CHASSIS SECTION

This service manual has been prepared to provide SUBARU service personnel with the necessary information and data for the correct maintenance and repair of SUBARU vehicles.
This manual includes the procedures for maintenance, disassembling, reassembling, inspection and adjustment of components and diagnostics for guidance of experienced mechanics.
Please peruse and utilize this manual fully to ensure complete repair work for satisfying our customers by keeping their vehicle in optimum condition. When replacement of parts during repair work is needed, be sure to use SUBARU genuine parts.

FRONT SUSPENSION	FS
REAR SUSPENSION	RS
WHEEL AND TIRE SYSTEM	WT
DIFFERENTIALS	DI
TRANSFER CASE	TC
DRIVE SHAFT SYSTEM	DS
ABS	ABS
ABS (DIAGNOSTICS)	ABS
BRAKE	BR
PARKING BRAKE	PB
POWER ASSISTED SYSTEM (POWER STEERING)	PS

All information, illustration and specifications contained in this manual are based on the latest product information available at the time of publication approval.

FUJI HEAVY INDUSTRIES LTD.

G1830BE5

FRONT SUSPENSION

FS

		Page
1.	General Description	2
2.	Wheel Alignment	8
3.	Sub Frame	16
4.	Front Transverse Link	17
5.	Front Ball Joint	19
6.	Front Strut	20
7.	Front Stabilizer	24
8.	Front Crossmember	25
9.	General Diagnostic Table	26

1. General Description

A: SPECIFICATIONS

1. STABILIZER

Model	Bar diameter.
ALL MODEL	20 mm (0.79 in)

2. WHEEL ALIGNMENT

Model	Sedan		Wagon		OUTBACK
	Turbo	Non-turbo	Turbo	Non-turbo	
Camber (tolerance: ±0°45′)	–0°25′	–0°15′	–0°20′	–0°10′	–0°05′
Caster (common difference: ±0°45′)	3°35′	3°25′	3°35′	3°25′	3°25′
Toe-in	0±3 mm (0±0.12 in) Each toe angle: ±0°07′30" (Total toe angle: ±0°15′)				
Kingpin angle (tolerance: ±0°45′)	14°35′	14°20′	13°45′	13°30′	13°20′
Wheel arch height [tolerance: ±12 mm (±0.47 in)]	396 mm (15.59 in)	406 mm (15.98 in)	387 mm (15.24 in)	397 mm (15.63 in)	402 mm (15.83 in)

NOTE:
- Front and rear toe-ins and front camber can be adjusted. If the toe-in or camber tolerance exceeds specifications, adjust toe-in and camber to the middle value of specification.
- The other items indicated in the specification table cannot be adjusted. If the other items exceeds specifications, check suspension parts and connections for deformities; replace with new ones as required.

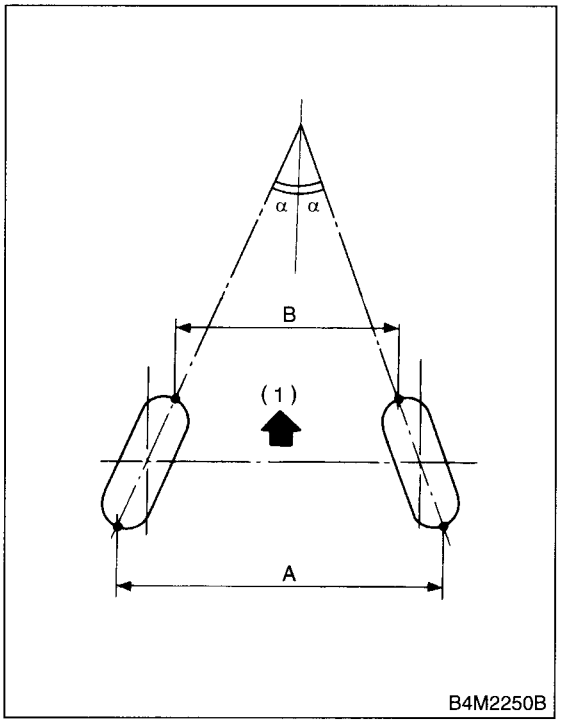

(1) Front
A – B = Positive: Toe-in, Negative: Toe-out
α = Each toe angle

B: COMPONENT

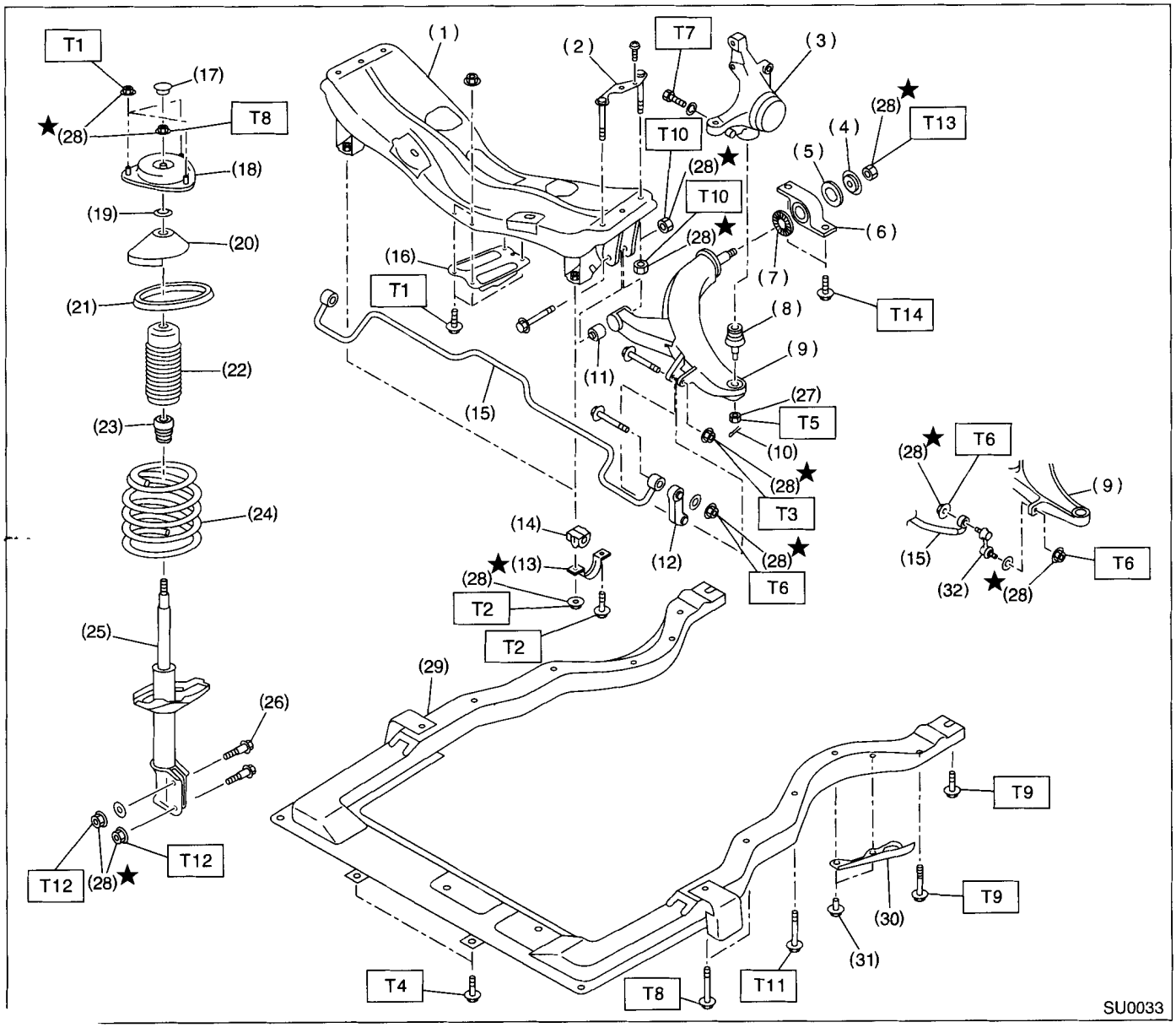
T1
(17)
★(28)
T8
(18)
(19)
(20)
(21)
(22)
(23)
(24)
(25)
(26)
T12
T12
(28)★
(1)
(2)
T7
(3)
(28)★
T13
(4)
(5)
T10
(28)★
T10
(28)★
(6)
(16)
T1
(7)
T14
(8)
(9)
(11)
(27)
T5
(15)
(10)
(28)★
T3
(28)★
T6
(14)
(12)
★(13)
(28)
T2
T2
(29)
(28)★
T6
(9)
(15)
(32)
★(28)
T6
T9
T9
(30)
(31)
T4
T8
T11
SU0033

(1) Front crossmember
(2) Bolt ASSY
(3) Housing
(4) Washer
(5) Stopper rubber (Rear)
(6) Rear bushing
(7) Stopper rubber (Front)
(8) Ball joint
(9) Transverse link
(10) Cotter pin
(11) Front bushing
(12) Stabilizer link (Except sedan turbo model)
(13) Clamp
(14) Bushing
(15) Stabilizer
(16) Jack-up plate
(17) Dust seal
(18) Strut mount
(19) Spacer
(20) Upper spring seat
(21) Rubber seat
(22) Dust cover
(23) Helper
(24) Coil spring
(25) Damper strut
(26) Adjusting bolt
(27) Castle nut
(28) Self-locking nut
(29) Sub frame
(30) Cover
(31) Clip
(32) Stabilizer link (Sedan turbo model)

Tightening torque: N·m (kgf-m, ft-lb)	
T1:	*20 (2.0, 14.5)*
T2:	*25 (2.5, 18.1)*
T3:	*30 (3.1, 22)*
T4:	*34 (3.5, 25)*
T5:	*40 (4.1, 30)*
T6:	*45 (4.6, 33)*
T7:	*50 (5.1, 37)*
T8:	*55 (5.6, 41)*
T9:	*71 (7.2, 52)*
T10:	*100 (10.2, 74)*
T11:	*<Ref. to FS-17, INSPECTION, Sub Frame.>*
T12:	*175 (17.8, 129)*
T13:	*190 (19.4, 140)*
T14:	*250 (25.5, 184)*

C: CAUTION

- Wear working clothing, including a cap, protective goggles, and protective shoes during operation.
- Remove contamination including dirt and corrosion before removal, installation or disassembly.
- Keep the disassembled parts in order and protect them from dust or dirt.
- Before removal, installation or disassembly, be sure to clarify the failure. Avoid unnecessary removal, installation, disassembly, and replacement.
- Use SUBARU genuine grease etc. or the equivalent. Do not mix grease etc. with that of another grade or from other manufacturers.
- Be sure to tighten fasteners including bolts and nuts to the specified torque.
- Place shop jacks or safety stands at the specified points.
- Apply grease onto sliding or revolution surfaces before installation.
- Before installing O-rings or snap rings, apply sufficient amount of grease to avoid damage and deformation.
- Before securing a part on a vice, place cushioning material such as wood blocks, aluminum plate, or shop cloth between the part and the vice.

D: PREPARATION TOOL

1. SPECIAL TOOLS

ILLUSTRATION	TOOL NUMBER	DESCRIPTION	REMARKS
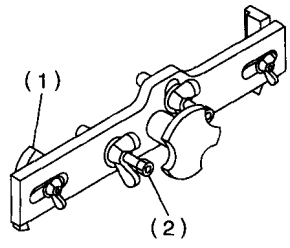 B4M2378A	927380002	ADAPTER	Used as an adapter for camber & caster gauge when measuring camber and caster. (1) 28199AC000 PLATE (2) 28199AC010 BOLT
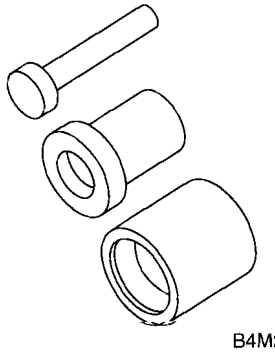 B4M2385	927680000	INSTALLER & REMOVER SET	Used for replacing transverse link bushing.
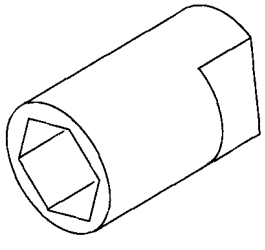 B4M2384	927760000	STRUT MOUNT SOCKET	Used for disassembling and assembling strut and shock mount.

2. GENERAL PURPOSE TOOLS

TOOL NAME	REMARKS
Alignment gauge	Used for wheel alignment measurement.
Turning radius gauge	Used for wheel alignment measurement.
Toe-in gauge	Used for toe-in measurement.
Dial gauge	Used for damper strut measurement.

2. Wheel Alignment

A: INSPECTION

Check, adjust and/or measure wheel alignment in accordance with procedures indicated in figure:

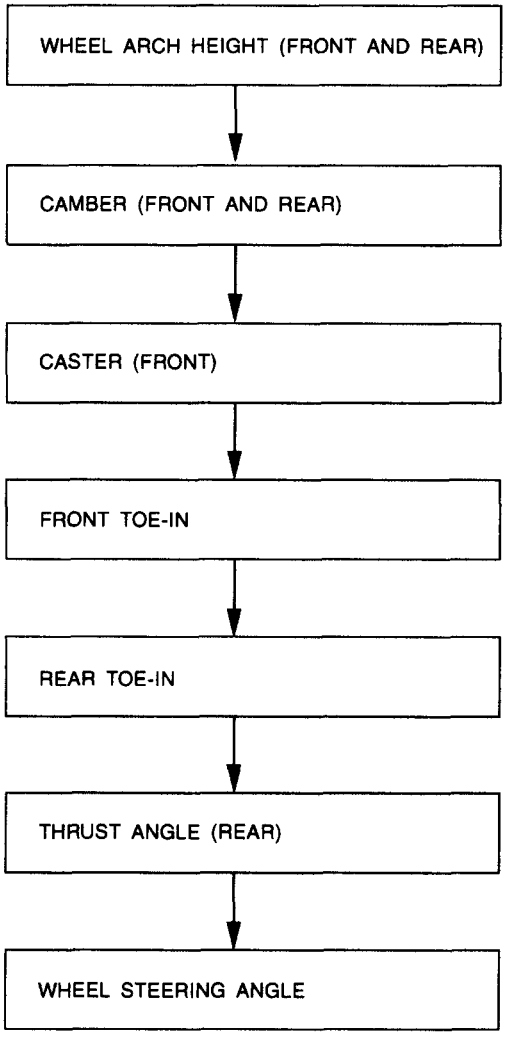

B4M1088A

1. WHEEL ARCH HEIGHT

1) Adjust the tire pressure to specifications.
2) Set the vehicle under "curb weight" conditions. (Empty luggage compartment, install spare tire, jack, service tools, and top up fuel tank.)
3) Set the steering wheel in a wheel-forward position.
4) Suspend a thread from wheel arch (point "A" in figure below) to determine the point directly above center of spindle.
5) Measure the distance between measuring point "A" and center of spindle.

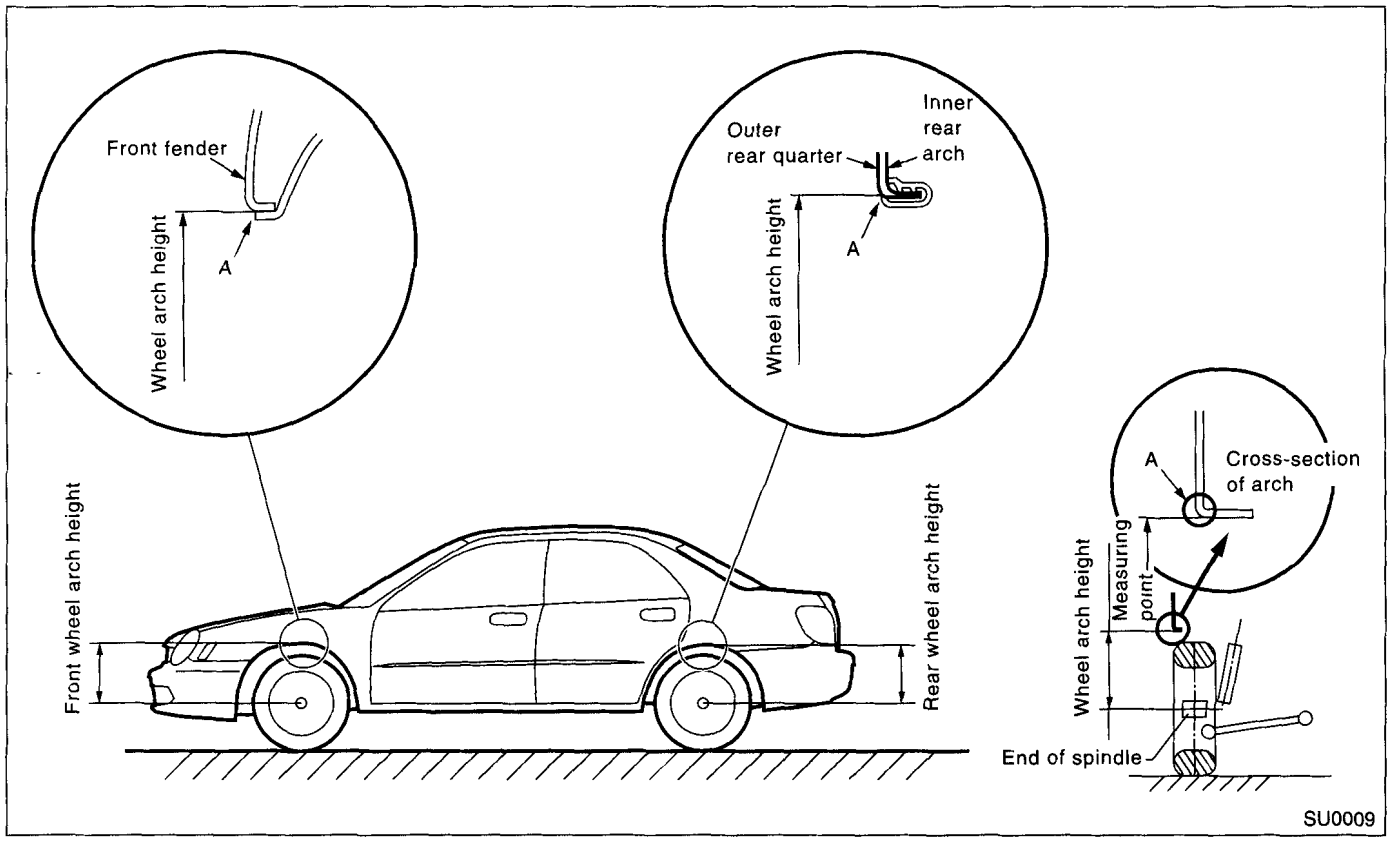

Model		Specified wheel arch height	
		Turbo	Non-turbo
Sedan	Front	396±12 mm (15.59±0.47 in)	406±12 mm (15.98±0.47 in)
	Rear	376±12 mm (14.80±0.47 in)	381±12 mm (15.0±0.47 in)
Wagon	Front	387±12 mm (15.24±0.47 in)	397±12 mm (15.63±0.47 in)
	Rear	376±12 mm (14.80±0.47 in)	381±12 mm (15.0±0.47 in)
OUTBACK	Front	—	402±12 mm (15.83±0.47 in)
	Rear	—	386±12 mm (15.20±0.47 in)

2. CAMBER

• Inspection

1) Place the front wheel on turning radius gauge. Make sure the ground contacting surfaces of front and rear wheels are set at the same height.
2) Set the ST into the center of the wheel, and then install the wheel alignment gauge.
ST 927380002 ADAPTER

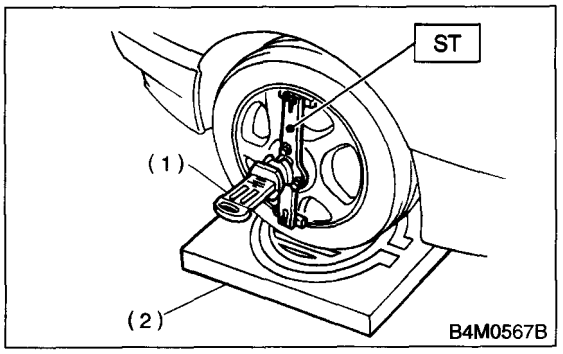

(1) Alignment gauge
(2) Turning radius gauge

NOTE:
Refer to the "SPECIFICATIONS" for the camber values.
Front: <Ref. to FS-2, SPECIFICATIONS, General Description.>
Rear: <Ref. to RS-2, SPECIFICATIONS, General Description.>

• Front camber adjustment

1) Loosen the two self-locking nuts located at the lower front portion of strut.

CAUTION:
• When the adjusting bolt needs to be loosened or tightened, hold its head with a wrench and turn the self-locking nut.
• Discard the loosened self-locking nut and replace with a new one.

2) Turn the camber adjusting bolt so that the camber is set at the specification.

NOTE:
Moving the adjusting bolt by one scale graduation changes the camber by approximately 0°10′.

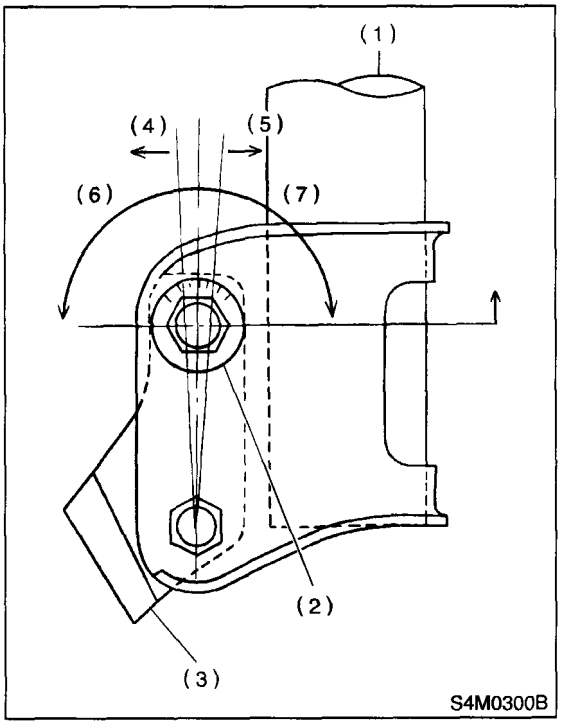

(1) Strut
(2) Adjusting bolt
(3) Housing
(4) Outer
(5) Inner
(6) Camber is increased.
(7) Camber is decreased.

	Left side	Right side
Camber is increased.	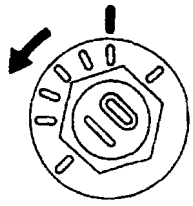 Rotate counterclockwise. B4M0190	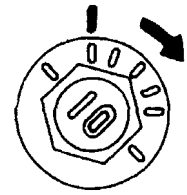 Rotate clockwise. B4M0350
Camber is decreased.	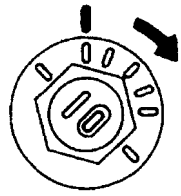 Rotate clockwise. B4M0350	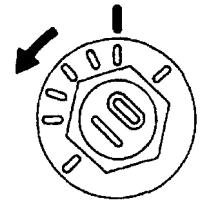 Rotate counterclockwise. B4M0190

3) Tighten the two self-locking nuts.

Tightening torque:
175 N·m (17.8 kgf-m, 129 ft-lb)

3. CASTER

• Inspection

1) Place the front wheel on turning radius gauge. Make sure the ground contacting surfaces of front and rear wheels are set at the same height.
2) Set the ST into the center of the wheel, and then install the wheel alignment gauge.
ST 927380002 ADAPTER

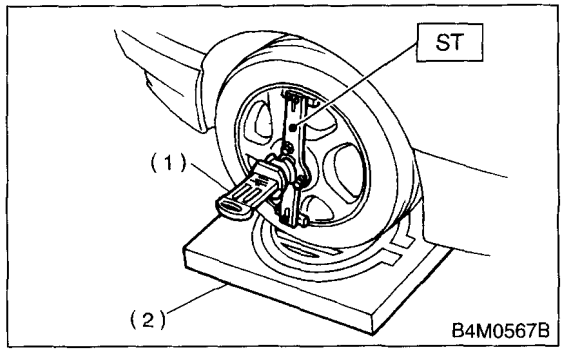

(1) Alignment gauge
(2) Turning radius gauge

NOTE:
Refer to the "SPECIFICATIONS" for the caster values. <Ref. to FS-2, SPECIFICATIONS, General Description.>

4. FRONT WHEEL TOE-IN

• Inspection

1) Using a toe gauge, measure the front wheel toe-in.

Toe-in:
0±3 mm (0±0.12 in)

2) Mark the rear sides of left and right tires at height corresponding to the center of spindles and measure distance "A" between marks.
3) Move the vehicle forward so that the marks line up with front sides at height corresponding to the center of spindles.
4) Measure the distance "B" between left and the right marks. Toe-in can then be obtained by the following equation:

A – B = Toe-in

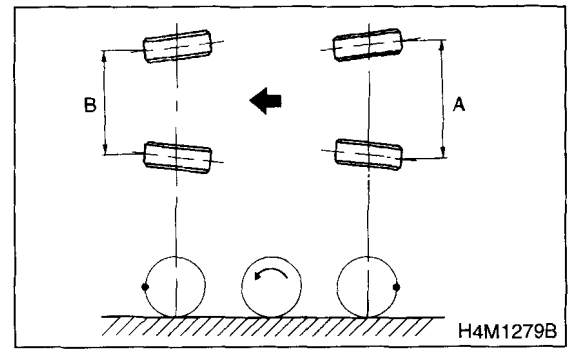

• Adjustment

1) Loosen the left and right side steering tie-rods lock nuts.

2) Turn the left and right tie rods equal amounts until the toe-in is at the specification.
Both the left and right tie-rods are right-hand threaded. To increase toe-in, turn both tie-rods clockwise equal amounts (as viewed from the inside of the vehicle).

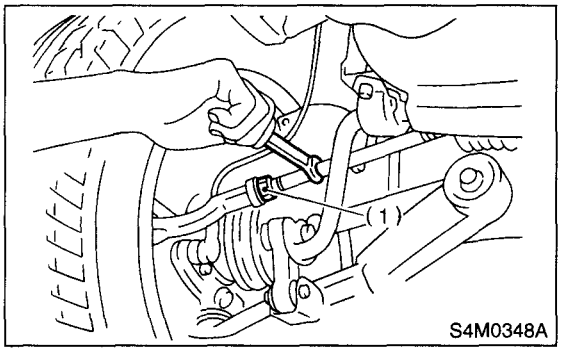

(1) Lock nut

3) Tighten the tie-rod lock nut.

Tightening torque:
83 N·m (8.5 kgf-m, 61.5 ft-lb)

CAUTION:
Correct the tie-rod boot, if it is twisted.

NOTE:
Check that the left and right wheel steering angle is within specifications.

5. REAR WHEEL TOE-IN

• Inspection

1) Using a toe-in gauge, measure the rear wheel toe-in.

Toe-in:
–1±2 mm (–0.039±0.079 in)

2) Mark the rear sides of left and right tires at height corresponding to the center of spindles and measure distance "A" between marks.
3) Move the vehicle forward so the that marks line up with front sides at height corresponding to the center of spindles.
4) Measure the distance "B" between left and right marks. Toe-in can then be obtained by the following equation:

A – B = Toe-in

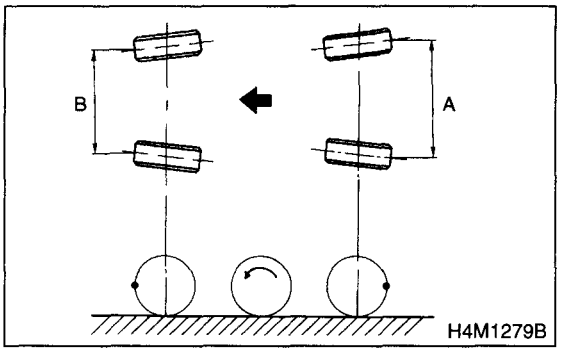

• Adjustment

1) Loosen the self-locking nut on inner side of link rear.

CAUTION:
• When loosening or tightening the adjusting bolt, hold the bolt head and turn self-locking nut.
• Discard the loosened self-locking nut and replace with a new one.

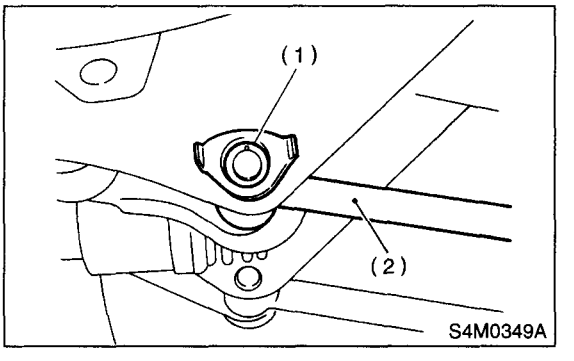

(1) Adjusting bolt
(2) Link rear

2) Turn the adjusting bolt head until toe-in is at the specification.

NOTE:
When the left and right wheels are adjusted for toe-in at the same time, the movement of one scale graduation changes toe-in by approximately 1.5 mm (0.12 in).

	Left side	Right side
Toe-in is increased.	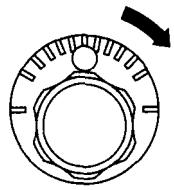 Rotate clockwise. B4M0192	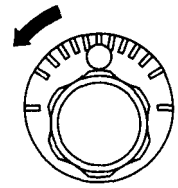 Rotate counterclockwise. B4M0352
Toe-in is decreased.	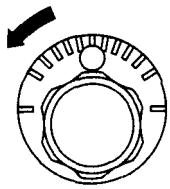 Rotate counterclockwise. B4M0352	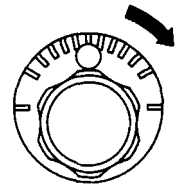 Rotate clockwise. B4M0192

3) Tighten the self-locking nut.

Tightening torque:
100 N·m (10.2 kgf-m, 74 ft-lb)

6. STEERING ANGLE

• Inspection

1) Place the vehicle on a turning radius gauge.
2) While depressing the brake pedal, turn the steering wheel fully to the left and right. With the steering wheel held at each fully turned position, measure both the inner and outer wheel steering angle.

Steering angle:

Model	*Turbo, sedan and OUTBACK*	*Others*
Inner wheel	*34°05°±1.5°*	*36°55'±1.5°*
Outer wheel	*29°35°±1.5°*	*31°35'±1.5°*

• Adjustment

Turn the tie-rod to adjust the steering angle of both inner and outer wheels.

CAUTION:
- **Check the toe-in.**
- **Correct the boot if it is twisted.**

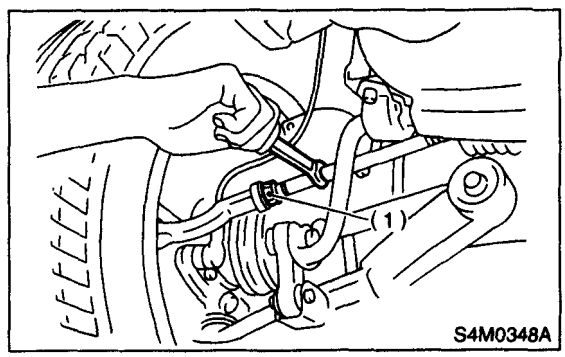

(1) Lock nut

7. THRUST ANGLE

• Inspection

1) Position the vehicle on a level surface.
2) Move the vehicle 3 to 4 meters directly forward.
3) Determine the locus of both front and rear axles.
4) Measure the distance "L" between center line of loci of the axles.

Thrust angle:
Less than 20′ when "L" is equal to or less than 15 mm (59 in).

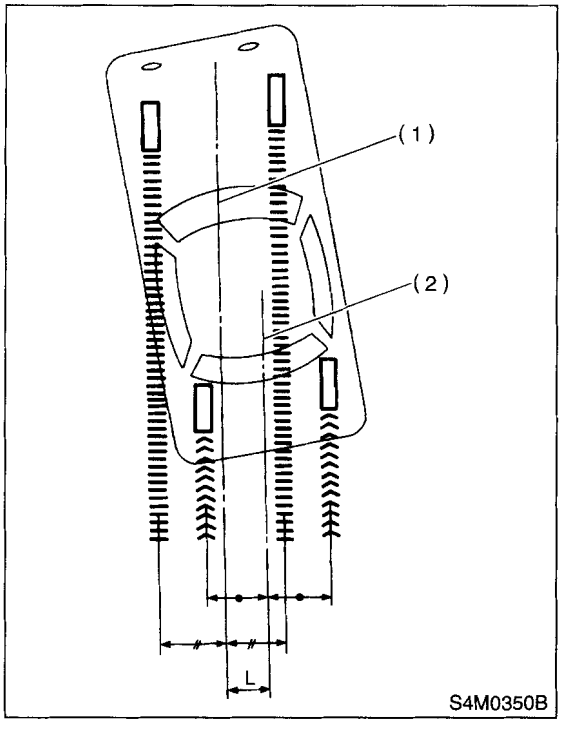

(1) Center line of loci (front axle)
(2) Center line of loci (rear axle)

• Adjustment

1) Make the thrust angle adjustments by turning toe-in adjusting bolts of rear suspension equally in the same direction.
2) When one rear wheel is adjusted in a toe-in direction, adjust the other rear wheel equally in toe-out direction, in order to make the thrust angle adjustment.
3) When the left and right adjusting bolts are turned incrementally by one graduation in the same direction, the thrust angle will change approximately 16′ ["L" is almost equal to 12 mm (0.472 in)].

Thrust angle:
0°±20′

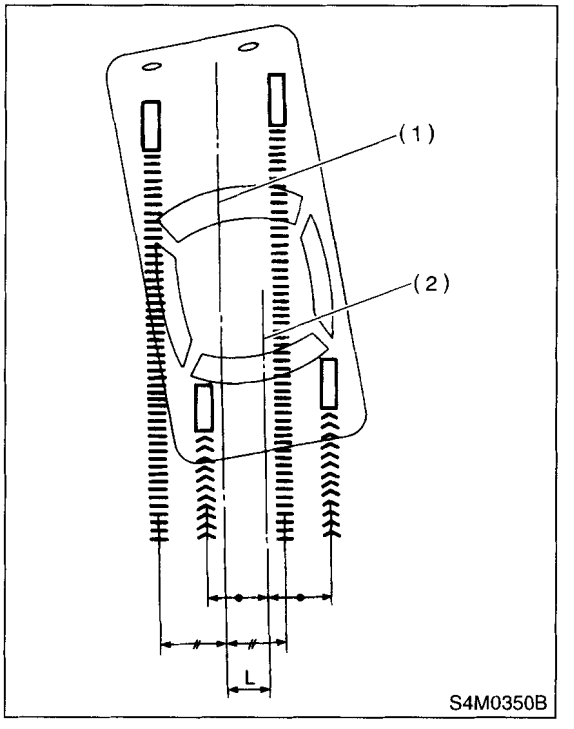

(1) Center line of loci (front axle)
(2) Center line of loci (rear axle)

NOTE:
Thrust angle refers to a mean value of left and right rear wheel toe angles in relation to the vehicle body center line. Vehicle is driven straight in the thrust angle direction while swinging in the oblique direction depending on the degree of the mean thrust angle.

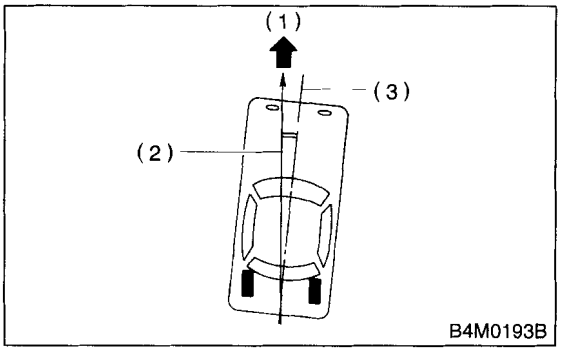

(1) Front
(2) Thrust angle
(3) Body center line

Thrust angle: $r = (\alpha - \beta)/2$

α: Right rear wheel toe-in angle
β: Left rear wheel toe-in angle

NOTE:
Here, use only positive toe-in values from each wheel to substitute for α and β in the equation.

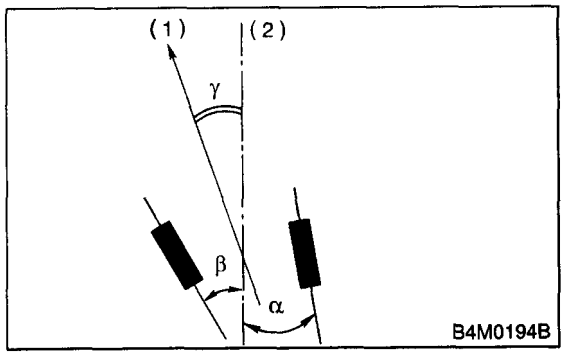

(1) Front
(2) Body center line

3. Sub Frame

A: REMOVAL

1) Lift-up the vehicle.
2) Remove the under cover.
3) Remove the bolt cover.

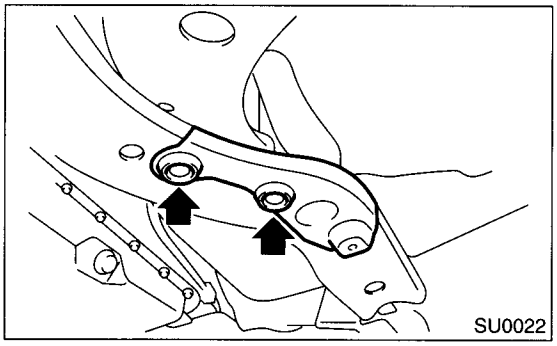

4) Remove the clip.

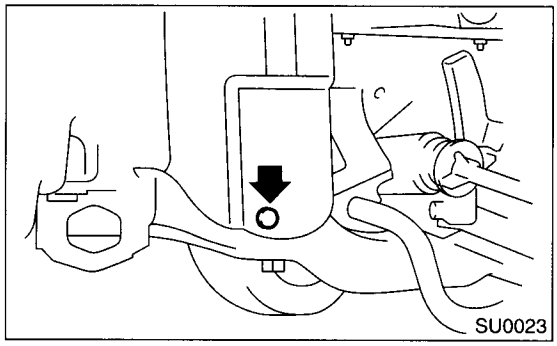

5) Remove the sub frame.

NOTE:
Loosen bolt (1) and leave a few threads caught, then remove the bolts in the order of (2), (3), (4), (5), and (6).

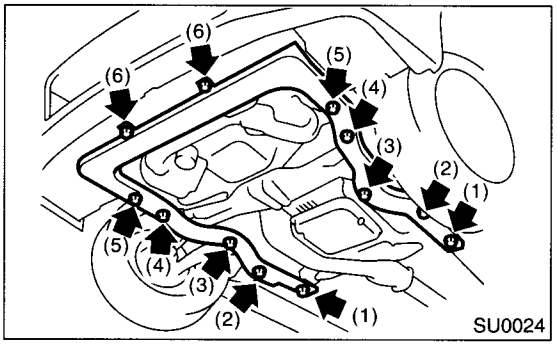

B: INSTALLATION

Install in the reverse order of removal.

NOTE:
Replace the M12 bolt with a new one.

Tightening torque:
T1: 34 N·m (3.5 kgf-m, 25 ft-lb)
T2: 55 N·m (5.6 kgf-m, 41 ft-lb)
T3: 71 N·m (7.2 kgf-m, 52 ft-lb)
T4: 105 N·m (10.7 kgf-m, 77 ft-lb)

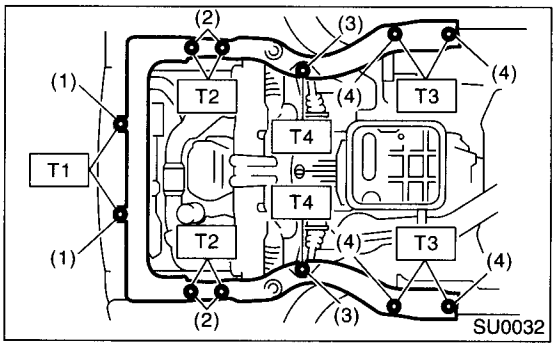

(1) M8 bolt
(2) M12 bolt (with max)
(3) M12 bolt (with oil)
(4) M10 bolt

C: INSPECTION

1) Check that there is no damage and distortion at the sub frame.
2) Check that the bolts are tightened with the specified torque. If there is looseness, tighten to the specified torque.

NOTE:
The tightening torque differs by the color for bolt (3). Always verify the bolt color before checking tightening torque.

Tightening torque:
T1: 34 N·m (3.5 kgf-m, 25 ft-lb)
T2: 55 N·m (5.6 kgf-m, 41 ft-lb)
T3: 71 N·m (7.2 kgf-m, 52 ft-lb)
T4: Dark green bolt
105 N·m (10.7 kgf-m, 77 ft-lb)
T4: Except dark green bolt
55 N·m (5.6 kgf-m, 41 ft-lb)

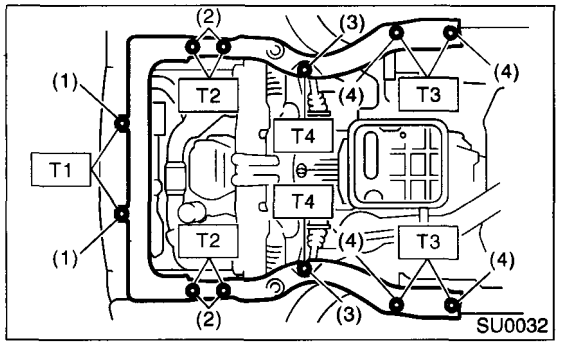

3. Sub Frame

A: REMOVAL

1) Lift-up the vehicle.
2) Remove the under cover.
3) Remove the bolt cover.

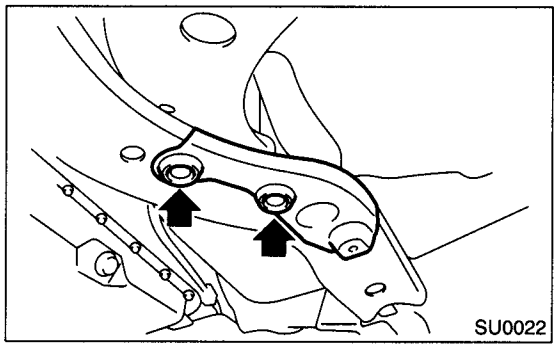

4) Remove the clip.

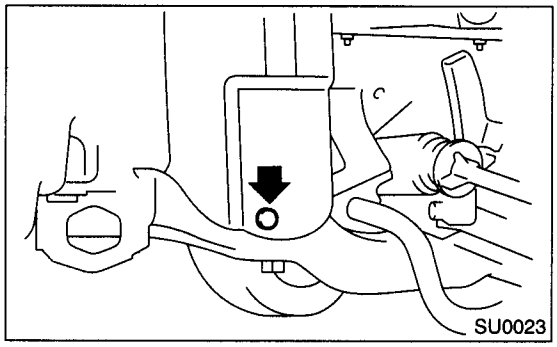

5) Remove the sub frame.

NOTE:
Loosen bolt (1) and leave a few threads caught, then remove the bolts in the order of (2), (3), (4), (5), and (6).

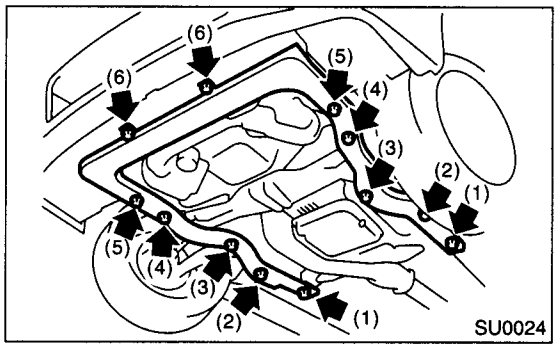

B: INSTALLATION

Install in the reverse order of removal.

NOTE:
Replace the M12 bolt with a new one.

Tightening torque:
T1: 34 N·m (3.5 kgf-m, 25 ft-lb)
T2: 55 N·m (5.6 kgf-m, 41 ft-lb)
T3: 71 N·m (7.2 kgf-m, 52 ft-lb)

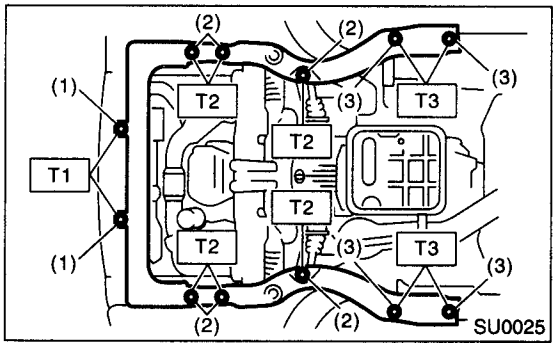

(1) M8 bolt
(2) M12 bolt
(3) M10 bolt

C: INSPECTION

Check that there is no damage and distortion at the sub frame.

4. Front Transverse Link

A: REMOVAL

1) Set the vehicle on the lift.
2) Disconnect the ground terminal from battery.
3) Lift-up the vehicle and remove the wheel.
4) Remove the sub frame. <Ref. to FS-16, REMOVAL, Sub Frame.>
5) Disconnect the stabilizer link from transverse link.
6) Remove the bolt securing the ball joint of transverse link to housing.

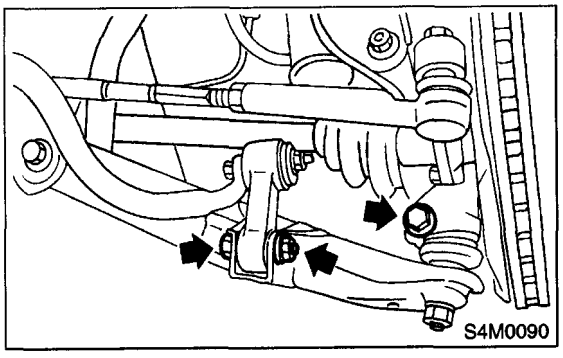

7) Remove the nut (do not remove bolt.) securing the transverse link to crossmember.
8) Remove the two bolts securing the bushing bracket of transverse link to vehicle body at rear bushing location.

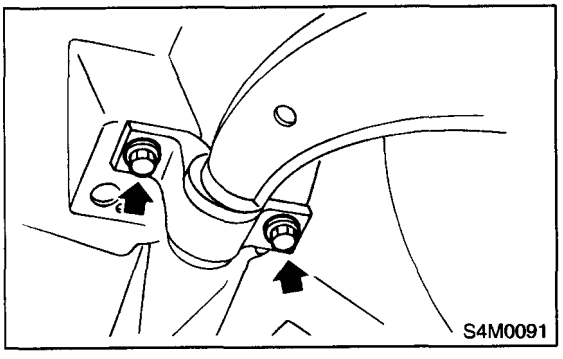

9) Extract the ball joint from housing.
10) Remove the bolt securing the transverse link to crossmember and extract the transverse link from crossmember.

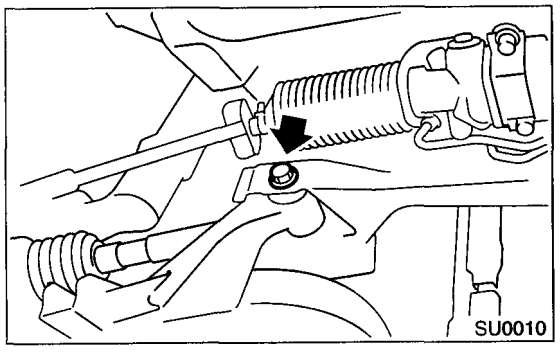

B: INSTALLATION

1) Temporarily tighten the two bolts used to secure the rear bushing of the transverse link to body.

NOTE:
These bolts should be tightened to such an extent that they can still move back and forth in the oblong shaped hole in the bracket (which holds the bushing).

2) Install the bolts used to connect the transverse link to crossmember and temporarily tighten with nut.

CAUTION:
Discard the loosened self-locking nut and replace with a new one.

3) Insert the ball joint into housing.
4) Connect the stabilizer link to transverse link, and temporarily tighten bolts.

CAUTION:
Discard the loosened self-locking nut and replace with a new one.

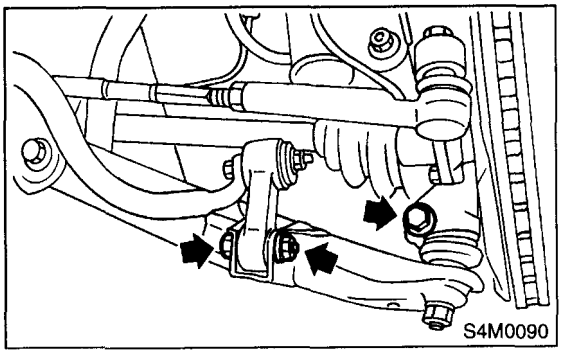

5) Tighten the following points in the order shown below when the wheels are in full contact with the ground and vehicle is curb weight.
   (1) Transverse link and stabilizer

Tightening torque:
Sedan Turbo model:
45 N·m (4.6 kgf-m, 33 ft-lb)
Except sedan Turbo model:
30 N·m (3.1 kgf-m, 22 ft-lb)

   (2) Transverse link and crossmember

Tightening torque:
100 N·m (10.2 kgf-m, 74 ft-lb)

   (3) Transverse link rear bushing and body

Tightening torque:
250 N·m (25.5 kgf-m, 184 ft-lb)

NOTE:
• Move the rear bushing back and forth until transverse link-to-rear bushing clearance is established (as indicated in figure.) before tightening.

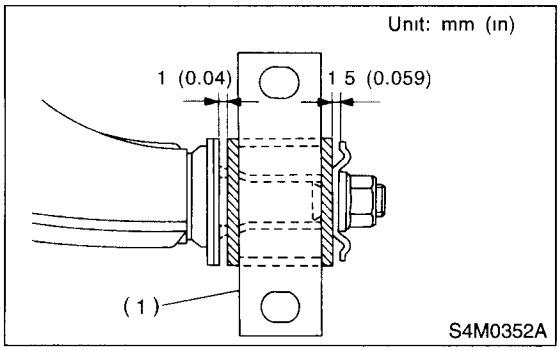

(1) Rear bushing

6) Install the sub frame. <Ref. to FS-16, INSTALLATION, Sub Frame.>
7) Inspect the wheel alignment and adjust if necessary. <Ref. to FS-8, Wheel Alignment.>

C: DISASSEMBLY

1. FRONT BUSHING

Using ST, press the front bushing out of place.
ST 927680000 INSTALLER & REMOVER SET

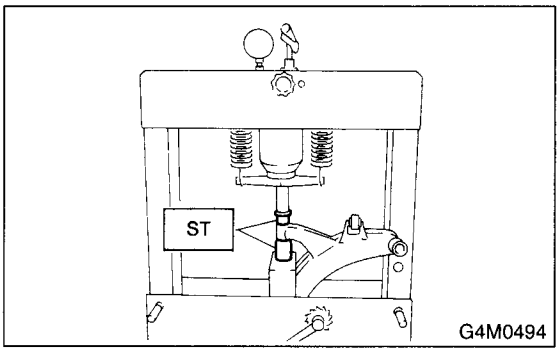

2. REAR BUSHING

1) Scribe an aligning mark on the transverse link and rear bushing.
2) Loosen the nut and remove the rear bushing.

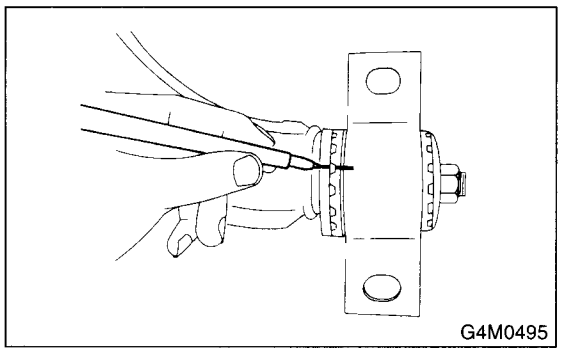

D: ASSEMBLY

1. FRONT BUSHING

To reassemble, reverse disassembly procedures.

CAUTION:
Install the front bushing in correct direction, as shown in the figure.

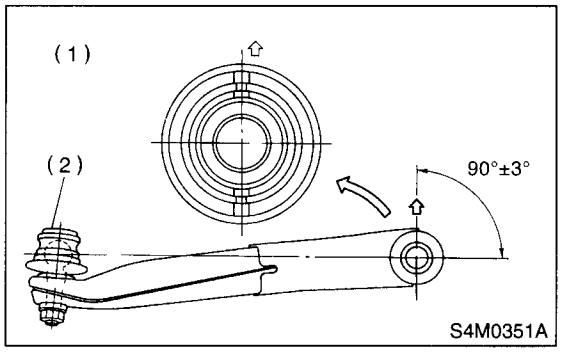

(1) Face bushing toward center of ball joint
(2) Ball joint

2. REAR BUSHING

1) Install the rear bushing to transverse link and align the aligning marks scribed on the two.
2) Tighten the self-locking nut.

CAUTION:
• Discard the loosened self-locking nut and replace with a new one.
• While holding the rear bushing so as not to change position of aligning marks, tighten the self-locking nut.

Tightening torque:
190 N·m (19.4 kgf-m, 140 ft-lb)

E: INSPECTION

1) Check the transverse link for wear, damage and cracks, and correct or replace if defective.
2) Check the bushings for cracks, fatigue or damage.
3) Check the rear bushing for oil leaks.

5. Front Ball Joint

A: REMOVAL

1) Remove the front wheel.
2) Pull out the cotter pin from the ball stud, remove the castle nut, and extract the ball stud from the transverse link.
3) Remove the bolt securing the ball joint to the housing.

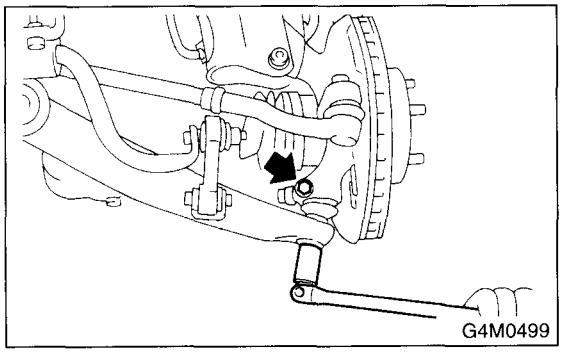

4) Extract the ball joint from the housing.

B: INSTALLATION

1) Install the ball joint onto the housing.

Torque (Bolt):
50 N·m (5.1 kgf-m, 37 ft-lb)

CAUTION:
Do not apply grease to the tapered portion of ball stud.

2) Connect the ball joint to transverse link.

Torque (Castle nut):
Sedan turbo model:
30 N·m (3.1 kgf-m, 22ft-lb)
Except sedan turbo model:
45 N·m (4.6 kgf-m, 33ft-lb)

3) Retighten the castle nut further within 60° until a slot in castle nut is aligned with the hole in ball stud end, then insert the new cotter pin and bend it around castle nut.
4) Install the front wheel.

C: INSPECTION

1) Measure the play of ball joint by the following procedures. Replace with a new one when the play exceeds the specified value.
(1) With 686 N (70 kgf, 154 lb) loaded in the direction shown in the figure, measure dimension ℓ_1.

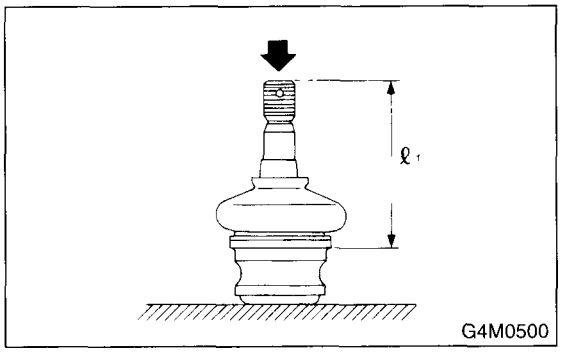

(2) With 686 N (70 kgf, 154 lb) loaded in the opposite direction shown in the figure, measure dimension ℓ_2.

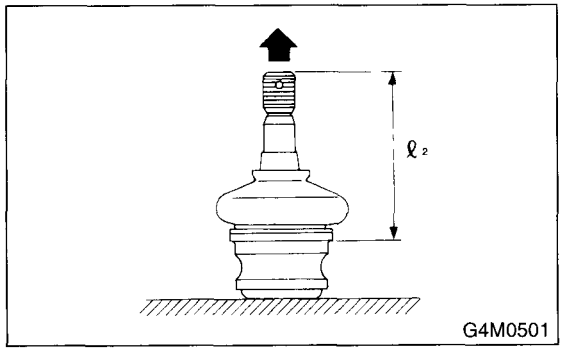

(3) Calculate plays from the following formula.
$S = \ell_2 - \ell_1$
(4) When plays are larger than the following value, replace with a new one.

FRONT BALL JOINT
Specified play for replacement: S
Less than 0.3 mm (0.012 in)

2) When the play is smaller than the specified value, visually inspect the dust cover.
3) The ball joint and cover that have been removed must be checked for wear, damage or cracks, and any defective part must be replaced.
4) If the dust cover is damaged, replace with a new ball joint.

6. Front Strut

A: REMOVAL

1) Remove the front wheel.
2) Remove the bolt securing brake hose from strut.

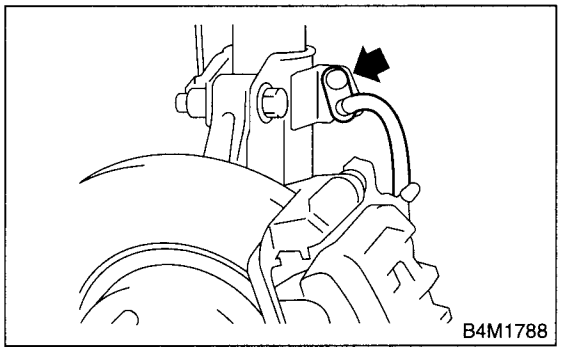

3) Scribe an alignment mark on the camber adjusting bolt which secures strut to housing.
4) Remove the bolt securing the ABS sensor harness.

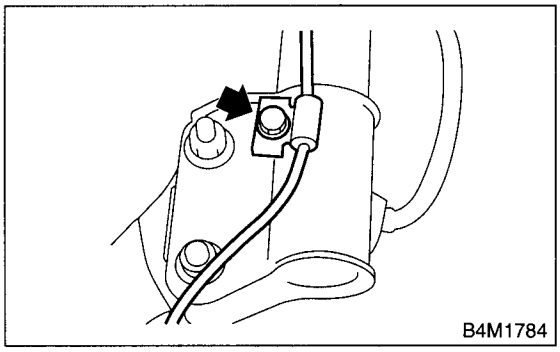

5) Remove the two bolts securing housing to strut.

CAUTION:
While holding the head of adjusting bolt, loosen self-locking nut.

6) Remove the three nuts securing strut mount to body.

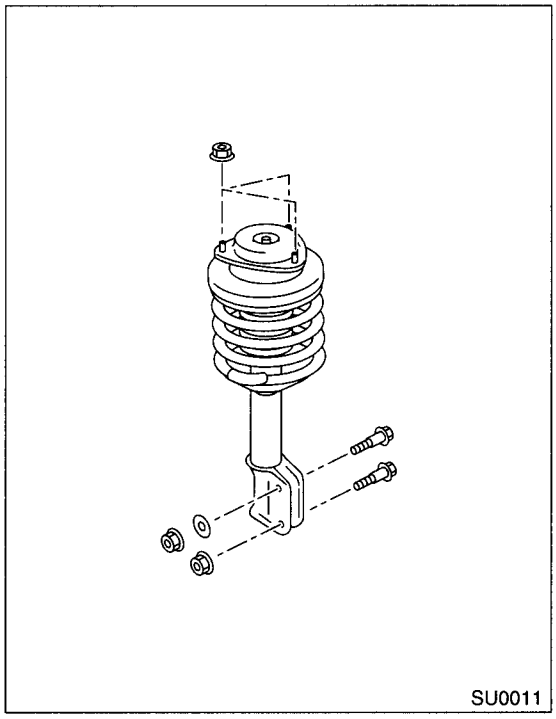

B: INSTALLATION

1) Install the strut mount at upper side of strut to body and tighten with nuts.

Tightening torque:
20 N·m (2.0 kgf-m, 14.5 ft-lb)

2) Position the aligning mark on camber adjustment bolt with aligning mark on lower side of strut.

CAUTION:
- **While holding the head of adjusting bolt, tighten self-locking nut.**
- **Be sure to use a new self-locking nut.**

Tightening torque:
175 N·m (17.8 kgf-m, 129 ft-lb)

3) Install the ABS sensor harness to strut.

Tightening torque:
33 N·m (3.4 kgf-m, 24.3 ft-lb)

4) Install bolts which secure the brake hose to strut.

Tightening torque:
33 N·m (3.4 kgf-m, 24.3 ft-lb)

5) Install the front wheels.

NOTE:
Check wheel alignment and adjust if necessary.

C: DISASSEMBLY

1) Using a coil spring compressor, compress the coil spring.

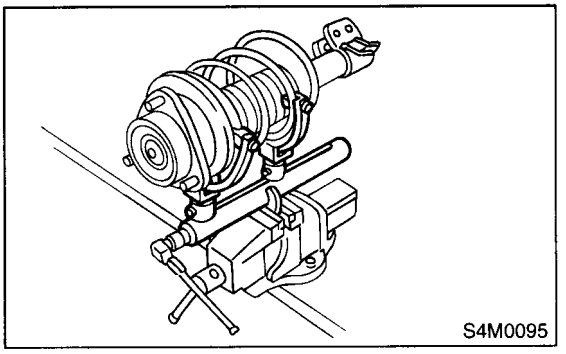

2) Using the ST, remove the self-locking nut.
ST 927760000 STRUT MOUNT SOCKET

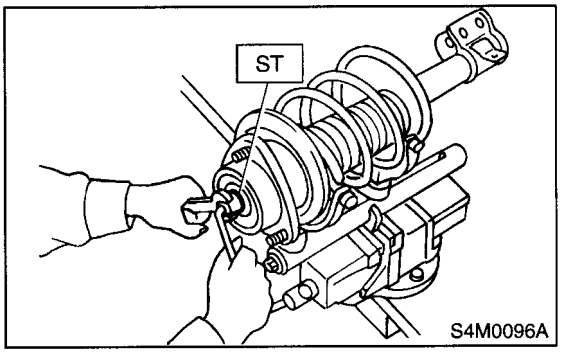

3) Remove the strut mount, upper spring seat and rubber seat from strut.
4) Gradually decreasing the compression force, and remove the coil spring.
5) Remove the dust cover and helper spring.

D: ASSEMBLY

1) Before installing the coil spring, strut mount, etc., on the strut, check for the presence of air in the dampening force generating mechanism of the strut since air prevents proper dampening force from being produced.

2) Checking for the presence of air:
   (1) Place the strut vertically with the piston rod facing up.
   (2) Move the piston rod to the center of its entire stroke.
   (3) While holding the piston rod end with finger-tips, move the rod up and down.
   (4) If the piston rod moves at least 10 mm (0.39 in) in the former step, purge air from the strut.

3) Air purging procedure:
   (1) Place the strut vertically with the piston rod facing up.
   (2) Fully extend the piston rod.
   (3) With the piston rod fully extended, place the piston rod side down. The strut must stand vertically.
   (4) Fully contract the piston rod.
   (5) Repeat 3 or 4 times from the first step.

NOTE:
After completely purging air from the strut, be sure to place the strut with the piston rod facing up. If it is laid down, check for entry of air in the strut as outlined under "Checking for the presence of air".

4) Using a coil spring compressor, compress the coil spring.

NOTE:
Make sure that the vertical installing direction of coil spring is as shown in the figure.

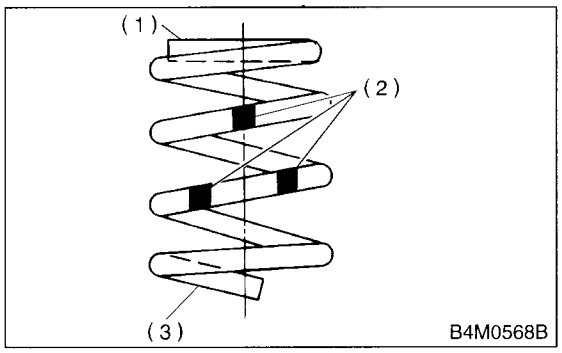

(1) Flat (top side)
(2) Identification paint
(3) Inclined (bottom side)

5) Set the coil spring correctly so that its end face fits well into the spring seat as shown.

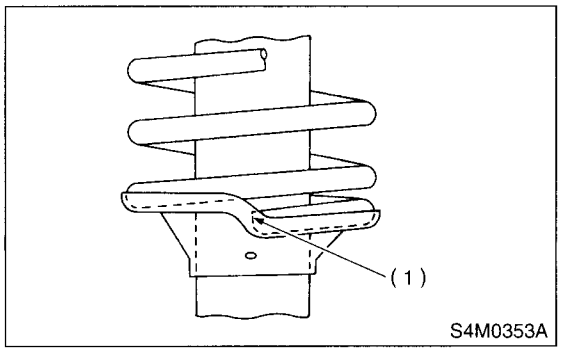

6) Install the helper and dust cover to the piston rod.

7) Pull the piston rod fully upward, and install the rubber seat and spring seat.

NOTE:
Ensure the upper spring seat is positioned as shown in the figure.

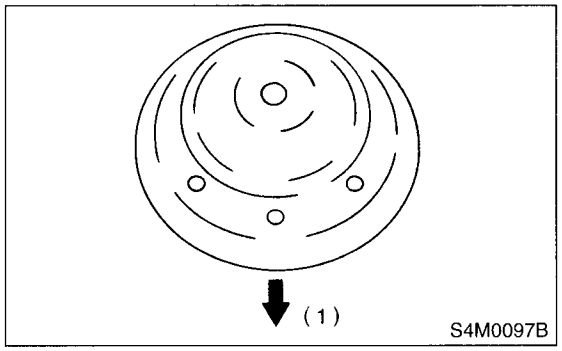

(1) Outside of body

8) Install the strut mount to the piston rod, and tighten the self-locking nut temporarily.

CAUTION:
Be sure to use a new self-locking nut.

9) Using a hexagon wrench to prevent strut rod from turning, tighten self-locking nut with ST.
ST 927760000 STRUT MOUNT SOCKET

Tightening torque:
55 N·m (5.6 kgf-m, 41 ft-lb)

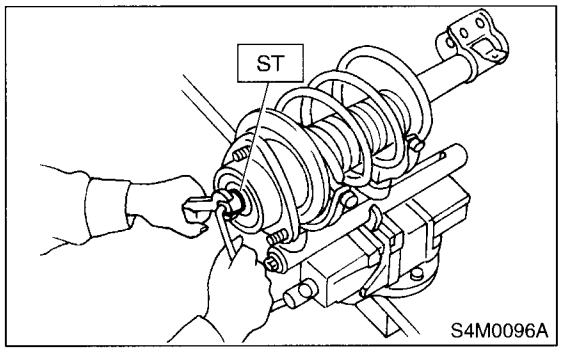

10) Loosen the coil spring carefully.

E: INSPECTION

Check the disassembled parts for cracks, damage and wear, and replace with new parts if defective.

1. DAMPER STRUT

1) Check for oil leakage.
2) Move the piston rod up and down to check that it operates smoothly without any binding.
3) Play of piston rod
• Measure the play as follows:
Fix the outer shell and fully extend the rod. Set a dial gauge at the end of the rod: L [10 mm (0.39 in)], then apply a force of W [20 N (2 kgf, 4 lb)] to threaded portion. With the force of 20 N (2 kgf, 4 lb) applied, read the dial gauge indication: P_1. Apply a force of 20 N (2 kgf, 4 lb) in the opposite direction of "W", then read the dial gauge indication: P_2.

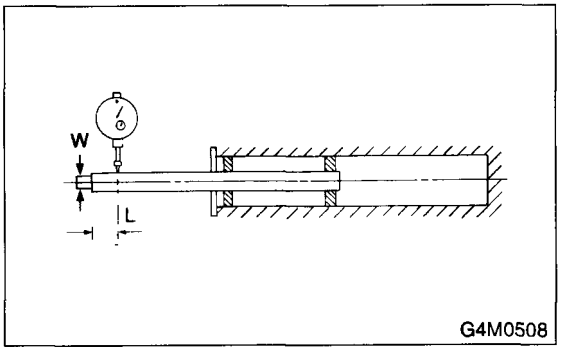

The free play is determined by the following equation:

Play = P_1, P_2

Limit of play:
Less than 0.8 mm (0.031 in)

If the play is greater, replace the strut.

2. STRUT MOUNT

Check the rubber part for creep, cracks and deterioration, and replace it with a new one if defective.

3. DUST COVER

If any cracks or damage are found, replace it with a new one.

4. COIL SPRING

One having permanent strain should be replaced with a new one. When the vehicle posture is uneven, although there are no considerable reasons like tire puncture, uneven loading, etc., check the coil spring for its free length referring to specifications, cracks, etc., and replace it with a new one if defective.

5. HELPER

Replace it with a new one if cracked or damaged.

F: DISPOSAL

CAUTION:
• On struts which have "GAS FILLED" marked on the outer housing under spring seat, completely discharge the gas before disposing, following the methods below.
• Do not disassemble the strut damper or place into a fire.
• Drill holes before disposing of gas filled struts.
• Before handling gas filled struts, be sure to wear goggles to protect eyes from gas, oil and/or filings.

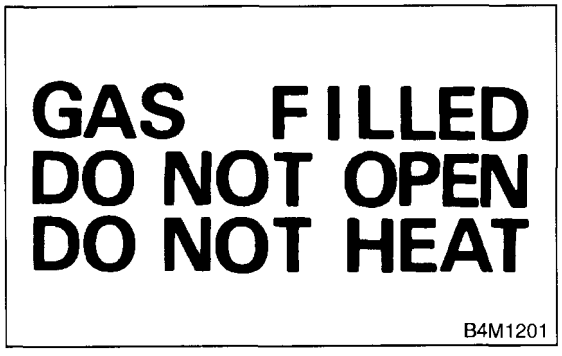

1) Place the gas filled strut on a flat and level surface with piston rod fully extended.
2) Using a 2 to 3 mm (0.08 to 0.12 in) dia. drill, make holes in areas shown in the figure.

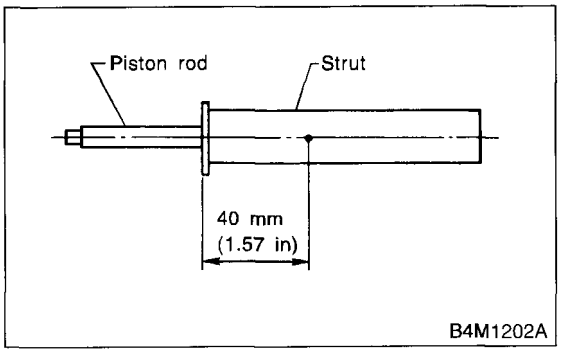

7. Front Stabilizer

A: REMOVAL

1) Jack-up the front part of the vehicle and support it with safety stands (rigid racks).
2) Remove the jack-up plate from lower part of crossmember.
3) Remove the sub frame. <Ref. to FS-16, REMOVAL, Sub Frame.>
4) Remove the bolt and nut which secure the stabilizer to crossmember.

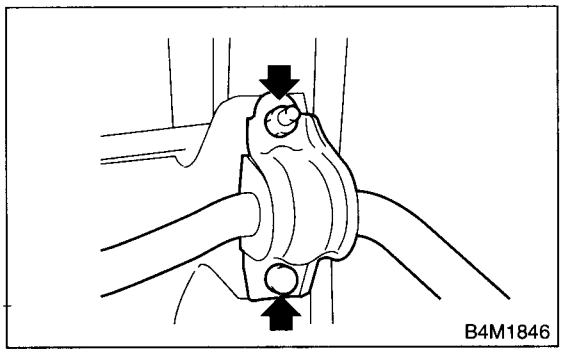

5) Remove the bolts which secure the stabilizer link to front transverse link.

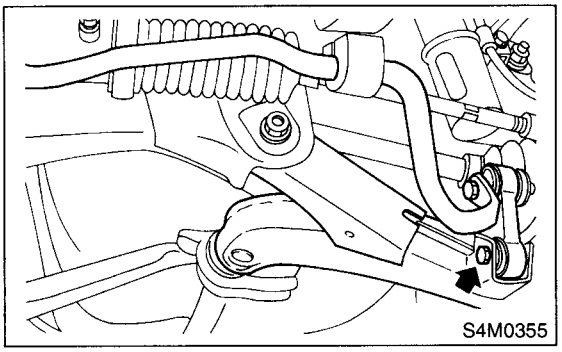

B: INSTALLATION

1) Install in the reverse order of removal.

NOTE:
- Install the bushing (on front crossmember side) while aligning it with paint mark on stabilizer.
- Ensure the bushing and stabilizer have the same identification colors when installing.

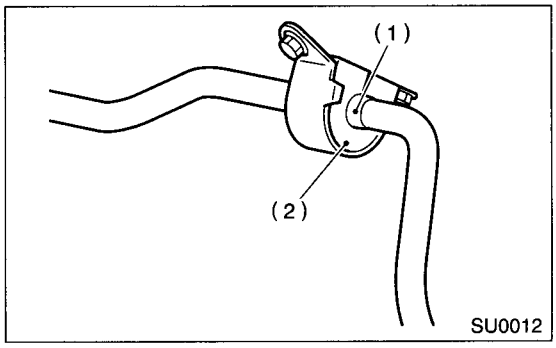

(1) Mark stamped on stabilizer
(2) Bushing identification color

2) Always tighten the rubber bushing location when wheels are in full contact with the ground and vehicle is curb weight.

Tightening torque (Sedan turbo model):
Jack-up plate to crossmember:
20 N·m (2.0 kgf-m, 14.5 ft-lb)
Stabilizer link to front transverse link:
45 N·m (4.6 kgf-m, 33 ft-lb)
Stabilizer to crossmember:
25 N·m (2.5 kgf-m, 18.1 ft-lb)

Tightening torque (Except sedan turbo model):
Jack-up plate to crossmember:
20 N·m (2.0 kgf-m, 14.5 ft-lb)
Stabilizer link to front transverse link:
30 N·m (3.1 kgf-m, 22 ft-lb)
Stabilizer to crossmember:
25 N·m (2.5 kgf-m, 18.1 ft-lb)

3) Install the sub frame. <Ref. to FS-16, INSTALLATION, Sub Frame.>

C: INSPECTION

1) Check the bushing for cracks, fatigue or damage.
2) Check the stabilizer link for deformities, cracks or damage, and bushing for protrusions from the hole of stabilizer link.

8. Front Crossmember

A: REMOVAL

1) Disconnect the ground terminal from battery.
2) Lift-up the vehicle and remove the front tires and wheels.
3) Remove the sub frame. <Ref. to FS-16, REMOVAL, Sub Frame.>
4) Remove both stabilizer and jack-up plate.

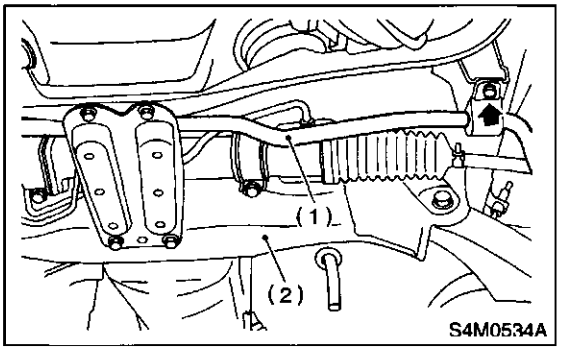

(1) Front stabilizer
(2) Front crossmember

5) Disconnect the tie-rod end from housing.
6) Remove the front exhaust pipe. (Non-turbo model) <Ref. to EX(SOHC)-5, REMOVAL, Front Exhaust Pipe.>
7) Remove the front transverse link from front crossmember and body.

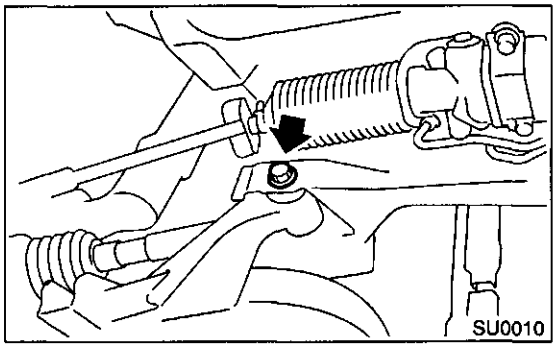

8) Remove the nuts attaching engine mount cushion rubber to crossmember.
9) Remove the steering universal joint. <Ref. to PS-26, REMOVAL, Steering Gearbox.>
10) Disconnect the power steering pipe from steering gear box.
11) Lift the engine by approx. 10 mm (0.39 in) by using a chain block.
12) Support the crossmember with a jack, remove the nuts securing crossmember to body and lower crossmember gradually along with the steering gearbox.

CAUTION:
When removing the crossmember downward, be careful that the tie-rod end does not interfere with SFJ boot.

13) Remove the steering gearbox from crossmember.

B: INSTALLATION

1) Install in the reverse order of removal.

CAUTION:
Always tighten the rubber bushing when wheels are in full contact with the ground and vehicle is curb weight.

Tightening torque:
Transverse link bushing to crossmember:
100 N·m (10.2 kgf-m, 74 ft-lb)
Stabilizer to bushing:
25 N·m (2.5 kgf-m, 18.1 ft-lb)
Tie-rod end to housing:
27.0 N·m (2.75 kgf-m, 19.9 ft-lb)
Front cushion rubber to crossmember:
85 N·m (8.7 kgf-m, 62.7 ft-lb)
Universal joint to pinion shaft:
24 N·m (2.4 kgf-m, 17.4 ft-lb)
Crossmember to body:
100 N·m (10.2 kgf-m, 74 ft-lb)

2) Purge air from the power steering system.

NOTE:
Check the wheel alignment and adjust if necessary.

C: INSPECTION

Check the crossmember for wear, damage and cracks, and correct or replace if defective.

9. General Diagnostic Table

A: INSPECTION

1. IMPROPER VEHICLE POSTURE OR IMPROPER WHEEL ARCH HEIGHT

Possible causes	Countermeasures
(1) Permanent distortion or breakage of coil spring	Replace.
(2) Unsmooth operation of damper strut and/or shock absorber	Replace.
(3) Installation of wrong strut and/or shock absorber	Replace with proper parts.
(4) Installation of wrong coil spring	Replace with proper parts.

2. POOR RIDE COMFORT

1) Large rebound shock
2) Rocking of vehicle continues too long after running over bump and/or hump.
3) Large shock in bumping

Possible causes	Countermeasures
(1) Breakage of coil spring	Replace.
(2) Overinflation pressure of tire	Adjust.
(3) Improper wheel arch height	Adjust or replace coil springs with new ones.
(4) Fault in operation of damper strut and/or shock absorber	Replace.
(5) Damage or deformation of strut mount and/or shock absorber mount	Replace.
(6) Unsuitability of maximum and/or minimum length of damper strut and/or shock absorber	Replace with proper parts.
(7) Deformation or loss of bushing	Replace.
(8) Deformation or damage of helper in strut assembly and/or shock absorber	Replace.
(9) Oil leakage of damper strut and/or shock absorber	Replace.

3. NOISE

Possible causes	Countermeasures
(1) Wear or damage of damper strut and/or shock absorber component parts	Replace.
(2) Loosening of suspension link installing bolt	Retighten to the specified torque.
(3) Deformation or loss of bushing	Replace.
(4) Unsuitability of maximum and/or minimum length of damper strut and/or shock absorber	Replace with proper parts.
(5) Breakage of coil spring	Replace.
(6) Wear or damage of ball joint	Replace.
(7) Deformation of stabilizer clamp	Replace.

REAR SUSPENSION

RS

Page

1. General Description 2
2. Wheel Alignment 9
3. Rear Stabilizer 10
4. Rear Trailing Link 11
5. Rear Strut 15
6. Lateral link 16
7. Rear Crossmember 19
8. General Diagnostic Table 20

1. General Description

A: SPECIFICATIONS

Item	Sedan		Wagon		OUTBACK
	Turbo	Non-turbo	Turbo	Non-turbo	
Camber (tolerance: ±0°45′)	−1°30′	−1°25′	−1°20′	−1°15′	−1°10′
Toe-in	-1±2 mm (-0.039±0.079 in) Each toe-in angle: ±0°07′30" (Total toe-in angle 0°±15′)				
Wheel arch height [tolerance: ±12 mm (±0.47 in)]	376 mm (14.80 in)	381 mm (15.0 in)	376 mm (14.80 in)	381 mm (15.0 in)	386 mm (15.20 in)
Thrust angle	0°±20′				
Diameter of stabilizer	20 mm (0.79 in)	13 mm (0.51 in)	17 mm (0.67 in)	13mm (0.51 in)	

NOTE:
- Front and rear toe-ins and front camber can be adjusted. If the toe-in or camber tolerance exceeds specifications, adjust the toe-in and camber to the middle value of specification.
- The other items indicated in the specification table cannot be adjusted. If the other items exceeds specifications, check the suspension parts and connections for deformities; replace with new ones as required.

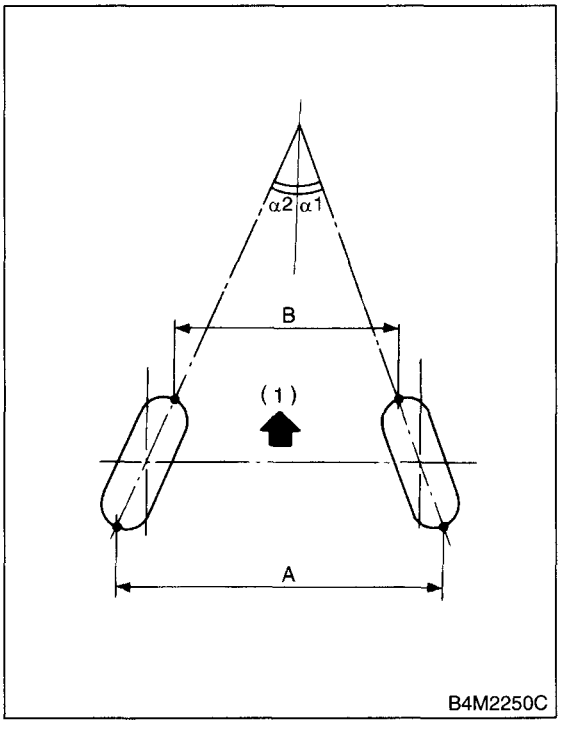

(1) Front
A – B = Positive: Toe-in, Negative: Toe-out
α1, α2: Each toe-in angle

B: COMPONENT

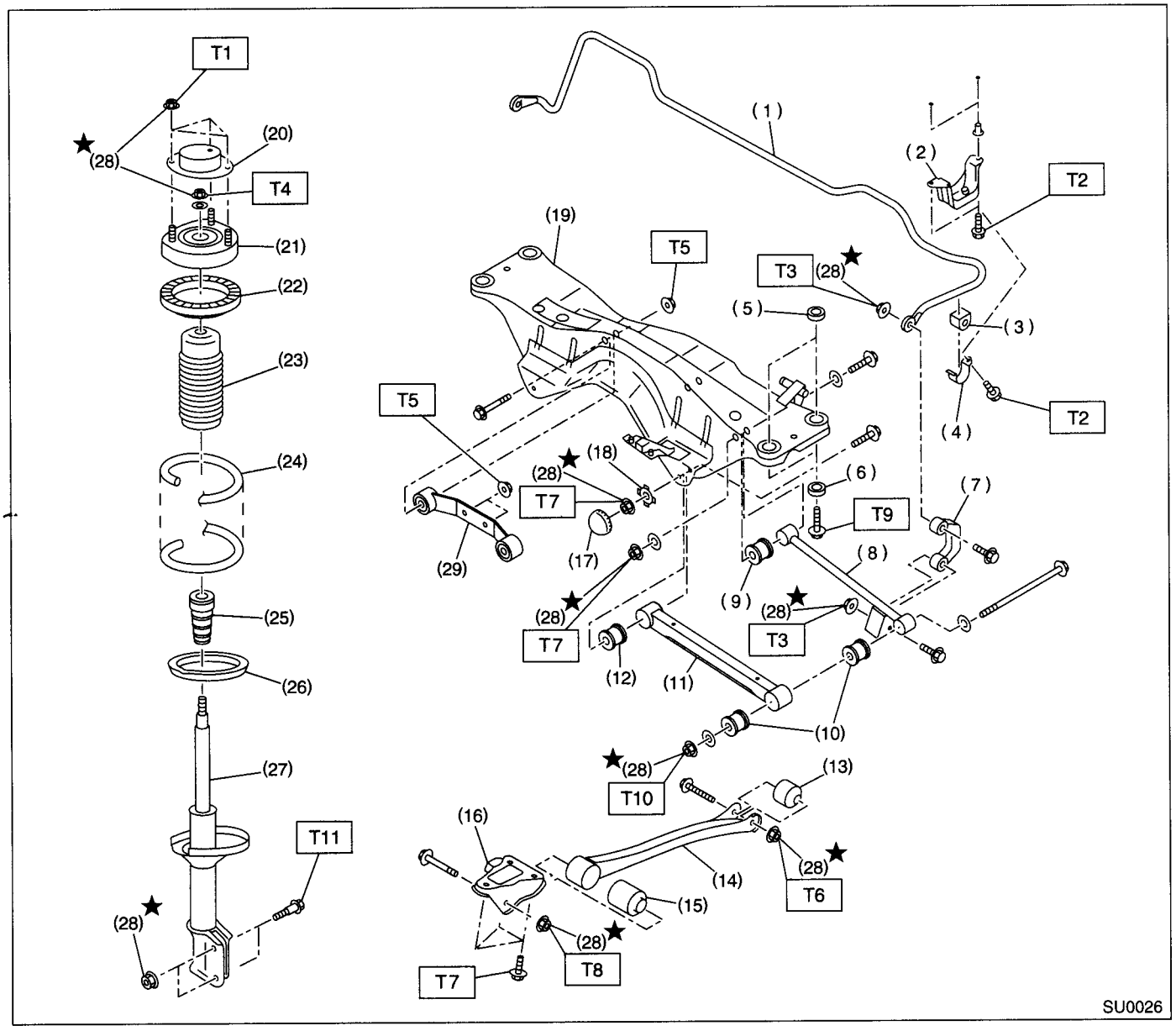
T1
(20)
★(28)
T4
(21)
(22)
(23)
(24)
(25)
(26)
(27)
T11
★(28)
(1)
(2)
T2
(19)
T5
T3
★(28)
(5)
(3)
T5
T2
(4)
★(18)
(28)
T7
(6)
(7)
T9
(17)
(29)
(8)
(9)
★(28)
T7
★(28)
T3
(12)
(11)
(10)
★(28)
T10
(13)
(16)
(14)
★(28)
T6
(15)
★(28)
T8
T7
SU0026

(1) Stabilizer
(2) Stabilizer bracket
(3) Stabilizer bushing
(4) Clamp
(5) Floating bushing
(6) Stopper
(7) Stabilizer link
(8) Rear lateral link
(9) Bushing (C)
(10) Bushing (A)
(11) Front lateral link
(12) Bushing (B)
(13) Trailing link rear bushing
(14) Trailing link
(15) Trailing link front bushing
(16) Trailing link bracket
(17) Cap (Protection)
(18) Washer
(19) Rear crossmember
(20) Strut mount cap
(21) Strut mount
(22) Rubber seat upper
(23) Dust cover
(24) Coil spring
(25) Helper
(26) Rubber seat lower
(27) Damper strut
(28) Self-locking nut
(29) Rear differential member rear

Tightening torque: N·m (kgf-m, ft-lb)	
T1:	*20 (2.0, 14.5)*
T2:	*25 (2.5, 18.1)*
T3:	*45 (4.6, 33.2)*
T4:	*55 (5.6, 41)*
T5:	*70 (7.1, 52)*
T6:	*90 (9.2, 66)*
T7:	*100 (10.2, 74)*
T8:	*115 (11.7, 85)*
T9:	*130 (13.3, 96)*
T10:	*135 (13.8, 100)*
T11:	*220 (22.4, 162)*

C: CAUTION

- Wear working clothing, including a cap, protective goggles, and protective shoes during operation.
- Remove contamination including dirt and corrosion before removal, installation or disassembly.
- Keep the disassembled parts in order and protect them from dust or dirt.
- Before removal, installation or disassembly, be sure to clarify the failure. Avoid unnecessary removal, installation, disassembly, and replacement.
- Use SUBARU genuine grease etc. or the equivalent. Do not mix grease etc. with that of another grade or from other manufacturers.
- Be sure to tighten fasteners including bolts and nuts to the specified torque.
- Place shop jacks or safety stands at the specified points.
- Apply grease onto sliding or revolution surfaces before installation.
- Before installing O-rings or snap rings, apply sufficient amount of grease to avoid damage and deformation.
- Before securing a part on a vice, place cushioning material such as wood blocks, aluminum plate, or shop cloth between the part and the vice.
- Before disposing shock absorbers, be sure to bleed gas completely. Also, do not throw away in fire.

D: PREPARATION TOOL

1. SPECIAL TOOLS

ILLUSTRATION	TOOL NUMBER	DESCRIPTION	REMARKS
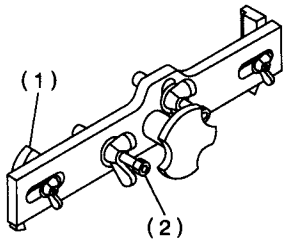 B4M2378A	927380002	ADAPTER	Used as an adapter for camber & caster gauge when measuring camber and caster. (1) 28199AC000 PLATE (2) 28199AC010 BOLT
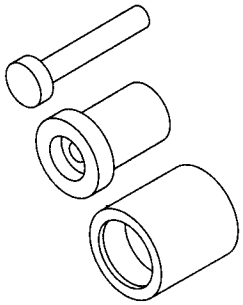 SU0014	927720000	INSTALLER & REMOVER	Used for replacing front bushing.
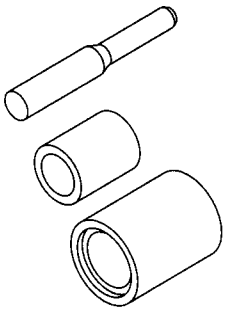 SU0015	927730000	INSTALLER & REMOVER	Used for replacing rear bushing.
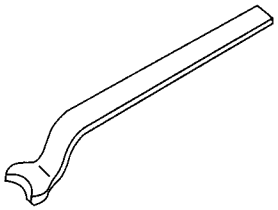 SU0016	28099PA100	REMOVER	Used for removing DOJ.

ILLUSTRATION	TOOL NUMBER	DESCRIPTION	REMARKS
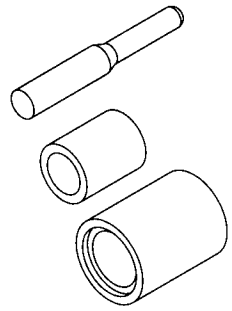 SU0015	92770000	INSTALLER & REMOVER	Used for replacing lateral link bushing.
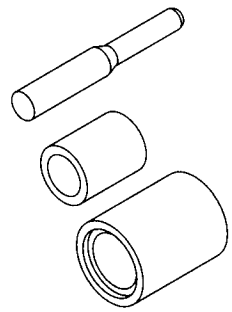 SU0015	927690000	HELPER SOCKET WRENCH	Used for replacing lateral link bushing.

2. GENERAL PURPOSE TOOLS

TOOL NAME	REMARKS
Alignment gauge	Used for wheel alignment measurement.
Turning radius gauge	Used for wheel alignment measurement.
Toe-in gauge	Used for toe-in measurement.
Transmission jack	Used for suspension assembly/disassembly.
Bearing puller	Used for removing bushings.

2. Wheel Alignment

A: INSPECTION

NOTE:
The front and rear wheel alignment must be measured and/or adjusted at once to obtain accuracy. Measure and/or adjust the rear wheel alignment together with the front. Follow the procedure in "FS" section "Wheel Alignment" for measurement and/or adjustment of wheel alignment. <Ref. to FS-8, INSPECTION, Wheel Alignment.>

3. Rear Stabilizer

A: REMOVAL

1) Jack-up the rear part of the vehicle, support it with safety stands (rigid racks).
2) Remove the bolts which secure stabilizer link to rear lateral link.

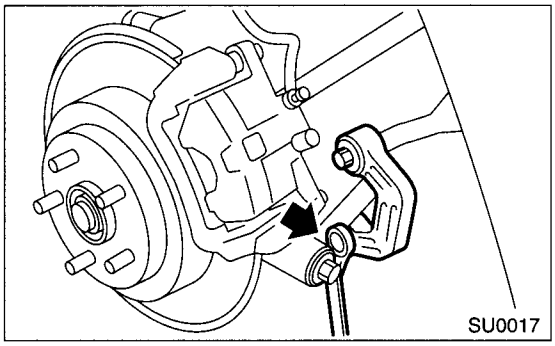

3) Remove the bolt which secures stabilizer to stabilizer bracket.

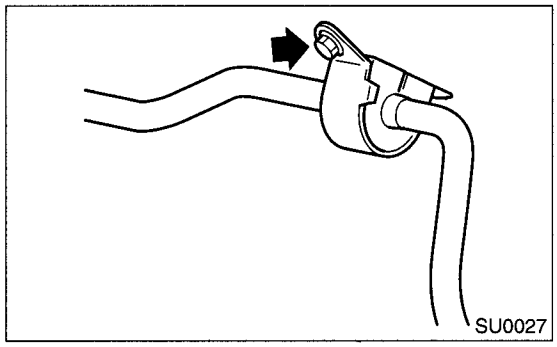

B: INSTALLATION

1) Install in the reverse order of removal.

NOTE:
- Install the bushing while aligning it with paint mark on stabilizer.
- Ensure that the bushing and stabilizer have the same identification colors when installing.

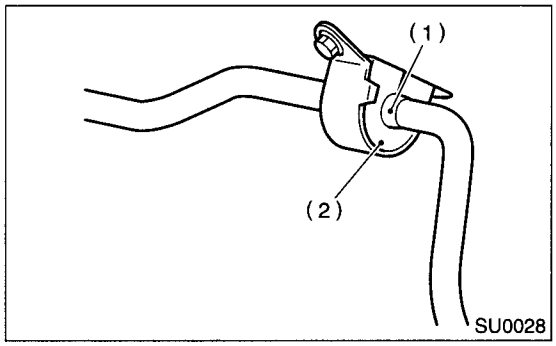

(1) Mark stamped on stabilizer
(2) Bushing identification color

2) Always tighten the rubber bushing location when wheels are in full contact with the ground and vehicle is curb weight.

Tightening torque:
Stabilizer link to rear lateral link
45 N·m (4.6 kgf-m, 33.2 ft-lb)
Stabilizer to stabilizer bracket
25 N·m (2.5 kgf-m, 18.1 ft-lb)

C: INSPECTION

1) Check the bushing for cracks, fatigue or damage.
2) Check the stabilizer links for deformities, cracks, or damage, and bushing for protrusions from the hole of stabilizer link.

4. Rear Trailing Link

A: REMOVAL

1) Loosen the rear wheel nuts.
2) Jack-up the vehicle, support it with safety stands (rigid racks) and remove the rear wheels.
3) Remove both rear parking brake clamp and ABS sensor harness. (Models equipped with ABS)
4) Remove the bolt which secures trailing link to trailing link bracket.

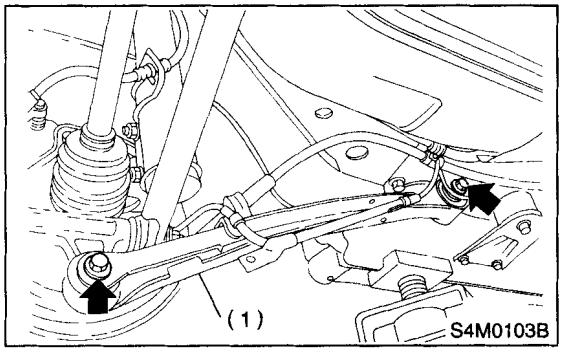

(1) Trailing link

5) Remove the bolt which secures trailing link to rear housing.

B: INSTALLATION

Install in the reverse order of removal.

CAUTION:
Always tighten the rubber bushing location when wheels are in full contact with the ground and vehicle is at curb weight condition.

NOTE:
Check the wheel alignment and adjust if necessary.

C: DISASSEMBLY

1. FRONT BUSHING

Using ST, press the front bushing out of place.
ST 927720000 INSTALLER & REMOVER SET

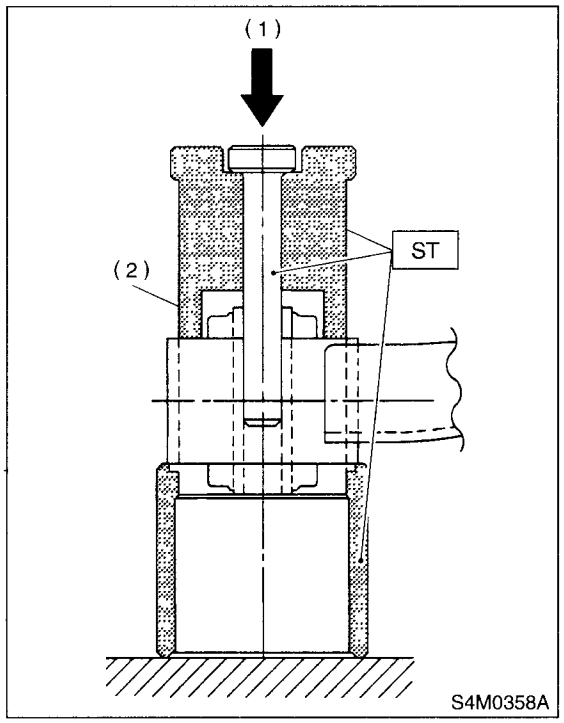

(1) Press
(2) Trailing link

2. REAR BUSHING

1) Remove the housing. <Ref. to DS-23, REMOVAL, Rear Axle.>
2) Using ST, press the rear bushing out of place.
ST 927730000 INSTALLER & REMOVER SET

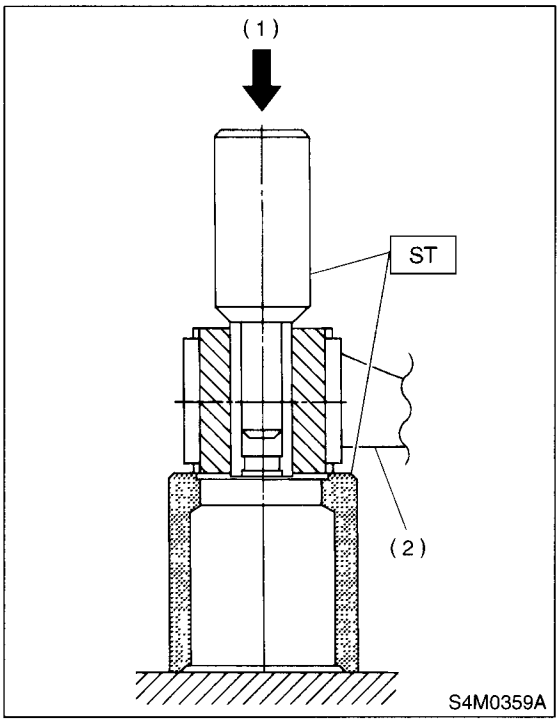

(1) Press
(2) Housing

D: ASSEMBLY

1. FRONT BUSHING

Using ST, press the bushing into trailing link.
ST 927720000 INSTALLER & REMOVER SET

CAUTION:
When installing the bushing, turn ST plunger upside down and press it until plunger end surface contacts trailing link end surface.

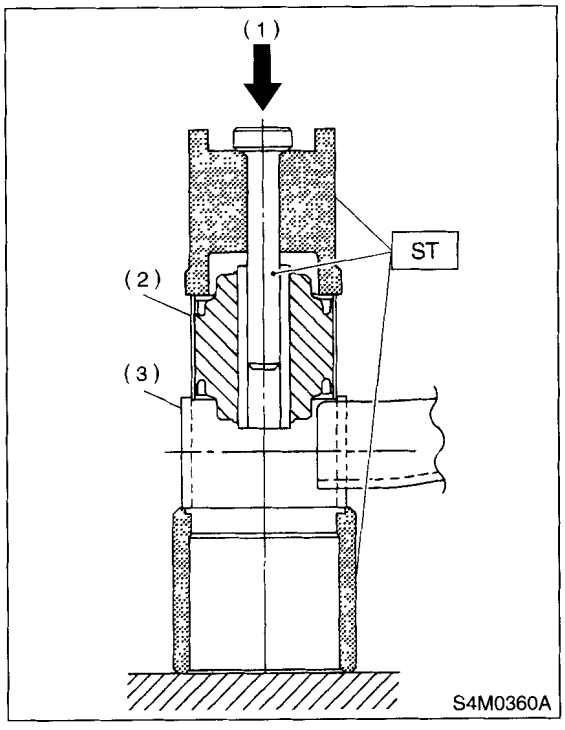

(1) Press
(2) Front bushing
(3) Trailing link

CAUTION:
Install the front bushing in proper direction, as shown in the figure.

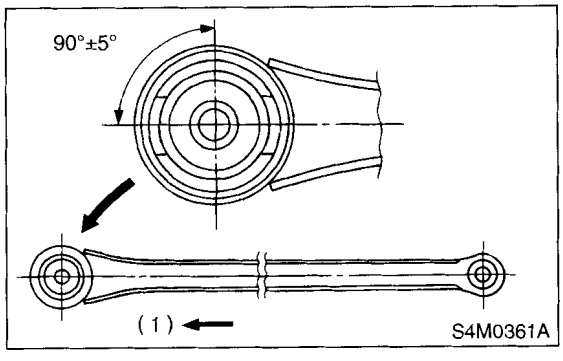

(1) Front

2. REAR BUSHING

1) Using ST, press the bushing into trailing link.
ST 927730000 INSTALLER & REMOVER SET

NOTE:
If it is difficult to press the bushing into trailing link, apply water-diluted TIRE LUBE to the inner surface of ST as a lubricant.

SPECIFIED lubricant:
TIRE LUBE : water = 1 : 3

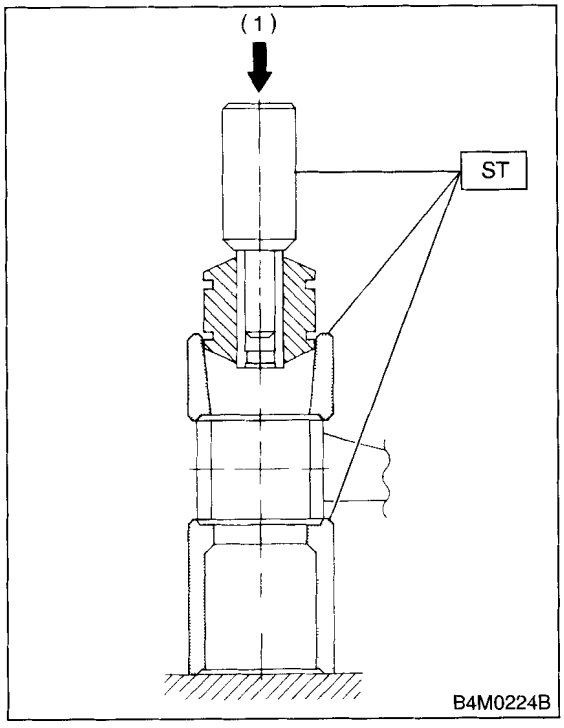

(1) Press

2) Press the ST pluger until bushing flange protrudes beyond trailing link.
ST 927730000 INSTALLER & REMOVER SET

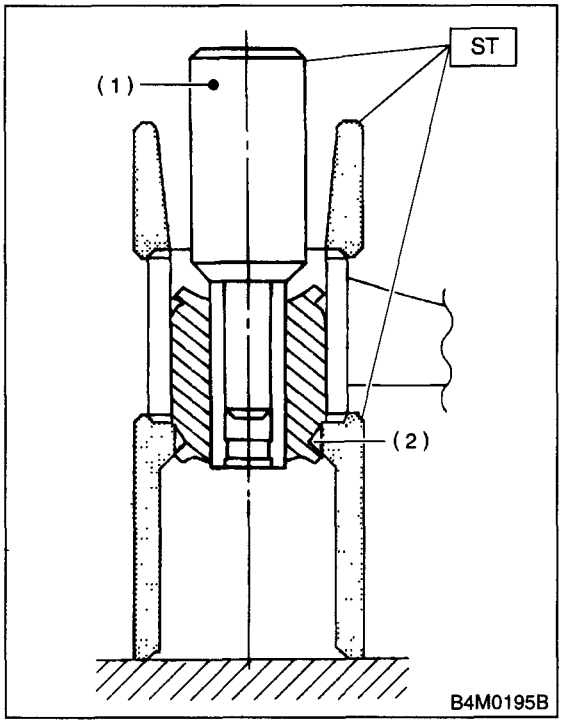

(1) Plunger
(2) Flange

3) Turn the trailing link upside down. Press the ST plunger in the direction opposite that outlines in the former procedure until bushing is correctly positioned in trailing link.
ST 927730000 INSTALLER & REMOVER SET

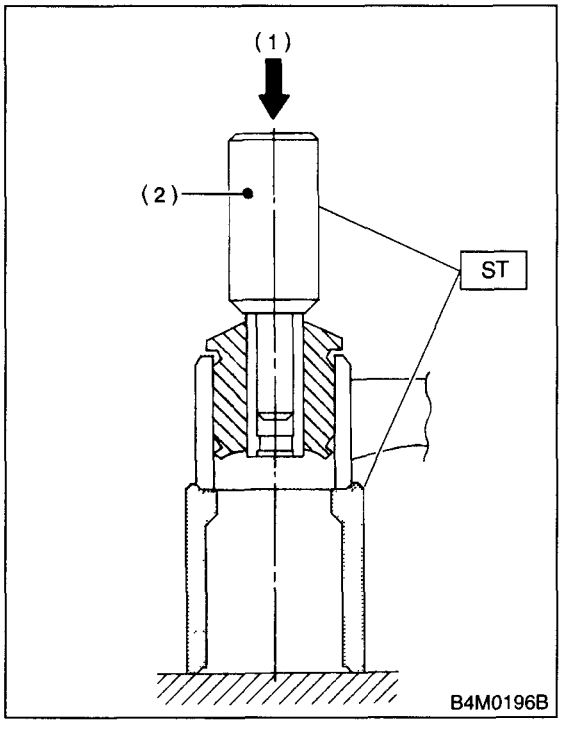

(1) Press
(2) Plunger

4) Install the housing. <Ref. to DS-26, INSTALLATION, Rear Axle.>

E: INSPECTION

Check the trailing links for bends, corrosion or damage.

5. Rear Strut

A: REMOVAL

1) Remove the rear seat cushion and backrest. (Sedan model)
2) Remove the strut cap of quarter trim. (Wagon model)
3) Loosen the rear wheel nuts.
4) Jack-up the vehicle, support it with safety stands (rigid racks) and remove the rear wheels.
5) Remove the brake hose clip and remove the brake hose from rear strut.

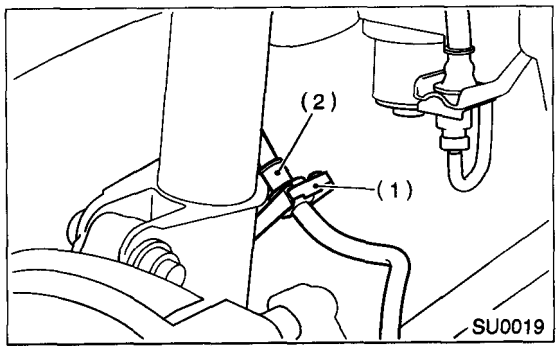

(1) Brake hose clip
(2) Brake hose

6) Remove the bolts which secure rear strut to housing.

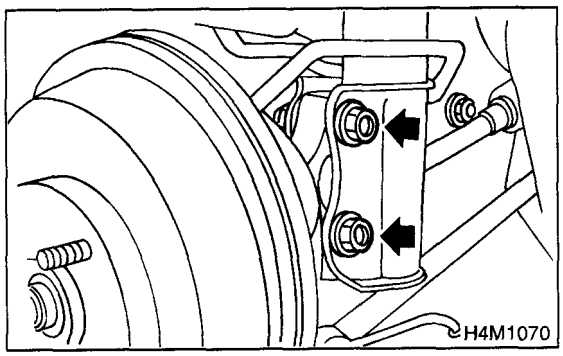

7) Remove the nuts securing strut mount to body.

B: INSTALLATION

1) Tighten the self-locking nut used to secure strut mount to car body.

CAUTION:
Discard the loosened self-locking nut, and replace with a new one.

Tightening torque:
20 N·m (2.0 kgf-m, 14.5 ft-lb)

2) Tighten the bolts which secure rear strut to housing.

Tightening torque:
220 N·m (22.4 kgf-m, 162 ft-lb)

CAUTION:
Discard the loosened self-locking nut, and replace with a new one.

3) Install the brake hose to lower side of strut, then insert brake hose clip.

CAUTION:
- **Check that the hose clip is positioned properly.**
- **Check the brake hose for twisting, or excessive tension.**
- **(Model equipped with ABS)**

Do not subject the ABS sensor harness to exces-sive tension.

4) Lower the vehicle and tighten wheel nut.

Tightening torque:
90 N·m (9.2 kgf-m, 66 ft-lb)

5) Sedan model:
Install the rear seat backrest and rear seat cushion.
Wagon model:
Install the strut cap to rear quarter trim.

NOTE:
Check wheel alignment and adjust if necessary.

C: DISASSEMBLY

For disassembly of rear strut, refer to procedures outlined under front strut as a guide. <Ref. to FS-21, DISASSEMBLY, Front Strut.>

D: ASSEMBLY

Refer to Front Strut as a guide for assembly procedures.
<Ref. to FS-22, ASSEMBLY, Front Strut.>

E: INSPECTION

Refer to Front Strut as a guide for inspection procedures.
<Ref. to FS-23, INSPECTION, Front Strut.>

F: DISPOSAL

Refer to Front Strut as a guide for disposal procedures.<Ref. to FS-23, DISPOSAL, Front Strut.>

6. Lateral link

A: REMOVAL

1) Loosen the wheel nuts. Lift-up the vehicle and remove wheel.
2) Remove the stabilizers. (Turbo model)
3) Remove the ABS sensor harness from trailing link.
(Models eqipped with ABS)
4) Remove the bolt securing trailing link to housing.

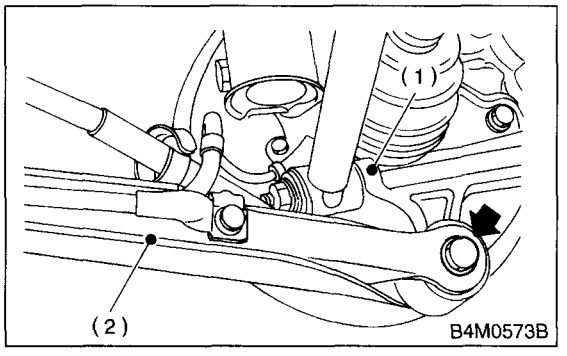

(1) Rear housing
(2) Trailing link

5) Remove the bolts which secure lateral link assembly to rear housing.
6) Remove the DOJ from rear differential using ST.
ST 28099PA100 DRIVE SHAFT REMOVER

NOTE:
The side spline shaft circlip comes out together with the shaft.

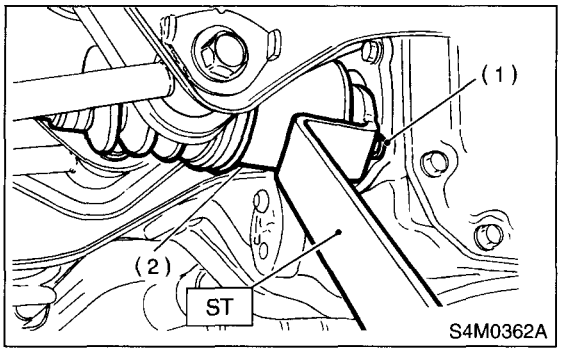

(1) Bolt
(2) DOJ

CAUTION:
Be careful not to damage the side bearing retainer. Always use bolt shown in figure, as supporting point for ST during removal.

7) Scribe an alignment mark on the rear lateral link adjusting bolt and crossmember.
8) Remove the bolts securing front and rear lateral links to crossmember, detach lateral links.

CAUTION:
To loosen the adjusting bolt, always loosen the nut while holding the head of adjusting bolt.

B: INSTALLATION

Install in the reverse order of removal. Observe the following instructions.
• Installation of DOJ to differential:<Ref. to DS-40, INSTALLATION, Rear Drive Shaft.>

CAUTION:
- **Do not allow the DOJ splines to damage side oil seal.**
- **Always tighten the rubber bushing location when wheels are in full contact with the ground and vehicle is curb weight.**
- **Tighten the nut when installing adjusting bolt.**
- **Replace the self-locking nut and DOJ circlip with new ones.**

NOTE:
Check the wheel alignment and adjust if necessary.

C: DISASSEMBLY

Using ST, press the bushing out of place.

NOTE:
• Using the following table as a guide, verify the type of bushings.
• Select the ST according to the type of bushings used.

Bushing	ST:INSTALLER & REMOVER SET
Bushing A	927700000
Bushing B	927690000
Bushing C	927700000

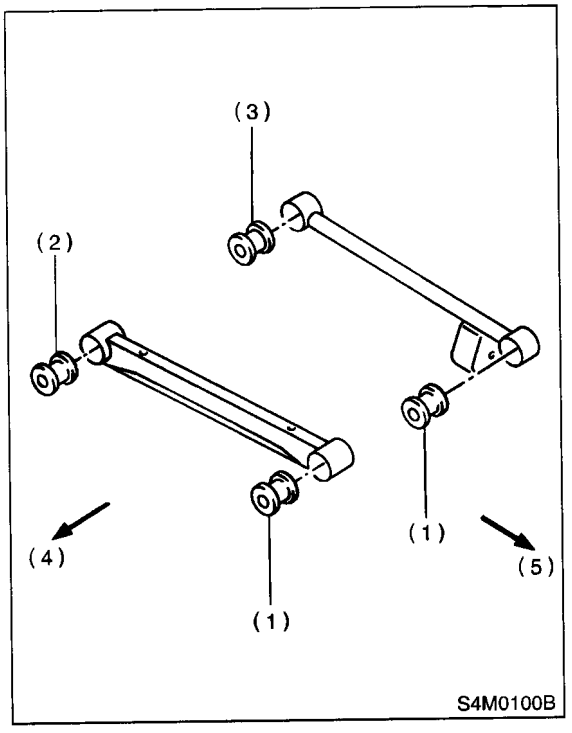

(1) Bushing A
(2) Bushing B
(3) Bushing C
(4) Front
(5) Outside of body

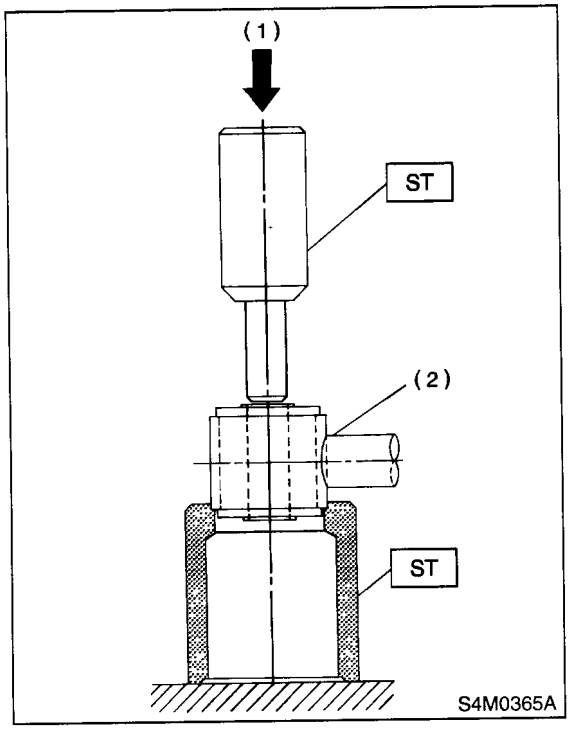

(1) Press
(2) Lateral link

D: ASSEMBLY

1) Using ST, press the bushing into place.

CAUTION:
Select the ST according to the type of bushings used.

NOTE:
- Use the same ST as that used during disassembly.
- If it is difficult to press the bushing into trailing link, apply water-diluted TIRE LUBE to the inner surface of ST as a lubricant.

Specified lubricant:
TIRE LUBE : water = 1 : 3

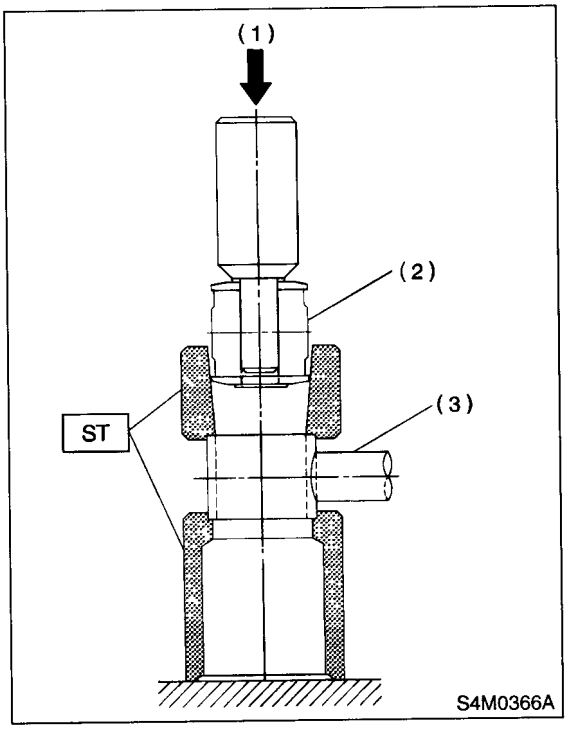

(1) Press
(2) Bushing
(3) Lateral link

2) Press the ST plunger until bushing flange protrudes beyond lateral link.

NOTE:
Use the same ST as that used during disassembly.

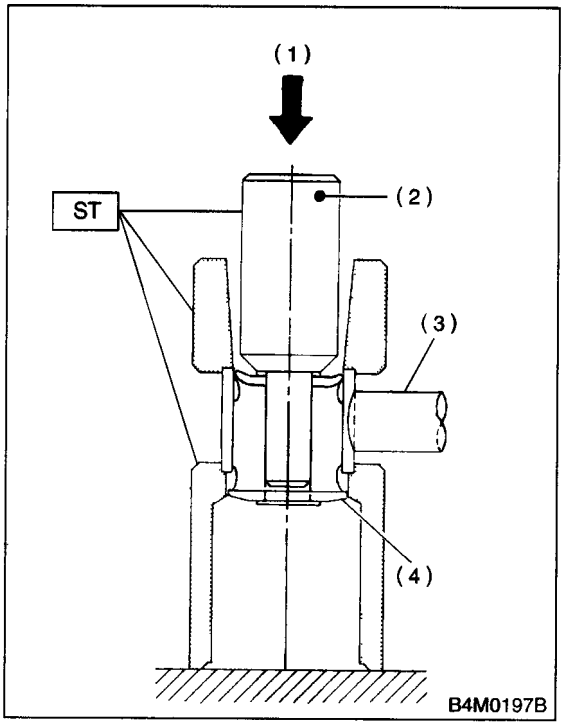

(1) Press
(2) Plunger
(3) Lateral link
(4) Flange

3) Turn the lateral link upside down. Press the ST plunger in the direction opposite that outlined in the former procedure until bushing is correctly positioned in trailing link.

NOTE:
Using the same ST as that used during dissassembly.

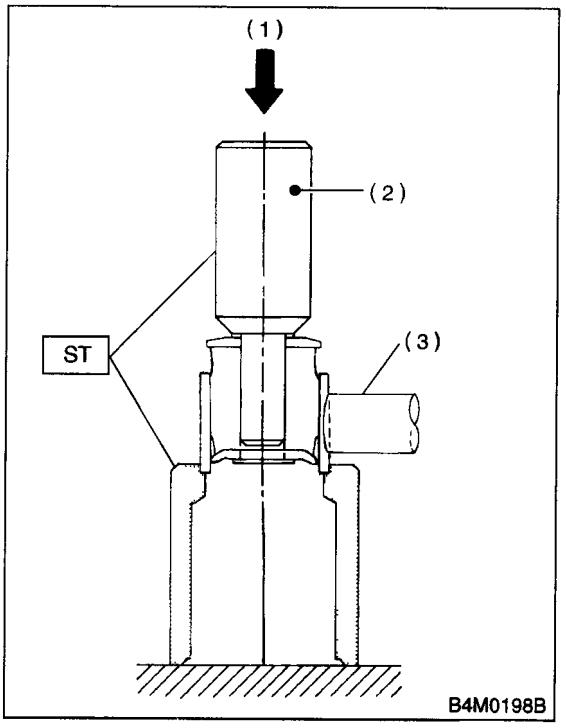

(1) Press
(2) Plunger
(3) Lateral link

E: INSPECTION

Visually check the lateral links for damage or bends.

7. Rear Crossmember

A: REMOVAL

CAUTION:
Do not subject the ABS sensor harness to excessive tension. (Models equipped with ABS)

1) Separate the front exhaust pipe and rear exhaust pipe.
2) Remove the rear exhaust pipe and muffler.
3) Remove the rear differential.
<Ref. to DI-19, REMOVAL, Rear Differential.>
4) Place a transmission jack under rear crossmember.

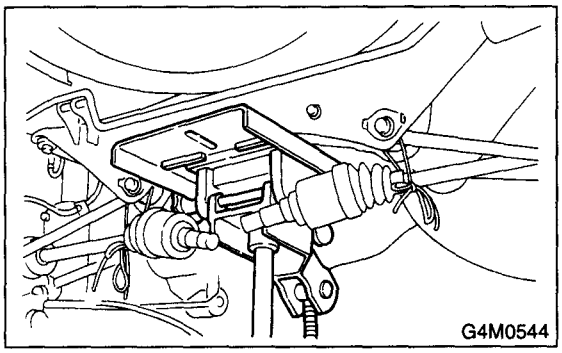

5) Remove the bolts securing crossmember to vehicle body, and remove the crossmember.

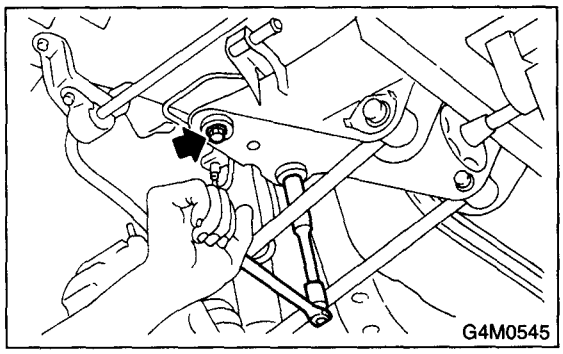

6) Scribe an alignment mark on the rear lateral link cam bolt and crossmember.
7) Remove the front and rear lateral links by loosening nuts.

B: INSTALLATION

1) Install in the reverse order of removal.
2) For installation and tightning torque of rear differential:
<Ref. to DI-20, INSTALLATION, Rear Differential.>
3) Always tighten the rubber bushing when wheels are in full contact with the ground and vehicle is curb weight.

NOTE:
Check the wheel alignment and adjust if necessary.

C: INSPECTION

Check the removed parts for wear, damage and cracks, and correct or replace if defective.

8. General Diagnostic Table

A: INSPECTION

1. IMPROPER VEHICLE POSTURE OR IMPROPER WHEEL ARCH HEIGHT

Possible causes	Countermeasures
(1) Permanent distortion or breakage of coil spring	Replace.
(2) Unsmooth operation of damper strut and/or shock absorber	Replace.
(3) Installation of wrong strut and/or shock absorber	Replace with proper parts.
(4) Installation of wrong coil spring	Replace with proper parts.

2. POOR RIDE COMFORT

1) Large rebound shock
2) Rocking of vehicle continues too long after running over bump and/or hump.
3) Large shock in bumping

Possible causes	Countermeasures
(1) Breakage of coil spring	Replace.
(2) Overinflation pressure of tire	Adjust.
(3) Improper wheel arch height	Adjust or replace coil springs with new ones.
(4) Fault in operation of damper strut and/or shock absorber	Replace.
(5) Damage or deformation of strut mount and/or shock absorber mount	Replace.
(6) Unsuitability of maximum and/or minimum length of damper strut and/or shock absorber	Replace with proper parts.
(7) Deformation or loss of bushing	Replace.
(8) Deformation or damage of helper in strut assembly and/or shock absorber	Replace.
(9) Oil leakage of damper strut and/or shock absorber	Replace.

3. NOISE

Possible causes	Countermeasures
(1) Wear or damage of damper strut and/or shock absorber component parts	Replace.
(2) Loosening of suspension link installing bolt	Retighten to the specified torque.
(3) Deformation or loss of bushing	Replace.
(4) Unsuitability of maximum and/or minimum length of damper strut and/or shock absorber	Replace with proper parts.
(5) Breakage of coil spring	Replace.
(6) Wear or damage of ball joint	Replace.
(7) Deformation of stabilizer clamp	Replace.

WHEEL AND TIRE SYSTEM

WT

Page

1. General Description 2
2. Tire 4
3. Steel Wheel 5
4. Aluminum Wheel 6
5. Wheel Balancing 7
6. "T-type" Tire 8
7. Full Wheel Cap 9
8. General Diagnostics Table 10

1. General Description

A: SPECIFICATIONS

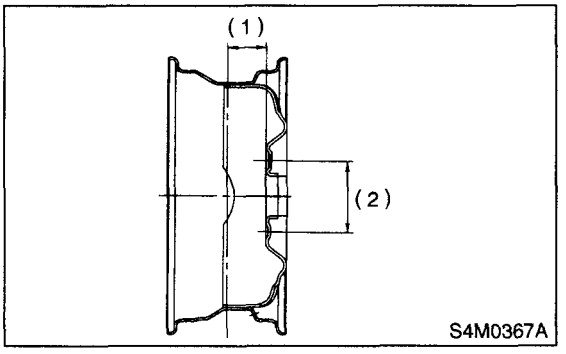

(1) Offset
(2) P.C.D.

	Tire size	Rim size	Rim offset mm (in)	P.C.D. mm (in)
Front and rear	P195/60R15 87H	15 × 6JJ	55 (2.17)	100 (3.94) Dia.
	P205/55 R16 89V	16 × 6 1/2JJ		
	215/45 R17 87W	17 × 7JJ		
T-Type tire	T135/70 D16 100M	16 × 4T	50 (1.97)	

	Tire size	Tire inflation pressure kPa (kg/cm^2, psi)
Front and rear	P195/60 R15 87H	Fr: 220 (2.2, 32) Rr: 200 (2.0, 29)
	P205/55 R16 89V	Fr: 220 (2.2, 32) Rr: 200 (2.0, 29)
	215/45 R17 87W	Fr: 230 (2.3, 33) Rr: 220 (2.2, 32)
T-Type tire	T135/70 D16 100M	420 (4.2, 60)

NOTE:
- "T-type" tire for temporary use is supplied as a spare tire.

1. SERVICE DATA

Item	Axial runout	Radial runout
Steel wheel	1.5 mm (0.059 in)	
Aluminum wheel	1.0 mm (0.039 in)	

2. ADJUSTING PARTS

Wheel balancing	Standard	Service limit
Dynamic unbalance	Less than 5 g (0.18 oz)	

Balance weight part number (For steel wheel)	Weight
723141290	5 g (0.18 oz)
723141300	10 g (0.35 oz)
723141310	15 g (0.53 oz)
723141320	20 g (0.71 oz)
723141330	25 g (0.88 oz)
723141340	30 g (1.06 oz)
723141350	35 g (1.23 oz)
723141360	40 g (1.41 oz)
723141370	45 g (1.59 oz)
723241380	50 g (1.76 oz)
723241580	55 g (1.94 oz)
723241590	60 g (2.12 oz)

Balance weight part number (For aluminum wheel)	Weight
23141GA462	5 g (0.18 oz)
23141GA472	10 g (0.35 oz)
23141GA482	15 g (0.53 oz)
23141GA492	20 g (0.71 oz)
23141GA502	25 g (0.88 oz)
23141GA512	30 g (1.06 oz)
23141GA522	35 g (1.23 oz)
23141GA532	40 g (1.41 oz)
23141GA542	45 g (1.59 oz)
23141GA552	50 g (1.76 oz)
—	55 g (1.94 oz)
23141GA572	60 g (2.12 oz)

B: PREPARATION TOOL

1. GENERAL PURPOSE TOOLS

TOOL NAME	REMARKS
Air pressure gauge	Used for measuring tire air pressure.
Dial gauge	Used for measuring wheel runout.

2. Tire

A: INSPECTION

1) Take stone, glass, nail etc. off the tread groove.
2) Replace the tire:

CAUTION:
- **When replacing a tire, make sure to use only the same size, construction and load range as originally installed.**
- **Avoid mixing radial, belted bias or bias tires on the vehicle.**

(1) when large crack on side wall, damage or crack on tread is found.
(2) when the "tread wear indicator" appears as a solid band across the tread.

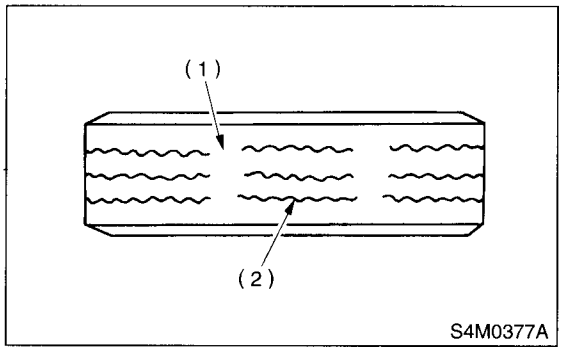

(1) Tread wear indicator
(2) Tire tread

1. TIRE ROTATION

If tires are maintained at the same positions for a long period of time, uneven wear results. Therefore, they should be periodically rotated.
This lengthens service life of tires.

CAUTION:
When rotating tires, replace unevenly worn or damaged tires with new ones.

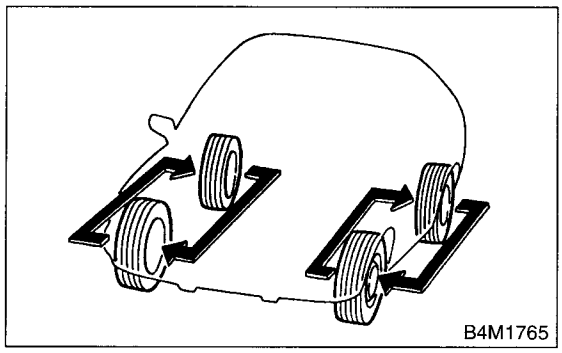

3. Steel Wheel

A: REMOVAL

1) Apply the parking brake, and position select lever to "P" or "LOW".
2) Set the shop jacks or a lift to the specified point, and support the vehicle with its wheels slightly contacting the floor.
3) Loosen the wheel nuts.
4) Raise the vehicle until its wheels take off the ground using a jack or a lift.
5) Remove the wheel nuts and wheels.

NOTE:
• While removing the wheels, prevent hub bolts from damage.

NOTE:
• Place the wheels with their outer sides facing upward to prevent wheels from damage.

B: INSTALLATION

1) Attach the wheel to the hub by aligning the wheel bolt hole with the hub bolt.
2) Temporarily attach the wheel nuts to the hub bolts. (In the case of aluminum wheel, use SUBARU genuine wheel nut for aluminum wheel.)
3) Manually tighten the nuts making sure the wheel hub hole is aligned correctly to the guide portion of hub.
4) Tighten the wheel nuts in a diagonal selection to the specified torque. Use a wheel nut wrench.

Wheel nut tightening torque:
90 N·m (9.1 kgf-m, 65.7 ft-lb)

CAUTION:
• Tighten the wheel nuts in two or three steps by gradually increasing the torque and working diagonally, until the specified torque is reached. For drum brake models, excess tightening of wheel nuts may cause wheels to "judder".
• Do not depress the wrench with a foot; Always use both hands when tightening.
• Make sure the bolt, nut and the nut seating surface of the wheel are free from oils.

5) If a wheel is removed for replacement or for repair of a puncture, retighten the wheel nuts to the specified torque after running 1,000 km (600 miles).

C: INSPECTION

1) Deformation or damage on the rim can cause air leakage. Check the rim flange for deformation, crack or damage, and repair or replace as necessary.
2) Jack-up the vehicle until wheels clear the floor.
3) Slowly rotate the wheel to check rim "runout" using a dial gauge.

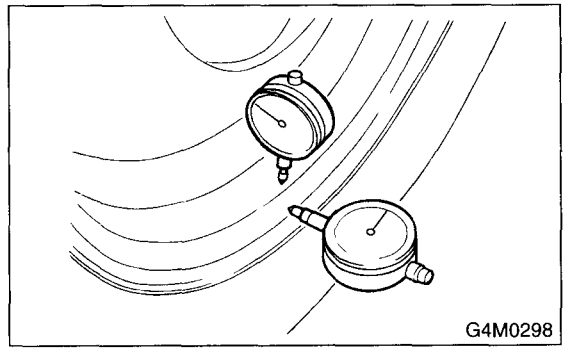

Axial runout limit	Radial runout limit
1.5 mm (0.059 in)	

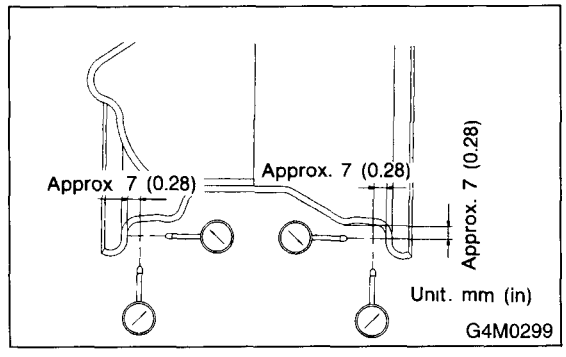

4) If the rim runout exceeds specifications, remove the tire from rim and check runout while attaching dial gauge to positions shown in figure.
5) If the measured runout still exceeds specifications, replace the wheel.

4. Aluminum Wheel

A: REMOVAL

Refer to Steel Wheel for removal procedure of aluminum wheels. <Ref. to WT-5, REMOVAL, Steel Wheel.>

B: INSTALLATION

Refer to Steel Wheel for installation procedure of aluminum wheels.<Ref. to WT-5, INSTALLATION, Steel Wheel.>

C: INSPECTION

Refer to Steel Wheel for inspection procedure of aluminum wheels. <Ref. to WT-5, INSPECTION, Steel Wheel.>

Rim runout:

Axial runout limit	Radial runout limit
1.0 mm (0.039 in)	

D: CAUTION

Aluminum wheels are easily scratched. To maintain their appearance and safety, do the following:
1) Do not damage the aluminum wheels during removal, disassembly, installation, wheel balancing, etc. After removing the aluminum wheels, place them on a rubber mat, etc.
2) While the vehicle is being driven, be careful not to ride over sharp obstacles or allow aluminum wheels to contact the shoulder of the road.
3) When installing a tire chain, be sure to install it properly not to have a slack; otherwise it may hit the wheel while driving.
4) When washing the aluminum wheel, use neutral synthetic detergent and water. Avoid using the cleanser including abrasive, hard brushes or an automatic car washer.

5. Wheel Balancing

A: REPLACEMENT

1) Remove the balance weights.
2) Using the dynamic balancing, measure wheel balance.
3) Select a weight close to the value measured by dynamic balancing.

Balance weight part number (For steel wheel)	Weight
723141290	5 g (0.18 oz)
723141300	10 g (0.35 oz)
723141310	15 g (0.53 oz)
723141320	20 g (0.71 oz)
723141330	25 g (0.88 oz)
723141340	30 g (1.06 oz)
723141350	35 g (1.23 oz)
723141360	40 g (1.41 oz)
723141370	45 g (1.59 oz)
723241380	50 g (1.76 oz)
723241580	55 g (1.94 oz)
723241590	60 g (2.12 oz)

Balance weight part number (For aluminum wheel)	Weight
23141GA462	5 g (0.18 oz)
23141GA472	10 g (0.35 oz)
23141GA482	15 g (0.53 oz)
23141GA492	20 g (0.71 oz)
23141GA502	25 g (0.88 oz)
23141GA512	30 g (1.06 oz)
23141GA522	35 g (1.23 oz)
23141GA532	40 g (1.41 oz)
23141GA542	45 g (1.59 oz)
23141GA552	50 g (1.76 oz)
—	55 g (1.94 oz)
23141GA572	60 g (2.12 oz)

4) Install the selected weight to the point designated by dynamic balancing.
5) Using the dynamic balancing, measure wheel balance again. Check that wheel balance is correctly adjusted.

B: INSPECTION

1) Proper wheel balance may be lost if the tire is repaired or if it wears. Check the tire for dynamic balance, and repair as necessary.
2) To check for dynamic balance, use a dynamic balancer. Drive in the balance weight on both the top and rear sides of the rim.
3) Some types of balancer can cause damage to the wheel. Use an appropriate balancer when adjusting the wheel balance.
4) Use genuine balance weights.

CAUTION:
- **55 g (1.94 oz) weight used with aluminum wheel is not available.**
- **Balance weights are available for use with any of 14- to 16-inch wheels.**

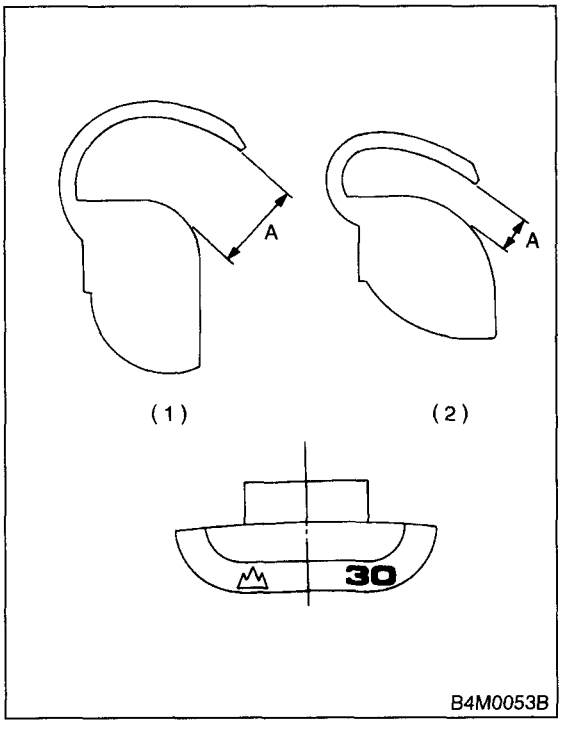

(1) Weight for aluminum wheel
(2) Weight for steel wheel

Service limit: A
Weight for steel wheel;
2.16 mm (0.085 in)
Weight for aluminum wheel;
4.5 mm (0.177 in)

6. "T-type" Tire

A: NOTE

"T-type" tire for temporary use is prepared as a spare tire.

CAUTION:

- **Do not use a tire chain with the "T-type" tire. Because of the smaller tire size, a tire chain will not fit properly and will result in damage to the vehicle and the tire.**
- **Do not drive at a speed greater than 80 km/h (50 MPH).**
- **Drive as slowly as possible and avoid passing over bumps.**

B: REPLACEMENT

Refer to Removal and Installation of Steel Wheel for removal/installation of "T-type" tires. <Ref. to WT-5, Steel Wheel.>

CAUTION:

Replace with a conventional tire as soon as possible since the "T-type" tire is only for temporary use.

C: INSPECTION

1) Check the tire inflation pressure.

Specification:

420 kPa (4.2 kg/cm^2, 60 psi)

2) Take the stones, glass, nails, etc. out of the tread groove.

3) Check the tires for deformation, cracks, partial wear, or wear.

CAUTION:

Replace the tire with a new one.

7. Full Wheel Cap

A: REMOVAL

Pry off the full wheel cap with a wheel cap remover inserted between openings in the cap.

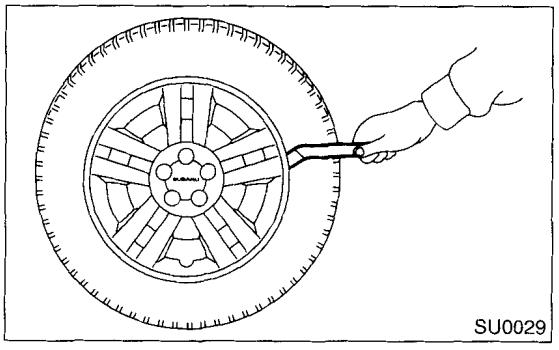

B: INSTALLATION

Align the valve hole in the wheel cap with the valve on the wheel and secure the wheel cap by tapping four points by hand.

C: INSPECTION

1) Check the wheels for missing wheel caps.
2) Check the pawls of wheel caps for damage or bend.
3) Check the wheel caps for cracks.

8. General Diagnostics Table

A: INSPECTION

Symptom	Possible cause	Remedy
Front wheel shimmy	• Worn or improperly inflated of tire.	Replace
	• Wheel is out of balance.	Adjustment
Abnormal tire wear	• Improperly inflated of tire.	Replace
Sways/pitches	• Worn or improperly inflated of tire.	Replace
Wander/pulls	• Worn or improperly inflated of tire.	Replace

DIFFERENTIALS

DI

		Page
1.	General Description	2
2.	Differential Gear Oil	17
3.	Front Differential	18
4.	Rear Differential	19
5.	Rear Differential Front Oil Seal	35
6.	Rear Differential Side Oil Seal	37
7.	Rear Differential Member	40
8.	General Diagnostic Table	41

1. General Description

A: SPECIFICATIONS

MODEL	Non-Turbo				Turbo	
	MT		AT			
	Wagon	Sedan	Wagon	Sedan	MT	AT
Rear differential type	EG	EH		EL	EF (with LSD)	EJ (with LSD)
Type of gear	Hypoid gear					
Gear ratio (Number of gear teeth)	3.900 (39/10)	4.111 (37/9)		4.444 (40/9)	3.545 (39/11)	4.111 (37/9)
Oil capacity	0.8 ℓ (0.8 US qt, 0.7 Imp qt)					
Rear differential gear oil	GL-5					

• Identification

When replacing a rear differential assembly, select the correct one according to the following figure.

CAUTION:

Using the different rear differential assembly causes the drive line and tires to "drag" or emit abnormal noise when AWD is selected.

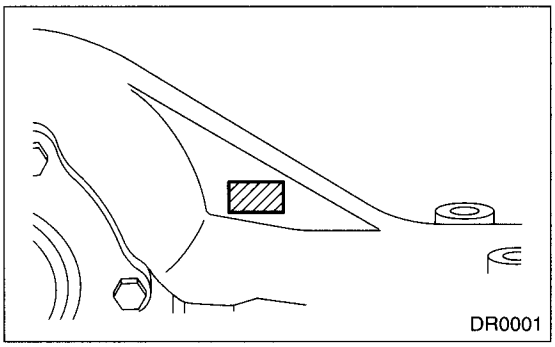

• Rear differential gear oil

Recommended oil

CAUTION:

Each oil manufacturer has its base oil and additives. Thus, do not mix two or more brands.

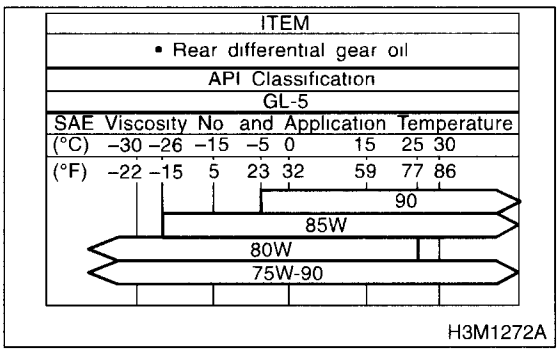

1. SERVICE DATA

Front and rear bearing preload at companion flange bolt hole N (kgf, lb)	New bearing	19.6 — 28.4 (2.0 — 2.9, 4.4 — 6.4)
	Used bearing	8.34 — 16.67 (0.85 — 1.7, 1.87 — 3.75)
Side gear backlash mm (in)		0.10 — 0.20 (0.0039 — 0.0079)
Side bearing standard width mm (in)		20.00 (0.7874)
Crown gear to drive pinion backlash mm (in)		0.10 — 0.20 (0.0039 — 0.0079)
Crown gear runout on its back surface mm (in)		Less than 0.05 (0.0020)

2. ADJUSTING PARTS

Front and rear bearing preload at companion flange bolt hole	New bearing	19.6 — 28.4 N (2.0 — 2.9 kgf, 4.4 — 6.4 lb)
	Used bearing	8.34 — 16.67 N (0.85 — 1.7 kgf, 1.87 — 3.75 lb)
Preload adjusting spacer	Part No.	Length
	383695201	56.2 mm (2.213 in)
	383695202	56.4 mm (2.220 in)
	383695203	56.6 mm (2.228 in)
	383695204	56.8 mm (2.236 in)
	383695205	57.0 mm (2.244 in)
	383695206	57.2 mm (2.252 in)

Preload adjusting washer	Part No.	Length
	383705200	2.59 mm (0.1020 in)
	383715200	2.57 mm (0.1012 in)
	383725200	2.55 mm (0.1004 in)
	383735200	2.53 mm (0.0996 in)
	383745200	2.51 mm (0.0988 in)
	383755200	2.49 mm (0.0980 in)
	383765200	2.47 mm (0.0972 in)
	383775200	2.45 mm (0.0965 in)
	383785200	2.43 mm (0.0957 in)
	383795200	2.41 mm (0.0949 in)
	383805200	2.39 mm (0.0941 in)
	383815200	2.37 mm (0.0933 in)
	383825200	2.35 mm (0.0925 in)
	383835200	2.33 mm (0.0917 in)
	383845200	2.31 mm (0.0909 in)
Pinion height adjusting shim	Part No.	Thickness
	383495200	3.09 mm (0.1217 in)
	383505200	3.12 mm (0.1228 in)
	383515200	3.15 mm (0.1240 in)
	383525200	3.18 mm (0.1252 in)
	383535200	3.21 mm (0.1264 in)
	383545200	3.24 mm (0.1276 in)
	383555200	3.27 mm (0.1287 in)
	383565200	3.30 mm (0.1299 in)
	383575200	3.33 mm (0.1311 in)
	383585200	3.36 mm (0.1323 in)
	383595200	3.39 mm (0.1335 in)
	383605200	3.42 mm (0.1346 in)
	383615200	3.45 mm (0.1358 in)
	383625200	3.48 mm (0.1370 in)
	383635200	3.51 mm (0.1382 in)
	383645200	3.54 mm (0.1394 in)
	383655200	3.57 mm (0.1406 in)
	383665200	3.60 mm (0.1417 in)
	383675200	3.63 mm (0.1429 in)
	383685200	3.66 mm (0.1441 in)
Side gear backlash	0.1 — 0.2 mm (0.0039 — 0.0079 in)	
Side gear thrust washer (Non-Turbo model)	Part No.	Thickness
	383445201	0.75 — 0.80 mm (0.0295 — 0.0315 in)
	383445202	0.80 — 0.85 mm (0.0315 — 0.0335 in)
	383445203	0.85 — 0.90 mm (0.0335 — 0.0354 in)
Side bearing standard width	—	20.00 mm (0.7874 in)
Side bearing retainer shim	Part No.	Thickness
	383475201	0.20 mm (0.0079 in)
	383475202	0.25 mm (0.0098 in)
	383475203	0.30 mm (0.0118 in)
	383475204	0.40 mm (0.0157 in)
	383475205	0.50 mm (0.0197 in)
Crown gear to drive pinion backlash	Limit	0.10 — 0.20 mm (0.0039 — 0.0079 in)
Crown gear runout on its back sunface		0.05 mm (0.0020 in)

B: COMPONENT

1. REAR DIFFERENTIAL WITHOUT LSD

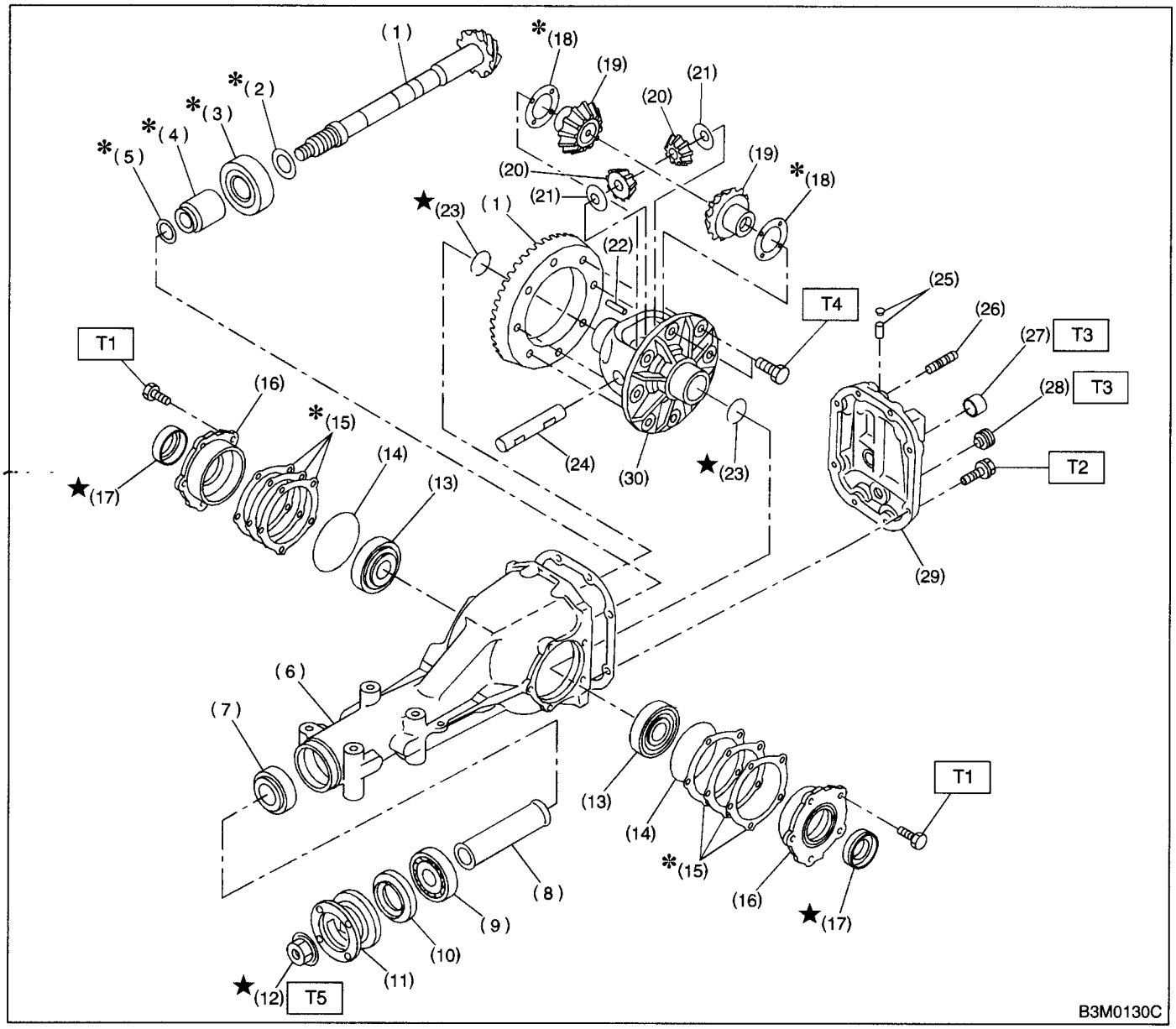

(1)	Pinion crown gear set	(13)	Side bearing	(25)	Air breather cap
(2)	Pinion height adjusting washer	(14)	O-ring	(26)	Stud bolt
(3)	Rear bearing	(15)	Side bearing retainer shim	(27)	Oil filler plug
(4)	Bearing preload adjusting spacer	(16)	Side bearing retainer	(28)	Oil drain plug
(5)	Bearing preload adjusting washer	(17)	Side oil seal	(29)	Rear cover
(6)	Differential carrier	(18)	Side gear thrust washer	(30)	Differential case
(7)	Front bearing	(19)	Side gear		
(8)	Spacer	(20)	Pinion mate gear		
(9)	Pilot bearing	(21)	Pinion mate gear washer		
(10)	Front oil seal	(22)	Pinion shaft lock pin		
(11)	Companion flange	(23)	Circlip		
(12)	Self-locking nut	(24)	Pinion mate shaft		

Tightening torque: N·m (kgf-m, ft-lb)

T1: 10.3 (1.05, 7.6)
T2: 29.4 (3.00, 21.7)
T3: 49.0 (5.0, 36.2)
T4: 103.0 (10.50, 75.9)
T5: 181.4 (18.50, 133.8)

2. REAR DIFFERENTIAL WITH LSD

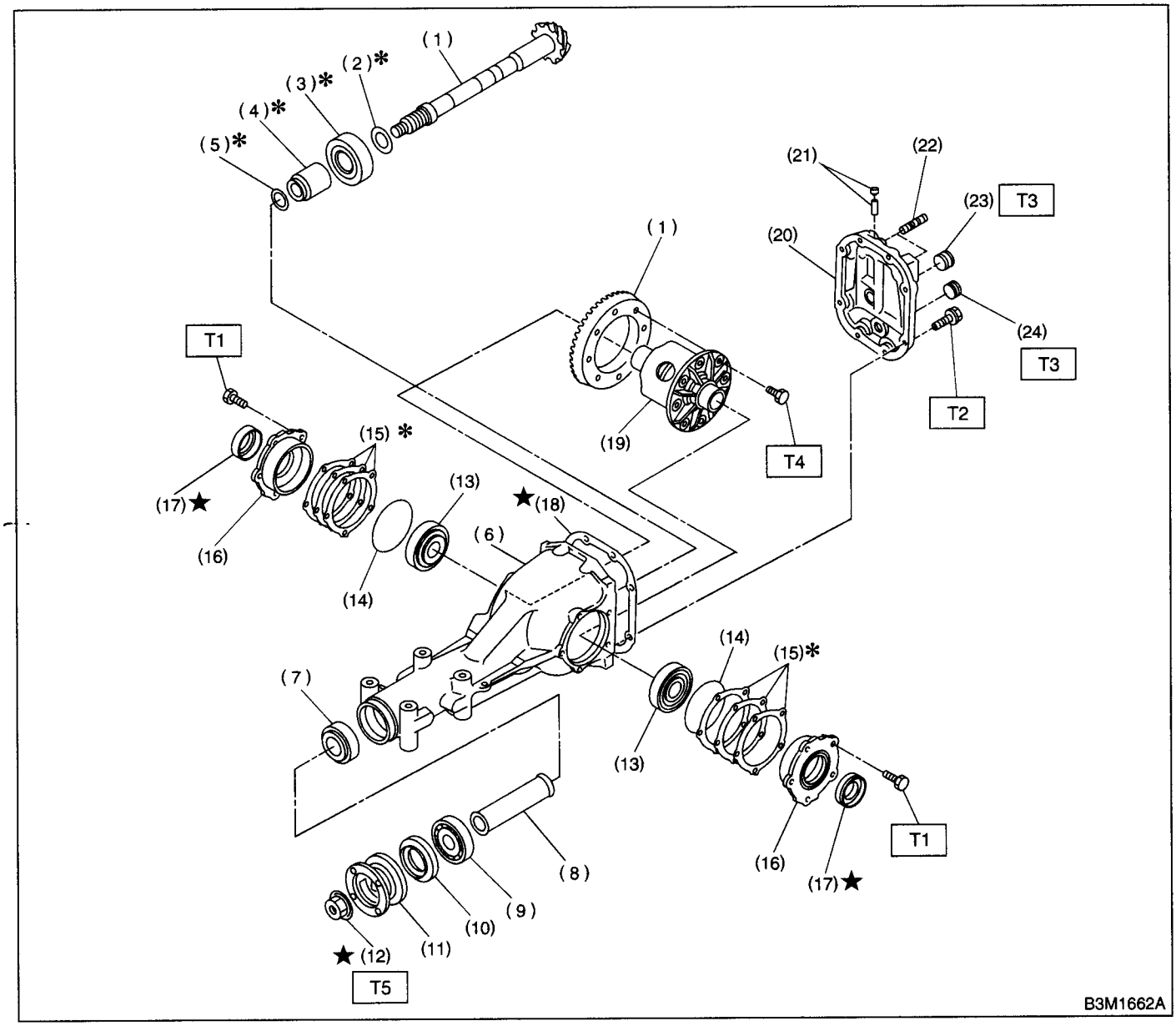

(1)	Pinion crown gear set	(12)	Self-locking nut	(23)	Oil filler plug
(2)	Pinion height adjusting shim	(13)	Side bearing	(24)	Oil drain plug
(3)	Rear bearing	(14)	O-ring		
(4)	Bearing preload adjusting spacer	(15)	Side bearing retainer shim		
(5)	Bearing preload adjusting washer	(16)	Side bearing retainer		
(6)	Differential carrier	(17)	Side oil seal		
(7)	Front bearing	(18)	Gasket		
(8)	Collar	(19)	Differential case		
(9)	Pilot bearing	(20)	Rear cover		
(10)	Front oil seal	(21)	Air breather cap		
(11)	Companion flange	(22)	Stud bolt		

Tightening torque: N·m (kgf-m, ft-lb)

T1: 10.3 (1.05, 7.6)
T2: 29.4 (3.00, 21.7)
T3: 49.0 (5.00, 36.2)
T4: 103.0 (10.50, 75.9)
T5: 181.4 (18.50, 133.8)

3. REAR DIFFERENTIAL MOUNTING SYSTEM

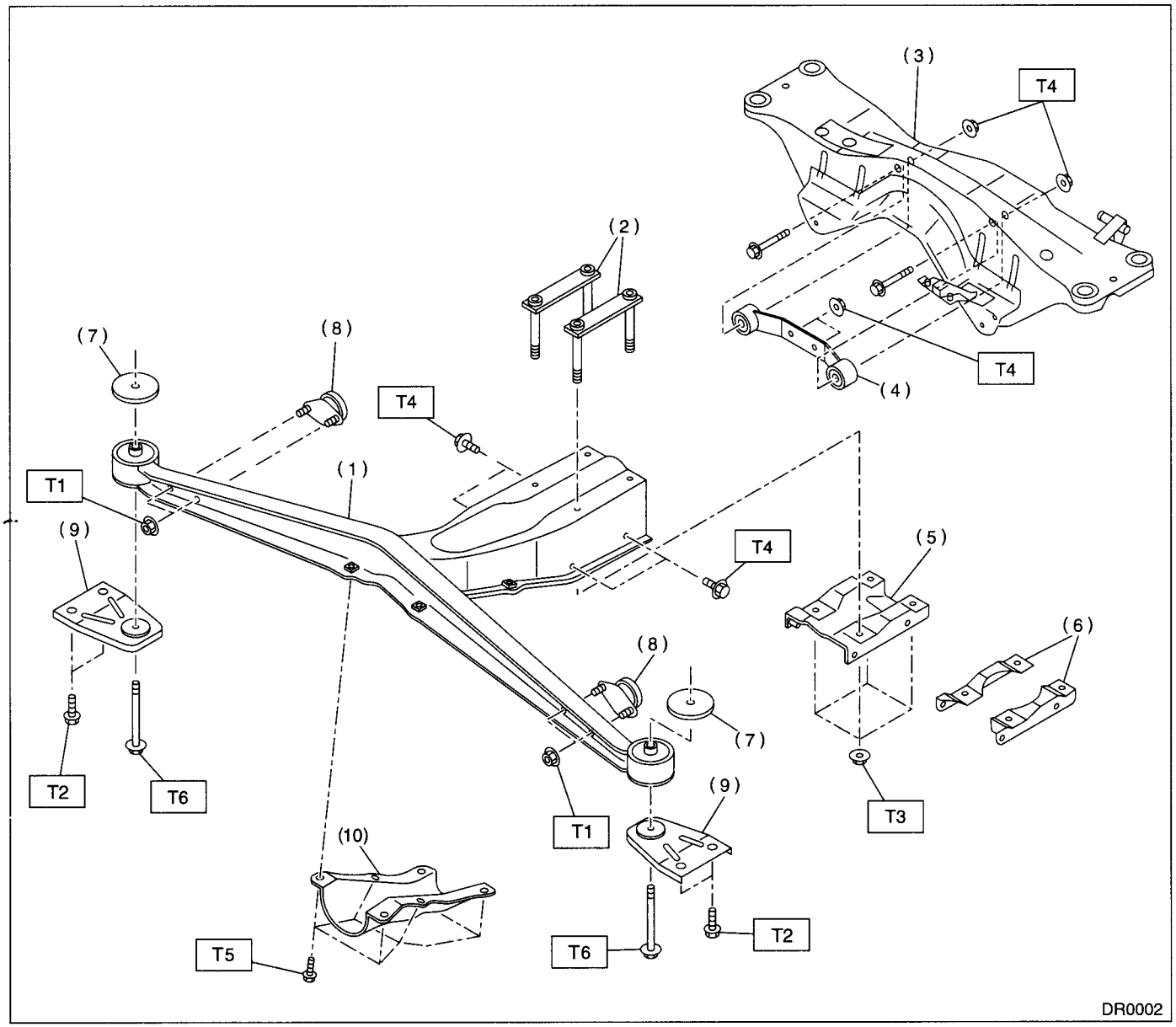

(1) Differential front member
(2) Plate
(3) Crossmember
(4) Differential rear member
(5) Differential mount lower bracket (TURBO model)
(6) Differential mount lower bracket (Non-turbo model)
(7) Stopper
(8) Dynamic damper
(9) Differential mount bracket
(10) Differential mount front cover

Tightening torque: N·m (kgf-m, ft-lb)

T1: 20 (2.0, 14.5)
T2: 33 (3.4, 24.3)
T3: 65 (6.6, 47.9)
T4: 70 (7.1, 51.6)
T5: 90 (9.2, 66.4)
T6: 100 (10.2, 73.8)

C: CAUTION

- Wear working clothing, including a cap, protective goggles, and protective shoes during operation.
- Remove contamination including dirt and corrosion before removal, installation or disassembly.
- Keep the disassembled parts in order and protect them from dust or dirt.
- Before removal, installation or disassembly, be sure to clarify the failure. Avoid unnecessary removal, installation, disassembly, and replacement.
- Be careful not to burn your hands, because each part on the vehicle is hot after running.
- Use SUBARU genuine gear oil, grease etc. or the equivalent. Do not mix gear oil, grease etc. with that of another grade or from other manufacturers.
- Be sure to tighten fasteners including bolts and nuts to the specified torque.
- Place shop jacks or safety stands at the specified points.
- Apply gear oil onto sliding or revolution surfaces before installation.
- Before installing O-rings or snap rings, apply sufficient amount of gear oil to avoid damage and deformation.
- Before securing a part on a vice, place cushioning material such as wood blocks, aluminum plate, or shop cloth between the part and the vice.
- Avoid damaging the mating face of the case.

D: PREPARATION TOOL

1. SPECIAL TOOLS

ILLUSTRATION	TOOL NUMBER	DESCRIPTION	REMARKS
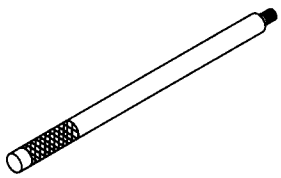 B3M1893	398477701	HANDLE	Used for installing front and rear bearing cone.
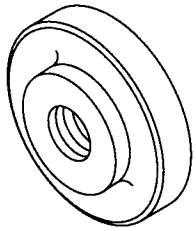 B3M1894	398477702	DRIFT	Used for press-fitting the bearing cone of differential carrier (rear).
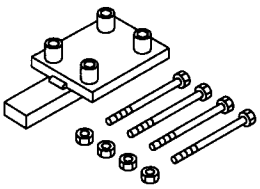 B3M1895	398217700	ATTACHMENT SET	Stand for rear differential carrier disassembly and assembly.
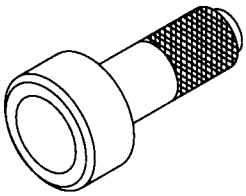 B3M1896	498447120	DRIFT	Used for installing front oil seal.

ILLUSTRATION	TOOL NUMBER	DESCRIPTION	REMARKS
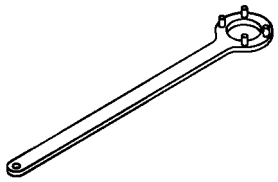 B3M1897	498427200	FLANGE WRENCH	Used for stopping rotation of companion flange when loosening and tightening self-lock nut.
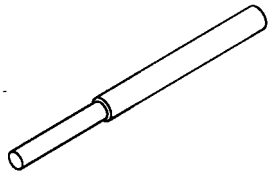 B3M1898	398467700	DRIFT	Used for removing pinion, pilot bearing and front bearing cone.
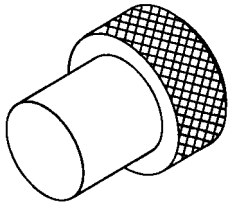 B3M1899	399780104	WEIGHT	Used for installing front bearing cone, pilot bearing companion flange.
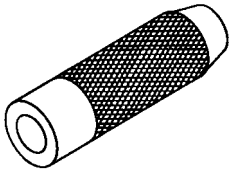 B3M1900	899580100	INSTALLER	Used for press-fitting the front bearing cone, pilot bearing.

ILLUSTRATION	TOOL NUMBER	DESCRIPTION	REMARKS
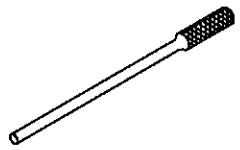 B3M1901	899904100	STRAIGHT PIN REMOVER	Used for driving out differential pinion shaft lock pin
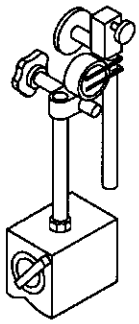 B3M1902	498247001	MAGNET BASE	• Used for measuring backlash between side gear and pinion, and hypoid gear • Used with DIAL GAUGE (498247100).
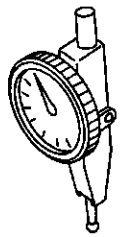 B3M1903	498247100	DIAL GAUGE	• Used for measuring backlash between side gear and pinion, and hypoid gear. • Used with MAGNET BASE (498247001)
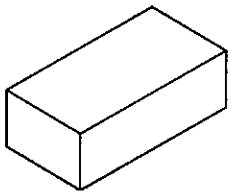 B3M1904	398507704	BLOCK	Used for adjusting pinion height and preload

ILLUSTRATION	TOOL NUMBER	DESCRIPTION	REMARKS
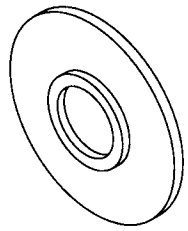 B3M1905	398177700	INSTALLER	• Used for installing rear bearing cone.
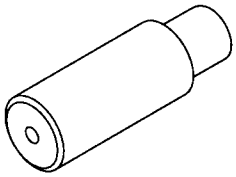 B3M1906	398457700	ATTACHMENT	• Used for removing side bearing retainer.
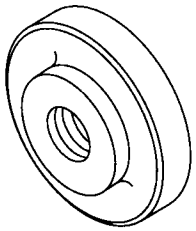 B3M1907	398477703	DRIFT2	• Used for press-fitting the bearing race (rear) of differential carrier.
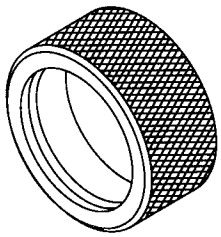 B3M1908	398437700	DRIFT	• Used for installing side oil seal.

ILLUSTRATION	TOOL NUMBER	DESCRIPTION	REMARKS
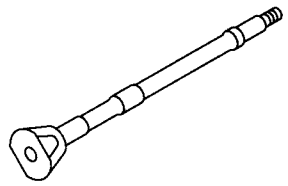 B3M1909	398507702	DUMMY SHAFT	• Used for adjusting pinion height and preload.
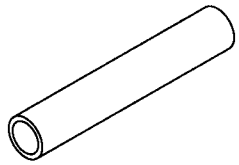 B3M1910	398507703	DUMMY COLLAR	• Used for adjusting pinion height and preload.
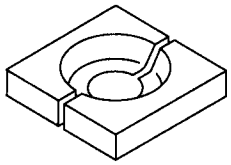 B3M1911	398517700	REPLACER	• Used for removing rear bearing cone.
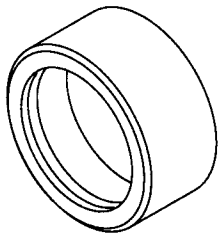 B3M1912	398487700	DRIFT	• Used for press-fitting the side bearing cone.

ILLUSTRATION	TOOL NUMBER	DESCRIPTION	REMARKS
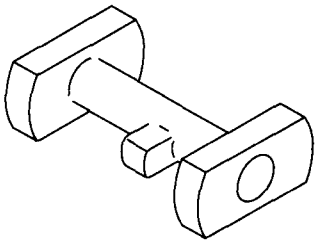 B3M1913	398507701	DIFFERENTIAL CARRIER GAUGE	• Used for adjusting pinion height.
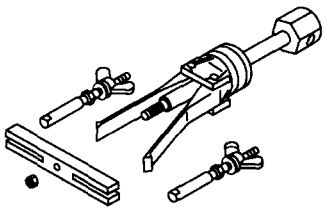 B3M1914	398527700	PULLEY ASSY	• Used for removing front oil seal. • Used for removing side bearing cup. (T-type)
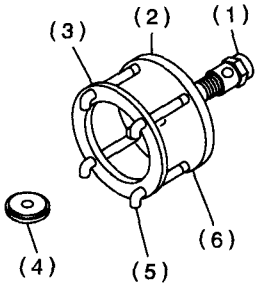 B3M1915A	399527700	PULLER SET	• Used for extracting side bearing cone. (1) BOLT (899521412) (2) PULLER (399527702) (3) HOLDER (399527703) (4) ADAPTER (398497701) (5) BOLT (899520107) (6) NUT (021008000)
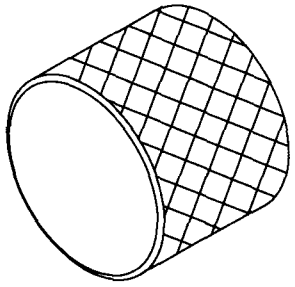 B3M1916	398227700	WEIGHT	• Used for installing side bearing.

ILLUSTRATION	TOOL NUMBER	DESCRIPTION	REMARKS
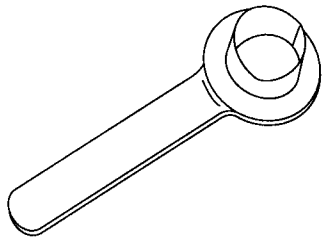 B3M1917	28099PA090	OIL SEAL PROTECTOR	• Used for installing rear drive shaft into rear differential. • For protecting oil seal.
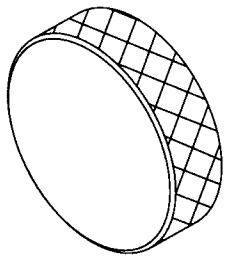 B3M1918	398237700	GAUGE	• Used for installing side bearing.
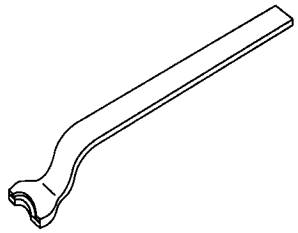 B3M1919	28099PA100	DRIVE SHAFT REMOVER	• Used for removing rear drive shaft from rear differential.
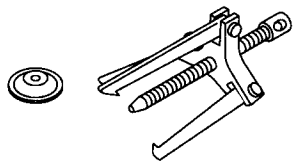 B3M1930	399703602	PULLEY ASSY	• Used for removing companion flange

ILLUSTRATION	TOOL NUMBER	DESCRIPTION	REMARKS
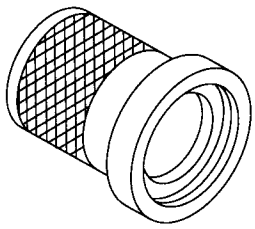 B3M1931	899874100	INSTALLER	• Used for installing companion flange.

2. GENERAL PURPOSE TOOLS

TOOL NAME	REMARKS
Transmission jack	Used for assembly/disassembly of rear differential.
Puller	Used for removal of side bearing retainer.
Thickness gauge	Used for measuring clearance.

2. Differential Gear Oil

A: INSPECTION

1) Take out the filler plug, and replace gear oil if it is contaminated or deteriorated. <Ref. to DI-17, REPLACEMENT, Differential Gear Oil.>
2) Check gear oil level is up to the bottom part of filler bolt. If the level is low, refill up to the bottom of filler bolt.

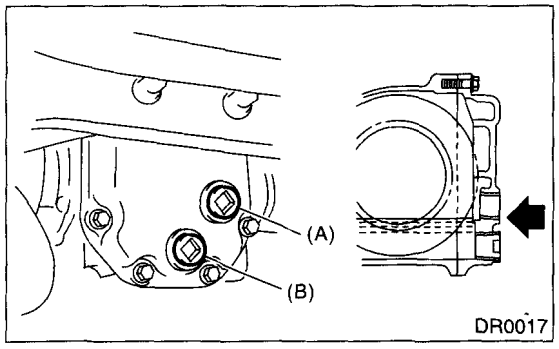

(A) Filler plug
(B) Drain plug

B: REPLACEMENT

1) Disconnect the ground terminal from battery.
2) Jack-up the vehicle and support it with sturdy racks.
3) Remove the oil drain plug and filler plug, and drain the gear oil.

CAUTION:
Be careful not to burn your hands, because gear oil becomes extremely hot after running.

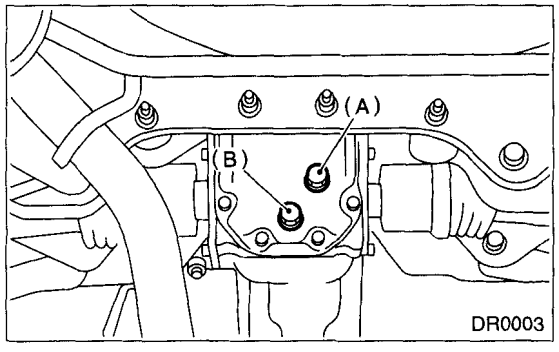

(A) Filler plug
(B) Drain plug

4) Tighten the oil drain plug.

NOTE:
- Apply fluid packing to the drain plug.

Fluid packing:
THREE BOND 1105 or equivalent

Tightening torque:
49.0 N·m (5.0 kgf-m, 36.2 ft-lb)

5) Fill differential carrier with gear oil to the upper plug level.

CAUTION:
Carefully refill oil while watching the level. Excess or insufficient oil must be avoided.

Oil capacity:
0.8 ℓ (0.8 US qt, 0.7 Imp qt)

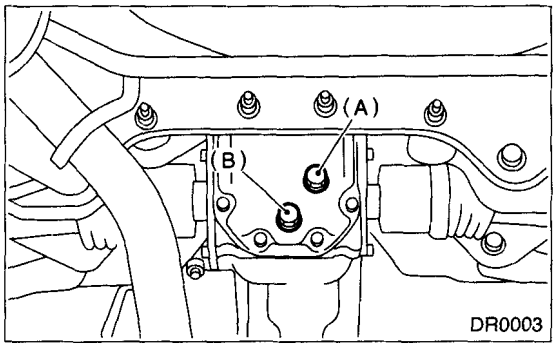

(A) Filler plug
(B) Drain plug

6) Install the filler plug.

NOTE:
Apply fluid packing to the filler plug.

Fluid packing:
THREE BOND 1105 or equivalent

Tightening torque:
49.0 N·m (5.0 kgf-m, 36.2 ft-lb)

3. Front Differential

A: NOTE

1. AT MODEL

Refer to AUTOMATIC TRANSMISSION in separate publication "AUTOMATIC TRANSMISSION" for Front Differential. <Pub. No. G0853ZE>

2. MT MODEL

For front differential of manual transmission, refer to "MT" section. <Ref. to MT-71, Front Differential Assembly.>

4. Rear Differential

A: REMOVAL

1) Set the vehicle on the lift.
2) Disconnect the ground terminal from battery.
3) Move the select lever or gear shift lever to "N".
4) Release the parking brake.
5) Loosen the wheel nuts.
6) Jack-up the vehicle and support it with sturdy racks.
7) Remove the wheels.
8) Remove the rear exhaust pipe and muffler.
Non-turbo model:
<Ref. to EX(SOHC)-9, REMOVAL, Rear Exhaust Pipe.> and <Ref. to EX(SOHC)-11, REMOVAL, Muffler.>
Turbo model:
<Ref. to EX(DOHC TURBO)-13, REMOVAL, Rear Exhaust Pipe.> and <Ref. to EX(DOHC TURBO)-14, REMOVAL, Muffler.>
9) Remove the rear differential protector. (If equipped)
10) Remove the front cover of rear differential mount.

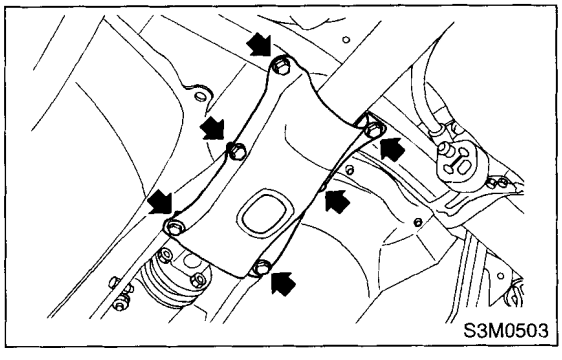

11) Remove the propeller shaft. <Ref. to DS-14, REMOVAL, Propeller Shaft.>
12) Remove the heat shield cover.
13) Remove the clamps and bracket of parking brake cable.

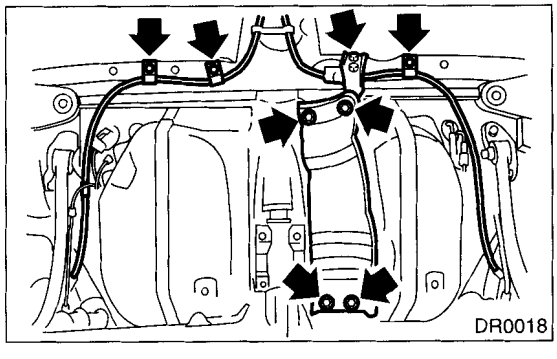

14) Remove the DOJ of rear drive shaft from rear differential using ST. <Ref. to DI-37, REPLACEMENT, Rear Differential Side Oil Seal.>
ST 28099PA100 DRIVE SHAFT REMOVER

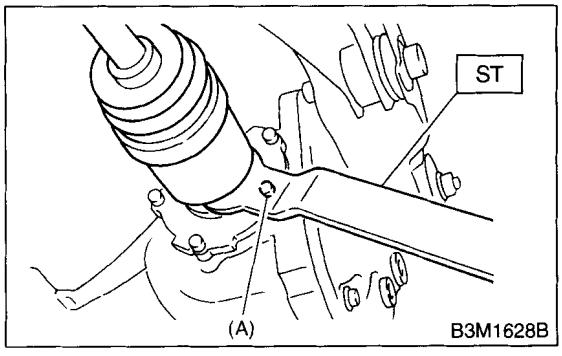

(A) Bolt

15) Secure the rear drive shaft to rear crossmember using wire.

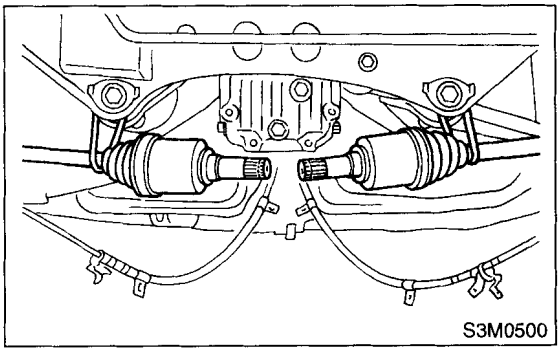

16) Remove the lower differential bracket.

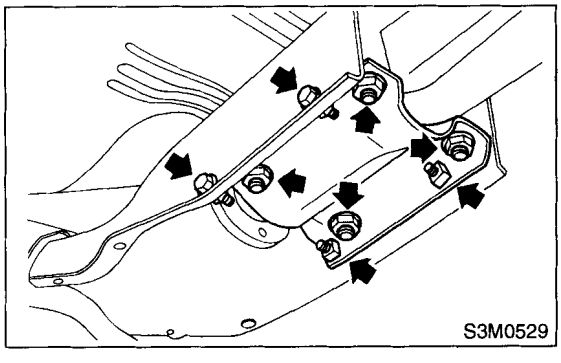

17) Support the rear differential with transmission jack.

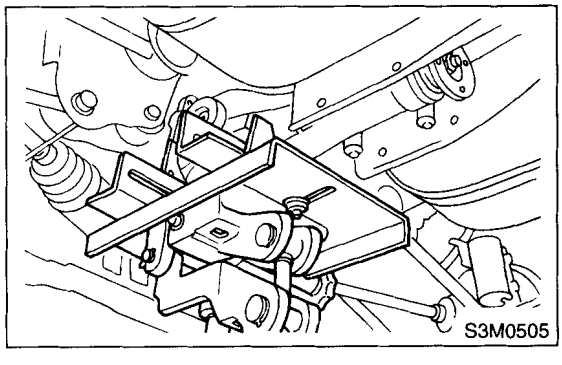

18) Remove the self-locking nuts and bolts.

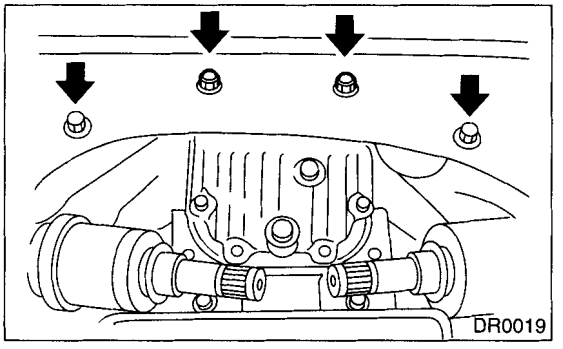

19) Remove the bolts which secure rear differential front member to body.
Loosen bolt A first, then remove bolts B.

NOTE:
Support the front member with the use of a helper to prevent it from dropping.

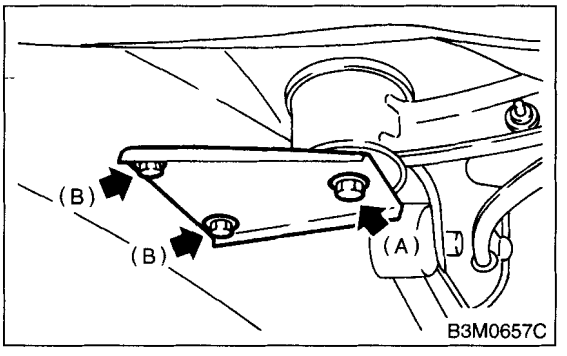

(A) Bolt A
(B) Bolt B

20) Remove bolt A.
21) While slowly lowering the transmission jack, move rear differential forward and remove front member and rear differential from body.

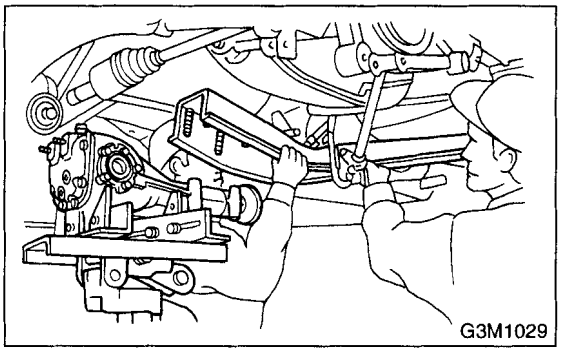

22) Remove the rear differential from front member, and remove rear member.

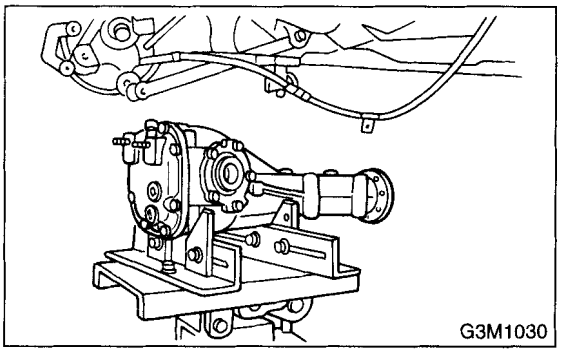

B: INSTALLATION

To install, reverse the removal sequence.
1) Install the air breather cap tapping with a plastic hammer.

CAUTION:
Be sure to install a new air breather cap.

2) Position the front member on body by passing it under parking brake cable and securing to rear differential.

NOTE:
When installing the rear differential front member, do not confuse the installation sequence of the upper and lower stoppers.

3) Install the DOJ of drive shaft into rear differential.<Ref. to DI-37, REPLACEMENT, Rear Differential Side Oil Seal.>

ST 28099PA090 SIDE OIL SEAL PROTECTOR

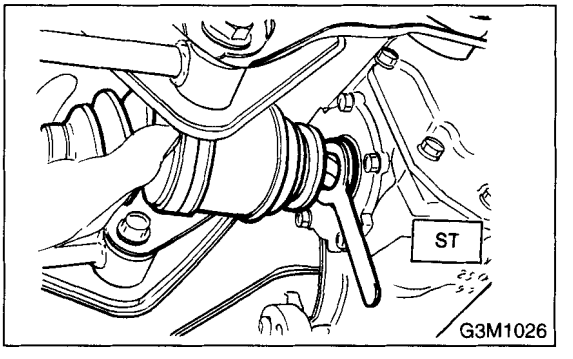

4) Install in the reverse order of removal.
5) After installation, fill the differential carrier with gear oil to the filler plug level. <Ref. to DI-17, Differential Gear Oil.>

C: DISASSEMBLY

To detect the real cause of trouble, inspect the following items before disassembling.

- Tooth contact of crown gear and pinion, and backlash
- Runout of crown gear at its back surface
- Turning resistance of drive pinion

1) Set the ST on vise and install the differential assembly to ST.

ST 398217700 ATTACHMENT

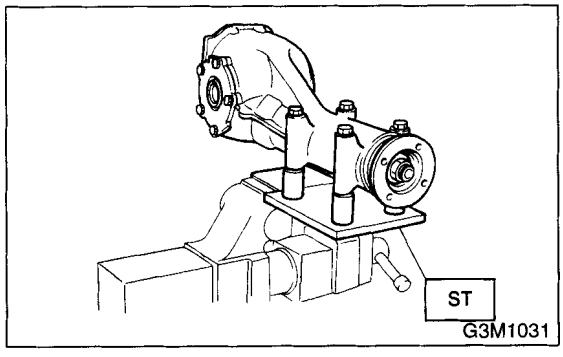

2) Drain the gear oil by removing plug.
3) Remove the air breather cap.

NOTE:
Do not attempt to replace the air breather cap unless necessary.

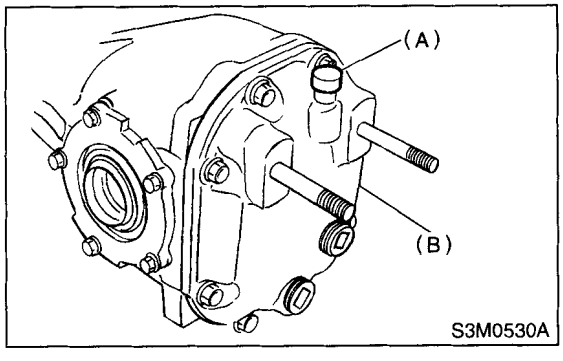

(A) Air breather cap
(B) Rear cover

4) Remove the rear cover by loosening retaining bolts.

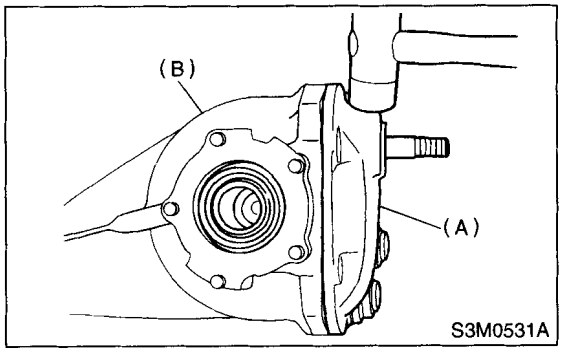

(A) Rear cover
(B) Differential carrier

5) Make right and left side bearing retainers in order to identify them at reassembly. Remove the side bearing retainer attaching bolts, set the ST to differential case, and extract right and left side bearing retainers with a puller.

CAUTION:
Each shim, which is installed to adjust the side bearing preload, should be kept together with its mating retainer.

ST 398457700 ATTACHMENT

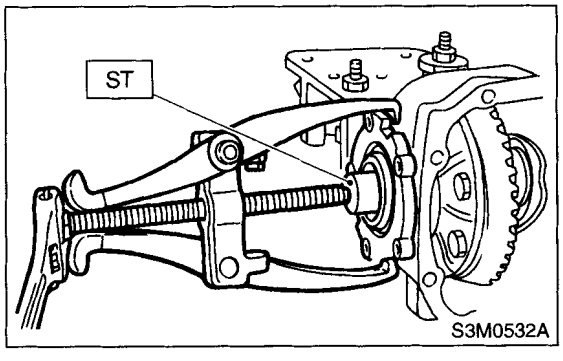

6) Pull out the differential case assembly from differential carrier.

CAUTION:
Be careful not to hit the teeth against the case.

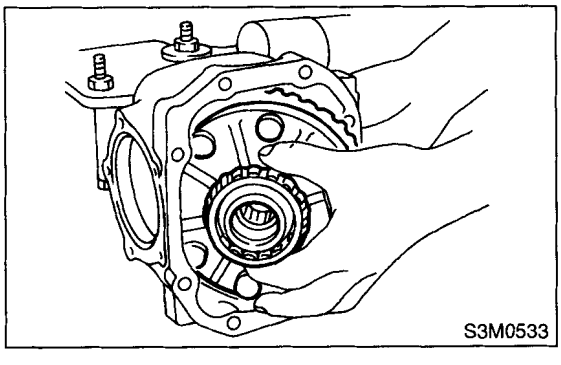

7) When replacing the side bearing, pull the bearing cup from side bearing retainer using ST.
ST 398527700 PULLER ASSY

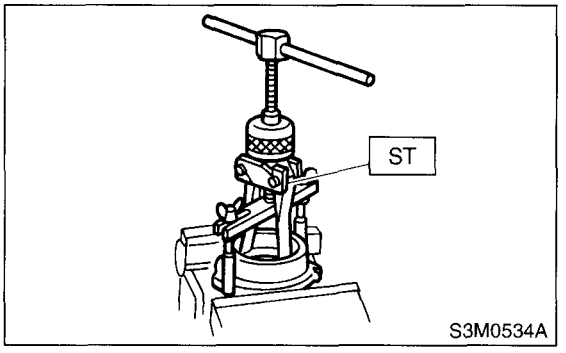

8) Extract the bearing cone with ST.

CAUTION:
Do not attempt to disassemble the parts unless necessary.

NOTE:
- Set the puller so that its claws catch the edge of the bearing cone.
- Never mix up the right and left hand bearing races and cones.

ST 398527700 PULLER SET

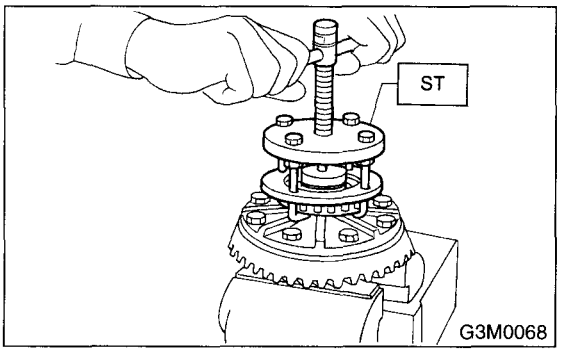

9) Remove the crown gear by loosening crown gear bolts.

CAUTION:
Further disassembling is not allowed.

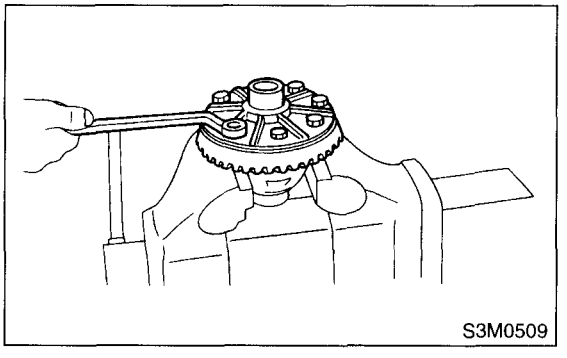

10) Drive out the pinion shaft lock pin from crown gear side. (Without LSD)

NOTE:
The lock pin is staked at the pin hole end on the differential carrier; do not drive it out forcibly before unstaking it.

ST 899904100 STRAIGHT PIN REMOVER

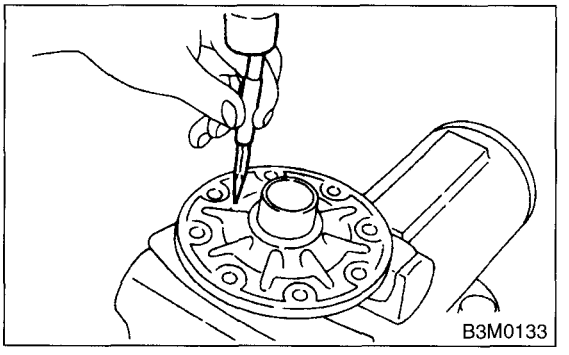

11) Draw out the pinion mate shaft and remove pinion mate gears, side gears and thrust washers. (Without LSD)

NOTE:
The gears as well as thrust washers should be marked or kept separated right and left, and front and rear.

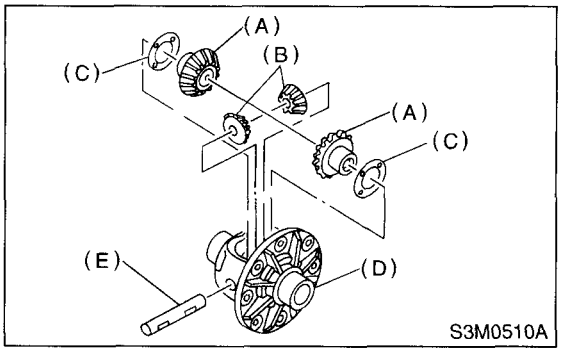

(A) Side gear
(B) Pinion mate gear
(C) Thrust washer
(D) Differential case
(E) Pinion mate shaft

12) Hold the companion flange with ST and remove drive pinion nut.
ST 498427200 FLANGE WRENCH

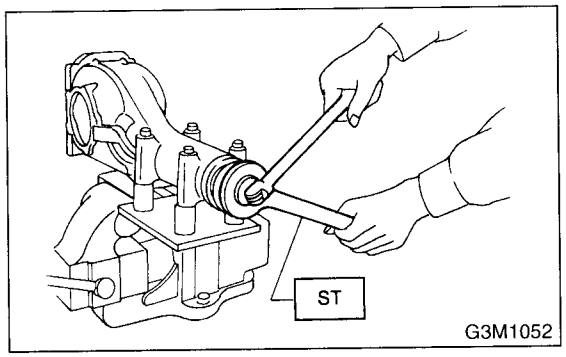

13) Extract the companion flange with a puller.

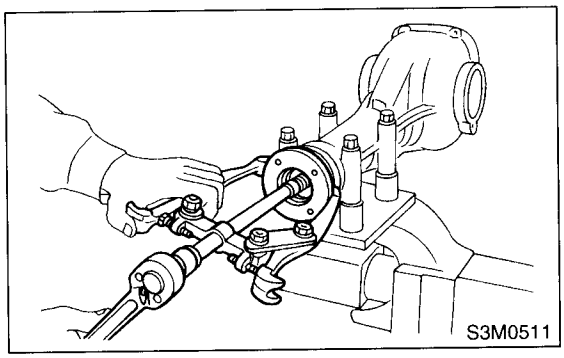

14) Press the end of drive pinion shaft and extract it together with rear bearing cone, preload adjusting spacer and washer.

NOTE:
Hold the drive pinion so as not to drop it.
ST 398467700 DRIFT

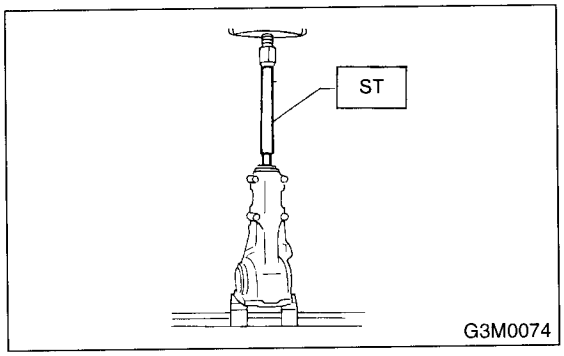

15) Remove the rear bearing cone from drive pinion by supporting cone with ST.

NOTE:
Place the replacer so that its center-recessed side faces the pinion gear.
ST 398517700 REPLACER

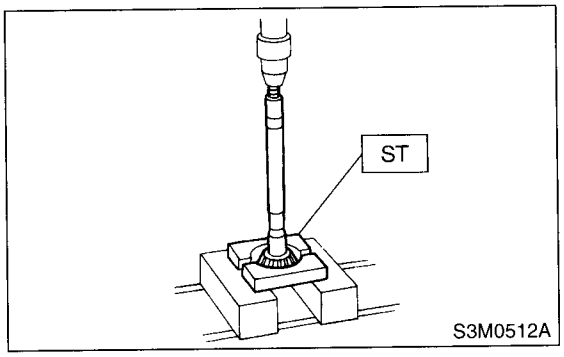

16) Remove the front oil seal from differential carrier using ST.
ST 398527700 PULLER ASSY

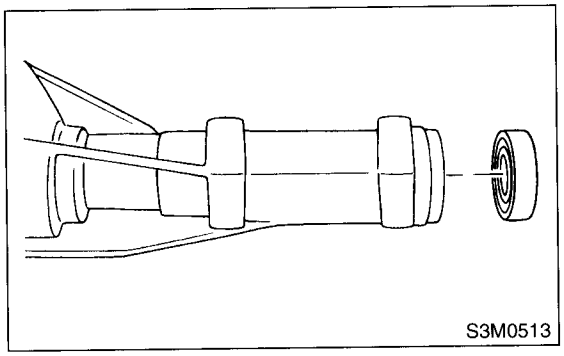

17) Remove the pilot bearing together with front bearing cone using ST.
ST 398467700 DRIFT

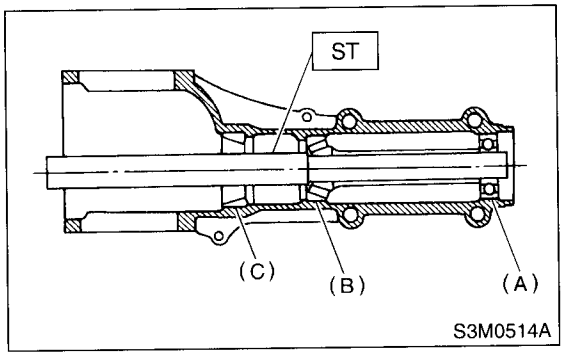

(A) Pinion bearing
(B) Front bearing
(C) Rear bearing cup

18) When replacing the bearings, tap front bearing cup and rear bearing cup in this order out of case by using a brass bar.

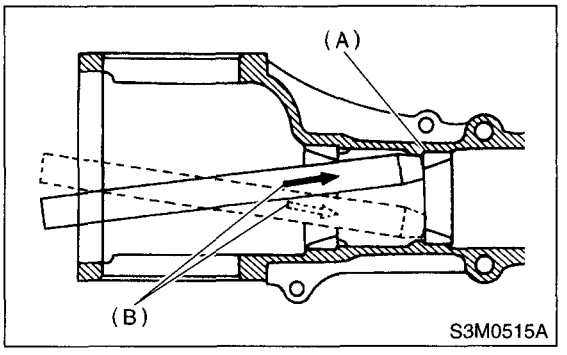

(A) 2 cutouts along diagonal lines
(B) Tap alternately with brass bar.

D: ASSEMBLY

1) Precautions for assembling:
- Assemble in the reverse order of disassembling.
- Check and adjust each part during assembly.
- Keep the shims and washers in order, so that they are not misinstalled.
- Thoroughly clean the surfaces on which the shims, washers and bearings are to be installed.
- Apply gear oil when installing the bearings and thrust washers.
- Be careful not to mix up the right and left hand races of the bearings.
- Replace the oil seal with a new one at every disassembly. Apply chassis grease between the lips when installing the oil seal.

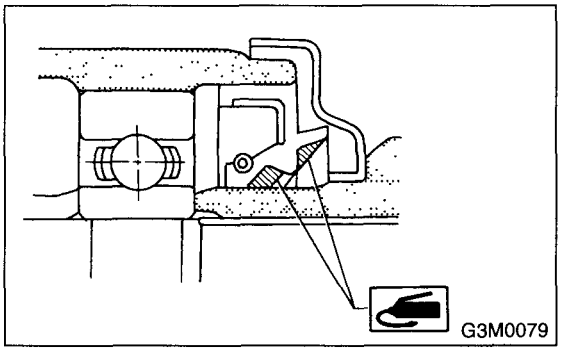

2) Adjusting preload for front and rear bearings:
Adjust the bearing preload with spacer and washer between front and rear bearings. Pinion height adjusting washer are not affected by this adjustment. The adjustment must be carried out without oil seal inserted.

(1) Press the rear bearing race into differential carrier with ST1 and ST2.

ST1 398477701 HANDLE
ST2 398477703 DRIFT 2

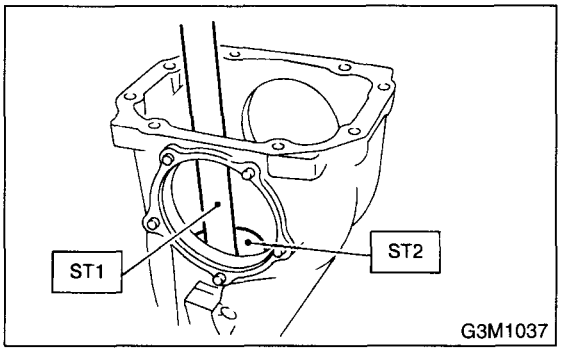

(2) Insert the ST1 into carrier with pinion height adjusting washer and rear bearing cone fitted onto it.

CAUTION:
- **Re-use the used washer if not deformed.**
- **Use a new rear bearing cone.**

(3) Then install the preload adjusting spacer and washer, front bearing cone, ST2, companion flange, and washer and drive pinion nut.

ST1 398507702 DUMMY SHAFT
ST2 398507703 DUMMY COLLAR

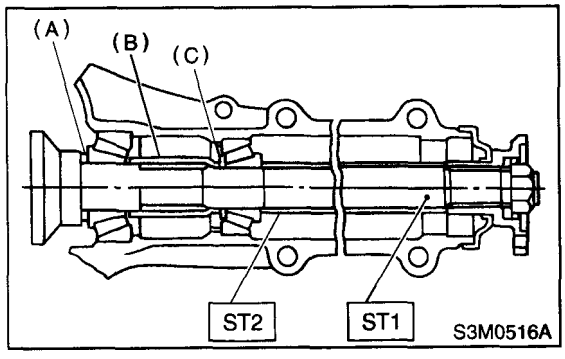

(A) Pinion height adjusting shim
(B) Preload adjusting spacer
(C) Preload adjusting washer

(4) Turn the ST1 with hand to make it seated, and tighten the drive pinion nut while measuring the preload with spring balance. Select the preload adjusting washer and spacer so that the specified preload is obtained when nut is tightened to the specified torque.

CAUTION:
Use a new lock nut.

NOTE:
- Be careful not to give excessive preload.
- When tightening the drive pinion nut, lock ST1 with ST2 as shown in the figure.

ST1 398507704 BLOCK
ST2 398507702 DUMMY SHAFT

Tightening torque:
181 N·m (18.5 kgf-m, 134 ft-lb)

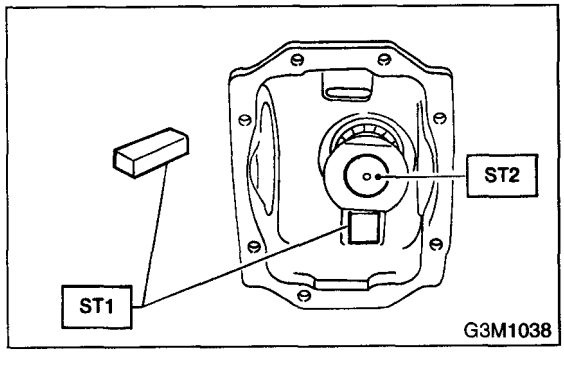

Front and rear bearing preload
For new bearing: 19.6 — 28.4 N (2.0 — 2.9 kgf, 4.4 — 6.4 lb) at companion flange bolt hole
For used bearing: 8.34 — 16.67 N (0.85 — 1.7 kgf, 1.87 — 3.75 lb) at companion flange bolt hole

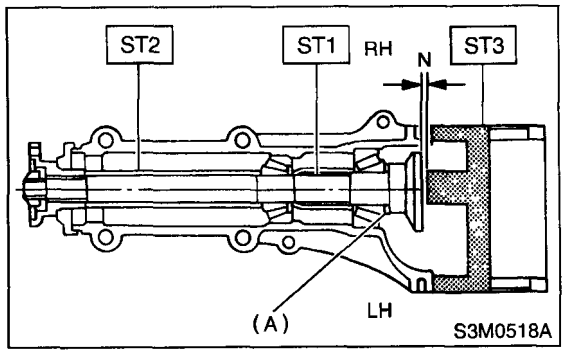

	Part No.	Thickness mm (in)
Preload adjusting washer	383705200	2.59 (0.1020)
	383715200	2.57 (0.1012)
	383725200	2.55 (0.1004)
	383735200	2.53 (0.0996)
	383745200	2.51 (0.0988)
	383755200	2.49 (0.0980)
	383765200	2.47 (0.0972)
	383775200	2.45 (0.0965)
	383785200	2.43 (0.0957)
	383795200	2.41 (0.0949)
	383805200	2.39 (0.0941)
	383815200	2.37 (0.0933)
	383825200	2.35 (0.0925)
	383835200	2.33 (0.0917)
	383845200	2.31 (0.0909)
Preload adjusting spacer	Part No.	Length mm (in)
	383695201	56.2 (2.213)
	383695202	56.4 (2.220)
	383695203	56.6 (2.228)
	383695204	56.8 (2.236)
	383695205	57.0 (2.244)
	383695206	57.2 (2.252)

3) Adjusting drive pinion height:
Adjust the drive pinion height with shim installed between rear bearing cone and the back of pinion gear.

(1) Install ST1, ST2 and ST3, as shown in the figure, and apply the specified preload on the bearings.

Front and rear bearing preload
For new bearing: 19.6 — 28.4 N (2.0 — 2.9 kgf, 4.4 — 6.4 lb) at companion flange bolt hole
For used bearing: 8.34 — 16.67 N (0.85 — 1.7 kgf, 1.87 — 3.75 lb) at companion flange bolt hole

Adjusting preload for front and rear bearings:

NOTE:
At this time, install a pinion height adjusting shim which is temporarily selected or the same as that used before. Measure and record the thickness.

ST1 398507702 DUMMY SHAFT
ST2 398507701 DIFFERENTIAL CARRIER GAUGE
ST3 398507703 DUMMY COLLAR

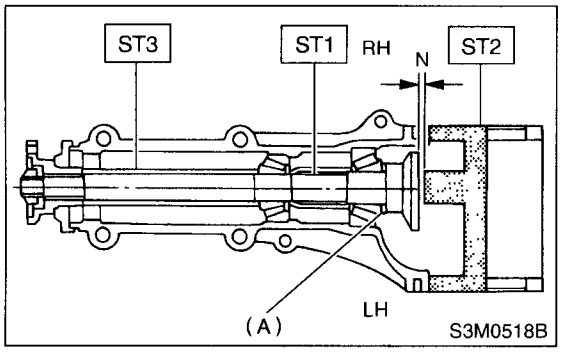

(A) Pinion height adjusting shim

(2) Measure the clearance N between the end of ST2 and the end surface of ST1 by using a thickness gauge.

NOTE:
Make sure there is no clearance between the case and ST2.

ST1 398507702 DUMMY SHAFT
ST2 398507701 DIFFERENTIAL CARRIER GAUGE

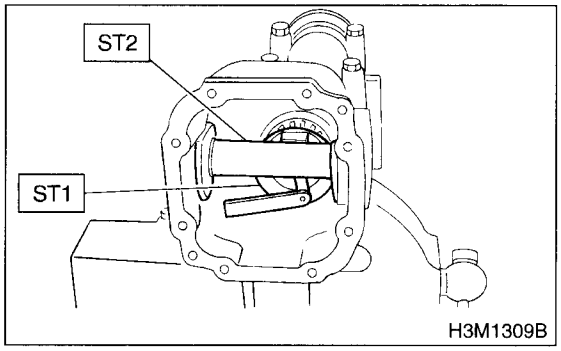

(3) Obtain the thickness of pinion height adjusting shim to be inserted from the following formula, and replace the temporarily installed shim with this one.

T = To + N – (H x 0.01) – 0.20 mm (0.0079 in)

NOTE:
Use copies of this page.

T	Thickness of shim temporarily inserted mm (in)	
To	Thickness of pinion height adjusting shim mm (in)	
N	Reading of thickness gauge mm (in)	
H	Figure marked on drive pinion head	
Memo:		

(Example of calculation)
To = 2.20 + 1.20 = 3.40 mm
N = 0.23 mm H = + 1,
T = 3.40 + 0.23 – 0.01 – 0.20 = 3.42
Result: Thickness = 3.42 mm
Therefore use the shim 383605200.

Pinion height adjusting shim	
Part No.	Thickness mm (in)
383495200	3.09 (0.1217)
383505200	3.12 (0.1228)
383515200	3.15 (0.1240)
383525200	3.18 (0.1252)
383535200	3.21 (0.1264)
383545200	3.24 (0.1276)
383555200	3.27 (0.1287)
383565200	3.30 (0.1299)
383575200	3.33 (0.1311)
383585200	3.36 (0.1323)
383595200	3.39 (0.1335)
383605200	3.42 (0.1346)
383615200	3.45 (0.1358)
383625200	3.48 (0.1370)
383635200	3.51 (0.1382)
383645200	3.54 (0.1394)
383655200	3.57 (0.1406)
383665200	3.60 (0.1417)
383675200	3.63 (0.1429)
383685200	3.66 (0.1441)

4) Install the selected pinion height adjusting shim on drive pinion, and press the rear bearing cone into position with ST.
ST 398177700 INSTALLER

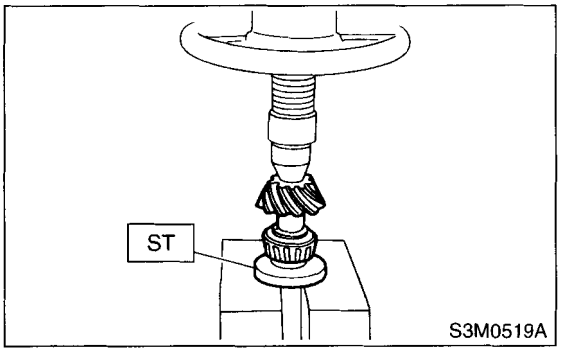

5) Insert the drive pinion into differential carrier, install the previously selected bearing preload adjusting spacer and washer.

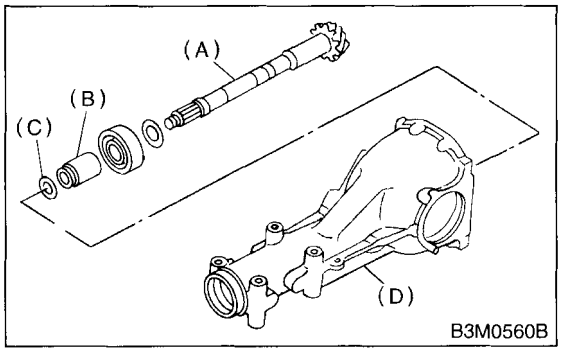

(A) Drive pinion
(B) Bearing adjusting spacer
(C) Washer
(D) Differential carrier

6) Press-fit the front bearing cone into case with ST1, ST2 and ST3.
ST1 398507703 DUMMY COLLAR
ST2 399780104 WEIGHT
ST3 899580100 INSTALLER

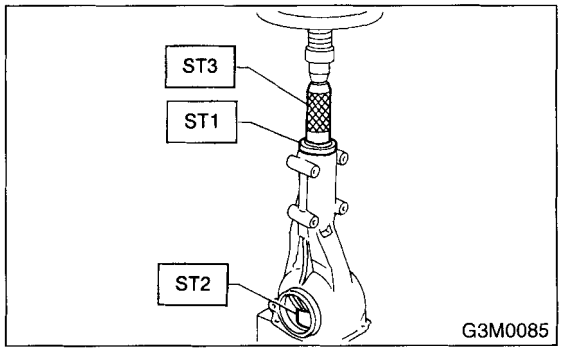

7) Insert the spacer, then press-fit pilot bearing with ST1 and ST2.
ST1 399780104 WEIGHT
ST2 899580100 INSTALLER

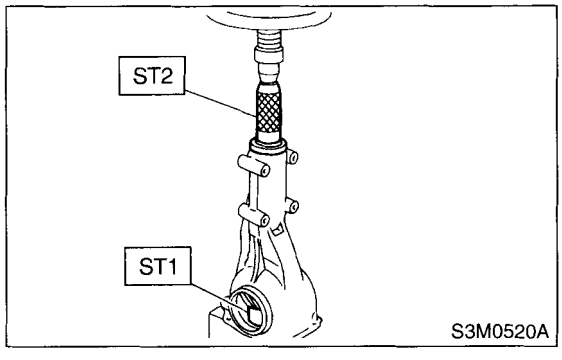

8) Fit a new oil seal with ST.

NOTE:
- Press-fit until end of oil seal is 1 mm (0.04 in) inward from end of carrier.
- Apply grease between the oil seal lips.

ST 498447120 DRIFT

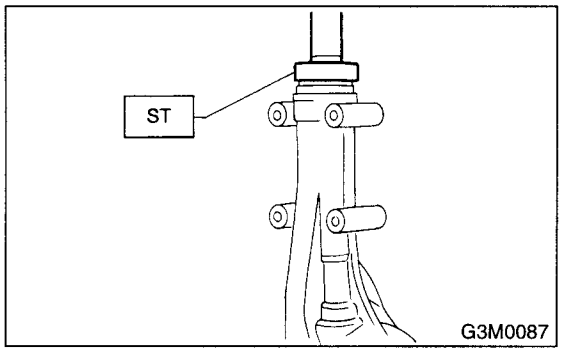

9) Press-fit the companion flange with ST1 and ST2.

CAUTION:
Be careful not to damage the bearing.

ST1 899874100 INSTALLER
ST2 399780104 WEIGHT

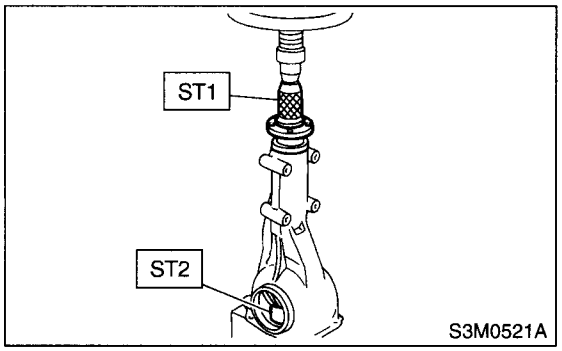

10) Install the self-locking nut. Then tighten it with ST.

ST 498427200 FLANGE WRENCH

Tightening torque:
181 N·m (18.5 kgf-m, 134 ft-lb)

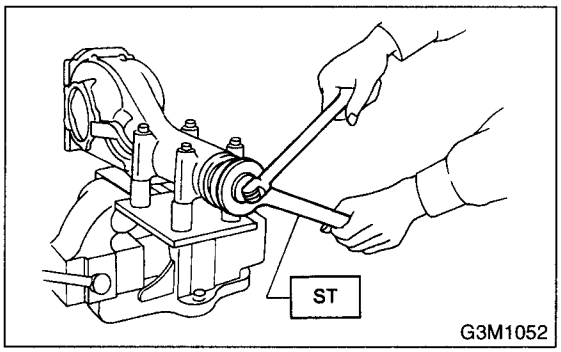

11) Assembling differential case:
Install the side gears and pinion mate gears, with their thrust washers and pinion mate shaft, into differential case. (Without LSD)

CAUTION:
- **Apply gear oil on both sides of the washer and on the side gear shaft before installing.**
- **Insert the pinion mate shaft into the differential case by aligning the lock pin holes.**

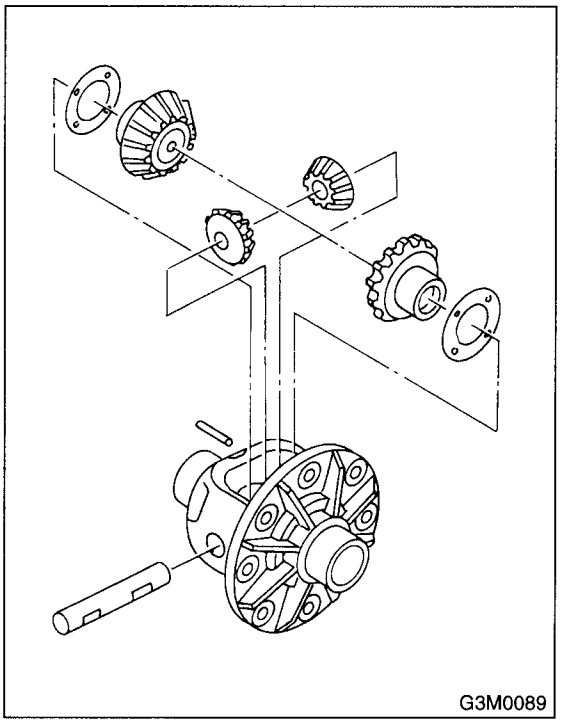

(1) Measure the side gear backlash.

Side gear back clearance:
0.10 — 0.20 mm (0.0039 — 0.0079 in)

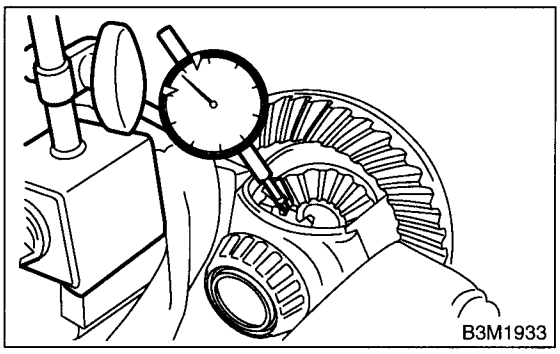

(2) Adjust the backlash as specified by selecting side gear thrust washer.

Side gear thrust washer	
Part No.	Thickness mm (in)
383445201	0.75 — 0.80 (0.0295 — 0.0315)
383445202	0.80 — 0.85 (0.0315 — 0.0335)
383445203	0.85 — 0.90 (0.0335 — 0.0354)

(3) Check the condition of rotation after applying oil to the gear tooth surfaces and thrust surfaces.

(4) After inserting the pinion shaft lock pin into differential case, stake the both sides of the hole to prevent pin from falling off.

12) Install the crown gear on differential case.

CAUTION:
Before installing bolts, apply Lock Tite to bolt threads.

Lock Tite:
THREE BOND 1324 or equivalent

NOTE:
Tighten diagonally while tapping the bolt heads.

Tightening torque:
103 N·m (10.5 kgf-m, 76 ft-lb)

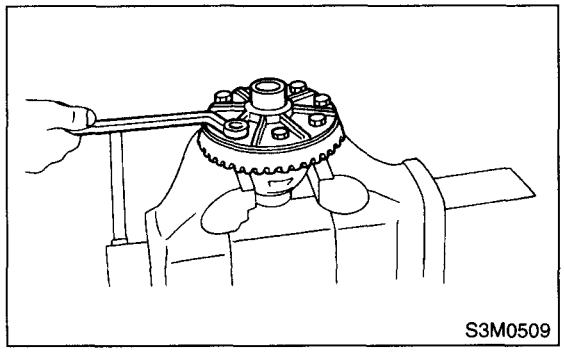

13) Press the side bearing cone onto differential case with ST.
ST 398487700 DRIFT

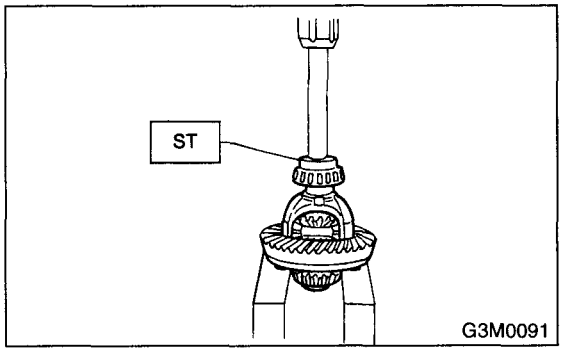

14) Adjusting the side bearing retainer shims:

(1) The driven gear backlash and side bearing preload can be determined by the side bearing retainer shim thickness.

(2) Install the differential case assembly into differential carrier in the reverse order of disassembly.

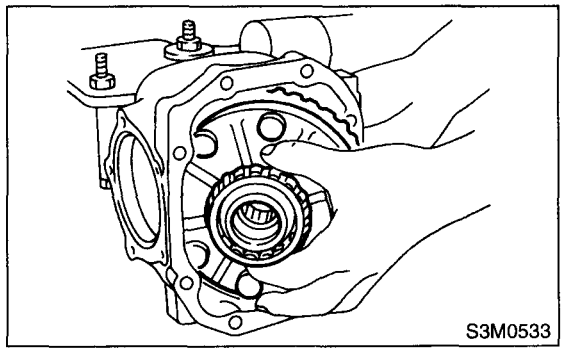

(3) Install the side retainer shims and O-rings to the left and right retainers from which they were removed.

NOTE:
- Replace the broken or cracked O-ring with a new one.
- Replace the broken or corroded side retainer shim with a new one of same thickness.

Side bearing retainer shim	
Part No.	Thickness mm (in)
383475201	0.20 (0.0079)
383475202	0.25 (0.0098)
383475203	0.30 (0.0118)
383475204	0.40 (0.0157)
383475205	0.50 (0.0197)

(4) Align the arrow mark on differential carrier with that marked on side retainer during installation.

CAUTION:
Be careful that side bearing outer race is not damaged by bearing roller.

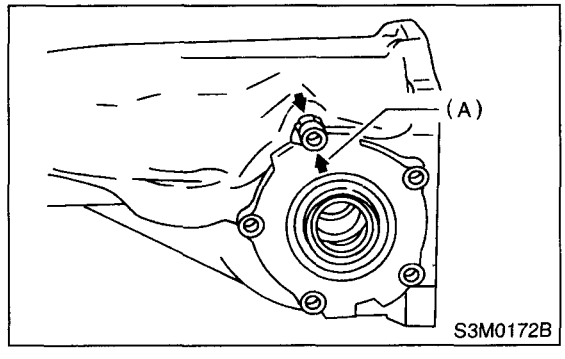

(A) Arrow mark

(5) Tighten the side bearing retainer bolts.

CAUTION:
Before tightening the two side bearing retainer bolts, apply Lock Tite to bolt threads.

⇨***Lock Tite:***
THREE BOND 1105 or equivalent

Tightening torque:
10.3 N·m (1.05 kgf-m, 7.6 ft-lb)

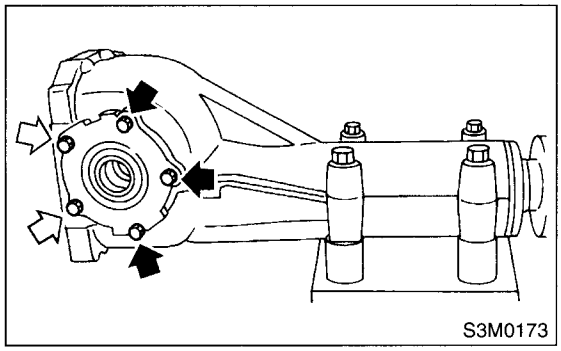
S3M0173

(6) Measure the crown gear-to-drive pinion backlash. Set the magnet base on differential carrier. Align the contact point of dial gauge with tooth face of crown gear, and move crown gear while holding drive pinion still. Read the value indicated on dial gauge.

Backlash:
0.10 — 0.20 mm (0.0039 — 0.0079 in)

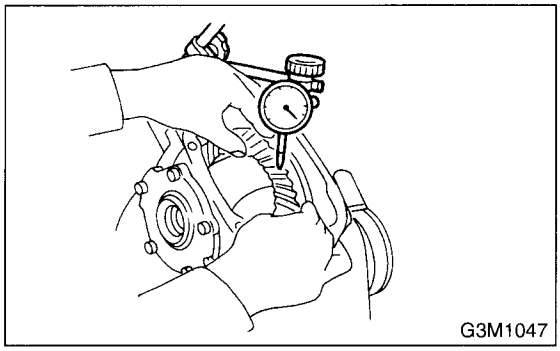
G3M1047

(7) At the same time, measure the turning resistance of drive pinion. Compared with the resistance when differential case is not installed, if the increase of the resistance is not within the specified range, readjust side bearing retainer shims.

Turning resistance increase:
2.9 — 10.8 N (0.3 — 1.1 kgf, 0.7 — 2.4 lb)

15) Recheck the crown gear-to-pinion backlash.

Backlash:
0.10 — 0.20 mm (0.0039 — 0.0079 in)

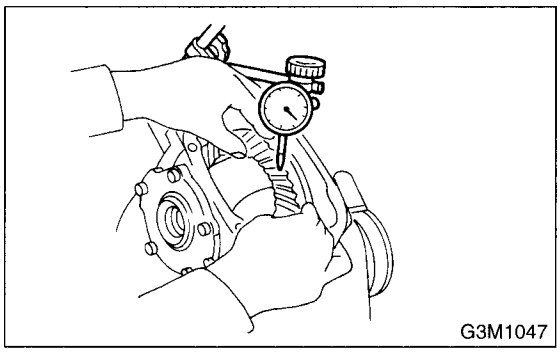
G3M1047

16) Check the crown gear runout on its back surface, and make sure pinion and crown gear rotates smoothly.

Limit of runout:
Less than 0.05 mm (0.0020 in)

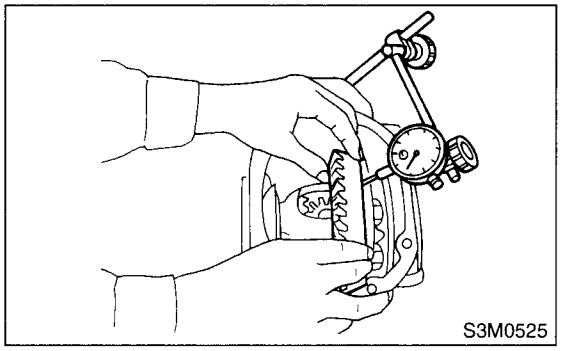
S3M0525

17) Checking and adjusting the tooth contact of crown gear:
(1) Apply an even coat of red lead on both sides of three or four teeth on the the crown gear. Check the contact pattern after rotating the crown gear several revolutions back and forth until a definite contact pattern appears on the crown gear.
(2) When the contact pattern is incorrect, readjust according to the instructions given in "TOOTH CONTACT PATTERN".

NOTE:
Be sure to wipe off red lead completely after adjustment is completed.

18) If proper tooth contact is not obtained, once again adjust the drive pinion height changing RH and LH side bearing retainer shims and the hypoid gear backlash.

(1) Drive pinion height

ST1 398507702 DUMMY SHAFT
ST2 398507701 DIFFERENTIAL CARRIER GAUGE

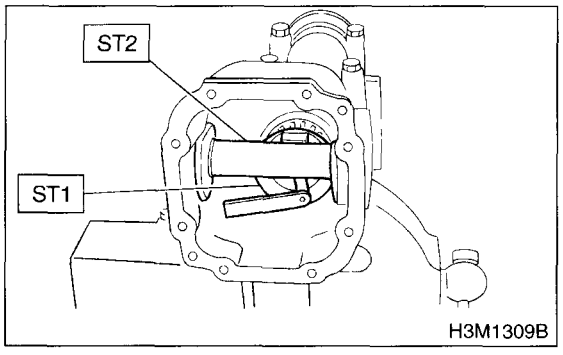

$T = To + N - (H \times 0.01) - 0.20$ (mm)

Where:

T = Thickness of pinion height adjusting shim (mm)

To = Thickness of shim temporarily inserted (mm)

N = Reading of thickness gauge (mm)

H = Figure marked on drive pinion head

(2) Hypoid gear backlash

Backlash:

0.10 — 0.20 mm (0.0039 — 0.0079 in)

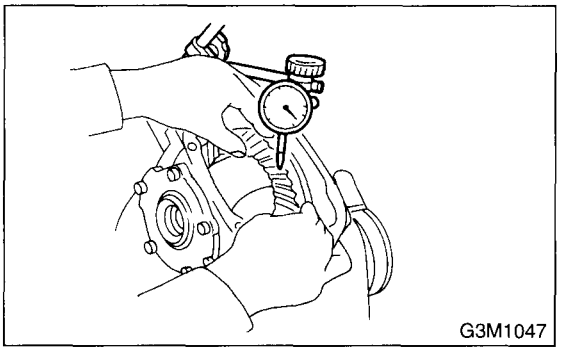

TOOTH CONTACT PATTERN		
Condition	Contact pattern	Adjustment
Correct tooth contact Tooth contact pattern slightly shifted towards toe under no load rotation. (When loaded, contact pattern moves toward heel.)	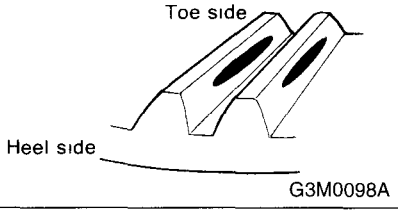	—
Face contact Backlash is too large.	This may cause noise and chipping at tooth ends. 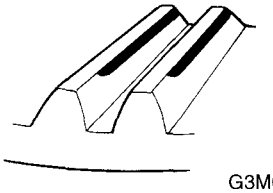	Increase thickness of drive pinion height adjusting shim in order to bring drive pinion closer to crown gear center. 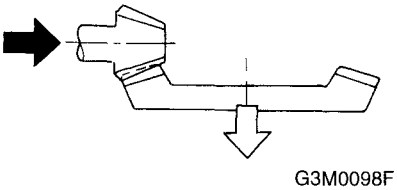
Flank contact Backlash is too small.	This may cause noise and stepped wear on surfaces. 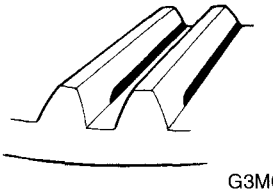	Reduce thickness of drive pinion height adjusting shim in order to move drive pinion away from crown gear. 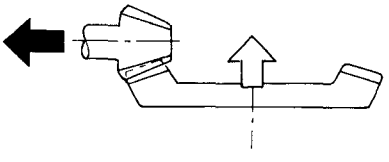

TOOTH CONTACT PATTERN		
Condition	Contact pattern	Adjustment
Toe contact Contact area is small.	This may cause chipping at toe ends. 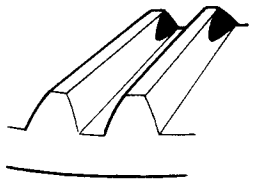 G3M0098D	Adjust as for flank contact. 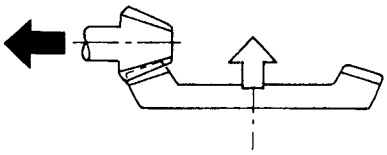 G3M0098G
Heel contact Contact area is small.	This may cause chipping at heel ends. 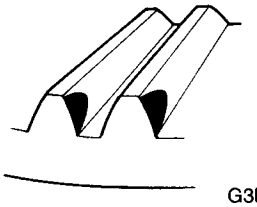 G3M0098E	Adjust as for face contact. 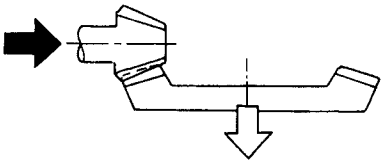 G3M0098F

➡ : Adjusting direction of drive pinion
⇨ : Adjusting direction of crown gear

19) Install the rear cover and tighten bolts to specified torque.

CAUTION:
Securely connect the ground terminal of rear differential temperature sensor.

Tightening torque:
29 N·m (3.0 kgf-m, 21.7 ft-lb)

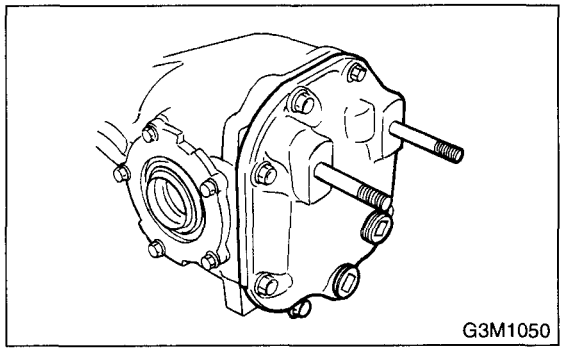

E: INSPECTION

Wash all the disassembled parts clean, and examine them for wear, damage or other defects. Repair or replace defective parts as necessary.

1) Crown gear and drive pinion:
- If abnormal tooth contact is evident, find out the cause and adjust to give correct tooth contact at assembly. Replace the gear if excessively worn or incapable of adjustment.
- If crack, score or seizure is evident, replace as a set. Slight damage of tooth can be corrected by oil stone or the like.

2) Side gear and pinion mate gear:
- Replace if crack, score or other defects are evident on tooth surface.
- Replace if thrust washer contacting surface is worn or seized. Slight damage of the surface can be corrected by oil stone or the like.

3) Bearing:
Replace if seizure, peeling, wear, rust, dragging during rotation, abnormal noise or other defect is evident.

4) Thrust washers of side gear and pinion mate gear:
Replace if seizure, flaw, abnormal wear or other defect is evident.

5) Oil seal:
Replace if deformed or damaged, and at every disassembling.

6) Differential carrier:
Replace if the bearing bores are worn or damaged.

7) Differential case:
Replace if its sliding surfaces are worn or cracked.

8) Companion flange:
Replace if the oil seal lip contacting surfaces have flaws.

1. SIDE GEAR BACKLASH

Using a dial gauge, check the backlash of the side gear.

Side gear backlash:
0.1 — 0.2 mm (0.004 — 0.008 in)

If the side gear backlash is not within the specification, adjust clearance as specified by selecting side gear thrust washer.

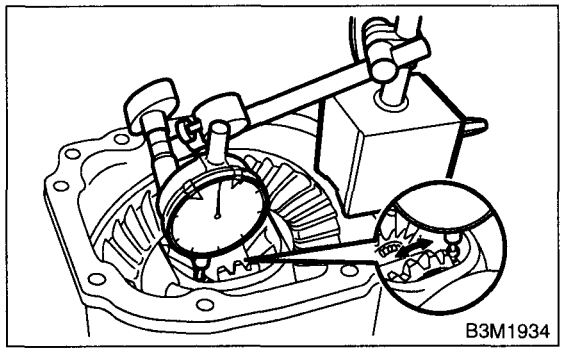

2. CROWN GEAR BACKLASH

Using a dial gauge, check the backlash of the crown gear.

Crown gear backlash:
0.1 — 0.2 mm (0.004 — 0.008 in)

If the crown gear backlash is not within the specification, adjust the side bearing preload or repair if necessary.

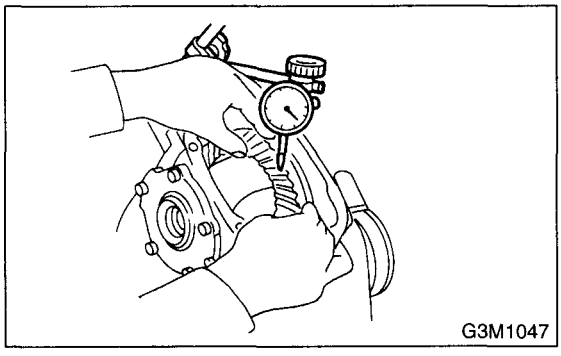

3. CROWN GEAR RUNOUT

Using a dial gauge, check the crown gear runout.

Crown gear runout:
Less than 0.05 mm (0.0020 in)

If the crown gear runout exceeds 0.05 mm (0.0020 in), replace the crown gear.

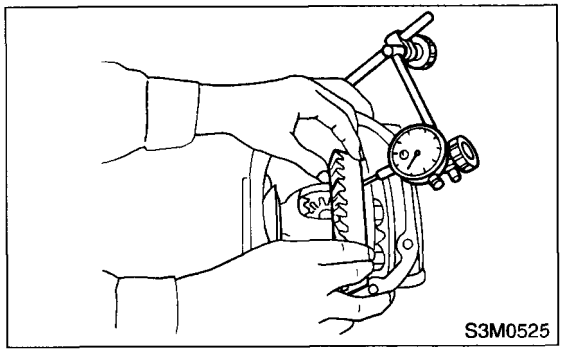

4. TOOTH CONTACT BETWEEN CROWN GEAR AND DRIVE PINION

Inspect the tooth contact between crown gear and driven pinion. <Ref. to DI-24, ASSEMBLY, Rear Differential.>

5. TOTAL PRELOAD

Using a gauge, check the turning resistance increase.

Total preload:
2.9 — 10.8 N·m (0.3 — 1.1 kgf, 0.7 — 2.4 lb)

If the increase of the resistance is not within the specification, adjust the side bearing retainer shims.

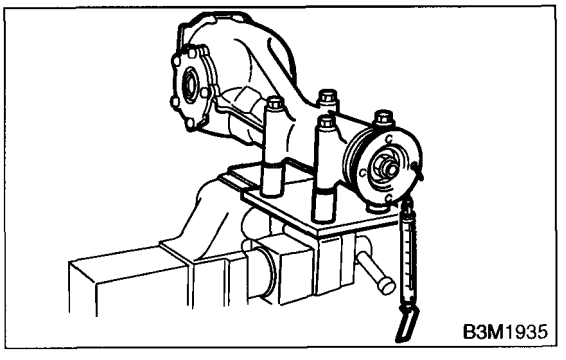

F: ADJUSTMENT

1. SIDE GEAR BACKLASH

Adjust the side gear backlash.
<Ref. to DI-24, ASSEMBLY, Rear Differential.>

2. CROWN GEAR BACKLASH

Adjust the crown gear backlash.
<Ref. to DI-24, ASSEMBLY, Rear Differential.>

3. TOOTH CONTACT BETWEEN CROWN GEAR AND DRIVE PINION

Adjust the tooth contact between crown gear and drive pinion gear.
<Ref. to DI-24, ASSEMBLY, Rear Differential.>

4. TOTAL PRELOAD

Adjust the side bearing shim.
<Ref. to DI-24, ASSEMBLY, Rear Differential.>

5. Rear Differential Front Oil Seal

A: INSPECTION

Make sure that there is no oil leakage from front oil seal.
If there is any oil leakage, replace the oil seal.

B: REPLACEMENT

1) Set the vehicle on the lift.
2) Disconnect the ground terminal from battery.
3) Move the select lever or gear shift lever to "N".
4) Release the parking brake.
5) Remove the oil drain plug, and drain gear oil.

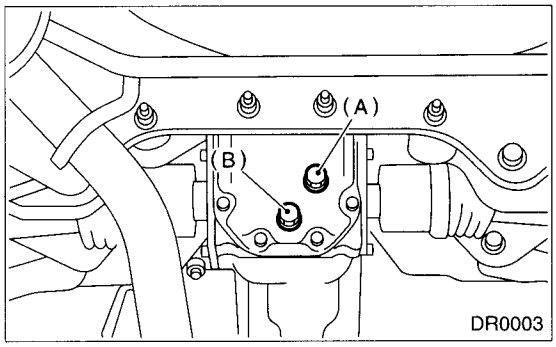

(A) Filler plug
(B) Drain plug

6) Install the oil drain plug.

NOTE:
- Apply fluid packing to drain plug.

Tightening torque:
49 N·m (5.0 kgf-m, 36.2 ft-lb)

7) Remove the rear exhaust pipe and muffler.
8) Remove the rear differential protector. (If equipped)
9) Remove the propeller shaft from body. <Ref. to DS-14, REMOVAL, Propeller Shaft.>
10) Remove the self-locking nut while holding companion flange with ST.
ST 498427200 FLANGE WRENCH

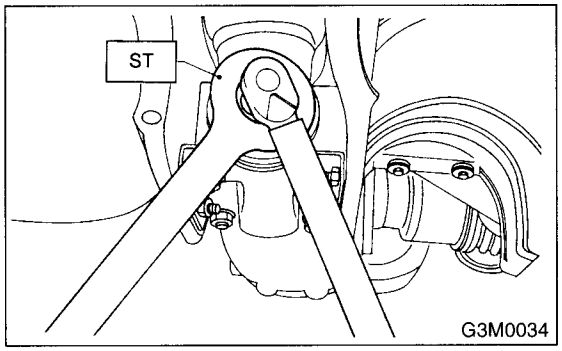

11) Extract the companion flange using ST.
ST 399703602 PULLEY ASSY

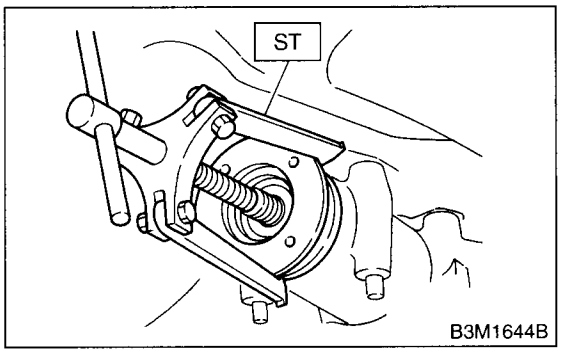

12) Remove the oil seal using ST.
ST 499705401 PULLER ASSY

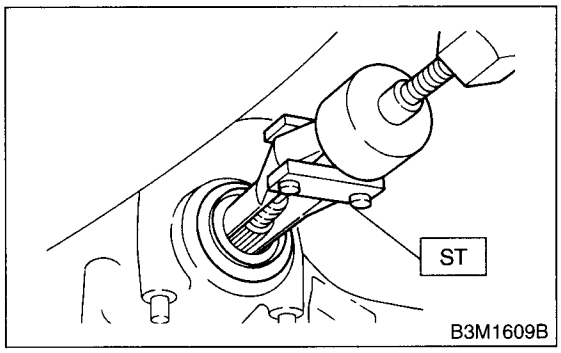

13) Fit a new oil seal using ST.
ST 498447120 DRIFT

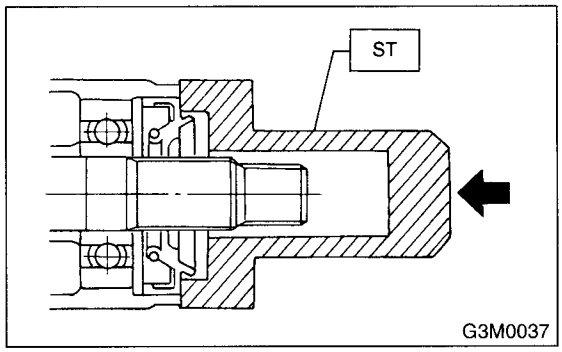

14) Install the companion flange.

NOTE:
Use a plastic hammer to install companion flange.

15) Tighten the self-locking nut within the specified torque range so that the turning resistance of companion flange becomes the same as that before replacing oil seal.
ST 498427200 FLANGE WRENCH

NOTE:
Use a new self-locking nut.

Tightening torque:
181.4 N·m (18.50 kgf-m, 133.8 ft-lb)

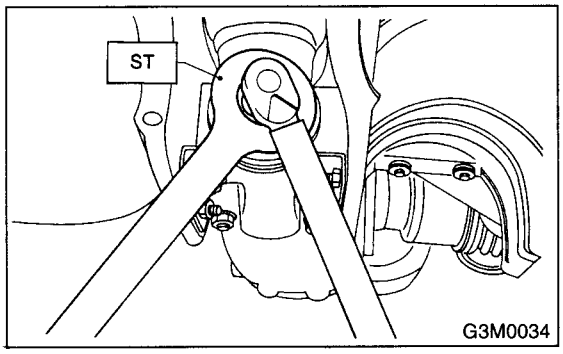

16) Reassembling procedure hereafter is the reverse of the disassembling.
17) Fill the differential carrier with gear oil to the filler plug level. <Ref. to DI-17, Differential Gear Oil.>

6. Rear Differential Side Oil Seal

A: INSPECTION

Make sure that there is no oil leakage from side oil seal.
If there is any oil leakage, replace the oil seal.

B: REPLACEMENT

1) Disconnect the ground terminal from battery.
2) Move the select lever or gear shift lever to "N".
3) Release the parking brake.
4) Loosen both wheel nuts.
5) Jack-up the vehicle and support it with rigid racks.
6) Remove the wheels.
7) Remove the rear exhaust pipe and muffler.
Non-turbo model:
<Ref. to EX(SOHC)-9, REMOVAL, Rear Exhaust Pipe.> and <Ref. to EX(SOHC)-11, REMOVAL, Muffler.>
Turbo model:
<Ref. to EX(DOHC TURBO)-13, REMOVAL, Rear Exhaust Pipe.> and <Ref. to EX(DOHC TURBO)-14, REMOVAL, Muffler.>
8) Remove the DOJ of rear drive shaft from rear differential.

(1) Remove the ABS sensor cable clamp and parking brake cable clamp from bracket.

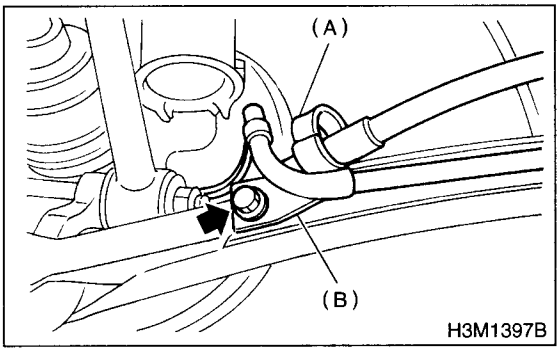

(A) ABS sensor cable clamp
(B) Parking brake cable guide

(2) Remove the ABS sensor cable clamp from the trailing link.

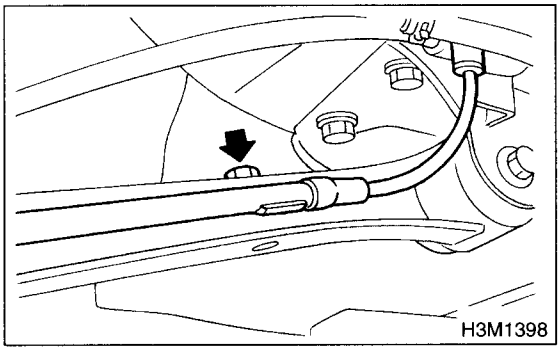

(3) Remove the ABS sensor cable clamp and parking brake cable guide from the trailing link.

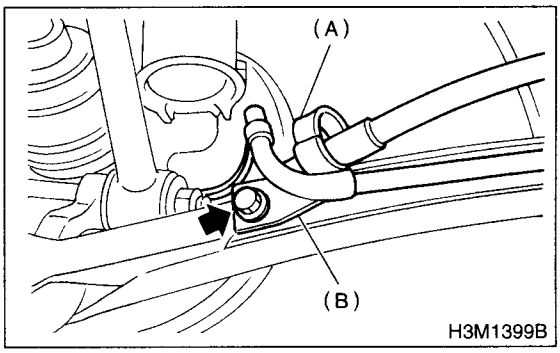

(A) ABS sensor cable clamp
(B) Parking brake cable guide

(4) Remove the rear stabilizer link.

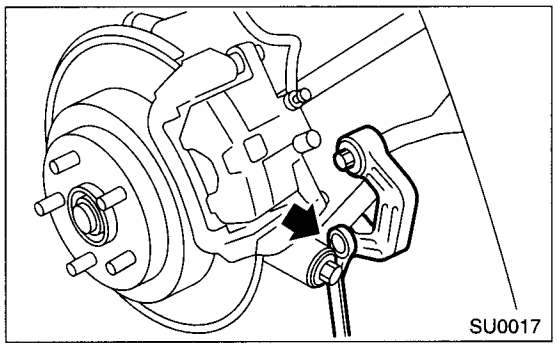

(5) Remove the bolts which secure the trailing link to the housing.

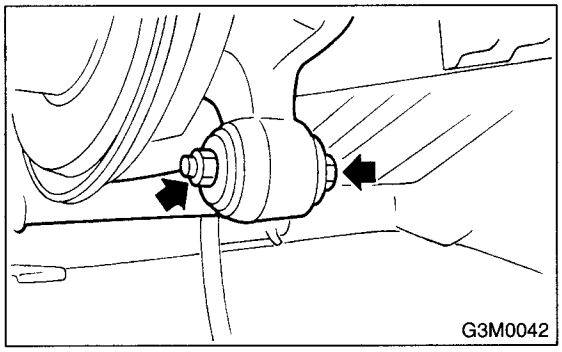

(6) Remove the bolts which secure the front and rear lateral link to the rear housing.

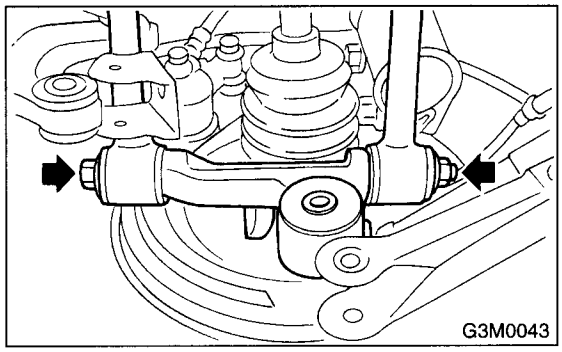

(7) Remove the DOJ from the rear differential by using ST.

CAUTION:
When removing the DOJ from the rear differential, fit ST to the bolts as shown in figure so as not to damage the side bearing retainer.

ST 208099PA100 DRIVE SHAFT REMOVER

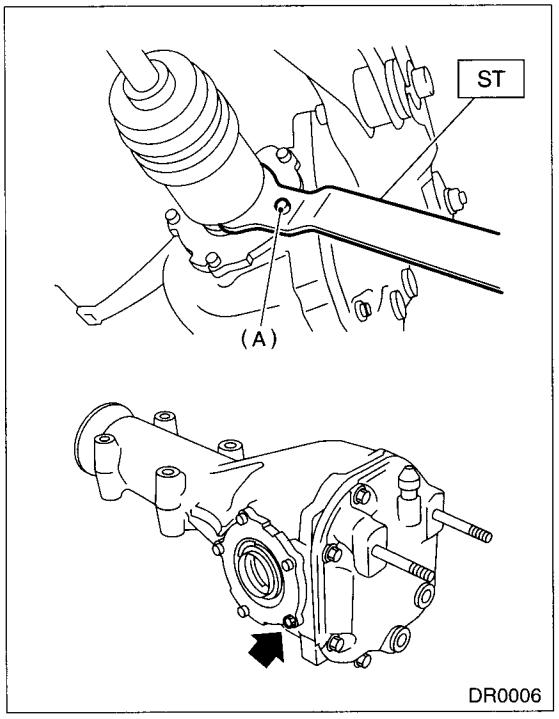

(A) Bolt

9) Remove the rear drive shaft to rear crossmember using wire.

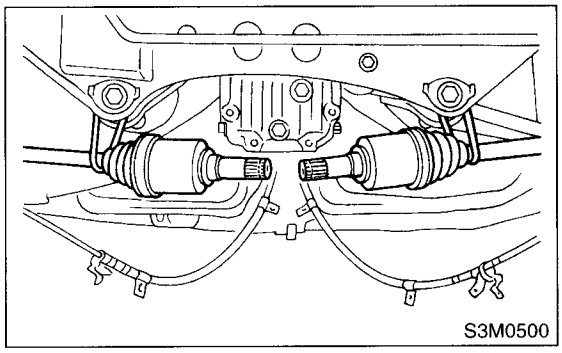

10) Remove the nut of protector.

ST 398527700 PULLER ASSY

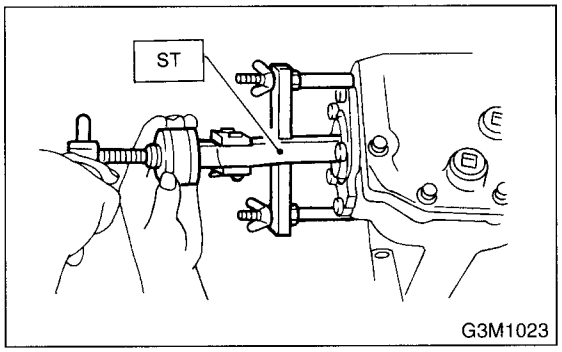

11) Drive in a new side oil seal with ST.

CAUTION:
Apply chassis grease between the oil seal lips.

ST 398437700 DRIFT

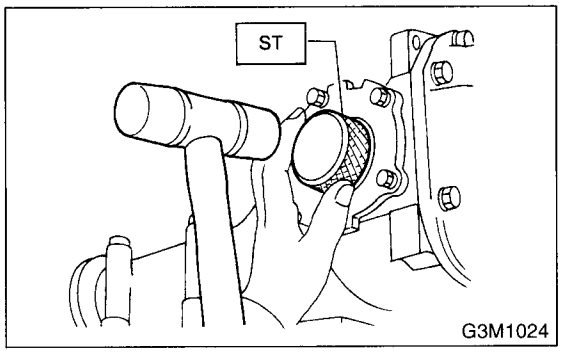

12) Insert the DOJ into rear differential.
(1) Install the ST to rear differential.

ST 28099PA090 SIDE OIL SEAL PROTECTOR

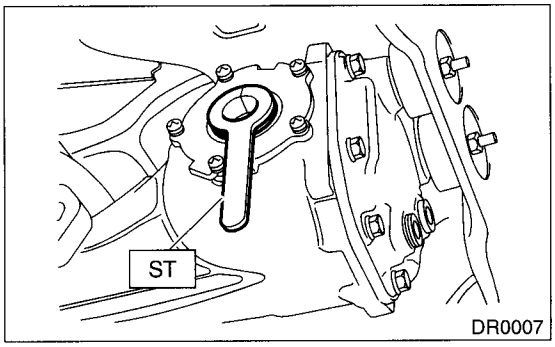

(2) Install the spline shaft until the spline portion is inside the side oil seal using ST.

ST 28099PA090 SIDE OIL SEAL PROTECTOR

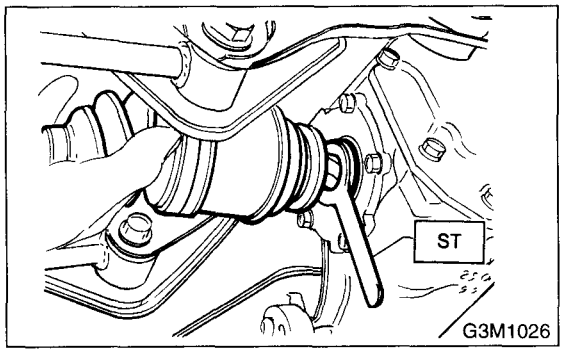

(3) Remove ST.

ST 28099PA090 SIDE OIL SEAL PROTECTOR

13) Hereafter, reassemble in the reverse order of disassembly.

14) Fill differential carrier with gear oil to the filler plug level. <Ref. to DI-17, Differential Gear Oil.>

7. Rear Differential Member

A: REMOVAL

1) Set the vehicle on the lift.
2) Disconnect the ground terminal from battery.
3) Move the selector lever or gear shift lever to "N".
4) Release the parking brake.
5) Loosen the wheel nuts.
6) Jack-up the vehicle and support it with study racks.
7) Remove the wheels.
8) Remove the rear exhaust pipe and muffler.
Non-turbo model:
<Ref. to EX(SOHC)-9, REMOVAL, Rear Exhaust Pipe.> and <Ref. to EX(SOHC)-11, REMOVAL, Muffler.>
Turbo model:
<Ref. to EX(DOHC TURBO)-13, REMOVAL, Rear Exhaust Pipe.> and <Ref. to EX(DOHC TURBO)-14, REMOVAL, Muffler.>
9) Remove the rear differential protector. (If equipped)
10) Remove the rear differential front member.

NOTE:
When removing the rear differential front member, work the removal procedure as rear differential.
<Ref. to DI-19, REMOVAL, Rear Differential.>

11) Remove the differential rear member.

B: INSTALLATION

To install, reverse the removal sequence.
1) Position the front member on body by passing it under parking brake cable and securing to rear differential.

NOTE:
When installing the rear differential front member, do not confuse the installation seqence of the stopper.

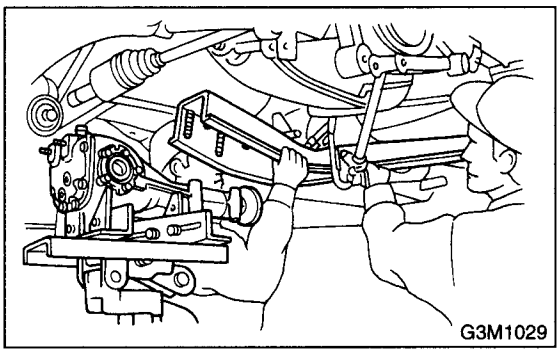

2) Insert the DOJ of rear drive shaft into rear differential.<Ref. to DI-37, REPLACEMENT, Rear Differential Side Oil Seal.>

CAUTION:
Before inserting, replace the differential side oil seal with a new one.

ST 28099PA090 SIDE OIL SEAL PROTEXTOR

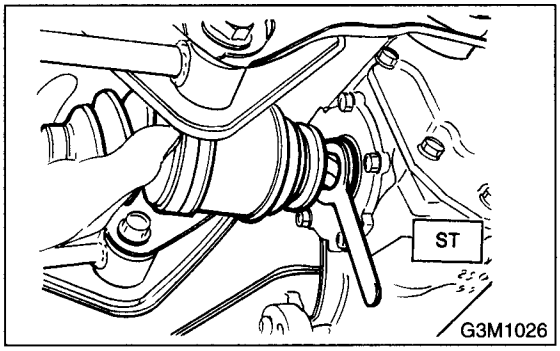

3) Installing procedure hereafter is in the reverse order of removal.

C: INSPECTION

1) Check the rear differential member for damage, bend or corrosion.
If damage, bend or corrosion is excessive, replace the rear differential member.
2) Check bushings of rear differential member for cracking, hardening or damage.
If cracking, hardening or damage is excessive, replace rear differential member.

8. General Diagnostic Table

A: INSPECTION

Symptom or trouble	Possible cause	Remedy
1. Oil leakage	(1) Worn, scratched, or incorrectly seated front or side oil seal. Scored, battered or excessively worn sliding surface of companion flange.	Repair or replace.
	(2) Clogged or damaged air breather.	Clean, repair or replace.
	(3) Loose bolts on differential spindle or side retainer or incorrectly fitted O-ring.	Tighten bolts to specified torque. Replace O-ring.
	(4) Loose rear cover attaching bolts or damaged gasket.	Tighten bolts to specified torque. Replace gasket and apply liquid packing.
	(5) Loose oil filler or drain plug.	Retighten and apply liquid packing.
	(6) Wear, damage or incorrectly fitting for spindle, side retainer and oil seal.	Repair or replace.
2. Seizure NOTE: Seized or damaged parts should be replaced, and also other parts should be thoroughly checked for any defect and should be repaired or replaced as required.	(1) Insufficient backlash for hypoid gear.	Readjust or replace.
	(2) Excessive preload for side, rear or front bearing.	Readjust or replace.
	(3) Insufficient or improper oil used.	Replace seized part and fill with specified oil to specified level.
3. Damage NOTE: Damaged parts should be replaced, and also other parts should be thoroughly checked for any defect and should be repaired or replaced as required.	(1) Improper backlash for hypoid gear.	Replace.
	(2) Insufficient or excessive preload for side, rear or front bearing.	Readjust or replace.
	(3) Excessive backlash for differential gear.	Replace gear or thrust washer.
	(4) Loose bolts and nuts such as crown gear bolt.	Retighten.
	(5) Damage due to overloading.	Replace.
4. Noises when starting or shifting gears NOTE: Noises may be caused by differential assembly, universal joint, wheel bearing, etc. Find out what is actually making noise before disassembly.	(1) Excessive backlash for hypoid gear.	Readjust.
	(2) Excessive backlash for differential gear.	Replace gear or thrust washer.
	(3) Insufficient preload for front or rear bearing.	Readjust.
	(4) Loose drive pinion nut.	Tighten to specified torque.
	(5) Loose bolts and nuts such as side bearing retainer attaching bolt.	Tighten to specified torque.
5. Noises when cornering	(1) Damaged differential gear.	Replace.
	(2) Excessive wear or damage of thrust washer.	Replace.
	(3) Broken pinion mate shaft.	Replace.
	(4) Seized or damaged side bearing.	Replace.

Symptom or trouble	Possible cause	Remedy
6. Gear noises NOTE: Since noises from engine, muffler, transmission, propeller shaft, wheel bearings, tires, and body are sometimes mistaken for noises from differential assembly, be careful in checking them. Inspection methods to locate noises include coasting, accelerating, cruising, and jacking-up all four wheels. Perform these inspections according to condition of trouble. When listening to noises, shift gears into four wheel drive and fourth speed position, trying to pick up only differential noise.	(1) Improper tooth contact of hypoid gear.	Readjust or replace hypoid gear set.
	(2) Improper backlash for hypoid gear.	Readjust.
	(3) Scored or chipped teeth of hypoid gear.	Replace hypoid gear set.
	(4) Seized hypoid gear.	Replace hypoid gear set.
	(5) Improper preload for front or rear bearings.	Readjust.
	(6) Seized, scored or chipped front or rear bearing.	Replace.
	(7) Seized, scored or chipped side bearing.	Replace.
	(8) Vibrating differential carrier.	Replace.

TRANSFER CASE

TC

		Page
1.	General Description	2
2.	Transfer Case and Extension for MT	3
3.	Transfer Clutch and Extension for AT	4
4.	Oil Seal	5
5.	Transfer Drive Gear (MT)	6
6.	Transfer Driven Gear (MT)	7
7.	Reduction Drive Gear without VTD	8
8.	Reduction Drive Gear with VTD	9
9.	Reduction Driven Gear without VTD	10
10.	Reduction Driven Gear with VTD	11
11.	Center Differential	12
12.	Transfer Clutch Pressure Test	13
13.	Transfer Duty Solenoid and Valve Body	14

1. General Description

A: NOTE

For removal, installation and inspection work, refer to "AT" or "MT" section.
AT model:
<Ref. to AT-2, General Description.>
MT model:
<Ref. to MT-2, General Description.>

2. Transfer Case and Extension for MT

A: NOTE

For removal, installation and inspection work, refer to "MT" section. <Ref. to MT-41, Transfer Case and Extension Case Assembly.>

3. Transfer Clutch and Extension for AT

A: NOTE

For removal, installation and inspection work, refer to "AUTOMATIC TRANSMISSION" (a separate publication: Pub. No. G0853ZE).

4. Oil Seal

A: NOTE

For removal, installation and inspection work, refer to "AT" or "MT" section.
AT model:
<Ref. to AT-27, Extension Case Oil Seal.>
MT model:
<Ref. to MT-36, Oil Seal.>

5. Transfer Drive Gear (MT)

A: NOTE

For removal, installation and inspection work, refer to "MT" section. <Ref. to MT-45, Transfer Drive Gear.>

6. Transfer Driven Gear (MT)

A: NOTE

For removal, installation and inspection work, refer to "MT" section. <Ref. to MT-47, Transfer Driven Gear.>

7. Reduction Drive Gear without VTD

A: NOTE

For removal, installation and inspection work, refer to "AUTOMATIC TRANSMISSION" (a separate publication: Pub. No. G0853ZE).

8. Reduction Drive Gear with VTD

A: NOTE

For removal, installation and inspection work, refer to "AUTOMATIC TRANSMISSION" (a separate publication: Pub. No. G0853ZE)

9. Reduction Driven Gear without VTD

A: NOTE

For removal, installation and inspection work, refer to "AUTOMATIC TRANSMISSION" (a separate publication: Pub. No. G0853ZE).

10. Reduction Driven Gear with VTD

A: NOTE

For removal, installation and inspection work, refer to "AUTOMATIC TRANSMISSION" (a separate publication: Pub. No. G0853ZE)

11.Center Differential

A: NOTE

For removal, installation and inspection work, refer to "AUTOMATIC TRANSMISSION" (a separate publication) or "MT" section.
AT model:
Pub No. G0853ZE
MT model:
<Ref. to MT-49, Center Differential.>

12. Transfer Clutch Pressure Test

A: NOTE

For inspection work, refer to "AT" section. <Ref. to AT-18, Transfer Clutch Pressure Test.>

13. Transfer Duty Solenoid and Valve Body

A: NOTE

For removal, installation and inspection work, refer to "AUTOMATIC TRANSMISSION" (a separate publication: Pub. No. G0853ZE) or "AT" section. <Ref. to AT-39, Shift Solenoids, Duty Solenoids and ATF Temperature Sensor.>

DRIVE SHAFT SYSTEM

DS

		Page
1.	General Description	2
2.	Propeller Shaft	14
3.	Front Axle	17
4.	Rear Axle	23
5.	Front Drive Shaft	32
6.	Front Drive Shaft Boots	38
7.	Rear Drive Shaft	39
8.	Rear Drive Shaft Boots	44
9.	General Diagnostic Table	46

1. General Description

A: SPECIFICATIONS

1. PROPELLER SHAFT

Model		Turbo	Non-turbo
Propeller shaft type		DOJ type	UJ type
Front propeller shaft Joint-to-joint length: L_1 mm (in)	AT	579 (22.79)	584 (22.99)
	MT	638 (25.12)	643 (25.32)
Rear propeller shaft Joint-to-joint length: L_2 mm (in)		713 (28.07)	708 (27.87)
Outside diameter of tube: mm (in)	D_1	63.5 (2.500)	
	D_2	57.0 (2.244)	

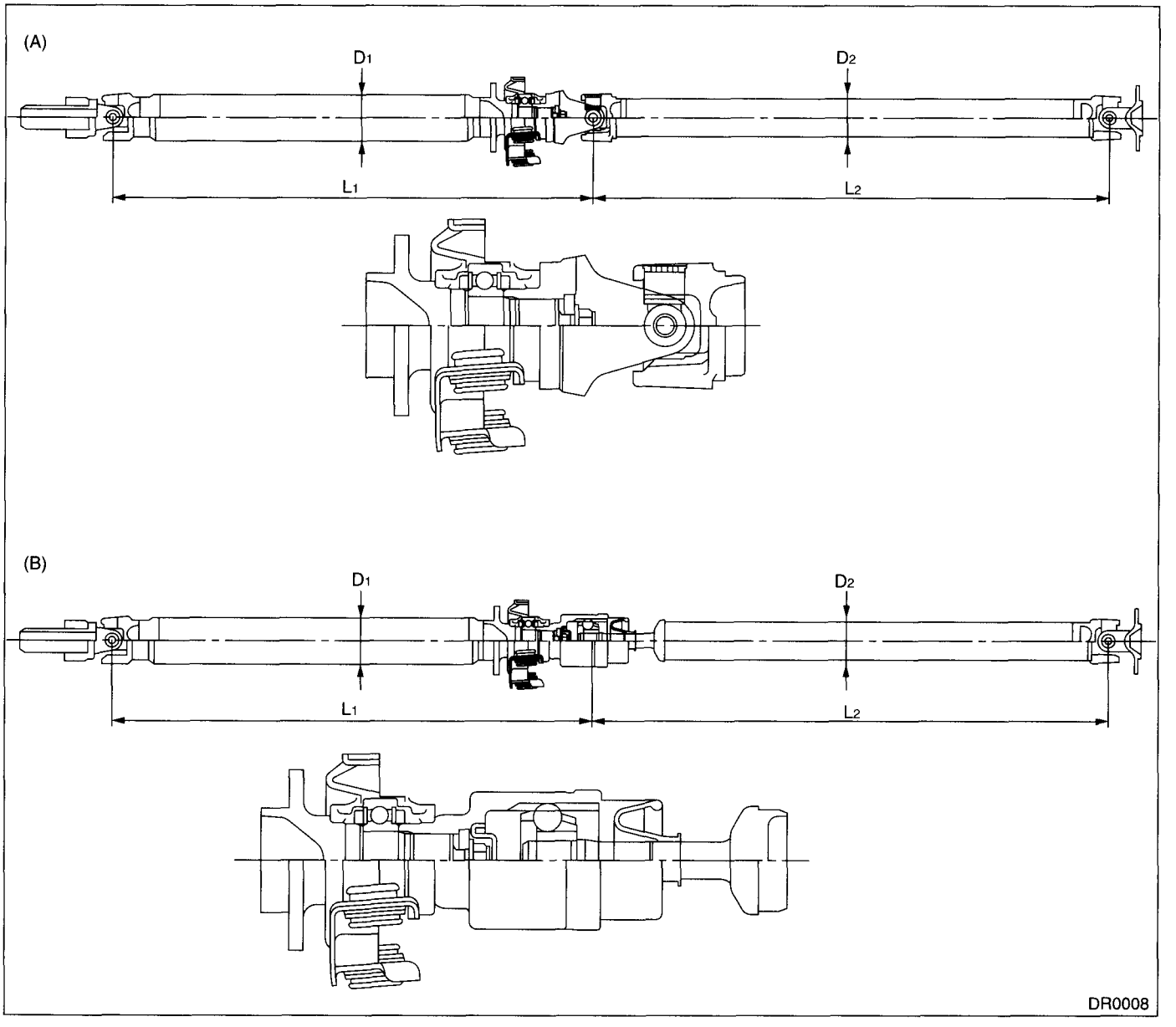

(A) UJ type (B) DOJ type

2. FRONT DRIVE SHAFT ASSEMBLY

Type of drive shaft assembly	Model	Shaft diameter
EBJ87+SFJ82	Except turbo MT model	26 mm (1.02 in)
	Turbo MT model	28 mm (1.10 in)

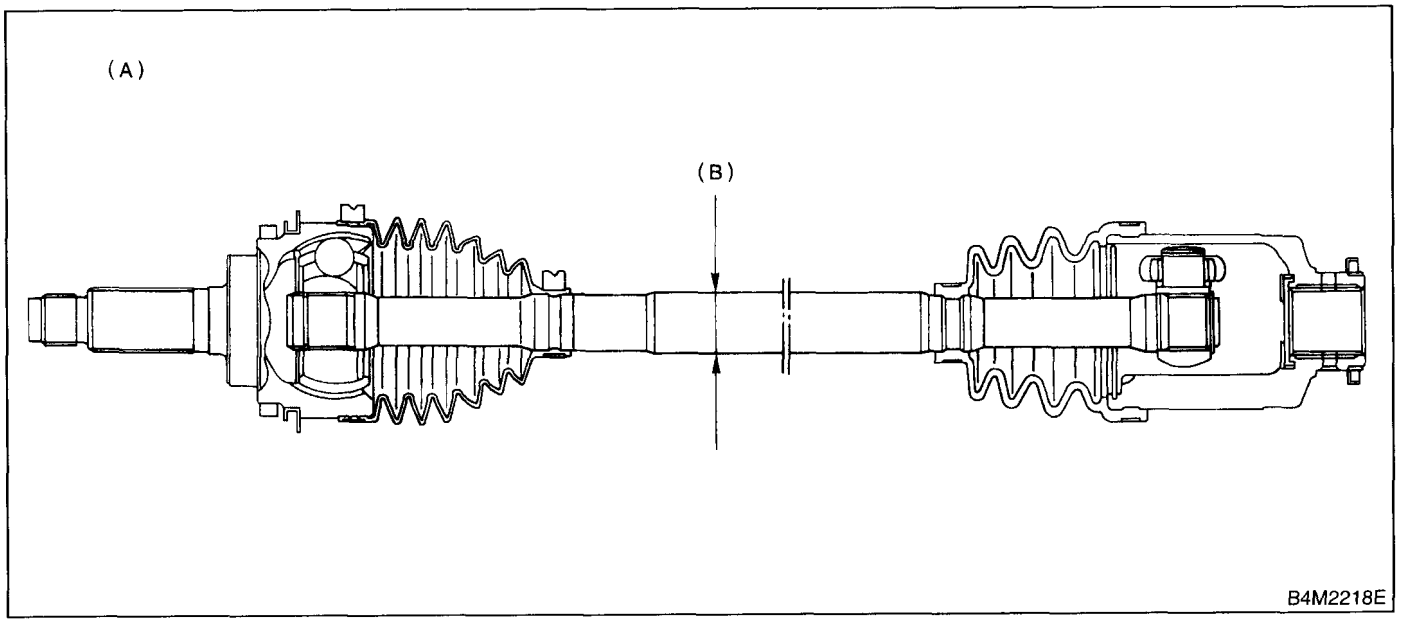

(A) EBJ87+SFJ82 (B) Measuring point

3. REAR DRIVE SHAFT ASSEMBLY

Type of drive shaft assembly	Model	No. of identification protrusion on shaft	L1 (mm)	ϕ D (mm)
EBJ82/DOJ82 RH	Sedan Turbo	2 (Two)	363	24
EBJ82/DOJ82 LH		1 (One)	353	24
BJ79/DOJ79 RH	Sedan Non-turbo	2 (Two)	368	23
BJ79/DOJ79 LH		1 (One)	358	23
EBJ82/DOJ82 RH	Wagon Turbo	2 (Two)	353	24
EBJ82/DOJ82 LH		1 (One)	343	24
BJ79/DOJ79 RH	Wagon Non-turbo	2 (Two)	358	23
BJ79/DOJ79 LH		1 (One)	348	23

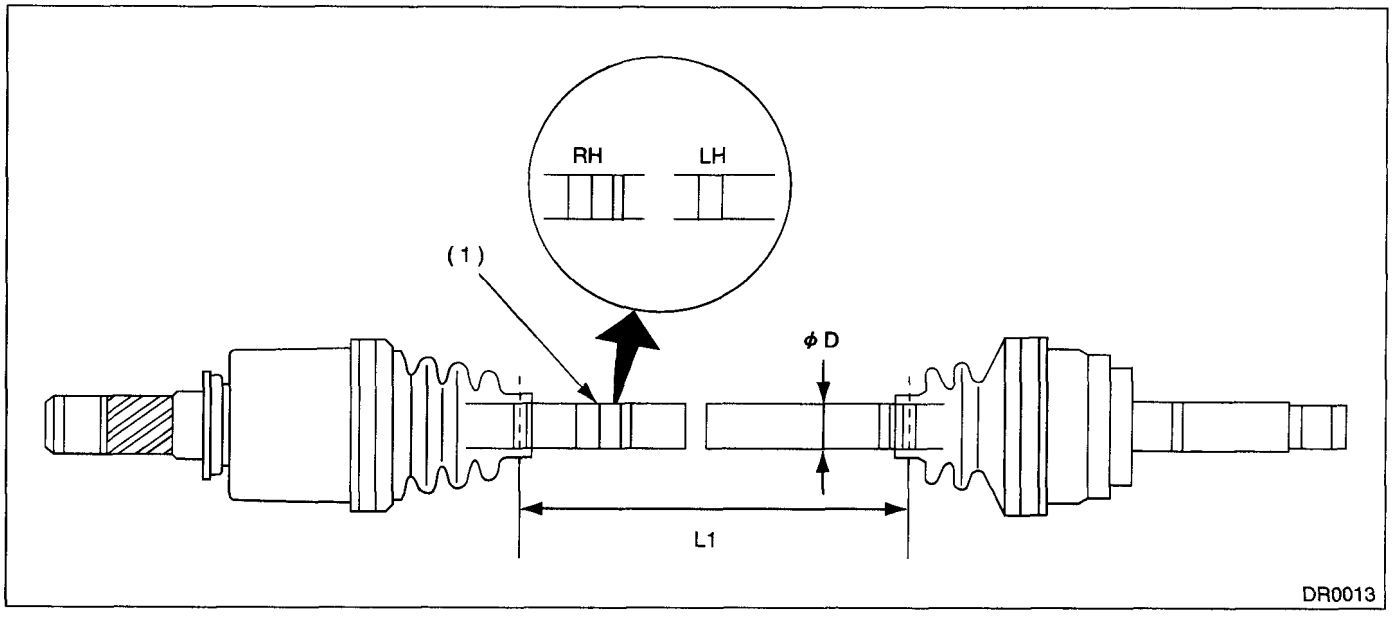

(1) Identification protrusion

B: COMPONENT

1. PROPELLER SHAFT

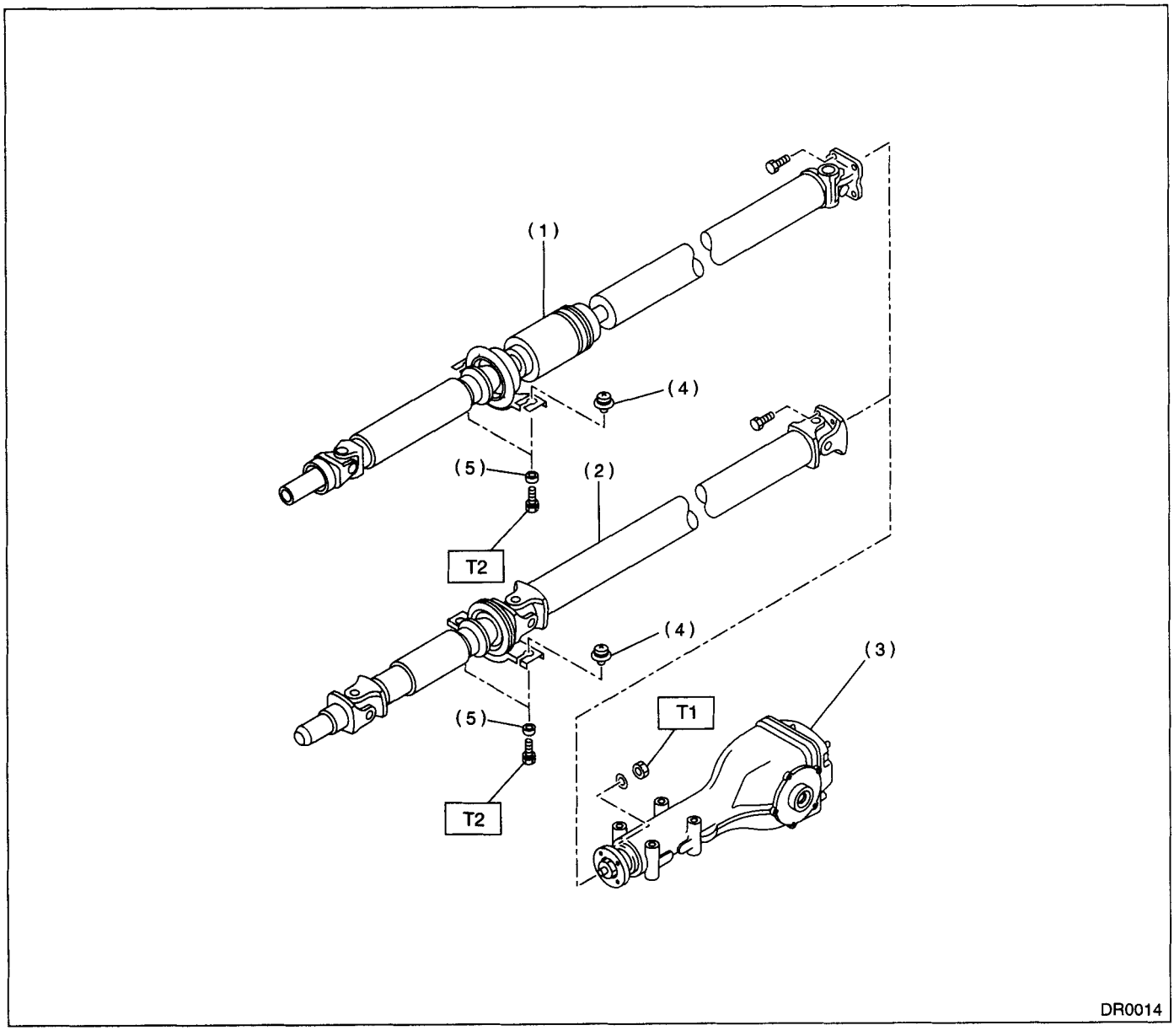

(1) Propeller shaft (Turbo model)
(2) Propeller shaft (Non-Turbo model)
(3) Rear differential
(4) Bush
(5) Bush

Tightening torque: N·m (kgf-m, ft-lb)
T1: 31 (3.2, 23.1)
T2: 52 (5.3, 38.3)

2. FRONT AXLE

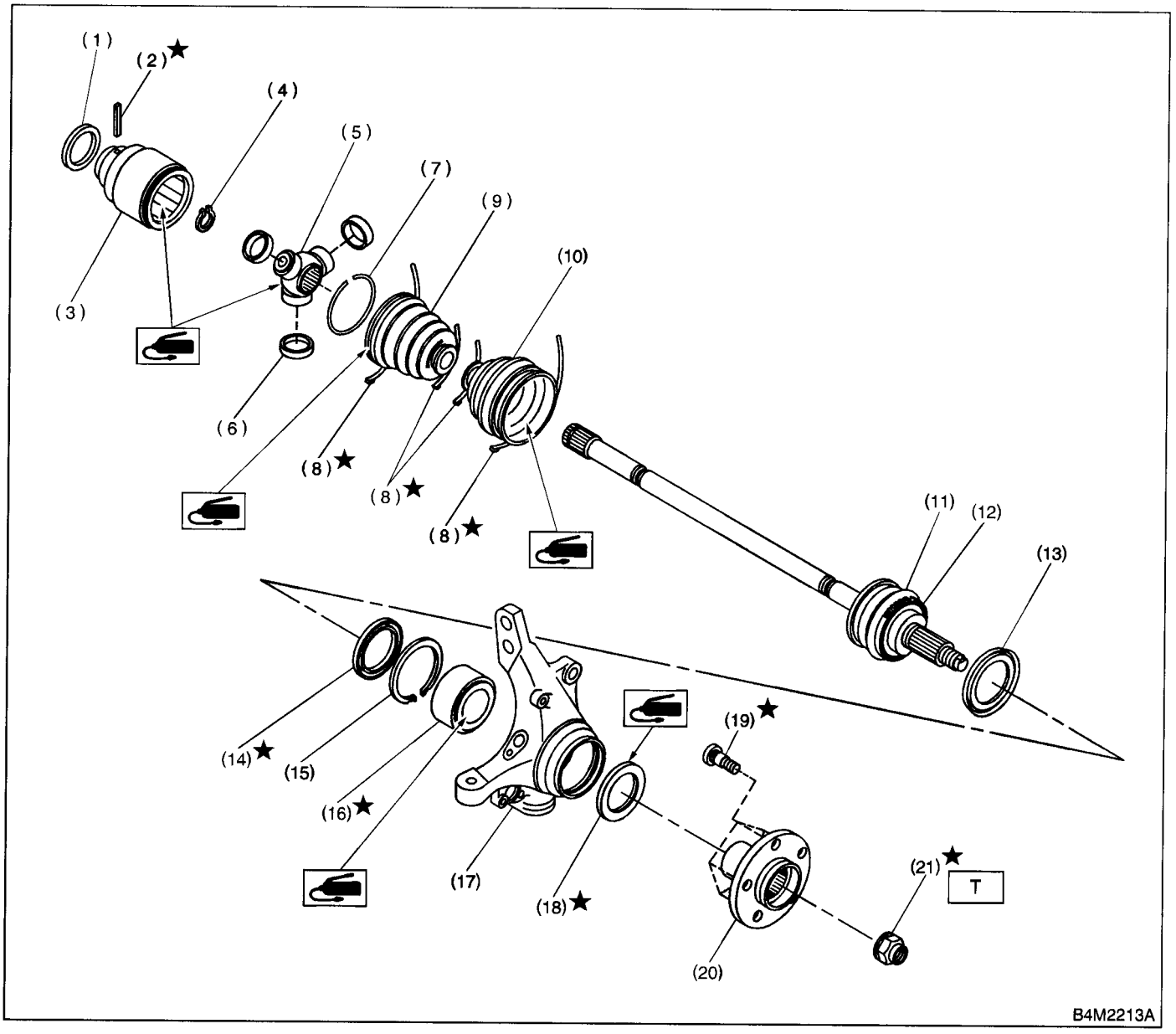

(1) Baffle plate (SFJ)
(2) Spring pin
(3) Outer race (SFJ)
(4) Snap ring
(5) Trunnion
(6) Free ring
(7) Circlip
(8) Boot band
(9) Boot (SFJ)
(10) Boot (EBJ)
(11) EBJ ASSY
(12) Tone wheel (With ABS)
(13) Baffle plate
(14) Oil seal (IN)
(15) Snap ring
(16) Bearing
(17) Housing
(18) Oil seal (OUT)
(19) Hub bolt
(20) Hub
(21) Axle nut

Tightening torque: N·m (kgf-m, ft-lb)
T: 186 (19, 137)

3. REAR AXLE

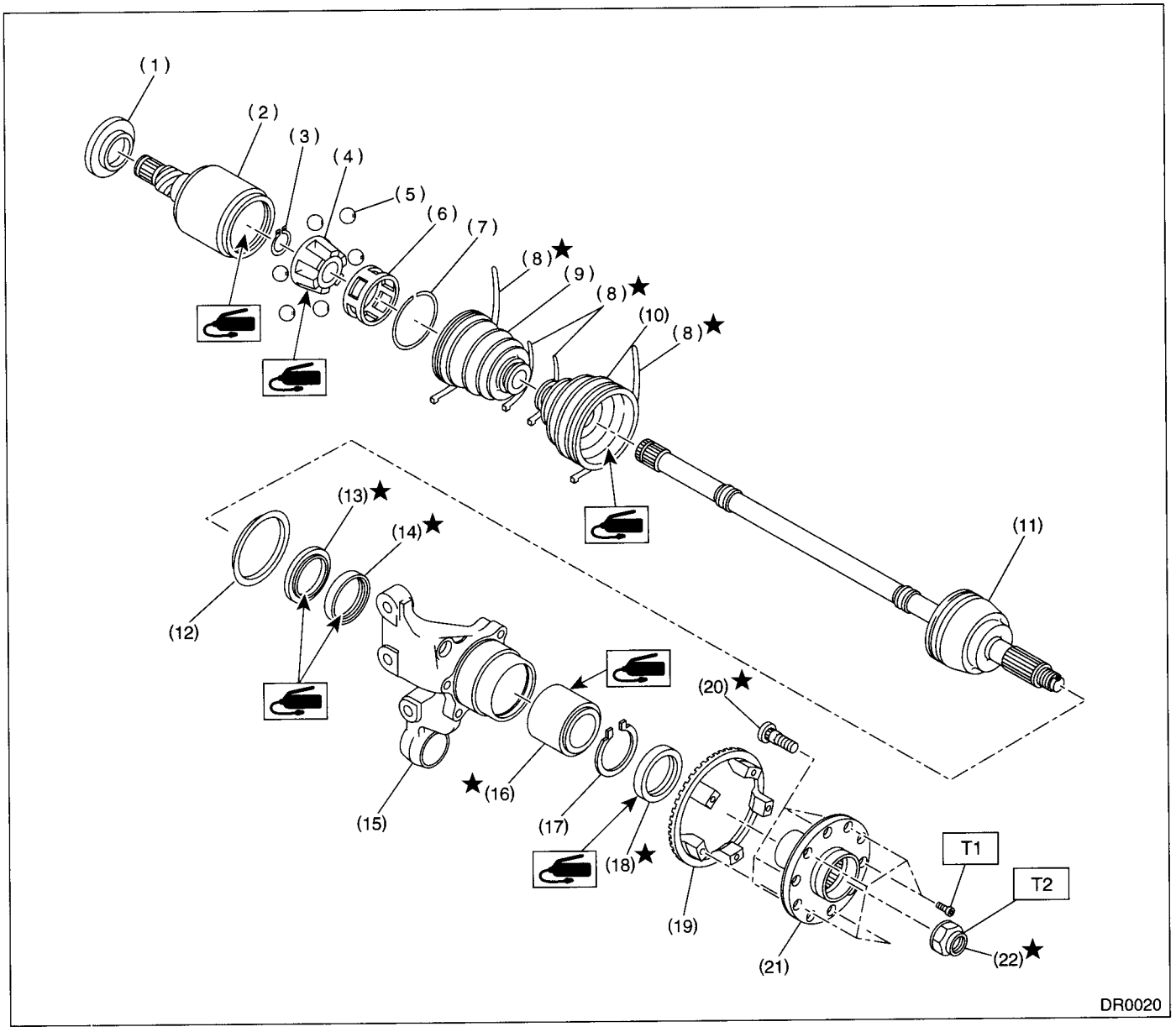

(1) Baffle plate (DOJ)
(2) Outer race (DOJ)
(3) Snap ring
(4) Inner race
(5) Ball
(6) Cage
(7) Circlip
(8) Boot band
(9) Boot (DOJ)
(10) Boot (*)
(11) Non-Turbo: BJ ASSY
Turbo: EBJ ASSY
(12) Baffle plate
(13) Oil seal (IN. No. 2)
(14) Oil seal (IN. No. 3)
(15) Housing
(16) Bearing ASSY
(17) Snap ring
(18) Oil seal (OUT)
(19) Tone wheel (With ABS)
(20) Hub bolt
(21) Hub
(22) Axle nut

Tightening torque: N·m (kgf-m, ft-lb)
T1: 13 (1.3, 9.4)
T2: 186 (19, 137)

* Non-Turbo model: BJ
Turbo model: EBJ

C: CAUTION

- Wear working clothing, including a cap, protective goggles, and protective shoes during operation.
- Remove contamination including dirt and corrosion before removal, installation or disassembly.
- Keep the disassembled parts in order and protect them from dust or dirt.
- Before removal, installation or disassembly, be sure to clarify the failure. Avoid unnecessary removal, installation, disassembly, and replacement.
- Be careful not to burn your hands, because each part on the vehicle is hot after running.
- Use SUBARU genuine grease etc. or the equivalent. Do not mix grease etc. with that of another grade or from other manufacturers.
- Be sure to tighten fasteners including bolts and nuts to the specified torque.
- Place shop jacks or safety stands at the specified points.
- Apply grease onto sliding or revolution surfaces before installation.
- Before installing O-rings or snap rings, apply sufficient amount of grease to avoid damage and deformation.
- Before securing a part on a vice, place cushioning material such as wood blocks, aluminum plate, or shop cloth between the part and the vice.

D: PREPARATION TOOL

1. SPECIAL TOOLS

ILLUSTRATION	TOOL NUMBER	DESCRIPTION	REMARKS
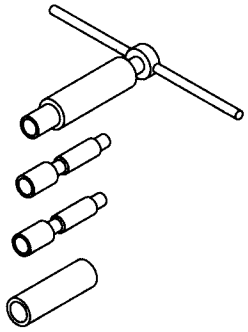 B4M2386	922431000	AXLE SHAFT INSTALLER	• Used for installing axle shaft into housing. • Used with ADAPTER (927390000).
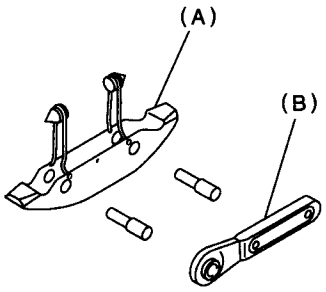 B4N2387A	925091000	BAND TIGHTENING TOOL	• Used for tightening boot band. (Except front axle housing side) (A) Jig for band (B) Ratchet wrench
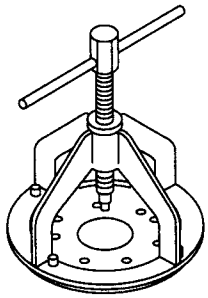 B4M2388	926470000	AXLE SHAFT PULLER	Used for removing axle shaft.
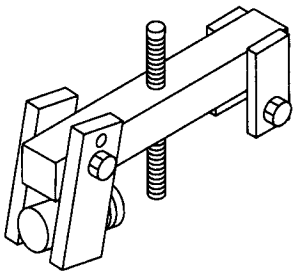 B4M2389	927060000	HUB REMOVER	• Used for removing front hub. • Used with HUB STAND (927080000).

ILLUSTRATION	TOOL NUMBER	DESCRIPTION	REMARKS
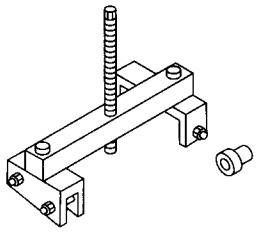 H5M0981	927420000	HUB REMOVER	• Used for removing rear hub. • Used with HUB STAND (927080000).
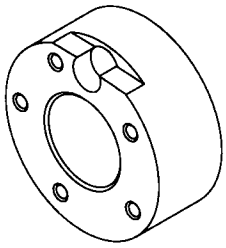 B4M2390	927080000	HUB STAND	Used for disassembling and assembling hub bolt in hub.
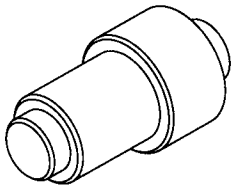 B4M2391	927100000	BEARING PULLER	• Used for disassembling and assembling front housing bearing. • Used with HOUSING STAND (927400000).
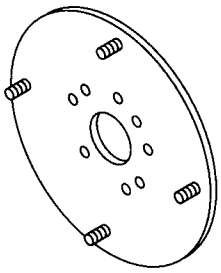 B4M2392	927140000	AXLE SHAFT PULLER PLATE	Same as plate 2 included in AXLE SHAFT PULLER (926470000).

ILLUSTRATION	TOOL NUMBER	DESCRIPTION	REMARKS
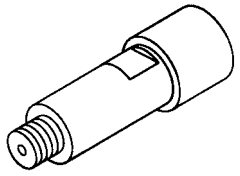 B4M2393	927390000	ADAPTER	Used as an adapter for AXLE SHAFT INSTALLER (922431000).
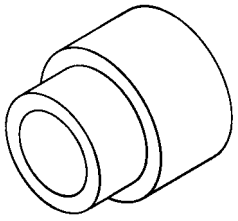 B4M2394	927400000	HOUSING STAND	• Used for disassembling and assembling front housing bearing. • Used with BEARING PULLER (927100000).
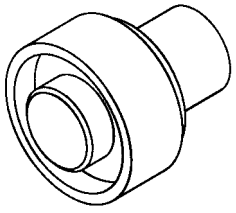 B4M2395	927410000	OIL SEAL INSTALLER	• Used for installing oil seal into front housing. • Used with HOUSING STAND (927400000).
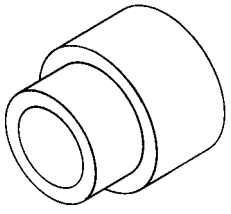 H5M0982	927430000	HOUSING STAND	• Used for disasembling and assembling rear housing bearing. • Used with BEARING PULLER (927440000).

ILLUSTRATION	TOOL NUMBER	DESCRIPTION	REMARKS
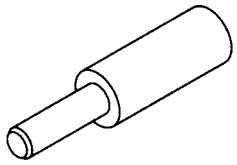 B4M2399	927120000	HUB INSTALLER	Used for installing hub.
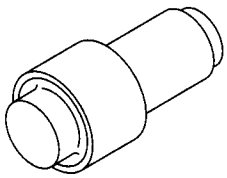 H5M0983	927440000	BEARING REMOVER	• Used for disassembling and assembling rear housing bearing. • Used with HOUSING STAND (927430000).
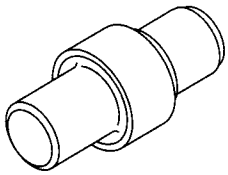 H5M0984	927460000	OIL SEAL INSTALLER	• Used for installing outer bearing and sub bearing into houding. • Used with HOUSING STAND (927430000).
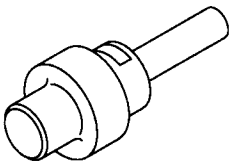 B4M2400	927450000	HUB INSTALLER	• Used for installing hub unit into hub ASSY. • Used with BEARING SPACER (28499AE000) and HUB STAND (927080000).

ILLUSTRATION	TOOL NUMBER	DESCRIPTION	REMARKS
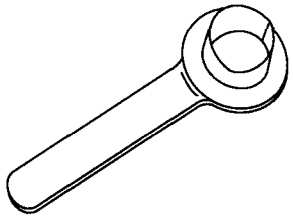 B4M2401	28099PA090	OIL SEAL PROTECTOR	• Used for installing rear drive shaft into rear differential. • For potecting oil seal.
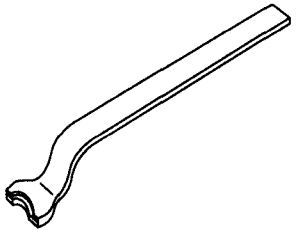 B4M2402	28099PA100	DRIVE SHAFT REMOVER	Used for removing rear drive shaft from rear differential.
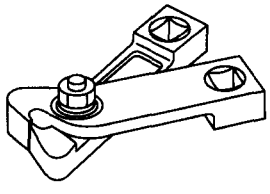 B4M2403	28099AC000	BOOT BAND PLIERS	Used for tightening front EBJ boot band. (Front axle housing side)

2. GENERAL PURPOSE TOOLS

TOOL NAME	REMERKS
Puller	Used for removing ball joint from knuckle arm.
Dial gauge	Used for inspecting propeller shaft run-out.
Snap ring pliers	Used for installing and removing snap ring.

2. Propeller Shaft

A: REMOVAL

NOTE:
- Before removing propeller shaft, wrap metal parts with a cloth or rubber material.
- In case of DOJ type, before removing propeller shaft, wrap metal parts (installed at the rubber boot of center DOJ) with a cloth or rubber material, as shown in the figure. Rubber boot may be damaged due to interference with adjacent metal parts while bending the DOJ during removal.

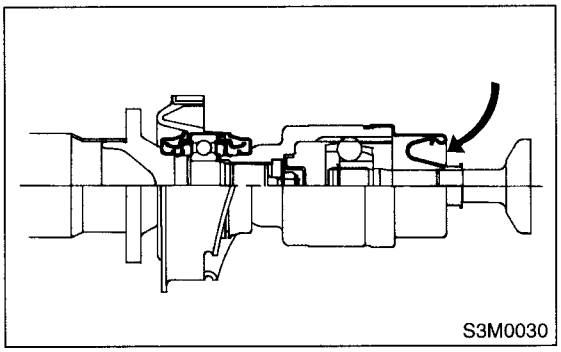

1) Set the vehicle on a lift.
2) Disconnect the ground terminal from battery.
3) Move the select lever or gear shift lever to "N".
4) Release the parking brake.
5) Jack-up the vehicle and support it with the safety stands. (rigid racks)
6) Remove the rear exhaust pipe and muffler.
7) Remove the rear differential protector. (If equipped)
8) Remove the differential mount front cover.

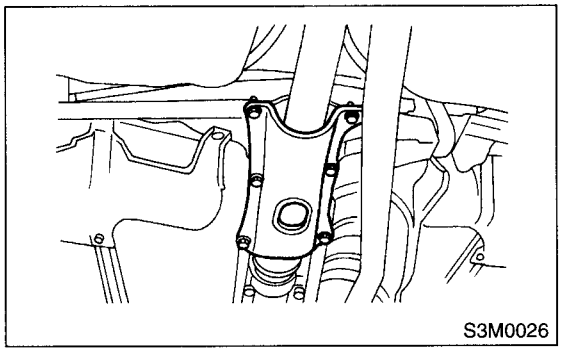

9) Remove the four bolts which hold propeller shaft to rear differential.

NOTE:
- Put matching mark on affected parts before removal.
- Remove all but one bolt.

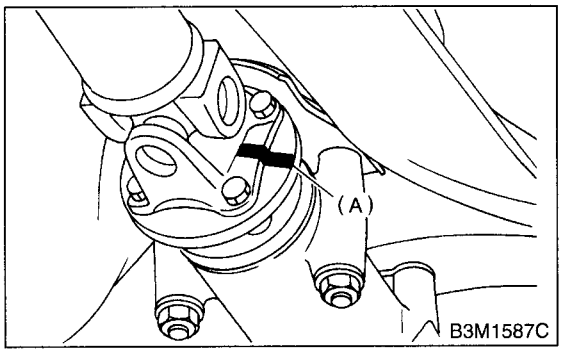

(A) Matching mark

10) Remove the two bolts which hold center bearing to the vehicle body.

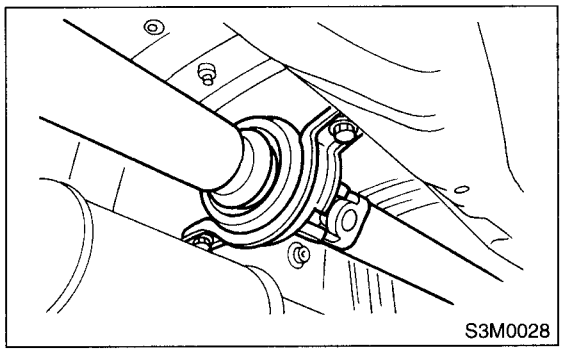

11) Remove the propeller shaft from the transmission.

CAUTION:
- **not to damage oil seals and frictional surface of sleeve yoke.**
- **Cover the center exhaust pipe with a cloth to keep off any ATF or oil spilled from transmission when removing propeller shaft.**

NOTE:
- Be sure to use an empty oil can to catch oil flowing out when removing propeller shaft.
- Be sure to plug the opening in transmission after removal of propeller shaft.

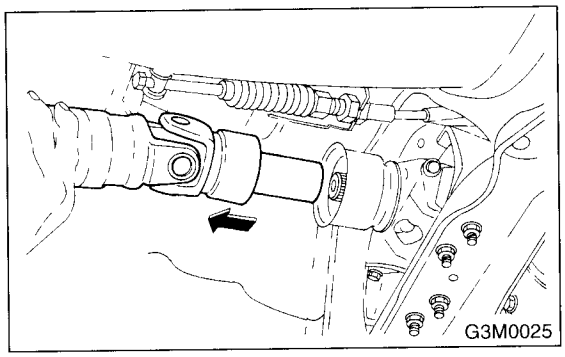

12) Install the extension cap to transmission.

NOTE:
If extension cap is not available, place vinyl bag over opening and fasten with string to prevent gear oil or ATF from leaking.

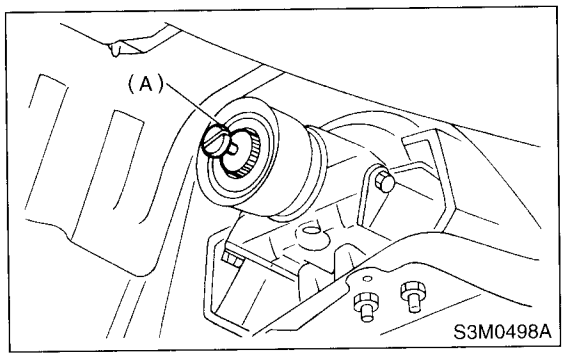

(A) Extension cap

B: INSTALLATION

1) Insert the sleeve yoke into the transmission and attach center bearing to body.

Tightening torque:
52 N·m (5.3 kgf-m, 38.3 ft-lb)

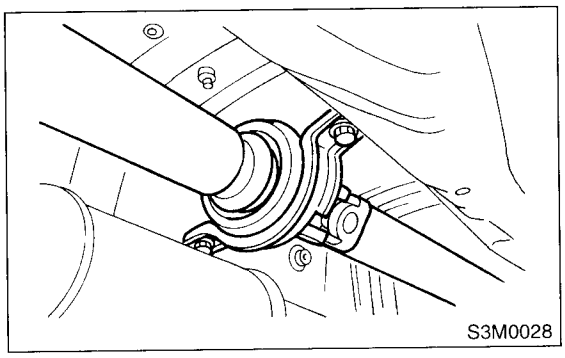

2) Align the matching marks and connect the flange yoke and rear differential.

Tightening torque:
31 N·m (3.2 kgf-m, 23.1 ft-lb)

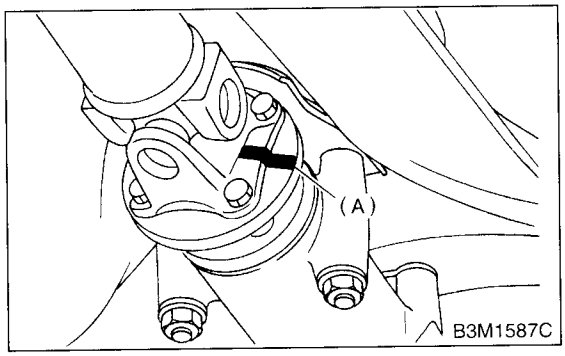

(A) Matching mark

3) Install the differential mount front cover.

Tightening torque:
88 N·m (9.0 kgf-m, 65 ft-lb)

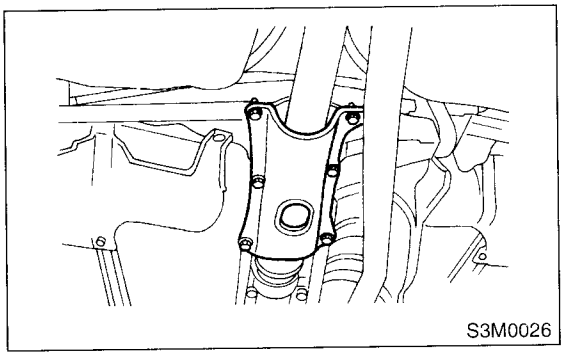

4) Install the rear differential protector. (If equipped)
5) Install the rear exhaust pipe and muffler.

C: INSPECTION

NOTE:
Do not disassemble propeller shaft. Check the following and replace if necessary.

1) Tube surfaces for dents or cracks
2) Splines for deformation or abnormal wear
3) Joints for non-smooth operation or abnormal noise
4) Center bearing for free play, noise or non-smooth operation
5) Oil seals for abnormal wear or damage
6) Center bearing for breakage

Check the following points with propeller shaft installed in vehicle.

1. JOINTS AND CONNECTIONS

1) Remove the rear exhaust pipes and muffler.
2) Remove the heat shield cover. (If equipped)
3) Check for any looseness of yoke flange connecting bolts and center bearing retaining bolts.

2. SPLINES AND BEARING LOCATIONS

1) Remove the rear exhaust pipe and muffler.
2) Remove the heat shield cover. (If equipped)
3) Turn the propeller shaft by hand to see if abnormal free play exists at splines. Also move yokes to see if the abnormal free play exists at spiders and bearings.

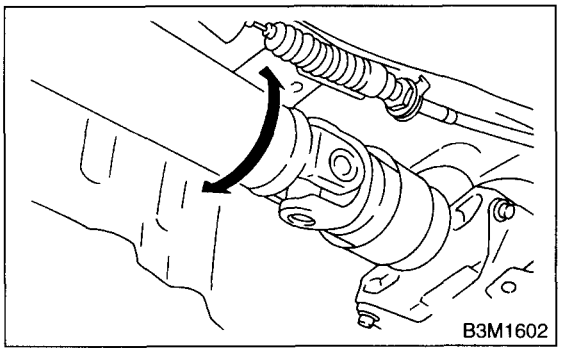

3. RUNOUT OF PROPELLER SHAFT

1) Remove the rear exhaust pipe and muffler.
2) Remove the heat shield cover. (If equipped)
3) Turn the rear wheels by hand to check for "runout" of propeller shaft.

NOTE:
Measure runout with a dial gauge at the center of front and rear propeller shaft tubes.

Runout:
Limit 0.6 mm (0.024 in)

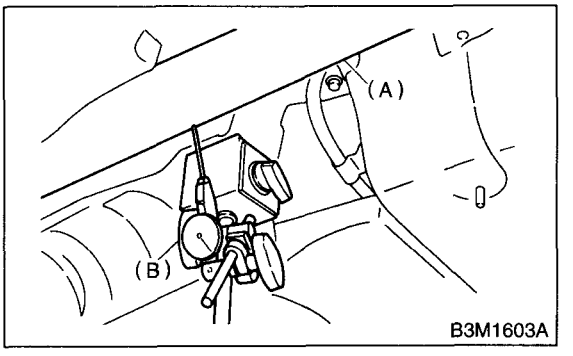

(A) Propeller shaft
(B) Dial gauge

4. CENTER BEARING FREE PLAY

1) Remove the rear exhaust pipe and muffler.
2) Remove the heat shield cover. (If equipped)
3) While holding propeller shaft near center bearing with your hand, move it up and down, and left and right to check for any abnormal bearing free play.

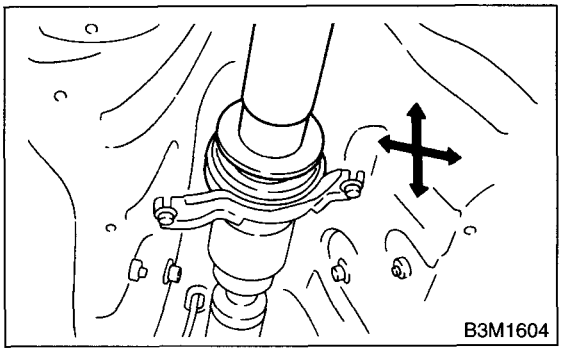

3. Front Axle

A: REMOVAL

1) Disconnect the ground cable from battery.
2) Jack-up the vehicle, support it with safety stands, and remove the front wheels.
3) Unlock the axle nut.

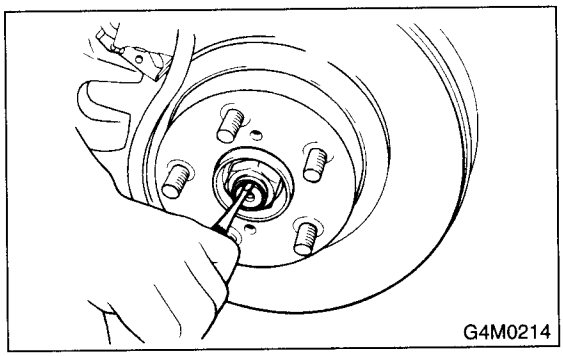

4) Remove the axle nut using a socket wrench.

CAUTION:
Be sure to loose and retighten axle nut after removing wheel from vehicle. Failure to follow this rule may damage wheel bearings.

5) Remove the stabilizer link.

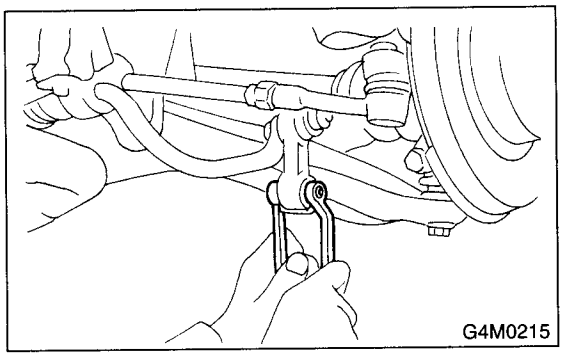

6) Remove the disc brake caliper from the housing, and suspend it from strut using a wire.

7) Remove the front drive shaft assembly from the hub. If it is hard to remove, use STs.

ST1	926470000	AXLE SHAFT PULLER
ST2	927140000	AXLE SHAFT PULLER PLATE

CAUTION:
- **Be careful not to damage oil seal lip when removing front drive shaft.**
- **When replacing front drive shaft, also replace inner oil seal.**

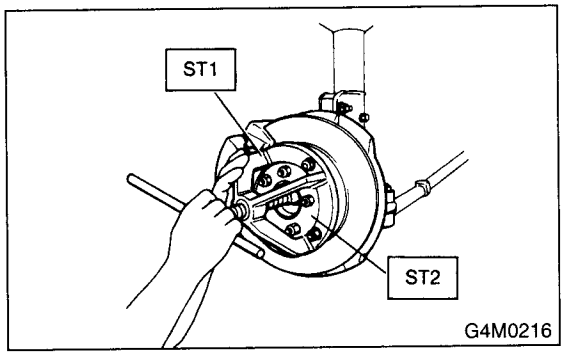

8) Remove the disc rotor from the hub.
If disc rotor seizes up within hub, drive disc rotor out by installing an 8-mm bolt in screw hole on the rotor.

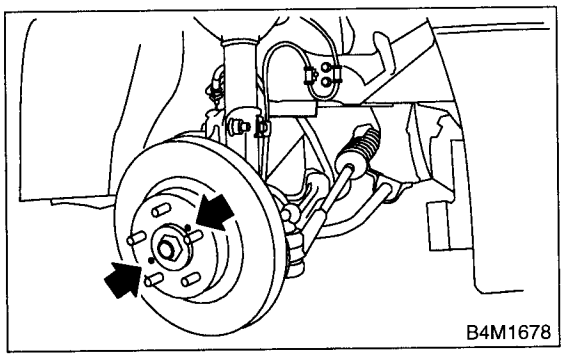

9) Remove the cotter pin and castle nut which secure tie-rod end to housing knuckle arm.

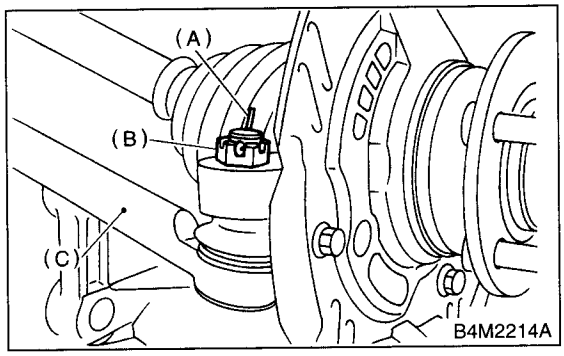

(A) Cotter pin
(B) Castle nut
(C) Tie-rod

10) Using a puller, remove the tie-rod ball joint from the knuckle arm.

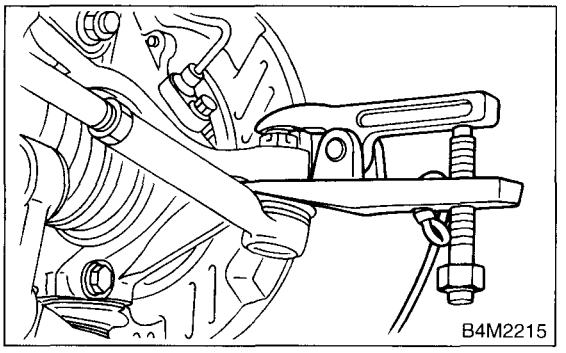

11) On ABS equipped models, remove the ABS sensor assembly and harness in advance.

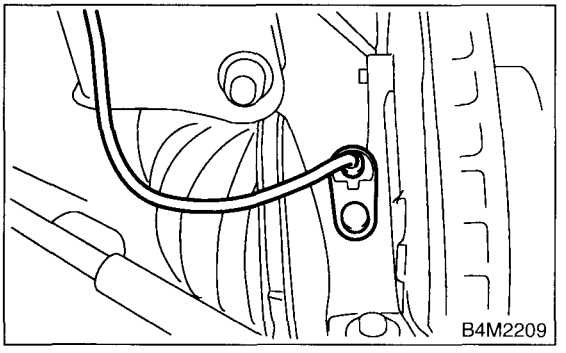

12) Remove the transverse link ball joint from the housing.

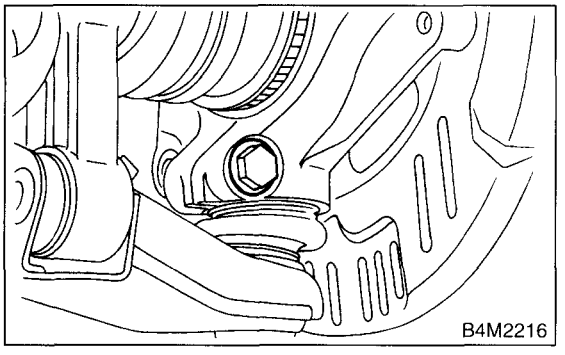

13) After scribing an alignment mark on camber adjusting bolt head, remove bolts which connect housing and strut, and disconnect the housing from the strut.

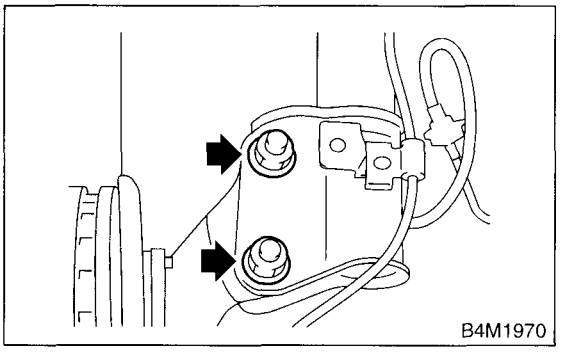

B: INSTALLATION

1) Install the transverse link ball joint to the housing.

Tightening torque:
49 N·m (5.0 kgf-m, 36 ft-lb)

2) While aligning alignment mark on camber adjusting bolt head, connect the housing and strut.

CAUTION:
Use a new self-locking nut.

Tightening torque:
152 N·m (15.5 kgf-m, 112 ft-lb)

3) Install the ABS sensor on the housing (only vehicle equipped with ABS).

Tightening torque:
32 N·m (3.3 kgf-m, 24 ft-lb)

4) Install the disc rotor on the hub.
5) Install the disc brake caliper on the housing.

Tightening torque:
78 N·m (8 kgf-m, 57.9 ft-lb)

6) Install the front drive shaft. <Ref. to DS-32, INSTALLATION, Front Drive Shaft.>
7) Connect the stabilizer link.
8) Connect the tie-rod end ball joint and knuckle arm with a castle nut, and insert the cotter pin into the tie-rod end.

Castle nut tightening torque:
Tighten to 27.0 N·m (2.75 kgf-m, 19.9 ft-lb), and tighten further within 60° until cotter pin hole is aligned with a slot in the nut.

CAUTION:
When connecting, do not hit cap at the bottom of tie-rod end with hammer.

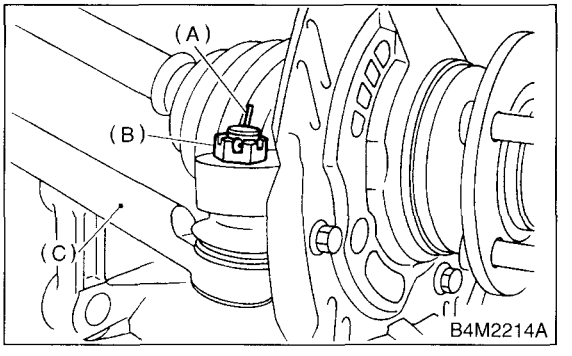

(A) Cotter pin
(B) Castle nut
(C) Tie-rod

9) While depressing brake pedal, tighten the axle nut and lock it securely.

Tightening torque:
186 N·m (19 kgf-m, 137 ft-lb)

CAUTION:
- **Use a new axle nut.**
- **Always tighten axle nut before installing wheel on vehicle. If wheel is installed and comes in contact with ground when axle nut is loose, wheel bearings may be damaged.**
- **Be sure to tighten axle nut to specified torque. Do not overtighten it as this may damage wheel bearing.**

10) After tightening the axle nut, lock it securely.

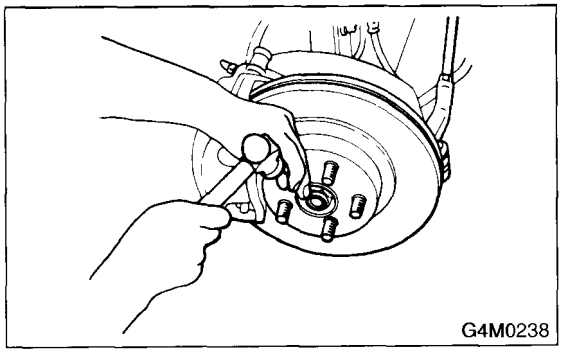

11) Install the wheel and tighten the wheel nuts to specified torque.

Tightening torque:
90 N·m (9.2 kgf-m, 66.5 ft-lb)

C: DISASSEMBLY

1) Using ST1, support housing and hub securely.
2) Attach ST2 to housing and drive hub out.

ST1 927060000 HUB REMOVER
ST2 927080000 HUB STAND

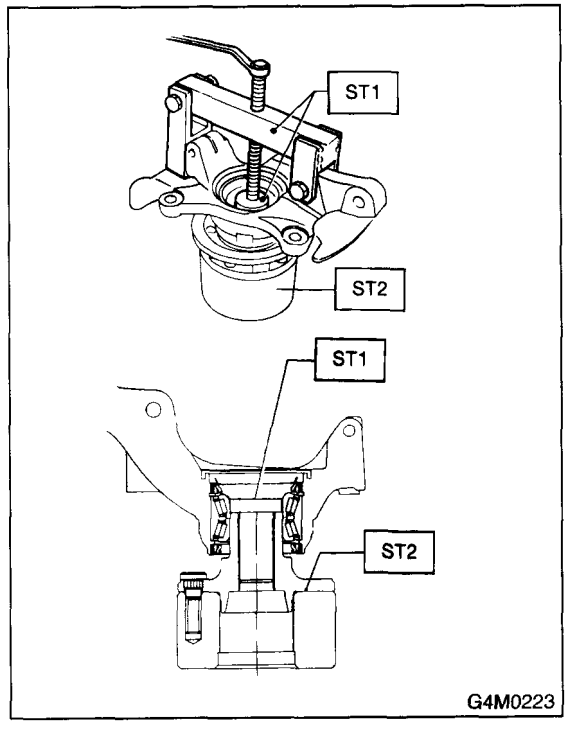

If inner bearing race remains in the hub, remove it with a suitable tool (commercially available).

CAUTION:
- **Be careful not to scratch polished area of hub.**
- **Be sure to install inner race on the side of outer race from which it was removed.**

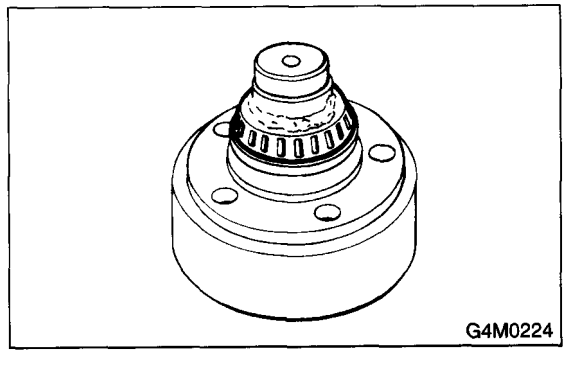

3) Remove the disc cover from the housing.

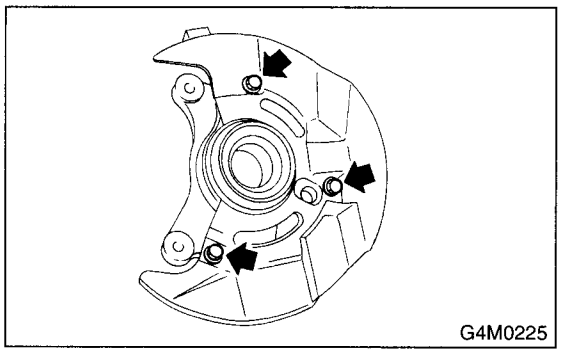

4) Using a standard screwdriver, remove the outer and inner oil seals.

CAUTION:
Do not use old oil seals.

5) Using flat bladed screwdriver, remove the snap ring.

CAUTION:
Be careful not to damage housing at removal.

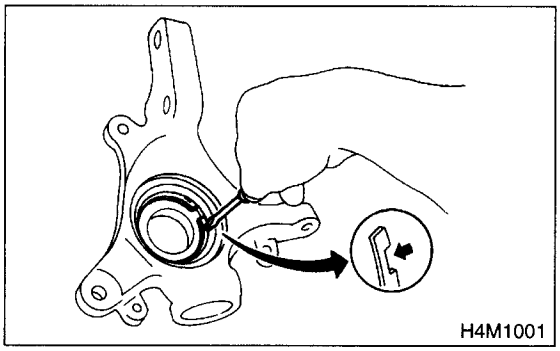

6) Using ST1, support housing securely.
7) Using ST2, press inner race to drive out outer bearing.

ST1 927400000 HOUSING STAND
ST2 927100000 BEARING PULLER

CAUTION:
- **Do not remove outer race unless it is faulty.**
- **Discard outer race after removal.**
- **Do not replace inner or outer race separately; always replace as a unit.**

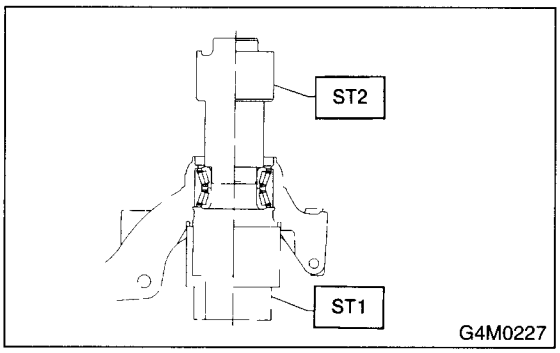

8) Using ST and a hydraulic press, drive hub bolts out.

ST 927080000 HUB STAND

CAUTION:
Be careful not to hammer the hub bolts. This may deform hub.

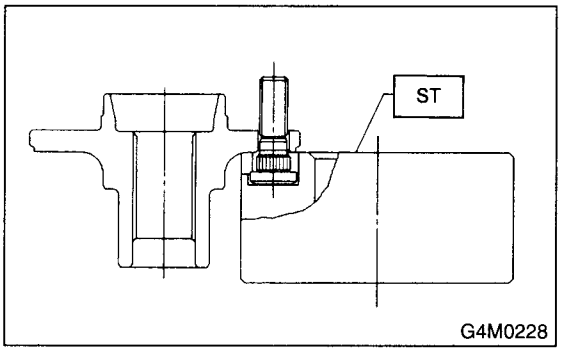

D: ASSEMBLY

1) Attach the hub to ST securely.
ST 927080000 HUB STAND

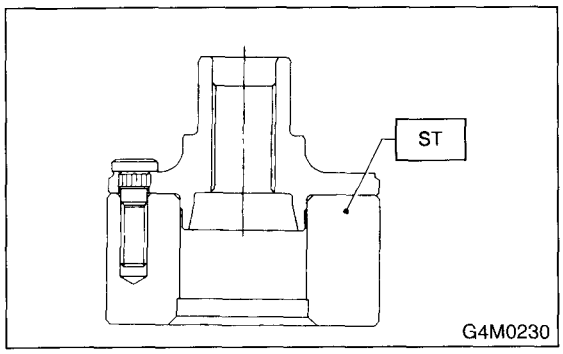

2) Using a hydraulic press, press the new hub bolts into place.

CAUTION:
Be sure to press hub bolts until their seating surfaces contact the hub.

NOTE:
Use 12 mm (0.47 in) dia. holes in HUB STAND to prevent bolts from tilting.

3) Clean the dust or foreign particles from inside the housing.
4) Using ST1 and ST2, press a new bearing into place.
ST1 927400000 HOUSING STAND
ST2 927100000 BEARING PULLER

CAUTION:
- **Always press outer race when installing bearing.**
- **Be careful not to remove the plastic lock from inner race when installing bearing.**
- **Charge bearing with new grease when outer race is not removed.**
- **Do not apply pressure more than 30 kN (3.1 ton, 2.8 US ton, 3.1 Imp ton).**

Specified grease:
SHELL 6459N

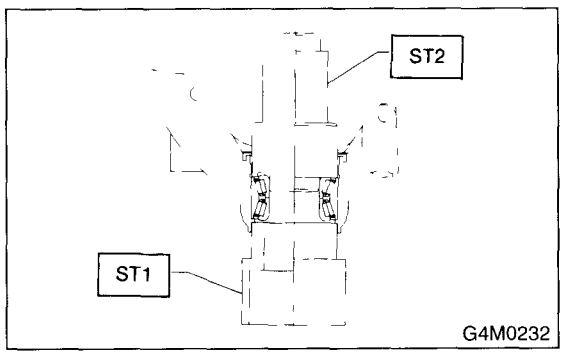

5) Using pliers, install the snap ring in its groove.

CAUTION:
Make sure to install it firmly to groove.

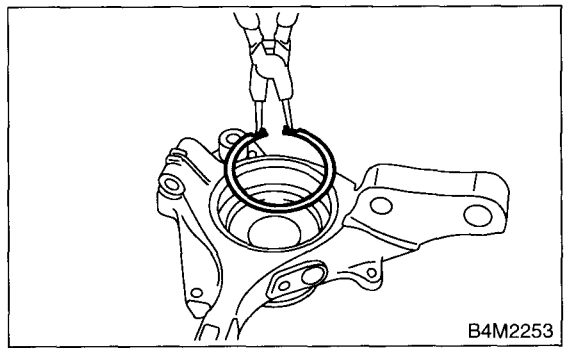

6) Using ST1 and ST2, press the outer oil seal until it contacts the bottom of housing.
ST1 927410000 OIL SEAL INSTALLER
ST2 927400000 HOUSING STAND

CAUTION:
Do not apply pressure more than 3.92 kN (0.4 ton, 0.4 US ton, 0.4 Imp ton).

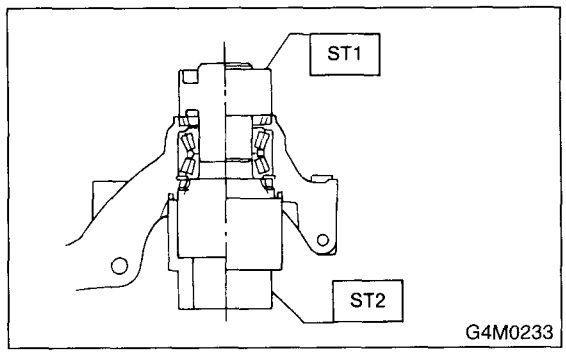

7) Using ST1 and ST2, press the inner oil seal until it contacts circlip.
ST1 927410000 OIL SEAL INSTALLER
ST2 927400000 HOUSING STAND

CAUTION:
Do not apply pressure more than 3.92 kN (0.4 ton, 0.4 US ton, 0.4 Imp ton).

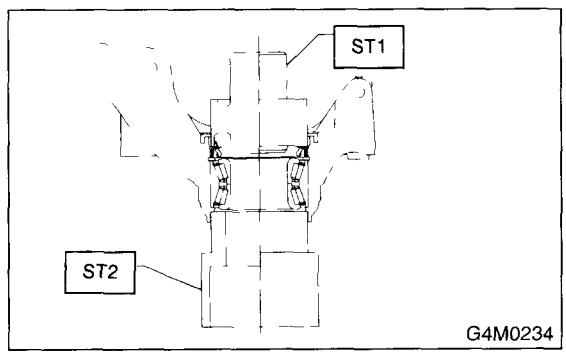

8) Invert the ST and housing.
ST 927400000 HOUSING STAND

9) Apply the sufficient grease to oil seal lip.

Specified grease
SHELL 6459N

CAUTION:
- **If specified grease is not available, remove bearing grease and apply Auto Rex A instead.**
- **Do not mix different types of grease.**

10) Install the disc cover to housing the three bolts.

Tightening torque:
18 N·m (1.8 kgf-m, 13.0 ft-lb)

11) Attach the hub to ST1 securely.
12) Clean the dust or foreign particles from the polished surface of hub.
13) Using ST2, press the bearing into hub by driving inner race.

ST1	927080000	HUB STAND
ST2	927120000	HUB INSTALLER

CAUTION:
Do not apply pressure more than 25 kN (2.5 ton, 2.3 US ton, 2.5 Imp ton).

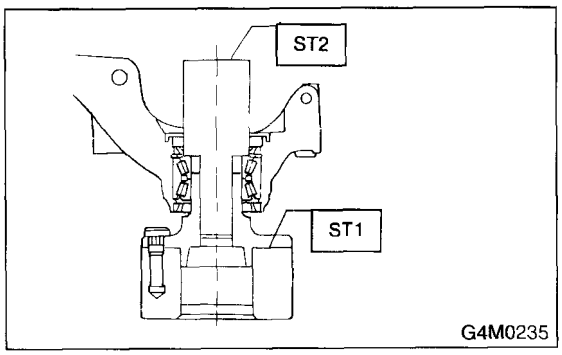

E: INSPECTION

1) Inspect the rattle of bearing, give the tires a shake with grasping both the upper and lower sides of the tire. And also inspect to rotate the wheel smoothly.

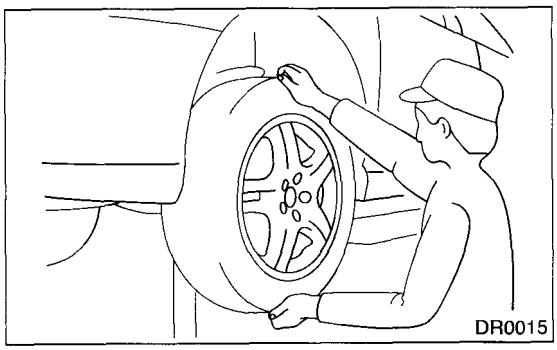

2) Inspect the lean of axis direction using a dial gauge. Replace the hub bearing if the load range exceed the limitation.

Limit:
Maximum: 0.05mm (0.0020in)

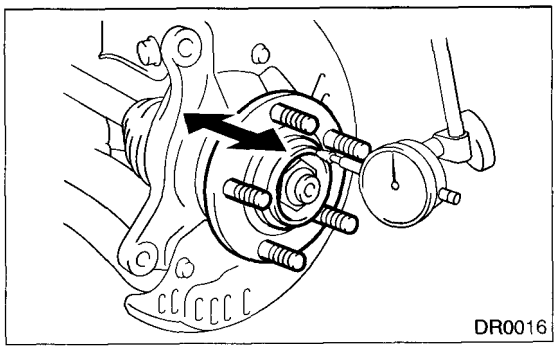

3) Inspect the removed parts for wear and damage. If defective, replace with new ones.

CAUTION:
- **If bearing is faulty, replace it as the bearing set.**
- **Be sure to replace oil seal at every overhaul.**

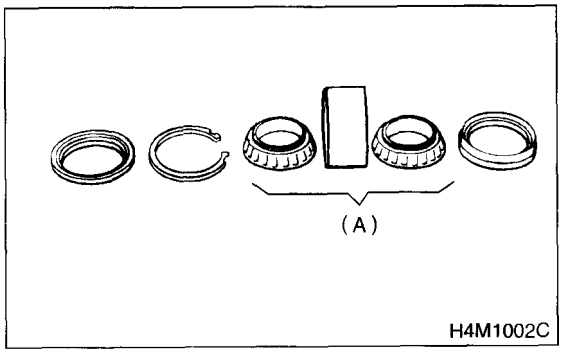

(A) Replace as a set.

4. Rear Axle

A: REMOVAL

1. DISC BRAKE

1) Disconnect the ground cable from battery.
2) Jack-up the vehicle, and remove the rear wheel cap and wheels.

CAUTION:
Be sure to loosen and retighten the axle nut after removing wheel from vehicle. Failure to follow this rule may damage wheel bearings.

3) Unlock the axle nut.
4) Remove the axle nut using a socket wrench.
5) Return the parking brake lever and loosen the adjusting nut.

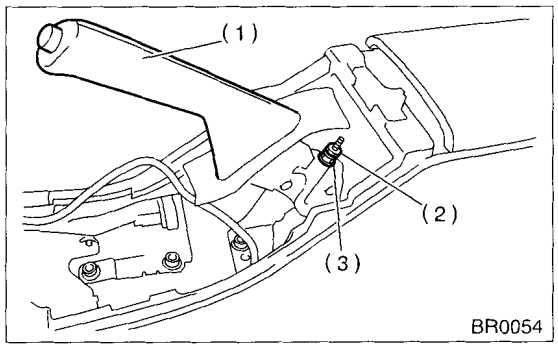

(1) Parking brake lever
(2) Lock nut
(3) Adjusting nut

6) Remove the disc brake caliper from the back plate, and suspend it from strut using a piece of wire.

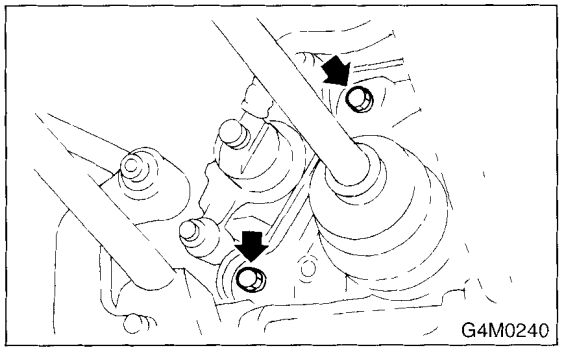

7) Remove the disc rotor from the hub.

NOTE:
If disc rotor seizes up within hub, drive it out by installing an 8-mm bolt into bolt hole in disc rotor.

8) Disconnect the parking brake cable end.

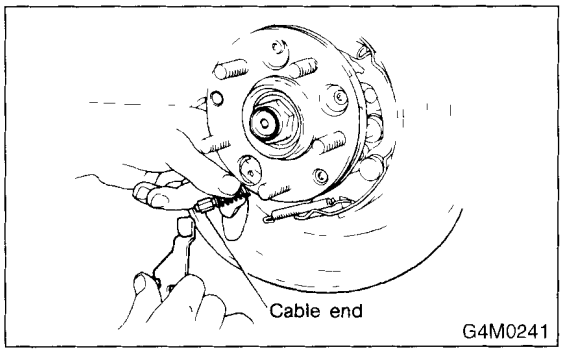

9) Disconnect the rear stabilizer from rear lateral link.
10) Remove the bolts which secure trailing link assembly to the rear housing.

CAUTION:
Discard old self-locking nut. Relpace with a new one.

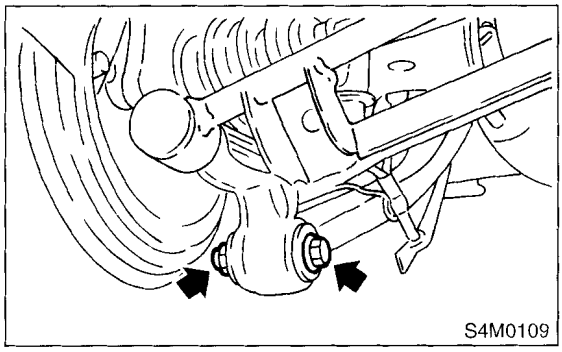

11) Remove the bolts which secure lateral assembly to the rear housing.

CAUTION:
Discard old self-locking nut. Relpace with a new one.

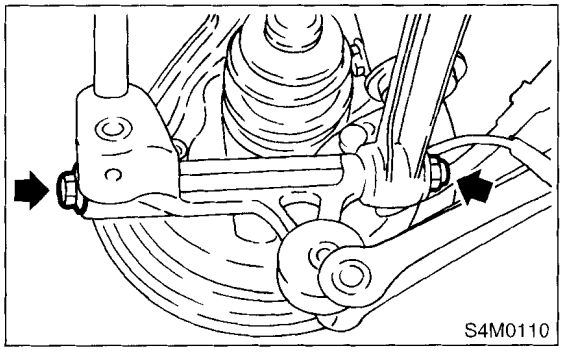

12) Disengage the BJ from the housing splines, and remove the rear drive shaft assembly.
If it is hard to remove, use STs.

ST1	926470000	AXLE SHAFT PULLER
ST2	927140000	AXLE SHAFT PULLER PLATE

CAUTION:
- **Be careful not to damage the oil seal lip when removing rear drive shaft.**
- **When rear drive shaft is to be replaced, also replace inner oil seal with a new one.**

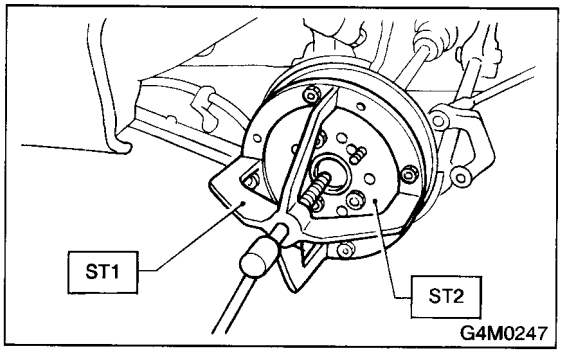

13) Remove the rear ABS sensor from the back plate (only vehicle equipped with ABS).

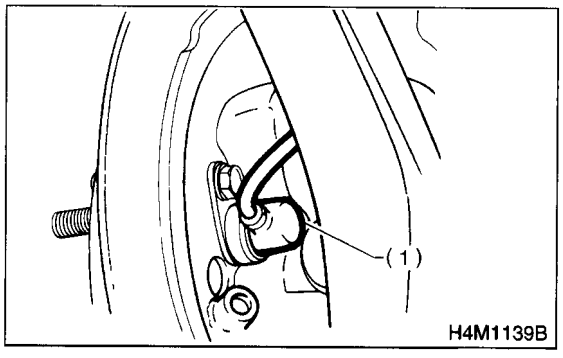

(1) ABS sensor

14) Remove the bolts which secure rear housing to strut, and separate the two.

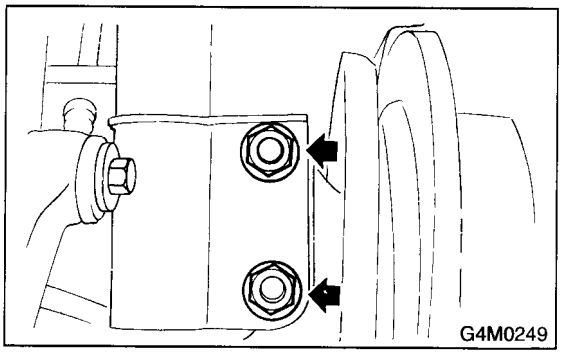

2. DRUM BRAKE

1) Disconnect the ground cable from battery.
2) Jack-up the vehicle, and remove the rear wheel cap and wheels.

CAUTION:
Be sure to loosen and retighten the axle nut after removing wheel from vehicle. Failure to follow this rule may damage wheel bearings.

3) Unlock the axle nut.
4) Remove the axle nut using a socket wrench.
5) Return the parking brake lever and loosen the adjusting nut.

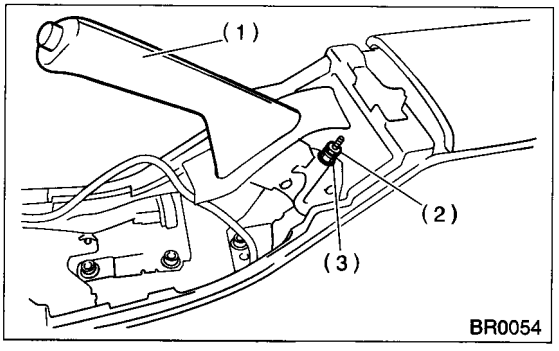

(1) Parking brake lever
(2) Lock nut
(3) Adjusting nut

6) Remove the brake drum from hub.
7) If it is difficult to remove brake drum, remove the adjusting hole cover from the back plate, and then turn the adjusting screw using a slot-type screwdriver until the brake shoe separates from the drum.

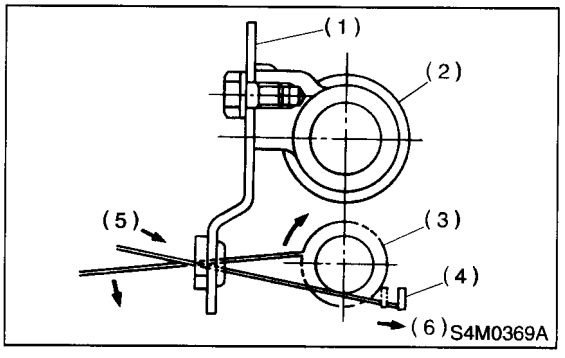

(1) Back plate
(2) Wheel cylinder
(3) Adjuster ASSY pawls
(4) Adjusting lever
(5) Tightening direction
(6) Push

NOTE:
If brake drum is difficult to remove, drive it out by installing an 8-mm bolt into bolt hole in brake drum.

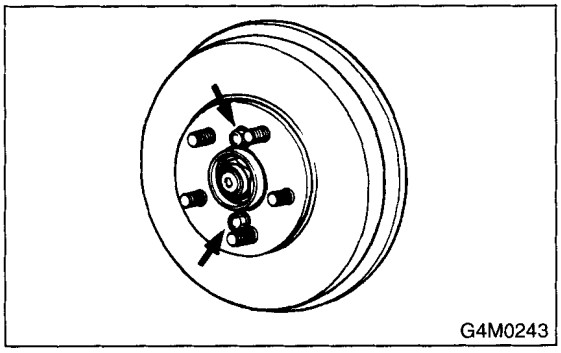

8) Using a flare-net wrench, disconnect the brake hose from the wheel cylinder.

CAUTION:
Cover open end of wheel cylinder to prevent entry of foreign particles.

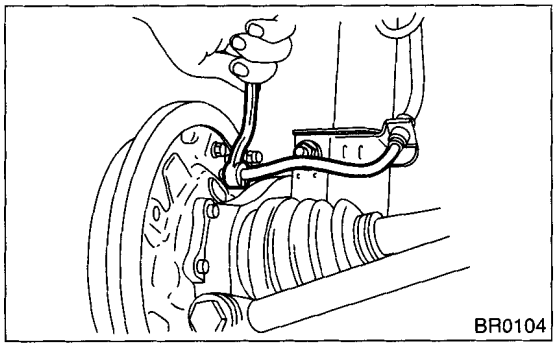

9) Disconnect the parking brake cable end.

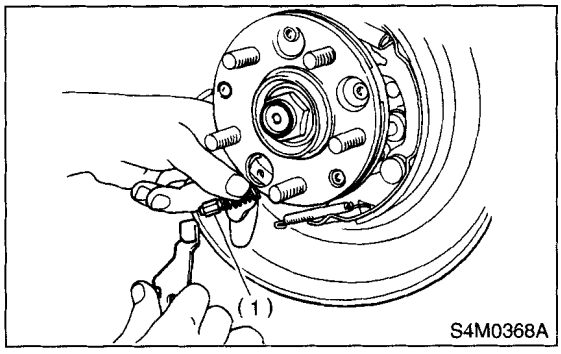

(1) Cable end

10) Disconnect the rear stabilizer from the rear lateral link.

11) Remove the bolts which secure trailing link assembly to the rear housing.

CAUTION:
Discard old self-locking nut. Replace with a new one.

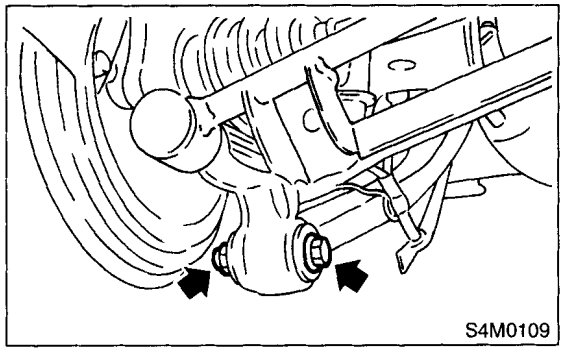

12) Remove the bolts which secure lateral link assembly to the rear housing.

CAUTION:
Discard old self-locking nut. Replace with a new one.

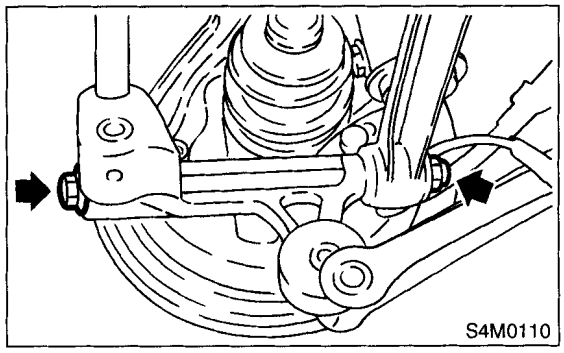

13) Disengage the BJ from the housing splines, and remove the rear drive shaft assembly.
If it is hard to remove, use STs.

ST1	926470000	AXLE SHAFT PULLER
ST2	927140000	AXLE SHAFT PULLER PLATE

CAUTION:
- **Be careful not to damage the oil seal lip when removing rear drive shaft.**
- **When rear drive shaft is to be replaced, also replace inner oil seal with a new one.**

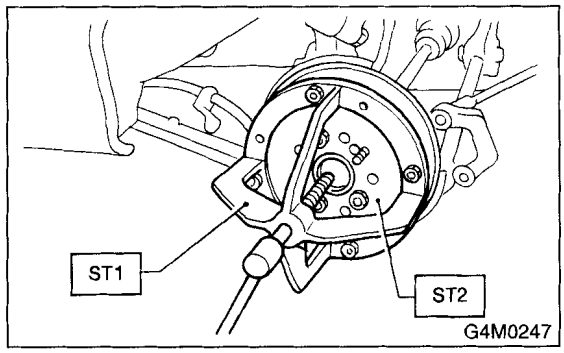

14) Remove the rear ABS sensor from the back plate (only vehicle equipped with ABS).

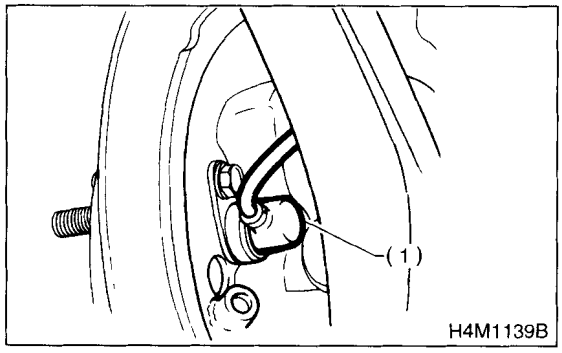

(1) ABS sensor

15) Remove the bolts which secure rear housing to strut, and separate the two.

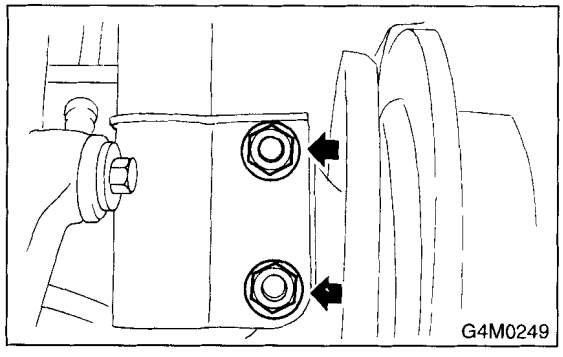

B: INSTALLATION

1. DISC BRAKE

1) Connect the rear housing assembly and strut assembly.

CAUTION:
Use a new self-locking nut.

Tightening torque:
196 N·m (20 kgf-m, 145 ft-lb)

2) Fit the BJ (bell joint) to the rear housing splines.

CAUTION:
Be careful not to damage inner oil seal lip.

3) Connect the rear housing assembly to the lateral link assembly.

CAUTION:
Use a new self-locking nut.

Tightening torque:
137 N·m (14 kgf-m, 101 ft-lb)

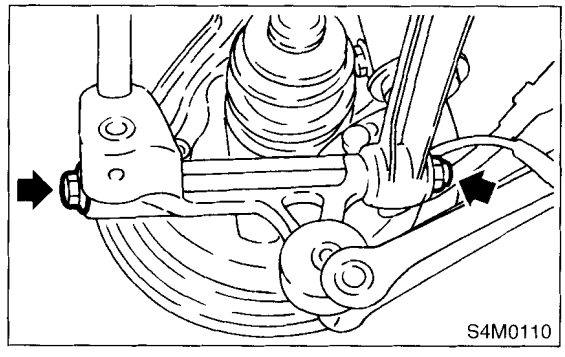

4) Connect the rear housing assembly to the trailing link assembly.

CAUTION:
Use a new self-locking nut.

Tightening torque:
113 N·m (11.5 kgf-m, 83 ft-lb)

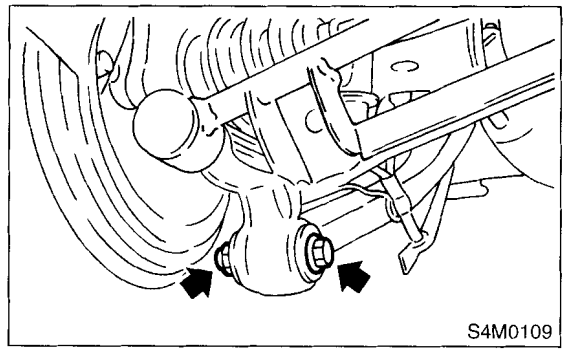

5) Connect the rear stabilizer to the rear lateral link.

CAUTION:
Use a new self-locking nut.

Tightening torque:
44 N·m (4.5 kgf-m, 32.5 ft-lb)

6) Connect the parking brake cable to the parking brake.
7) Install the disc rotor on the rear housing assembly.
8) Install the disc brake caliper on the back plate.

Tightening torque:
52 N·m (5.3 kgf-m, 38.3 ft-lb)

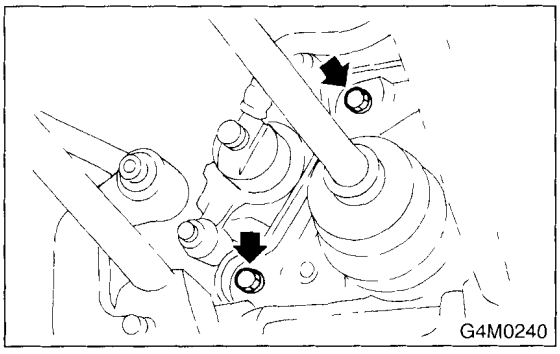

9) Install the rear ABS sensor and brake cable bracket (only vehicle equipped with ABS).

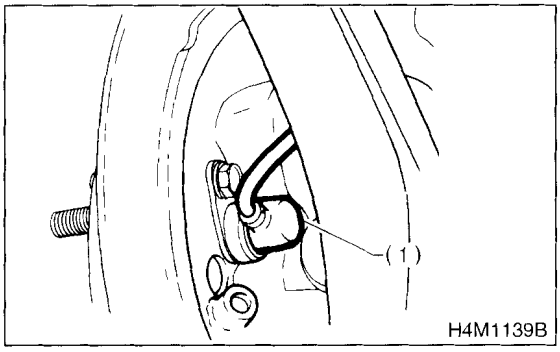

(1) ABS sensor

10) Bleed air from brake system. <Ref. to BR-44, REPLACEMENT, Brake Fluid.>
11) Adjust the parking brake lever stroke by turning adjuster.
12) Move the brake lever back to apply brakes. While depressing brake pedal, tighten the axle nut using a socket wrench. Lock the axle nut after tightening.

Tightening torque:
186 N·m (19 kgf-m, 137 ft-lb)

CAUTION:
- **Use a new axle nut.**
- **Always tighten axle nut before installing wheel on vehicle. If wheel is installed and comes in contact with ground when axle nut is loose, wheel bearings may be damaged.**
- **Be sure to tighten axle nut to specified torque. Do not overtighten it as this may damage wheel bearing.**

13) Install the wheel and tighten the wheel nuts to specified torque.

Tightening torque:
88 N·m (9 kgf-m, 65 ft-lb)

2. DRUM BRAKE

1) Connect the rear housing assembly and strut assembly.

CAUTION:
Use a new self-locking nut.

Tightening torque:
196 N·m (20 kgf-m, 145 ft-lb)

2) Fit the BJ (bell joint) to rear housing splines.

CAUTION:
Be careful not to damage inner oil seal lip.

3) Connect the rear housing assembly to the lateral link assembly.

CAUTION:
Use a new self-locking nut.

Tightening torque:
137 N·m (14 kgf-m, 101 ft-lb)

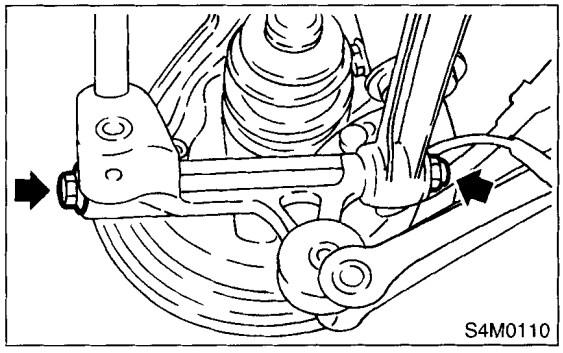

4) Connect the rear housing assembly to the trailing link assembly.

CAUTION:
Use a new self-locking nut.

Tightening torque:
113 N·m (11.5 kgf-m, 83 ft-lb)

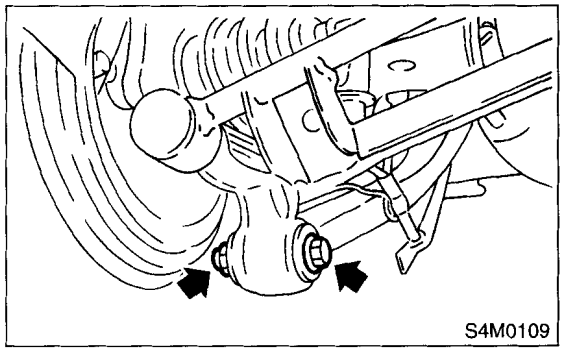

5) Connect the rear stabilizer to the rear lateral link.

CAUTION:
Use a new self-locking nut.

Tightening torque:
44 N·m (4.5 kgf-m, 32.5 ft-lb)

6) Connect the parking brake cable to the parking brake.
7) Clean the brake pipe connection. Using a flare-nut wrench, connect the brake pipe to the wheel cylinder.
8) Connect the rear ABS sensor to the back plate (only vehicle equipped with ABS).

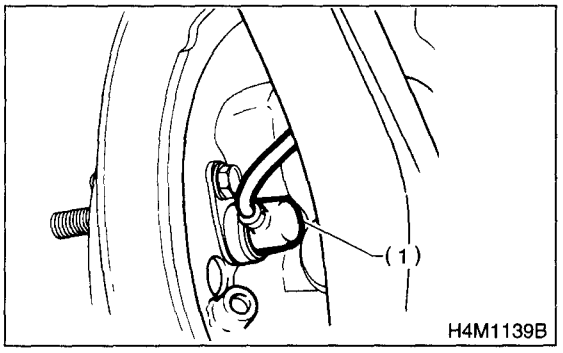

(1) ABS sensor

9) Connect the parking brake cable to the lever.
10) Install the brake drum on the rear housing assembly.
11) Bleed air from brake system. <Ref. to BR-44, REPLACEMENT, Brake Fluid.>
12) Adjust the parking brake lever stroke by turning adjuster.
13) Move the brake lever back to apply brakes. While depressing brake pedal, tighten the axle nut using a socket wrench. Lock the axle nut after tightening.

Tightening torque:
186 N·m (19 kgf-m, 137 ft-lb)

CAUTION:
- **Use a new axle nut.**
- **Always tighten axle nut before installing wheel on vehicle. If wheel is installed and comes in contact with ground when axle nut is loose, wheel bearings may be damaged.**
- **Be sure to tighten axle nut to specified torque. Do not overtighten it as this may damage wheel bearing.**

14) Install the wheel and tighten the wheel nuts to specified torque.

Tightening torque:
90 N·m (9.2 kgf-m, 66.5 ft-lb)

C: DISASSEMBLY

1) Using ST1 and ST2, remove the hub from the rear housing.
ST 927080000 HUB STAND
ST 927420000 HUB REMOVER

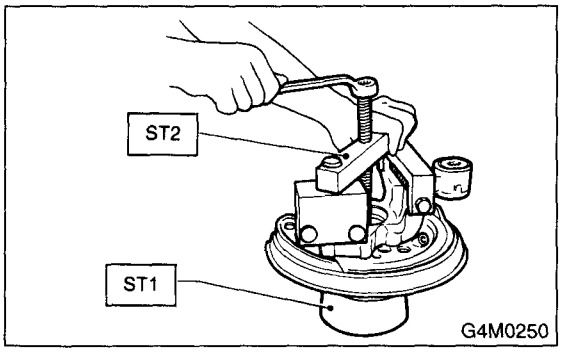

2) Remove the back plate from the rear housing
3) Using a standard screwdriver, remove the outer and inner oil seals.

CAUTION:
Use new oil seals.

4) Using flat bladed screwdriver, remove the snap ring.

CAUTION:
Be careful not to damage housing at removal.

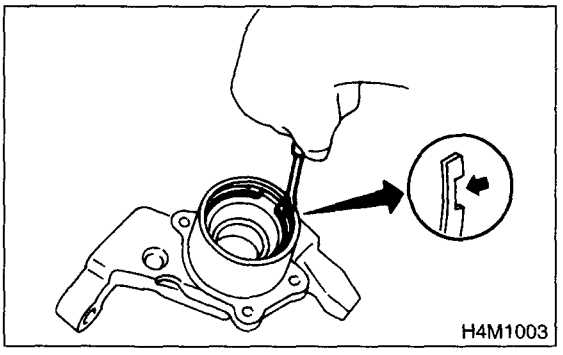

5) Using ST1 and ST2, remove the bearing by pressing inner race.
ST1 927430000 HOUSING STAND
ST2 927440000 BEARING REMOVER

CAUTION:
- **Do not remove bearing unless damaged.**
- **Do not re-use bearing after removal.**

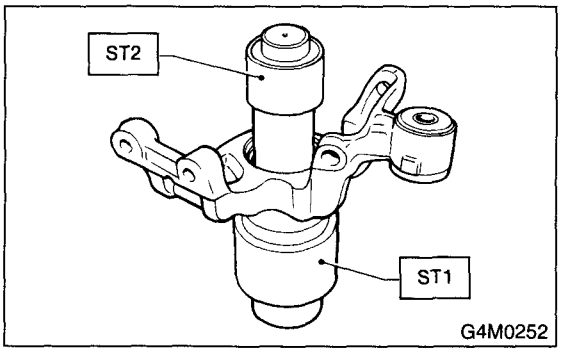

6) Remove the tone wheel bolts and remove the tone wheel from the hub (only vehicle equipped with ABS).
7) Using ST, press the hub bolt out.
ST 927080000 HUB STAND

CAUTION:
Be careful not to hammer the hub bolts. This may deform hub.

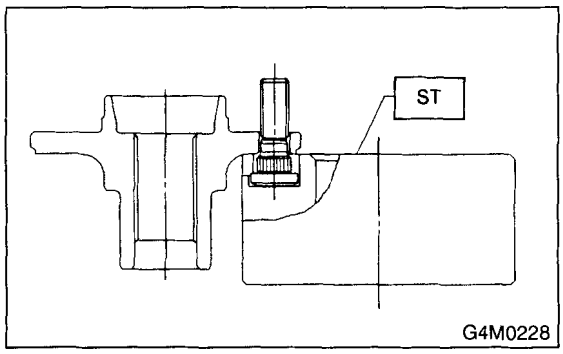

D: ASSEMBLY

1) Using ST, press the new hub bolt into place.

CAUTION:
- **Ensure hub bolt closely contacts hub.**
- **Use a 12 mm (0.47 in) hole in the ST to prevent hub bolt from tilting during installation.**

ST 927080000 HUB STAND

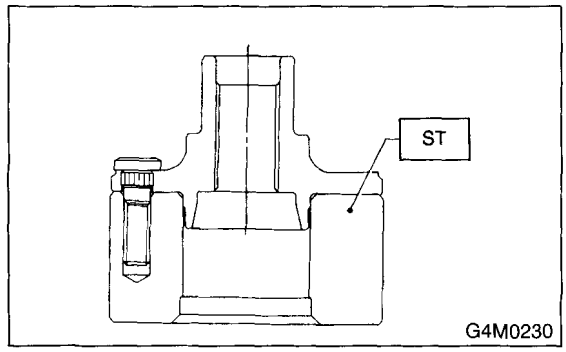

2) Remove the foreign particles (dust, rust, etc.) from the mating surfaces of hub tone wheel, and install the tone wheel to hub (only vehicle equipped with ABS).

CAUTION:
- **Ensure tone wheel closely contacts hub.**
- **Be careful not to damage tone wheel teeth.**

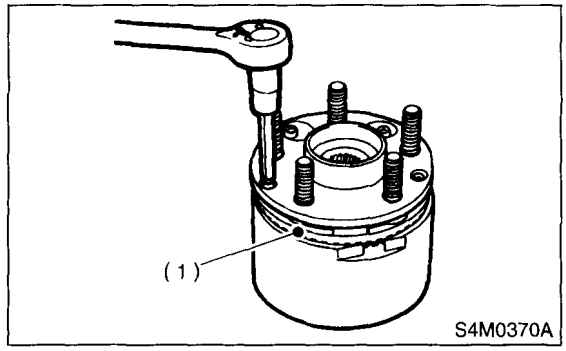

(1) Tone wheel

3) Clean the housing interior completely. Using ST1 and ST2, press the bearing into the housing.
ST1 927430000 HOUSING STAND
ST2 927440000 BEARING REMOVER

CAUTION:
- **Always press iouter race when installing bearing.**
- **Be careful not to remove plastic lock from inner race when installing bearing.**
- **Charge bearing with new grease when outer race is not removed.**
- **Do not apply pressure more than 30 kN (3.1 ton, 2.8 US ton, 3.1 Imp ton).**

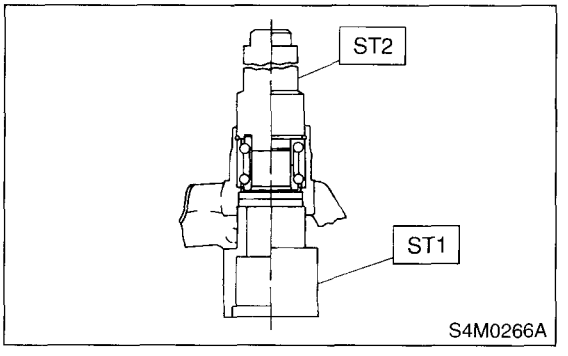

4) Using plier, install the snap ring.

CAUTION:
Ensure snap ring fits in groove properly.

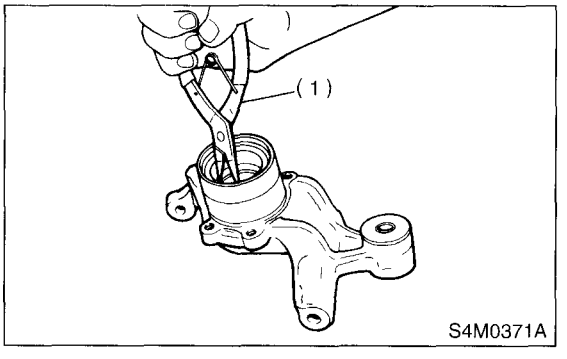

(1) Plier

5) Using ST1 and ST2, press the outer oil seal unit it comes in contact with snap ring.
ST1 927430000 HOUSING STAND
ST2 927460000 OIL SEAL INSTALLER

CAUTION:
Do not apply pressure more than 3.92 kN (0.4 ton, 0.4 US ton, 0.4 Imp ton).

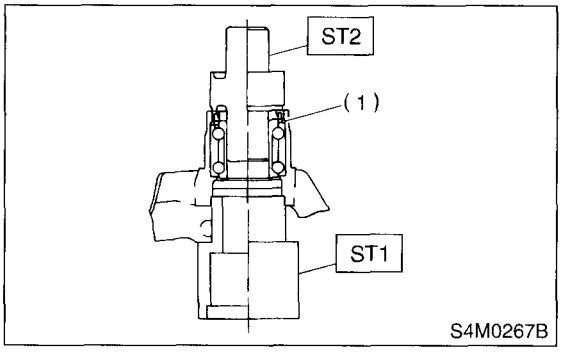

(1) Snap ring

6) Invert both ST1 and housing.
7) Using ST2, press the inner oil seal into the housing until it touches bottom.
ST1 927430000 HOUSING STAND
ST2 927460000 OIL SEAL INSTALLER

CAUTION:
Do not apply pressure more than 3.92 kN (0.4 ton, 0.4 US ton, 0.4 Imp ton).

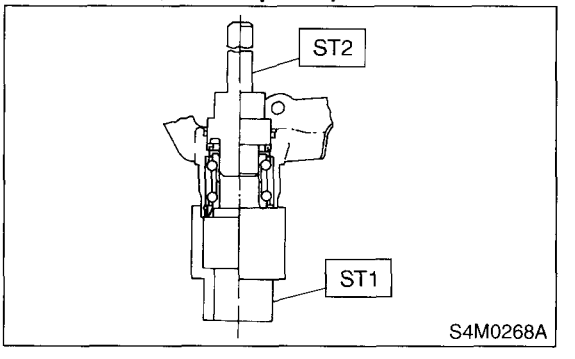

8) Using ST1 and ST2, press the sub seal into place.
ST1 927430000 HOUSING STAND
ST2 927460000 OIL SEAL INSTALLER

CAUTION:
Do not apply pressure more than 3.92 kN (0.4 ton, 0.4 US ton, 0.4 Imp ton).

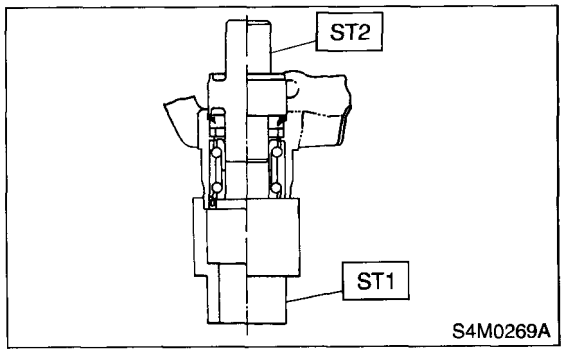

9) Apply the sufficient grease to oil seal lip.

Specified grease:
SHELL 6459N

CAUTION:
- **If specification grease is not available, remove bearing grease and apply Auto Rex A instead.**
- **Do not mix different types of grease.**

10) Install back plate to rear housing.

Tightening torque:
52 N·m (5.3 kgf-m, 38 ft-lb)

11) Using ST1 and ST2, press the baring into hub.
ST1 927080000 HUB STAND
ST2 927450000 HUB INSTALLER

CAUTION:
Do not apply pressure more than 25 kN (2.5 ton, 2.3 US ton, 2.5 Imp ton).

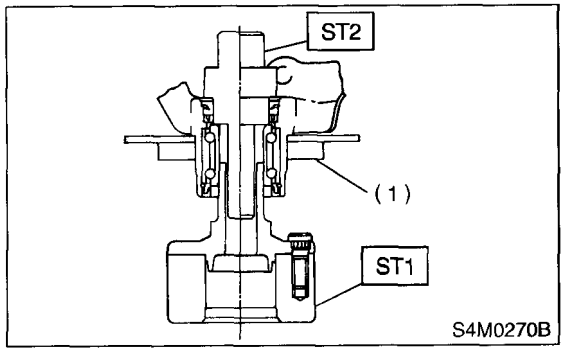

E: INSPECTION

1) Inspect the rattle and lean of axis direction of the removed parts as the same procedure of Front Axle <Ref. to DS-22, INSPECTION, Front Axle.>

The lean of axis direction
Maximum: 0.05mm (0.0020in)

2) Inspect the removed parts for wear and damage. If defective, replace with a new one.

CAUTION:
- **If a bearing is faulty, replace it as the bearing set.**
- **Be sure to replace oil seal at every overhaul.**

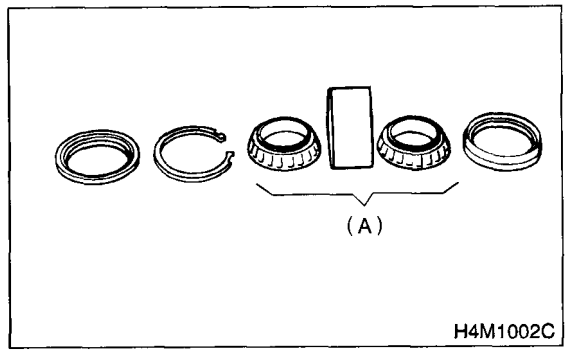

(A) Replace as a set.

5. Front Drive Shaft

A: REMOVAL

1) Disconnect the ground cable from battery.
2) Jack-up the vehicle, support it with safety stands (rigid racks), and remove the front wheel cap and wheels.
3) Unlock the axle nut.
4) Depress the brake pedal and remove the axle nut using a socket wrench.

CAUTION:
Be sure to loosen and retighten axle nut after removing wheel from vehicle. Failure to follow this rule may damage wheel bearings.

5) Remove the stabilizer link from the transverse link.
6) Disconnect the transverse link from the housing.
7) Remove the spring pin which secures transmission spindle to SFJ.

CAUTION:
Use a new spring pin.

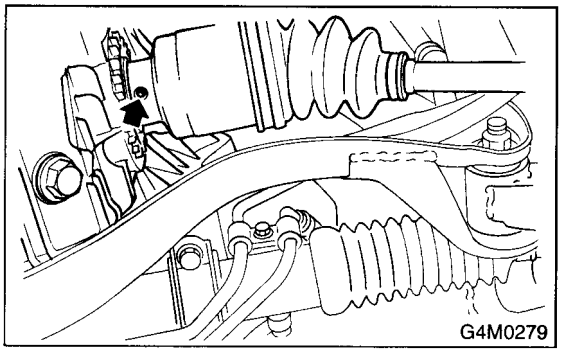

8) Remove the front drive shaft assembly. If it is hard to remove, use ST1 and ST2.

ST1	926470000	AXLE SHAFT PULLER
ST2	927140000	AXLE SHAFT PULLER PLATE

CAUTION:
- **Be careful not to damage the oil seal lip and tone wheel when removing front drive shaft.**
- **When front drive shaft is to be replaced, also replace inner oil seal.**

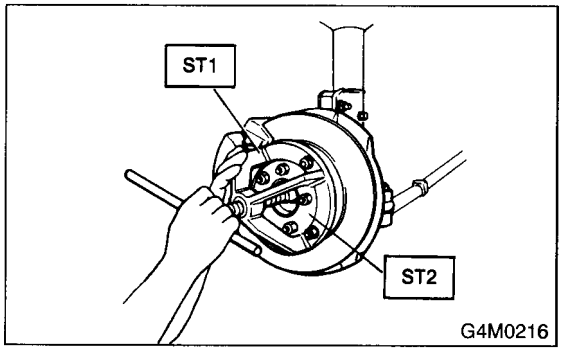

B: INSTALLATION

1) Insert the BJ into hub splines.

CAUTION:
Be careful not to damage inner oil seal lip and tone wheel.

2) Using ST1 and ST2, pull the drive shaft into place.

ST1	922431000	AXLE SHAFT INSTALLER
ST2	927390000	ADAPTER

CAUTION:
Do not hammer drive shaft when installing it.

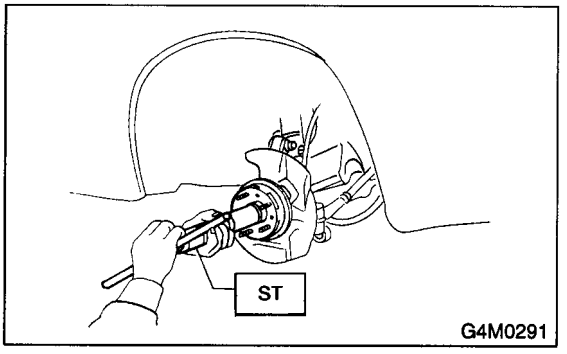

3) Tighten the axle nut temporarily.
4) Install the SFJ on transmission spindle and drive spring pin into place.

CAUTION:
Always use a new spring pin.

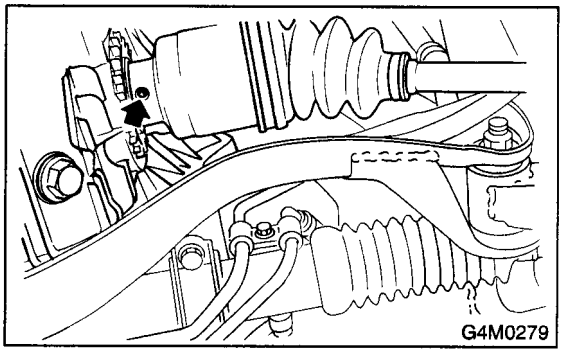

5) Connect the transverse link to the housing.

Tightening torque (self-locking nut):
49 N·m (5.0 kgf-m, 36 ft-lb)

CAUTION:
Use a new self-locking nut.

6) Install the stabilizer bracket.

7) While depressing brake pedal, tighten the axle nut to the specified torque.

Tightening torque:
186 N·m (19 kgf-m, 137 ft-lb)

CAUTION:
- **Use a new axle nut.**
- **Always tighten axle nut before installing wheel on vehicle. If wheel is installed and comes in contact with ground when axle nut is loose, wheel bearings may be damaged.**
- **Be sure to tighten axle nut to specified torque. Do not overtighten it as this may damage wheel bearing.**

8) After tightening axle nut, lock it securely.

C: DISASSEMBLY

1) Place alignment marks on the shaft and outer race.

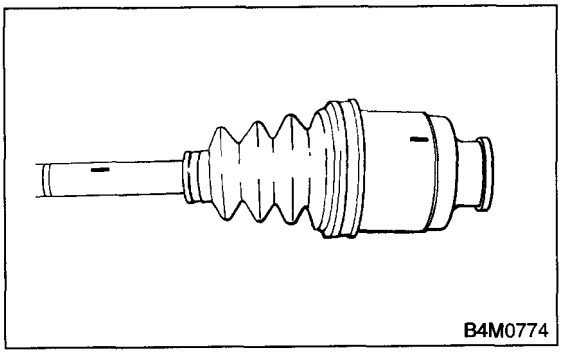

2) Remove the SFJ boot band and boot.

CAUTION:
Be careful not to damage boot.

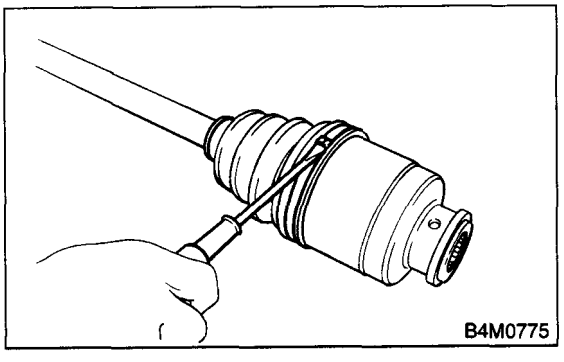

3) Remove the circlip from SFJ outer race using screwdriver.

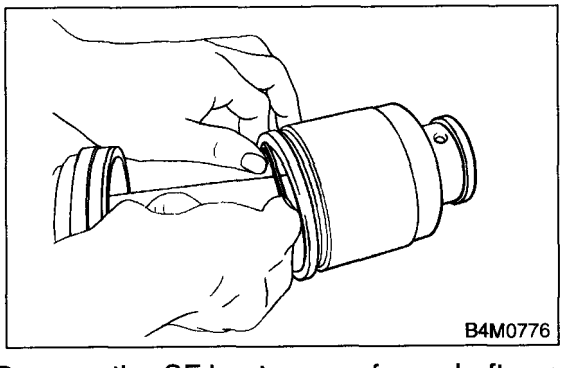

4) Remove the SFJ outer race from shaft assembly.
5) Wipe off grease.

CAUTION:
The grease is a special grease. Do not confuse with other greases.

6) Place alignment mark on free ring and trunnion.

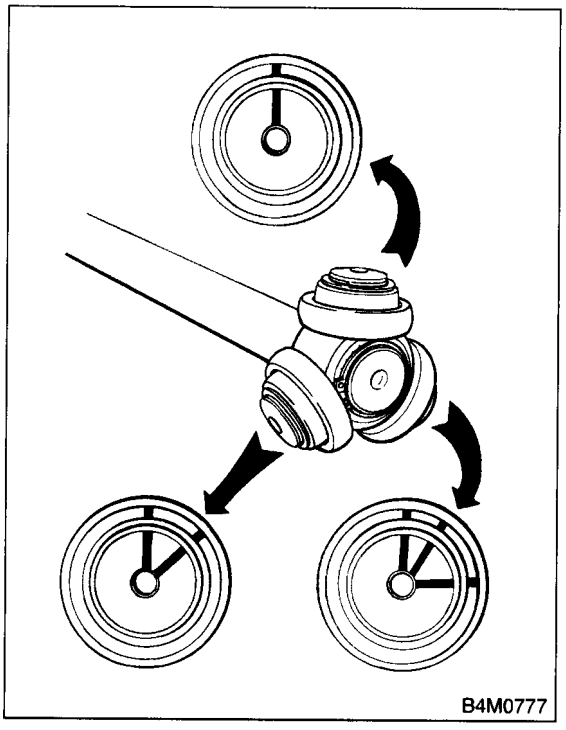

7) Remove the free ring from trunnion.

CAUTION:
Be careful with the free ring position.

8) Place alignment mark on trunnion and shaft.

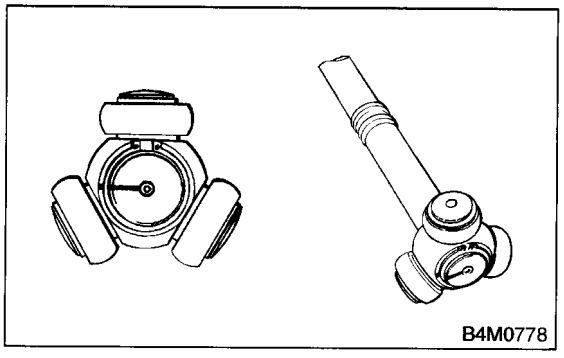

9) Remove the snap ring and trunnion.

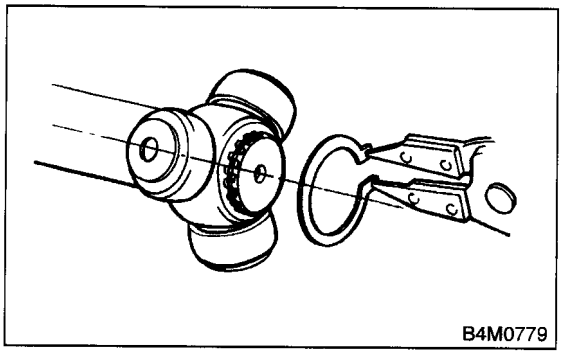

CAUTION:
Be sure to wrap shaft splines with vinyl tape to prevent boot from scratches.

10) Remove the SFJ boot.

11) Place the drive shaft in a vise between wooden blocks.

CAUTION:
Do not place drive shaft directly in the vise; use wooden block.

12) Raise the boot band claws by means of screwdriver and hammer.

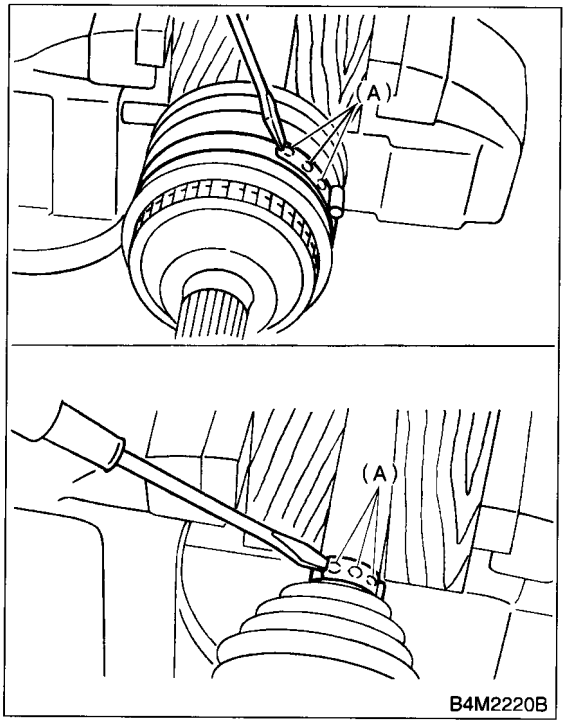

(A) Boot band claws

13) Cut and remove the boot.

CAUTION:
The boot must be replaced with a new one whenever it is removed.

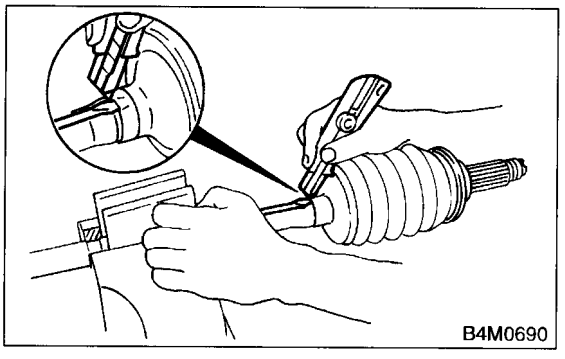

14) Thus, disassembly of axle is completed, but BJ cannot be disassembled.

D: ASSEMBLY

CAUTION:
Use specified grease.

EBJ side:
NTG2218 (Part No. 28093AA000)

SFJ side:
SSG6003 (Part No. 28093TA000)

1) Place the EBJ boot and small boot band on the BJ side of shaft.

CAUTION:
Be sure to wrap shaft splines with vinyl tape to prevent boot from scratches.

2) Place the drive shaft in a vise.

CAUTION:
Do not place drive shaft directly in the vise; use wooden blocks.

3) Apply a coat of specified grease [60 to 70 g (2.12 to 2.47 oz)] to EBJ.

4) Apply an even coat of specified grease [20 to 30 g (0.71 to 1.06 oz)] to the entire inner surface of boot. Also apply the grease to the shaft.

NOTE:
The inside of the larger end of BJ boot and the boot groove shall be cleaned so as to be free from grease and other substances.

5) Install the boot projecting portion to the EBJ groove.

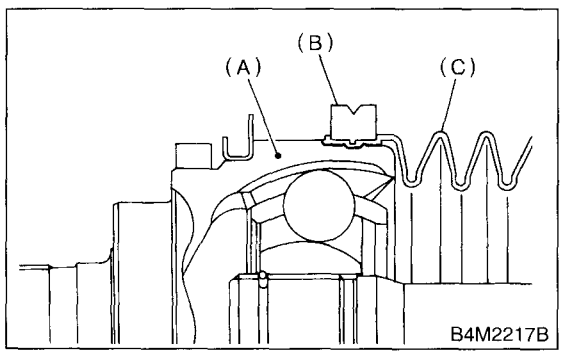

(A) EBJ
(B) Lorge boot band
(C) Boot

6) Set the large boot band in place.

7) Install the boot projecting portion to shaft groove.

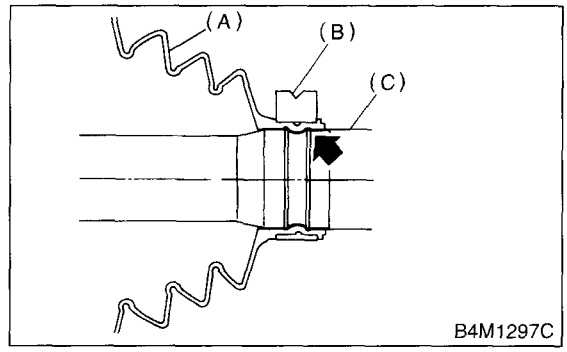

(A) Boot
(B) Small boot band
(C) Shaft

8) Tighten the boot bands using ST, torque wrench and socket flex handle.
ST 28099AC000 BOOT BAND PLIER

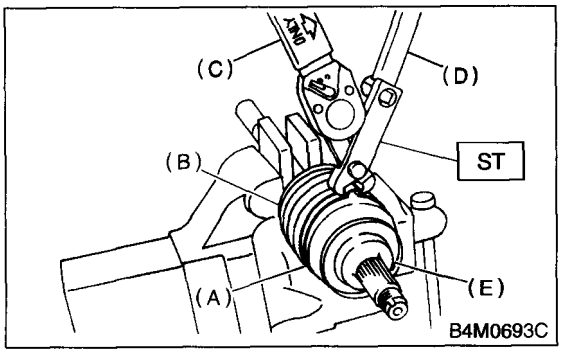

(A) Large boot band
(B) Boot
(C) Torque wrench
(D) Socket flex handle
(E) BJ

Tightening torque:
Large boot band
157 N·m (16.0 kgf-m, 116 ft-lb) or more
Small boot band
133 N·m (13.6 kgf-m, 98 ft-lb) or more

9) Place the SFJ boot at the center of shaft.
10) Align alignment marks and install the trunnion on the shaft.

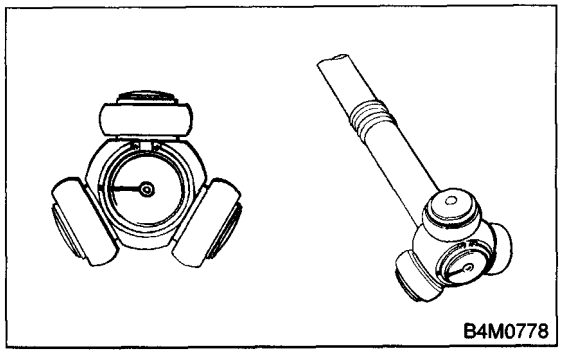

11) Install the snap ring to the shaft.

CAUTION:
Confirm that the snap ring is completely fitted in the shaft groove.

12) Fill 100 to 110 g (3.53 to 3.88 oz) of specified grease into the interior of SFJ outer race.
13) Apply a coat of specified grease to the free ring and trunnion.
14) Align alignment marks on free ring and trunnion and install the free ring.

CAUTION:
Be careful with the free ring position.

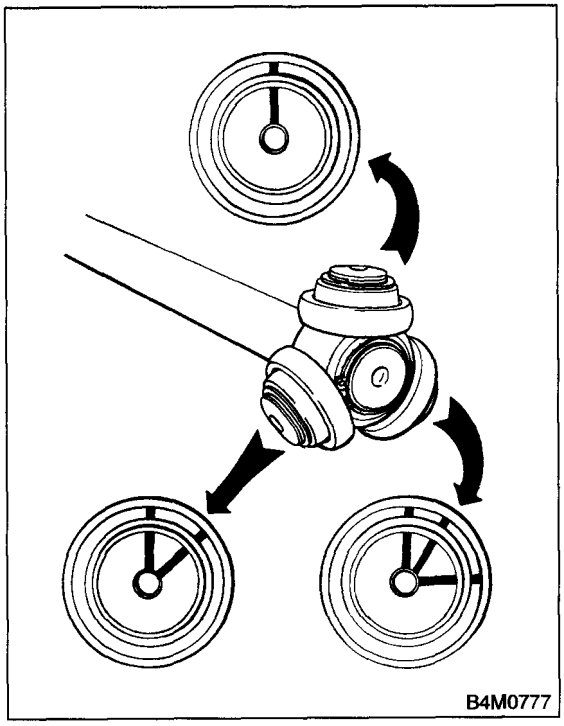

15) Align alignment marks on shaft and outer race, and install outer race.

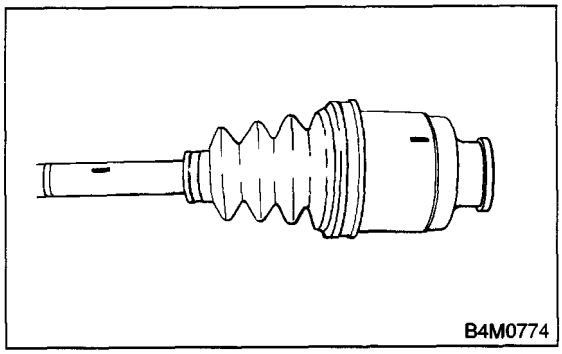

16) Install the circlip in the groove on the SFJ outer race.

CAUTION:
Pull the shaft lightly and assure that the circlip is completely fitted in the groove.

17) Apply an even coat of the specified grease 30 to 40 g (1.06 to 1.41 oz) to the entire inner surface of boot.
18) Install the SFJ boot taking care not to twist it.

CAUTION:
- **The inside of the larger end of SFJ boot and the boot groove shall be cleaned so as to be free from grease and other substances.**
- **When installing SFJ boot, position outer race of SFJ at center of its travel.**

19) Put a band through the clip and wind twice in alignment with band groove of boot.

CAUTION:
Use a new band.

20) Pinch the end of band with pliers. Hold the clip and tighten securely.

NOTE:
When tightening boot, exercise care so that the air within the boot is appropriate.

21) Tighten the band by using ST.
ST 925091000 BAND TIGHTENING TOOL

NOTE:
Tighten the band until it cannot be moved by hand.

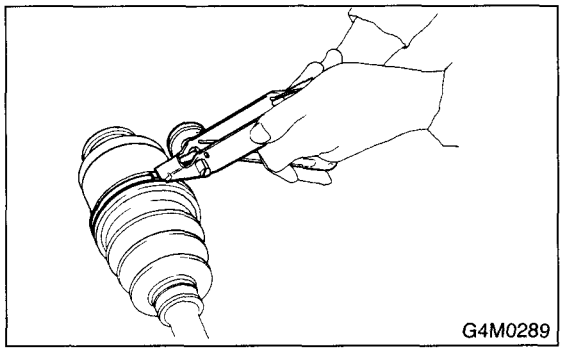

22) Tap on the clip with the punch provided at the end of ST.
ST 925091000 BAND TIGHTENING TOOL

CAUTION:
Tap to an extent that the boot underneath is not damaged.

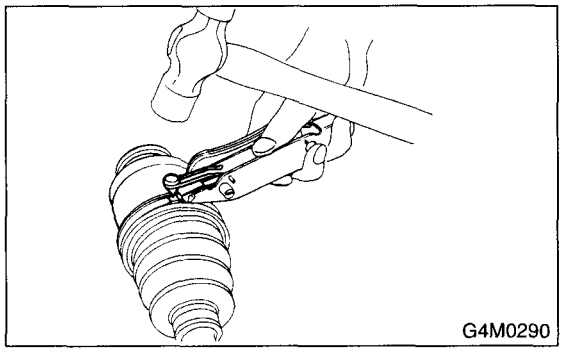

23) Cut off band with an allowance of about 10 mm (0.39 in) left from the clip and bend this allowance over the clip.

CAUTION:
Be careful so that the end of the band is in close contact with clip.

24) Fix up boot on the EBJ in the same manner.

NOTE:
Extend and retract the SFJ to provide equal grease coating.

E: INSPECTION

Check the removed parts for damage, wear, corrosion etc. If faulty, repair or replace.

1) SFJ (Shudder-less Freering tripod Joint)
Check seizure, corrosion, damage and excessive play.

2) Shaft
Check excessive bending, twisting, damage and wear.

3) EBJ (Bell Joint)
Check seizure, corrosion, damage and excessive play.

4) Boot
Check for wear, warping, breakage or scratches.

5) Grease
Check for discoloration or fluidity.

6. Front Drive Shaft Boots

A: INSPECTION

Inspect the wear, warping, breakage or scratches for boot. If faulty, repair or replace.

B: REPLACEMENT

1) Disconnect the ground terminal from battery.
2) Jack-up the vehicle, support it with safety stands (rigid racks), and remove the front wheel cap and wheels.

NOTE:
Do not remove the axle nut.

3) Remove the stabilizer link.
4) Disconnect the transverse link from the housing.
5) Remove the spring pin which secures transmission spindle to the SFJ.

CAUTION:
Use a new spring pin.

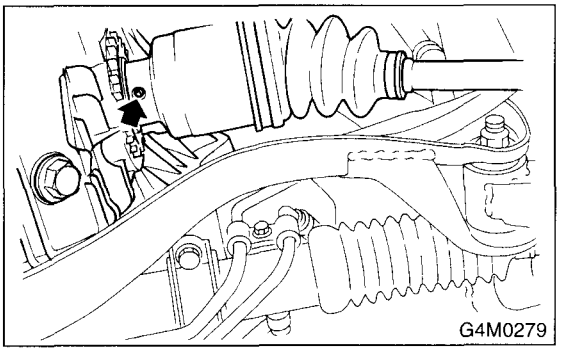

6) Remove the EBJ and SFJ boots from the drive shaft. <Ref. to DS-33, DISASSEMBLY, Front Drive Shaft.>
7) Install the EBJ and SFJ boots to the drive shaft. <Ref. to DS-35, ASSEMBLY, Front Drive Shaft.>
8) Install the SFJ on transmission spindle and drive spring pin into the place.

CAUTION:
Always use a new spring pin.

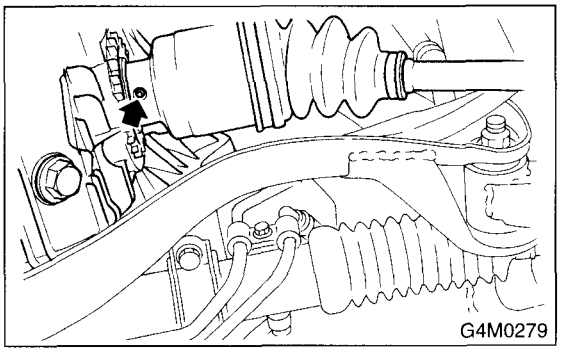

9) Connect the transverse link to the housing.
10) Install the stabilizer link.

7. Rear Drive Shaft

A: REMOVAL

1) Disconnect the ground cable from battery.
2) Lift-up the vehicle, and remove the rear wheel cap and wheels.

CAUTION:
Be sure to loosen and retighten axle nut after removing wheel from vehicle. Failure to follow this rule may damage wheel bearings.

3) Unlock the axle nut.
4) Remove the DOJ from rear differential using ST.
ST 28099PA100 DRIVE SHAFT REMOVER

NOTE:
The side spline shaft circlip comes out together with the shaft.

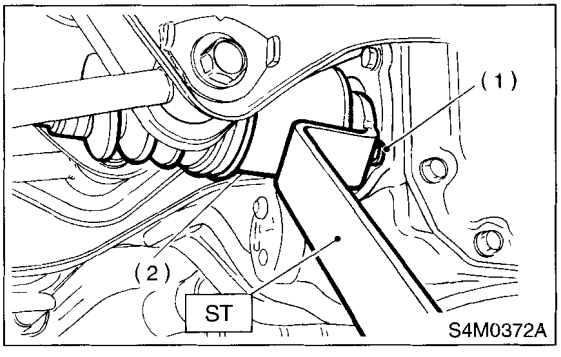

(1) Bolt
(2) DOJ

CAUTION:
Be careful not to damage the side bearing retainer. Always use bolt as shown in figure, as supporting point for ST during removal.
ST 28099PA100 DRIVE SHAFT REMOVER

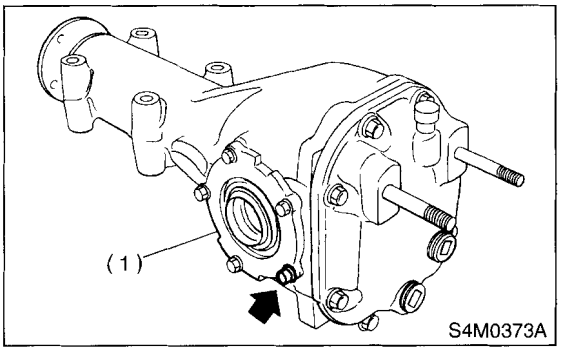

(1) Side bearing retainer

5) Remove the axle nut and drive shaft. If it is hard to remove, use ST1 and ST2.
ST1 926470000 AXLE SHAFT PULLER
ST2 927140000 AXLE SHAFT PULLER PLATE

CAUTION:
Be careful not to damage tone wheel when removing rear drive shaft.

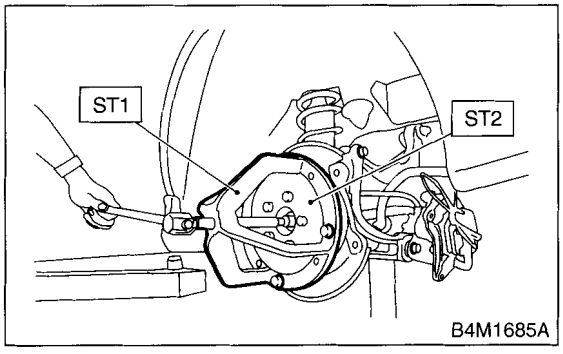

B: INSTALLATION

1) Insert the BJ or EBJ into the rear hub splines.

CAUTION:
Be careful not to damage tone wheel.

2) Using ST1 and ST2, pull the drive shaft into the place.

ST1 922431000 AXLE SHAFT INSTALLER
ST2 927390000 ADAPTER

CAUTION:
Do not hammer drive shaft when installing it.

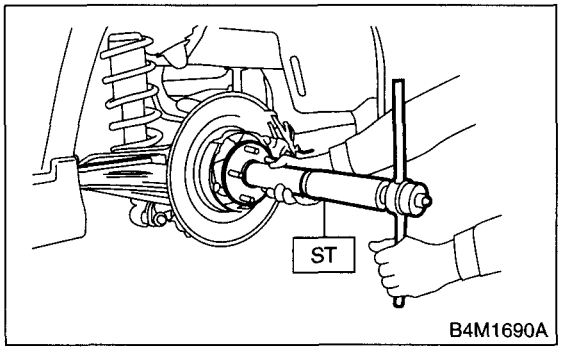

3) Tighten the axle nut temporarily.
4) Using ST, install the DOJ into differential.

ST 28099PA090 SIDE OIL SEAL PROTECTOR

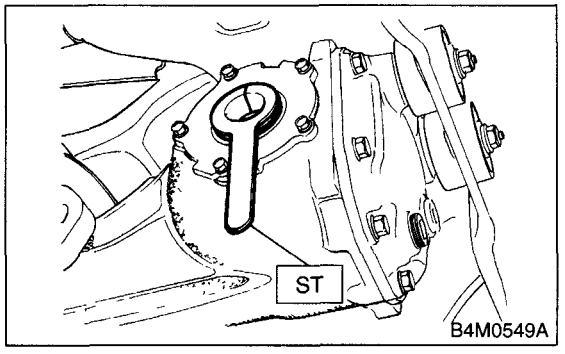

5) Insert the DOJ spline end into the bore of side oil seal, and remove ST.

CAUTION:
Do not allow DOJ splines to damage side oil seal.

ST 28099PA090 SIDE OIL SEAL PROTECTOR

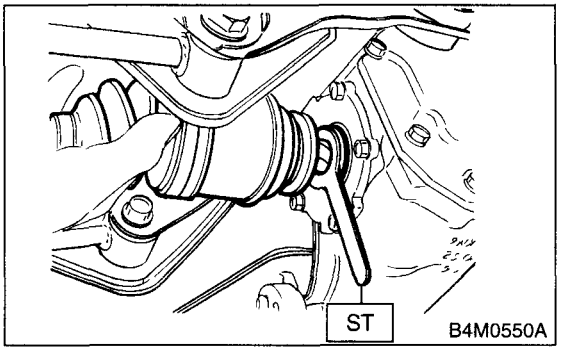

6) Align the DOJ and differential splines.
7) Push the housing to insert DOJ into the differential.

NOTE:
Make sure the DOJ is inserted properly.

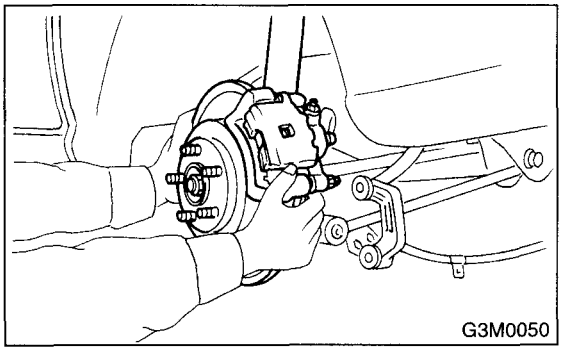

CAUTION:
Discard old self-locking nut. Replace with a new one.

8) While depressing brake pedal, tighten the axle nut using a socket wrench.

Tightening torque:
235 N·m (24 kgf-m, 174 ft-lb)

CAUTION:
- **Use a new axle nut for rear use only.**
- **Always tighten axle nut before installing wheel on vehicle. If wheel is installed and comes in contact with ground when axle nut is loose, wheel bearings may be damaged.**
- **Be sure to tighten axle nut to specified torque. Do not overtighten it as this may damage wheel bearing.**

9) After tightening axle nut, lock it securely.

C: DISASSEMBLY

1) Straighten the bent claw of larger end of DOJ boot.
2) Loosen the band by means of screwdriver or pliers with care of not damaging boot.

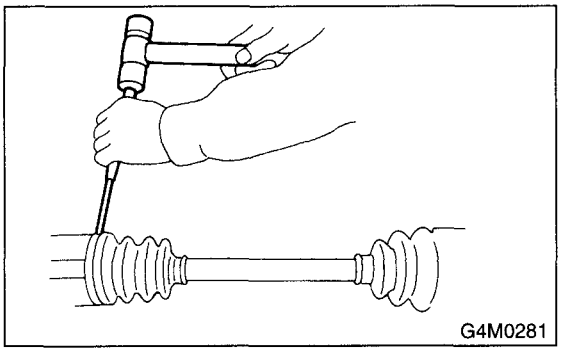

3) Remove the boot band on the small end of DOJ boot in the same manner.
4) Remove the larger end of DOJ boot from DOJ outer race.
5) Pry and remove the round circlip located at the neck of DOJ outer race with a screwdriver.

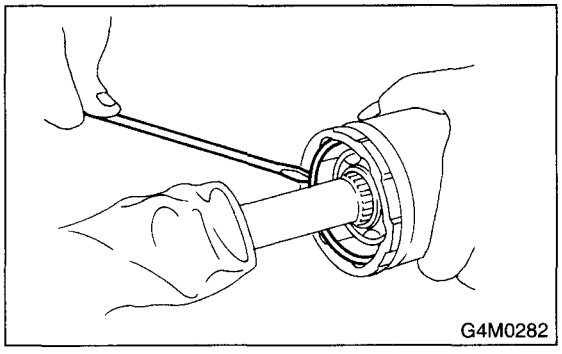

6) Take out the DOJ outer race from shaft assembly.
7) Wipe off the grease and take out balls.

CAUTION:
The grease is a special grease (grease for constant velocity joint). Do not confuse with other greases.

NOTE:
Disassemble exercising care not to lose balls (6 pcs).

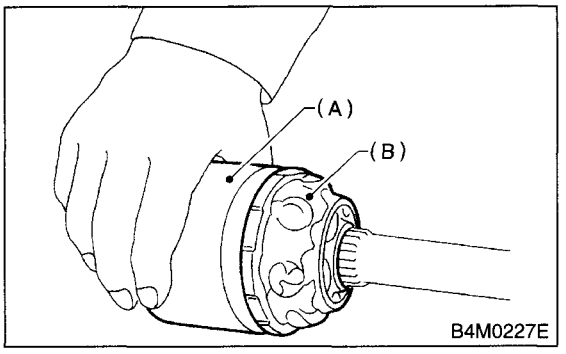

(A) Outer race
(B) Grease

8) To remove the cage from the inner race, turn the cage by a half pitch to the track groove of the inner race and shift the cage.
9) Remove snap ring, which fixes inner race to shaft, by using pliers.
10) Take out the DOJ inner race.
11) Take off the DOJ cage from shaft and remove DOJ boot.

CAUTION:
Be sure to wrap shaft splines with vinyl tape to prevent boot from scratches.

12) Remove the BJ or EBJ boot in the same procedure as DOJ boot.
13) Thus, disassembly of axle is completed, but BJ or EBJ is unable to be disassembled.

D: ASSEMBLY

CAUTION:
Use specified grease.

BJ side (Non-turbo model):
Molylex No. 2 (Part No. 723223010)

EBJ side (Turbo model):
NTG 2218 (Part No. 28093AA000)

DOJ side:
VU-3A702 (Yellow) (Part No. 23223GA050)

1) Install the BJ or EBJ boot in specified position, and fill it with 60 to 70 g (2.12 to 2.47 oz) of specified grease.
2) Place the DOJ boot at the center of shaft.

CAUTION:
Be sure to wrap shaft splines with vinyl tape to prevent boot from scratches.

3) Insert the DOJ cage onto shaft.

NOTE:
Insert the cage with the cut-out portion facing the shaft end, since the cage has an orientation.

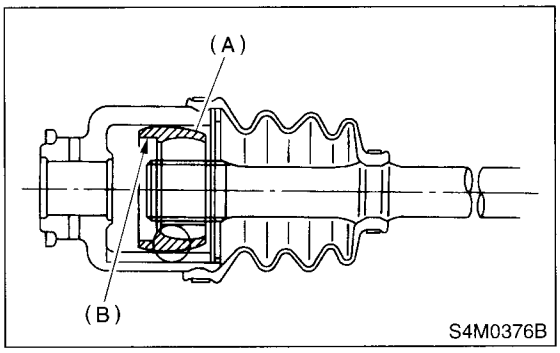

(A) Cage
(B) Cut-out portion

4) Install the DOJ inner race on shaft and fit snap ring with pliers.

NOTE:
Confirm that the snap ring is completely fitted in the shaft groove.

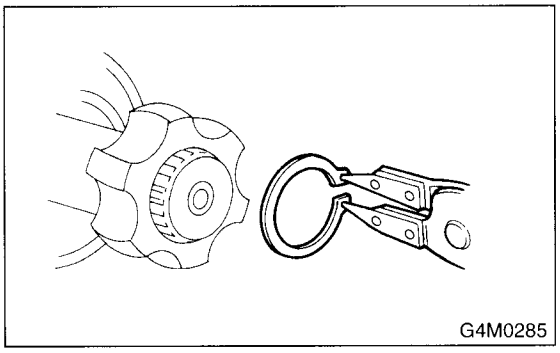

5) Install the cage, which was previously fitted, to inner race fixed upon shaft.

NOTE:
Fit the cage with the protruded part aligned with the track on the inner race and then turn by a half pitch.

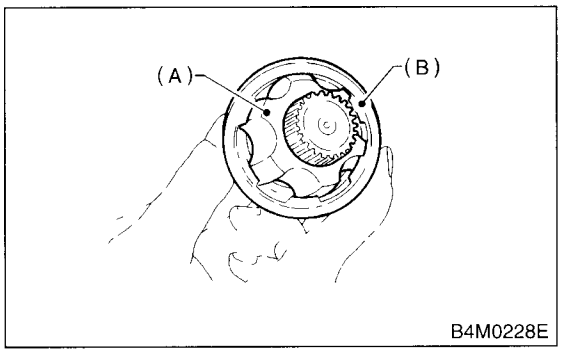

(A) Inner race
(B) Cage

6) Fill 80 to 90 g (2.82 to 3.17 oz) of specified grease into the interior of DOJ outer race.
7) Apply a coat of specified grease to the cage pocket and six balls.
8) Insert six balls into the cage pocket.
9) Align the outer race track and ball positions and place in the part where shaft, inner race, cage and balls are previously installed, and then fit outer race.

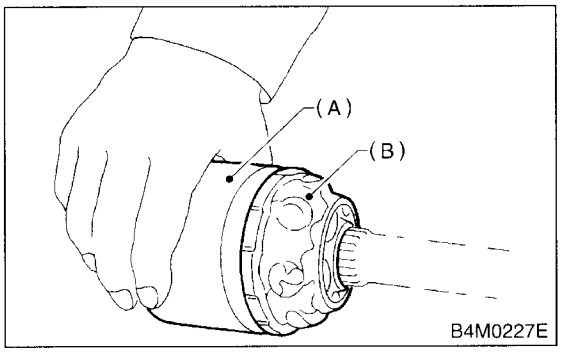

(A) Outer race
(B) Grease

10) Install the circlip in the groove on the DOJ outer race.

NOTE:
- Assure that the balls, cage and inner race are completely fitted in the outer race of DOJ.
- Exercise care not to place the matched position of circlip in the ball groove of outer race.
- Pull the shaft lightly and assure that the circlip is completely fitted in the groove.

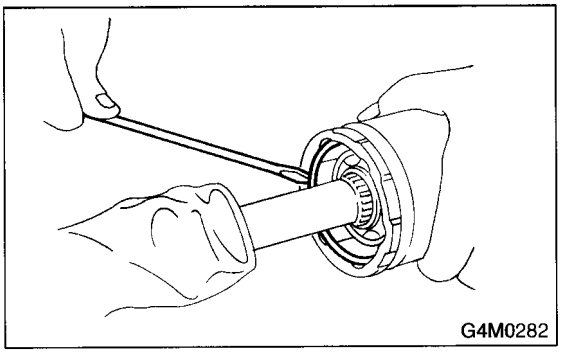

11) Apply an even coat of the specified grease [20 to 30 g (0.71 to 1.06 oz)] to the entire inner surface of boot. Also apply grease to shaft.
12) Install the DOJ boot taking care not to twist it.

NOTE:
- The inside of the larger end of DOJ boot and the boot groove shall be cleaned so as to be free from grease and other substances.
- When installing DOJ boot, position outer race of DOJ at center of its travel.

13) Put a band through the clip and wind twice in alignment with band groove of boot.

CAUTION:
Use a new band.

14) Pinch the end of band with pliers. Hold the clip and tighten securely.

NOTE:
When tightening boot, exercise care so that the air within the boot is appropriate.

15) Tighten the band by using ST.
ST 925091000 BAND TIGHTENING TOOL

NOTE:
Tighten the band until it cannot be moved by hand.

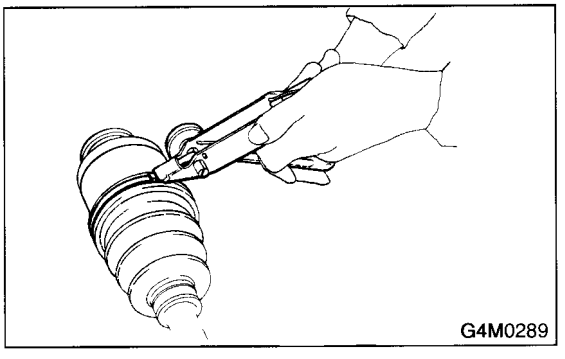

16) Tap on the clip with the punch provided at the end of ST.
ST 925091000 BAND TIGHTENING TOOL

CAUTION:
Tap to an extent that the boot underneath is not damaged.

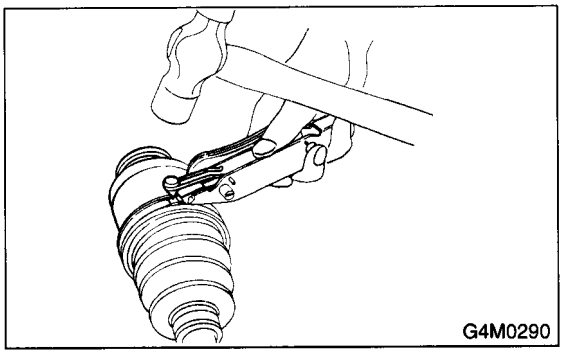

17) Cut off the band with an allowance of about 10 mm (0.39 in) left from the clip and bend this allowance over the clip.

CAUTION:
Be careful so that the end of the band is in close contact with clip.

18) Fix up the boot on the BJ or EBJ in the same manner.

NOTE:
Extend and retract the DOJ to provide equal grease coating.

E: INSPECTION

Check the removed parts for damage, wear, corrosion etc. If faulty, repair or replace.
1) DOJ (Double Offset Joint)
Check seizure, corrosion, damage, wear and excessive play.
2) Shaft
Check excessive bending, twisting, damage and wear.
3) BJ (Bell Joint) and EBJ (Eightball Bell Joint)
Check seizure, corrosion, damage and excessive play.
4) Boot
Check for wear, warping, breakage or scratches.
5) Grease
Check for discoloration or fluidity.

8. Rear Drive Shaft Boots

A: INSPECTION

Inspect the wear, warping, breakage or scratches for boot. If faulty, repair or replace.

B: REPLACEMENT

1) Disconnect the ground terminal from battery.
2) Lift-up the vehicle, and remove the rear wheel cap and wheels.

NOTE:
Axle nut need not be removed.

3) Remove the ABS sensor clamps and parking brake cable bracket.
4) Disconnect the stabilizer link from the lateral link.
5) Remove the bolts which secure lateral link assembly to the rear housing.
6) Remove the bolts which secure trailing link assembly to the rear housing.
7) Remove the DOJ from rear differential using ST.
ST 28099PA100 DRIVE SHAFT REMOVER

NOTE:
The side spline shaft circlip comes out together with the shaft.

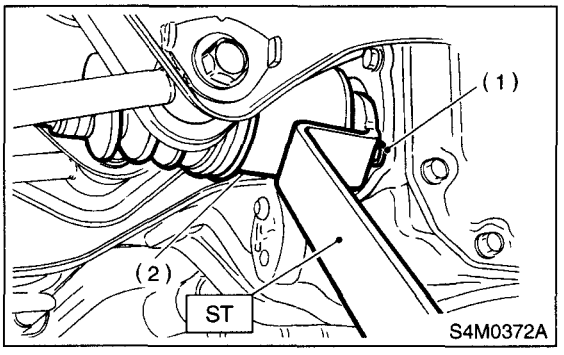

(1) Bolt
(2) DOJ

CAUTION:
Be careful not to damage the side bearing retainer. Always use bolt as shown in figure, as supporting point for ST during removal.
ST 28099PA100 DRIVE SHAFT REMOVER

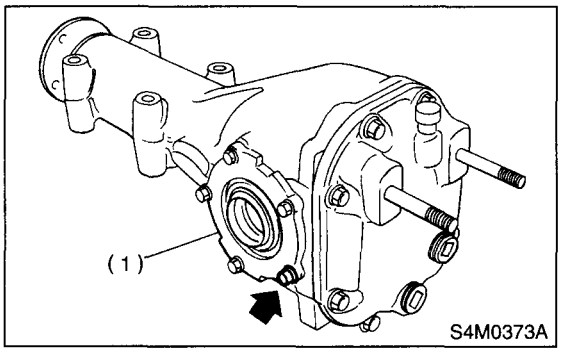

(1) Side bearing retainer

8) Remove the DOJ and BJ or EBJ boots from the drive shaft. <Ref. to DS-41, DISASSEMBLY, Rear Drive Shaft.>
9) Install the DOJ and BJ or EBJ boots to the drive shaft. <Ref. to DS-42, ASSEMBLY, Rear Drive Shaft.>

10) Using ST, install the DOJ into differential.
ST 28099PA090 SIDE OIL SEAL PROTECTOR

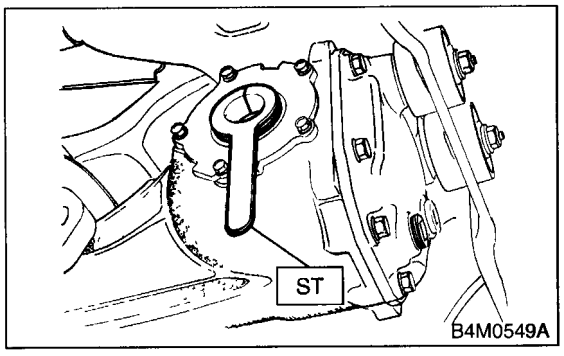

11) Insert the DOJ spline end into the bore of side oil seal, and remove ST.

CAUTION:
Do not allow DOJ splines to damage side oil seal.
ST 28099PA090 SIDE OIL SEAL PROTECTOR

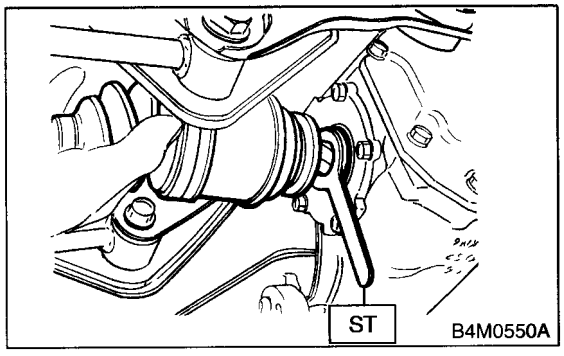

12) Align the DOJ and differential splines.
13) Push the housing to insert DOJ into the differential.

NOTE:
Make sure the DOJ is inserted properly.

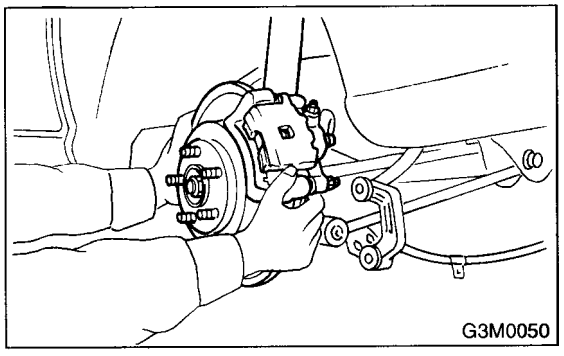

CAUTION:
Discard old self-locking nut. Replace with a new one.

14) Connect the rear housing assembly to the trailing link assembly, and tighten the self-locking nut.
15) Connect the rear housing assembly to the lateral link assembly, and tighten the self-locking nut.
16) Connect the stabilizer link to the lateral link.
17) Install the ABS sensor clamps and parking brake cable bracket.

9. General Diagnostic Table

A:INSPECTION

NOTE:
Vibration while cruising may be caused by an unbalanced tire, improper tire inflation pressure, improper wheel alignment, etc

Symptom	Possible cause	Remedy
1. Vibration of propeller shaft NOTE Vibration is caused by propeller shaft during operation and is transferred to vehicle body Generally vibration increase in proportion to vehicle speed	(1) Worn or damaged universal joint	Replace
	(2) Unbalanced propeller shaft due to bend or dent	Replace
	(3) Loose installation of propeller shaft	Retighten
	(4) Worn or damaged center bearing and damaged center mounting rubber	Replace
2. Tapping when starting and noise while cruising, caused by propeller shaft.	(1) Worn or damaged universal joint	Replace
	(2) Worn spline of sleeve yoke	Replace
	(3) Loose installation of propeller shaft	Retighten
	(4) Loose installation of joint	Replace
	(5) Worn or damaged center bearing and damaged center mounting rubber	Replace
3. Front wheel shimmy	(1) Worn or damaged hub bearing	Repair or replace
4. Wander or pulling	(1) Worn or damaged hub bearing	Repair or replace

ABS

		Page
1.	General Description	2
2.	ABS Control Module and Hydraulic Control Unit (ABSCM&H/U)	7
3.	ABS Sequence Control	11
4.	Front ABS Sensor	14
5.	Rear ABS Sensor	18
6.	Front Tone Wheel	21
7.	Rear Tone Wheel	22
8.	G Sensor	23

1. General Description

A: SPECIFICATIONS

Item				Standard or remarks
ABS sensor	ABS sensor gap		Front	0.3 — 0.8 mm (0.012 — 0.031 in)
			Rear	0.7 — 1.2 mm (0.028 — 0.047 in)
	ABS sensor resistance		Front	1.25±0.25 kΩ
			Rear	1.0±0.2 kΩ
	Marks of the harness	Front	RH	White
			LH	Yellow
		Rear	RH	Light blue
			LH	Brown
G sensor	G sensor voltage			2.3±0.2 V
ABS control module and hydraulic control unit (ABSCM&H/U) marks			AT	CC
			MT	CD

B: COMPONENT

1. SENSOR

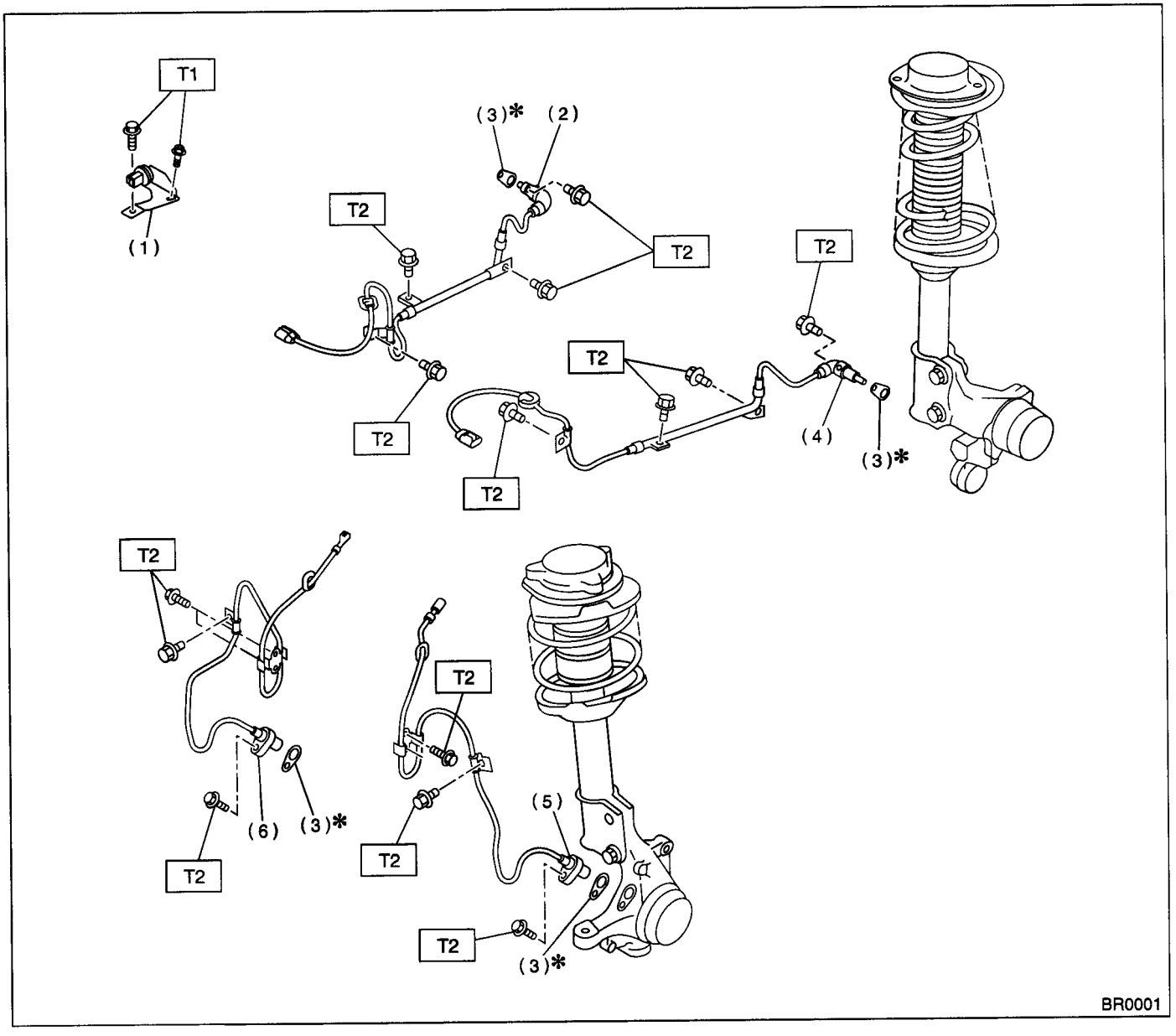

(1)	G sensor	(4)	Rear ABS sensor LH
(2)	Rear ABS sensor RH	(5)	Front ABS sensor LH
(3)	ABS spacer	(6)	Front ABS sensor RH

Tightening torque: N·m (kgf-m, ft-lb)
T1: 7.4 (0.75, 5.4)
T2: 32 (3.3, 24)

2. ABS CONTROL MODULE AND HYDRAULIC CONTROL UNIT (ABSCM&H/U)

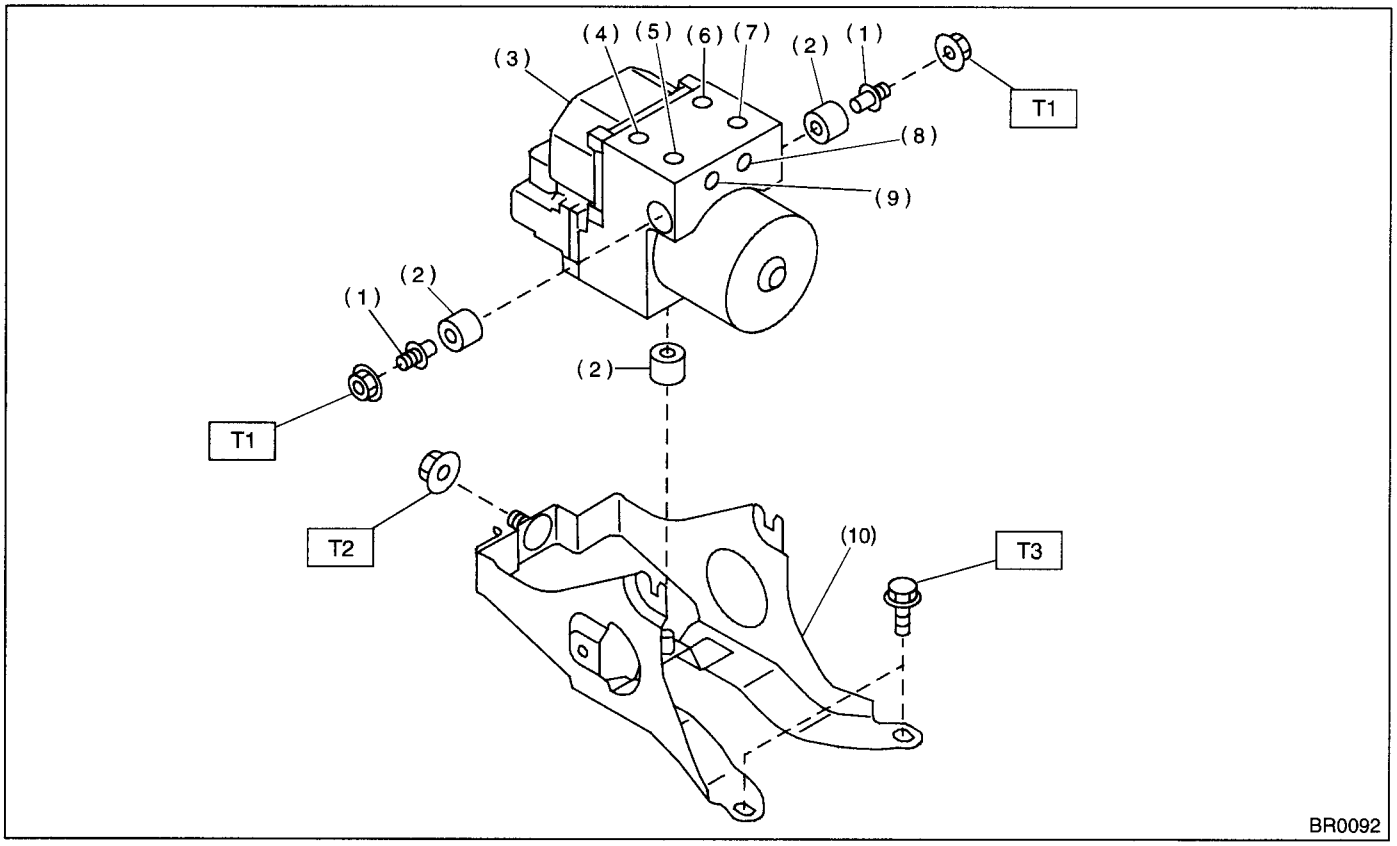

(1)	Stud bolt	(6)	Front-RH outlet
(2)	Damper	(7)	Primary inlet
(3)	ABS control module and hydraulic control unit	(8)	Rear-LH outlet
		(9)	Rear-RH outlet
(4)	Front-LH outlet	(10)	Bracket
(5)	Secondary inlet		

Tightening torque: N·m (kgf-m, ft-lb)	
T1:	*18 (1.8, 13.0)*
T2:	*29 (3.0, 21.7)*
T3:	*32 (3.3, 24)*

C: CAUTION

- Wear working clothing, including a cap, protective goggles, and protective shoes during operation.
- Remove contamination including dirt and corrosion before removal, installation or disassembly.
- Keep the disassembled parts in order and protect them from dust or dirt.
- Before removal, installation or disassembly, be sure to clarify the failure. Avoid unnecessary removal, installation, disassembly, and replacement.
- Be careful not to burn your hands, because each part in the vehicle is hot after running.
- Be sure to tighten fasteners including bolts and nuts to the specified torque.
- Place shop jacks or safety stands at the specified points.
- Before disconnecting electrical connectors of sensors or units, be sure to disconnect negative terminal from battery.

D: PREPARATION TOOL

1. SPECIAL TOOLS

ILLUSTRATION	TOOL NUMBER	DESCRIPTION	REMARKS
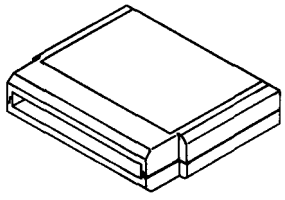 B2M3876	24082AA150 (New apopted tool)	CARTRIDGE	Troubleshooting for electrical systems.
B2M3877	22771AA030	SELECT MONITOR KIT	Troubleshooting for electrical systems. • English: 22771AA030 (Without printer) • German: 22771AA070 (Without printer) • French: 22771AA080 (Without printer) • Spanish: 22771AA090 (Without printer)

2. GENERAL PURPOSE TOOLS

TOOL NAME	REMARKS
Circuit tester	Used for measuring resistance, voltage and ampere.
Pressure gauge	Used for measuring oil pressure.
Oscilloscope	Used for measuring sensor.

2. ABS Control Module and Hydraulic Control Unit (ABSCM&H/U)

A: REMOVAL

1) Disconnect the ground terminal from battery.
2) Remove the air intake duct from engine compartment to facilitate removal of ABSCM&H/U.
3) Use an air gun to get rid of water around the ABSCM&H/U.

CAUTION:
The contact will be insufficient if the terminal gets wet.

4) Pull off the lock of the ABSCM&H/U connector to remove it.

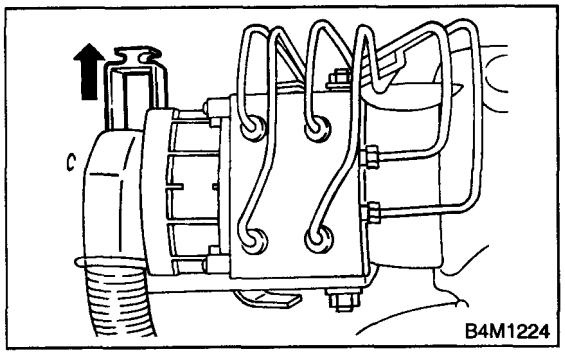

5) Disconnect the connector from ABSCM&H/U.

CAUTION:
Be careful not to let water or other foreign matter contact the ABSCM&H/U terminal.

6) Unlock the cable clip.
7) Disconnect the brake pipes from ABSCM&H/U.

CAUTION:
Wrap the brake pipes with vinyl bag to avoid spilling brake fluid on vehicle body.

8) Remove the ABSCM&H/U from engine compartment.

CAUTION:
- **ABSCM&H/U cannot be disassembled. Do not attempt to loosen the bolts and nuts.**
- **Do not drop or bump the ABSCM&H/U.**
- **Do not turn the ABSCM&H/U upside down or place it on its side.**
- **Be careful to prevent foreign particles from getting into the ABSCM&H/U.**
- **Apply a coat of rust-preventive wax (Nippeco LT or GB) to bracket attaching bolt after tightening.**
- **Do not pull the harness when disconnecting connector.**

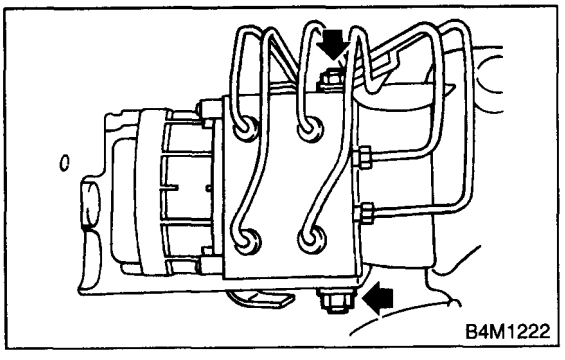

B: INSTALLATION

1) Install the ABSCM&H/U bracket.

Tightening torque:
32 N·m (3.3 kgf-m, 24 ft-lb)

2) Install the ABSCM&H/U.

CAUTION:
Confirm that the specifications of the ABSCM&H/U conforms to the vehicle specifications.

Tightening torque:
18 N·m (1.8 kgf-m, 13.0 ft-lb)

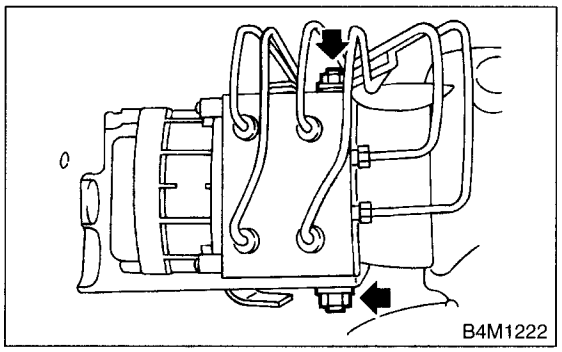

3) Connect the brake pipes to their correct ABSCM&H/U connections.

Tightening torque:
15 N·m (1.5 kgf-m, 10.8 ft-lb)

4) Using cable clip, secure the ABSCM&H/U harness to bracket.
5) Connect the connector to the ABSCM&H/U.

CAUTION:
- **Be sure to remove all foreign matter from inside the connector before connecting.**
- **Ensure that the ABSCM&H/U connector is securely locked.**

6) Install the air intake duct.
Non-turbo model:
<Ref. to IN(SOHC)-7, INSTALLATION, Air Intake Duct.>
Turbo model:
<Ref. to IN(DOHC TURBO)-8, INSTALLATION, Air Intake Duct.>
7) Bleed air from the brake system. <Ref. to BR-46, Air Bleeding.>

C: INSPECTION

1) Check the connected and fixed condition of connector.
2) Check the specifications of the mark with ABSCM&H/U.

Mark	Model
CC	AT
CD	MT

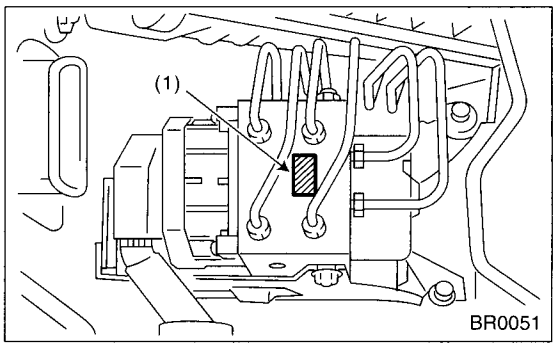

(1) Mark

1. CHECKING THE HYDRAULIC UNIT ABS OPERATION BY PRESSURE GAUGE

1) Lift-up the vehicle and remove wheels.
2) Disconnect the air bleeder screws from the FL and FR caliper bodies.
3) Connect two pressure gauges to the FL and FR caliper bodies.

CAUTION:
- **Pressure gauges used exclusively for brake fluid must be used.**
- **Do not employ the pressure gauge previously used for transmission since the piston seal is expanded and may lead to malfunction of the brake.**

NOTE:
Wrap a sealing tape around the pressure gauge.

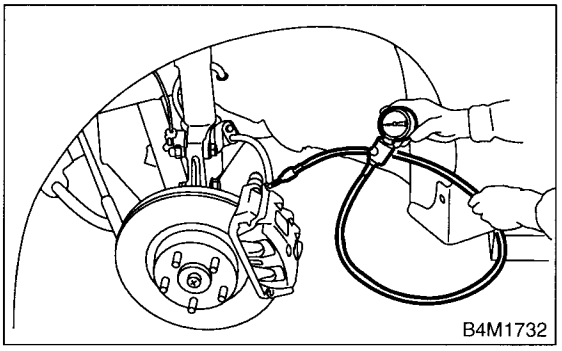

4) Bleed air from the pressure gauges.
5) Perform the ABS sequence control.
<Ref. to ABS-11, ABS Sequence Control.>
6) When the hydraulic unit begins to work, and first the FL side performs decompression, holding, and compression, and then the FR side performs decompression, holding, and compression.
7) Read values indicated on the pressure gauge and check if the fluctuation of the values between decompression and compression meets the standard values. Also check if any irregular brake pedal tightness is felt.

	Front wheel	Rear wheel
Initial value	3,432 kPa (35 kgf/cm^2, 498 psi)	3,432 kPa (35 kgf/cm^2, 498 psi)
When decompressed	490 kPa (5 kgf/cm^2, 71 psi) or less	490 kPa (5 kgf/cm^2, 71 psi) or less
When compressed	3,432 kPa (35 kgf/cm^2, 498 psi) or more	3,432 kPa (35 kgf/cm^2, 498 psi) or more

8) Remove the pressure gauges from FL and FR caliper bodies.
9) Remove the air bleeder screws from the RL and RR caliper bodies.
10) Connect the air bleeder screws to the FL and FR caliper bodies.
11) Connect two pressure gauges to the RL and RR caliper bodies.
12) Bleed air from the pressure gauges and the FL and FR caliper bodies.
13) Perform the ABS sequence control.
<Ref. to ABS-11, ABS Sequence Control.>
14) When the hydraulic unit begins to work, at first the RR side performs decompression, holding, and compression, and then the RL side performs decompression, holding, and compression.
15) Read the values indicated on the pressure gauges and check if they meet the standard value.
16) After checking, remove the pressure gauges from caliper bodies.
17) Connect the air bleeder screws to RL and RR caliper bodies.
18) Bleed air from the brake line.

2. CHECKING THE HYDRAULIC UNIT ABS OPERATION WITH BRAKE TESTER

1) In the case of AWD AT Non-turbo vehicles, install a spare fuse with the FWD connector in the main fuse box to simulate FWD vehicles.

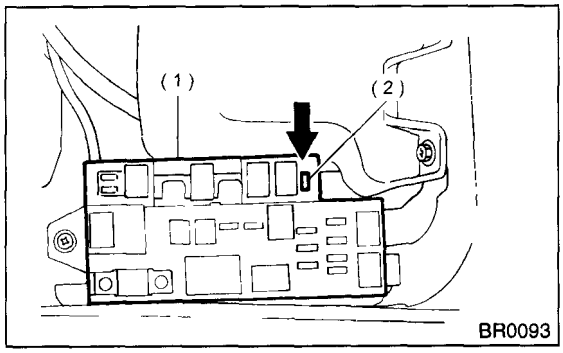

(1) Main fuse box
(2) FWD connector

2) Prepare for operating the ABS sequence control.
<Ref. to ABS-11, ABS Sequence Control.>
3) Set the front wheels or rear wheels on the brake tester and set the select lever's position at "neutral".

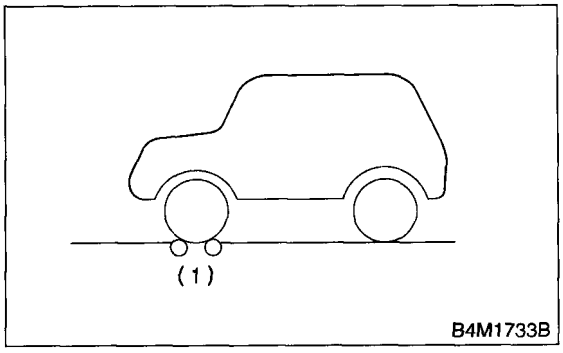

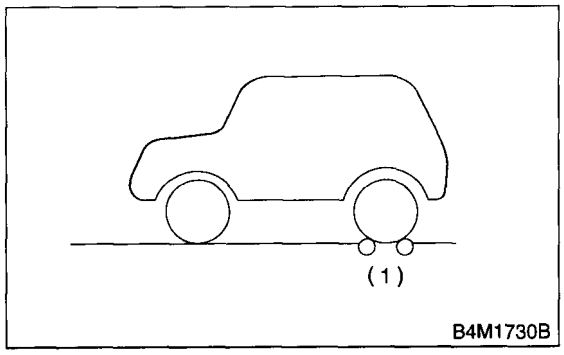

(1) Brake tester

4) Operate the brake tester.
5) Perform ABS sequence control.
<Ref. to ABS-11, ABS Sequence Control.>

6) Hydraulic unit begins to work; and check the following working sequence.
   (1) The FL wheel performs decompression, holding, and compression in sequence, and subsequently the FR wheel repeats the cycle.
   (2) The RR wheel performs decompression, holding, and compression in sequence, and subsequently the RL wheel repeats the cycle.
7) Read the values indicated on the brake tester and check if the fluctuation of values, when decompressed and compressed, meet the standard values.

	Front wheel	Rear wheel
Initial value	981 N (100 kgf, 221 lb)	981 N (100 kgf, 221 lb)
When decompressed	490 N (50 kgf, 110 lb) or less	490 N (50 kgf, 110 lb) or less
When compressed	981 N (100 kgf, 221 lb) or more	981 N (100 kgf, 221 lb) or more

8) After checking, also check if any irregular brake pedal tightness is felt.

3. ABS Sequence Control

A: OPERATION

1) Under the ABS sequence control, after the hydraulic unit solenoid valve is driven, the operation of the hydraulic unit can be checked by means of the brake tester or pressure gauge.
2) ABS sequence control can be started by diagnosis connector or select monitor.

1. ABS SEQUENCE CONTROL WITH DIAGNOSIS CONNECTOR

1) Connect the diagnosis terminals to terminals No. 3 and No. 6 of the diagnosis connector beside driver's seat heater unit.

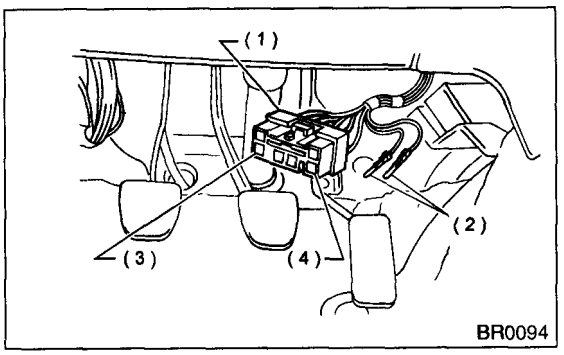

(1) Diagnosis connector
(2) Diagnosis terminals
(3) 3 terminal
(4) 6 terminal

2) Set the speed of all wheels at 4 km/h (2 MPH) or less.
3) Turn the ignition switch OFF.
4) Within 0.5 seconds after the ABS warning light goes out, depress the brake pedal and hold it immediately after the ignition switch is turned to ON.

CAUTION:
Do not depress the clutch pedal.

NOTE:
- When the ignition switch is set to on, the brake pedal must not be depressed.
- Engine must not operate.

5) After completion of ABS sequence control, turn the ignition switch OFF.

2. ABS SEQUENCE CONTROL WITH SELECT MONITOR

NOTE:
- In the event of any trouble, the sequence control may not be operative. In such a case, activate the sequence control, referring to "ABS SEQUENCE CONTROL WITH DIAGNOSIS CONNECTOR".
<Ref. to ABS-11, ABS SEQUENCE CONTROL WITH DIAGNOSIS CONNECTOR, ABS Sequence Control.>
- When the diagnosis terminal is connected to the diagnosis connector, the sequence control will not operate.

1) Connect the select monitor to data link connector under the driver's seat instrument panel lower cover.
2) Turn the ignition switch ON.
3) Turn the select monitor switch ON.
4) Put the select monitor to "BRAKE CONTROL" mode.
5) When "Function check sequence" is selected, 'ABS sequence control' will start.
6) The message 'Press Brake Pedal Firmly' is displayed as follows:
   (1) When using the brake tester, depress the brake pedal with braking force of 981 N (100 kgf, 221 lb).
   (2) When using the pressure gauge, depress the brake pedal so as to make the pressure gauge indicate 3,432 kPa (35 kg/cm^2, 498 psi).

CAUTION:
Do not depress the clutch pedal.

7) When the message "Press YES" is displayed, press the YES key.
8) Operation points will be displayed on the select monitor.

3. CONDITIONS FOR ABS SEQUENCE CONTROL

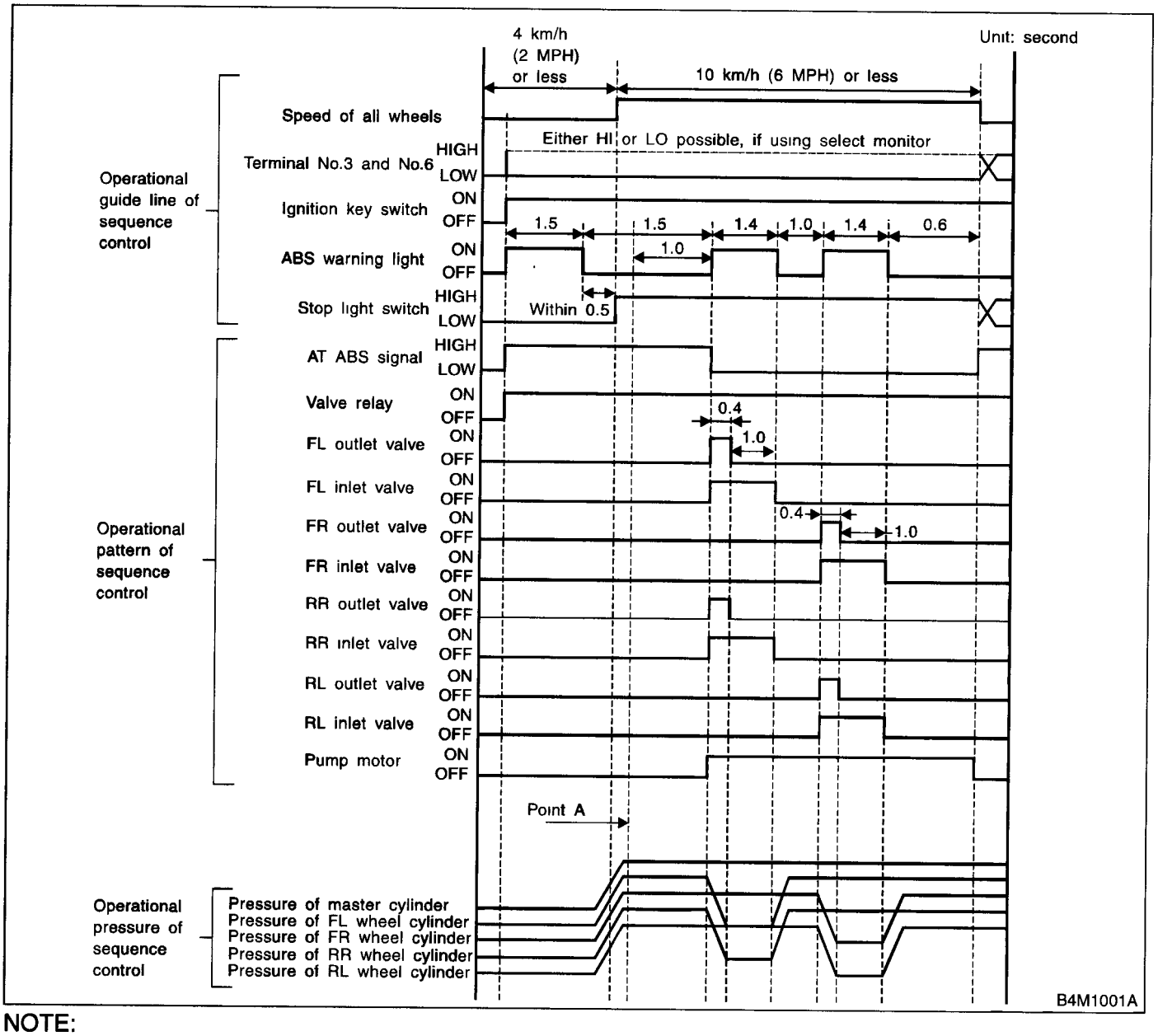

NOTE:

- When the select monitor is used, control operation starts at point A. The patterns from IGN key ON to the point A show that operation is started by diagnosis connector.
- HIGH means high voltage.
- LOW means low voltage.

4. CONDITIONS FOR COMPLETION OF ABS SEQUENCE CONTROL

When the following conditions develop, the ABS sequence control stops and ABS operation is returned to the normal control mode.

1) When the speed of at least one wheel reaches 10 km/h (6 MPH).
2) When terminal No. 3 or No. 6 are separated from diagnosis terminals. (When the select monitor is not used.)
3) When the brake pedal is released during sequence control and the braking lamp switch is set to OFF.
4) When the brake pedal is depressed after the ignition key is turned to ON, and before ABS warning light goes out. (When the select monitor is not used.)
5) When the brake pedal is not depressed after the ignition key is turned to ON, and within 0.5 seconds after ABS warning light goes out. (When the select monitor is not used.)
6) After completion of the sequence control.
7) When malfunction is detected. (When the select monitor is used.)

4. Front ABS Sensor

A: REMOVAL

1) Disconnect the ground terminal from battery.
2) Jack-up the vehicle, support it with rigid racks, and remove the wheel.
3) Disconnect the front ABS sensor connector located next to the front strut mounting house in engine compartment.
4) Remove the bolts which secure sensor harness to strut.

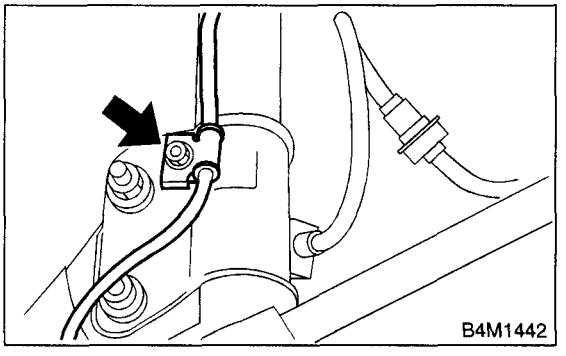

5) Remove the bolts which secure sensor harness to body.

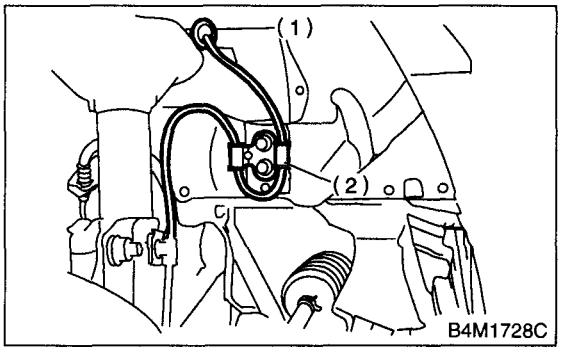

(1) To front ABS sensor connector
(2) Bracket

6) Remove the bolts which secure front ABS sensor to housing, and remove the front ABS sensor.

CAUTION:
- **Be careful not to damage the pole piece located at tip of the sensor and teeth faces during removal.**
- **Do not pull the sensor harness during removal.**

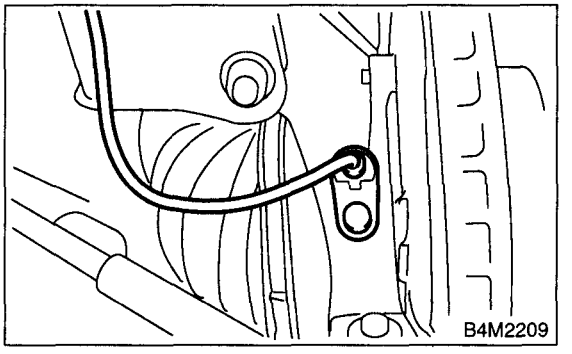

B: INSTALLATION

1) Temporarily install the front ABS sensor on housing.

CAUTION:
Be careful not to strike the ABS sensor's pole piece and tone wheel's teeth against adjacent metal parts during installation.

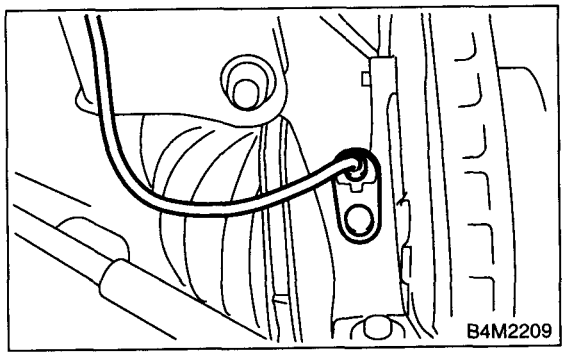

2) Install the front ABS sensor on strut and wheel apron bracket.

Tightening torque:
32 N·m (3.3 kgf-m, 24 ft-lb)

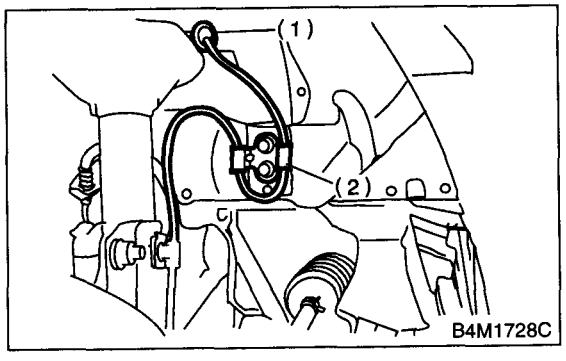

(1) To front ABS sensor connector
(2) Bracket

3) Place a thickness gauge between the ABS sensor's and tone wheel's tooth face. After standard clearance is obtained over the entire perimeter, tighten the ABS sensor on housing to specified torque.

ABS sensor standard clearance:
0.3 — 0.8 mm (0.012 — 0.031 in)

Tightening torque:
32 N·m (3.3 kgf-m, 24 ft-lb)

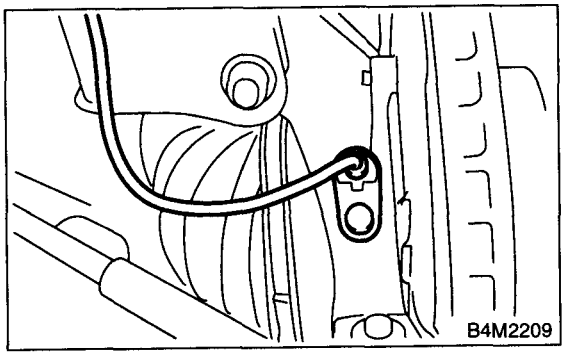

CAUTION:
Check the marks on the harness to make sure that no distortion exists.

RH: White
LH: Yellow

NOTE:
If the clearance is outside specifications, readjust.

4) After confirmation of the ABS sensor clearance, connect the connector to ABS sensor.
5) Install the wheel.
6) Connect the battery ground terminal to battery.

C: INSPECTION

1. ABS SENSOR

1) Check the pole piece of the ABS sensor for foreign particles or damage. If necessary, clean the pole piece or replace the ABS sensor.
2) Measure the ABS sensor resistance.

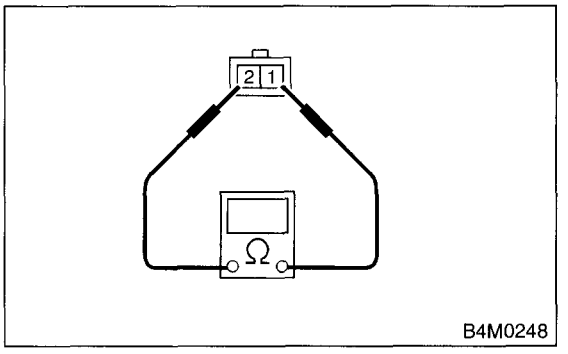

Terminal No.	Standard
1 and 2	1.25±0.25 kΩ

CAUTION:
If resistance is outside the standard value, replace the ABS sensor with a new one.

NOTE:
Check the ABS sensor cable for discontinuity. If necessary, replace with a new one.

2. SENSOR GAP

1) Measure the distance "A" between ABS sensor surface and sensor pole face.

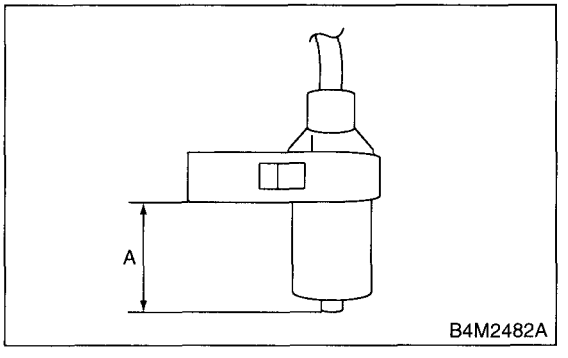

2) Measure the distance "B" between the surface where front axle housing meets the ABS sensor, and the tone wheel.

NOTE:
Measure so that the gauge touches the tone wheel teeth top.

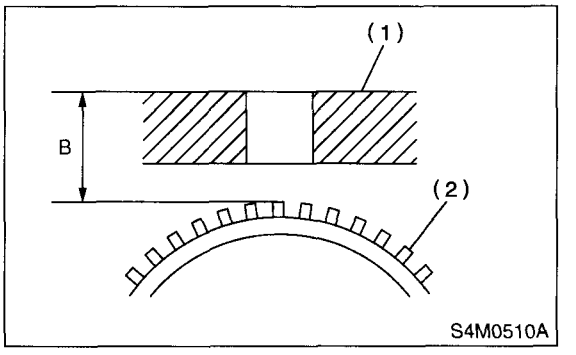

(1) Axle housing
(2) Tone wheel

3) Find the gap between the ABS sensor pole face and the surface of the tone wheel teeth by putting the measured values in the formula below and calculating.

ABS sensor clearance = B – A

ABS sensor standard clearance:
0.3 — 0.8 mm (0.012 — 0.031 in)

NOTE:
If the clearance is outside specifications, readjust.

3. OUTPUT VOLTAGE

Output voltage can be checked by the following method. Install a resistor and condenser, then rotate the wheel about 2.75 km/h (2 MPH) or equivalent.

NOTE:
Regarding terminal No., please refer to item 1. ABS SENSOR.

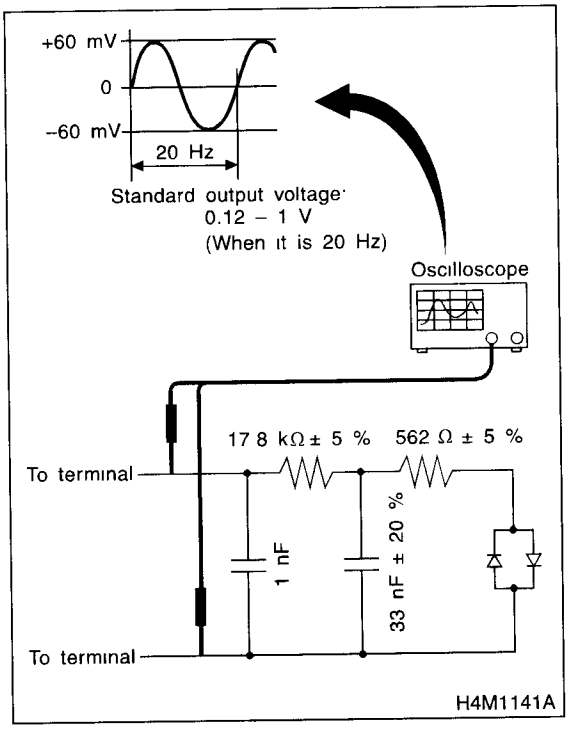

D: ADJUSTMENT

Adjust the gap using spacer (Part No. 26755A000).

5. Rear ABS Sensor

A: REMOVAL

1) Disconnect the ground terminal from battery.
2) Jack-up the vehicle, support it with rigid racks, and remove the wheel.
3) Remove the rear seat and disconnect the rear ABS sensor connector.
4) Remove the rear sensor harness bracket from rear trailing link and bracket.
5) Remove the rear ABS sensor from back plate.

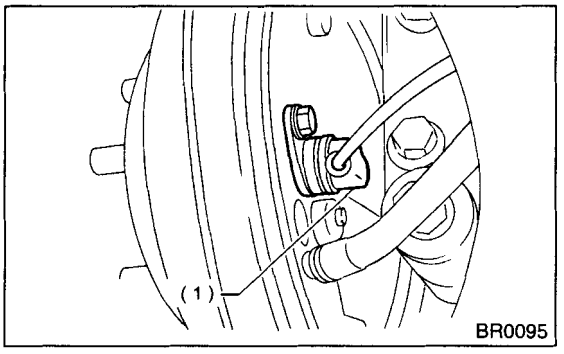

(1) Rear ABS sensor

B: INSTALLATION

1) Temporarily install the rear ABS sensor on back plate.

CAUTION:
Be careful not to strike the ABS sensor's pole piece and tone wheel's teeth against adjacent metal parts during installation.

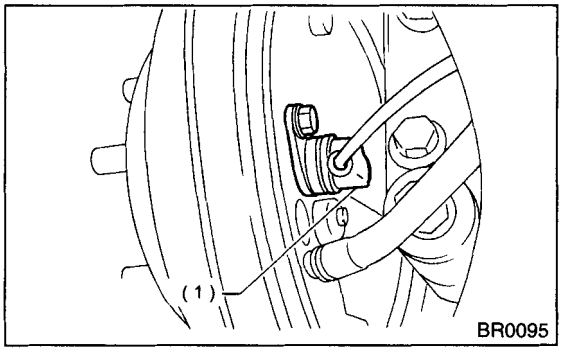

(1) Rear ABS sensor

2) Install the rear sensor harness on rear trailing link.

Tightening torque:
32 N·m (3.3 kgf-m, 24 ft-lb)

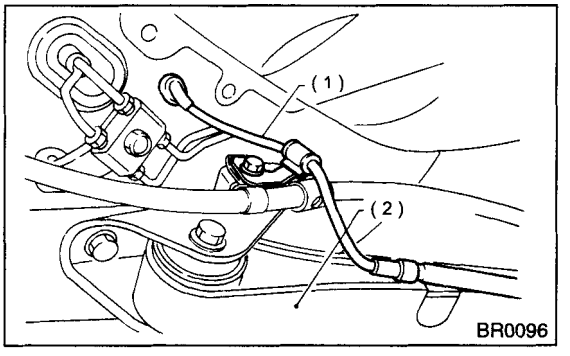

(1) Rear sensor harness
(2) Trailing link

3) Place a thickness gauge between the ABS sensor's and tone wheel's tooth face. After standard clearance is obtained over the entire perimeter, tighten the ABS sensor on rear arm to specified torque.

ABS sensor standard clearance:
0.7 — 1.2 mm (0.028 — 0.047 in)

Tightening torque:
32 N·m (3.3 kgf-m, 24 ft-lb)

CAUTION:
Check the marks on the harness to make sure that no distortion exists.
RH: White
LH: Yellow

NOTE:
If the clearance is outside specifications, readjust.

4) After confirmation of the ABS sensor clearance, connect the connector to ABS sensor.
5) Connect the battery ground terminal to battery.

C: INSPECTION

1. ABS SENSOR

1) Check the pole piece of the ABS sensor for foreign particles or damage. If necessary, clean the pole piece or replace the ABS sensor.
2) Measure the ABS sensor resistance.

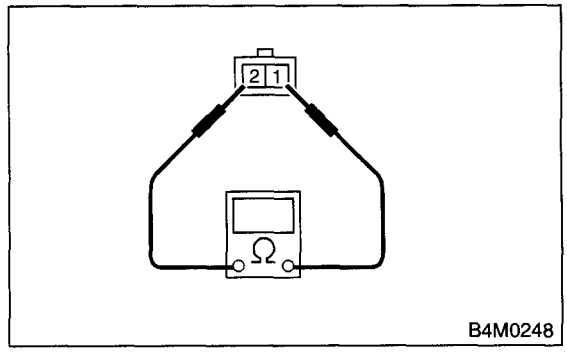

Terminal No.	Standard
1 and 2	1.0±0.2 kΩ

CAUTION:
- **If resistance is outside the standard value, replace the ABS sensor with a new one.**
- **Check the marks on the harness to make sure that no distortion exists.**

RH: Light blue
LH: Brown

NOTE:
Check the ABS sensor cable for discontinuity. If necessary, replace with a new one.

2. SENSOR GAP

Clearances (sensor gaps) should be measured one by one to ensure the tone wheel and speed sensor are installed correctly.

NOTE:

- If clearance is narrow, adjust by using the spacer (Part No. 26755AA000).
- If clearance is wide, check the outputted voltage then replace the ABS sensor or tone wheel if the outputted voltage is outside the specification.

ABS sensor clearance:
0.7 — 1.2 mm (0.028 — 0.047 in)

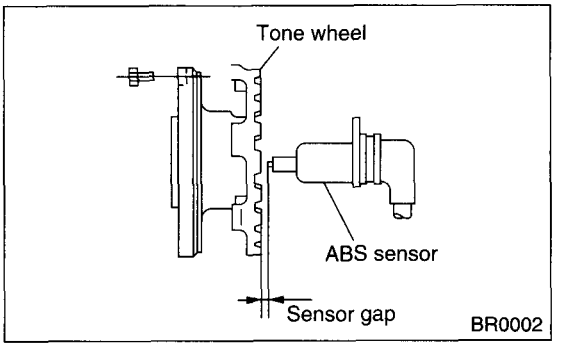

3. OUTPUT VOLTAGE

Output voltage can be checked by the following method. Install a resistor and condenser, then rotate the wheel about 2.75 km/h (2 MPH) or equivalent.

NOTE:
Regarding terminal No., please refer to item 1. ABS SENSOR.

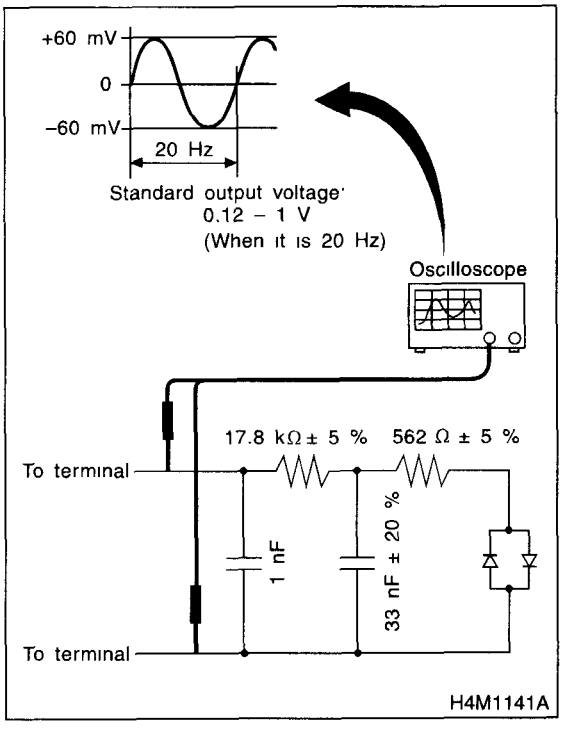

D: ADJUSTMENT

Adjust the gap using spacer (Part No. 26755AA000).

6. Front Tone Wheel

A: REMOVAL

Refer to Front Drive Shaft, because the front tone wheel is integrated with front drive shaft.
<Ref. to DS-32, REMOVAL, Front Drive Shaft.>

B: INSTALLATION

Refer to Front Drive Shaft, because the front tone wheel is integrated with front drive shaft.
<Ref. to DS-32, INSTALLATION, Front Drive Shaft.>

C: INSPECTION

Visually check the tone wheels teeth (44 pieces) for cracks or dents. If necessary, replace the tone wheel with a new one.

NOTE:
Replace the BJ assembly with a new one as a single unit if there is any defect found on the tone wheel, since it is unitized with the BJ assembly of drive shaft.

7. Rear Tone Wheel

A: REMOVAL

Refer to Rear Drive Shaft, because the rear tone wheel is integrated with hub.
<Ref. to DS-23, REMOVAL, Rear Axle.>

B: INSTALLATION

Refer to Rear Drive Shaft, because the rear tone wheel is integrated with hub.
<Ref. to DS-26, INSTALLATION, Rear Axle.>

C: INSPECTION

Visually check the tone wheels teeth (44 pieces) for cracks or dents. If necessary, replace the tone wheel with a new one.

8. G Sensor

A: REMOVAL

1) Disconnect the ground terminal from battery.

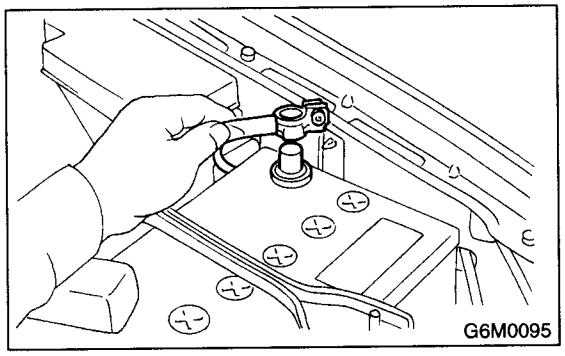

2) Remove the console cover.
<Ref. to EI-41, Console Box.>
3) Disconnect the connector from G sensor.
4) Remove the G sensor from body.

CAUTION:
Do not drop or bump the G sensor.

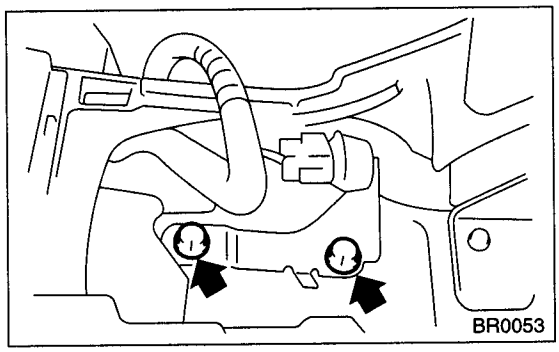

B: INSTALLATION

1) Install in the reverse order of removal.

CAUTION:
Do not drop or bump the G sensor.

Tightening torque (G sensor):
32 N·m (3.3 kgf-m, 24 ft-lb)

C: INSPECTION

Step		Check	Yes	No
1	**CHECK SUBARU SELECT MONITOR.**	Do you have the SUBARU SELECT MONITOR?	Go to step **5.**	Go to step **2.**
2	**CHECK G SENSOR.** 1)Turn the ignition switch to OFF. 2)Remove the G sensor from vehicle. 3)Connect the connector to G sensor. 4)Turn the ignition switch to ON. 5)Measure the voltage between G sensor connector terminals. ***Connector & terminal:*** ***(B292) No. 2 (+) — No. 3 (–)***	Is the voltage 2.3±0.2 V when G sensor is horizontal?	Go to step **3.**	Replace G sensor.
3	**CHECK G SENSOR.** Measure the voltage between G sensor connector terminals. ***Connector & terminal:*** ***(B292) No. 2 (+) — No. 3 (–)***	Is the voltage 3.9±0.2 V when G sensor is inclined forwards to 90°?	Go to step **4.**	Replace G sensor.
4	**CHECK G SENSOR.** Measure the voltage between G sensor connector terminals. ***Connector & terminal:*** ***(B292) No. 2 (+) — No. 3 (–)***	Is the voltage 0.7±0.2 V when G sensor is inclined backwards to 90°?	G sensor is normal.	Replace G sensor.
5	**CHECK G SENSOR.** 1)Turn the ignition switch to OFF. 2)Connect the select monitor connector to data link connector. 3)Turn the select monitor into {BRAKE CONTROL} mode. 4)Set the display in the {Current Data Display & Save} mode. 5)Read the G sensor output voltage.	Is the indicated reading 2.3±0.2 V when the vehicle is in horizontal position?	Go to step **6.**	Replace G sensor.
6	**CHECK G SENSOR.** 1)Remove the console box. 2)Remove the G sensor from vehicle. (Do not disconnect connector.) 3)Read the select monitor display.	Is the indicated reading 3.9±0.2 V when G sensor is inclined forwards to 90°?	Go to step **7.**	Replace G sensor.
7	**CHECK G SENSOR.** Read the select monitor display.	Is the indicated reading 0.7±0.2 V when G sensor is inclined backwards to 90°?	G sensor is normal.	Replace G sensor.

ABS (DIAGNOSTICS)

ABS

		Page
1.	Basic Diagnostic Procedure	2
2.	Check List for Interview	6
3.	General Description	9
4.	Electrical Components Location	12
5.	Control Module I/O Signal	14
6.	Subaru Select Monitor	18
7.	Read Diagnostic Trouble Code (DTC)	20
8.	Inspection Mode	21
9.	Clear Memory Mode	22
10.	ABS Warning Light Illumination Pattern	23
11.	List of Diagnostics Trouble Code (DTC)	24
12.	Diagnostics Chart with Diagnosis Connector	29
13.	Diagnostics Chart with Subaru Select Monitor	96
14.	General Diagnostics Table	183

1. Basic Diagnostic Procedure

A: PROCEDURE

1. WITHOUT SUBARU SELECT MONITOR

CAUTION:
Remove foreign matter (dust, water, etc.) from the ABSCM&H/U connector during removal and installation.

NOTE:
- To check harness for broken wires or short circuits, shake it while holding it or the connector.
- When the ABS warning light illuminates, read and record the diagnostic trouble code (DTC) indicated by ABS warning light.

	Step	Check	Yes	No
1	**CHECK PRE-INSPECTION.** 1)Ask the customer when and how the trouble occurred using interview checklist. <Ref. to ABS-6, Check List for Interview.> 2)Before performing diagnosis, inspect the unit which might influence the ABS problem. <Ref. to ABS-9, INSPECTION, General Description.>	Is unit that might influence the ABS problem normal?	Go to step **2.**	Repair or replace each unit.
2	**CHECK INDICATION OF DIAGNOSTIC TROUBLE CODE (DTC).** Calling up diagnostic trouble code (DTC). <Ref. to ABS-20, Read Diagnostic Trouble Code (DTC).>	Is the diagnostic trouble code (DTC) readable?	Go to step **3.**	Inspect using diagnostic chart for ABS warning light failure.<Ref. to ABS-29, Diagnostics Chart with Diagnosis Connector.> NOTE: Call up diagnostic trouble code (DTC) again after inspecting ABS warning light. <Ref. to ABS-20, Read Diagnostic Trouble Code (DTC).>
3	**CHECK DIAGNOSTIC TROUBLE CODE (DTC).** NOTE: Record all diagnostic trouble codes (DTC).	Is only the start code issued?	Go to step **4.**	Go to step **5.**
4	**PERFORM THE GENERAL DIAGNOSTICS.** 1)Inspect using "General Diagnostics Table". <Ref. to ABS-183, General Diagnostics Table.> 2)Perform the clear memory mode. <Ref. to ABS-22, WITHOUT SUBARU SELECT MONITOR, OPERATION, Clear Memory Mode.> 3)Perform the inspection mode. <Ref. to ABS-21, Inspection Mode.> Calling up the diagnostic trouble code (DTC). <Ref. to ABS-20, Read Diagnostic Trouble Code (DTC).>	Is only the start code issued?	Complete the diagnosis.	Go to step **5.**

	Step	Check	Yes	No
5	**PERFORM THE DIAGNOSIS.** 1)Inspect using "Diagnostics Chart with Diagnostic Connector".<Ref. to ABS-29, Diagnostics Chart with Diagnosis Connector.> NOTE: For diagnostic trouble code (DTC) list, refer to "List of Diagnostics Trouble Code (DTC)".<Ref. to ABS-24, WITHOUT SUBARU SELECT MONITOR, LIST, List of Diagnostics Trouble Code (DTC).> 2)Repair the trouble cause. 3)Perform the clear memory mode. <Ref. to ABS-22, WITHOUT SUBARU SELECT MONITOR, OPERATION, Clear Memory Mode.> 4)Perform the inspection mode. <Ref. to ABS-21, Inspection Mode.> 5)Calling up the diagnostic trouble code (DTC). <Ref. to ABS-20, Read Diagnostic Trouble Code (DTC).>	Is only the start code issued?	Complete the diagnosis.	Inspect using "Diagnostics Chart with Diagnostic Connector". <Ref. to ABS-29, Diagnostics Chart with Diagnosis Connector.>

2. WITH SUBARU SELECT MONITOR

CAUTION:
Remove foreign matter (dust, water, etc.) from the ABSCM&H/U connector during removal and installation.

NOTE:
- To check harness for broken wires or short circuits, shake it while holding it or the connector.
- Check the list for interview. <Ref. to ABS-26, WITH SUBARU SELECT MONITOR, LIST, List of Diagnostics Trouble Code (DTC).>

	Step	Check	Yes	No
1	**CHECK PRE-INSPECTION.** 1)Ask the customer when and how the trouble occurred using interview checklist. <Ref. to ABS-6, Check List for Interview.> 2)Before performing diagnosis, inspect the unit which might influence the ABS problem. <Ref. to ABS-9, INSPECTION, General Description.>	Is unit that might influence the ABS problem normal?	Go to step **2.**	Repair or replace each unit.
2	**CHECK INDICATION OF TROUBLE CODE DISPLAY.** 1)Turn the ignition switch to OFF. 2)Connect the SUBARU SELECT MONITOR to data link connector. 3)Turn the ignition switch to ON and SUBARU SELECT MONITOR to ON. NOTE: If the communication function of the select monitor cannot be executed normally, check the communication circuit. <Ref. to ABS-96, COMMUNICATION FOR INITIALIZING IMPOSSIBLE, Diagnostics Chart with Subaru Select Monitor.> 4)Read the diagnostic trouble code (DTC). <Ref. to ABS-19, READ CURRENT DATA, OPERATION, Subaru Select Monitor.> 5)Record all diagnostic trouble codes (DTC) and frame data.	Is the corresponding trouble encoding?	Go to step **3.**	Go to step **4.**
3	**PERFORM THE GENERAL DIAGNOSTICS.** 1)Inspect using "General Diagnostics Table". <Ref. to ABS-183, General Diagnostics Table.> 2)Perform the clear memory mode. <Ref. to ABS-19, CLEAR MEMORY MODE, OPERATION, Subaru Select Monitor.> 3)Perform the inspection mode. <Ref. to ABS-21, Inspection Mode.> 4)Calling up the diagnostic trouble code (DTC). <Ref. to ABS-18, READ DIAGNOSTIC TROUBLE CODE (DTC), OPERATION, Subaru Select Monitor.>	Is no diagnostic trouble code (DTC) designated and ABS warning light goes out after turning on?	Complete the diagnosis.	Go to step **4.**

	Step	Check	Yes	No
4	**PERFORM THE DIAGNOSIS.** 1)Inspect using "Diagnostics Chart with Subaru Select Monitor".<Ref. to ABS-96, Diagnostics Chart with Subaru Select Monitor.> NOTE: For diagnostic trouble code (DTC) list, refer to "List of Diagnostics Trouble Code (DTC)".<Ref. to ABS-24, WITHOUT SUBARU SELECT MONITOR, LIST, List of Diagnostics Trouble Code (DTC).> 2)Repair the trouble cause. 3)Perform the clear memory mode. <Ref. to ABS-19, CLEAR MEMORY MODE, OPERATION, Subaru Select Monitor.> 4)Perform the inspection mode. <Ref. to ABS-21, Inspection Mode.> 5)Calling up the diagnostic trouble code (DTC). <Ref. to ABS-18, READ DIAGNOSTIC TROUBLE CODE (DTC), OPERATION, Subaru Select Monitor.>	Is no diagnostic trouble code (DTC) designated and does ABS warning light go out after turning on?	Complete the diagnosis.	Inspect using "Diagnostics Chart with Subaru Select Monitor". <Ref. to ABS-96, Diagnostics Chart with Subaru Select Monitor.>

2. Check List for Interview

A: CHECK

Check the following items about the vehicle's state.

1. STATE OF ABS WARNING LIGHT

ABS warning light comes on.	❑ Always ❑ Sometimes ❑ Only once ❑ Does not come on • When / how long does it come on?:		
Ignition key position	❑ LOCK ❑ ACC ❑ ON (before starting engine) ❑ START ❑ On after starting (Engine is running) ❑ On after starting (Engine is stop)		
Timing	❑ Immediately after ignition is ON. ❑ Immediately after ignition starts.		
	❑ When advancing	km/h to	km/h
		MPH to	MPH
	❑ While traveling at a constant speed	km/h	MPH
	❑ When decelerating	km/h to	km/h
		MPH to	MPH
	❑When turning to right	Steering angle :	deg
		Steering time :	sec
	❑ When turning to left	Steering angle :	deg
		Steering time :	sec
	❑ When moving other electrical parts		
	• Parts name : • Operating condition :		

2. SYMPTOMS

ABS operating condition	❑ Performs no work.		
	❑ Operates only when abruptly applying brakes.	Vehicle speed :	km/h MPH
	• How to step on brake pedal :		
	a) Operating time :		sec
	b) Operating noise : ❑ Produce / ❑ Does not produce		
	• What kind of noise?	❑ Knock ❑ Gong gong ❑ Bong ❑ Buzz ❑ Gong gong buzz ❑ Others :	
	c) Reaction force of brake pedal		
		❑ Stick ❑ Press down once with a clunk ❑ Press and released ❑ Others :	
Behavior of vehicle	a) Directional stability cannot be obtained or steering arm refuses to work when applying brakes : ❑ Yes / ❑ No		
	• When :	❑ Vehicle turns to right ❑ Vehicle turns to left ❑ Spins ❑ Others :	
	b) Directional stability cannot be obtained or steering arm refuses to work when accelerating : ❑ Yes / ❑ No		
	• When :	❑ Vehicle turns to right ❑ Vehicle turns to left ❑ Spins ❑ Others :	
	c) Brakes are out of order : ❑ Yes / ❑ No		
	• What :	❑ Braking distance is long ❑ Brakes lock or drag ❑ Pedal stroke is long ❑ Pedal sticks ❑ Others :	
	d) Poor acceleration : ❑ Yes / ❑ No		
	• What :	❑ Fails to accelerate ❑ Engine stalls ❑ Others :	
	e) Occurrence of vibration : ❑ Yes / ❑ No		
	• Where • What kind :		
	f) Occurrence of abnormal noise : ❑ Yes / ❑ No		
	• Where • What kind :		
	g) Occurrence of other phenomena : ❑ Yes / ❑ No		
	• What kind :		

3. CONDITIONS UNDER WHICH TROUBLE OCCURS

Environment	a) Weather	❑ Fine ❑ Cloudy ❑ Rainy ❑ Snowy ❑ Various/Others :
	b) Ambient temperature	°F (°C)
	c) Road	❑ Urban area ❑ Suburbs ❑ Highway ❑ General road ❑ Ascending slope ❑ Descending slope ❑ Paved road ❑ Gravel road ❑ Muddy road ❑ Sandy place ❑ Others :
	d) Road surface	❑ Dry ❑ Wet ❑ New-fallen snow ❑ Compressed snow ❑ Frozen slope ❑ Others :
Condition	a) Brakes	Deceleration : g
		❑ Continuous / ❑ Intermittent
	b) Accelerator	Acceleration : g
		❑ Continuous / ❑ Intermittent
	c) Vehicle speed	km/h MPH
		❑ Advancing ❑ Accelerating ❑ Reducing speed ❑ Low speed ❑ Turning ❑ Others :
	d) Tire inflation pressure	Front RH tire : kPa
		Front LH tire : kPa
		Rear RH tire : kPa
		Rear LH tire : kPa
	e) Degree of wear	Front RH tire :
		Front LH tire :
		Rear RH tire :
		Rear LH tire :
	f) Genuine parts are used. : ❑ Yes / ❑ No	
	g) Chain is passed around tires. : ❑ Yes / ❑ No	
	h) T tire is used. : ❑ Yes / ❑ No	
	i) Condition of suspension alignment :	
	j) Loading state :	
	k) Repair parts are used. : ❑ Yes / ❑ No	
	• What :	
	l) Others :	

3. General Description

A: CAUTION

1. SUPPLEMENTAL RESTRAINT SYSTEM "AIRBAG"

The airbag system wiring harness is routed near the ABS sensor, ABS control module and hydraulic control unit.

CAUTION:
- **All Airbag system wiring harness and connectors are colored yellow. Do not use electrical test equipment on these circuit.**
- **Be careful not to damage the Airbag system wiring harness when servicing the ABS sensor, ABS control module and hydraulic control unit.**

B: INSPECTION

Before performing diagnostics, check the following items which might affect ABS problems:

1. BATTERY

Measure the battery voltage and specific gravity of electrolyte.

Standard voltage: 12 V, or more

Specific gravity: Above 1.260

2. BRAKE FLUID

1) Check the brake fluid level.
2) Check for brake fluid leakage.

3. HYDRAULIC UNIT

Check the hydraulic unit.
- With brake tester <Ref. to ABS-9, CHECKING THE HYDRAULIC UNIT ABS OPERATION WITH BRAKE TESTER, INSPECTION, ABS Control Module and Hydraulic Control Unit (ABSCM&H/U).>
- Without brake tester <Ref. to ABS-8, CHECKING THE HYDRAULIC UNIT ABS OPERATION BY PRESSURE GAUGE, INSPECTION, ABS Control Module and Hydraulic Control Unit (ABSCM&H/U).>

4. BRAKE DRAG

Check for brake drag.

5. BRAKE PAD AND ROTOR

Check the brake pad and rotor.
- Front <Ref. to BR-17, INSPECTION, Front Brake Pad.> and <Ref. to BR-18, INSPECTION, Front Disc Rotor.>
- Rear <Ref. to BR-24, INSPECTION, Rear Brake Pad.> and <Ref. to BR-26, INSPECTION, Rear Disc Rotor.> or <Ref. to BR-31, INSPECTION, Rear Drum Brake Shoe.> and <Ref. to BR-32, INSPECTION, Rear Drum Brake Drum.>

6. TIRE

Check the tire specifications, tire wear and air pressure. <Ref. to WT-2, SPECIFICATIONS, General Description.>

C: PREPARATION TOOL

1. SPECIAL TOOLS

ILLUSTRATION	TOOL NUMBER	DESCRIPTION	REMARKS
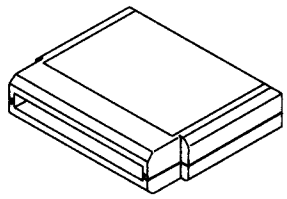 B2M3876	24082AA150 (Newly adopted tool)	CARTRIDGE	Troubleshooting for electrical systems.
B2M3877	22771AA030	SELECT MONITOR KIT	Troubleshooting for electrical systems. • English: 22771AA030 (Without printer) • German: 22771AA070 (Without printer) • French: 22771AA080 (Without printer) • Spanish: 22771AA090 (Without printer)

2. GENERAL PURPOSE TOOLS

TOOL NAME	REMARKS
Circuit tester	Used for measuring resistance, voltage and ampere.
Oscilloscope	Used for measuring sensor.

4. Electrical Components Location

A: LOCATION

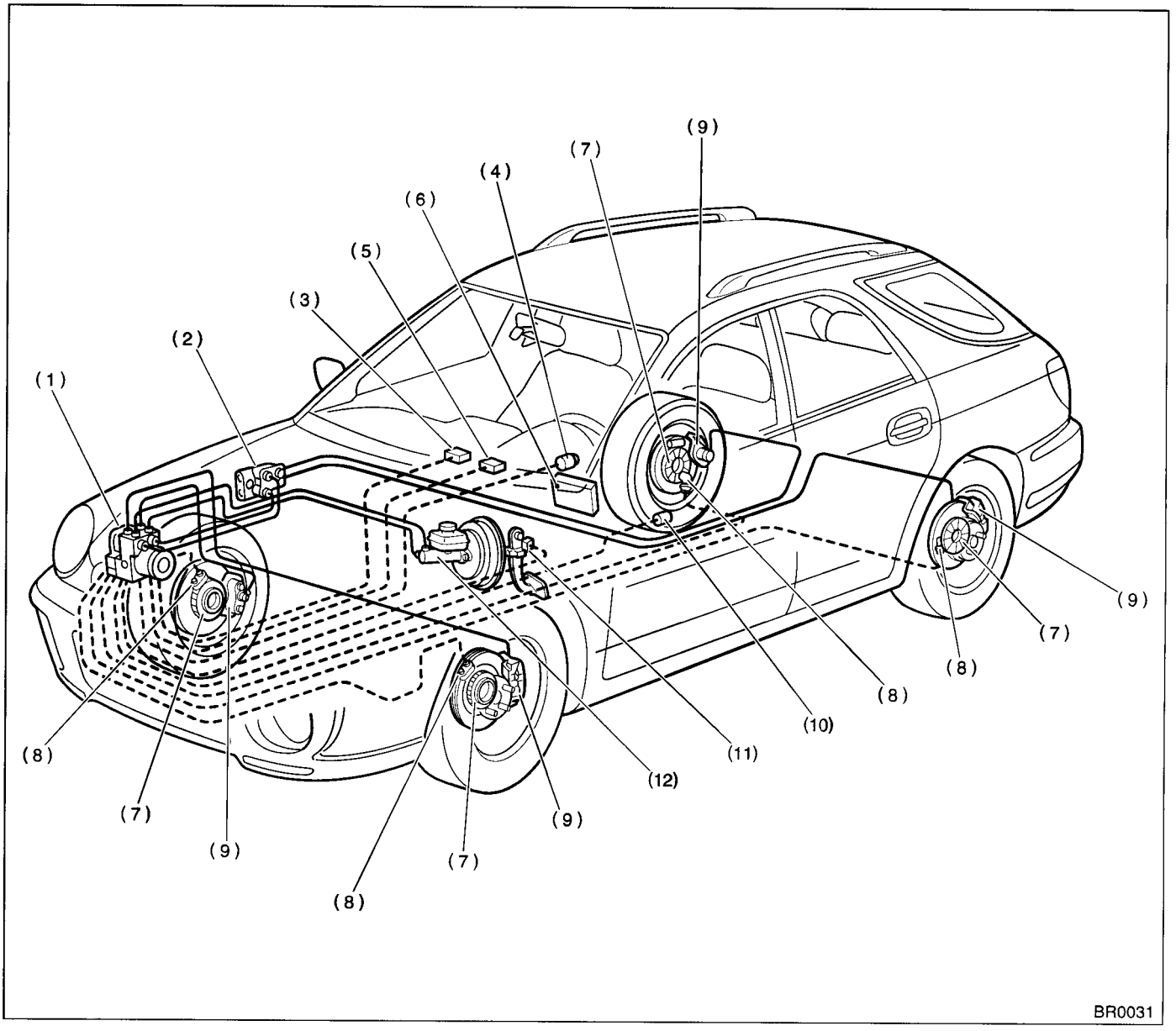

(1)	ABS control module and hydraulic control unit (ABSCM&H/U)	(5)	Data link connector (for Subaru select monitor)	(8)	ABS sensor
(2)	Proportioning valve	(6)	Transmission control module (only AT vehicle)	(9)	Wheel cylinder
(3)	Diagnosis connector	(7)	Tone wheel	(10)	G sensor
(4)	ABS warning light			(11)	Stop light switch
				(12)	Master cylinder

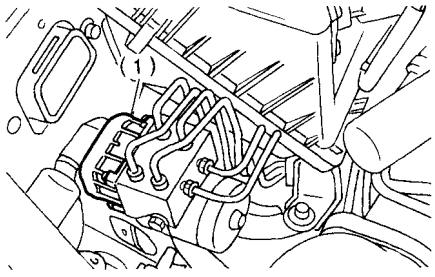

B4M1226B

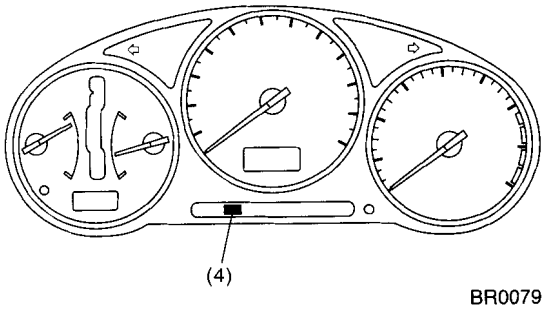

BR0079

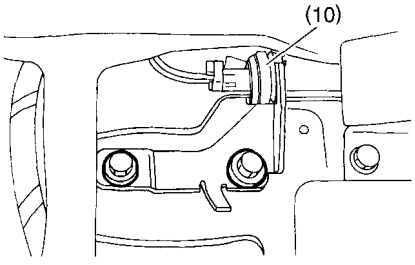

BR0056

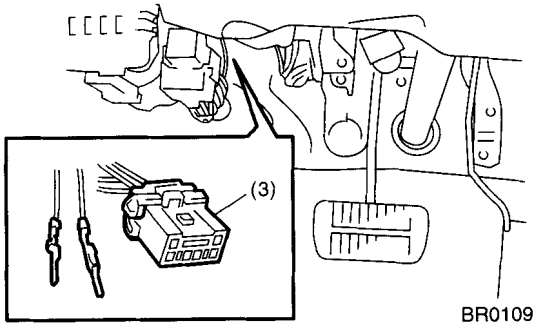

BR0109

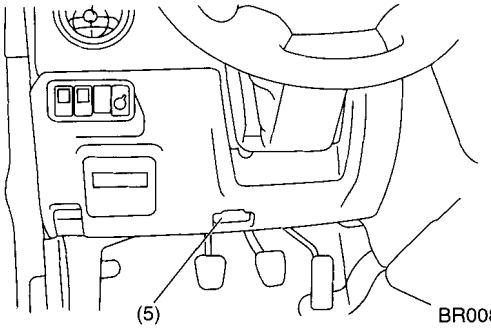

BR0080

FRONT

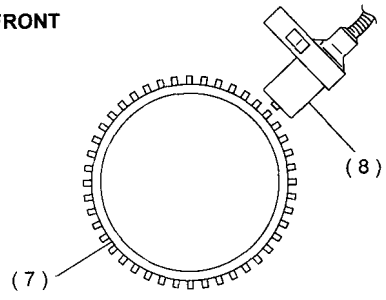

BR0057

REAR

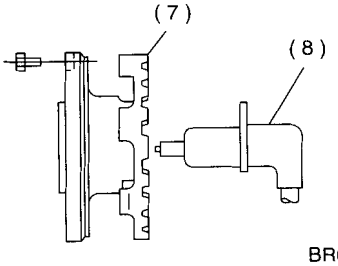

BR0058

SUBARU

5. Control Module I/O Signal

A: ELECTRICAL SPECIFICATION

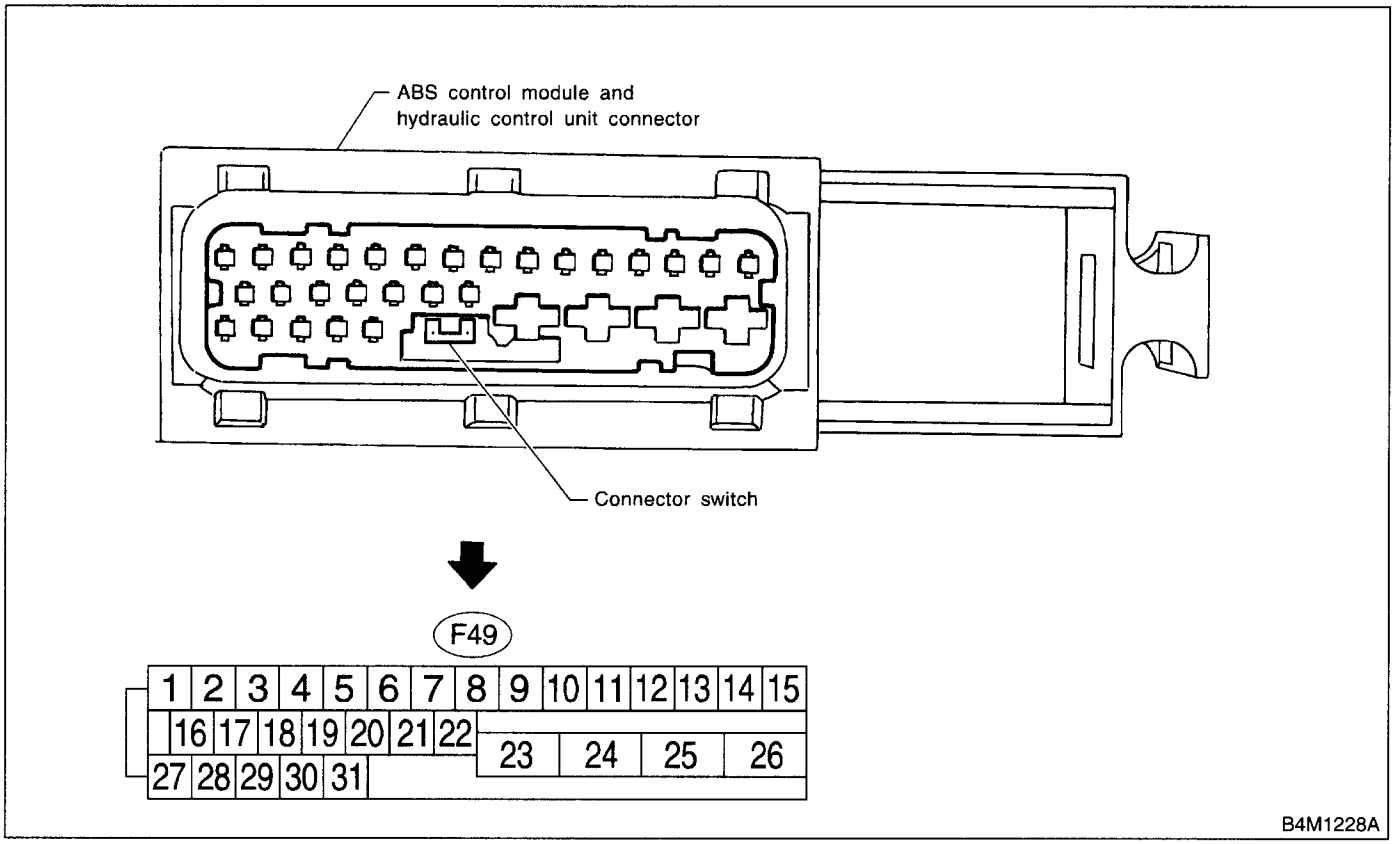

NOTE:
- The terminal numbers in the ABS control module and hydraulic control unit connector are as shown in the figure.
- When the connector is removed from the ABSCM&H/U, the connector switch closes the circuit between terminal No. 22 and No. 23. The ABS warning light illuminates.

CONTROL MODULE I/O SIGNAL

Contents		Terminal No. (+)—(−)	Input/Output signal Measured value and measuring conditions
ABS sensor*2 (Wheel speed sensor)	Front left wheel	9—10	0.12 — 1 V (When it is 20 Hz.)
	Front right wheel	11—12	
	Rear left wheel	7—8	
	Rear right wheel	14—15	
Valve relay power supply		24—23	10 — 15 V
Motor relay power supply		25—23	10 — 15 V
G sensor*2	power supply	30—28	4.75 — 5.25 V
	ground	28	—
	output	6—28	2.3±0.2 V when the vehicle is in horizontal position.
Stop light switch*1		2—23	Less than 1.5 V when the stop light is OFF and, 10 — 15 V when the stop light is ON.
ABS warning light*2		22—23	Less than 1.5 V during 1.5 seconds when ignition switch is ON, and 10 — 15 V after 1.5 seconds.
AT ABS signal*2 (AT model only)		31—23	Less than 1.5 V when the ABS control still operates and more than 5.5 V when ABS does not operate.
ABS operation signal monitor*2		3—23	Less than 1.5 V when the ABS control still operates and more than 5.5 V when ABS does not operate.
Select monitor*2	Data is received.	20—23	Less than 1.5 V when no data is received.
	Data is sent.	5—23	4.75 — 5.25 V when no data is sent.
ABS diagnosis connector*2	Terminal No. 3	29—23	10 — 15 V when the ignition switch is ON.
	Terminal No. 6	4—23	10 — 15 V when the ignition switch is ON.
Power supply*1		1—23	10 — 15 V when the ignition switch is ON.
Grounding line		23	—
Grounding line		26	—

*1: Measure the I/O signal voltage after removing the connector from the ABSCM&H/U terminal.
*2: Measure the I/O signal voltage at connector (B200) or (F74).

CONTROL MODULE I/O SIGNAL

B: SCHEMATIC

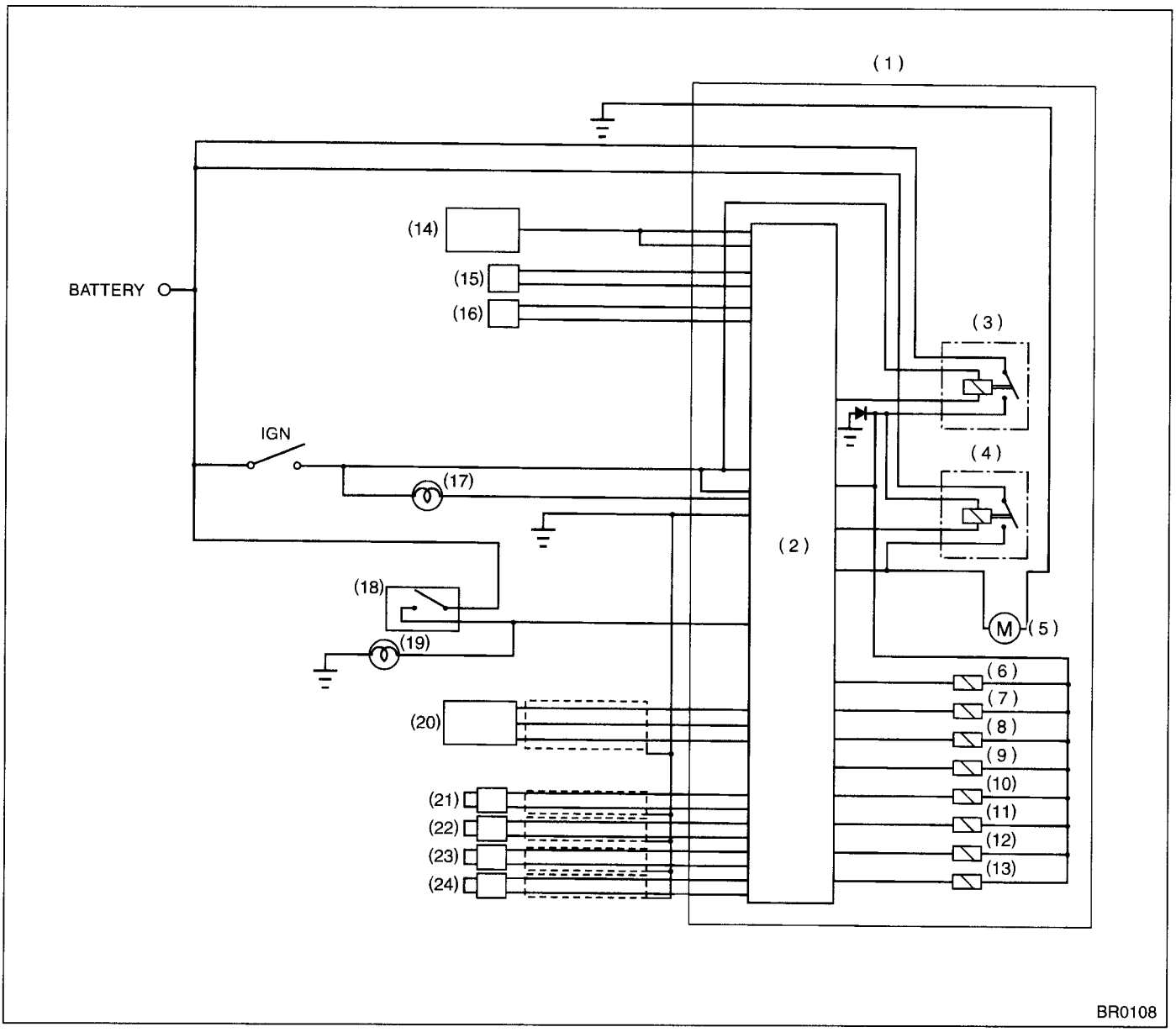

(1) ABS control module and hydraulic control unit (ABSCM&H/U)
(2) ABS control module area
(3) Valve relay
(4) Motor relay
(5) Motor
(6) Front left inlet solenoid valve
(7) Front left outlet solenoid valve
(8) Front right inlet solenoid valve
(9) Front right outlet solenoid valve
(10) Rear left inlet solenoid valve
(11) Rear left outlet solenoid valve
(12) Rear right inlet solenoid valve
(13) Rear right outlet solenoid valve
(14) Transmission control module (only AT model)
(15) Diagnosis connector
(16) Data link connector
(17) ABS warning light
(18) Stop light switch
(19) Stop light
(20) G sensor
(21) Front left ABS sensor
(22) Front right ABS sensor
(23) Rear left ABS sensor
(24) Rear right ABS sensor

C: WAVEFORM

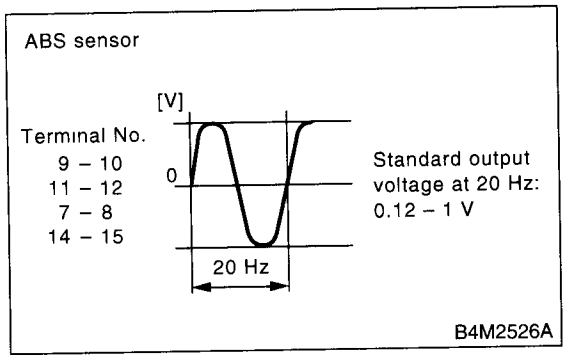
ABS sensor
Terminal No.
9 – 10
11 – 12
7 – 8
14 – 15
[V]
0
20 Hz
Standard output voltage at 20 Hz: 0.12 – 1 V
B4M2526A

6. Subaru Select Monitor

A: OPERATION

1. READ DIAGNOSTIC TROUBLE CODE (DTC)

1) Prepare the Subaru Select Monitor kit.

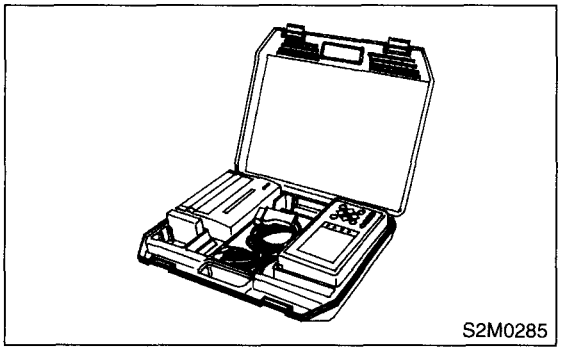

2) Connect the diagnosis cable to Subaru Select Monitor.
3) Insert the cartridge into Subaru Select Monitor. <Ref. to ABS-10, SPECIAL TOOLS, PREPARATION TOOL, General Description.>

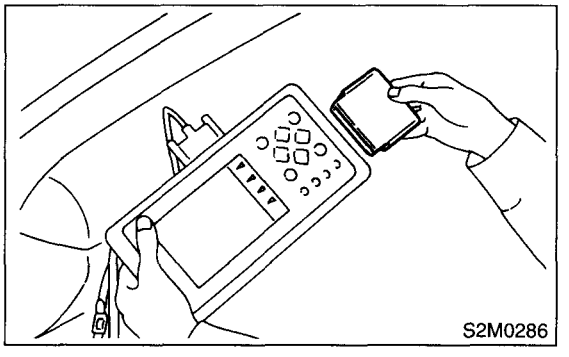

4) Connect the Subaru Select Monitor to data link connector.
   (1) Data link connector is located in the lower portion of the instrument panel (on the driver's side).

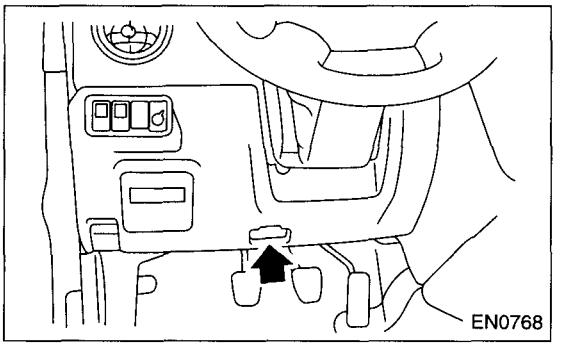

   (2) Connect the diagnosis cable to data link connector.

5) Turn the ignition switch to ON (engine OFF) and Subaru Select Monitor switch to ON.

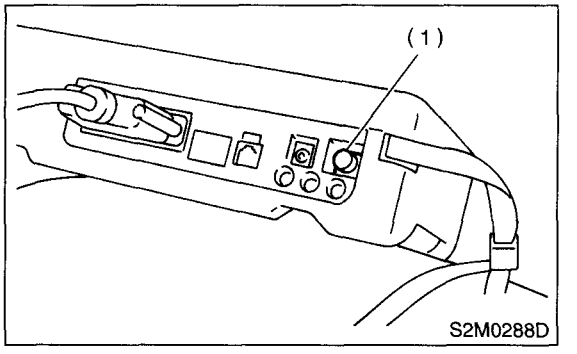

(1) Power switch

6) On the «Main Menu» display screen, select the {Each System Check} and press the [YES] key.
7) On the «System Selection Menu» display screen, select the {Brake Control System} and press the [YES] key.
8) Press the [YES] key after displayed the information of engine type.
9) On the «ABS Diagnosis» display screen, select the {Diagnostic Code(s) Display} and press the [YES] key.
10) On the «Diagnostic Code(s) Display» display screen, select the {Current Diagnostic Code(s)} or {History Diagnostic Code(s)} and press the [YES] key.

NOTE:
- For detailed operation procedure, refer to the SUBARU SELECT MONITOR OPERATION MANUAL.
- For detailed concerning diagnostic trouble codes (DTC), refer to the LIST OF DIAGNOSTICS TROUBLE CODE (DTC). <Ref. to ABS-24, List of Diagnostics Trouble Code (DTC).>

2. READ CURRENT DATA

1) On the «Main Menu» display screen, select the {Each System Check} and press the «YES» key.
2) On the «System Selection Menu» display screen, select the {Brake Control System} and press the «YES» key.
3) Press the «YES» key after displayed the information of ABS type.
4) On the «Brake Control Diagnosis» display screen, select the {Current Data Display & Save} and press the «YES» key.
5) On the «Data Display Menu» display screen, select the {Data Display} and press the «YES» key.
6) Using the scroll key, move the display screen up or down until the desired data is shown.

- A list of the support data is shown in the following table.

Display screen	Contents to be monitored	Unit of measure
FR Wheel Speed	Wheel speed detected by the Front Right ABS sensor is displayed	km/h or MPH
FL Wheel Speed	Wheel speed detected by the Front Left ABS sensor is displayed	km/h or MPH
RR Wheel Speed	Wheel speed detected by the Rear Right ABS sensor is displayed	km/h or MPH
RL Wheel Speed	Wheel speed detected by the Rear Left ABS sensor is displayed	km/h or MPH
Stop Light Switch	Stop light switch signal	ON or OFF
Stop Light Switch	Stop light switch monitor voltage is displayed.	V
G sensor output Signal	Refers to vehicle acceleration detecting by the analog G sensor. It appears on the select monitor display in volts.	V
Valve Relay Signal	Valve Relay Signal	ON or OFF
Motor Relay Signal	Motor Relay Signal	ON or OFF
ABS Signal to TCM	ABS operation signal from ABS control module to TCM	ON or OFF
ABS Warning Lamp	ON operation of the ABS warning light is displayed.	ON or OFF
Motor Relay Monitor	Operating condition of the motor relay is displayed.	ON or OFF
Valve Relay Monitor	Operating condition of the valve relay is displayed.	ON or OFF
CCM Signal	ABS operation signal from ABS control module to TCM	ON or OFF

NOTE:
For detailed operation procedure, refer to the SUBARU SELECT MONITOR OPERATION MANUAL.

3. CLEAR MEMORY MODE

1) On the «Main Menu» display screen, select the {2. Each System Check} and press the «YES» key.
2) On the «System Select Menu» display screen, select {Brake System} and press the «YES» key.
3) Press the «YES» key after displayed the information of engine type.
4) On the «Brake Control Diagnosis» display screen, select the {Clear Memory} and press the «YES» key.
5) When the "Done" and "turn ignition switch OFF" are shown on the display screen, turn the Subaru Select Monitor and ignition switch to OFF.

NOTE:
For detailed operation procedure, refer to the SUBARU SELECT MONITOR OPERATION MANUAL.

7. Read Diagnostic Trouble Code (DTC)

A: OPERATION

1. WITHOUT SUBARU SELECT MONITOR

1) Take out the diagnosis connector from side of driver's seat heater unit.

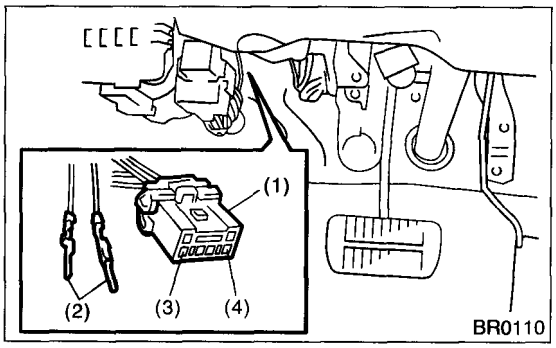

(1) Diagnosis connector
(2) Diagnosis terminals
(3) 3 terminal
(4) 6 terminal

2) Turn the ignition switch OFF.
3) Connect the diagnosis connector terminal 6 to diagnosis terminal.
4) Turn the ignition switch ON.
5) ABS warning light is set in the diagnostic mode and blinks to identify diagnostic trouble code (DTC).
6) After the start code (11) is shown, the diagnostic trouble code (DTC) will be shown in order of the last information first.
These repeat for a maximum of 3 minutes.

NOTE:
- When there are no diagnostic trouble code (DTC) in memory, only the start code (11) is shown.
- When on-board diagnosis of the ABS control module detects a problem, the information (up to a maximum of three) will be stored in the EEP ROM as a diagnostic trouble code (DTC). When there are more than three, the most recent three will be stored. (Stored codes will stay in memory until they are cleared.)

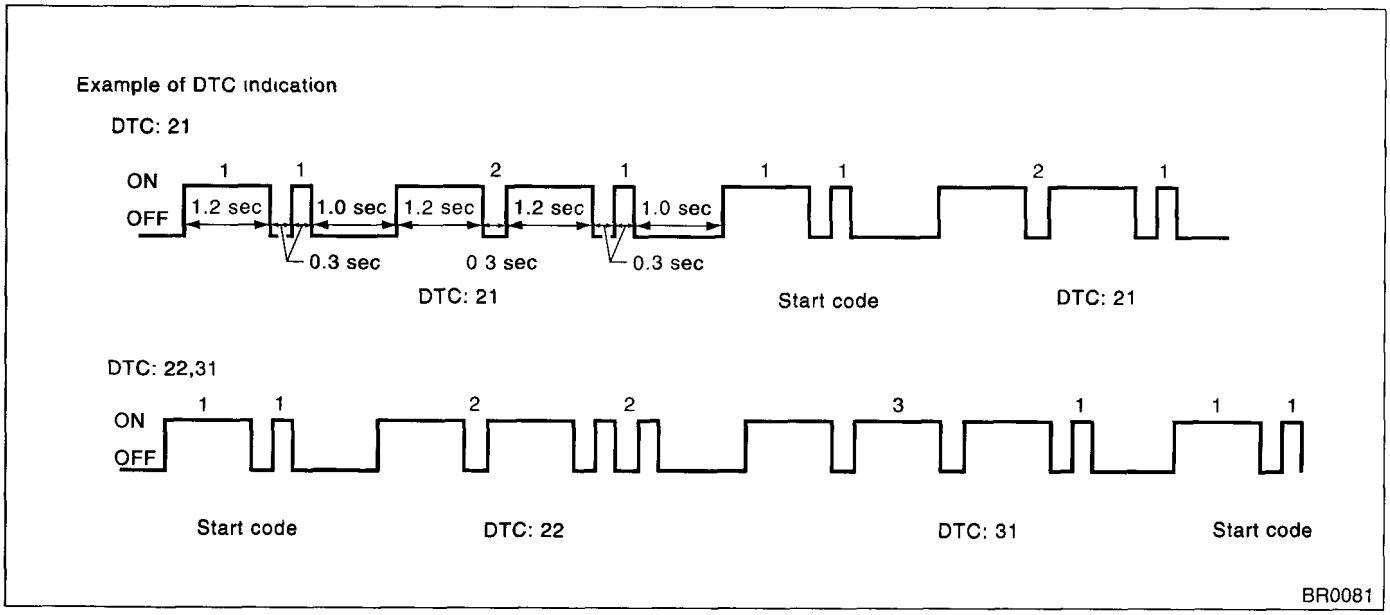

2. WITH SUBARU SELECT MONITOR

Refer to SUBARU SELECT MONITOR for information about how to obtain and understand the diagnostic trouble code (DTC). <Ref. to ABS-18, Subaru Select Monitor.>

8. Inspection Mode

A: OPERATION

Reproduce the condition under which the problem has occurred as much as possible.
Drive the vehicle at a speed more than 40 km/h (25 MPH) for at least one minute.

9. Clear Memory Mode

A: OPERATION

1. WITHOUT SUBARU SELECT MONITOR

1) After calling up a diagnostic trouble code (DTC), disconnect the diagnosis connector terminal 6 from diagnosis terminal.

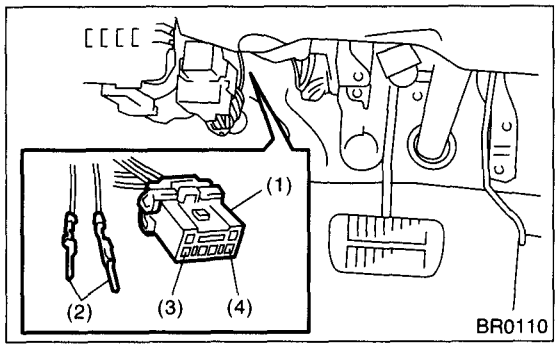

(1) Diagnosis connector
(2) Diagnosis terminals
(3) 3 terminal
(4) 6 terminal

2) Repeat 3 times within approx. 12 seconds; connecting and disconnecting terminal 6 and diagnosis terminal for at least 0.2 seconds each time.

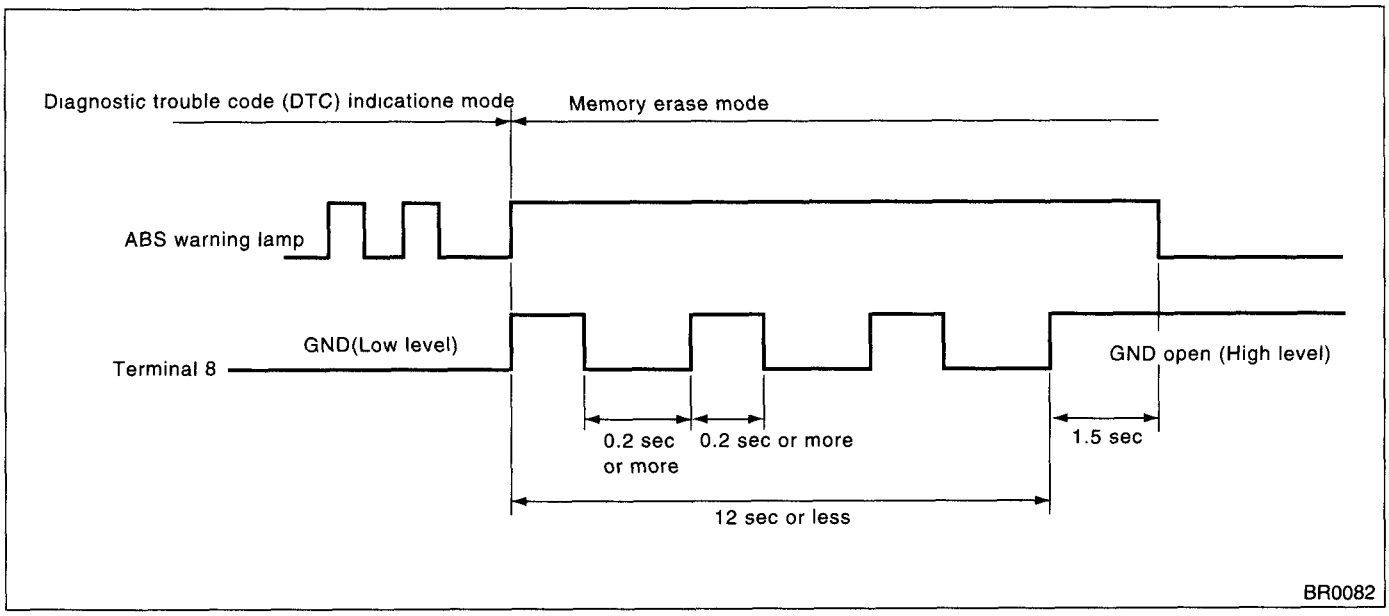

NOTE:
After diagnostics is completed, make sure to clear memory. Make sure only start code (11) is shown after memory is cleared.

2. WITH SUBARU SELECT MONITOR

Refer to SUBARU SELECT MONITOR for information about how to clear the diagnostic trouble code (DTC). <Ref. to ABS-18, Subaru Select Monitor.>

10.ABS Warning Light Illumination Pattern

A: INSPECTION

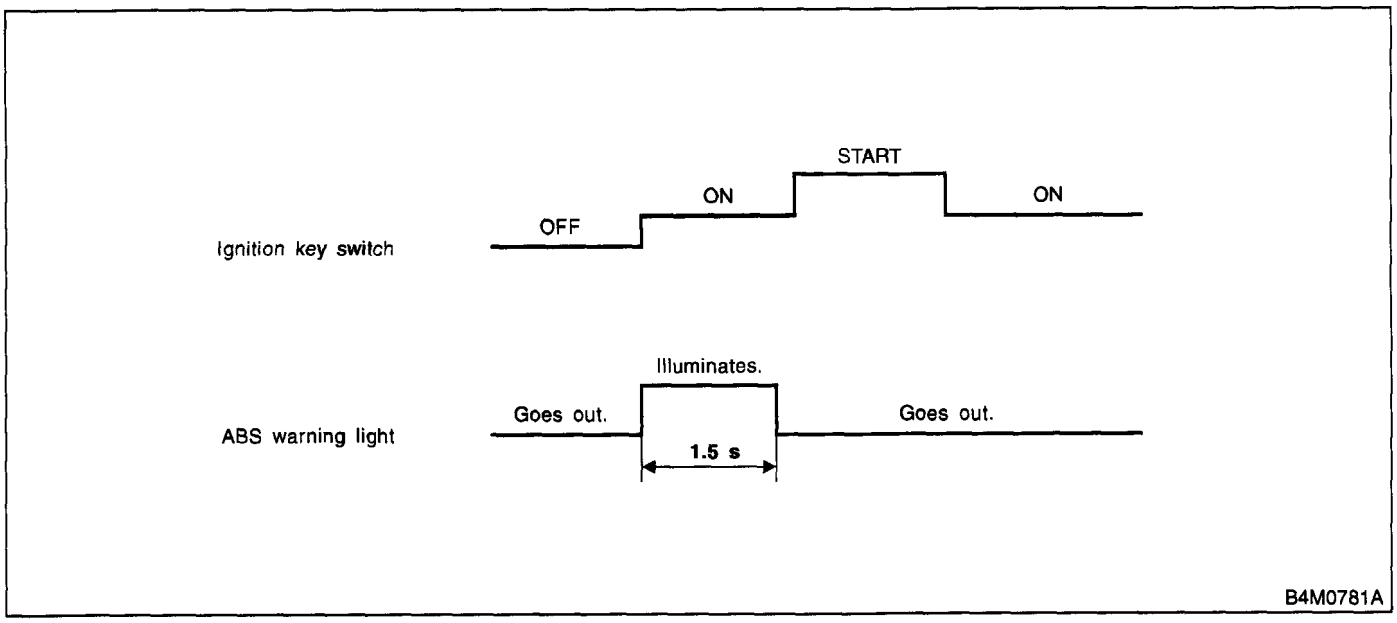

1) When the ABS warning light does not illuminate in accordance with this illumination pattern, there must be an electrical malfunction.
2) When the ABS warning light remains constantly OFF, repair the ABS warning light circuit or diagnosis circuit. <Ref. to ABS-29, Diagnostics Chart with Diagnosis Connector.>

NOTE:
Even though the ABS warning light does not go out 1.5 seconds after it illuminates, the ABS system operates normally when the warning light goes out while driving at approximately 12 km/h (7 MPH). However, the Anti-lock brakes do not work while the ABS warning light is illuminated.

11.List of Diagnostics Trouble Code (DTC)

A: LIST

1. WITHOUT SUBARU SELECT MONITOR

DTC No.	Contents of diagnosis		Index No.
11	Start code • DTC is shown after start code. • Only start code is shown in normal condition.		—
21	Abnormal ABS sensor (Open circuit or input voltage too high)	Front right ABS sensor	<Ref. to ABS-40, DTC 21 ABNORMAL ABS SENSOR (OPEN CIRCUIT OR INPUT VOLTAGE TOO HIGH) (FRONT RH), Diagnostics Chart with Diagnosis Connector.>
23		Front left ABS sensor	<Ref. to ABS-40, DTC 23 ABNORMAL ABS SENSOR (OPEN CIRCUIT OR INPUT VOLTAGE TOO HIGH) (FRONT LH), Diagnostics Chart with Diagnosis Connector.>
25		Rear right ABS sensor	<Ref. to ABS-40, DTC 25 ABNORMAL ABS SENSOR (OPEN CIRCUIT OR INPUT VOLTAGE TOO HIGH) (REAR RH), Diagnostics Chart with Diagnosis Connector.>
27		Rear left ABS sensor	<Ref. to ABS-41, DTC 27 ABNORMAL ABS SENSOR (OPEN CIRCUIT OR INPUT VOLTAGE TOO HIGH) (REAR LH), Diagnostics Chart with Diagnosis Connector.>
22	Abnormal ABS sensor (Abnormal ABS sensor signal)	Front right ABS sensor	<Ref. to ABS-46, DTC 22 ABNORMAL ABS SENSOR (FRONT RH), Diagnostics Chart with Diagnosis Connector.>
24		Front left ABS sensor	<Ref. to ABS-46, DTC 24 ABNORMAL ABS SENSOR (FRONT LH), Diagnostics Chart with Diagnosis Connector.>
26		Rear right ABS sensor	<Ref. to ABS-46, DTC 26 ABNORMAL ABS SENSOR (REAR RH), Diagnostics Chart with Diagnosis Connector.>
28		Rear left ABS sensor	<Ref. to ABS-47, DTC 28 ABNORMAL ABS SENSOR (REAR LH), Diagnostics Chart with Diagnosis Connector.>
29		Any one of four	<Ref. to ABS-53, DTC 29 ABNORMAL ABS SENSOR SIGNAL (ANY ONE OF FOUR), Diagnostics Chart with Diagnosis Connector.>
31	Abnormal solenoid valve circuit(s) in ABS control module and hydraulic unit	Front right inlet valve	<Ref. to ABS-57, DTC 31 ABNORMAL INLET SOLENOID VALVE CIRCUIT(S) IN ABSCM&H/U (FRONT RH), Diagnostics Chart with Diagnosis Connector.>
32		Front right outlet valve	<Ref. to ABS-61, DTC 32 ABNORMAL OUTLET SOLENOID VALVE CIRCUIT(S) IN ABSCM&H/U (FRONT RH), Diagnostics Chart with Diagnosis Connector.>
33		Front left inlet valve	<Ref. to ABS-57, DTC 33 ABNORMAL INLET SOLENOID VALVE CIRCUIT(S) IN ABSCM&H/U (FRONT LH), Diagnostics Chart with Diagnosis Connector.>
34		Front left outlet valve	<Ref. to ABS-61, DTC 34 ABNORMAL OUTLET SOLENOID VALVE CIRCUIT(S) IN ABSCM&H/U (FRONT LH), Diagnostics Chart with Diagnosis Connector.>
35		Rear right inlet valve	<Ref. to ABS-57, DTC 35 ABNORMAL INLET SOLENOID VALVE CIRCUIT(S) IN ABSCM&H/U (REAR RH), Diagnostics Chart with Diagnosis Connector.>
36		Rear right outlet valve	<Ref. to ABS-61, DTC 36 ABNORMAL OUTLET SOLENOID VALVE CIRCUIT(S) IN ABSCM&H/U (REAR RH), Diagnostics Chart with Diagnosis Connector.>
37		Rear left inlet valve	<Ref. to ABS-57, DTC 37 ABNORMAL INLET SOLENOID VALVE CIRCUIT(S) IN ABSCM&H/U (REAR LH), Diagnostics Chart with Diagnosis Connector.>
38		Rear left outlet valve	<Ref. to ABS-61, DTC 38 ABNORMAL OUTLET SOLENOID VALVE CIRCUIT(S) IN ABSCM&H/U (REAR LH), Diagnostics Chart with Diagnosis Connector.>

LIST OF DIAGNOSTICS TROUBLE CODE (DTC)

DTC No.	Contents of diagnosis	Index No.
41	Abnormal ABS control module	<Ref. to ABS-66, DTC 41 ABNORMAL ABS CONTROL MODULE, Diagnostics Chart with Diagnosis Connector.>
42	Source voltage is abnormal.	<Ref. to ABS-69, DTC 42 SOURCE VOLTAGE IS ABNORMAL., Diagnostics Chart with Diagnosis Connector.>
44	A combination of AT control abnormal	<Ref. to ABS-74, DTC 44 A COMBINATION OF AT CONTROL ABNORMAL, Diagnostics Chart with Diagnosis Connector.>
51	Abnormal valve relay	<Ref. to ABS-77, DTC 51 ABNORMAL VALVE RELAY, Diagnostics Chart with Diagnosis Connector.>
52	Abnormal motor and/or motor relay	<Ref. to ABS-81, DTC 52 ABNORMAL MOTOR AND/OR MOTOR RELAY, Diagnostics Chart with Diagnosis Connector.>
54	Abnormal stop light switch	<Ref. to ABS-86, DTC 54 ABNORMAL STOP LIGHT SWITCH, Diagnostics Chart with Diagnosis Connector.>
56	Abnormal G sensor output voltage	<Ref. to ABS-89, DTC 56 ABNORMAL G SENSOR OUTPUT VOLTAGE, Diagnostics Chart with Diagnosis Connector.>

LIST OF DIAGNOSTICS TROUBLE CODE (DTC)

2. WITH SUBARU SELECT MONITOR

DTC No.	Display screen	Contents of diagnosis	Index No.
—	Communication for initializing impossible	Select monitor communication failure	<Ref. to ABS-96, COMMUNICATION FOR INITIALIZING IMPOSSIBLE, Diagnostics Chart with Subaru Select Monitor.>
—	No trouble code	Although no trouble code appears on the select monitor display, the ABS warning light remains on.	<Ref. to ABS-101, NO TROUBLE CODE, Diagnostics Chart with Subaru Select Monitor.>
21	Open or short circuit in front right ABS sensor circuit	Open or short circuit in front right ABS sensor circuit	<Ref. to ABS-104, DTC 21 OPEN OR SHORT CIRCUIT IN FRONT RIGHT ABS SENSOR CIRCUIT, Diagnostics Chart with Subaru Select Monitor.>
22	Front right ABS sensor abnormal signal	Front right ABS sensor abnormal signal	<Ref. to ABS-110, DTC 22 FRONT RIGHT ABNORMAL ABS SENSOR SIGNAL, Diagnostics Chart with Subaru Select Monitor.>
23	Open or short circuit in front left ABS sensor circuit	Open or short circuit in front left ABS sensor circuit	<Ref. to ABS-104, DTC 23 OPEN OR SHORT CIRCUIT IN FRONT LEFT ABS SENSOR CIRCUIT, Diagnostics Chart with Subaru Select Monitor.>
24	Front left ABS sensor abnormal signal	Front left ABS sensor abnormal signal	<Ref. to ABS-110, DTC 24 FRONT LEFT ABNORMAL ABS SENSOR SIGNAL, Diagnostics Chart with Subaru Select Monitor.>
25	Open or short circuit in rear right ABS sensor circuit	Open or short circuit in rear right ABS sensor circuit	<Ref. to ABS-104, DTC 25 OPEN OR SHORT CIRCUIT IN REAR RIGHT ABS SENSOR CIRCUIT, Diagnostics Chart with Subaru Select Monitor.>
26	Rear right ABS sensor abnormal signal	Rear right ABS sensor abnormal signal	<Ref. to ABS-110, DTC 26 REAR RIGHT ABNORMAL ABS SENSOR SIGNAL, Diagnostics Chart with Subaru Select Monitor.>
27	Open or short circuit in rear left ABS sensor circuit	Open or short circuit in rear left ABS sensor circuit	<Ref. to ABS-105, DTC 27 OPEN OR SHORT CIRCUIT IN REAR LEFT ABS SENSOR CIRCUIT, Diagnostics Chart with Subaru Select Monitor.>
28	Rear left ABS sensor abnormal signal	Rear left ABS sensor abnormal signal	<Ref. to ABS-111, DTC 28 REAR LEFT ABNORMAL ABS SENSOR SIGNAL, Diagnostics Chart with Subaru Select Monitor.>
29	Abnormal ABS sensor signal on any one of four sensor	Abnormal ABS sensor signal on any one of four	<Ref. to ABS-117, DTC 29 ABNORMAL ABS SENSOR SIGNAL ON ANY ONE OF FOUR SENSOR, Diagnostics Chart with Subaru Select Monitor.>
31	Front right inlet valve malfunction	Front right inlet valve malfunction	<Ref. to ABS-121, DTC 31 FRONT RIGHT INLET VALVE MALFUNCTION, Diagnostics Chart with Subaru Select Monitor.>
32	Front right outlet valve malfunction	Front right outlet valve malfunction	<Ref. to ABS-125, DTC 32 FRONT RIGHT OUTLET VALVE MALFUNCTION, Diagnostics Chart with Subaru Select Monitor.>
33	Front left inlet valve malfunction	Front left inlet valve malfunction	<Ref. to ABS-121, DTC 33 FRONT LEFT INLET VALVE MALFUNCTION, Diagnostics Chart with Subaru Select Monitor.>
34	Front left outlet valve malfunction	Front left outlet valve malfunction	<Ref. to ABS-125, DTC 34 FRONT LEFT OUTLET VALVE MALFUNCTION, Diagnostics Chart with Subaru Select Monitor.>
35	Rear right inlet valve malfunction	Rear right inlet valve malfunction	<Ref. to ABS-121, DTC 35 REAR RIGHT INLET VALVE MALFUNCTION, Diagnostics Chart with Subaru Select Monitor.>
36	Rear right outlet valve malfunction	Rear right outlet valve malfunction	<Ref. to ABS-125, DTC 36 REAR RIGHT OUTLET VALVE MALFUNCTION, Diagnostics Chart with Subaru Select Monitor.>
37	Rear left inlet valve malfunction	Rear left inlet valve malfunction	<Ref. to ABS-121, DTC 37 REAR LEFT INLET VALVE MALFUNCTION, Diagnostics Chart with Subaru Select Monitor.>
38	Rear left outlet valve malfunction	Rear left outlet valve malfunction	<Ref. to ABS-125, DTC 38 REAR LEFT OUTLET VALVE MALFUNCTION, Diagnostics Chart with Subaru Select Monitor.>
41	ABS control module malfunction	ABS control module and hydraulic control unit malfunction	<Ref. to ABS-130, DTC 41 ABS CONTROL MODULE MALFUNCTION, Diagnostics Chart with Subaru Select Monitor.>
42	Power supply voltage too low	Power supply voltage too low	<Ref. to ABS-132, DTC 42 POWER SUPPLY VOLTAGE TOO LOW, Diagnostics Chart with Subaru Select Monitor.>
42	Power supply voltage too high	Power supply voltage too high	<Ref. to ABS-134, DTC 42 POWER SUPPLY VOLTAGE TOO HIGH, Diagnostics Chart with Subaru Select Monitor.>

LIST OF DIAGNOSTICS TROUBLE CODE (DTC)

DTC No.	Display screen	Contents of diagnosis	Index No.
44	ABS-AT control (Non Controlled)	ABS-AT control (Non Controlled)	<Ref. to ABS-138, DTC 44 ABS-AT CONTROL (NON CONTROLLED), Diagnostics Chart with Subaru Select Monitor.>
44	ABS-AT control (Controlled)	ABS-AT control (Controlled)	<Ref. to ABS-140, DTC 44 ABS-AT CONTROL (CONTROLLED), Diagnostics Chart with Subaru Select Monitor.>
51	Valve relay malfunction	Valve relay malfunction	<Ref. to ABS-143, DTC 51 VALVE RELAY MALFUNCTION, Diagnostics Chart with Subaru Select Monitor.>
51	Valve relay ON failure	Valve relay ON failure	<Ref. to ABS-147, DTC 51 VALVE RELAY ON FAILURE, Diagnostics Chart with Subaru Select Monitor.>
52	Open circuit in motor relay circuit	Open circuit in motor relay circuit	<Ref. to ABS-151, DTC 52 OPEN CIRCUIT IN MOTOR RELAY CIRCUIT, Diagnostics Chart with Subaru Select Monitor.>
52	Motor relay ON failure	Motor relay ON failure	<Ref. to ABS-155, DTC 52 MOTOR RELAY ON FAILURE, Diagnostics Chart with Subaru Select Monitor.>
52	Motor malfunction	Motor malfunction	<Ref. to ABS-159, DTC 52 MOTOR MALFUNCTION, Diagnostics Chart with Subaru Select Monitor.>
54	Stop light switch signal circuit malfunction	Stop light switch signal circuit malfunction	<Ref. to ABS-162, DTC 54 STOP LIGHT SWITCH SIGNAL CIRCUIT MALFUNCTION, Diagnostics Chart with Subaru Select Monitor.>
56	Open or short circuit in G sensor circuit	Open or short circuit in G sensor circuit	<Ref. to ABS-165, DTC 56 OPEN OR SHORT CIRCUIT IN G SENSOR CIRCUIT, Diagnostics Chart with Subaru Select Monitor.>
56	Battery short in G sensor circuit	Battery short in G sensor circuit	<Ref. to ABS-169, DTC 56 BATTERY SHORT IN G SENSOR CIRCUIT, Diagnostics Chart with Subaru Select Monitor.>
56	Abnormal G sensor high μ output	Abnormal G sensor high μ output	<Ref. to ABS-175, DTC 56 ABNORMAL G SENSOR HIGH M OUTPUT, Diagnostics Chart with Subaru Select Monitor.>
56	Detection of G sensor stick	Detection of G sensor stick	<Ref. to ABS-179, DTC 56 DETECTION OF G SENSOR STICK, Diagnostics Chart with Subaru Select Monitor.>

NOTE:
High μ means high friction coefficient against road surface.

12. Diagnostics Chart with Diagnosis Connector

A: ABS WARNING LIGHT DOES NOT COME ON.

DIAGNOSIS:
- ABS warning light circuit is open or shorted.

TROUBLE SYMPTOM:
- When the ignition switch is turned ON (engine OFF), ABS warning light does not come on.

WIRING DIAGRAM:

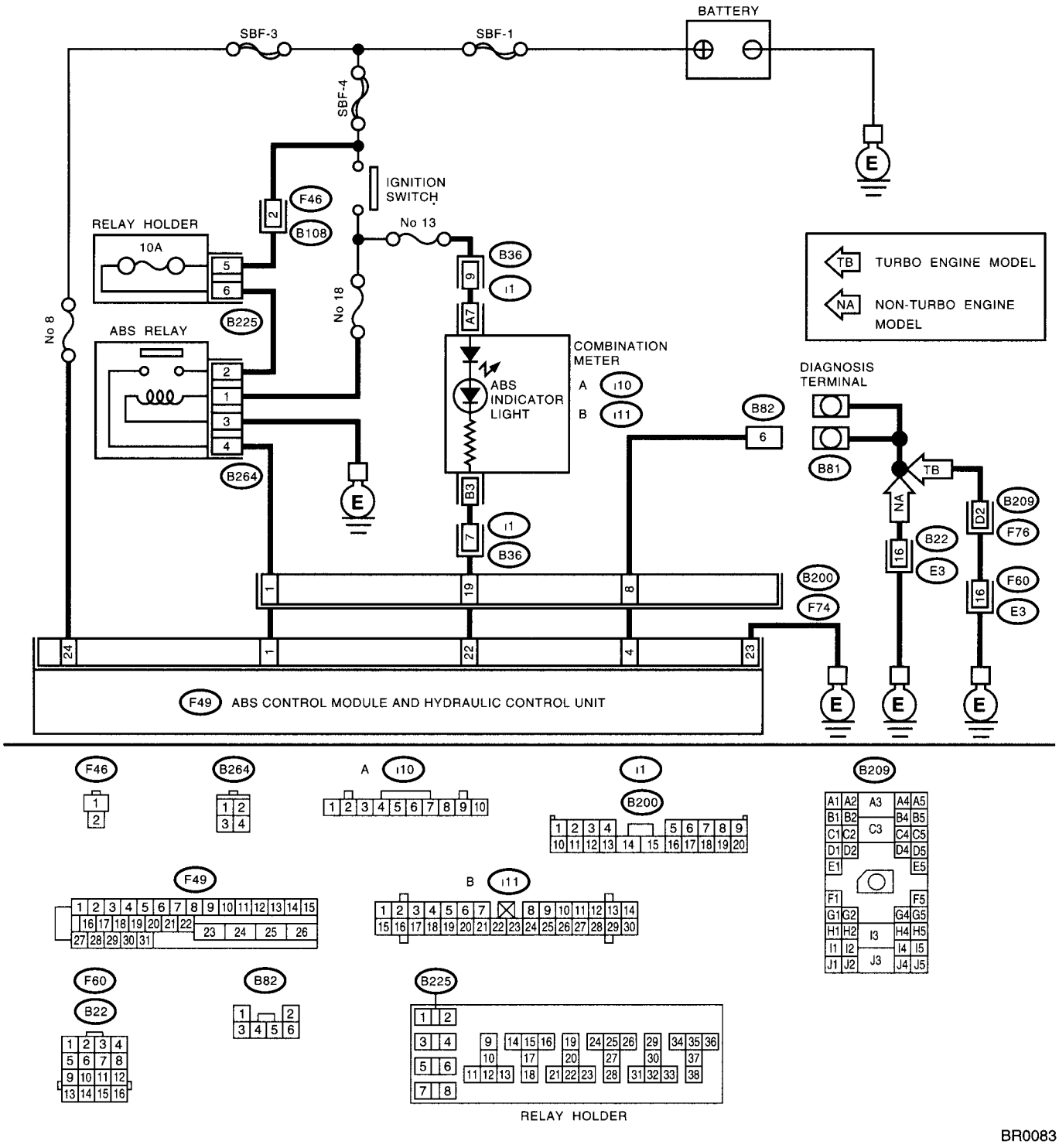

DIAGNOSTICS CHART WITH DIAGNOSIS CONNECTOR

	Step	Check	Yes	No
1	**CHECK IF OTHER WARNING LIGHTS TURN ON.** Turn the ignition switch to ON (engine OFF).	Do other warning lights turn on?	Go to step **2.**	Repair the combination meter. <Ref. to IDI-11, Combination Meter Assembly.>
2	**CHECK ABS WARNING LIGHT BULB.** 1)Turn the ignition switch to OFF. 2)Remove the combination meter. 3)Remove the ABS warning light bulb from combination meter.	Is the ABS warning light bulb OK?	Go to step **3.**	Replace the ABS warning light bulb. <Ref. to IDI-11, Combination Meter Assembly.>
3	**CHECK BATTERY SHORT OF ABS WARNING LIGHT HARNESS.** 1)Disconnect the connector (B200) from connector (F74). 2)Measure the voltage between connector (B200) and chassis ground. ***Connector & terminal*** ***(B200) No. 19 (+) — Chassis ground (–):***	Is the voltage less than 3 V?	Go to step **4.**	Repair the warning light harness.
4	**CHECK BATTERY SHORT OF ABS WARNING LIGHT HARNESS.** 1)Turn the ignition switch to ON. 2)Measure the voltage between connector (B200) and chassis ground. ***Connector & terminal*** ***(B200) No. 19 (+) — Chassis ground (–):***	Is the voltage less than 3 V?	Go to step **5.**	Repair the warning light harness.
5	**CHECK WIRING HARNESS.** 1)Turn the ignition switch to OFF. 2)Install the ABS warning light bulb from combination meter. 3)Install the combination meter. 4)Turn the ignition switch to ON. 5)Measure the voltage between connector (B200) and chassis ground. ***Connector & terminal*** ***(B200) No. 19 (+) — Chassis ground (–):***	Is the voltage between 10 and 15 V?	Go to step **6.**	Repair the wiring harness.
6	**CHECK BATTERY SHORT OF ABS WARNING LIGHT HARNESS.** 1)Turn the ignition switch to OFF. 2)Measure the voltage between connector (F74) and chassis ground. ***Connector & terminal*** ***(F74) No. 19 (+) — Chassis ground (–):***	Is the voltage less than 3 V?	Go to step **7.**	Repair the wiring harness.
7	**CHECK BATTERY SHORT OF ABS WARNING LIGHT HARNESS.** 1)Turn the ignition switch to ON. 2)Measure the voltage between connector (F74) and chassis ground. ***Connector & terminal*** ***(F74) No. 19 (+) — Chassis ground (–):***	Is the voltage less than 3 V?	Go to step **8.**	Repair the wiring harness.
8	**CHECK GROUND CIRCUIT OF ABSCM&H/U.** Measure the resistance between ABSCM&H/U and chassis ground. ***Connector & terminal*** ***(F49) No. 23 — GND:***	Is the resistance less than 0.5 Ω?	Go to step **9.**	Repair the ABSCM&H/U ground harness.
9	**CHECK WIRING HARNESS.** Measure the resistance between connector (F74) and chassis ground. ***Connector & terminal*** ***(F74) No. 19 (+) — Chassis ground (–):***	Is the resistance less than 0.5 Ω?	Go to step **10.**	Repair the harness/connector.

Step		Check	Yes	No
10	**CHECK POOR CONTACT IN CONNECTORS.** Turn the ignition switch to OFF.	Is there poor contact in connectors between combination meter and ABSCM&H/U?	Repair the connector.	Replace the ABSCM&H/U. <Ref. to ABS-7, ABS Control Module and Hydraulic Control Unit (ABSCM&H/U).>

B: ABS WARNING LIGHT DOES NOT GO OFF.

DIAGNOSIS:

- ABS warning light circuit is open or shorted.

TROUBLE SYMPTOM:

- When starting the engine and while the ABS warning light is kept ON.

WIRING DIAGRAM:

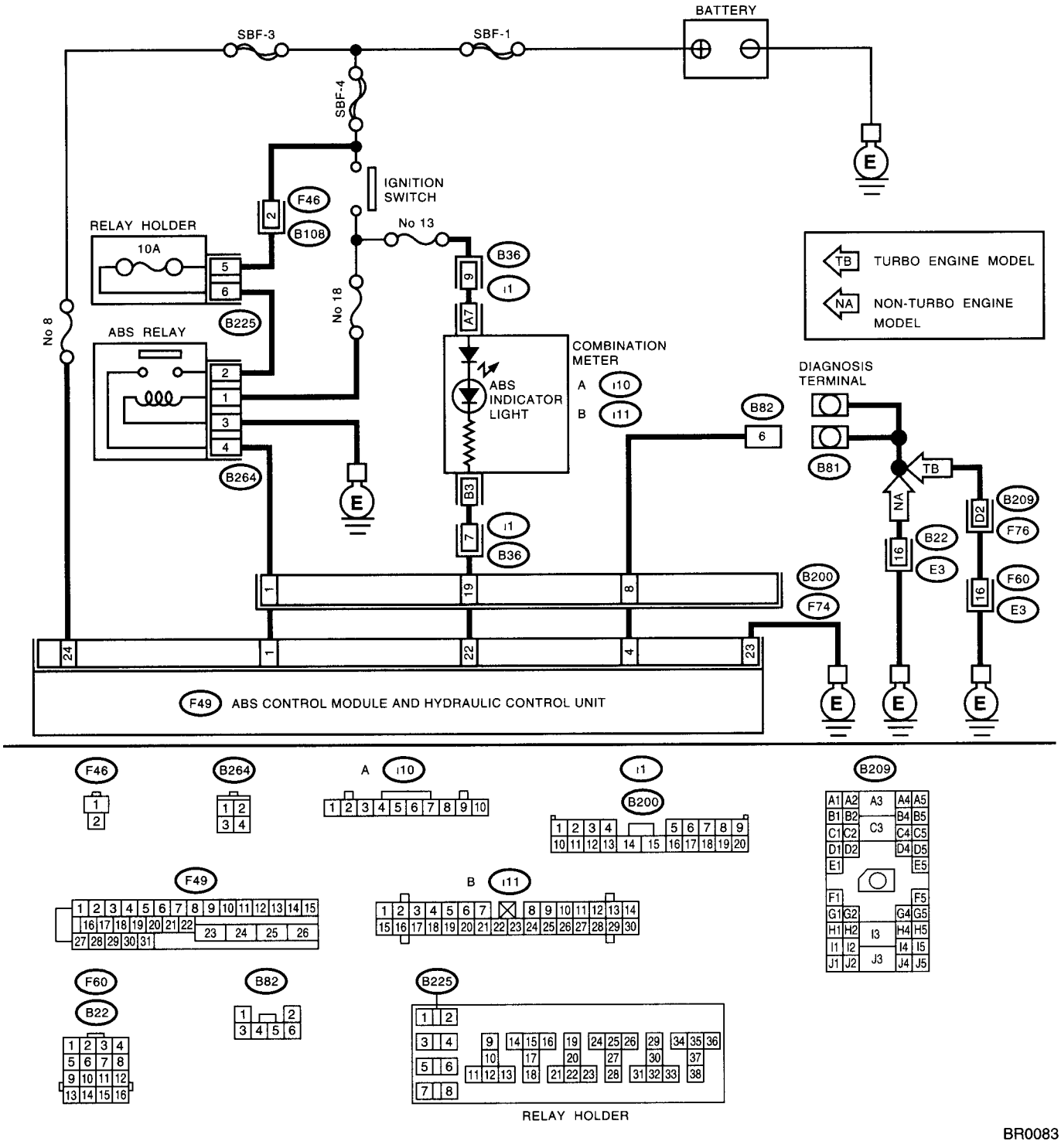

DIAGNOSTICS CHART WITH DIAGNOSIS CONNECTOR

	Step	Check	Yes	No
1	**CHECK INSTALLATION OF ABSCM&H/U CONNECTOR.** Turn the ignition switch to OFF.	Is the ABSCM&H/U connector inserted into ABSCM until the clamp locks onto it?	Go to step **2.**	Insert ABSCM&H/U connector into ABSCM&H/U until the clamp locks onto it.
2	**CHECK DIAGNOSIS TERMINAL.** Measure the resistance between diagnosis terminals (B81) and chassis ground. ***Terminals*** ***Diagnosis terminal (A) — Chassis ground:*** ***Diagnosis terminal (B) — Chassis ground:***	Is the resistance less than 0.5 Ω?	Go to step **3.**	Repair the diagnosis terminal harness.
3	**CHECK DIAGNOSIS LINE.** 1)Turn the ignition switch to OFF. 2)Connect the diagnosis terminal (B81) to diagnosis connector (B82) No. 6. 3)Disconnect the connector from ABSCM&H/U. 4)Measure the resistance between ABSCM&H/U connector and chassis ground. ***Connector & terminal*** ***(F49) No. 4 — Chassis ground:***	Is the resistance less than 0.5 Ω?	Go to step **4.**	Repair harness connector between ABSCM&H/U and diagnosis connector.
4	**CHECK GENERATOR.** 1)Start the engine. 2)Idle the engine. 3)Measure the voltage between generator and chassis ground. ***Terminal*** ***Generator B terminal (+) — Chassis ground (–):***	Is the voltage between 10 and 15 V?	Go to step **5.**	Repair the generator. <Ref. to SC-13, Generator.>
5	**CHECK BATTERY TERMINAL.** Turn the ignition switch to OFF.	Is there poor contact at battery terminal?	Repair the battery terminal.	Go to step **6.**
6	**CHECK POWER SUPPLY OF ABSCM.** 1)Disconnect the connector from ABSCM&H/U. 2)Start the engine. 3)Idle the engine. 4)Measure the voltage between ABSCM&H/U connector and chassis ground. ***Connector & terminal*** ***(F49) No. 1 (+) — Chassis ground (–):***	Is the voltage between 10 and 15 V?	Go to step **7.**	Repair the ABSCM&H/U power supply circuit.
7	**CHECK WIRING HARNESS.** 1)Disconnect the connector (F74) from connector (B200). 2)Turn the ignition switch to ON.	Does the ABS warning light remain off?	Go to step **8.**	Repair the front wiring harness.
8	**CHECK PROJECTION AT ABSCM&H/U.** 1)Turn the ignition switch to OFF. 2)Check for broken projection at the ABSCM&H/U terminal.	Are the projection broken?	Go to step **9.**	Replace the ABSCM&H/U. <Ref. to ABS-7, ABS Control Module and Hydraulic Control Unit (ABSCM&H/U).>

	Step	Check	Yes	No
9	**CHECK ABSCM&H/U.** Measure the resistance between ABSCM&H/U terminals. ***Terminal*** ***No. 22 — No. 23:***	Is the resistance more than 1 MΩ?	Go to step **10.**	Replace the ABSCM&H/U. <Ref. to ABS-7, ABS Control Module and Hydraulic Control Unit (ABSCM&H/U).>
10	**CHECK WIRING HARNESS.** Measure the resistance between connector (F74) and chassis ground. ***Connector & terminal*** ***(F74) No. 20 — Chassis ground:***	Is the resistance less than 0.5 Ω?	Go to step **11.**	Repair the harness.
11	**CHECK WIRING HARNESS.** 1)Connect the connector to ABSCM&H/U. 2)Measure the resistance between connector (F74) and chassis ground. ***Connector & terminal*** ***(F74) No. 20 — Chassis ground:***	Is the resistance more than 1 MΩ?	Go to step **12.**	Repair the harness.
12	**CHECK POOR CONTACT IN ABSCM&H/U CONNECTOR.**	Is there poor contact in ABSCM&H/U connector?	Repair the connector.	Replace the ABSCM&H/U. <Ref. to ABS-7, ABS Control Module and Hydraulic Control Unit (ABSCM&H/U).>

C: DIAGNOSTIC TROUBLE CODE (DTC) DOES NOT APPEAR.

DIAGNOSIS:

- Diagnosis circuit is open.

TROUBLE SYMPTOM:

- The ABS warning light turns on or off normally but the start code cannot be read out in the diagnostic mode.

WIRING DIAGRAM:

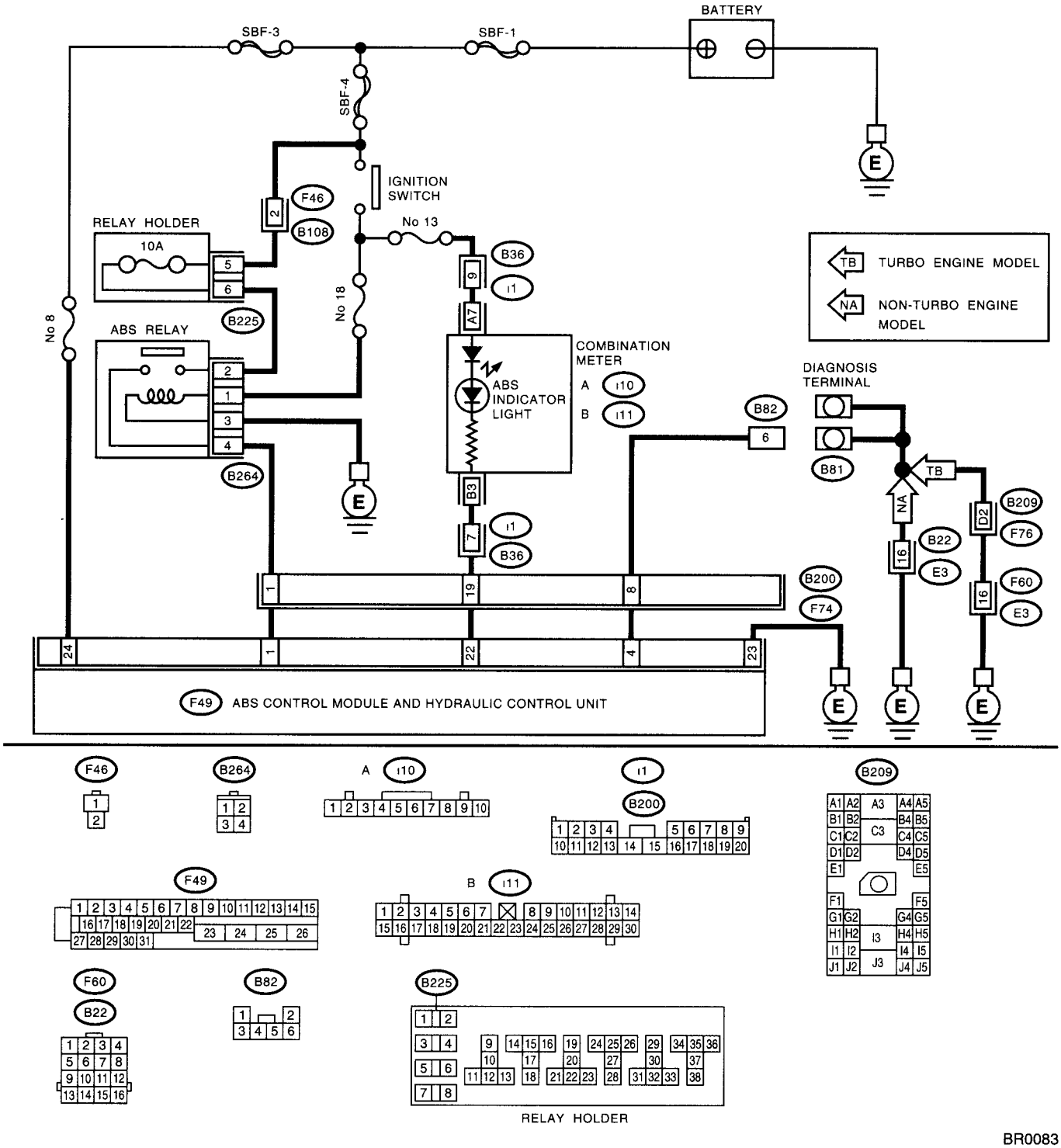

DIAGNOSTICS CHART WITH DIAGNOSIS CONNECTOR

	Step	Check	Yes	No
1	**CHECK DIAGNOSIS TERMINAL.** 1)Turn the ignition switch to OFF. 2)Measure the resistance between diagnosis terminals (B81) and chassis ground. ***Terminals*** ***Diagnosis terminal (A) — Chassis ground:*** ***Diagnosis terminal (B) — Chassis ground:***	Is the resistance less than 0.5 Ω?	Go to step **2.**	Repair the diagnosis terminal harness.
2	**CHECK DIAGNOSIS LINE.** 1)Turn the ignition switch to OFF. 2)Connect the diagnosis terminal (B81) to diagnosis connector (B82) No. 6. 3)Disconnect the connector from ABSCM&H/U. 4)Measure the resistance between ABSCM&H/U connector and chassis ground. ***Connector & terminal*** ***(F49) No. 4 — Chassis ground:***	Is the resistance less than 0.5 Ω?	Go to step **3.**	Repair harness connector between ABSCM&H/U and diagnosis connector.
3	**CHECK POOR CONTACT IN ABSCM&H/U CONNECTOR.**	Is there poor contact in ABSCM&H/U connector?	Repair the connector.	Replace the ABSCM&H/U. <Ref. to ABS-7, ABS Control Module and Hydraulic Control Unit (ABSCM&H/U).>

D: DTC 21
ABNORMAL ABS SENSOR (OPEN CIRCUIT OR INPUT VOLTAGE TOO HIGH) (FRONT RH)

NOTE:
For the diagnostic procedure, refer to DTC 27. <Ref. to ABS-41, DTC 27 ABNORMAL ABS SENSOR (OPEN CIRCUIT OR INPUT VOLTAGE TOO HIGH) (REAR LH), Diagnostics Chart with Diagnosis Connector.>

E: DTC 23
ABNORMAL ABS SENSOR (OPEN CIRCUIT OR INPUT VOLTAGE TOO HIGH) (FRONT LH)

NOTE:
For the diagnostic procedure, refer to DTC 27. <Ref. to ABS-41, DTC 27 ABNORMAL ABS SENSOR (OPEN CIRCUIT OR INPUT VOLTAGE TOO HIGH) (REAR LH), Diagnostics Chart with Diagnosis Connector.>

F: DTC 25
ABNORMAL ABS SENSOR (OPEN CIRCUIT OR INPUT VOLTAGE TOO HIGH) (REAR RH)

NOTE:
For the diagnostic procedure, refer to DTC 27. <Ref. to ABS-41, DTC 27 ABNORMAL ABS SENSOR (OPEN CIRCUIT OR INPUT VOLTAGE TOO HIGH) (REAR LH), Diagnostics Chart with Diagnosis Connector.>

G: DTC 27
ABNORMAL ABS SENSOR (OPEN CIRCUIT OR INPUT VOLTAGE TOO HIGH) (REAR LH)

DIAGNOSIS:
- Faulty ABS sensor (Broken wire, input voltage too high)
- Faulty harness connector

TROUBLE SYMPTOM:
- ABS does not operate.

WIRING DIAGRAM:

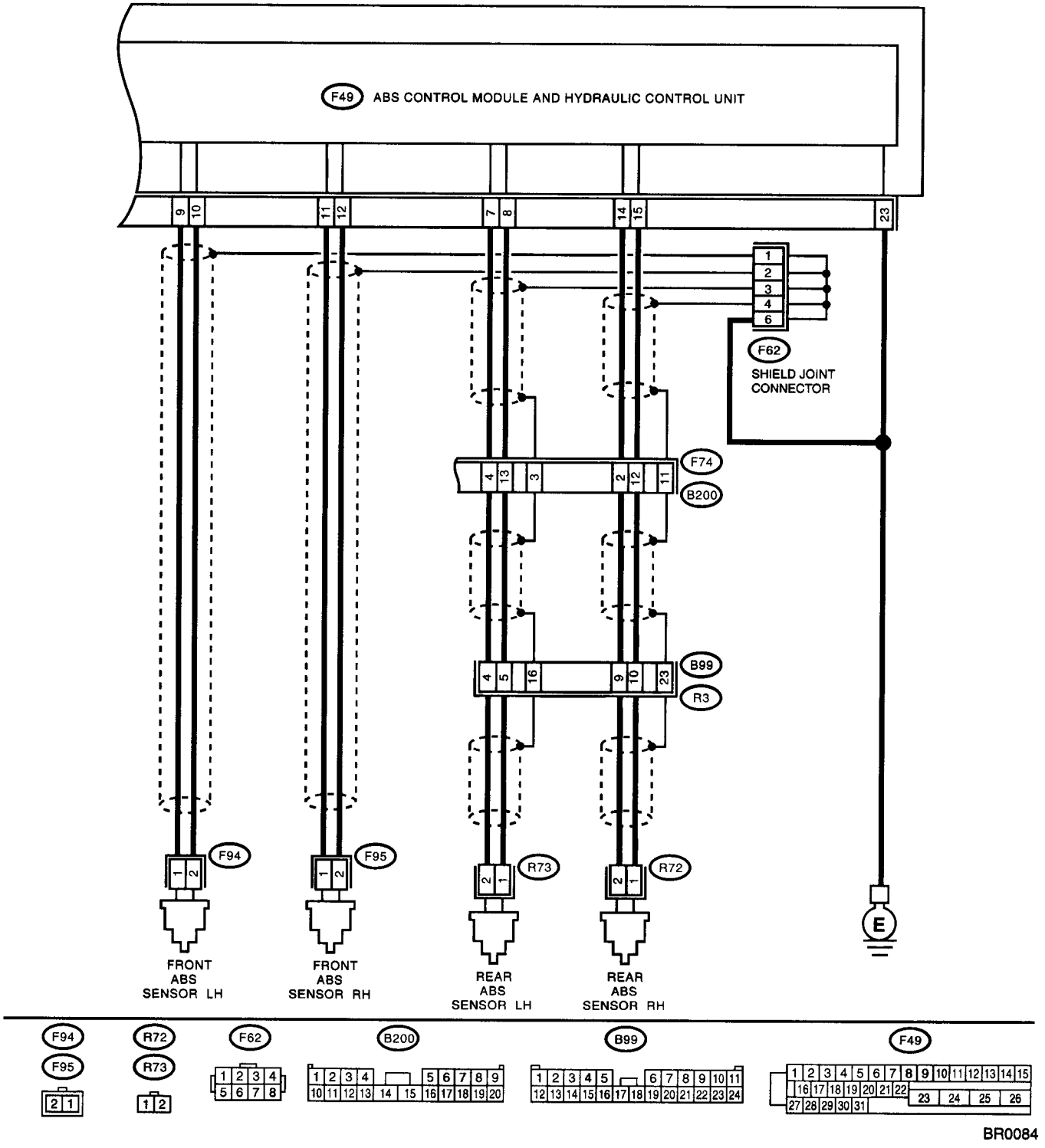

	Step	Check	Yes	No
1	**CHECK ABS SENSOR.** 1)Turn the ignition switch to OFF. 2)Disconnect the connector from ABS sensor. 3)Measure the resistance of ABS sensor connector terminals. ***Terminal*** ***Front RH No. 1 — No. 2:*** ***Front LH No. 1 — No. 2:*** ***Rear RH No. 1 — No. 2:*** ***Rear LH No. 1 — No. 2:***	Is the resistance between 1 and 1.5 kΩ?	Go to step **2.**	Replace the ABS sensor. Front: <Ref. to ABS-14, Front ABS Sensor.> Rear: <Ref. to ABS-18, Rear ABS Sensor.>
2	**CHECK BATTERY SHORT OF ABS SENSOR.** 1)Disconnect the connector from ABSCM&H/U. 2)Measure the voltage between ABS sensor and chassis ground. ***Terminal*** ***Front RH No. 1 (+) — Chassis ground (–):*** ***Front LH No. 1 (+) — Chassis ground (–):*** ***Rear RH No. 2 (+) — Chassis ground (–):*** ***Rear LH No. 2 (+) — Chassis ground (–):***	Is the voltage less than 1 V?	Go to step **3.**	Replace the ABS sensor. Front: <Ref. to ABS-14, Front ABS Sensor.> Rear: <Ref. to ABS-18, Rear ABS Sensor.>
3	**CHECK BATTERY SHORT OF ABS SENSOR.** 1)Turn the ignition switch to ON. 2)Measure the voltage between ABS sensor and chassis ground. ***Terminal*** ***Front RH No. 1 (+) — Chassis ground (–):*** ***Front LH No. 1 (+) — Chassis ground (–):*** ***Rear RH No. 2 (+) — Chassis ground (–):*** ***Rear LH No. 2 (+) — Chassis ground (–):***	Is the voltage less than 1 V?	Go to step **4.**	Replace the ABS sensor. Front: <Ref. to ABS-14, Front ABS Sensor.> Rear: <Ref. to ABS-18, Rear ABS Sensor.>
4	**CHECK HARNESS/CONNECTOR BETWEEN ABSCM&H/U AND ABS SENSOR.** 1)Turn the ignition switch to OFF. 2)Connect the connector to ABS sensor. 3)Measure the resistance between ABSCM&H/U connector terminals. ***Connector & terminal*** ***DTC 21 / (F49) No. 11 — No. 12:*** ***DTC 23 / (F49) No. 9 — No. 10:*** ***DTC 25 / (F49) No. 14 — No. 15:*** ***DTC 27 / (F49) No. 7 — No. 8:***	Is the resistance between 1 and 1.5 kΩ?	Go to step **5.**	Repair harness/ connector between ABSCM&H/U and ABS sensor.
5	**CHECK BATTERY SHORT OF HARNESS.** Measure the voltage between ABSCM&H/U connector and chassis ground. ***Connector & terminal*** ***DTC 21 / (F49) No. 11 (+) — Chassis ground (–):*** ***DTC 23 / (F49) No. 9 (+) — Chassis ground (–):*** ***DTC 25 / (F49) No. 14 (+) — Chassis ground (–):*** ***DTC 27 / (F49) No. 7 (+) — Chassis ground (–):***	Is the voltage less than 1 V?	Go to step **6.**	Repair harness between ABSCM&H/U and ABS sensor.

	Step	Check	Yes	No
6	**CHECK BATTERY SHORT OF HARNESS.** 1)Turn the ignition switch to ON. 2)Measure the voltage between ABSCM&H/U connector and chassis ground. ***Connector & terminal*** ***DTC 21 / (F49) No. 11 (+) — Chassis ground (–):*** ***DTC 23 / (F49) No. 9 (+) — Chassis ground (–):*** ***DTC 25 / (F49) No. 14 (+) — Chassis ground (–):*** ***DTC 27 / (F49) No. 7 (+) — Chassis ground (–):***	Is the voltage less than 1 V?	Go to step **7.**	Repair harness between ABSCM&H/U and ABS sensor.
7	**CHECK INSTALLATION OF ABS SENSOR.** Turn the ignition switch to OFF. ***Tightening torque:*** ***32 N·m (3.3 kgf-m, 24 ft-lb)***	Are the ABS sensor installation bolts tightened securely?	Go to step **8.**	Tighten the ABS sensor installation bolts securely.
8	**CHECK ABS SENSOR GAP.** Measure the tone wheel to ABS sensor piece gap over entire perimeter of the wheel. ***Front wheel*** ***0.3 — 0.8 mm (0.012 — 0.031 in)*** ***Rear wheel*** ***0.7 — 1.2 mm (0.028 — 0.047 in)***	Is the gap within the specifications?	Go to step **9.**	Adjust the gap. NOTE: Adjust the gap using spacers (Part No. 26755AA000). If spacers cannot correct the gap, replace worn sensor or worn tone wheel.
9	**CHECK TONE WHEEL RUNOUT.** Measure the tone wheel runout.	Is the runout less than 0.05 mm (0.0020 in)?	Go to step **10.**	Replace the tone wheel. Front: <Ref. to ABS-21, Front Tone Wheel.> Rear: <Ref. to ABS-22, Rear Tone Wheel.>
10	**CHECK GROUND SHORT OF ABS SENSOR.** 1)Turn the ignition switch to ON. 2)Measure the resistance between ABS sensor and chassis ground. ***Terminal*** ***Front RH No. 1 — Chassis ground:*** ***Front LH No. 1 — Chassis ground:*** ***Rear RH No. 1 — Chassis ground:*** ***Rear LH No. 1 — Chassis ground:***	Is the resistance more than 1 MΩ?	Go to step **11.**	Replace the ABS sensor and ABSCM&H/U. Front: <Ref. to ABS-14, Front ABS Sensor.> Rear: <Ref. to ABS-18, Rear ABS Sensor.> and <Ref. to ABS-7, ABS Control Module and Hydraulic Control Unit (ABSCM&H/U).>

	Step	Check	Yes	No
11	**CHECK GROUND SHORT OF HARNESS.** 1)Turn the ignition switch to OFF. 2)Connect the connector to ABS sensor. 3)Measure the resistance between ABSCM&H/U connector terminal and chassis ground. ***Connector & terminal*** ***DTC 21 / (F49) No. 11 — Chassis ground:*** ***DTC 23 / (F49) No. 9 — Chassis ground:*** ***DTC 25 / (F49) No. 14 — Chassis ground:*** ***DTC 27 / (F49) No. 7 — Chassis ground:***	Is the resistance more than 1 MΩ?	Go to step **12.**	Repair harness between ABSCM&H/U and ABS sensor. Replace ABSCM&H/U. <Ref. to ABS-7, ABS Control Module and Hydraulic Control Unit (ABSCM&H/U).>
12	**CHECK POOR CONTACT IN CONNECTORS.**	Is there poor contact in connectors between ABSCM&H/U and ABS sensor?	Repair the connector.	Go to step **13.**
13	**CHECK ABSCM&H/U.** 1)Connect all connectors. 2)Erase the memory. 3)Perform the inspection mode. 4)Read out the diagnostic trouble code.	Is the same diagnostic trouble code as in the current diagnosis still being output?	Replace the ABSCM&H/U. <Ref. to ABS-7, ABS Control Module and Hydraulic Control Unit (ABSCM&H/U).>	Go to step **14.**
14	**CHECK ANY OTHER DIAGNOSTIC TROUBLE CODES APPEARANCE.**	Are other diagnostic trouble codes being output?	Proceed with the diagnosis corresponding to the diagnostic trouble code.	A temporary poor contact. NOTE: Check harness and connectors between ABSCM&H/U and ABS sensor.

H: DTC 22
ABNORMAL ABS SENSOR (FRONT RH)

NOTE:
For the diagnostic procedure, refer to DTC 28. <Ref. to ABS-47, DTC 28 ABNORMAL ABS SENSOR (REAR LH), Diagnostics Chart with Diagnosis Connector.>

I: DTC 24
ABNORMAL ABS SENSOR (FRONT LH)

NOTE:
For the diagnostic procedure, refer to DTC 28. <Ref. to ABS-47, DTC 28 ABNORMAL ABS SENSOR (REAR LH), Diagnostics Chart with Diagnosis Connector.>

J: DTC 26
ABNORMAL ABS SENSOR (REAR RH)

NOTE:
For the diagnostic procedure, refer to DTC 28. <Ref. to ABS-47, DTC 28 ABNORMAL ABS SENSOR (REAR LH), Diagnostics Chart with Diagnosis Connector.>

K: DTC 28
ABNORMAL ABS SENSOR (REAR LH)

DIAGNOSIS:
- Faulty ABS sensor signal (noise, irregular signal, etc.)
- Faulty harness/connector

TROUBLE SYMPTOM:
- ABS does not operate.

WIRING DIAGRAM:

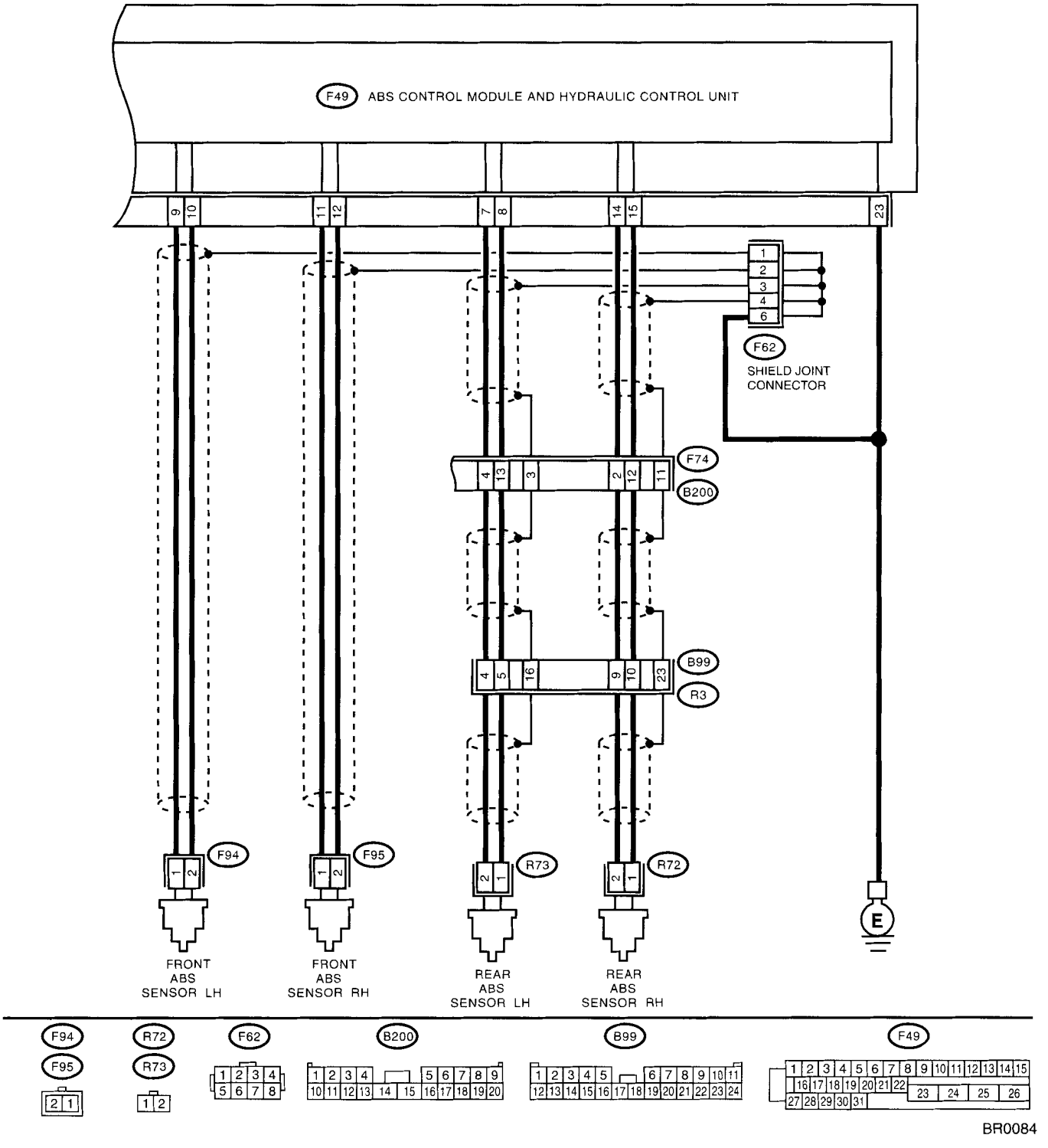

DIAGNOSTICS CHART WITH DIAGNOSIS CONNECTOR

	Step	Check	Yes	No
1	**CHECK INSTALLATION OF ABS SENSOR.** Turn the ignition switch to OFF. ***Tightening torque:*** ***32 N·m (3.3 kgf-m, 24 ft-lb)***	Are the ABS sensor installation bolts tightened securely?	Go to step **2.**	Tighten the ABS sensor installation bolts securely.
2	**CHECK ABS SENSOR GAP.** Measure the tone wheel to ABS sensor piece gap over entire perimeter of the wheel. ***Front wheel*** ***0.3 — 0.8 mm (0.012 — 0.031 in)*** ***Rear wheel*** ***0.7 — 1.2 mm (0.028 — 0.047 in)***	Is the gap within the specifications?	Go to step **3.**	Adjust the gap. NOTE: Adjust the gap using spacer (Part No. 26755AA000). If spacers cannot correct the gap, replace worn sensor or worn tone wheel.
3	**PREPARE OSCILLOSCOPE.**	Is an oscilloscope available?	Go to step **4.**	Go to step **5.**
4	**CHECK ABS SENSOR SIGNAL.** 1)Raise all four wheels off ground. 2)Turn the ignition switch OFF. 3)Connect the oscilloscope to the connector. 4)Turn the ignition switch ON. 5)Rotate the wheels and measure voltage at specified frequency. <Ref. to ABS-17, WAVEFORM, Control Module I/O Signal.> NOTE: When this inspection is completed, the ABS control module sometimes stores the DTC 29. ***Connector & terminal*** ***DTC 22 /*** ***(F95) No. 1 (+) — No. 2 (–):*** ***DTC 24 /*** ***(F94) No. 1 (+) — No. 2 (–):*** ***DTC 26 /*** ***(B99) No. 9 (+) — No. 10 (–):*** ***DTC 28 /*** ***(B99) No. 4 (+) — No. 5 (–):***	Is the oscilloscope pattern smooth, as shown in the figure?	Go to step **8.**	Go to step **7.**
5	**CHECK CONTAMINATION OF ABS SENSOR OR TONE WHEEL.** Remove the disc rotor or drum from hub in accordance with diagnostic trouble code.	Is the ABS sensor piece or the tone wheel contaminated by dirt or other foreign matter?	Thoroughly remove dirt or other foreign matter.	Go to step **6.**
6	**CHECK DAMAGE OF ABS SENSOR OR TONE WHEEL.**	Are there broken or damaged in the ABS sensor piece or the tone wheel?	Replace the ABS sensor or tone wheel. Front: <Ref. to ABS-14, Front ABS Sensor.> Rear: <Ref. to ABS-18, Rear ABS Sensor.> and Front: <Ref. to ABS-21, Front Tone Wheel.> Rear: <Ref. to ABS-22, Rear Tone Wheel.>	Go to step **7.**

DIAGNOSTICS CHART WITH DIAGNOSIS CONNECTOR

	Step	Check	Yes	No
'	**CHECK TONE WHEEL RUNOUT.** Measure the tone wheel runout.	s the runout less than 0.05 nm (0.0020 in)?	3o to step **8.**	Replace the tone wheel Front: <Ref. to ABS-21, Front Tone Wheel.> Rear: <Ref. to ABS-22, Rear Tone Wheel.>
I	**CHECK RESISTANCE OF ABS SENSOR.** 1)Turn the ignition switch OFF. 2)Disconnect the connector from ABS sensor. 3)Measure the resistance between ABS sensor connector terminals. ***Terminal*** ***Front RH No. 1 — No. 2:*** ***Front LH No. 1 — No. 2:*** ***Rear RH No. 1 — No. 2:*** ***Rear LH No. 1 — No. 2:***	s the resistance between 1 and 1 5 kΩ?	3o to step **9.**	Replace the ABS sensor. Front: <Ref. to ABS-14, Front ABS Sensor.> Rear: <Ref. to ABS-18, Rear ABS Sensor.>
	CHECK GROUND SHORT OF ABS SENSOR. Measure the resistance between ABS sensor and chassis ground. ***Terminal*** ***Front RH No. 1 — Chassis ground:*** ***Front LH No. 1 — Chassis ground:*** ***Rear RH No. 1 — Chassis ground:*** ***Rear LH No. 1 — Chassis ground:***	s the resistance more than 1 MΩ?	3o to step **10.**	Replace the ABS sensor. Front: <Ref. to ABS-14, Front ABS Sensor.> Rear: <Ref. to ABS-18, Rear ABS Sensor.>
10	**CHECK HARNESS/CONNECTOR BETWEEN ABSCM&H/U AND ABS SENSOR.** 1)Connect the connector to ABS sensor. 2)Disconnect the connector from ABSCM&H/U. 3)Measure the resistance at ABSCM&H/U connector terminals ***Connector & terminal*** ***DTC 22 / (F49) No. 11 — No. 12:*** ***DTC 24 / (F49) No. 9 — No. 10:*** ***DTC 26 / (F49) No. 14 — No. 15:*** ***DTC 28 / (F49) No. 7 — No. 8:***	s the resistance between 1 and 1 5 kΩ?	3o to step **11.**	Repair harness/ connector between ABSCM&H/U and ABS sensor
11	**CHECK GROUND SHORT OF HARNESS.** Measure the resistance between ABSCM&H/U connector and chassis ground ***Connector & terminal*** ***DTC 22 / (F49) No. 11 — Chassis ground.*** ***DTC 24 / (F49) No. 9 — Chassis ground:*** ***DTC 26 / (F49) No. 14 — Chassis ground.*** ***DTC 28 / (F49) No. 7 — Chassis ground:***	s the resistance more than 1 MΩ?	3o to step **12.**	Repair harness/ connector between ABSCM&H/U and ABS sensor.
12	**CHECK GROUND CIRCUIT OF ABSCM&H/U.** Measure the resistance between ABSCM&H/U and chassis ground. ***Connector & terminal*** ***(F49) No. 23 — GND:***	s the resistance less than 0.5 Ω?	3o to step **13.**	Repair the ABSCM&H/U ground harness.
13	**CHECK POOR CONTACT IN CONNECTORS.**	s there poor contact in connectors between ABSCM&H/U and ABS sensor?	Repair the connector.	Go to step **14.**
14	**CHECK SOURCES OF SIGNAL NOISE.**	s the car telephone or the wireless transmitter properly nstalled?	3o to step **15.**	Properly install the car telephone or the wireless transmitter.

	Step	Check	Yes	No
5	**CHECK SOURCES OF SIGNAL NOISE.**	Are noise sources (such as an antenna) installed near the sensor harness?	nstall the noise sources apart from he sensor harness.	Go to step **16.**
6	**CHECK SHIELD CIRCUIT.** 1)Connect all connectors. 2)Measure the resistance between shield connector and chassis ground. ***Connector & terminal*** ***DTC 26 / (B200) No. 11 — Chassis ground:*** ***DTC 28 / (B200) No. 3 — Chassis ground*** NOTE. For the **DTC 22** and **24**: Go to step **17.**	Is the resistance less than 0.5 Ω?	Go to step **17.**	Repair the shield harness
7	**CHECK ABSCM&H/U.** 1)Connect all connectors. 2)Erase the memory. 3)Perform the inspection mode. 4)Read out the diagnostic trouble code.	Is the same diagnostic trouble code as in the current diagnosis still being output?	Replace the ABSCM&H/U <Ref. to ABS-7, ABS Control Module and Hydraulic Control Unit (ABSCM&H/U).>	Go to step **18.**
8	**CHECK ANY OTHER DIAGNOSTIC TROUBLE CODES APPEARANCE.**	Are other diagnostic trouble codes being output?	Proceed with the diagnosis corresponding to the diagnostic trouble code.	A temporary noise interference.

L: DTC 29
ABNORMAL ABS SENSOR SIGNAL (ANY ONE OF FOUR)

DIAGNOSIS:
- Faulty ABS sensor signal (noise, irregular signal, etc.)
- Faulty tone wheel
- Wheels turning freely for a long time

TROUBLE SYMPTOM:
- ABS does not operate.

WIRING DIAGRAM:

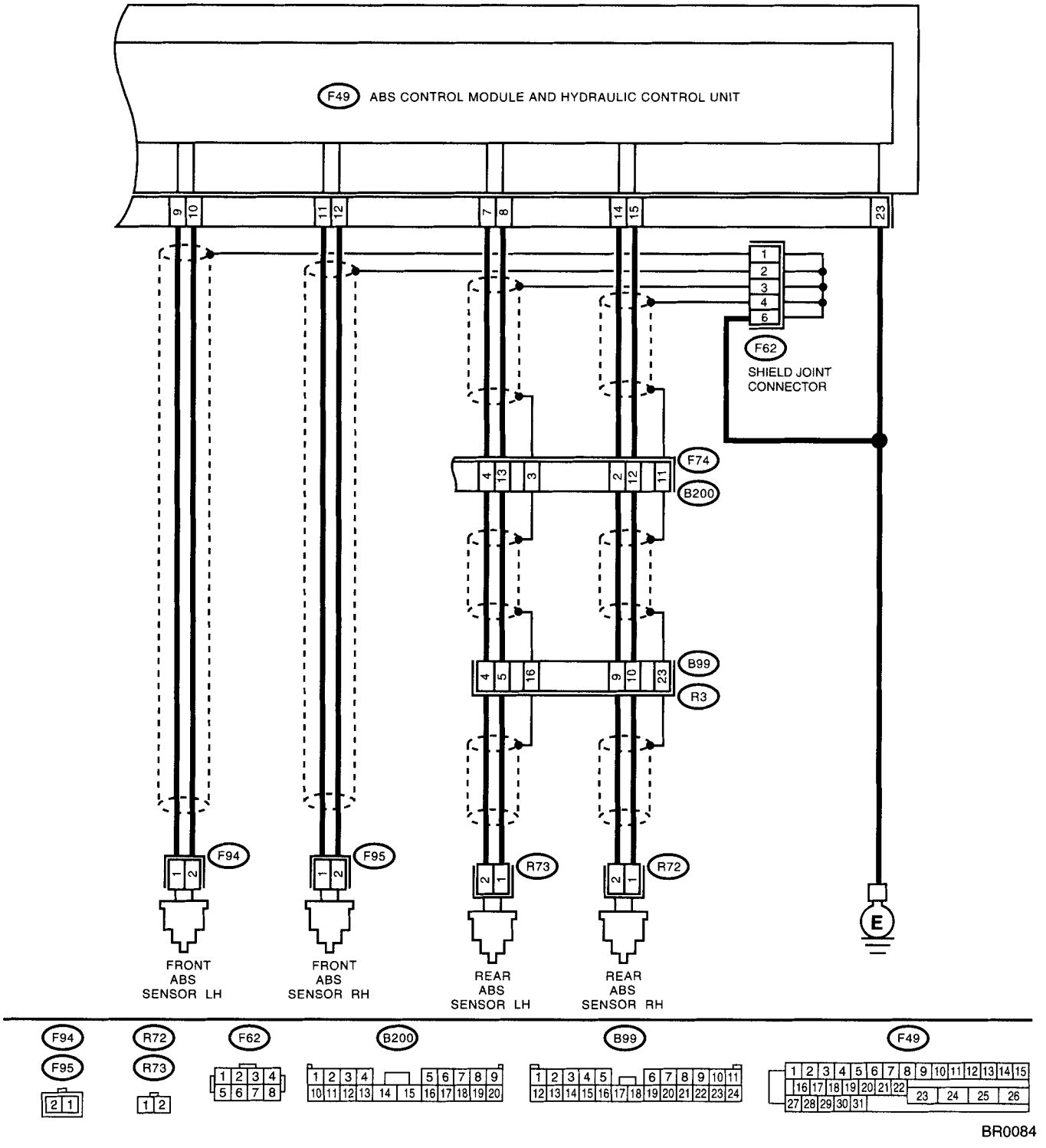

	Step	Check	Yes	No
1	**CHECK IF THE WHEELS HAVE TURNED FREELY FOR A LONG TIME.**	Check if the wheels have been turned freely for more than one minute, such as when the vehicle is jacked-up, under full-lock cornering or when tire is not in contact with road surface.	The ABS is normal. Erase the diagnostic trouble code. NOTE: When the wheels turn freely for a long time, such as when the vehicle is towed or jacked-up, or when steering wheel is continuously turned all the way, this trouble code may sometimes occur.	Go to step **2.**
2	**CHECK TIRE SPECIFICATIONS.** Turn the ignition switch to OFF.	Are the tire specifications correct?	Go to step **3.**	Replace the tire.
3	**CHECK WEAR OF TIRE.**	Is the tire worn excessively?	Replace the tire.	Go to step **4.**
4	**CHECK TIRE PRESSURE.**	Is the tire pressure correct?	Go to step **5.**	Adjust the tire pressure.
5	**CHECK INSTALLATION OF ABS SENSOR.** ***Tightening torque:*** ***32 N·m (3.3 kgf-m, 24 ft-lb)***	Are the ABS sensor installation bolts tightened securely?	Go to step **6.**	Tighten the ABS sensor installation bolts securely.
6	**CHECK ABS SENSOR GAP.** Measure the tone wheel to ABS sensor piece gap over entire perimeter of the wheel. ***Specifications*** ***Front wheel*** ***0.3 — 0.8 mm (0.012 — 0.031 in)*** ***Rear wheel*** ***0.7 — 1.2 mm (0.028 — 0.047 in)***	Is the gap within the specifications?	Go to step **7.**	Adjust the gap. NOTE: Adjust the gap using spacer (Part No. 26755AA000). If spacers cannot correct the gap, replace worn sensor or worn tone wheel.
7	**PREPARE OSCILLOSCOPE.**	Is an oscilloscope available?	Go to step **8.**	Go to step **9.**
8	**CHECK ABS SENSOR SIGNAL.** 1)Raise all four wheels off ground. 2)Turn the ignition switch OFF. 3)Connect the oscilloscope to the connector. 4)Turn the ignition switch ON. 5)Rotate the wheels and measure voltage at specified frequency. <Ref. to ABS-17, WAVEFORM, Control Module I/O Signal.> NOTE: When this inspection is completed, the ABSCM&H/U sometimes stores the DTC 29. ***Connector & terminal*** ***Front RH*** ***(F95) No. 1 (+) — No. 2 (–):*** ***Front LH*** ***(F94) No. 1 (+) — No. 2 (–):*** ***Rear RH*** ***(B99) No. 9 (+) — No. 10 (–):*** ***Rear LH*** ***(B99) No. 4 (+) — No. 5 (–):***	Is the oscilloscope pattern smooth, as shown in figure?	Go to step **12.**	Go to step **9.**

	Step	Check	Yes	No
9	**CHECK CONTAMINATION OF ABS SENSOR OR TONE WHEEL.** Remove the disc rotor from hub.	Is the ABS sensor piece or the tone wheel contaminated by dirt or other foreign matter?	Thoroughly remove dirt or other foreign matter.	Go to step **10.**
10	**CHECK DAMAGE OF ABS SENSOR OR TONE WHEEL.**	Are there broken or damaged teeth in the ABS sensor piece or the tone wheel?	Replace the ABS sensor or tone wheel. Front: <Ref. to ABS-14, Front ABS Sensor.> Rear: <Ref. to ABS-18, Rear ABS Sensor.> and Front: <Ref. to ABS-21, Front Tone Wheel.> Rear: <Ref. to ABS-22, Rear Tone Wheel.>	Go to step **11.**
11	**CHECK TONE WHEEL RUNOUT.** Measure the tone wheel runout.	Is the runout less than 0.05 mm (0.0020 in)?	Go to step **12.**	Replace the tone wheel. Front: <Ref. to ABS-21, Front Tone Wheel.> Rear: <Ref. to ABS-22, Rear Tone Wheel.>
12	**CHECK ABSCM&H/U.** 1)Turn the ignition switch to OFF. 2)Connect all connectors. 3)Erase the memory. 4)Perform the inspection mode. 5)Read out the diagnostic trouble code.	Is the same diagnostic trouble code as in the current diagnosis still being output?	Replace the ABSCM&H/U. <Ref. to ABS-7, ABS Control Module and Hydraulic Control Unit (ABSCM&H/U).>	Go to step **13.**
13	**CHECK ANY OTHER DIAGNOSTIC TROUBLE CODES APPEARANCE.**	Are other diagnostic trouble codes being output?	Proceed with the diagnosis corresponding to the diagnostic trouble code.	A temporary poor contact.

M: DTC 31
ABNORMAL INLET SOLENOID VALVE CIRCUIT(S) IN ABSCM&H/U (FRONT RH)

NOTE:
For the diagnostic procedure, refer to DTC 37. <Ref. to ABS-57, DTC 37 ABNORMAL INLET SOLENOID VALVE CIRCUIT(S) IN ABSCM&H/U (REAR LH), Diagnostics Chart with Diagnosis Connector.>

N: DTC 33
ABNORMAL INLET SOLENOID VALVE CIRCUIT(S) IN ABSCM&H/U (FRONT LH)

NOTE:
For the diagnostic procedure, refer to DTC 37. <Ref. to ABS-57, DTC 37 ABNORMAL INLET SOLENOID VALVE CIRCUIT(S) IN ABSCM&H/U (REAR LH), Diagnostics Chart with Diagnosis Connector.>

O: DTC 35
ABNORMAL INLET SOLENOID VALVE CIRCUIT(S) IN ABSCM&H/U (REAR RH)

NOTE:
For the diagnostic procedure, refer to DTC 37. <Ref. to ABS-57, DTC 37 ABNORMAL INLET SOLENOID VALVE CIRCUIT(S) IN ABSCM&H/U (REAR LH), Diagnostics Chart with Diagnosis Connector.>

P: DTC 37
ABNORMAL INLET SOLENOID VALVE CIRCUIT(S) IN ABSCM&H/U (REAR LH)

DIAGNOSIS:
- Faulty harness/connector
- Faulty inlet solenoid valve in ABSCM&H/U

TROUBLE SYMPTOM:
- ABS does not operate.

WIRING DIAGRAM:

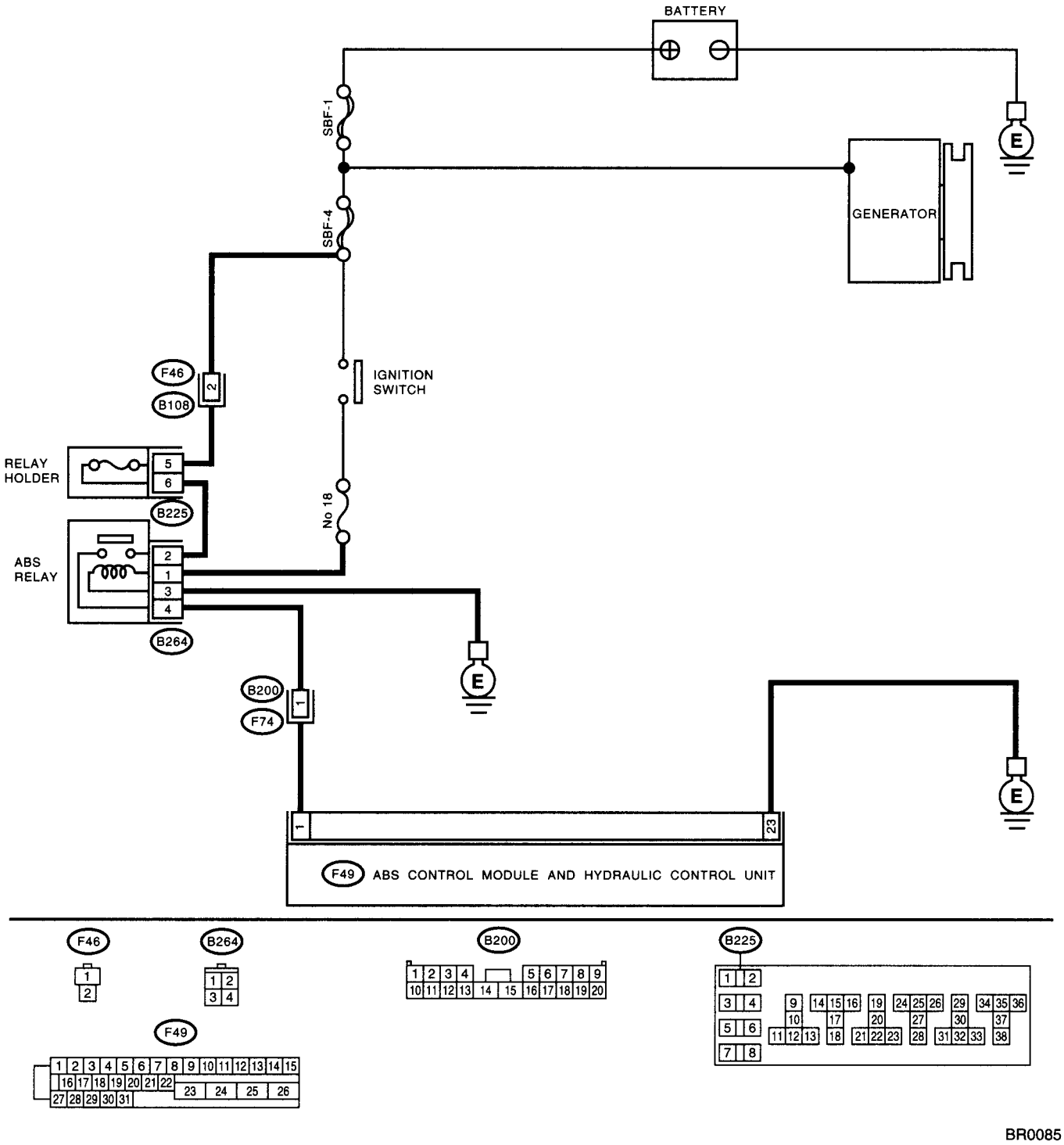

DIAGNOSTICS CHART WITH DIAGNOSIS CONNECTOR

	Step	Check	Yes	No
1	**CHECK INPUT VOLTAGE OF RELAY HOLDER.** 1)Turn the ignition switch to OFF. 2)Remove the fuse. 3)Measure the voltage between ABS relay connector and chassis ground. ***Connector & terminal*** ***(B225) No. 5 (+) — Chassis ground (–):***	Is the voltage more than 10 V?	Go to step **2.**	Repair open circuit in harness between battery and Relay holder connector.
2	**CHECK RELAY HOLDER.**	Is the fuse blown out?	Replace the fuse.	Go to step **3.**
3	**CHECK INPUT VOLTAGE OF ABS RELAY.** 1)Install the fuse. 2)Remove the ABS relay. 3)Turn the ignition switch to ON. 4)Measure the voltage between ABS relay connector and chassis ground. ***Connector & terminal*** ***(B264) No. 2 (+) — Chassis ground (–):***	Is the voltage more than 10 V?	Go to step **4.**	Repair open circuit in harness between battery and Relay holder connector.
4	**CHECK INPUT VOLTAGE OF ABS RELAY.** Measure the voltage between ABS relay connector and chassis ground. ***Connector & terminal*** ***(B264) No. 1 (+) — Chassis ground (–):***	Is the voltage more than 10 V?	Go to step **5.**	Repair harness connector between battery, ignition switch and ABS relay.
5	**CHECK GROUND CIRCUIT OF ABS RELAY.** 1)Turn the ignition switch to OFF. 2)Measure the resistance between ABS relay connector and chassis ground. ***Connector & terminal*** ***(B264) No. 3 (+) — Chassis ground:***	Is the resistance less than 5 Ω?	Go to step **6.**	Repair open circuit between ABS relay and chassis ground.
6	**CHECK the ABS RELAY.** 1)Connect the battery to ABS relay terminal No. 1 and 3. 2)Measure the resistance between ABS relay terminals.	Is the resistance less than 10 Ω?	Go to step **7.**	Replace the ABS relay.
7	**CHECK INPUT VOLTAGE OF ABSCM&H/U.** 1)Disconnect the connector from ABSCM&H/U. 2)Run the engine at idle. 3)Measure the voltage between ABSCM&H/U connector and chassis ground. ***Connector & terminal*** ***(F49) No. 1 (+) — Chassis ground (–):***	Is the voltage between 10 and 15 V?	Go to step **8.**	Repair harness connector between ABS relay and ABSCM&H/U.
8	**CHECK GROUND CIRCUIT OF ABSCM&H/U.** 1)Turn the ignition switch to OFF. 2)Measure the resistance between ABSCM&H/U connector and chassis ground. ***Connector & terminal*** ***(F49) No. 23 — Chassis ground:***	Is the resistance less than 0.5 Ω?	Go to step **9.**	Repair the ABSCM&H/U ground harness.
9	**CHECK POOR CONTACT IN CONNECTORS.**	Is there poor contact in connectors between generator, battery and ABSCM&H/U?	Repair the connector.	Go to step **10.**
10	**CHECK ABSCM&H/U.** 1)Connect all connectors. 2)Erase the memory. 3)Perform the inspection mode. 4)Read out the diagnostic trouble code.	Is the same diagnositc trouble code as in the current diagnosis still being output?	Replace the ABSCM&H/U. <Ref. to ABS-7, ABS Control Module and Hydraulic Control Unit (ABSCM&H/U).>	Go to step **11.**

Step		Check	Yes	No
11	**CHECK ANY OTHER DIAGNOSTIC TROUBLE CODES APPEARANCE.**	Are other diagnostic trouble codes being output?	Proceed with the diagnosis corresponding to the diagnostic trouble code.	A temporary poor contact.

Q: DTC 32
ABNORMAL OUTLET SOLENOID VALVE CIRCUIT(S) IN ABSCM&H/U (FRONT RH)

NOTE:
For the diagnostic procedure, refer to DTC 38. <Ref. to ABS-61, DTC 38 ABNORMAL OUTLET SOLENOID VALVE CIRCUIT(S) IN ABSCM&H/U (REAR LH), Diagnostics Chart with Diagnosis Connector.>

R: DTC 34
ABNORMAL OUTLET SOLENOID VALVE CIRCUIT(S) IN ABSCM&H/U (FRONT LH)

NOTE:
For the diagnostic procedure, refer to DTC 38. <Ref. to ABS-61, DTC 38 ABNORMAL OUTLET SOLENOID VALVE CIRCUIT(S) IN ABSCM&H/U (REAR LH), Diagnostics Chart with Diagnosis Connector.>

S: DTC 36
ABNORMAL OUTLET SOLENOID VALVE CIRCUIT(S) IN ABSCM&H/U (REAR RH)

NOTE:
For the diagnostic procedure, refer to DTC 38. <Ref. to ABS-61, DTC 38 ABNORMAL OUTLET SOLENOID VALVE CIRCUIT(S) IN ABSCM&H/U (REAR LH), Diagnostics Chart with Diagnosis Connector.>

T: DTC 38
ABNORMAL OUTLET SOLENOID VALVE CIRCUIT(S) IN ABSCM&H/U (REAR LH)

DIAGNOSIS:
- Faulty harness/connector
- Faulty outlet solenoid valve in ABSCM&H/U

TROUBLE SYMPTOM:
- ABS does not operate.

WIRING DIAGRAM:

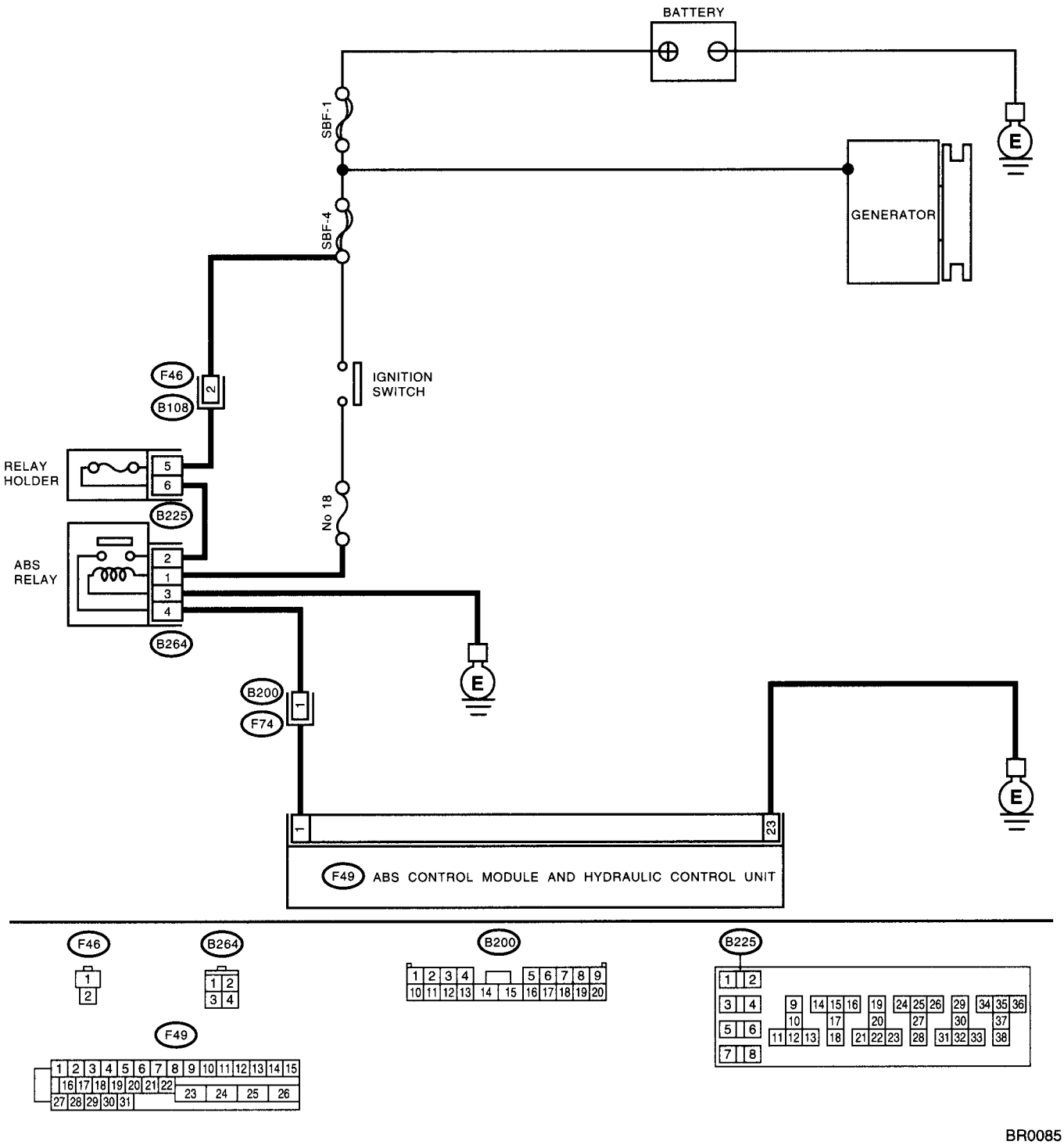

DIAGNOSTICS CHART WITH DIAGNOSIS CONNECTOR

	Step	Check	Yes	No
1	**CHECK INPUT VOLTAGE OF RELAY HOLDER.** 1)Turn the ignition switch to OFF. 2)Remove the fuse 3)Measure the voltage between ABS relay connector and chassis ground. ***Connector & terminal*** ***(B225) No. 5 (+) — Chassis ground (–):***	s the voltage more than 10 V?	Go to step **2.**	Repair open circuit n harness between battery and Relay holder connector.
2	**CHECK RELAY HOLDER.**	s the fuse blown out?	Replace the fuse.	Go to step **3.**
3	**CHECK INPUT VOLTAGE OF ABS RELAY.** 1)Install the fuse. 2)Remove the ABS relay. 3)Turn the ignition switch to ON. 4)Measure the voltage between ABS relay connector and chassis ground. ***Connector & terminal*** ***(B264) No. 2 (+) — Chassis ground (–):***	s the voltage more than 10 V?	Go to step **4.**	Repair open circuit n harness between battery and Relay holder connector.
4	**CHECK INPUT VOLTAGE OF ABS RELAY.** Measure the voltage between ABS relay connector and chassis ground. ***Connector & terminal*** ***(B264) No. 1 (+) — Chassis ground (–):***	s the voltage more than 10 V?	Go to step **5.**	Repair harness connector between battery, ignition switch and ABS relay.
5	**CHECK GROUND CIRCUIT OF ABS RELAY** 1)Turn the ignition switch to OFF. 2)Measure the resistance between ABS relay connector and chassis ground. ***Connector & terminal*** ***(B264) No. 3 (+) — Chassis ground:***	s the resistance less than 5 Ω?	Go to step **6.**	Repair open circuit between ABS relay and chassis ground.
6	**CHECK ABS RELAY.** 1)Connect the battery to ABS relay terminal No. 1 and 3. 2)Measure the resistance between ABS relay terminals.	s the resistance less than 10 Ω?	Go to step **7.**	Replace the ABS relay
7	**CHECK INPUT VOLTAGE OF ABSCM&H/U.** 1)Disconnect the connector from ABSCM&H/U. 2)Run the engine at idle. 3)Measure the voltage between ABSCM&H/U connector and chassis ground ***Connector & terminal*** ***(F49) No. 1 (+) — Chassis ground (–):***	s the voltage between 10 and 15 V?	Go to step **8.**	Repair harness connector between battery, ignition switch and ABSCM&H/U.
8	**CHECK GROUND CIRCUIT OF ABSCM&H/U** 1)Turn the ignition switch to OFF. 2)Measure the resistance between ABSCM&H/U connector and chassis ground. ***Connector & terminal*** ***(F49) No. 23 — Chassis ground:***	s the resistance less than 0.5 Ω?	Go to step **9.**	Repair the ABSCM&H/U ground harness
9	**CHECK POOR CONTACT IN CONNECTORS**	s there poor contact in connectors between generator, battery and ABSCM&H/U?	Repair the connector.	Go to step **10.**
10	**CHECK ABSCM&H/U.** 1)Connect all connectors. 2)Erase the memory. 3)Perform the inspection mode. 4)Read out the diagnostic trouble code.	s the same diagnostic trouble code as in the current diagnosis still being output?	Replace the ABSCM&H/U. <Ref. to ABS-7, ABS Control Module and Hydraulic Control Unit (ABSCM&H/U).>	Go to step **11.**

Step		Check	Yes	No
11	**CHECK ANY OTHER DIAGNOSTIC TROUBLE CODES APPEARANCE.**	Are other diagnostic trouble codes being output?	Proceed with the diagnosis corresponding to the diagnostic trouble code.	A temporary poor contact.

U: DTC 41
ABNORMAL ABS CONTROL MODULE

DIAGNOSIS:
- Faulty ABSCM&H/U.

TROUBLE SYMPTOM:
- ABS does not operate.

WIRING DIAGRAM:

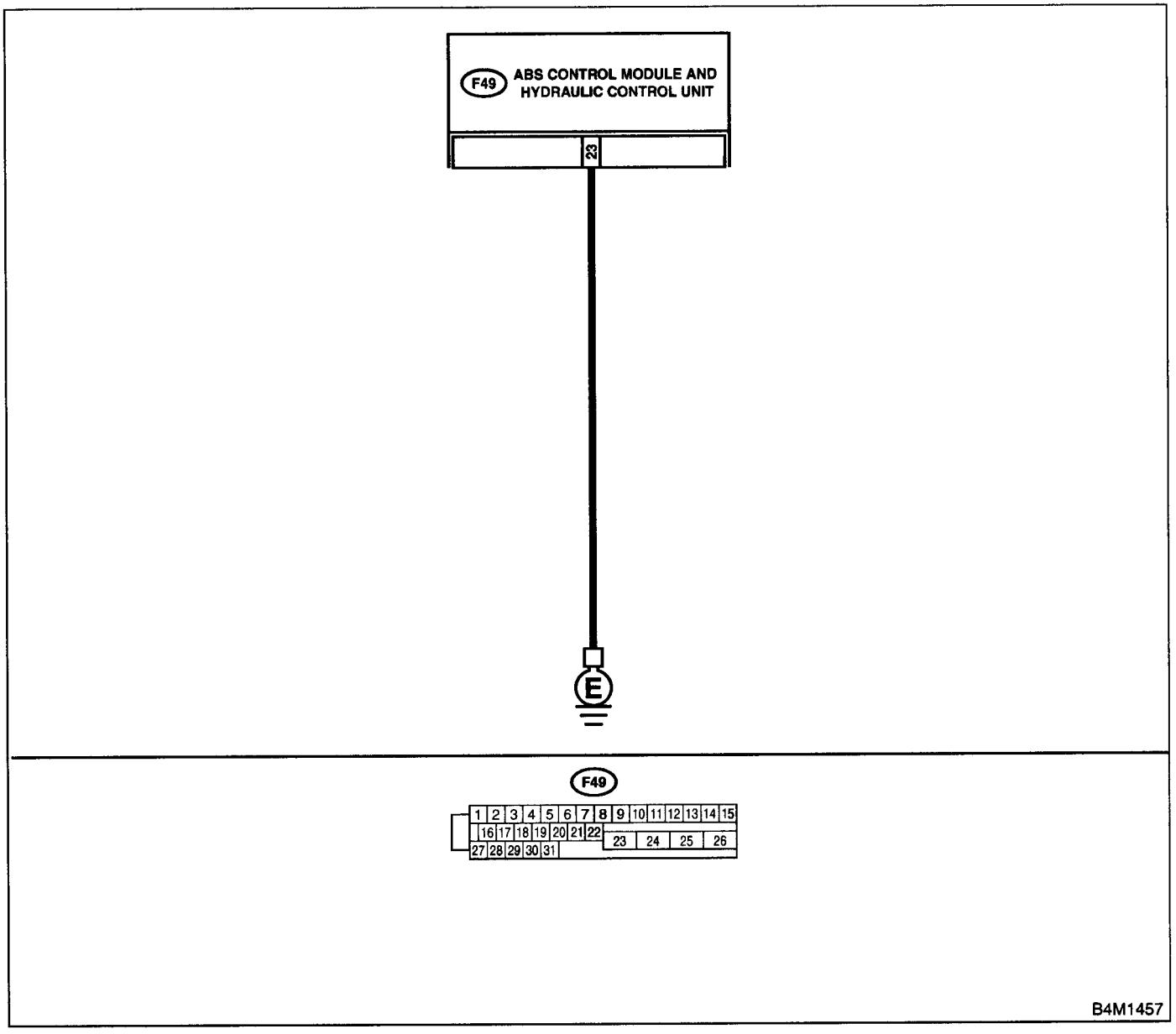

DIAGNOSTICS CHART WITH DIAGNOSIS CONNECTOR

	Step	Check	Yes	No
1	**CHECK GROUND CIRCUIT OF ABSCM&H/U.** 1)Turn the ignition switch to OFF. 2)Disconnect the connector from ABSCM&H/U. 3)Measure the resistance between ABSCM&H/U and chassis ground. ***Connector & terminal*** ***(F49) No. 23 — Chassis ground:***	Is the resistance less than 0.5 Ω?	Go to step **2.**	Repair the ABSCM&H/U ground harness.
2	**CHECK POOR CONTACT IN CONNECTORS.**	Is there poor contact in connectors between battery, ignition switch and ABSCM&H/U?	Repair the connector.	Go to step **3.**
3	**CHECK SOURCES OF SIGNAL NOISE.**	Is the car telephone or the wireless transmitter properly installed?	Go to step **4.**	Properly install the car telephone or the wireless transmitter.
4	**CHECK SOURCES OF SIGNAL NOISE.**	Are noise sources (such as an antenna) installed near the sensor harness?	Install the noise sources apart from the sensor harness.	Go to step **5.**
5	**CHECK ABSCM&H/U.** 1)Connect all connectors. 2)Erase the memory. 3)Perform the inspection mode. 4)Read out the diagnostic trouble code.	Is the same diagnostic trouble code as in the current diagnosis still being output?	Replace the ABSCM&H/U. <Ref. to ABS-7, ABS Control Module and Hydraulic Control Unit (ABSCM&H/U).>	Go to step **6.**
6	**CHECK ANY OTHER DIAGNOSTIC TROUBLE CODES APPEARANCE.**	Are other diagnostic trouble codes being output?	Proceed with the diagnosis corresponding to the diagnostic trouble code.	A temporary poor contact.

V: DTC 42
SOURCE VOLTAGE IS ABNORMAL

DIAGNOSIS:

- Power source voltage of the ABSCM&H/U is low or high.

TROUBLE SYMPTOM:

- ABS does not operate.

WIRING DIAGRAM:

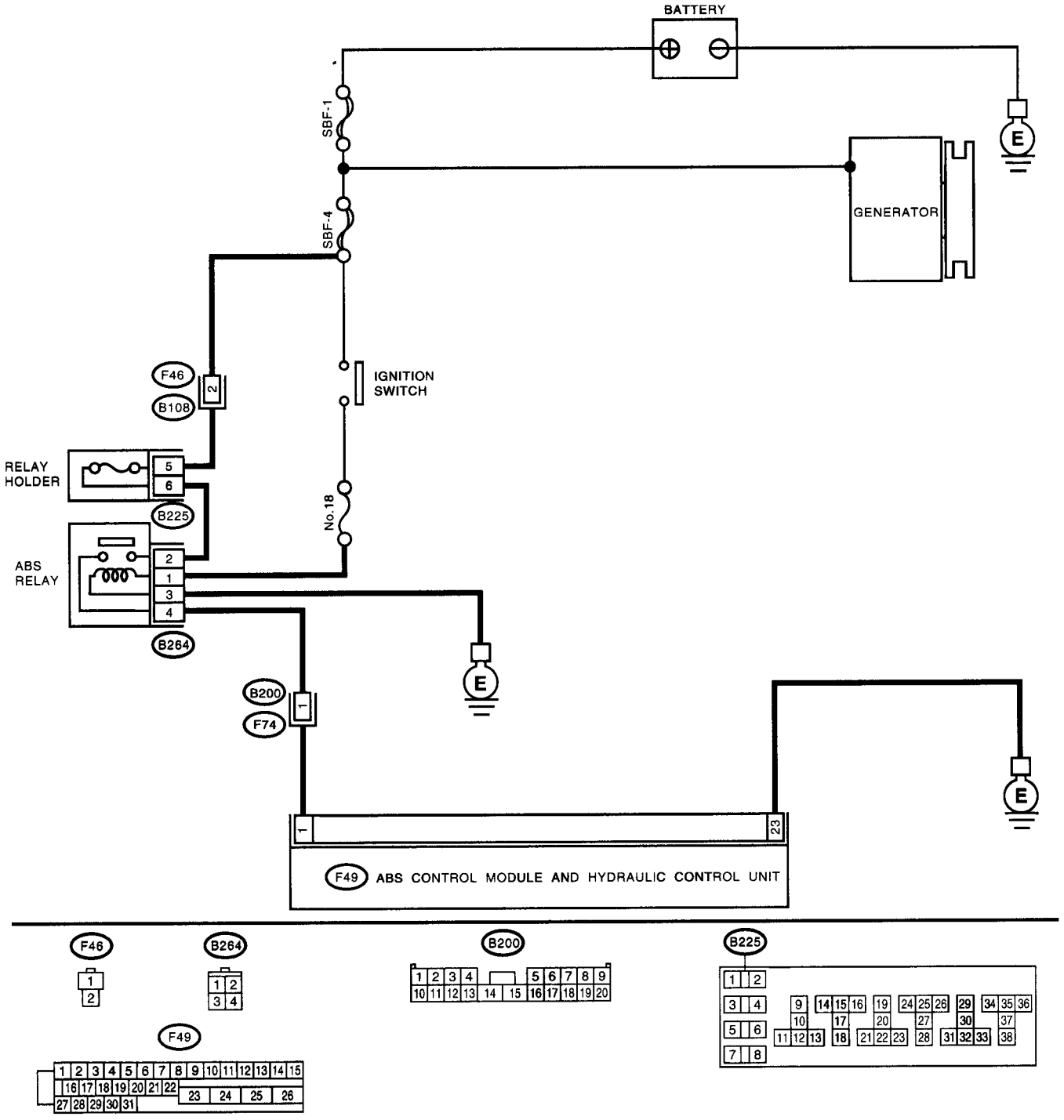

Step	Check	Yes	No
CHECK GENERATOR. 1)Start the engine. 2)Idling after warm-up. 3)Measure the voltage between generator B terminal and chassis ground. ***Terminal*** ***Generator B terminal — Chassis ground:***	s the voltage between 10 and 7 V?	Go to step **2.**	Repair the genera-or. <Ref. to SC-13, Generator.>
CHECK BATTERY TERMINAL. Turn the ignition switch to OFF.	re the positive and negative attery terminals tightly lamped?	Go to step **3.**	Tighten the clamp of terminal.
CHECK INPUT VOLTAGE OF RELAY HOLD-ER. 1)Turn the ignition switch to OFF 2)Remove the fuse. 3)Measure the voltage between ABS relay connector and chassis ground. ***Connector & terminal*** ***(B225) No. 5 (+) — Chassis ground (–):***	s the voltage more than 10 V?	Go to step **4.**	Repair open circuit n harness between battery and Relay holder connector.
CHECK RELAY HOLDER.	s the fuse blown out?	Replace the fuse.	Go to step **5.**
CHECK INPUT VOLTAGE OF ABS RELAY. 1)Install the fuse. 2)Remove the ABS relay 3)Turn the ignition switch to ON 4)Measure the voltage between ABS relay connector and chassis ground. ***Connector & terminal*** ***(B264) No. 2 (+) — Chassis ground (–):***	s the voltage more than 10 V?	Go to step **6.**	Repair open circuit in harness between battery and Relay holder connector.
CHECK INPUT VOLTAGE OF ABS RELAY. Measure the voltage between ABS relay con-nector and chassis ground ***Connector & terminal*** ***(B264) No. 1 (+) — Chassis ground (–):***	s the voltage more than 10 V?	Go to step **7.**	Repair harness connector between battery, ignition switch and ABS relay.
CHECK GROUND CIRCUIT OF ABS RELAY. 1)Turn the ignition switch to OFF. 2)Measure the resistance between ABS relay connector and chassis ground. ***Connector & terminal*** ***(B264) No. 3 (+) — Chassis ground:***	s the resistance less than 5 Ω?	Go to step **8.**	Repair open circuit between ABS relay and chassis ground
CHECK ABS RELAY. 1)Connect the battery to ABS relay terminal No. 1 and 3. 2)Measure the resistance between ABS relay terminals.	s the resistance less than 10 Ω?	Go to step **9.**	Replace the ABS relay.
CHECK INPUT VOLTAGE OF ABSCM&H/U. 1)Disconnect the connector from ABSCM&H/U. 2)Run the engine at idle. 3)Measure the voltage between ABSCM&H/U connector and chassis ground. ***Connector & terminal*** ***(F49) No. 1 (+) — Chassis ground (–):***	s the voltage between 10 and 17 V?	Go to step **10.**	Repair harness connector between battery, ignition switch and ABSCM&H/U.
CHECK GROUND CIRCUIT OF ABSCM&H/U 1)Turn the ignition switch to OFF 2)Measure the resistance between ABSCM&H/U connector and chassis ground. ***Connector & terminal*** ***(F49) No. 23 — Chassis ground:***	s the resistance less than 0.5 Ω?	Go to step **11.**	Repair the ABSCM&H/U ground harness.

Step		Check	Yes	No
11	**CHECK POOR CONTACT IN CONNECTORS.**	Is there poor contact in connectors between generator, battery and ABSCM&H/U?	Repair the connector.	Go to step **12.**
12	**CHECK ABSCM&H/U.** 1)Connect all connectors. 2)Erase the memory. 3)Perform the inspection mode. 4)Read out the diagnostic trouble code.	Is the same diagnostic trouble code as in the current diagnosis still being output?	Replace the ABSCM&H/U. <Ref. to ABS-7, ABS Control Module and Hydraulic Control Unit (ABSCM&H/U).>	Go to step **13.**
13	**CHECK ANY OTHER DIAGNOSTIC TROUBLE CODES APPEARANCE.**	Are other diagnostic trouble codes being output?	Proceed with the diagnosis corresponding to the diagnostic trouble code.	A temporary poor contact.

W: DTC 44
A COMBINATION OF AT CONTROL ABNORMAL

DIAGNOSIS:
- Combination of AT control faults

TROUBLE SYMPTOM:
- ABS does not operate.

WIRING DIAGRAM:

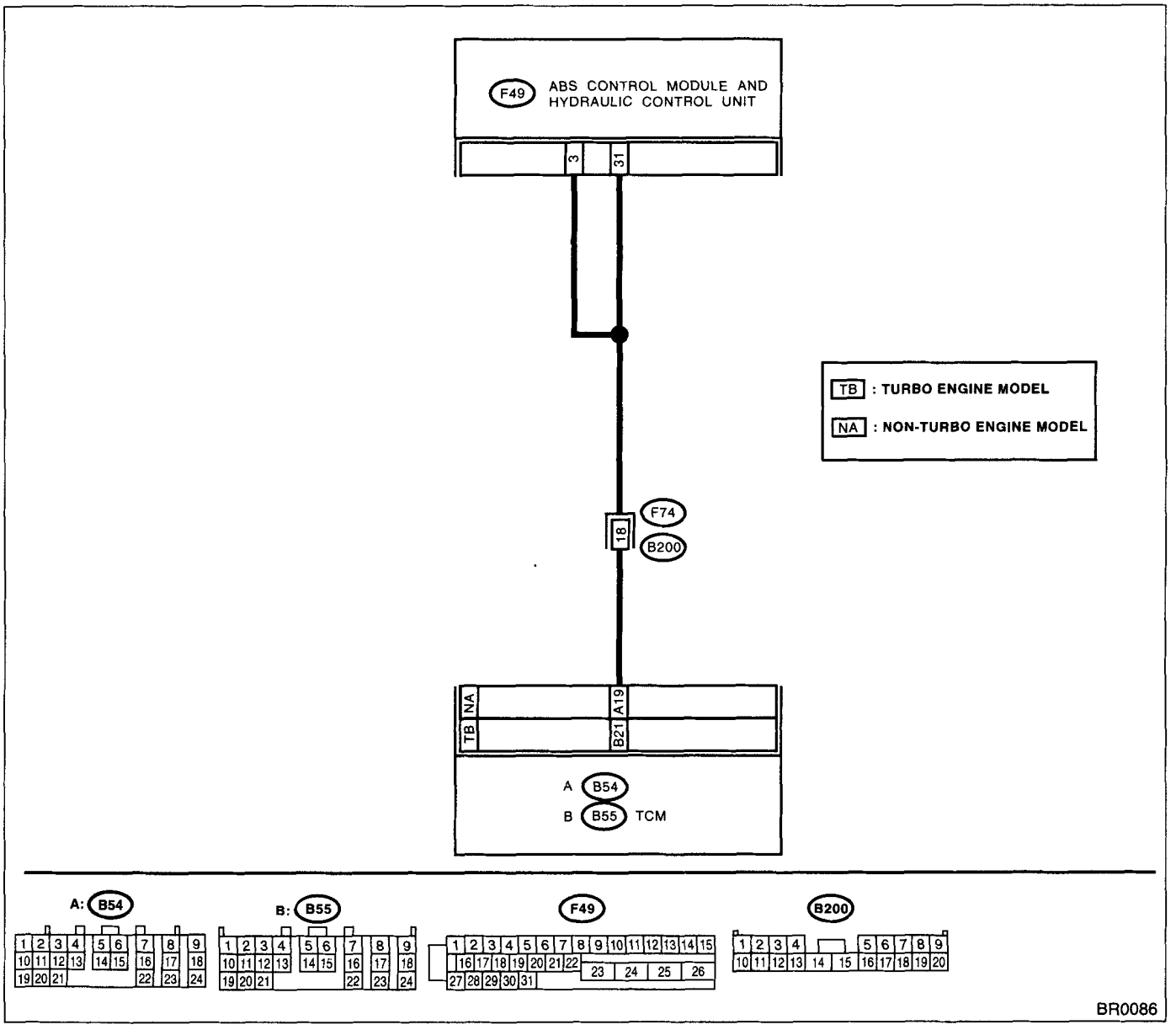

DIAGNOSTICS CHART WITH DIAGNOSIS CONNECTOR

	Step	Check	Yes	No
1	**CHECK SPECIFICATIONS OF THE ABSCM&H/U.** Check specifications of the mark to the ABSCM&H/U. ***CC: AT*** ***CD: MT***	Is an ABSCM&H/U for AT model installed on a MT model?	Replace the ABSCM&H/U. <Ref. to ABS-7, ABS Control Module and Hydraulic Control Unit (ABSCM&H/U).>	Go to step **2.**
2	**CHECK GROUND SHORT OF HARNESS.** 1)Turn the ignition switch to OFF. 2)Disconnect two connectors from TCM. 3)Disconnect the connector from ABSCM&H/U. 4)Measure the resistance between ABSCM&H/U connector and chassis ground. ***Connector & terminal*** ***(F49) No. 3 — Chassis ground:***	Is the resistance more than 1 MΩ?	Go to step **3.**	Repair harness between TCM and ABSCM&H/U.
3	**CHECK BATTERY SHORT OF HARNESS.** Measure the voltage between ABSCM&H/U connector and chassis ground. ***Connector & terminal*** ***(F49) No. 3 (+) — Chassis ground (–):***	Is the voltage less than 1 V?	Go to step **4.**	Repair harness between TCM and ABSCM&H/U.
4	**CHECK BATTERY SHORT OF HARNESS.** 1)Turn the ignition switch to ON. 2)Measure the voltage between ABSCM&H/U connector and chassis ground. ***Connector & terminal*** ***(F49) No. 3 (+) — Chassis ground (–):***	Is the voltage less than 1 V?	Go to step **5.**	Repair harness between TCM and ABSCM&H/U.
5	**CHECK TCM.** 1)Turn the ignition switch to OFF. 2)Connect all connectors to TCM. 3)Turn the ignition switch to ON. 4)Measure the voltage between TCM connector terminal and chassis ground. ***Connector & terminal*** ***NON-TURBO MODEL*** ***(B54) No. 19 (+) — Chassis ground (–):*** ***TURBO MODEL*** ***(B55) No. 21 (+) — Chassis ground (–):***	Is the voltage between 10 and 15 V?	Go to step **7.**	Go to step **6.**
6	**CHECK AT.**	Is the AT functioning normally?	Replace the TCM.	Repair the AT.
7	**CHECK OPEN CIRCUIT OF HARNESS.** Measure the voltage between ABSCM&H/U connector and chassis ground. ***Connector & terminal*** ***(F49) No. 3 (+) — Chassis ground (–):*** ***(F49) No. 31 (+) — Chassis ground (–):***	Is the voltage between 10 and 15 V?	Go to step **8.**	Repair harness/ connector between TCM and ABSCM&H/U.
8	**CHECK POOR CONTACT IN CONNECTORS.**	Is there poor contact in connectors between TCM and ABSCM&H/U?	Repair the connector.	Go to step **9.**
9	**CHECK ABSCM&H/U.** 1)Turn the ignition switch to OFF. 2)Connect all connectors. 3)Erase the memory. 4)Perform the inspection mode. 5)Read out the diagnostic trouble code.	Is the same diagnostic trouble code as in the current diagnosis still being output?	Replace the ABSCM&H/U. <Ref. to ABS-7, ABS Control Module and Hydraulic Control Unit (ABSCM&H/U).>	Go to step **10.**

Step		Check	Yes	No
10	**CHECK ANY OTHER DIAGNOSTIC TROUBLE CODES APPEARANCE.**	Are other diagnostic trouble codes being output?	Proceed with the diagnosis corresponding to the diagnostic trouble code.	A temporary poor contact.

X: DTC 51
ABNORMAL VALVE RELAY

DIAGNOSIS:
- Faulty valve relay

TROUBLE SYMPTOM:
- ABS does not operate.

WIRING DIAGRAM:

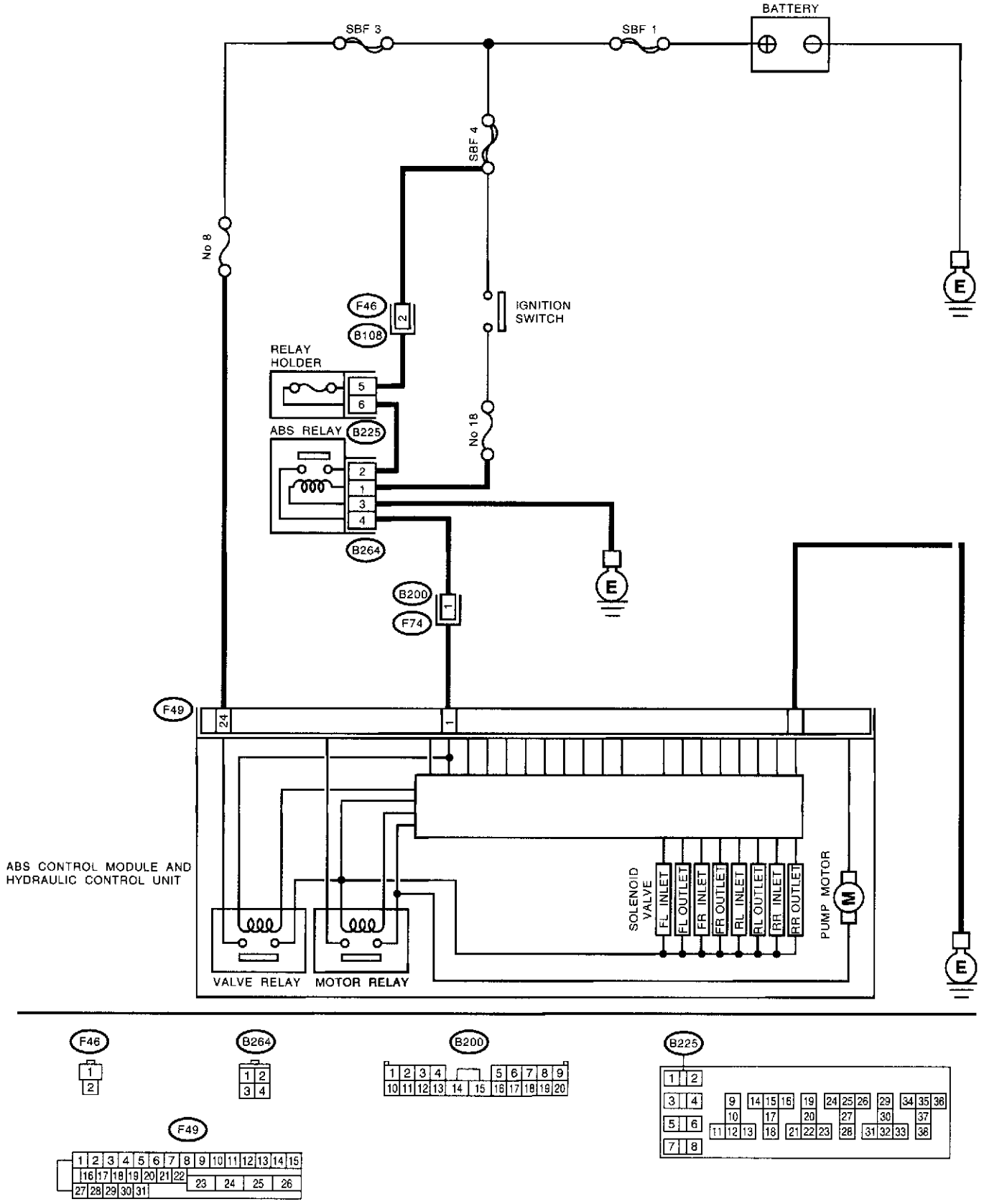

DIAGNOSTICS CHART WITH DIAGNOSIS CONNECTOR

	Step	Check	Yes	No
1	**CHECK INPUT VOLTAGE OF RELAY HOLDER.** 1)Turn the ignition switch to OFF. 2)Remove the fuse. 3)Measure the voltage between ABS relay connector and chassis ground. ***Connector & terminal*** ***(B225) No. 5 (+) — Chassis ground (–):***	Is the voltage more than 10 V?	Go to step **2.**	Repair open circuit in harness between battery and relay holder connector.
2	**CHECK RELAY HOLDER.**	Is the fuse blown out?	Replace fuse.	Go to step **3.**
3	**CHECK INPUT VOLTAGE OF ABS RELAY.** 1)Install the fuse. 2)Remove the ABS relay. 3)Turn the ignition switch to ON. 4)Measure the voltage between ABS relay connector and chassis ground. ***Connector & terminal*** ***(B264) No. 2 (+) — Chassis ground (–):***	Is the voltage more than 10 V?	Go to step **4.**	Repair open circuit in harness between battery and relay holder connector.
4	**CHECK INPUT VOLTAGE OF ABS RELAY.** Measure the voltage between ABS relay connector and chassis ground. ***Connector & terminal*** ***(B264) No. 1 (+) — Chassis ground (–):***	Is the voltage more than 10 V?	Go to step **5.**	Repair harness connector between battery, ignition switch and ABS relay.
5	**CHECK GROUND CIRCUIT OF ABS RELAY.** 1)Turn the ignition switch to OFF. 2)Measure the resistance between ABS relay connector and chassis ground. ***Connector & terminal*** ***(B264) No. 3 (+) — Chassis ground:***	Is the resistance less than 5 Ω?	Go to step **6.**	Repair open circuit between ABS relay and chassis ground.
6	**CHECK ABS RELAY.** 1)Connect the battery to ABS relay terminal No. 1 and 3. 2)Measure the resistance between ABS relay terminals.	Is the resistance less than 10 Ω?	Go to step **7.**	Replace the ABS relay.
7	**CHECK INPUT VOLTAGE OF ABSCM&H/U.** 1)Turn the ignition switch to OFF. 2)Disconnect the connector from ABSCM&H/U. 3)Run the engine at idle. 4)Measure the voltage between ABSCM&H/U connector and chassis ground. ***Connector & terminal*** ***(F49) No. 1 (+) — Chassis ground (–):*** ***(F49) No. 24 (+) — Chassis ground (–):***	Is the voltage between 10 and 15 V?	Go to step **8.**	Repair harness connector between battery, ABS relay and ABSCM&H/U.
8	**CHECK GROUND CIRCUIT OF ABSCM&H/U.** 1)Turn the ignition switch to OFF. 2)Measure the resistance between ABSCM&H/U connector and chassis ground. ***Connector & terminal*** ***(F49) No. 23 — Chassis ground:***	Is the resistance less than 0.5 Ω?	Go to step **9.**	Repair the ABSCM&H/U ground harness.
9	**CHECK VALVE RELAY IN ABSCM&H/U.** Measure the resistance between ABSCM&H/U and terminals. ***Terminals*** ***No. 23 (+) — No. 24 (–):***	Is the resistance more than 1 MΩ?	Go to step **10.**	Replace the ABSCM&H/U. <Ref. to ABS-7, ABS Control Module and Hydraulic Control Unit (ABSCM&H/U).>
10	**CHECK POOR CONTACT IN CONNECTORS.**	Is there poor contact in connectors between generator, battery and ABSCM&H/U?	Repair the connector.	Go to step **11.**

Step		Check	Yes	No
11	**CHECK ABSCM&H/U.** 1)Connect all connectors. 2)Erase the memory. 3)Perform the inspection mode. 4)Read out the diagnostic trouble code.	Is the same diagnostic trouble code as in the current diagnosis still being output?	Replace the ABSCM&H/U. <Ref. to ABS-7, ABS Control Module and Hydraulic Control Unit (ABSCM&H/U).>	Go to step **12.**
12	**CHECK ANY OTHER DIAGNOSTIC TROUBLE CODES APPEARANCE.**	Are other diagnostic trouble codes being output?	Proceed with the diagnosis corresponding to the diagnostic trouble code.	A temporary poor contact.

Y: DTC 52
ABNORMAL MOTOR AND/OR MOTOR RELAY

DIAGNOSIS:
- Faulty motor
- Faulty motor relay
- Faulty harness connector

TROUBLE SYMPTOM:
- ABS does not operate.

WIRING DIAGRAM:

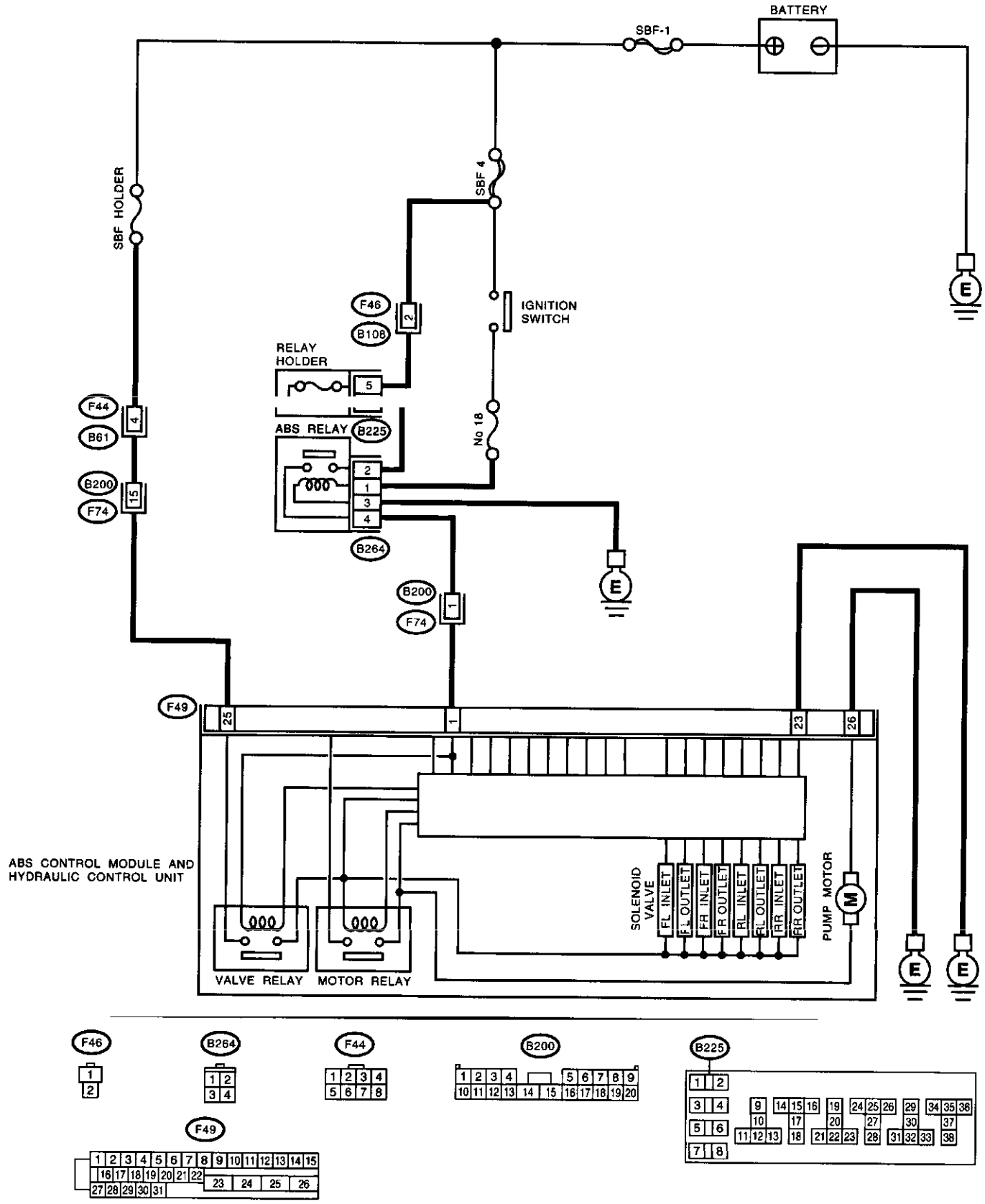

DIAGNOSTICS CHART WITH DIAGNOSIS CONNECTOR

	Step	Check	Yes	No
1	**CHECK INPUT VOLTAGE OF ABSCM&H/U.** 1)Turn the ignition switch to OFF. 2)Disconnect the connector from ABSCM&H/U. 3)Turn the ignition switch to ON. 4)Measure the voltage between ABSCM&H/U connector and chassis ground. ***Connector & terminal*** ***(F49) No. 25 (+) — Chassis ground (–):***	Is the voltage between 10 and 15 V?	Go to step **2.**	Repair harness/ connector between battery and ABSCM&H/U and check fuse SBF-holder.
2	**CHECK GROUND CIRCUIT OF MOTOR.** 1)Turn the ignition switch to OFF. 2)Measure the resistance between ABSCM&H/U connector and chassis ground. ***Connector & terminal*** ***(F49) No. 26 — Chassis ground:***	Is the resistance less than 0.5 Ω?	Go to step **3.**	Repair the ABSCM&H/U ground harness.
3	**CHECK INPUT VOLTAGE OF RELAY HOLDER.** 1)Turn the ignition switch to OFF. 2)Remove the fuse. 3)Measure the voltage between ABS relay connector and chassis ground. ***Connector & terminal*** ***(B225) No. 5 (+) — Chassis ground (–):***	Is the voltage more than 10 V?	Go to step **4.**	Repair open circuit in harness between battery and Relay holder connector.
4	**CHECK RELAY HOLDER.**	Is the fuse blown out?	Replace the fuse.	Go to step **5.**
5	**CHECK INPUT VOLTAGE OF ABS RELAY.** 1)Install the fuse. 2)Remove the ABS relay. 3)Turn the ignition switch to ON. 4)Measure the voltage between ABS relay connector and chassis ground. ***Connector & terminal*** ***(B264) No. 2 (+) — Chassis ground (–):***	Is the voltage more than 10 V?	Go to step **6.**	Repair open circuit in harness between battery and Relay holder connector.
6	**CHECK INPUT VOLTAGE OF ABS RELAY.** Measure the voltage between ABS relay connector and chassis ground. ***Connector & terminal*** ***(B264) No. 1 (+) — Chassis ground (–):***	Is the voltage more than 10 V?	Go to step **7.**	Repair harness connector between battery, ignition switch and ABS relay.
7	**CHECK GROUND CIRCUIT OF ABS RELAY.** 1)Turn the ignition switch to OFF. 2)Measure the resistance between ABS relay connector and chassis ground. ***Connector & terminal*** ***(B264) No. 3 (+) — Chassis ground:***	Is the resistance less than 5 Ω?	Go to step **8.**	Repair open circuit between ABS relay and chassis ground.
8	**CHECK ABS RELAY.** 1)Connect the battery to ABS relay terminal No. 1 and 3. 2)Measure the resistance between ABS relay terminals.	Is the resistance less than 10 Ω?	Go to step **9.**	Replace the ABS relay.
9	**CHECK INPUT VOLTAGE OF ABSCM&H/U.** 1)Run the engine at idle. 2)Measure the voltage between ABSCM&H/U connector and chassis ground. ***Connector & terminal*** ***(F49) No. 1 (+) — Chassis ground (–):***	Is the voltage between 10 and 15 V?	Go to step **10.**	Repair harness connector between battery, ignition switch and ABSCM&H/U.

	Step	Check	Yes	No
10	**CHECK GROUND CIRCUIT OF ABSCM&H/U.** 1)Turn the ignition switch to OFF. 2)Measure the resistance between ABSCM&H/U connector and chassis ground. ***Connector & terminal*** ***(F49) No. 23 — Chassis ground:***	Is the resistance less than 0.5 Ω?	Go to step **11.**	Repair the ABSCM&H/U ground harness.
11	**CHECK MOTOR OPERATION.** Operate the sequence control. <Ref. to ABS-11, ABS Sequence Control.> NOTE: Use the diagnosis connector to operate the sequence control.	Can motor revolution noise (buzz) be heard when carrying out the sequence control?	Go to step **12.**	Replace the ABSCM&H/U. <Ref. to ABS-7, ABS Control Module and Hydraulic Control Unit (ABSCM&H/U).>
12	**CHECK POOR CONTACT IN CONNECTORS.** Turn the ignition switch to OFF.	Is there poor contact in connector between generator, battery and ABSCM&H/U?	Repair the connector.	Go to step **13.**
13	**CHECK ABSCM&H/U.** 1)Connect all connectors. 2)Erase the memory. 3)Perform the inspection mode. 4)Read out the diagnostic trouble code.	Is the same diagnostic trouble code as in the current diagnosis still being output?	Replace the ABSCM&H/U. <Ref. to ABS-7, ABS Control Module and Hydraulic Control Unit (ABSCM&H/U).>	Go to step **14.**
14	**CHECK ANY OTHER DIAGNOSTIC TROUBLE CODES APPEARANCE.**	Are other diagnostic trouble codes being output?	Proceed with the diagnosis corresponding to the diagnostic trouble code.	A temporary poor contact.

Z: DTC 54
ABNORMAL STOP LIGHT SWITCH

DIAGNOSIS:
- Faulty stop light switch

TROUBLE SYMPTOM:
- ABS does not operate.

WIRING DIAGRAM:

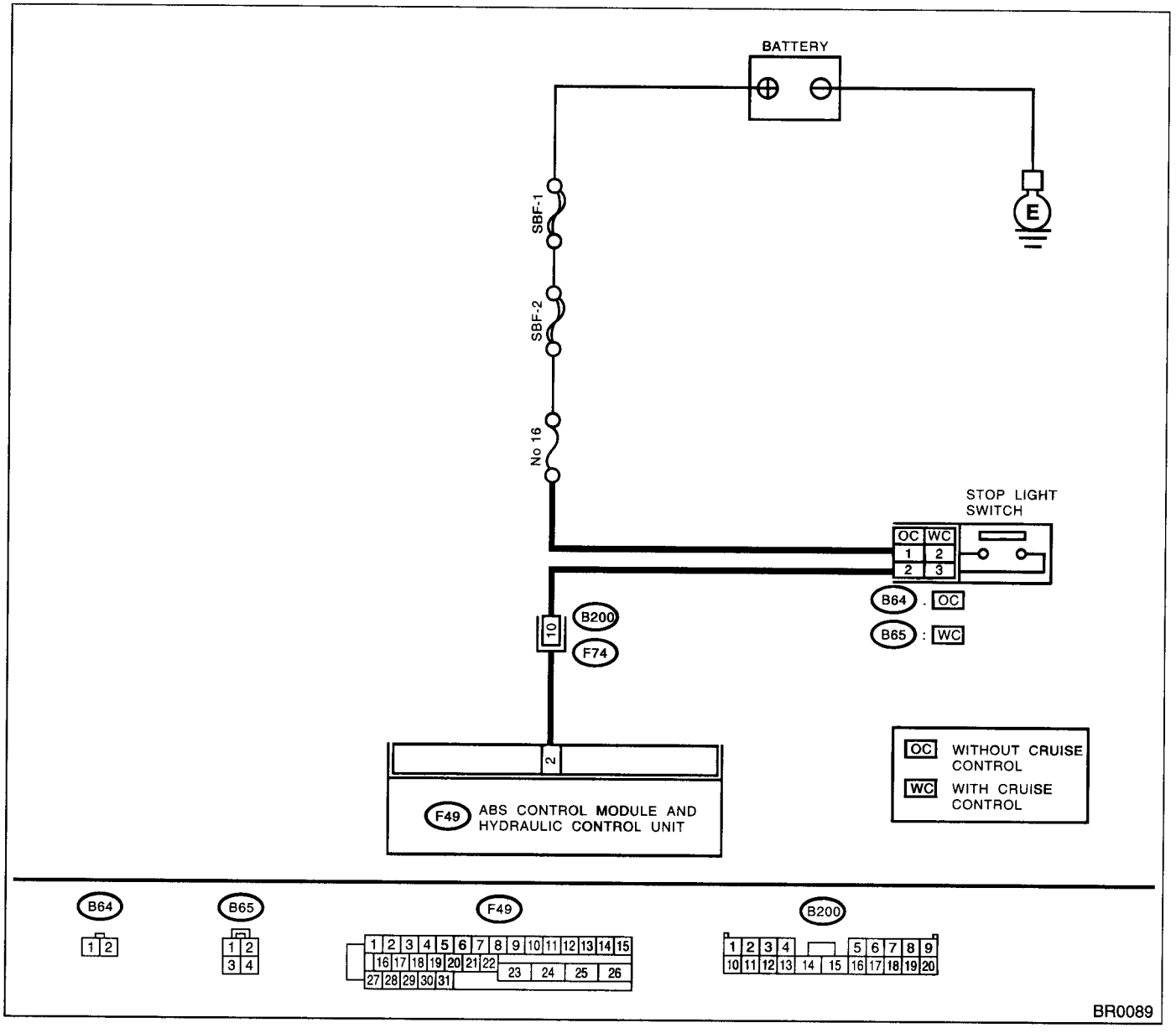

DIAGNOSTICS CHART WITH DIAGNOSIS CONNECTOR

	Step	Check	Yes	No
1	**CHECK STOP LIGHTS COME ON.** Depress the brake pedal.	Do the stop lights come on?	Go to step **2.**	Repair the stop lights circuit.
2	**CHECK OPEN CIRCUIT IN HARNESS.** 1)Turn the ignition switch to OFF. 2)Disconnect the connector from ABSCM&H/U. 3)Depress the brake pedal. 4)Measure the voltage between ABSCM&H/U connector and chassis ground. ***Connector & terminal*** ***(F49) No. 2 (+) — Chassis ground (–):***	Is the voltage between 10 and 15 V?	Go to step **3.**	Repair harness between stop light switch and ABSCM&H/U.
3	**CHECK POOR CONTACT IN CONNECTORS.**	Is there poor contact in connector between stop light switch and ABSCM&H/U?	Repair the connector.	Go to step **4.**
4	**CHECK ABSCM&H/U.** 1)Connect all connectors. 2)Erase the memory. 3)Perform the inspection mode. 4)Read out the diagnostic trouble code.	Is the same diagnostic trouble code as in the current diagnosis still being output?	Replace the ABSCM&H/U. <Ref. to ABS-7, ABS Control Module and Hydraulic Control Unit (ABSCM&H/U).>	Go to step **5.**
5	**CHECK ANY OTHER DIAGNOSTIC TROUBLE CODES APPEARANCE.**	Are other diagnostic trouble codes being output?	Proceed with the diagnosis corresponding to the diagnostic trouble code.	A temporary poor contact.

AA:DTC 56
ABNORMAL G SENSOR OUTPUT VOLTAGE

DIAGNOSIS:
- Faulty G sensor output voltage

TROUBLE SYMPTOM:
- ABS does not operate.

WIRING DIAGRAM:

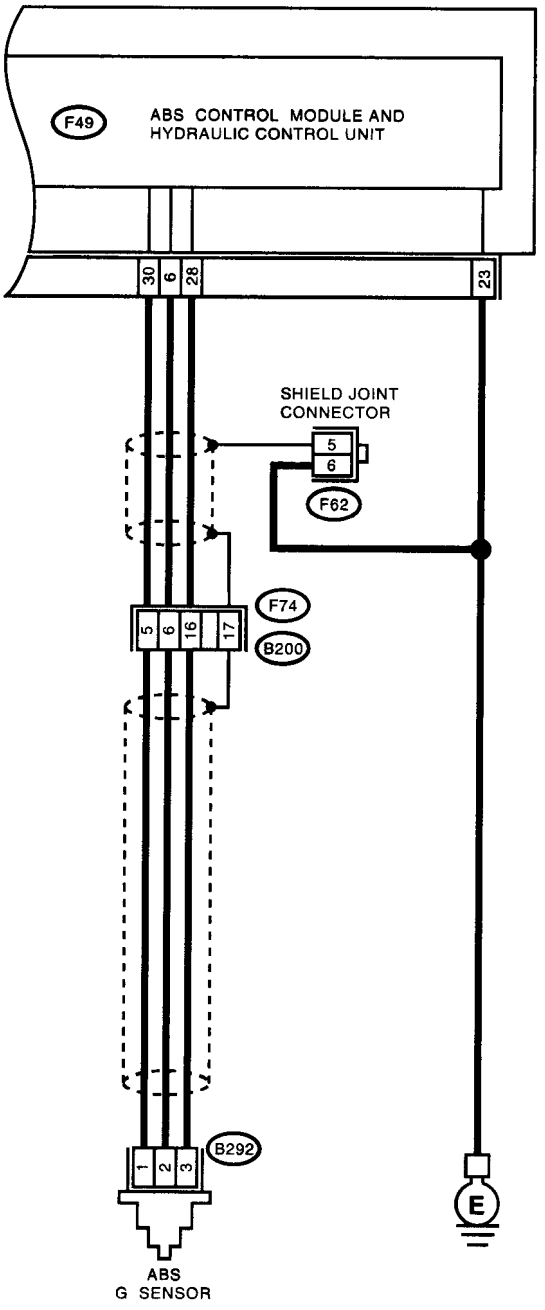

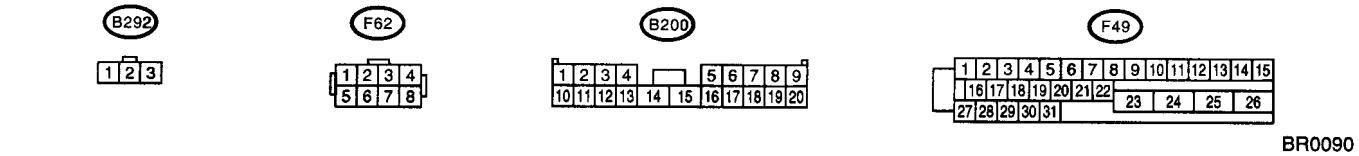

BR0090

DIAGNOSTICS CHART WITH DIAGNOSIS CONNECTOR

	Step	Check	Yes	No
1	**CHECK ALL FOUR WHEELS FOR FREE TURNING.**	Have the wheels been turned freely such as when the vehicle is lifted up, or operated on a rolling road?	The ABS is normal. Erase the diagnostic trouble code.	Go to step **2.**
2	**CHECK SPECIFICATIONS OF ABSCM&H/U.** Check specifications of the mark to the ABSCM&H/U. ***CC: AT*** ***CD: MT***	Does the vehicle specification and the ABSCM&H/U specification match?	Replace the ABSCM&H/U. <Ref. to ABS-7, ABS Control Module and Hydraulic Control Unit (ABSCM&H/U).> **CAUTION:** **Be sure to turn ignition switch to OFF when removing ABSCM&H/U.**	Go to step **3.**
3	**CHECK INPUT VOLTAGE OF G SENSOR.** 1)Turn the ignition switch to OFF. 2)Remove the console box. 3)Disconnect the G sensor from body. (Do not disconnect the connector.) 4)Turn the ignition switch to ON. 5)Measure the voltage between G sensor connector terminals. ***Connector & terminal*** ***(B292) No. 1 (+) — No. 3 (–):***	Is the voltage between 4.75 and 5.25 V?	Go to step **4.**	Repair harness/ connector between G sensor and ABSCM&H/U.
4	**CHECK OPEN CIRCUIT IN G SENSOR OUTPUT HARNESS AND GROUND HARNESS.** 1)Turn the ignition switch to OFF. 2)Disconnect the connector from ABSCM&H/U. 3)Measure the resistance between ABSCM&H/U connector terminals. ***Connector & terminal*** ***(F49) No. 6 — No. 28:***	Is the resistance between 4.3 and 4.9 kΩ?	Go to step **5.**	Repair harness/ connector between G sensor and ABSCM&H/U.
5	**CHECK GROUND SHORT IN G SENSOR OUTPUT HARNESS.** 1)Disconnect the connector from G sensor. 2)Measure the resistance between ABSCM&H/U connector and chassis ground. ***Connector & terminal*** ***(F49) No. 6 — Chassis ground:***	Is the resistance more than 1 MΩ?	Go to step **6.**	Repair harness between G sensor and ABSCM&H/U.
6	**CHECK BATTERY SHORT OF HARNESS.** Measure the voltage between ABSCM&H/U connector and chassis ground. ***Connector & terminal*** ***(F49) No. 6 (+) — Chassis ground (–):***	Is the voltage less than 1 V?	Go to step **7.**	Repair harness between G sensor and ABSCM&H/U.
7	**CHECK BATTERY SHORT OF HARNESS.** 1)Turn the ignition switch to ON. 2)Measure the voltage between ABSCM&H/U connector and chassis ground. ***Connector & terminal*** ***(F49) No. 6 (+) — Chassis ground (–):***	Is the voltage less than 1 V?	Go to step **8.**	Repair harness between G sensor and ABSCM&H/U.

	Step	Check	Yes	No
8	**CHECK GROUND SHORT OF HARNESS.** Measure the resistance between ABSCM&H/U connector and chassis ground. ***Connector & terminal*** ***(F49) No. 28 — Chassis ground:***	Is the resistance more than 1 MΩ?	Go to step **9.**	Repair harness between G sensor and ABSCM&H/U. Replace the ABSCM&H/U. <Ref. to ABS-7, ABS Control Module and Hydraulic Control Unit (ABSCM&H/U).>
9	**CHECK G SENSOR.** 1)Turn the ignition switch to OFF 2)Remove the G sensor from vehicle. 3)Connect the connector to G sensor. 4)Connect the connector to ABSCM&H/U. 5)Turn the ignition switch to ON. 6)Measure the voltage between G sensor connector terminals. ***Connector & terminal*** ***(B292) No. 2 (+) — No. 3 (–):***	Is the voltage between 2.1 and 2.4 V when G sensor is horizontal?	Go to step **10.**	Replace the G sensor. <Ref. to ABS-23, G Sensor.>
10	**CHECK G SENSOR.** Measure the voltage between G sensor connector terminals. ***Connector & terminal*** ***(B292) No. 2 (+) — No. 3 (–):***	Is the voltage between 3.7 and 4.1 V when G sensor is inclined forwards to 90°?	Go to step **11.**	Replace the G sensor. <Ref. to ABS-23, G Sensor.>
11	**CHECK G SENSOR.** Measure the voltage between G sensor connector terminals. ***Connector & terminal*** ***(B292) No. 2 (+) — No. 3 (–):***	Is the voltage between 0.5 and 0.9 V when G sensor is inclined backwards to 90°?	Go to step **12.**	Replace the G sensor. <Ref. to ABS-23, G Sensor.>
12	**CHECK POOR CONTACT IN CONNECTORS.**	Is there poor contact in connector between ABSCM&H/U and G sensor?	Repair connector.	Go to step **13.**
13	**CHECK ABSCM&H/U.** 1)Connect all connectors. 2)Erase the memory. 3)Perform the inspection mode. 4)Read out the diagnostic trouble code.	Is the same diagnostic trouble code as in the current diagnosis still being output?	Replace the ABSCM&H/U. <Ref. to ABS-7, ABS Control Module and Hydraulic Control Unit (ABSCM&H/U).>	Go to step **14.**
14	**CHECK ANY OTHER DIAGNOSTIC TROUBLE CODES APPEARANCE.**	Are other diagnostic trouble codes being output?	Proceed with the diagnosis corresponding to the diagnostic trouble code.	A temporary poor contact.

AB:SELECT MONITOR

Applicable cartridge of select monitor: <Ref. to ABS-10, SPECIAL TOOLS, PREPARATION TOOL, General Description.>

NOTE:
For basic handling of the select monitor, refer to its Operation Manual.

AC:DIAGNOSTIC TROUBLE CODES (DTC) ARE DISPLAYED.

A maximum of 3 diagnostic trouble codes (DTC) are displayed in order of occurrence.

- If a particular diagnostic trouble code (DTC) is not properly stored in memory (due to a drop in AB-SCM&H/U power supply, etc.) when a problem occurs, the diagnostic trouble code (DTC), followed by a question mark "?", appears on the select monitor display. This shows it may be an unreliable reading.

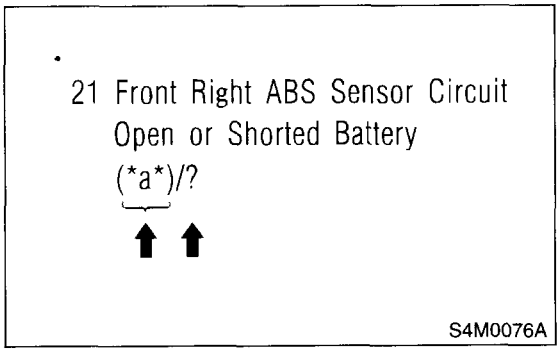

- *a* refers to the troubles in order of occurrence (Latest, Old, Older and Reference).

Display screen	Contents to be monitored
Latest	The most recent diagnostic trouble code (DTC) appears on the select monitor display.
Old	The second most recent diagnostic trouble code (DTC) appears on the select monitor display.
Older	The third most recent diagnostic trouble code (DTC) appears on the select monitor display.
Reference	A specified period of time proceeding diagnostic trouble code (DTC) appears on the select monitor display.

AD:CLEAR MEMORY

Display screen	Contents to be monitored
Clear memory?	Function of clearing diagnostic trouble code (DTC) and freeze frame data.

AE:ANALOG DATA ARE DISPLAYED.

Display screen	Contents to be monitored
FR wheel speed	Wheel speed detected by the Front Right ABS sensor is displayed in km/h or mile/h.
FL wheel speed	Wheel speed detected by the Front Left ABS sensor is displayed in km/h or mile/h.
RR wheel speed	Wheel speed detected by the Rear Right ABS sensor is displayed in km/h or mile/h.
RL wheel speed	Wheel speed detected by the Rear Left ABS sensor is displayed in km/h or mile/h.
Stop light switch	Stop light switch monitor voltage is displayed.
G sensor output voltage	Refers to vehicle acceleration detecting by the analog G sensor. It appears on the select monitor display in volts.

AF:ON/OFF DATA ARE DISPLAYED.

Display screen	Contents to be monitored
Stop light switch	Stop light switch signal
Valve relay signal	Valve relay signal
Motor relay signal	Motor relay signal
ABS signal to TCM	ABS operation signal from ABS control module to TCM
ABS warning light	ABS warning light
Valve relay monitor	Valve relay operation monitor signal
Motor relay monitor	Motor relay operation monitor signal
CCM signal	ABS operation signal from ABS control module to TCM

AG:ABS SEQUENCE CONTROL

Display screen	Contents to be monitored	Index No.
ABS sequence control	Perform ABS sequence control by operating valve and pump motor sequentially.	<Ref. to ABS-11, ABS Sequence Control.>

AH:FREEZE FRAME DATA

NOTE:
- Data stored at the time of trouble occurrence is shown on display.
- Each time trouble occurs, the latest information is stored in the freeze frame data in memory.
- Freeze frame data will be memorized maximum to three.
- If freeze frame data is not properly stored in memory (due to a drop in ABSCM power supply, etc.), a diagnostic trouble code (DTC), preceded by a question mark "?", appears on the select monitor display. This shows it may be an unreliable reading.

Display screen	Contents to be monitored
FR wheel speed	Wheel speed detected by the Front Right ABS sensor is displayed in km/h or mile/h.
FL wheel speed	Wheel speed detected by the Front Left ABS sensor is displayed in km/h or mile/h.
RR wheel speed	Wheel speed detected by the Rear Right ABS sensor is displayed in km/h or mile/h.
RL wheel speed	Wheel speed detected by the Rear Left ABS sensor is displayed in km/h or mile/h.
ABSCM power voltage	Power (in volts) supplied to ABSCM&H/U appears on the select monitor display.
G sensor output voltage	Refers to vehicle acceleration detected by the analog G sensor. It appears on the select monitor display in volts.
Motor relay monitor	Motor relay operation monitor signal
Stop light switch	Stop light switch signal
ABS signal to TCM	ABS operation signal from ABS control module to TCM
ABS-AT control	ABS operation signal from ABS control module to TCM
ABS operation signal	ABS operation signal

13.Diagnostics Chart with Subaru Select Monitor

A: COMMUNICATION FOR INITIALIZING IMPOSSIBLE

DIAGNOSIS:
- Faulty harness connector

TROUBLE SYMPTOM:
- ABS warning light remains on.

WIRING DIAGRAM:

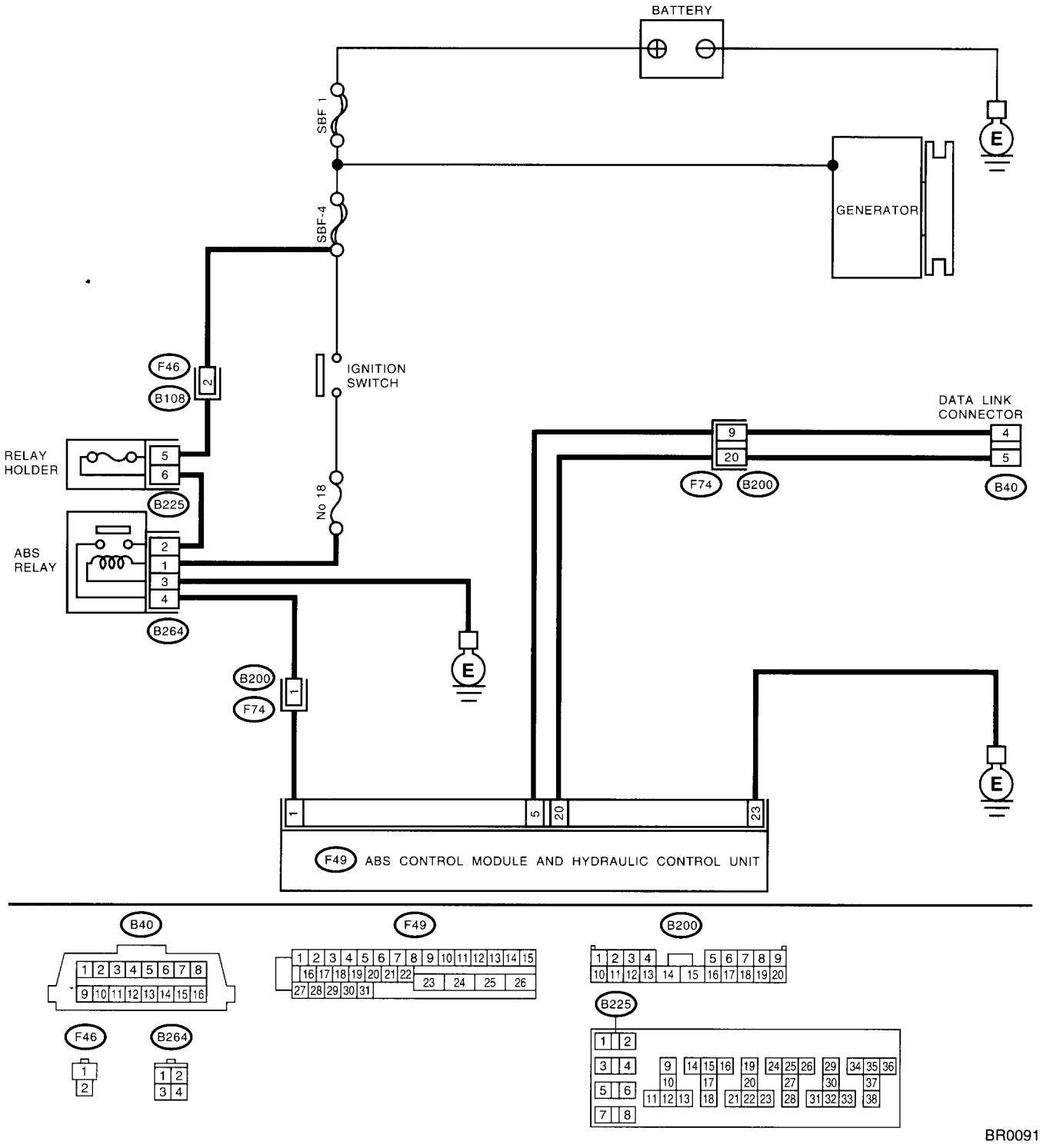

	Step	Check	Yes	No
1	**CHECK IGNITION SWITCH.**	Is the ignition switch ON?	Go to step **2.**	Turn the ignition switch to ON, and select ABS mode using the select monitor.
2	**CHECK BATTERY.** 1)Turn the ignition switch to OFF. 2)Measure the battery voltage.	Is the voltage more than 11 V?	Go to step **3.**	Charge or replace bettery.
3	**CHECK BATTERY TERMINAL.**	Is there poor contact at battery terminal?	Repair or tighten the battery terminal.	Go to step **4.**
4	**CHECK COMMUNICATION OF SELECT MONITOR.** 1)Turn the ignition switch to OFF. 2)Using the select monitor, check whether communication to other system (such as engine, TCM, etc.) can be executed normally.	Are the name and year of the system displayed on the select monitor?	Go to step **10.**	Go to step **5.**
5	**CHECK COMMUNICATION OF SELECT MONITOR.** 1)Turn the ignition switch to OFF. 2)Disconnect the ABSCM&H/U connector. 3)Check whether communication to other systems (such as TCM, engine etc.) can be executed normally.	Are the name and year of the system displayed on the select monitor?	Go to step **10.**	Go to step **6.**
6	**CHECK COMMUNICATION OF SELECT MONITOR.** 1)Turn the ignition switch to OFF. 2)Connect the ABSCM&H/U connector. 3)Disconnect the ECM connector. 4)Check whether communication to other systems (such as TCM, engine etc.) can be executed normally.	Are the name and year of the system displayed on the select monitor?	Inspect the ECM.	Go to step **7.**
7	**CHECK COMMUNICATION OF SELECT MONITOR.** 1)Turn the ignition switch to OFF. 2)Connect the ECM connector. 3)Disconnect the TCM connector. 4)Check whether communication to other systems (such as engine etc.) can be executed normally.	Are the name and year of the system displayed on the select monitor?	Inspect the TCM.	Go to step **8.**
8	**CHECK COMMUNICATION OF SELECT MONITOR.** 1)Turn the ignition switch to OFF. 2)Connect the TCM connector. 3)Disconnect the cruise control module connector. 4)Check whether communication to other systems (such as engine, TCM etc.) can be executed normally. NOTE: If the vehicle is not equipped with cruise control: Go to step **9.**	Are the name and year of the system displayed on the select monitor?	Inspect the cruise control module	Go to step **9.**

	Step	Check	Yes	No
9	**CHECK HARNESS CONNECTOR BETWEEN EACH CONTROL MODULE AND DATA LINK CONNECTOR.** 1)Turn the ignition switch to OFF. 2)Disconnect the TCM, ECM, ABSCM&H/U, and, cruise control module connectors. 3)Measure the resistance between ABSCM&H/U connector and chassis ground. ***Connector & terminal*** ***(B40) No. 5 — Chassis ground:*** ***(B40) No. 4 — Chassis ground:***	s the resistance less than 1 Ω?	Go to step **10.**	Repair harness and connector between each control module and data link connector.
10	**CHECK OUTPUT SIGNAL FOR ABSCM&H/U.** 1)Turn the ignition switch to ON. 2)Measure the voltage between ABSCM&H/U and chassis ground. ***Connector & terminal*** ***(B40) No. 5 (+) — Chassis ground (–):*** ***(B40) No. 4 (+) — Chassis ground (–):***	s the voltage more than 1 V?	Repair harness and connector between each control module and data link connector.	Go to step **11.**
11	**CHECK HARNESS/CONNECTOR BETWEEN ABSCM&H/U AND DATA LINK CONNECTOR.** Measure the resistance between ABSCM&H/U connector and data link connector. ***Connector & terminal*** ***(F49) No. 20 — (B40) No. 5:*** ***(F49) No. 5 — (B40) No. 4:***	s the resistance less than 0.5 Ω?	Repair harness and connector between ABSCM&H/U and data link connector.	Go to step **12.**
12	**CHECK INSTALLATION OF ABSCM&H/U CONNECTOR.** Turn the ignition switch to OFF.	s the ABSCM&H/U connector inserted into ABSCM&H/U until the clamp locks onto it?	Go to step **13.**	nsert ABSCM&H/U connector into ABSCM&H/U.
13	**CHECK INPUT VOLTAGE OF RELAY HOLDER.** 1)Turn the ignition switch to OFF. 2)Remove the fuse. 3)Measure the voltage between ABS relay connector and chassis ground. ***Connector & terminal*** ***(B225) No. 5 (+) — Chassis ground (–):***	s the voltage more than 10 V?	Go to step **14.**	Repair open circuit in harness between battery and Relay holder connector.
14	**CHECK RELAY HOLDER.**	s the fuse blown out?	Replace the fuse.	Go to step **15.**
15	**CHECK INPUT VOLTAGE OF ABS RELAY.** 1)Install the fuse. 2)Remove the ABS relay. 3)Turn the ignition switch to ON. 4)Measure the voltage between ABS relay connector and chassis ground. ***Connector & terminal*** ***(B264) No. 2 (+) — Chassis ground (–):***	s the voltage more than 10 V?	Go to step **16.**	Repair open circuit in harness between battery and Relay holder connector.
16	**CHECK INPUT VOLTAGE OF ABS RELAY.** Measure the voltage between ABS relay connector and chassis ground. ***Connector & terminal*** ***(B264) No. 1 (+) — Chassis ground (–):***	s the voltage more than 10 V?	Go to step **17.**	Repair harness connector between battery, ignition switch and ABS relay
17	**CHECK GROUND CIRCUIT OF ABS RELAY.** 1)Turn the ignition switch to OFF. 2)Measure the resistance between ABS relay connector and chassis ground. ***Connector & terminal*** ***(B264) No. 3 (+) — Chassis ground:***	s the resistance less 5 Ω?	Go to step **18.**	Repair open circuit between ABS relay and chassis ground.

Step		Check	Yes	No
18	**CHECK ABS RELAY.** 1)Connect the battery to ABS relay terminal No. 1 and 3. 2)Measure the resistance between ABS relay terminals.	Is the resistance less than 10 Ω?	Go to step **19.**	Replace the ABS relay.
19	**CHECK POWER SUPPLY CIRCUIT.** 1)Turn the ignition switch to ON (engine OFF). 2)Measure the ignition power supply voltage between ABSCM&H/U connector and chassis ground. ***Connector & terminal*** ***(F49) No. 1 (+) — Chassis ground (–):***	Is the voltage more than 10 V?	Go to step **20.**	Repair open circuit in harness between ABSCM&H/U and battery.
20	**CHECK HARNESS CONNECTOR BETWEEN ABSCM&H/U AND CHASSIS GROUND.** 1)Turn the ignition switch to OFF. 2)Disconnect the connector from ABSCM&H/U and transmission. 3)Measure the resistance of harness between ABSCM&H/U and chassis ground. ***Connector & terminal*** ***(F49) No. 23 — Chassis ground:***	Is the resistance less than 1 Ω?	Go to step **21.**	Repair open circuit in harness between ABSCM&H/U and inhibitor side connector, and poor contact in coupling connector.
21	**CHECK POOR CONTACT IN CONNECTORS.**	Is there poor contact in control module power supply, ground line and data link connector?	Repair the connector.	Replace the ABSCM&H/U. <Ref. to ABS-7, ABS Control Module and Hydraulic Control Unit (ABSCM&H/U).>

B: NO TROUBLE CODE

DIAGNOSIS:
- ABS warning light circuit is shorted.

TROUBLE SYMPTOM:
- ABS warning light remains on.
- NO TROUBLE CODE displayed on the select monitor.

NOTE:
When the ABS warning light is OFF and "NO TROUBLE CODE" is displayed on the select monitor, the system is in normal condition.

WIRING DIAGRAM:

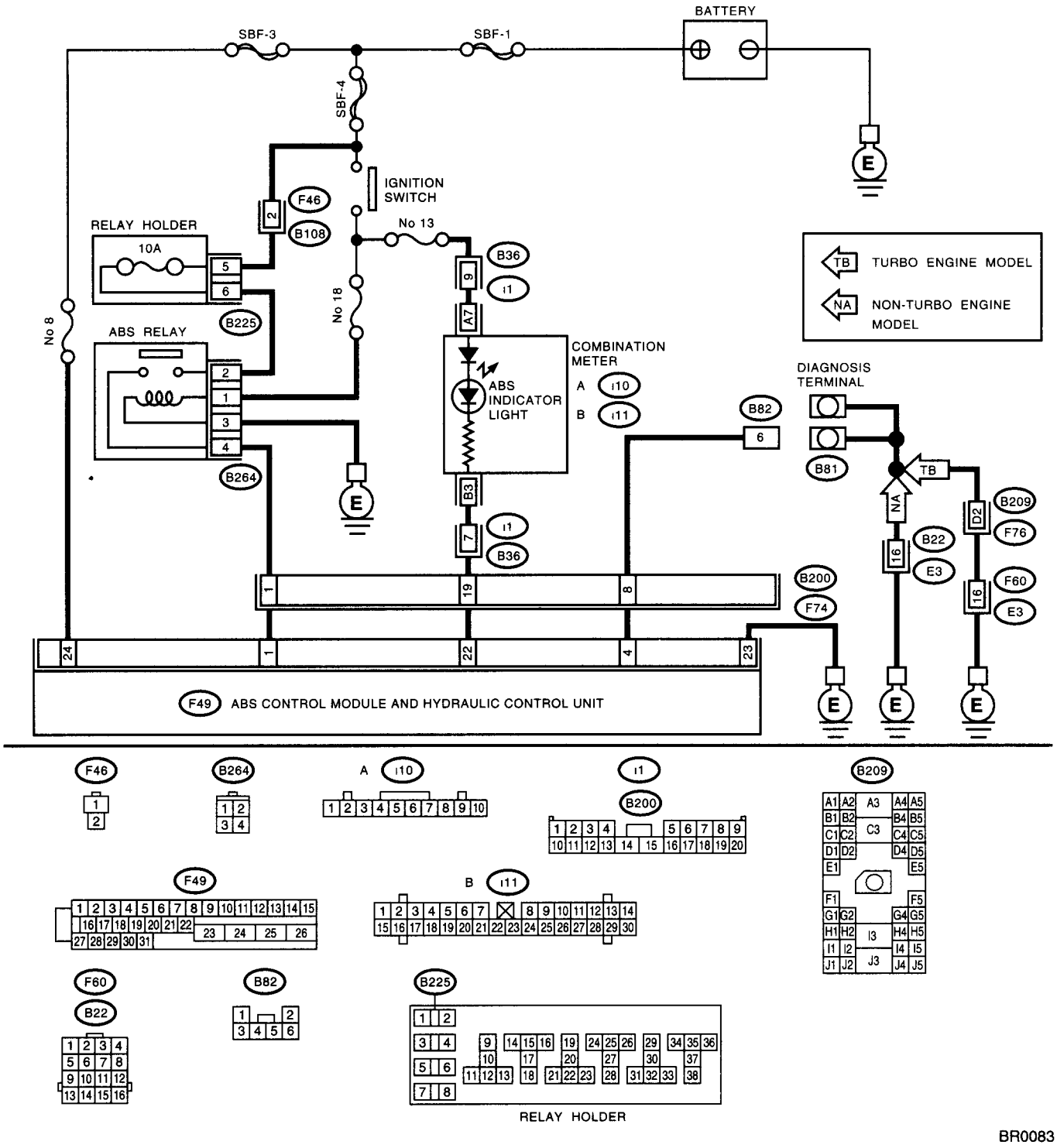

	Step	Check	Yes	No
1	**CHECK WIRING HARNESS.** 1)Turn the ignition switch to OFF. 2)Disconnect the connector (F74) from connector (B200). 3)Turn the ignition switch to ON.	Does the ABS warning light remain off?	Go to step **2.**	Repair the front wiring harness.
2	**CHECK PROJECTION AT ABSCM&H/U.** 1)Turn the ignition switch to OFF. 2)Disconnect the connector from ABSCM&H/U. 3)Check for broken projection at the ABSCM&H/U terminal.	Are the projection broken?	Go to step **3.**	Replace the ABSCM&H/U. <Ref. to ABS-7, ABS Control Module and Hydraulic Control Unit (ABSCM&H/U).>
3	**CHECK ABSCM&H/U.** Measure the resistance between ABSCM&H/U terminals. ***Terminals*** ***No. 22 — No. 23:***	Is the resistance more than 1 MΩ?	Go to step **4.**	Replace the ABSCM&H/U. <Ref. to ABS-7, ABS Control Module and Hydraulic Control Unit (ABSCM&H/U).>
4	**CHECK WIRING HARNESS.** Measure the resistance between connector (F74) and chassis ground. ***Connector & terminal*** ***(F74) No. 19 — Chassis ground:***	Is the resistance less than 0.5 Ω?	Go to step **5.**	Repair the harness.
5	**CHECK WIRING HARNESS.** 1)Connect the connector to ABSCM&H/U. 2)Measure the resistance between connector (F74) and chassis ground. ***Connector & terminal*** ***(F74) No. 19 — Chassis ground:***	Is the resistance more than 1 MΩ?	Go to step **6.**	Repair the harness.
6	**CHECK POOR CONTACT IN ABSCM&H/U CONNECTOR.**	Is there poor contact in ABSCM&H/U connector?	Repair the connector.	Replace the ABSCM&H/U. <Ref. to ABS-7, ABS Control Module and Hydraulic Control Unit (ABSCM&H/U).>

C: DTC 21
OPEN OR SHORT CIRCUIT IN FRONT RIGHT ABS SENSOR CIRCUIT

NOTE:
For the diagnostic procedure, refer to DTC 27. <Ref. to ABS-105, DTC 27 OPEN OR SHORT CIRCUIT IN REAR LEFT ABS SENSOR CIRCUIT, Diagnostics Chart with Subaru Select Monitor.>

D: DTC 23
OPEN OR SHORT CIRCUIT IN FRONT LEFT ABS SENSOR CIRCUIT

NOTE:
For the diagnostic procedure, refer to DTC 27. <Ref. to ABS-105, DTC 27 OPEN OR SHORT CIRCUIT IN REAR LEFT ABS SENSOR CIRCUIT, Diagnostics Chart with Subaru Select Monitor.>

E: DTC 25
OPEN OR SHORT CIRCUIT IN REAR RIGHT ABS SENSOR CIRCUIT

NOTE:
For the diagnostic procedure, refer to DTC 27. <Ref. to ABS-105, DTC 27 OPEN OR SHORT CIRCUIT IN REAR LEFT ABS SENSOR CIRCUIT, Diagnostics Chart with Subaru Select Monitor.>

F: DTC 27
OPEN OR SHORT CIRCUIT IN REAR LEFT ABS SENSOR CIRCUIT

DIAGNOSIS:
- Faulty ABS sensor (Broken wire, input voltage too high)
- Faulty harness connector

TROUBLE SYMPTOM:
- ABS does not operate.

WIRING DIAGRAM:

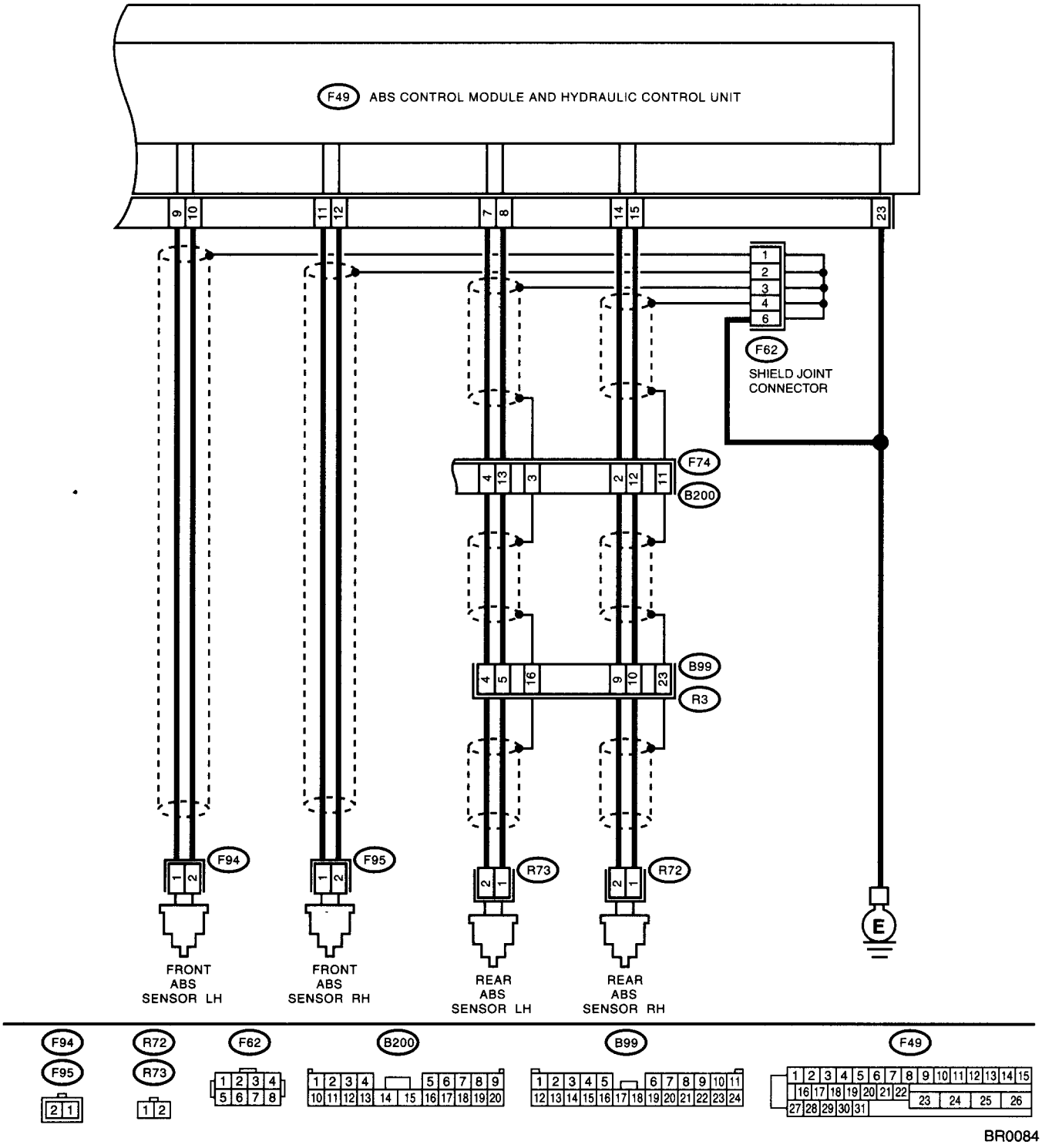

Step	Check	Yes	No
CHECK OUTPUT OF ABS SENSOR USING SELECT MONITOR. 1)Select "Current data display & Save" on the select monitor. 2)Read the ABS sensor output corresponding to the faulty system in the select monitor data display mode.	)oes the speed indicated on he display change in response ɔ the speedometer reading luring acceleration/decelera-ion when the steering wheel is ı the straight-ahead position?	ɜo to step **2.**	Go to step **8.**
CHECK INSTALLATION OF ABS SENSOR. ***Tightening torque:*** ***32 N·m (3.3 kgf-m, 24 ft-lb)***	ıre the ABS sensor installation ıolts tightened securely?	ɜo to step **3.**	Tighten the ABS sensor installation bolts securely.
CHECK ABS SENSOR GAP. Measure the tone wheel to ABS sensor piece gap over entire perimeter of the wheel. ***Front wheel*** ***0.3 — 0.8 mm (0.012 — 0.031 in)*** ***Rear wheel*** ***0.7 — 1.2 mm (0.028 — 0.047 in)***	s the gap within the specifica-ıons?	ɜo to step **4.**	Adjust the gap. NOTE. Adjust the gap us ıng spacers (Pai No 26755AA000) If spacers cannc correct the gap, re place the wori sensor or wori tone wheel.
.CHECK TONE WHEEL RUNOUT. Measure the tone wheel runout	s the runout less than 0.05 nm (0 0020 in)?	ɜo to step **5.**	Replace the tone wheel. Front <Ref to ABS-21, Front Tone Wheel.> Rear: <Ref. to ABS-22, Rear Tone Wheel.>
CHECK POOR CONTACT IN CONNECTORS. Turn the ıgnition switch to OFF	s there poor contact in con-ıectors between ABSCM&H/U ınd ABS sensor?	Repair the con-ıector.	Go to step **6.**
CHECK ABSCM&H/U. 1)Connect all connectors. 2)Erase the memory. 3)Perform the inspection mode. 4)Read out the diagnostic trouble code.	s the same diagnostic trouble ɔode as in the current diagno-ıis still being output?	Replace the ABSCM&H/U. <Ref. to ABS-7, ABS Control Mod-ıle and Hydraulic Control Unit ABSCM&H/U).>	Go to step **7.**
CHECK ANY OTHER DIAGNOSTIC TROU-BLE CODES APPEARANCE.	ıre other diagnostic trouble ɔodes being output?	Proceed with the diagnosis corre-sponding to the diagnostic trouble ɔode	A temporary poor contact. NOTE. Check harnes and connector between AE SCM&H/U an ABS sensor.
CHECK ABS SENSOR. 1)Turn the ıgnition switch to OFF. 2)Disconnect the connector from ABS sensor. 3)Measure the resistance of ABS sensor con-nector terminals. ***Terminal*** ***Front RH No. 1 — No. 2:*** ***Front LH No. 1 — No. 2:*** ***Rear RH No. 1 — No. 2:*** ***Rear LH No. 1 — No. 2:***	s the resistance between 1 ınd 1.5 kΩ?	ɜo to step **9.**	Replace the ABS sensor. Front: <Ref. to ABS-14, Front ABS Sen-sor.> Rear: <Ref. to ABS-18, Rear ABS Sensor.>

	Step	Check	Yes	No
9	**CHECK BATTERY SHORT OF ABS SENSOR.** 1)Disconnect the connector from ABSCM&H/U. 2)Measure the voltage between ABS sensor and chassis ground. ***Terminal*** ***Front RH No. 1 (+) — Chassis ground (–):*** ***Front LH No. 1 (+) — Chassis ground (–):*** ***Rear RH No. 1 (+) — Chassis ground (–):*** ***Rear LH No. 1 (+) — Chassis ground (–):***	Is the voltage less than 1 V?	Go to step **10.**	Replace the ABS sensor. Front. <Ref. to ABS-14, Front ABS Sensor.> Rear: <Ref. to ABS-18, Rear ABS Sensor.>
10	**CHECK BATTERY SHORT OF ABS SENSOR.** 1)Turn the ignition switch to ON. 2)Measure the voltage between ABS sensor and chassis ground. ***Terminal*** ***Front RH No. 1 (+) — Chassis ground (–):*** ***Front LH No. 1 (+) — Chassis ground (–):*** ***Rear RH No. 1 (+) — Chassis ground (–):*** ***Rear LH No. 1 (+) — Chassis ground (–):***	Is the voltage less than 1 V?	Go to step **11.**	Replace the ABS sensor. Front: <Ref. to ABS-14, Front ABS Sensor.> Rear: <Ref. to ABS-18, Rear ABS Sensor.>
11	**CHECK HARNESS/CONNECTOR BETWEEN ABSCM&H/U AND ABS SENSOR.** 1)Turn the ignition switch to OFF. 2)Connect the connector to ABS sensor. 3)Measure the resistance between ABSCM&H/U connector terminals. ***Connector & terminal*** ***DTC 21 / (F49) No. 11 — No. 12:*** ***DTC 23 / (F49) No. 9 — No. 10:*** ***DTC 25 / (F49) No. 14 — No. 15:*** ***DTC 27 / (F49) No. 7 — No. 8:***	Is the resistance between 1 and 1.5 kΩ?	Go to step **12.**	Repair harness/ connector between ABSCM&H/U and ABS sensor.
12	**CHECK BATTERY SHORT OF HARNESS.** Measure the voltage between ABSCM&H/U connector and chassis ground. ***Connector & terminal*** ***DTC 21 / (F49) No. 11 (+) — Chassis ground (–):*** ***DTC 23 / (F49) No. 9 (+) — Chassis ground (–):*** ***DTC 25 / (F49) No. 14 (+) — Chassis ground (–):*** ***DTC 27 / (F49) No. 7 (+) — Chassis ground (–):***	Is the voltage less than 1 V?	Go to step **13.**	Repair harness between ABSCM&H/U and ABS sensor.
13	**CHECK BATTERY SHORT OF HARNESS.** 1)Turn the ignition switch to ON. 2)Measure the voltage between ABSCM&H/U connector and chassis ground. ***Connector & terminal*** ***DTC 21 / (F49) No. 11 (+) — Chassis ground (–):*** ***DTC 23 / (F49) No. 9 (+) — Chassis ground (–):*** ***DTC 25 / (F49) No. 14 (+) — Chassis ground (–):*** ***DTC 27 / (F49) No. 7 (+) — Chassis ground (–):***	Is the voltage less than 1 V?	Go to step **14.**	Repair harness between ABSCM&H/U and ABS sensor.
14	**CHECK INSTALLATION OF ABS SENSOR.** ***Tightening torque:*** ***32 N·m (3.3 kgf-m, 24 ft-lb)***	Are the ABS sensor installation bolts tightened securely?	Go to step **15.**	Tighten the ABS sensor installation bolts securely.

	Step	Check	Yes	No
15	**CHECK ABS SENSOR GAP.** Measure the tone wheel to ABS sensor piece gap over entire perimeter of the wheel. ***Front wheel*** ***0.3 — 0.8 mm (0.012 — 0.031 in)*** ***Rear wheel*** ***0.7 — 1.2 mm (0.028 — 0.047 in)***	Is the gap within the specifications?	Go to step **16.**	Adjust the gap. NOTE: Adjust the gap using spacers (Part No. 26755AA000). If spacers cannot correct the gap, replace the worn sensor or worn tone wheel.
16	**CHECK TONE WHEEL RUNOUT.** Measure the tone wheel runout.	Is the runout less than 0.05 mm (0.0020 in)?	Go to step **17.**	Replace the tone wheel. Front: <Ref. to ABS-21, Front Tone Wheel.> Rear: <Ref. to ABS-22, Rear Tone Wheel.>
17	**CHECK GROUND SHORT OF ABS SENSOR.** 1)Turn the ignition switch to ON. 2)Measure the resistance between ABS sensor and chassis ground. ***Terminal*** ***Front RH No. 1 — Chassis ground:*** ***Front LH No. 1 — Chassis ground:*** ***Rear RH No. 1 — Chassis ground:*** ***Rear LH No. 1 — Chassis ground:***	Is the resistance more than 1 MΩ?	Go to step **18.**	Replace the ABS sensor and ABSCM&H/U. Front: <Ref. to ABS-14, Front ABS Sensor.> Rear: <Ref. to ABS-18, Rear ABS Sensor.> and <Ref. to ABS-7, ABS Control Module and Hydraulic Control Unit (ABSCM&H/U).>
18	**CHECK GROUND SHORT OF HARNESS.** 1)Turn the ignition switch to OFF. 2)Connect the connector to ABS sensor. 3)Measure the resistance between ABSCM&H/U connector terminal and chassis ground. ***Connector & terminal*** ***DTC 21 / (F49) No. 11 — Chassis ground:*** ***DTC 23 / (F49) No. 9 — Chassis ground:*** ***DTC 25 / (F49) No. 14 — Chassis ground:*** ***DTC 27 / (F49) No. 7 — Chassis ground:***	Is the resistance more than 1 MΩ?	Go to step **19.**	Repair harness between ABSCM&H/U and ABS sensor. And replace the ABSCM&H/U. <Ref. to ABS-7, ABS Control Module and Hydraulic Control Unit (ABSCM&H/U).>
19	**CHECK POOR CONTACT IN CONNECTORS.**	Is there poor contact in connectors between ABSCM&H/U and ABS sensor?	Repair the connector.	Go to step **20.**
20	**CHECK ABSCM&H/U.** 1)Connect all connectors. 2)Erase the memory. 3)Perform the inspection mode. 4)Read out the diagnostic trouble code.	Is the same diagnostic trouble code as in the current diagnosis still being output?	Replace the ABSCM&H/U.	Go to step **21.**
21	**CHECK ANY OTHER DIAGNOSTIC TROUBLE CODES APPEARANCE.**	Are other diagnostic trouble codes being output?	Proceed with the diagnosis corresponding to the diagnostic trouble code.	A temporary poor contact. NOTE: Check harness and connectors between ABSCM&H/U and ABS sensor.

G: DTC 22
FRONT RIGHT ABNORMAL ABS SENSOR SIGNAL

NOTE:
For the diagnostic procedure, refer to DTC 28. <Ref. to ABS-111, DTC 28 REAR LEFT ABNORMAL ABS SENSOR SIGNAL, Diagnostics Chart with Subaru Select Monitor.>

H: DTC 24
FRONT LEFT ABNORMAL ABS SENSOR SIGNAL

NOTE:
For the diagnostic procedure, refer to DTC 28. <Ref. to ABS-111, DTC 28 REAR LEFT ABNORMAL ABS SENSOR SIGNAL, Diagnostics Chart with Subaru Select Monitor.>

I: DTC 26
REAR RIGHT ABNORMAL ABS SENSOR SIGNAL

NOTE:
For the diagnostic procedure, refer to DTC 28. <Ref. to ABS-111, DTC 28 REAR LEFT ABNORMAL ABS SENSOR SIGNAL, Diagnostics Chart with Subaru Select Monitor.>

J: DTC 28
REAR LEFT ABNORMAL ABS SENSOR SIGNAL

DIAGNOSIS:
- Faulty ABS sensor signal (noise, irregular signal, etc.)
- Faulty harness/connector

TROUBLE SYMPTOM:
- ABS does not operate.

WIRING DIAGRAM:

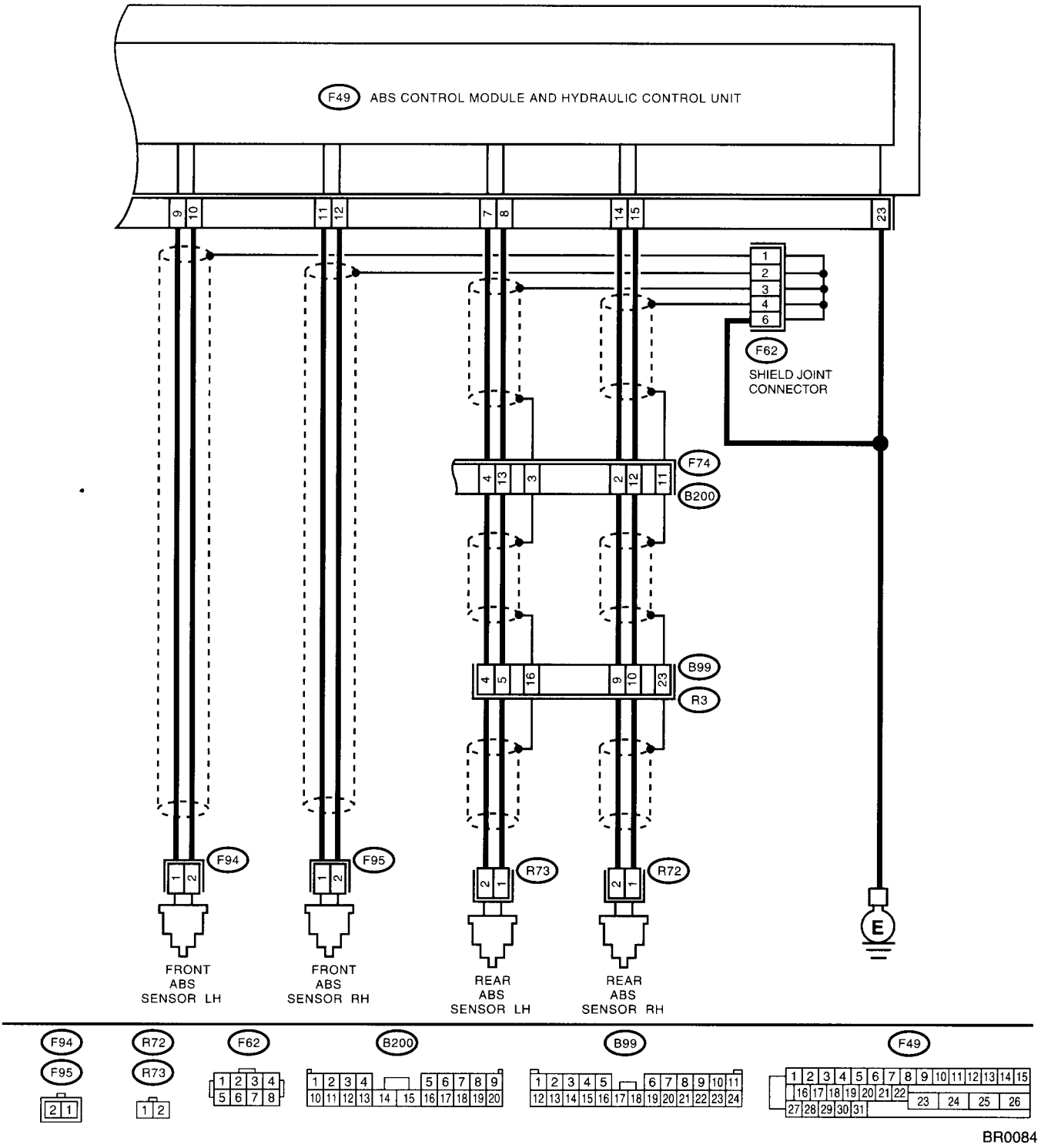

DIAGNOSTICS CHART WITH SUBARU SELECT MONITOR

	Step	Check	Yes	No
1	**CHECK OUTPUT OF ABS SENSOR USING SELECT MONITOR.** 1)Select "Current data display & Save" on the select monitor. 2)Read the ABS sensor output corresponding to the faulty system in the select monitor data display mode.	Does the speed indicated on the display change in response to the speedometer reading during acceleration/deceleration when the steering wheel is in the straight-ahead position?	Go to step **2.**	Go to step **8.**
2	**CHECK POOR CONTACT IN CONNECTORS.** Turn the ignition switch to OFF.	Is there poor contact in connectors between ABSCM&H/U and ABS sensor?	Repair the connector.	Go to step **3.**
3	**CHECK SOURCES OF SIGNAL NOISE.**	Is the car telephone or the wireless transmitter properly installed?	Go to step **4.**	Properly install the car telephone or the wireless transmitter.
4	**CHECK SOURCES OF SIGNAL NOISE.**	Are noise sources (such as an antenna) installed near the sensor harness?	Install the noise sources apart from the sensor harness.	Go to step **5.**
5	**CHECK SHIELD CIRCUIT.** 1)Turn the ignition switch to OFF. 2)Connect all connectors. 3)Measure the resistance between shield connector and chassis ground. ***Connector & terminal*** ***DTC 26 / (B200) No. 11 — Chassis ground:*** ***DTC 28 / (B200) No. 3 — Chassis ground:*** NOTE: For the **DTC 22** and **24**: Go to step **6.**	Is the resistance less than 0.5 Ω?	Go to step **6.**	Repair the shield harness.
6	**CHECK ABSCM&H/U.** 1)Connect all connectors. 2)Erase the memory. 3)Perform the inspection mode. 4)Read out the diagnostic trouble code.	Is the same diagnostic trouble code as in the current diagnosis still being output?	Replace the ABSCM&H/U. <Ref. to ABS-7, ABS Control Module and Hydraulic Control Unit (ABSCM&H/U).>	Go to step **7.**
7	**CHECK ANY OTHER DIAGNOSTIC TROUBLE CODES APPEARANCE.**	Are other diagnostic trouble codes being output?	Proceed with the diagnosis corresponding to the diagnostic trouble code.	A temporary noise interference.
8	**CHECK INSTALLATION OF ABS SENSOR.** ***Tightening torque:*** ***32 N·m (3.3 kgf-m, 24 ft-lb)***	Are the ABS sensor installation bolts tightened securely?	Go to step **9.**	Tighten the ABS sensor installation bolts securely.
9	**CHECK ABS SENSOR GAP.** Measure the tone wheel to ABS sensor piece gap over entire perimeter of the wheel. ***Front wheel*** ***0.3 — 0.8 mm (0.012 — 0.031 in)*** ***Rear wheel*** ***0.7 — 1.2 mm (0.028 — 0.047 in)***	Is the gap within the specifications?	Go to step **10.**	Adjust the gap. NOTE: Adjust the gap using spacer (Part No. 26755AA000). If spacers cannot correct the gap, replace the worn sensor or worn tone wheel.
10	**PREPARE OSCILLOSCOPE.**	Is an oscilloscope available?	Go to step **11.**	Go to step **12.**

	Step	Check	Yes	No
11	**CHECK ABS SENSOR SIGNAL.** 1)Raise all four wheels of ground. 2)Turn the ignition switch OFF. 3)Connect the oscilloscope to the connector. 4)Turn the ignition switch ON. 5)Rotate the wheels and measure voltage at specified frequency. <Ref. to ABS-17, WAVEFORM, Control Module I/O Signal.> NOTE: When this inspection is completed, the ABSCM&H/U sometimes stores the DTC 29. ***Connector & terminal*** ***DTC 22 / (F95) No. 1 (+) — No. 2 (–):*** ***DTC 24 / (F94) No. 1 (+) — No. 2 (–):*** ***DTC 26 / (B99) No. 9 (+) — No. 10 (–):*** ***DTC 28 / (B99) No. 4 (+) — No. 5 (–):***	Is the oscilloscope pattern smooth, as shown in the figure?	Go to step **15.**	Go to step **12.**
12	**CHECK CONTAMINATION OF ABS SENSOR OR TONE WHEEL.** Remove the disc rotor or drum from hub in accordance with diagnostic trouble code.	Is the ABS sensor piece or the tone wheel contaminated by dirt or other foreign matter?	Thoroughly remove dirt or other foreign matter.	Go to step **13.**
13	**CHECK DAMAGE OF ABS SENSOR OR TONE WHEEL.**	Are there broken or damaged in the ABS sensor piece or the tone wheel?	Replace the ABS sensor or tone wheel. Front: <Ref. to ABS-14, Front ABS Sensor.> Rear: <Ref. to ABS-18, Rear ABS Sensor.> and Front: <Ref. to ABS-21, Front Tone Wheel.> Rear: <Ref. to ABS-22, Rear Tone Wheel.>	Go to step **14.**
14	**CHECK TONE WHEEL RUNOUT.** Measure the tone wheel runout.	Is the runout less than 0.05 mm (0.0020 in)?	Go to step **15.**	Replace the tone wheel. Front: <Ref. to ABS-21, Front Tone Wheel.> Rear: <Ref. to ABS-22, Rear Tone Wheel.>
15	**CHECK RESISTANCE OF ABS SENSOR.** 1)Turn the ignition switch OFF. 2)Disconnect the connector from ABS sensor. 3)Measure the resistance between ABS sensor connector terminals. ***Terminal*** ***Front RH No. 1 — No. 2:*** ***Front LH No. 1 — No. 2:*** ***Rear RH No. 1 — No. 2:*** ***Rear LH No. 1 — No. 2:***	Is the resistance between 1 and 1.5 kΩ?	Go to step **16.**	Replace the ABS sensor. Front: <Ref. to ABS-14, Front ABS Sensor.> Rear: <Ref. to ABS-18, Rear ABS Sensor.>
16	**CHECK GROUND SHORT OF ABS SENSOR.** Measure the resistance between ABS sensor and chassis ground. ***Terminal*** ***Front RH No. 1 — Chassis ground:*** ***Front LH No. 1 — Chassis ground:*** ***Rear RH No. 1 — Chassis ground:*** ***Rear LH No. 1 — Chassis ground:***	Is the resistance more than 1 MΩ?	Go to step **17.**	Replace the ABS sensor. Front: <Ref. to ABS-14, Front ABS Sensor.> Rear: <Ref. to ABS-18, Rear ABS Sensor.>

	Step	Check	Yes	No
17	**CHECK HARNESS/CONNECTOR BETWEEN ABSCM&H/U AND ABS SENSOR.** 1)Connect the connector to ABS sensor. 2)Disconnect the connector from ABSCM&H/U. 3)Measure the resistance at ABSCM&H/U connector terminals. ***Connector & terminal*** ***DTC 22 / (F49) No. 11 — No. 12:*** ***DTC 24 / (F49) No. 9 — No. 10:*** ***DTC 26 / (F49) No. 14 — No. 15:*** ***DTC 28 / (F49) No. 7 — No. 8:***	Is the resistance between 1 and 1.5 kΩ?	Go to step **18.**	Repair harness/ connector between ABSCM&H/U and ABS sensor.
18	**CHECK GROUND SHORT OF HARNESS.** Measure the resistance between ABSCM&H/U connector and chassis ground. ***Connector & terminal*** ***DTC 22 / (F49) No. 11 — Chassis ground:*** ***DTC 24 / (F49) No. 9 — Chassis ground:*** ***DTC 26 / (F49) No. 14 — Chassis ground:*** ***DTC 28 / (F49) No. 7 — Chassis ground:***	Is the resistance more than 1 MΩ?	Go to step **19.**	Repair harness/ connector between ABSCM&H/U and ABS sensor.
19	**CHECK GROUND CIRCUIT OF ABSCM&H/U.** Measure the resistance between ABSCM&H/U and chassis ground. ***Connector & terminal*** ***(F49) No. 23 — GND:***	Is the resistance less than 0.5 Ω?	Go to step **20.**	Repair the ABSCM&H/U ground harness.
20	**CHECK POOR CONTACT IN CONNECTORS.**	Is there poor contact in connectors between ABSCM&H/U and ABS sensor?	Repair the connector.	Go to step **21.**
21	**CHECK SOURCES OF SIGNAL NOISE.**	Is the car telephone or the wireless transmitter properly installed?	Go to step **22.**	Properly install the car telephone or the wireless transmitter.
22	**CHECK SOURCES OF SIGNAL NOISE.**	Are noise sources (such as an antenna) installed near the sensor harness?	Install the noise sources apart from the sensor harness.	Go to step **23.**
23	**CHECK SHIELD CIRCUIT.** 1)Connect all connectors. 2)Measure the resistance between shield connector and chassis ground. ***Connector & terminal*** ***DTC 26 / (B200) No. 11 — Chassis ground:*** ***DTC 28 / (B200) No. 3 — Chassis ground:*** NOTE: For the **DTC 22** and **24**: Go to step **24.**	Is the resistance less than 0.5 Ω?	Go to step **24.**	Repair the shield harness.
24	**CHECK ABSCM&H/U.** 1)Connect all connectors. 2)Erase the memory. 3)Perform the inspection mode. 4)Read out the diagnostic trouble code.	Is the same diagnostic trouble code as in the current diagnosis still being output?	Replace the ABSCM&H/U. <Ref. to ABS-7, ABS Control Module and Hydraulic Control Unit (ABSCM&H/U).>	Go to step **25.**
25	**CHECK ANY OTHER DIAGNOSTIC TROUBLE CODES APPEARANCE.**	Are other diagnostic trouble codes being output?	Proceed with the diagnosis corresponding to the diagnostic trouble code.	A temporary noise interference.

K: DTC 29
ABNORMAL ABS SENSOR SIGNAL ON ANY ONE OF FOUR SENSOR

DIAGNOSIS:
- Faulty ABS sensor signal (noise, irregular signal, etc.)
- Faulty tone wheel
- Wheels turning freely for a long time

TROUBLE SYMPTOM:
- ABS does not operate.

WIRING DIAGRAM:

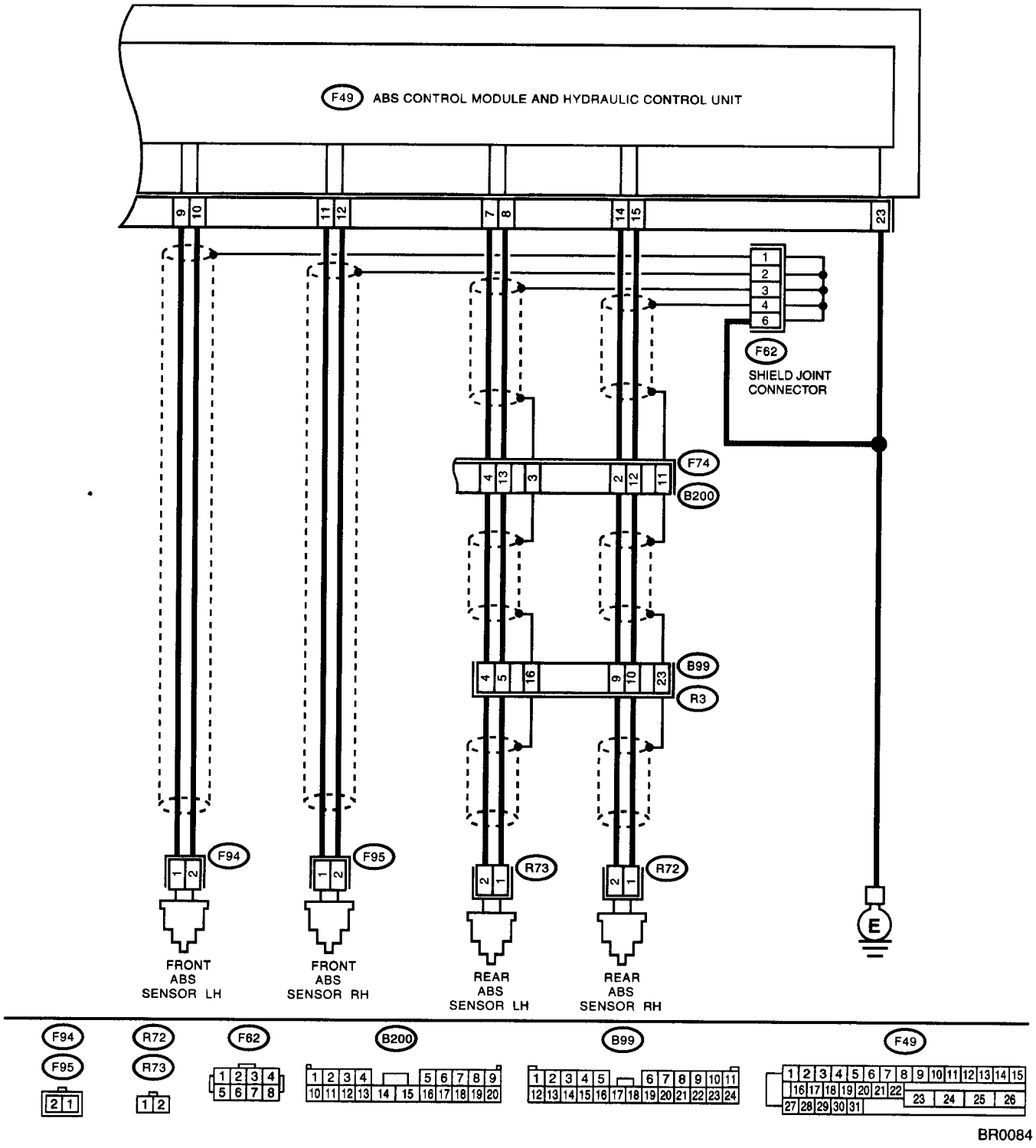

	Step	Check	Yes	No
1	**CHECK IF THE WHEELS HAVE TURNED FREELY FOR A LONG TIME.**	Check if the wheels have been turned freely for more than one minute, such as when the vehicle is jacked-up, under full-lock cornering or when tire is not in contact with road surface.	The ABS is normal. Erase the diagnostic trouble code. NOTE: When the wheels turn freely for a long time, such as when the vehicle is towed or jacked-up, or when steering wheel is continuously turned all the way, this diagnostic trouble code may sometimes occur.	Go to step **2.**
2	**CHECK TIRE SPECIFICATIONS.** Turn the ignition switch to OFF.	Are the tire specifications correct?	Go to step **3.**	Replace the tire.
3	**CHECK WEAR OF TIRE.**	Is the tire worn excessively?	Replace the tire.	Go to step **4.**
4	**CHECK TIRE PRESSURE.**	Is the tire pressure correct?	Go to step **5.**	Adjust the tire pressure.
5	**CHECK INSTALLATION OF ABS SENSOR.** ***Tightening torque:*** ***32 N·m (3.3 kgf-m, 24 ft-lb)***	Are the ABS sensor installation bolts tightened securely?	Go to step **6.**	Tighten the ABS sensor installation bolts securely.
6	**CHECK ABS SENSOR GAP.** Measure the tone wheel to ABS sensor piece gap over entire perimeter of the wheel. ***Front wheel*** ***0.3 — 0.8 mm (0.012 — 0.031 in)*** ***Rear wheel*** ***0.7 — 1.2 mm (0.028 — 0.047 in)***	Is the gap within the specifications?	Go to step **7.**	Adjust the gap. NOTE: Adjust the gap using spacer (Part No. 26755AA000). If spacers cannot correct the gap, replace the worn sensor or worn tone wheel.
7	**PREPARE OSCILLOSCOPE.**	Is an oscilloscope available?	Go to step **8.**	Go to step **9.**

	Step	Check	Yes	No
8	**CHECK ABS SENSOR SIGNAL.** 1)Raise all four wheels of ground. 2)Turn the ignition switch OFF 3)Connect the oscilloscope to the connector (B99), (F95) or (F94) in accordance with trouble code. 4)Turn the ignition switch ON. 5)Rotate the wheels and measure voltage at specified frequency. <Ref. to ABS-17, WAVEFORM, Control Module I/O Signal.> NOTE: When this inspection is completed, the ABSCM&H/U sometimes stores the DTC 29. ***Connector & terminal*** ***Front RH*** ***(F95) No. 1 (+) — No. 2 (–):*** ***Front LH*** ***(F94) No. 1 (+) — No. 2 (–):*** ***Rear RH*** ***(B99) No. 9 (+) — No. 10 (–):*** ***Rear LH*** ***(B99) No. 4 (+) — No. 5 (–):***	Is oscilloscope pattern smooth, as shown in the figure?	Go to step **12.**	Go to step **9.**
9	**CHECK CONTAMINATION OF ABS SENSOR OR TONE WHEEL.** Remove the disc rotor from hub.	Is the ABS sensor piece or the tone wheel contaminated by dirt or other foreign matter?	Thoroughly remove dirt or other foreign matter.	Go to step **10.**
10	**CHECK DAMAGE OF ABS SENSOR OR TONE WHEEL.**	Are there broken or damaged teeth in the ABS sensor piece or the tone wheel?	Replace the ABS sensor or tone wheel. Front: <Ref. to ABS-14, Front ABS Sensor.> Rear: <Ref. to ABS-18, Rear ABS Sensor.> and Front: <Ref. to ABS-21, Front Tone Wheel.> Rear: <Ref. to ABS-22, Rear Tone Wheel.>	Go to step **11.**
11	**CHECK TONE WHEEL RUNOUT.** Measure the tone wheel runout.	Is the runout less than 0.05 mm (0.0020 in)?	Go to step **12.**	Replace the tone wheel. Front: <Ref. to ABS-21, Front Tone Wheel.> Rear: <Ref. to ABS-22, Rear Tone Wheel.>
12	**CHECK ABSCM&H/U.** 1)Turn the ignition switch to OFF. 2)Connect all connectors. 3)Erase the memory. 4)Perform the inspection mode. 5)Read out the diagnostic trouble code.	Is the same diagnostic trouble code as in the current diagnosis still being output?	Replace the ABSCM&H/U. <Ref. to ABS-7, ABS Control Module and Hydraulic Control Unit (ABSCM&H/U).>	Go to step **13.**
13	**CHECK ANY OTHER DIAGNOSTIC TROUBLE CODES APPEARANCE.**	Are other diagnostic trouble codes being output?	Proceed with the diagnosis corresponding to the diagnostic trouble code.	A temporary poor contact.

L: DTC 31
FRONT RIGHT INLET VALVE MALFUNCTION

NOTE:
For the diagnostic procedure, refer to DTC 37. <Ref. to ABS-121, DTC 37 REAR LEFT INLET VALVE MALFUNCTION, Diagnostics Chart with Subaru Select Monitor.>

M: DTC 33
FRONT LEFT INLET VALVE MALFUNCTION

NOTE:
For the diagnostic procedure, refer to DTC 37. <Ref. to ABS-121, DTC 37 REAR LEFT INLET VALVE MALFUNCTION, Diagnostics Chart with Subaru Select Monitor.>

N: DTC 35
REAR RIGHT INLET VALVE MALFUNCTION

NOTE:
For the diagnostic procedure, refer to DTC 37. <Ref. to ABS-121, DTC 37 REAR LEFT INLET VALVE MALFUNCTION, Diagnostics Chart with Subaru Select Monitor.>

O: DTC 37
REAR LEFT INLET VALVE MALFUNCTION

DIAGNOSIS:
- Faulty harness/connector
- Faulty inlet solenoid valve

TROUBLE SYMPTOM:
- ABS does not operate.

WIRING DIAGRAM:

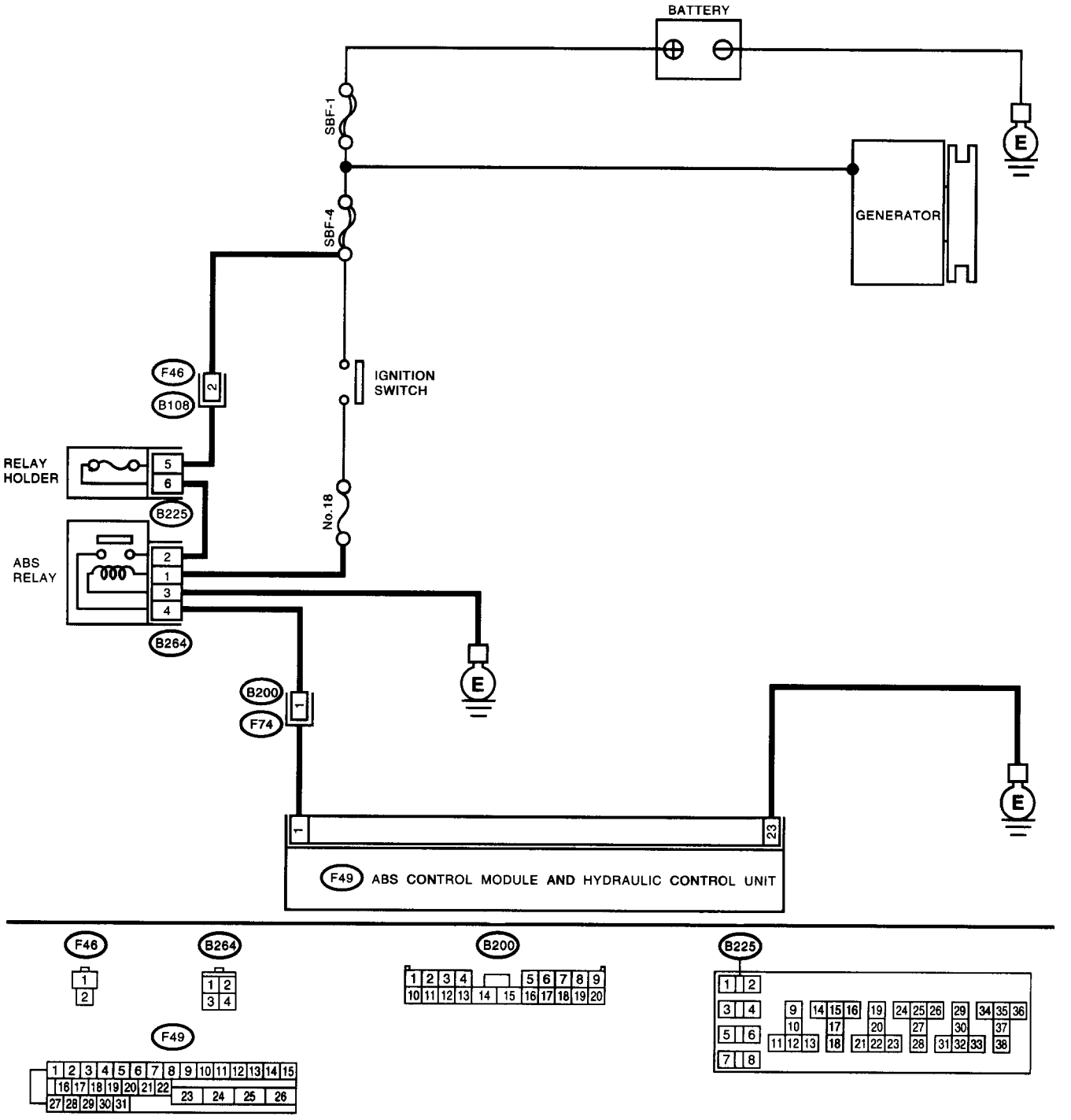

	Step	Check	Yes	No
1	**CHECK INPUT VOLTAGE OF RELAY HOLDER.** 1)Turn the ignition switch to OFF. 2)Remove the fuse. 3)Measure the voltage between ABS relay connector and chassis ground. ***Connector & terminal*** ***(B225) No. 5 (+) — Chassis ground (–):***	Is the voltage more than 10 V?	Go to step **2.**	Repair open circuit in harness between battery and relay holder connector.
2	**CHECK RELAY HOLDER.**	Is the fuse blown out?	Replace the fuse.	Go to step **3.**
3	**CHECK INPUT VOLTAGE OF ABS RELAY.** 1)Install the fuse. 2)Remove the ABS relay. 3)Turn the ignition switch to ON. 4)Measure the voltage between ABS relay connector and chassis ground ***Connector & terminal*** ***(B264) No. 2 (+) — Chassis ground (–):***	Is the voltage more than 10 V?	Go to step **4.**	Repair open circuit in harness between battery and relay holder connector.
4	**CHECK INPUT VOLTAGE OF ABS RELAY.** Measure the voltage between ABS relay connector and chassis ground. ***Connector & terminal*** ***(B264) No. 1 (+) — Chassis ground (–):***	Is the voltage more than 10 V?	Go to step **5.**	Repair harness connector between battery, ignition switch and ABS relay.
5	**CHECK GROUND CIRCUIT OF ABS RELAY** 1)Turn the ignition switch to OFF 2)Measure the resistance between ABS relay connector and chassis ground. ***Connector & terminal*** ***(B264) No. 3 (+) — Chassis ground:***	Is the resistance less than 5 Ω?	Go to step **6.**	Repair open circuit between ABS relay and chassis ground.
6	**CHECK ABS RELAY.** 1)Connect the battery to ABS relay terminal No 1 and 3. 2)Measure the resistance between ABS relay terminals	Is the resistance less than 10 Ω?	Go to step **7.**	Replace the ABS relay.
7	**CHECK INPUT VOLTAGE OF ABSCM&H/U.** 1)Turn the ignition switch to OFF 2)Disconnect the connector from ABSCM&H/U. 3)Run the engine at idle. 4)Measure the voltage between ABSCM&H/U connector and chassis ground. ***Connector & terminal*** ***(F49) No. 1 (+) — Chassis ground (–):***	Is the voltage between 10 and 15 V?	Go to step **8.**	Repair harness connector between battery, ignition switch and ABSCM&H/U
8	**CHECK GROUND CIRCUIT OF ABSCM&H/U** 1)Turn the ignition switch to OFF. 2)Measure the resistance between ABSCM&H/U connector and chassis ground. ***Connector & terminal*** ***(F49) No. 23 — Chassis ground:***	Is the resistance less than 0.5 Ω?	Go to step **9.**	Repair the ABSCM&H/U ground harness
9	**CHECK POOR CONTACT IN CONNECTORS**	Is there poor contact in connectors between generator, battery and ABSCM&H/U?	Repair the connector.	Go to step **10.**
10	**CHECK ABSCM&H/U.** 1)Connect all connectors 2)Erase the memory. 3)Perform the inspection mode. 4)Read out the diagnostic trouble code.	Is the same diagnostic trouble code as in the current diagnosis still being output?	Replace the ABSCM&H/U. <Ref. to ABS-7, ABS Control Module and Hydraulic Control Unit (ABSCM&H/U) >	Go to step **11.**

Step		Check	Yes	No
11	**CHECK ANY OTHER DIAGNOSTIC TROUBLE CODES APPEARANCE.**	Are other diagnostic trouble codes being output?	Proceed with the diagnosis corresponding to the diagnostic trouble code.	A temporary poor contact

P: DTC 32
FRONT RIGHT OUTLET VALVE MALFUNCTION

NOTE:
For the diagnostic procedure, refer to DTC 38. <Ref. to ABS-125, DTC 38 REAR LEFT OUTLET VALVE MALFUNCTION, Diagnostics Chart with Subaru Select Monitor.>

Q: DTC 34
FRONT LEFT OUTLET VALVE MALFUNCTION

NOTE:
For the diagnostic procedure, refer to DTC 38. <Ref. to ABS-125, DTC 38 REAR LEFT OUTLET VALVE MALFUNCTION, Diagnostics Chart with Subaru Select Monitor.>

R: DTC 36
REAR RIGHT OUTLET VALVE MALFUNCTION

NOTE:
For the diagnostic procedure, refer to DTC 38. <Ref. to ABS-125, DTC 38 REAR LEFT OUTLET VALVE MALFUNCTION, Diagnostics Chart with Subaru Select Monitor.>

S: DTC 38
REAR LEFT OUTLET VALVE MALFUNCTION

DIAGNOSIS:
- Faulty harness/connector
- Faulty outlet solenoid valve

TROUBLE SYMPTOM:
- ABS does not operate.

WIRING DIAGRAM:

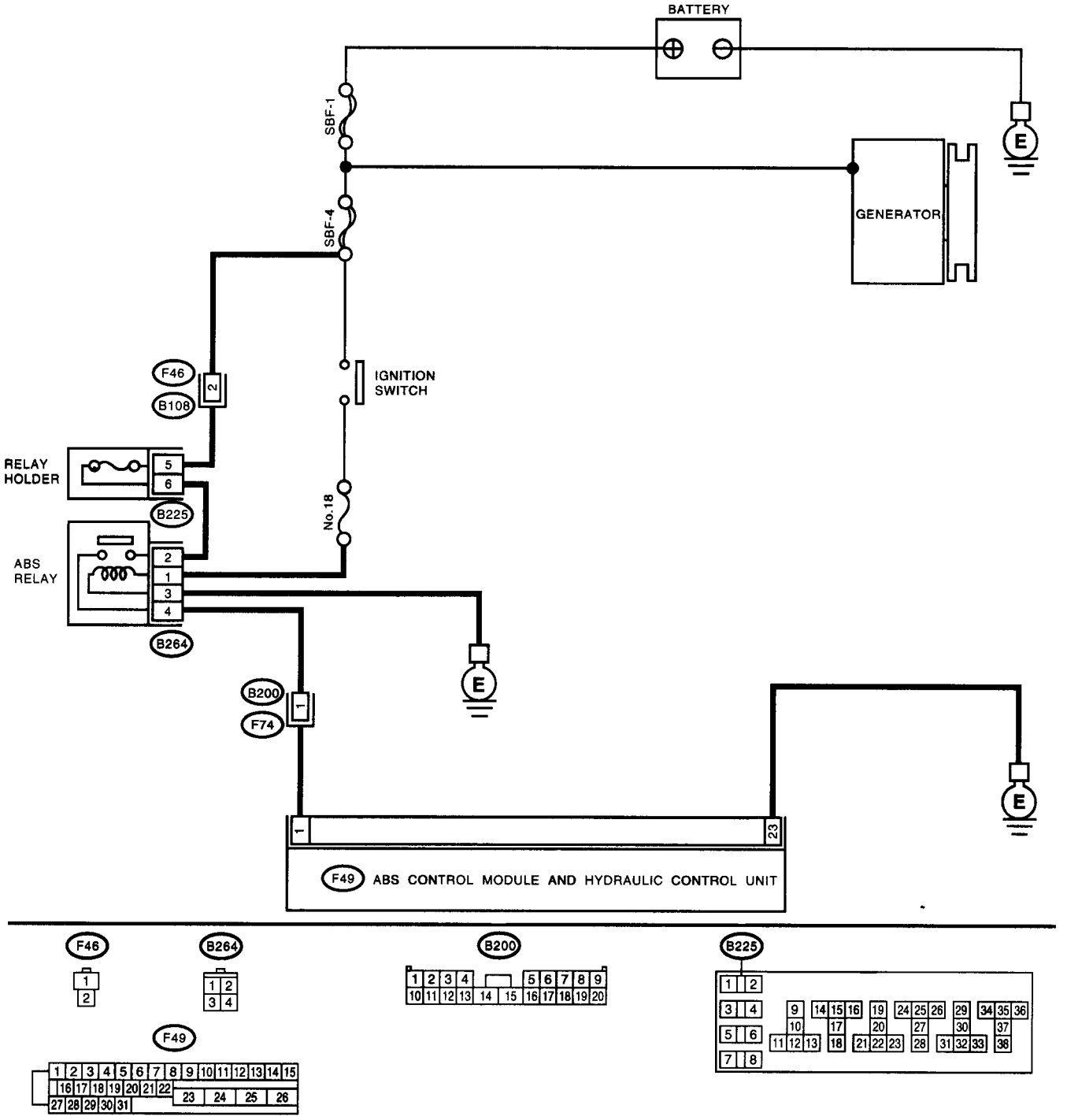

	Step	Check	Yes	No
1	**CHECK INPUT VOLTAGE OF RELAY HOLDER.** 1)Turn the ignition switch to OFF. 2)Remove the fuse. 3)Measure the voltage between ABS relay connector and chassis ground. ***Connector & terminal*** ***(B225) No. 5 (+) — Chassis ground (–):***	Is the voltage more than 10 V?	Go to step **2.**	Repair open circuit in harness between battery and relay holder connector.
2	**CHECK RELAY HOLDER.**	Is the fuse blown out?	Replace the fuse.	Go to step **3.**
3	**CHECK INPUT VOLTAGE OF ABS RELAY.** 1)Install the fuse. 2)Remove the ABS relay. 3)Turn the ignition switch to ON. 4)Measure the voltage between ABS relay connector and chassis ground. ***Connector & terminal*** ***(B264) No. 2 (+) — Chassis ground (–):***	Is the voltage more than 10 V?	Go to step **4.**	Repair open circuit in harness between battery and relay holder connector.
4	**CHECK INPUT VOLTAGE OF ABS RELAY.** Measure the voltage between ABS relay connector and chassis ground. ***Connector & terminal*** ***(B264) No. 1 (+) — Chassis ground (–):***	Is the voltage more than 10 V?	Go to step **5.**	Repair harness connector between battery, ignition switch and ABS relay.
5	**CHECK GROUND CIRCUIT OF ABS RELAY.** 1)Turn the ignition switch to OFF. 2)Measure the resistance between ABS relay connector and chassis ground. ***Connector & terminal*** ***(B264) No. 3 (+) — Chassis ground:***	Is the resistance less than 5 Ω?	Go to step **6.**	Repair open circuit between ABS relay and chassis ground.
6	**CHECK ABS RELAY.** 1)Connect the battery to ABS relay terminal No. 1 and 3. 2)Measure the resistance between ABS relay terminals.	Is the resistance less than 10 Ω?	Go to step **7.**	Replace the ABS relay.
7	**CHECK INPUT VOLTAGE OF ABSCM&H/U.** 1)Turn the ignition switch to OFF. 2)Disconnect the connector from ABSCM&H/U. 3)Run the engine at idle. 4)Measure the voltage between ABSCM&H/U connector and chassis ground. ***Connector & terminal*** ***(F49) No. 1 (+) — Chassis ground (–):***	Is the voltage between 10 and 15 V?	Go to step **8.**	Repair harness connector between battery, ignition switch and ABSCM&H/U.
8	**CHECK GROUND CIRCUIT OF ABSCM&H/U.** 1)Turn the ignition switch to OFF. 2)Measure the resistance between ABSCM&H/U connector and chassis ground. ***Connector & terminal*** ***(F49) No. 23 — Chassis ground:***	Is the resistance less than 0.5 Ω?	Go to step **9.**	Repair the ABSCM&H/U ground harness.
9	**CHECK POOR CONTACT IN CONNECTORS.**	Is there poor contact in connectors between generator, battery and ABSCM&H/U?	Repair the connector.	Go to step **10.**
10	**CHECK ABSCM&H/U.** 1)Connect all connectors. 2)Erase the memory. 3)Perform the inspection mode. 4)Read out the diagnostic trouble code.	Is the same diagnostic trouble code as in the current diagnosis still being output?	Replace the ABSCM&H/U. <Ref. to ABS-7, ABS Control Module and Hydraulic Control Unit (ABSCM&H/U).>	Go to step **11.**

Step		Check	Yes	No
11	**CHECK ANY OTHER DIAGNOSTIC TROUBLE CODES APPEARANCE.**	Are other diagnostic trouble codes being output?	Proceed with the diagnosis corresponding to the diagnostic trouble code.	A temporary poor contact.

T: DTC 41
ABS CONTROL MODULE MALFUNCTION

DIAGNOSIS:
- Faulty ABSCM&H/U

TROUBLE SYMPTOM:
- ABS does not operate.

WIRING DIAGRAM:

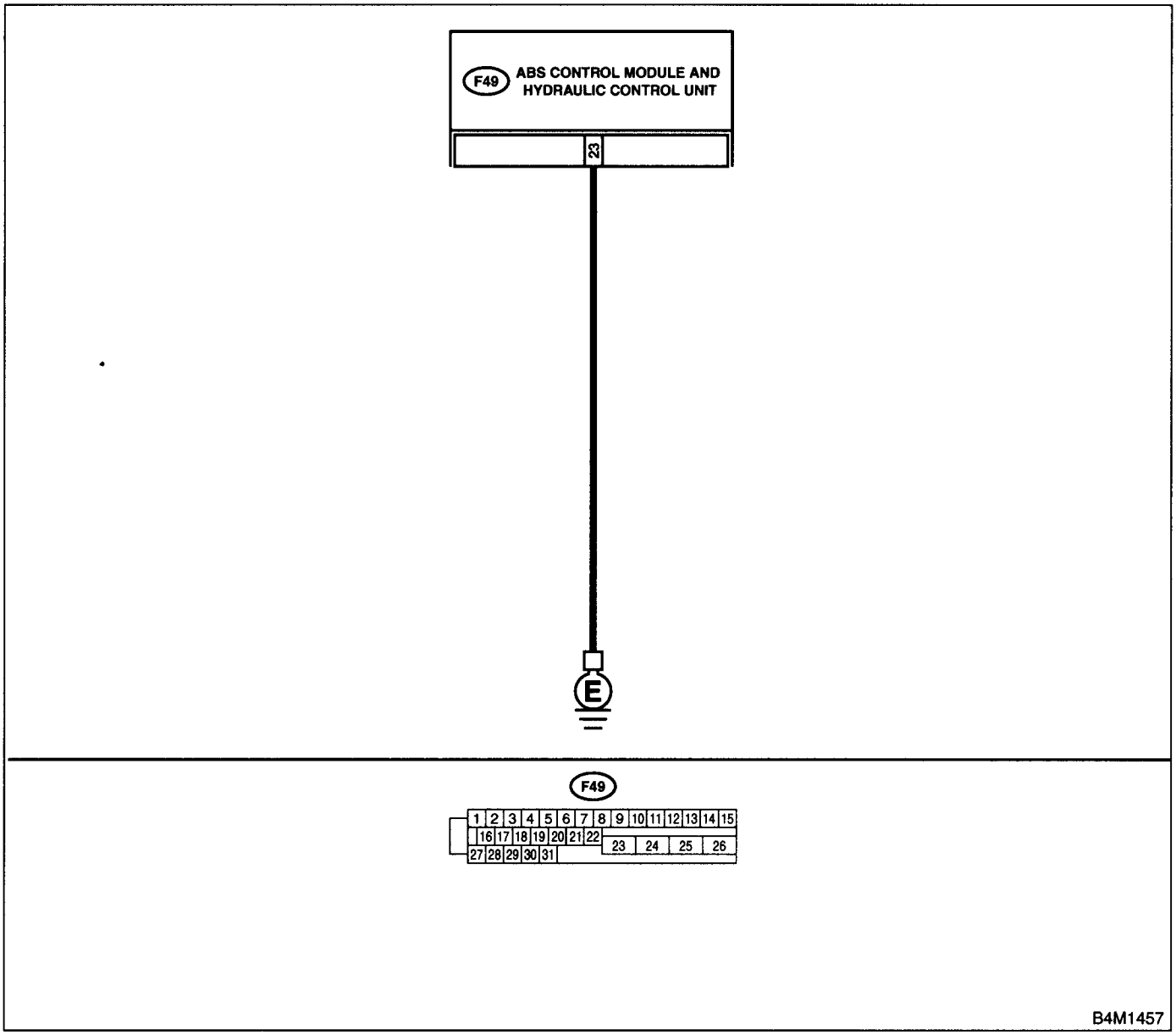

	Step	Check	Yes	No
1	**CHECK GROUND CIRCUIT OF ABSCM&H/U.** 1)Turn the ignition switch to OFF. 2)Disconnect the connector from ABSCM&H/U. 3)Measure the resistance between ABSCM&H/U and chassis ground. ***Connector & terminal*** ***(F49) No. 23 — Chassis ground:***	Is the resistance less than 0.5 Ω?	Go to step **2.**	Repair the ABSCM&H/U ground harness.
2	**CHECK POOR CONTACT IN CONNECTORS.**	Is there poor contact in connectors between battery, ignition switch and ABSCM&H/U?	Repair the connector.	Go to step **3.**
3	**CHECK SOURCES OF SIGNAL NOISE.**	Is the car telephone or the wireless transmitter properly installed?	Go to step **4.**	Properly install the car telephone or the wireless transmitter.
4	**CHECK SOURCES OF SIGNAL NOISE.**	Are noise sources (such as an antenna) installed near the sensor harness?	Install the noise sources apart from the sensor harness.	Go to step **5.**
5	**CHECK ABSCM&H/U.** •1)Turn the ignition switch to OFF. 2)Connect all connectors. 3)Erase the memory. 4)Perform the inspection mode. 5)Read out the diagnostic trouble code.	Is the same diagnostic trouble code as in the current diagnosis still being output?	Replace the ABSCM&H/U. <Ref. to ABS-7, ABS Control Module and Hydraulic Control Unit (ABSCM&H/U).>	Go to step **6.**
6	**CHECK ANY OTHER DIAGNOSTIC TROUBLE CODES APPEARANCE.**	Are other diagnostic trouble codes being output?	Proceed with the diagnosis corresponding to the diagnostic trouble code.	A temporary poor contact.

U: DTC 42
POWER SUPPLY VOLTAGE TOO LOW

DIAGNOSIS:
- Power source voltage of the ABSCM&H/U is low.

TROUBLE SYMPTOM:
- ABS does not operate.

WIRING DIAGRAM:

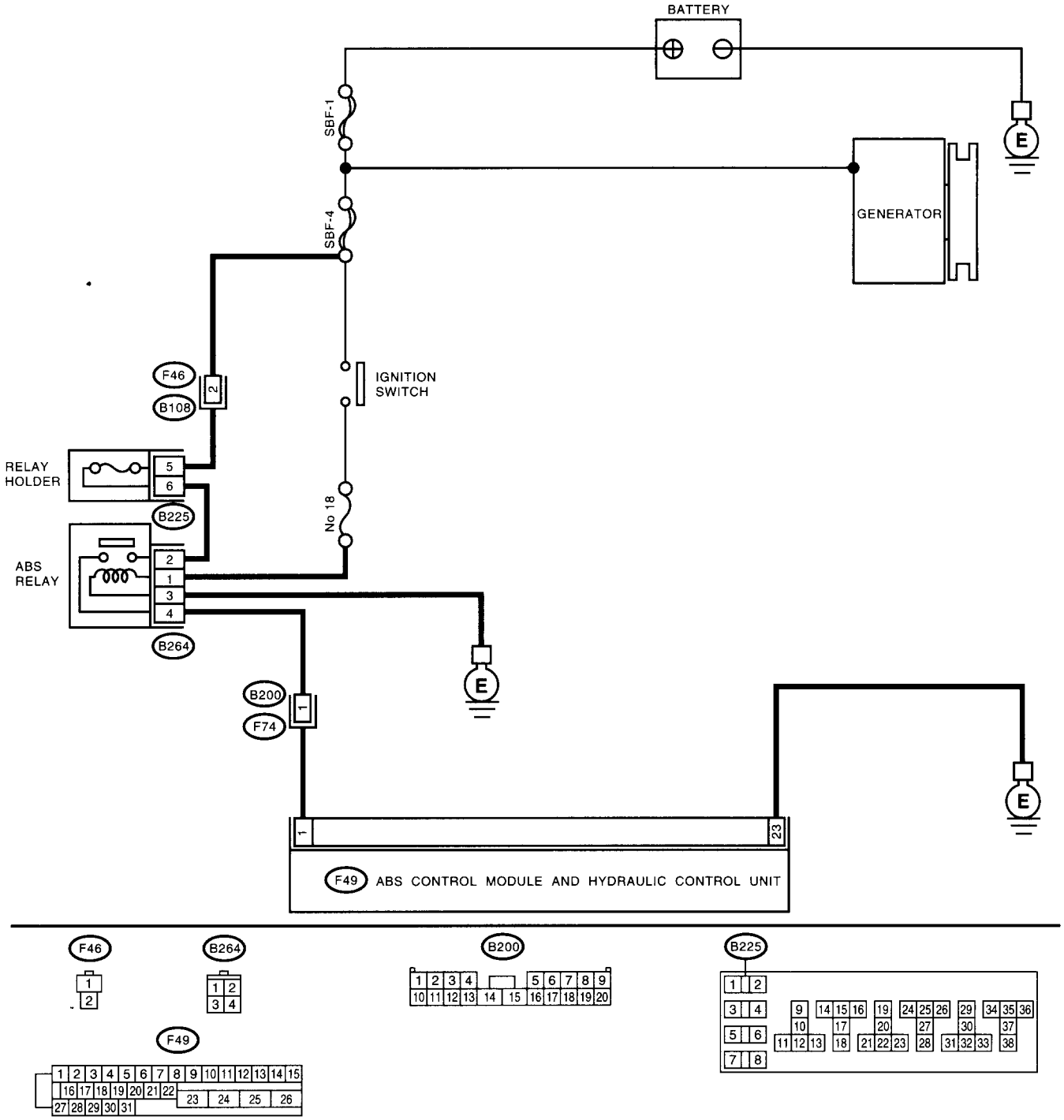

BR0085

	Step	Check	Yes	No
1	**CHECK GENERATOR.** 1)Start the engine 2)Idling after warm-up 3)Measure the voltage between generator B terminal and chassis ground. ***Terminal*** ***Generator B terminal — Chassis ground***	s the voltage between 10 and 15 V?	Go to step **2.**	Repair the generator <Ref to SC-13, Generator >
2	**CHECK BATTERY TERMINAL.** Turn the ignition switch to OFF.	Are the positive and negative battery terminals tightly clamped?	Go to step **3.**	Tighten the clamp of terminal.
3	**CHECK INPUT VOLTAGE OF ABSCM&H/U.** 1)Disconnect the connector from ABSCM&H/U 2)Run the engine at idle 3)Measure the voltage between ABSCM&H/U connector and chassis ground ***Connector & terminal*** ***(F49) No. 1 (+) — Chassis ground (–):***	s the voltage between 10 and 15 V?	Go to step **4.**	Repair harness connector between battery, ignition switch and ABSCM&H/U
4	**CHECK GROUND CIRCUIT OF ABSCM&H/U** 1)Turn the ignition switch to OFF 2)Measure the resistance between ABSCM&H/U connector and chassis ground. ***Connector & terminal*** ***(F49) No. 23 — Chassis ground:***	s the resistance less than 0 5 Ω?	Go to step **5.**	Repair the ABSCM&H/U ground harness
5	**CHECK POOR CONTACT IN CONNECTORS**	s there poor contact in connectors between generator, battery and ABSCM&H/U?	Repair the connector.	Go to step **6.**
6	**CHECK ABSCM&H/U.** 1)Connect all connectors. 2)Erase the memory 3)Perform the inspection mode. 4)Read out the diagnostic trouble code	s the same diagnostic trouble code as in the current diagnosis still being output?	Replace the ABSCM&H/U. <Ref. to ABS-7, ABS Control Module and Hydraulic Control Unit ABSCM&H/U) >	Go to step **7.**
7	**CHECK ANY OTHER DIAGNOSTIC TROUBLE CODES APPEARANCE.**	Are other diagnostic trouble codes being output?	Proceed with the diagnosis corresponding to the diagnostic trouble code.	A temporary poor contact.

V: DTC 42
POWER SUPPLY VOLTAGE TOO HIGH

DIAGNOSIS:
- Power source voltage of the ABSCM&H/U is high.

TROUBLE SYMPTOM:
- ABS does not operate.

WIRING DIAGRAM:

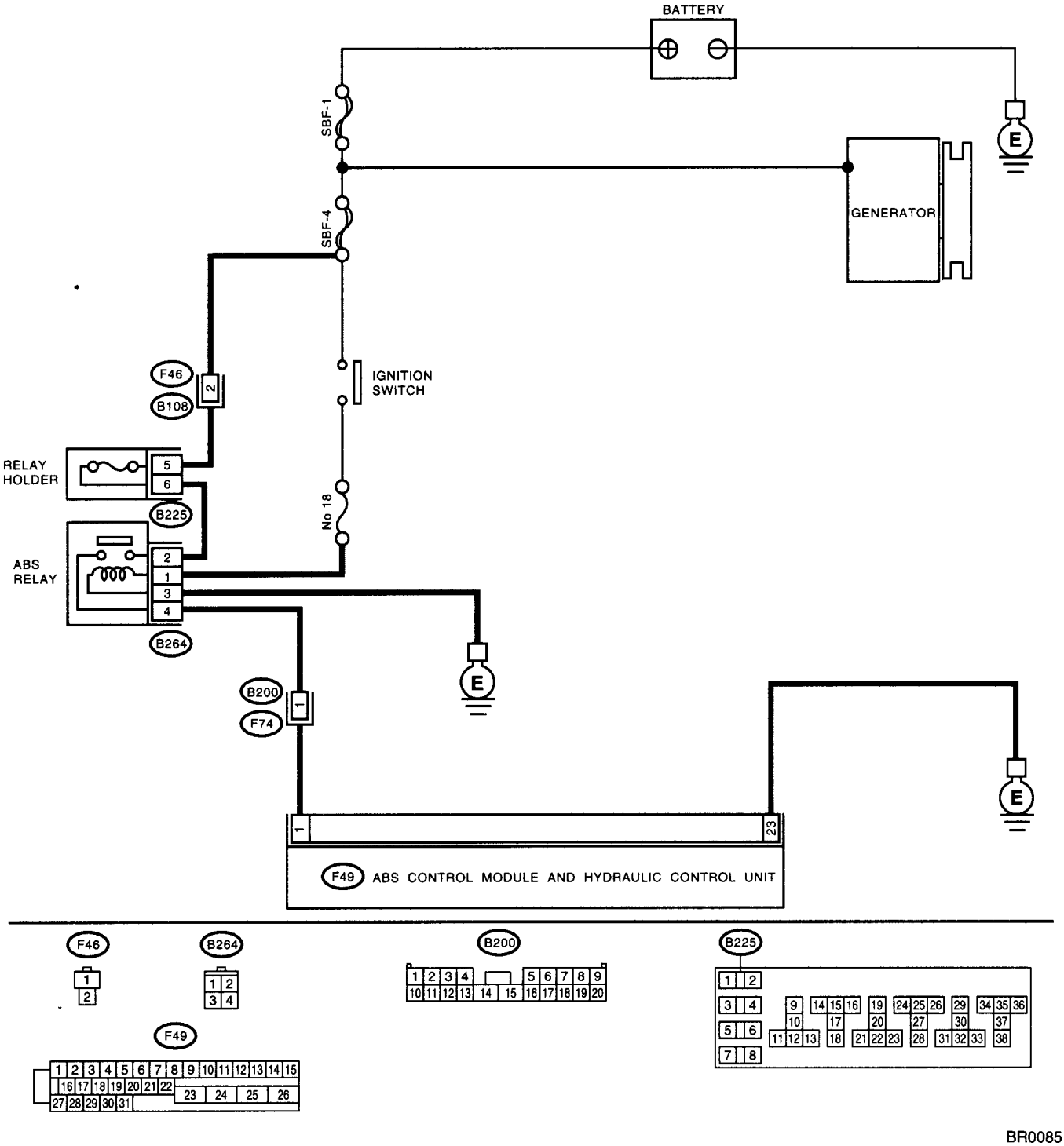

	Step	Check	Yes	No
1	**CHECK GENERATOR.** 1)Start the engine. 2)Idling after warm-up. 3)Measure the voltage between generator B terminal and chassis ground. ***Terminal*** ***Generator B terminal — Chassis ground:***	Is the voltage between 10 and 17 V?	Go to step **2.**	Repair the generator. <Ref. to SC-13, Generator.>
2	**CHECK BATTERY TERMINAL.** Turn the ignition switch to OFF.	Are the positive and negative battery terminals tightly clamped?	Go to step **3.**	Tighten the clamp of terminal.
3	**CHECK INPUT VOLTAGE OF RELAY HOLDER.** 1)Turn the ignition switch to OFF. 2)Remove the fuse. 3)Measure the voltage between ABS relay connector and chassis ground. ***Connector & terminal*** ***(B225) No. 5 (+) — Chassis ground (–):***	Is the voltage more than 10 V?	Go to step **4.**	Repair open circuit in harness between battery and Relay holder connector.
4	**CHECK RELAY HOLDER.**	Is the fuse blown out?	Replace the fuse.	Go to step **5.**
5	**CHECK INPUT VOLTAGE OF ABS RELAY.** 1)Install the fuse. 2)Remove the ABS relay. 3)Turn the ignition switch to ON. 4)Measure the voltage between ABS relay connector and chassis ground. ***Connector & terminal*** ***(B264) No. 2 (+) — Chassis ground (–):***	Is the voltage more than 10 V?	Go to step **6.**	Repair open circuit in harness between battery and Relay holder connector.
6	**CHECK INPUT VOLTAGE OF ABS RELAY.** Measure the voltage between ABS relay connector and chassis ground. ***Connector & terminal*** ***(B264) No. 1 (+) — Chassis ground (–):***	Is the voltage more than 10 V?	Go to step **7.**	Repair harness connector between battery, ignition switch and ABS relay.
7	**CHECK GROUND CIRCUIT OF ABS RELAY.** 1)Turn the ignition switch to OFF. 2)Measure the resistance between ABS relay connector and chassis ground. ***Connector & terminal*** ***(B264) No. 3 (+) — Chassis ground:***	Is the resistance less than 5 Ω?	Go to step **8.**	Repair open circuit between ABS relay and chassis ground.
8	**CHECK ABS RELAY.** 1)Connect the battery to ABS relay terminal No. 1 and 3. 2)Measure the resistance between ABS relay terminals.	Is the resistance less than 10 Ω?	Go to step **9.**	Replace the ABS relay.
9	**CHECK INPUT VOLTAGE OF ABSCM&H/U.** 1)Disconnect the connector from ABSCM&H/U. 2)Run the engine at idle. 3)Measure the voltage between ABSCM&H/U connector and chassis ground. ***Connector & terminal*** ***(F49) No. 1 (+) — Chassis ground (–):***	Is the voltage between 10 and 17 V?	Go to step **10.**	Repair harness connector between battery, ignition switch and ABSCM&H/U.
10	**CHECK GROUND CIRCUIT OF ABSCM&H/U.** 1)Turn the ignition switch to OFF. 2)Measure the resistance between ABSCM&H/U connector and chassis ground. ***Connector & terminal*** ***(F49) No. 23 — Chassis ground:***	Is the resistance less than 0.5 Ω?	Go to step **11.**	Repair the ABSCM&H/U ground harness.

Step		Check	Yes	No
11	**CHECK POOR CONTACT IN CONNECTORS.**	Is there poor contact in connectors between generator, battery and ABSCM&H/U?	Repair the connector	Go to step **12.**
12	**CHECK ABSCM&H/U.** 1)Connect all connectors. 2)Erase the memory. 3)Perform the inspection mode. 4)Read out the diagnostic trouble code.	Is the same diagnostic trouble code as in the current diagnosis still being output?	Replace the ABSCM&H/U. <Ref. to ABS-7, ABS Control Module and Hydraulic Control Unit (ABSCM&H/U).>	Go to step **13.**
13	**CHECK ANY OTHER DIAGNOSTIC TROUBLE CODES APPEARANCE.**	Are other diagnostic trouble codes being output?	Proceed with the diagnosis corresponding to the diagnostic trouble code.	A temporary poor contact.

W: DTC 44
ABS-AT CONTROL (NON CONTROLLED)

DIAGNOSIS:
- Combination of AT control faults

TROUBLE SYMPTOM:
- ABS does not operate.

WIRING DIAGRAM:

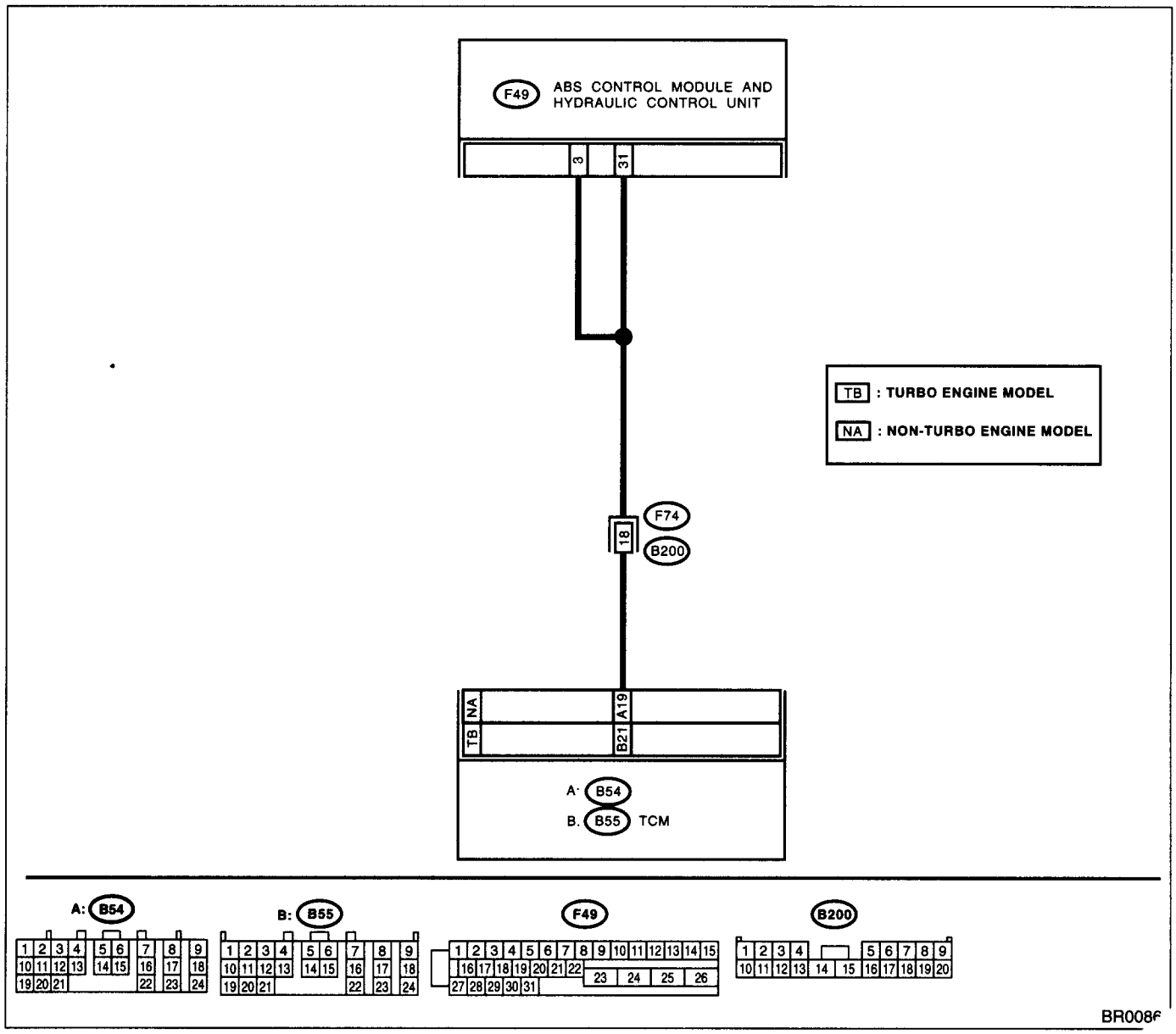

DIAGNOSTICS CHART WITH SUBARU SELECT MONITOR

	Step	Check	Yes	No
1	**CHECK SPECIFICATIONS OF THE ABSCM&H/U.** Check specifications of the mark to the ABSCM&H/U. ***CC: AT*** ***CD: MT***	Is an ABSCM&H/U for AT model installed on a MT model?	Replace the ABSCM&H/U. <Ref. to ABS-7, ABS Control Module and Hydraulic Control Unit (ABSCM&H/U).>	Go to step **2.**
2	**CHECK GROUND SHORT OF HARNESS.** 1)Turn the ignition switch to OFF. 2)Disconnect two connectors from TCM. 3)Disconnect the connector from ABSCM&H/U. 4)Measure the resistance between ABSCM&H/U connector and chassis ground. ***Connector & terminal*** ***(F49) No. 3 — Chassis ground:***	Is the resistance more than 1 MΩ?	Go to step **3.**	Repair harness between TCM and ABSCM&H/U.
3	**CHECK TCM.** 1)Connect all connectors to TCM. 2)Turn the ignition switch to ON. 3)Measure the voltage between TCM connector terminal and chassis ground. ***Connector & terminal*** ***NON-TURBO MODEL:*** ***(B54) No. 19 (+) — Chassis ground (–):*** ***TURBO MODEL:*** ***(B55) No. 21 (+) — Chassis ground (–):***	Is the voltage between 10 and 15 V?	Go to step **5.**	Go to step **4.**
4	**CHECK AT.**	Is the AT functioning normally?	Replace the TCM.	Repair the AT.
5	**CHECK OPEN CIRCUIT OF HARNESS.** Measure the voltage between ABSCM&H/U connector and chassis ground. ***Connector & terminal*** ***(F49) No. 3 (+) — Chassis ground (–):*** ***(F49) No. 31 (+) — Chassis ground (–):***	Is the voltage more than 10 V?	Go to step **6.**	Repair harness/ connector between TCM and ABSCM&H/U.
6	**CHECK POOR CONTACT IN CONNECTORS.**	Is there poor contact in connectors between TCM and ABSCM&H/U?	Repair the connector.	Go to step **7.**
7	**CHECK ABSCM&H/U.** 1)Connect all connectors. 2)Erase the memory. 3)Perform the inspection mode. 4)Read out the diagnostic trouble code.	Is the same diagnostic trouble code as in the current diagnosis still being output?	Replace the ABSCM&H/U. <Ref. to ABS-7, ABS Control Module and Hydraulic Control Unit (ABSCM&H/U).>	Go to step **8.**
8	**CHECK ANY OTHER DIAGNOSTIC TROUBLE CODES APPEARANCE.**	Are other diagnostic trouble codes being output?	Proceed with the diagnosis corresponding to the diagnostic trouble code.	A temporary poor contact.

X: DTC 44
ABS-AT CONTROL (CONTROLLED)

DIAGNOSIS:
- Combination of AT control faults

TROUBLE SYMPTOM:
- ABS does not operate.

WIRING DIAGRAM:

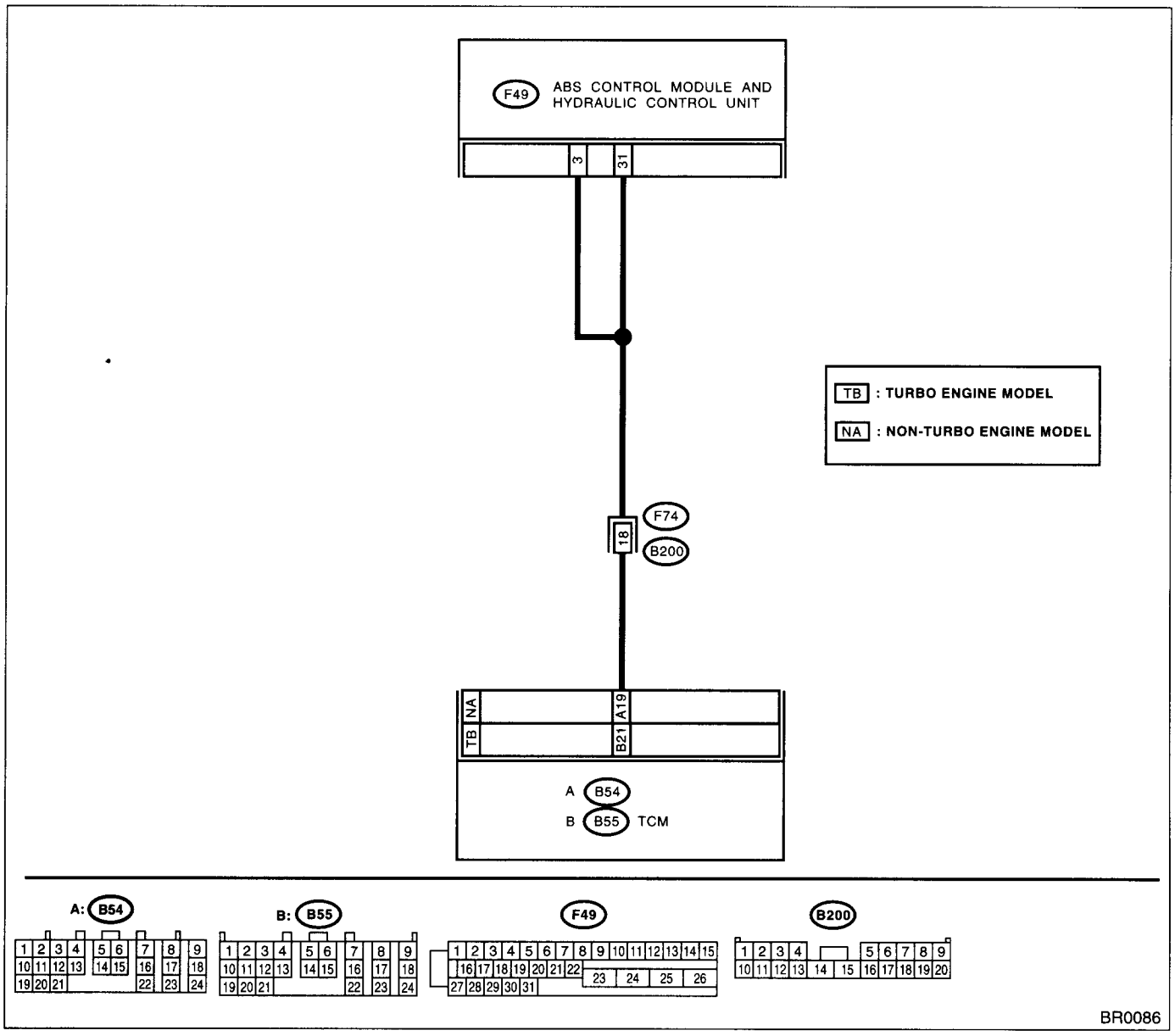

	Step	Check	Yes	No
1	**CHECK BATTERY SHORT OF HARNESS.** 1)Turn the ignition switch to OFF. 2)Disconnect two connectors from TCM. 3)Disconnect the connector from ABSCM&H/U. 4)Measure the voltage between ABSCM&H/U connector and chassis ground. ***Connector & terminal*** ***(F49) No. 3 (+) — Chassis ground (–):***	Is the voltage less than 1 V?	Go to step **2.**	Repair harness between TCM and ABSCM&H/U.
2	**CHECK BATTERY SHORT OF HARNESS.** 1)Turn the ignition switch to ON. 2)Measure the voltage between ABSCM&H/U connector and chassis ground. ***Connector & terminal*** ***(F49) No. 3 (+) — Chassis ground (–):***	Is the voltage less than 1 V?	Go to step **3.**	Repair harness between TCM and ABSCM&H/U.
3	**CHECK OPEN CIRCUIT OF HARNESS.** 1)Turn the ignition switch to OFF. 2)Connect all connectors to TCM. 3)Turn the ignition switch to ON. 4)Measure the voltage between ABSCM&H/U connector and chassis ground. ***Connector & terminal*** ***(F49) No. 3 (+) — Chassis ground (–):*** ***(F49) No. 31 (+) — Chassis ground (–):***	Is the voltage between 10 and 13 V?	Go to step **4.**	Repair harness/ connector between TCM and ABSCM&H/U.
4	**CHECK POOR CONTACT IN CONNECTORS.** Turn the ignition switch to OFF.	Is there poor contact in connectors between TCM and ABSCM&H/U?	Repair the connector.	Go to step **5.**
5	**CHECK ABSCM&H/U.** 1)Connect all connectors. 2)Erase the memory. 3)Perform the inspection mode. 4)Read out the diagnostic trouble code.	Is the same diagnostic trouble code as in the current diagnosis still being output?	Replace the ABSCM&H/U. <Ref. to ABS-7, ABS Control Module and Hydraulic Control Unit (ABSCM&H/U).>	Go to step **6.**
6	**CHECK ANY OTHER DIAGNOSTIC TROUBLE CODES APPEARANCE.**	Are other diagnostic trouble codes being output?	Proceed with the diagnosis corresponding to the diagnositc trouble code.	A temporary poor contact.

Y: DTC 51
VALVE RELAY MALFUNCTION

DIAGNOSIS:
- Faulty valve relay

TROUBLE SYMPTOM:
- ABS does not operate.

WIRING DIAGRAM:

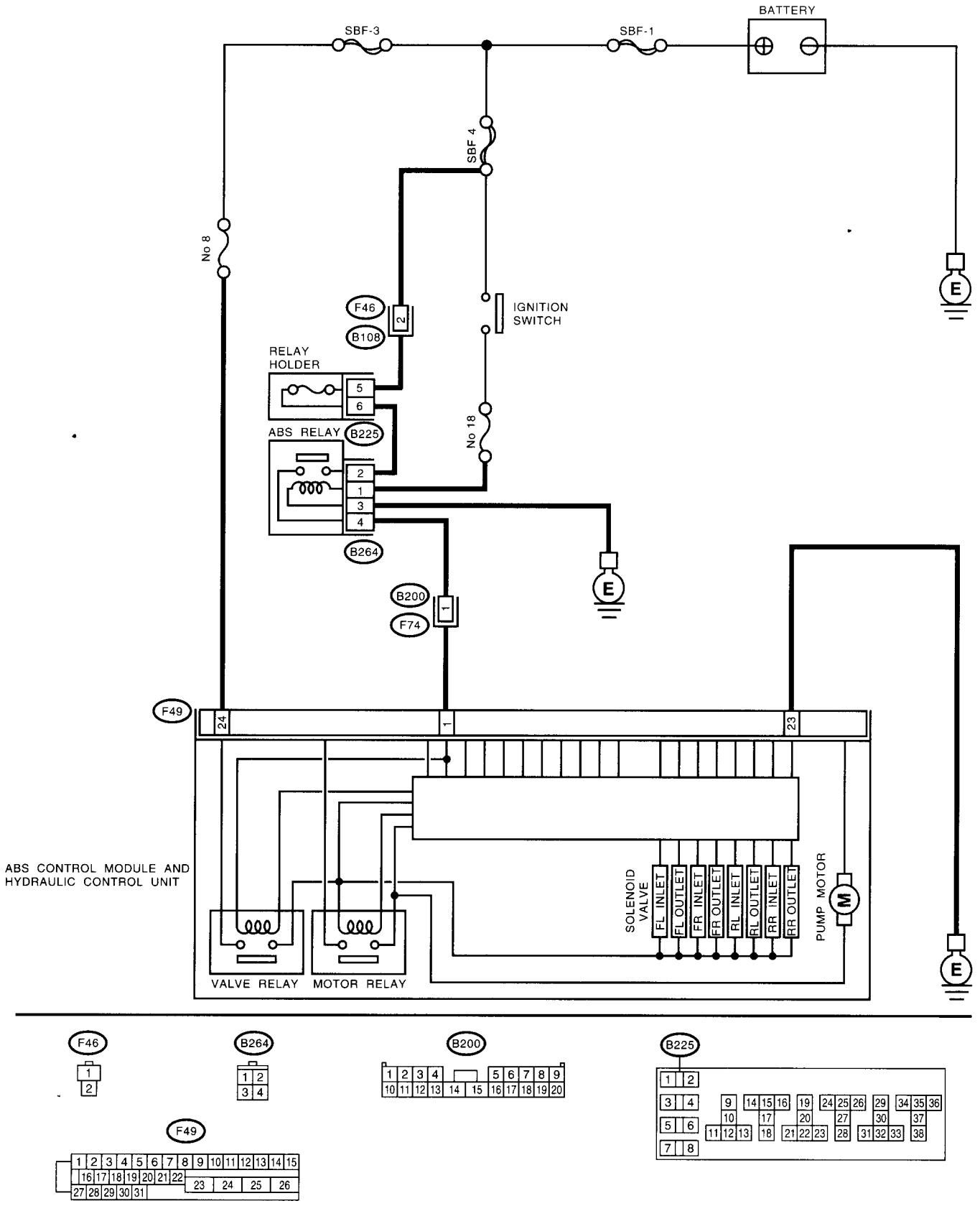

	Step	Check	Yes	No
1	**CHECK INPUT VOLTAGE OF RELAY HOLDER.** 1)Turn the ignition switch to OFF 2)Remove the fuse 3)Measure the voltage between ABS relay connector and chassis ground ***Connector & terminal*** ***(B225) No. 5 (+) — Chassis ground (–):***	Is the voltage more than 10 V?	Go to step **2.**	Repair open circuit in harness between battery and Relay holder connector
2	**CHECK RELAY HOLDER.**	Is the fuse blown out?	Replace the fuse	Go to step **3.**
3	**CHECK INPUT VOLTAGE OF ABS RELAY.** 1)Install the fuse 2)Remove the ABS relay. 3)Turn the ignition switch to ON. 4)Measure the voltage between ABS relay connector and chassis ground ***Connector & terminal*** ***(B264) No. 2 (+) — Chassis ground (–):***	Is the voltage more than 10 V?	Go to step **4.**	Repair open circuit in harness between battery and Relay holder connector
4	**CHECK INPUT VOLTAGE OF ABS RELAY.** Measure the voltage between ABS relay connector and chassis ground ***Connector & terminal*** ***(B264) No. 1 (+) — Chassis ground (–):***	Is the voltage more than 10 V?	Go to step **5.**	Repair harness connector between battery, ignition switch and ABS relay
5	**CHECK GROUND CIRCUIT OF ABS RELAY.** 1)Turn the ignition switch to OFF. 2)Measure the resistance between ABS relay connector and chassis ground ***Connector & terminal*** ***(B264) No. 3 (+) — Chassis ground:***	Is the resistance less than 5 Ω?	Go to step **6.**	Repair open circuit between ABS relay and chassis ground
6	**CHECK ABS RELAY.** 1)Connect the battery to ABS relay terminal No 1 and 3 2)Measure the resistance between ABS relay terminals.	Is the resistance less than 10 Ω?	Go to step **7.**	Replace the ABS relay.
7	**CHECK INPUT VOLTAGE OF ABSCM&H/U.** 1)Turn the ignition switch to OFF 2)Disconnect the connector from ABSCM&H/U. 3)Run the engine at idle 4)Measure the voltage between ABSCM&H/U connector and chassis ground. ***Connector & terminal*** ***(F49) No. 1 (+) — Chassis ground (–):*** ***(F49) No. 24 (+) — Chassis ground (–):***	Is the voltage between 10 and 15 V?	Go to step **8.**	Repair harness connector between battery and ABSCM&H/U.
8	**CHECK GROUND CIRCUIT OF ABSCM&H/U** 1)Turn the ignition switch to OFF 2)Measure the resistance between ABSCM&H/U connector and chassis ground ***Connector & terminal*** ***(F49) No. 23 — Chassis ground:***	Is the resistance less than 0.5 Ω?	Go to step **9.**	Repair the ABSCM&H/U ground harness
9	**CHECK POOR CONTACT IN CONNECTORS**	Is there poor contact in connectors between generator, battery and ABSCM&H/U?	Repair the connector	Go to step **10.**
10	**CHECK ABSCM&H/U.** 1)Connect all connectors. 2)Erase the memory. 3)Perform the inspection mode. 4)Read out the diagnostic trouble code	Is the same diagnostic trouble code as in the current diagnosis still being output?	Replace the ABSCM&H/U <Ref to ABS-7, ABS Control Module and Hydraulic Control Unit (ABSCM&H/U).>	Go to step **11.**

Step		Check	Yes	No
11	**CHECK ANY OTHER DIAGNOSTIC TROUBLE CODES APPEARANCE.**	Are other diagnostic trouble codes being output?	Proceed with the diagnosis corresponding to the diagnostic trouble code.	A temporary poor contact.

Z: DTC 51
VALVE RELAY ON FAILURE

DIAGNOSIS:
- Faulty valve relay

TROUBLE SYMPTOM:
- ABS does not operate.

WIRING DIAGRAM:

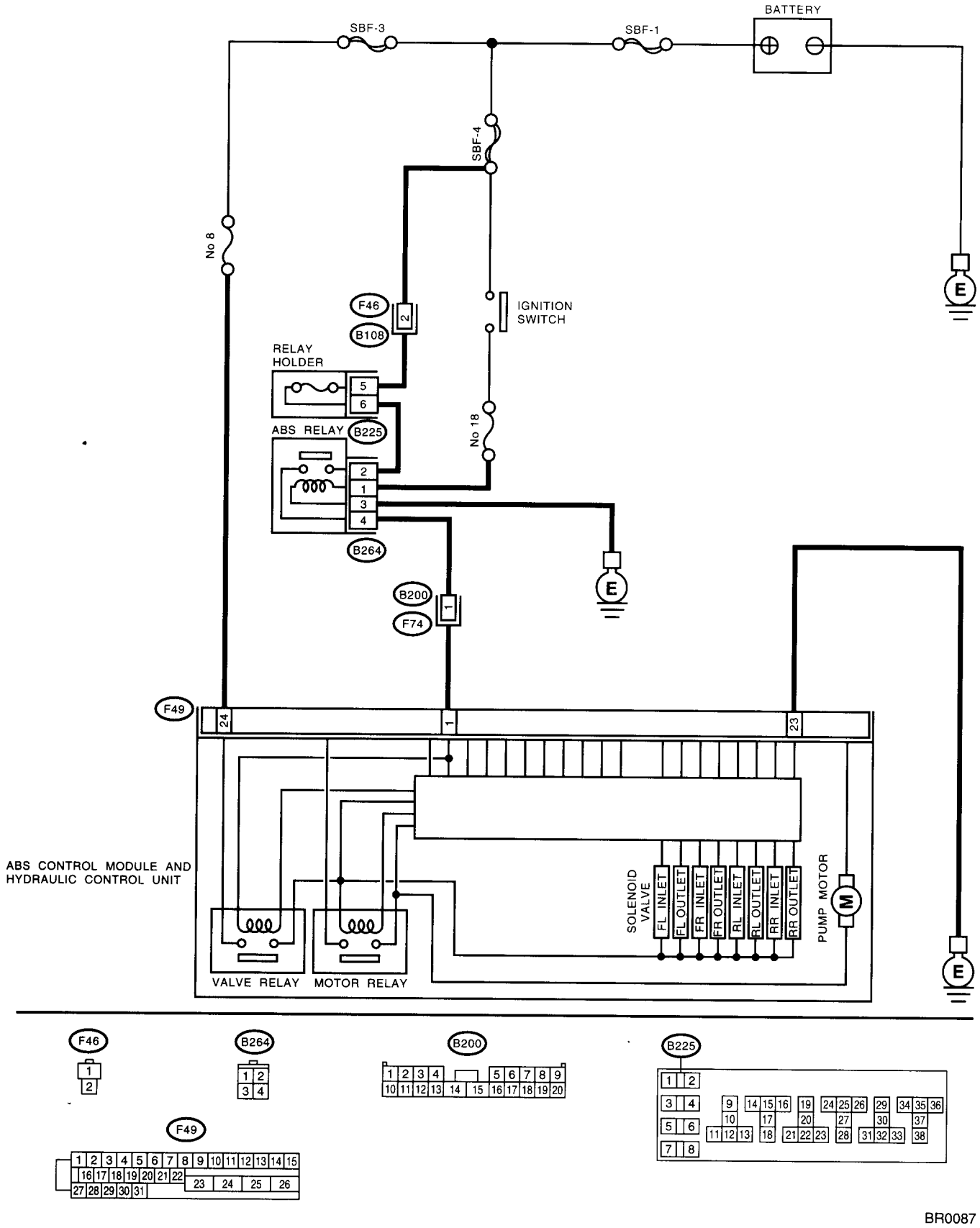

BR0087

DIAGNOSTICS CHART WITH SUBARU SELECT MONITOR

	Step	Check	Yes	No
1	**CHECK VALVE RELAY IN ABSCM&H/U.** Measure the resistance between ABSCM&H/U terminals. ***Terminals*** ***No. 23 (+) — No. 24 (–):***	Is the resistance more than 1 MΩ?	Go to step **2.**	Replace the ABSCM&H/U. <Ref. to ABS-7, ABS Control Module and Hydraulic Control Unit (ABSCM&H/U).>
2	**CHECK POOR CONTACT IN CONNECTORS.**	Is there poor contact in connectors between generator, battery and ABSCM&H/U?	Repair the connector.	Go to step **3.**
3	**CHECK ABSCM&H/U.** 1)Connect all connectors. 2)Erase the memory. 3)Perform the inspection mode. 4)Read out the diagnostic trouble code.	Is the same diagnostic trouble code as in the current diagnosis still being output?	Replace the ABSCM&H/U. <Ref. to ABS-7, ABS Control Module and Hydraulic Control Unit (ABSCM&H/U).>	Go to step **4.**
4	**CHECK ANY OTHER DIAGNOSTIC TROUBLE CODES APPEARANCE.**	Are other diagnostic trouble codes being output?	Proceed with the diagnosis corresponding to the diagnostic trouble code.	A temporary poor contact.

AA:DTC 52
OPEN CIRCUIT IN MOTOR RELAY CIRCUIT

DIAGNOSIS:
- Faulty motor
- Faulty motor relay
- Faulty harness connector

TROUBLE SYMPTOM:
- ABS does not operate.

WIRING DIAGRAM:

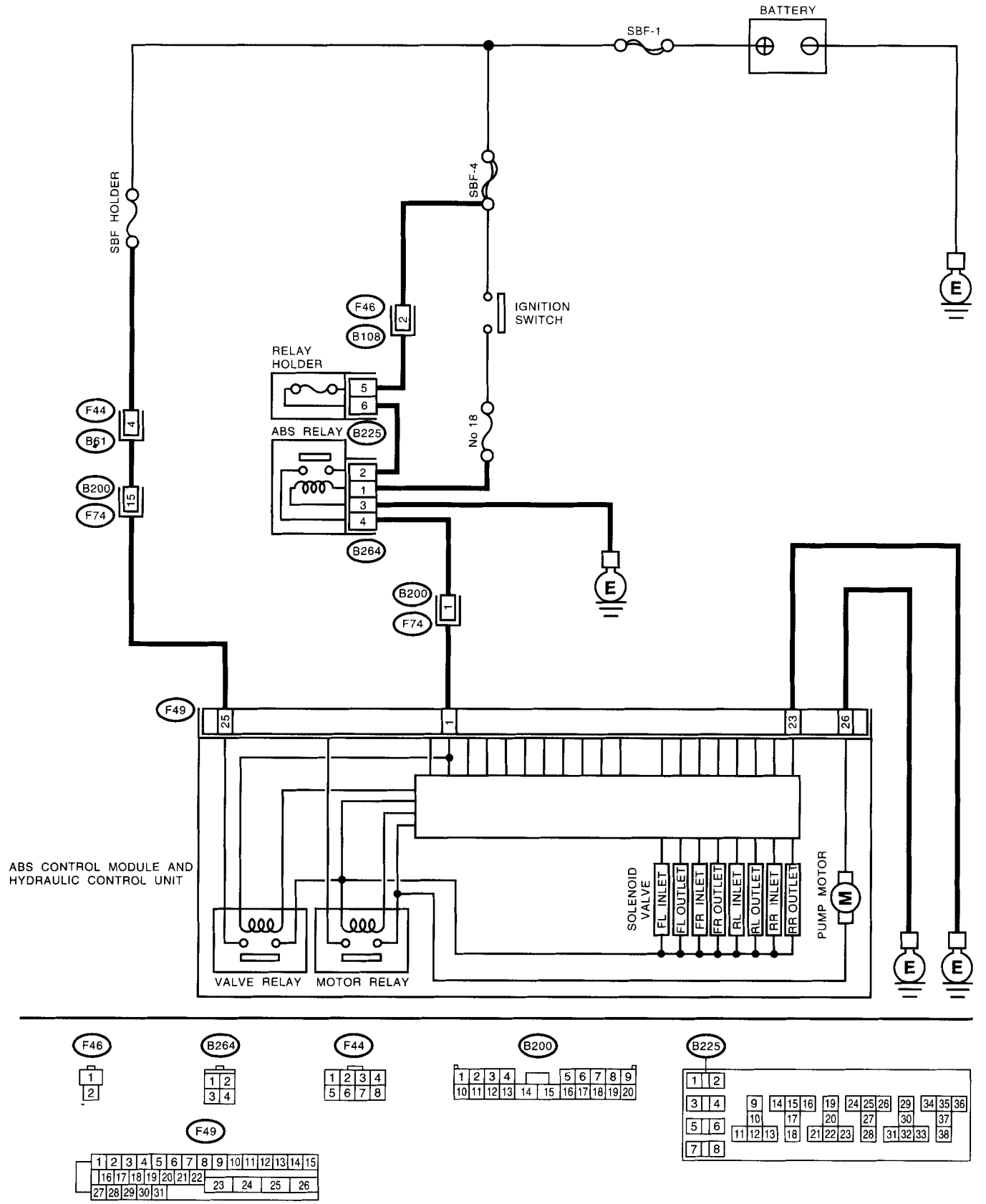

DIAGNOSTICS CHART WITH SUBARU SELECT MONITOR

	Step	Check	Yes	No
1	**CHECK INPUT VOLTAGE OF ABSCM&H/U.** 1)Turn the ignition switch to OFF. 2)Disconnect the connector from ABSCM&H/U. 3)Turn the ignition switch to ON. 4)Measure the voltage between ABSCM&H/U connector and chassis ground. ***Connector & terminal*** ***(F49) No. 25 (+) — Chassis ground (–):***	Is the voltage between 10 and 13 V?	Go to step **2.**	Repair harness/ connector between battery and ABSCM&H/U and check fuse SBF6.
2	**CHECK GROUND CIRCUIT OF MOTOR.** 1)Turn the ignition switch to OFF. 2)Measure the resistance between ABSCM&H/U connector and chassis ground. ***Connector & terminal*** ***(F49) No. 26 — Chassis ground:***	Is the resistance less than 0.5 Ω?	Go to step **3.**	Repair the ABSCM&H/U ground harness.
3	**CHECK MOTOR OPERATION.** Operate the sequence control. <Ref. to ABS-11, ABS Sequence Control.> NOTE: Use the diagnosis connector to operate the sequence control.	Can the motor revolution noise (buzz) be heard when carrying out the check sequence?	Go to step **4.**	Replace the ABSCM&H/U. <Ref. to ABS-7, ABS Control Module and Hydraulic Control Unit (ABSCM&H/U).>
4	**CHECK POOR CONTACT IN CONNECTORS.** Turn the ignition switch to OFF.	Is there poor contact in connector between hydraulic unit, relay box and ABSCM&H/U?	Repair the connector.	Go to step **5.**
5	**CHECK ABSCM&H/U.** 1)Connect all connectors. 2)Erase the memory. 3)Perform the inspection mode. 4)Read out the diagnostic trouble code.	Is the same diagnostic trouble code as in the current diagnosis still being output?	Replace the ABSCM&H/U. <Ref. to ABS-7, ABS Control Module and Hydraulic Control Unit (ABSCM&H/U).>	Go to step **6.**
6	**CHECK ANY OTHER DIAGNOSTIC TROUBLE CODES APPEARANCE.**	Are other diagnostic trouble codes being output?	Proceed with the diagnosis corresponding to the diagnostic trouble code.	A temporary poor contact.

AB:DTC 52
MOTOR RELAY ON FAILURE

DIAGNOSIS:
- Faulty motor
- Faulty motor relay
- Faulty harness connector

TROUBLE SYMPTOM:
- ABS does not operate.

WIRING DIAGRAM:

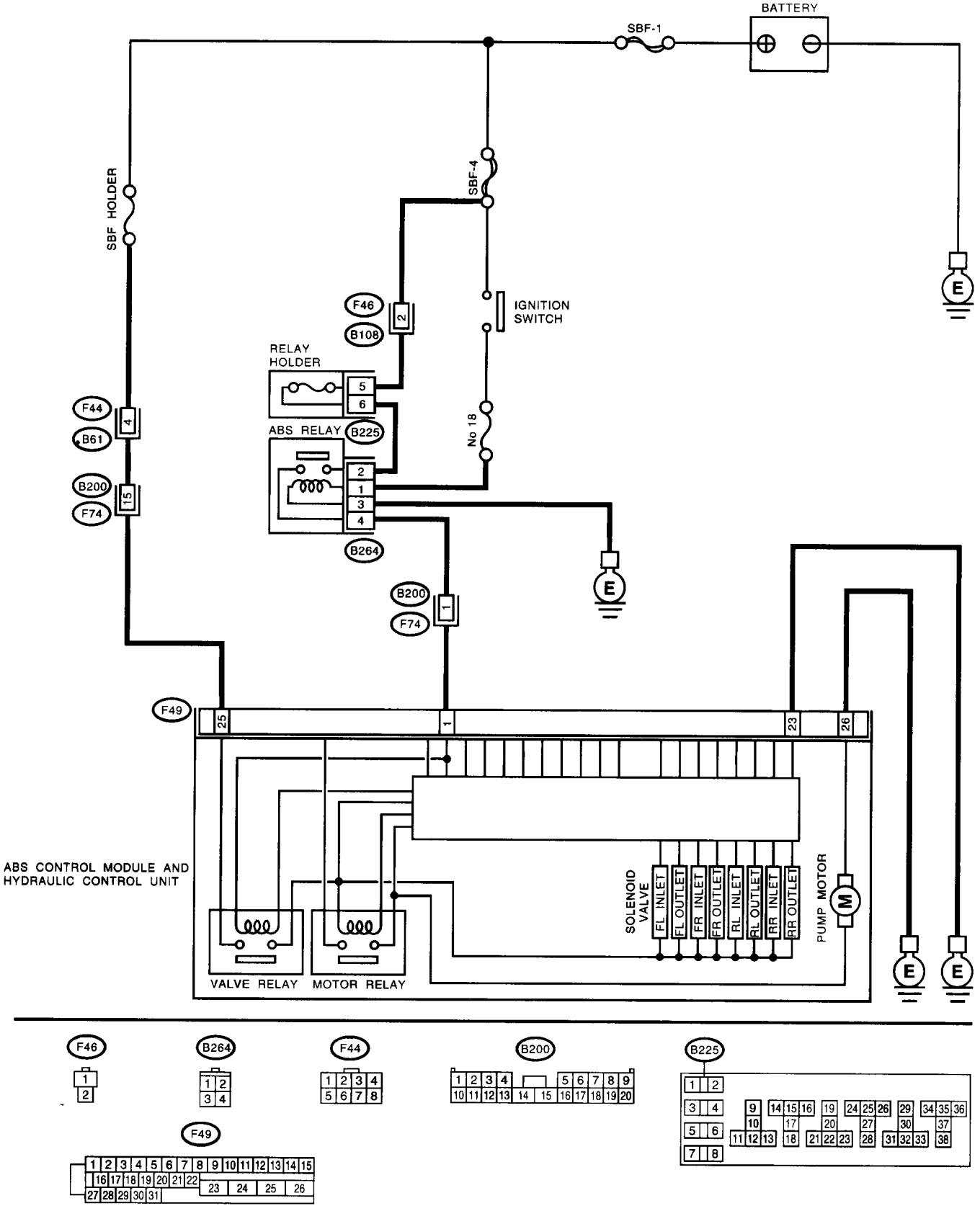

DIAGNOSTICS CHART WITH SUBARU SELECT MONITOR

	Step	Check	Yes	No
1	**CHECK MOTOR RELAY IN ABSCM&H/U.** Measure the resistance between ABSCM&H/U terminals. ***Terminals*** ***No. 25 — No. 26:***	Is the resistance more than 1 MΩ?	Go to step **2.**	Replace the ABSCM&H/U <Ref. to ABS-7, ABS Control Module and Hydraulic Control Unit (ABSCM&H/U).>
2	**CHECK MOTOR OPERATION.** Operate the sequence control. <Ref. to ABS-11, ABS Sequence Control.> NOTE: Use the diagnosis connector to operate the sequence control.	Can the motor revolution noise (buzz) be heard when carrying out the sequence control?	Go to step **3.**	Replace the ABSCM&H/U. <Ref. to ABS-7, ABS Control Module and Hydraulic Control Unit (ABSCM&H/U).>
3	**CHECK POOR CONTACT IN CONNECTORS.** Turn the ignition switch to OFF.	Is there poor contact in connector between hydraulic unit, relay box and ABSCM&H/U?	Repair the connector.	Go to step **4.**
4	**CHECK ABSCM&H/U.** 1)Connect all connectors. 2)Erase the memory. 3)Perform the inspection mode. 4)Read out the diagnostic trouble code.	Is the same diagnostic trouble code as in the current diagnosis still being output?	Replace the ABSCM&H/U. <Ref. to ABS-7, ABS Control Module and Hydraulic Control Unit (ABSCM&H/U).>	Go to step **5.**
5	**CHECK ANY OTHER DIAGNOSTIC TROUBLE CODES APPEARANCE.**	Are other diagnostic trouble codes being output?	Proceed with the diagnosis corresponding to the diagnostic trouble code.	A temporary poor contact.

AC:DTC 52
MOTOR MALFUNCTION

DIAGNOSIS:
- Faulty motor
- Faulty motor relay
- Faulty harness connector

TROUBLE SYMPTOM:
- ABS does not operate.

WIRING DIAGRAM:

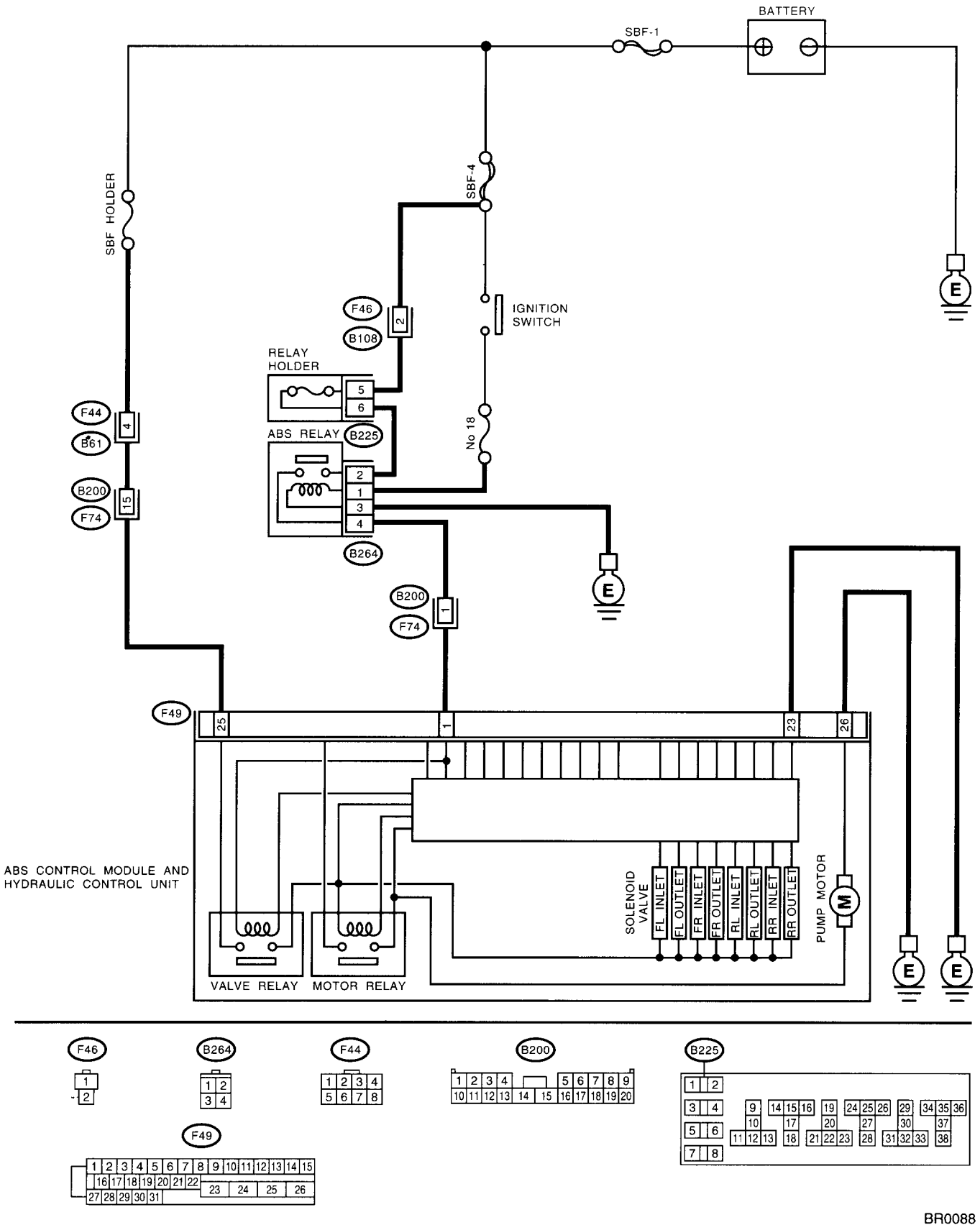

	Step	Check	Yes	No
1	**CHECK INPUT VOLTAGE OF ABSCM&H/U.** 1)Turn the ignition switch to OFF. 2)Disconnect the connector from ABSCM&H/U. 3)Turn the ignition switch to ON. 4)Measure the voltage between ABSCM&H/U connector and chassis ground. ***Connector & terminal*** ***(F49) No. 25 (+) — Chassis ground (–):***	Is the voltage between 10 and 13 V?	Go to step **2.**	Repair harness/ connector between battery and ABSCM&H/U and check fuse SBF6.
2	**CHECK GROUND CIRCUIT OF MOTOR.** 1)Turn the ignition switch to OFF. 2)Measure the resistance between ABSCM&H/U connector and chassis ground. ***Connector & terminal*** ***(F49) No. 26 — Chassis ground:***	Is the resistance less than 0.5 Ω?	Go to step **3.**	Repair the ABSCM&H/U ground harness.
3	**CHECK INPUT VOLTAGE OF ABSCM&H/U.** 1)Run the engine at idle. 2)Measure the voltage between ABSCM&H/U connector and chassis ground. ***Connector & terminal*** ***(F49) No. 1 (+) — Chassis ground (–):***	Is the voltage between 10 and 15 V?	Go to step **4.**	Repair harness connector between battery, ignition switch and ABSCM&H/U.
4	**CHECK GROUND CIRCUIT OF ABSCM&H/U.** 1)Turn the ignition switch to OFF. 2)Measure the resistance between ABSCM&H/U connector and chassis ground. ***Connector & terminal*** ***(F49) No. 23 — Chassis ground:***	Is the resistance less than 0.5 Ω?	Go to step **5.**	Repair the ABSCM&H/U ground harness.
5	**CHECK MOTOR OPERATION.** Operate the sequence control. <Ref. to ABS-11, ABS Sequence Control.> NOTE: Use the diagnosis connector to operate the sequence control.	Can the motor revolution noise (buzz) be heard when carrying out the sequence control?	Go to step **6.**	Replace the ABSCM&H/U. <Ref. to ABS-7, ABS Control Module and Hydraulic Control Unit (ABSCM&H/U).>
6	**CHECK POOR CONTACT IN CONNECTORS.** Turn the ignition switch to OFF.	Is there poor contact in connector between generator, battery and ABSCM&H/U?	Repair the connector.	Go to step **7.**
7	**CHECK ABSCM&H/U.** 1)Connect all connectors. 2)Erase the memory. 3)Perform the inspection mode. 4)Read out the diagnostic trouble code.	Is the same diagnostic trouble code as in the current diagnosis still being output?	Replace the ABSCM&H/U. <Ref. to ABS-7, ABS Control Module and Hydraulic Control Unit (ABSCM&H/U).>	Go to step **8.**
8	**CHECK ANY OTHER DIAGNOSTIC TROUBLE CODES APPEARANCE.**	Are other diagnostic trouble codes being output?	Proceed with the diagnosis corresponding to the diagnostic trouble code.	A temporary poor contact.

AD:DTC 54
STOP LIGHT SWITCH SIGNAL CIRCUIT MALFUNCTION

DIAGNOSIS:
- Faulty stop light switch

TROUBLE SYMPTOM:
- ABS does not operate.

WIRING DIAGRAM:

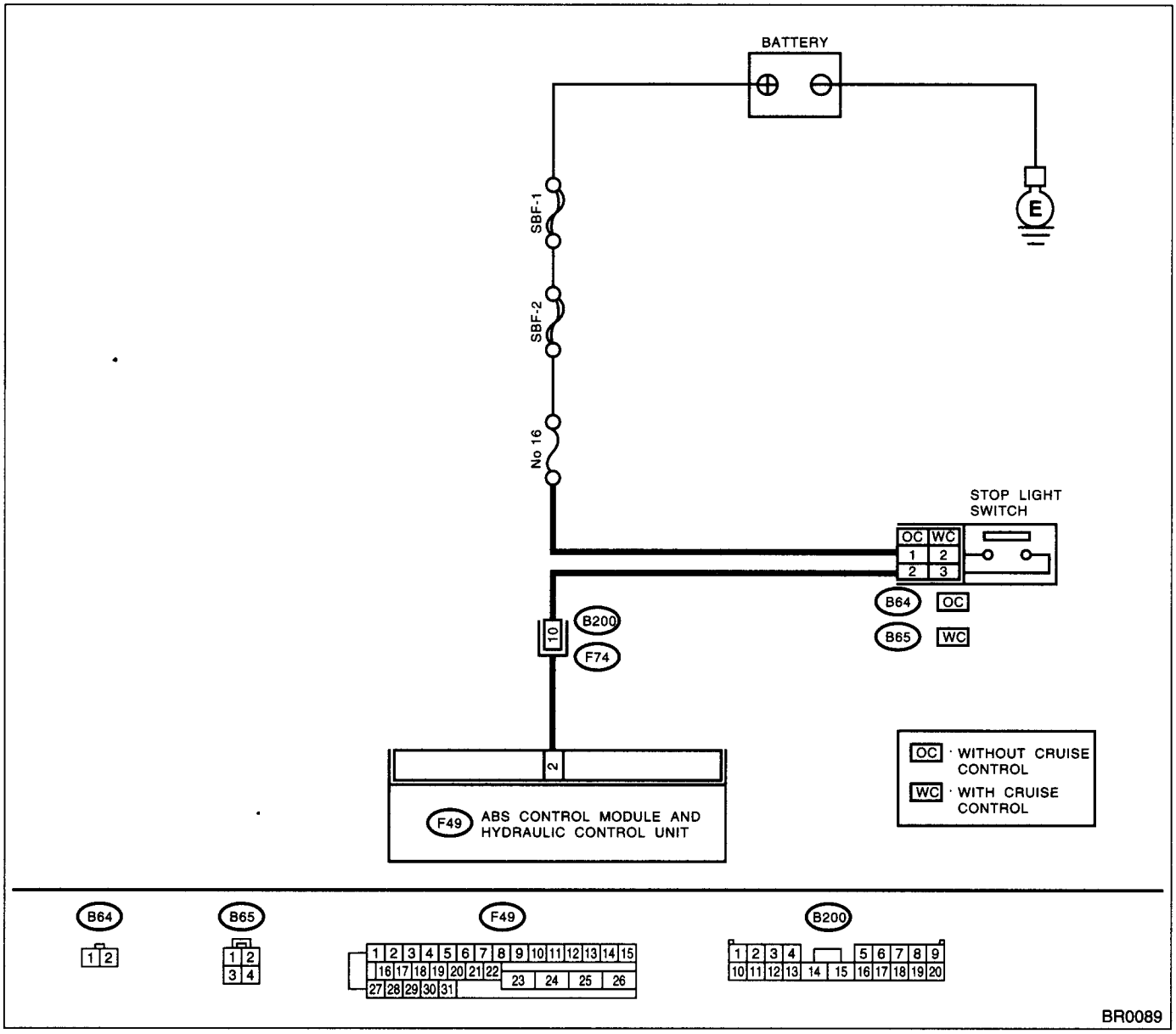

	Step	Check	Yes	No
1	**CHECK OUTPUT OF STOP LIGHT SWITCH USING SELECT MONITOR.** 1)Select "Current data display & Save" on the select monitor. 2)Release the brake pedal. 3)Read the stop light switch output in the select monitor data display.	Is the reading indicated on monitor display less than 1.5 V?	Go to step **2.**	Go to step **3.**
2	**CHECK OUTPUT OF STOP LIGHT SWITCH USING SELECT MONITOR.** 1)Depress the brake pedal. 2)Read the stop light switch output in the select monitor data display.	Is the reading indicated on monitor display between 10 and 15 V?	Go to step **5.**	Go to step **3.**
3	**CHECK IF STOP LIGHTS COME ON.** Depress the brake pedal.	Do stop lights turn on?	Go to step **4.**	Repair the stop lights circuit.
4	**CHECK OPEN CIRCUIT IN HARNESS.** 1)Turn the ignition switch to OFF. 2)Disconnect the connector from ABSCM&H/U. 3)Depress the brake pedal. 4)Measure the voltage between ABSCM&H/U connector and chassis ground. ***Connector & terminal*** ***(F49) No. 2 — Chassis ground:***	Is the voltage between 10 and 15 V?	Go to step **5.**	Repair harness between stop light switch and ABSCM&H/U connector.
5	**CHECK POOR CONTACT IN CONNECTORS.**	Is there poor contact in connector between stop light switch and ABSCM&H/U?	Repair the connector.	Go to step **6.**
6	**CHECK ABSCM&H/U.** 1)Connect all connectors. 2)Erase the memory. 3)Perform the inspection mode. 4)Read out the diagnostic trouble code.	Is the same diagnostic trouble code as in the current diagnosis still being output?	Replace the ABSCM&H/U. <Ref. to ABS-7, ABS Control Module and Hydraulic Control Unit (ABSCM&H/U).>	Go to step **7.**
7	**CHECK ANY OTHER DIAGNOSTIC TROUBLE CODES APPEARANCE.**	Are other diagnostic trouble codes being output?	Proceed with the diagnosis corresponding to the diagnostic trouble code.	A temporary poor contact.

AE:DTC 56
OPEN OR SHORT CIRCUIT IN G SENSOR CIRCUIT

DIAGNOSIS:
- Faulty G sensor output voltage

TROUBLE SYMPTOM:
- ABS does not operate.

WIRING DIAGRAM:

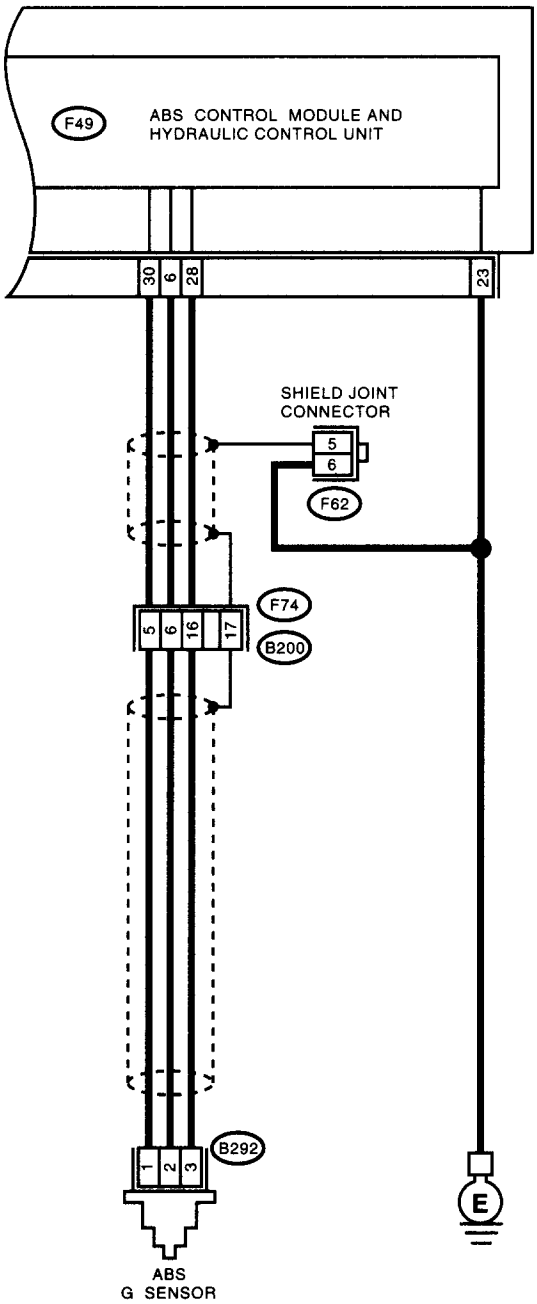

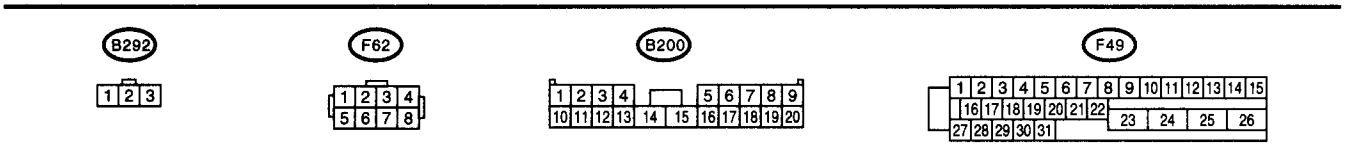

BR0090

	Step	Check	Yes	No
1	**CHECK OUTPUT OF G SENSOR USING SELECT MONITOR.** 1)Select "Current data display & Save" on the select monitor. 2)Read the G sensor output in select monitor data display.	Is the G sensor output on the monitor display between 2.1 and 2.5 V when the G sensor is in horizontal position?	Go to step **2.**	Go to step **5.**
2	**CHECK POOR CONTACT IN CONNECTORS.**	Is there poor contact in connector between ABSCM&H/U and G sensor?	Repair the connector.	Go to step **3.**
3	**CHECK ABSCM&H/U.** 1)Connect all connectors. 2)Erase the memory. 3)Perform the inspection mode. 4)Read out the diagnostic trouble code.	Is the same diagnostic trouble code as in the current diagnosis still being output?	Replace the ABSCM&H/U. <Ref. to ABS-7, ABS Control Module and Hydraulic Control Unit (ABSCM&H/U).>	Go to step **4.**
4	**CHECK ANY OTHER DIAGNOSTIC TROUBLE CODES APPEARANCE.**	Are other diagnostic trouble codes being output?	Proceed with the diagnosis corresponding to the diagnostic trouble code.	A temporary poor contact.
5	**CHECK INPUT VOLTAGE OF G SENSOR.** 1)Turn the ignition switch to OFF. 2)Remove the console box. 3)Disconnect the G sensor from body. (Do not disconnect connector.) 4)Turn the ignition switch to ON. 5)Measure the voltage between G sensor connector terminals. ***Connector & terminal*** ***(B292) No. 1 (+) — No. 3 (–):***	Is the voltage between 4.75 and 5.25 V?	Go to step **6.**	Repair harness/ connector between G sensor and ABSCM&H/U.
6	**CHECK OPEN CIRCUIT IN G SENSOR OUTPUT HARNESS AND GROUND HARNESS.** 1)Turn the ignition switch to OFF. 2)Disconnect the connector from ABSCM&H/U. 3)Measure the resistance between ABSCM&H/U connector terminals. ***Connector & terminal*** ***(F49) No. 6 — No. 28:***	Is the resistance between 4.3 and 4.9 kΩ?	Go to step **7.**	Repair harness/ connector between G sensor and ABSCM&H/U.
7	**CHECK GROUND SHORT IN G SENSOR OUTPUT HARNESS.** 1)Disconnect the connector from G sensor. 2)Measure the resistance between ABSCM&H/U connector and chassis ground. ***Connector & terminal*** ***(F49) No. 6 — Chassis ground:***	Is the resistance more than 1 MΩ?	Go to step **8.**	Repair harness between G sensor and ABSCM&H/U.
8	**CHECK G SENSOR.** 1)Connect the connector to G sensor. 2)Connect the connector to ABSCM&H/U. 3)Turn the ignition switch to ON. 4)Measure the voltage between G sensor connector terminals. ***Connector & terminal*** ***(B292) No. 2 (+) — No. 3 (–):***	Is the voltage between 2.1 and 2.5 V when G sensor is horizontal?	Go to step **9.**	Replace the G sensor. <Ref. to ABS-23, G Sensor.>

	Step	Check	Yes	No
9	**CHECK G SENSOR.** Measure the voltage between G sensor connector terminals. ***Connector & terminal*** ***(B292) No. 2 (+) — No. 3 (–):***	Is the voltage between 3.7 and 4.1 V when G sensor is inclined forwards to 90°?	Go to step **10.**	Replace the G sensor. <Ref. to ABS-23, G Sensor.>
10	**CHECK G SENSOR.** Measure the voltage between G sensor connector terminals. ***Connector & terminal*** ***(B292) No. 2 (+) — No. 3 (–):***	Is the voltage between 0.5 and 0.9 V when G sensor is inclined backwards to 90°?	Go to step **11.**	Replace the G sensor. <Ref. to ABS-23, G Sensor.>
11	**CHECK POOR CONTACT IN CONNECTORS.** Turn the ignition switch to OFF.	Is there poor contact in connector between ABSCM&H/U and G sensor?	Repair the connector.	Go to step **12.**
12	**CHECK ABSCM&H/U.** 1)Connect all connectors. 2)Erase the memory. 3)Perform the inspection mode. 4)Read out the diagnostic trouble code.	Is the same diagnostic trouble code as in the current diagnosis still being output?	Replace the ABSCM&H/U. <Ref. to ABS-7, ABS Control Module and Hydraulic Control Unit (ABSCM&H/U).>	Go to step **13.**
13	**CHECK ANY OTHER DIAGNOSTIC TROUBLE CODES APPEARANCE.**	Are other diagnostic trouble codes being output?	Proceed with the diagnosis corresponding to the diagnostic trouble code.	A temporary poor contact.

AF:DTC 56
BATTERY SHORT IN G SENSOR CIRCUIT

DIAGNOSIS:
- Faulty G sensor output voltage

TROUBLE SYMPTOM:
- ABS does not operate.

WIRING DIAGRAM:

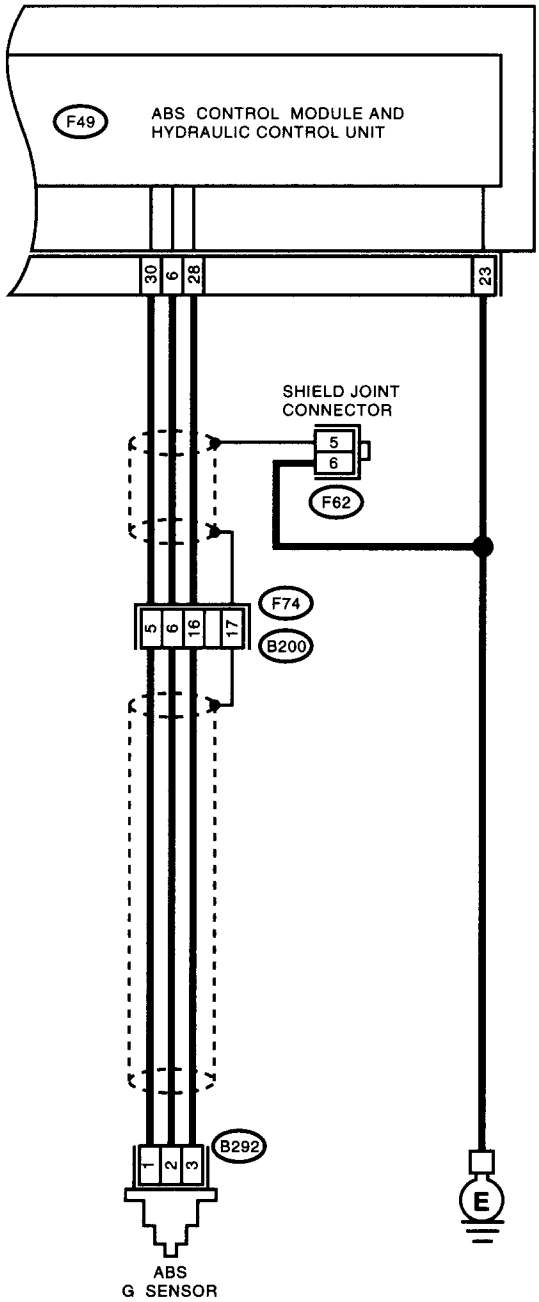

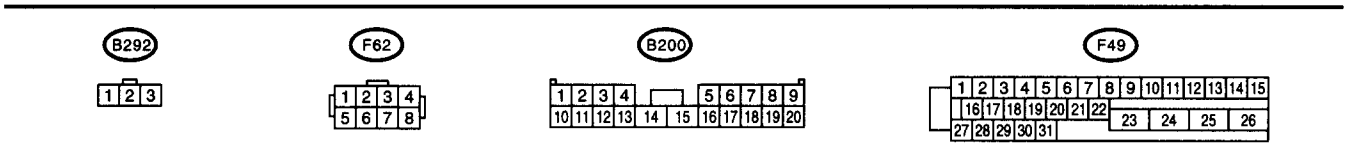

BR0090

	Step	Check	Yes	No
	CHECK OUTPUT OF G SENSOR USING SELECT MONITOR. 1)Select "Current data display & Save" on the select monitor 2)Read the G sensor output in select monitor data display.	s the G sensor output on the nonitor display between 2 1 ınd 2 5 V when the G sensor s in horizontal position?	Go to step **2.**	Go to step **5.**
!	**CHECK POOR CONTACT IN CONNECTORS**	s there poor contact in connector between ABSCM&H/U ınd G sensor?	Repair the connector.	Go to step **3.**
)	**CHECK ABSCM&H/U.** 1)Connect all connectors. 2)Erase the memory. 3)Perform the inspection mode. 4)Read out the diagnostic trouble code	s the same diagnostic trouble ode as in the current diagnois still being output?	Replace the ABSCM&H/U. <Ref. to ABS-7, ABS Control Module and Hydraulic Control Unit ABSCM&H/U) >	Go to step **4.**
)	**CHECK ANY OTHER DIAGNOSTIC TROUBLE CODES APPEARANCE.**	re other diagnostic trouble odes being output?	Proceed with the diagnosis corresponding to the diagnostic trouble code.	A temporary poor contact.
;	**CHECK FREEZE FRAME DATA.** 1)Select "Freeze frame data" on the select monitor. 2)Read the front right wheel speed on the select monitor display	s the front right wheel speed n monitor display 0 km?	Go to step **6.**	Go to step **16.**
;	**CHECK FREEZE FRAME DATA.** Read the front left wheel speed on the select monitor display.	s the front left wheel speed on nonitor display 0 km?	Go to step **7.**	Go to step **16.**
'	**CHECK FREEZE FRAME DATA.** Read the rear right wheel speed on the select monitor display.	s the rear right wheel speed n monitor display 0 km?	Go to step **8.**	Go to step **16.**
;	**CHECK FREEZE FRAME DATA.** Read the rear left wheel speed on the select monitor display	s the rear left wheel speed on nonitor display 0 km?	Go to step **9.**	Go to step **16.**
)	**CHECK FREEZE FRAME DATA.** Read the G sensor output on the select monitor display.	s the G sensor output on monitor display more than 3.65 V?	Go to step **10.**	Go to step **16.**
10	**CHECK OPEN CIRCUIT IN G SENSOR OUTPUT HARNESS AND GROUND HARNESS.** 1)Turn the ignition switch to OFF 2)Disconnect the connector from ABSCM&H/U 3)Measure the resistance between ABSCM&H/U connector terminals. ***Connector & terminal*** ***(F49) No. 6 — No. 28:***	s the resistance between 4.3 ınd 4.9 kΩ?	Go to step **11.**	Repair harness/ connector between G senso and ABSCM&H/U
11	**CHECK BATTERY SHORT OF HARNESS.** 1)Turn the ignition switch to OFF. 2)Remove the console box 3)Disconnect the connector from G sensor. 4)Disconnect the connector from ABSCM&H/U. 5)Measure the voltage between ABSCM&H/U connector and chassis ground. ***Connector & terminal*** ***(F49) No. 6 (+) — Chassis ground (–):***	s the voltage less than 1 V?	Go to step **12.**	Repair harness between G senso and ABSCM&H/U

	Step	Check	Yes	No
12	**CHECK BATTERY SHORT OF HARNESS.** 1)Turn the ignition switch to ON. 2)Measure the voltage between ABSCM&H/U connector and chassis ground. ***Connector & terminal*** ***(F49) No. 6 (+) — Chassis ground (–):***	Is the voltage less than 1 V?	Go to step **13.**	Repair harness between G sensor and ABSCM&H/U.
13	**CHECK POOR CONTACT IN CONNECTORS.**	Is there poor contact in connector between ABSCM&H/U and G sensor?	Repair the connector.	Go to step **14.**
14	**CHECK ABSCM&H/U.** 1)Connect all connectors. 2)Erase the memory. 3)Perform the inspection mode. 4)Read out the diagnostic trouble code.	Is the same diagnostic trouble code as in the current diagnosis still being output?	Replace the ABSCM&H/U. <Ref. to ABS-7, ABS Control Module and Hydraulic Control Unit (ABSCM&H/U).>	Go to step **15.**
15	**CHECK ANY OTHER DIAGNOSTIC TROUBLE CODES APPEARANCE.**	Are other diagnostic trouble codes being output?	Proceed with the diagnosis corresponding to the diagnostic trouble code.	A temporary poor contact.
16	**CHECK INPUT VOLTAGE OF G SENSOR.** 1)Turn the ignition switch to OFF. 2)Remove the console box. 3)Disconnect the G sensor from body. (Do not disconnect connector.) 4)Turn the ignition switch to ON. 5)Measure the voltage between G sensor connector terminals. ***Connector & terminal*** ***(B292) No. 1 (+) — No. 3 (–):***	Is the voltage between 4.75 and 5.25 V?	Go to step **17.**	Repair harness/ connector between G sensor and ABSCM&H/U.
17	**CHECK OPEN CIRCUIT IN G SENSOR OUTPUT HARNESS AND GROUND HARNESS.** 1)Turn the ignition switch to OFF. 2)Disconnect the connector from ABSCM&H/U. 3)Measure the resistance between ABSCM&H/U connector terminals. ***Connector & terminal*** ***(F49) No. 6 — No. 28:***	Is the resistance between 4.3 and 4.9 kΩ?	Go to step **18.**	Repair harness/ connector between G sensor and ABSCM&H/U.
18	**CHECK G SENSOR.** 1)Connect the connector to G sensor. 2)Connect the connector to ABSCM&H/U. 3)Turn the ignition switch to ON. 4)Measure the voltage between G sensor connector terminals. ***Connector & terminal*** ***(B292) No. 2 (+) — No. 3 (–):***	Is the voltage between 2.1 and 2.5 V when G sensor is horizontal?	Go to step **19.**	Replace the G sensor. <Ref. to ABS-23, G Sensor.>
19	**CHECK G SENSOR.** Measure the voltage between G sensor connector terminals. ***Connector & terminal*** ***(B292) No. 2 (+) — No. 3 (–):***	Is the voltage between 3.7 and 4.1 V when G sensor is inclined forwards to 90°?	Go to step **20.**	Replace the G sensor. <Ref. to ABS-23, G Sensor.>
20	**CHECK G SENSOR.** Measure the voltage between G sensor connector terminals. ***Connector & terminal*** ***(B292) No. 2 (+) — No. 3 (–):***	Is the voltage between 0.5 and 0.9 V when G sensor is inclined backwards to 90°?	Go to step **21.**	Replace the G sensor. <Ref. to ABS-23, G Sensor.>

Step		Check	Yes	No
21	**CHECK POOR CONTACT IN CONNECTORS.** Turn the ignition switch to OFF.	Is there poor contact in connector between ABSCM&H/U and G sensor?	Repair the connector.	Go to step **22.**
22	**CHECK ABSCM&H/U.** 1)Connect all connectors. 2)Erase the memory. 3)Perform the inspection mode. 4)Read out the diagnostic trouble code.	Is the same diagnostic trouble code as in the current diagnosis still being output?	Replace the ABSCM&H/U. <Ref. to ABS-7, ABS Control Module and Hydraulic Control Unit (ABSCM&H/U).>	Go to step **23.**
23	**CHECK ANY OTHER DIAGNOSTIC TROUBLE CODES APPEARANCE.**	Are other diagnostic trouble codes being output?	Proceed with the diagnosis corresponding to the diagnostic trouble code.	A temporary poor contact.

AG:DTC 56
ABNORMAL G SENSOR HIGH μ OUTPUT

DIAGNOSIS:
- Faulty G sensor output voltage

TROUBLE SYMPTOM:
- ABS does not operate.

WIRING DIAGRAM:

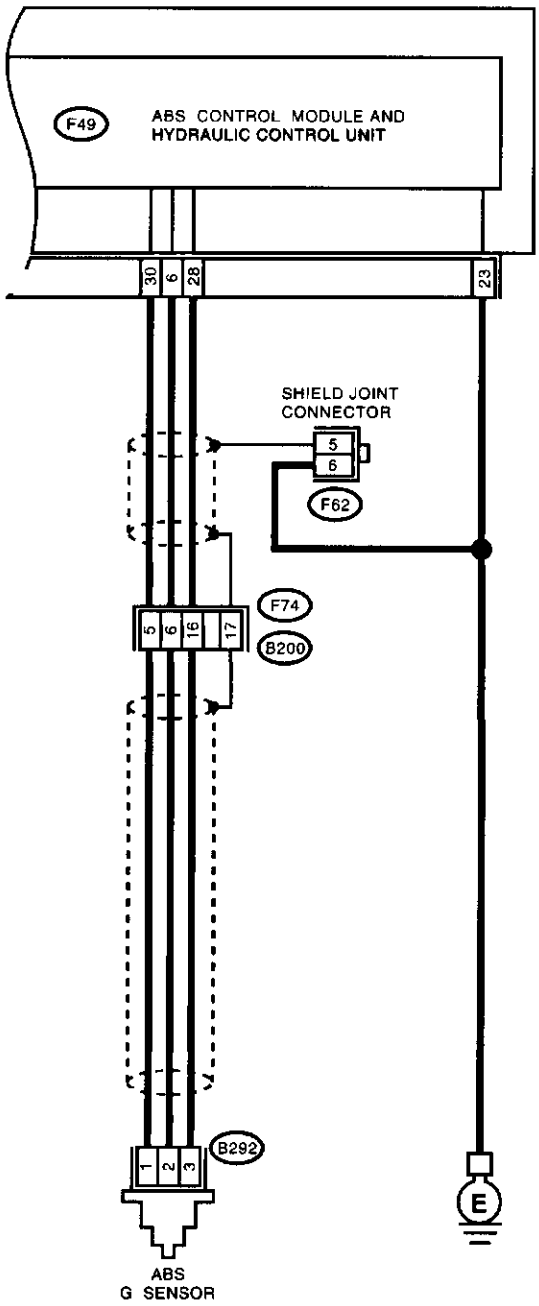

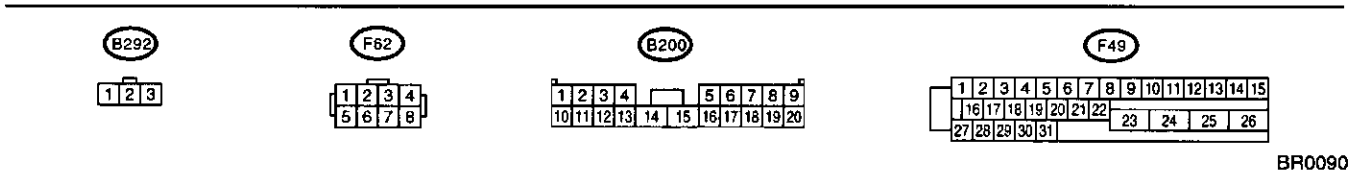

BR0090

	Step	Check	Yes	No
1	**CHECK OUTPUT OF G SENSOR USING SELECT MONITOR.** 1)Select "Current data display & Save" on the select monitor. 2)Read the G sensor output on the select monitor display.	Is the G sensor output on monitor display 2.3±0.2 V when the G sensor is in horizontal position?	Go to step **2.**	Go to step **6.**
2	**CHECK POOR CONTACT IN CONNECTORS.** Turn the ignition switch to OFF.	Is there poor contact in connector between ABSCM&H/U and G sensor?	Repair the connector.	Go to step **3.**
3	**CHECK ABSCM&H/U.** 1)Connect all connectors. 2)Erase the memory. 3)Perform the inspection mode. 4)Read out the diagnostic trouble code.	Is the same diagnostic trouble code as in the current diagnosis still being output?	Replace the ABSCM&H/U. <Ref. to ABS-7, ABS Control Module and Hydraulic Control Unit (ABSCM&H/U).>	Go to step **4.**
4	**CHECK ANY OTHER DIAGNOSTIC TROUBLE CODES APPEARANCE.**	Are other diagnostic trouble codes being output?	Proceed with the diagnosis corresponding to the diagnostic trouble code.	A temporary poor contact.
5	**CHECK OPEN CIRCUIT IN G SENSOR OUTPUT HARNESS AND GROUND HARNESS.** 1)Turn the ignition switch to OFF. 2)Disconnect the connector from ABSCM&H/U. 3)Measure the resistance between ABSCM&H/U connector terminals. ***Connector & terminal*** ***(F49) No. 6 — No. 28:***	Is the resistance between 4.3 and 4.9 kΩ?	Go to step **6.**	Repair harness/ connector between G sensor and ABSCM&H/U.
6	**CHECK GROUND SHORT OF HARNESS.** Measure the resistance between ABSCM&H/U connector and chassis ground. ***Connector & terminal*** ***(F49) No. 28 — Chassis ground:***	Is the resistance more than 1 MΩ?	Go to step **7.**	Repair harness between G sensor and ABSCM&H/U. Replace ABSCM&H/U. <Ref. to ABS-7, ABS Control Module and Hydraulic Control Unit (ABSCM&H/U).>
7	**CHECK G SENSOR.** 1)Remove the console box. 2)Remove the G sensor from vehicle. 3)Connect the connector to G sensor. 4)Connect the connector to ABSCM&H/U. 5)Turn the ignition switch to ON. 6)Measure the voltage between G sensor connector terminals. ***Connector & terminal*** ***(B292) No. 2 (+) — No. 3 (–):***	Is the voltage between 2.1 and 2.5 V when G sensor is horizontal?	Go to step **8.**	Replace the G sensor. <Ref. to ABS-23, G Sensor.>
8	**CHECK G SENSOR.** Measure the voltage between G sensor connector terminals. ***Connector & terminal*** ***(B292) No. 2 (+) — No. 3 (–):***	Is the voltage between 3.7 and 4.1 V when G sensor is inclined forwards to 90°?	Go to step **9.**	Replace the G sensor. <Ref. to ABS-23, G Sensor.>

	Step	Check	Yes	No
9	**CHECK G SENSOR.** Measure the voltage between G sensor connector terminals. ***Connector & terminal*** ***(B292) No. 2 (+) — No. 3 (–):***	Is the voltage between 0.5 and 0.9 V when G sensor is inclined backwards to 90°?	Go to step **10.**	Replace the G sensor. <Ref. to ABS-23, G Sensor.>
10	**CHECK ABSCM&H/U.** 1)Turn the ignition switch to OFF. 2)Connect all connectors. 3)Erase the memory. 4)Perform the inspection mode. 5)Read out the diagnostic trouble code.	Is the same diagnostic trouble code as in the current diagnosis still being output?	Replace the ABSCM&H/U. <Ref. to ABS-7, ABS Control Module and Hydraulic Control Unit (ABSCM&H/U).>	Go to step **11.**
11	**CHECK ANY OTHER DIAGNOSTIC TROUBLE CODES APPEARANCE.**	Are other diagnostic trouble codes being output?	Proceed with the diagnosis corresponding to the diagnostic trouble code.	A temporary poor contact.

AH:DTC 56
DETECTION OF G SENSOR STICK

DIAGNOSIS:
- Faulty G sensor output voltage

TROUBLE SYMPTOM:
- ABS does not operate.

WIRING DIAGRAM:

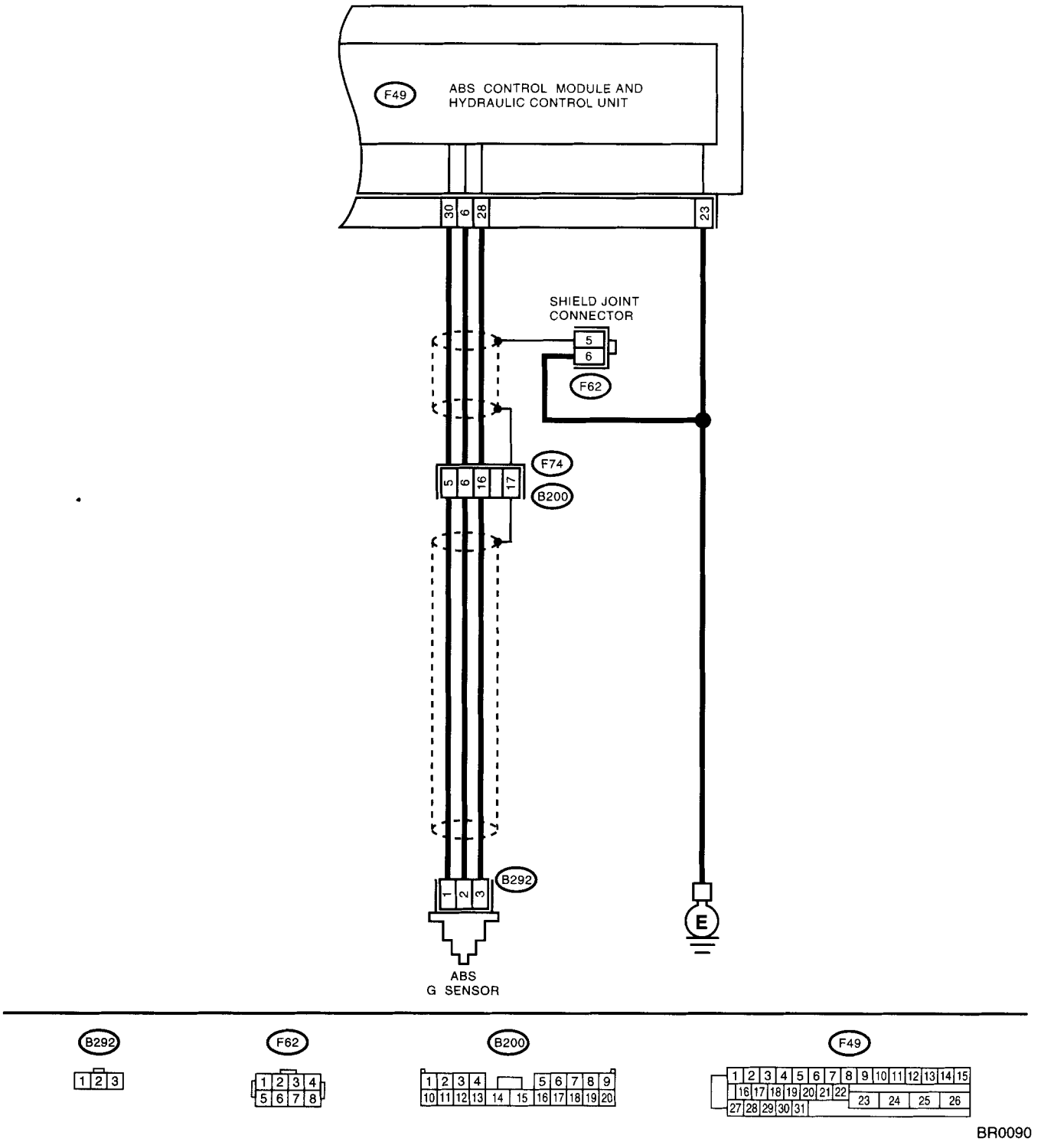

	Step	Check	Yes	No
1	**CHECK ALL FOUR WHEELS FOR FREE TURNING.**	Have the wheels been turned freely such as when the vehicle is lifted up, or operated on a rolling road?	The ABS is normal. Erase the diagnostic trouble code.	Go to step **2.**
2	**CHECK OUTPUT OF G SENSOR USING SELECT MONITOR.** 1)Select "Current data display & Save" on the select monitor. 2)Read the select monitor display.	Is the G sensor output on the monitor display between 2.1 and 2.5 V when the vehicle is in horizontal position?	Go to step **3.**	Go to step **8.**
3	**CHECK OUTPUT OF G SENSOR USING SELECT MONITOR.** 1)Turn the ignition switch to OFF. 2)Remove the console box. 3)Remove the G sensor from vehicle. (Do not disconnect connector.) 4)Turn the ignition switch to ON. 5)Select "Current data display & Save" on the select monitor. 6)Read the select monitor display.	Is the G sensor output on the monitor display between 3.7 and 4.1 V when G sensor is inclined forwards to 90°?	Go to step **4.**	Replace the G sensor. <Ref. to ABS-23, G Sensor.>
4	**CHECK OUTPUT OF G SENSOR USING SELECT MONITOR.** Read the select monitor display.	Is the G sensor output on the monitor display between 0.5 and 0.9 V when G sensor is inclined backwards to 90°?	Go to step **5.**	Replace the G sensor. <Ref. to ABS-23, G Sensor.>
5	**CHECK POOR CONTACT IN CONNECTORS.** Turn the ignition switch to OFF.	Is there poor contact in connector between ABSCM&H/U and G sensor?	Repair the connector.	Go to step **6.**
6	**CHECK ABSCM&H/U.** 1)Connect all connectors. 2)Erase the memory. 3)Perform the inspection mode. 4)Read out the diagnostic trouble code.	Is the same diagnostic trouble code as in the current diagnosis still being output?	Replace the ABSCM&H/U. <Ref. to ABS-7, ABS Control Module and Hydraulic Control Unit (ABSCM&H/U).>	Go to step **7.**
7	**CHECK ANY OTHER DIAGNOSTIC TROUBLE CODES APPEARANCE.**	Are other diagnostic trouble codes being output?	Proceed with the diagnosis corresponding to the diagnostic trouble code.	A temporary poor contact.
8	**CHECK OPEN CIRCUIT IN G SENSOR OUTPUT HARNESS AND GROUND HARNESS.** 1)Turn the ignition switch to OFF. 2)Disconnect the connector from ABSCM&H/U. 3)Measure the resistance between ABSCM&H/U connector terminals. ***Connector & terminal*** ***(F49) No. 6 — No. 28:***	Is the resistance between 4.3 and 4.9 kΩ?	Go to step **9.**	Repair harness/connector between G sensor and ABSCM&H/U.
9	**CHECK G SENSOR.** 1)Remove the console box. 2)Remove the G sensor from vehicle. 3)Connect the connector to G sensor. 4)Connect the connector to ABSCM&H/U. 5)Turn the ignition switch to ON. 6)Measure the voltage between G sensor connector terminals. ***Connector & terminal*** ***(B292) No. 2 (+) — No. 3 (–):***	Is the voltage between 2.1 and 2.5 V when G sensor is horizontal?	Go to step **10.**	Replace the G sensor. <Ref. to ABS-23, G Sensor.>

	Step	Check	Yes	No
10	**CHECK G SENSOR.** Measure the voltage between G sensor connector terminals. ***Connector & terminal*** ***(B292) No. 2 (+) — No. 3 (–):***	Is the voltage between 3.7 and 4.1 V when G sensor is inclined forwards to 90°?	Go to step **11.**	Replace the G sensor. <Ref. to ABS-23, G Sensor.>
11	**CHECK G SENSOR.** Measure the voltage between G sensor connector terminals. ***Connector & terminal*** ***(B292) No. 2 (+) — No. 3 (–):***	Is the voltage between 0.5 and 0.9 V when G sensor is inclined backwards to 90°?	Go to step **12.**	Replace the G sensor. <Ref. to ABS-23, G Sensor.>
12	**CHECK ABSCM&H/U.** 1)Turn the ignition switch to OFF. 2)Connect all connectors. 3)Erase the memory. 4)Perform the inspection mode. 5)Read out the diagnostic trouble code.	Is the same diagnostic trouble code as in the current diagnosis still being output?	Replace the ABSCM&H/U. <Ref. to ABS-7, ABS Control Module and Hydraulic Control Unit (ABSCM&H/U).>	Go to step **13.**
13	**CHECK ANY OTHER DIAGNOSTIC TROUBLE CODES APPEARANCE.**	Are other diagnostic trouble codes being output?	Proceed with the diagnosis corresponding to the diagnostic trouble code.	A temporary poor contact.

14.General Diagnostics Table

A: INSPECTION

Symptom		Probable faulty units/parts
Vehicle instability during braking	Vehicle pulls to either side.	• ABSCM&H/U (solenoid valve) • ABS sensor • Brake (caliper & piston, pads) • Wheel alignment • Tire specifications, tire wear and air pressures • Incorrect wiring or piping connections • Road surface (uneven, camber)
	Vehicle spins.	• ABSCM&H/U (solenoid valve) • ABS sensor • Brake (pads) • Tire specifications, tire wear and air pressures • Incorrect wiring or piping connections
Poor braking	Long braking/stopping distance	• ABSCM&H/U (solenoid valve) • Brake (pads) • Air in brake line • Tire specifications, tire wear and air pressures • Incorrect wiring or piping connections
	Wheel locks.	• ABSCM&H/U (solenoid valve, motor) • ABS sensor • Incorrect wiring or piping connections
	Brake dragging	• ABSCM&H/U (solenoid valve) • ABS sensor • Master cylinder • Brake (caliper & piston) • Parking brake • Axle & wheels • Brake pedal play
	Long brake pedal stroke	• Air in brake line • Brake pedal play
	Vehicle pitching	• Suspension play or fatigue (reduced damping) • Incorrect wiring or piping connections • Road surface (uneven)
	Unstable or uneven braking	• ABSCM&H/U (solenoid valve) • ABS sensor • Brake (caliper & piston, pads) • Tire specifications, tire wear and air pressures • Incorrect wiring or piping connections • Road surface (uneven)

GENERAL DIAGNOSTICS TABLE

Symptom		Probable faulty units/parts
Vibration and/or noise (while driving on slippery roads)	Excessive pedal vibration	• Incorrect wiring or piping connections • Road surface (uneven)
	Noise from ABSCM&H/U	• ABSCM&H/U (mount bushing) • ABS sensor • Brake piping
	Noise from front of vehicle	• ABSCM&H/U (mount bushing) • ABS sensor • Master cylinder • Brake (caliper & piston, pads, rotor) • Brake piping • Brake booster & check valve • Suspension play or fatigue
	Noise from rear of vehicle	• ABS sensor • Brake (caliper & piston, pads, rotor) • Parking brake • Brake piping • Suspension play or fatigue

BRAKE

BR

		Page
1.	General Description	2
2.	Front Brake Pad	16
3.	Front Disc Rotor	18
4.	Front Disc Brake Assembly	19
5.	Rear Brake Pad	24
6.	Rear Disc Rotor	25
7.	Rear Disc Brake Assembly	27
8.	Rear Drum Brake Shoe	30
9.	Rear Drum Brake Drum	32
10.	Rear Drum Brake Assembly	33
11.	Master Cylinder	36
12.	Brake Booster	38
13.	Proportioning Valve	43
14.	Brake Fluid	44
15.	Air Bleeding	46
16.	Brake Hose	48
17.	Brake Pipe	50
18.	Brake Pedal	51
19.	Stop Light Switch	55
20.	General Diagnostics	57

1. General Description

A: SPECIFICATIONS

		Non-turbo		Turbo
		Other	Sedan and OUTBACK	
Front disc brake	Size	15 inch		16 inch
	Type	Disc (Floating type, ventilated)		
	Effective disc diameter	228 mm (8.98 in)		247 mm (9.72 in)
	Disc thickness × Outer diameter	24 × 277 mm (0.94 × 10.91 in)		24 × 294 mm (0.94 × 11.57 in)
	Effective cylinder diameter	42.8 mm (1.685 in) × 2		
	Pad dimensions (length × width × thickness)	105.0 × 50.5 × 11.0 mm (4.134 × 1.989 × 0.433 in)		112.3 × 50.0 × 11.0 mm (4.421 × 1.969 × 0.433 in)
	Clearance adjustment	Automatic adjustment		
Rear disc brake	Type	—	Disc (Floating type)	
	Effective disc diameter	—	230 mm (9.06 in)	
	Disc thickness × Outer diameter	—	10 × 266 mm (0.39 × 10.47 in)	
	Effective cylinder diameter	—	38.1 mm (1.500 in)	
	Pad dimensions (length × width × thickness)	—	82.4 × 33.7 × 9.0 mm (3.244 × 1.327 × 0.354 in)	
	Clearance adjustment	—	Automatic adjustment	
Rear drum brake	Type	Drum (Leading-Trailing type)	—	
	Effective drum diameter	228.6 mm (9 in)	—	
	Effective cylinder diameter	19.0 mm (0.689 in)	—	
	Lining dimensions (length × width × thickness)	219.3 × 35.0 × 4.1 mm (8.63 × 1.378 × 0.161 in)	—	
	Clearance adjustment	Automatic adjustment	—	
Master cylinder	Type	Tandem		
	Effective diameter	26.99 mm (1-1/16 in)		
	Reservoir type	Sealed type		
	Brake fluid reservoir capacity	205 cm^3 (12.51 cu in)		
Brake booster	Type	Vacuum suspended		
	Effective diameter	205 + 230 mm (8.07 + 9.06 in)		
Proportioning valve	Split point	1,961 kPa (20 kg/cm^2, 285 psi)		
	Reducing ratio	0.3		
Brake line		Dual circuit system		
Brake fluid		FMVSS No. 116, DOT3 or DOT4		

NOTE:
Refer to "PB section" for parking brake SPECIFICATIONS. <Ref. to PB-2, SPECIFICATIONS, General Description.>

ITEM		STANDARD	SERVICE LIMIT
Front brake	Pad thickness (including back metal)	17 mm (0.571 in)	7.5 mm (0.295 in)
	Disc thickness	24 mm (0.94 in)	22 mm (0.87 in)
	Disc runout	—	0.075 mm (0.0030 in)
Rear brake (Disc type)	Pad thickness (including back metal)	14 mm (0.55 in)	6.5 mm (0.256 in)
	Disc thickness	10 mm (0.39 in)	8.5 mm (0.335 in)
	Disc runout	—	0.07 mm (0.0028 in)
Rear brake (Drum type)	Inside diameter	228.6 mm (9 in)	230.6 mm (9.08 in)
	Lining thickness	4.1 mm (0.161 in)	1.5 mm (0.059 in)
Rear brake (Disc type parking)	Inside diameter	170 mm (6.69 in)	171 mm (6.73 in)
	Lining thickness	3.2 mm (0.126 in)	1.5 mm (0.059 in)
Parking brake	Lever stroke	7 to 8 notches/196 N (20 kgf, 44 lb)	

		Brake pedal force	Fluid pressure	
			Non-turbo	Turbo
Brake booster	Brake fluid pressure without engine running	147 N (15 kgf, 33 lb)	588 kPa (6 kg/cm^2, 85 psi)	
		294 N (30 kgf, 66 lb)	1,471 kPa (15 kg/cm^2, 213 psi)	
	Brake fluid pressure with engine running and vacuum at 66.7 kPa (500 mmHg, 19.69 inHg)	147 N (15 kgf, 33 lb)	5,296 kPa (54 kg/cm^2, 768 psi)	5,688 kPa (58 kg/cm^2, 825 psi)
		294 N (30 kgf, 66 lb)	9,120 kPa (93 kg/cm^2, 1,323 psi)	

Brake pedal	Free play	1 — 3 mm (0.04 — 0.12 in) [Depress brake pedal pad with a force of less than 10 N (1 kgf, 2 lb).]

B: COMPONENT

1. FRONT DISK BRAKE

• NON-TURBO MODEL

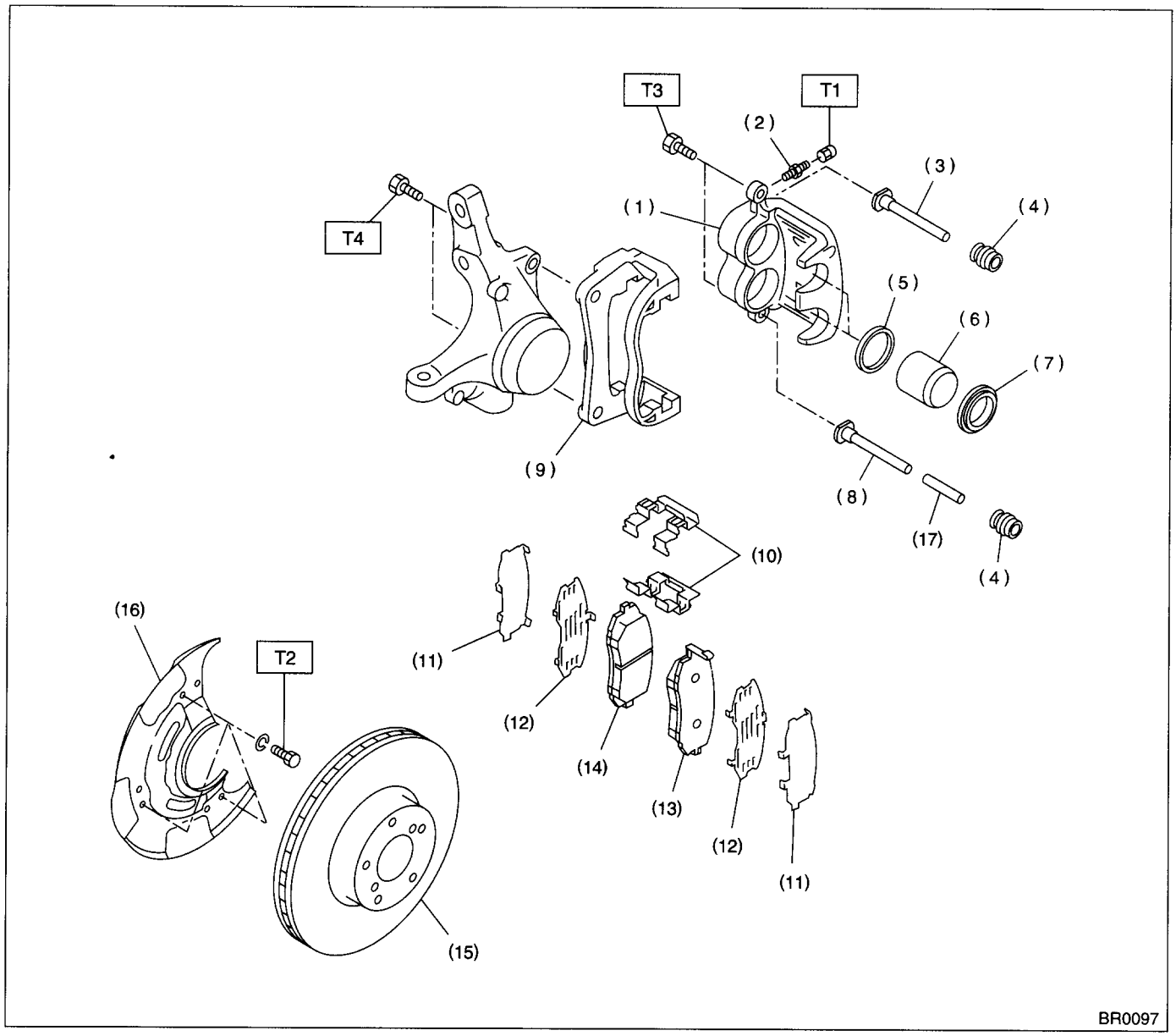

(1)	Caliper body	(9)	Support	(17)	Lock pin sleeve
(2)	Air bleeder screw	(10)	Pad clip		
(3)	Guide pin (Green)	(11)	Outer shim		
(4)	Pin boot	(12)	Inner shim		
(5)	Piston seal	(13)	Pad (Outside)		
(6)	Piston	(14)	Pad (Inside)		
(7)	Piston boot	(15)	Disc rotor		
(8)	Lock pin (Yellow)	(16)	Disc cover		

Tightening torque: N·m (kgf-m, ft-lb)

T1: 8 (0.8, 5.8)
T2: 18 (1.8, 13.0)
T3: 26.5 (2.70, 19.5)
T4: 80 (8.2, 59)

• TURBO MODEL

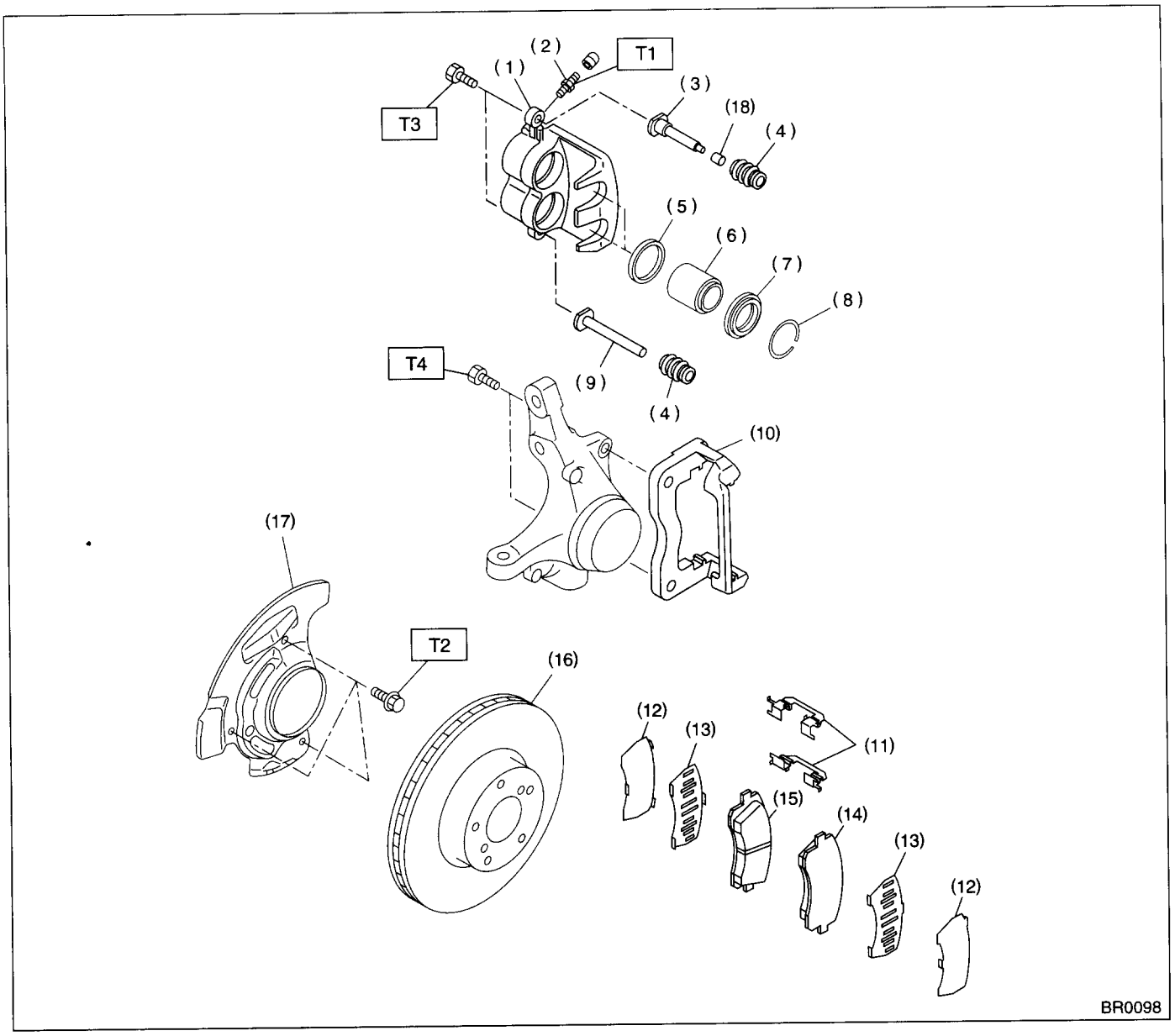

(1)	Caliper body	(9)	Lock pin (Yellow)	(17)	Disc cover
(2)	Air bleeder screw	(10)	Support	(18)	Bush
(3)	Guide pin (Green)	(11)	Pad clip		
(4)	Pin boot	(12)	Outer shim		
(5)	Piston seal	(13)	Inner shim		
(6)	Piston	(14)	Pad (Outside)		
(7)	Piston boot	(15)	Pad (Inside)		
(8)	Boot ring	(16)	Disc rotor		

Tightening torque: N·m (kgf-m, ft-lb)

T1: 8 (0.8, 5.8)
T2: 18 (1.8, 13.0)
T3: 37 (3.8, 27.5)
T4: 80 (8.2, 59)

2. REAR DISC BRAKE

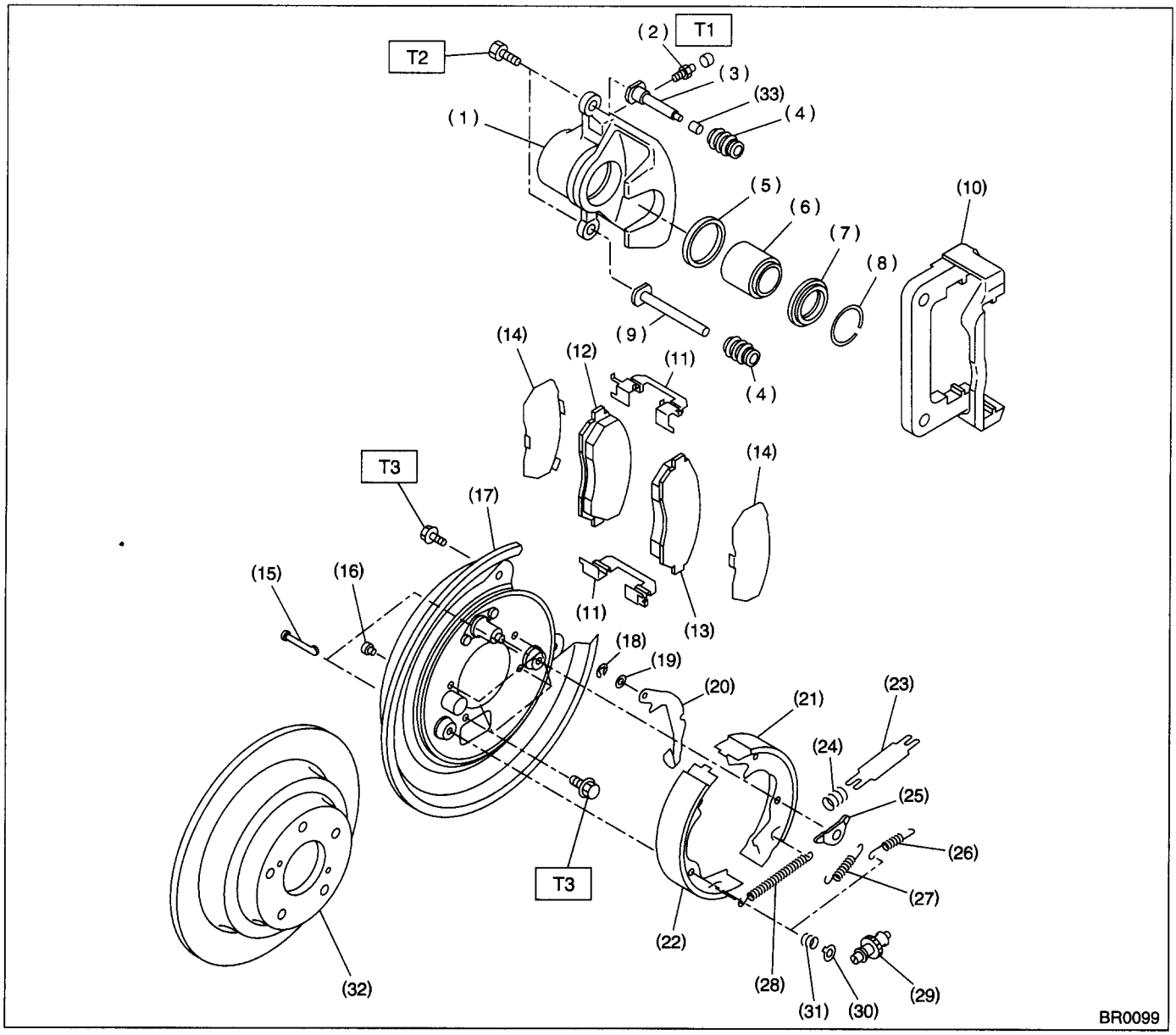

(1)	Caliper body	(14)	Shim	(27)	Primary shoe return spring
(2)	Air bleeder screw	(15)	Shoe hold-down pin	(28)	Adjusting spring
(3)	Guide pin (Green)	(16)	Cover	(29)	Adjuster
(4)	Pin boot	(17)	Back plate	(30)	Shoe hold-down cup
(5)	Piston seal	(18)	Retainer	(31)	Shoe hold-down spring
(6)	Piston	(19)	Spring washer	(32)	Disc rotor
(7)	Piston boot	(20)	Parking brake lever	(33)	Bush
(8)	Boot ring	(21)	Parking brake shoe (Secondary)		
(9)	Lock pin (Yellow)	(22)	Parking brake shoe (Primary)		
(10)	Support	(23)	Strut		
(11)	Pad clip	(24)	Strut shoe spring		
(12)	Inner pad	(25)	Shoe guide plate		
(13)	Outer pad	(26)	Secondary shoe return spring		

Tightening torque: N·m (kgf-m, ft-lb)

T1: 8 (0.8, 5.8)
T2: 37 (3.8, 27.5)
T3: 53 (5.4, 39.1)

3. REAR DRUM BRAKE

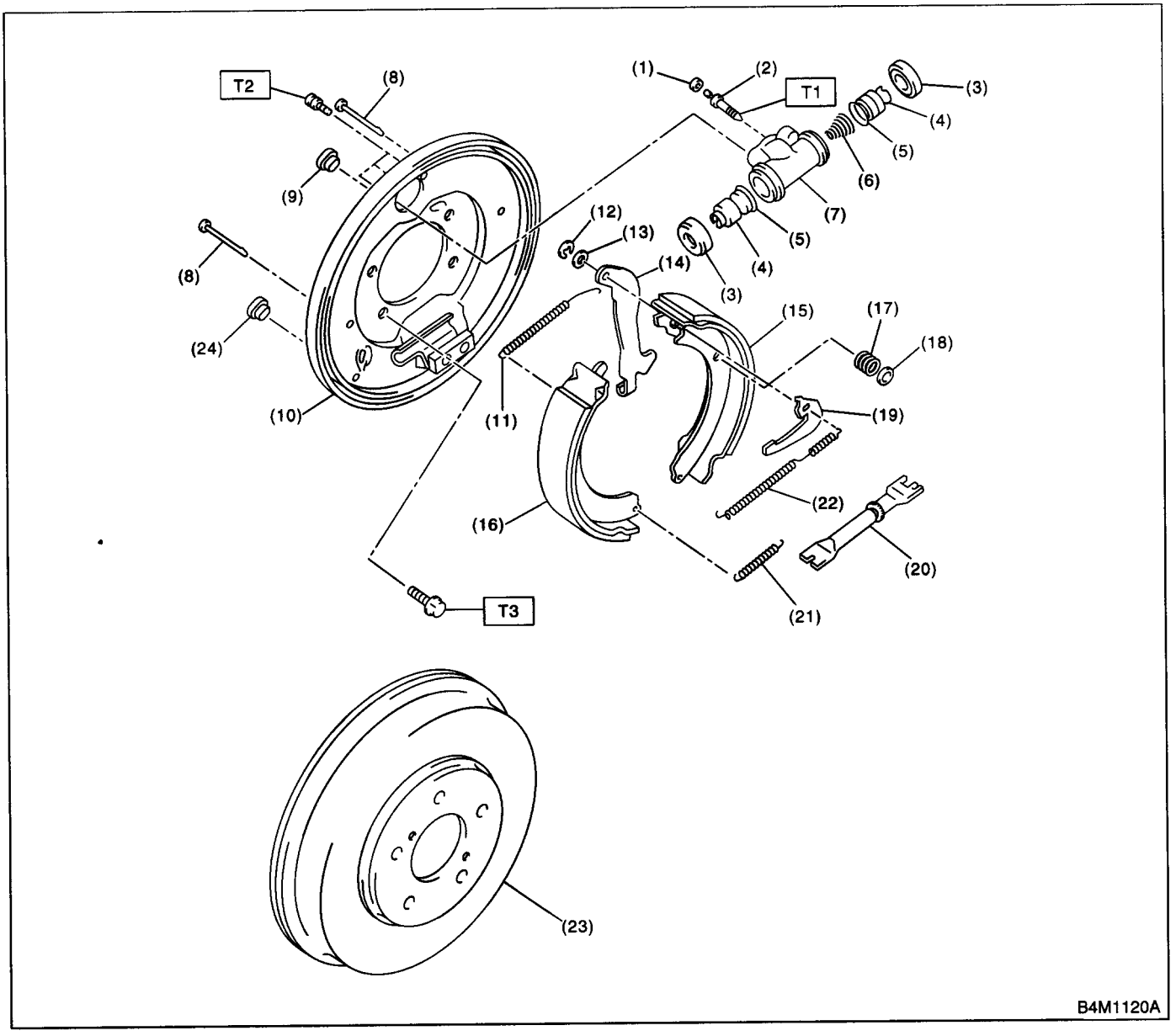

(1) Air bleeder cap
(2) Air bleeder screw
(3) Boot
(4) Piston
(5) Cup
(6) Spring
(7) Wheel cylinder body
(8) Pin
(9) Plug
(10) Back plate
(11) Upper shoe return spring
(12) Retainer
(13) Washer
(14) Parking brake lever
(15) Brake shoe (Trailing)
(16) Brake shoe (Leading)
(17) Shoe hold-down spring
(18) Cup
(19) Adjusting lever
(20) Adjuster
(21) Lower shoe return spring
(22) Adjusting spring
(23) Drum

Tightening torque: N·m (kgf-m, ft-lb)
T1: 8 (0.8, 5.8)
T2: 10 (1.0, 7.2)
T3: 53 (5.4, 39.1)

4. MASTER CYLINDER

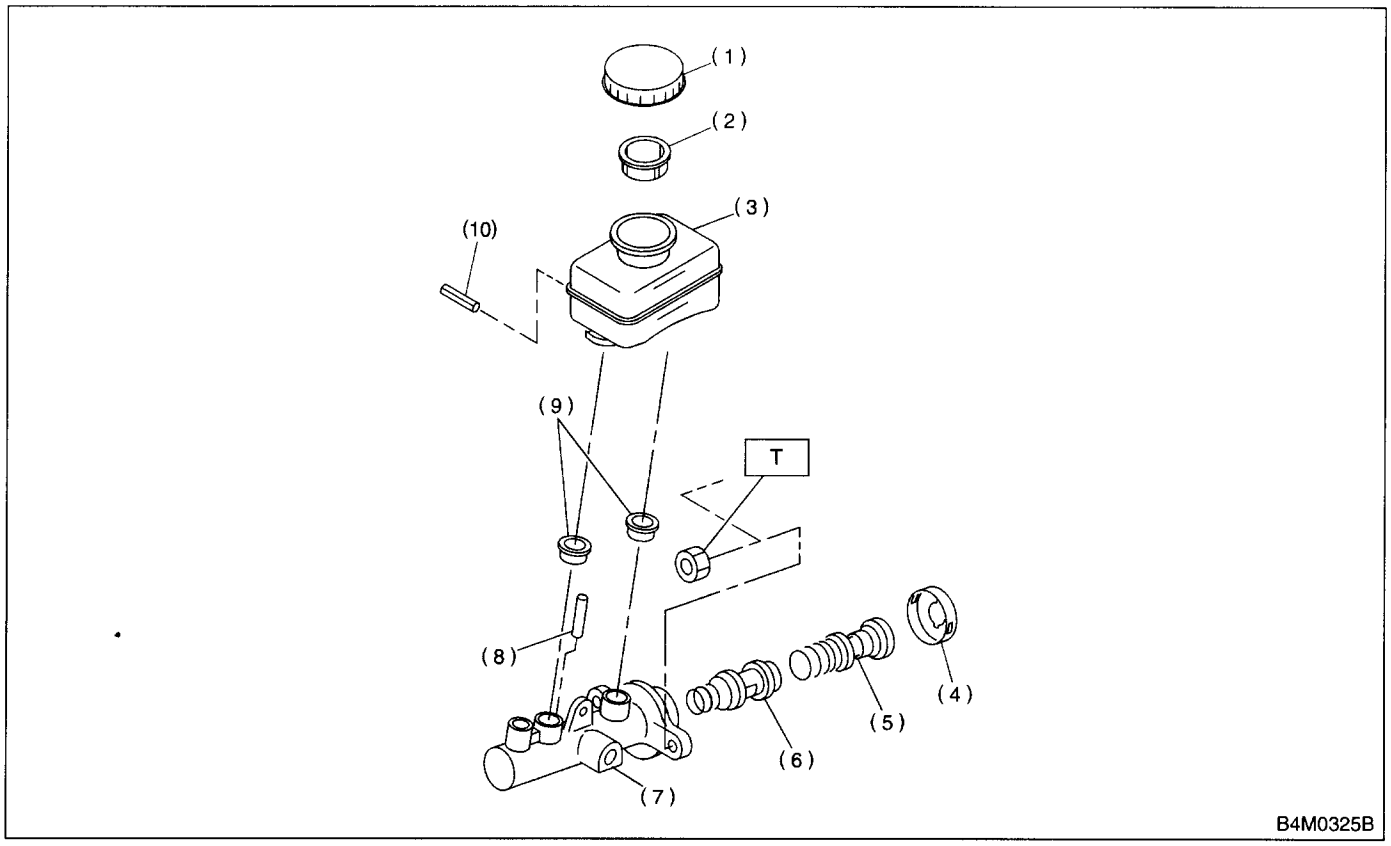

(1)	Cap	(6)	Secondary piston
(2)	Filter	(7)	Cylinder body
(3)	Reservoir tank	(8)	Cylinder pin (with ABS)
(4)	Piston retainer	(9)	Seal
(5)	Primary piston	(10)	Pin

Tightening torque: N·m (kgf-m, ft-lb)
T1: 14 (1.4, 10.1)

5. FRONT BRAKE PIPES AND HOSE

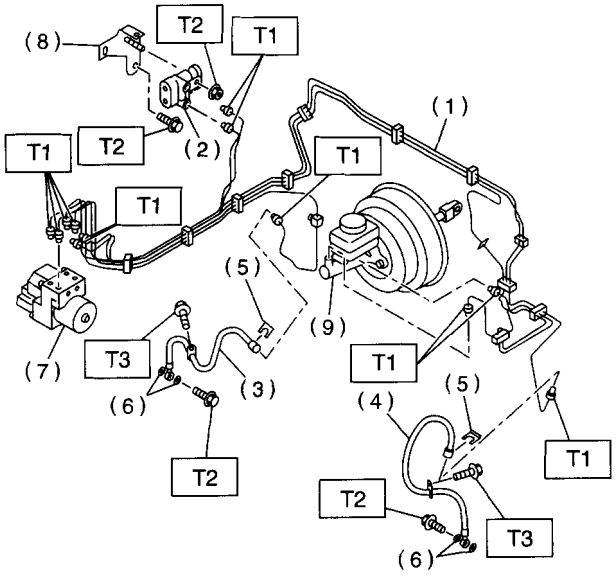

BR0077

(1)	Front brake pipe assembly	(6)	Gasket
(2)	Proportioning valve	(7)	ABS control module and hydraulic control unit
(3)	Front brake hose RH	(8)	Bracket
(4)	Front brake hose LH	(9)	Master Cylinder
(5)	Clamp		

Tightening torque: N·m (kgf-m, ft-lb)

T1: 15 (1.5, 10.8)
T2: 18 (1.8, 13.0)
T3: 32 (3.3, 23.6)

6. CENTER AND REAR BRAKE PIPES AND HOSE

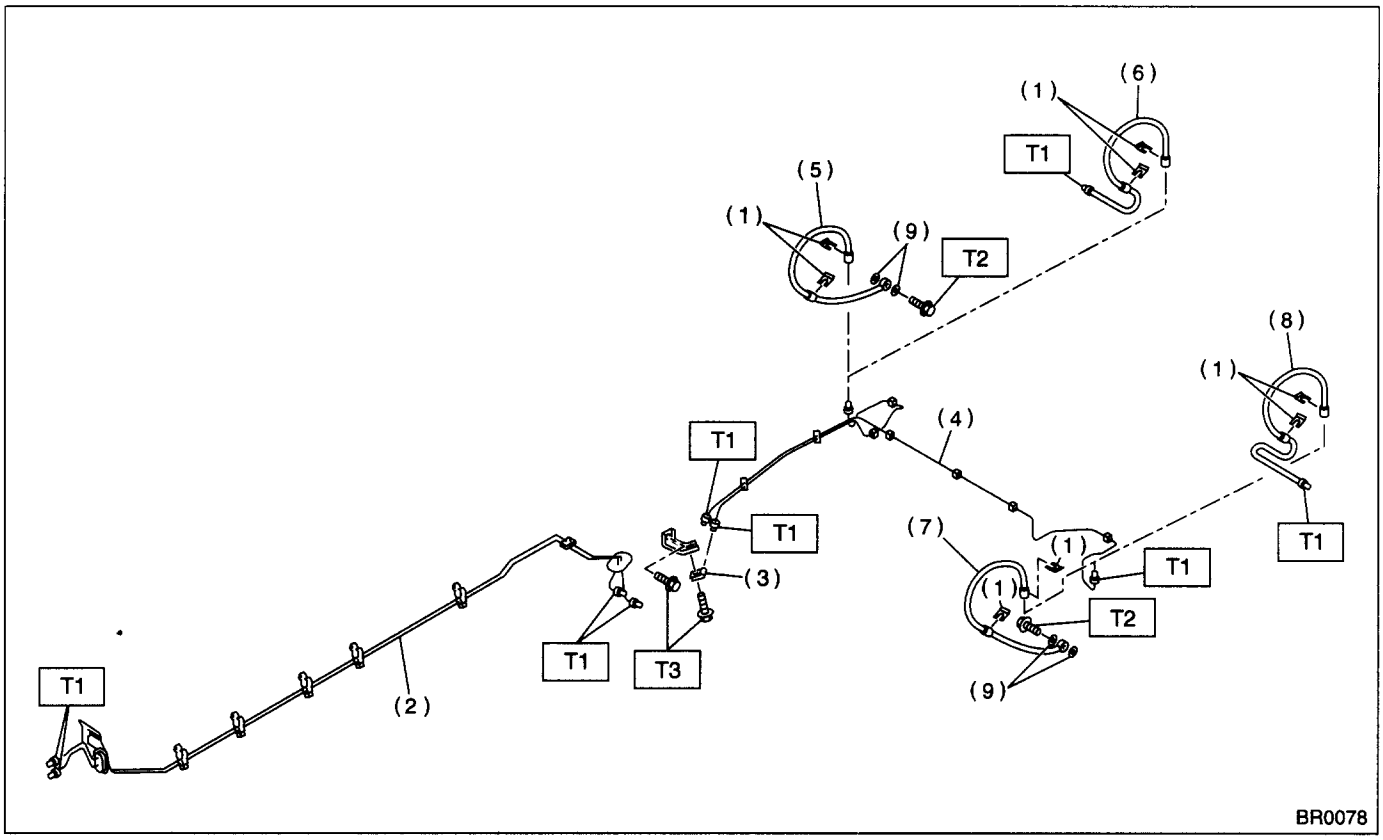

(1) Clamp
(2) Center brake pipe assembly
(3) Two-way connector
(4) Rear brake pipe assembly
(5) Rear brake hose RH (Disc brake model)
(6) Rear brake hose RH (Drum brake model)
(7) Rear brake hose LH (Disc brake model)
(8) Rear brake hose LH (Drum brake model)
(9) Gasket

Tightening torque: N·m (kgf-m, ft-lb)
T1: 15 (1.5, 10.8)
T2: 18 (1.8, 13.0)

7. BRAKE BOOSTER

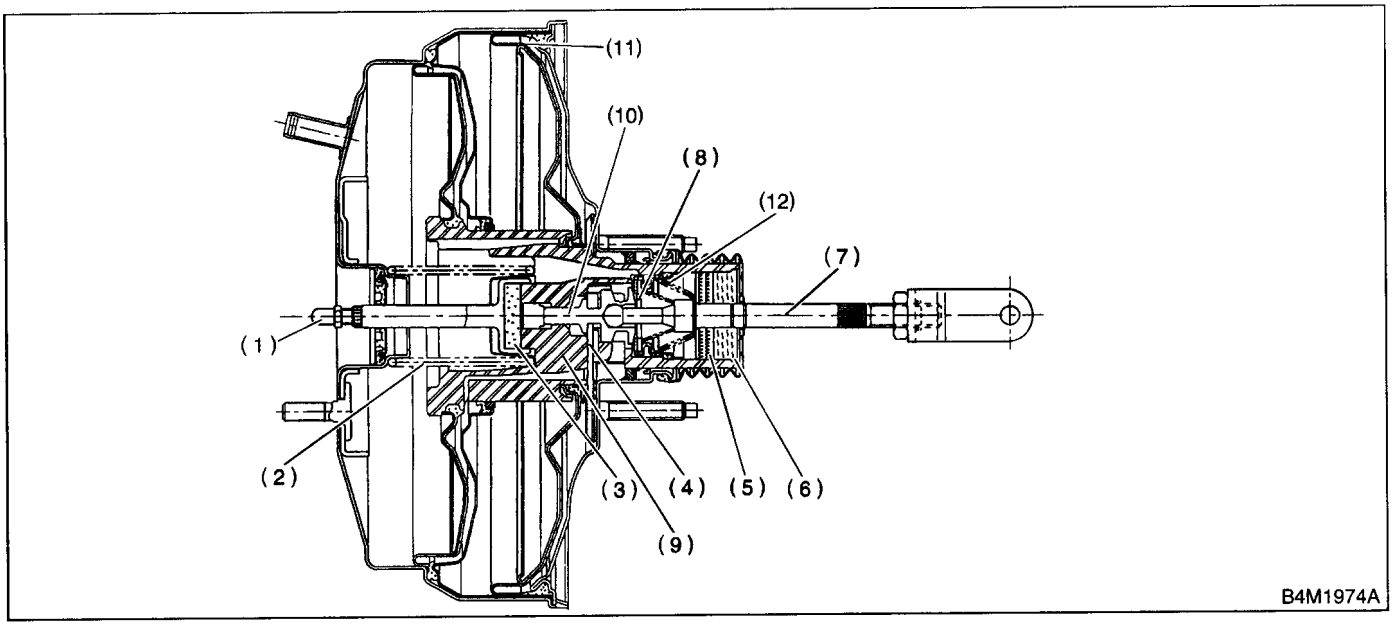

(1)	Push rod	(5)	Filter	(9)	Valve body
(2)	Return spring	(6)	Silencer	(10)	Plunger valve
(3)	Reaction disc	(7)	Operating rod	(11)	Diaphragm plate
(4)	Key	(8)	Poppet valve	(12)	Valve return spring

8. BRAKE PEDAL

• MT Model

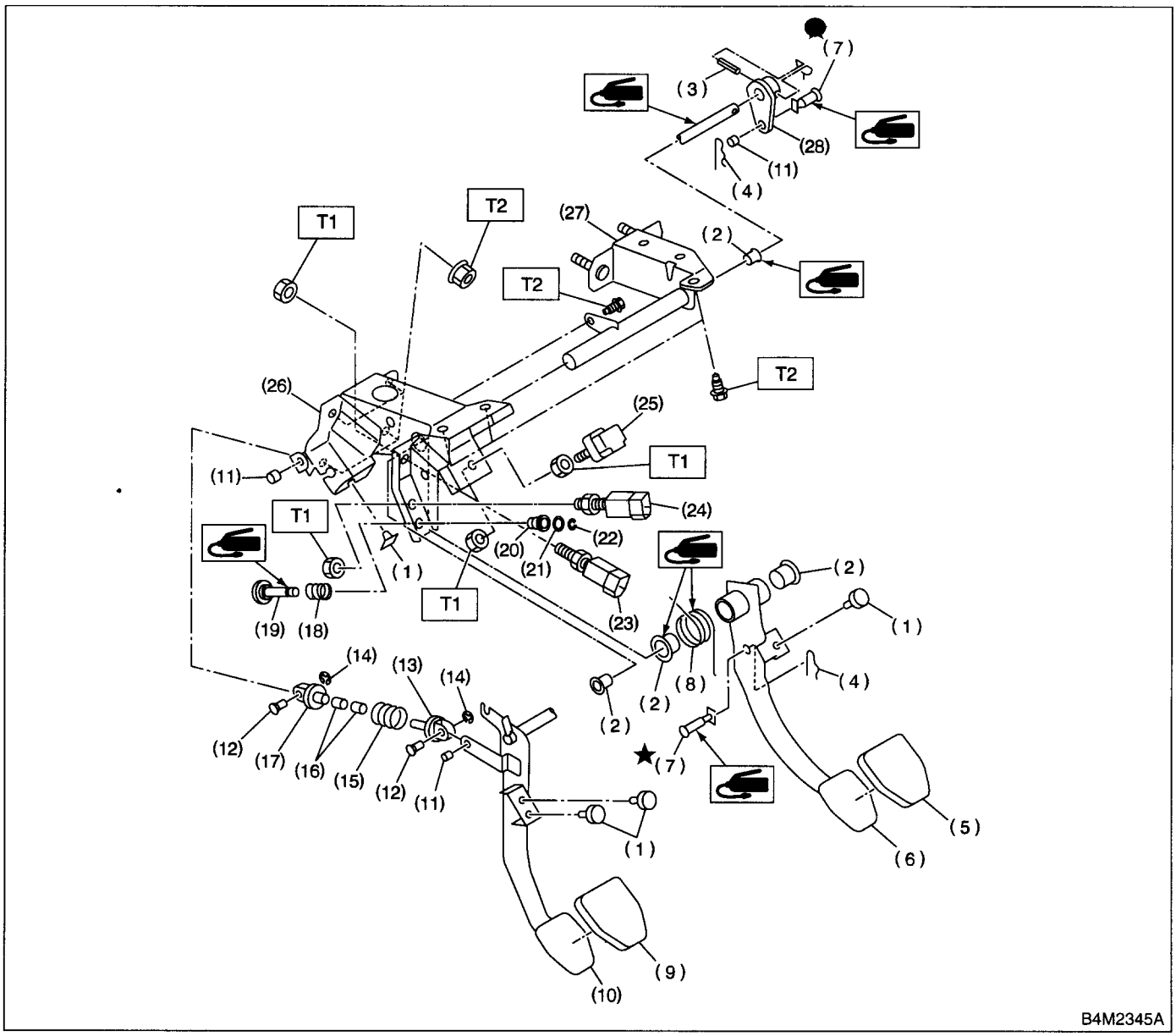

(1)	Stopper	(12)	Clutch clevis pin	(23)	Clutch switch (Starter interlock)
(2)	Bushing	(13)	Assist rod A	(24)	Clutch switch (With cruise control)
(3)	Spring pin	(14)	Clip	(25)	Stop light switch
(4)	Snap pin	(15)	Assist spring	(26)	Pedal bracket
(5)	Brake pedal pad	(16)	Assist bushing	(27)	Clutch master cylinder bracket
(6)	Brake pedal	(17)	Assist rod B	(28)	Lever
(7)	Clevis pin	(18)	Spring S		
(8)	Brake pedal spring	(19)	Rod S		
(9)	Clutch pedal pad	(20)	Bushing S		
(10)	Clutch pedal	(21)	O-ring		
(11)	Bushing C	(22)	Clip		

Tightening torque: N·m (kgf-m, ft-lb)
T1: 8 (0.8, 5.8)
T2: 18 (1.8, 13.0)

• AT Model

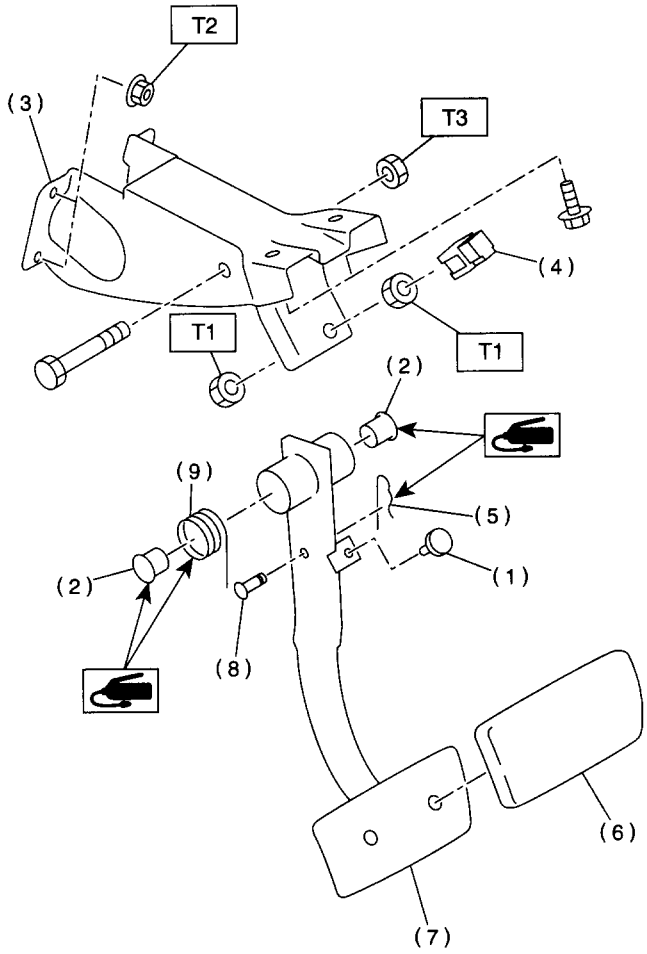

(1) Stopper
(2) Bushing
(3) Pedal bracket
(4) Stop light switch
(5) Snap pin
(6) Brake pedal pad
(7) Brake pedal
(8) Clevis pin
(9) Brake pedal spring

Tightening torque: N·m (kgf-m, ft-lb)	
T1:	*8 (0.8, 5.8)*
T2:	*18 (1.8, 13.0)*
T3:	*29 (3.0, 21.7)*

C: CAUTION

- Wear working clothing, including a cap, protective goggles, and protective shoes during operation.
- Remove contamination including dirt and corrosion before removal, installation or disassembly.
- Keep the disassembled parts in order and protect them from dust or dirt.
- Before removal, installation or disassembly, be sure to clarify the failure. Avoid unnecessary removal, installation, disassembly, and replacement.
- Be careful not to burn your hands, because each part in the vehicle is hot after running.
- Use SUBARU genuine grease etc. or the equivalent. Do not mix grease etc. with that of another grade or from other manufacturers.
- Be sure to tighten fasteners including bolts and nuts to the specified torque.
- Place shop jacks or safety stands at the specified points.
- Apply grease onto sliding or revolution surfaces before installation.
- Before installing O-rings or snap rings, apply sufficient amount of grease to avoid damage and deformation.
- Before securing a part on a vice, place cushioning material such as wood blocks, aluminum plate, or shop cloth between the part and the vice.
- Do not put fluid on body. If the body is tainted, wash away with water.

D: PREPARATION TOOL

1. SPECIAL TOOLS

ILLUSTRATION	TOOL NUMBER	DESCRIPTION	REMARKS
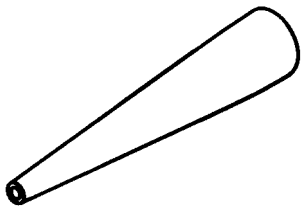 B4M2406	926460000	WHEEL CYLINDER 3/4″ ADAPTER	Used for installing cup onto wheel cylinder piston (Size 11/16 in).

2. GENERAL PURPOSE TOOLS

TOOL NAME	REMARKS
SNAP RING PLIERS	Used for removing and installing snap ring.

2. Front Brake Pad

A: REMOVAL

1) Set the vehicle on the lift.
2) Loosen the wheel nuts.
3) Jack-up the vehicle, and remove the front wheel.
4) Remove the lock pin.
5) Raise the caliper body.
6) Remove the pad.

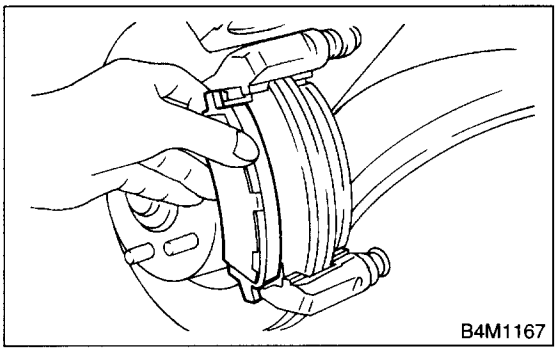

NOTE:
If the brake pad is difficult to remove, proceed as follows:

(1) Remove the caliper body and fasten it provisionally to coil spring.
(2) Remove the support.
(3) Place the support in a vise between wooden blocks.

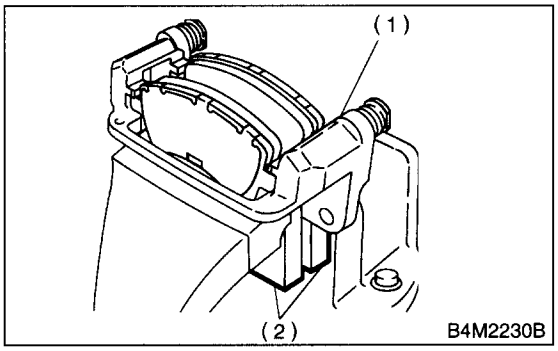

(1) Support
(2) Wooden blocks

(4) Attach a rod of less than 12 mm (0.47 in) dia. to the shaded area of the brake pad, and strike the rod with a hammer to drive brake pad out of place.

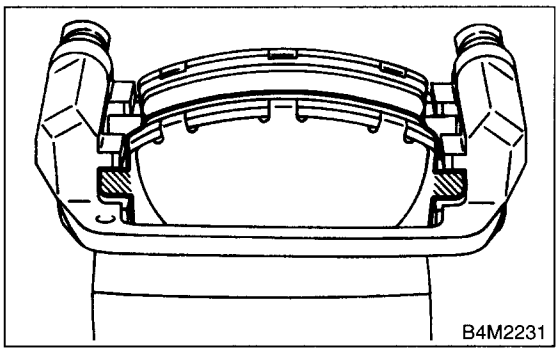

B: INSTALLATION

1) Apply a thin coat of Molykote AS880N (Part No. 26298AC000) to the frictional portion between pad and pad clip.
2) Apply a thin coat of Molykote AS880N (Part No. 26298AC000) to the frictional portion between pad and pad inner shim.

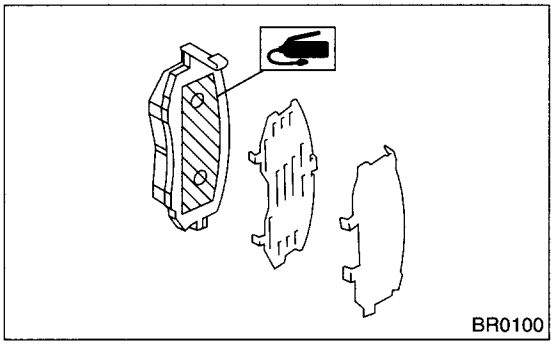

3) Install the pads on support.
4) Install the caliper body on support.

Tightening torque:
Non-turbo model:
26.5 N·m (2.70 kgf-m, 19.5 ft-lb)
Turbo model:
37 N·m (3.8 kgf-m, 27.5 ft-lb)

NOTE:
If it is difficult to push the piston during pad replacement, loosen the air bleeder to facilitate work.

5) Install the front wheel.

C: INSPECTION

Check the pad thickness A.

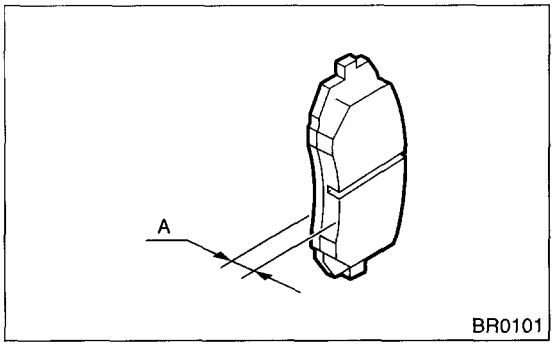

Pad thickness (including back metal)	Standard value	17 mm (0.67 in)
	Wear limit	7.5 mm (0.295 in)

CAUTION:

- **Always replace the pads for both the left and right wheels at the same time. Also replace the pad clips if they are twisted or worn.**
- **A wear indicator is provided on the inner disc brake pad. If the pad wears down to such an extent that the end of the wear indicator contacts the disc rotor, a squeaking sound is produced as the wheel rotates. If this sound is heard, replace the pad.**
- **Replace the pad if there is oil or grease on it.**

3. Front Disc Rotor

A: REMOVAL

1) Set the vehicle on the lift.
2) Loosen the wheel nuts.
3) Jack-up the vehicle, and remove the front wheel.
4) Remove the caliper body from housing, and suspend it from strut using a wire.

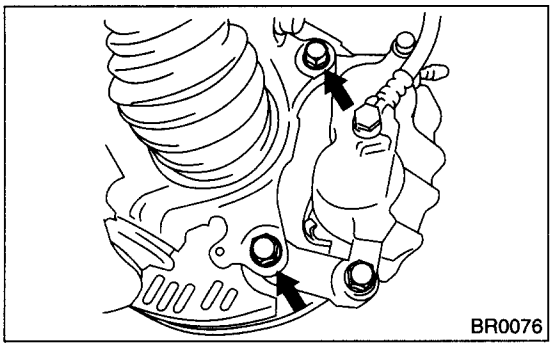

5) Remove the disc rotor.

NOTE:
If the disc rotor seizes up within the hub, drive the disc rotor out by installing an 8-mm bolt in holes B on the rotor.

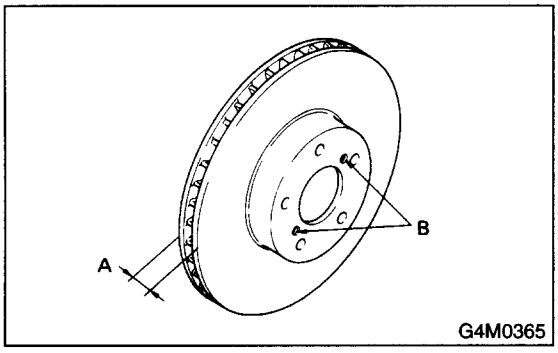

6) Clean mud and foreign particles from the caliper body assembly and support.

B: INSTALLATION

1) Install the disc rotor.
2) Install the caliper body on housing.

Tightening torque:
80 N·m (8.2 kgf-m, 59 ft-lb)

3) Install the wheel.

C: INSPECTION

1) Install the disc rotor by tightening the five wheel nuts.
2) Set a dial gauge on the disc rotor. Turn the disc rotor to check runout.

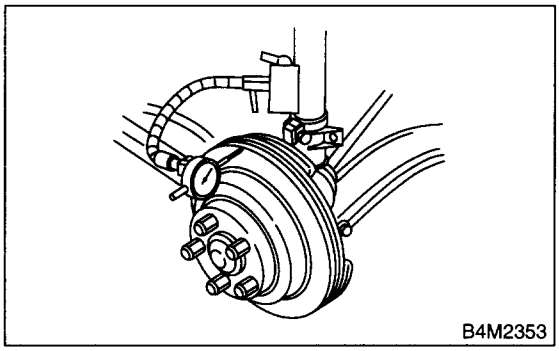

NOTE:
- Make sure the dial gauge is set 5 mm (0.20 in) inward of rotor outer perimeter.
- If the runout of disc rotor exceeds the limit, check for abnormal free play at hub bearing and runout in the thrust direction. <Ref. to DS-22, INSPECTION, Front Axle.>

If the hub bearing is okay, replace the disc rotor.

Disc rotor runout limit:
0.075 mm (0.0030 in)

3) Measure the disc rotor thickness.
If the thickness of disc rotor is below runout limit, replace the disc rotor.

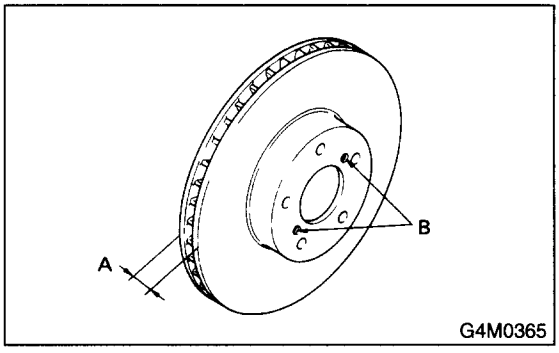

NOTE:
Make sure the micrometer is set 5 mm (0.20 in) inward of rotor outer perimeter.

		Standard value	Service limit	Disc outer diameter
Disc rotor thickness A	15″	24.0 mm (0.945 in)	22.0 mm (0.866 in)	277 mm (10.91 in)
	16″	24.0 mm (0.945 in)	22.0 mm (0.866 in)	294 mm (11.57 in)

4. Front Disc Brake Assembly

A: REMOVAL

1) Set the vehicle on the lift.
2) Loosen the wheel nuts.
3) Jack-up the vehicle, and remove the front wheel.
4) Remove the union bolt and disconnect the brake hose from caliper body assembly.

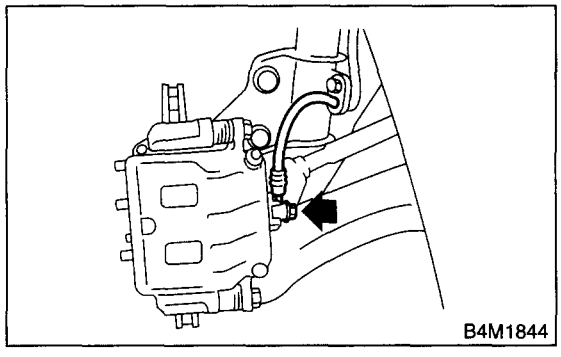

5) Remove the bolt securing lock pin to caliper body.

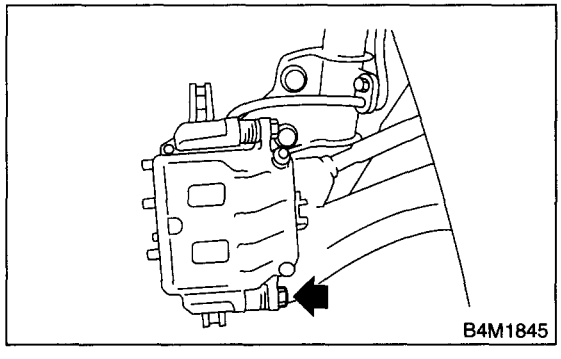

6) Raise the caliper body and move it toward the vehicle center to separate it from support.
7) Remove the support from housing.

NOTE:
Remove the support only when replacing it or the rotor. It need not be removed when servicing the caliper body assembly.

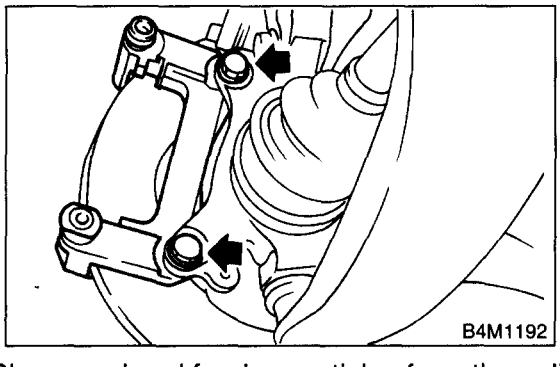

8) Clean mud and foreign particles from the caliper body assembly and support.

B: INSTALLATION

1) Install the support on housing.

Tightening torque:
80 N·m (8.2 kgf-m, 59 ft-lb)

CAUTION:
- **Always replace the pads for both the left and right wheels at the same time. Also replace the pad clips if they are twisted or worn.**
- **A wear indicator is provided on the inner disc brake pad. If the pad wears down to such an extent that the end of the wear indicator contacts the disc rotor, a squeaking sound is produced as the wheel rotates. If this sound is heard, replace the pad.**
- **When replacing the pads, replace the pads of the right and left wheels at the same time.**

2) Apply a thin coat of Molykote AS880N (Part No. 26298AC000) to the frictional portion between pad and pad clip.
3) Apply a thin coat of Molykote AS880N (Part No. 26298AC000) to the frictional portion between pad and inner shim.

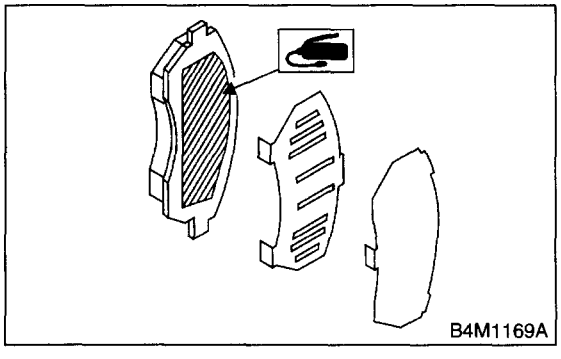

4) Install the pads on support.
5) Install the caliper body on support.

Tightening torque:
Non-turbo model:
26.5 N·m (2.70 kgf-m, 19.5 ft-lb)
Turbo model:
37 N·m (3.8 kgf-m, 27.5 ft-lb)

6) Connect the brake hose.

Tightening torque:
18 N·m (1.8 kgf-m, 13.0 ft-lb)

CAUTION:
Replace the brake hose gaskets with new ones.

7) Bleed air from the brake system. <Ref. to BR-46, Air Bleeding.>

C: DISASSEMBLY

1. NON-TURBO MODEL

1) Clean mud and foreign particles from the caliper body assembly and support.

CAUTION:
Be careful not to allow foreign particles to enter inlet (at brake hose connector).

2) Gradually supply compressed air via caliper body brake hose to force piston out.

CAUTION:
- **Place a wooden block as shown in the figure to prevent damage to piston.**
- **Do not apply excessively high-pressure.**

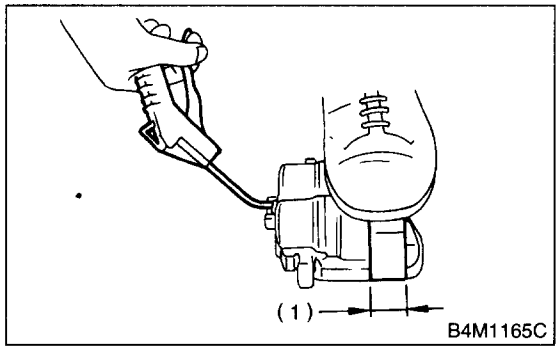

(1) Place a 30 mm (1.18 in) wide wooden block here.

3) Remove the piston boot.

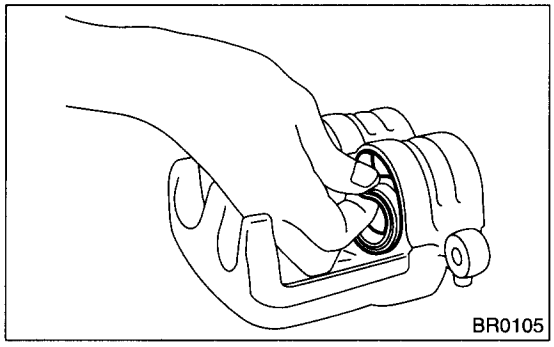

4) Remove the piston seal from caliper body sylinder.

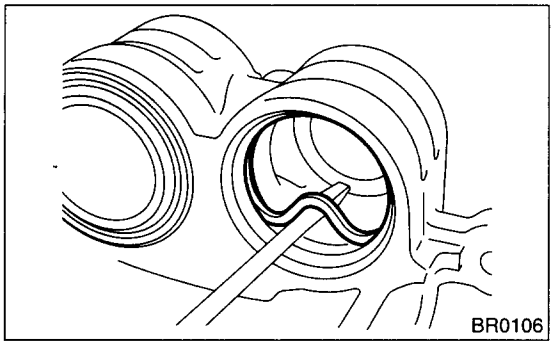

5) Remove the guide pin and boot from caliper body.

2. TURBO MODEL

1) Clean mud and foreign particles from the caliper body assembly and support.

CAUTION:
Be careful not to allow foreign particles to enter inlet (at brake hose connector).

2) Using a standard screwdriver, remove the boot ring from piston.

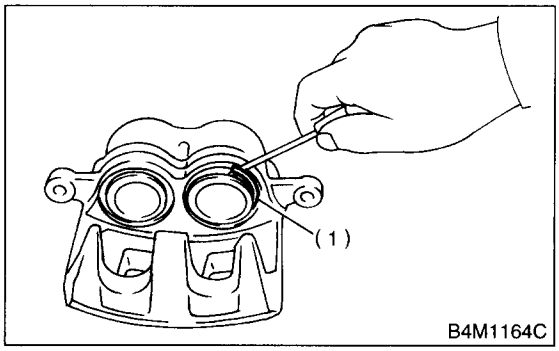

(1) Boot ring

3) Remove the boot from piston end.

4) Gradually supply compressed air via caliper body brake hose to force piston out.

CAUTION:
Place a wooden block as shown in the figure to prevent damage to piston.

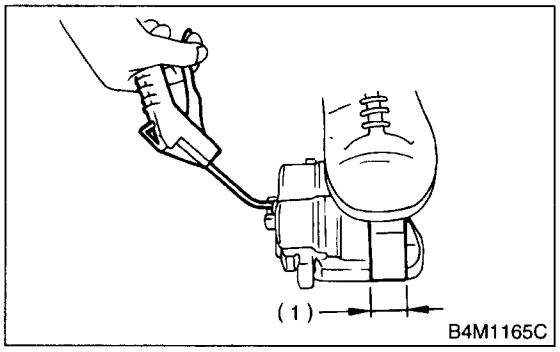

(1) Place a 30 mm (1.18 in) wide wooden block here.

5) Remove the piston seal from caliper body cylinder.

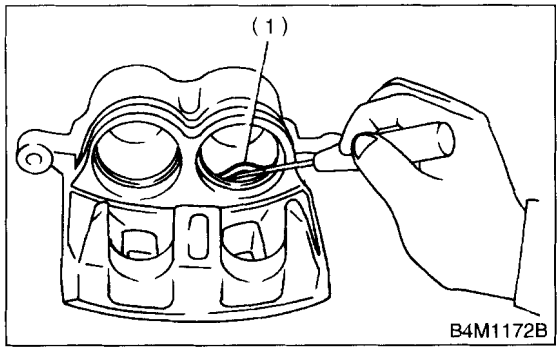

(1) Piston pin

6) Remove the lock pin boot and guide pin boot.

D: ASSEMBLY

1. NON-TURBO MODEL

1) Clean the caliper body interior using brake fluid.
2) Apply a coat of brake fluid to the piston seal and fit piston seal in groove on caliper body.
3) Apply a coat of brake fluid to the entire inner surface of cylinder and outer surface of piston.
4) Apply a coat of specified grease to the boot and fit in the groove on ends of cylinder and piston boot onto cylinder.

Grease:
NIGLUBE RX-2 (Part No. 003606000)

5) Insert the piston into cylinder.

CAUTION:
Do not force the piston into cylinder.

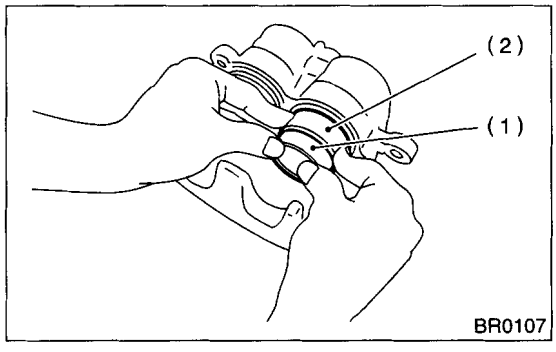

(1) Piston
(2) Piston boot

6) Position the boot in grooves on cylinder and piston.

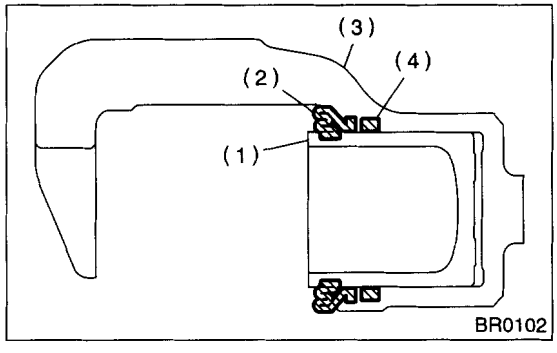

(1) Piston
(2) Piston boot
(3) Caliper body
(4) Piston seal

7) Apply a coat of specified grease to the lock pin and guide pin outer surface, cylinder inner surface, and boot grooves.

Grease:
NIGLUBE RX-2 (Part No. 003606000)

8) Install the lock and guide pin boot on support.

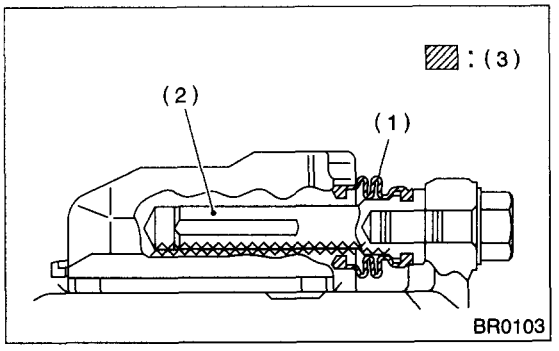

(1) Pin boot
(2) Lock pin or guide pin
(3) Apply grease.

2. TURBO MODEL

1) Clean the caliper body interior using brake fluid.
2) Apply a coat of brake fluid to the piston seal and fit piston seal in groove on caliper body.
3) Apply a coat of brake fluid to the entire inner surface of cylinder and outer surface of piston.
4) Insert the piston into cylinder.

CAUTION:
Do not force the piston into cylinder.

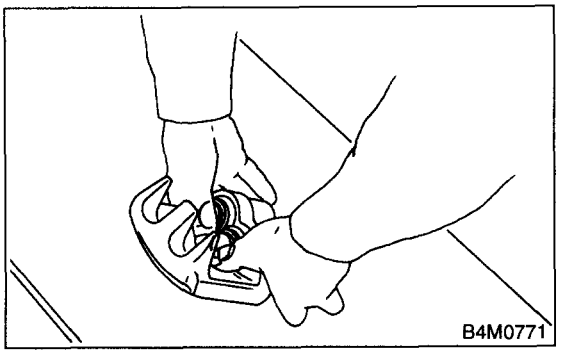

5) Apply a coat of specified grease to the boot and fit in the groove on ends of cylinder and piston.

Grease:
NIGLUBE RX-2 (Part No. 003606000)

To facilitate installation, fit the boot starting with piston end.

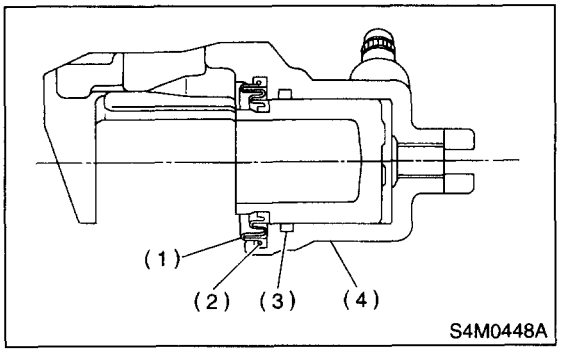

(1) Piston boot
(2) Boot ring
(3) Piston seal
(4) Caliper body

6) Position the boot in grooves on cylinder and piston.
7) Install the boot ring. Be careful not to scratch the boot.
8) Apply a coat of specified grease to lock pin and guide pin, outer surface, cylinder inner surface, and boot grooves.

Grease:
NIGLUBE RX-2 (Part No. 003606000)

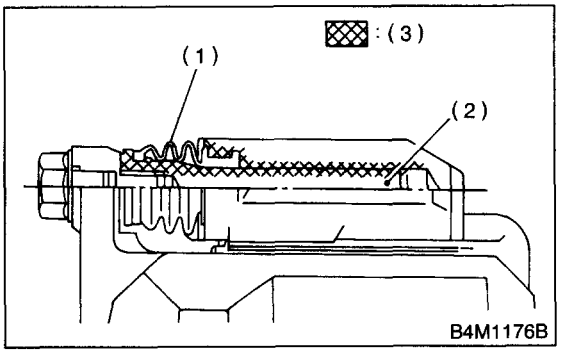

(1) Pin boot
(2) Lock pin or guide pin
(3) Apply grease.

9) Install the lock pin boot and guide pin boot on support.

E: INSPECTION

NOTE:
Repair or replace the faulty parts.

1) Check the caliper body and piston for uneven wear, damage or rust.
2) Check the rubber parts for damage or deterioration.

5. Rear Brake Pad

A: REMOVAL

1) Set the vehicle on the lift.
2) Loosen the wheel nuts.
3) Jack-up the vehicle, and remove the rear wheel.
4) Remove the lock pin.

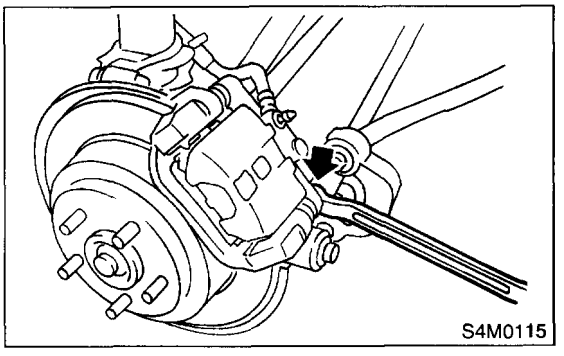

5) Raise the caliper body.
6) Remove the pad from support.

NOTE:
If the brake pad is difficult to remove, use the same procedure as for front disc brake pad.
<Ref. to BR-16, REMOVAL, Front Brake Pad.>

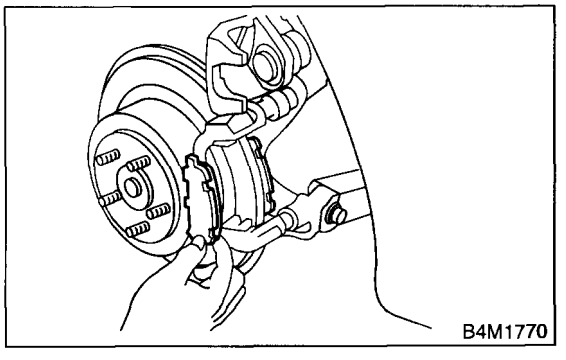

B: INSTALLATION

1) Apply a thin coat of Molykote AS880N (Part No. 26298AC000) to the frictional portion between pad and pad clip.
2) Install the pad on support.
3) Install the caliper body on support.

Tightening torque:
37 N·m (3.8 kgf-m, 27.5 ft-lb)

NOTE:
If it is difficult to push the piston during pad replacement, loosen the air bleeder to facilitate work.

C: INSPECTION

Check the pad thickness A.

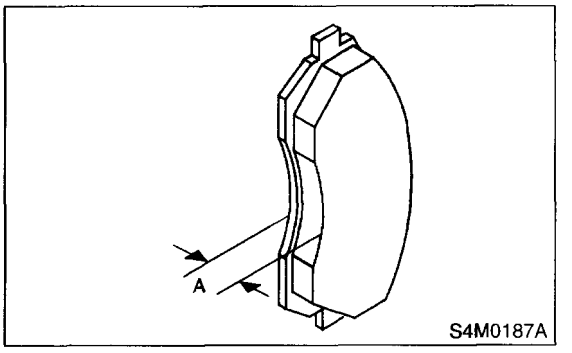

Pad thickness (including back metal)	Standard value	14.0 mm (0.551 in)
	Wear limit	6.5 mm (0.256 in)

CAUTION:
- **Always replace the pads for both the left and right wheels at the same time. Also replace the pad clips if they are twisted or worn.**
- **A wear indicator is provided on the inner disc brake pad. If the pad wears down to such an extent that the end of the wear indicator contacts the disc rotor, a squeaking sound is produced as the wheel rotates. If this sound is heard, replace the pad.**
- **Replace the pad if there is oil or grease on it.**

6. Rear Disc Rotor

A: REMOVAL

1) Lift-up the vehicle and remove the wheels.
2) Remove the two mounting bolts and remove the disc brake assembly.

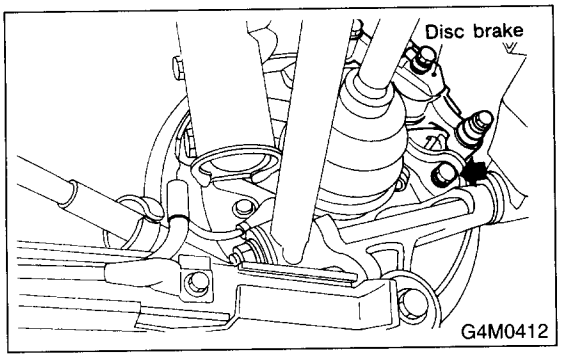

3) Suspend the disc brake assembly so that the hose is not stretched.
4) Pull down and release the parking brake.
5) Remove the disc rotor.

NOTE:
If the disc rotor is difficult to remove, try the following two methods in order.

(1) Turn the adjusting screw using a slot-type screwdriver until the brake shoe gets away enough from the disc rotor.

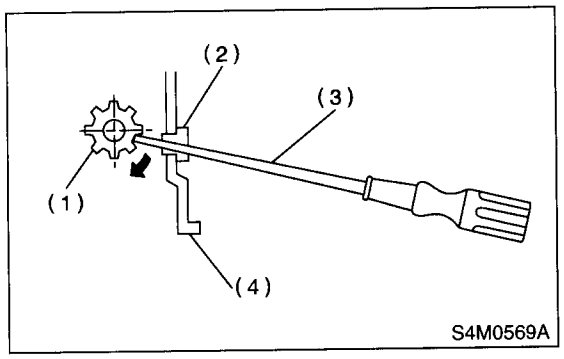

(1) Adjusting screw
(2) Cover
(3) Slot-type screwdriver
(4) Back plate

(2) If the disc rotor seizes up within hub, drive the disc rotor out by installing an 8-mm bolt in holes B on the rotor.

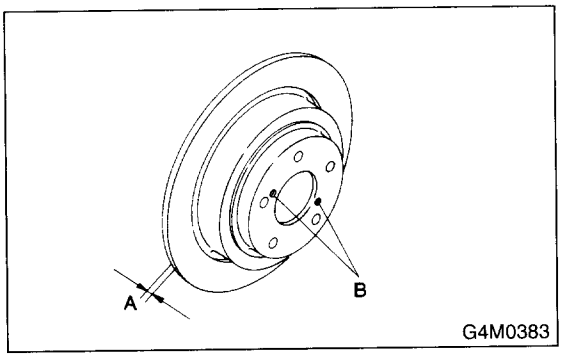

B: INSTALLATION

1) Install in the reverse order of removal.
2) Adjust the parking brake. <Ref. to PB-12, ADJUSTMENT, Parking Brake Assembly (Rear Disc Brake).>

C: INSPECTION

1) Set a dial gauge on the disc rotor. Turn the disc rotor to check runout.

CAUTION:
Securely adjust the disc rotor to hub.

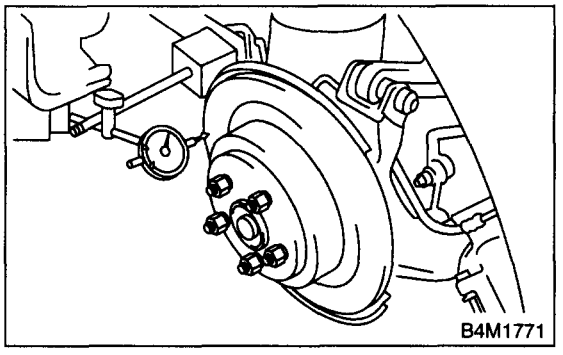

NOTE:
- Make sure the dial gauge is set 5 mm (0.20 in) inward of rotor outer perimeter.
- If the runout of disc rotor exceeds the limit, check for abnormal free play at hub bearing and runout in the thrust direction. <Ref. to DS-31, INSPECTION, Rear Axle.>

If the hub bearing is okay, replace the disc rotor.

Disc rotor runout limit:
0.07 mm (0.0028 in)

2) Measure the disc rotor thickness.
If the thickness of disk rotor is below runout limit, replace the disk rotor.

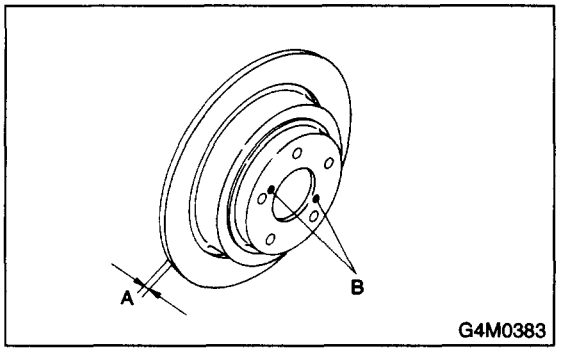

NOTE:
Make sure the micrometer is set 5 mm (0.20 in) inward of rotor outer perimeter.

Standard value
10 mm (0.39 in)

Service limit
8.5 mm (0.335 in)

7. Rear Disc Brake Assembly

A: REMOVAL

CAUTION:
Do not allow brake fluid to come in contact with the vehicle body; wipe off completely if spilled.

1) Set the vehicle on the lift.
2) Loosen the wheel nuts.
3) Lift-up the vehicle and remove the wheels.
4) Disconnect the brake hose from caliper body assembly.
5) Remove the lock pin.

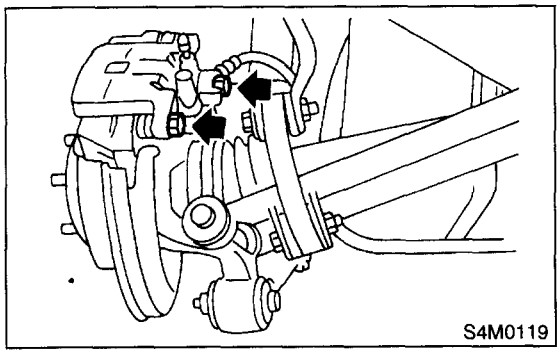

6) Raise the caliper body and move it toward the vehicle center to separate it from support.
7) Remove the support from back plate.

NOTE:
Remove the support only when replacing it or the rotor. It need not be removed when servicing the caliper body assembly.

8) Clean mud and foreign particles from the caliper body assembly and support.

CAUTION:
Be careful not to allow foreign particles to enter inlet (at brake hose connector).

B: INSTALLATION

1) Install the disc rotor on hub.
2) Install the support on back plate.

Tightening torque:
53 N·m (5.4 kgf-m, 39.1 ft-lb)

CAUTION:
- **Always replace the pads for both the left and right wheels at the same time. Also replace the pad clips if they are twisted or worn.**
- **A wear indicator is provided on the inner disc brake pad. If the pad wears down to such an extent that the end of the wear indicator contacts the disc rotor, a squeaking sound is produced as the wheel rotates. If this sound is heard, replace the pad.**
- **Replace the pads if there is oil or grease on them.**

3) Apply a thin coat of Molykote AS880N (Part No. 26298AC000) to the frictional portion between pad and pad clip.
4) Install the pads on support.
5) Install the caliper body on support.

Tightening torque:
37 N·m (3.8 kgf-m, 27.5 ft-lb)

6) Connect the brake hose.

Tightening torque:
18 N·m (1.8 kgf-m, 13.0 ft-lb)

CAUTION:
- **The brake hose must be connected without any twist.**
- **Replace the brake hose gaskets with new ones.**

7) Bleed air from the brake system. <Ref. to BR-46, Air Bleeding.>

C: DISASSEMBLY

1) Remove the boot ring.

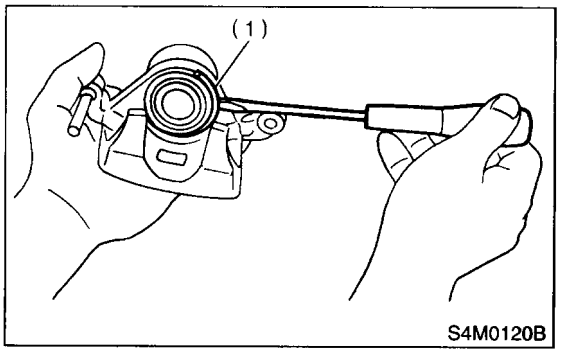

(1) Boot ring

2) Remove the piston boot.

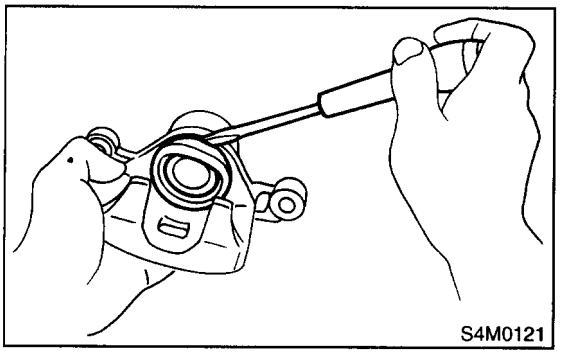

3) Gradually supply compressed air via inlet of caliper body to force piston out.

CAUTION:

- **Place a wooden block as shown in the figure to prevent damage to piston.**
- **Do not apply excessively high-pressure.**

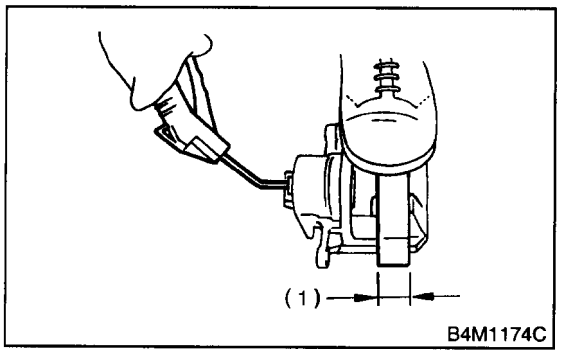

(1) Place a 30 mm (1.18 in) wide wooden block here.

4) Remove the piston seal from caliper body cylinder.

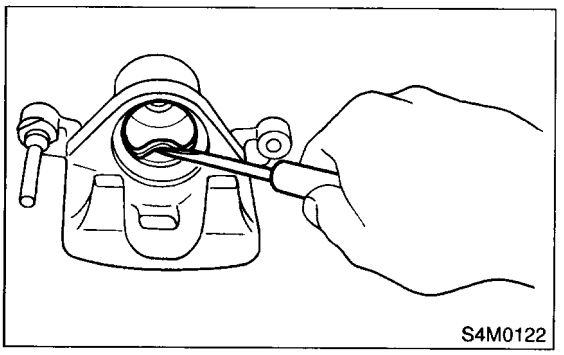

5) Remove the lock pin sleeve and boot from caliper body.

6) Remove the guide pin boot.

D: ASSEMBLY

1) Clean the caliper body interior using brake fluid.
2) Apply a coat of brake fluid to the piston seal and fit piston seal in groove on caliper body.
3) Apply a coat of brake fluid to the entire inner surface of cylinder and outer surface of piston.
4) Insert the piston into cylinder.

CAUTION:
Do not force the piston into cylinder.

5) Apply a coat of specified grease to the boot and fit in the groove on ends of cylinder and piston.

Grease:
NIGLUBE RX-2 (Part No. 003606000)

6) Install the piston boot to the caliper body, and attach boot ring.

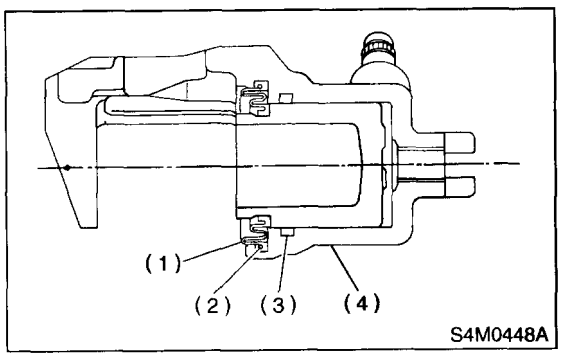

(1) Piston boot
(2) Boot ring
(3) Piston seal
(4) Caliper body

7) Apply a coat of specified grease to guide pin, outer surface, sleeve outer surface, cylinder inner surface, and boot grooves.

Grease:
NIGLUBE RX-2 (Part No. 003606000)

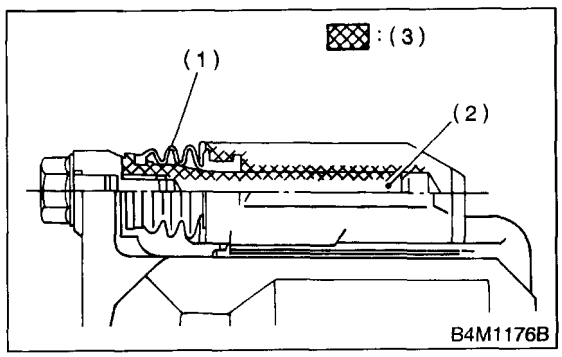

(1) Pin boot
(2) Lock pin or guide pin
(3) Apply grease.

8) Install the guide pin boot on caliper body.
9) Install the lock pin boot on caliper body and insert lock pin sleeve into place.

E: INSPECTION

NOTE:
Repair or replace the faulty parts.

1) Check the caliper body and piston for uneven wear, damage or rust.
2) Check the rubber parts for damage or deterioration.

8. Rear Drum Brake Shoe

A: REMOVAL

1) Loosen the wheel nuts, jack-up the vehicle, support it with rigid racks, and remove the wheel.
2) Release the parking brake.
3) Remove the brake drum from brake assembly.

NOTE:
- If it is difficult to remove the brake drum, remove the adjusting hole cover from back plate, and then turn the adjuster assembly pawls using a slot-type screwdriver until the brake shoe separates from the drum.

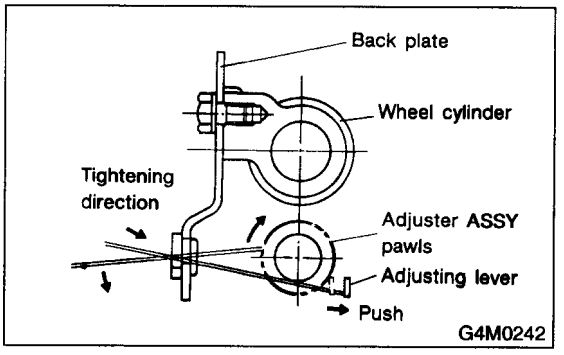

- If the brake drum is difficult to remove, drive it out by installing an 8-mm bolt into bolt hole in brake drum.

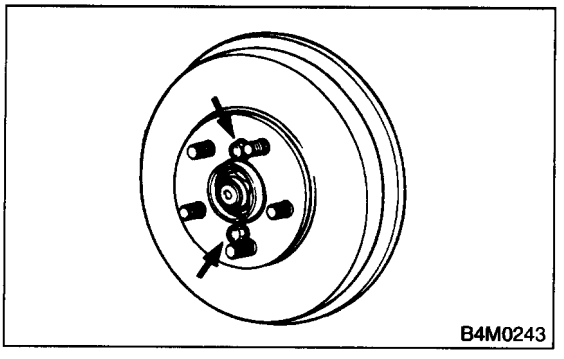

4) Hold the hold-down pin by securing rear of back plate with your hand.

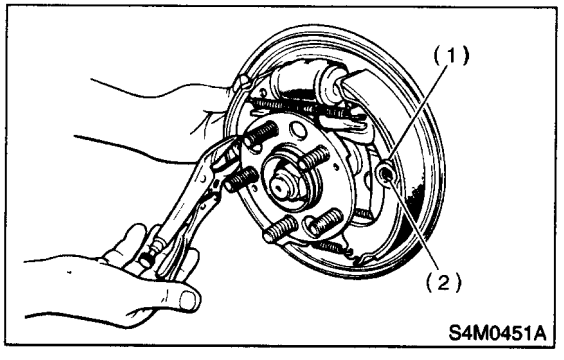

(1) Hold-down cup
(2) Hold-down pin

5) Disconnect the hold-down cup from hold-down pin by rotating hold-down cup.
6) Disconnect the lower shoe return spring from shoes.

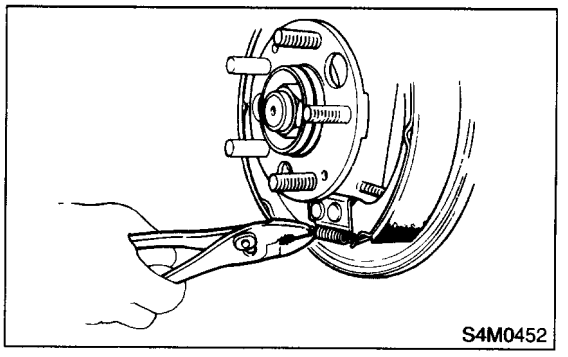

7) Remove the shoes one by one from back plate with adjuster.

CAUTION:
Be careful not to bend the parking brake cable excessively when removing the brake shoes.

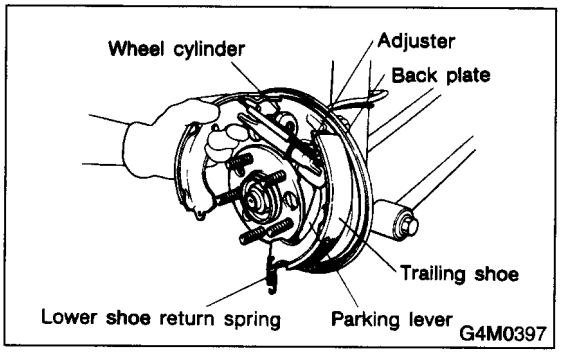

8) Disconnect the parking brake cable from parking lever.

B: INSTALLATION

1) Clean the back plate and wheel cylinder.
2) Apply grease to the portions indicated by arrows in the figure.

Brake grease:
Dow Corning Molykote No. 7439 (Part No. 725191460)

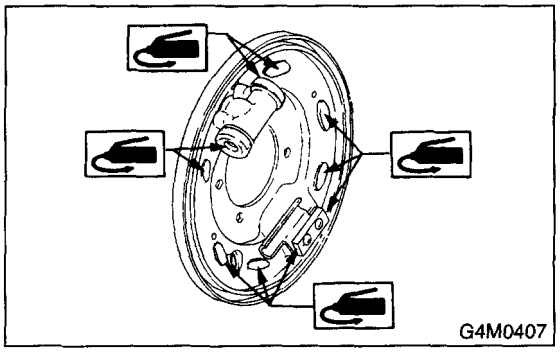

3) Apply grease to the adjusting screw and both ends of adjuster.

Brake grease:
Dow Corning Molykote No. 7439 (Part No. 725191460)

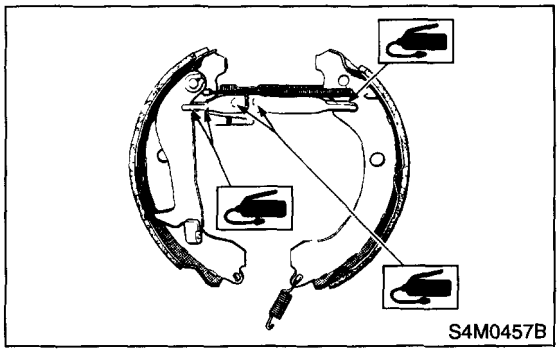

4) Connect the upper shoe return spring to shoes.
5) Connect the parking brake cable to parking lever.
6) While positioning the shoes (one at a time) in groove on wheel cylinder, secure shoes.

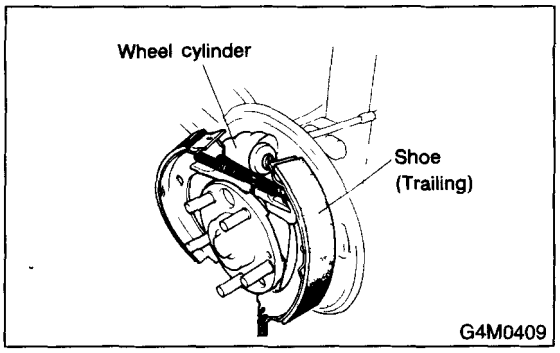

7) Fix the shoes by connecting hold-down cup to hold-down pin.
8) Connect the lower shoe return spring.
9) Set the outside diameter of brake shoes less than 0.5 to 0.8 mm (0.020 to 0.031 in) in comparison with the inside diameter of brake drum.
10) Install the drum. <Ref. to BR-32, INSTALLATION, Rear Drum Brake Drum.>

C: INSPECTION

1) Measure the lining thickness.

Lining thickness:
Standard 4.1 mm (0.161 in)
Service limit 1.5 mm (0.059 in)

2) If the deformation or wear of back plate, shoe, etc. are notable, replace them.
3) When the shoe return spring tension is excessively weakened, replace it, taking care to identify upper and lower springs.

9. Rear Drum Brake Drum

A: REMOVAL

1) Loosen the wheel nuts, jack-up the vehicle, support it with rigid racks, and remove the wheel.
2) Release the parking brake.
3) Remove the brake drum from brake assembly.

NOTE:
• If it is difficult to remove the brake drum, remove the adjusting hole cover from back plate, and then turn adjuster assembly pawls using a slot-type screwdriver until the brake shoe separates from the drum.

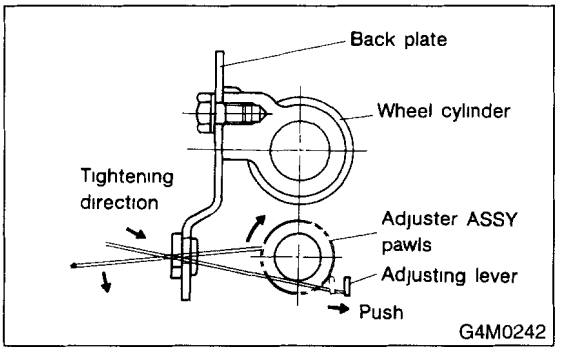

• If the brake drum is difficult to remove, drive it out by installing an 8-mm bolt into bolt hole in brake drum.

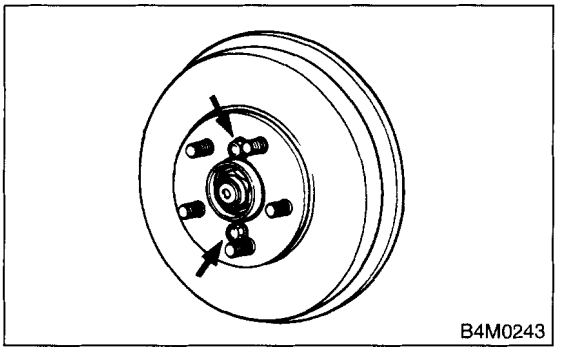

B: INSTALLATION

1) Set the outside diameter of brake shoes less than 0.5 to 0.8 mm (0.020 to 0.031 in) in comparison with the inside diameter of brake drum.
2) Install the drum.
3) Install the rear wheel.

C: INSPECTION

1) If the inside surface of brake drum is streaked, correct the surface. And, if it is unevenly worn, taperingly streaked, or the outside surface of brake drum is damaged, correct or replace it.
2) Measure the drum inner diameter.

Drum inner diameter: "L"
Standard 228 mm (9 in)
Service limit 230.6 mm (9.08 in)

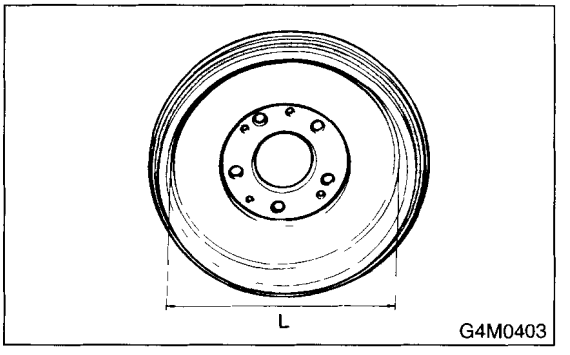

10.Rear Drum Brake Assembly

A: REMOVAL

1) Loosen the wheel nuts, jack-up the vehicle, support it with rigid racks, and remove the wheel.
2) Release the parking brake.
3) Remove the brake drum from brake assembly. <Ref. to BR-32, REMOVAL, Rear Drum Brake Drum.>
4) Remove the brake shoe. <Ref. to BR-30, REMOVAL, Rear Drum Brake Shoe.>
5) Unscrew the brake hose flare nut and disconnect the brake hose.

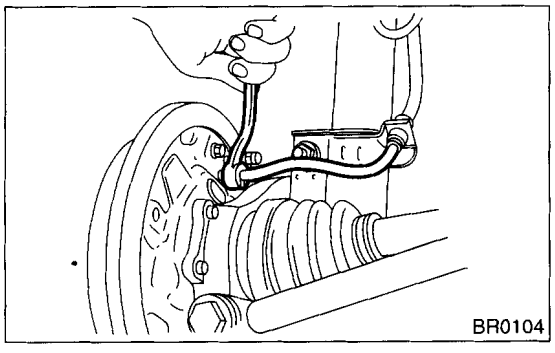
BR0104

6) Remove the hub.
<Ref. to DS-23, REMOVAL, Rear Axle.>
7) Disconnect the ABS sensor from back plate. (only vehicle equipped ABS)
8) Remove the brake assembly.

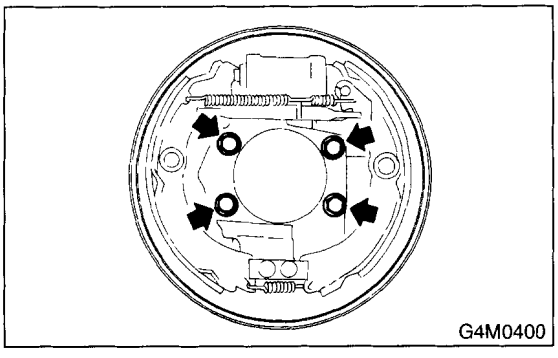
G4M0400

9) Remove the bolts installing the wheel cylinder on back plate, and remove it.

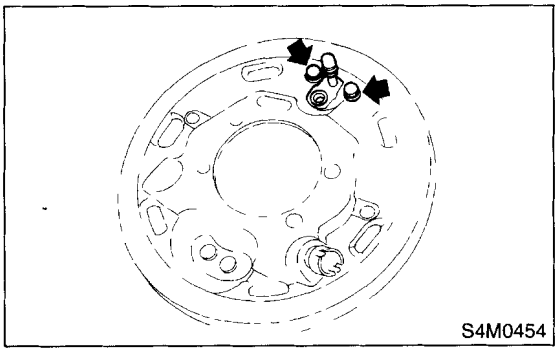
S4M0454

B: INSTALLATION

1) Clean the back plate and wheel cylinder.
2) Install the wheel cylinder on back plate, and tighten bolts.

Tightening torque:
10 N·m (1.0 kgf-m, 7.2 ft-lb)

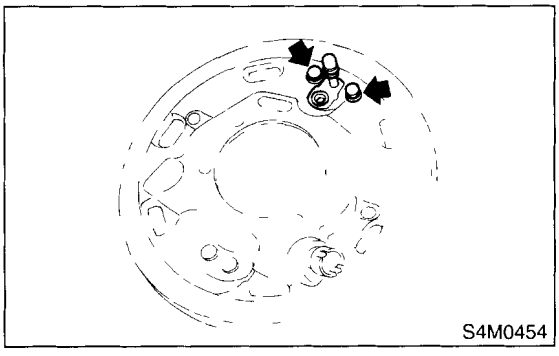
S4M0454

3) Apply grease to the portions indicated by arrows in Figure.

Brake grease:
Dow Corning Molykote No. 7439 (Part No. 725191460)

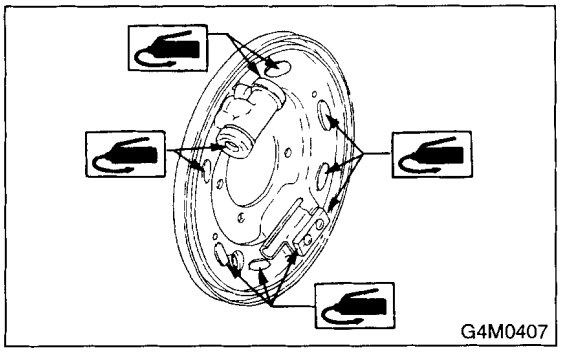
G4M0407

4) Install the brale assembly on hopusing, and tighten bolts to install the back plate.

Tightening torque:
53 N·m (5.4 kgf-m, 39.1 ft-lb)

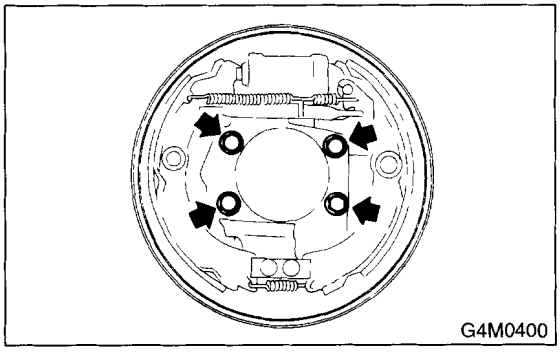
G4M0400

5) Install the hub. <Ref. to DS-26, INSTALLATION, Rear Axle.>

6) Connect the brake hose, and tighten the brake hose flange nut.

Tightening torque:
15 N·m (1.5 kgf-m, 10.8 ft-lb)

7) Connect the ABS sensor to back plate. (only vehicle equipped with ABS)

Tightening torque:
32 N·m (3.3 kgf-m, 24 ft-lb)

8) Apply grease to the adjusting screw and both ends of adjuster.

Brake grease:
Dow Corning Molykote No. 7439 (Part No. 725191460)

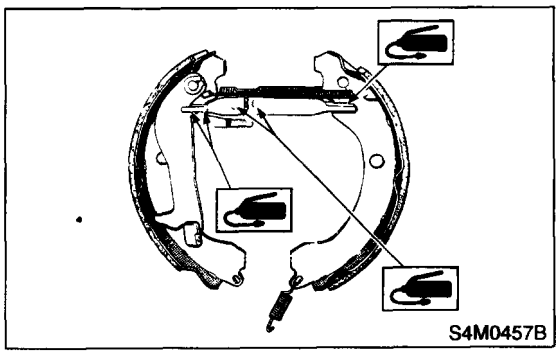

9) Install the brake shoe. <Ref. to BR-31, INSTALLATION, Rear Drum Brake Shoe.>
10) Install brake drum. <Ref. to BR-32, INSTALLATION, Rear Drum Brake Drum.>
11) After installing brake assembly, bleed air from brake line. <Ref. to BR-46, Air Bleeding.>

C: DISASSEMBLY

1) Remove the right and left dust boots from wheel cylinder.

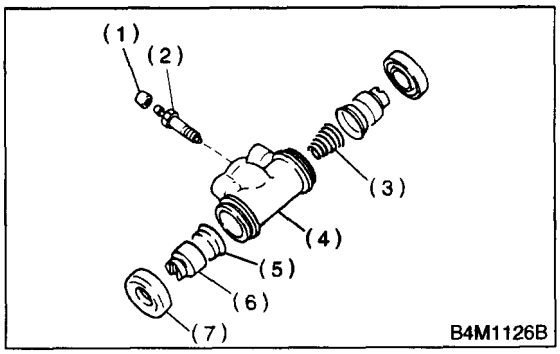

(1) Bleeder cap
(2) Bleeder screw
(3) Spring
(4) Cylinder
(5) Cup
(6) Piston
(7) Boot

2) Remove the piston, cup, spring and air bleeder screw and cap.

D: ASSEMBLY

1) Clean all parts with brake fluid. Check and replace faulty parts.
- Cup and boot for damage or fatigue
- Cylinder, piston and spring or damage or rust formation

2) Assembly is the reverse order of disassembly.
   (1) When installing the cup, use ST, apply brake fluid to the frictional surface for smooth installation and pay attention to cup direction.
   (2) STs are available in different sizes.

CAUTION:
- **When replacing the repair kit, make sure that the sizes of cylinder and cup are the same as those which were replaced.**
- **Use only the tool of the correct size.**

ST: ADAPTER	
Applicable size	Part No.
19.0 mm (3/4 in)	926460000

CAUTION:
While assembling, be careful to prevent any metal chip, dust or dirt from entering the wheel cylinder.

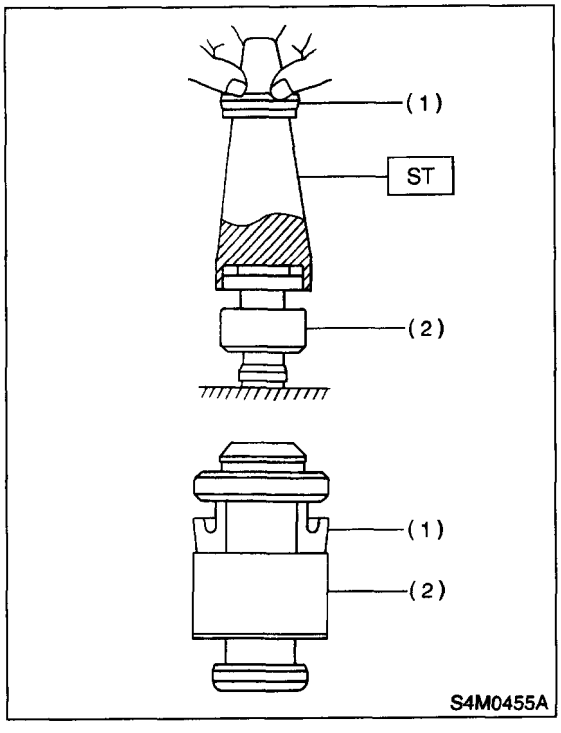

(1) Cup
(2) Piston

3) Apply rubber grease to the boot inside as shown in figure.

CAUTION:
Never use brake grease.

Grease:
NIGLUBE RX-2 (Part No. 003606000)

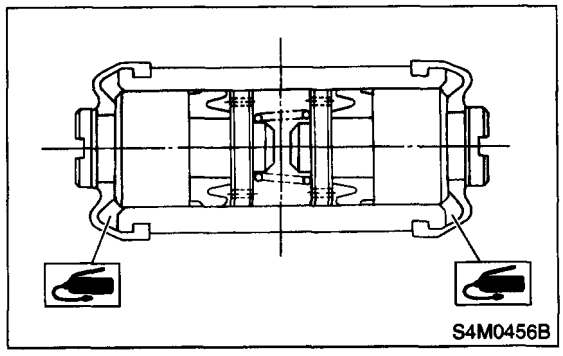

E: INSPECTION

1) Inspect the wheel cylinder for leakage.
2) If the deformation or wear of back plate, shoe, etc. are notable, replace them.

11.Master Cylinder

A: REMOVAL

1) Thoroughly drain the brake fluid from reservoir tank.
2) Disconnect the fluid level indicator harness connector.
3) Remove the brake pipes from master cylinder.
4) Remove the master cylinder mounting nuts, and take out master cylinder from brake booster.

CAUTION:
Be extremely careful not to spill the brake fluid. Brake fluid spilt on the vehicle body will harm the painted surface; wipe it off quickly if spilt.

B: INSTALLATION

1) To install the master cylinder to the body, reverse the sequence of removal procedure.

Tightening torque:
Master cylinder mounting nut
14 N·m (1.4 kgf-m, 10.1 ft-lb)
Piping flare nut
15 N·m (1.5 kgf-m, 10.8 ft-lb)

CAUTION:
Be sure to use recommended brake fluid.

2) Bleed air from the brake system. <Ref. to BR-46, PROCEDURE, Air Bleeding.>

C: DISASSEMBLY

1. PRECAUTIONS FOR DISASSEMBLING

1) Remove mud and dirt from the surface of brake master cylinder.
2) Prepare the tools necessary for disassembly operation, and arrange them neatly on work bench.
3) Clean the work bench.

2. DISASSEMBLING PROCEDURE

1) Remove the pin with drift pin which secures the reserve tank to master cylinder.
2) Remove the cylinder pin with magnetic pick-up tool while pushing in primary piston. (with ABS)

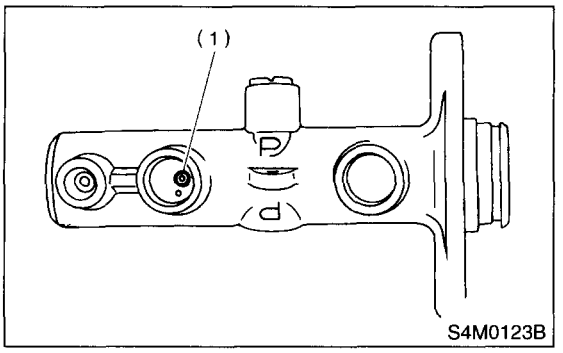

(1) Cylinder pin

3) Pry up the pawl and remove the piston retainer.

NOTE:
Piston may jump out from master cylinder.

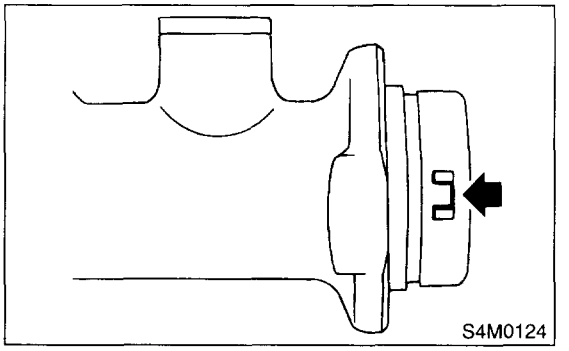

4) Extract the primary piston assembly and secondary piston assembly.

CAUTION:
- **Do not disassemble the piston assembly; otherwise, the spring set value may be changed.**
- **Use brake fluid or methanol to wash inside wall of cylinder, pistons and piston cups. Be careful not to damage parts when washing. If methanol is used for washing, do not dip rubber parts, such as piston cups, in it for more than 30 seconds; otherwise, they may become swelled.**

D: ASSEMBLY

1. PRECAUTIONS FOR ASSEMBLING

1) When assembling, be sure to use recommended brake fluid.
2) Ensure that the inside wall of cylinder, pistons, and piston cups are free from dirt when assembling.
3) Be extremely careful not to damage, scratch, or dent cylinder inside wall, pistons, and piston cups.
4) Do not drop the parts. Never attempt to use any part that has been dropped accidentally.

2. ASSEMBLING PROCEDURE

1) Assembling piston assembly:
Apply recommended brake fluid to inside wall of cylinder, and to outer surface of piston assembly, and install the piston assemblies carefully into cylinder.
2) Assembling cylinder pin:
3) Press the pawl and install the piston retainer into the master cylinder.

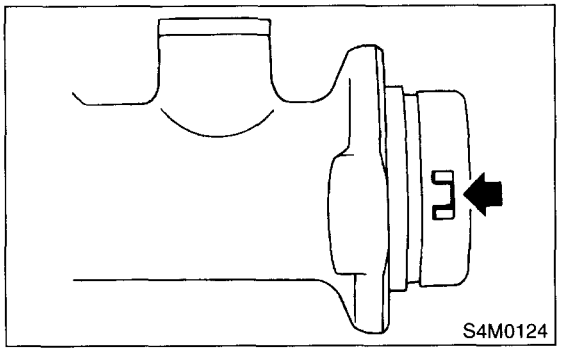

4) Install the seal to reservoir tank.

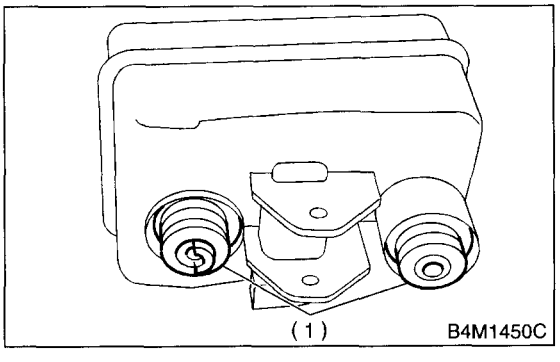

(1) Seal

5) Install the pin with drift pins which secures the reservoir tank to master cylinder.

E: INSPECTION

If any damage, deformation, wear, swelling, rust, and other faults are found on the primary piston assembly, secondary piston assembly, supply valve stopper, or gasket, replace the faulty part.

CAUTION:

- **The primary and secondary pistons must be replaced as complete assemblies.**
- **The service limit of the clearance between each piston and the master cylinder inner dia. is 0.11 mm (0.0043 in).**
- **When handling parts, be extremely careful not to damage or scratch the parts, or let any foreign matter get on them.**

12.Brake Booster

A: REMOVAL

1) Remove or disconnect the following parts at engine compartment.
   (1) Disconnect the connector for brake fluid level indicator.
   (2) Remove the brake pipes from master cylinder.
   (3) Remove the master cylinder installing nuts.
   (4) Disconnect the vacuum hose from brake booster.
2) Remove the following parts from the pedal bracket.
   (1) Snap pin and clevis pin
   (2) Four brake booster installing nuts
3) Remove the brake booster while shunning brake pipes.

NOTE:
- Be careful not to drop the brake booster. Brake booster should be discarded if it has been dropped.
- Use special care when handling the operating rod.

If excessive force is applied to operating rod, sufficient to cause a change in the angle in excess of ±3°, it may result in damage to the power piston cylinder.
- Use care when placing the brake booster on the floor.
- Do not change the push rod length. If it has been changed, reset the projected length "L" to the standard length.

Standard:
L = 10.4 mm (0.41 in)

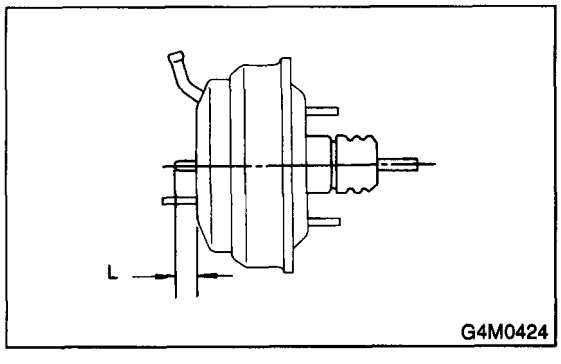

CAUTION:
If external force is applied from above when brake booster is placed in this position, the resin portion as indicated by "P", may be damaged.

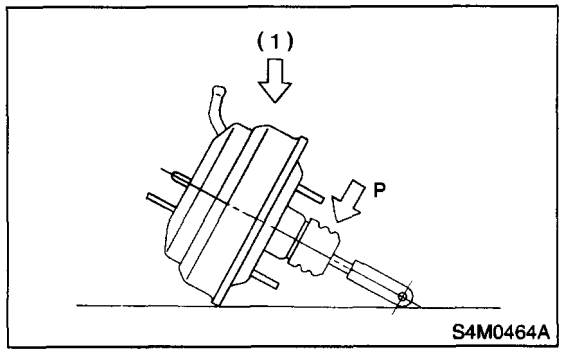

(1) Force

B: INSTALLATION

1) Mount the brake booster in position.
2) Connect the operating rod to brake pedal with clevis pin and snap pin.

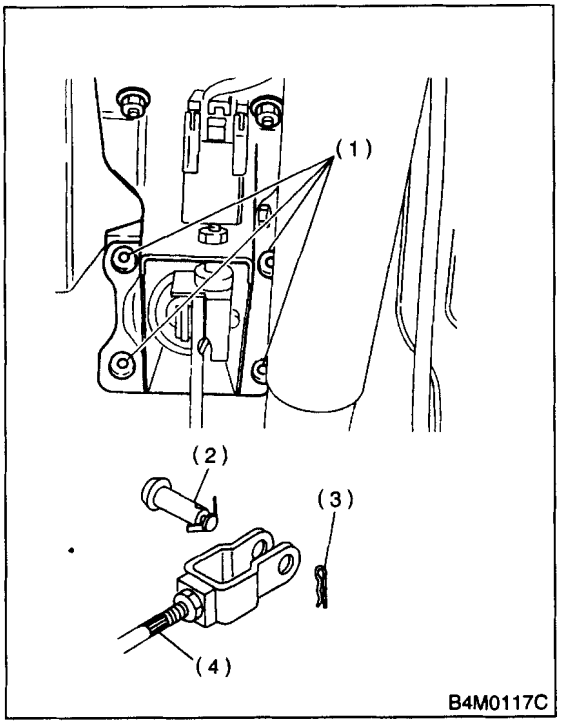

(1) Nuts
(2) Clevis pin
(3) Snap pin
(4) Operating rod

3) Connect the vacuum hose to brake booster.

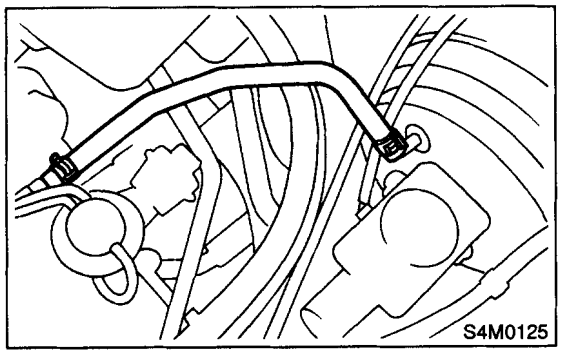

4) Mount the master cylinder onto brake booster.
5) Connect the brake pipes to master cylinder.
6) Connect the electric connector for brake fluid level indicator.
7) Adjust the operating rod of brake booster.

Standard: L
LHD model:
144.6 mm (5.69 in)
RHD model:
173.2 mm (6.82 in)

If it is not in specified value, adjust it by adjusting the brake booster operating rod.

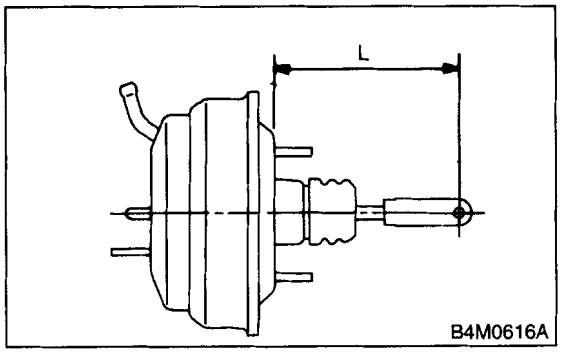

8) Measure the clearance between threaded end of stop light switch and stopper.
If it is not in specified value, adjust it by adjusting the position of stop light switch.

CAUTION:
Be careful not to rotate the stop light switch.

Stop light switch clearance: A
0.3 mm (0.012 in)

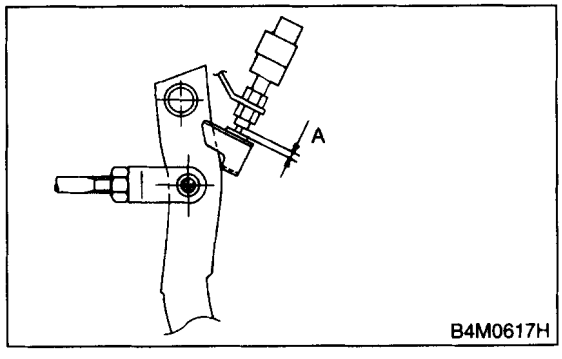

9) Apply grease to operating rod connecting pin to prevent it from wearing.
10) Bleed air from the brake system.

Tightening torque (Air bleeder screw):
8 N·m (0.8 kgf-m, 5.8 ft-lb)

11) Conduct road tests to ensure brakes do not drag.

C: INSPECTION

1. OPERATION CHECK (WITHOUT GAUGES)

CAUTION:
When checking operation, be sure to securely apply the hand brake.

• Checking without gauges

This method cannot determine the exact portion which has failed, but it can provide a rough understanding of the nature of the failure if checking is conducted in accordance with the following procedures.

• Air tightness check

Start the engine, and run it for 1 to 2 minutes, then turn it off. Depress the brake pedal several times applying the same pedal force as that used in ordinary braking operations. The pedal stroke should be greatest on the 1st depression, and it should become smaller with each successive depression. If no change occurs in the pedal height while in a depressed state, the brake booster is faulty.

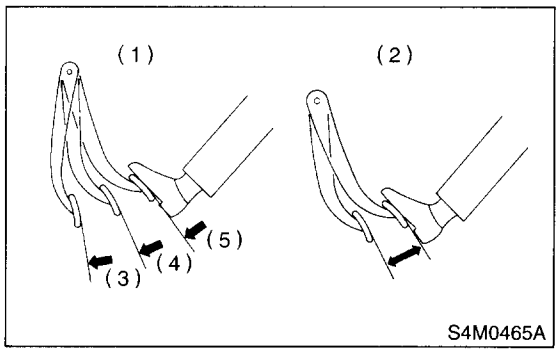

(1) OK
(2) NOT OK
(3) 1st
(4) 2nd
(5) 3rd

NOTE:
• In the event of defective operation, inspect the condition of the check valve and vacuum hose.
• Replace them if faulty and conduct the test again.
• If no improvement is observed, check precisely with gauges.

• Operation check

1) With the engine off, depress the brake pedal several times applying the same pedal force and make sure that the pedal height does not vary with each depression of the pedal.

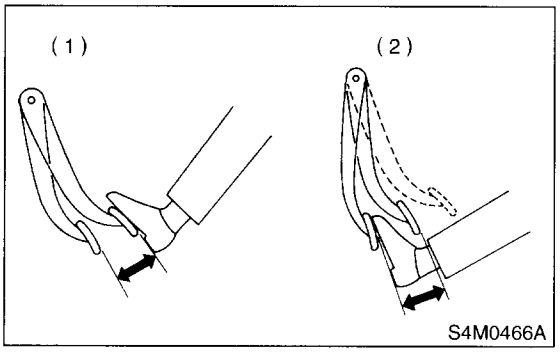

(1) When engine is stopped
(2) When engine is started

2) With the brake pedal depressed, start the engine.
3) As engine starts, the brake pedal should move slightly toward the floor. If no change occurs in the pedal height, the brake booster is faulty.

NOTE:
If faulty, check precisely with gauges.

• Loaded air tightness check

Depress the brake pedal while engine is running, and turn off the engine while the pedal is still depressed. Keep the pedal depressed for 30 seconds; if no change occurs in the pedal height, the brake booster is functioning normally; if the pedal height increases, it is faulty.

NOTE:
If faulty, check precisely with gauges.

2. OPERATION CHECK (WITH GAUGES)

CAUTION:
When checking operation, be sure to securely apply the hand brake.

• Checking with gauges

Connect gauges as shown in the figure. After bleeding air from pressure gauges, proceed to each check.

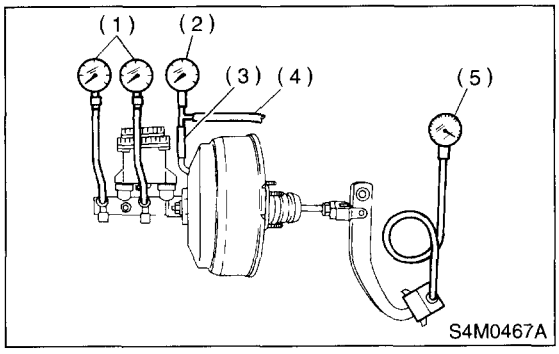

(1) Pressure gauge
(2) Vacuum gauge
(3) Adapter hose
(4) Vacuum hose
(5) Pedal force gauge

• Air tightness check

1) Start the engine and keep it running until a vacuum of 66.7 kPa (500 mmHg, 19.69 inHg) = point A is indicated on vacuum gauge. Do not depress the brake pedal.

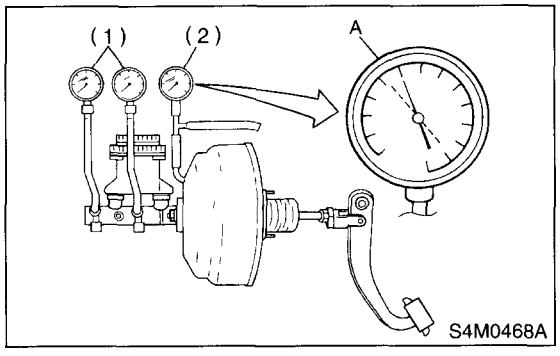

(1) Pressure gauge
(2) Vacuum gauge

2) Stop the engine and watch the gauge. If the vacuum drop range is less than 3.3 kPa (25 mmHg, 0.98 inHg) within 15 seconds after stopping the engine, the brake booster is functioning properly.
If defective, the cause may be one of those listed below.

- Check valve malfunction
- Leak from vacuum hose
- Leak from the shell jointed portion or stud bolt welded portion
- Damaged diaphragm
- Leak from valve body seal and bearing portion
- Leak from plate and seal assembly portion
- Leak from poppet valve assembly portion

• Loaded air tightness check

1) Start the engine and depress the brake pedal with pedal force of 196 N (20 kgf, 44 lb). Keep the engine running until a vacuum of 66.7 kPa (500 mmHg, 19.69 inHg) = point B is indicated on vacuum gauge while the pedal is still depressed.

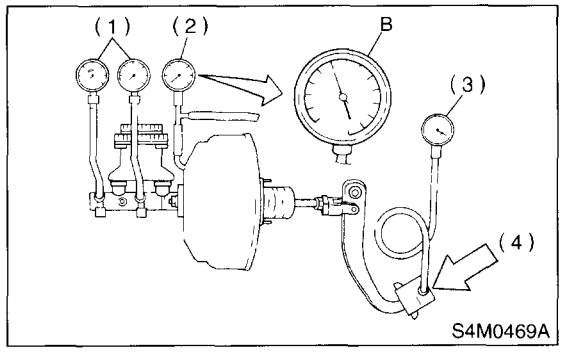

(1) Pressure gauge
(2) Vacuum gauge
(3) Pedal force gauge
(4) Depress

2) Stop the engine and watch vacuum gauge.
If the vacuum drop range is less than 3.3 kPa (25 mmHg, 0.98 inHg) within 15 seconds after stopping the engine, brake booster is functioning properly.
If defective, refer to "AIR TIGHTNESS CHECK".
<Ref. to BR-40, INSPECTION, Brake Booster.>

• Lack of boosting action check

Turn off the engine, and set the vacuum gauge reading at "0". Then, check the fluid pressure when brake pedal is depressed. The pressure must be greater than the standard value listed.

Brake pedal force	147 N (15 kgf, 33 lb)	294 N (30 kgf, 66 lb)
Fluid pressure	588 kPa (6 kg/cm^2, 85 psi)	1,471 kPa (15 kg/cm^2, 213 psi)

• Boosting action check

Set the vacuum gauge reading at 66.7 kPa (500 mmHg, 19.69 inHg) by running engine. Then, check the fluid pressure when brake pedal is depressed. The pressure must be greater than the standard value listed.

Brake pedal force		147 N (15 kgf, 33 lb)	294 N (30 kgf, 66 lb)
Fluid pressure	Turbo	5,688 kPa (58 kg/cm^2, 825 psi)	9,120 kPa (93 kg/cm^2, 1,323 psi)
	Non-turbo	5,296 kPa (54 kg/cm^2, 768 psi)	

13.Proportioning Valve

A: REMOVAL

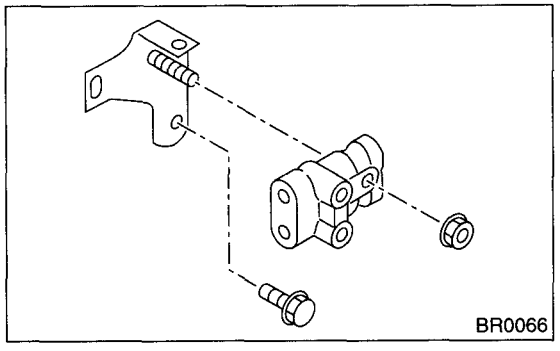

1) Remove the brake pipe from proportioning valve at four places.
2) Remove the proportioning valve from its bracket.

CAUTION:
Do not disassemble or adjust the proportioning valve. (The proportioning valve must be replaced as an assembly.)

B: INSTALLATION

1) Install the proportioning valve to bracket.
2) Connect the brake pipes correctly to proportioning valve.
3) Bleed air, then check each joint of brake pipe for oil leaks.

Tightening torque:
Proportioning valve to brake pipe flare nut:
15 N·m (1.5 kgf-m, 10.8 ft-lb)
Proportioning valve to bracket
18 N·m (1.8 kgf-m, 13.0 ft-lb)

C: INSPECTION

1) Install the oil pressure gauges to measure the master cylinder fluid pressure (front wheel brake fluid pressure) and rear wheel cylinder fluid pressure.
2) Bleed air from the oil pressure gauges.
3) Check the master cylinder fluid pressure and rear wheel cylinder fluid pressure.
The standard values are shown in the figure.

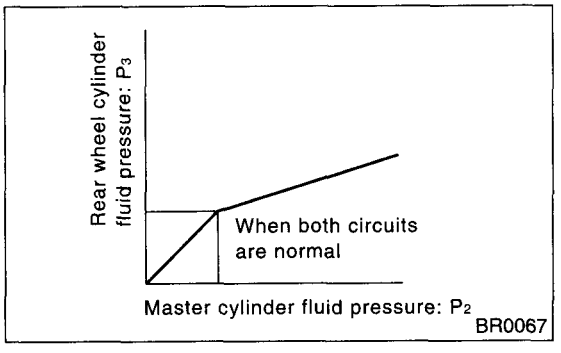

4) For the oil pressure in case of split point, refer to "SPECIFICATIONS".
<Ref. to BR-2, SPECIFICATIONS, General Description.>

14. Brake Fluid

A: INSPECTION

1) Check that the brake fluid level remains between "MIN" and "MAX". If out of the specified range, refill or drain fluid. If fluid level becomes close to "MIN", refill fluid.
2) Check the fluid for discoloration. If fluid color has excessively changed, drain the fluid and refill with new fluid.

B: REPLACEMENT

CAUTION:
- **To always maintain the brake fluid characteristics, replace the brake fluid according to maintenance schedule or earlier than that when used in severe condition.**
- **The FMVSS No. 116, fresh DOT3 or 4 brake fluid must be used.**
- **Cover the bleeder with waste cloth, when loosening it, to prevent brake fluid from being splashed over surrounding parts.**
- **Avoid mixing different brands of brake fluid to prevent degrading the quality of the fluid.**
- **Be careful not to allow dirt or dust to get into the reservoir tank.**

NOTE:
- During bleeding operation, keep the brake reservoir tank filled with brake fluid to eliminate entry of air.
- Brake pedal operating must be very slow.
- For convenience and safety, two people should do the work.
- The amount of brake fluid required is approximately 500 m ℓ (16.9 US fl oz, 17.6 Imp fl oz) for total brake system.

1) Either jack-up the vehicle and place a safety stand under it, or lift up the vehicle.
2) Remove both front and rear wheels.
3) Draw out the brake fluid from master cylinder with syringe.
4) Refill the reservoir tank with recommended brake fluid.

Recommended brake fluid:
FMVSS No. 116, fresh DOT3 or 4 brake fluid

5) Install one end of a vinyl tube onto the air bleeder and insert the other end of the tube into a container to collect the brake fluid.

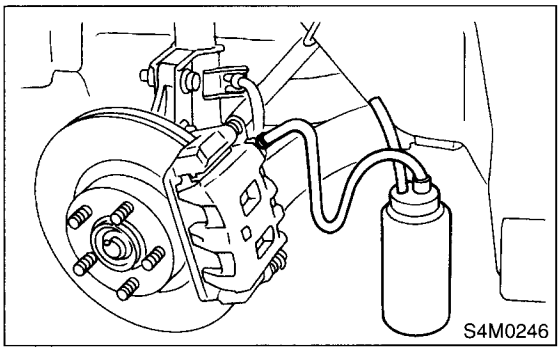

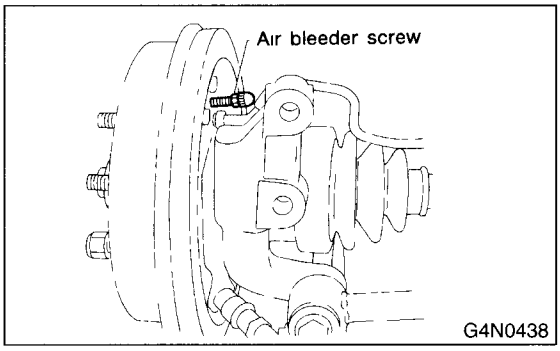

CAUTION:
Brake fluid replacement sequence; (A) Front right → (B) Rear left → (C) Front left → (D) Rear right

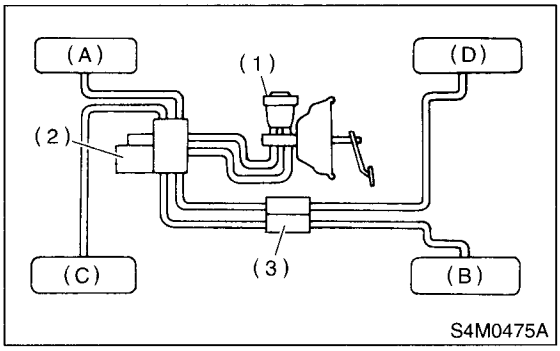

(1) Master cylinder
(2) Hydraulic unit
(3) Proportioning valve

6) Instruct your co-worker to depress the brake pedal slowly two or three times and then hold it depressed.
7) Loosen the bleeder screw approximately 1/4 turn until a small amount of brake fluid drains into the container, and then quickly tighten the screw.

8) Repeat steps 6) and 7) above until there are no air bubbles in drained brake fluid and new fluid flows through vinyl tube.

NOTE:
Add brake fluid as necessary while performing the air bleed operation, in order to prevent the tank from running short of brake fluid.

9) After completing the bleeding operation, hold the brake pedal depressed and tighten the screw and install bleeder cap.

Tightening torque (Bleeder screw):
8 N·m (0.8 kgf-m, 5.8 ft-lb)

10) Bleed air from each wheel cylinder using the same procedures as described in steps 6) through 7) above.

11) Depress the brake pedal with a force of approximately 294 N (30 kgf, 66 lb) and hold it there for approximately 20 seconds. At this time check the pedal to see if it shows any unusual movement.
Visually inspect the bleeder screws and brake pipe joints to make sure that there is no fluid leakage.

12) Install the wheels, and drive vehicle for a short distance between 2 to 3 km (1 to 2 miles) to make sure that brakes are operating properly.

15.Air Bleeding

A: PROCEDURE

CAUTION:
- **The FMVSS No. 116, fresh DOT3 or 4 brake fluid must be used.**
- **Cover the bleeder with waste cloth when loosening it to prevent brake fluid from being splashed over surrounding parts.**
- **Avoid mixing different brands of brake fluid to prevent degrading the quality of the fluid.**
- **Be careful not to allow dirt or dust to get into the reservoir tank.**

NOTE:
- Start with the brakes (wheels) connected to the secondary chamber of the master cylinder.
- The time interval between two brake pedal operations (from the time when the pedal is released to the time when it is depressed another time) shall be approximately 3 seconds.
- The air bleeder on each brake shall be released for 1 to 2 seconds.

1. MASTER CYLINDER

NOTE:
- If the master cylinder is disassembled or reservoir tank is empty, bleed the master cylinder.
- During the bleeding operation, keep the brake reservoir tank filled with brake fluid to eliminate entry of air.
- Brake pedal operating must be very slow.
- For convenience and safety, two people should do the work.

1) Disconnect the brake line at primary and secondary sides.
2) Cover the master cylinder with vinyl bag.
3) Carefully depress and hold the brake pedal.

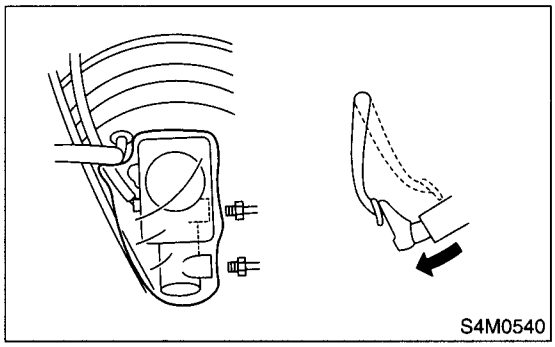
S4M0540

4) Close the outlet plug with your finger, and release the brake pedal.

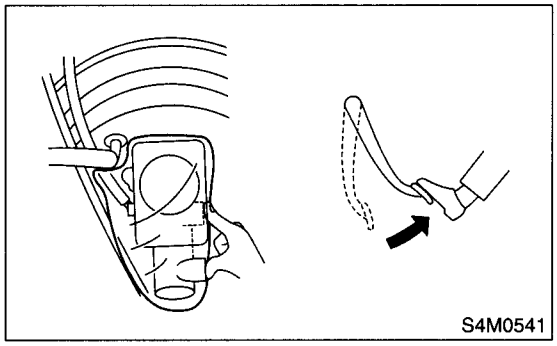
S4M0541

5) Repeat the above step3) and 4) until brake fluid is completey bled from outlet plug.
6) Remove the vinyl bag, then connect the brake pipe to master cylinder.

Tightening torque:
8 N·m (0.8 kgf-m, 5.8 ft-lb)

7) Using water, wash off the spilt brake fluid at the master cylinder surrounding, then wipe up the water.
8) Bleed air from the brake line. <Ref. to BR-46, BRAKE LINE, PROCEDURE, Air Bleeding.>

2. BRAKE LINE

NOTE:
- During the bleeding operation, keep the brake reservoir tank filled with brake fluid to eliminate entry of air.
- Brake pedal operating must be very slow.
- For convenience and safety, two people should do the work.

1) Make sure that there is no leak from joints and connections of the brake system.
2) Fit one end of vinyl tube into the air bleeder and put the other end into a brake fluid container.

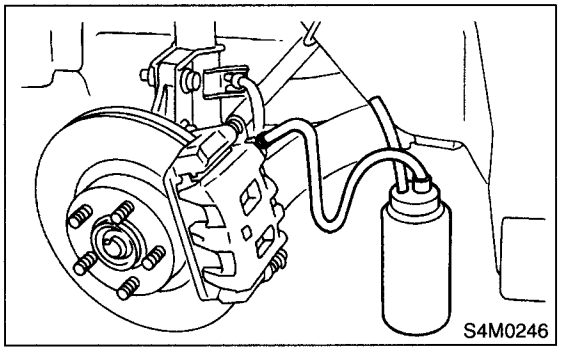
S4M0246

CAUTION:
Brake fluid replacement sequence; (A) Front right → (B) Rear left → (C) Front left → (D) Rear right

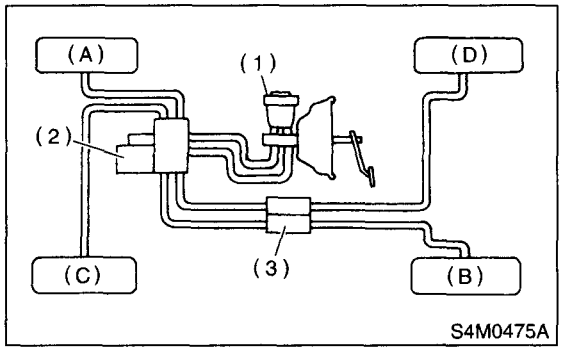

(1) Master cylinder
(2) Hydraulic unit
(3) Proportioning valve

3) Slowly depress the brake pedal and keep it depressed. Then, open the air bleeder to discharge air together with the fluid.
Release the air bleeder for 1 to 2 seconds.
Next, with the bleeder closed, slowly release the brake pedal.
Repeat these steps until there is no more air bubbles in the vinyl tube.
Allow 3 to 4 seconds between two brake pedal operations.

CAUTION:
Cover the bleeder with waste cloth, when loosening it, to prevent brake fluid from being splashed over surrounding parts.

NOTE:
Brake pedal operating must be very slow.

4) Tighten the air bleeder securely when no air bubbles are visible.

Air bleeder tightening torque:
8 N·m (0.8 kgf-m, 5.8 ft-lb)

5) Perform these steps for the brakes connecting to the secondary chamber of master cylinder, first, and then for the ones connecting to primary chamber. With all procedures completed, fully depress the brake pedal and keep it in that position for approximately 20 seconds to make sure that there is no leak evident in the entire system.

6) Check the pedal stroke.
While the engine is idling, depress the brake pedal with a 490 N (50 kgf, 110 lb) load and measure the distance between the brake pedal and steering wheel. With the brake pedal released, measure the distance between the pedal and steering wheel again. The difference between the two measurements must be more than specified.

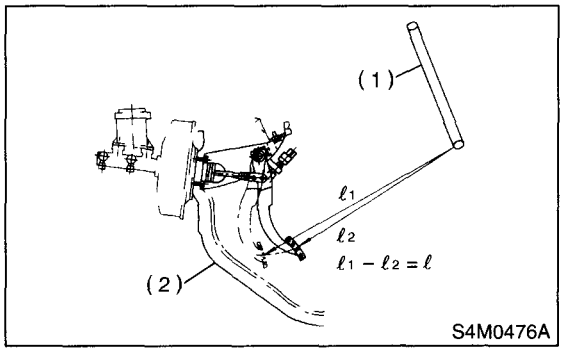

(1) Steering wheel
(2) Toe board

Specified pedal stroke:
Without ABS
90 mm (3.54 in)
With ABS
95 mm (3.74 in)
When depressing brake pedal with a 490 N (50 kg, 110 lb) load.

7) If the distance is more than specified, there is a possibility that air is in the brake line. Bleed the brake line until pedal stroke meets the specification.
8) Operate the hydraulic control unit in the sequence control mode. (With ABS)
<Ref. to ABS-11, ABS Sequence Control.>
9) Recheck the brake stroke.
10) If the distance is more than specified, there is a possibility air is in the inside of the hydraulic unit. Repeat above steps 2) to 9) until pedal stroke meets the specification.
11) Add brake fluid to the required level (MAX. level) of reservoir tank.
12) As a final step, test run the vehicle at low speed and apply brakes relatively hard 2 to 3 times to ensure that brakes provide normal braking action on all four wheels without dragging and uneven braking.

16.Brake Hose

A: REMOVAL

1. FRONT BRAKE HOSE

1) Separate the brake pipe from brake hose. (Always use flare nut wrench and be careful not to deform flare nut.)

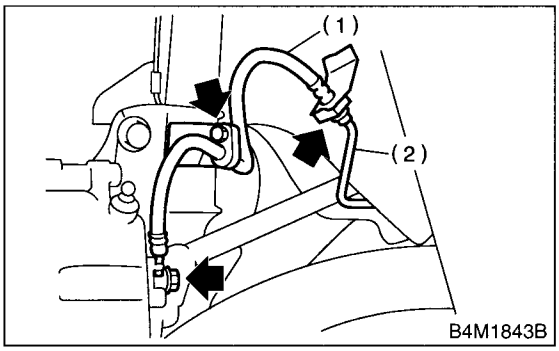

(1) Brake hose
(2) Brake pipe

2) Pull out the clamp to remove the brake hose.
3) Remove the bolt at strut and union bolt.

2. REAR BRAKE HOSE

1) Separate the brake pipe from brake hose.

NOTE:
Always use flare nut wrench and be careful not to deform flare nut.

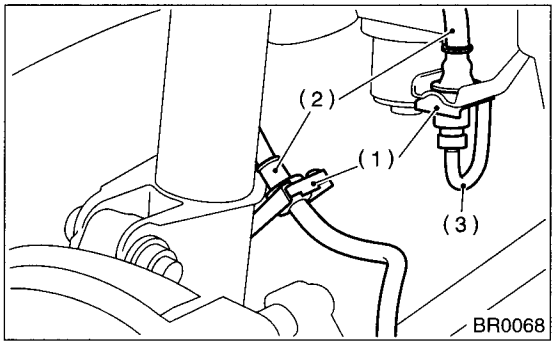

(1) Brake hose clip
(2) Brake hose
(3) Brake pipe

2) Unscrew the brake hose flare nut, and disconnect the brake hose.
3) Pull out the clamp to remove the brake hose.

B: INSTALLATION

1. FRONT BRAKE HOSE

1) Route the end of brake hose (on caliper side) through hole in brake hose bracket at strut location.
2) Tighten the end of brake hose at caliper using a union bolt.

Tightening torque (Union bolt):
18 N·m (1.8 kgf-m, 13.0 ft-lb)

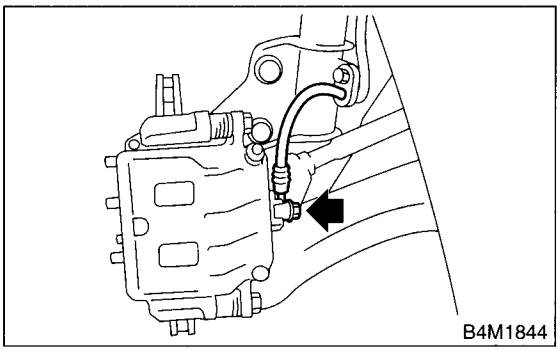

3) Secure the middle fitting of brake hose to bracket at strut location using a clamp.
4) Position the disc in straight-forward direction and route the brake hose through hole in bracket on wheel apron side.

CAUTION:
Be sure the brake hose is not twisted.

5) Temporarily tighten the flare nut to connect brake pipe and hose.
6) Fix the brake hose with clamp at wheel apron bracket.
7) While holding the hexagonal part of brake hose fitting with a wrench, tighten the flare nut to the specified torque.

Tightening torque (Brake pipe flare nut):
15 N·m (1.5 kgf-m, 10.8 ft-lb)

8) Bleed air from the brake system. <Ref. to BR-46, Air Bleeding.>

2. REAR BRAKE HOSE

1) Pass the brake hose through the hole of bracket, and lightly tighten the flare nut to connect brake hose.
2) Insert the clamp upward to fix brake hose.
3) While holding the hexagonal part of brake hose fitting with a wrench, tighten the flare nut to the specified torque.

Tightening torque (Brake pipe flare nut):
15 N·m (1.5 kgf-m, 10.8 ft-lb)

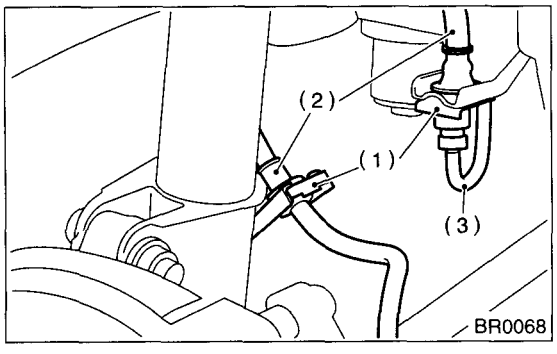

(1) Brake hose clip
(2) Brake hose
(3) Brake pipe

4) Bleed air from the brake system. <Ref. to BR-46, Air Bleeding.>

C: INSPECTION

Ensure there are no cracks, breakage, or damage on hoses. Check the joints for fluid leakage. If any cracks, breakage, damage or leakage is found, repair or replace the hose.

17.Brake Pipe

A: REMOVAL

NOTE:
Airbag system wiring harness is routed near the center brake pipe.

CAUTION:
- **All Airbag system wiring harness and connectors are colored yellow. Do not use electrical test equipment on these circuits.**
- **Be careful not to damage the Airbag system wiring harness when servicing the center brake pipe.**
- **When removing the brake pipe, make sure that it is not bent.**

B: INSTALLATION

NOTE:
Airbag system wiring harness is routed near the center brake pipe.

CAUTION:
- **All Airbag system wiring harness and connectors are colored yellow. Do not use electrical test equipment on these circuits.**
- **Be careful not to damage the Airbag system wiring harness when servicing the center brake pipe.**
- **When installing the brake pipe, make sure that it is not bent.**
- **After installing the brake pipe and hose, bleed the air.**
- **After installing the brake hose, make sure that it does not touch the tire or suspension assembly, etc.**

Brake pipe tightening torque:
15 N·m (1.5 kgf-m, 10.8 ft-lb)

C: INSPECTION

Ensure there are no cracks, breakage, or damage on pipes. Check the joints for fluid leakage. If any cracks, breakage, damage or leakage is found, repair or replace the pipe.

NOTE:
Use a mirror when inspecting the low-visible part or back side.

18.Brake Pedal

A: REMOVAL

1. MT MODEL

1) Remove the steering bolts.
2) Raise the vehicle on hoist and remove the two bolts which secure steering unit to underside of body.
3) Lower the vehicle to floor.
4) Remove the instrument panel lower cover from instrument panel.
5) Disconnect the following parts from pedal bracket.
- Operating rod of brake booster
- Electrical connectors (for stop light switch, etc.)

6) Remove the clevis pin which secures lever to push rod.
7) Remove the nut which secures clutch master cylinder.
8) Remove the steering assembly.
9) Remove the accelerator pedal.
10) Remove the bolts and nuts which secure pedal bracket.

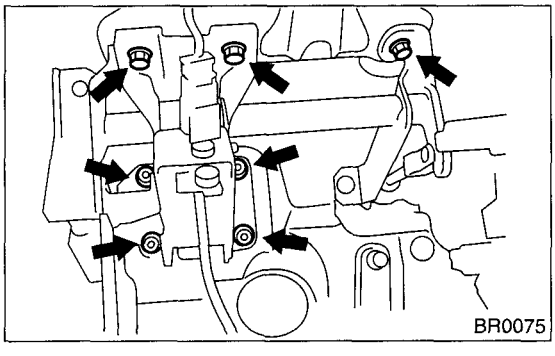

2. AT MODEL

1) Disconnect the ground cable from battery.
2) Remove the instrument panel lower cover from instrument panel.
3) Remove the clevis pin which secures brake pedal to brake booster operating rod. Also disconnect the stop light switch connector.
4) Remove the two bolts and four nuts which secure brake pedal to pedal.

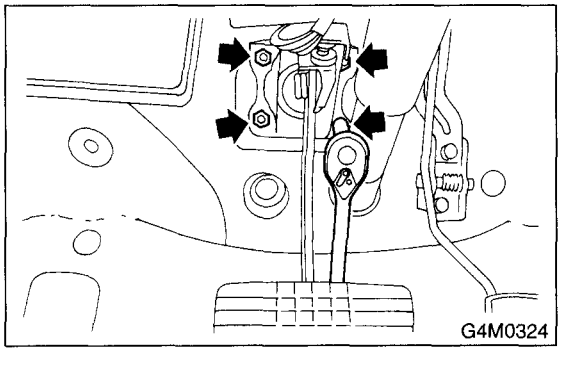

B: INSTALLATION

1) Install in the reverse order of removal.

CAUTION:
- **If the cable clamp is damaged, replace it with a new one.**
- **Never fail to cover the outer cable end with boot.**
- **Be careful not to kink the accelerator cable.**
- **Always use new clevis pins.**

2) Adjust the clutch pedal <Ref. to CL-27, ADJUSTMENT, Clutch Pedal.>
3) Inspect after pedal installation <Ref. to BR-53, INSPECTION, Brake Pedal.>

C: DISASSEMBLY

1. MT MODEL

1) Remove the brake switch.
<Ref. to BR-55, REMOVAL, Stop Light Switch.>
2) Remove the clutch pedal.
<Ref. to CL-26, DISASSEMBLY, Clutch Pedal.>
3) Remove the clutch master cylinder bracket.

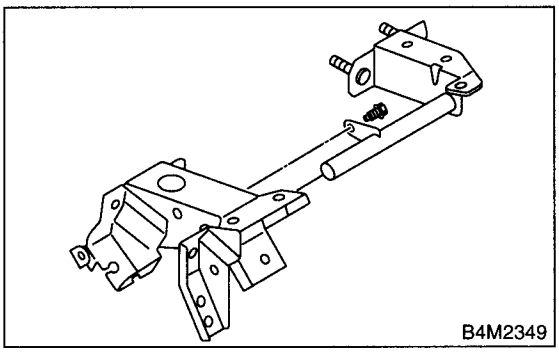

4) Remove the bush, spring and stopper.

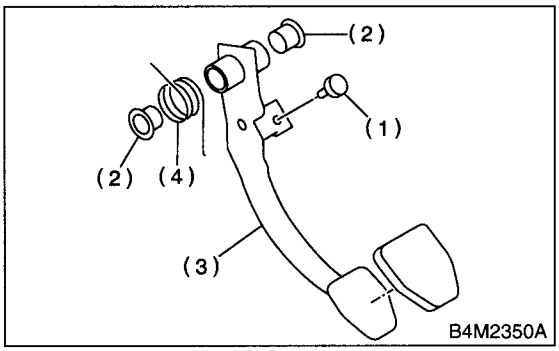

(1) Stopper
(2) Bushing
(3) Brake pedal
(4) Brake pedal spring

5) Remove the brake pedal pad.

2. AT MODEL

1) Remove the brake switch.
2) Unbolt, and then remove the brake pedal.

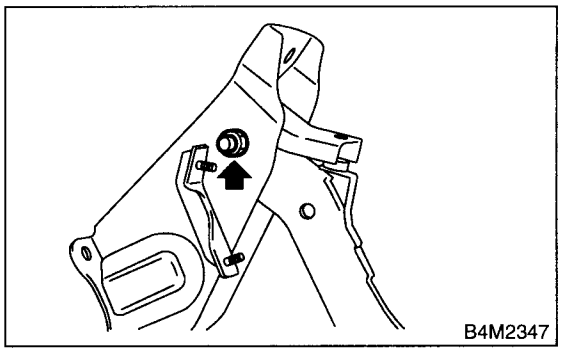

3) Remove the bush, spacer and spring.

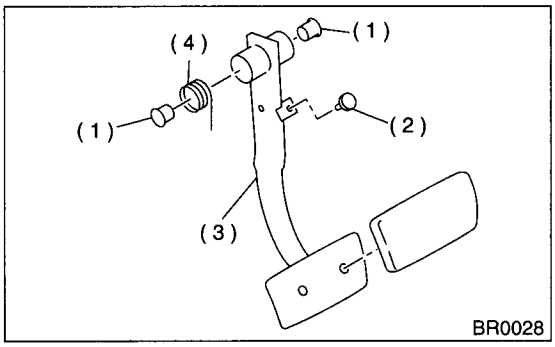

(1) Plug
(2) Stopper
(3) Brake pedal
(4) Brake pedal spring

4) Remove the brake pedal pad.

D: ASSEMBLY

1) Attach the stop light switch, etc. to pedal bracket temporarily.
2) Clean the inside of bores of clutch pedal and brake pedal, apply grease, and set bushings into bores.
3) Align bores of pedal bracket, clutch pedal and brake pedal, attach brake pedal return spring and clutch pedal effort reducing spring (vehicle with hill holder), and then install the pedal bolt.

NOTE:
Clean up inside of bushings and apply grease before installing the spacer.

Tightening torque:
T: 29 N·m (3.0 kgf-m, 21.7 ft-lb)

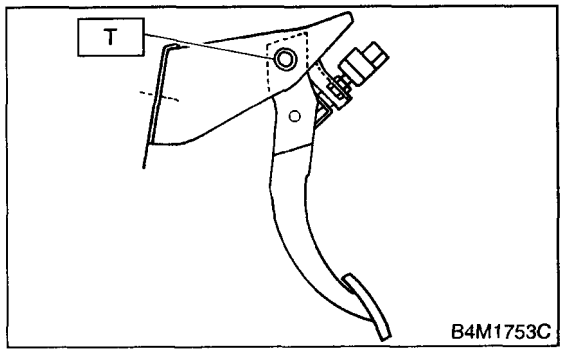

4) Set the brake pedal position by adjusting the position of stop light switch.

Pedal position: L
125.9 mm (4.96 in)

Tightening torque:
T: 8 N·m (0.8 kgf-m, 5.8 ft-lb)

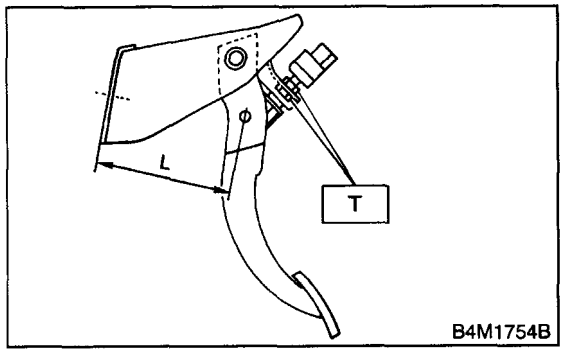

E: INSPECTION

1) Move the brake and clutch pedal pads in the lateral direction with a force of approximately 10 N (1 kgf, 2 lb) to ensure pedal deflection is in specified range.

CAUTION:
If excessive deflection is noted, replace the bushings with new ones.

Deflection of brake and clutch pedal:
Service limit
5.0 mm (0.197 in) or less

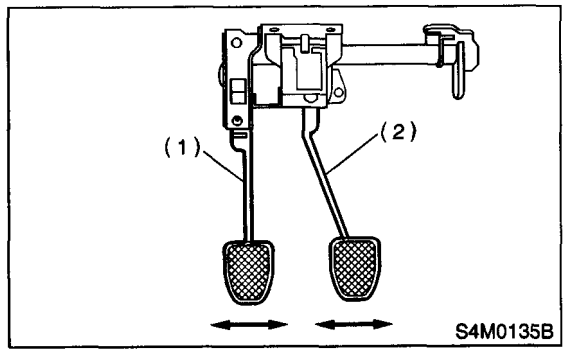

(1) Clutch pedal
(2) Brake pedal

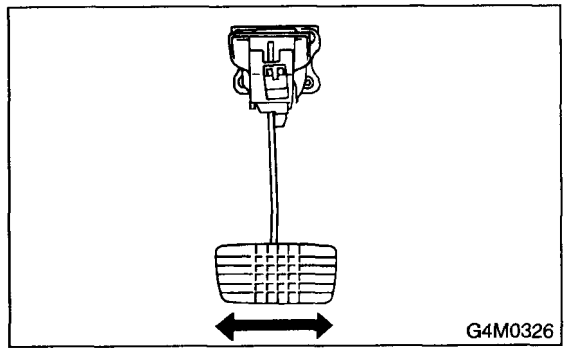

2) Check the position of pedal pad.

Pedal height: L
148 mm (5.83 in)

Brake pedal free play: A
1 — 3 mm (0.04 — 0.12 in) [Depress brake pedal pad with a force of less than 10 N (1 kgf, 2 lb).]

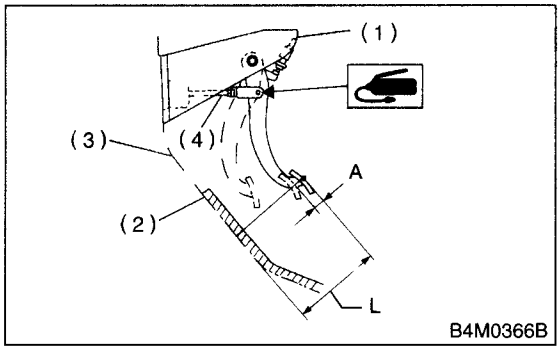

(1) Stop light switch
(2) Mat
(3) Toe board
(4) Brake booster operating rod

3) If it is not in specified value, adjust it by adjusting the brake booster operating rod length.

19.Stop Light Switch

A: REMOVAL

1) Disconnect the ground terminal from battery.
2) Disconnect the stop light switch connector.
3) Loosen the nuts, and unscrew stop light switch to remove.

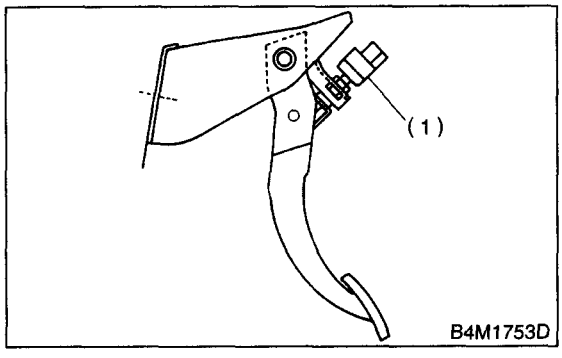

(1) Stop light switch

B: INSTALLATION

1) Screw the stop light switch onto a bracket and secure it temporarily with a nut.
2) Adjust the stop light switch position, and then tighten the nut.
<Ref. to BR-56, ADJUSTMENT, Stop Light Switch.>

Tightening torque:
8 N·m (0.8 kgf-m, 5.8 ft-lb)

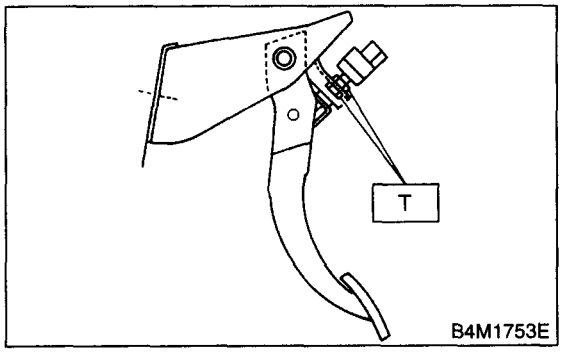

C: INSPECTION

1) If the stop light switch does not operate properly (or if it does not stop at the specified position), replace with a new one.

Specified position: L
2 mm (0.079 in)

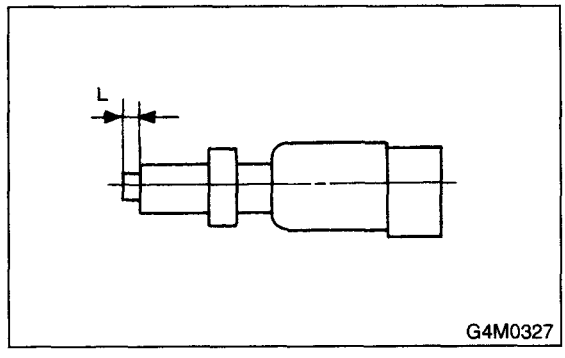

2) Measure the clearance between threaded end of stop light switch and stopper.

CAUTION:
Be careful not to rotate the stop light switch.

Stop light switch clearance: A
0.3 mm (0.012 in)

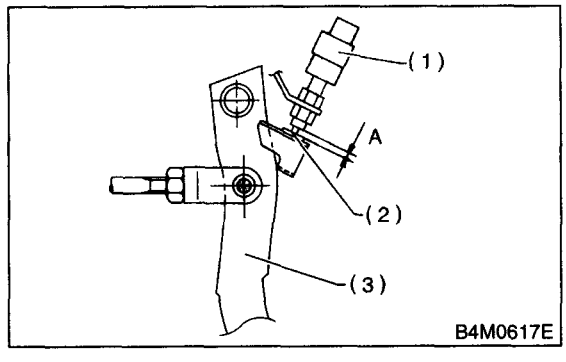

(1) Stop light switch
(2) Stopper
(3) Brake pedal

3) If it is not in specified value, adjust it by adjusting the position of stop light switch.

CAUTION:
Be careful not to rotate the stop light switch.

D: ADJUSTMENT

Loosen the lock nut, and adjust the stop light switch position until the clearance between threaded end of the stop light switch and the stopper becomes 0.3 mm (0.012 in). Then, tighten the lock nut.

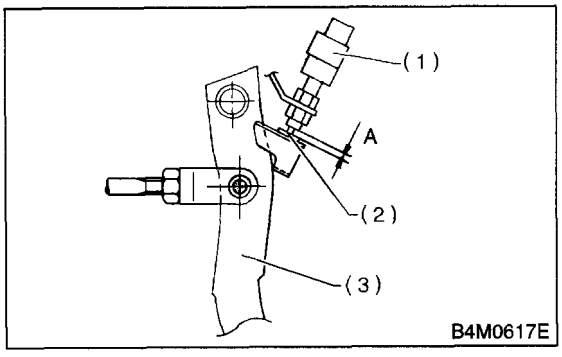

20. General Diagnostics

A: INSPECTION

	Trouble and possible cause	Corrective action
1. Insufficient braking	(1) Fluid leakage from the hydraulic mechanism	Repair or replace (cup, piston seal, piston boot, master cylinder piston kit, pipe or hose).
	(2) Entry of air into the hydraulic mechanism	Bleed the air.
	(3) Excessively wide shoe clearance	Adjust the clearance.
	(4) Wear, deteriorated surface material, adhering water or fluid on the lining	Replace, grind or clean.
	(5) Improper operation of master cylinder, disc caliper, brake booster or check valve	Correct or replace.
2. Unstable or uneven braking	(1) Fluid on the lining, drum or rotor	Eliminate cause of fluid leakage, clean, or replace.
	(2) Drum or rotor eccentricity	Correct or replace the drum or rotor.
	(3) Worn brake drum, or damage to the drum caused by sand	Correct by grinding, or replace.
	(4) Improper lining contact, deteriorated surface material, improper inferior material, or wear	Correct by grinding, or replace.
	(5) Deformed back plate	Correct or replace.
	(6) Improper tire inflation	Inflate to correct pressure.
	(7) Disordered wheel alignment	Adjust alignment.
	(8) Loosened back plate or the support installing bolts	Retighten.
	(9) Loosened wheel bearing	Retighten to normal tightening torque or replace.
	(10) Trouble in the hydraulic system	Replace the cylinder, brake pipe or hose.
	(11) Uneven effect of the parking brake	Check, adjust, or replace the rear brake and cable system.
3. Excessive pedal stroke	(1) Entry of air into the hydraulic mechanism	Bleed the air.
	(2) Excessive play in the master cylinder push rod	Adjust.
	(3) Fluid leakage from the hydraulic mechanism	Repair or replace (cup, piston seal, piston boot, master cylinder piston kit, pipe or hose).
	(4) Improperly adjusted shoe clearance	Adjust.
	(5) Improper lining contact or worn lining	Correct or replace.
4. Brake dragging or improper brake return	(1) Insufficient pedal play	Adjust play.
	(2) Improper master cylinder return	Clean or replace the cylinder.
	(3) Clogged hydraulic system	Replace.
	(4) Improper return or adjustment of parking brake	Correct or adjust.
	(5) Weakened spring tension or breakage of shoe return spring	Replace the spring.
	(6) Excessively narrow shoe clearance	Adjust the clearance.
	(7) Improper disc caliper operation	Correct or replace.
	(8) Improper adjusted wheel bearing	Adjust or replace.
5. Brake noise (1) (creak sound)	(1) Hardened or deteriorated lining	Replace the shoe assembly or pad.
	(2) Worn lining	Replace the shoe assembly or pad.
	(3) Loosened back plate or the support installing bolts	Retighten.
	(4) Loose wheel bearing	Retighten to normal tightening torque.
	(5) Dirty drum or rotor	Clean the drum or rotor, or clean and replace the brake assembly.
6. Brake noise (2) (hissing sound)	(1) Worn lining	Replace the shoe assembly or pad.
	(2) Improper installed shoe or pad	Correct or replace the shoe assembly or pad.
	(3) Loose or bent drum or rotor	Retighten or replace.

	Trouble and possible cause	Corrective action
7. Brake noise (3) (click sound)	In the case of the disc brake:	
	(1) Excessively worn pad or the support	Replace the pad or the support.
	In the case of the drum brake:	
	(1) Excessively worn shoe ridge	Replace the back plate.
	(2) Lack of oil on the shoe ridge surface and anchor	Add more grease.

PARKING BRAKE

PB

Page

1. General Description 2
2. Parking Brake Lever 6
3. Parking Brake Cable 8
4. Parking Brake Assembly (Rear Disc Brake) 10
5. General Diagnostic Table 13

1. General Description

A: SPECIFICATIONS

Model		Rear drum brake	Rear disc brake
Type		Mechanical on rear brakes, drum in disc	
Effective drum diameter	mm (in)	228.6 (9)	170 (6.69)
Lining dimensions (length × width × thickness)	mm (in)	219.3 × 35.0 × 4.1 (8.63 × 1.378 × 0.161)	163.1 × 30.0 × 3.2 (6.42 × 1.181 × 0.126)
Clearance adjustment		Automatic adjustment	Manual adjustment
Lever stroke	notches/N (kgf, lb)	7 to 8/196 (20, 44)	

B: COMPONENT

1. PARKING BRAKE (REAR DISC BRAKE)

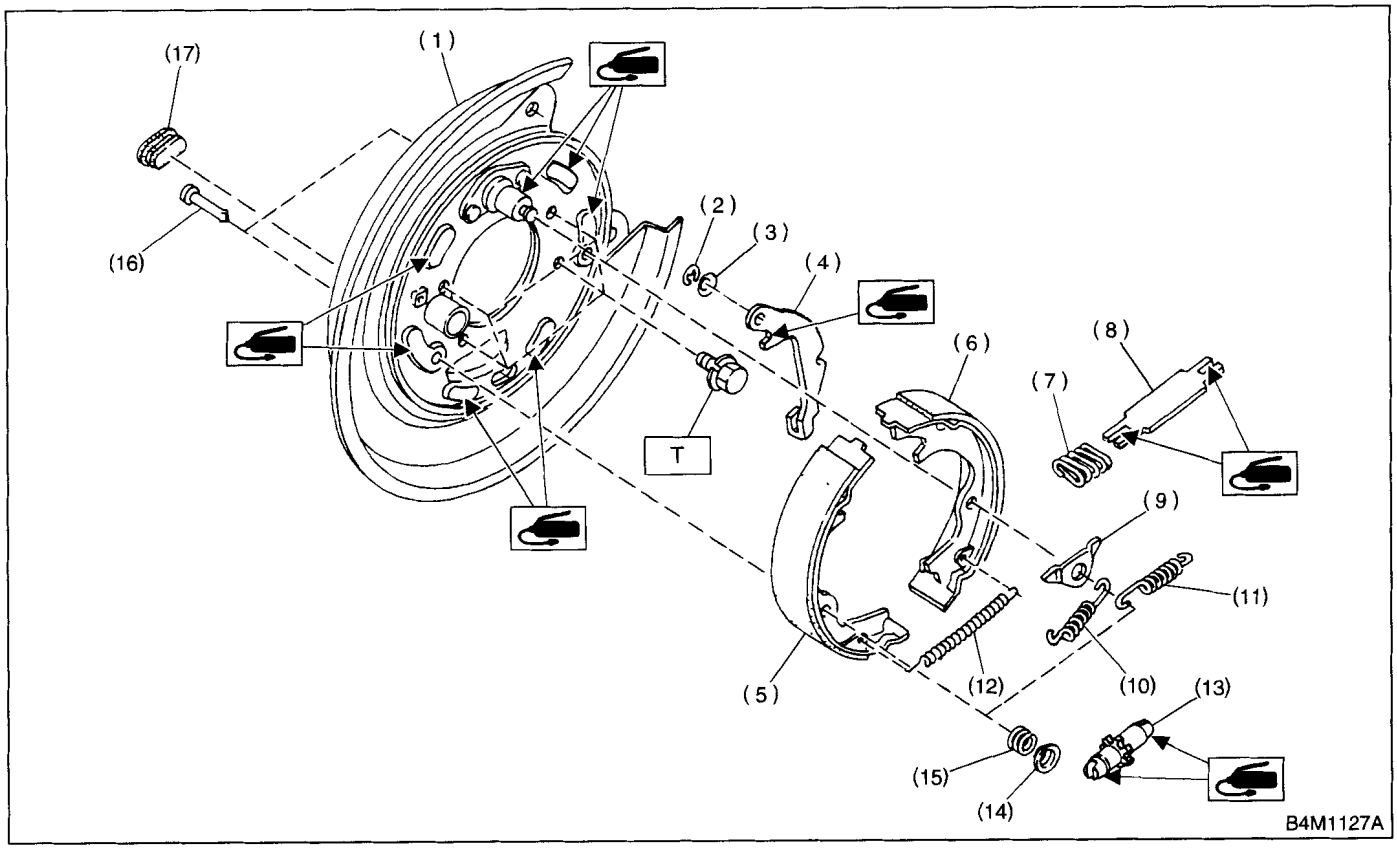

(1)	Back plate	(10)	Primary return spring
(2)	Retainer	(11)	Secondary return spring
(3)	Spring washer	(12)	Adjusting spring
(4)	Lever	(13)	Adjuster
(5)	Parking brake shoe (Primary)	(14)	Shoe hold-down cup
(6)	Parking brake shoe (Secondary)	(15)	Shoe hold down spring
(7)	Strut spring	(16)	Shoe hold down pin
(8)	Strut	(17)	Adjusting hole cover
(9)	Shoe guide plate		

Tightening torque: N·m (kgf-m, ft-lb)
T: 53 (5.4, 39)

2. PARKING BRAKE CABLE

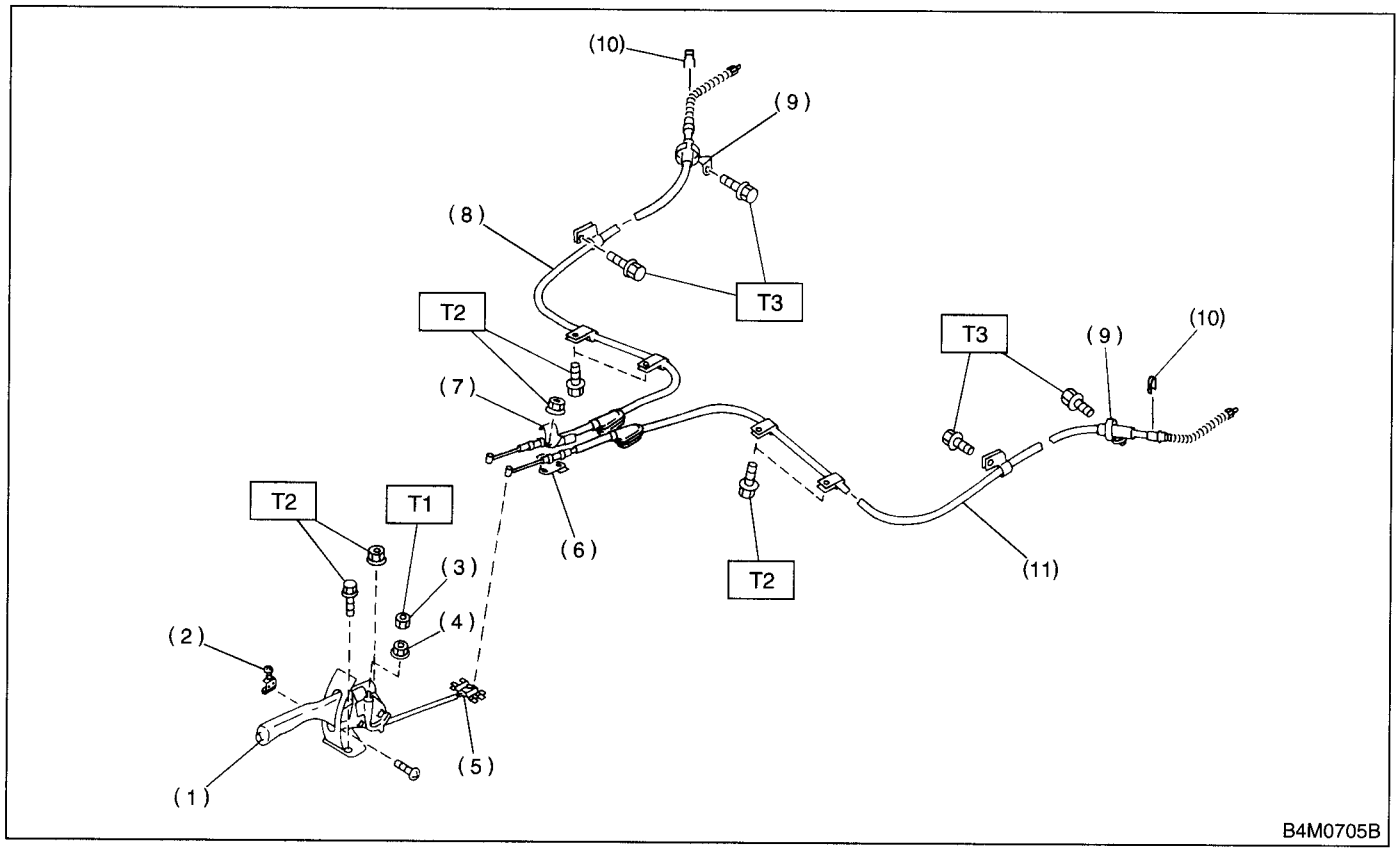

(1)	Parking brake lever	(7)	Clamp
(2)	Parking brake switch	(8)	Parking brake cable RH
(3)	Lock nut	(9)	Cable guide
(4)	Adjusting nut	(10)	Clamp (Rear disc brake model only)
(5)	Equalizer		
(6)	Bracket	(11)	Parking brake cable LH

Tightening torque: N·m (kgf-m, ft-lb)

T1: 6 (0.6, 4.4)
T2: 18 (1.8, 13.0)
T3: 33 (3.4, 24)

C: CAUTION

- Wear working clothing, including a cap, protective goggles, and protective shoes during operation.
- Remove contamination including dirt and corrosion before removal, installation or disassembly.
- Keep the disassembled parts in order and protect them from dust or dirt.
- Before removal, installation or disassembly, be sure to clarify the failure. Avoid unnecessary removal, installation, disassembly, and replacement.
- Be careful not to burn your hands, because each part on the vehicle is hot after running.
- Use SUBARU genuine grease etc. or the equivalent. Do not mix grease etc. with that of another grade or from other manufacturers.
- Be sure to tighten fasteners including bolts and nuts to the specified torque.
- Place shop jacks or safety stands at the specified points.
- Apply grease onto sliding or revolution surfaces before installation.
- Before installing O-rings or snap rings, apply sufficient amount of grease to avoid damage and deformation.
- Before securing a part on a vice, place cushioning material such as wood blocks, aluminum plate, or shop cloth between the part and the vice.
- Keep grease etc. away from parking brake shoes.

2. Parking Brake Lever

A: REMOVAL

1) Move the select lever to "P" position or gear shift lever to 1st gear, then block the wheels.
2) Disconnect the battery ground terminal from battery.
3) Remove the console box. <Ref. to EI-41, REMOVAL, Console Box.>
4) Disconnect the connector of parking brake switch.
5) Loosen the parking cable adjusting nut and console bracket.
6) Remove the parking brake lever.

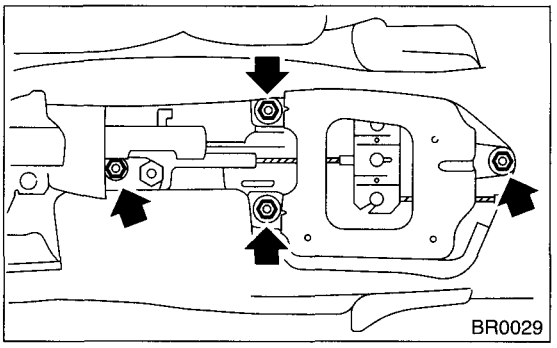

7) Remove the inner cable end from equalizer.

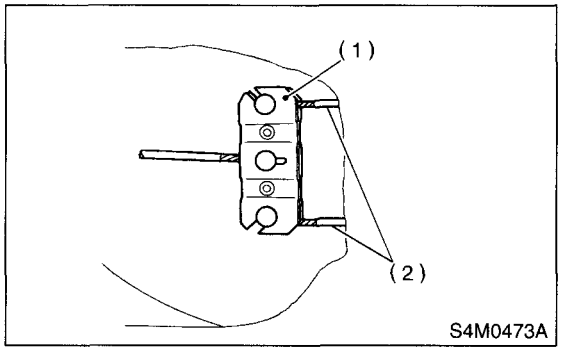

(1) Equalizer
(2) Inner cable end

8) Unbend the parking brake lever pawls and remove cable.

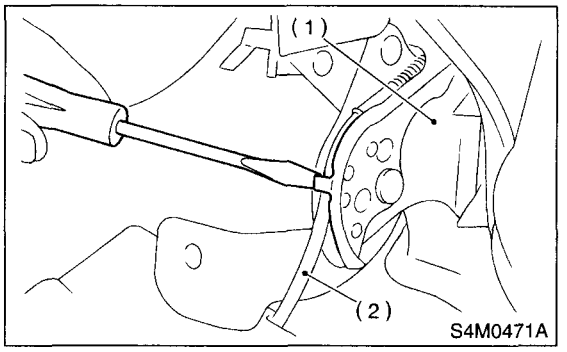

(1) Parking brake lever
(2) Cable

B: INSTALLATION

Install in the reverse order of removal.

Tightening torque:
Parking brake lever;
18 N·m (1.8 kgf-m, 13.0 ft-lb)
Adjusting nut;
6 N·m (0.6 kgf-m, 4.4 ft-lb)

NOTE:
- Be sure to pass the cable through the guide inside tunnel.
- Be sure to adjust the lever stroke. <Ref. to PB-7, ADJUSTMENT, Parking Brake Lever.>

C: INSPECTION

While pulling the parking brake lever upward, count the notches.

Lever stroke:

7 to 8 notches when pulled with a force of 196 N (20 kgf, 44 lb)

If incorrect, adjust the parking brake.
<Ref. to PB-12, ADJUSTMENT, Parking Brake Assembly (Rear Disc Brake).>

D: ADJUSTMENT

1) Remove the console box. <Ref. to EI-41, REMOVAL, Console Box.>
2) Forcibly pull the parking brake lever 3 to 5 times.
3) Adjust the parking brake lever by turning adjuster until the parking brake lever stroke is set at 7 to 8 notches with an operating force of 196 N (20 kgf, 44 lb).
4) Tighten the lock nut.

Lever stroke:

7 to 8 notches when pulled with a force of 196 N (20 kgf, 44 lb)

Tightening torque (Lock nut):

5.9 N·m (0.6 kgf-m, 4.3 ft-lb)

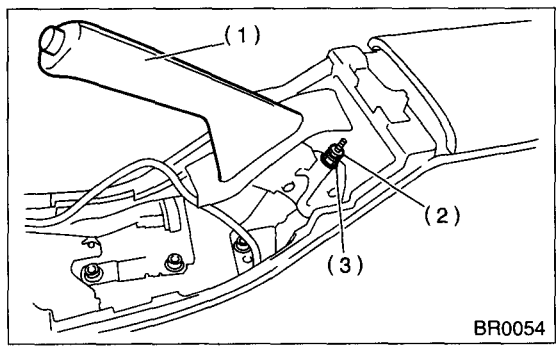

(1) Parking brake lever
(2) Lock nut
(3) Adjusting nut

5) Install the console box. <Ref. to EI-41, INSTALLATION, Console Box.>

3. Parking Brake Cable

A: REMOVAL

1) Lift-up the vehicle.
2) Remove the rear tires and wheels.
3) Remove the rear cushion.
4) Remove the console box. <Ref. to EI-41, REMOVAL, Console Box.>
5) Loosen the parking cable adjusting nut and console bracket.
6) Remove the parking brake lever.

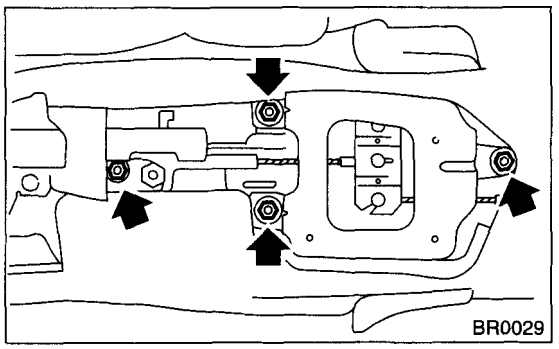

7) Roll up the floor mat and remove clamps.

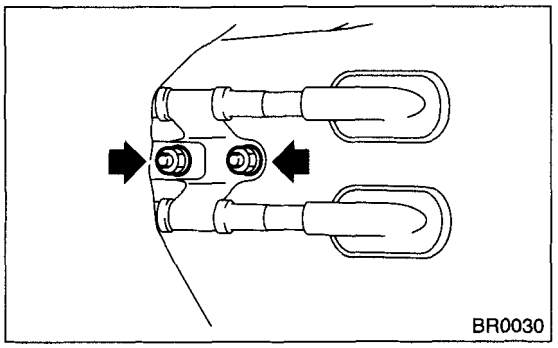

8) Remove the equalizer cover.
9) Remove the inner cable end from equalizer.

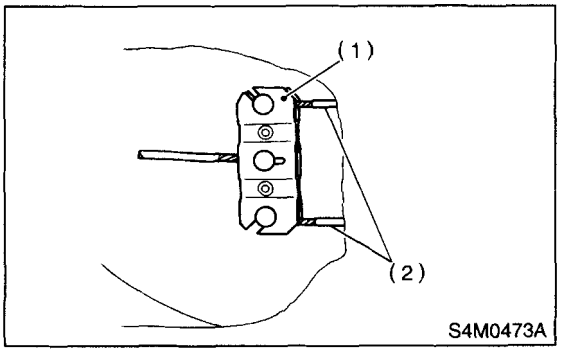

(1) Equalizer
(2) Inner cable end

10) Pull out the parking brake cable from rear brake.
Disc brake
<Ref. to PB-10, REMOVAL, Parking Brake Assembly (Rear Disc Brake).>
Drum brake
<Ref. to BR-33, Rear Drum Brake Assembly.>
11) Pull out the clamp from rear brake.
12) Remove the bolt and bracket from trailing link bracket.
13) Remove the bolt and clamp from rear floor.

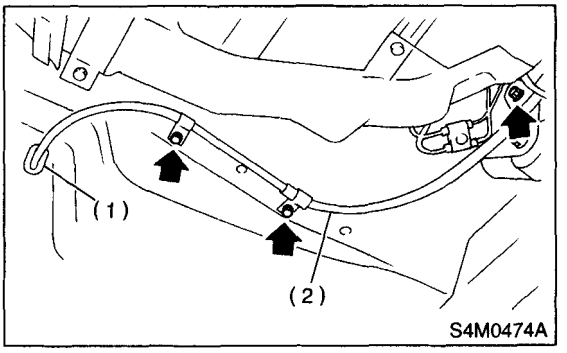

(1) Grommet
(2) Parking brake cable

14) Detach the grommet from rear floor.
15) Remove the cable assembly from cabin by forcibly pulling it backward.
16) Detach the parking brake cable from cable guide at rear trailing link.

B: INSTALLATION

Install the (new) parking brake assembly in the reverse order of removal.

NOTE:

- Be sure to pass the cable through the cable guide inside tunnel.
- Be sure to adjust the lever stroke. <Ref. to PB-7, ADJUSTMENT, Parking Brake Lever.>

C: INSPECTION

Check the removed cable and replace if damaged, rusty or malfunctioning.

1) Check for smooth operation of the cable.
2) Check the inner cable for damage and rust.
3) Check the outer cable for damage, bends, and cracks.
4) Check the boot for damage, cracks, and deterioration.

4. Parking Brake Assembly (Rear Disc Brake)

A: REMOVAL

1) Set the vehicle on a lift.
2) Disconnect the ground terminal from battery.
3) Loosen the wheel nuts.
4) Jack-up the vehicle, and remove wheel.
5) Remove the two mounting bolts and remove the disc brake assembly.

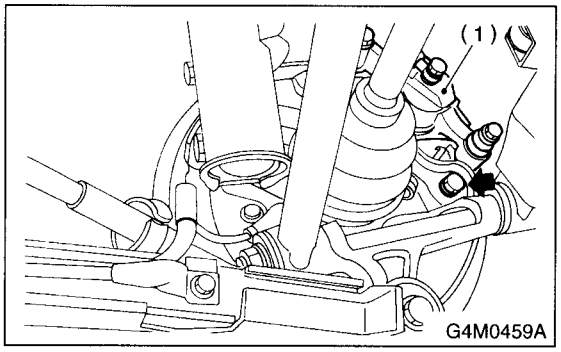

(1) Disc brake ASSY

6) Suspend the disc brake assembly so that the hose is not stretched.
7) Pull down and release the parking brake.
8) Remove the disc rotor.

NOTE:
If the disc rotor is difficult to remove try the following two methods in order.

(1) Turn the adjusting screw using a slot-type screwdriver until the brake shoe gets away enough from the disc rotor.

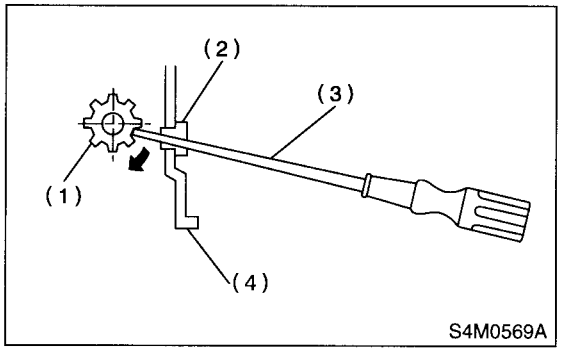

(1) Adjusting screw
(2) Cover (rubber)
(3) Slot-type screwdriver
(4) Back plate

(2) If the disc rotor seizes up within the hub, drive the disc rotor out by installing an 8-mm bolt in holes B on the rotor.

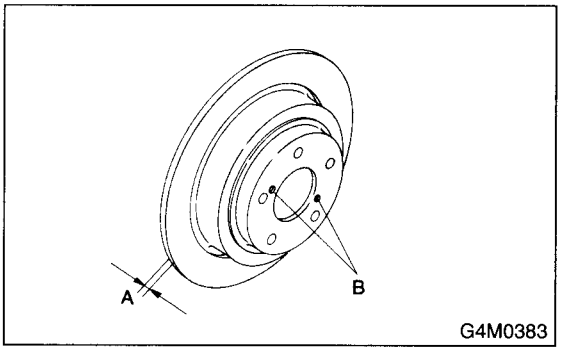

9) Remove the primary and secondary return spring from parking brake assembly.
10) Remove the front shoe hold down spring and pin with pliers.

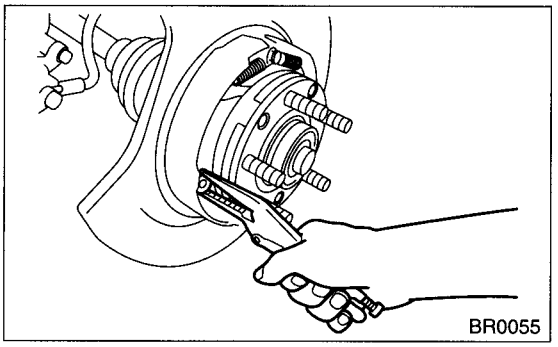

11) Remove the strut and strut spring.
12) Remove the rear shoe hold-down spring and pin with pliers.
13) Remove the adjuster assembly and adjusting spring from parking brake assembly.
14) Remove the parking cable from parking lever.
15) Remove the brake shoe.

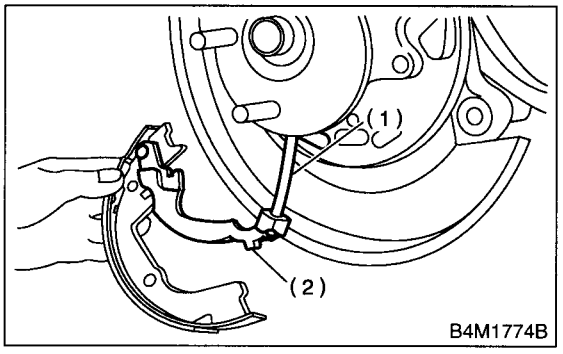

(1) Parking brake cable
(2) Parking brake lever

16) Using a standard screwdriver, raise the retainer. Remove the parking lever and washer from brake shoe.

B: INSTALLATION

CAUTION:
Be sure the lining surface is free from oil contamination.

Brake grease:
Dow Corning Molykote No. 7439 (Part No. 725191460)

1) Apply brake grease to the following places.
- Six contact surfaces of shoe rim and back plate packing
- Contact surface of shoe wave and anchor pin
- Contact surface of lever and strut
- Contact surface of shoe wave and adjuster assembly
- Contact surface of shoe wave and strut
- Contact surface of lever and shoe wave

2) Install in the reverse order of removal.

CAUTION:
- **Use new retainers and clinch them when installing the brake shoes to levers.**
- **Ensure that the parking lever moves smoothly.**
- **Do not confuse the left parking lever with right one.**
- **Do not confuse the left strut with right one.**

NOTE:
Ensure that the adjuster assembly is securely installed with the screw in the left side, facing vehicle front.

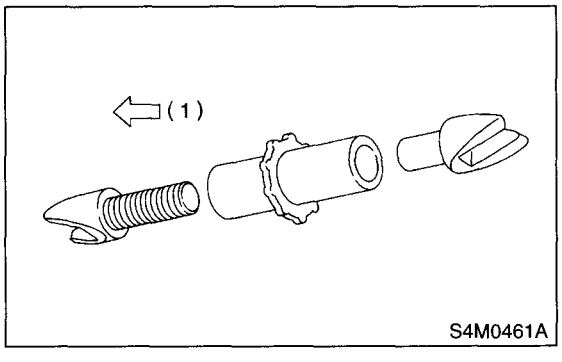

(1) LEFT

NOTE:
Ensure that the shoe return spring is installed as shown in Figure.

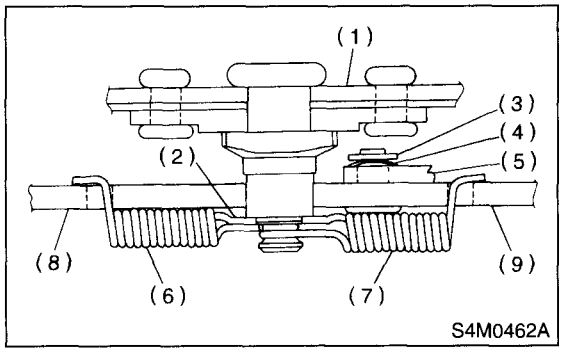

(1) Back plate
(2) Shoe guide plate
(3) Retainer
(4) Spring washer
(5) Lever
(6) Primary shoe return spring (Blue)
(7) Secondary shoe return spring (Yellow)
(8) Parking brake shoe (Primary)
(9) Parking brake shoe (Secondary)

3) Adjust the parking brakes. <Ref. to PB-12, ADJUSTMENT, Parking Brake Assembly (Rear Disc Brake).>

CAUTION:
After replacing the parking brake lining, be sure to drive the vehicle for "break-in" purposes.
(1) Drive the vehicle at about 35 km/h (22 MPH).
(2) With the parking brake release button pushed in, pull the parking brake lever gently.
(3) Drive the vehicle for about 200 meter (0.12 mile) in this condition.
(4) Wait 5 to 10 minutes for the parking brake to cool down. Repeat this procedure once more.
(5) After breaking-in, re-adjust the parking brakes.

C: INSPECTION

1) Measure the brake disc inside diameter. If the disc is scored or worn, replace the brake disc.

Disc inside diameter:
Standard
170 mm (6.69 in)
Service limit
171 mm (6.73 in)

2) Measure the lining thickness. If it exceeds the limit, replace shoe assembly.

Lining thickness:
Standard
3.2 mm (0.126 in)
Service limit
1.5 mm (0.059 in)

CAUTION:
Replace the brake shoes on the right and left brake assembly at the same time.

D: ADJUSTMENT

1. SHOE CLEARANCE

1) Remove the adjusting hole cover from back plate.
2) Turn the adjusting screw using a slot-type screwdriver until the brake shoe is in close contact with disc rotor.

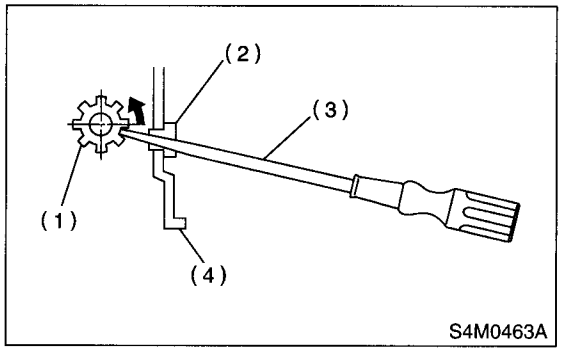

(1) Adjusting screw
(2) Cover (rubber)
(3) Slot-type screwdriver
(4) Back plate

3) Turn back (downward) the adjusting screw 3 or 4 notches.
4) Install the adjusting hole cover to back plate.

2. LEVER STROKE

1) Remove the console box lid.
2) Forcibly pull the parking brake lever 3 to 5 times.
3) Adjust the parking brake lever by turning adjuster until the parking brake lever stroke is set at 6 notches with operating force of 196 N (20 kgf, 44 lb).

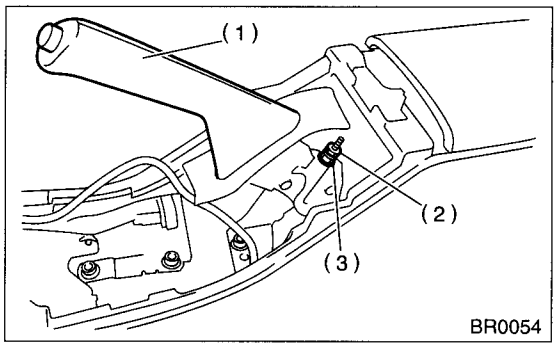

(1) Parking brake lever
(2) Lock nut
(3) Adjusting nut

4) Tighten the lock nut.
5) Install the console box lid.

Lever stroke:
7 to 8 notches when pulled with a force of 196 N (20 kgf, 44 lb)

Tightening torque (Adjuster lock nut):
6 N·m (0.6 kgf-m, 4.4 ft-lb)

5. General Diagnostic Table

A: INSPECTION

Symptom	Possible cause	Remedy
Brake drag	• Parking brake lever is maladjusted.	• Adjustment.
	• Parking brake cable does not move.	• Repair or replace.
	• Parking brake shoe clearance is maladjusted.	• Adjustment.
	• Return spring is faulty.	• Replace.
Noise from brake	• Return spring is faulty.	• Replace.
	• Shoe hold down spring is faulty.	• Replace.

POWER ASSISTED SYSTEM (POWER STEERING)

PS

		Page
1.	General Description	2
2.	Steering Wheel	19
3.	Universal Joint	20
4.	Tilt Steering Column	23
5.	Steering Gearbox	26
6.	Pipe Assembly	47
7.	Oil Pump	55
8.	Reservoir Tank	70
9.	Power Steering Fluid	72
10.	General Diagnostic Table	74

1. General Description

A: SPECIFICATIONS

Model			Non-TURBO		TURBO
			Others	Sedan and OUTBACK	
Whole system	Minimum turning radius m (ft)		5.1 (16.7)	5.4 (17.7)	
	Steering angle (Inside-Outside)		36°55' — 31°35'	34°05' — 29°35'	
	Steering wheel diameter mm (in)		385 (15.16)		
	Overall gear ratio (Turns, lock to lock Gear box)		3.22	3.02	
Gearbox	Type		Rack and pinion, Integral		
	Backlash		0 (Automatically adjustable)		
	Valve (Power steering system)		Rotary valve		
Pump (Power steering system)	Type		Vane pump		
	Oil tank		Installed on body		
	Output cm^3 (cu in)/rev.		7.8 (0.476)		7.2 (0.439)
	Relief pressure kPa (kg/cm^2, psi)		7,164 — 7,840 (73 — 80, 1,040 — 1,165)		7,350 — 8,036 (75 — 82, 1,067 — 1,165)
	Hydraulic fluid control		Dropping in response to increased engine revolutions		
	Hydraulic fluid ℓ (US qt, Imp qt)		1,000 rpm: 7 (7.4, 6.2) 3,000 rpm: 5 (5.3, 4.4)		7.5 (7.9, 6.6)*1 7 (7.4, 6.2)*2
	Range of revolution rpm		700 — 9,000		
	Revolving direction		Clockwise		
Working fluid (Power steering system)	Name		ATF DEXRON III		
	Capacity ℓ (US qt, Imp qt)	Oil tank	0.3 (0.3, 0.3)		
		Total	0.7 (0.7, 0.6)		

*1: With maximum load.
*2: With no load.

Steering wheel	Free play		mm (in)	17 (0.67)
Turning angle	Inner tire & wheel	TURBO, OUTBACK, Non-TURBO sedan		34°05'±1.5°
		other		36°55'±1.5°
	Outer tire & wheel	TURBO, OUTBACK, Non-TURBO sedan		29°35'±1.5°
		other		31°35'±1.5°
Steering shaft	Clearance between steering wheel and column cover		mm (in)	3.0 (0.118)
Steering gear-box (Power steering system)	Sliding resistance		N (kgf, lb)	340 (35, 76) or less
	Rack shaft play in radial direction	Right-turn steering	mm (in)	0.19 (0.0075) or less
		Left-turn steering	mm (in)	Horizontal movement: 0.15 (0.0059) or less Vertical movement: 0.3 (0.012) or less
	Input shaft play	In radial direction	mm (in)	0.18 (0.0071) or less
		In axial direction	mm (in)	0.5 (0.020) or less
	Turning resistance		N (kgf, lb)	Maximum allowable value: 12 (1.2, 2.7)
Oil pump (Power steering system)	Pulley shaft	Radial play	mm (in)	0.4 (0.016) or less
		Axial play: Non-TURBO	mm (in)	0.4 (0.016) or less
		Axial play: TURBO	mm (in)	0.8 (0.031) or less
	Pulley	Ditch deflection	mm (in)	1.0 (0.039) or less
		Resistance to rotation	N (kgf, lb)	9.22 (0.94, 2.07) or less
	Regular pressure		kPa (kg/cm^2, psi)	981 (10, 142) or less
	Relief pressure	Non-TURBO	kPa (kg/cm^2, psi)	7,355 (75, 1,067)
		TURBO	kPa (kg/cm^2, psi)	7,845 (80, 1,138)
Steering wheel effort (Power steering system)	At standstill with engine idling on a concrete road		N (kgf, lb)	31.4 (3.2, 7.1) or less
	At standstill with engine stalled on a concrete road		N (kgf, lb)	294.2 (30, 66.2) or less

Recommended power steering fluid	Manufacturer
ATF DEXRON III	B.P.
	CALTEX
	CASTROL
	MOBIL
	SHELL
	TEXACO

CAUTION:
This table lists various clearances that must be correctly adjusted to ensure normal vehicle driving without interfering noise, or any other faults.

Location	Minimum allowance
(1) Crossmember — Pipe	5 mm (0.20 in)
(2) DOJ — Shaft or joint	14 mm (0.55 in)
(3) DOJ — Valve housing	11 mm (0.43 in)
(4) Pipe — Pipe	2 mm (0.08 in)
(5) Stabilizer — Pipe	5 mm (0.20 in)
(6) Exhaust pipe — Pipe	11 mm (0.43 in)
(7) Exhaust pipe — Gearbox bolt	15 mm (0.59 in)
(8) Side frame — Hose A and B	10 mm (0.39 in)
(9) Cruise control pump — Hose A and B	15 mm (0.59 in)
(10) Pipe portion of hose A — Pipe portion of hose B	1.5 mm (0.059 in)
(11) AT cooling hose — Joint	20 mm (0.79 in)

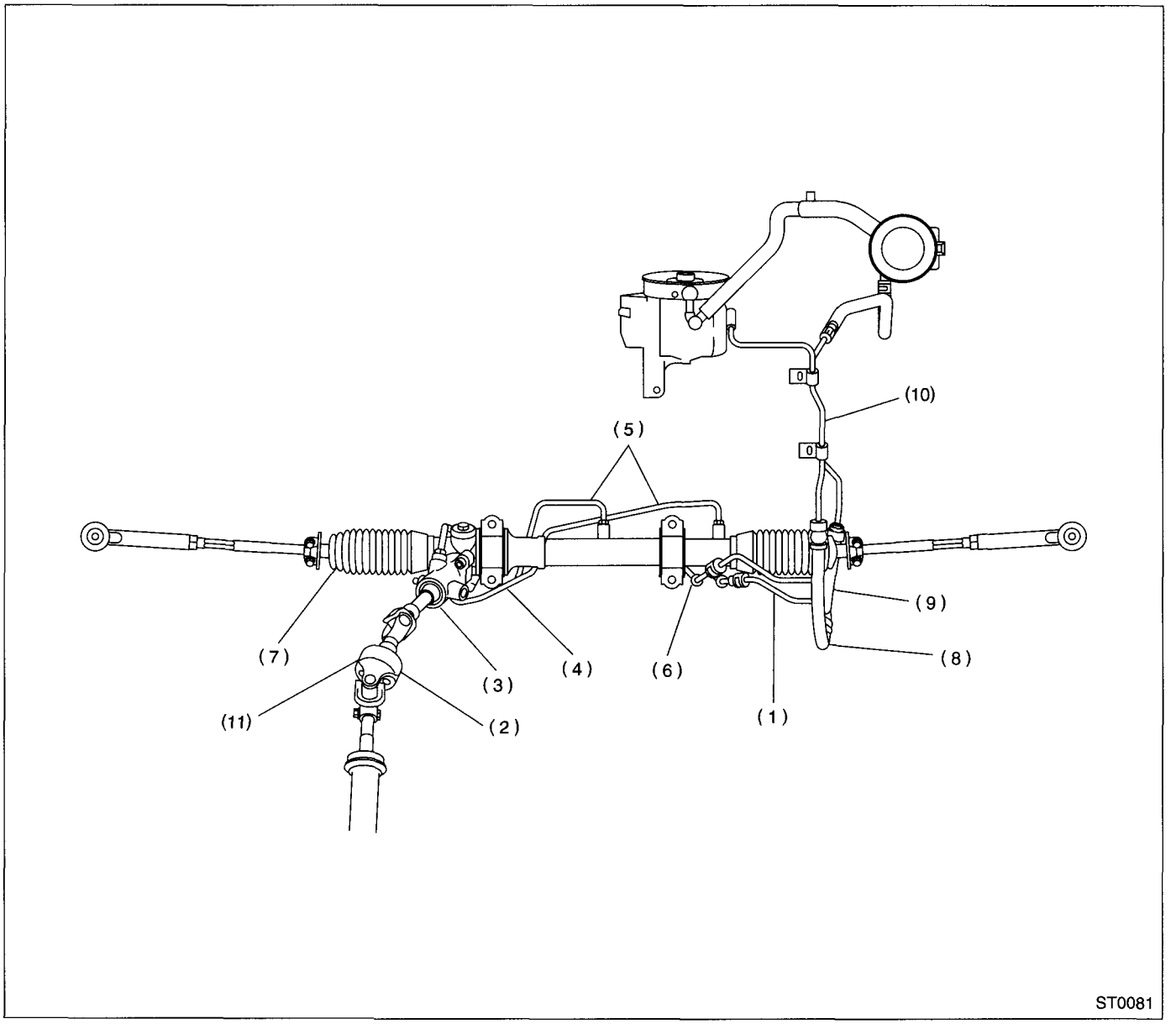

B: COMPONENT

1. STEERING WHEEL AND COLUMN

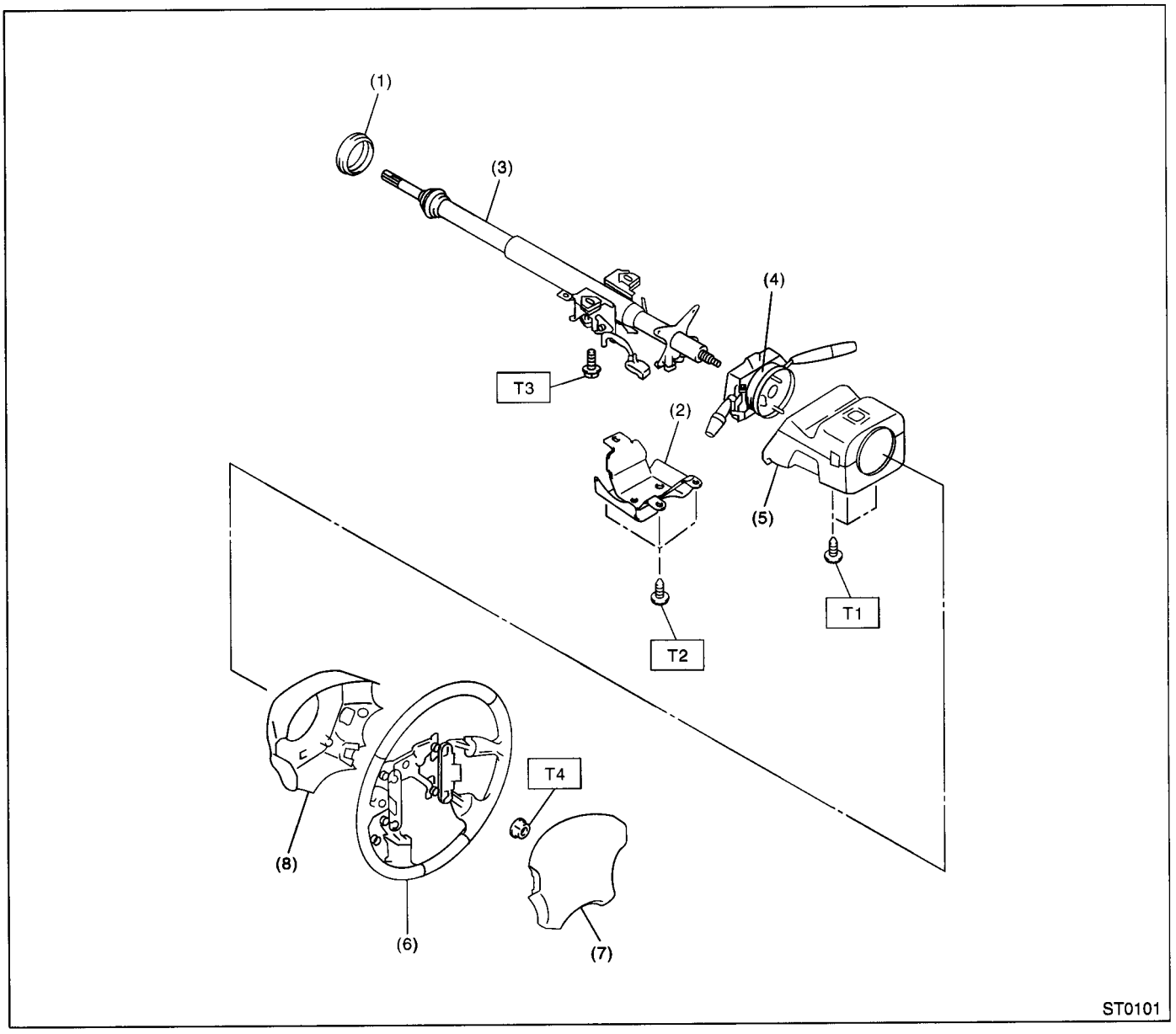

(1) Bushing
(2) Knee protector
(3) Steering shaft
(4) Steering roll connector
(5) Column cover
(6) Steering wheel
(7) Airbag module
(8) Lower steering wheel cover

Tightening torque: N·m (kgf-m, ft-lb)
T1: 1.2 (0.12, 0.9)
T2: 3.4 (0.35, 2.5)
T3: 25 (2.5, 18.1)
T4: 44 (4.5, 32.5)

2. POWER ASSISTED SYSTEM

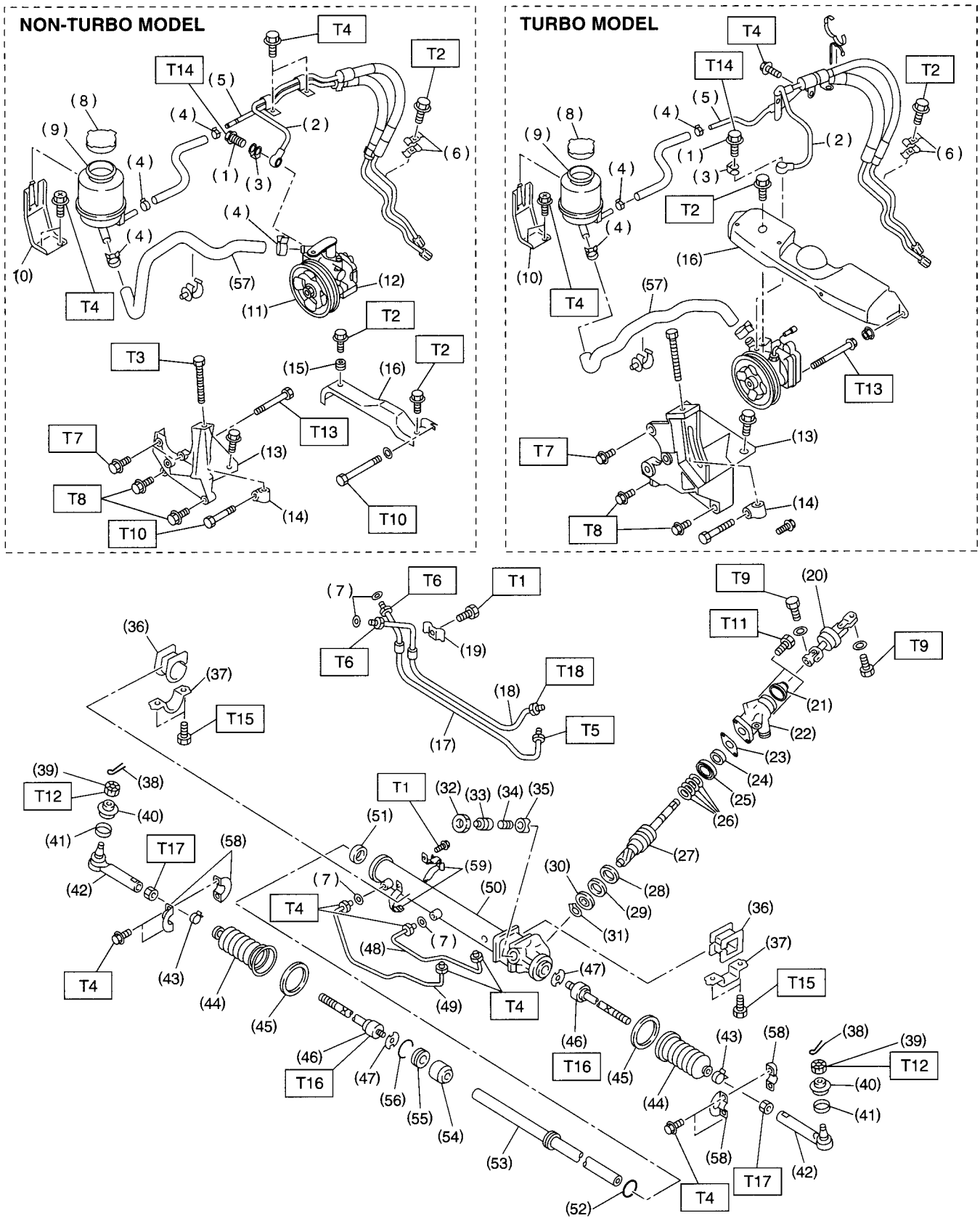

(1) Eye bolt
(2) Pipe C
(3) Gasket
(4) Clip
(5) Pipe D
(6) Clamp E
(7) O-ring
(8) Cap
(9) Reservoir tank
(10) Reservoir tank bracket
(11) Pulley
(12) Oil pump
(13) Bracket
(14) Belt tension nut
(15) Bush
(16) Belt cover
(17) Pipe E
(18) Pipe F
(19) Clamp plate
(20) Universal joint
(21) Dust seal
(22) Valve housing
(23) Gasket
(24) Oil seal
(25) Ball bearing
(26) Seal ring
(27) Pinion and valve ASSY
(28) Oil seal
(29) Back-up washer
(30) Ball bearing
(31) Snap ring
(32) Lock nut
(33) Adjusting screw
(34) Spring
(35) Sleeve
(36) Adapter
(37) Clamp
(38) Cotter pin
(39) Castle nut
(40) Dust cover
(41) Clip
(42) Tie-rod end
(43) Clip
(44) Boot
(45) Band
(46) Tie-rod
(47) Lock washer
(48) Pipe B
(49) Pipe A
(50) Steering body
(51) Oil seal
(52) Piston ring
(53) Rack
(54) Rack bushing
(55) Rack stopper
(56) Circlip
(57) Suction hose
(58) Tie-rod end plate
(59) Clamp plate

Tightening torque: N·m (kgf-m, ft-lb)	
T1:	*6 (0.6, 4.3)*
T2:	*7.4 (0.75, 5.4)*
T3:	*8 (0.8, 5.8)*
T4:	*13 (1.3, 9.4)*
T5:	*15 (1.5, 10.8)*
T6:	*15 (1.5, 10.8)*
T7:	*15.7 (1.6, 11.6)*
T8:	*22 (2.2, 15.9)*
T9:	*24 (2.4, 17.4)*
T10:	*25 (2.5, 18.1)*
T11:	*25 (2.5, 18.1)*
T12:	*27 (2.75, 19.9)*
T13:	*37.3 (3.8, 27.5)*
T14:	*39 (4.0, 28.9)*
T15:	*59 (6.0, 43)*
T16:	*78 (8.0, 58)*
T17:	*83 (8.5, 61.5)*
T18:	*25 (2.5, 18.1)*

3. OIL PUMP

NON-TURBO MODEL

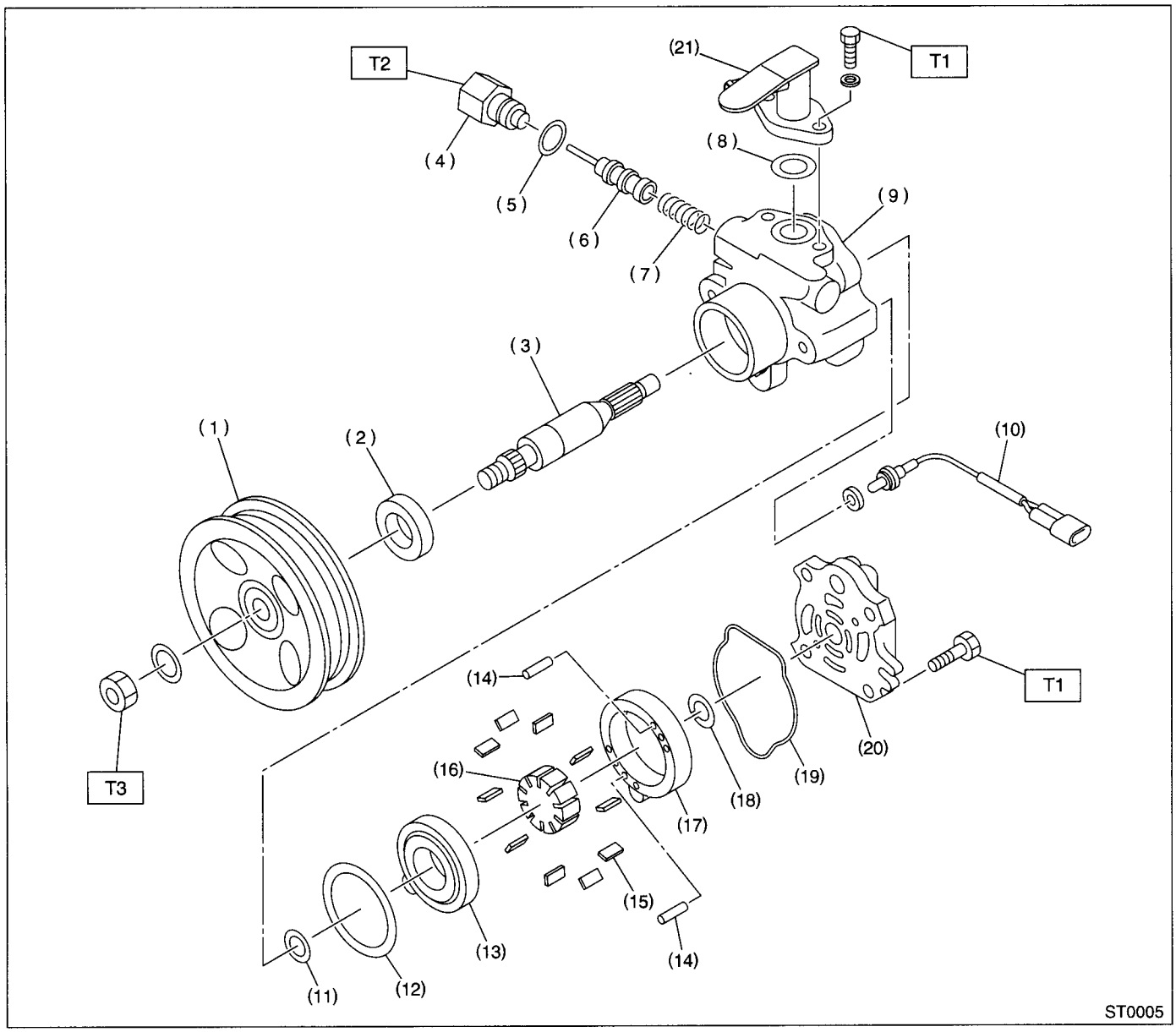

(1)	Pulley	(10)	Pressure switch	(19)	O-ring
(2)	Oil seal	(11)	O-ring	(20)	Rear cover
(3)	Shaft	(12)	O-ring	(21)	Suction connector
(4)	Connector	(13)	Pressure plate		
(5)	O-ring	(14)	Straight pin		
(6)	Spool valve	(15)	Vane		
(7)	Spring	(16)	Rotor		
(8)	O-ring	(17)	Cam ring		
(9)	Front casing	(18)	Retaining ring		

Tightening torque: N·m (kgf-m, ft-lb)

T1: 21 (2.14, 15.5)
T2: 49 (5.0, 36.2)
T3: 52 (5.3, 38)

TURBO MODEL

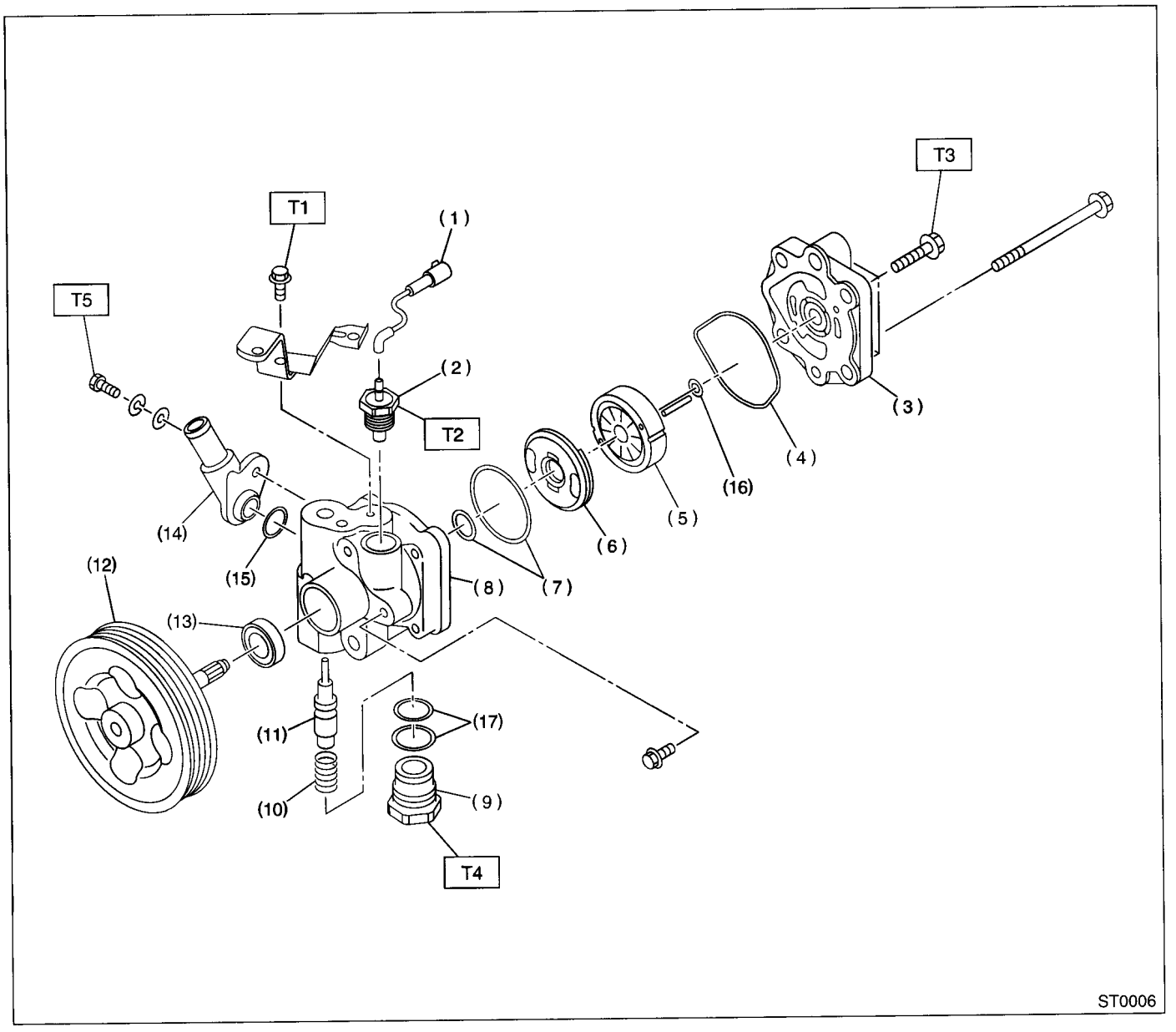

(1) Lead wire
(2) Pump switch
(3) Rear cover
(4) O-ring
(5) Cam
(6) Pressure plate
(7) O-ring
(8) Front casing
(9) Front casing
(10) Flow control spring
(11) Flow control valve
(12) Pulley
(13) Oil seal
(14) Suction connector
(15) O-ring
(16) Retaining ring
(17) O-ring

Tightening torque: N·m (kgf-m, ft-lb)

T1: 9.8 (1.0, 7.2)
T2: 27 (2.75, 19.9)
T3: 27.4 (2.8, 20.3)
T4: 59 (6.0, 43)
T5: 11.8 (1.2, 8.7)

C: CAUTION

- Wear working clothing, including a cap, protective goggles, and protective shoes during operation.
- Remove contamination including dirt and corrosion before removal, installation or disassembly.
- Keep the disassembled parts in order and protect them from dust or dirt.
- Before removal, installation or disassembly, be sure to clarify the failure. Avoid unnecessary removal, installation, disassembly and replacement.
- Be careful not to burn your hands, because each part on the vehicle is hot after running.
- Use SUBARU genuine steering fluid, grease etc. or the equivalent. Do not mix steering fluid, grease etc. with that of another grade or from other manufacturers.
- Be sure to tighten fasteners including bolts and nuts to the specified torque.
- Place shop jacks or safety stands at the specified points.
- Apply steering fluid onto sliding or revolution surfaces before installation.
- Before installing O-rings or snap rings, apply sufficient amount of steering fluid to avoid damage and deformation.
- Before securing a part on a vice, place cushioning material such as wood blocks, aluminum plate, or shop cloth between the part and the vice.

D: PREPARATION TOOL

1. SPECIAL TOOLS

ILLUSTRATION	TOOL NUMBER	DESCRIPTION	REMARKS
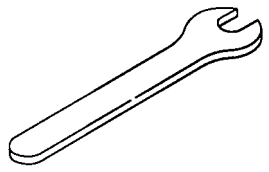 B4M2411	925700000	WRENCH	• Used for removing and installing tie-rod. • Apply this tool to rack.
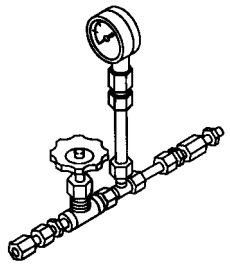 B4M2412	925711000	PRESSURE GAUGE	Used for measuring oil pump pressure.
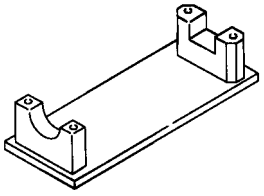 B4M2413	926200000	STAND	Used when inspecting characteristic of gearbox assembly and disassembling it.
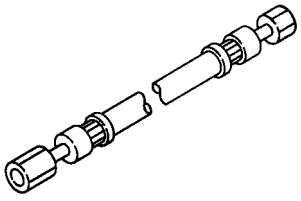 B4M2414	34099AC010	ADAPTER HOSE A	Used with PRESSURE GAUGE (925711000).

ILLUSTRATION	TOOL NUMBER	DESCRIPTION	REMARKS
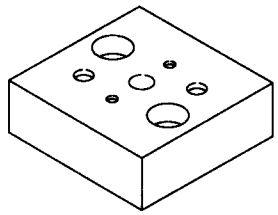 G1H0273	34099FA100	STAND BASE	• Used for assembling power steering gearbox. • For LHD model.
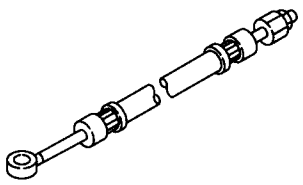 B4M2415	34099AC020	ADAPTER HOSE B	Used with PRESSURE GAUGE (925711000).
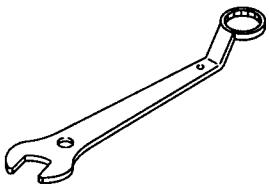 B4M2416	926230000	SPANNER	• For the lock nut when adjusting backlash of gearbox.
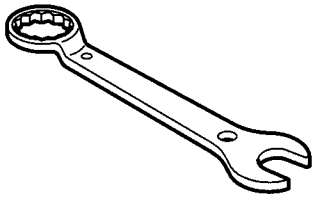 ST0047	34099PA100	SPANNER	• Measurement of rotating resistance of gearbox assembly.

ILLUSTRATION	TOOL NUMBER	DESCRIPTION	REMARKS
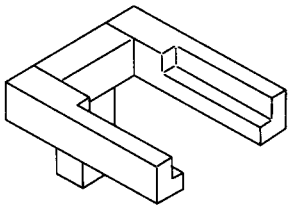 B4M2417	34199AE020	MOUNT	• Used for disassembling oil pump. • For TURBO model.
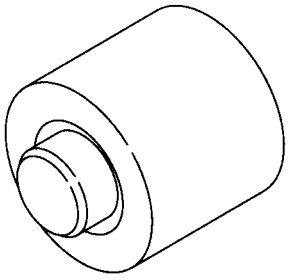 B4M2418	34199AE030	INSTALLER	Used for installing oil seal into oil pump.
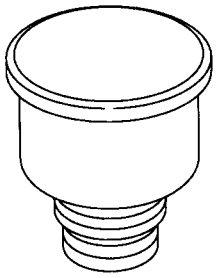 B4M2419	34199AE040	OIL CHARGE GUIDE	Used for charging power steering oil.
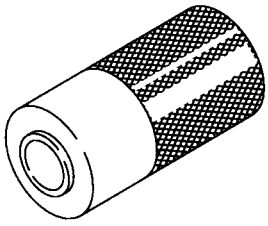 B4M2420	927640000	INSTALLER B	Used for installing ball bearing into housing.

ILLUSTRATION	TOOL NUMBER	DESCRIPTION	REMARKS
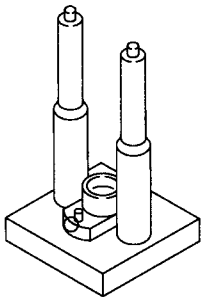 B4M2421	926370000	INSTALLER A	• Used for installing valve assembly into valve housing assembly. • Used with STAND BASE (927630000).
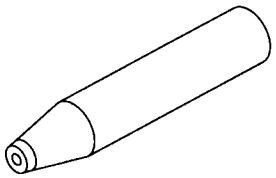 B4M2422	926390001	COVER & REMOVER ASSY	• Used for assembling rack assembly.
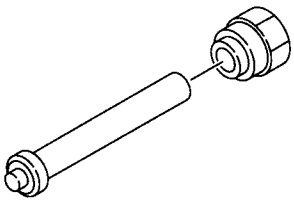 B4M2423	926420000	PLUG	When oil leaks from pinion side of gearbox assembly, remove pipe B from valve housing, attach this tool and check oil leaking points.
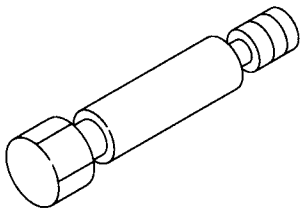 B4M2424	926400000	GUIDE	• Right side of rack when installing rack bush. • Used with GUIDE (927660000).

ILLUSTRATION	TOOL NUMBER	DESCRIPTION	REMARKS
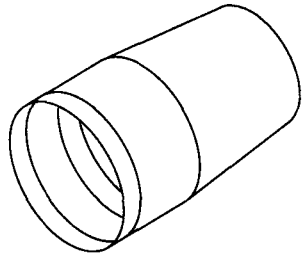 B4M2425	927660000	GUIDE	• Right side of rack when installing rack bush. • Used with GUIDE (926400000).
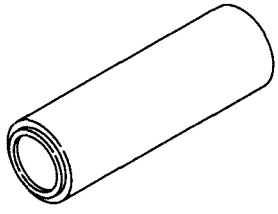 B4M2426	927620000	INSTALLER B	• Used for installing oil seal of valve housing. • Used with INSTALLER A (926360000).
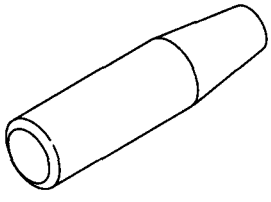 B4M2428	926360000	INSTALLER A	• Used as a guide to install oil seal. • Used with INSTALLER B (927620000).
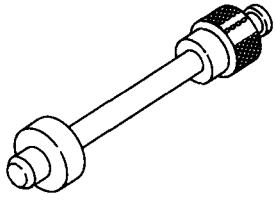 B4M2429	34099FA110	INSTALLER	Used for installing oil seal.

ILLUSTRATION	TOOL NUMBER	DESCRIPTION	REMARKS
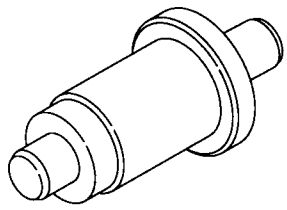 S1H0030	34099FA120	INSTALLER AND REMOVER SEAL	Used for installing and removing valve housing oil seal.
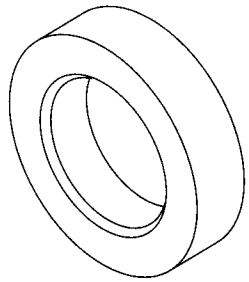 ST0007	34099FA130	INSTALLER SEAL	• Used for installing valve housing oil seal. • Used with INSTALLER AND REMOVER SEAL (34099FA120).
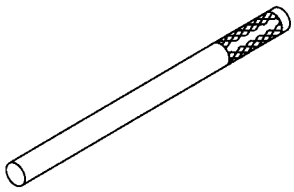 B4M2432	34199AE050	REMOVER OIL SEAL	Used for removing back-up ring and oil seal.
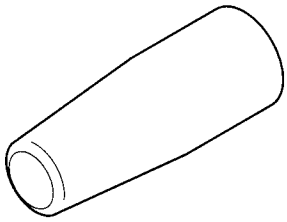 H4M1408	34099AC030	INSTALLER A	• Used for installing retaining ring. • Used with INSTALLER B (34099AC040). • For non-turbo model.

ILLUSTRATION	TOOL NUMBER	DESCRIPTION	REMARKS
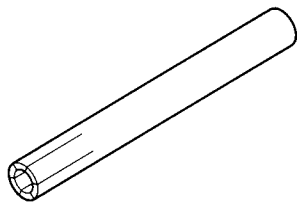 H4M1409	34099AC040	INSTALLER B	• Used for installing retaining ring. • Used with INSTALLER A (34099AC030). • For non-turbo model.

2. GENERAL PURPOSE TOOLS

TOOL NAME	REMARKS
Spring scale	Used for measuring tightening torque.
Snap ring pliers	Used for removing and installing snap ring.
Dial gauge	Used for measuring steering gearbox.

2. Steering Wheel

A: REMOVAL

1) Disconnect the ground terminal from battery.
2) Set the tires to straight-ahead position.
3) Remove the airbag module. <Ref. to AB-12, REMOVAL, Driver's Airbag Module.>

WARNING:
Always refer to "Air Bag System" before performing airbag module service. <Ref. to AB-12, CAUTION, **Driver's Airbag Module.>**

4) Remove the steering wheel nut, and then draw out the steering wheel from the shaft using steering puller.

NOTE:
Make the matching marks on the steering wheel and steering column in advance.

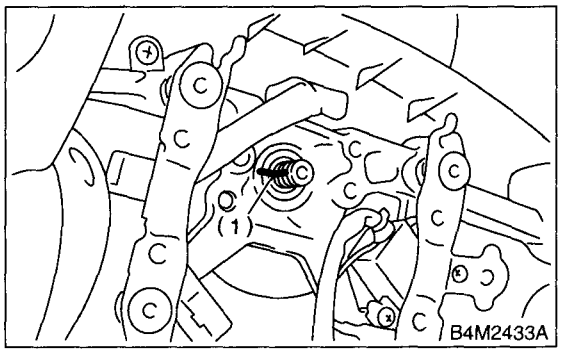

(1) Matching mark

B: INSTALLATION

1) Align the center of roll connector. <Ref. to AB-17, ADJUSTMENT, Roll Connector.>
2) Install in the reverse order of removal.

NOTE:
Align the matching marks on the steering wheel and steering column.

Tightening torque:
44 N·m (4.5 kgf-m, 32.5 ft-lb)

Column cover-to-steering wheel clearance:
2 — 4 mm (0.08 — 0.16 in)

WARNING:
Always refer to "Air Bag System" before performing airbag module service. <Ref. to AB-12, CAUTION, Driver's Airbag Module.>

CAUTION:
Insert the roll connector guide pin into the guide hole on lower end of surface of steering wheel to prevent damage. Draw out the airbag system connector, horn connector and cruise control connectors from the guide hole of steering wheel lower end.

C: INSPECTION

1) Check the steering wheel for deformation. If the deformation is excessive, replace the steering wheel.
2) Check the splines on the steering wheel for damage. If the damage is excessive, replace the steering wheel.

3. Universal Joint

A: REMOVAL

1) Remove the steering wheel. <Ref. to PS-19, REMOVAL, Steering Wheel.>
2) Remove the universal joint bolts and then remove the universal joint.

CAUTION:
Scribe alignment marks on universal joint so that it can be reassembled at the original serration.

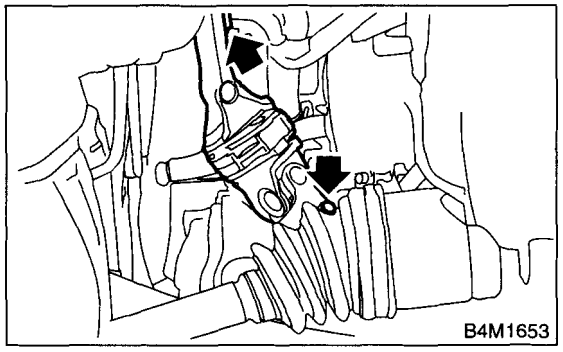

B: INSTALLATION

1) Install the universal joint.
(1) Align the cutout at serrated section of the column shaft and yoke, then insert the universal joint into the column shaft.

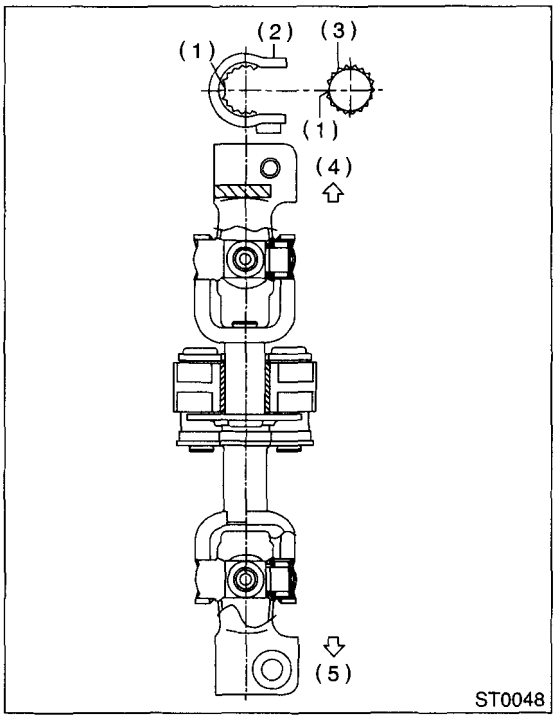

(1) Cutout
(2) Yoke
(3) Column shaft
(4) Column shaft side
(5) Gearbox side

(2) Align the bolt hole on the gearbox side of universal joint with the cutout at the serrated section of gearbox assembly. Lower the universal joint completely.
(3) Temporarily tighten the bolt on the gearbox side. Raise the universal joint to make sure the bolt is properly passing through the cutout at the serrated section.
(4) Tighten the bolt.

Tightening torque:
24 N·m (2.4 kgf-m, 17.4 ft-lb)

CAUTION:
- **Make sure that universal joint bolt is tightened through notch in shaft serration.**
- **Excessively large tightening torque of universal joint bolts may lead to heavy steering wheel operation.**

Standard clearance between gearbox to DOJ:
Over 14 mm (0.55 in)

2) Align the center of roll connector. <Ref. to AB-17, ADJUSTMENT, Roll Connector.>

CAUTION:
Ensure that front wheel are set straight forward direction.

3) Install the steering wheel and airbag module. <Ref. to PS-19, INSTALLATION, Steering Wheel.>

WARNING:
Always refer to "Air Bag System" before performing airbag module service. <Ref. to AB-12, CAUTION, Driver's Airbag Module.> and <Ref. to AB-12, INSTALLATION, Driver's Airbag Module.>

C: INSPECTION

Clean the disassembled parts with a cloth, and check for wear, damage, or any other faults. If necessary, repair or replace faulty parts.

Inspection	Corrective action
• Free play • Swinging torque Yawing torque Looseness 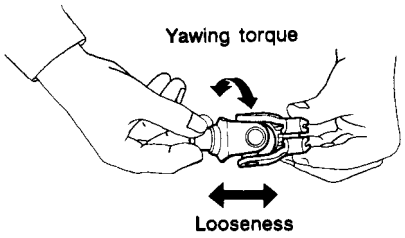 G4M0089 **Standard value of universal joint free play: 0 mm (0 in)** **Max. value of universal joint swinging torque: 0.3 N·m (0.03 kgf-m, 0.2 ft-lb)**	Replace if faulty.

Measurement of folding torque of universal joint is as shown in the figures.

Service limit:
Maximum load; 7.3 N (0.74 kgf, 1.64 lb) or less

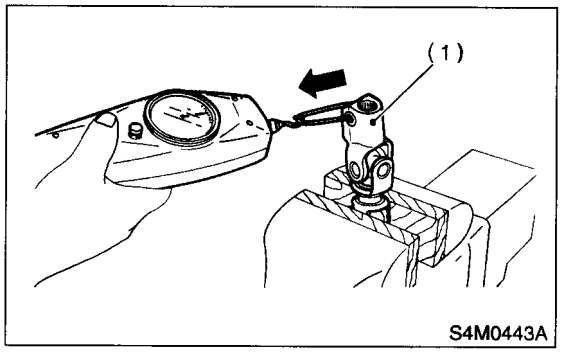

(1) Yoke (gearbox side)

Service limit:
Maximum load; 7.3 N (0.74 kgf, 1.64 lb) or less

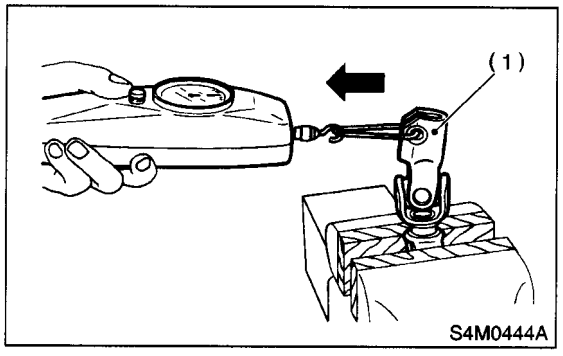

(1) Yoke (gearbox side)

Service limit:
Maximum load; 7.3 N (0.74 kgf, 1.64 lb) or less

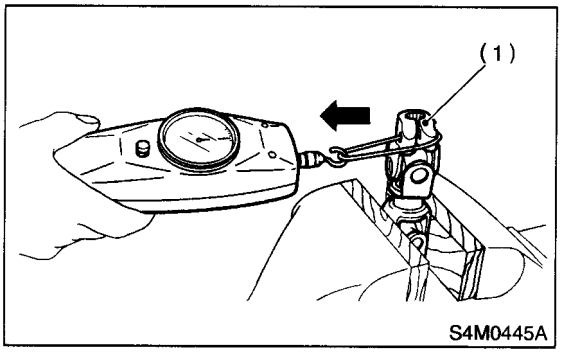

(1) Yoke (Steering column side)

Service limit:
Maximum load; 7.3 N (0.74 kgf, 1.64 lb) or less

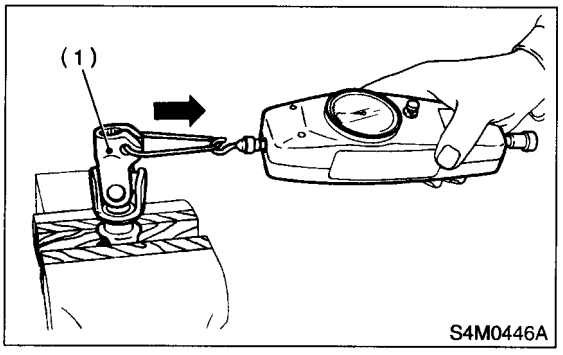

(1) Yoke (Steering column side)

4. Tilt Steering Column

A: REMOVAL

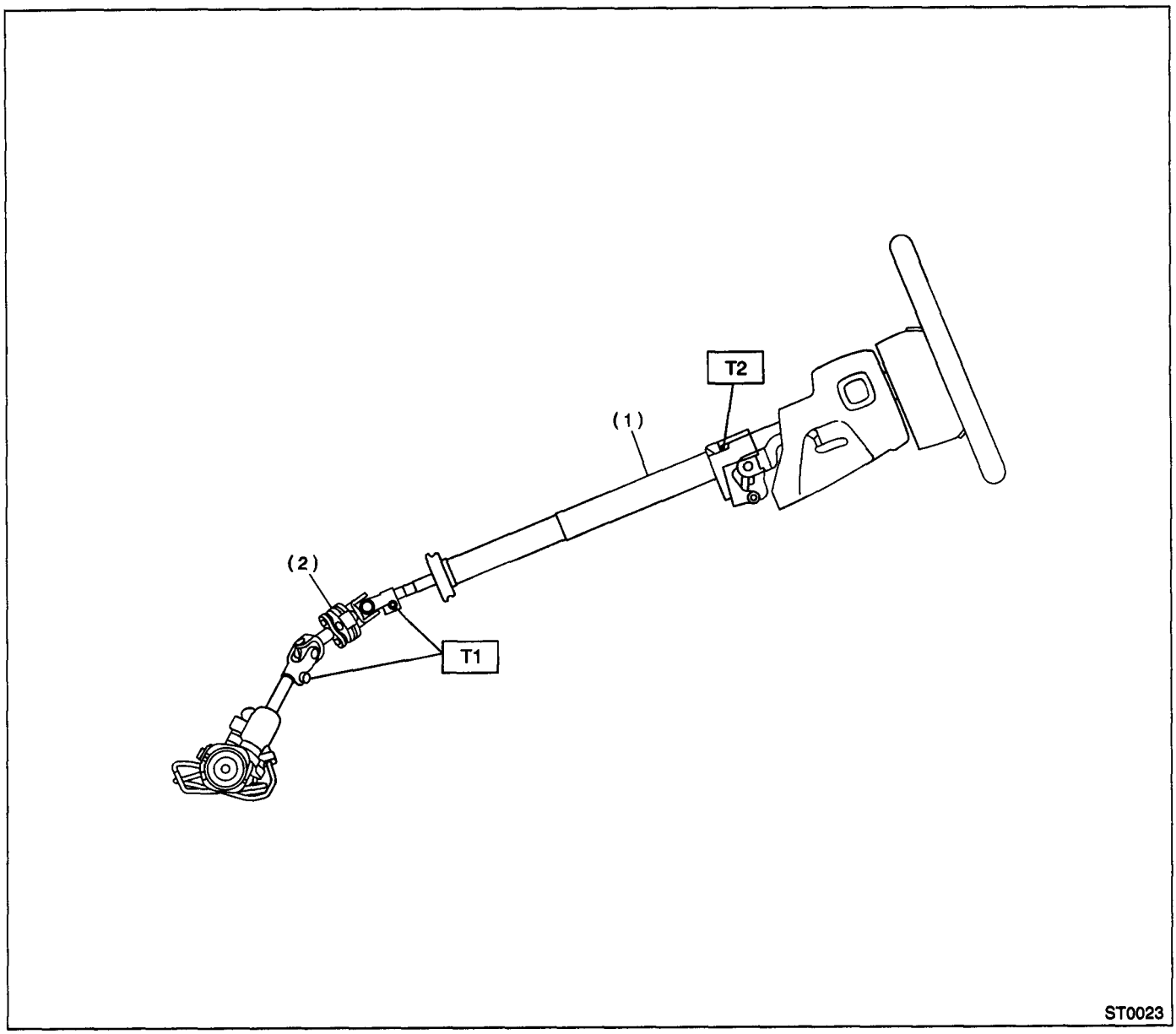

(1) Tilt steering column
(2) Universal joint

Tightening torque: N·m (kgf-m, ft-lb)
T1: 24 (2.4, 17.4)
T2: 25 (2.5, 18.1)

1) Set the vehicle on the lift.
2) Disconnect the battery ground terminal.
3) Remove the airbag module. <Ref. to AB-12, REMOVAL, Driver's Airbag Module.>

WARNING:
Always refer to "Air Bag System" before performing airbag module service. <Ref. to AB-12, CAUTION, Driver's Airbag Module.>

4) Remove the steering wheel. <Ref. to PS-19, REMOVAL, Steering Wheel.>
5) Remove the universal joint. <Ref. to PS-20, REMOVAL, Universal Joint.>
6) Remove the trim panel under instrument panel.

7) Remove the screw securing lower steering column cover.

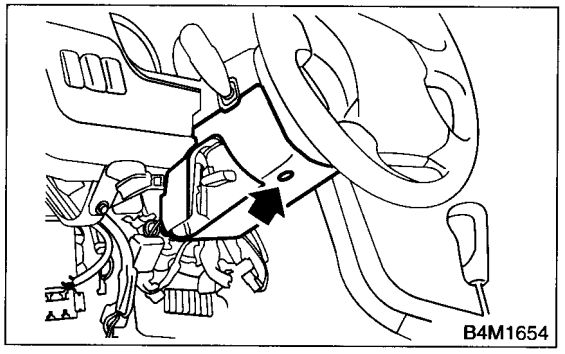

8) Remove the knee bolster.

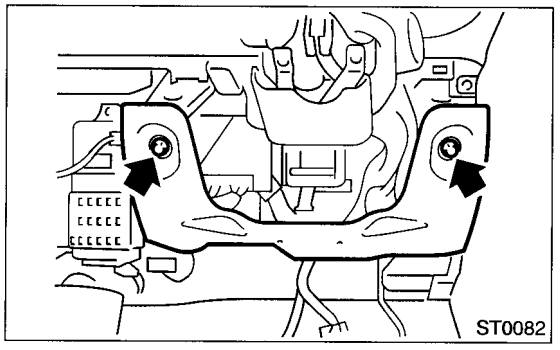

9) Remove all connectors from the steering column.
10) Remove the two bolts under instrument panel securing steering column.

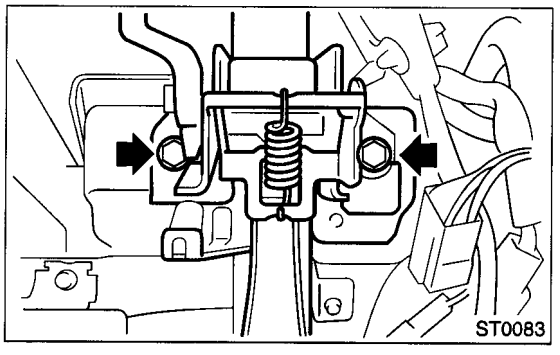

11) Pull out the steering shaft assembly from the hole on toe board.

CAUTION:
Be sure to remove the universal joint before removing steering shaft assembly installing bolts when removing steering shaft assembly or when lowering it for servicing of other parts.

B: INSTALLATION

1) Set the grommet to the toe board.

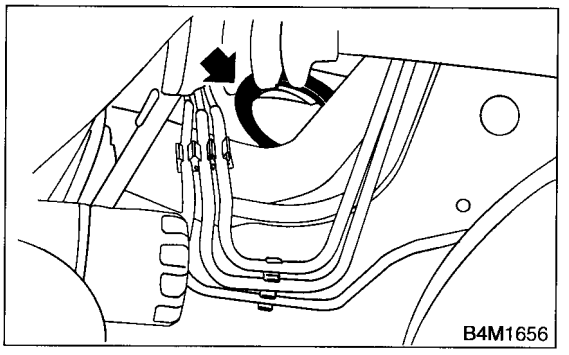

2) Insert the end of steering shaft into the toe board grommet.
3) Tighten the steering shaft mounting bolts under instrument panel.

Tightening torque:
25 N·m (2.5 kgf-m, 18.1 ft-lb)

4) Install the knee bolster.

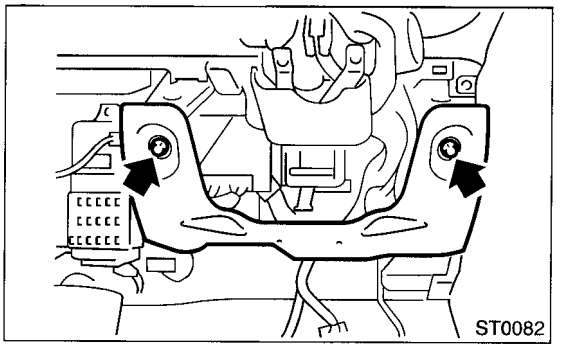

5) Connect all connectors under instrument panel.
6) Connect the airbag system connector at the harness spool.

NOTE:
Make sure to apply double lock.

7) Install the lower column cover with tilt lever held in the lowered position.
8) Install the universal joint. <Ref. to PS-20, INSTALLATION, Universal Joint.>
9) Align the center of roll connector. <Ref. to AB-17, ADJUSTMENT, Roll Connector.>

CAUTION:
Ensure that front wheels are set in straight forward direction.

10) Install the steering wheel. <Ref. to PS-19, INSTALLATION, Steering Wheel.>
Set the steering wheel to neutral and install it onto steering shaft.

CAUTION:
Insert roll connector guide pin into guide hole on lower end of surface of steering wheel to prevent damage. Draw out airbag system connector, horn connector and cruise control connectors from guide hole of steering wheel lower end.

11) Install the airbag module to the steering wheel.

WARNING:
Always refer to "Air Bag System" before performing the service operation. <Ref. to AB-12, CAUTION, Driver's Airbag Module.>

C: DISASSEMBLY

Remove the two screws securing upper steering column covers, and the two screws securing combination switch, then remove the related parts.

D: ASSEMBLY

1) Insert the combination switch to the upper column shaft, and install the upper column cover. Then route the ignition key harness and combination switch harness between column cover mounting bosses.

Tightening torque:
1.2 N·m (0.12 kgf-m, 0.9 ft-lb)

CAUTION:
Don't overtorque the screw.

E: INSPECTION

1. BASIC INSPECTION

Clean the disassembled parts with a cloth, and check for wear, damage, or any other faults. If necessary, repair or replace faulty parts.

Inspection	Corrective action
• Overall length of steering column Measure overall length of steering column. Standard overall length of steering column: 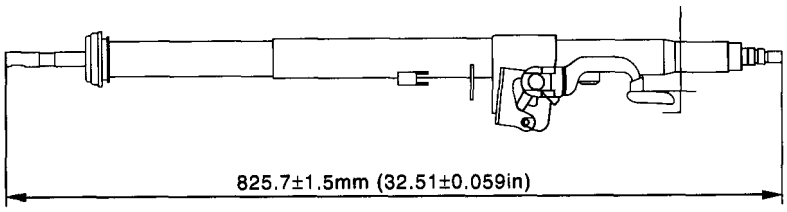 ST0024	Replace steering column assembly.

2. AIRBAG MODEL INSPECTION

WARNING:
For airbag model inspection procedures, refer to "Air Bag System". <Ref. to AB-12, CAUTION, Driver's Airbag Module.> and <Ref. to AB-12, INSPECTION, Driver's Airbag Module.>

5. Steering Gearbox

A: REMOVAL

1) Set the vehicle on the lift.
2) Disconnect the battery ground terminal.
3) Loosen the front wheel nuts.
4) Lift the vehicle and remove the front wheels.
5) Remove the under cover.
6) Remove the sub frame. <Ref. to FS-16, REMOVAL, Sub Frame.>
7) Remove the front exhaust pipe assembly. (Non-TURBO model)
<Ref. to EX(SOHC)-5, REMOVAL, Front Exhaust Pipe.>

WARNING:
Be careful, exhaust pipe is hot.

8) Using a puller, remove the tie-rod end from the knuckle arm after pulling off cotter pin and removing castle nut.

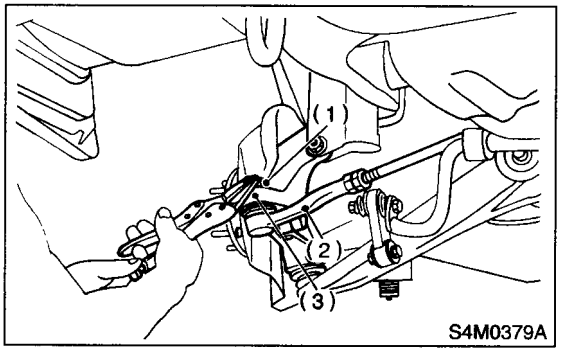

(1) Castle nut
(2) Tie-rod end
(3) Knuckle arm

9) Remove the jack-up plate and front stabilizer.

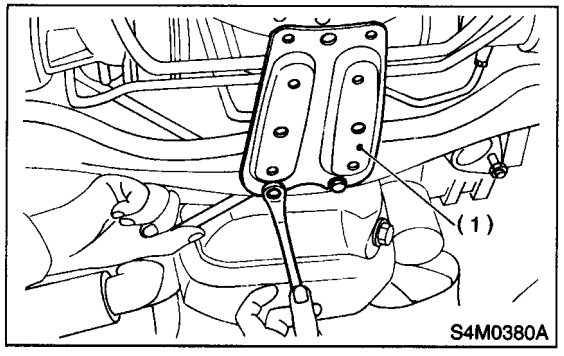

(1) Jack-up plate

10) Remove the one pipe joint at the center of gearbox, and connect the vinyl hose to the pipe and joint. Discharge the fluid by turning steering wheel fully clockwise and counterclockwise. Discharge the fluid similarly from the other pipe.

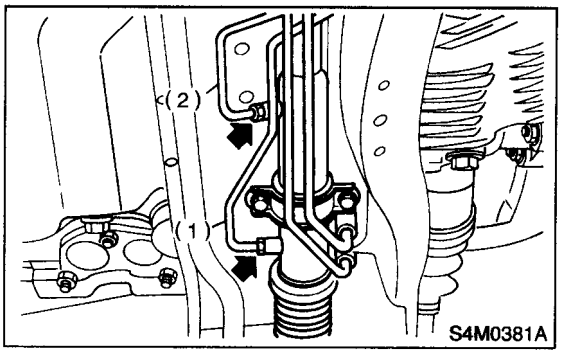

(1) Pipe A
(2) Pipe B

11) Remove the universal joint. <Ref. to PS-20, REMOVAL, Universal Joint.>
12) Disconnect the pipes C and D from the pipe of gearbox.

CAUTION:
Be careful not to damage these pipes.

NOTE:
Disconnect the upper pipe D first, and lower pipe C second.

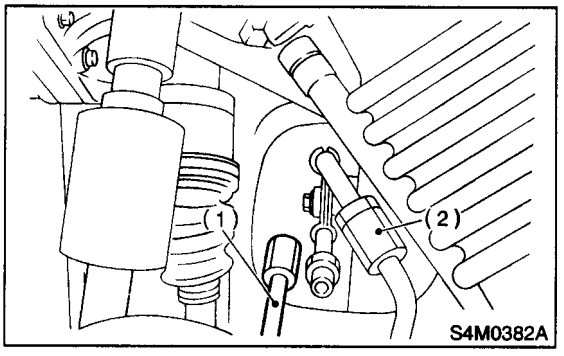

(1) Pipe C
(2) Pipe D

13) Remove the clamp bolts securing gearbox to the crossmember, and remove the gearbox.

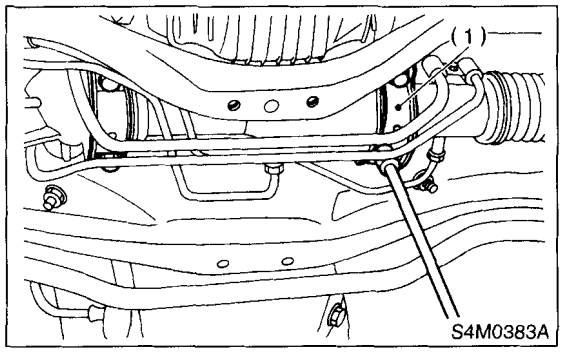

(1) Clamp

B: INSTALLATION

1) Insert the gearbox into the crossmember, being careful not to damage gearbox boot.
2) Tighten the gearbox to the crossmember bracket via clamp with bolt to the specified torque.

Tightening torque:
59 N·m (6.0 kgf-m, 43 ft-lb)

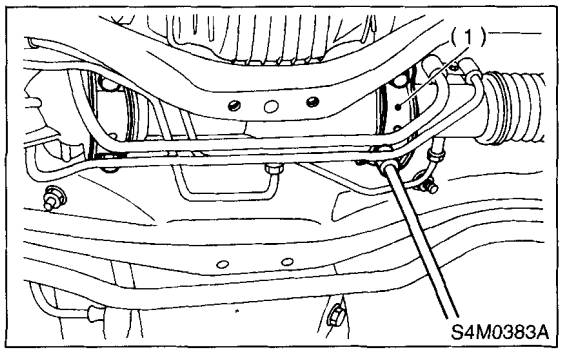

(1) Clamp

3) Install the four pipes on the gearbox.
   (1) Connect the pipes A and B to the four pipe joints of gearbox. Connect the upper pipe B first, and lower pipe A.

Tightening torque:
13 N·m (1.3 kgf-m, 9.4 ft-lb)

   (2) Connect the pipes C and D to the gearbox. Connect the upper pipe D first, and lower pipe C second.

Tightening torque:
15 N·m (1.5 kgf-m, 10.8 ft-lb)

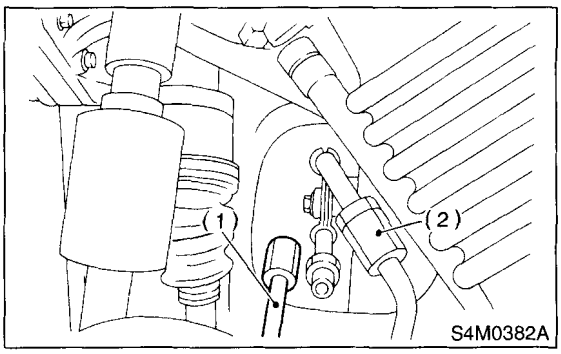

(1) Pipe C
(2) Pipe D

4) Install the universal joint. <Ref. to PS-20, INSTALLATION, Universal Joint.>
5) Connect the tie-rod end and knuckle arm, and tighten with castle nut. Fit the cotter pin into the nut and bend the pin to lock.

Castle nut tightening torque:
Tighten to 27.0 N·m (2.75 kgf-m, 19.9 ft-lb), and tighten further within 60° until cotter pin hole is aligned with a slot in the nut.

CAUTION:
When connecting, do not hit cap at the bottom of tie-rod end with hammer.

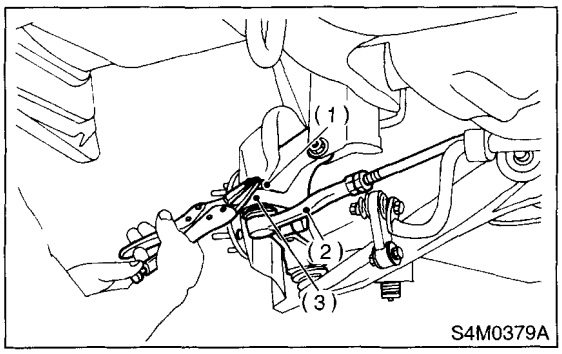

(1) Castle nut
(2) Tie-rod end
(3) Knuckle arm

6) Install the front stabilizer to vehicle.
7) Install the front exhaust pipe assembly.
8) Install the sub frame. <Ref. to FS-16, INSTALLATION, Sub Frame.>

9) Align the center of roll connector. <Ref. to AB-17, ADJUSTMENT, Roll Connector.>

CAUTION:
Ensure that front wheels are set in straight forward direction.

10) Install the steering wheel. <Ref. to PS-19, INSTALLATION, Steering Wheel.>
11) Install the tires.
12) Tighten the wheel nuts to the specified torque.

Tightening torque:
90 N·m (9.1 kgf-m, 66 ft-lb)

13) Connect the ground terminal to battery.
14) Pour the fluid into the oil tank, and bleed air. <Ref. to PS-72, Power Steering Fluid.>
15) Check for fluid leaks.
16) Install the jack-up plate.
17) Lower the vehicle.
18) Check the fluid level in oil tank.
19) After adjusting toe-in and steering angle, tighten the lock nut on tie-rod end.

Tightening torque:
83 N·m (8.5 kgf-m, 61.5 ft-lb)

CAUTION:
When adjusting toe-in, hold the boot as shown to prevent it from being rotated or twisted. If twisted, straighten it.

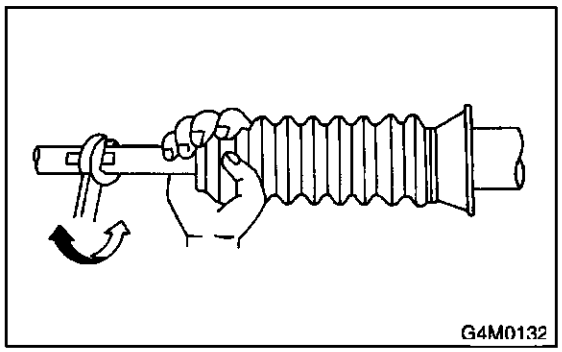

C: DISASSEMBLY

NOTE:
Parts requiring replacement are described in the smallest unit of spare parts including damaged parts and spare parts damaged. In actual disassembly work, accidental damage as well as inevitable damage to some related parts must be taken into account, and spare parts for them must also be prepared. However, it is essential to pinpoint the cause of trouble, and limit the number of replacement parts as much as possible.

1. RACK HOUSING ASSEMBLY

1) Disconnect the four pipes from the gearbox.

NOTE:
Remove the pipes E and F as a single unit being fixed at the clamp plate.

2) Secure the gearbox removed from the vehicle in vice using ST.
ST 926200000 STAND

CAUTION:
Secure the gearbox in a vice using the ST as shown. Do not attempt to secure it without this ST.

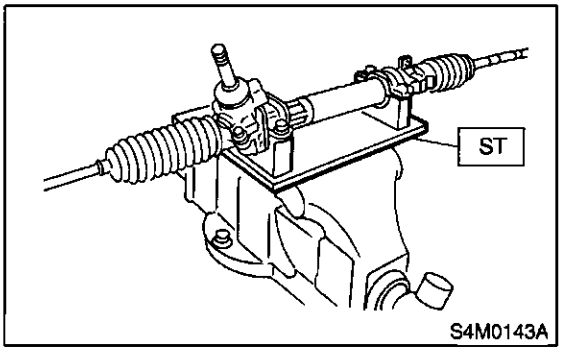

3) Remove the tie-rod end plate.

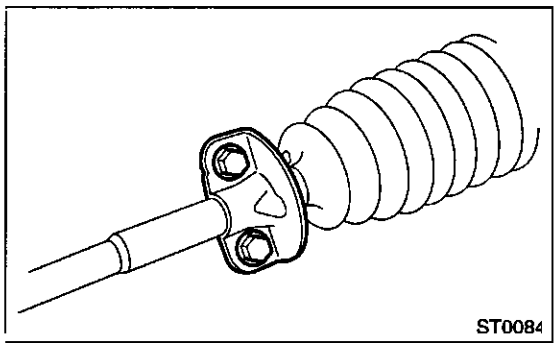

4) Remove the tie-rod end and lock nut from the gearbox.
5) Remove the small clip from the boot using pliers, and move the boot to the tie-rod end side.

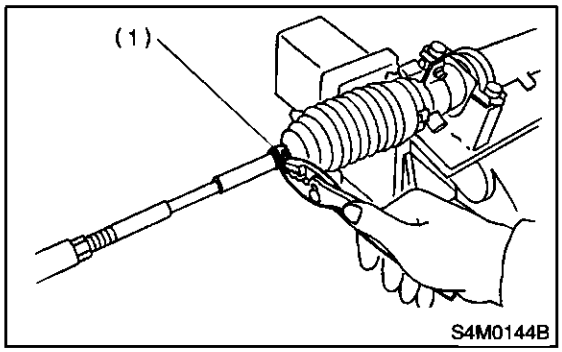

(1) Clip

6) Using standard screwdriver, remove the band from the boot.

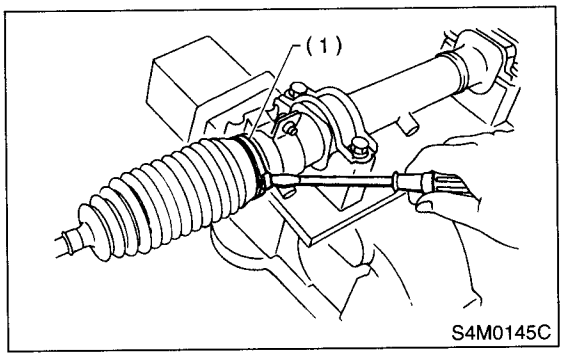

(1) Band

7) Extend the rack approximately 40 mm (1.57 in) out. Unlock the lock wire at lock washer on each side of tie-rod end using a standard screwdriver.

CAUTION:
Be careful not to scratch rack surface as oil leaks may result.

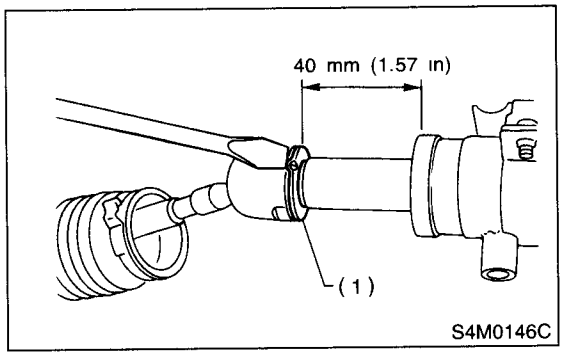

(1) Lock washer

8) Using ST, loosen the lock nut.
ST 926230000 SPANNER

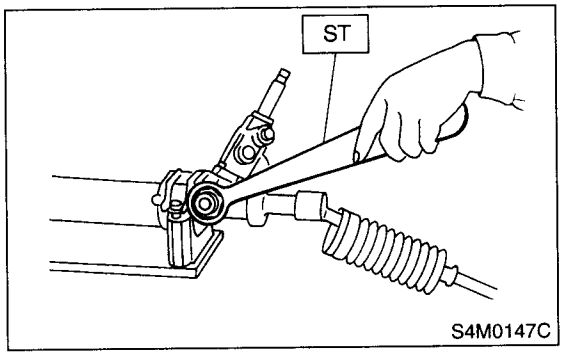

9) Tighten the adjusting screw until it no longer tightens.

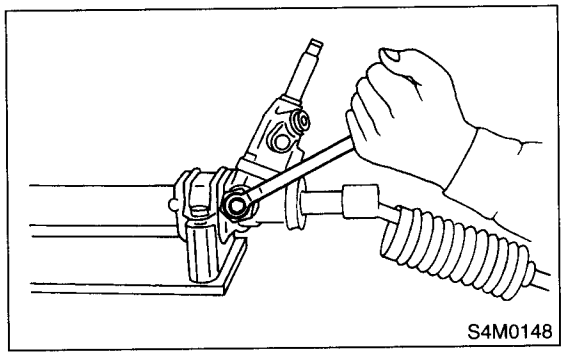

10) Using a wrench [32 mm (1.26 in) width across flats] or adjustable wrench, remove the tie-rod.

CAUTION:
- **Check ball joint for free play, and tie-rod for bends. Replace if necessary.**
- **Check dust seals used with tie-rod end ball joint for damage or deterioration. Replace if necessary.**

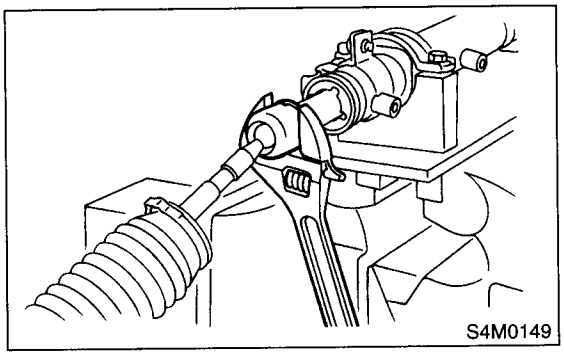

11) Loosen the adjusting screw and remove the spring and sleeve.

CAUTION:
Replace spring and/or sleeve if damaged.

12) Remove the two bolts securing valve assembly.

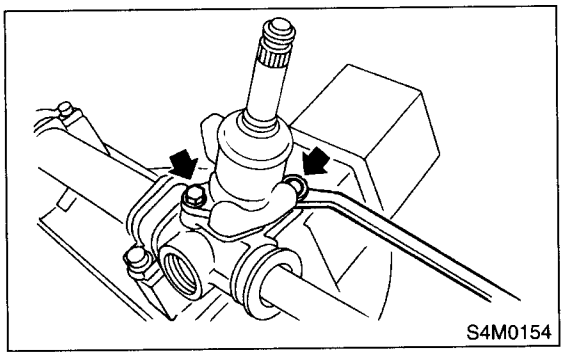

13) Carefully draw out the input shaft and remove the valve assembly.

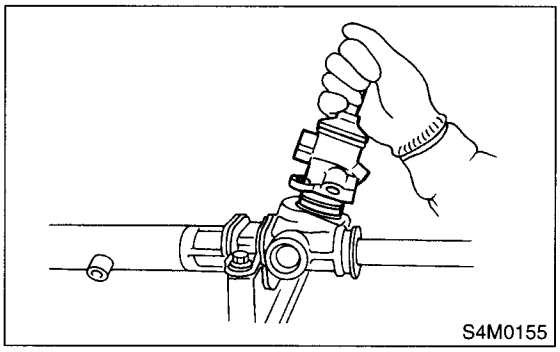

14) Using a sharp pointed pliers, rotate the rack stopper in the direction of the arrow until the end of the circlip comes out of the stopper. Rotate the circlip in the opposite direction and pull it out.

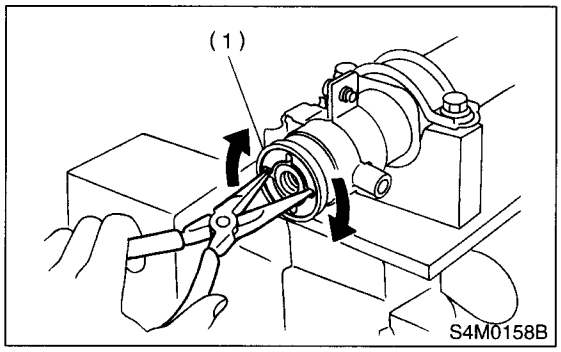

(1) Rack stopper

15) Pull the rack assembly from the cylinder side, and draw out the rack bushing and rack stopper together with the rack assembly.

CAUTION:
Be careful not to contact rack to inner wall of cylinder when drawing out. Any scratch on cylinder inner wall will cause oil leakage.

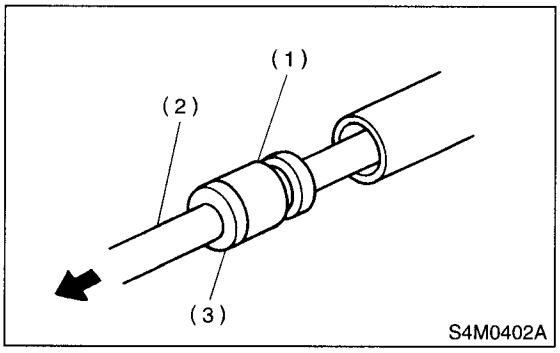

(1) Rack bushing
(2) Rack ASSY
(3) Rack stopper

16) Remove the rack bushing and rack stopper from the rack assembly.

CAUTION:
Do not reuse removed rack bushing and circlip.

17) Remove the oil seal from rack.
18) Insert ST from the pinion housing side and remove the oil seal using a press.
ST 34099FA110 INSTALLER

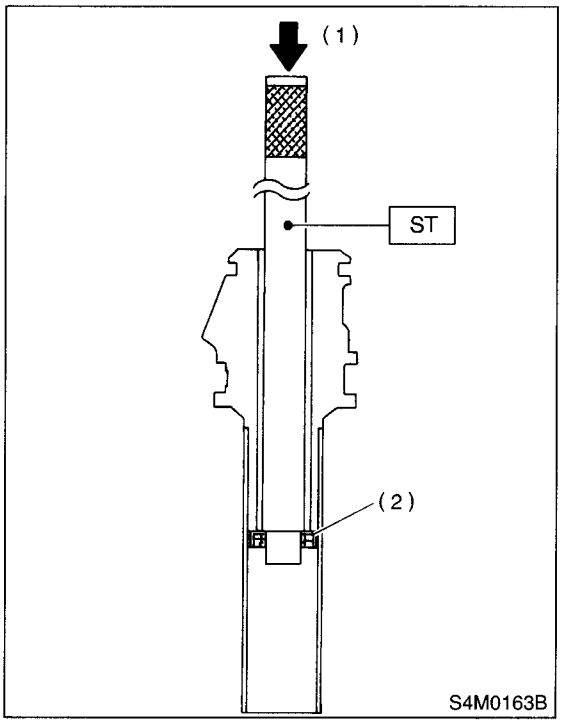

(1) Press
(2) Oil seal

NOTE:
Discard the removed the oil seal.

2. CONTROL VALVE

1) Disconnect the four pipes from the gearbox.

NOTE:
Remove the pipes E and F as a single unit being fixed at the clamp plate.

2) Secure the gearbox removed from the vehicle in vice using ST.
ST 926200000 STAND

CAUTION:
Secure the gearbox in a vice using the ST as shown. Do not attempt to secure it without this ST.

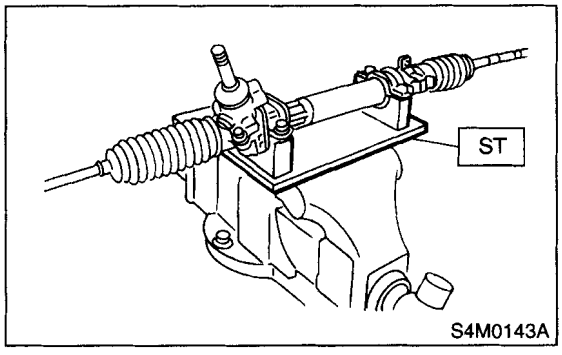

3) Using ST, loosen the lock nut.
ST 926230000 SPANNER

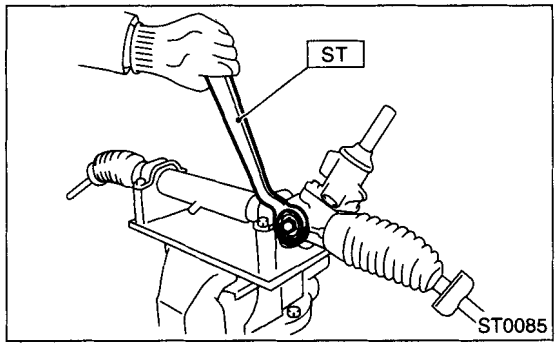

4) Tighten the adjusting screw until it no longer tightens.

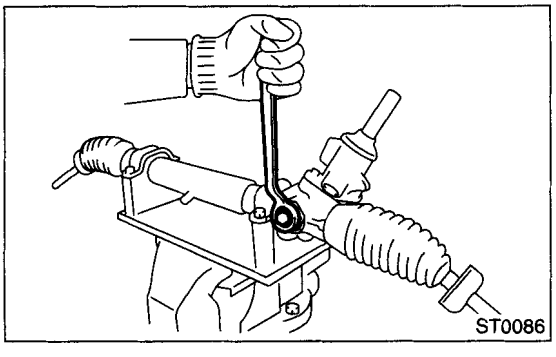

5) Loosen the adjusting screw and remove the spring and sleeve.

CAUTION:
Replace the spring and/or sleeve if damaged.

6) Remove the two bolts securing valve assembly.

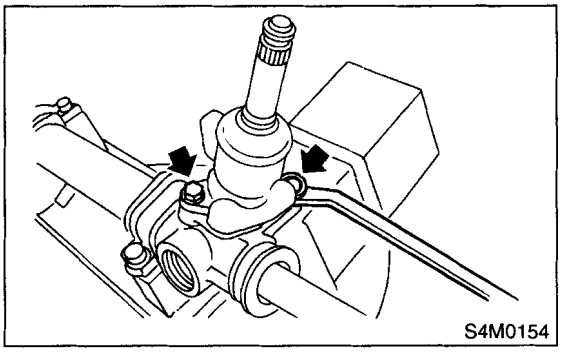

7) Carefully draw out the input shaft and remove the valve assembly.

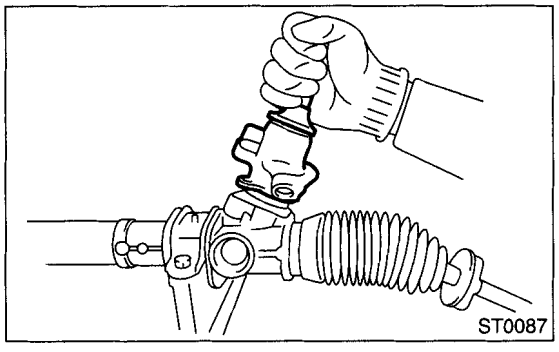

8) Slide the dust cover out.

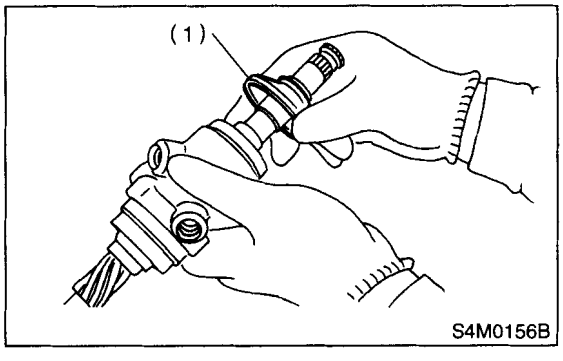

(1) Dust cover

9) Using a press remove pinion and valve assembly from the valve housing.

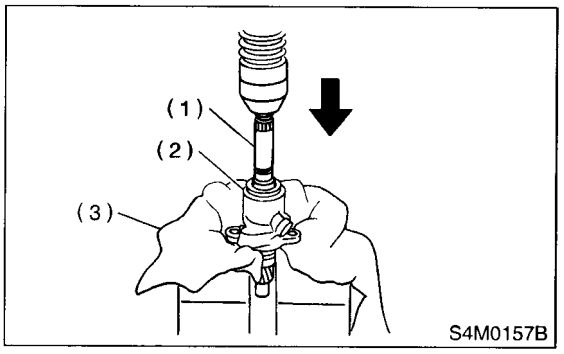

(1) Valve ASSY
(2) Valve housing
(3) Cloth

10) Using ST and press, remove the dust seal, oil seal and special bearing from the valve housing.
ST 34099FA120 INSTALLER & REMOVER SEAL

CAUTION:
- **Do not apply a force to end surface of valve housing.**
- **Do not reuse oil seal after removal.**

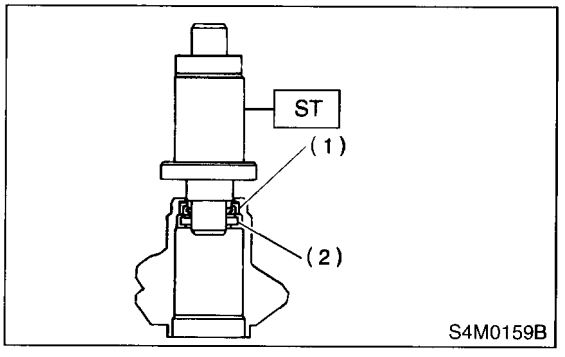

(1) Oil seal
(2) Special bearing

11) Remove the snap ring using snap ring pliers.

CAUTION:
- **Do not reuse removed snap ring.**
- **Be careful not to scratch pinion and valve assembly.**

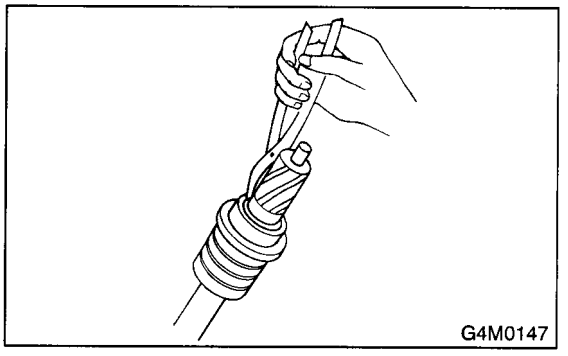

12) Press out the bearing together with the back up washer using pipe of I.D. 38.5 to 39.5 mm (1.516 to 1.555 in) and press.

CAUTION:
Do not reuse removed bearing.

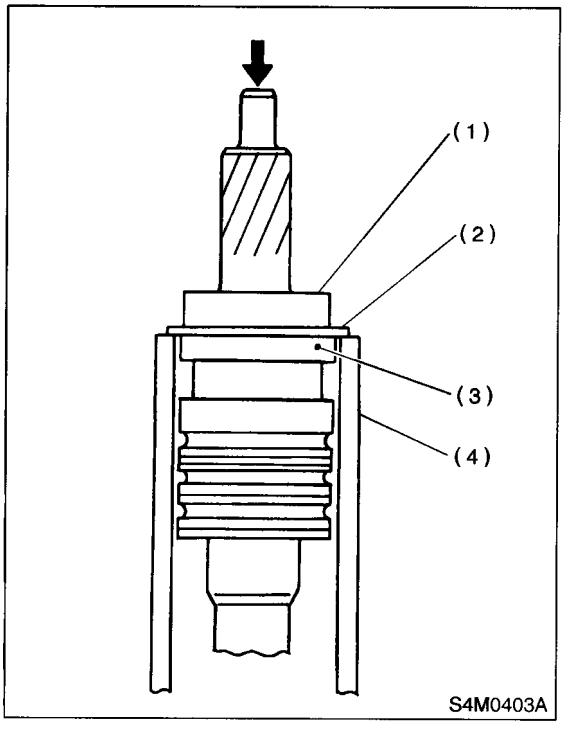

(1) Bearing
(2) Backing washer
(3) Oil seal
(4) Pipe

13) Remove the oil seal.

CAUTION:
Do not reuse removed oil seal.

D: ASSEMBLY

1. RACK HOUSING ASSEMBLY

CAUTION:
Use only SUBARU genuine grease for gearbox.

Specified grease for gearbox:
VALIANT GREASE M2 (Part No. 003608001)

1) Clean all parts and tools before reassembling.
2) Force-fit oil seal using ST.
ST 34099FA110 INSTALLER

CAUTION:
Be careful not to damage or scratch cylinder inner wall.

NOTE:
- Apply specified power steering fluid to oil seal.
- Pay special attention not to install oil seal in wrong direction.
- Push oil seal until the stepped portion of A contacts end face of B.

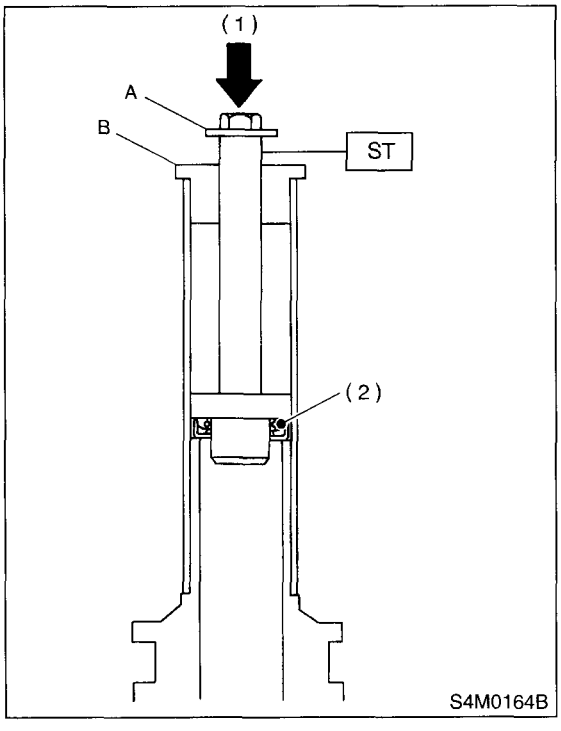

(1) Press
(2) Oil seal

3) Apply grease to the teeth of rack so that the grease applied is about as high as teeth, and also apply a thin film of grease to the sliding portion of rack shaft.

CAUTION:
- **When moving rack to stroke end without tie-rod attached, prevent shocks from being applied at the end.**
- **Do not apply grease to threaded portion at end of rack shaft.**
- **Move rack shaft to stroke end two (2) or three (3) times to squeeze grease which accumulates on both ends. Remove grease to prevent it from choking air passage hole.**

4) Apply grease to the sleeve insertion hole.
5) Apply grease to the dust seal insertion hole.

CAUTION:
Apply clean grease with clean hands. If material having a sharp edge is used for applying grease, oil seal at the inside might be damaged.

6) Fixing rack housing
Fix the rack housing in vice using ST.
ST 926200000 STAND

CAUTION:
- **When fixing rack housing in vice, be sure to use this special tool. Do not fix rack housing in vice using pad such as aluminum plates, etc.**
- **When using old rack housing, be sure to clean and remove rust before assembling. Check pinion housing bushing carefully.**

7) Install the oil seal to rack.
8) Fit ST over toothed portion of rack assembly, and check for binding or unsmooth insertion. If any deformation is noted on flats at the end of rack, shape by using file, and wash with cleaning fluid.
ST 926390001 COVER & REMOVER

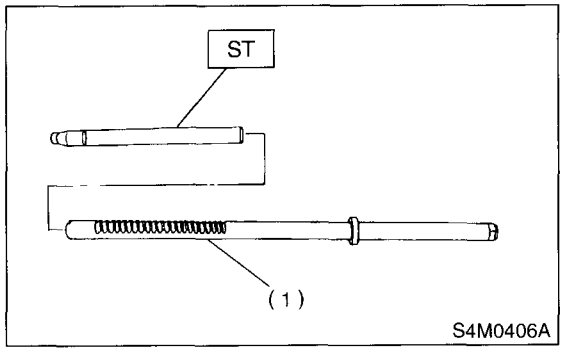

(1) Rack ASSY

9) Apply genuine grease to the teeth of thoroughly washed rack assembly, and fit ST over the toothed portion.

CAUTION:
- **Be careful not to block air passage with grease. Remove excessive grease.**
- **After fitting cover, check air passage hole for clogging. If clogged, open by removing grease from the hole.**
- **Check rack shaft for damage.**
- **Apply specified power steering fluid to this ST and surface of piston ring to prevent seal from being damaged.**

10) Insert the rack assembly into the rack housing from cylinder side, and remove ST after it has passed completely through oil seal.

NOTE:
Before inserting rack assembly, apply a coat of specified power steering fluid to surfaces of ST and rack piston.

ST 926390001 COVER & REMOVER

11) Fit ST1 and ST2 over the end of rack, and install rack bushing.

ST1 926400000 GUIDE
ST2 927660000 GUIDE

CAUTION:
- **If burrs, or nicks are found on this guide and rack shaft portion, remove by filing.**
- **Dip rack bushing in specified power steering fluid before installing, and pay attention not to damage O-ring and oil seal.**

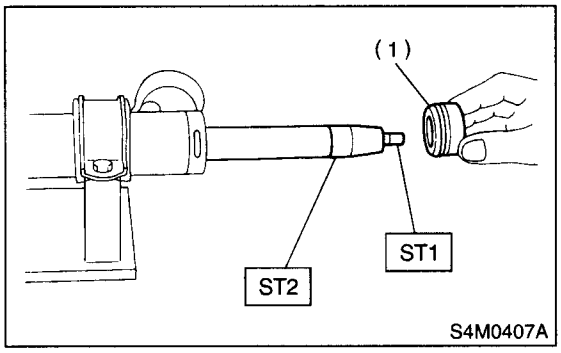

(1) Rack bushing ASSY

12) Insert the rack stopper into the cylinder tube until internal groove (on cylinder side) is aligned with external groove (on rack stopper). Turn the rack stopper with ST so that the rack stopper hole is seen through cylinder slits.

13) Insert the rack stopper into the rack housing, and wrap the circlip using a sharp pointed pliers to secure the rack stopper in position.

CAUTION:
Be careful not to scratch rack while winding circlip.

NOTE:
Rotate the wrench another 90 to 180° after the end of circlip has been wrapped in.

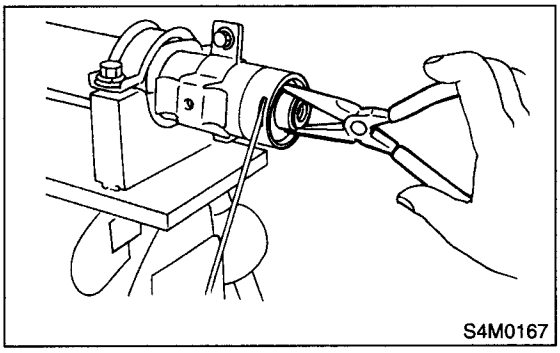

14) Fit the mounting rubber onto the rack housing.
15) Apply the specified grease to the dust cover.

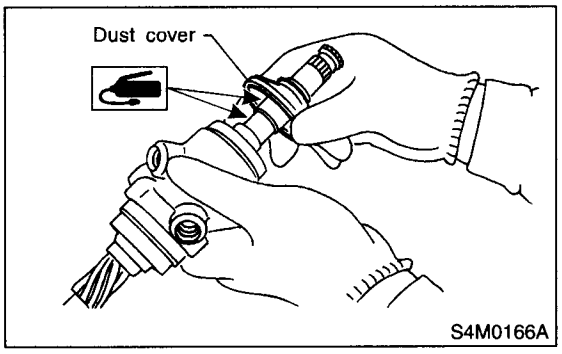

16) Install the dust cover on the valve assembly.
17) Apply genuine grease to the pinion gear and bearing of valve assembly.

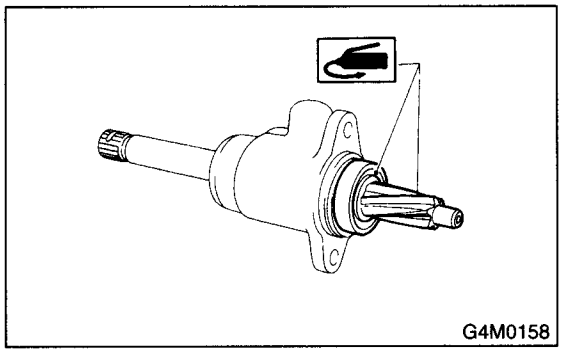

18) Install the gasket on the valve assembly. Insert the valve assembly into the place while facing rack teeth toward pinion.

CAUTION:
Be sure to use a new gasket.

NOTE:
Do not allow packing to be caught when installing valve assembly.

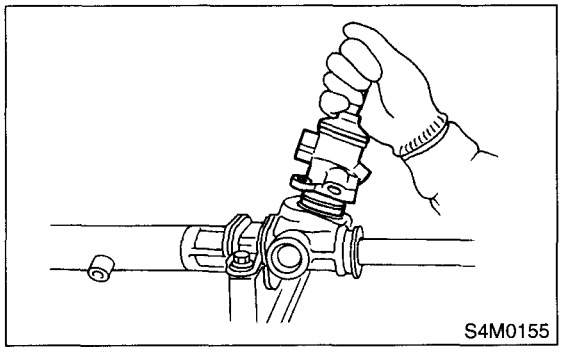

19) Tighten the bolts alternately to secure the valve assembly.

Tightening torque:
25 N·m (2.5 kgf-m, 18.1 ft-lb)

CAUTION:
Be sure to alternately tighten bolts.

20) Apply grease to the sliding surface of sleeve and spring seat, then insert the sleeve into the pinion housing. Fit the spring into the sleeve screw, pack grease inside of screw, then install the screw.

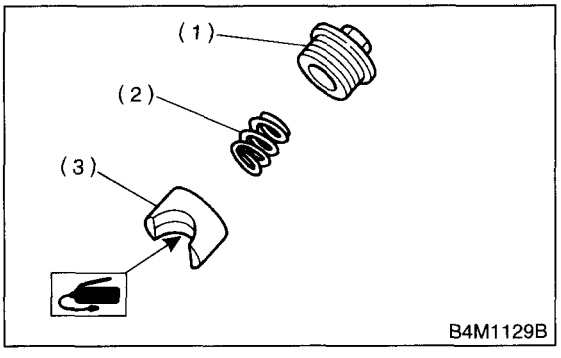

(1) Adjusting screw
(2) Spring
(3) Sleeve

21) Install the lock washers and tighten the left and right tie-rods into the rack ends.

On condition
L: Approximately 40 mm (1.57 in)

Tightening torque:
78 N·m (8.0 kgf-m, 58 ft-lb)

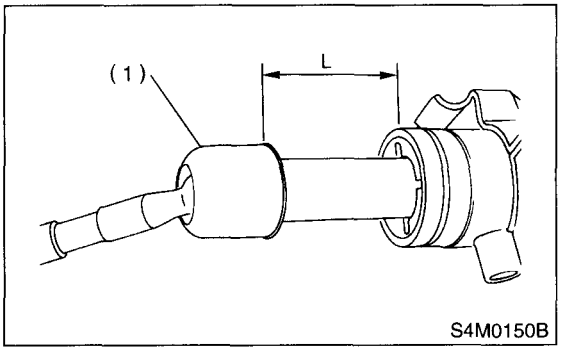

(1) Tie-rod

22) Bend the lock washer using a chisel.

CAUTION:
Be careful not to scratch rack when bending lock washer.

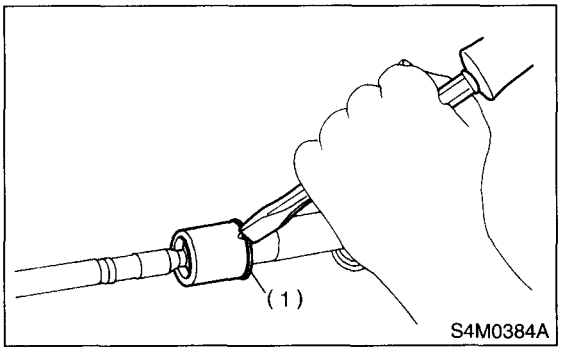

(1) Lock washer

23) Rack and pinion backlash adjustment
(1) Loosen the adjusting screw.
(2) Rotate the input shaft so that the rack is in the straight ahead direction.
(3) Apply grease to the sleeve.

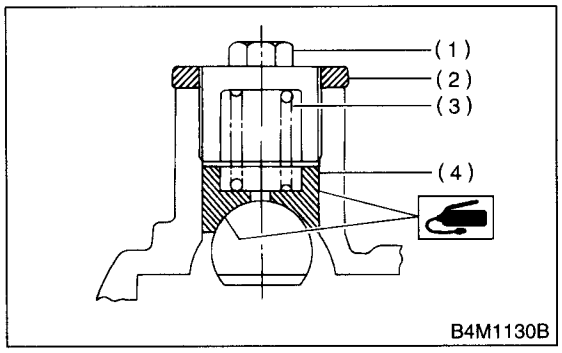

(1) Adjusting screw
(2) Lock nut
(3) Spring
(4) Sleeve

(4) Tighten the adjusting screw by two threads.

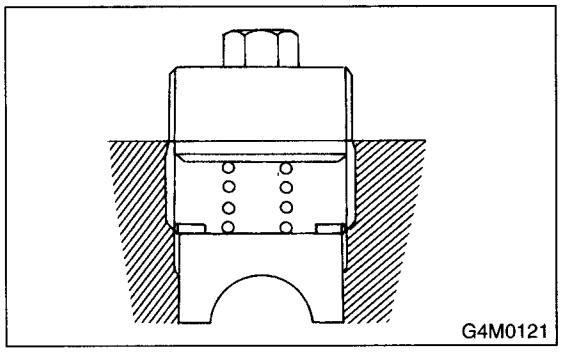

(5) Apply liquid packing to at least 1/3 of entire perimeter of adjusting screw thread.

Liquid packing:
THREE BOND 1141

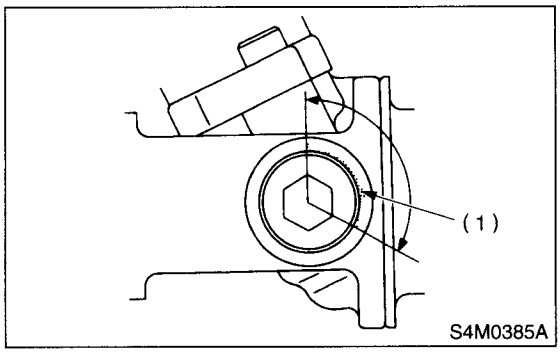

(1) Apply liquid packing to at least 1/3 of entire perimeter.

(6) Tighten the adjusting screw to 7.4 N·m (0.75 kgf-m, 5.4 ft-lb) and back off 25°.

(7) Install the lock nut. While holding adjusting screw with a wrench, tighten the lock nut using ST.

ST 926230000 SPANNER

Tightening torque (Lock nut):
39 N·m (4.0 kgf-m, 29 ft-lb)

NOTE:
- Hold the adjusting screw with a wrench to prevent it from turning while tightening lock nut.
- Make adjustment so that the steering wheel can be rotated fully from lock to lock without binding.

24) Check for service limit as per article of "Service limit".<Ref. to PS-42, INSPECTION, Steering Gearbox.> Make replacement and adjustment if necessary.

25) Install the boot to the housing.

NOTE:
- Before installing boot, be sure to apply grease to the groove of tie-rod.
- Install fitting portions of boots to the following portions in both sides of assembled steering gearbox.

The groove on gearbox
The groove on the rod

- Make sure that the boot is installed without unusual inflation or deflation.

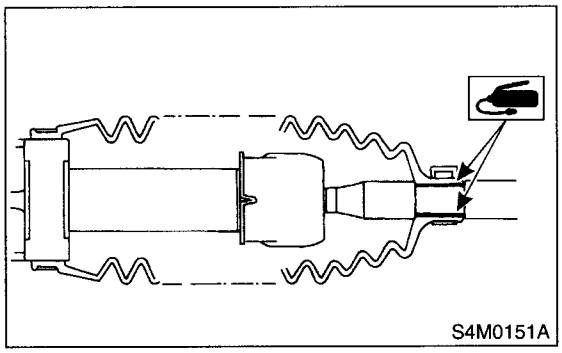

26) Using a screwdriver, tighten the screw until the ends "A" and "B" of the band come into contact with each other.

CAUTION:
Use a new band.

NOTE:
Always tighten the band from the underside of the gear box.

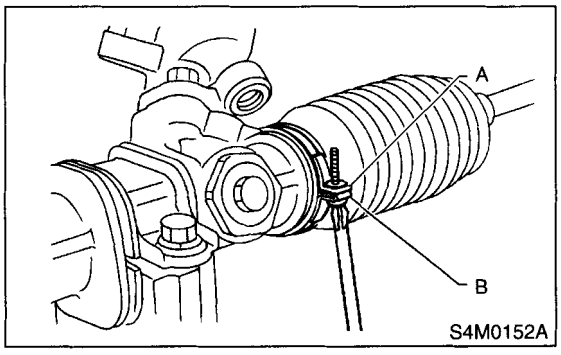

27) Fix the boot end with clip (small).

CAUTION:
After installing, check boot end is positioned into groove on tie-rod.

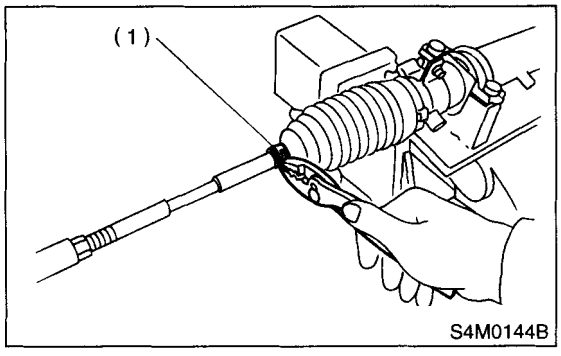

(1) Clip

28) If the tie-rod end was removed, screw in lock nut and tie-rod end to the screwed portion of tie-rod, and tighten the lock nut temporarily in a position as shown in figure.

Installed tie-rod length: L
15 mm (0.59 in)

NOTE:
Pay attention to difference between right and left tie-rod ends.

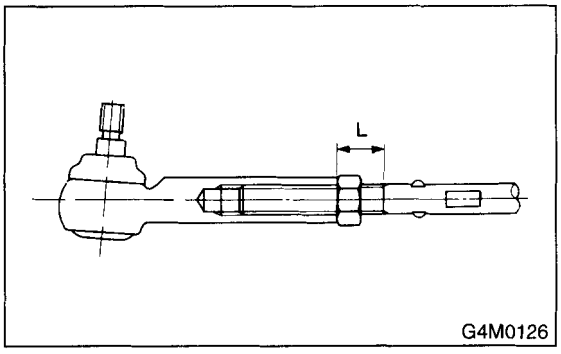

29) Install the tie-rod end plate.

Tightening torque:
13 N·m (1.3 kgf-m, 9.4 ft-lb)

30) Inspect the gearbox as follows:
"A" Holding tie-rod end, repeat lock to lock two or three times as quickly as possible.
"B" Holding tie-rod end, turn it slowly at a radius one or two times as large as possible.
After all, make sure that the boot is installed in the specified position without deflation.

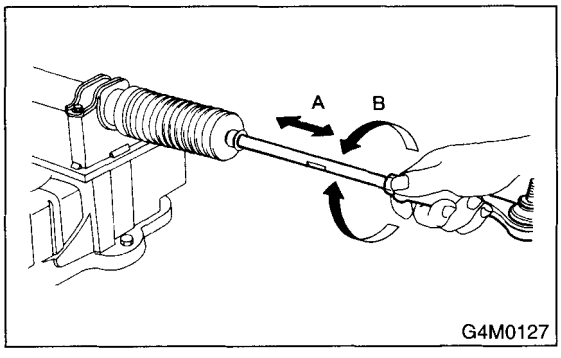

31) Remove gearbox from ST.
ST 926200000 STAND

32) Install the four pipes on gearbox.
(1) Connect the pipe A and B to the four pipe joints of gearbox.

Tightening torque:
13 N·m (1.3 kgf-m, 9.4 ft-lb)

(2) Connect the pipe E and F to the gearbox.

Tightening torque:
Pipe E: 15 N·m (1.5 kgf-m, 10.8 ft-lb)
Pipe F: 25 N·m (2.5 kgf-m, 18.1 ft-lb)

2. CONTROL VALVE ASSEMBLY

Specified steering grease:
VALIANT GREASE M2 (Part No. 003608001)

1) Clean all parts and tools before reassembling.
2) Apply a coat of specified power steering fluid to the inner wall of valve housing.

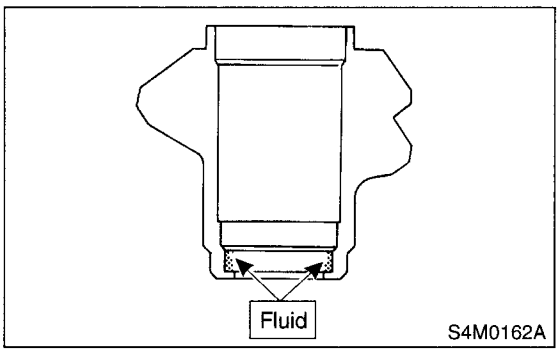

3) Attach ST2 to ST1, and press the oil seal into the place using a press.

ST1 34099FA120 INSTALLER & REMOVER SEAL
ST2 34099FA130 INSTALLER SEAL

(1) Face oil seal in the direction shown in figure when installing.
(2) To avoid scratching oil seal, apply a coat of grease to the contact surface of installer and oil seal.
(3) To facilitate installation, attach oil seal to the installer and position in valve housing before pressing into place.

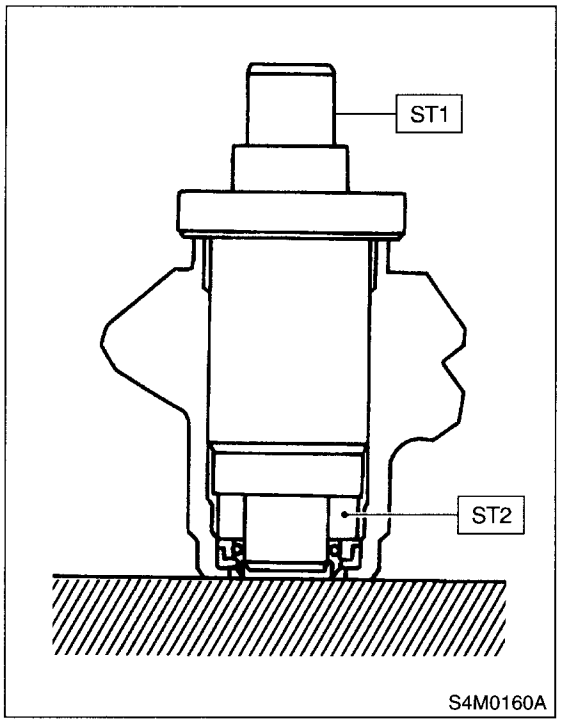

4) Using ST and press, install the special bearing in valve housing.

ST 34099FA120 INSTALLER & REMOVER SEAL

NOTE:
To facilitate installation, attach the ball bearing to the remover and position in valve housing before pressing it into place.

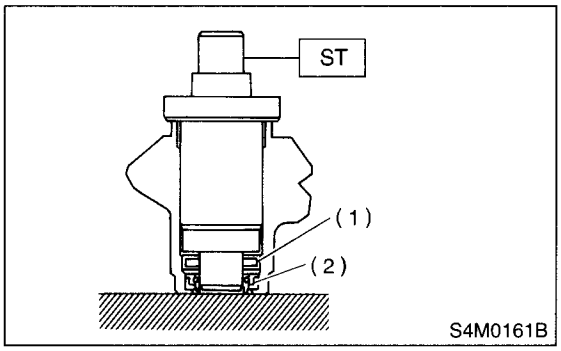

(1) Special bearing
(2) Oil seal

5) Put vinyl tape around pinion shaft splines to protect oil seal from damage.
6) Fit pinion and valve assembly into valve housing.
7) Secure valve assembly to ST1 and ST2.

8) Put ST3 over pinion, and insert oil seal, then force-fit oil seal into housing using ST4.

ST1 926370000 INSTALLER A
ST2 34099FA100 STAND BASE
ST3 926360000 INSTALLER A
ST4 927620000 INSTALLER B

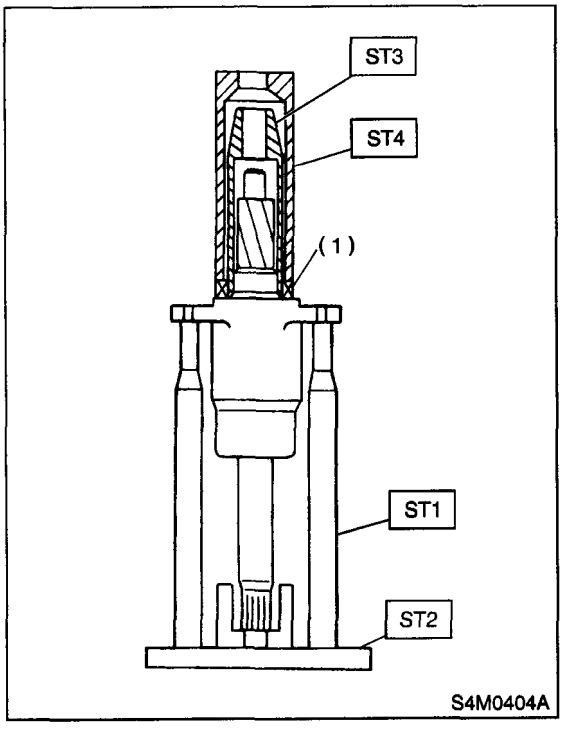

(1) Oil seal

NOTE:
- Apply the specified power steering fluid to the oil seal and ST3, being careful not to damage oil seal lip.
- Push the oil seal until ST3 contacts housing end face.

9) Remove ST3, and fit backing washer.

10) Force-fit ball bearing using ST3.

ST1 926370000 INSTALLER A
ST2 34099FA100 STAND BASE
ST3 927640000 INSTALLER B

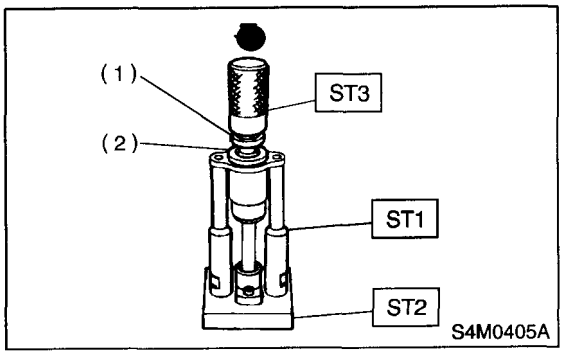

(1) Ball bearing
(2) Backing washer

NOTE:
Be careful not to tilt ball bearing during installation.

11) Install the snap ring using snap ring pliers.

NOTE:
Rotate the snap ring to check for proper installation.

12) Apply the specified grease to the dust cover.

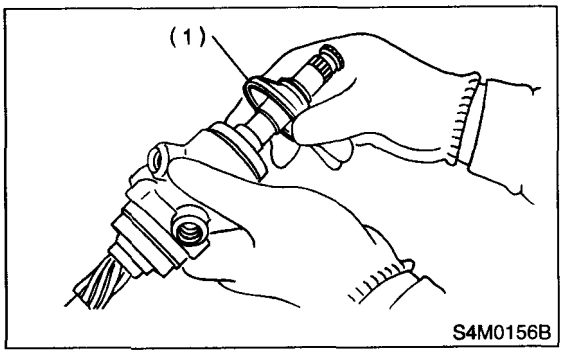

(1) Dust cover

13) Install the dust cover on the valve assembly.

14) Apply genuine grease to the pinion gear and bearing of valve assembly.

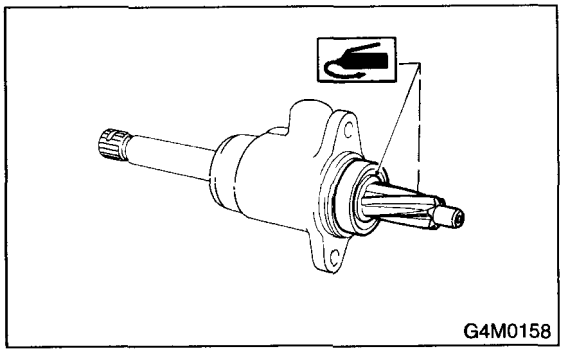

15) Install the gasket on the valve assembly. Insert the valve assembly into the place while facing rack teeth toward pinion.

CAUTION:
Be sure to use a new gasket.

NOTE:
Do not allow packing to be caught when installing valve assembly.

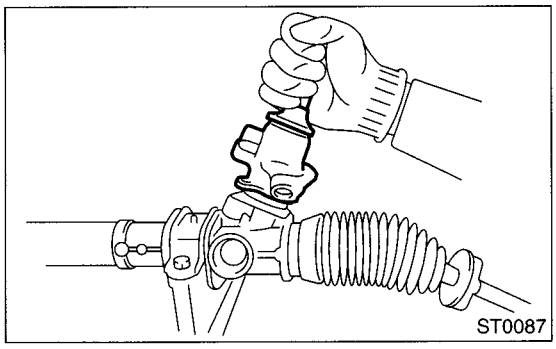

16) Tighten the bolts alternately to secure the valve assembly.

Tightening torque:
25 N·m (2.5 kgf-m, 18.1 ft-lb)

CAUTION:
Be sure to alternately tighten bolts.

17) Apply grease to the sleeve insertion hole.
18) Apply grease to the dust seal insertion hole.

CAUTION:
Apply clean grease with clean hands. If material having a sharp edge is used for applying grease, oil seal at the inside might be damaged.

19) Apply grease to the sliding surface of sleeve and spring seat, then insert the sleeve into the pinion housing. Fit the spring into the sleeve the screw, pack grease inside of screw, then install the screw.

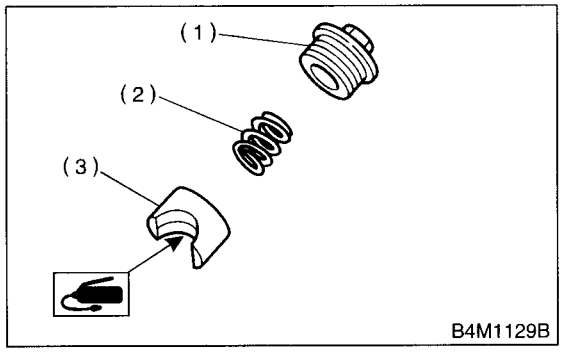

(1) Adjusting screw
(2) Spring
(3) Sleeve

20) Rack and pinion backlash adjustment
(1) Loosen the adjusting screw.
(2) Rotate the input shaft so that the rack is in the straight ahead direction.
(3) Apply grease to the sleeve.

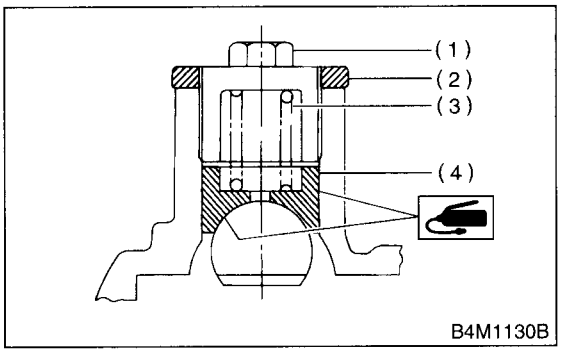

(1) Adjusting screw
(2) Lock nut
(3) Spring
(4) Sleeve

(4) Tighten the adjusting screw by two threads.

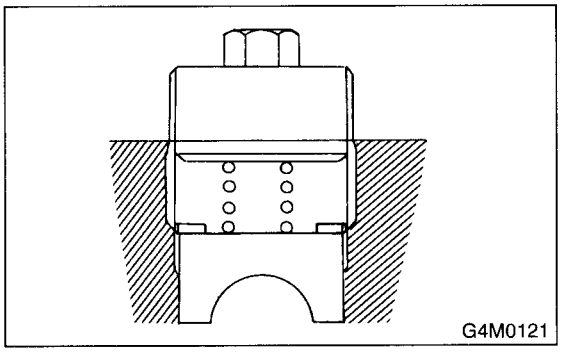

(5) Apply liquid packing to at least 1/3 of entire perimeter of adjusting screw thread.

Liquid packing:
THREE BOND 1141

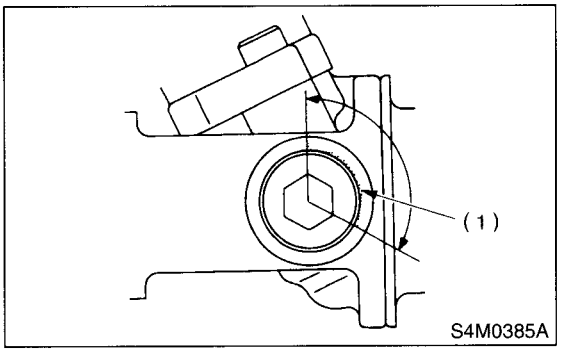

(1) Apply liquid packing to at least 1/3 of entire perimeter.

(6) Tighten the adjusting screw to 7.4 N·m (0.75 kgf-m, 5.4 ft-lb) and back off 25°.

(7) Install the lock nut. While holding adjusting screw with a wrench, tighten the lock nut using ST.

ST 926230000 SPANNER

Tightening torque (Lock nut):
39 N·m (4.0 kgf-m, 29 ft-lb)

NOTE:
- Hold the adjusting screw with a wrench to prevent it from turning while tightening lock nut.
- Make adjustment so that the steering wheel can be rotated fully from lock to lock without binding.

21) Check for service limit as per article of "Service limit".<Ref. to PS-42, INSPECTION, Steering Gearbox.> Make replacement and adjustment if necessary.
22) Take off the gearbox from ST.
23) Install the four pipes on the gearbox.
(1) Connect the pipe A and B to the gearbox.

Tightening torque:
13 N·m (1.3 kgf-m, 9.4 ft-lb)

(2) Connect the pipe E and F to the gearbox.

Tightening torque:
Pipe E: 15 N·m (1.5 kgf-m, 10.8 ft-lb)
Pipe F: 25 N·m (2.5 kgf-m, 18.1 ft-lb)

E: INSPECTION

1. BASIC INSPECTION

1) Clean all disassembled parts, and check for wear, damage, or any other faults, then repair or replace as necessary.
2) When disassembling, check inside of gearbox for water. If any water is found, carefully check boot for damage, input shaft dust seal, adjusting screw and boot clips for poor sealing. If faulty, replace with new parts.

No.	Parts	Inspection	Corrective action
1	Input shaft	(1) Bend of input shaft (2) Damage on serration	If the bend or damage is excessive, replace the entire gearbox.
2	Dust seal	(1) Crack or damage (2) Wear	If the outer wall slips, the lip is worn out or damage is found, replace it with new one.
3	Rack and pinion	Poor mating of rack with pinion	(1) Adjust the backlash properly. By measuring turning torque of gearbox and sliding resistance of rack, check if rack and pinion engage uniformly and smoothly with each other. (Refer to "Service limit".) (2) Keeping rack pulled out all the way so that all teeth emerge, check teeth for damage. Even if abnormality is found in either (1) or (2), replace the entire gearbox.
4	Gearbox unit	(1) Bend of rack shaft (2) Bend of cylinder portion (3) Crack or damage on cast iron portion	Replace the gearbox with new one.
		(4) Wear or damage on rack bush	If the free play of rack shaft in radial direction is out of the specified range, replace the gearbox with new one. (Refer to "Service limit".)
		(5) Wear on input shaft bearing	If the free plays of input shaft in radial and axial directions are out of the specified ranges, replace the gearbox with new one. (Refer to "Service limit".)
5	Boot	Crack, damage or deterioration	Replace.
6	Tie-rod	(1) Looseness of ball joint (2) Bend of tie-rod	Replace.
7	Tie-rod end	Damage or deterioration on dust seal	Replace.
8	Adjusting screw spring	Deterioration	Replace.
9	Boot clip	Deterioration	Replace.
10	Sleeve	Damage	Replace.
11	Pipes	(1) Damage to flared surface (2) Damage to flare nut (3) Damage to pipe	Replace.

2. SERVICE LIMIT

Make a measurement as follows. If it exceeds the specified service limit, adjust or replace.

NOTE:
When making a measurement, vise gearbox by using ST. Never vise gearbox by inserting aluminum plates, etc. between vise and gearbox.

ST 926200000 STAND

Sliding resistance of rack shaft:

Service limit
340 N (35 kgf, 76 lb) or less

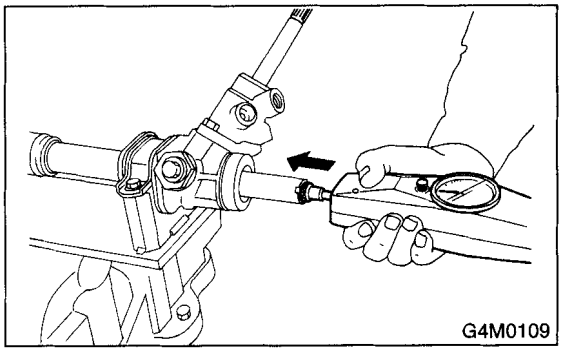

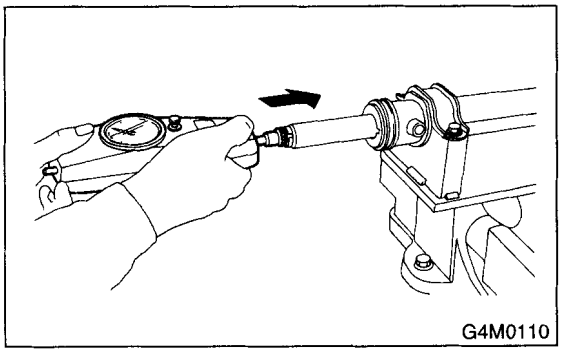

3. RACK SHAFT PLAY IN RADIAL DIRECTION

Right-turn steering:

Service limit
0.19 mm (0.0075 in) or less

On condition
L: 5 mm (0.20 in)
P: 122.6 N (12.5 kgf, 27.6 lb)

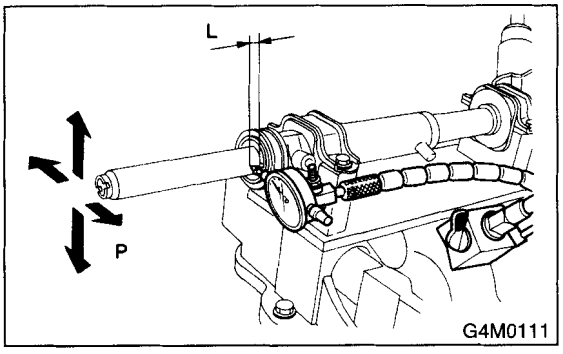

Left-turn steering:

Service limit
Direction ⇦⇨
0.3 mm (0.012 in) or less
Direction ⬅➡
0.15 mm (0.0059 in) or less

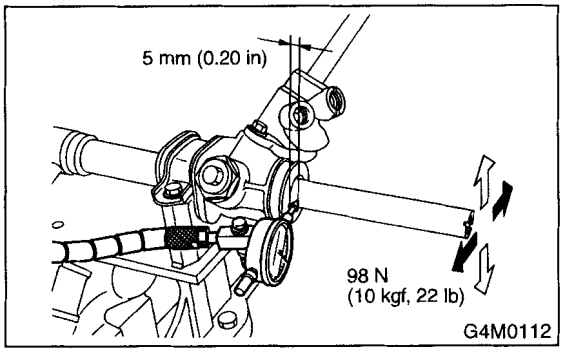

4. INPUT SHAFT PLAY

In radial direction:

Service limit
0.18 mm (0.0071 in) or less

On condition
P: 98 N (10 kgf, 22 lb)

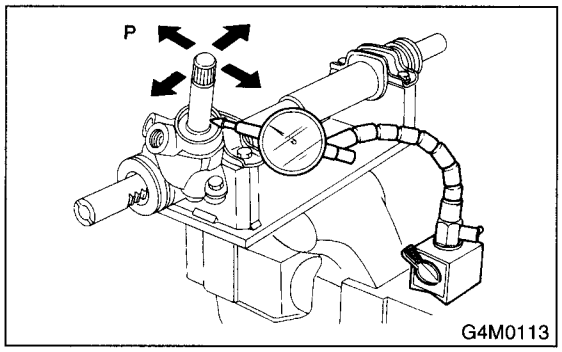

In axial direction:

Service limit
0.5 mm (0.020 in) or less

On condition
P: 20 — 49 N (2 — 5 kgf, 4 — 11 lb)

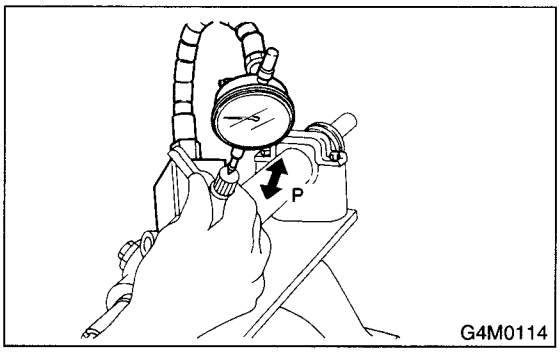

5. TURNING RESISTANCE OF GEARBOX

Using ST, measure gearbox turning resistance.
ST 34099PA100 SPANNER

Service limit
Maximum allowable resistance
Less than 12 N (1.2 kgf, 2.7 lb)

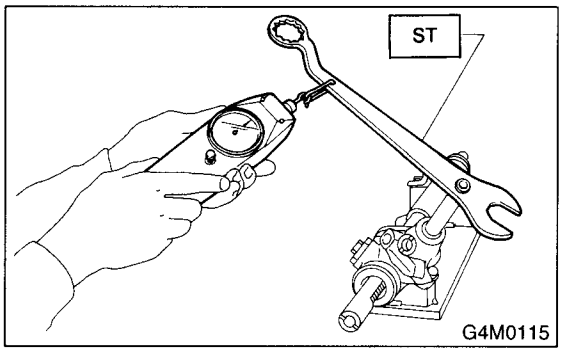

6. OIL LEAKING

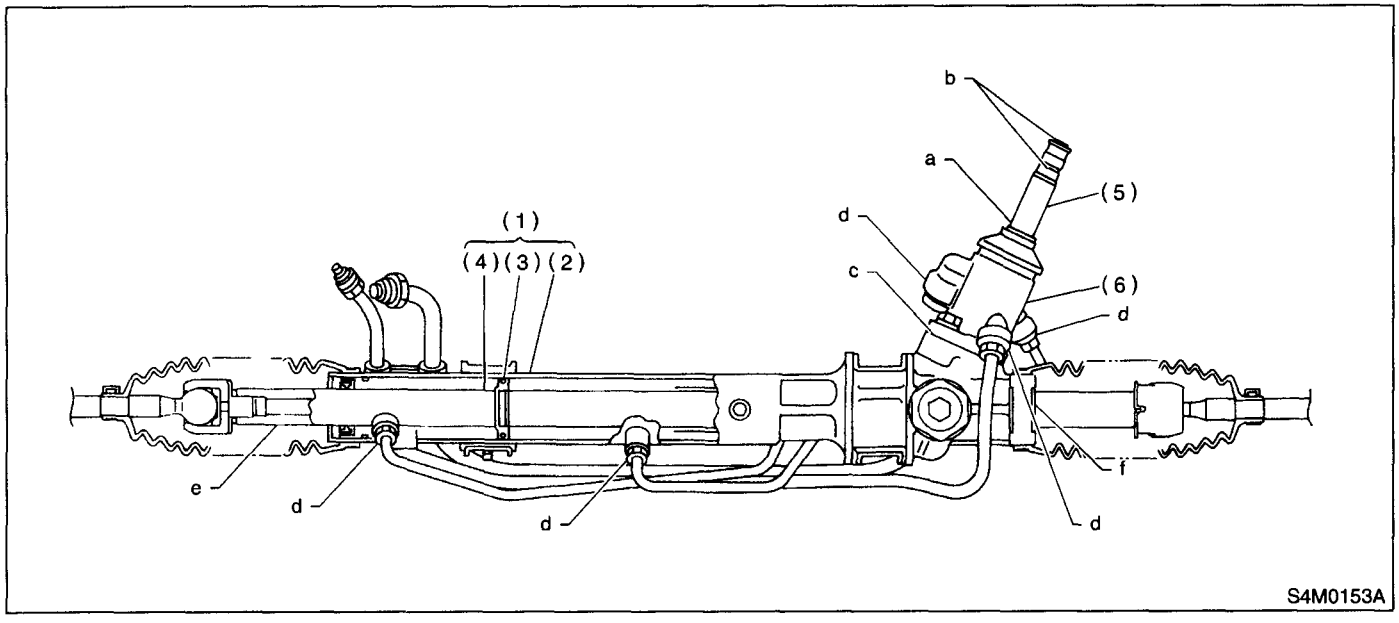

(1)	Power cylinder	(3)	Rack piston	(5)	Input shaft
(2)	Cylinder	(4)	Rack axle	(6)	Valve housing

NOTE:
If the gearbox is dismounted without confirming where the leak is, it must be mounted again to locate the leak point.

1) Even if the location of the leak can be easily found by observing the leaking condition, it is necessary to thoroughly remove the oil from the suspected portion and turn the steering wheel from lock to lock about 30 to 40 times with engine running, then make comparison of the suspected portion between immediately after and several hours after this operation.

2) Inspect leakage from "a"
The oil seal is damaged. Replace the valve assembly with a new one.

3) Inspect leakage from "b"
The torsion bar O-ring is damaged. Replace the valve assembly with a new one.

4) Inspect leakage from "c"
The oil seal is damaged. Replace the valve assembly or oil seal with a new one.

5) Inspect leakage from "d"
The pipe is damaged. Replace the faulty pipe or O-ring.

6) If leak is other than a, b, c, or d, and if oil is leaking from the gearbox, move the right and left boots toward tie-rod end side, respectively, with the gearbox mounted to the vehicle, and remove oil from the surrounding portions. Then, turn the steering wheel from lock to lock 30 to 40 times with the engine running, then make comparison of the leaked portion immediately after and several hours after this operation.

(1) Leakage from "e"
The cylinder seal is damaged. Replace the rack bush with a new one.

(2) Leakage from "f"
There are two possible causes. Take the following step first. Remove the pipe assembly B from the valve housing, and close the circuit with ST.

ST 926420000 PLUG

Turn the steering wheel from lock to lock 30 to 40 times with the engine running, then make comparison of the leaked portion between immediately after and several hours after this operation.

CAUTION:

- **If leakage from "f" is noted again:**

The oil seal of pinion and valve assembly is damaged. Replace pinion and valve assembly with a new one. Or replace the oil seal and the parts that are damaged during disassembly with new ones.

- **If oil stops leaking from "f":**

The oil seal of rack housing is damaged. Replace the oil seal and the parts that are damaged during disassembly with new ones.

F: ADJUSTMENT

1) Adjust the front toe.

Standard of front toe:
IN 3 — OUT 1 mm (IN 0.12 — OUT 0.039 in)

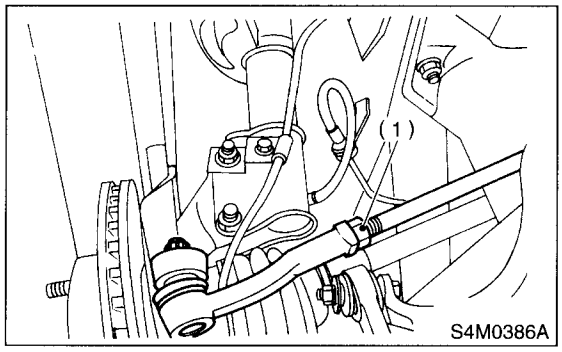

(1) Lock nut

2) Adjust the steering angle of wheels.

Standard of steering angle:

Model	TURBO, Sedan, OUTBACK	Others
Inner wheel	34°05' ± 1.5°	36°55' ± 1.5°
Outer wheel	29°35' ± 1.5°	31°35' ± 1.5°

3) If the steering wheel spokes are not horizontal when wheels are set in the straight ahead position, and error is more than 5° on the periphery of steering wheel, correctly re-install the steering wheel.

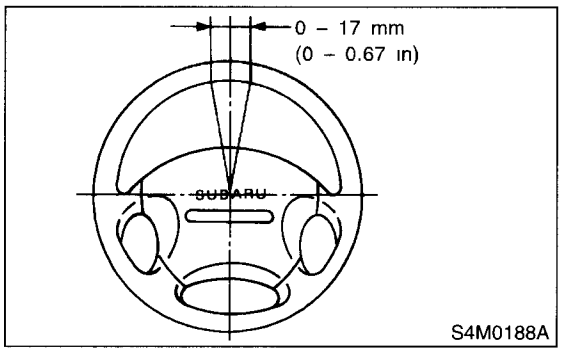

4) If the steering wheel spokes are not horizontal with vehicle set in the straight ahead position after this adjustment, correct it by turning the right and left tie-rods in the same direction by the same turns.

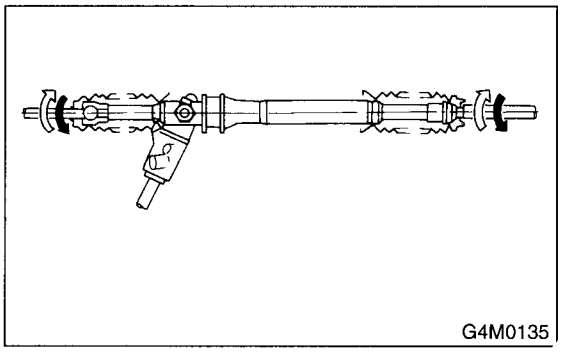

6. Pipe Assembly

A: REMOVAL

1) Disconnect the battery ground terminal.
2) Lift the vehicle and remove the jack-up plate.

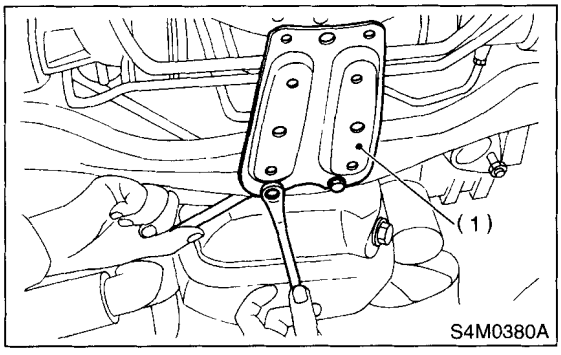

(1) Jack-up plate

3) Remove one pipe joint at the center of gearbox, and connect a vinyl hose to the pipe and joint. Discharge the fluid by turning steering wheel fully clockwise and counterclockwise. Discharge the fluid similarly from the other pipe.

CAUTION:
Improper removal and installation of parts often causes fluid leak trouble. To prevent this, clean the surrounding portions before disassembly and reassembly, and pay special attention to keep dirt and other foreign matter from mating surfaces.

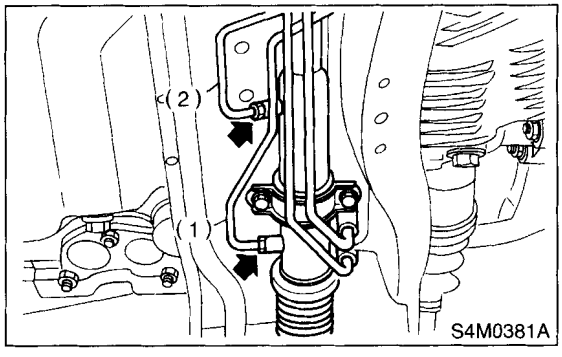

(1) Pipe A
(2) Pipe B

4) Remove the clamp E from pipes C and D.

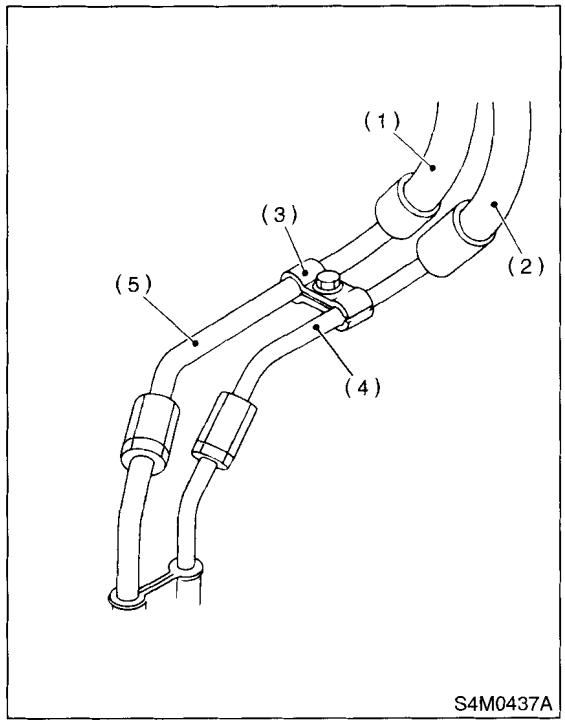

(1) Return hose
(2) Pressure hose
(3) Clamp E
(4) Pipe C
(5) Pipe D

5) Disconnect the pipe C·D from the pipe (on the gearbox side).

CAUTION:
- **When disconnecting pipe C·D, use two wrenches to prevent deformities.**
- **Be careful to keep pipe connections free from foreign matter.**

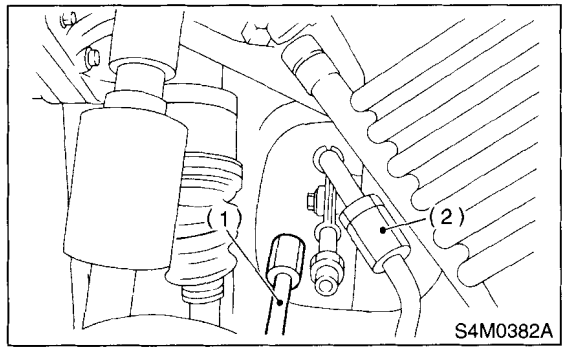

(1) Pipe C
(2) Pipe D

6) Non-TURBO model:
   (1) Remove the air intake duct. <Ref. to IN(SOHC)-7, REMOVAL, Air Intake Duct.>
   (2) Remove the bolt A.
   (3) Disconnect the pipe C from the oil pump.
   (4) Disconnect the pipe D from the return hose.

CAUTION:
- **Do not allow fluid from the hose end to come into contact with pulley belt.**
- **To prevent foreign matter from entering the hose and pipe, cover the open ends of them with a clean cloth.**

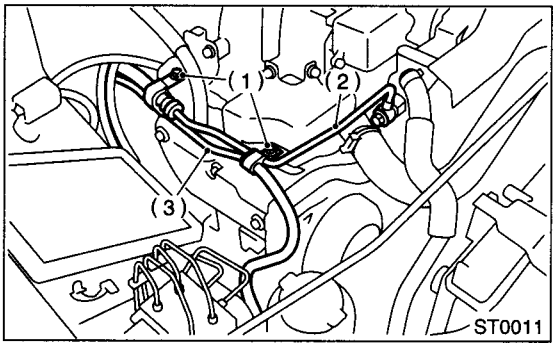

(1) Bolt A
(2) Pipe C
(3) Pipe D

7) TURBO model:
   (1) Remove the air intake duct, air cleaner upper cover and air intake boot.
   <Ref. to IN(DOHC TURBO)-8, REMOVAL, Air Intake Duct.> and <Ref. to IN(DOHC TURBO)-7, REMOVAL, Air Cleaner.>
   (2) Remove the two bolts fixing pipe C and D.
   (3) Remove the coolant filler tank.

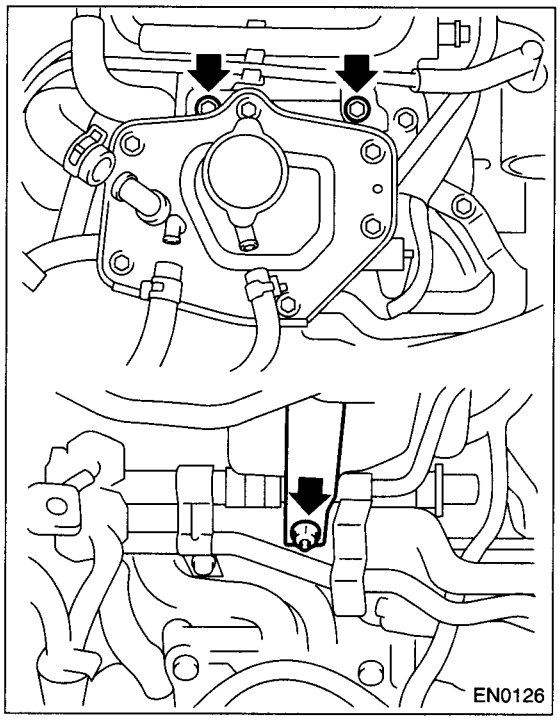

   (4) Disconnect the pipe C from oil pump.
   (5) Disconnect the pipe D from the return hose.

CAUTION:
- **Do not allow fluid from the hose end to come into contact with pulley belt.**
- **To prevent foreign matter from entering the hose and pipe, cover the open ends of them with a clean cloth.**

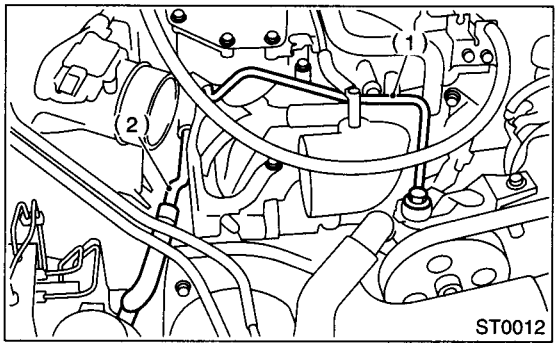

(1) Pipe C
(2) Pipe D

B: INSTALLATION

1) Temporarily tighten the bolts fixing pipe C and D.

CAUTION:
Visually check that hose between tank and pipe D is free from bending or twisting.

- Non-TURBO model

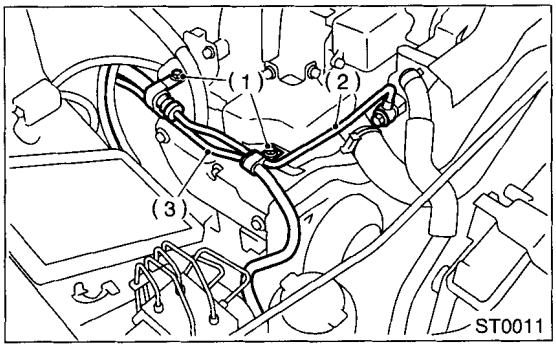

(1) Bolt A
(2) Pipe C
(3) Pipe D

- TURBO model

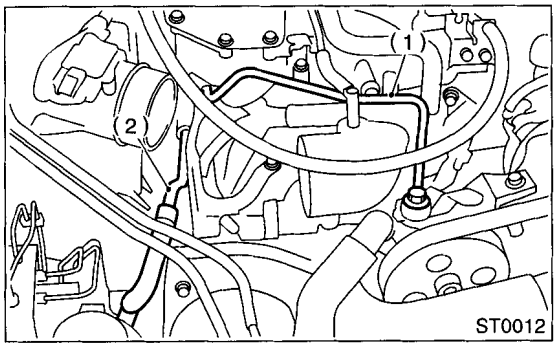

(1) Pipe C
(2) Pipe D

(1) Connect the pipe D to oil tank.
(2) Install the pipe C to oil pump.

CAUTION:
Use a new gasket.

Tightening torque:
39 N·m (4.0 kgf-m, 28.9 ft-lb)

(3) Tighten bolts fixing pipe C and D.

Tightening torque:
13 N·m (1.3 kgf-m, 9.4 ft-lb)

2) Install the coolant filler tank. (Turbo model)

Tightening torque:
T1: 19 N·m (1.9 kgf-m, 13.7 ft-lb)
T2: 21 N·m (2.1 kgf-m, 15.2 ft-lb)

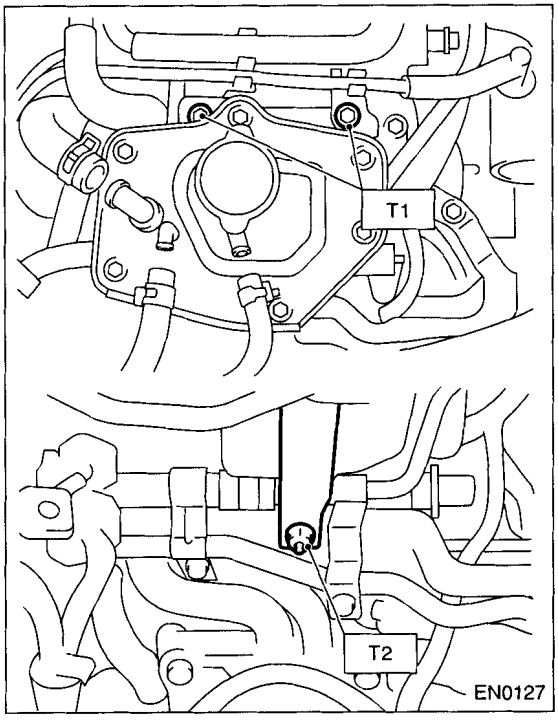

3) Temporarily connect the pipes C and D to the pipes (on the gearbox side).

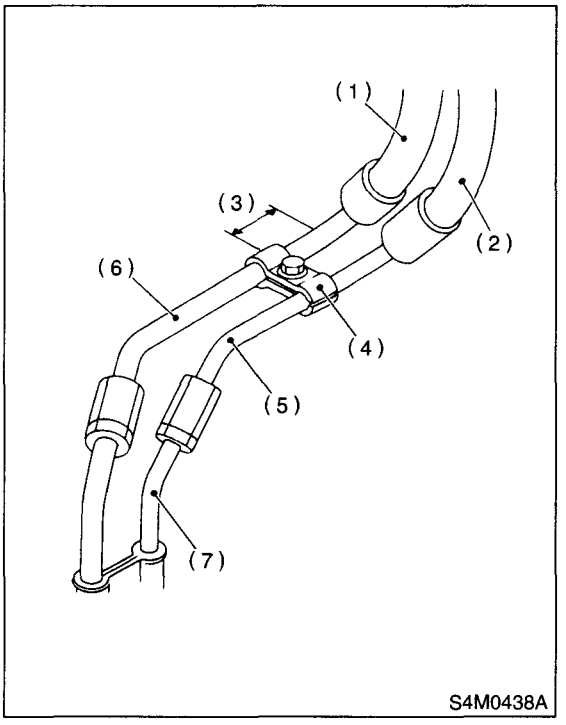

(1) Return hose
(2) Pressure hose
(3) Approx. 30 mm (1.18 in)
(4) Clamp E
(5) Pipe C
(6) Pipe D
(7) Pipe (on gearbox side)

4) Temporarily install the clamp E on the pipes C and D.

CAUTION:
Ensure that the letter "8" on each clamp are diagonally opposite each other as shown in figure.

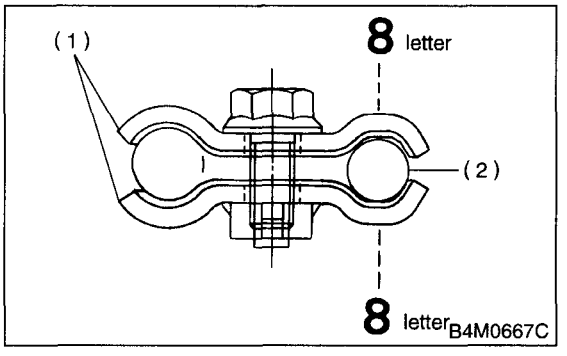

(1) Clamp E
(2) Pipe C

5) Tighten the clamp E firmly.

Tightening torque:
7.4 N·m (0.75 kgf-m, 5.4 ft-lb)

6) Tighten the joint nut.

Tightening torque:
15 N·m (1.5 kgf-m, 10.8 ft-lb)

7) Connect the pipes A and B to the four pipe joints of gearbox. Connect the upper pipe B first, and lower pipe A second.

Tightening torque:
13 N·m (1.3 kgf-m, 9.4 ft-lb)

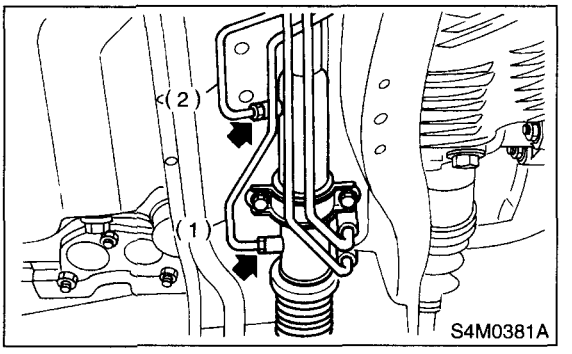

(1) Pipe A
(2) Pipe B

8) Install the jack-up plate.
9) Install the air intake duct. (Non-TURBO model). <Ref. to IN(SOHC)-7, INSTALLATION, Air Intake Duct.>
10) Install the air intake duct, air intake boot and air cleaner upper cover. (TURBO model) <Ref. to IN(DOHC TURBO)-7, INSTALLATION, Air Cleaner.> and <Ref. to IN(DOHC TURBO)-8, INSTALLATION, Air Intake Duct.>
11) Connect the battery ground terminal.

12) Feed the specified fluid.

NOTE:
Never start the engine before feeding the fluid; otherwise vane pump might be seized up.

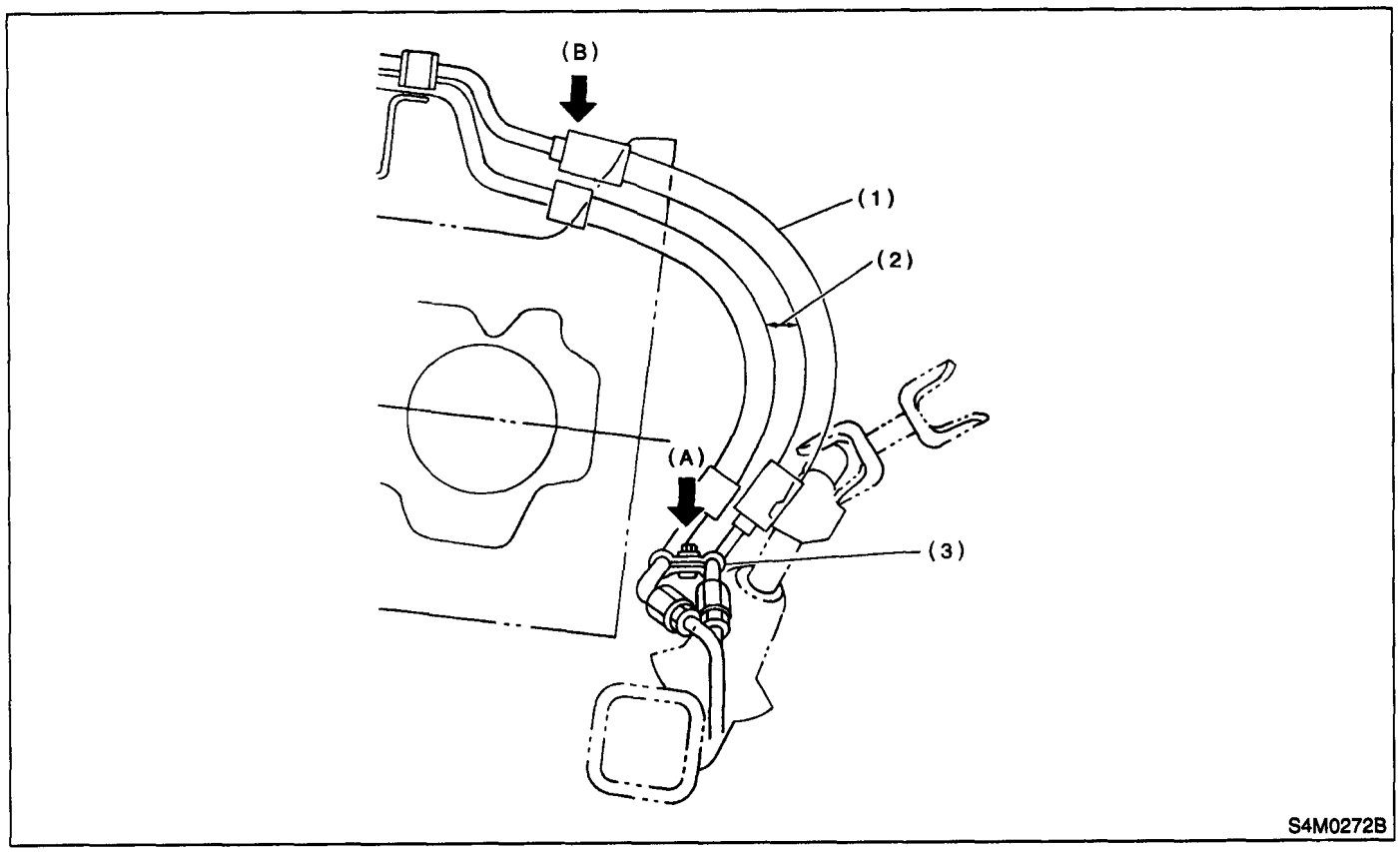

(1) High-pressure hose
(2) No interference is allowed between hoses.
(3) Clearance between crossmember and pipe: 3 — 8 mm (0.12 — 0.31 in)

13) Finally check clearance between pipes and/or hoses, as shown above.
If the clearance between cruise control pump and power steering hose is less than 10 mm (0.39 in), proceed as follows:

(1) Move the clamped section (A) (refer to figure above.) down to a point where the pipe is close to crossmember.

Pipe-to-crossmember clearance:
10 mm (0.39 in), min.

(2) Check that clearance between cruise control pump and power steering hose is at least 10 mm (0.39 in). If it is not, bend section (B) down until a clearance of at least 10 mm (0.39 in) is obtained.

C: INSPECTION

Check all disassembled parts for wear, damage or other abnormalities. Repair or replace faulty parts as required.

Part name	Inspection	Remedy
Pipe	• O-ring fitting surface for damage • Nut for damage • Pipe for damage	Replace with new one.
Clamp B Clamp C Clamp E	• Clamps for weak clamping force	Replace with new one.
Hose	• Flared surface for damage • Flare nut for damage • Outer surface for cracks • Outer surface for wear • Clip for damage • End coupling or adapter for degradation	Replace with new one.

CAUTION:
Although surface layer materials of rubber hoses have excellent weathering resistance, heat resistance and resistance for low temperature brittleness, they are likely to be damaged chemically by brake fluid, battery electrolyte, engine oil and automatic transmission fluid and their service lives are to be very shortened. It is very important to keep the hoses free from before mentioned fluids and to wipe out immediately when the hoses are adhered with the fluids.
Since resistances for heat or low temperature brittleness are gradually declining according to time accumulation of hot or cold conditions for the hoses and their service lives are shortening accordingly, it is necessary to perform careful inspection frequently when the vehicle is used in hot weather areas, cold weather area and/or a driving condition in which many steering operations are required in short time.
Particularly continuous work of relief valve over 5 seconds causes to reduce service lives of the hoses, the oil pump, the fluid, etc. due to over heat.
So, avoid to keep this kind of condition when servicing as well as driving.

Trouble	Possible cause	Corrective action
Pressure hose burst	Excessive holding time of relief status	Instruct customers.
	Malfunction of relief valve	Replace oil pump.
	Poor cold characteristic of fluid	Replace fluid.
Forced out return hose	Poor connection	Correct.
	Poor holding of clip	Retighten.
	Poor cold characteristic of fluid	Replace fluid.
Fluid bleeding out of hose slightly	Wrong layout, tensioned	Replace hose.
	Excessive play of engine due to deterioration of engine mounting rubber	Replace defective parts.
	Improper stop position of pitching stopper	Replace defective parts.
Crack on hose	Excessive holding time of relief status	Replace. Instruct customer.
	Excessive tightening torque for return hose clip	Replace.
	Power steering fluid, brake fluid, engine oil, electrolyte adhere on the hose surface	Replace. Pay attention on service work.
	Too many times use in extremely cold weather	Replace. Instruct customers.

CAUTION:
It is likely that although one judges fluid leakage, there is actually no leakage. This is because the fluid spilt during the last maintenance was not completely wiped off. Be sure to wipe off spilt fluid thoroughly after maintenance.

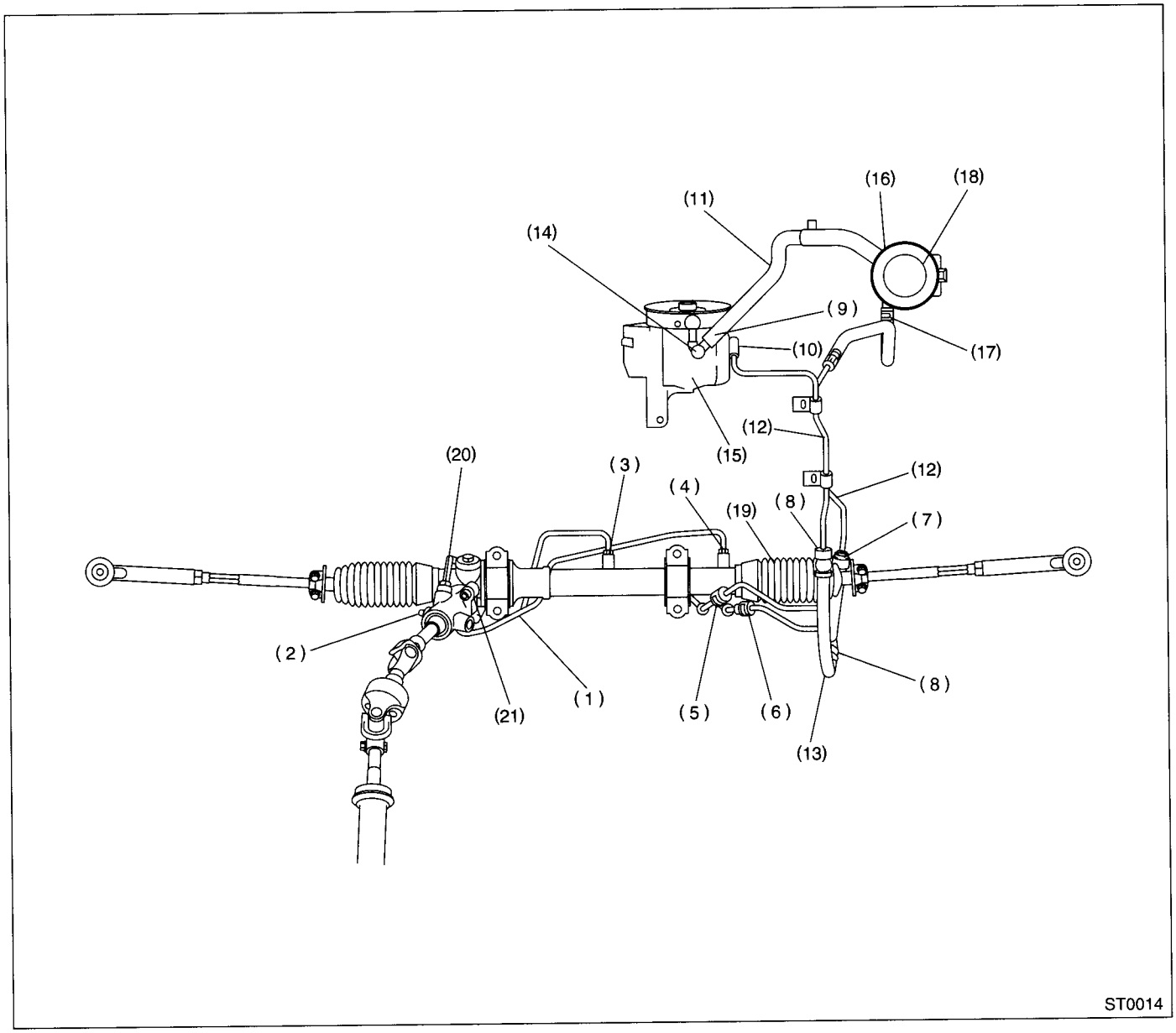

Fluid leaking area	Possible cause	Corrective action
Leakage from connecting portions of pipes and hoses, numbered with (1) through (10) in figure	Insufficient tightening of flare nut, catching dirt or the like, damage to flare or flare nut or eye bolt	Loosen and retighten, if ineffective, replace.
	Poor insertion of hose, poor clamping	Retighten or replace the clamp.
	Damaged O-ring or gasket	Replace O-ring or gasket pipe or hose with new one, if ineffective, replace the gearbox also.
Leakage from hose (11), (12) and (13) in figure	Crack or damage in hose	Replace with a new one.
	Crack or damage in hose hardware	Replace with a new one.
Leakage from surrounding of cast iron portion of oil pump (14) and (15) in figure	Damaged O-ring	Replace the oil pump.
	Damaged gasket	Replace the oil pump.
Leakage from oil tank (16) and (17) in figure	Crack in oil tank	Replace the oil tank.
Leakage from filler neck (18)	Damaged cap packing	Replace the cap.
	Crack in root of filler neck	Replace the oil tank.
	High fluid level	Adjust the fluid level.
Leakage from surrounding of power cylinder of gearbox (19) in figure	Damaged oil seal	Replace the oil seal.
Leakage from control valve of gear-box (20) and (21) in figure	Damaged packing or oil seal	Replace the problem parts.
	Damage in control valve	Replace the control valve.

NOTE:
Fluid level is specified at optimum position (range) for ordinary use. Accordingly, if the vehicle is used often under hard conditions such as on very rough roads or in mountainous areas, fluid may bleed out from cap air vent hole. This is not a problem. If a customer complains strongly and is not likely to be satisfied with the leakage, lower the fluid level to the extent that fluid will not bleed out under the conditions described, and have the customer check the fluid level and its quality more frequency than usual.

7. Oil Pump

A: REMOVAL

1. NON-TURBO MODEL

1) Remove the ground terminal from battery.
2) Remove the pulley belt cover.
3) Loosen the oil pump pulley nut, then remove the bolts which secure alternator.

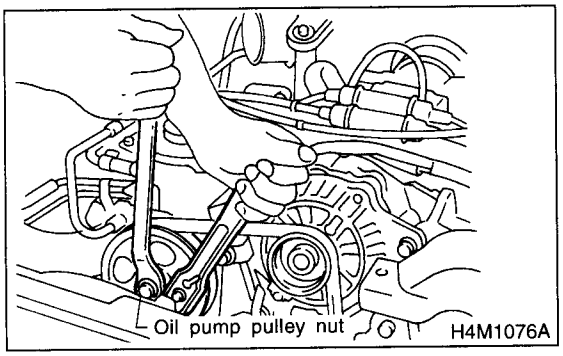

4) Loosen the lock bolt and slider bolt and remove the power steering pump drive V-belt.

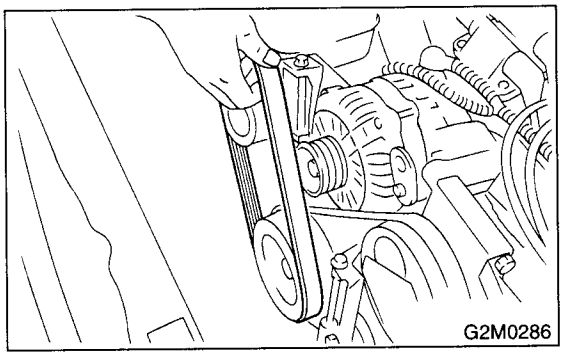

5) Disconnect the connector from the power steering pump switch.

6) Disconnect the pipe C and suction hose from the oil pump.

CAUTION:
- **Do not allow fluid from the hose end to come into contact with pulley belt.**
- **To prevent foreign matter from entering the hose, cover the open ends of them with a clean cloth.**

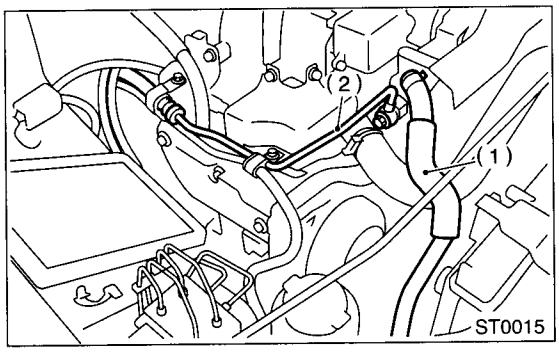

(1) Suction hose
(2) Pipe C

7) Remove the bolts, which install power steering pump bracket.

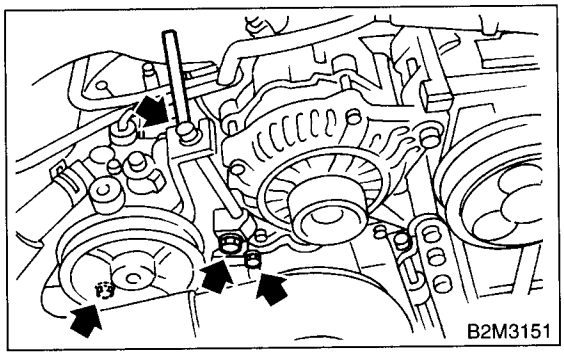

8) Place the oil pump bracket in a vise, remove the two bolts from the front side of oil pump.

CAUTION:
Do not place oil pump bracket directly in the vise; use soft pads and hold oil pump lightly to protect the pump.

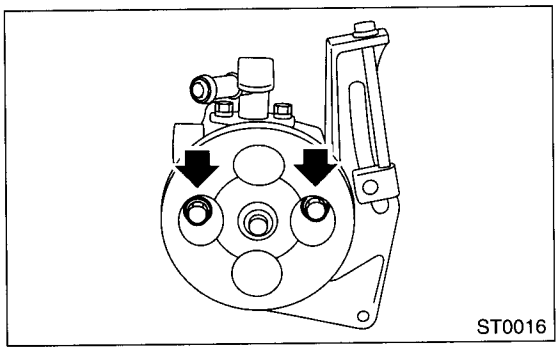

9) Remove the bolt from the rear side of oil pump.

10) Disassemble the oil pump and bracket by inserting a screwdriver as shown in the figure.

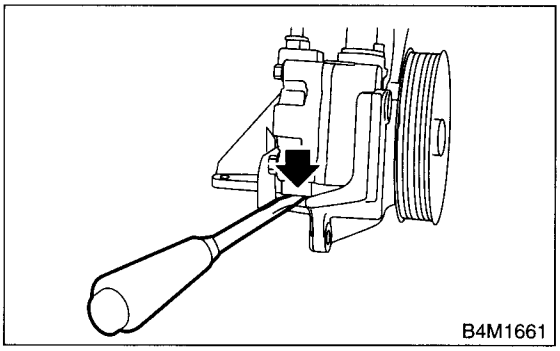

2. TURBO MODEL

1) Remove the ground terminal from battery.
2) Remove the pulley belt cover.
3) Loosen the lock bolt and slider bolt and remove the power steering pump drive V-belt.

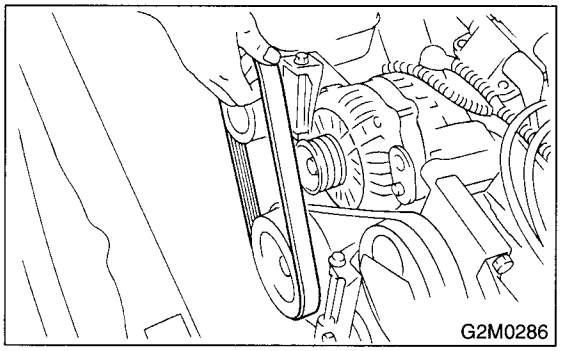

4) Disconnect the connector from the power steering pressure switch.
5) Disconnect the pipe C and suction hose from the oil pump.

CAUTION:
- **Do not allow fluid from the hose end to come into contact with pulley belt.**
- **To prevent foreign matter from entering the hose and pipe, cover the open ends of them with a clean cloth.**

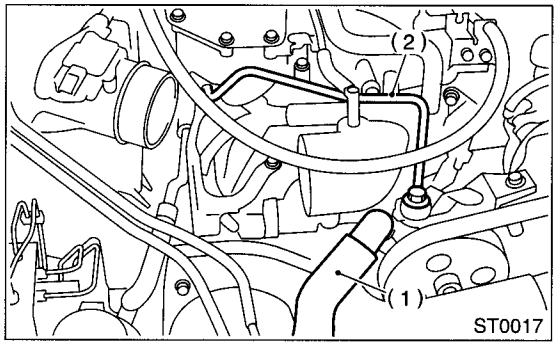

(1) Suction hose
(2) Pipe C

6) Remove the bolts which install power steering pump bracket.

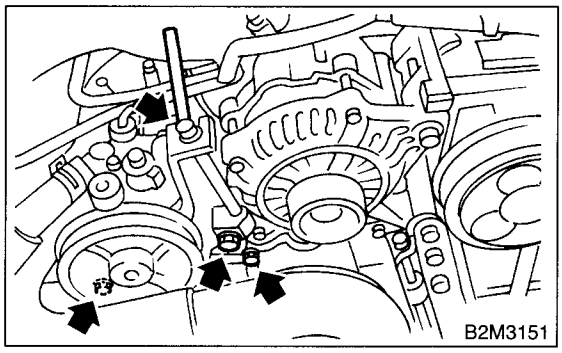

7) Place the oil pump bracket in a vise, remove the two bolts from the front side of oil pump.

CAUTION:
Do not place oil pump bracket directly in the vise; use soft pads and hold oil pump lightly to protect the pump.

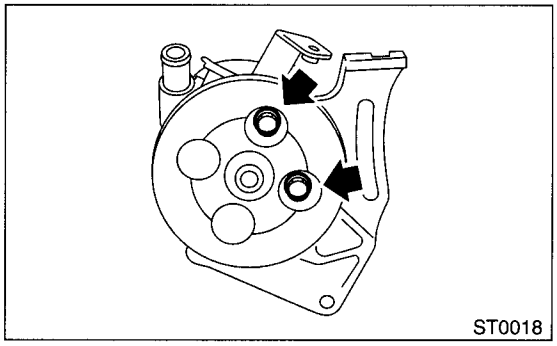

8) Remove the bolt from the rear side of oil pump.
9) Disassemble the oil pump and bracket by inserting a screwdriver as shown in the figure.

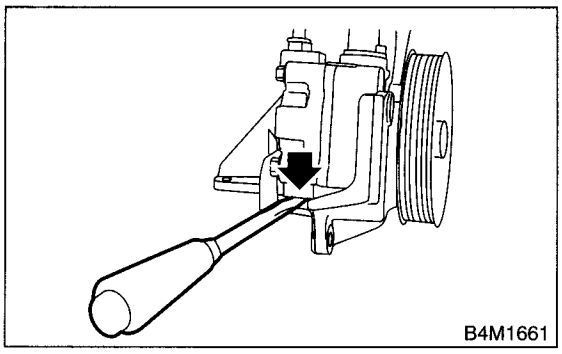

B: INSTALLATION

1. NON-TURBO MODEL

1) Install the oil pump to the bracket.
   (1) Place the oil pump bracket in a vise. Tighten the bushing using a 12.7 mm (1/2″) type 14 and 21-mm box wrench until it is in contact with oil pump mounting surface.

CAUTION:
Do not place oil pump bracket directly in the vise; use soft pads and hold oil pump lightly to protect the pump.

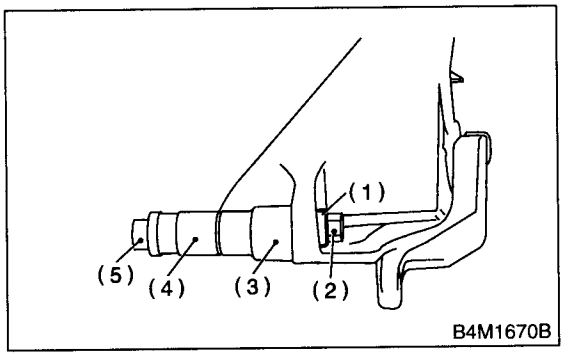

(1) Bush
(2) Nut
(3) 21 mm
(4) 14 mm
(5) Bolt

(2) Tighten the bolt which installs oil pump to the bracket.

Tightening torque:
15.7 N·m (1.6 kgf-m, 11.6 ft-lb)

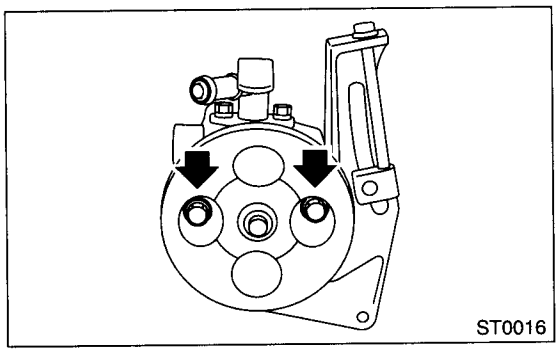

Tightening torque:
37.3 N·m (3.8 kgf-m, 27.5 ft-lb)

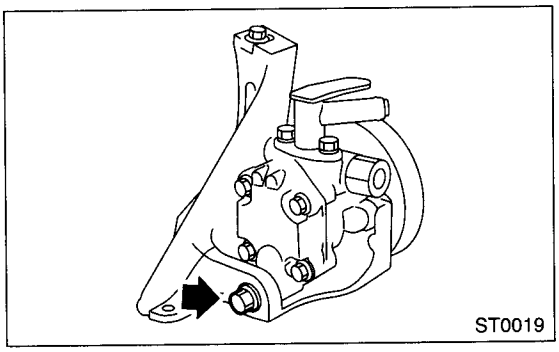

2) Tighten the bolt which installs power steering pump bracket.

Tightening torque:
22 N·m (2.2 kgf-m, 15.9 ft-lb)

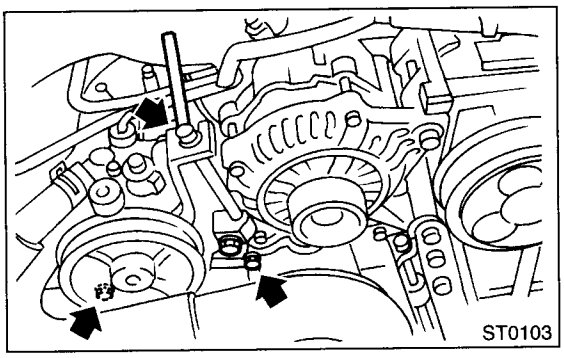

3) Interconnect the pipe C and suction hose.

Tightening torque:
Joint nut
39.2 N·m (4 kgf-m, 28.9 ft-lb)

CAUTION:
If a hose is twisted at this step, the hose may come into contact with some other parts.

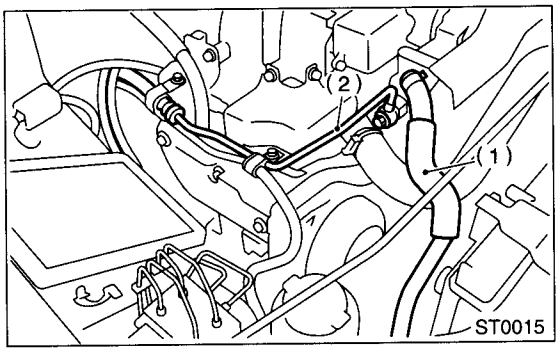

(1) Suction hose
(2) Pipe C

4) Connect the connector to the power steering pump switch.
5) Install the pulley belt to the oil pump.

6) Tighten the oil pump pulley nut to the specified torque.

Tightening torque:
52 N·m (5.3 kgf-m, 38 ft-lb)

7) Check the pulley belt tension.
<Ref. to ME(SOHC)-44, INSPECTION, V-belt.>
8) Tighten the bolt belt tension.

Tightening torque:
8 N·m (0.8 kgf-m, 5.8 ft-lb)

9) Install the pulley belt cover.
10) Connect the ground terminal of battery.
11) Feed the specified power steering fluid. <Ref. to PS-72, Power Steering Fluid.>

CAUTION:
Never start the engine before feeding the fluid; otherwise vane pump might be seized up.

2. TURBO MODEL

1) Install the oil pump to the bracket.
   (1) Place the oil pump bracket in a vise. Tighten the bushing using a 12.7 mm (1/2″) type 14- and 21-mm box wrench until it is in contact with oil pump mounting surface.

CAUTION:
Do not place oil pump bracket directly in the vise; use soft pads and hold oil pump lightly to protect the pump.

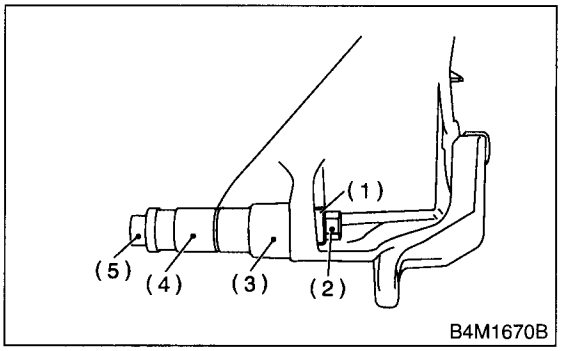

(1) Bush
(2) Nut
(3) 21 mm
(4) 14 mm
(5) Bolt

   (2) Tighten the bolt which installs oil pump to the bracket.

Tightening torque:
37.3 N·m (3.8 kgf-m, 27.5 ft-lb)

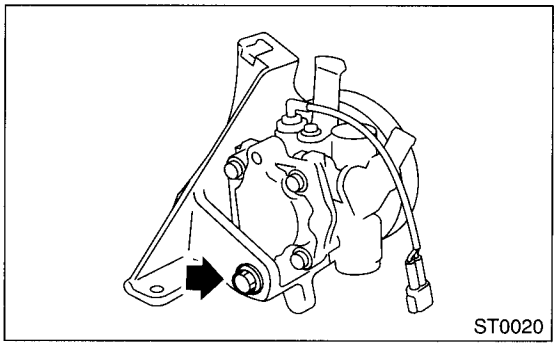

Tightening torque:
15.7 N·m (1.6 kgf-m, 11.6 ft-lb)

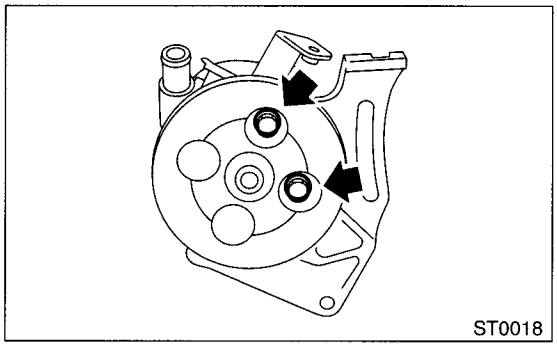

2) Tighten the bolt which install power steering pump bracket.

Tightening torque:
22 N·m (2.2 kgf-m, 15.9 ft-lb)

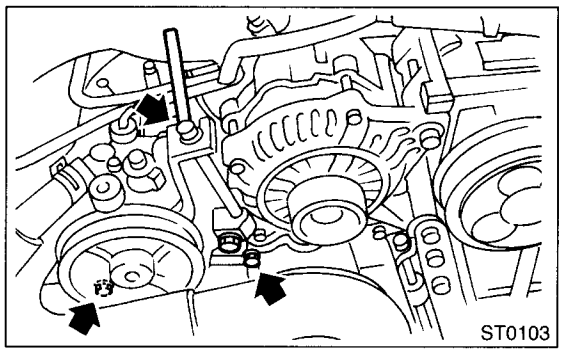

3) Interconnect the pipes C and suction hose.

Tightening torque:
Joint nut
39.2 N·m (4 kgf-m, 28.9 ft-lb)

CAUTION:
If a hose is twisted at this step, the hose may come into contact with some other parts.

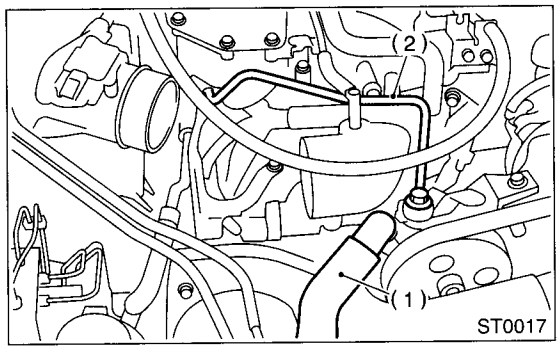

(1) Suction hose
(2) Pipe C

4) Connect the connector to the power steering oil pressure switch.
5) Install the pulley belt to the oil pump.
6) Check the pulley belt tension. <Ref. to ME(DOHC TURBO)-45, INSPECTION, V-belt.>
7) Tighten the bolt belt tension.

Tightening torque:
8 N·m (0.8 kgf-m, 5.8 ft-lb)

8) Install the pulley belt cover.
9) Connect the ground terminal of battery.
10) Feed the specified power steering fluid <Ref. to PS-72, Power Steering Fluid.>

CAUTION:
Never start the engine before feeding the fluid; otherwise vane pump might be seized up.

C: DISASSEMBLY

1. NON-TURBO MODEL

1) Remove the nut and detach oil pump pulley.
2) Remove the stay from the oil pump.
3) Remove the four bolts which secure rear cover.

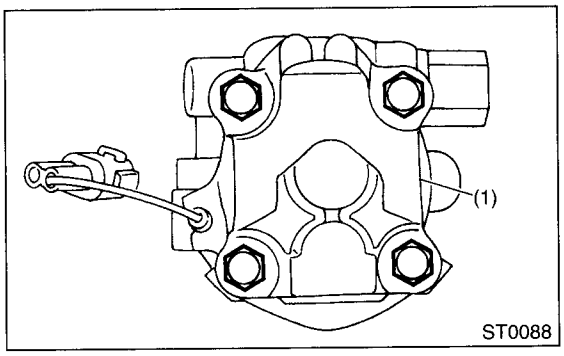

(1) Rear cover

4) Using a screwdriver, pry the retaining ring off.

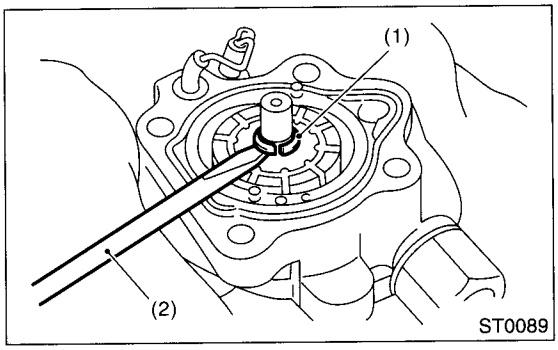

(1) Retaining ring
(2) Screwdriver

5) Extract the shaft from the front casing.

6) Remove the following parts from the front casing.

CAUTION:
Discard old seal washer; replace with a new one.

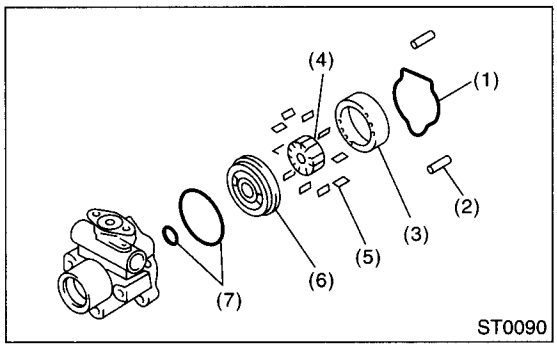

(1) O-ring
(2) Straight pin (2 ea.)
(3) Cam ring
(4) Rotor
(5) Vane (10 ea.)
(6) Pressure plate
(7) O-ring (2 ea.)

7) Pry the oil seal off using a screwdriver.

CAUTION:
Be careful not to scratch inner surface of casing.

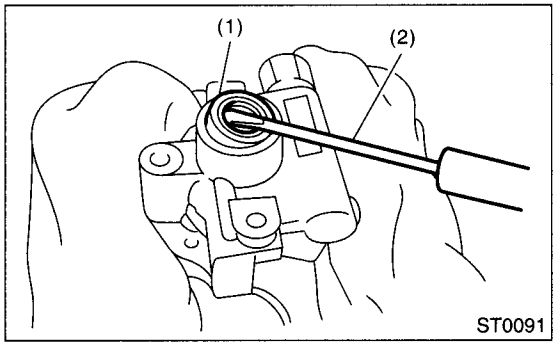

(1) Oil seal
(2) Screwdriver

8) Remove the pressure switch.

9) Slightly loosen the outlet connector, and remove the connector.

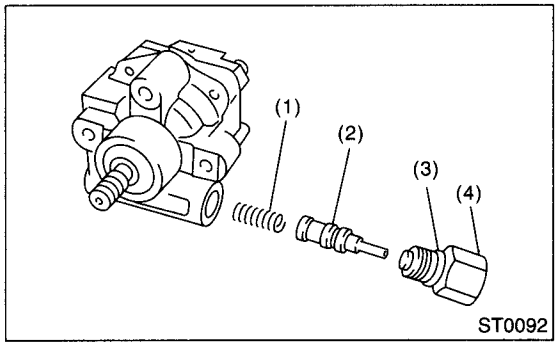

(1) Flow control spring
(2) Spool valve assembly
(3) O-ring
(4) Connector

2. TURBO MODEL

1) Using ST, place the oil pump in a vise and remove the four bolts which secure rear cover.
ST 34199AE020 MOUNT

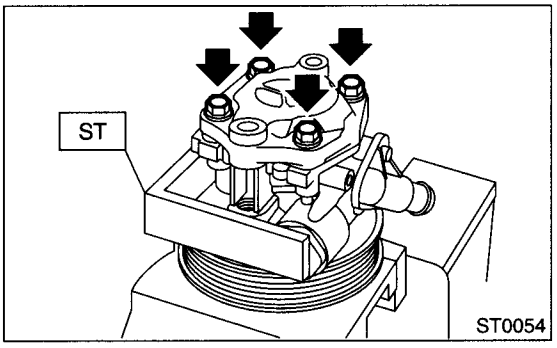

2) Using a screwdriver, pry the retaining ring off.

CAUTION:
Do not remove cam ring, rotor, etc.

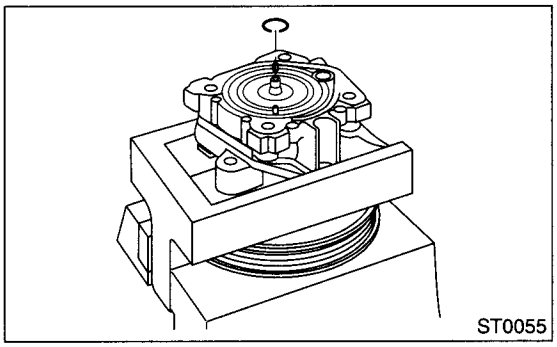

3) Extract the oil pump pulley from the front casing.

4) Remove the following parts from the front casing.

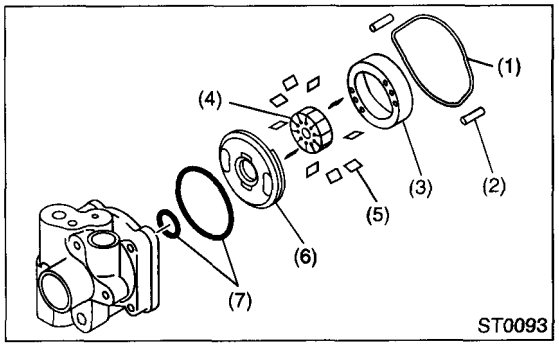

(1) O-ring
(2) Straight pin (2 ea.)
(3) Cam ring
(4) Rotor
(5) Vane (10 ea.)
(6) Pressure plate
(7) O-ring (2 ea.)

5) Place the oil pump in a vise.

CAUTION:
Do not place oil pump directly in the vise, use soft pads and hold oil pump lightly to protect the pump.

6) Pry the oil seal off using a screwdriver.

CAUTION:
Be careful not to scratch inner surface of casing.

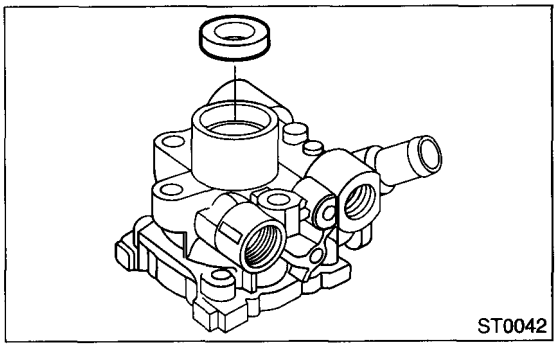

D: ASSEMBLY

1. NON-TURBO MODEL

1) Reassembly precautions
(1) Whenever the O-rings, oil seals, and snap rings are removed, they must be replaced with new ones.
(2) Thoroughly wash the parts and allow to dry. They must be kept free from cleaning oil and dust.
(3) Reassembly procedure must be performed in clean place. Ensure that the parts are kept away from the waste threads or other dust particles.
(4) Cleaning oil tends to stay inside the front casing. Remove it completely by blowing compressed air.
(5) Ensure that the parts are free from rust. (Use specified hydraulic oil for rust prevention after cleaning and drying.)
(6) Reverse the sequence of disassembly procedures.

2) Apply the grease to the oil seal and inner surface of front casing (at bearing location).

CAUTION:
Make sure that the front body internal surfaces are free from damage.

3) Attach ST to the front body. Using a press, install the oil seal.
ST 34199AE030

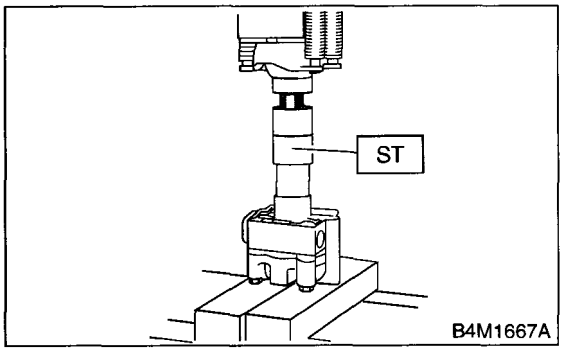

4) Press-fit the shaft assembly into the front body.
5) Apply the specified hydraulic oil to the O-rings and fit them into the front casing.

6) Install the side plate to the front casing.

CAUTION:
Use care not to let side plate gall.

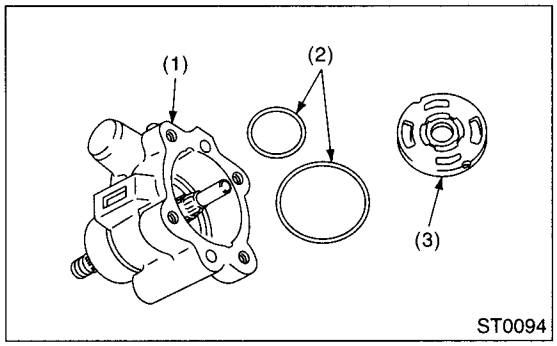

(1) Front casing
(2) O-ring
(3) Side plate

7) Install the cam ring to the front casing with alignment mark facing forward.

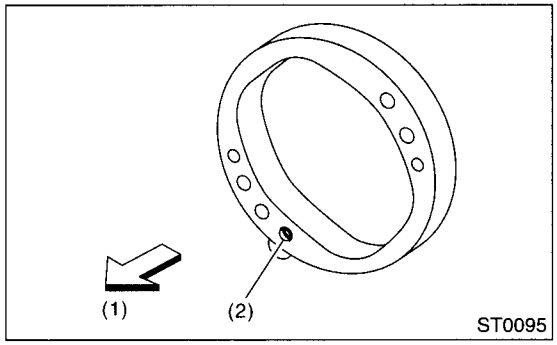

(1) Front
(2) Alignment mark

8) Install the rotor to the front casing with groove facing rearward.

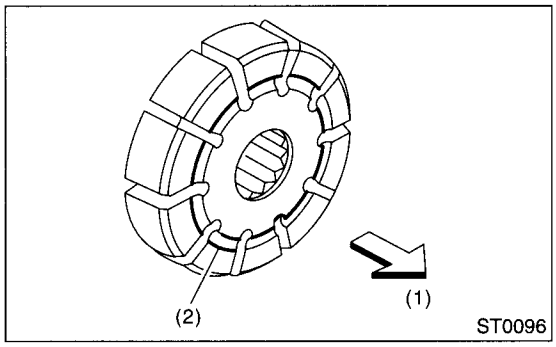

(1) Rear
(2) Groove

9) Install the 10 vanes into the rotor with their nose radius facing toward cam ring.

10) Install the cam ring to the front casing, securing with knock pins.

CAUTION:
Do not use hammer to fit knock pins in position.

11) Mount the O-ring on the front casing.

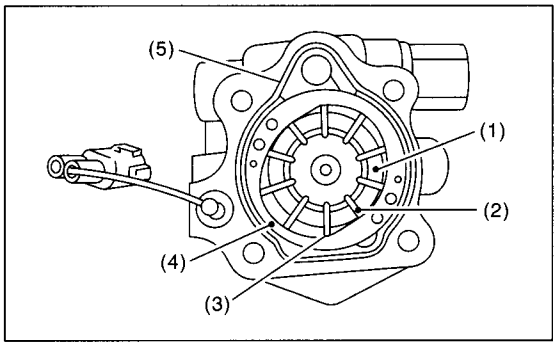

(1) Rotor
(2) Vane
(3) Radius facing
(4) Cam ring
(5) O-ring

12) Using STs, press the retaining ring into the shaft groove.

CAUTION:
Discard retaining ring and replace with a new one.

NOTE:
Use ST2, bending its top edge slightly toward the inside.

ST1 34099AC030 INSTALLER RETAINING RING CAP
ST2 34099AC040 INSTALLER RETAINING RING PIPE

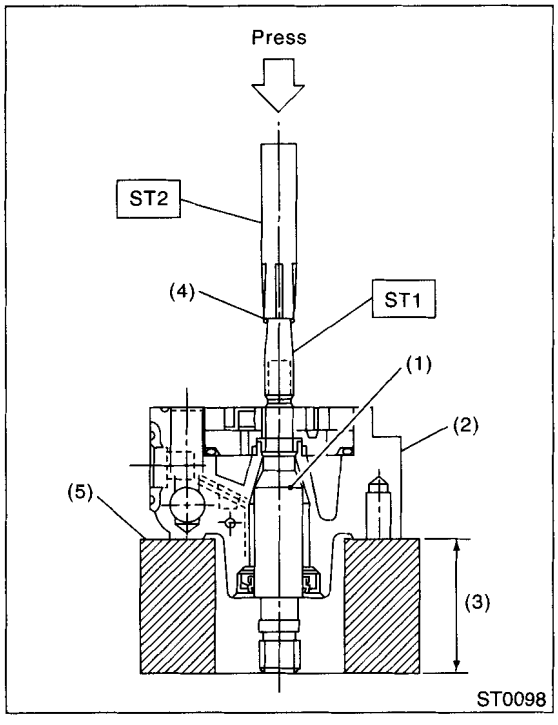

(1) Shaft
(2) Front casing
(3) 48 mm (1.89 in)
(4) Retaining ring
(5) Block

CAUTION:
Make sure the retaining ring is fit in the second groove of the shaft.

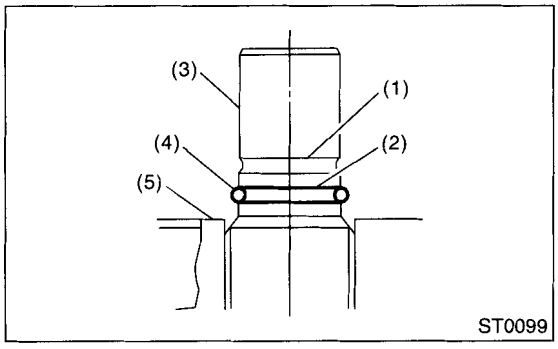

(1) First groove
(2) Second groove
(3) Shaft
(4) Retaining ring
(5) Rotor

13) Mount on pressure switch on front casing.
14) With knock pin positions aligned, install the rear cover.

CAUTION:
Loosely the tighten bolts in the sequence (A), (B), (C), and (D) shown in figure. Then, tighten in the same sequence.

Tightening torque:
21 N·m (2.14 kgf-m, 15.5 ft-lb)

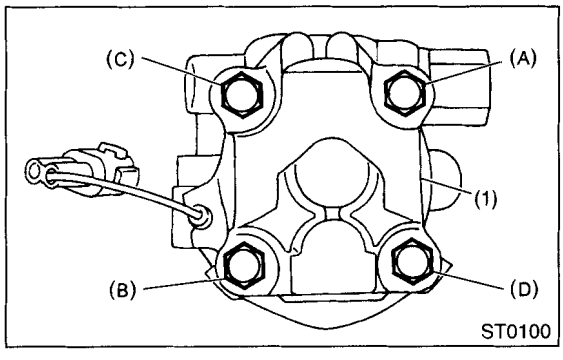

(1) Rear cover

15) Install the spring into the front casing. Then, with spool valve dipped in specified hydraulic oil, install it into the front casing.
16) Using a 5-mm dia. round bar, ensure that the valve moves smoothly.

17) Set the O-ring, with grease applied to it, onto the connector and secure connector to the front casing.

CAUTION:
- **Use care to prevent damage to O-ring at installation.**
- **When tightening the connector, ensure that the O-ring does not protrude or get caught.**

Tightening torque:
49 N·m (5.0 kgf-m, 36.2 ft-lb)

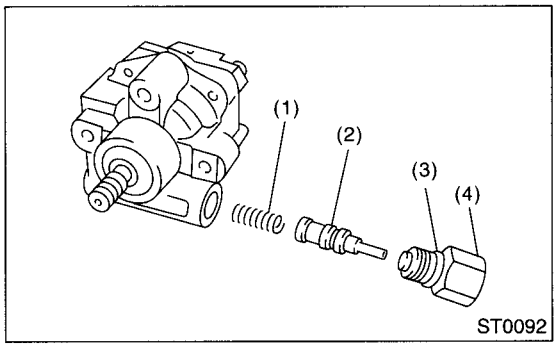

(1) Flow control spring
(2) Spool valve assembly
(3) O-ring
(4) Connector

18) Fix the oil pump pulley temporarily.
19) When the reassembly procedures have been completed, turn the shaft by hand to ensure it turns smoothly. If it binds or other unusual conditions are evident, disassemble again and check for foreign matter trapped on sliding surfaces and improper installation. Eliminate the cause of trouble.
20) Check followings by referring to "CHECK" article.
- Excessive play in pulley shaft
- Ditch deflection of pulley
- Resistance to rotation of pulley
- Measurement of generated oil pressure

2. TURBO MODEL

1) Reassembly precautions
(1) Whenever the O-rings, oil seals, and snap rings are removed, they must be replaced with new ones.
(2) Thoroughly wash the parts and allow to dry. They must be kept free from cleaning oil and dust.
(3) Reassembly procedure must be performed in clean place. Ensure that the parts are kept away from the waste threads or other dust particles.
(4) Cleaning oil tends to stay inside the front casing. Remove it completely by blowing compressed air.
(5) Ensure that the parts are free from rust. (Use specified hydraulic oil for rust prevention after cleaning and drying.)
(6) Reverse the sequence of disassembly procedures.
2) Apply grease to the oil seal and inner surface of front casing (at bearing location).

CAUTION:
Make sure that the front body internal surfaces are free from damage.

3) Attach ST to front body. Using a press, install the oil seal.
ST 34199AE030 INSTALLER

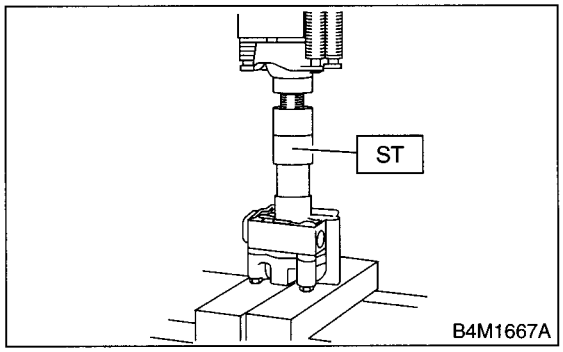

4) Install the pump pulley to front body.
5) Using ST, place the oil pump in a vise.
ST 34199AE020 MOUNT
6) Remove the rear cover.

7) Install the following parts to casing.

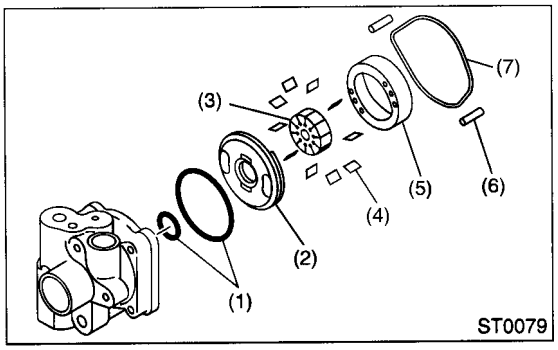

(1) O-ring
(2) Pressure plate
(3) Rotor
(4) Vane
(5) Cam ring
(6) Straight pin
(7) O-ring

NOTE:
Install the rotor with the mark facing the rear case side.

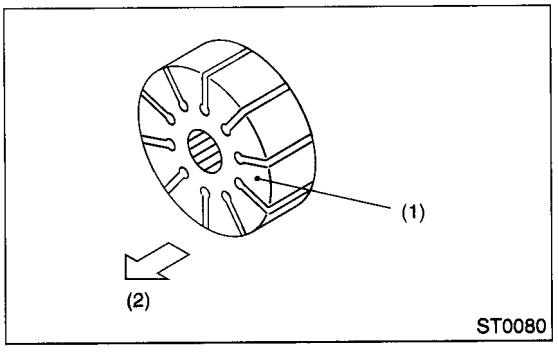

(1) Mark
(2) Rear

8) Using 8-mm box wrench, tap the retaining ring into the shaft groove.

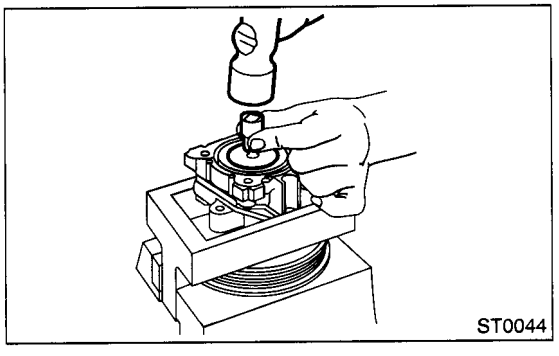

9) Install the O-ring to the rear cover.
10) Install the rear cover.

Tightening torque:
27.5 N·m (2.8 kgf-m, 20.3 ft-lb)

CAUTION:
Loosely tighten the bolts in the sequence (A), (B), (C), and (D) shown in figure. Then, tighten in the same sequence.

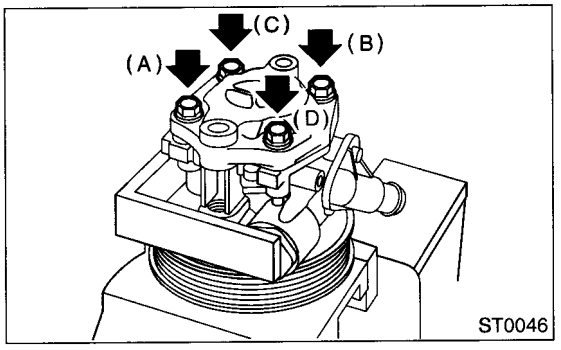

11) When the reassembly procedures have been completed, turn the shaft by hand to ensure it turns smoothly. If it binds or other unusual conditions are evident, disassemble again and check for foreign matter trapped on sliding surfaces and improper installation. Eliminate the cause of trouble.
12) Check followings by referring to "CHECK" article.

- Excessive play in pulley shaft
- Ditch deflection of pulley
- Resistance to rotation of pulley
- Measurement of generated oil pressure

E: INSPECTION

1. BASIC INSPECTION

Perform the following inspection procedures and repair or replace defective parts.

Part name	Description	Remedy
1. Front casing	1) Damage on body surfaces 2) Excessive wear on hole, into which spool valve is inserted. 3) Wear and damage on cartridge assembly mounting surface 4) Wear and damage on surfaces in contact with shaft and oil seal	Replace with a new one together with spool valve as selective fit is made.
2. Rear cover	1) Damage on body surfaces 2) Wear and damage on sliding surfaces	Replace with a new one.
3. Shaft	1) Shaft bend 2) Wear and damage on surfaces in contact with bushing and oil seal 3) Wear and damage on rotor mounting surfaces 4) Bearing damage	Replace with a new one.
4. Pressure plate	Wear and damage on sliding surfaces	Replace with a new one.
5. Cam ring	Ridge wear on sliding surfaces	If the damage is serious, replace with a new cartridge assembly.
6. Vane	Excessive wear on nose radius and side surfaces	
7. Rotor	1) Wear and damage on sliding surfaces 2) Ridge wear on vane sliding grooves (If light leaks with vane in slit against light source)	
	3) Damage resulting from snap ring removal	Correct with oil stone. If the damage is serious, replace with a new cartridge assembly.
8. Connector	Damage on threads	Replace with a new one.
9. Spring	Damage	Replace with a new one.
10. Bolts and nuts	Damage on threads	Replace with a new one.

- In accordance with the following table, check all removed parts for wear and damage, and make repair or replacement if necessary.

No.	Parts	Inspection	Corrective action
1	Oil pump (Exterior)	(1) Crack, damage or oil leakage	Replace the oil pump with a new one.
		(2) Play of pulley shaft	Measure the radial play and axial play. If any of these exceeds the service limit, replace the oil pump with a new one.
2	Pulley	(1) Damage	Replace it with a new one.
		(2) Bend	Measure the V ditch deflection. If it exceeds the service limit, replace the pulley with a new one.
3	Oil pump (Interior)	(1) Defect or burning of vane pump	Check the resistance to the rotation of pulley. If it is past the service limit, replace the oil pump with a new one.
		(2) Bend in the shaft or damage to bearing	Oil pump emits a noise that is markedly different in tone and loudness from a sound of a new oil pump when turning with a string put around its pulley, replace the oil pump with a new one.
4	O-ring	Crack or deterioration	Replace it with a new one.
5	Bracket	Crack	Replace it with a new one.

2. SERVICE LIMIT

Make a measurement as follows. If it exceeds the specified service limit, replace the parts with new ones.

CAUTION:

- **Fix oil pump on a vise to make a measurement. At this time, hold oil pump with the least possible force between two wood pieces.**
- **Do not set outside of flow control valve or pulley on a vise; otherwise outside or pulley might be deformed. Select properly sized wood pieces.**

1) Play of pulley shaft

On condition:
P: 9.8 N (1.0 kgf, 2.2 lb)

Service limit:
Radial play (Direction ⟷)
0.4 mm (0.016 in) or less

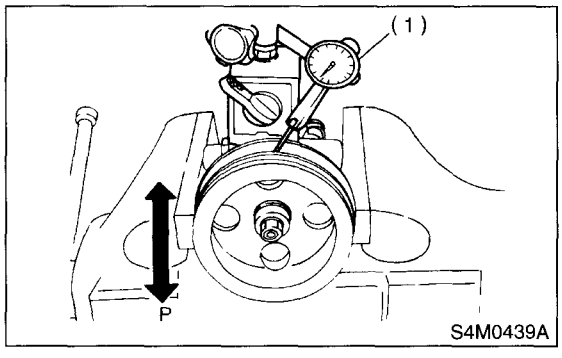

(1) Dial indicator

Axial play (Direction ⟺)
Non-TURBO model
0.4 mm (0.016 in) or less
TURBO model
0.8 mm (0.031 in) or less

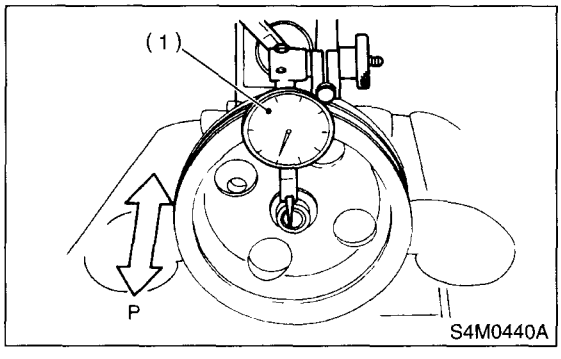

(1) Dial indicator

2) Ditch deflection of pulley

Service limit:
1.0 mm (0.039 in) or less

NOTE:
Read the value for one surface of V ditch, and then the value for another off the dial.

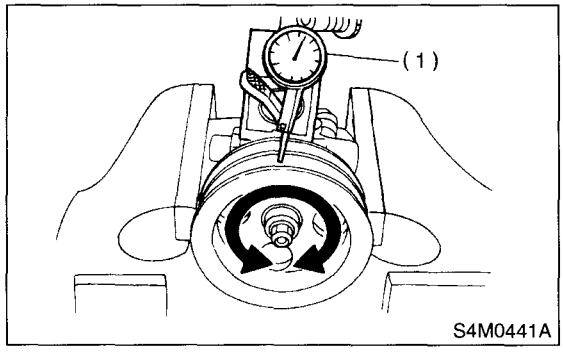

(1) Dial indicator

3) Resistance to rotation of pulley

Service limit:
Maximum load; 9.22 N (0.94 kgf, 2.07 lb) or less

NOTE:

- A rather higher value may be indicated when pulley starts turning.
- Measure the load during rotation and make a judgment.

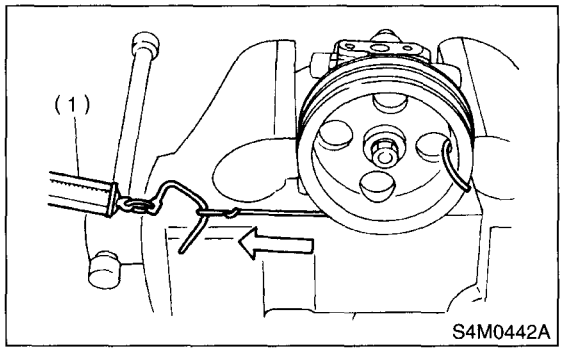

(1) Spring balance

3. HYDRAULIC PRESSURE

CAUTION:

- **Be sure to complete all items aforementioned in "INSPECTION", prior to measuring hydraulic pressure. Otherwise, pressure can not be measured correctly. <Ref. to PS-74, INSPECTION, General Diagnostic Table.>**
- **Do not leave the valve of pressure gauge closed or hold the steering wheel at stop end for 5 seconds or more in any case, as the oil pump may be damaged due to long keep of these conditions.**
- **Put cotton cloth waste at a place where fluid drops before pressure gauge is installed. Wipe off spilt fluid thoroughly after the measurement.**

NOTE:
Keep engine idling during the measurement.

1) MEASURE REGULAR PRESSURE.
   (1) Remove the two bolts securing power steering pipes to the engine.
   (2) Install ST1, 2 and 3 between power steering pump and pipes using gasket (Part No. 34621AC021) and bolt (Part No. 34620AC010).
   (3) Replenish the power steering fluid up to specified level.
   (4) Open the valve, and start the engine.
   (5) Measure the regular pressure.

ST1 925711000 PRESSURE GAUGE
ST2 34099AC020 ADAPTER HOSE B
ST3 34099AC010 ADAPTER HOSE A

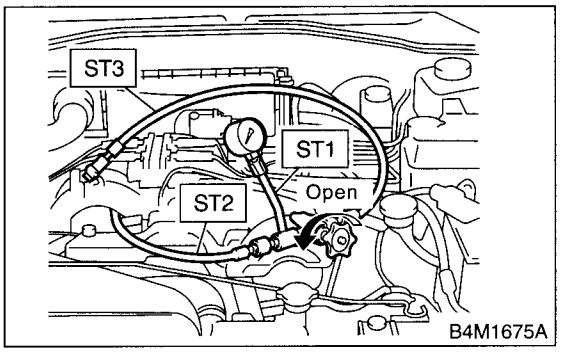

Service limit:
981 kPa (10 kg/cm^2, 142 psi) or less

   (6) If it is not within the specified value, replace the troubled part caused by the following symptoms; pipe or hose clogged, leaks from fluid line, and mix of foreign objects in fluid line.

2) Measure relief pressure.
   (1) Using STs, measure the relief pressure.
   (2) Close the valve.
   (3) Measure the relief pressure.

ST1 925711000 PRESSURE GAUGE
ST2 34099AC020 ADAPTER HOSE B
ST3 34099AC010 ADAPTER HOSE A

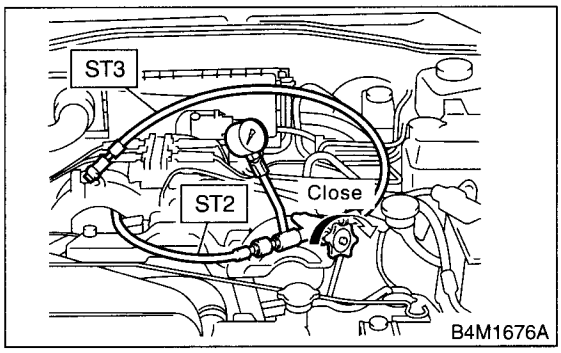

Service limit:
TURBO model
7,350 — 8,036 kPa
(75 — 82 kg/cm^2, 1,067 — 1,165 psi)
Non-TURBO model
7,164 — 7,840 kPa
(73 — 80 kg/cm^2, 1,040 — 1,137 psi)

   (4) If it is not within the specified value, replace the oil pump.

3) Measure working pressure.
   (1) Using STs, measure the working pressure.
   (2) Open the valve.
   (3) Measure the working pressure of control valve by turning wheel from stop to stop.

ST1 925711000 PRESSURE GAUGE
ST2 34099AC020 ADAPTER HOSE B
ST3 34099AC010 ADAPTER HOSE A

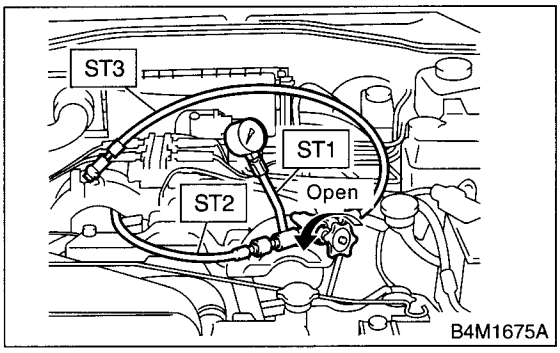

Service limit:
TURBO model
7,350 — 8,036 kPa
(75 — 82 kg/cm^2, 1,067 — 1,165 psi)
Non-TURBO model
7,164 — 7,840 kPa
(73 — 80 kg/cm^2, 1,040 — 1,137 psi)

(4) If it is within the specified value, measure the steering effort. <Ref. to PS-78, MEASUREMENT OF STEERING EFFORT, INSPECTION, General Diagnostic Table.> If it is not within specified value, replace the control valve itself or control valve and pinion as a single unit with new ones.

8. Reservoir Tank

A: REMOVAL

1. NON-TURBO MODEL

1) Remove the air intake duct. <Ref. to IN(SOHC)-7, REMOVAL, Air Intake Duct.>
2) Drain the fluid from the reservoir tank.
3) Disconnect the pipe D from the return hose and suction hose from the oil pump.

CAUTION:
- **Do not allow fluid from the hose end to come into contact with pulley belt.**
- **To prevent foreign matter from entering the hose and pipe, cover the open ends of them with a clean cloth.**

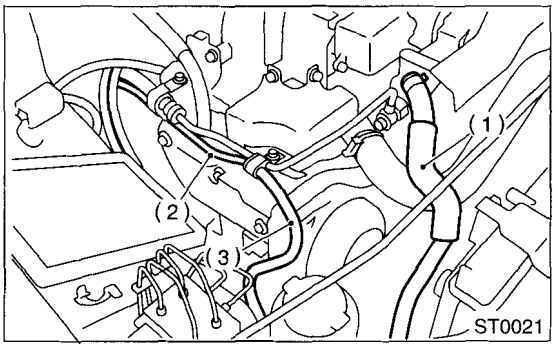

(1) Suction hose
(2) Pipe D
(3) Return hose

4) Remove the reservoir tank from the bracket by pulling it upwards.

2. TURBO MODEL

1) Remove the air intake duct. <Ref. to IN(DOHC TURBO)-9, REMOVAL, Intake Duct.>
2) Drain the fluid from the reservoir tank.
3) Disconnect the return hose and suction hose from the reservoir tank.

CAUTION:
- **Do not allow fluid from the hose end to come into contact with pulley belt.**
- **To prevent foreign matter from entering the hose, cover the open ends of them with a clean cloth.**

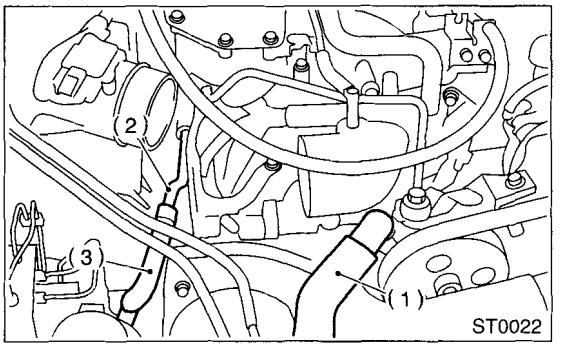

(1) Suction hose
(2) Pipe D
(3) Return hose

4) Remove the reservoir tank from the bracket by pulling it upwards.

B: INSTALLATION

1. NON-TURBO MODEL

1) Install the reservoir tank to the bracket.
2) Connect the pipes D to the return hose and suction hose to the oil pump.

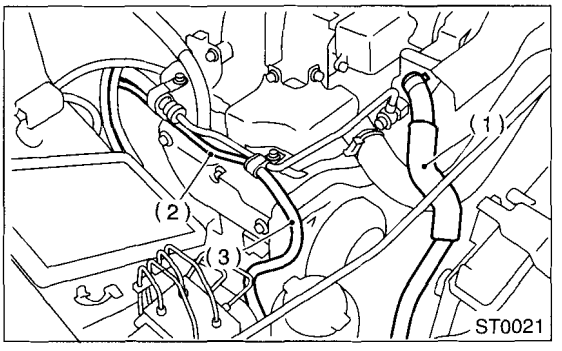

(1) Suction hose
(2) Pipe D
(3) Return hose

3) Feed the specified power steering fluid. <Ref. to PS-72, Power Steering Fluid.>

2. TURBO MODEL

1) Install the reservoir tank to the bracket.
2) Connect the pressure hose and suction hose to the oil pump.

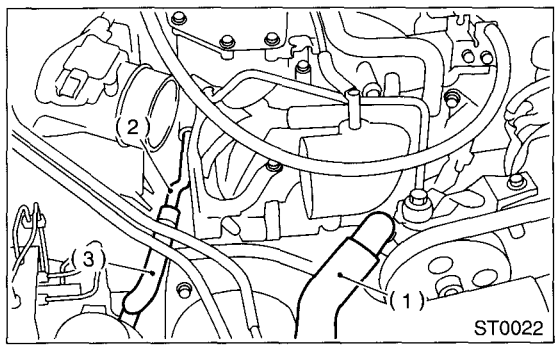

(1) Suction hose
(2) Pipe D
(3) Return hose

3) Feed the specified power steering fluid. <Ref. to PS-72, Power Steering Fluid.>

C: INSPECTION

Check the reservoir tank for cracks, breakage, or damage. If any cracks, breakage, or damage is found, replace the reservoir tank.

9. Power Steering Fluid

A: SPECIFICATION

Recommended power steering fluid	Manufacturer
DEXRON III	B.P.
	CALTEX
	CASTROL
	MOBIL
	SHELL
	TEXACO

B: INSPECTION

1) Check the power steering fluid for deterioration or contamination. If the fluid is highly deteriorated or contaminated, drain it and refill with new fluid.
2) Check the joints and units for oil leakage. If any oil leaks are found, repair or replace the applicable part.
3) Inspect the fluid level on flat and level surface with engine "OFF" by indicator of reservoir tank.
If the level is at lower point or below, add fluid to keep the level in the specified range of the indicator. If at upper point or above, drain the fluid by using a syringe or the like.
(1) Check at temperature 20°C (68°F) on reservoir surface of oil pump; read the fluid level on the "COLD" side.
(2) Check at temperature 80°C (176°F) on reservoir surface of oil pump; read the fluid level on the "HOT" side.

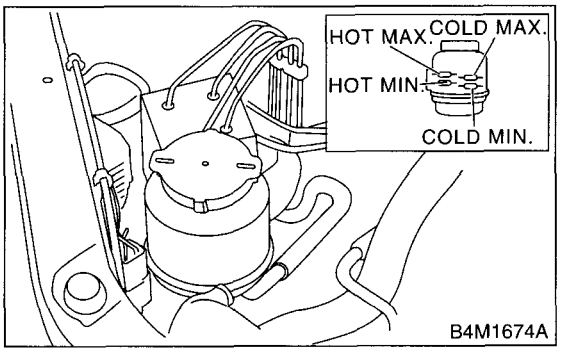

C: INSTALLATION

1) Set ST on the top of reservoir tank and fill it about half way with the specified fluid.
ST 34199AE040 OIL CHARGE

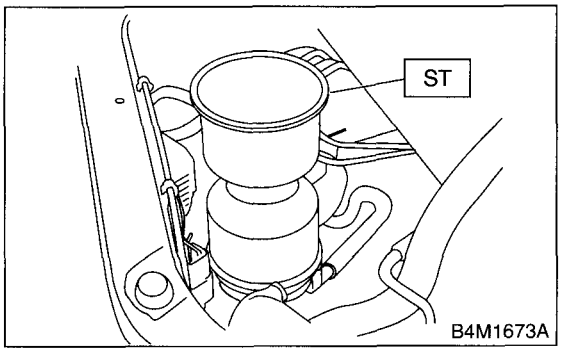

2) Continue to turn the steering wheel slowly from lock to lock until the bubbles stop appearing in the tank while keeping the fluid at that level.
3) In case air is absorbed to deliver bubbles into piping because the fluid level is lower, leave it about half an hour and then do the step 2) all over again.
4) Start, and idle the engine.
5) Continue to turn the steering wheel slowly from lock to lock again until the bubbles stop appearing in the tank while keeping the fluid at that level.
It is normal that bubbles stop appearing after three times turning of steering wheel.
6) In case bubbles do not stop appearing in the tank, leave it about half an hour and then do the step 5) all over again.
7) Stop the engine, and take out safety stands after jacking up vehicle again.
Then lower the vehicle, and idle the engine.
8) Continue to turn the steering wheel from lock to lock until the bubbles stop appearing and change of the fluid level is within 3 mm (0.12 in).
9) In case the following happens, leave it about half an hour and then do step 8) again.
(1) The fluid level changes over 3 mm (0.12 in).
(2) Bubbles remain on the upper surface of the fluid.
(3) Grinding noise is generated from oil pump.

10) Check the fluid leakage at flare nuts after turning steering wheel from lock to lock with engine running.

CAUTION:

- **Before checking, wipe off any fluid on flare nuts and piping.**
- **In case the fluid leaks from flare nut, it is caused by dust (or the like) and/or damage between flare and tapered seat in piping.**
- **So remove the flare nut, tighten again it to the specified torque after cleaning flare and tapered seat. If flare or tapered seat is damaged, replace it with a new one.**

10.General Diagnostic Table

A: INSPECTION

Trouble	Possible cause	Corrective action
• Heavy steering effort in all ranges • Heavy steering effort at stand still • Steering wheel surges when turning.	1. Pulley belt • Unequal length of pulley belts • Adhesion of oil and grease • Loose or damage of pulley belt • Poor uniformity of pulley belt cross section • Pulley belt touches to pulley bottom • Poor revolution of pulleys except oil pump pulley • Poor revolution of oil pump pulley	Adjust or replace.
	2. Tire and rim • Improper tires out of specification • Improper rims out of specification • Tires not properly inflated*1	Replace or reinflate.
	3. Fluid • Low fluid level • Aeration • Dust mix • Deterioration of fluid • Poor warming-up of fluid *2	Refill, bleed air, replace or instruct customer.
	4. Idling speed • Lower idling speed • Excessive drop of idling speed at start or at turning steering wheel *3	Adjust or instruct customer.
	5. Measure hydraulic pressure.<Ref. to PS-66, INSPECTION, Oil Pump.>	Replace problem parts.
	6. Measure steering effort.<Ref. to PS-74, INSPECTION, General Diagnostic Table.>	Adjust or replace.
• Vehicle leads to one side or the other. • Poor return of steering wheel to center • Steering wheel surges when turning.	1. Fluid line • Folded hose • Flattened pipe	Reform or replace.
	2. Tire and rim • Flat tire • Mix use of different tires • Mix use of different rims • Abnormal wear of tire • Unbalance of remained grooves • Unbalance of tire pressure	Fix or replace.
	3. Front alignment • Improper or unbalance caster • Improper or unbalance toe-in • Loose connection of suspension	Adjust or retighten.
	4. Others • Damaged joint assembly • Unbalanced height • One-sided weight	Replace, adjust or instruct customer.
	5. Measure steering effort.<Ref. to PS-74, INSPECTION, General Diagnostic Table.>	Adjust or replace.

*1 If the tires and/or rims are wider, the load to power steering system is the more. Accordingly, in a condition, for example before fluid warms-up, relief valve may work before maximum turning angle. In this case, steering effort may be heavy. When the measured hydraulic pressure is normal, there is no abnormal thing.
*2 In cold weather, steering effort may be heavy due to increased flow resistance of cold fluid. After warming-up engine, turn the steering wheel from stop to stop several times to warm-up fluid. Then if steering effort reduces normally, there is no abnormal thing.
*3 In cold weather or with insufficient warm-up of engine, steering effort may be heavy due to excessive drop of idling when turning steering wheel. In this case, it is recommended to start the vehicle with increasing engine speed than usual. Then if steering effort reduces normally, there is no abnormal thing.

1. NOISE AND VIBRATION

CAUTION:
Don't keep the relief valve operated over 5 seconds at any time or inner parts of the oil pump may be damaged due to rapid increase of fluid temperature.

NOTE:
- Grinding noise may be heard immediately after the engine start in extremely cold condition. In this case, if the noise goes off during warm-up there is no abnormal function in the system. This is due to the fluid characteristic in extremely cold condition.
- Oil pump makes whine or growl noise slightly due to its mechanism. Even if the noise can be heard when steering wheel is turned at stand still there is no abnormal function in the system provided that the noise eliminates when the vehicle is running.
- When stopping with service brake and/or parking brake applied, power steering can be operated easily due to its light steering effort. If doing so, the disk rotates slightly and makes creaking noise. The noise is generated by creaking between the disk and pads. If the noise goes off when the brake is released, there is no abnormal function in the system.
- There may be a little vibration around the steering devices when turning steering wheel at standstill, even though the component parts are properly adjusted and have no defects.

Hydraulic systems are likely to generate this kind of vibration as well as working noise and fluid noise because of combined conditions, i.e., road surface and tire surface, engine speed and turning speed of steering wheel, fluid temperature and braking condition.
This phenomena does not indicate there is some abnormal function in the system.
The vibration can be known when steering wheel is turned repeatedly at various speeds from slow to rapid step by step with parking brake applied on concrete road and in "D" range for automatic transmission vehicle.

GENERAL DIAGNOSTIC TABLE

Trouble	Possible cause	Corrective action
Hiss noise (continuous) While engine is running.	Relief valve emits operating sound when steering wheel is completely turned in either direction. (Don't keep this condition over 5 seconds.)	Normal
	Relief valve emits operating sound when steering wheel is not turned. This means that the relief valve is faulty.	Defective Replace the oil pump.
Rattling noise (intermittent) While engine is running.	Interference with adjacent parts	Check the clearance. Correct if necessary. <Ref. to PS-52, INSPECTION, Pipe Assembly.>
	Loosened installation of oil pump, oil tank, pump bracket, gearbox or crossmember	Retighten.
	Loosened installation of oil pump pulley or other pulley(s)	Retighten.
	Loosened linkage or play of steering or suspension Loosened tightening of joint or steering column	Retighten or replace.
	Sound generates from the inside of gearbox or oil pump.	Replace the bad parts of the gearbox or oil pump.
Knocking When turning steering wheel in both direction with small angle repeatedly at engine ON or OFF.	Excessive backlash Loosened lock nut for adjusting backlash	Adjust and retighten.
	Loosened tightening or play of tie-rod, tie-rod end	Retighten or replace.
Grinding noise (continuous) While engine is running.	Vane pump aeration	Inspect and retighten the fluid line connection. Refill the fluid and vent air.
	Vane pump seizing	Replace oil pump.
	Pulley bearing seizing of oil pump	Replace oil pump.
	Folded hose, flat pipe	Replace.
Squeal, squeak (intermittent or continuous) While engine is running.	Maladjustment of pulley belt Damaged or charged pulley belt Unequal length of pulley belts	Adjust or replace. (Replace two belts as a set.)
	Run out or soilage of V-groove surface of oil pump pulley	Clean or replace.
Sizzling noise (continuous) While engine is running.	Fluid aeration	Fix the wrong part causing aeration. Replace the fluid and vent air.
	Damaged pipe of gearbox	Replace the pipe.
	Abnormal inside of hose or pipe Flat hose or pipe	Rectify or replace.
	Abnormal inside of oil tank	Replace.
	Removed oil tank cap	Install cap.
Whistle (continuous) While engine is running.	Abnormal pipe of gearbox or abnormal inside of hose	Replace the bad parts of gearbox or hose.
Whine or growl (continuous or intermittent) While engine is running with/without steering turned.	Loosened installation of oil pump, oil pump bracket	Retighten.
	Abnormal inside of oil pump, hose	Replace the oil pump, hose, if the noise can be heard when running as well as stand still.
	Torque converter growl, air conditioner compression growl	Remove the power steering pulley belt and confirm.
Creaking noise (intermittent) While engine is running with steering turned.	Abnormal inside of gearbox	Replace the bad parts of gearbox.
	Abnormal bearing for steering shaft	Apply the grease or replace.
	Generates when turning steering wheel with brake (service or parking) applied.	If the noise goes off when brake is released, it is normal.

Trouble	Possible cause	Corrective action
Vibration While engine is running with/ without steering turned.	Too low engine speed at start	Adjust and instruct customers.
	Vane pump aeration	Fix the wrong part. Vent air.
	Damaged valve in oil pump, gearbox	Replace the oil pump, bad parts of gearbox.
	Looseness of play of steering, suspension parts	Retighten.

2. MEASUREMENT OF STEERING EFFORT

	Step	Check	Yes	No
1	**CHECK STEERING EFFORT.** 1)Stop the vehicle on a concrete road. 2)Start the engine. 3)Idle the engine. 4)Install the spring scale on the steering wheel. 5)Pull the spring scale at an right angle to the steering wheel, and measure both right and left steering wheel effort. NOTE: When turning steering more quickly than necessary from a direction to the other direction at an engine speed over 2,000 rpm, steering effort may be heavy. This is caused by flow characteristic of oil pump and is not a problem.	Is the steering effort 31.4 N (3.2 kgf, 7.1 lb) or less?	Go to step **2.**	Adjustment backlash.
2	**CHECK STEERING EFFORT.** 1)Stop the engine. 2)Pull the spring scale at an right angle to the steering wheel, and measure both right and left steering wheel effort.	Is the steering effort 294.2 N (30 kgf, 66.2 lb) or less?	Go to step **3.**	Adjustment.
3	**CHECK STEERING WHEEL EFFORT.** 1)Remove the universal joint. 2)Measure the steering wheel effort.	Is the maximum force steering wheel effort 2.26 N (0.23 kgf, 0.51 lb) or less?	Go to step **4.**	Check, adjust and replace if necessary.
4	**CHECK STEERING WHEEL EFFORT.** Measure the steering wheel effort.	Is the fluctuation width 1.08 N (0.11 kgf, 0.24 lb) or less?	Go to step **5.**	Check, adjust and replace if necessary.
5	**CHECK UNIVERSAL JOINT.** Measure the folding torque of the joint (yoke of steering column side). <Ref. to PS-22, INSPECTION, Universal Joint.>	Is the folding torque 7.3 N (0.74 kgf, 1.64 lb) or less?	Go to step **6.**	Replace with new one.
6	**CHECK UNIVERSAL JOINT.** Measure the folding torque of the joint (yoke of gearbox side). <Ref. to PS-22, INSPECTION, Universal Joint.>	Is the folding torque 7.3 N (0.74 kgf, 1.64 lb) or less?	Go to step **7.**	Replace with new one.
7	**CHECK FRONT WHEEL.**	Are the front wheels for unsteady revolution or rattling and brake for dragging?	Inspect, readjust and replace if necessary.	Go to step **8.**
8	**CHECK TIE-ROD ENDS.** Remove the tie-rod ends.	Are the tie-rod ends of suspension for unsteady revolution or ratting?	Inspect and replace if necessary.	Go to step **9.**
9	**CHECK BALL JOINT.**	Are the ball joints of suspension for unsteady revolution or ratting?	Inspect and replace if necessary.	Go to step **10.**
10	**CHECK GEARBOX.** Measure the rotating of gearbox. <Ref. to PS-44, TURNING RESISTANCE OF GEARBOX, INSPECTION, Steering Gearbox.>	Is rotating resistance 12.7 N (1.3 kgf, 2.9 lb) or less in all positions within 20% difference between clockwise and counterclockwise?	Go to step **11.**	Readjust backlash, and if ineffective, replace bad parts.
11	**CHECK GEARBOX.** Measure sliding of gearbox. <Ref. to PS-43, SERVICE LIMIT, INSPECTION, Steering Gearbox.>	Is sliding resistance 340 N (35 kgf, 76 lb) or less with 20% difference between left and right direction?	Steering effort is normal.	Readjust backlash, and if ineffective, replace bad parts.