TRANSMISSION SECTION

CONTROL SYSTEMS	CS
AUTOMATIC TRANSMISSION	AT
AUTOMATIC TRANSMISSION (DIAGNOSTICS)	AT
MANUAL TRANSMISSION AND DIFFERENTIAL	MT
CLUTCH SYSTEM	CL

This service manual has been prepared to provide SUBARU service personnel with the necessary information and data for the correct maintenance and repair of SUBARU vehicles.
This manual includes the procedures for maintenance, disassembling, reassembling, inspection and adjustment of components and diagnostics for guidance of experienced mechanics.
Please peruse and utilize this manual fully to ensure complete repair work for satisfying our customers by keeping their vehicle in optimum condition. When replacement of parts during repair work is needed, be sure to use SUBARU genuine parts.

All information, illustration and specifications contained in this manual are based on the latest product information available at the time of publication approval.

FUJI HEAVY INDUSTRIES LTD.

G1830BE4

CONTROL SYSTEMS

CS

		Page
1.	General Description	2
2.	Electrical Component	6
3.	AT Shift Lock System	8
4.	Select Lever	23
5.	Select Cable	26
6.	AT Shift Lock Solenoid and "P" Position Switch	29
7.	Integrated Module	31
8.	MT Gear Shift Lever	32
9.	General Diagostic	38

1. General Description

A: SPECIFICATIONS

Item		Specification
Vibration torque of rod against lever	N·m (kgf-m, ft-lb)	0.7 (0.07, 0.5) or less

B: COMPONENT

1. AT SELECT LEVER

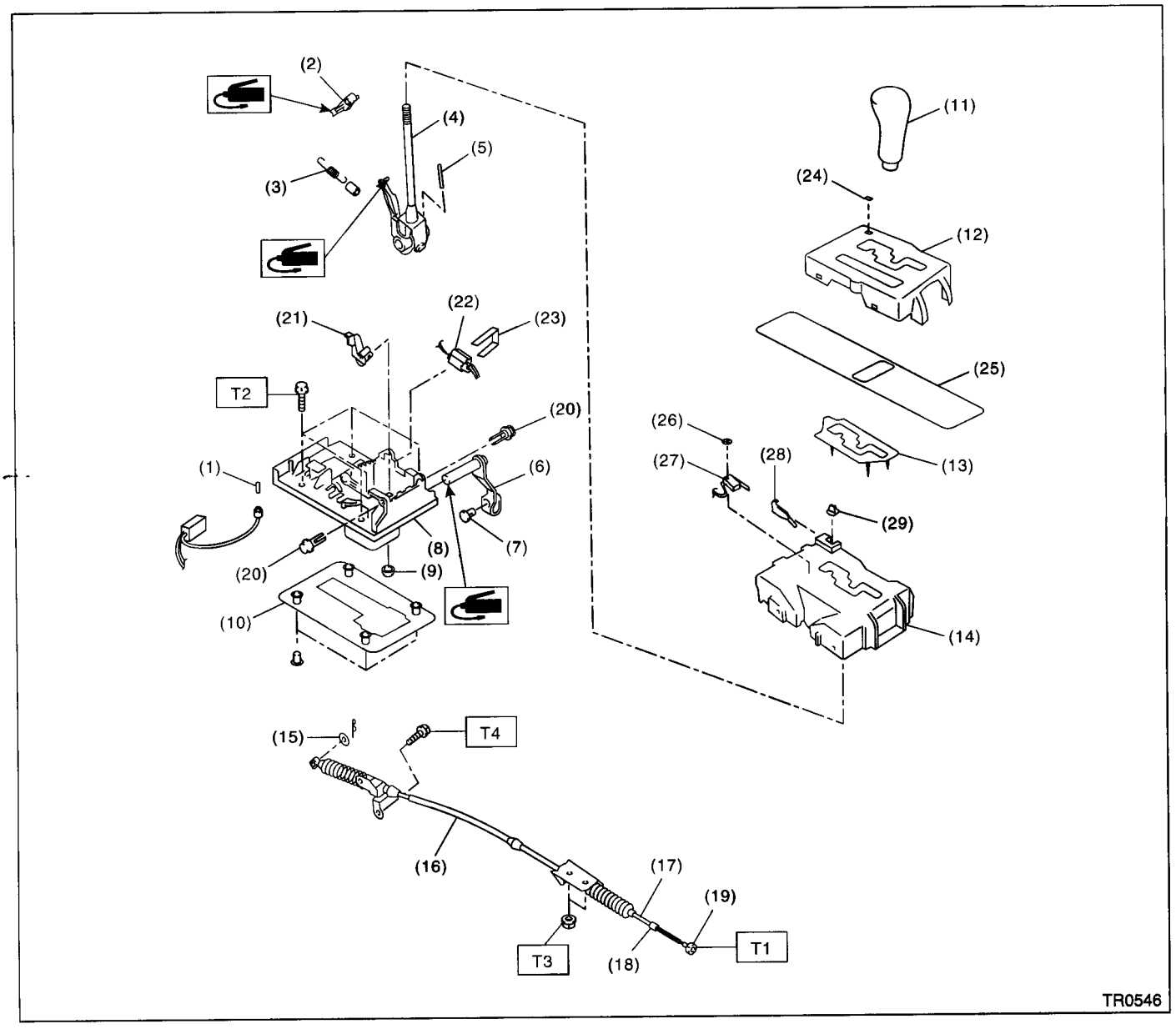

(1) Indicator light bulb
(2) Detent arm
(3) Detent spring
(4) Select lever
(5) Spring pin
(6) Arm
(7) Pin
(8) Plate
(9) Grommet
(10) Packing
(11) Grip
(12) Indicator cover
(13) Cushion
(14) Guide plate
(15) Snap pin
(16) Outer cable
(17) Inner cable
(18) Nut B
(19) Nut A
(20) Clip
(21) Lock plate
(22) Shift lock solenoid
(23) Clamp
(24) Cover
(25) Slider
(26) Clip
(27) "P" position switch
(28) Spring
(29) Button

Tightening torque: N·m (kgf-m, ft-lb)
T1: 7.5 (0.76, 5.5)
T2: 13 (1.3, 9.4)
T3: 18 (1.8, 13.0)
T4: 33 (3.4, 25)

2. MT GEAR SHIFT LEVER

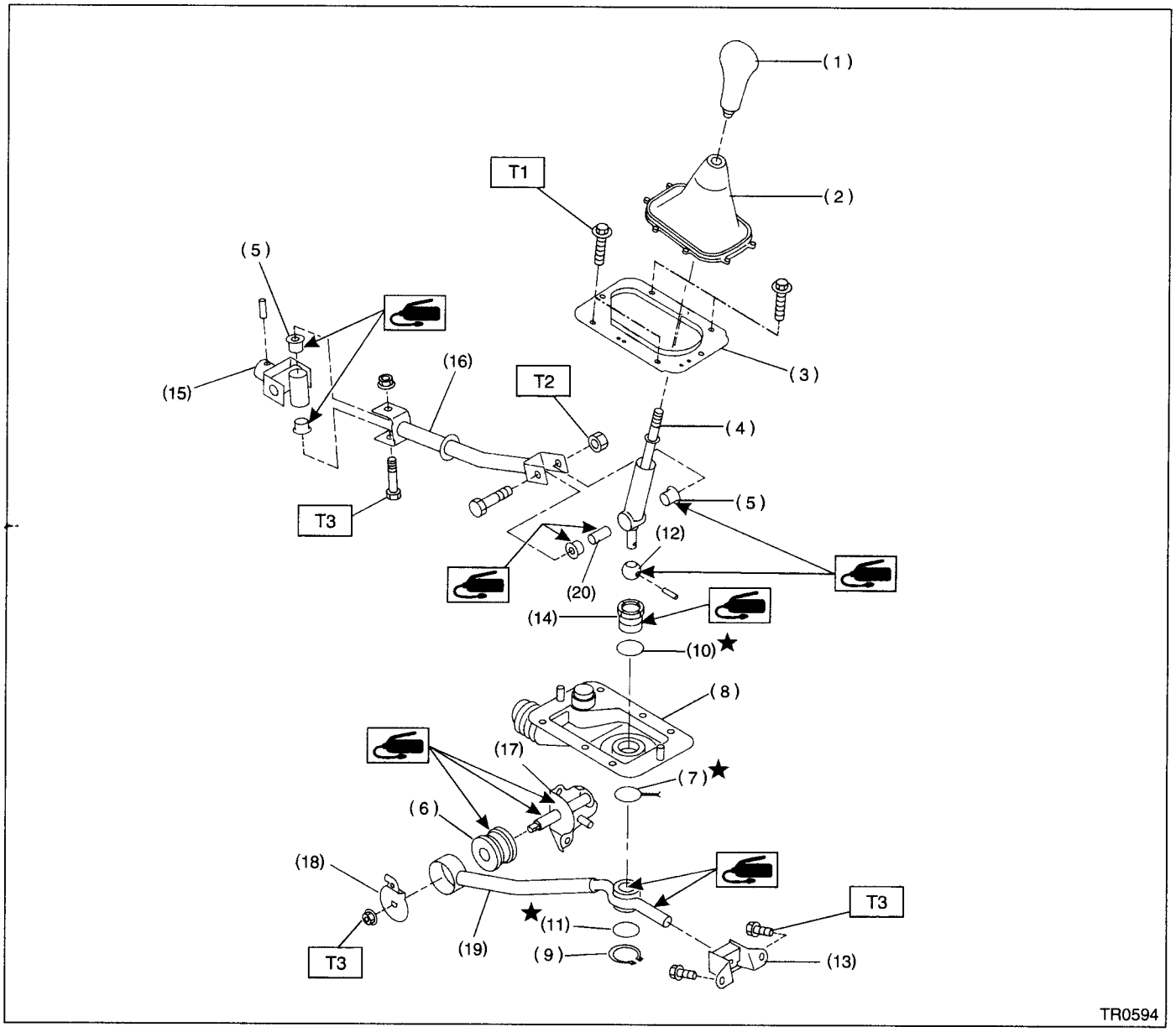

(1)	Gear shift knob	(10)	O-ring A	(19)	Stay
(2)	Console boot	(11)	O-ring B	(20)	Spacer
(3)	Plate complete	(12)	Bush A		
(4)	Lever	(13)	Cushion rubber		
(5)	Bush	(14)	Bush B		
(6)	Bush	(15)	Joint		
(7)	Locking wire	(16)	Rod		
(8)	Boot	(17)	Bracket		
(9)	Snap ring	(18)	Washer		

Tightening torque: N·m (kgf-m, ft-lb)

T1: 7.5 (0.76, 5.5)
T2: 12 (1.2, 8.7)
T3: 18 (1.8, 13.0)

C: CAUTION

- Wear working clothing, including a cap, protective goggles, and protective shoes during operation.
- Remove contamination including dirt and corrosion before removal, installation or disassembly.
- Keep the disassembled parts in order and protect them from dust or dirt.
- Before removal, installation or disassembly, be sure to clarify the failure. Avoid unnecessary removal, installation, disassembly, and replacement.
- Use SUBARU genuine grease etc. or the equivalent. Do not mix grease etc. with that of another grade or from other manufacturers.
- Be sure to tighten fasteners including bolts and nuts to the specified torque.
- Place shop jacks or safety stands at the specified points.
- Apply grease onto sliding or revolution surfaces before installation.
- Before installing O-rings or snap rings, apply sufficient amount of grease to avoid damage and deformation.
- Before securing a part on a vice, place cushioning material such as wood blocks, aluminum plate, or shop cloth between the part and the vice.
- Before disconnecting electrical connectors, be sure to disconnect the negative terminal from battery.

2. Electrical Component

A: LOCATION

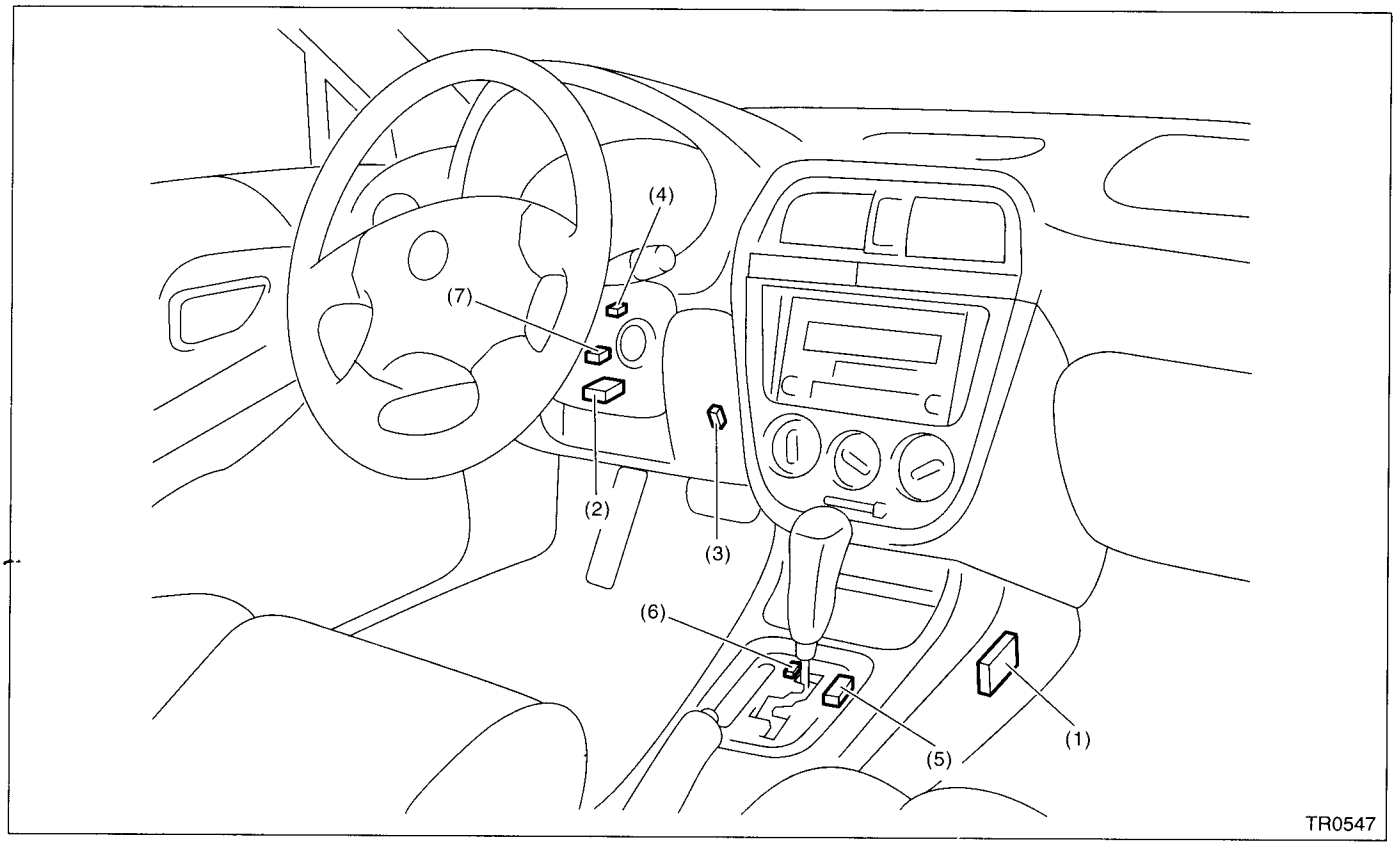

(1) Inhibitor switch
(2) Integrated module
(3) Stop light switch
(4) Key warning switch
(5) Shift lock solenoid
(6) "P" position switch
(7) Key lock solenoid

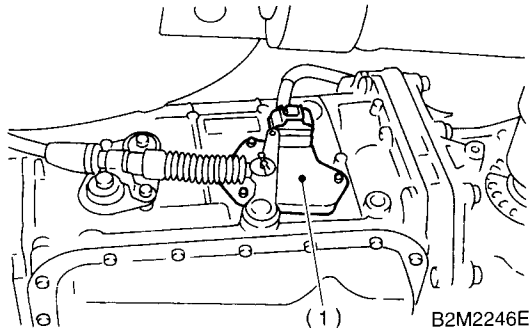

B2M2246E

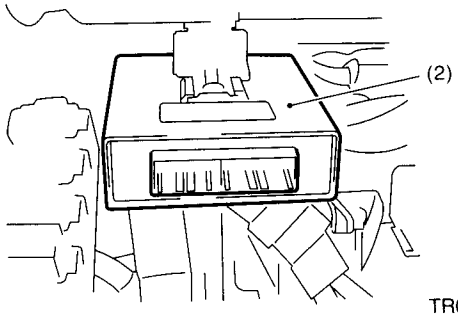

TR0548

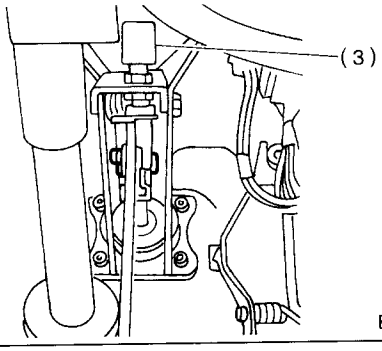

B4M1747B

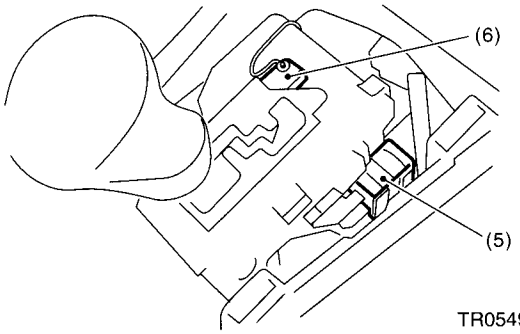

TR0549

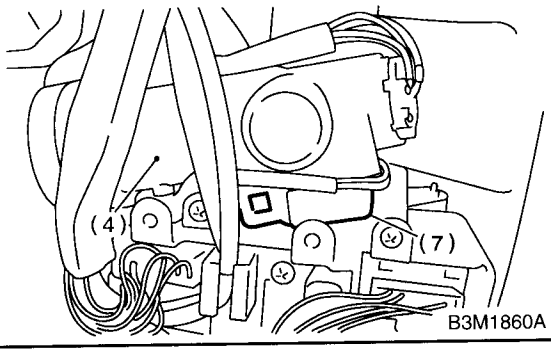

B3M1860A

SUBARU

3. AT Shift Lock System

A: ELECTRICAL SPECIFICATION

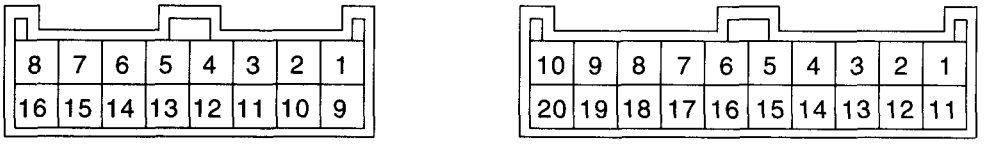

BO0311

Contents	Connector No.	Terminal No.	Input/Output signal Measured value and measuring conditions
Battery power supply	B281	2	9 — 16 V
Ignition power supply	B280	19	10 — 15 V when ignition switch is at ON or START.
Ignition power supply	B280	10	10 — 15 V when ignition switch is at ACC.
Inhibitor Switch ("P" position)	B280	5	0 V when select lever is in "P" position. 9 — 16 V when select lever is in other positions than "P" position.
Stop light switch	B280	9	9 — 16 V when stop light switch is ON. 0 V when stop light switch is OFF.
"P" position switch	B280	6	0 V when select lever is in "P" position. 9 — 16 V when select lever is in other positions than "P" position.
Shift lock solenoid signal	B281	9	8.5 — 16 V when shift lock is released. 0 V when shift lock is operating.
Key warning switch signal	B280	20	9 — 16 V when key is inserted. 0 V when key is removed.
Key lock solenoid signal	B281	3	7.5 — 16 V when turning ignition switch to ON, select lever is in "P" position and brake switch is ON. 0 V at other conditions than above.
Ground	B281	4	—
Ground	B281	13	—

B: SCHEMATIC

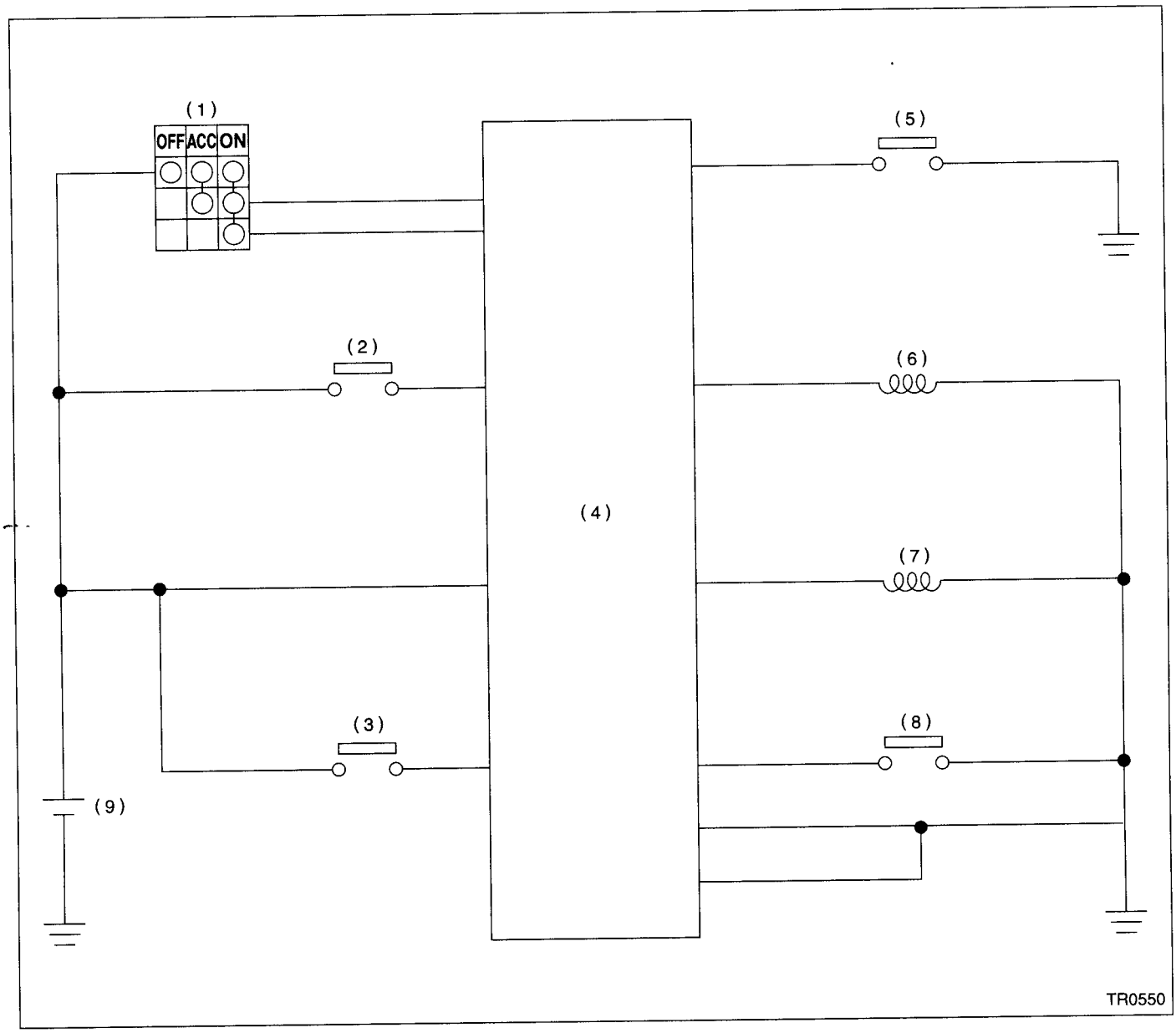

(1) Ignition switch
(2) Stop light switch
(3) Key warning switch
(4) Integrated module
(5) Inhibitor switch
(6) Key lock solenoid
(7) Shift lock solenoid
(8) "P" position switch
(9) Battery

C: INSPECTION

Step	Check	Yes	No
1 **CHECK SHIFT LOCK.** 1)Turn the ignition switch ON. 2)Move the select lever to "P" position.	While brake pedal is depressed, can select lever move from "P" range to other positions?	Go to step **2.**	Inspect "SELECT LEVER CANNOT BE SHIFT LOCKED". <Ref. to CS-14, SELECT LEVER CANNOT BE SHIFT LOCKED, INSPECTION, AT Shift Lock System.>
2 **CHECK SHIFT LOCK.**	While brake pedal is not depressed, can select lever move from "P" range to other positions?	Inspect "SELECT LEVER SHIFT LOCK CANNOT BE RELEASED". <Ref. to CS-16, SELECT LEVER SHIFT LOCK CANNOT BE RELEASED, INSPECTION, AT Shift Lock System.>	Go to step **3.**
3 **CHECK KEY INTERLOCK.**	When select lever is in other than "P" position, does ignition switch turn to "LOCK" position? Or when select lever is in "P" position, does ignition switch turn to "LOCK" position?	Inspect "KEY INTERLOCK DOES NOT BE LOCKED OR RELEASED. <Ref. to CS-20, KEY INTERLOCK DOES NOT LOCK OR RELEASE, INSPECTION, AT Shift Lock System.>	AT shift lock system is normal.

1. INTEGRATED MODULE POWER SUPPLY AND GROUND LINE WIRING DIAGRAM:

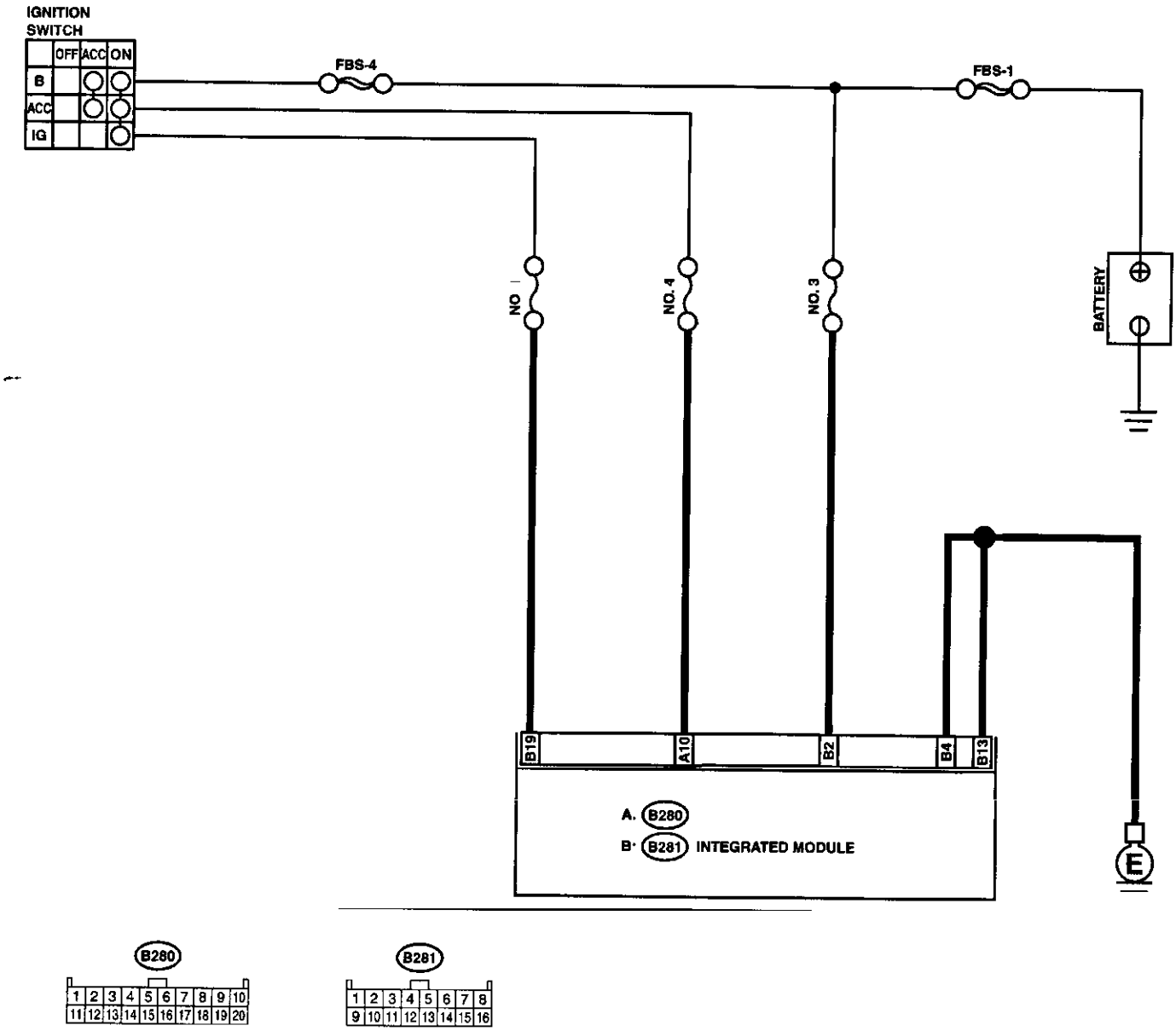

TR0551

	Step	Check	Yes	No
1	**CHECK FUSE (No. 3, 4 and 11).** 1)Remove the fuse (No. 3, 4 and 11).	Is the fuse (No. 3, 4 or 11) blown out?	Replace the fuse (No. 3, 4 or 11). If the replaced fuse (No. 3, 4 or 11) has blown out easily, repair short circuit in harness between fuse and integrated module.	Go to step **2.**
2	**CHECK HARNESS CONNECTOR BETWEEN INTEGRATED MODULE AND BODY GROUND.** 1)Turn the ignition switch to OFF. 2)Measure the resistance of harness between integrated module and chassis ground. ***Connector & terminal*** ***(B281) No. 4 — Chassis ground:*** ***(B281) No. 13 — Chassis ground:***	Is the resistance less than 1 Ω?	Go to step **3.**	Repair open circuit in harness between integrated module and body ground.
3	**CHECK BATTERY POWER SUPPLY.** 1)Turn the ignition switch to ON (engine OFF). 2)Measure the voltages between integrated module and chassis ground. ***Connector & terminal*** ***(B281) No. 1 (+) — Chassis ground (–):***	Is the voltage more than 9 V?	Go to step **4.**	Repair open circuit harness between battery and integrated module, and poor contact in coupling connector.
4	**CHECK IGNITION POWER SUPPLY CIRCUIT.** 1)Turn the ignition switch to ACC. 2)Measure the voltage between integrated module and chassis ground. ***Connector & terminal*** ***(B280) No. 10 (+) — Chassis ground (–):***	Is the voltage more than 9 V?	Go to step **5.**	Repair open circuit harness between battery and integrated module, and poor contact in coupling connector.
5	**CHECK IGNITION POWER SUPPLY CIRCUIT.** 1)Turn the ignition switch to ON (engine OFF). 2)Measure the voltage between integrated module and chassis ground. ***Connector & terminal*** ***(B281) No. 19 (+) — Chassis ground (–):***	Is the voltage more than 9 V?	Go to step **6.**	Repair open circuit harness between battery and integrated module, and poor contact in coupling connector.
6	**CHECK POOR CONTACT.**	Is there poor contact in power supply and ground line circuit?	Repair poor contact.	Replace the integrated module.

2. SELECT LEVER CANNOT BE SHIFT LOCKED
WIRING DIAGRAM:

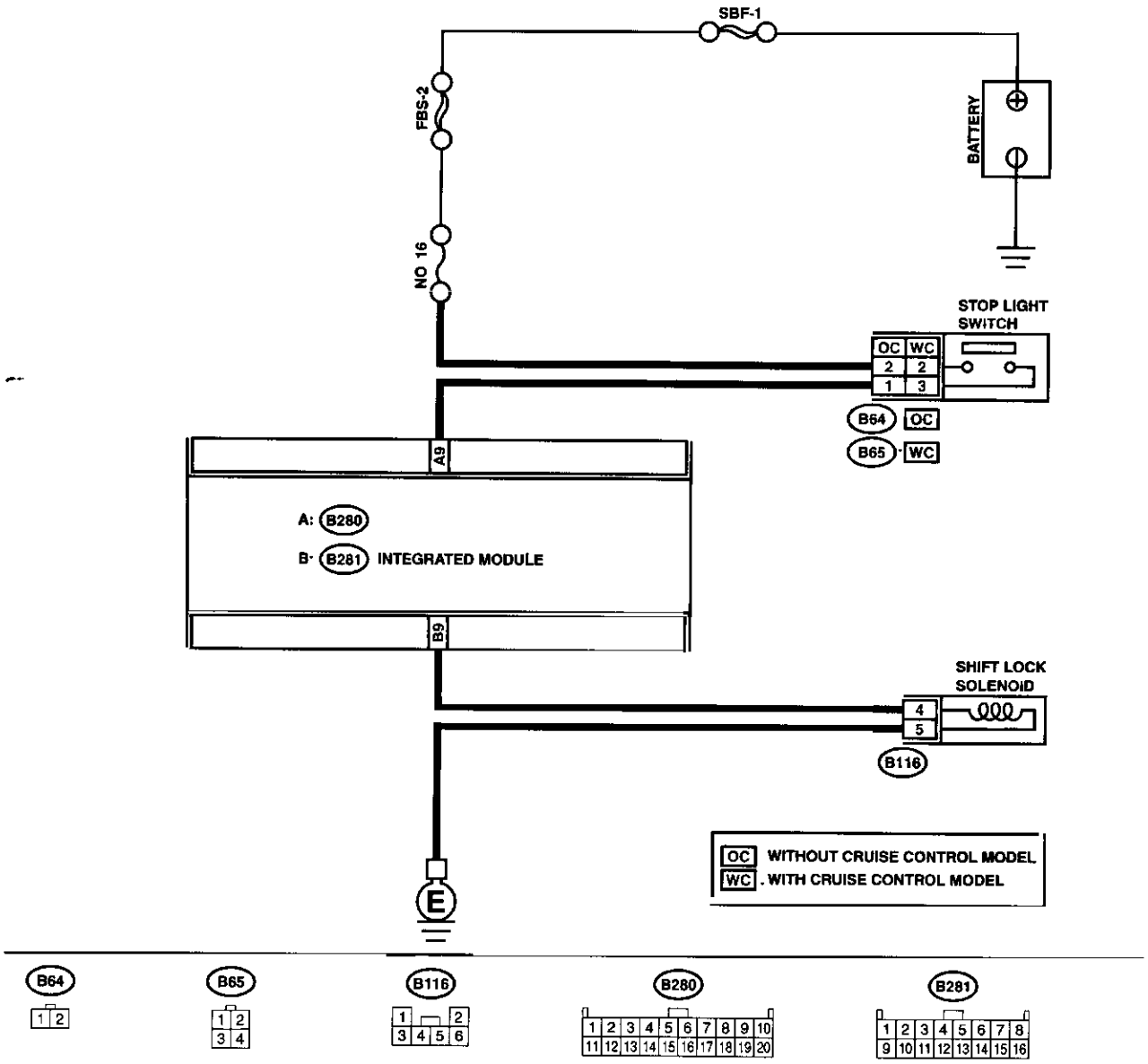

TR0552

	Step	Check	Yes	No
1	**CHECK STOP LIGHT SWITCH.** Depress the brake pedal.	Does the stop light turn ON?	Go to step **2.**	Inspect the stop light system.
2	**CHECK HARNESS BETWEEN STOP LIGHT SWITCH AND INTEGRATED MODULE.** 1)Turn the ignition switch to OFF. 2)Disconnect the integrated and stoplight switch connector. 3)Measure the resistance of harness between stop light switch and integrated module. ***Connector & terminal*** ***Without cruise control model*** ***(B64) No. 1 — (B280) No. 9:*** ***Without cruise control model*** ***(B65) No. 3 — (B280) No. 9:***	Is the resistance more than 1 MΩ?	Repair open circuit in harness between integrated module and stop light switch.	Go to step **3.**
3	**CHECK HARNESS BETWEEN STOP LIGHT SWITCH AND INTEGRATED MODULE.** Measure the resistance of harness between stop light switch and chassis ground. ***Connector & terminal*** ***Without cruise control model*** ***(B64) No. 1 — Chassis ground:*** ***Without cruise control model*** ***(B65) No. 3 — Chassis ground:***	Is the resistance less than 1 Ω?	Repair short circuit in harness between integrated module and stop light switch.	Go to step **4.**
4	**CHECK HARNESS BETWEEN INTEGRATED MODULE AND SHIFT LOCK SOLENOID.** 1)Disconnect the shift lock solenoid connector. 2)Measure the resistance of harness between integrated module and shift lock solenoid. ***Connector & terminal*** ***(B116) No. 4 — (B281) No. 9:***	Is the resistance more than 1 MΩ?	Repair open circuit in harness between integrated module and shift lock solenoid.	Go to step **5.**
5	**CHECK HARNESS BETWEEN INTEGRATED MODULE AND SHIFT LOCK SOLENOID.** Measure the resistance of harness between shift lock solenoid and chassis ground. ***Connector & terminal*** ***(B116) No. 4 — Chassis ground:***	Is the resistance less than 1 Ω?	Repair short circuit in harness between integrated module and shift lock solenoid.	Go to step **6.**
6	**CHECK HARNESS BETWEEN SHIFT LOCK SOLENOID AND CHASSIS GROUND.** Measure the resistance of harness between shift lock solenoid and chassis ground. ***Connector & terminal*** ***(B116) No. 5 — Chassis ground:***	Is the resistance more than 1 MΩ?	Repair open circuit in harness between shift lock solenoid and body ground.	Go to step **7.**
7	**CHECK SHIFT LOCK SOLENOID.** Measure the resistance of shift lock solenoid connector terminals. ***Terminal*** ***No. 4 — No. 5:***	Is the resistance between 10 and 20 Ω?	Go to step **8.**	Replace the shift lock solenoid.
8	**CHECK SHIFT LOCK SOLENOID.** Connect the battery with shift lock solenoid connector terminal and operate solenoid. ***Terminal*** ***No. 4 (+) — No. 5 (–):***	Does the shift lock solenoid operate properly?	Go to step **9.**	Replace the shift lock solenoid.
9	**CHECK POOR CONTACT.**	Is there poor contact in key lock circuit?	Repair poor contact.	Replace the integrated module.

3. SELECT LEVER SHIFT LOCK CANNOT BE RELEASED
WIRING DIAGRAM:

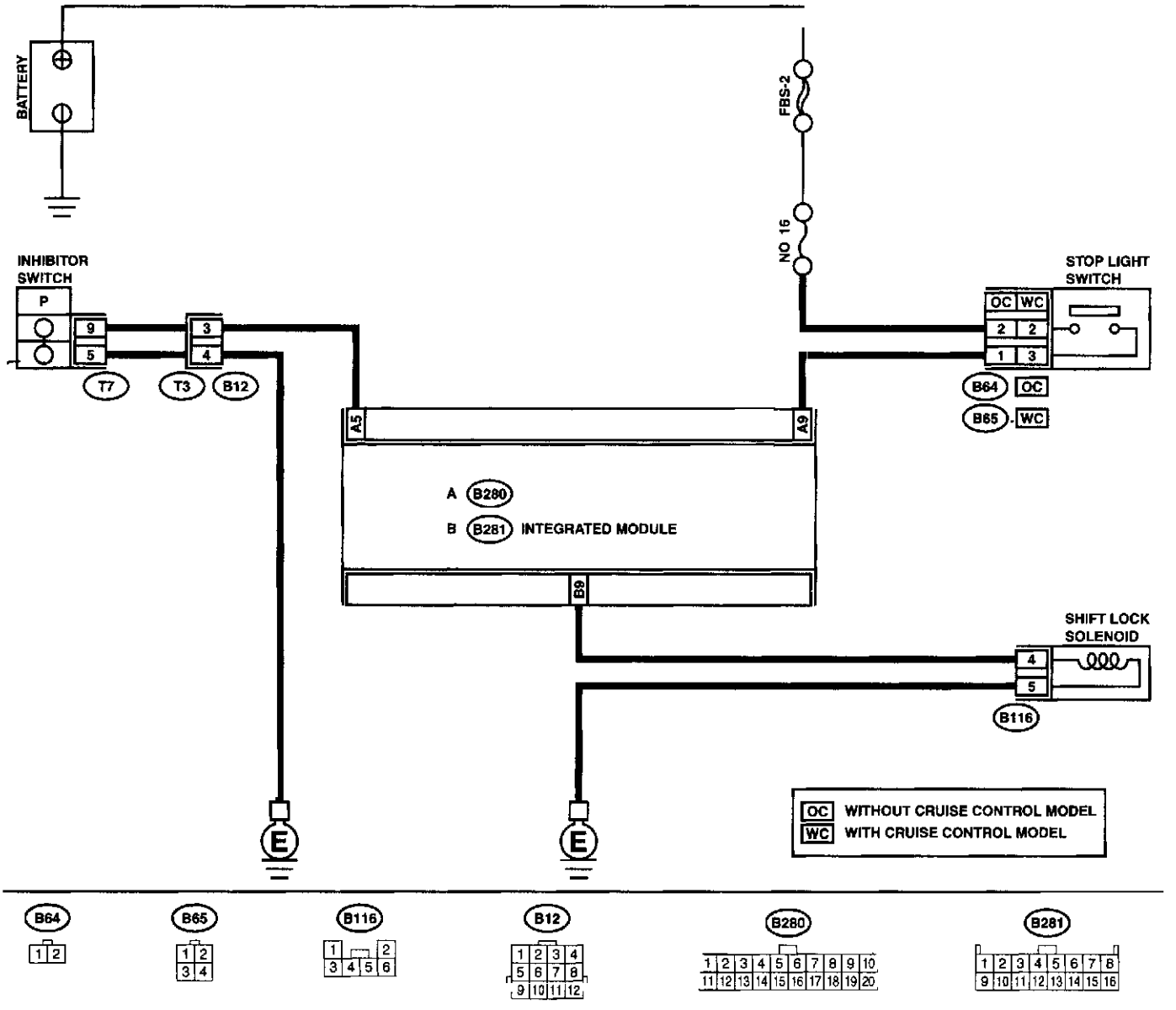

TR0553

	Step	Check	Yes	No
1	**CHECK INHIBITOR SWITCH.** 1)Turn the ignition switch to ON (engine OFF). 2)Move the select lever from "P" to "1" range.	Combination meter indicator lamp and select lever "P", "R", "N", "3", "2" and "1" are correctly matched?	Go to step **2.**	Adjust inhibitor switch and select cable.
2	**CHECK HARNESS BETWEEN INHIBITOR SWITCH AND INTEGRATED MODULE.** 1)Turn the ignition switch to OFF. 2)Disconnect the connector transmission harness and intgrated module. 3)Measure the resistance of harness between integrated module and chassis ground. ***Connector & terminal*** ***(B280) No. 5 — Chassis ground:***	Is the resistance less than 1 Ω?	Repair short circuit in harness between integrated module and transmission connector.	Go to step **3.**
3	**CHECK HARNESS BETWEEN INHIBITOR SWITCH AND INTEGRATED MODULE.** Measure the resistance of harness between integrated module and inhibitor switch. ***Connector & terminal*** ***(B12) No. 3 — (B280) No. 5:***	Is the resistance more than 1 MΩ?	Repair open circuit in harness between integrated module and transmission connector	Go to step **4.**
4	**CHECK HARNESS BETWEEN INHIBITOR SWITCH AND CHASSIS GROUND.** Measure the resistance of harness between integrated module and chassis ground. ***Connector & terminal*** ***(B12) No. 4 — Chassis ground:***	Is the resistance less than 1 Ω?	Go to step **5.**	Repair open circuit in harness between integrated module and chassis ground.
5	**CHECK INHIBITOR SWITCH.** 1)Move the select lever to "P" position. 2)Measure the resistance of transmission harness connector terminals. ***Connector & terminal*** ***(T3) No. 3 — No. 4:***	Is the resistance more than 1 MΩ?	Repair or replace inhibitor switch.	Go to step **6.**
6	**CHECK OUTPUT SIGNAL FOR INTEGRATED MODULE.** 1)Connect all connectors. 2)Turn the ignition switch to ON. 3)Measure the voltage between integrated module and chassis ground. ***Connector & terminal*** ***(B280) No. 5 (+) — Chassis ground (–):***	Is the voltage between 9 and 16 V?	Go to step **7.**	Go to step **15.**
7	**CHECK STOP LIGHT SWITCH.** Depress the brake pedal.	Does the stop light turn on?	Go to step **8.**	Inspect stop light system.
8	**CHECK HARNESS BETWEEN STOP LIGHT SWITCH AND AT SHIFT LOCK CONTROL MODULE.** 1)Depress the brake pedal. 2)Measure the voltage between integrated module and chassis ground. ***Connector & terminal*** ***(B280) No. 9 (+) — Chassis ground (–):***	Is the voltage more than 9 V?	Go to step **9.**	Repair open or short circuit in harness between integrated module and stop light switch.
9	**CHECK HARNESS BETWEEN INTEGRATED MODULE AND SHIFT LOCK SOLENOID.** 1)Turn the ignition switch to OFF. 2)Disconnect the connector from shift lock solenoid and integrated module. 3)Measure the resistance of harness between integrated module and shift lock solenoid. ***Connector & terminal*** ***(B281) No. 9 — (B116) No. 4:***	Is the resistance more than 1 MΩ?	Repair open circuit in harness between integrated module and shift lock solenoid.	Go to step **10.**

	Step	Check	Yes	No
10	**CHECK HARNESS BETWEEN INTEGRATED MODULE AND SHIFT LOCK SOLENOID.** Measure the resistance of harness between shift lock solenoid and chassis ground. ***Connector & terminal*** ***(B281) No. 9 — Chassis ground:***	Is the resistance less than 10 Ω?	Go to step **11.**	Repair short circuit in harness between integrated module and shift lock solenoid.
11	**CHECK HARNESS BETWEEN SHIFT LOCK SOLENOID AND CHASSIS GROUND.** Measure the resistance of harness between shift lock solenoid and chassis ground. ***Connector & terminal*** ***(B116) No. 5 — Chassis ground:***	Is the resistance less than 1 Ω?	Go to step **12.**	Repair open circuit in harness between shift lock solenoid and chassis ground.
12	**CHECK SHIFT LOCK SOLENOID.** Measure the resistance of shift lock solenoid connector terminals. ***Terminal*** ***No. 4 — No. 5:***	Is the resistance between 10 and 20 Ω?	Go to step **13.**	Replace the shift lock solenoid.
13	**CHECK SHIFT LOCK SOLENOID.** Connect the battery with shift lock solenoid connector terminal and operate solenoid. ***Terminal*** ***No. 4 (+) — No. 5 (–):***	Is shift lock solenoid operating properly?	Go to step **14.**	Replace the shift lock solenoid.
14	**CHECK OUTPUT SIGNAL FOR AT SHIFT LOCK CONTROL MODULE.** 1)Turn the ignition switch to ON (engine OFF). 2)Measure the voltage between integrated module and chassis ground. ***Connector & terminal*** ***(B281) No. 9 (+) — Chassis ground (–):***	Is the voltage more than 8.5 V?	Go to step **15.**	Replace the integrated module.
15	**CHECK POOR CONTACT.**	Is there poor contact in key lock circuit?	Repair poor contact.	Replace the integrated module.

4. KEY INTERLOCK DOES NOT LOCK OR RELEASE

WIRING DIAGRAM:

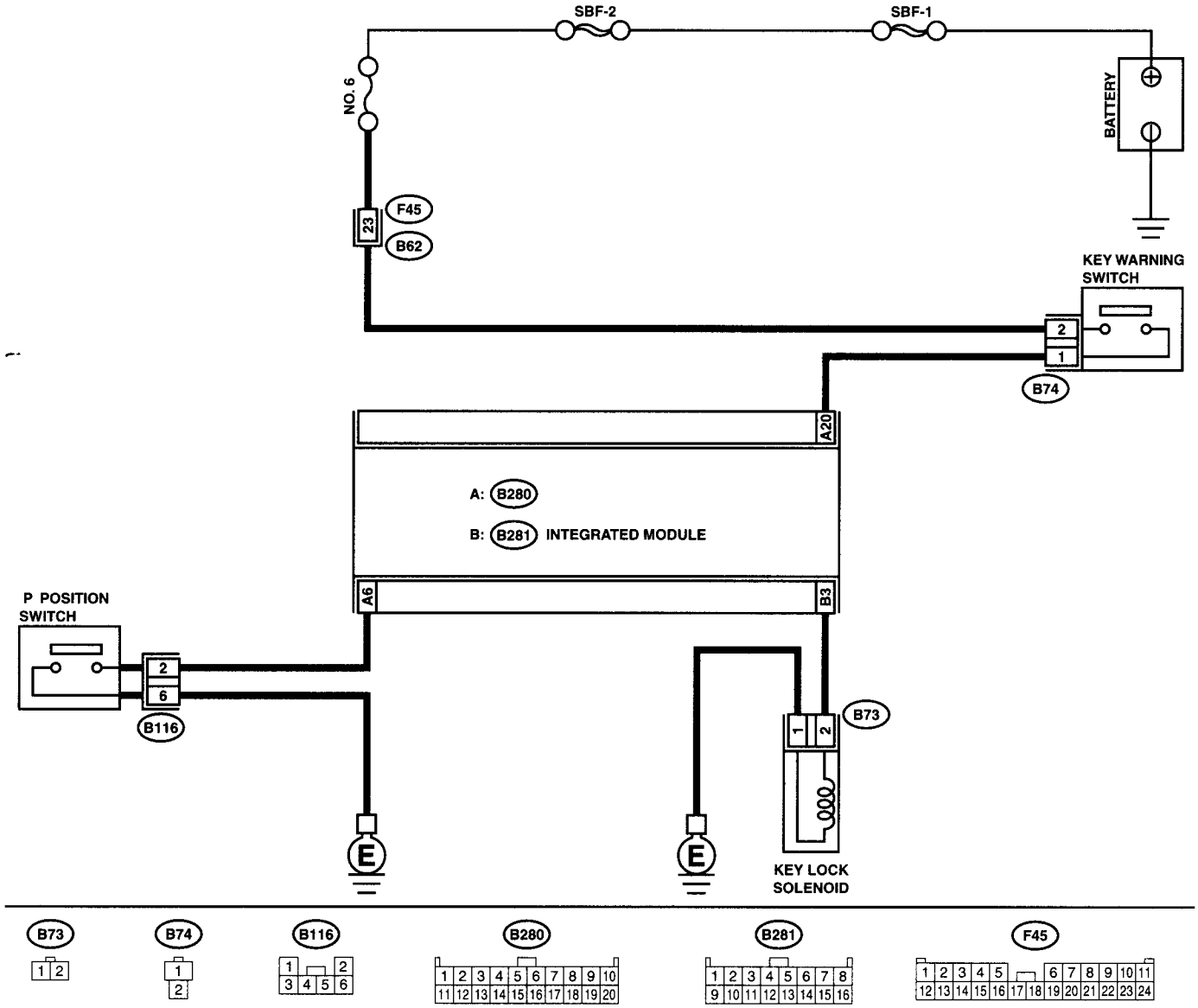

TR0554

	Step	Check	Yes	No
1	**CHECK HARNESS BETWEEN BATTERY AND KEY WARNING SWITCH.** 1)Disconnect the connector key warning switch. 2)Measure the voltage of harness between key warning switch and chassis ground. ***Connector & terminal*** ***(B74) No. 2 — Chassis ground:***	Is the voltage between 9 and 16 V?	Go to step **2.**	Repair open or short circuit in harness between battery and key warning switch.
2	**CHECK KEY WARNING SWITCH.** Measure the resistance of stop light switch connector terminals. ***Terminal*** ***No. 1 — No. 2:***	Is the resistance more than 1 MΩ?	Replace key warning switch.	Go to step **4.**
3	**CHECK KEY WARNING SWITCH.** 1)Remove the key. 2)Measure the resistance of stop light switch connector terminals. ***Terminal*** ***No. 1 — No. 2:***	Is the resistance more than 1 MΩ?	Go to step **4.**	Replace key warning switch.
4	**CHECK HARNESS BETWEEN AT SHIFT LOCK CONTROL MODULE AND KEY WARNING SWITCH.** 1)Disconnect the integrated module connector. 2)Measure the voltage of harness integrated module and chassis ground. ***Connector & terminal*** ***(B280) No. 20 — Chassis ground:***	Is the resistance more than 9 V?	Go to step **5.**	Repair open circuit in harness between integrated module and key warning switch.
5	**CHECK HARNESS BETWEEN INTEGRATED MODULE AND KEY LOCK SOLENOID.** 1)Disconnect the connector key lock solenoid. 2)Measure the resistance of harness between integrated module and key lock solenoid. ***Connector & terminal*** ***(B73) No. 2 — (B281) No. 3:***	Is the resistance more than 1 MΩ?	Repair open circuit in harness between integrated module and key lock solenoid.	Go to step **6.**
6	**CHECK HARNESS BETWEEN INTEGRATED MODULE AND KEY LOCK SOLENOID.** Measure the resistance of harness between integrated module and chassis ground. ***Connector & terminal*** ***(B281) No. 3 — Chassis ground:***	Is the resistance more than 1 Ω?	Go to step **7.**	Repair short circuit in harness between integrated module and key lock solenoid.
7	**CHECK HARNESS BETWEEN KEY LOCK SOLENOID AND CHASSIS GROUND.** Measure the resistance of harness between key lock solenoid and chassis ground. ***Connector & terminal*** ***(B73) No. 1 — Chassis ground:***	Is the resistance less than 10 Ω?	Go to step **8.**	Repair open circuit in harness between key lock solenoid and chassis ground.
8	**CHECK KEY LOCK SOLENOID.** Measure the resistance of key lock solenoid connector terminals. ***Connector & terminal*** ***(B73) No. 1 — No. 2:***	Is the resistance between 4 and 8 Ω?	Go to step **14.**	Replace the key lock solenoid.
9	**CHECK HARNESS BETWEEN "P" POSITION SWITCH AND CHASSIS GROUND.** Measure the resistance of harness between "P" position switch and chassis ground. ***Connector & terminal*** ***(B116) No. 2 — Chassis ground:***	Is the resistance less than 1 Ω?	Go to step **10.**	Repair short circuit in harness between "P" position switch and integrated module.

	Step	Check	Yes	No
10	**CHECK HARNESS BETWEEN AT SHIFT LOCK CONTROL MODULE AND "P" POSITION SWITCH.** 1)Disconnect the connector from "P" position switch. 2)Measure the resistance of harness between integrated module and "P" position switch. ***Connector & terminal*** ***(B116) No. 2 — (B280) No. 6:***	Is the resistance more than 1 MΩ?	Repair open circuit in harness between integrated module and "P" position switch.	Go to step **11.**
11	**CHECK HARNESS BETWEEN "P" POSITION SWITCH AND CHASSIS GROUND.** Measure the resistance of harness "P"position switch and chassis ground. ***Connector & terminal*** ***(B116) No. 6 — Chassis ground:***	Is the resistance more than 1 MΩ?	Go to step **12.**	Repair open circuit in harness between "P" position switch and chassis ground.
12	**CHECK "P" POSITION SWITCH.** 1)Move the select lever to "P" position. 2)Measure resistance between "P" position switch connector terminals. ***Terminal*** ***No. 2 — No. 6:***	Is the resistance less than 1 Ω?	Go to step **13.**	Replace the "P" position switch.
13	**CHECK "P" POSITION SWITCH.** 1)Move the select lever to other than "P" position. 2)Measure resistance between "P" position switch connector terminals. ***Terminal*** ***No. 2 — No. 6:***	Is the resistance more than 1 MΩ?	Go to step **14.**	Replace the "P" position switch.
14	**CHECK OUTPUT SIGNAL FOR INTEGRATED MODULE.** 1)Connect all connectors. 2)Turn the ignition switch to ON (engine OFF). 3)Move the select lever to "P" position. 4)Press the brake pedal. 5)Measure the voltage between integrated module connector and chassis ground. ***Connector & terminal*** ***(B281) No. 3 (+) — Chassis ground (–):***	Is the voltage 7.5 and 16 V?	Go to step **15.**	Replace the integrated module.
15	**CHECK POOR CONTACT.**	Is there poor contact in AT shift lock circuit?	Repair poor contact.	Replace the integrated module.

4. Select Lever

A: REMOVAL

1) Set the vehicle on the lift.
2) Disconnect the ground terminal from battery.
3) Move the select lever to the "N" position.
4) Lift-up the vehicle.
5) Remove the rear exhaust pipe and muffler.
6) Remove the heat shield cover. (If equipped)
7) Disconnect the cable from select lever and then remove the cable bracket.

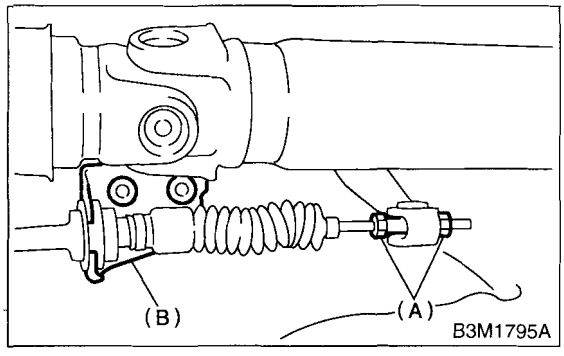

(A) Adjusting nuts
(B) Cable bracket

8) Lower the vehicle.
9) Remove the console box. <Ref. to EI-41, REMOVAL, Console Box.>
10) Disconnect the connectors, then remove the four bolts to take out the select lever assembly from the body.

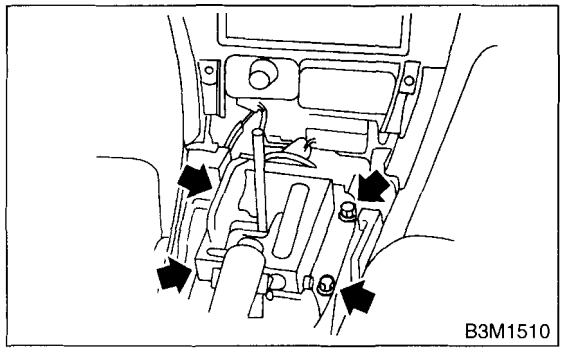

B: INSTALLATION

1) Mount the select lever onto the vehicle body.
2) Tighten the four bolts to install the select lever to the vehicle body, then connect the connector.

Tightening torque:
13 N·m (1.3 kgf-m, 9.4 ft-lb)

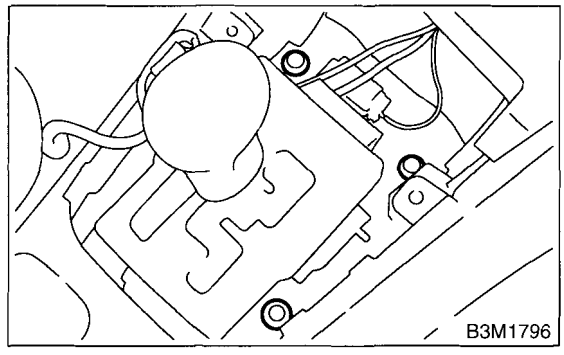

3) Install the console box. <Ref. to EI-39, INSTALLATION, Glove Box.>
4) Set the location of select lever at "N" position.
5) Lift-up the vehicle.
6) Set the location of range select lever to "N" position.
7) Insert the thread portion of the other inner cable and into the connector hole of the select lever, and fix the other outer cable end to the bracket.
8) Adjust the select cable position. <Ref. to CS-27, ADJUSTMENT, Select Cable.>
9) After completion of fitting, make sure that the select lever operates smoothly all across the operating range.
10) Inspect the following items. If the following inspection reveals problems, adjust the select cable and inhibitor switch. <Ref. to CS-27, ADJUSTMENT, Select Cable.> and <Ref. to AT-28, ADJUSTMENT, Inhibitor Switch.>
    (1) The engine starts operating when select lever is in position "P", but not in other positions.
    (2) The back-up light is lit when the select lever is in position "R", but not in other positions.
    (3) Select lever and indicator positions are matched.
11) Check the shift-lock system.
    (1) Ensure the ignition switch rotates from "ACC" to "LOCK" when the select lever is set at "P". Also check that ignition key can be removed only from the "LOCK" position.
    (2) Ensure the select lever moves from "P" to any other position when the brake pedal is depressed with ignition key set at "ON" or "START".
12) Install heat shield cover. (If equipped)
13) Install rear exhaust pipe and muffler.

C: DISASSEMBLY

1) Remove the grip.
2) Remove the indicator light and then remove the indicator cover.

NOTE:
Be careful not to break the indicator light during removal.

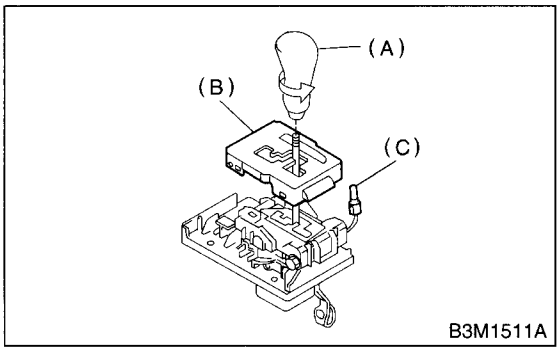

(A) Grip
(B) Indicator cover
(C) Indicator light

3) Remove the slider.
4) Remove the clips and then remove the guide plate.

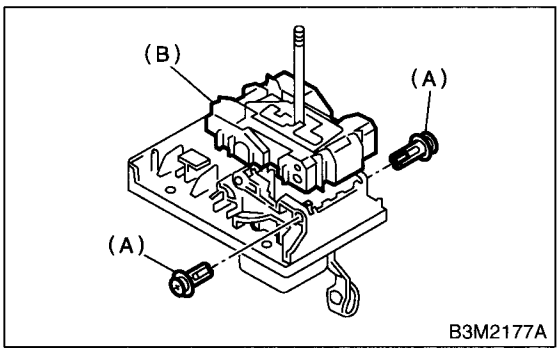

(A) Clips
(B) Guide plate

5) Remove the clamp, and shift lock solenoid.

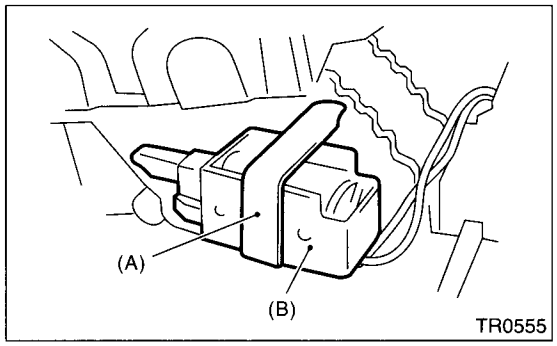

(A) Clamp
(B) Shift lock solenoid

6) Remove the lock plate.

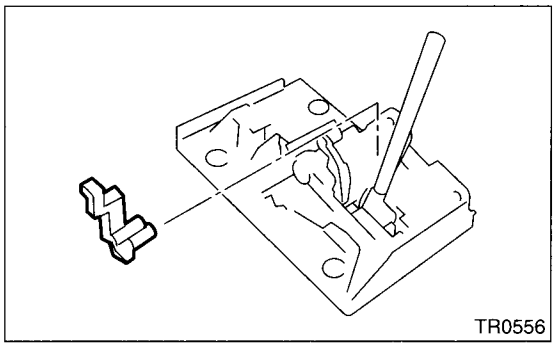

7) Remove the pattern plate.

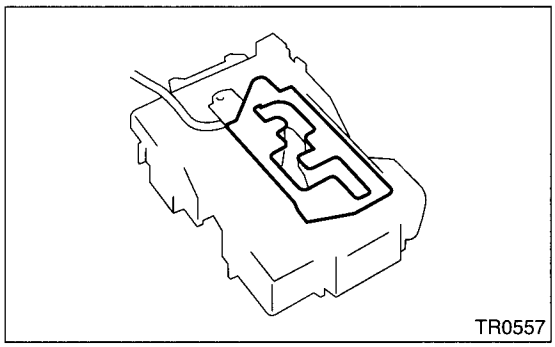

8) Remove the clip and remove the "P" position switch.

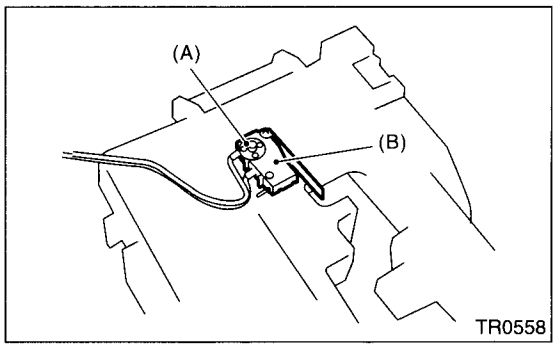

(A) Clip
(B) "P" position switch

9) Remove the cap and then extract straight pin.

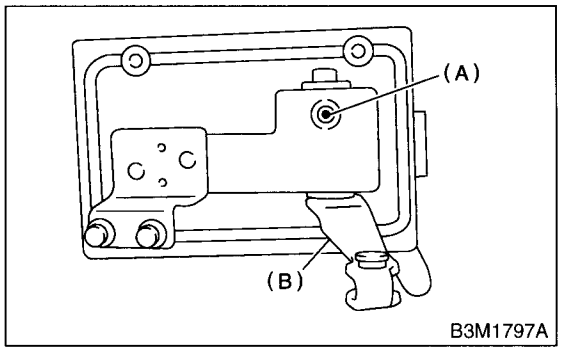

(A) Straight pin
(B) Select lever lower

10) Remove the select lever lower then take away the select lever upper from plate.

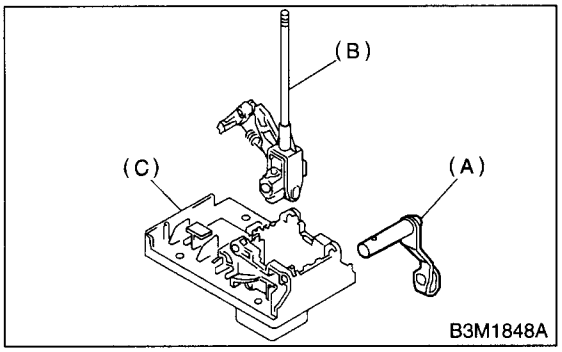

(A) Select lever lower
(B) Select lever upper
(C) Plate

11) Remove the spring and remove the detent arm.

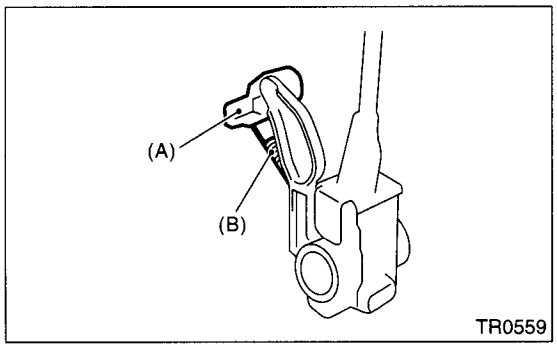

(A) Detent arm
(B) Spring

12) Remove the cushion.

D: ASSEMBLY

1) Clean all parts before assembly.
2) Apply grease [NIGTIGHT LYW No. 2 or equivalent] to each parts. <Ref. to CS-3, AT Select Lever.>
3) Assembly is in the reverse order of disassembly.
4) After completion of fitting, transfer the select lever to range "P" — "1", then check whether the indicator and select lever agree, whether the pointer and position mark agree and what the operating force is.

E: INSPECTION

1) Inspect the removed parts by comparing with new ones for deformation, damage and wear. Correct or replace if defective.
2) Confirm the following parts for operating condition before assembly. Moving condition of the selector lever upper, it should move smoothly.

5. Select Cable

A: REMOVAL

1) Set the vehicle on the lift.
2) Disconnect the ground terminal from battery.
3) Prior to removal, set the lever to "N" position.
4) Lift-up the vehicle.
5) Remove the front and center exhaust pipe. (Non-turbo model) <Ref. to EX(SOHC)-5, REMOVAL, Front Exhaust Pipe.>

CAUTION:
When removing the exhaust pipes, be careful each exhaust pipe does not drop out.

6) Remove the center exhaust pipe. (Turbo model) <Ref. to EX(DOHC TURBO)-8, REMOVAL, Center Exhaust Pipe.>
7) Remove the heat shield cover. (If equipped)
8) Remove the snap pin from range select lever.

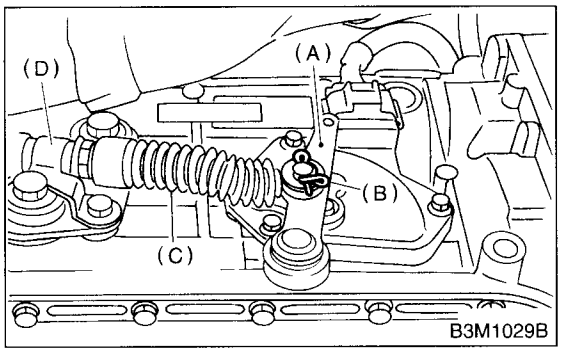

(A) Range select lever
(B) Snap pin
(C) Select cable
(D) Clamp

9) Remove the plate assembly from transmission case.

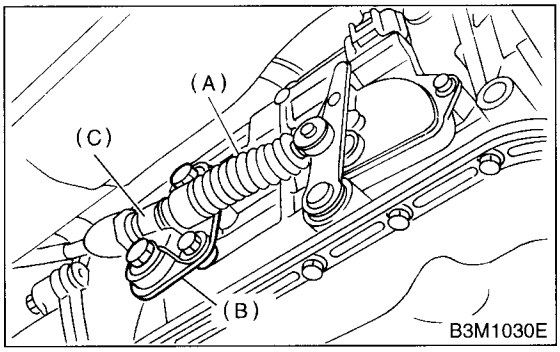

(A) Select cable
(B) Plate ASSY
(C) Clamp

10) Disconnect the cable from select lever and then remove the cable bracket.

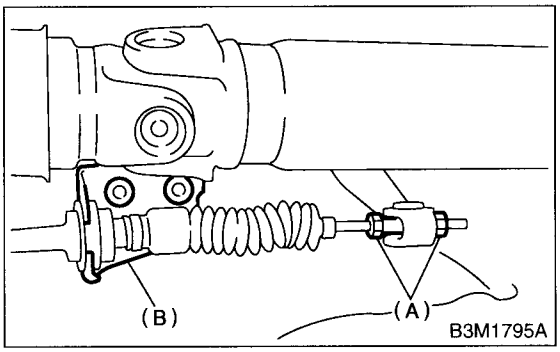

(A) Adjusting nuts
(B) Cable bracket

11) Remove the select cable from plate assembly.

B: INSTALLATION

1) Install the select cable to plate assembly.

Tightening torque:
32 N·m (3.3 kgf-m, 24 ft-lb)

2) Install the select cable to range select lever.
3) Install the plate assembly to transmission.

Tightening torque:
T: 24.5 N·m (2.5 kgf-m, 18.1 ft-lb)

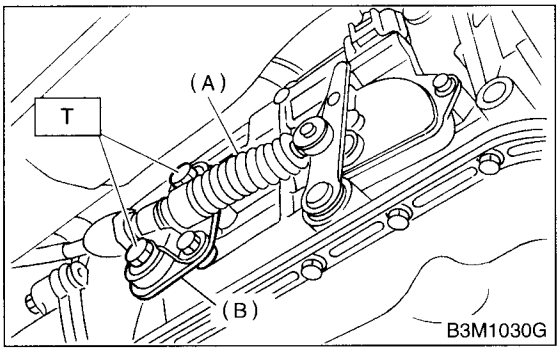

(A) Select cable
(B) Plate ASSY

4) Install the snap pin to range select lever.

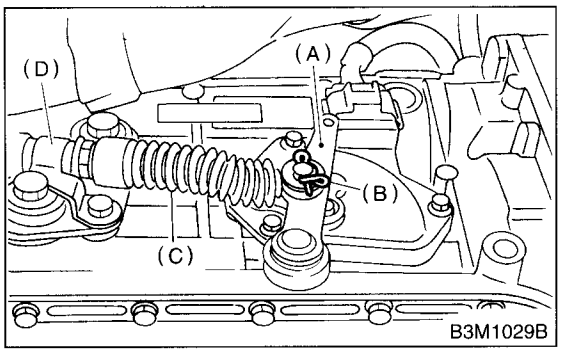

(A) Range select lever
(B) Snap pin
(C) Select cable
(D) Clamp

5) Move the select lever to the "N" position, then adjust the select cable position. <Ref. to CS-27, ADJUSTMENT, Select Cable.>
6) Install the heat shield cover. (If equipped)
7) Install the front and center exhaust pipe. (Non-turbo model) <Ref. to EX(SOHC)-6, INSTALLATION, Front Exhaust Pipe.>
8) Install the center exhaust pipe. (Turbo model) <Ref. to EX(DOHC TURBO)-9, INSTALLATION, Center Exhaust Pipe.>

C: INSPECTION

Check the removed cable and replace if damaged, rusty, or malfunctioning.
1) Check for smooth operation of the cable.
2) Check the inner cable for damage and rust.
3) Check the outer cable for damage, bends, and cracks.
4) Check the boot for damage, cracks, and deterioration.
5) Move the select lever from "P" position to "1" position. You should be able to feel the detentes in each position. If the detentes cannot be felt or the position pointer is improperly aligned, adjust the cable.

D: ADJUSTMENT

1) Set the vehicle on the lift.
2) Disconnect the ground terminal from battery.
3) Set the lever to "N" position.
4) Lift-up the vehicle.
5) Remove the rear exhaust pipe and muffler.
6) Remove the heat shield cover. (If equipped)
7) Loosen the adjusting nut on each side.

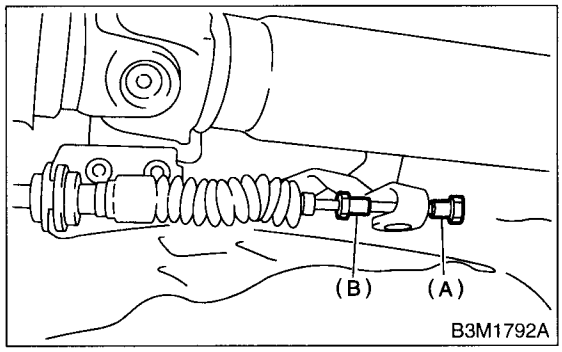

(A) Adjusting nut A
(B) Adjusting nut B

8) Turn the adjusting nut B until it lightly touches the connector.

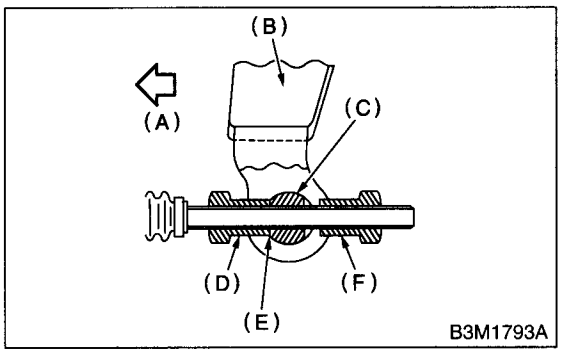

(A) Front side
(B) Select lever
(C) Connector
(D) Adjusting nut B
(E) Contact point
(F) Adjusting nut A

9) While preventing the adjusting nut B from moving with a wrench, tighten adjusting nut A.

Tightening torque:
7.5 N·m (0.76 kgf-m, 5.5 ft-lb)

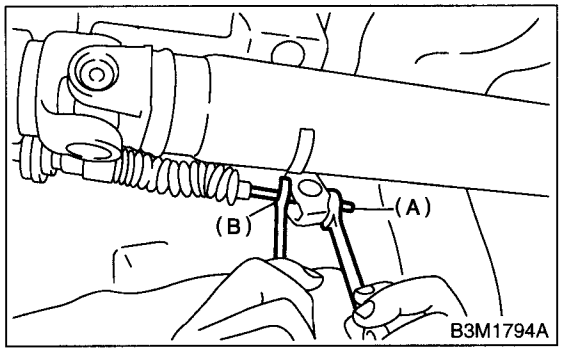

(A) Adjusting nut A
(B) Adjusting nut B

10) After completion of fitting, make sure that the select lever operates smoothly all across the operating range.
11) Install in the reverse order of removal.

6. AT Shift Lock Solenoid and "P" Position Switch

A: REMOVAL

1) Disconnect the ground terminal from battery.
2) Remove the console box. <Ref. to EI-41, REMOVAL, Console Box.>
3) Disconnect the connector.
4) Remove the grip.
5) Remove the indicator cover.

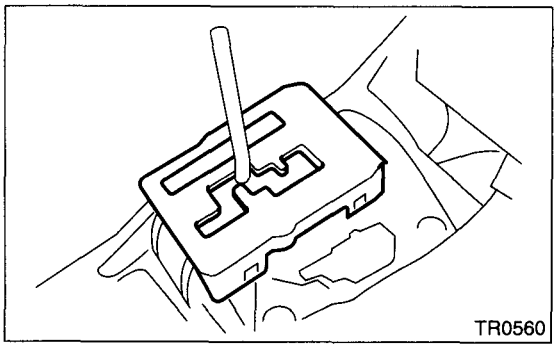

6) Remove the slider.
7) Remove the cushion.
8) Remove the clip and remove the "P" position switch.

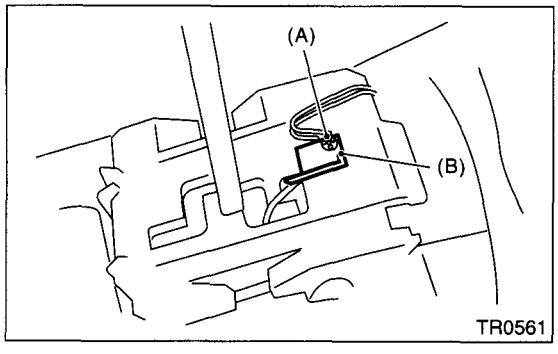

(A) Clip
(B) "P" position switch

9) Remove the clamp and remove the shift lock solenoid.

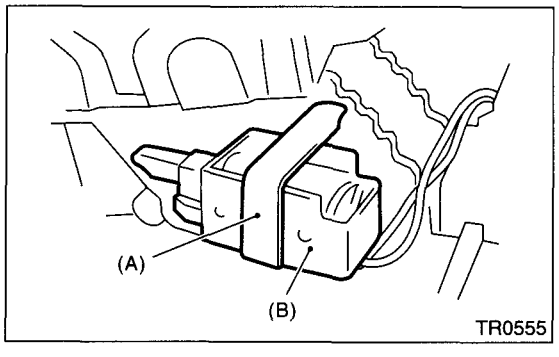

(A) Clamp
(B) Shift lock solenoid

B: INSTALLATION

Install in the reverse order of removal.

C: INSPECTION

	Step	Check	Yes	No
1	**CHECK SHIFT LOCK SOLENOID.** Measure the resistance of shift lock solenoid connector terminals. ***Terminal*** ***No. 4 — No. 5***	Is the resistance between 10 and 20 Ω?	Go to step **2.**	Replace the shift lock solenoid and "P" position switch assembly.
2	**CHECK SHIFT LOCK SOLENOID.** Connect the battery with shift lock solenoid connector terminal, operate solenoid. ***Terminal*** ***No. 4 (+) — No. 5 (–)***	Is the shift lock solenoid operating properly?	Go to step **3.**	Replace the shift lock solenoid and "P" position switch assembly.
3	**CHECK "P" POSITION SWITCH.** 1)Move the select lever to "P" position. 2)Measure resistance between "P" position switch connector terminals.	Is the resistance less than 1 Ω?	Go to step **4.**	Replace the "P" position switch.
4	**CHECK "P" POSITION SWITCH.** 1)Move the select lever to other than "P" position. 2)Measure resistance between "P" position switch connector terminals.	Is the resistance more than 1 MΩ?	Normal	Replace the "P" position switch.

7. Integrated Module

A: REMOVAL

1) Disconnect the ground terminal from battery.

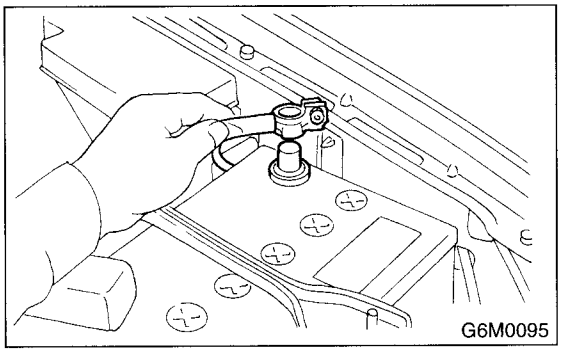

2) Remove the lower cover.

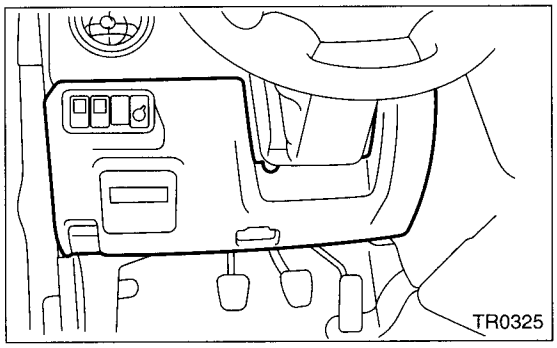

3) Remove the knee bolster.

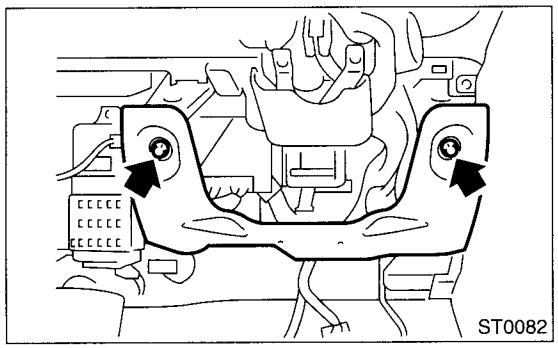

4) Disconnect the connector from integrated module.
5) Remove the integrated module.

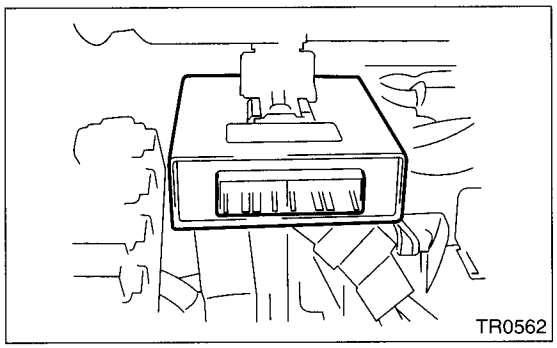

B: INSTALLATION

Install in the reverse order of removal.

8. MT Gear Shift Lever

A: REMOVAL

1) Set the vehicle on the lift.
2) Remove the gear shift knob.
3) Disconnect the ground terminal from battery.
4) Remove the console box. <Ref. to EI-41, REMOVAL, Console Box.>
5) Remove the boot plate from body.

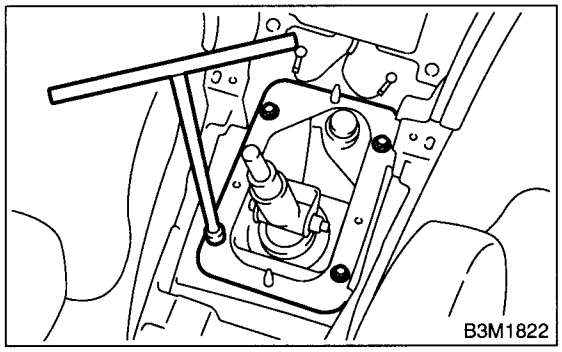

6) Lift-up the vehicle.
7) Remove the rear exhaust pipe and muffler.
8) Remove the heat shield cover. (If equipped)
9) Remove the stay from transmission bracket.

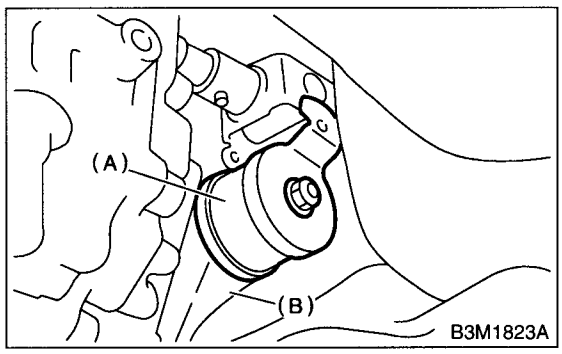

(A) Stay
(B) Transmission bracket

10) Remove the rod from joint.

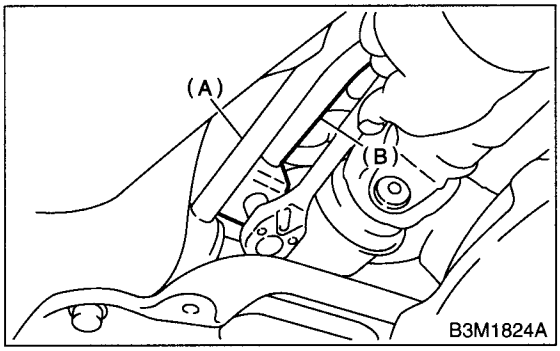

(A) Stay
(B) Rod

11) Remove the cushion rubber from body.

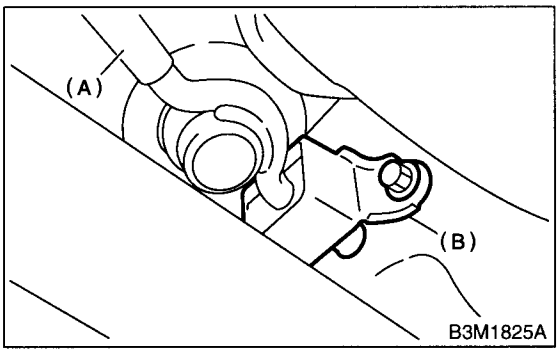

(A) Stay
(B) Cushion rubber

12) Remove the joint and then extract the spring pin.

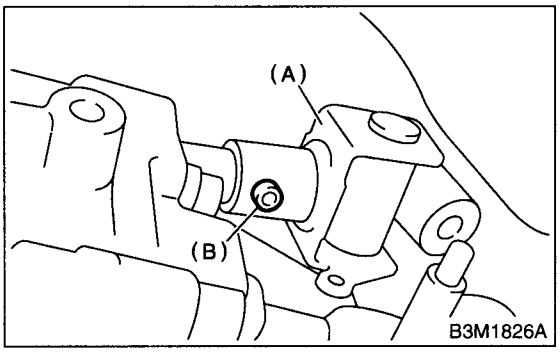

(A) Joint
(B) Spring pin

13) Lower the vehicle.
14) Remove the gear shift lever.

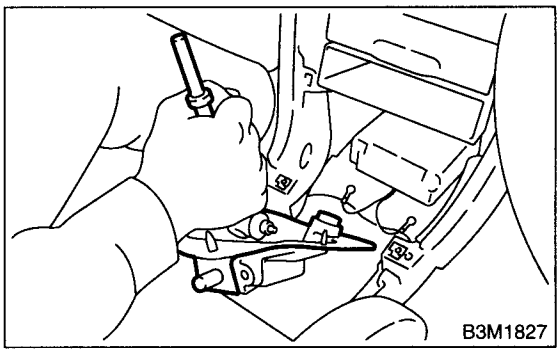

B: INSTALLATION

1) Install the joint to the transmission and secure with the straight pin.
2) Insert the gear shift lever from room side.

NOTE:
After inserting the rod and stay, temporarily put them onto transmission mount.

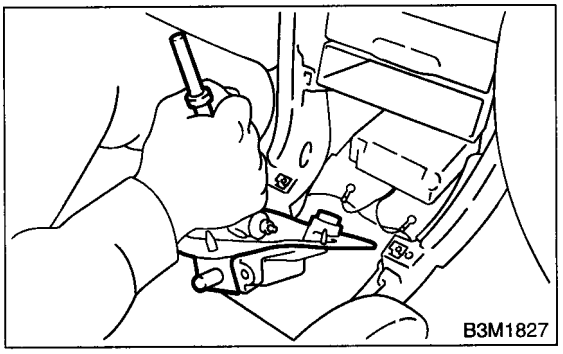

3) Lift-up the vehicle.
4) Install the joint to shifter arm.
5) Insert the spring pin.

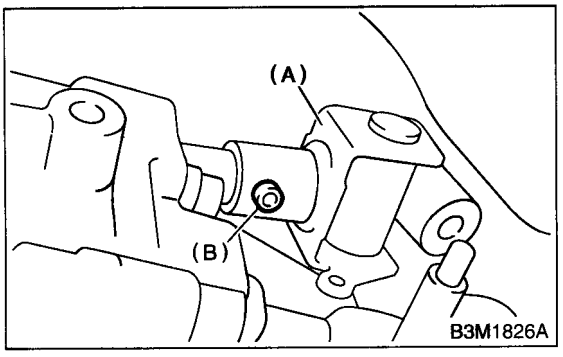

(A) Joint
(B) Spring pin

6) Mount the cushion rubber on the body.

Tightening torque:
18 N·m (1.8 kgf-m, 13.0 ft-lb)

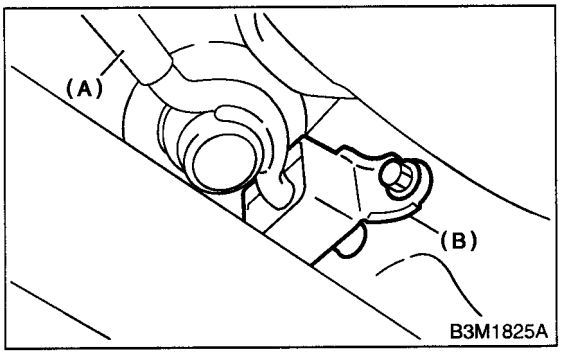

(A) Stay
(B) Cushion rubber

7) Connect the rod to the joint.

Tightening torque:
18 N·m (1.8 kgf-m, 13.0 ft-lb)

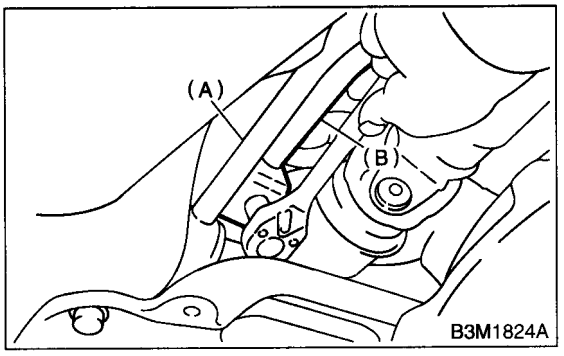

(A) Stay
(B) Rod

8) Connect the stay to transmission bracket.

Tightening torque:
18 N·m (1.8 kgf-m, 13.0 ft-lb)

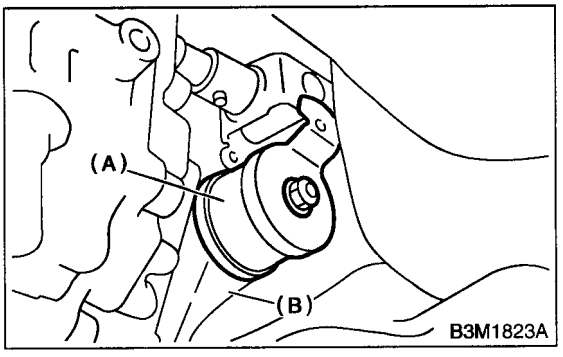

(A) Stay
(B) Transmission bracket

9) Install the heat shield cover. (If equipped)
10) Install the rear exhaust pipe and muffler.
11) Lower the vehicle.
12) Install the boot plate to body.

Tightening torque:
7.5 N·m (0.76 kgf-m, 5.5 ft-lb)

13) Install the consol box. <Ref. to EI-41, INSTALLATION, Console Box.>

C: DISASSEMBLY

1) Disassemble the locking wire.

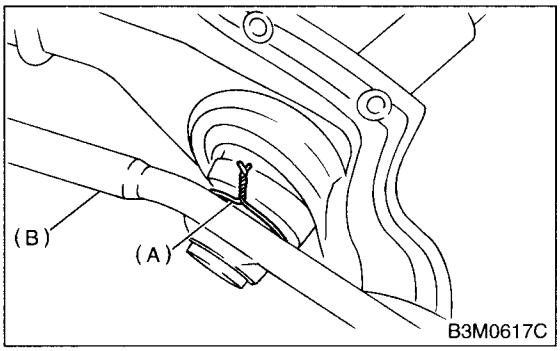

(A) Locking wire
(B) Stay

2) Remove the rod from gear shift lever.

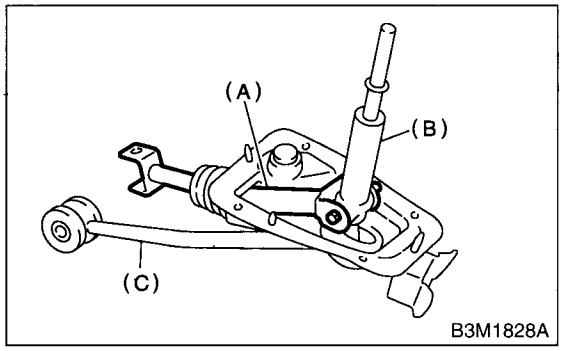

(A) Rod
(B) Gear shift lever
(C) Stay

3) Remove the snap ring from bush B, then disconnect the stay.

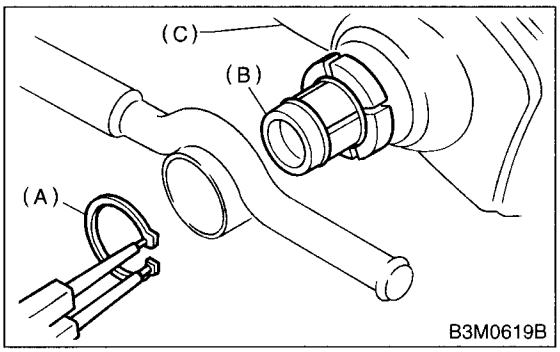

(A) Snap ring
(B) Bushing B
(C) Boot

4) Remove the boot from gear shift lever.

5) Remove the bush and cushion rubber from stay.

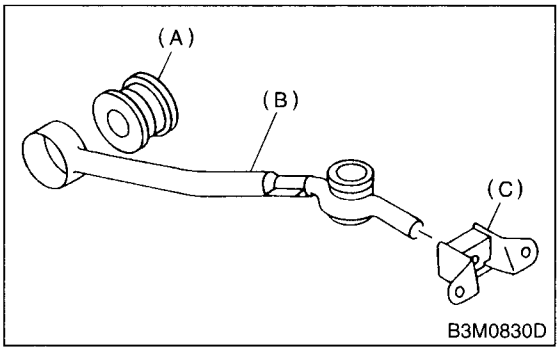

(A) Bushing
(B) Stay
(C) Cushion rubber

6) Remove the O-ring, then disconnect the bush D.

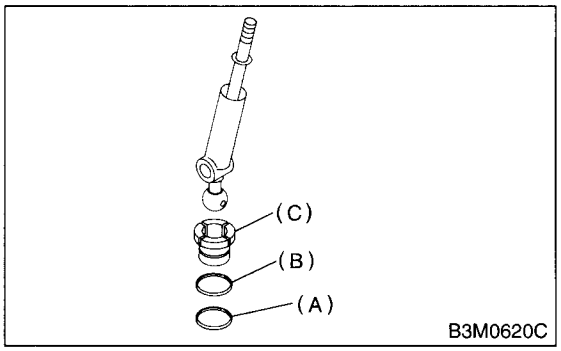

(A) O-ring B
(B) O-ring A
(C) Bushing B

7) Draw out the spring pin, then remove the bush C from gear shift lever.

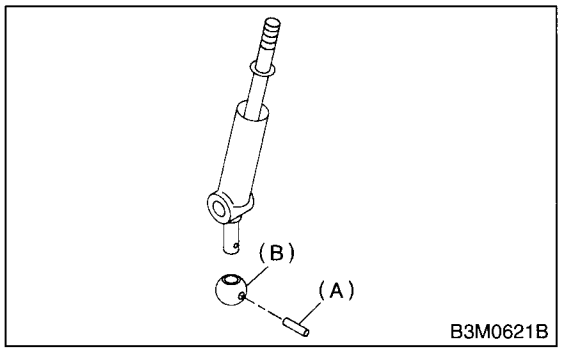

(A) Spring pin
(B) Bushing A

D: ASSEMBLY

1) Clean all parts before assembly.
2) Mount the bushing B and cushion rubber on the stay.

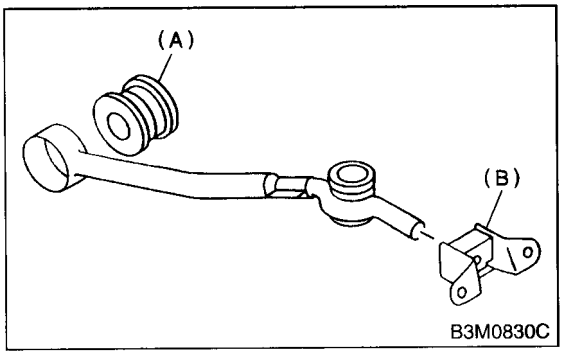

(A) Bushing
(B) Cushion rubber

3) Mount each part; boot, O-ring, bush, spacer, bush A, bush B and straight pin on the gear shift lever.

CAUTION:
- **Always use new O-rings.**
- **Apply grease [DNIGTIGHT LYW No. 2 or equivalent] to the inner and side surfaces of the bushing when installing the spacer.**

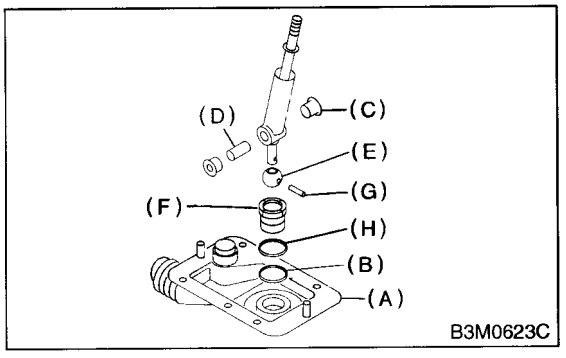

(A) Boot
(B) O-ring B
(C) Bushing
(D) Spacer
(E) Bushing A
(F) Bushing B
(G) Spring pin
(H) O-ring A

4) Insert the gear shift lever into the boot hole.
5) Install the snap ring and stay to the bushing B.

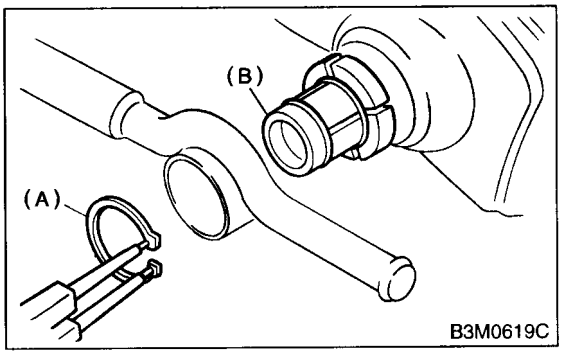

(A) Snap ring
(B) Bushing B

6) Tighten with locking wire to the extent that the boot will not come off.

CAUTION:
Always use new locking wire.

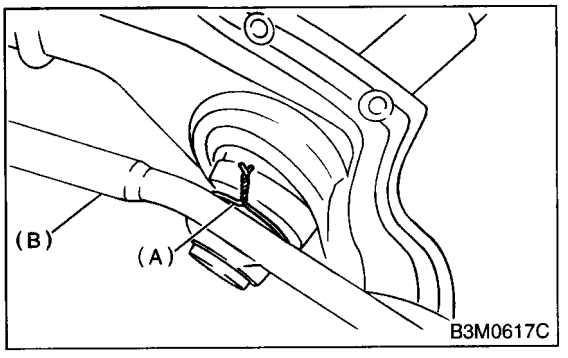

(A) Locking wire
(B) Stay

7) Insert the rod into the boot hole.
8) Connect the rod to gear shift lever.

Tightening torque:
11.8 N·m (1.2 kgf-m, 8.7 ft-lb)

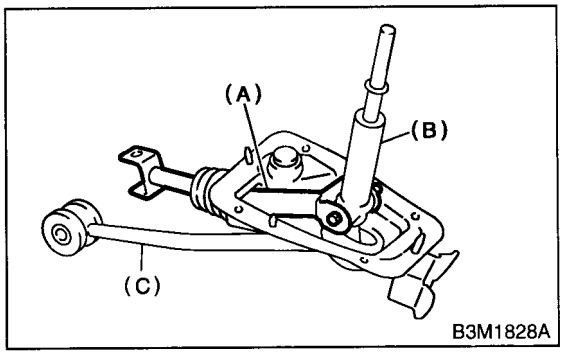

(A) Rod
(B) Shift lever
(C) Stay

9) Check the swing torque of the rod in relation to the gear shift lever.
If the torque exceeds the specification, replace the bushing or retighten nuts.

Rocking torque:
0.7 N·m (0.07 kgf-m, 0.5 ft-lb) or less

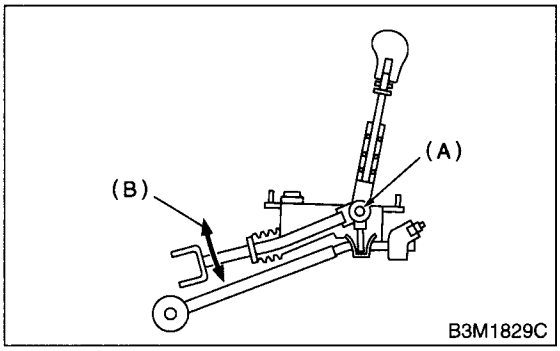

(A) Center of rotation
(B) Swing torque

10) Check that there is no excessive play and that parts move smoothly.

E: INSPECTION

1) Check each part (bushing, cushion rubber, spacer, boot, stay and rod, etc.) for deformation, damage and wear. Repair or replace any defective part. Determine defective parts by comparing with new parts.

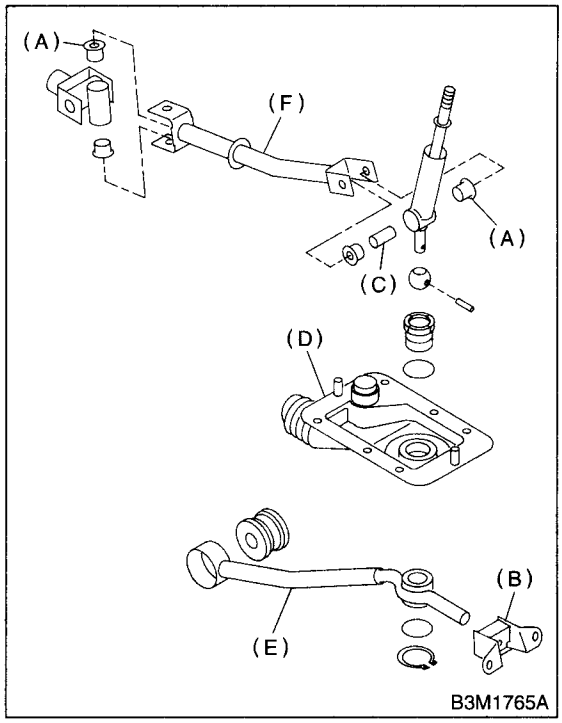

(A) Bushing
(B) Cushion rubber
(C) Spacer
(D) Boot
(E) Stay
(F) Rod

2) Check the swing torque of the rod in relation of the gear shift lever.
If the torque exceeds the specification, replace the bushing or retighten nuts.

Rocking torque:
0.7 N·m (0.07 kgf-m, 0.5 ft-lb) or less

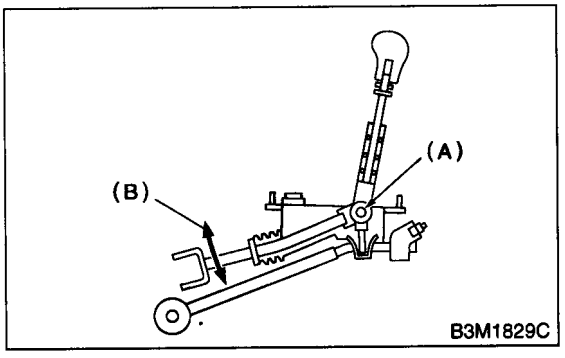

(A) Center of rotation
(B) Swing torque

9. General Diagostic

A: INSPECTION

Symptom	Problem parts
Shift lock does not function.	• Stop light switch • Shift lock solenoid • Integrated module
Shift lock cannot be released.	• Stop light switch • Shift lock solenoid • Integrated module • Inhibitor switch
Key interlock does not function.	• Key warning switch • "P" position switch • Key lock solenoid • Integrated module
Key interlock cannot be released.	• Key warning switch • "P" position switch • Key lock solenoid • Integrated module
Starter does not run.	• Inhibitor switch • Select cable • Starter circuit
Back-up light does not light up.	• Inhibitor switch • Select cable • Back-up light circuit

AUTOMATIC TRANSMISSION

AT

		Page
1.	General Description	2
2.	Automatic Transmission Fluid	9
3.	Differential Gear Oil	11
4.	Road Test	12
5.	Stall Test	13
6.	Time Lag Test	15
7.	Line Pressure Test	16
8.	Transfer Clutch Pressure Test	18
9.	Automatic Transmission Assembly	19
10.	Transmission Mounting System	25
11.	Extension Case Oil Seal	27
12.	Inhibitor Switch	28
13.	Front Vehicle Speed Sensor	32
14.	Rear Vehicle Speed Sensor	35
15.	Torque Converter Turbine Speed Sensor	36
16.	Control Valve Body	37
17.	Shift Solenoids, Duty Solenoids and ATF Temperature Sensor	39
18.	ATF Filter	44
19.	Transmission Control Module (TCM)	45
20.	Dropping Resistor	46
21.	ATF Cooler Pipe and Hose	47

1. General Description

A: SPECIFICATIONS

1. TORQUE CONVERTER CLUTCH

Model	Non-turbo	Turbo
Type	Symmetric, 3 element, single stage, 2 phase torque converter	
Stall torque ratio	1.9 — 2.1	1.85 — 2.15
Nominal diameter	246 mm (9.69 in)	
Stall speed (at sea level)	2,100 — 2,600 rpm	2,600 — 3,300 rpm
One-way clutch	Sprague type one-way clutch	

2. OIL PUMP

Type	Pracoid constant-displacement pump	
Driving method	Driven by engine	
Number of teeth	Inner rotor	9
	Outer rotor	10

3. TRANSMISSION CONTROL ELEMENT

Type	4-forward, 1-reverse, double-row planetary gears
Multi-plate clutch	3 sets
Multi-plate brake	2 sets
One-way clutch (sprague type)	1 sets

4. TRANSMISSION GEAR RATIO

Model	Sedan non-turbo	Except sedan non-turbo
1st	3.027	2.785
2nd	1.619	1.545
3rd	1.000	
4th	0.694	
Rev	2.272	

5. PLANETARY GEAR AND PLATE

Model	Non-turbo		Turbo
	Sedan	Wagon	
Front sun gear number of teeth	33		
Front pinion number of teeth	21		
Front internal gear number of teeth	75		
Rear sun gear number of teeth	37	42	
Rear pinion number of teeth	19	17	
Tooth number of rear internal gear	75		
Drive & driven plate number of high clutch	4		5
Drive & driven plate number of low clutch	6		7
Drive & driven plate number of reverse clutch	2		
Drive & driven plate number of 2-4 brake	3		4
Drive & driven plate number of low & reverse brake	6		7

6. SELECTOR POSITION

P (Park)	Transmission in neutral, output member immovable, and engine start possible
R (Reverse)	Transmission in reverse for backing
N (Neutral)	Transmission in neutral and engine start possible
D (Drive)	Automatic gear change 1st ← → 2nd ← → 3rd ← → 4th
3 (3rd)	Automatic gear change 1st ← → 2nd ← → 3rd ← 4th
2 (2nd)	2nd gear locked (Deceleration possible 2nd ← 3rd ← 4th)
1 (1st)	1st gear locked (Deceleration possible 1st ← 2nd ← 3rd ← 4th)
Control method	Hydraulic remote control

7. HYDRAULIC CONTROL AND LUBRICATION

Type	Electronic/hydraulic control [Four forward speed changes by electrical signals of vehicle speed and accelerator (throttle) opening]
Fluid	Dexron III type Automatic transmission fluid
Fluid capacity	9.3 — 9.6 ℓ (9.8 — 10.1 US qt, 7.4 — 7.7 Imp qt)
Lubrication system	Forced feed lubrication with oil pump
Oil	Automatic transmission fluid (above mentioned)

8. COOLING AND HARNESS

Cooling system	Liquid-cooled cooler incorporated in radiator
Inhibitor switch	12 poles
Transmission harness	20 poles

9. TRANSFER

Model	Non-turbo	Turbo
Transfer type	Multi-plate transfer (MPT)	Variable torque distribution (VTD)
Drive & driven plate number of transfer clutch	5	3
Control method	Electronic, hydraulic type	
Lubricant	The same Automatic transmission fluid used in automatic transmission	
1st reduction gear ratio	1.000 (53/53)	

10. FINAL REDUCTION

Model	Sedan non-turbo	Except sedan non-turbo
Front final gear ratio	4.444 (40/9)	4.111 (37/9)
Lubrication oil	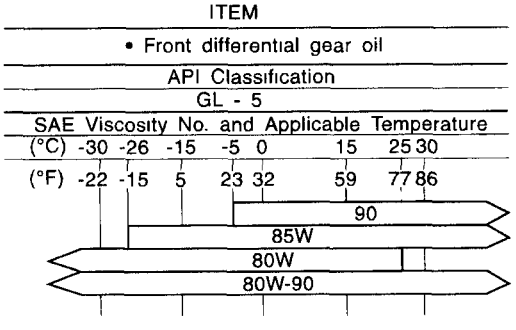	
Front differential oil capacity	1.2 ℓ (1.3 US qt, 1.1 Imp qt)	

B: COMPONENT

NOTE:
For information about other transmission mounting components, refer to "AUTOMATIC TRANSMISSION" <Pub. No. G0853ZE> a separate publication.

1. TRANSMISSION MOUNTING

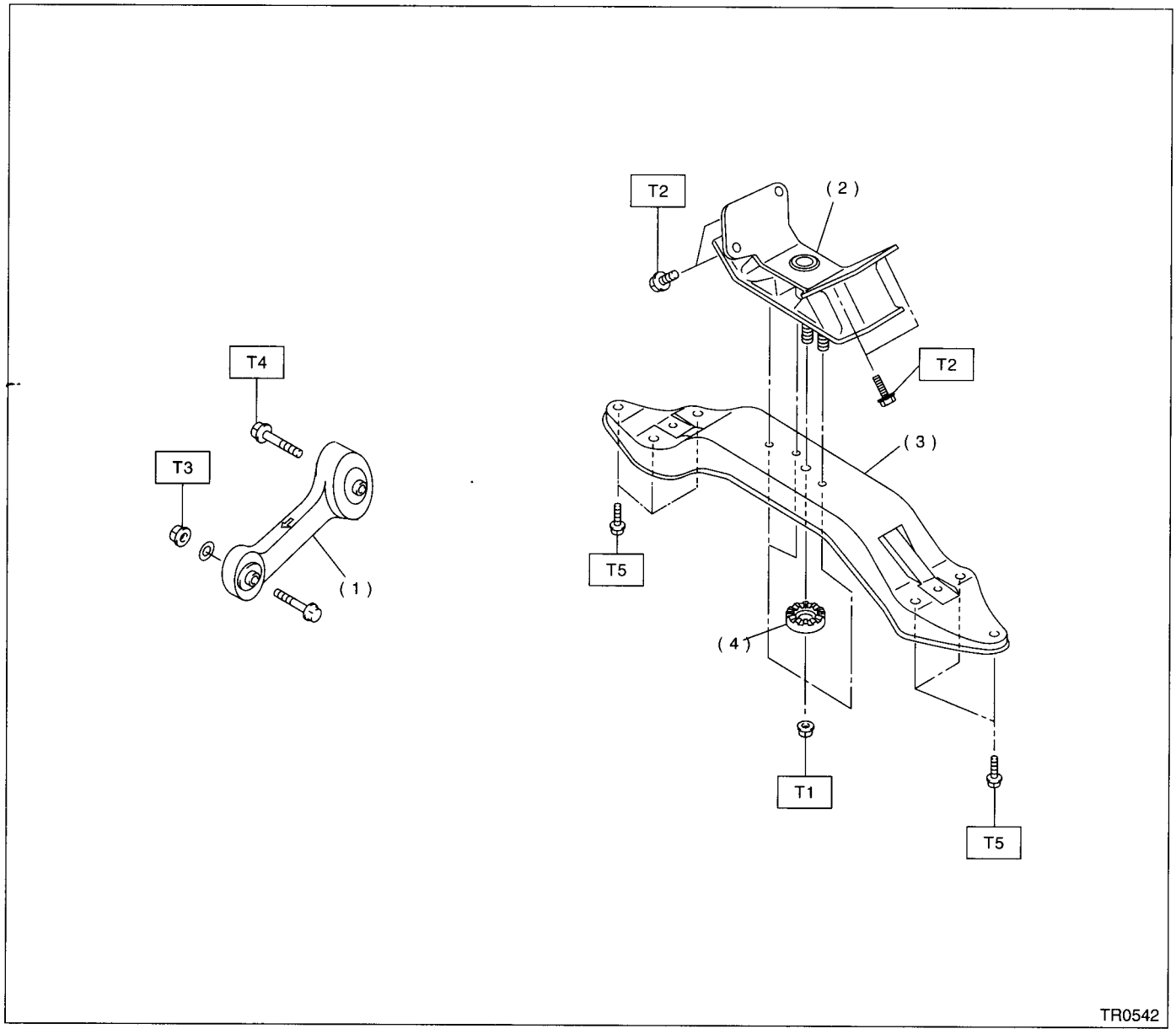

(1) Pitching stopper
(2) Rear cushion rubber
(3) Crossmember
(4) Stopper

Tightening torque: N·m (kgf-m, ft-lb)
T1: 35 (3.6, 26)
T2: 39 (4.0, 29)
T3: 50 (5.1, 37)
T4: 58 (5.9, 43)
T5: 70 (7.1, 51)

C: CAUTION

- Wear working clothing, including a cap, protective goggles, and protective shoes during operation.
- Remove contamination including dirt and corrosion before removal, installation, and disassembly.
- Keep the disassembled parts in order and protect them from dust or dirt.
- Until the oil pan is removed, do not place with the oil pan side facing up to prevent foreign matter from entering the valve body.
- Before removal, installation or disassembly, be sure to clarify the failure. Avoid unnecessary removal, installation, disassembly and replacement.
- When disassembling the case and other light alloy parts, use a plastic hammer to force it apart. Do not pry it apart with a screwdriver or other tool.
- Be careful not to burn your hands, because each part on the vehicle is hot after running.
- Use SUBARU genuine gear oil, grease etc. or the equivalent. Do not mix gear oil, grease etc. with that of another grade or from other manufacturers.
- Be sure to tighten fasteners including bolts and nuts to the specified torque.
- Place shop jacks or safety stands at the specified points.
- Apply gear oil onto sliding or revolution surfaces before installation.
- Replace deformed or otherwise damaged snap rings with new ones.
- Before installing O-rings or oil seals, apply sufficient amount of ATF fluid to avoid damage and deformation.
- Be careful not to incorrectly install or fail to install O-rings, snap rings and other such parts.
- Before securing a part on a vice, place cushioning material such as wood blocks, aluminum plate, or shop cloth between the part and the vice.
- Avoid damaging the mating surface of the case.
- Before applying sealant, completely remove the old seal.

D: PREPARATION TOOL

1. SPECIAL TOOLS

ILLUSTRATION	TOOL NUMBER	DESCRIPTION	REMARKS
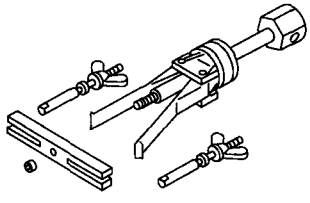 B3M1977	398527700	PULLER ASSY	Used for removing and installing extension case roller bearing.
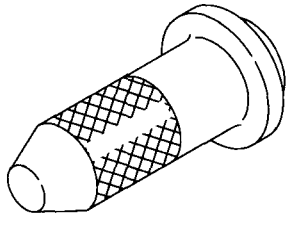 B3M1972	498057300	INSTALLER	Used for installing extension oil seal.

ILLUSTRATION	TOOL NUMBER	DESCRIPTION	REMARKS
B3M2040	498575400	OIL PRESSURE GAUGE ASSY	Used for measuring oil pressure.
B3M2041	498897200	ADAPTER	Used for oil pump housing when measuring reverse clutch pressure and line pressure.
B3M2042	498545400	FILTER WRENCH	Used for removing and installing ATF filter.
B3M2043	498277200	STOPPER SET	Used for removing and installing automatic transmission assembly to engine.

ILLUSTRATION	TOOL NUMBER	DESCRIPTION	REMARKS
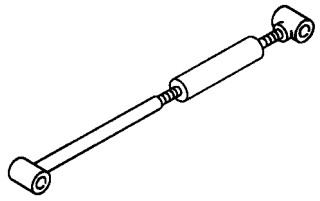 B3M1976	41099AA020	ENGINE SUPPORT	Used for supporting engine.
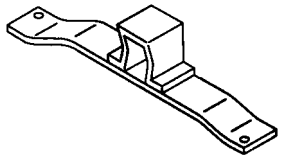 B3M1975	41099AA010	ENGINE SUPPORT BRACKET	Used for supporting engine.
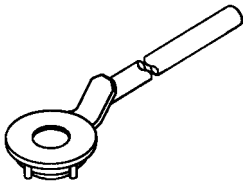 B2M4157	Turbo model 499977300 Non-turbo model 499977100	CRANK PULLEY WRENCH	Used for removing and installing bolts which hold torque converter clutch and drive plate.
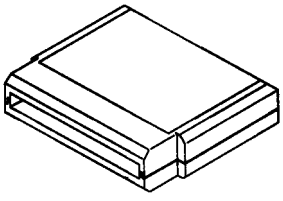 B2M3876	24082AA150 (Newly adopted tool)	CARTRIDGE	Troubleshooting for electrical systems.

ILLUSTRATION	TOOL NUMBER	DESCRIPTION	REMARKS
B2M3877	22771AA030	SELECT MONITOR KIT	Troubleshooting for electrical systems. • English: 22771AA030 (Without printer) • German: 22771AA070 (Without printer) • French: 22771AA080 (Without printer) • Spanish: 22771AA090 (Without printer)
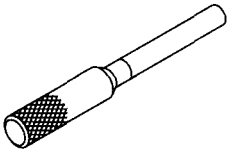 B3M2008	499267300	STOPPER PIN	Used for installing and adjusting inhibitor switch.

2. GENERAL PURPOSE TOOLS

TOOL NAME	REMARKS
Circuit Tester	Used for measuring resistance, voltage and ampere.

2. Automatic Transmission Fluid

A: INSPECTION

1) Check the level of the ATF.
   (1) Raise the ATF temperature to 60 to 80°C (140 to 176°F) from 40 to 60°C (104 to 140°F) (when cold) by driving a distance of 5 to 10 km (3 to 6 miles).

NOTE:
The level of ATF varies with fluid temperature. Pay attention to the fluid temperature when checking oil level.

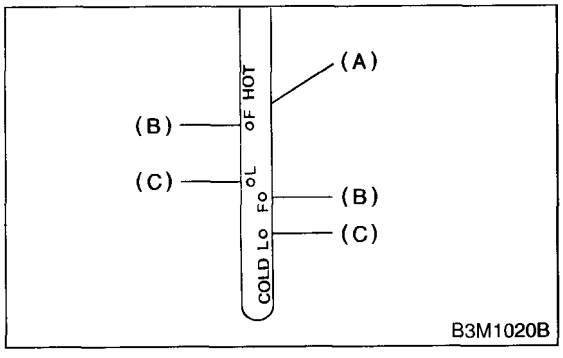

(A) ATF level gauge
(B) Upper level
(C) Lower level

   (2) Make sure the vehicle is level. After selecting all positions (P, R, N, D, 3, 2, 1), set the select leveler in "P" range. Measure fluid level with the engine idling.

NOTE:
After running, idle the engine for one or two minutes before measurement.

   (3) If the fluid level is below the center between upper and lower marks, add the recommended ATF until the fluid level is found within the specified range (above the center between upper and lower marks). When the transmission is hot, the level should be above the center of upper and lower marks, and when it is cold, the level should be found below the center of these two marks.

CAUTION:
- **Use care not to exceed the upper limit level.**
- **ATF level varies with temperature. Remember that the addition of fluid to the upper limit mark when the transmission is cold will result in overfilling of fluid.**

   (4) Fluid temperature rising speed:
- By idling the engine

Time for temperature rise to 60°C (140°F) with atmospheric temperature of 0°C (32°F): More than 25 minutes
<Reference>
Time for temperature rise to 30°C (86°F) with atmospheric temperature of 0°C (32°F): Approx. 8 minutes
- By running the vehicle

Time for temperature rise to 60°C (140°F) with atmospheric temperature of 0°C (32°F): More than 10 minutes

   (5) Method for checking fluid level upon delivery or at periodic inspection:
   Check fluid level after a warm-up run of approx. 10 minutes. During the warm-up period, the automatic transmission functions can also be checked.

2) Check the fluid for leaks.
Check for leaks in the transmission. If there are leaks, it is necessary to repair or replace gasket, oil seals, plugs or other parts.

B: REPLACEMENT

1) Lift-up the vehicle.
2) Drain the ATF completely.

CAUTION:
Directly after the engine has been running, the ATF is hot. Be careful not to burn yourself.

NOTE:
Tighten the ATF drain plug after draining the ATF.

Tightening torque:
25 N·m (2.5 kgf-m, 18.1 ft-lb)

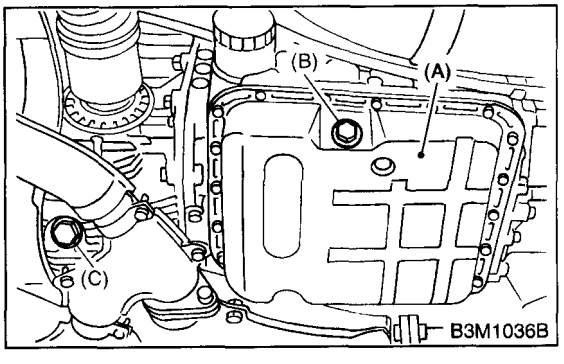

(A) Oil pan
(B) Drain plug
(C) Differential oil drain plug

3) Lower the vehicle.

4) Pour ATF into the oil charge pipe.

Recommended fluid:
Dexron III type automatic transmission fluid

Capacity:
Fill the same amount of fluid drained from the drain plug hole.

Capacity when transmission is overhauled:
9.3 — 9.6 ℓ (9.8 — 10.1 US qt, 8.2 — 8.4 Imp qt)

5) Check the level and leaks of the ATF.
<Ref. to AT-9, INSPECTION, Automatic Transmission Fluid.>

3. Differential Gear Oil

A: INSPECTION

1) Park the vehicle on a level surface.
2) Remove the oil level gauge and wipe it clean.
3) Reinsert the level gauge all the way. Be sure that the level gauge is correctly inserted and in the proper orientation.
4) Remove it again and note the reading. If the differential gear oil level is below the "L" line, add oil to bring the level up to the "F" line.
5) To prevent overfilling the differential gear oil, do not add oil above the "F" line.

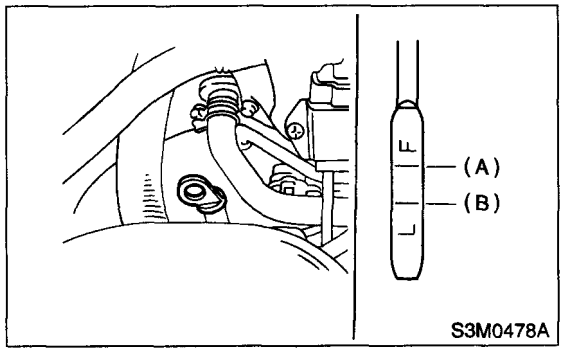

(A) Upper level
(B) Lower level

B: REPLACEMENT

1) Lift-up the vehicle.
2) Drain the differential gear oil completely.

CAUTION:
Directly after the engine has been running, the differential gear oil is hot. Be careful not to burn yourself.

NOTE:
Tighten the differential gear oil drain plug after draining the differential gear oil.

Tightening torque:
44 N·m (4.5 kgf-m, 32.5 ft-lb)

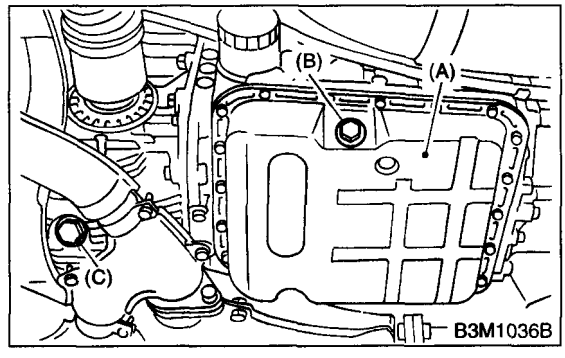

(A) Oil pan
(B) Drain plug
(C) Differential oil drain plug

3) Lower the vehicle.
4) Pour gear oil into the gauge hole.

Recommended fluid:
Use GL-5 or equivalent.

Gear oil capacity:
1.2 ℓ (1.3 US qt, 1.1 Imp qt)

5) Check the level of the differential gear oil.
<Ref. to AT-11, INSPECTION, Differential Gear Oil.>

4. Road Test

A: INSPECTION

1. GENERAL PRECAUTION

Road tests should be conducted to properly diagnose the condition of the automatic transmission.

CAUTION:
When performing the test, do not exceed posted speed limit.

2. D RANGE SHIFT FUNCTION

Check shifting between 1st ⇔ 2nd ⇔ 3rd ⇔ 4th while driving on normal city streets.

3. D RANGE SHIFT SHOCK

Check the shock level when shifting up during normal driving.

4. KICK-DOWN FUNCTION

Check kick-down for each gear. Also check the kick-down shock level.

5. ENGINE BRAKE OPERATION

- Check the 3rd gear engine brake when shifting between D ⇔ 3rd range while driving in 4th gear of D range [50 to 60 km/h (31 to 37 MPH)].
- Check the 2nd gear engine brake when shifting between 3 ⇔ 2 range while driving in the 3 range 3rd gear [40 to 50 km/h (25 to 31 MPH)].
- Check the 1st gear engine brake when shifting between 2 ⇔1 range while driving in the 2 range 2nd gear [20 to 30 km/h (12 to 19 MPH)].

6. LOCK-UP FUNCTION

Check that rpm does not change sharply when the axle pedal is lightly depressed when driving on flat roads at normal speed in the lock-up range.

7. P RANGE OPERATION

Stop the vehicle on an uphill grade of 5% or more and shift to "P" range. Check that the vehicle does not move when the parking brake is released.

8. UNUSUAL SOUNDS AND VIBRATION

Check for unusual sounds and vibration while driving and during shifting.

9. CLIMBING CONTROL FUNCTION

- Check that the gear remains in 3rd when going up a grade.
- Check that the gear remains in 3rd when applying the brakes while going down a grade.

10.OIL LEAKS

After the driving test, inspect for oil leaks.

5. Stall Test

A: INSPECTION

1. GENERAL INFORMATION

The stall test is of extreme importance in diagnosing the condition of the automatic transmission and the engine. It should be conducted to measure the engine stall speeds in "R" and "2" ranges.
Purposes of the stall test:
1) To check the operation of the automatic transmission clutch.
2) To check the operation of the torque converter clutch.
3) To check engine performance.

2. TEST METHODS

1) Preparations before test:
   (1) Check that the throttle valve opens fully.
   (2) Check that the engine oil level is correct.
   (3) Check that the coolant level is correct.
   (4) Check that the ATF level is correct.
   (5) Check that the differential gear oil level is correct.
   (6) Increase ATF temperature to 50 to 80°C (122 to 176°F) by idling the engine for approximately 30 minutes (with select lever set to "N" or "P").
2) Install an engine tachometer at a location visible from the driver's compartment and mark the stall speed range on the tachometer scale.
3) Place the wheel chocks at the front and rear of all wheels and engage the parking brake.
4) Move the manual linkage to ensure it operates properly, and shift the select lever to the "2" range.
5) While forcibly depressing the foot brake pedal, gradually depress the accelerator pedal until the engine operates at full throttle.

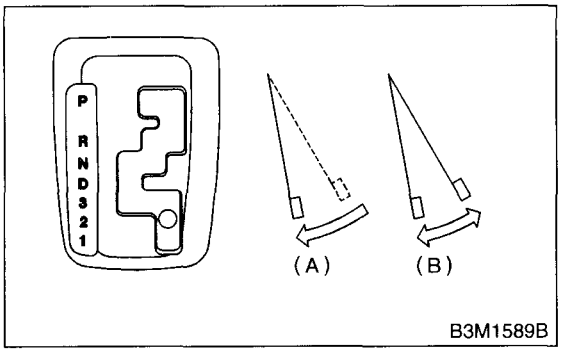

(A) Brake pedal
(B) Accelerator pedal

6) When the engine speed is stabilized, read that speed quickly and release the accelerator pedal.
7) Shift the select lever to Neutral, and cool down the engine by idling it for more than one minute.
8) Record the stall speed.
9) If the stall speed in "2" range is higher than specifications, low clutch slipping and "2-4 brake slipping" may occur. To identify it, conduct the same test as above in D range.
10) Perform the stall tests with the select lever in the R range.

NOTE:
- Do not continue the stall test for MORE THAN FIVE SECONDS at a time (from closed throttle, fully open throttle to stall speed reading). Failure to follow this instruction causes the engine oil and ATF to deteriorate and the clutch and brake to be adversely affected.
Be sure to cool down the engine for at least one minute after each stall test with the select lever set in the "P" or "N" range and with the idle speed lower than 1,200 rpm.
- If the stall speed is higher than the specified range, attempt to finish the stall test in as short a time as possible, in order to prevent the automatic transmission from sustaining damage.

Stall speed (at sea level):
Non-turbo model: 2,100 — 2,600 rpm
Turbo model: 2,600 — 3,300 rpm

3. EVALUATION

Stall speed (at sea level)	Position	Cause
Less than specifications	2, R	• Throttle valve not fully open • Erroneous engine operation • Torque converter clutch's one-way clutch slipping
Greater than specifications	D	• Line pressure too low • Low clutch slipping • One-way clutch malfunctioning
	R	• Line pressure too low • Reverse clutch slipping • Low & reverse brake slipping
	2	• Line pressure too low • Low clutch slipping • 2-4 brake slipping

6. Time Lag Test

A: INSPECTION

1. GENERAL INFORMATION

If the select lever is shifted while the engine is idling, there will be a certain time elapse or lag before the shock can be felt. This is used for checking the condition of the low clutch, reverse clutch, low & reverse brake and one-way clutch.

CAUTION:
- **Perform the test at normal operation fluid temperature 60 to 80°C (140 to 176°F).**
- **Be sure to allow a one minute interval between tests.**
- **Make three measurements and take the average value.**

2. TEST METHODS

1) Fully apply the parking brake.
2) Start the engine.
3) Check the idling speed (A/C OFF).
4) Shift the select lever from "N" to "D" range.
Using a stop watch, measure the time it takes from shifting the lever until the shock is felt.
   Time lag: Less than 1.2 seconds
5) In the same manner, measure the time lag for "N" → "R".
   Time lag: Less than 1.5 seconds

3. EVALUATION

1) If "N" → "D" time lag is longer than specified:
- Line pressure too low
- Low clutch worn
- One-way clutch not operating properly

2) If "N" → "R" time lag is longer than specified:
- Line pressure too low
- Reverse clutch worn
- Low & reverse brake worn

7. Line Pressure Test

A: MEASUREMENT

1. GENERAL INFORMATION

If the clutch or the brake shows a sign of slippage or shifting sensation is not correct, the line pressure should be checked.

- Excessive shocks during upshifting or shifting takes place at a higher point than under normal circumstances, may be due to the line pressure being too high.
- Slippage or inability to operate the vehicle may, in most cases, be due to loss of oil pressure for the operation of the clutch, brake or control valve.

1) Line pressure measurement (under no load):

CAUTION:

- **Before measuring line pressure, jack-up all wheels.**
- **Maintain temperature of ATF at approximately 50°C (122°F) during measurement.**

(ATF will reach the above temperature after idling the engine for approximately 30 minutes with select lever in "N" or "P".)

2) Line pressure measurement (under heavy load):

CAUTION:

- **Before measuring line pressure, apply both foot and parking brakes with all wheels chocked (Same as for "stall" test conditions).**
- **Measure the line pressure when the select lever is in "R", "2" with engine under stall conditions.**
- **Measure the line pressure within 5 the seconds after shifting the select lever to each position. (If the line pressure needs to be measured again, allow the engine to idle and then stop. Wait for at least one minute before measurement.)**
- **Maintain the temperature of ATF at approximately 50°C (122°F) during measurement. (ATF will reach the above temperature after idling the engine for approximately 30 minutes with the select lever in "N" or "P".)**

2. TEST METHODS

1) Temporarily attach the ST to a suitable place in the driver's compartment, remove the blind plug located in front of the toe board and pass the hose of the ST to the engine compartment.

ST 498575400 OIL PRESSURE GAUGE ASSY

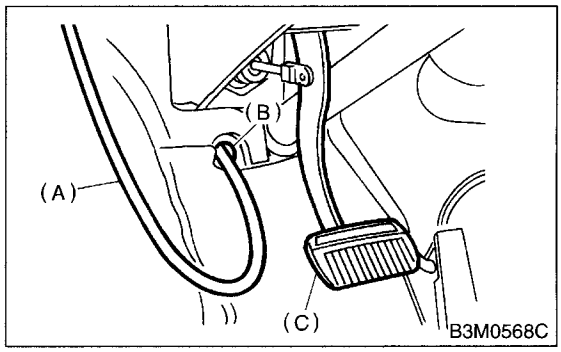

(A) Pressure gauge hose
(B) Hole in toe board (blind plug hole)
(C) Brake pedal

2) Remove the test plug and install the ST instead.

ST 498897200 OIL PRESSURE GAUGE ADAPTER

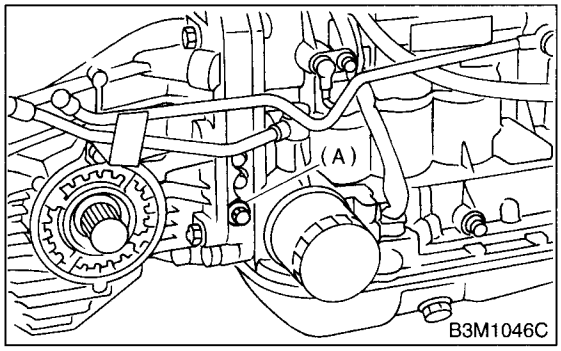

(A) Test plug

3) Connect ST1 with ST2.

ST1 498897200 OIL PRESSURE GAUGE ADAPTER
ST2 498575400 OIL PRESSURE GAUGE ASSY

4) Check for duty ratio changes by opening and closing the throttle valve using the Subaru Select Monitor.

(1) Insert the cartridge to the Subaru Select Monitor. <Ref. to AT-5, PREPARATION TOOL, General Description.>

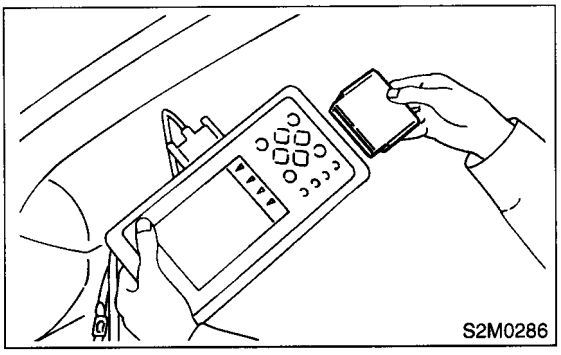

(2) Connect the Subaru Select Monitor to data link connector.

5) Check the line pressure in accordance with the following chart.

3. EVALUATION

Standard line pressure			
Range position	Line pressure duty ratio (%)	Throttle position	Line pressure kPa (kg/cm^2, psi)
2	5	Full open	1,128 — 1,304 (11.5 — 13.3, 164 — 189)
R	5	Full open	1,520 — 1,716 (15.5 — 17.5, 220 — 249)
D	100	Full closed	304 — 412 (3.1 — 4.2, 44 — 60)

8. Transfer Clutch Pressure Test

A: INSPECTION

1. TEST METHODS

• MPT model

Check the transfer clutch pressure in accordance with the following chart in the same manner as with line pressure. <Ref. to AT-16, Line Pressure Test.>

ST 498897700 OIL PRESSURE ADAPTER SET
ST 498575400 OIL PRESSURE GAUGE ASSY

AWD mode: "D" range
FWD mode: "P" range, engine speed 2,000 rpm

CAUTION:
Before setting in FWD mode, install the spare fuse on FWD mode switch.

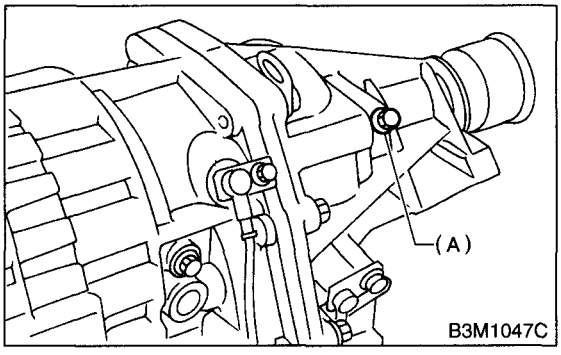

(A) Test plug

• VTD model

Check the transfer clutch pressure in accordance with the following chart in the same manner as with line pressure.

ST 498897700 OIL PRESSURE ADAPTER SET
ST 498575400 OIL PRESSURE GAUGE ASSY

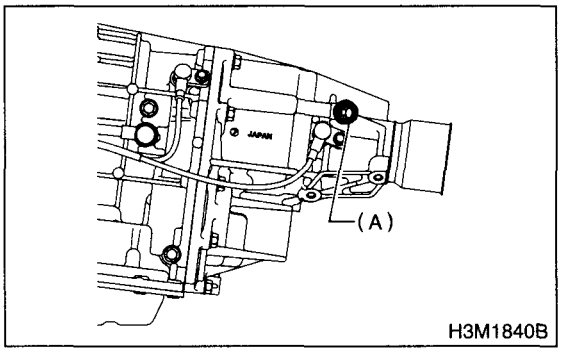

(A) Test plug

2. EVALUATION

• MTP model

NOTE:
If the oil pressure is not produced or if it does not change in the AWD mode, the transfer duty solenoid or transfer valve assembly may be malfunctioning. If the oil pressure is produced in the FWD mode, the problem is similar to that in the AWD mode.

Standard transfer clutch pressure kPa (kg/cm^2, psi)			
Duty ratio (%)	Throttle position	AWD mode	FWD mode
5	Full closed	932 — 1,089 (9.5 — 11.1, 135 — 158)	—
60	2/3 throttle	216 — 294 (2.2 — 3.0, 31 — 43)	—
95	Full open	—	0 (0, 0)

• VTD model

Duty ratio (%)	Throttle position	Standard transfer clutch pressure kPa (kg/cm^2, psi)
5	Full closed	932 — 1,089 (9.5 — 11.1, 135 — 158)
60	2/3 throttle	216 — 294 (2.2 — 3.0, 31 — 43)

9. Automatic Transmission Assembly

A: REMOVAL

1) Set the vehicle on the lift.
2) Open the front hood fully, and support it with stay.
3) Disconnect the ground terminal from battery.
4) Remove the air intake duct. (Non-turbo model) <Ref. to IN(SOHC)-7, REMOVAL, Air Intake Duct.>
5) Remove the air cleaner case. (Non-turbo model) <Ref. to IN(SOHC)-6, REMOVAL, Air Cleaner Case.>
6) Remove the air cleaner case stay. (Non-turbo model)

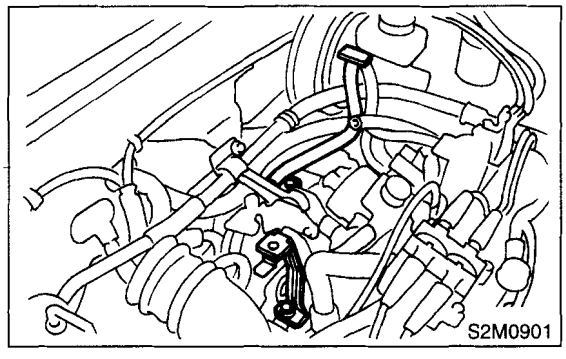

7) Remove the intercooler. (Turbo model) <Ref. to IN(DOHC TURBO)-10, REMOVAL, Intercooler.>
8) Remove the front, center, rear exhaust pipe and muffler. (Non-turbo model)
<Ref. to EX(SOHC)-5, REMOVAL, Front Exhaust Pipe.>, <Ref. to EX(SOHC)-9, REMOVAL, Rear Exhaust Pipe.> and <Ref. to EX(SOHC)-11, REMOVAL, Muffler.>
9) Remove the center, rear exhaust pipe and muffer. (Turbo model) <Ref. to EX(DOHC TURBO)-8, REMOVAL, Center Exhaust Pipe.>, <Ref. to EX(DOHC TURBO)-13, REMOVAL, Rear Exhaust Pipe.> and <Ref. to EX(DOHC TURBO)-14, REMOVAL, Muffler.>

10) Disconnect the following connectors:
(1) Transmission harness connector

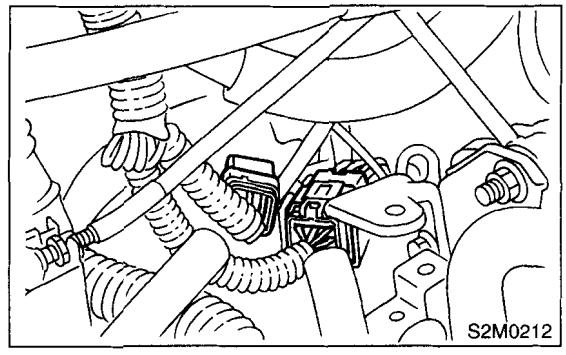

(2) Transmission ground terminal
11) Remove the starter. <Ref. to SC-6, REMOVAL, Starter.>
12) Install the ST to torque converter clutch case.
ST 498277200 STOPPER SET

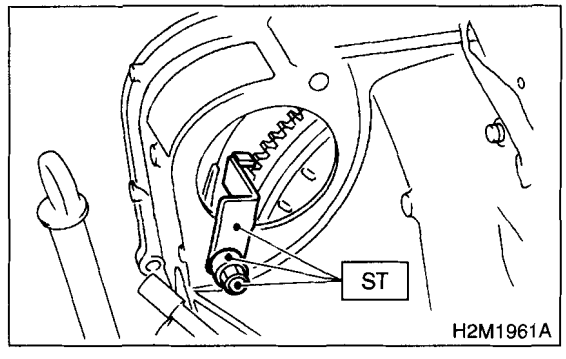

13) Remove the pitching stopper.

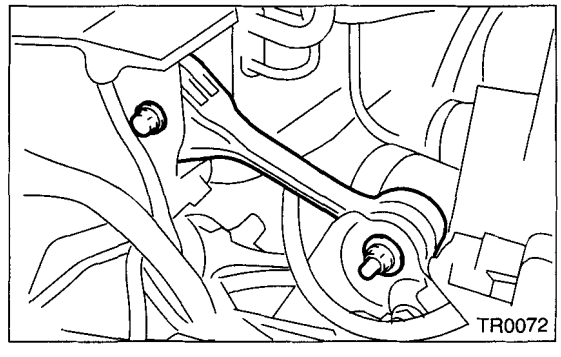

14) Separate the torque converter clutch from drive plate.
(1) Remove the service hole plug.
(2) Remove the bolts which hold torque converter clutch to drive plate.
(3) While rotating the engine, remove the other bolts using ST.

CAUTION:
Be careful not to drop bolts into the torque converter clutch housing.

Turbo model
ST 499977300 CRANK PULLEY WRENCH
Non-turbo model
ST 499977100 CRANK PULLEY WRENCH

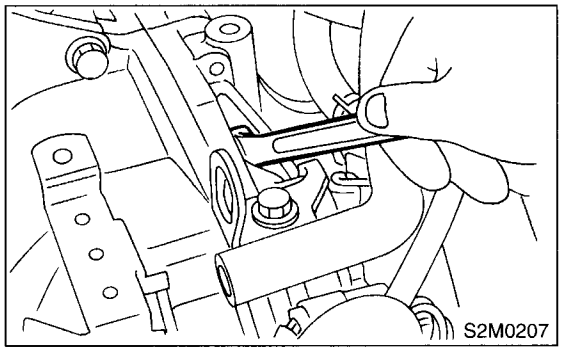

15) Remove the ATF level gauge.

CAUTION:
Plug the opening to prevent entry of foreign particles into transmission fluid.

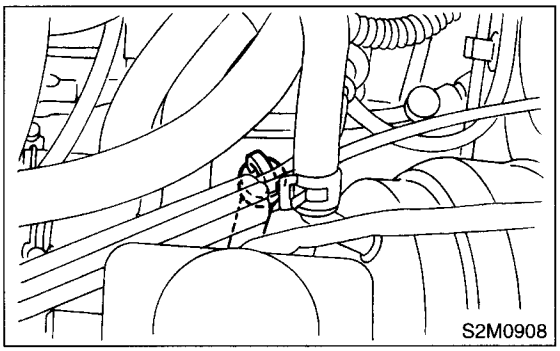

16) Set the ST.

NOTE:
Also is available Part No. 41099AA010.
ST 41099AA020 ENGINE SUPPORT ASSY

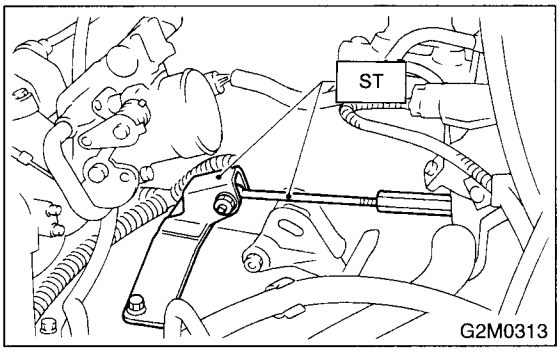

17) Remove the bolt which holds right upper side of transmission to engine.

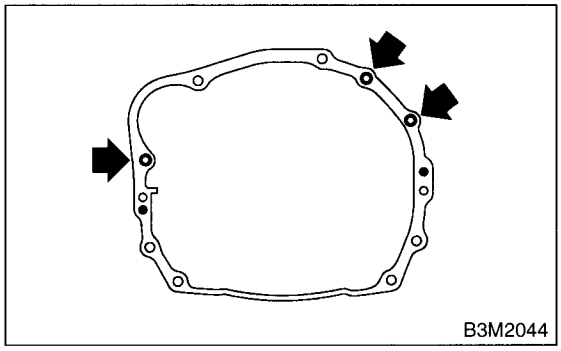

18) Lift-up the vehicle.
19) Remove the under cover.
20) Remove the heat shield cover. (If equipped)
21) Drain the ATF to remove the ATF drain plug.

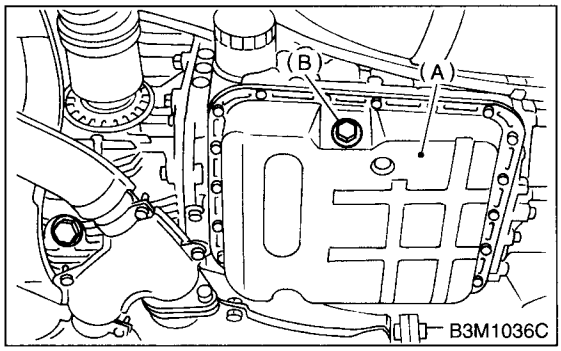

(A) Oil pan
(B) Drain plug

22) Disconnect the ATF cooler hoses from pipes of transmission side, and remove the ATF level gauge guide.

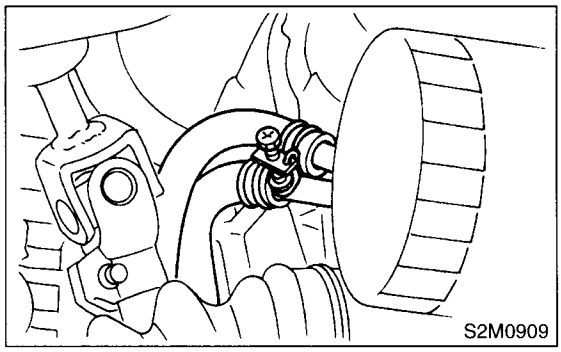

23) Remove the propeller shaft.
<Ref. to DS-14, REMOVAL, Propeller Shaft.>
24) Remove the shift select cable. <Ref. to CS-26, REMOVAL, Select Cable.>
25) Disconnect the stabilizer link from transverse link.

26) Remove the bolt securing ball joint of transverse link to housing.

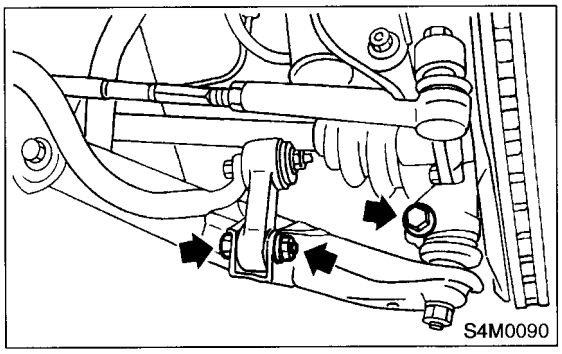

27) Remove the spring pins and separate front drive shafts from each side of the transmission.

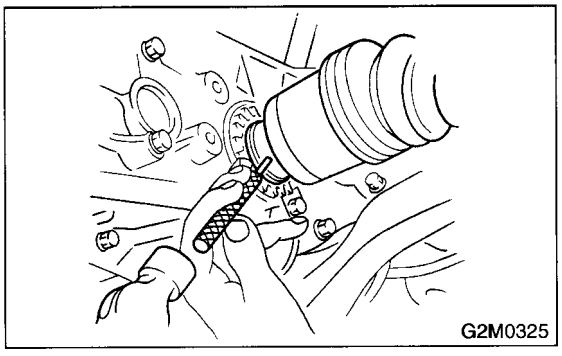

28) Remove the nuts which hold lower side of transmission to engine.

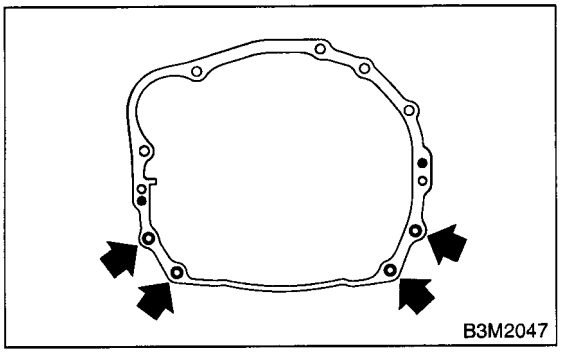

29) Place the transmission jack under transmission.

CAUTION:
- **Make sure that the support plates of transmission jack don't touch the oil pan.**

30) Remove the transmission rear crossmember from vehicle.

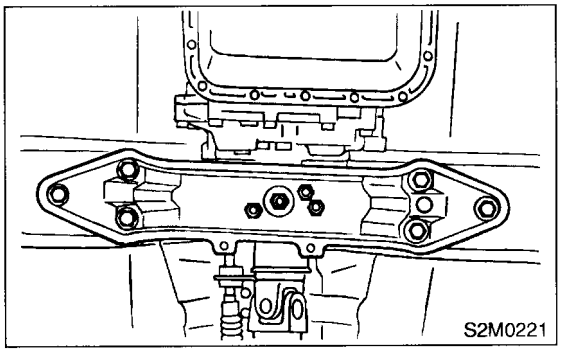

31) Remove the transmission.

CAUTION:
Move the transmission and torque converter as a unit away from engine.

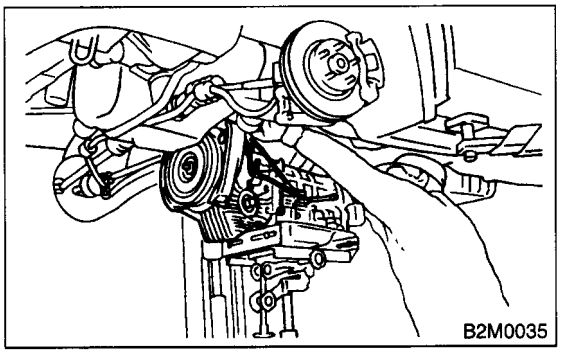

32) Separate transmission assembly and rear cushion rubber.

B: INSTALLATION

1) Install the rear cushion rubber to transmission assembly.

Tightening torque:
39 N·m (4.0 kgf-m, 29 ft-lb)

2) Install the ST to torque converter clutch case.
ST 498277200 STOPPER SET

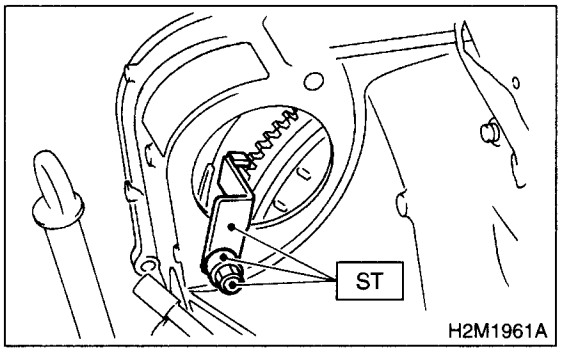

3) Install the transmission onto engine.
(1) Gradually raise the transmission with transmission jack.

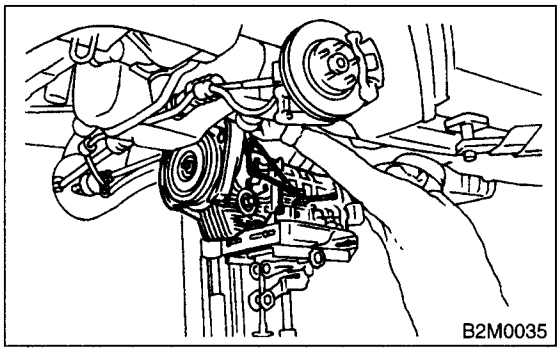

(2) Engage them at splines.

4) Install the transmission rear crossmember.

Tightening torque:
T1: 35 N·m (3.6 kgf-m, 26 ft-lb)
T2: 70 N·m (7.1 kgf-m, 51.4 ft-lb)

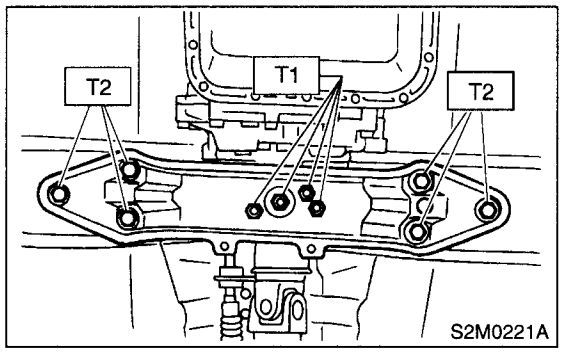

5) Take off the transmission jack.

6) Tighten the nuts and bolts which hold lower side of transmission to engine.

Tightening torque:
50 N·m (5.1 kgf-m, 36.9 ft-lb)

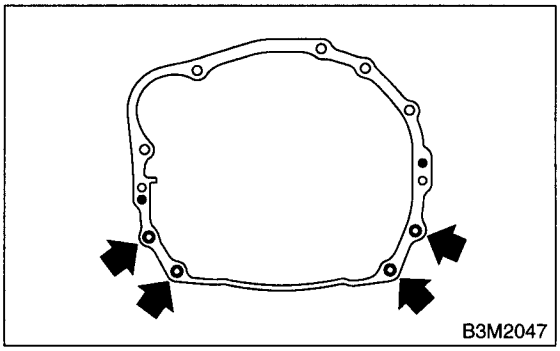

7) Lower the vehicle.

8) Connect the engine and transmission.
(1) Remove the ST from torque converter clutch case.

NOTE:
Be careful not to drop the ST into the torque converter clutch case when removing the ST.

ST 498277200 STOPPER SET

(2) Install the starter.
<Ref. to SC-7, INSTALLATION, Starter.>

(3) Tighten the bolt which holds right upper side of transmission to engine.

Tightening torque:
50 N·m (5.1 kgf-m, 36.9 ft-lb)

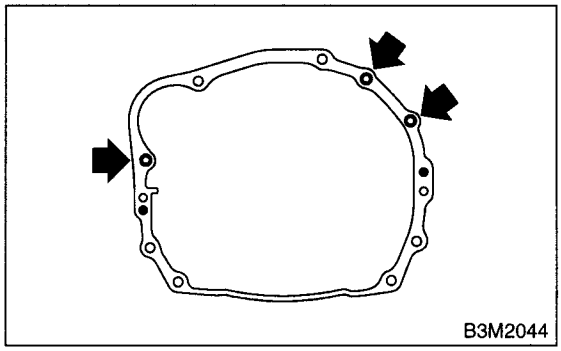

9) Install the torque converter clutch to drive plate.
   (1) Tighten the bolts which hold torque converter clutch to drive plate.
   (2) Tighten the other bolts while rotating the engine by using ST.

CAUTION:
Be careful not to drop bolts into the torque converter clutch housing.

Turbo model
ST 499977300 CRANK PULLEY WRENCH
Non-turbo model
ST 499977100 CRANK PULLEY WRENCH

Tightening torque:
25 N·m (2.5 kgf-m, 18.1 ft-lb)

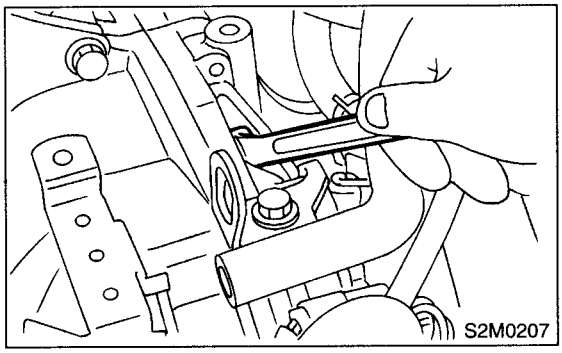

   (3) Clog the service hole with a plug.
10) Remove the ST.

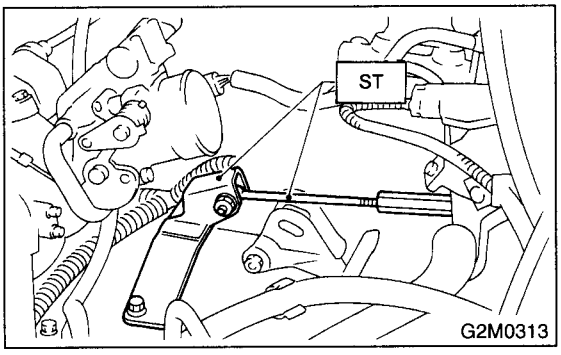

11) Install the pitching stopper.

Tightening torque:
T1: 50 N·m (5.1 kgf-m, 37 ft-lb)
T2: 58 N·m (5.9 kgf-m, 43 ft-lb)

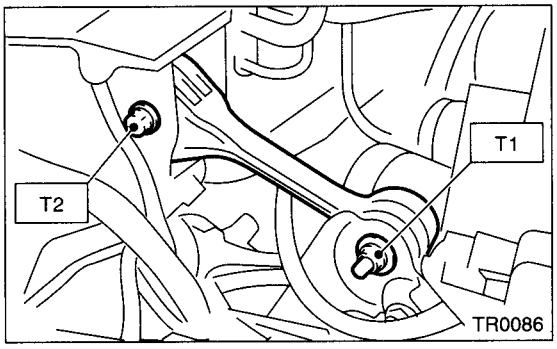

12) Lift-up the vehicle.
Install the front drive shafts into transmission.
   (1) Lift-up the vehicle.
   (2) Install the front drive shaft into transmission.
   (3) Drive the spring pin into chamfered hole of drive shaft.

CAUTION:
Always use a new spring pin.

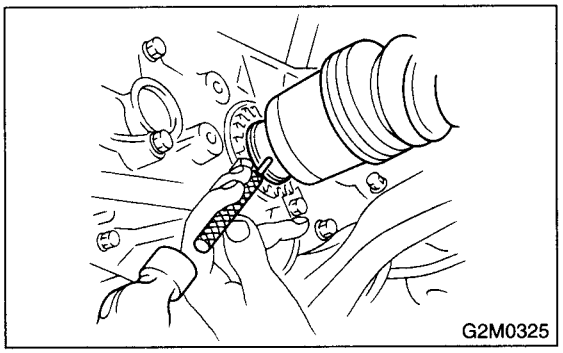

13) Install the ball joint into housing.
14) Connect the stabilizer link to transverse link, and temporarily tighten the bolts.

CAUTION:
Discard the loosened self-locking nut and replace with a new one.

Tightening torque:
T1: 30 N·m (3.1 kgf-m, 22.4 ft-lb)
T2: 50 N·m (5.1 kgf-m, 37 ft-lb)

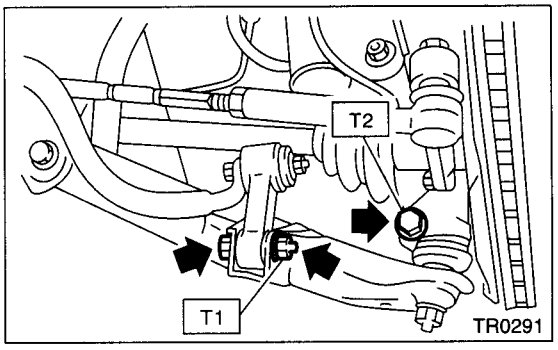

15) Install the shift select cable onto select lever.
<Ref. to CS-27, INSTALLATION, Select Cable.>
16) Install the ATF level gauge guide, and connect the ATF cooler hoses to pipe.

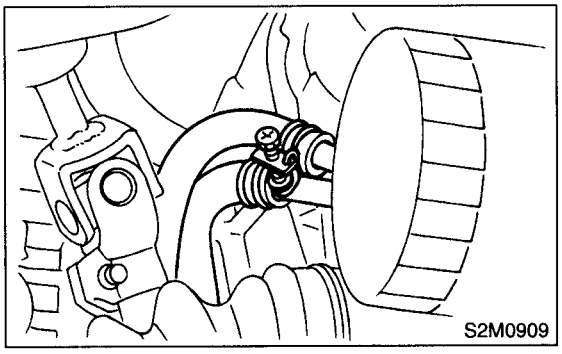

17) Install the propeller shaft.
<Ref. to DS-15, INSTALLATION, Propeller Shaft.>
18) Install the heat shield cover. (If equipped)
19) Install the front, center, rear exhaust pipes and muffler. (Non-turbo model)
<Ref. to EX(SOHC)-6, INSTALLATION, Front Exhaust Pipe.>, <Ref. to EX(SOHC)-9, INSTALLATION, Rear Exhaust Pipe.> and <Ref. to EX(SOHC)-11, INSTALLATION, Muffler.>
20) Install the center, rear exhaust pipes and muffler. (Turbo model) <Ref. to EX(DOHC TURBO)-9, INSTALLATION, Center Exhaust Pipe.>, <Ref. to EX(DOHC TURBO)-13, INSTALLATION, Rear Exhaust Pipe.>, <Ref. to EX(DOHC TURBO)-14, INSTALLATION, Muffler.>
21) Install the under cover.
22) Lower the vehicle.
23) Install the ATF level gauge.

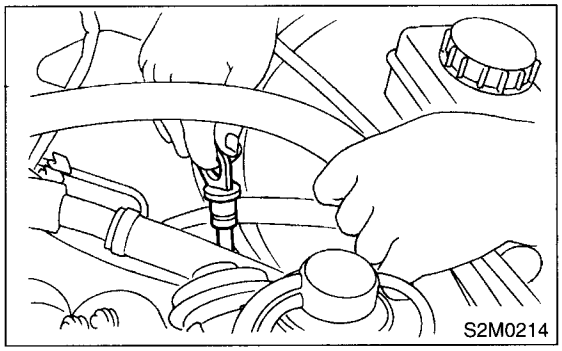

24) Connect the following connectors:
(1) Transmission harness connectors
(2) Transmission ground terminal
25) Install the air cleaner case stay. (Non-turbo model)

Tightening torque:
16 N·m (1.6 kgf-m, 11.6 ft-lb)

26) Install the air cleaner case. (Non-turbo model) <Ref. to IN(SOHC)-6, INSTALLATION, Air Cleaner Case.>
27) Install the air intake duct. (Non-turbo model) <Ref. to IN(SOHC)-7, INSTALLATION, Air Intake Duct.>
28) Install the intercooler. (Turbo model) <Ref. to IN(DOHC TURBO)-11, INSTALLATION, Intercooler.>
29) Connect the battery ground terminal.
30) Fill ATF up to the middle of the "COLD" side on level gauge by using the gauge hole.

Recommended fluid:
Dexron III type automatic transmission fluid

Fluid capacity:
9.3 — 9.6 ℓ (9.8 — 10.1 US qt, 7.4 — 7.7 Imp qt)

31) Take off the vehicle from lift arms.
32) Check the select lever operation.
<Ref. to AT-28, INSPECTION, Inhibitor Switch.>
33) Check the ATF level. <Ref. to AT-9, Automatic Transmission Fluid.>
34) Check the vehicle on the road tester.
<Ref. to AT-12, Road Test.>

10. Transmission Mounting System

A: REMOVAL

1. PITCHING STOPPER

1) Disconnect the ground terminal from battery.
2) Remove the air intake duct. (Non-turbo model) <Ref. to IN(SOHC)-7, REMOVAL, Air Intake Duct.>
3) Remove the air cleaner case. (Non-turbo model) <Ref. to IN(SOHC)-6, REMOVAL, Air Cleaner Case.>
4) Remove the intercooler. (Turbo model) <Ref. to IN(DOHC TURBO)-10, REMOVAL, Intercooler.>
5) Remove the pitching stopper.

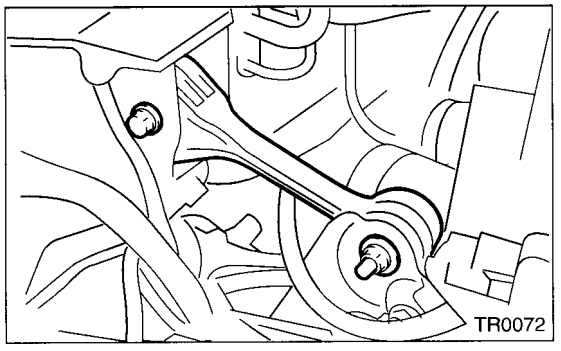

2. CROSSMEMBER AND CUSHION RUBBER

1) Disconnect the ground terminal from battery.
2) Jack-up the vehicle and support it with sturdy racks.
3) Remove the front, center, rear exhaust pipes and muffler. (Non-turbo model)
<Ref. to EX(SOHC)-5, REMOVAL, Front Exhaust Pipe.>, <Ref. to EX(SOHC)-9, REMOVAL, Rear Exhaust Pipe.> and <Ref. to EX(SOHC)-11, REMOVAL, Muffler.>
4) Remove the center, rear exhaust pipes and muffler. (Turbo model) <Ref. to EX(DOHC TURBO)-8, REMOVAL, Center Exhaust Pipe.>, <Ref. to EX(DOHC TURBO)-13, REMOVAL, Rear Exhaust Pipe.>, <Ref. to EX(DOHC TURBO)-14, REMOVAL, Muffler.>

CAUTION:
When removing the exhaust pipes, be careful each exhaust pipe does not drop out.

5) Remove the heat shield cover. (If equipped)
6) Set the transmission jack under the transmission.

CAUTION:
- **Make sure that the support plates of transmission jack don't touch the oil pan.**

7) Remove the crossmember.

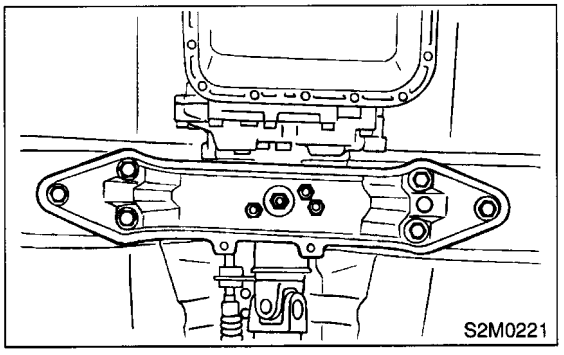

8) Remove the rear cushion rubber.

B: INSTALLATION

1. PITCHING STOPPER

1) Install the pitching stopper.

Tightening torque:
T1: 50 N·m (5.1 kgf-m, 37 ft-lb)
T2: 58 N·m (5.9 kgf-m, 43 ft-lb)

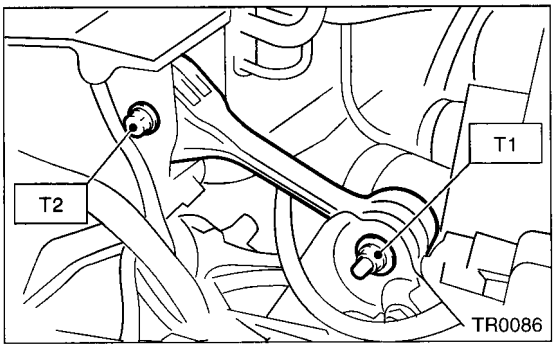

2) Install the air intake duct and cleaner case. (Non-turbo model) <Ref. to IN(SOHC)-7, REMOVAL, Air Intake Duct.>, <Ref. to IN(SOHC)-6, REMOVAL, Air Cleaner Case.>
3) Install the intercooler. (Turbo model) <Ref. to IN(DOHC TURBO)-10, REMOVAL, Intercooler.>

2. CROSSMEMBER AND CUSHION RUBBER

1) Install the rear cushion rubber.

Tightening torque:
39 N·m (4.0 kgf-m, 29 ft-lb)

2) Install the crossmember.

Tightening torque:
T1: 35 N·m (3.6 kgf-m, 26 ft-lb)
T2: 70 N·m (7.1 kgf-m, 51.4 ft-lb)

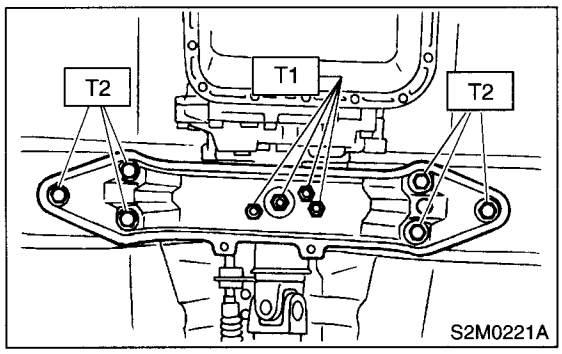

3) Remove the transmission jack.
4) Install the heat shield cover. (If equipped)
5) Install the front, center, rear exhaust pipes and the muffler. (Non-turbo model)
<Ref. to EX(SOHC)-6, INSTALLATION, Front Exhaust Pipe.>, <Ref. to EX(SOHC)-9, INSTALLATION, Rear Exhaust Pipe.> and <Ref. to EX(SOHC)-11, INSTALLATION, Muffler.>
6) Install the center, rear exhaust pipes and muffler. (Turbo model) <Ref. to EX(DOHC TURBO)-14, INSTALLATION, Muffler.>, <Ref. to EX(DOHC TURBO)-13, INSTALLATION, Rear Exhaust Pipe.>, <Ref. to EX(DOHC TURBO)-9, INSTALLATION, Center Exhaust Pipe.>

C: INSPECTION

Repair or replace parts if the results of the inspection below are not satisfactory.

1. PITCHING STOPPER

Make sure that the pitching stopper is not bent or damaged. Make sure that the rubber is not stiff, cracked, or otherwise damaged.

2. CROSSMEMBER AND CUSHION RUBBER

Make sure that the crossmember is not bent or damaged. Make sure that the cushion rubber is not stiff, cracked, or otherwise damaged.

11.Extension Case Oil Seal

A: INSPECTION

Make sure that the ATF does not leak from the joint of the transmission and propeller shaft. If so, replace the oil seal. <Ref. to AT-27, REPLACEMENT, Extension Case Oil Seal.>

B: REPLACEMENT

1) Set the vehicle on the lift.
2) Disconnect the ground terminal from battery.
3) Lift up the vehicle.
4) Clean the transmission exterior.
5) Drain the ATF completely.

NOTE:
Tighten the ATF drain plug after draining the ATF.

Tightening torque:
25 N·m (2.5 kgf-m, 18.1 ft-lb)

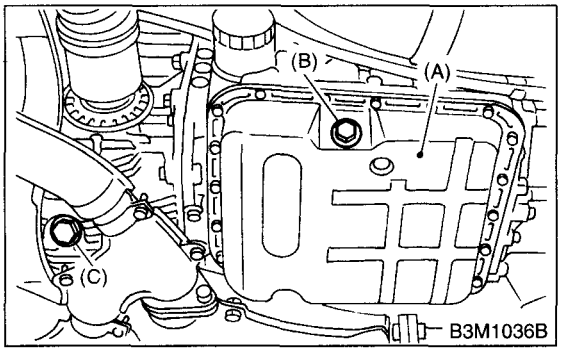

(A) Oil pan
(B) Drain plug
(C) Differential oil drain plug

6) Remove the rear exhaust pipe and muffler.
Non-turbo model
<Ref. to EX(SOHC)-9, REMOVAL, Rear Exhaust Pipe.> and <Ref. to EX(SOHC)-11, REMOVAL, Muffler.>
Turbo model
<Ref. to EX(DOHC TURBO)-13, REMOVAL, Rear Exhaust Pipe.>, <Ref. to EX(DOHC TURBO)-14, REMOVAL, Muffler.>
7) Remove the heat shield cover. (If equipped)
8) Remove the propeller shaft. <Ref. to DS-14, REMOVAL, Propeller Shaft.>
9) Using the ST, remove the oil seal.
ST 398527700 PULLER ASSY
10) Using the ST, install the oil seal.
ST 498057300 INSTALLER
11) Install the propeller shaft. <Ref. to DS-15, INSTALLATION, Propeller Shaft.>
12) Install the heat shield cover. (If equipped)
13) Install the rear exhaust pipe and muffler.
Non-turbo model
<Ref. to EX(SOHC)-9, INSTALLATION, Rear Exhaust Pipe.> and <Ref. to EX(SOHC)-11, INSTALLATION, Muffler.>
Turbo model
<Ref. to EX(DOHC TURBO)-14, INSTALLATION, Muffler.>, <Ref. to EX(DOHC TURBO)-13, INSTALLATION, Rear Exhaust Pipe.>
14) Pour ATF and check the ATF level. <Ref. to AT-9, Automatic Transmission Fluid.>

12.Inhibitor Switch

A: INSPECTION

When the driving condition or starter motor operation is erroneous, first check the shift linkage for improper operation. If the shift linkage is functioning properly, check the inhibitor switch.

1) Disconnect the inhibitor switch connector.
2) Check continuity in inhibitor switch circuits with the select lever moved to each position.

CAUTION:
Also check that continuity in ignition circuit does not exist when the select lever is in R, D, 3, 2 and 1 ranges.

NOTE:
If the inhibitor switch is inoperative, check for poor contact of connector on transmission side.

	Position	Pin No.
Signal sent to TCM	P	4 — 3
	R	4 — 2
	N	4 — 1
	D	4 — 8
	3	4 — 7
	2	4 — 6
	1	4 — 5
Starter circuit	P/N	12 — 11
Back-up light circuit	R	10 — 9

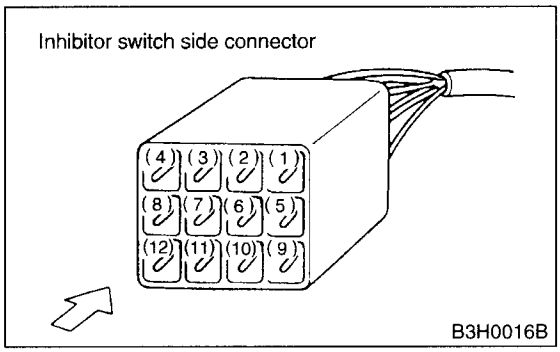

3) Check if there is continuity at equal points when the select lever is turned 1.5° in both directions from the N range.
If there is continuity in one direction and the continuity in the other or if there is continuity at unequal points, adjust the inhibitor switch.<Ref. to AT-28, ADJUSTMENT, Inhibitor Switch.>

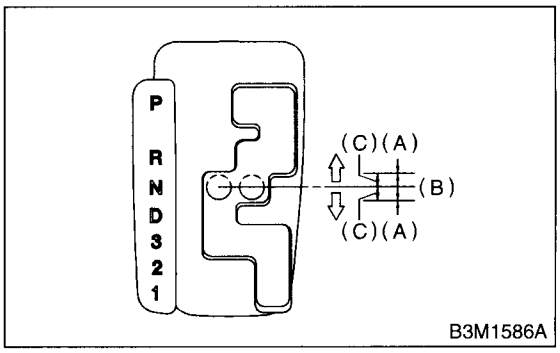

(A) Continuity does not exist.
(B) Continuity exists.
(C) 1.5°

4) Repeat the above checks. If there are abnormalities, adjust the select cable. <Ref. to CS-27, ADJUSTMENT, Select Cable.>

B: ADJUSTMENT

1) Shift the select lever to the N range.
2) Loosen the three inhibitor switch securing bolts.
3) Insert the ST as vertical as possible into the holes in the inhibitor switch lever and switch body.
ST 499267300 STOPPER PIN

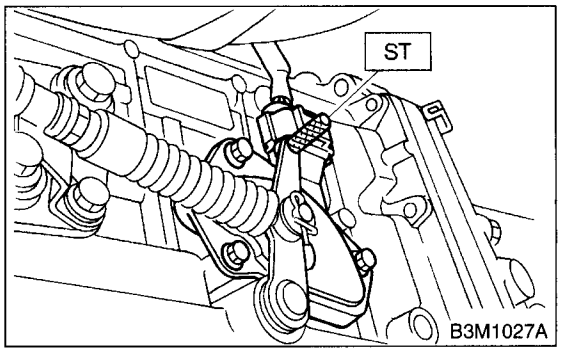

4) Tighten the three inhibitor switch bolts.

Tightening torque:
3.4 N·m (0.35 kgf-m, 2.5 ft-lb)

5) Repeat the above checks. If the inhibitor switch is determined to be "faulty", replace it.

C: REMOVAL

1) Set up the vehicle on the lift.
2) Move the select lever to neutral position.
3) Remove the air cleaner case. (Non-turbo model) <Ref. to IN(SOHC)-6, REMOVAL, Air Cleaner Case.>
4) Remove the intercooler. (Turbo model) <Ref. to IN(DOHC TURBO)-10, REMOVAL, Intercooler.>
5) Disconnect the inhibitor switch connector.

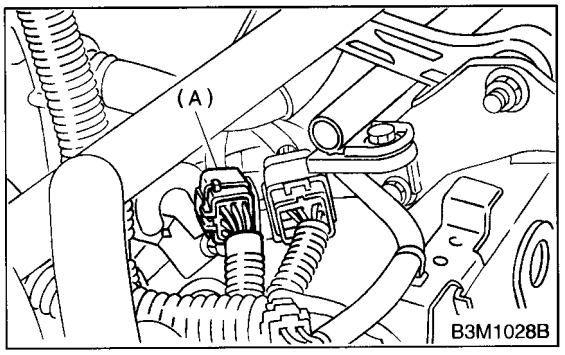

(A) Inhibitor switch

6) Remove the inhibitor switch connector from stay.
7) Lift-up the vehicle.
8) Remove the front exhaust pipe with center exhaust pipe. (Non-turbo model)
<Ref. to EX(SOHC)-5, REMOVAL, Front Exhaust Pipe.>
9) Remove the center exhaust pipe. (Turbo model) <Ref. to EX(DOHC TURBO)-8, REMOVAL, Center Exhaust Pipe.>
10) Remove the snap pin from range select lever.

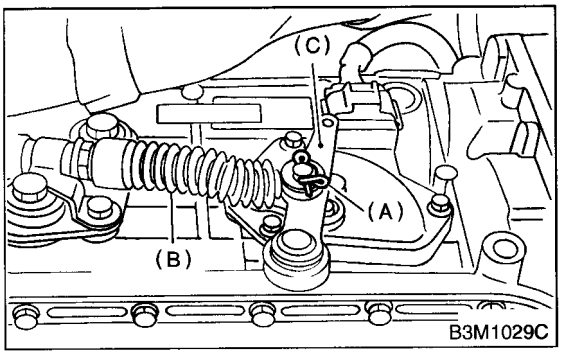

(A) Snap pin
(B) Select cable
(C) Range select lever

11) Remove the plate assembly from transmission case.

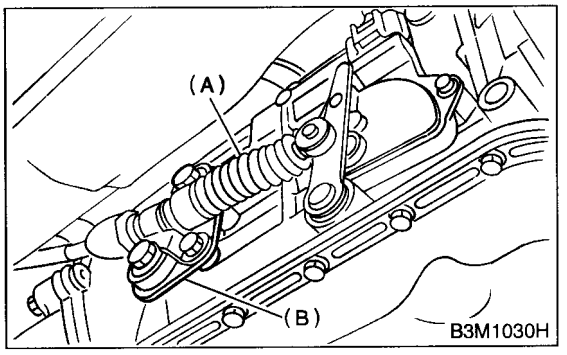

(A) Select cable
(B) Plate ASSY

12) Remove the bolts.

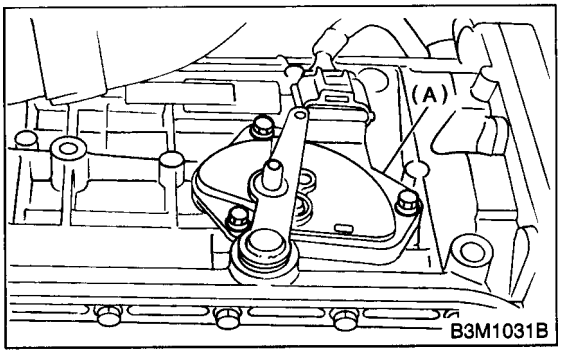

(A) Inhibitor switch

13) Move the range select lever to parking position (left side).

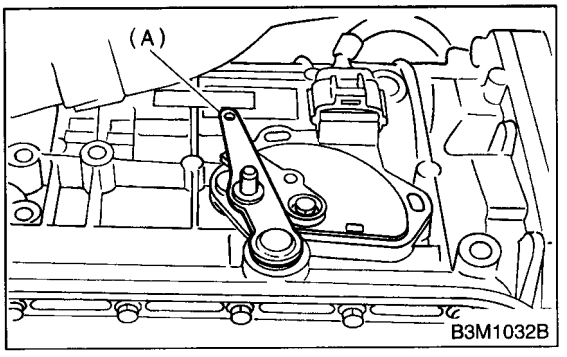

(A) Range select lever

14) Remove the inhibitor switch from transmission.

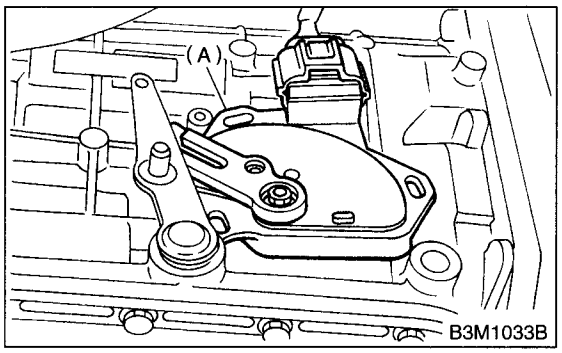

(A) Inhibitor switch

15) Disconnect the inhibitor switch harness from inhibitor switch.

D: INSTALLATION

1) Connect the inhibitor switch harness to inhibitor switch.
2) Install the inhibitor switch to transmission case.

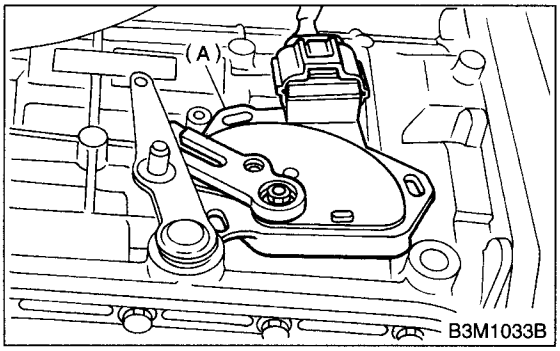

(A) Inhibitor switch

3) Move the range select lever to neutral position.
4) Using the ST, tighten bolts of inhibitor switch.
ST 499267300 STOPPER PIN

Tightening torque:
3.4 N·m (0.35 kgf-m, 2.5 ft-lb)

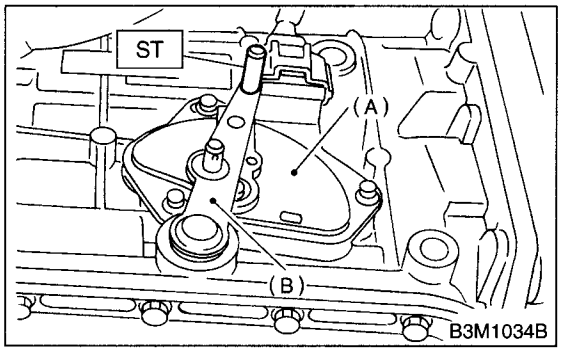

(A) Inhibitor switch
(B) Range select lever

5) Install the select cable to range select lever.

6) Install the plate assembly to transmission.

Tightening torque:
T: 24.5 N·m (2.50 kgf-m, 18.1 ft-lb)

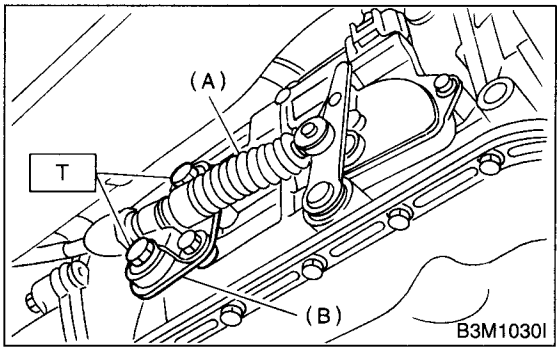

(A) Select cable
(B) Plate ASSY

7) Install the snap pin to range select lever.

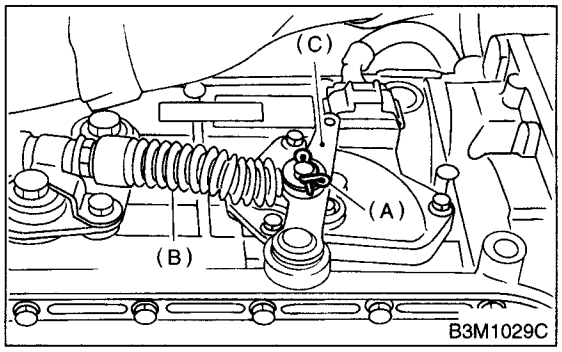

(A) Snap ring
(B) Select cable
(C) Range select lever

8) Install the front exhaust pipe with center exhaust pipe. (Non-turbo model)
<Ref. to EX(SOHC)-6, INSTALLATION, Front Exhaust Pipe.>
9) Install the center exhaust pipe. (Turbo model)
<Ref. to EX(DOHC TURBO)-9, INSTALLATION, Center Exhaust Pipe.>
10) Lower the vehicle.
11) Install the inhibitor switch connector from stay.

12) Connect the inhibitor switch connector.

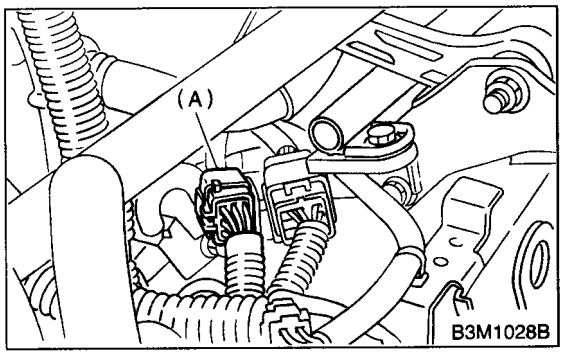

(A) Inhibitor switch

13) Install the air cleaner case. (Non-turbo model) <Ref. to IN(SOHC)-6, INSTALLATION, Air Cleaner Case.>
14) Install the intercooler. (Turbo model) <Ref. to IN(DOHC TURBO)-11, INSTALLATION, Intercooler.>
15) Inspect the inhibitor switch. <Ref. to AT-28, INSPECTION, Inhibitor Switch.>

13.Front Vehicle Speed Sensor

A: REMOVAL

1) Set up the vehicle on the lift.
2) Disconnect the ground terminal from battery.

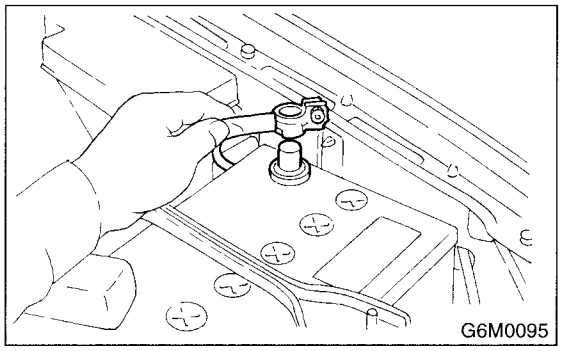

3) Remove the air cleaner case. (Non-turbo model) <Ref. to IN(SOHC)-6, REMOVAL, Air Cleaner Case.>
4) Remove the intercooler. (Turbo model) <Ref. to IN(DOHC TURBO)-10, REMOVAL, Intercooler.>
5) Disconnect the transmission connector.

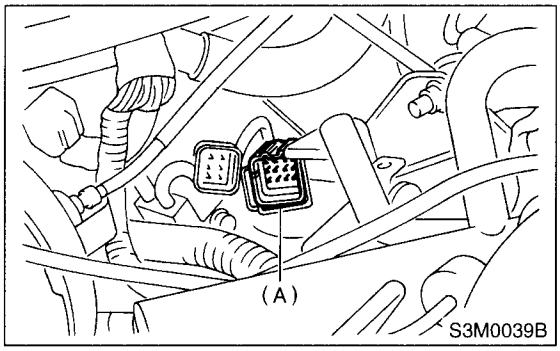

(A) Transmission connector

6) Remove the transmission connector from stay.
7) Lift-up the vehicle.
8) Clean the transmission exterior.
9) Drain the ATF completely.

NOTE:
Tighten the ATF drain plug after draining the ATF.

Tightening torque:
25 N·m (2.5 kgf-m, 18.1 ft-lb)

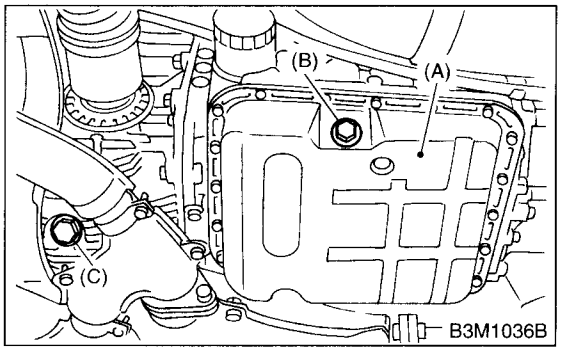

(A) Oil pan
(B) Drain plug
(C) Differential oil drain plug

10) Remove the front, center, rear, exhaust pipes and muffler.
<Ref. to EX(SOHC)-5, REMOVAL, Front Exhaust Pipe.>, <Ref. to EX(SOHC)-9, REMOVAL, Rear Exhaust Pipe.> and <Ref. to EX(SOHC)-11, REMOVAL, Muffler.>
11) Remove the center, rear exhaust pipes and muffler. (Turbo model) <Ref. to EX(DOHC TURBO)-8, REMOVAL, Center Exhaust Pipe.>, <Ref. to EX(DOHC TURBO)-13, REMOVAL, Rear Exhaust Pipe.>, <Ref. to EX(DOHC TURBO)-14, REMOVAL, Muffler.>
12) Remove the shield cover.
13) Remove the propeller shaft. <Ref. to DS-14, REMOVAL, Propeller Shaft.>
14) Place the transmission jack under crossmember.

NOTE:
Place a shop cloth or equivalent between the crossmember and transmission.

15) Remove the transmission rear crossmember bolts.

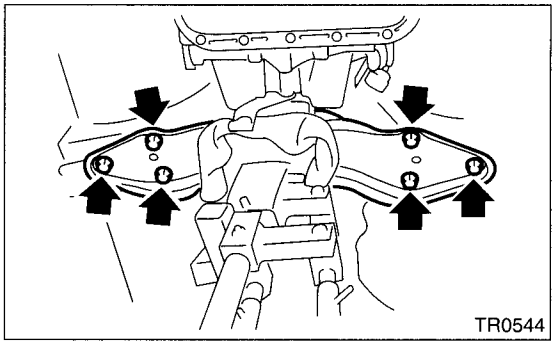

16) Lower the AT jack.

NOTE:
Do not separate the AT jack and transmission.

17) Remove the oil cooler outlet pipe.

CAUTION:
When removing the outlet pipe, be careful not to lose the balls and springs used with retaining screws.

18) Remove the front and rear vehicle speed sensor and torque converter turbine speed sensor.

- **Front vehicle speed sensor and torque converter turbine speed sensor**

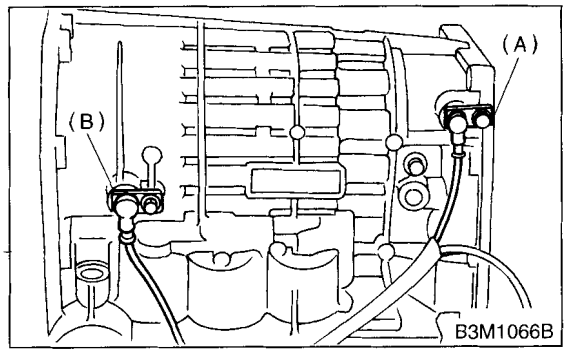

(A) Front vehicle speed sensor
(B) Torque converter turbine speed sensor

- **Rear vehicle speed sensor**

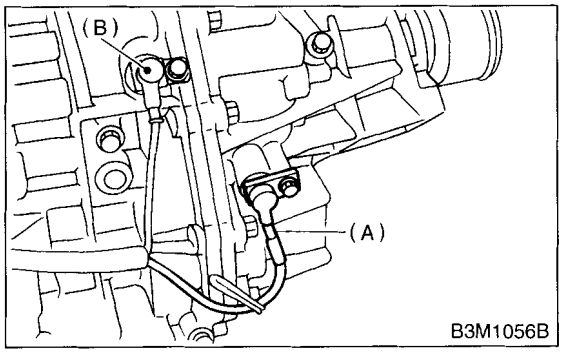

(A) Rear vehicle speed sensor
(B) Front vehicle speed sensor

19) Remove the oil pan.

20) Disconnect the duty solenoids and ATF temperature sensor connectors. Remove the connectors from clip and disconnect the connectors.

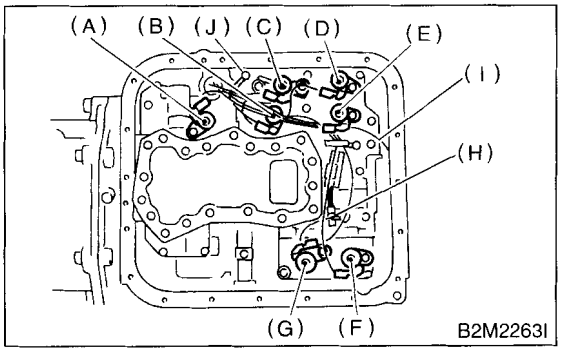

(A) Lock-up duty solenoid (Blue)
(B) Low clutch timing solenoid (Gray)
(C) Line pressure duty solenoid (Red)
(D) Shift solenoid 2 (Yellow)
(E) Shift solenoid 1 (Green)
(F) 2-4 brake timing solenoid (Black)
(G) 2-4 brake duty solenoid (Red)
(H) ATF temperature sensor
(I) Transfer duty solenoid (Brown)
(J) Transmission ground

21) Remove the harness assembly.

B: INSTALLATION

1) Pass the harness assembly through the hole in the transmission case.

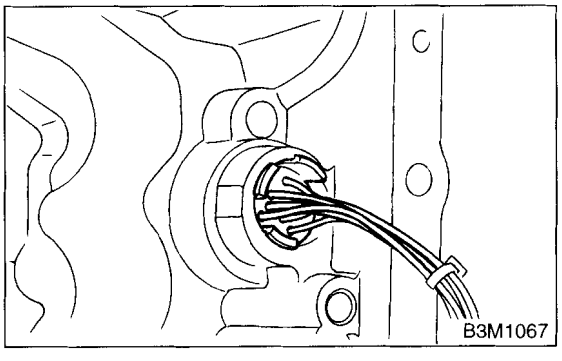

2) Connect the harness connectors.
Connect the connectors of same color, and secure the connectors to valve body sing clips.

Tightening torque (Transmission ground terminal):
8 N·m (0.8 kgf-m, 5.8 ft-lb)

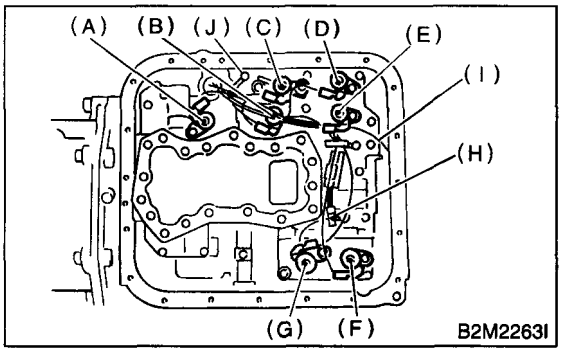

(A) Lock-up duty solenoid (Blue)
(B) Low clutch timing solenoid (Gray)
(C) Line pressure duty solenoid (Red)
(D) Shift solenoid 2 (Yellow)
(E) Shift solenoid 1 (Green)
(F) 2-4 brake timing solenoid (Black)
(G) 2-4 brake duty solenoid (Red)
(H) ATF temperature sensor
(I) Transfer duty solenoid (Brown)
(J) Transmission ground

3) Apply proper amount of liquid gasket to the entire oil pan mating surface.
Fluid packing:
Three Bond 1217B

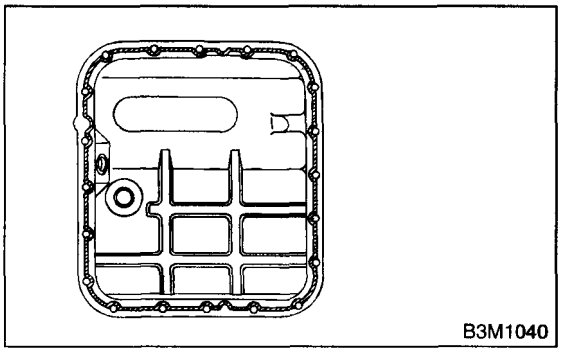

4) Install the oil pan.

Tightening torque:
25 N·m (2.5 kgf-m, 18.1 ft-lb)

5) Install the front and rear vehicle speed sensor, and also the torque converter turbine speed sensor, and then fasten the harness.

Tightening torque:
7 N·m (0.7 kgf-m, 5.1 ft-lb)

6) Install the oil cooler outlet pipe.

CAUTION:
Be sure to use a new aluminum washer.

Tightening torque:
25 N·m (2.5 kgf-m, 18.1 ft-lb)

7) Install the transmission rear crossmember bolts.

Tightening torque:
75 N·m (7.6 kgf-m, 55 ft-lb)

8) Install the propeller shaft. <Ref. to DS-15, INSTALLATION, Propeller Shaft.>
9) Install the shield cover. (If equipped)
10) Install the front, center, rear exhaust pipes and muffler. (Non-turbo model)
<Ref. to EX(SOHC)-6, INSTALLATION, Front Exhaust Pipe.> and <Ref. to EX(SOHC)-9, INSTALLATION, Rear Exhaust Pipe.> and <Ref. to EX(SOHC)-11, INSTALLATION, Muffler.>
11) Install the center, rear exhaust pipes and muffler. (Turbo model) <Ref. to EX(DOHC TURBO)-14, INSTALLATION, Muffler.>, <Ref. to EX(DOHC TURBO)-13, INSTALLATION, Rear Exhaust Pipe.>, <Ref. to EX(DOHC TURBO)-9, INSTALLATION, Center Exhaust Pipe.>
12) Lower the vehicle.
13) Install the transmission connector to the stay.
14) Install the air cleaner case. (Non-turbo model) <Ref. to IN(SOHC)-6, INSTALLATION, Air Cleaner Case.>
15) Install the intercooler. (Turbo model). <Ref. to IN(DOHC TURBO)-11, INSTALLATION, Intercooler.>

14.Rear Vehicle Speed Sensor

A: REMOVAL

When removing the rear vehicle speed sensor, refer to "Front Vehicle Speed Sensor." <Ref. to AT-32, REMOVAL, Front Vehicle Speed Sensor.>

B: INSTALLATION

When installing the rear vehicle speed sensor, refer to "Front Vehicle Speed Sensor." <Ref. to AT-33, INSTALLATION, Front Vehicle Speed Sensor.>

15. Torque Converter Turbine Speed Sensor

A: REMOVAL

When removing the torque converter turbine speed sensor, refer to "Front Vehicle Speed Sensor." <Ref. to AT-32, REMOVAL, Front Vehicle Speed Sensor.>

B: INSTALLATION

When installing the torque converter turbine speed sensor, refer to "Front Vehicle Speed Sensor." <Ref. to AT-33, INSTALLATION, Front Vehicle Speed Sensor.>

16.Control Valve Body

A: REMOVAL

1) Lift-up the vehicle.
2) Clean the transmission exterior.
3) Drain the ATF completely.

NOTE:
Tighten the ATF drain plug after draining the ATF.

Tightening torque:
25 N·m (2.5 kgf-m, 18.1 ft-lb)

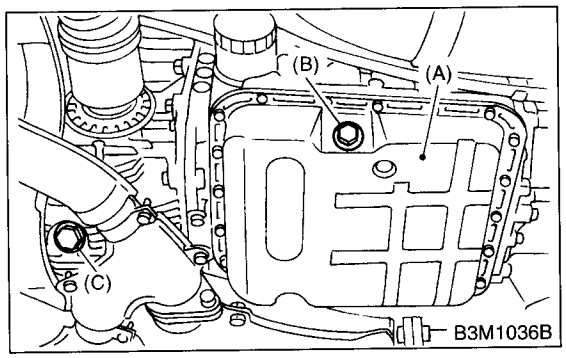

(A) Oil pan
(B) Drain plug
(C) Differential oil drain plug

4) Remove the oil pan.

NOTE:
- Remove and clean the magnet.
- Remove the old gasket on the oil pan and transmission case completely.

5) Disconnect the duty solenoids and ATF temperature sensor connectors. Remove the connectors from clip and disconnect the connectors.

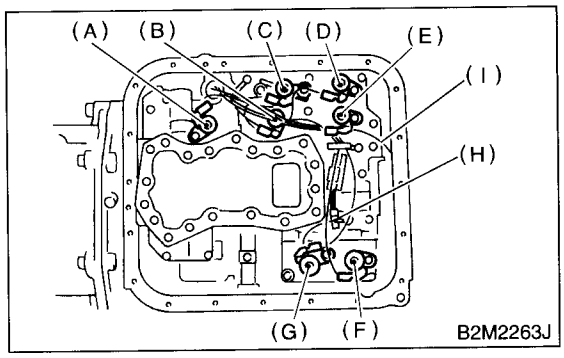

(A) Lock-up duty solenoid (Blue)
(B) Low clutch timing solenoid (Gray)
(C) Line pressure duty solenoid (Red)
(D) Shift solenoid 2 (Yellow)
(E) Shift solenoid 1 (Green)
(F) 2-4 brake timing solenoid (Black)
(G) 2-4 brake duty solenoid (Red)
(H) ATF temperature sensor
(I) Transfer duty solenoid (Brown)

6) Remove the control valve. When removing the control valve body, be careful not to interfere with transfer duty solenoid wiring.

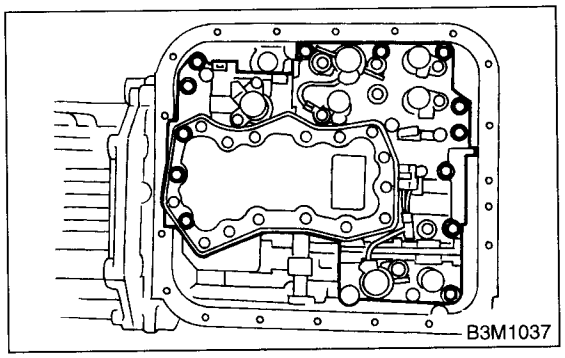

B: INSTALLATION

1) Set the range select lever in "N" position.
2) Install the control valve and ground earth connectors.

Tightening torque:
8 N·m (0.8 kgf-m, 5.8 ft-lb)

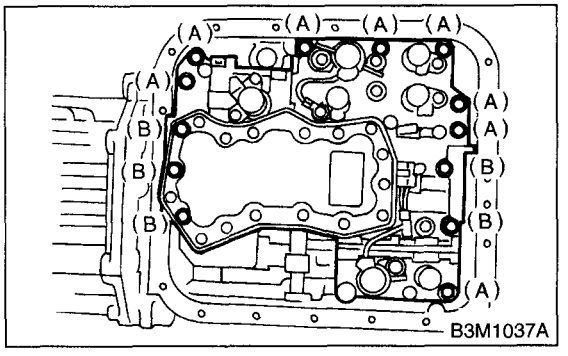

(A) Short bolts
(B) Long bolts

3) Connect all connector.

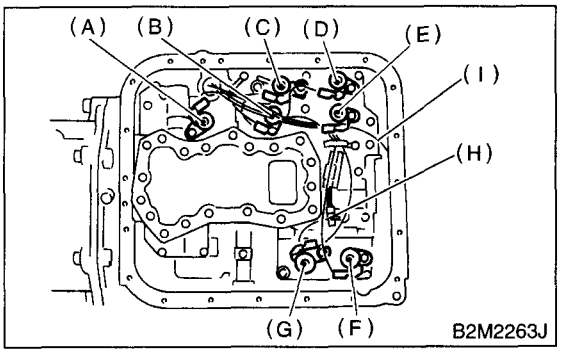

(A) Lock-up duty solenoid (Blue)
(B) Low clutch timing solenoid (Gray)
(C) Line pressure duty solenoid (Red)
(D) Shift solenoid 2 (Yellow)
(E) Shift solenoid 1 (Green)
(F) 2-4 brake timing solenoid (Black)
(G) 2-4 brake duty solenoid (Red)
(H) ATF temperature sensor
(I) Transfer duty solenoid (Brown)

4) Attach the magnet at the specified position.

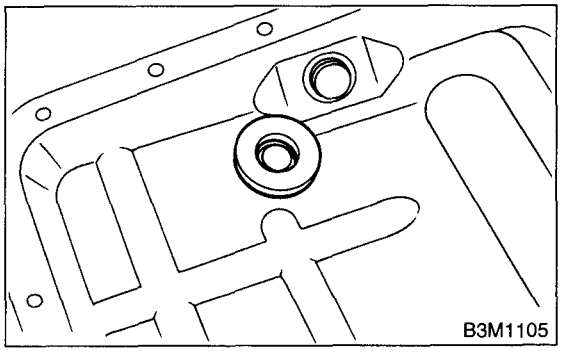

5) Apply proper amount of liquid gasket to the entire oil pan mating surface.
Fluid packing:
Tree Bond 1217B

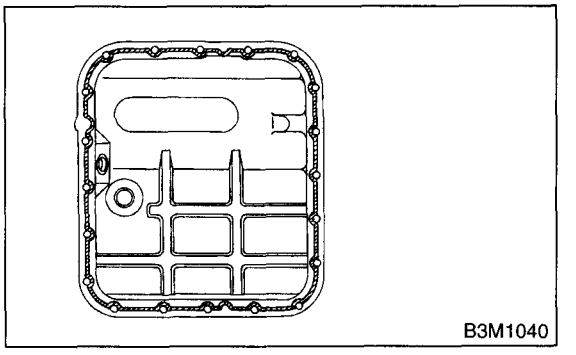

6) Install the oil pan.

Tightening torque:
4.9 N·m (0.5 kgf-m, 3.6 ft-lb)

7) Pour ATF into the oil charge pipe. <Ref. to AT-9, Automatic Transmission Fluid.>
8) Check the level of the ATF.
<Ref. to AT-9, Automatic Transmission Fluid.>

C: DISASSEMBLY

Refer to "AUTOMATIC TRANSMISSION" <Pub. No. G0853ZE> a separate publication.

D: ASSEMBLY

Refer to "AUTOMATIC TRANSMISSION" <Pub. No. G0853ZE> a separate publication.

E: INSPECTION

Refer to "AUTOMATIC TRANSMISSION" <Pub. No. G0853ZE> a separate publication.

17.Shift Solenoids, Duty Solenoids and ATF Temperature Sensor

A: REMOVAL

1) Set the vehicle on the lift.
2) Disconnect the ground terminal from battery.
3) Lift-up the vehicle.
4) Clean the transmission exterior.
5) Drain the ATF completely.

NOTE:
Tighten the ATF drain plug after draining the ATF.

Tightening torque:
25 N·m (2.5 kgf-m, 18.1 ft-lb)

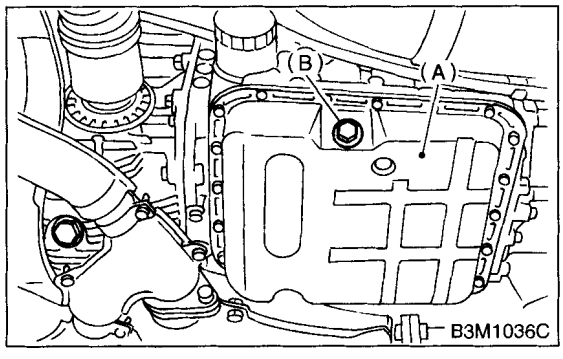

(A) Oil pan
(B) Drain plug

6) Remove the oil pan.
7) Disconnect the solenoid and sensor connectors. Remove the connectors from clip and disconnect the connectors.

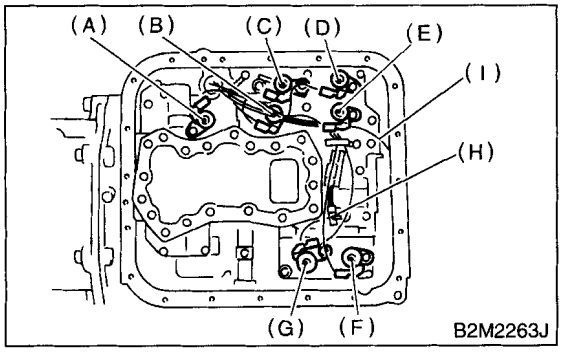

(A) Lock-up duty solenoid (Blue)
(B) Low clutch timing solenoid (Gray)
(C) Line pressure duty solenoid (Red)
(D) Shift solenoid 2 (Yellow)
(E) Shift solenoid 1 (Green)
(F) 2-4 brake timing solenoid (Black)
(G) 2-4 brake duty solenoid (Red)
(H) ATF temperature sensor
(I) Transfer duty solenoid (Brown)

8) Remove the solenoids, duty solenoids and ATF temperature sensor.

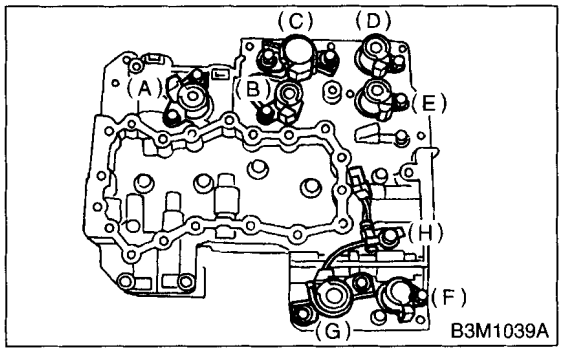

(A) Lock-up duty solenoid (Blue)
(B) Low clutch timing solenoid (Gray)
(C) Line pressure duty solenoid (Red)
(D) Shift solenoid 2 (Yellow)
(E) Shift solenoid 1 (Green)
(F) 2-4 brake timing solenoid (Black)
(G) 2-4 brake duty solenoid (Red)
(H) ATF temperature sensor

1. TRANSFER DUTY SOLENOID AND TRANSFER VALVE BODY

1) Set up the vehicle on the lift.
2) Disconnect the ground terminal from battery.
3) Remove the air intake duct. <Ref. to IN(SOHC)-7, REMOVAL, Air Intake Duct.>
4) Remove the air cleaner case. <Ref. to IN(SOHC)-6, REMOVAL, Air Cleaner Case.>
5) Remove the intercooler. (Turbo model) <Ref. to IN(DOHC TURBO)-10, REMOVAL, Intercooler.>
6) Remove the pitching stopper.

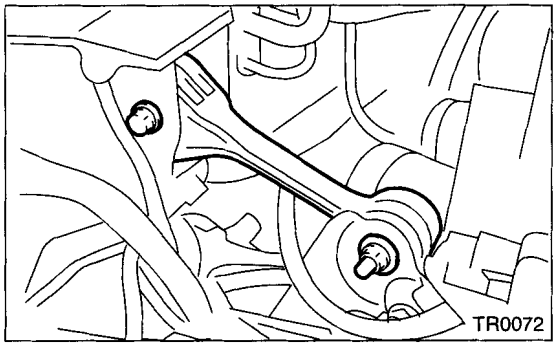

7) Remove the front exhaust pipe with center exhaust pipe. (Non-turbo model)
With OBD
<Ref. to EX(SOHC)-5, REMOVAL, Front Exhaust Pipe.>
8) Remove the center exhaust pipe. (Turbo model) <Ref. to EX(DOHC TURBO)-8, REMOVAL, Center Exhaust Pipe.>

9) Raise the vehicle and drain the ATF.

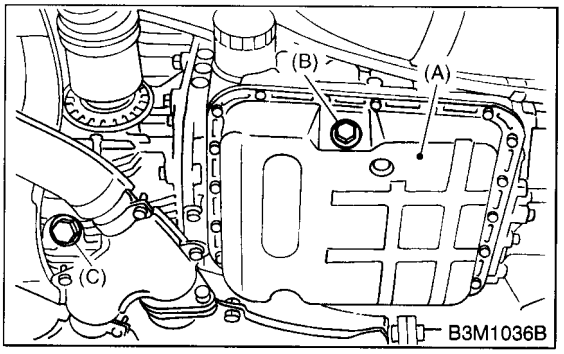

(A) Oil pan
(B) Drain plug
(C) Defferential oil drain plug

10) Remove the heat shield cover. (If equipped)
11) Remove the propeller shaft. <Ref. to DS-14, REMOVAL, Propeller Shaft.>
12) Remove the rear crossmember.
(1) Support the transmission using a transmission jack and raise slightly.
(2) Remove the bolts and nuts as shown in the figure.

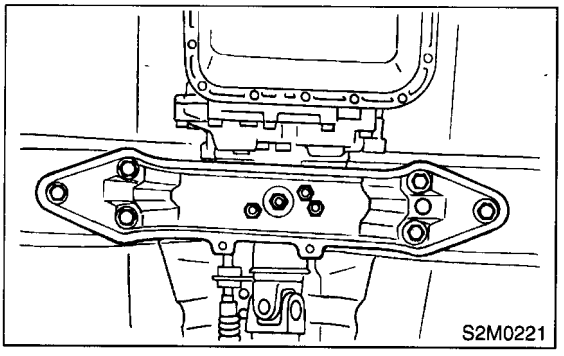

13) Remove the rear vehicle speed sensor.

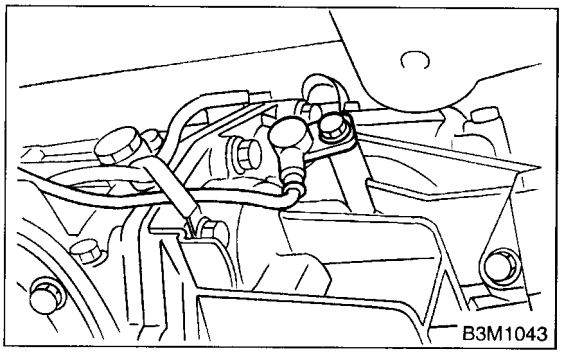

14) Remove the select cable nut.

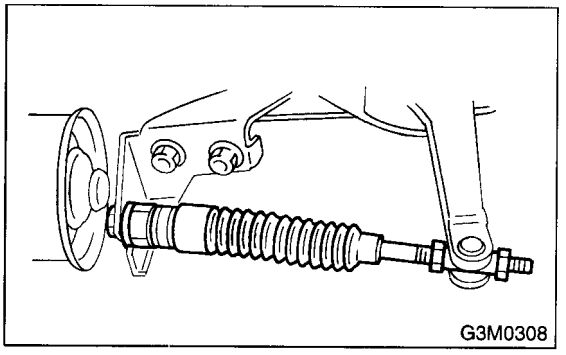

15) Move the gear select cable so that extension bolts can be removed.
16) Remove the bolts.
17) Remove the extension case.

NOTE:
Use a container to catch oil flowing from extension.

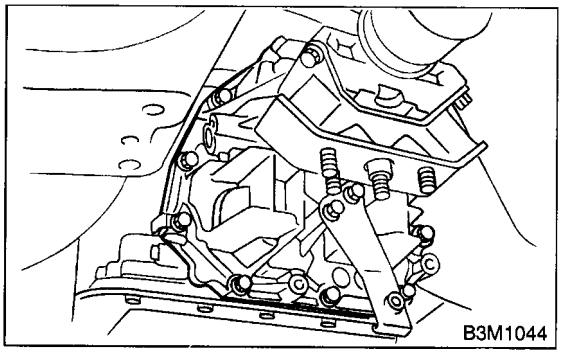

18) Disconnect the transfer duty solenoid connector.
19) Remove the transfer duty solenoid and transfer valve body.

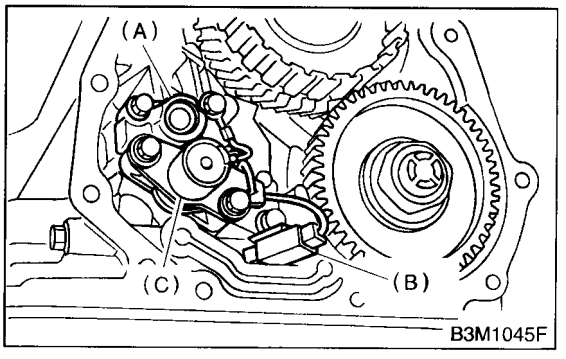

(A) Transfer valve body
(B) Transfer duty solenoid connector
(C) Transfer duty solenoid

B: INSTALLATION

1) Install the solenoids and ATF temperature sensor.

Tightening torque:
T: 8 N·m (0.8 kgf-m, 5.8 ft-lb)

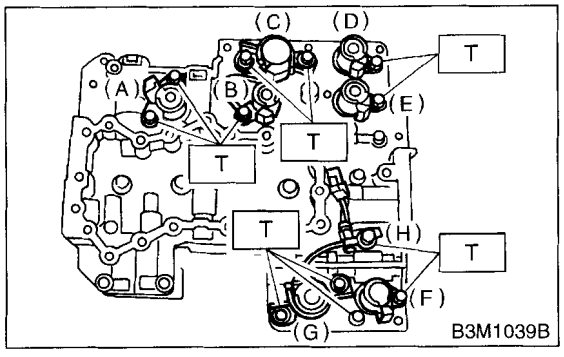

(A) Lock-up duty solenoid (Blue)
(B) Low clutch timing solenoid (Gray)
(C) Line pressure duty solenoid (Red)
(D) Shift solenoid 2 (Yellow)
(E) Shift solenoid 1 (Green)
(F) 2-4 brake timing solenoid (Black)
(G) 2-4 brake duty solenoid (Red)
(H) ATF temperature sensor

2) Connect the harness connectors.
Connect the connectors of same color, and secure the connectors to valve body using clips.

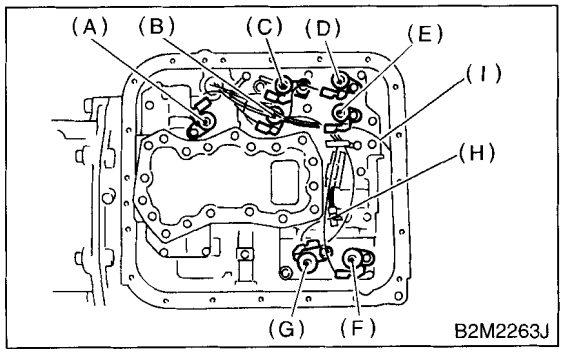

(A) Lock-up duty solenoid (Blue)
(B) Low clutch timing solenoid (Gray)
(C) Line pressure duty solenoid (Red)
(D) Shift solenoid 2 (Yellow)
(E) Shift solenoid 1 (Green)
(F) 2-4 brake timing solenoid (Black)
(G) 2-4 brake duty solenoid (Red)
(H) ATF temperature sensor
(I) Transfer duty solenoid (Brown)

3) Apply proper amount of liquid gasket to the entire oil pan mating surface.
Fluid packing:
Tree Bond 1217B

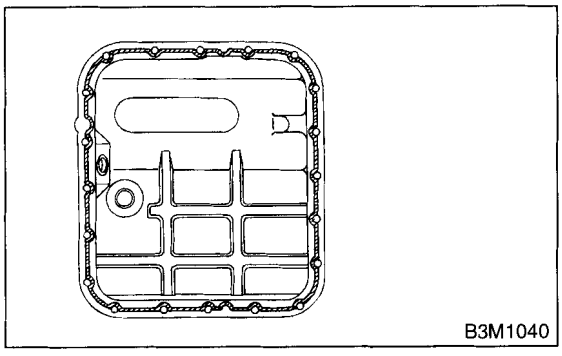

4) Install the oil pan.

Tightening torque:
4.9 N·m (0.50 kgf-m, 3.6 ft-lb)

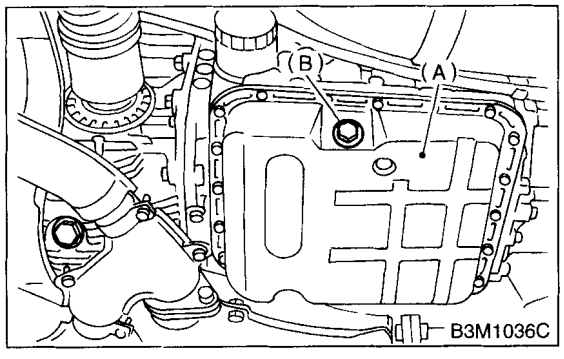

(A) Oil pan
(B) Drain plug

5) Fill ATF up to the middle of the "COLD" side on level gauge by using the gauge hole. <Ref. to AT-9, Automatic Transmission Fluid.>
6) Check the ATF level. <Ref. to AT-9, Automatic Transmission Fluid.>

1. TRANSFER DUTY SOLENOID AND TRANSFER VALVE BODY

1) Install the transfer duty solenoid and transfer valve body.
   (1) Install the transfer duty solenoid and transfer valve body.

Tightening torque:
T: 8 N·m (0.8 kgf-m, 5.8 ft-lb)

   (2) Connect the transfer duty solenoid connector.

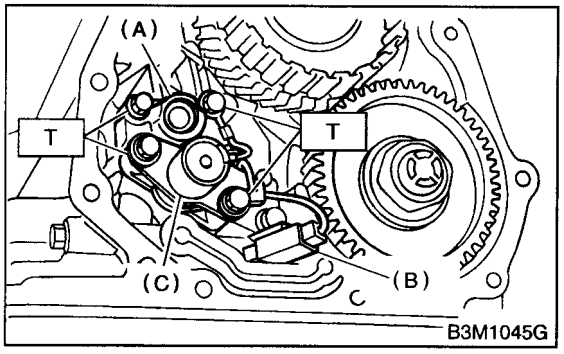

(A) Transfer valve body
(B) Transfer duty solenoid connector
(C) Transfer duty solenoid

2) Install the extension case to transmission case.
   (1) Tighten eleven bolts.

Tightening torque:
25 N·m (2.5 kgf-m, 18.1 ft-lb)

   (2) Adjust the select cable. <Ref. to CS-27, ADJUSTMENT, Select Cable.>
3) Install the rear vehicle speed sensor.

Tightening torque:
T: 7 N·m (0.7 kgf-m, 5.1 ft-lb)

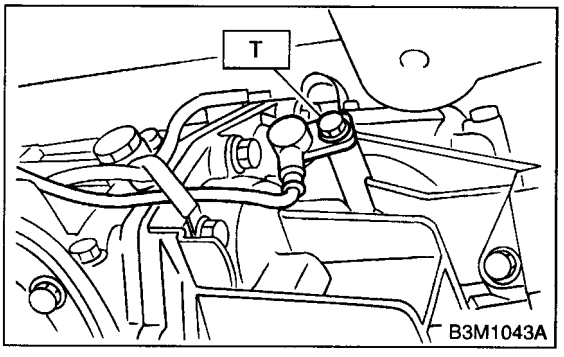

4) Install the rear crossmember.
   (1) Tighten the bolts.

Tightening torque:
T1: 35 N·m (3.6 kgf-m, 26 ft-lb)
T2: 70 N·m (7.1 kgf-m, 51.4 ft-lb)

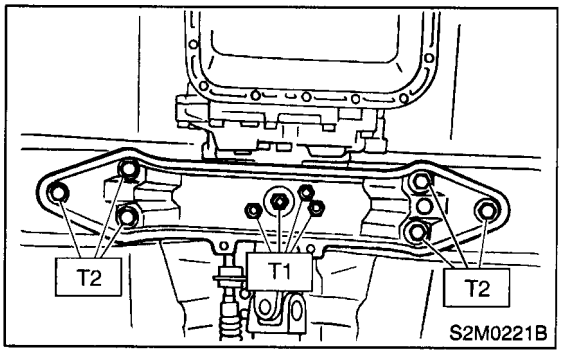

   (2) Lower and remove the transmission jack.
5) Install the propeller shaft. <Ref. to DS-15, INSTALLATION, Propeller Shaft.>
6) Install the front exhaust pipe and center exhaust pipe.
7) Lower and remove the jack.
8) Connect the transmission harness connector.

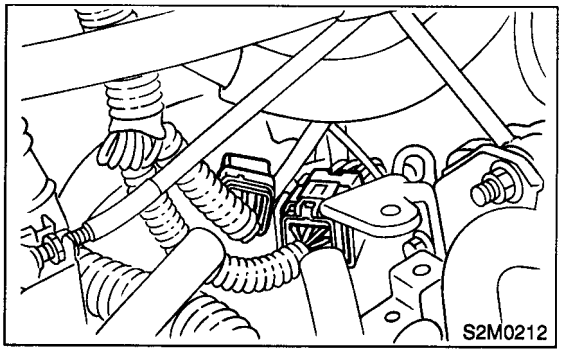

9) Install the pitching stopper.

Tightening torque:
T1: 50 N·m (5.1 kgf-m, 37 ft-lb)
T2: 58 N·m (5.9 kgf-m, 43 ft-lb)

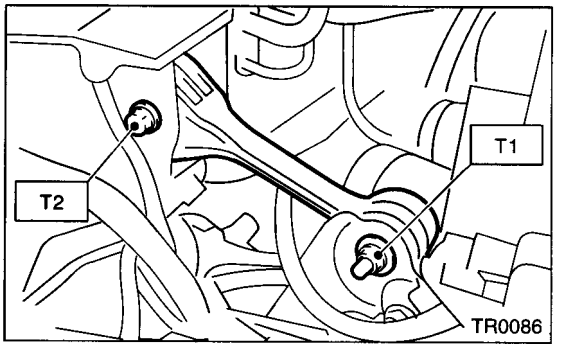

10) Install the air cleaner case and duct.

11) Fill ATF up to the middle of the "COLD" side on level gauge by using the gauge hole. <Ref. to AT-9, Automatic Transmission Fluid.>
12) Check the ATF level. <Ref. to AT-9, Automatic Transmission Fluid.>

18.ATF Filter

A: REMOVAL

NOTE:
The ATF filter is maintenance free.

1) Lift-up the vehicle.
2) Using the ST, remove the ATF filter.
ST 498545400 OIL FILTER WRENCH

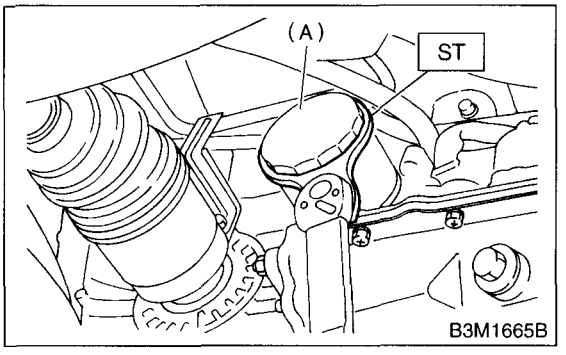

(A) ATF filter

3) Get a new ATF filter and apply a thin coat of ATF to the oil seal.

B: INSTALLATION

1) Install the ATF filter. Turn it by hand, being careful not to damage oil seal.
2) Using the ST, tighten the ATF filter to transmission case.
Calculate the ATF filter torque specifications using the following formula.
$T2 = L1/(L1 + L2) \times T1$
T1: 14 N·m (1.4 kgf-m, 10.1 ft-lb)
[Required torque setting]
T2: Tightening torque
L1: ST length 0.078 m (3.07 in)
L2: Torque wrench length
Example:

Torque wrench length mm (in)	Tightening torque N·m (kgf-m, ft-lb)
100 (3.94)	6 (0.6, 4.3)
150 (5.91)	5 (0.5, 3.6)
200 (7.87)	4 (0.4, 2.9)
250 (9.84)	3 (0.3, 2.2)

CAUTION:
Align the ST with torque wrench while tightening the ATF filter.

ST 498545400 OIL FILTER WRENCH

3) Add ATF.
4) Inspect the level of ATF. <Ref. to AT-9, Automatic Transmission Fluid.>

C: INSPECTION

Replace the part if any defect is found from the inspection.
Check for rust, hole, ATF leaks, and other damage.

19. Transmission Control Module (TCM)

A: REMOVAL

1) Disconnect the ground terminal from battery.

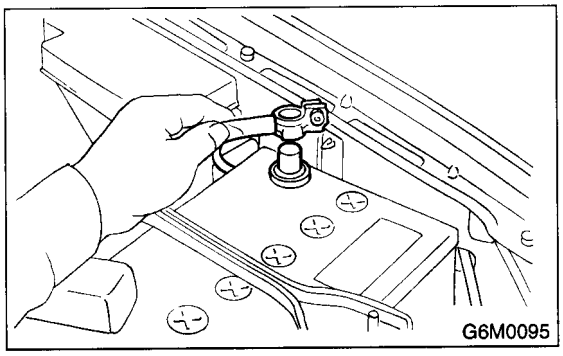

2) Remove the lower cover and then disconnect the connector.

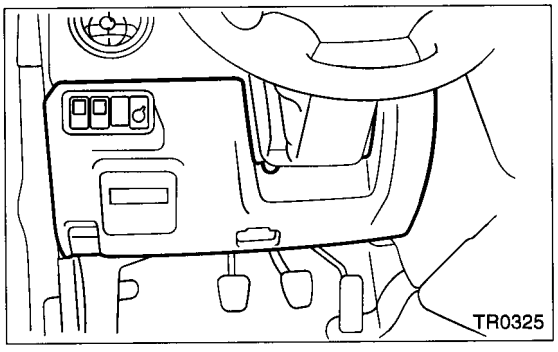

3) Disconnect the connectors from transmission control module.

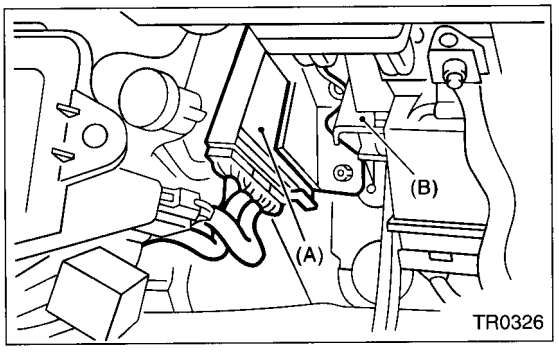

(A) Transmission control module
(B) Brake pedal bracket

4) Remove the transmission control module.

B: INSTALLATION

1) Install the transmission control module.

Tightening torque:
7.5 N·m (0.76 kgf-m, 5.5 ft-lb)

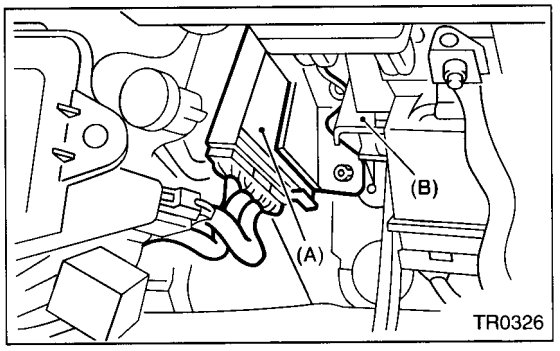

(A) Transmission control module
(B) Brake pedal bracket

2) Connect the connectors to transmission control module.
3) Install in the reverse order of removal.

20.Dropping Resistor

A: REMOVAL

NOTE:
The dropping resister is only equipped to Non-turbo models.

1) Disconnect the ground terminal from battery.

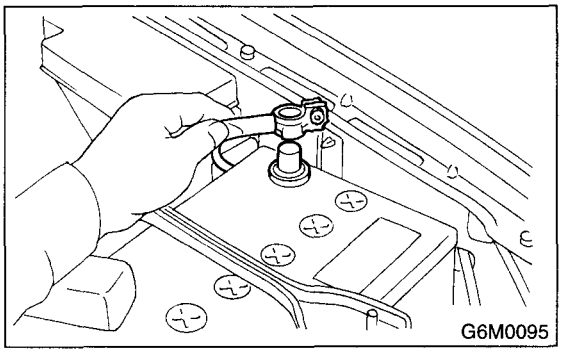

2) Remove the air intake duct. <Ref. to IN(SOHC)-6, REMOVAL, Air Cleaner Case.>
3) Disconnect the connector from dropping resistor.
4) Remove the dropping resistor.

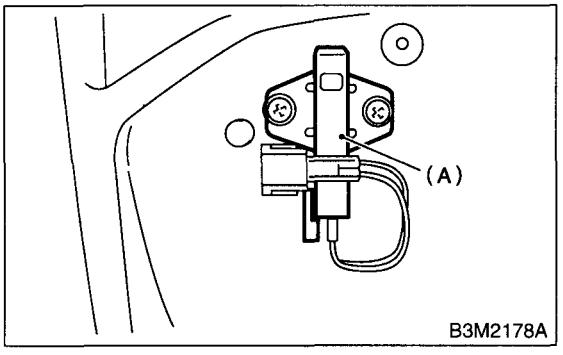

(A) Dropping resistor

B: INSTALLATION

1) Install in the reverse order of removal.

Tightening torque:
6.4 N·m (0.65 kgf-m, 4.7 ft-lb)

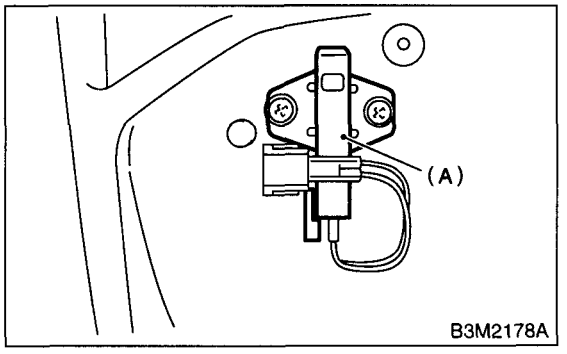

(A) Dropping resistor

C: INSPECTION

	Step	Check	Yes	No
1	**CHECK RESISTOR.** 1)Turn the ignition switch to OFF. 2)Disconnect the connector from dropping resistor. 3)Measure the resistance between dropping resistor terminal. ***Terminals*** ***No. 1 — No. 2:***	Is the resistance between 9 and 15 Ω?	Go to step **2.**	Replace the dropping resistor. <Ref. to AT-46, Dropping Resistor.>
2	**CHECK RESISTOR.** Measure the resistance between dropping resistor terminal. ***Terminals*** ***No. 3 — No. 4:***	Is the resistance between 9 and 15 Ω?	Dropping resistor is normal.	Replace the dropping resistor. <Ref. to AT-46, Dropping Resistor.>

21.ATF Cooler Pipe and Hose

A: REMOVAL

1. NON-TURBO MODEL

1) Set the vehicle on the lift.
2) Lift-up the vehicle.
3) Remove the under cover.
4) Disconnect the ATF cooler hose from radiator.

NOTE:
- Do not remove with a screwdriver or other pointed tools.
- When the hose is difficult to remove, wrap a shop cloth around the hose to protect it. Turn it with pliers, and then pull directly out with your hand.

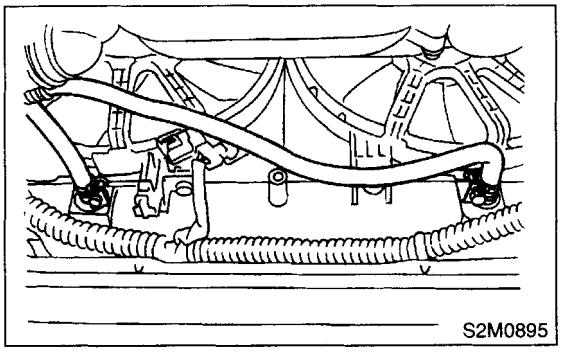

5) Disconnect the ATF cooler hoses from pipes.

NOTE:
- Do not remove with a screwdriver or other pointed tools.
- When the hose is difficult to remove, wrap a shop cloth around the hose to protect it. Turn it with pliers, and then pull directly out with your hand.

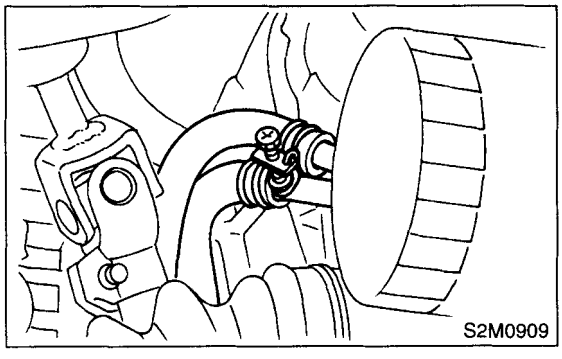

6) Remove the ATF cooler pipe from cylinder head.

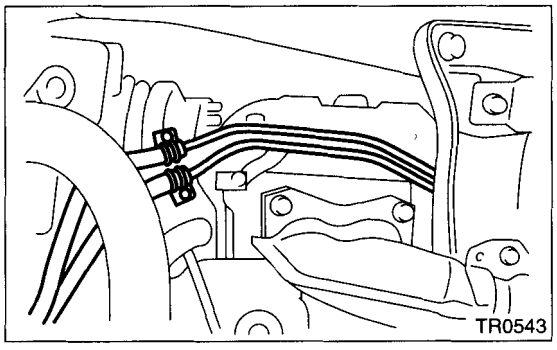

7) Remove the oil cooler inlet and outlet pipes.

CAUTION:
When removing the outlet pipe, be careful not to lose the ball and spring used with retaining screw.

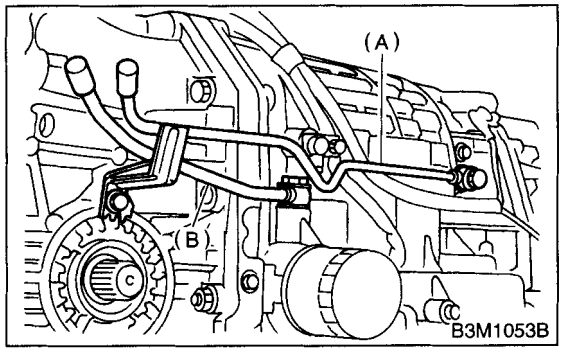

(A) Inlet pipe
(B) Outlet pipe

2. TURBO MODEL

1) Set the vehicle on the lift.
2) Remove the battery and washer tank.
3) Lift-up the vehicle.
4) Remove the under cover.
5) Remove the radiator under cover.

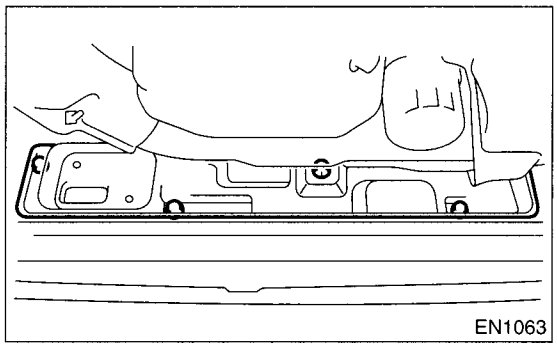

6) Disconnect the ATF cooler hose from radiator.

NOTE:
- Do not remove with a screwdriver or other pointed tools.
- When the hose is difficult to remove, wrap a shop cloth around the hose to protect it. Turn it with pliers, and then pull directly out with your hand.

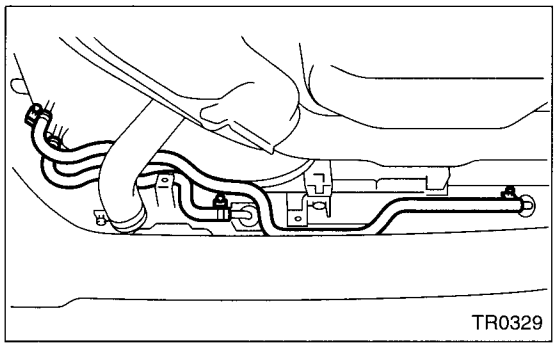

7) Disconnect the ATF cooler hoses from pipes.

NOTE:
- Do not remove with a screwdriver or other pointed tools.
- When the hose is difficult to remove, wrap a shop cloth around the hose to protect it. Turn it with pliers, and then pull directly out with your hand.

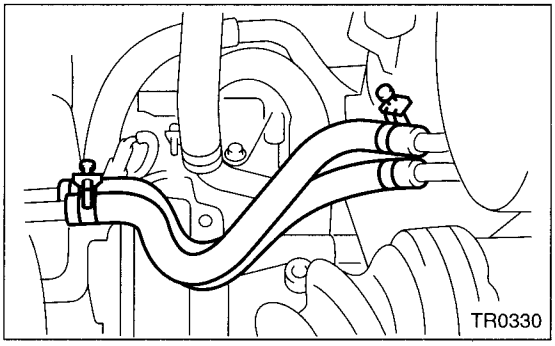

8) Remove the ATF cooler pipe from frame.

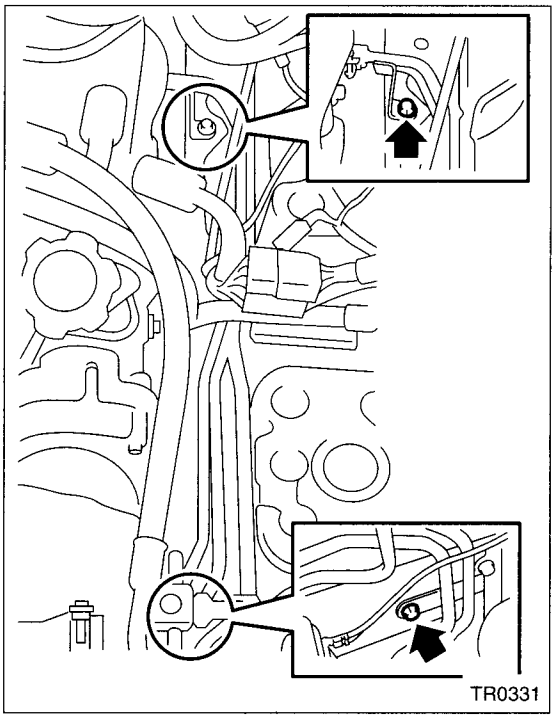

9) Remove the oil cooler inlet and outlet pipes.

CAUTION:
When removing the outlet pipe, be careful not to lose the ball and spring used with retaining screw.

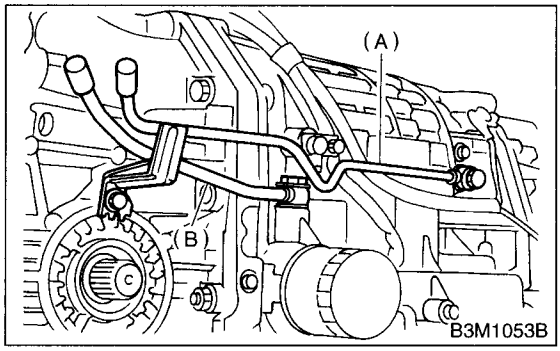

(A) Inlet pipe
(B) Outlet pipe

B: INSTALLATION

1. NON-TURBO MODEL

1) Install the oil cooler outlet and inlet pipes.

CAUTION:
Be sure to use a new aluminum washer.

Tightening torque:
T1: 44 N·m (4.5 kgf-m, 32.5 ft-lb)
T2: 25 N·m (2.5 kgf-m, 18.1 ft-lb)

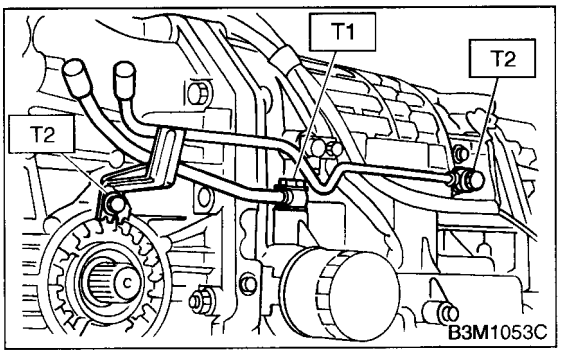

(A) Inlet pipe
(B) Outlet pipe

2) Install the ATF cooler pipe to cylinder head.

Tightening torque:
7.35 N·m (0.75 kgf-m, 5.42 ft-lb)

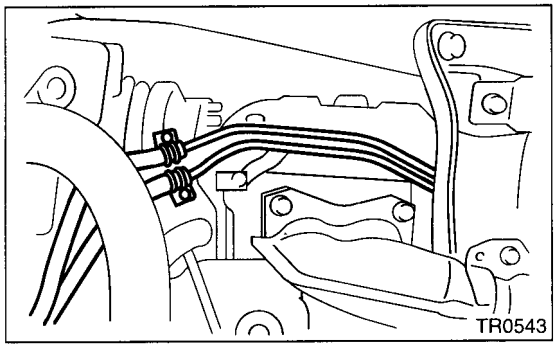

3) Connect the ATF cooler hose to pipe transmission side.

NOTE:
- Install so that the hose is not folded over, excessively bent, or twisted.
- Be careful to insert the hose to the specified position.

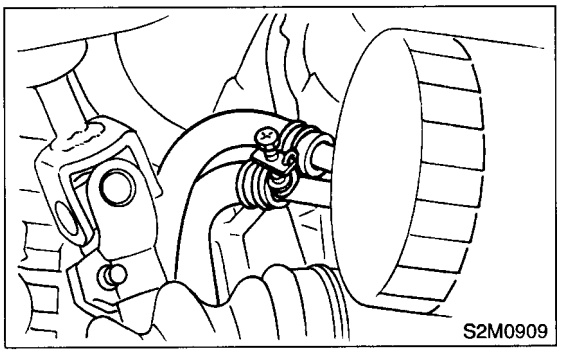

4) Connect the ATF cooler hose to pipe of radiator side.

NOTE:
- Install so that the hose is not folded over, excessively bent, or twisted.
- Be careful to insert the hose to the specified position.

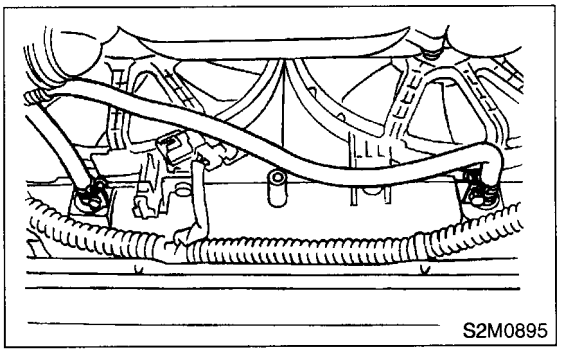

5) Install the under cover.
6) Fill ATF. <Ref. to AT-9, Automatic Transmission Fluid.>

NOTE:
Make sure there are no ATF leaks in joints between the transmission, radiator, pipes, and hoses.

2. TURBO MODEL

1) Install the oil cooler outlet and inlet pipes.

CAUTION:
Be sure to use a new aluminum washer.

Tightening torque:
T1: 44 N·m (4.5 kgf-m, 32.5 ft-lb)
T2: 25 N·m (2.5 kgf-m, 18.1 ft-lb)

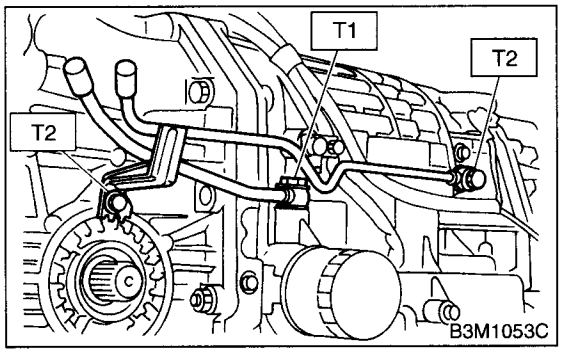

(A) Inlet pipe
(B) Outlet pipe

2) Install the ATF cooler pipe to frame.

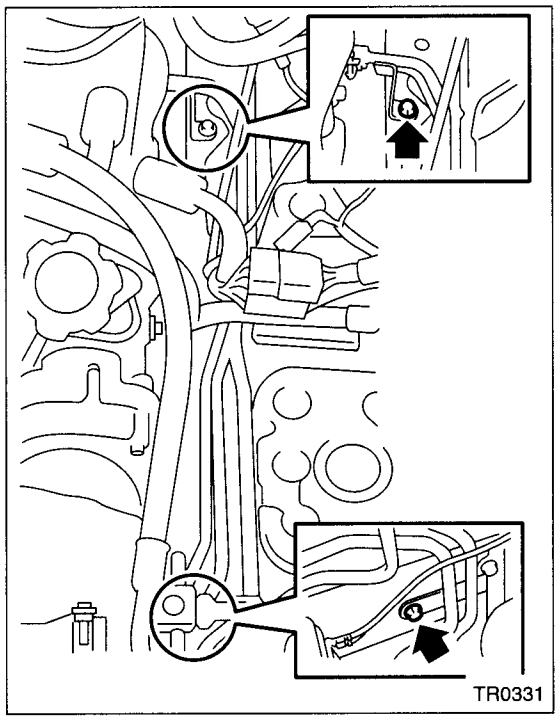

3) Connect the ATF cooler hose to pipe transmission side.

NOTE:
- Install so that the hose is not folded over, excessively bent, or twisted.
- Be careful to insert the hose to the specified position.

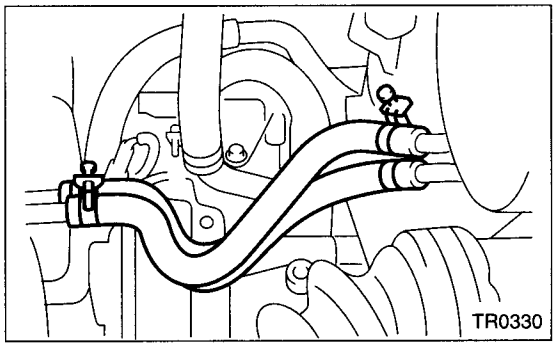

4) Connect the ATF cooler hose to pipe of radiator side.

NOTE:
- Install so that the hose is not folded over, excessively bent, or twisted.
- Be careful to insert the hose to the specified position.

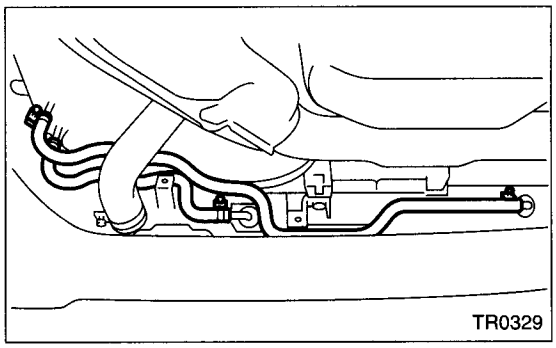

5) Install the radiator under cover.

Tightening torque:
4.9 N·m (0.5 kgf-m, 3.6 ft-lb)

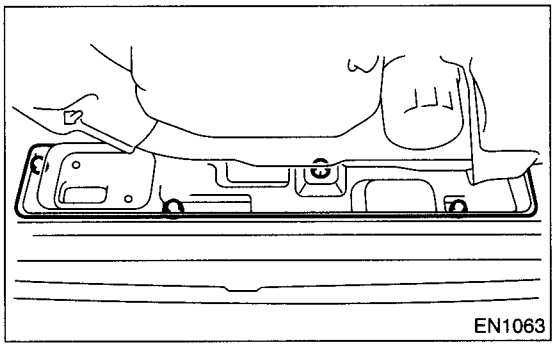

6) Install the under cover.
7) Install the battery and washer tank.

8) Fill ATF. <Ref. to AT-9, Automatic Transmission Fluid.>

NOTE:
Make sure there are no ATF leaks in joints between the transmission, radiator, pipes, and hoses.

C: INSPECTION

Repair or replace any defective hoses, pipes, clamps, and washers found from the inspection below.

1) Check for ATF leaks in joints between the transmission, radiator, pipes, and hoses.
2) Check for deformed clamps.
3) Lightly bend the hose and check for cracks in the surface and other damage.
4) Pinch the hose with your fingers and check for poor elasticity. Also check for poor elasticity in the parts where the clamp was installed by pressing with your fingernail.
5) Check for peeling, cracks, and deformation at the tip of the hose.

AUTOMATIC TRANSMISSION (DIAGNOSTICS)

AT

		Page
1.	Basic Diagnostic Procedure	2
2.	Check List for Interview	4
3.	General Description	5
4.	Electrical Components Location	7
5.	Transmission Control Module (TCM) I/O Signal	11
6.	Subaru Select Monitor	22
7.	Read Diagnostic Trouble Code (DTC)	24
8.	Inspection Mode	26
9.	Clear Memory Mode	27
10.	AT OIL TEMP Warning Light Display	28
11.	List of Diagnostic Trouble Code (DTC)	29
12.	Diagnostic Procedure for AT OIL TEMP Warning Light	31
13.	Diagnostic Procedure for Select Monitor Communication	39
14.	Diagnostic Procedure with Diagnostic Trouble Code (DTC)	44
15.	Diagnostic Procedure for No-Diagnostic Trouble Code (DTC)	108
16.	Symptom Related Diagnostic	127

1. Basic Diagnostic Procedure

A: PROCEDURE

	Step	Check	Yes	No
1	**CHECK PRE-INSPECTION.** 1)Ask the customer when and how the trouble occurred using the interview checklist. <Ref. to AT-4, Check List for Interview.> 2)Before performing diagnosis, inspect the following items which might influence the AT problems. •General inspection <Ref. to AT-5, INSPECTION, General Description.> •Oil leak •Stall speed test <Ref. to AT-13, Stall Test.> •Line pressure test <Ref. to AT-16, Line Pressure Test.> •Transfer clutch pressure test <Ref. to AT-18, Transfer Clutch Pressure Test.> •Time lag test <Ref. to AT-15, Time Lag Test.> •Road test <Ref. to AT-12, Road Test.> •Inhibitor switch <Ref. to AT-28, Inhibitor Switch.>	Is the unit that might influence the AT problem normal?	Go to step **2.**	Repair or replace each item.
2	**CHECK AT OIL TEMP WARNING LIGHT.** Turn the ignition switch to ON.	Does not the AT OIL TEMP warning light light up?	Go to step **3.**	Go to step **4.**
3	**CHECK AT OIL TEMP WARNING LIGHT.** 1)Turn the ignition switch to OFF. 2)Repair the AT OIL TEMP warning light circuit or power supply and ground line circuit. <Ref. to AT-31, Diagnostic Procedure for AT OIL TEMP Warning Light.> 3)Turn the ignition switch to ON.	Is the AT OIL TEMP warning light flashing?	Go to step **4.**	Go to step **5.**
4	**CHECK INDICATION OF DTC.** Calling up the diagnostic trouble code (DTC). Without SUBARU SELECT MONITOR <Ref. to AT-24, WITHOUT SUBARU SELECT MONITOR, Read Diagnostic Trouble Code (DTC).> With SUBARU SELECT MONITOR <Ref. to AT-25, WITH SUBARU SELECT MONITOR, Read Diagnostic Trouble Code (DTC).> NOTE: If the communication function of the select monitor cannot be executed normally, check the communication circuit. <Ref. to AT-39, COMMUNICATION FOR INITIALIZING IMPOSSIBLE, Diagnostic Procedure for Select Monitor Communication.>	Is the diagnostic trouble code (DTC) displayed?	Go to step **6.** NOTE: Record all diagnostic trouble code (DTC).	Go to step **5.**

	Step	Check	Yes	No
5	**PERFORM THE GENERAL DIAGNOSTICS.** 1)Inspect using the "Diagnostic Procedure for No-Diagnostic trouble Code".<Ref. to AT-108, Diagnostic Procedure for No-Diagnostic Trouble Code (DTC).> 2)Inspect using the "Symptom Related Diagnostic". <Ref. to AT-127, Symptom Related Diagnostic.> 3)Perform the clear memory mode. With SUBARU SELECT MONITOR <Ref. to AT-27, WITH SUBARU SELECT MONITOR, Clear Memory Mode.> Without SUBARU SELECT MONITOR <Ref. to AT-27, WITHOUT SUBARU SELECT MONITOR, Clear Memory Mode.> 4)Perform the inspection mode. <Ref. to AT-26, Inspection Mode.> Calling up the diagnostic trouble code (DTC). Without SUBARU SELECT MONITOR <Ref. to AT-24, WITHOUT SUBARU SELECT MONITOR, Read Diagnostic Trouble Code (DTC).> With SUBARU SELECT MONITOR <Ref. to AT-25, WITH SUBARU SELECT MONITOR, OPERATION, Read Diagnostic Trouble Code (DTC).>	Is the diagnostic trouble code (DTC) displayed?	Go to step **6.**	Complete the diagnosis.
6	**PERFORM THE DIAGNOSIS.** 1)Inspect using the "Diagnostics Chart with Diahnostic Trouble Code".<Ref. to AT-44, Diagnostic Procedure with Diagnostic Trouble Code (DTC).> NOTE: For trouble code table, refer to the "List of Diagnostic Trouble Code".<Ref. to AT-29, List of Diagnostic Trouble Code (DTC).> 2)Repair the trouble cause. 3)Perform the clear memory mode. With SUBARU SELECT MONITOR <Ref. to AT-27, WITH SUBARU SELECT MONITOR, OPERATION, Clear Memory Mode.> Without SUBARU SELECT MONITOR <Ref. to AT-27, WITHOUT SUBARU SELECT MONITOR, Clear Memory Mode.> 4)Perform the inspection mode. <Ref. to AT-26, Inspection Mode.> 5)Calling up the diagnostic trouble code (DTC). Without SUBARU SELECT MONITOR <Ref. to AT-24, WITHOUT SUBARU SELECT MONITOR, OPERATION, Read Diagnostic Trouble Code (DTC).> With SUBARU SELECT MONITOR <Ref. to AT-25, WITH SUBARU SELECT MONITOR, OPERATION, Read Diagnostic Trouble Code (DTC).>	Is the diagnostic trouble code (DTC) displayed?	Inspect using the "Diagnostics Chart with Diagnostic Connector". <Ref. to AT-44, Diagnostic Procedure with Diagnostic Trouble Code (DTC).>	Complete the diagnosis.

2. Check List for Interview

NOTE:
Use copies of this page for interviewing customers.

A: CHECK

Check the following items when problem has occurred.

Customer's name			
Data vehicle brought in			
Data of repair			
Trans. model	TRANSMISSION	VIN	
Odometer reading	km/h or mile		
Frequency	❑ Continuous ❑ Intermittent (times a day)		
Weather	❑ Fine ❑ Cloudy ❑ Rainy ❑ Snowy ❑ Various/Others ( )		
Place	❑ High ❑ Suburbs ❑ Inner city ❑ Uphill ❑ Rough road ❑ Others ( )		
Outdoor temperature	❑ Hot ❑ Warm ❑ Cool ❑ Cold		
Vehicle speed	km/h (MPH)		
Malfunction indicator lamp (MIL)	❑ Continuously lit	❑ Not lit	
Select lever position	❑ P ❑ R ❑ N ❑ D ❑ 3 ❑ 2 ❑ 1		
Driving condition	❑ Not affected ❑ At racing ❑ While decelerating	❑ At starting ❑ While accelerating ❑ While turning (❑ RH/❑ LH)	❑ While idling ❑ While cruising
Symptoms	❑ No up-shift		
	❑ No down-shift		
	❑ No kick down		
	❑ Vehicle does not move (❑ Any position ❑ Particular position)		
	❑ Lock-up malfunction		
	❑ Noise or vibration		
	❑ Shift shock or slip		
	❑ Select lever does not move		
	❑ Others ( )		

3. General Description

A: CAUTION

- **Supplemental Restraint System "Airbag"**

The airbag system wiring harness is routed near the transmission control module (TCM).

CAUTION:

- **All airbag system wiring harness and connectors are colored yellow. Do not use electrical test equipment on these circuit.**
- **Be careful not to damage the airbag system wiring harness when performing diagnostics and servicing the TCM.**
- **Measurement**

When measuring the voltage and resistance of the ECM, TCM or each sensor, use a tapered pin with a diameter of less than 0.64 mm (0.025 in) in order to avoid poor contact. Do not insert the pin more than 6.5 mm (0.256 in).

B: INSPECTION

1. BATTERY

Measure the battery voltage and specific gravity of electrolyte.

Standard voltage: 12V or more

Specific gravity: Above 1.260

2. TRANSMISSION GROUND

Make sure that the ground terminal bolt is tightened securely.

- **Chassis side**

Tightening torque:
13 N·m (1.3 kgf-m, 9.4 ft-lb)

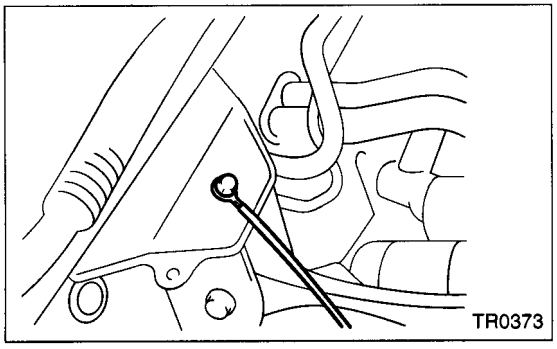

3. ATF LEVEL

Make sure the ATF level is in the specification.

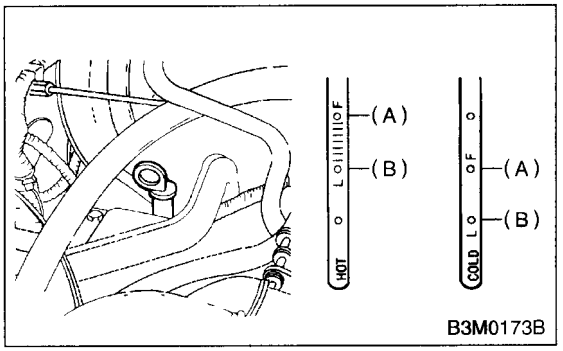

(A) Upper level
(B) Lower level

4. FRONT DIFFERENTIAL OIL LEVEL

Make sure the front differential oil level is in the specification.

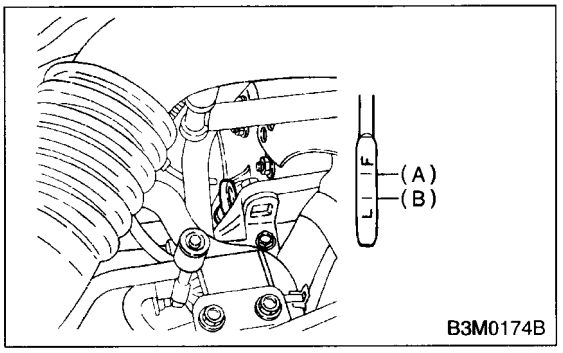

(A) Upper level
(B) Lower level

5. OPERATION OF SHIFT SELECT LEVER

Make sure there is no abnormal noise, dragging or contact pattern in each select lever range.

WARNING:
Stop the engine while checking operation of the selector lever.

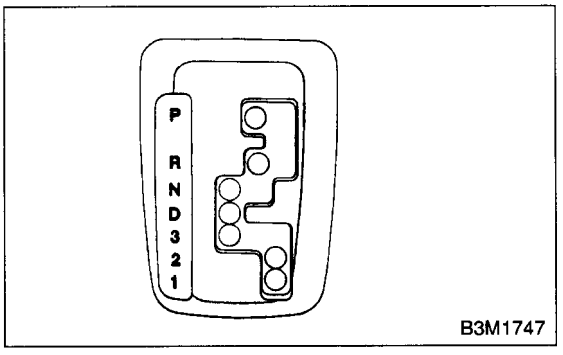

C: PREPARATION TOOL

1. SPECIAL TOOLS

ILLUSTRATION	TOOL NUMBER	DESCRIPTION	REMARKS
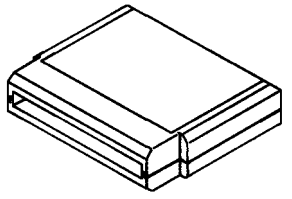 B2M3876	24082AA150 (Newly adopted tool)	CARTRIDGE	Troubleshooting for electrical systems.
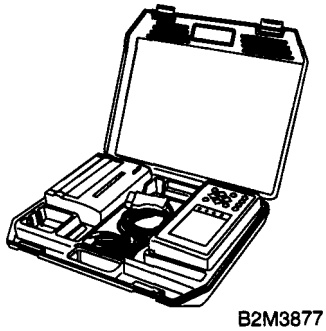 B2M3877	22771AA030	SELECT MONITOR KIT	Troubleshooting for electrical systems. • English: 22771AA030 (Without printer) • German: 22771AA070 (Without printer) • French: 22771AA080 (Without printer) • Spanish: 22771AA090 (Without printer)

2. GENERAL PURPOSE TOOLS

TOOL NAME	REMARKS
Circuit Tester	Used for measuring resistance, voltage and ampere.
Oscilloscope	Used for measuring sensor.

4. Electrical Components Location

A: LOCATION

1. CONTROL MODULE

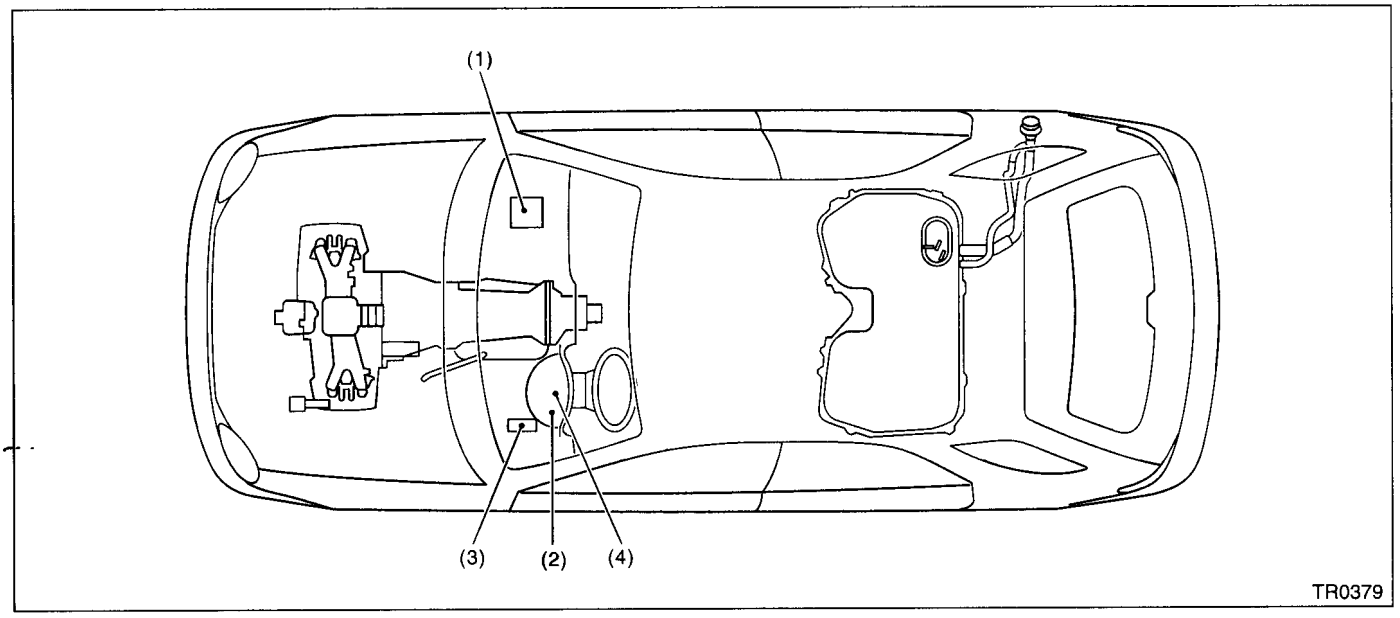

(1) Engine control module (ECM)
(2) ATF temperature warning light (AT diagnostic indicator light)
(3) Transmission control module (TCM)
(4) Data link connector

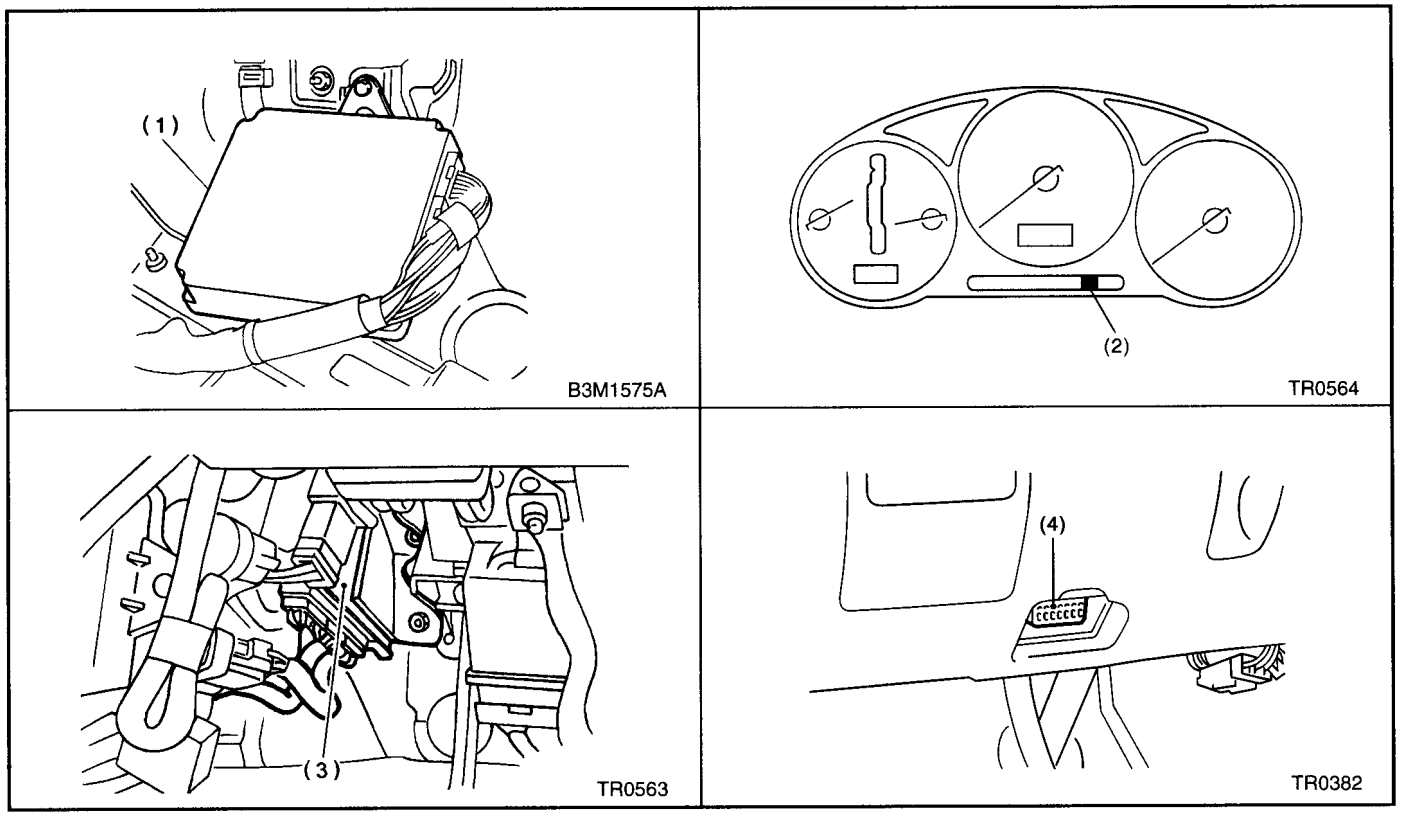

2. SENSOR

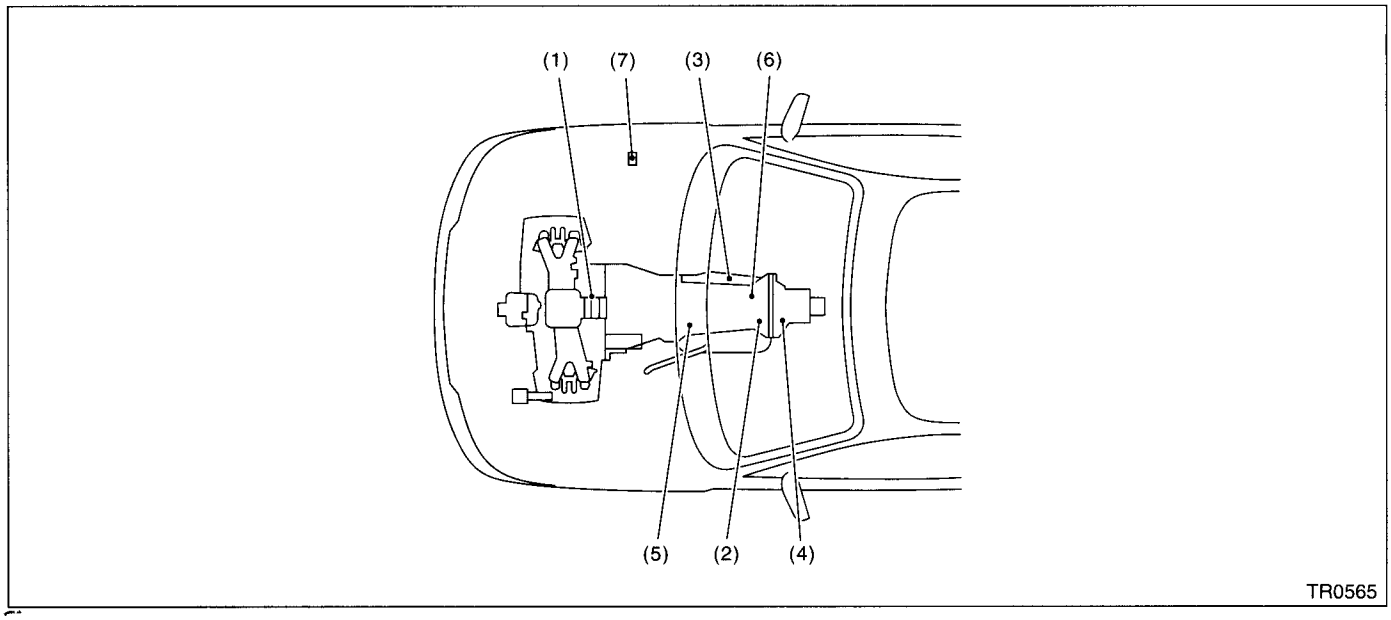

(1) Throttle position sensor
(2) Front vehicle speed sensor
(3) Inhibitor switch
(4) Rear vehicle speed sensor
(5) Torque converter turbine speed sensor
(6) ATF temperature sensor
(7) Dropping resistor (Non-turbo model)

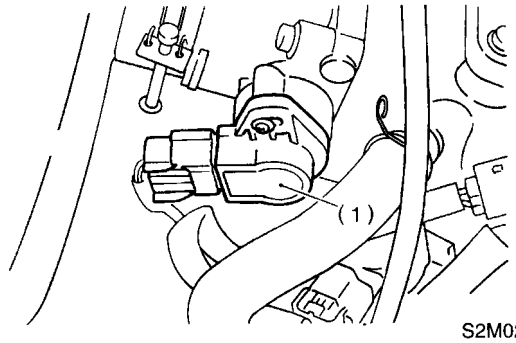

S2M0262B

Non-turbo model

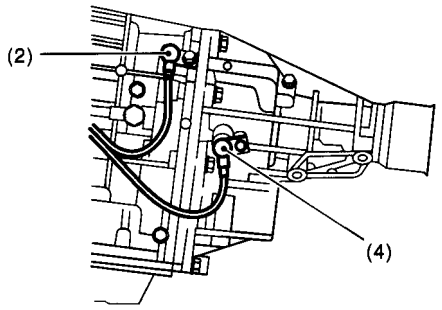

TR0387

Turbo model

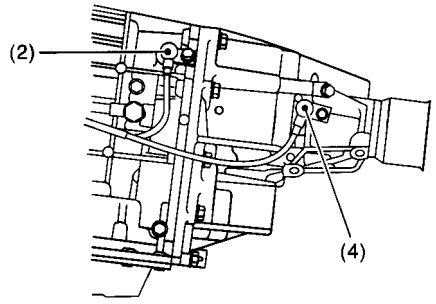

TR0592

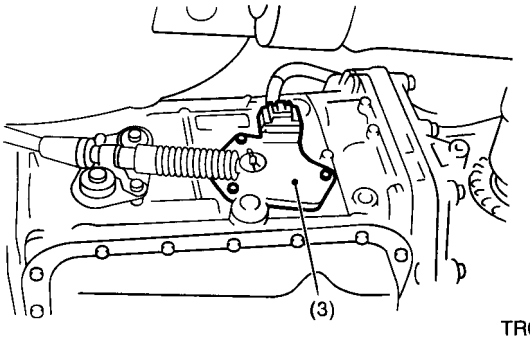

TR0388

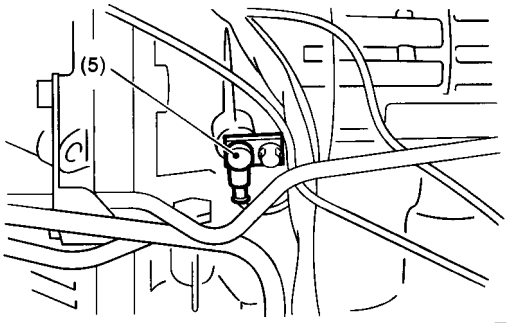

TR0390

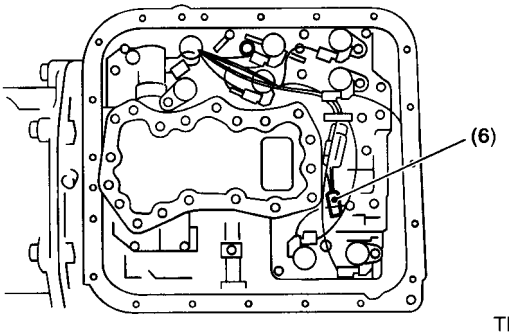

TR0389

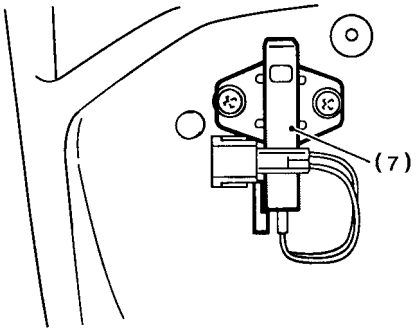

TR0593

SUBARU

3. SOLENOID

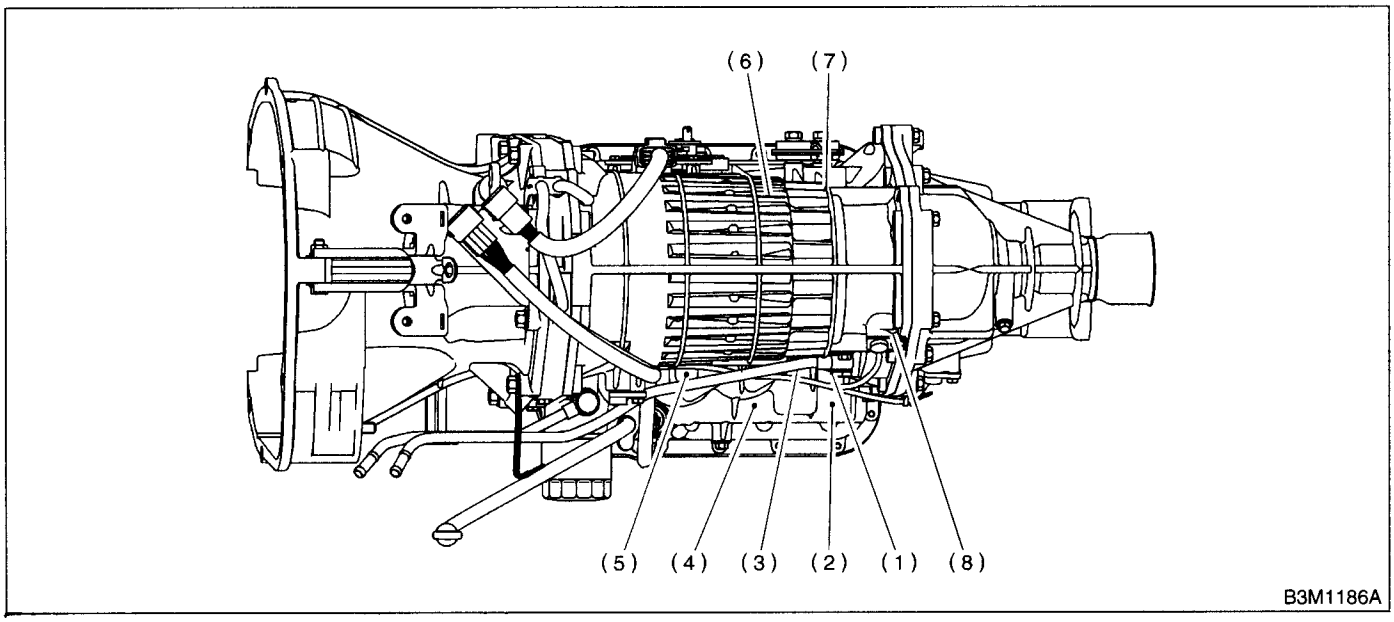

(1) Solenoid 1
(2) Solenoid 2
(3) Line pressure duty solenoid
(4) Low clutch timing solenoid
(5) Lock-up duty solenoid
(6) 2-4 brake duty solenoid
(7) 2-4 brake timing solenoid
(8) Transfer duty solenoid

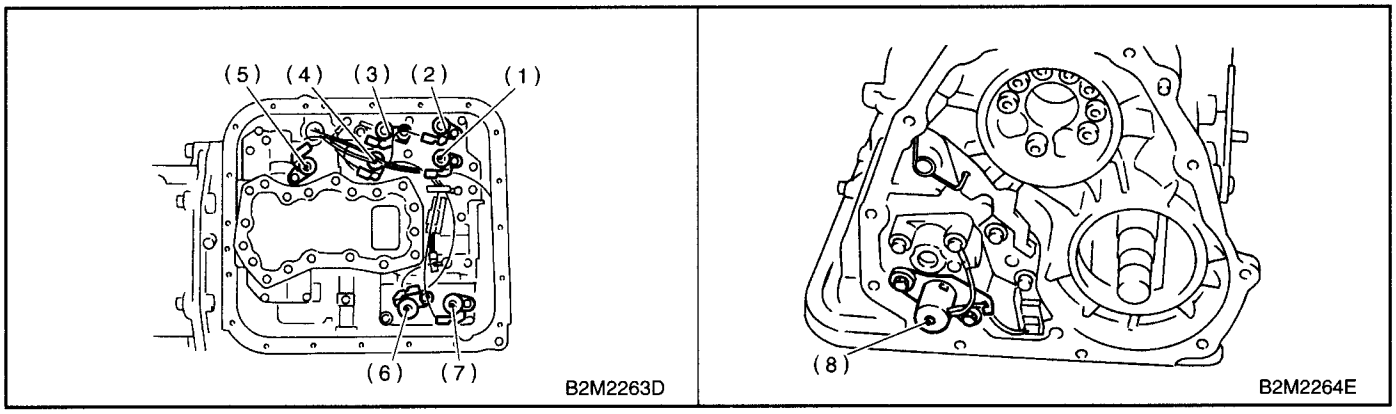

5. Transmission Control Module (TCM) I/O Signal

A: ELECTRICAL SPECIFICATION

1. NON-TURBO MODEL

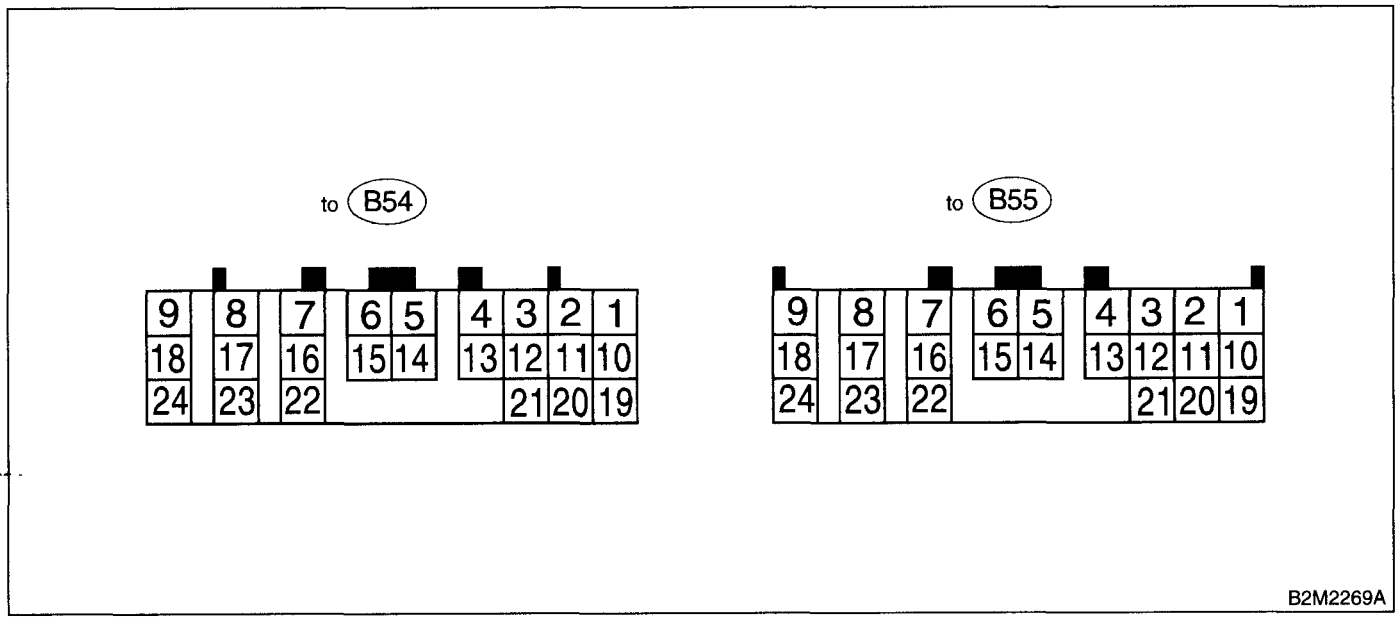

Check with ignition switch ON.						
Content		Connector No.	Terminal No.	Measuring conditions	Voltage (V)	Resistance to body (ohms)
Back-up power supply		B55	6	Ignition switch OFF	10 — 13	—
Ignition power supply		B54	23	Ignition switch ON (with engine OFF)	10 — 13	—
		B54	24			
Inhibitor switch	"P" range switch	B55	23	Select lever in "P" range	Less than 1	—
				Select lever in any other than "P" range (except "N" range)	More than 8	
	"N" range switch	B55	22	Select lever in "N" range	Less than 1	—
				Select lever in any other than "N" range (except "P" range)	More than 8	
	"R" range switch	B55	17	Select lever in "R" range	Less than 1	—
				Select lever in any other than "R" range	More than 8	
	"D" range switch	B55	8	Select lever in "D" range	Less than 1	—
				Select lever in any other than "D" range	More than 8	
	"3" range switch	B55	18	Select lever in "3" range	Less than 1	—
				Select lever in any other than "3" range	More than 8	
	"2" range switch	B54	10	Select lever in "2" range	Less than 1	—
				Select lever in any other than "2" range	More than 8	
	"1" range switch	B54	1	Select lever in "1" range	Less than 1	—
				Select lever in any other than "1" range	More than 8	

Check with ignition switch ON.					
Content	Connector No.	Terminal No.	Measuring conditions	Voltage (V)	Resistance to body (ohms)
Brake switch	B55	24	Brake pedal depressed.	More than 10.5	—
			Brake pedal released.	Less than 1	
ABS signal	B54	19	ABS switch ON	Less than 1	—
			ABS switch OFF	More than 6.5	
AT OIL TEMP light	B54	3	Light ON	Less than 1	—
			Light OFF	More than 9	
Throttle position sensor	B55	2	Throttle fully closed.	Approx. 0.5	—
			Throttle fully open.	Approx. 4.3	
Throttle position sensor power supply	B55	1	Ignition switch ON (With engine OFF)	4.8 — 5.3	—
ATF temperature sensor	B55	11	ATF temperature 20°C (68°F)	1.6 — 2.0	2.1 — 2.9 k
			ATF temperature 80°C (176°F)	0.4 — 0.9	275 — 375
Rear vehicle speed sensor	B55	3	Vehicle stopped.	0	450 — 650
			Vehicle speed at least 20 km/h (12 MPH)	More than 1 (AC range)	
Front vehicle speed sensor	B55	5	Vehicle stopped	0	450 — 650
			Vehicle speed at least 20 km/h (12 MPH)	More than 1 (AC range)	
Torque converter turbine speed sensor	B55	12	Engine idling after warm-up (D range)	0	450 — 650
			Engine idling after warm-up (N range)	More than 1 (AC range)	
Vehicle speed output signal	B55	13	Vehicle speed at most 10 km/h (6 MPH)	Less than 1← →More than 5	—
Engine speed signal	B55	4	Ignition switch ON (with engine OFF)	0	—
			Ignition switch ON (with engine ON)	0 — 13 or more	
Cruise set signal	B54	11	When cruise control is set (SET light ON)	Less than 1	—
			When cruise control is not set (SET light OFF)	More than 6.5	
Torque control signal 1	B54	13	Ignition switch ON (with engine ON)	More than 4.8	—
Torque control signal 2	B54	21	Ignition switch ON (with engine ON)	More than 4.8	—
Torque control cut signal	B54	2	Ignition switch ON	8	—
Intake manifold pressure signal	B55	20	Engine idling after warm-up.	1.2 — 1.8	—
Shift solenoid 1	B54	7	1st gear	More than 9	10 — 16
			3rd gear	Less than 1	
Shift solenoid 2	B54	6	2nd gear	More than 9	10 — 16
			4th gear	Less than 1	
Line pressure duty solenoid	B54	9	Throttle fully closed (with engine OFF) after warm-up.	1.5 — 5.0	2.0 — 4.5
			Throttle fully open (with engine OFF) after warm-up.	Less than 1	

Check with ignition switch ON.					
Content	Connector No.	Terminal No.	Measuring conditions	Voltage (V)	Resistance to body (ohms)
Dropping resistor	B54	18	Throttle fully closed (with engine OFF) after warm-up.	More than 8.5	9 — 15
			Throttle fully open (with engine OFF) after warm-up.	Less than 0.5	
Lock-up duty solenoid	B54	16	When lock up occurs.	More than 8.5	10 — 17
			When lock up is released.	Less than 0.5	
Transfer duty solenoid	B54	15	Fuse on FWD switch	More than 8.5	10 — 17
			Fuse removed from FWD switch (with throttle fully open and with select lever in 1st gear).	Less than 0.5	
2-4 brake duty solenoid	B54	8	Throttle fully closed (with engine OFF) after warm-up.	1.5 — 5.0	2.0 — 4.5
			Throttle fully open (with engine OFF) after warm-up.	Less than 1	
2-4 brake dropping resistor	B54	17	Throttle fully closed (with engine OFF) after warm-up.	More than 8.5	9 — 15
			Throttle fully open (with engine OFF) after warm-up.	Less than 0.5	
2-4 brake timing solenoid	B54	5	1st gear	Less than 1	10 — 16
			3rd gear	More than 9	
Low clutch timing solenoid	B54	14	2nd gear	Less than 1	10 — 16
			4th gear	More than 9	
Sensor ground line 1	B55	10	—	0	Less than 1
Sensor ground line 2	B55	21	—	0	Less than 1
System ground line	B55	9	—	0	Less than 1
		19			
FWD switch	B55	14	Fuse removed.	More than 9	—
			Fuse installed.	Less than 1	
FWD indicator light	B54	12	Fuse ONFWD switch	Less than 1	—
			Fuse removed from FWD switch	More than 9	
AT diagnosis signal	B54	4	Ignition switch ON	Less than 1← →More than 4	—
Data link signal (Subaru Select Monitor)	B55	7	—	—	—
		16	—	—	

2. TURBO MODEL

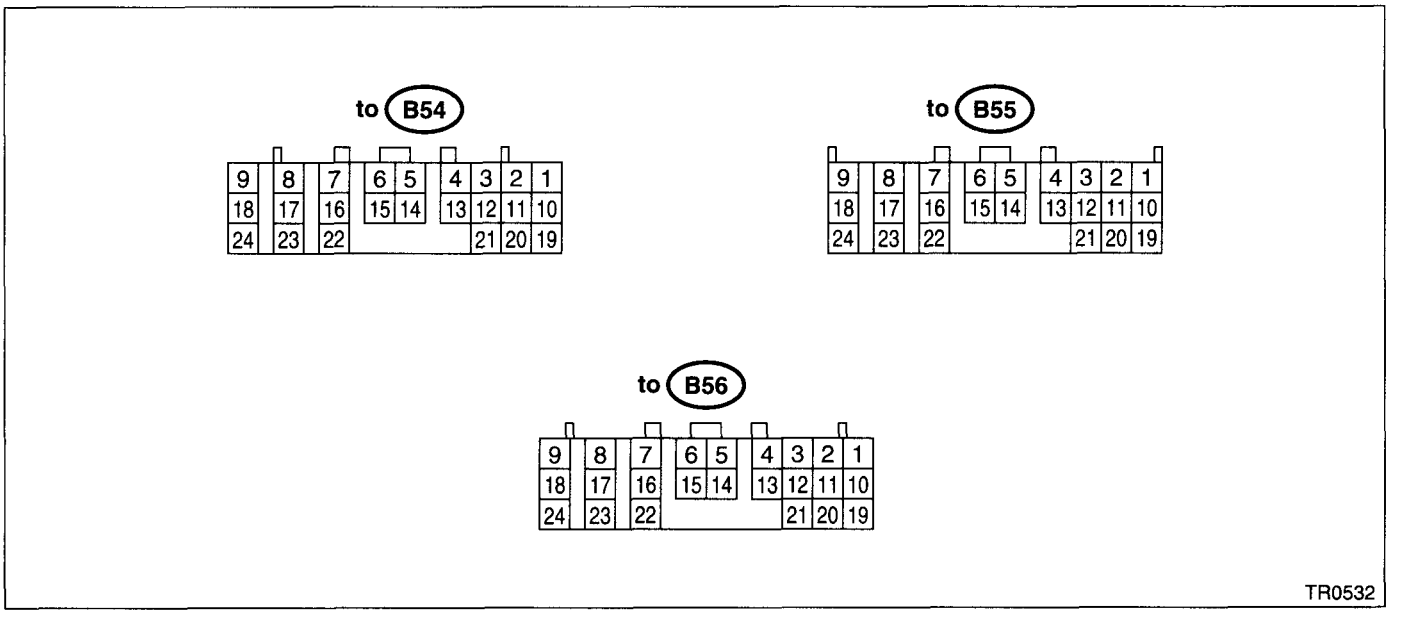

Check with ignition switch ON.						
Content		Connector No.	Terminal No.	Measuring conditions	Voltage (V)	Resistance to body (ohms)
Back-up power supply		B56	1	Ignition switch OFF	10 — 13	—
Ignition power supply		B54	23	Ignition switch ON (with engine OFF)	10 — 13	—
		B54	24			
Inhibitor switch	"P" range switch	B55	1	Select lever in "P" range	Less than 1	—
				Select lever in any other than "P" range (except "N" range)	More than 8	
	"N" range switch	B55	14	Select lever in "N" range	Less than 1	—
				Select lever in any other than "N" range (except "P" range)	More than 8	
	"R" range switch	B55	3	Select lever in "R" range	Less than 1	—
				Select lever in any other than "R" range	More than 8	
	"D" range switch	B55	4	Select lever in "D" range	Less than 1	—
				Select lever in any other than "D" range	More than 8	
	"3" range switch	B55	5	Select lever in "3" range	Less than 1	—
				Select lever in any other than "3" range	More than 8	
	"2" range switch	B55	6	Select lever in "2" range	Less than 1	—
				Select lever in any other than "2" range	More than 8	
	"1" range switch	B55	7	Select lever in "1" range	Less than 1	—
				Select lever in any other than "1" range	More than 8	
Brake switch		B55	12	Brake pedal depressed.	More than 10.5	—
				Brake pedal released.	Less than 1	
AT OIL TEMP warning light		B56	10	Light ON	Less than 1	—
				Light OFF	More than 9	

Check with ignition switch ON.					
Content	Connector No.	Terminal No.	Measuring conditions	Voltage (V)	Resistance to body (ohms)
Throttle position sensor	B54	3	Throttle fully closed.	Approx. 0.5	—
			Throttle fully open.	Approx. 4.3	
Throttle position sensor power supply	B54	2	Ignition switch ON (With engine OFF)	Approx. 5.0	—
ATF temperature sensor	B54	11	ATF temperature 20°C (68°F)	1.6 — 2.0	2.1 k — 2.9 k
			ATF temperature 80°C (176°F)	0.4 — 0.9	275 — 375
Rear vehicle speed sensor	B55	24	Vehicle stopped.	0	450 — 650
			Vehicle speed at least 20 km/h (12 MPH)	More than 1 (AC range)	
Front vehicle speed sensor	B55	18	Vehicle stopped.	0	450 — 650
			Vehicle speed at least 20 km/h (12 MPH)	More than 1 (AC range)	
Torque converter turbine speed sensor	B55	8	Engine idling after warm-up. (D range)	0	450 — 650
			Engine idling after warm-up. (N range)	More than 1 (AC range)	
Vehicle speed output signal	B56	17	Vehicle speed at most 10 km/h (6 MPH)	Less than 1← →More than 5	—
Engine speed signal	B55	17	Ignition switch ON (with engine OFF)	0	—
			Ignition switch ON (with engine ON)	0 — 13 or more	
Cruise set signal	B55	22	When cruise control is set (SET lamp ON)	Less than 1	—
			When cruise control is not set (SET lamp OFF)	More than 6.5	
Torque control signal 1	B56	5	Ignition switch ON (with engine ON)	More than 4	—
Torque control signal 2	B56	14	Ignition switch ON (with engine ON)	More than 4	—
Torque control cut signal	B55	10	Ignition switch ON	8	—
Mass air flow signal	B54	1	Engine idling after warm-up.	0.5 — 1.2	—
Shift solenoid 1	B54	22	1st or 4th gear	More than 9	10 — 16
			2nd or 3rd gear	Less than 1	
Shift solenoid 2	B54	5	1st or 2nd gear	More than 9	10 — 16
			3rd or 4th gear	Less than 1	
Line pressure duty solenoid	B54	9	Ignition switch ON (with engine OFF) Throttle fully closed after warm-up.	1.5 — 5.0	2.0 — 4.5
			Ignition switch ON (with engine OFF) Throttle fully open after warm-up.	Less than 1	
Lock-up duty solenoid	B54	7	When lock up occurs.	More than 8.5	10 — 17
			When lock up is released.	Less than 0.5	
Transfer duty solenoid	B54	6	—	More than 8.5	10 — 17
			Throttle fully open and with select lever in 1st gear.	Less than 0.5	

Check with ignition switch ON.					
Content	Connector No.	Terminal No.	Measuring conditions	Voltage (V)	Resistance to body (ohms)
2-4 brake duty solenoid	B54	18	Throttle fully closed (with engine OFF) after warm-up.	1.5 — 5.0	2.0 — 4.5
			Throttle fully open (with engine OFF) after warm-up.	Less than 1	
2-4 brake timing solenoid	B54	16	1st gear	Less than 1	10 — 16
			3rd gear	More than 9	
Low clutch timing solenoid	B54	15	2nd gear	Less than 1	10 — 16
			4th gear	More than 9	
ABS signal	B55	21	ABS switch ON	Less than 1	—
			ABS switch OFF	More than 6.5	—
Sensor ground line 1	B54	20	—	0	Less than 1
Sensor ground line 2	B55	9	—	0	Less than 1
System ground line	B56	19	—	0	Less than 1
	B54	21			
Sensor ground line 3	B54	10	—	0	Less than 1
Sensor ground line 4	B54	19	—	0	Less than 1
AT diagnosis signal	B56	21	Ignition switch ON	Less than 1 ← → More than 4	—
Data link signal (Subaru Select Monitor)	B56	15	—	—	—
		6	—	—	

B: SCHEMATIC

1. NON-TURBO MODEL

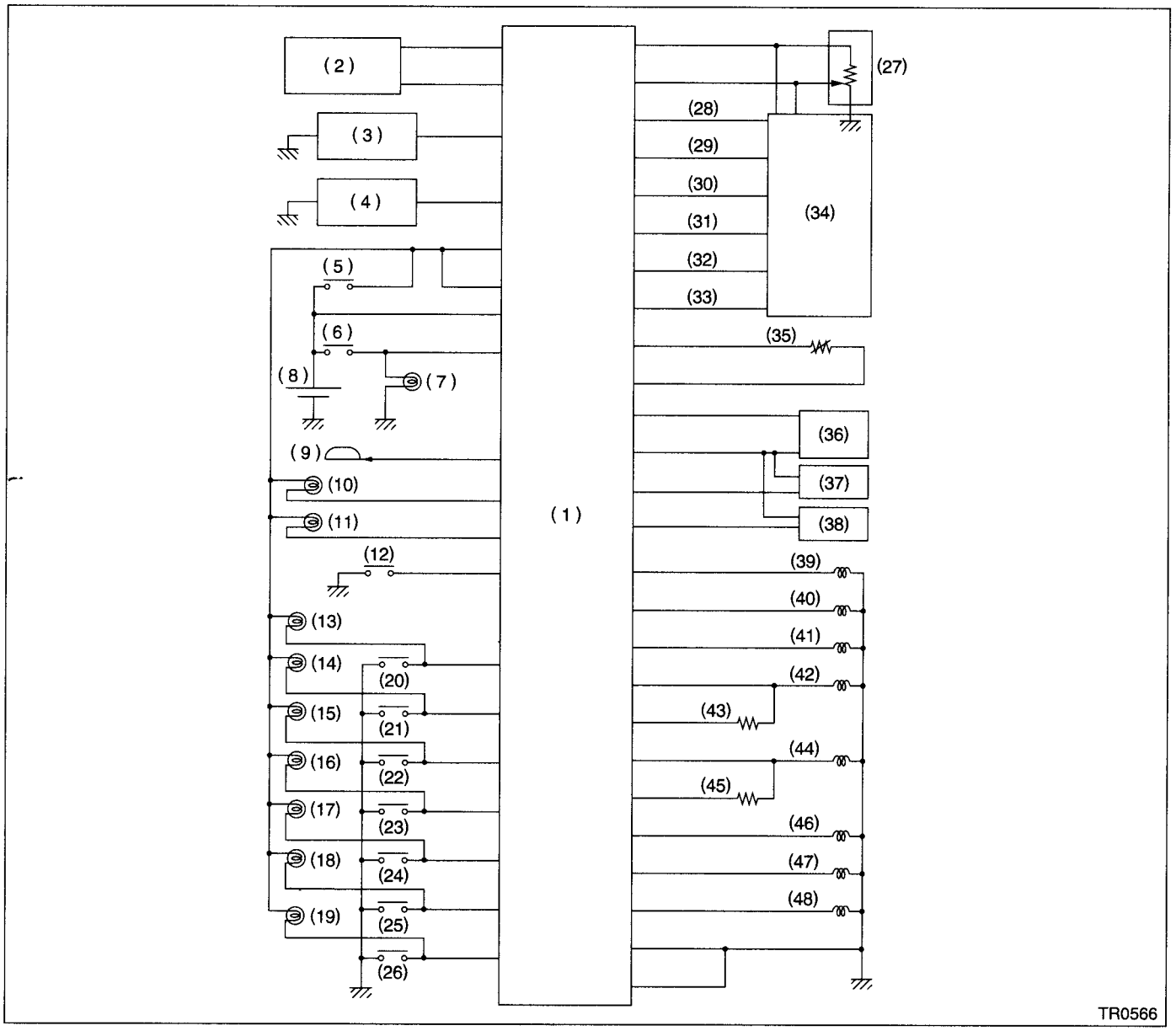

(1) Transmission control module
(2) Data link connector
(3) Cruise set switch
(4) ABS control module
(5) Ignition switch
(6) Brake switch
(7) Brake light
(8) Battery
(9) Combination meter
(10) AT OIL TEMP warning light
(11) FWD indicator light
(12) FWD switch
(13) "P" range indicator light
(14) "R" range indicator light
(15) "N" range indicator light
(16) "D" range indicator light
(17) "3" range indicator light
(18) "2" range indicator light
(19) "1" range indicator light
(20) "P" range switch
(21) "R" range switch
(22) "N" range switch
(23) "D" range switch
(24) "3" range switch
(25) "2" range switch
(26) "1" range switch
(27) Throttle position sensor
(28) Engine speed signal
(29) Torque control cut signal
(30) Torque control signal 2
(31) Torque control signal 1
(32) AT load signal
(33) AT diagnostics signal
(34) Engine control module
(35) ATF temperature sensor
(36) Torque converter turbine speed sensor
(37) Front vehicle speed sensor
(38) Rear vehicle speed sensor
(39) Shift solenoid 1
(40) Shift solenoid 2
(41) 2-4 brake timing solenoid
(42) Line pressure duty solenoid
(43) Line pressure dropping resistor
(44) 2-4 brake duty solenoid
(45) 2-4 brake dropping resistor
(46) Lock-up duty solenoid
(47) Low clutch timing solenoid
(48) Transfer duty solenoid

2. TURBO MODEL

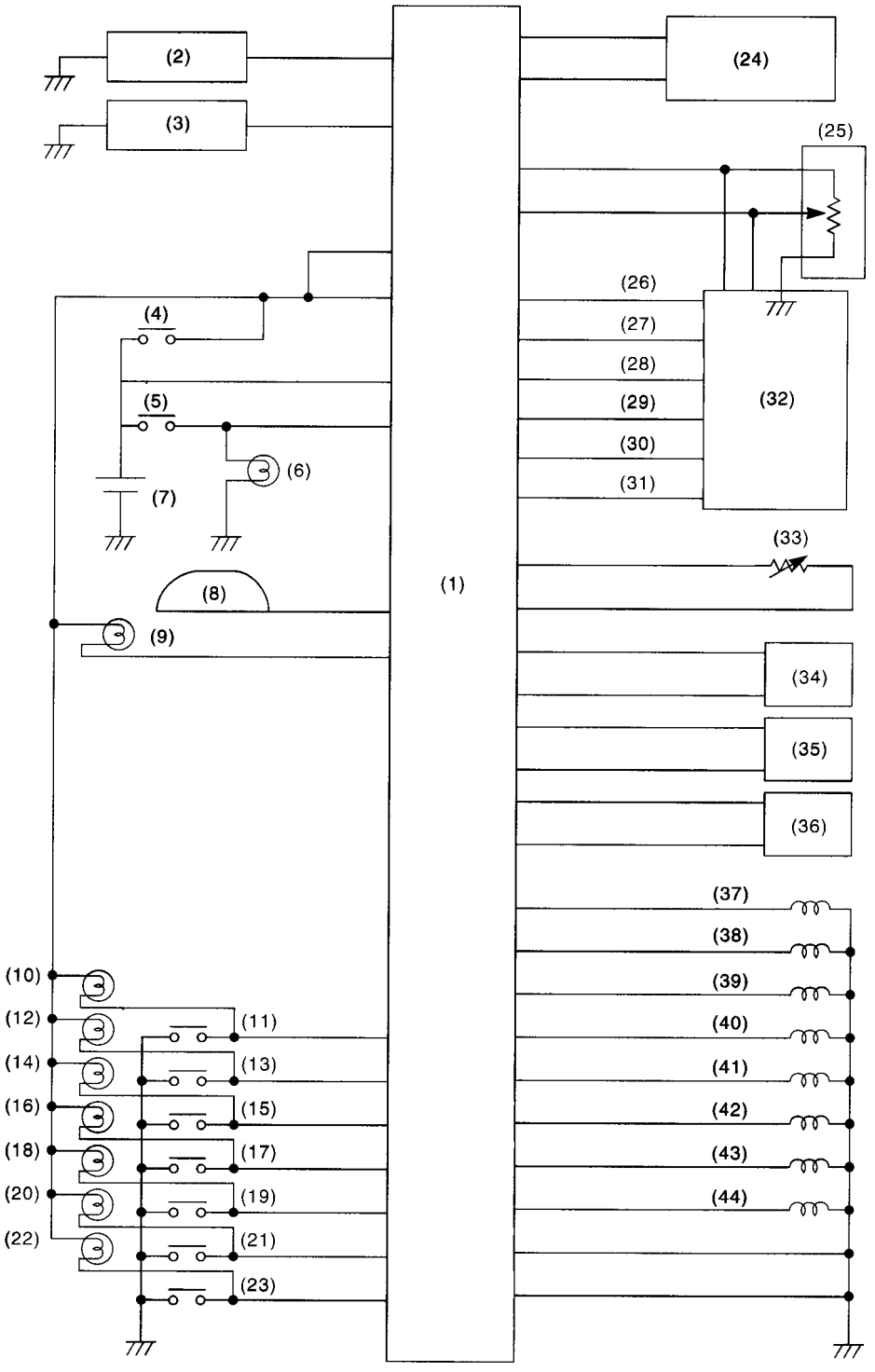

TR0567

(1) Transmission control module
(2) Cruise control module
(3) ABS control module
(4) Ignition switch
(5) Brake switch
(6) Brake light
(7) Battery
(8) Combination meter (Speedometer circuit)
(9) AT OIL TEMP light
(10) "P" range indicator light
(11) "P" range switch
(12) "R" range indicator light
(13) "R" range switch
(14) "N" range indicator light
(15) "N" range switch
(16) "D" range indicator light
(17) "D" range switch
(18) "3" range indicator light
(19) "3" range switch
(20) "2" range indicator light
(21) "2" range switch
(22) "1" range indicator light
(23) "1" range switch
(24) Data link connector
(25) Throttle position sensor
(26) Engine speed signal
(27) Torque control cut signal
(28) Torque control signal 2
(29) Torque control signal 1
(30) Mass air flow signal
(31) AT diagnostics signal
(32) Engine control module
(33) ATF temperature sensor
(34) Torque converter turbine speed sensor
(35) Rear vehicle speed sensor
(36) Front vehicle speed sensor
(37) Shift solenoid 1
(38) Shift solenoid 2
(39) 2-4 brake timing solenoid
(40) Line pressure duty solenoid
(41) 2-4 brake duty solenoid
(42) Lock-up duty solenoid
(43) Low clutch timing solenoid
(44) Transfer duty solenoid

6. Subaru Select Monitor

A: OPERATION

1. READ DIAGNOSTIC TROUBLE CODE (DTC)

1) Prepare the Subaru Select Monitor kit.

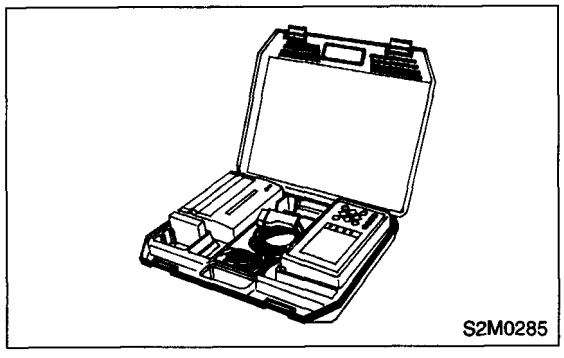

2) Connect the diagnosis cable to Subaru Select Monitor.
3) Insert the cartridge into Subaru Select Monitor. <Ref. to AT-6, PREPARATION TOOL, General Description.>

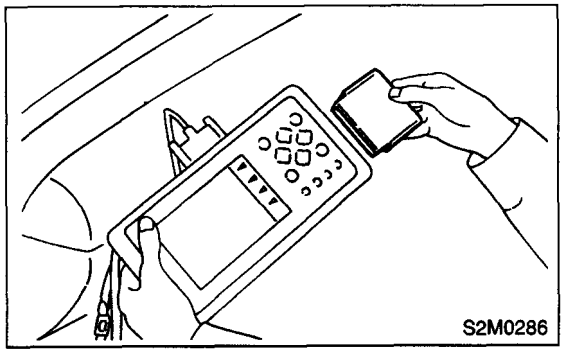

4) Connect the Subaru Select Monitor to data link connector.
   (1) Data link connector located in the lower portion of the instrument panel (on the driver's side).

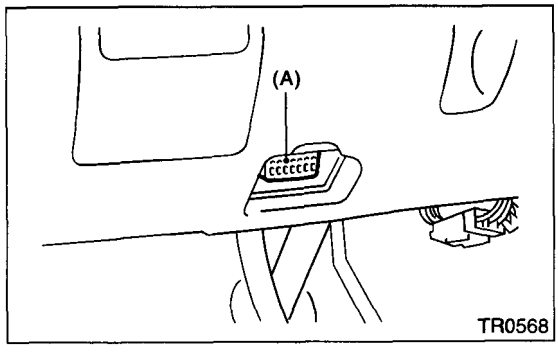

(A) Data link connector

   (2) Connect the diagnosis cable to data link connector.

CAUTION:
Do not connect scan tools except for Subaru Select Monitor and OBD-II general scan tool.

5) Turn the ignition switch to ON (engine OFF) and Subaru Select Monitor switch to ON.

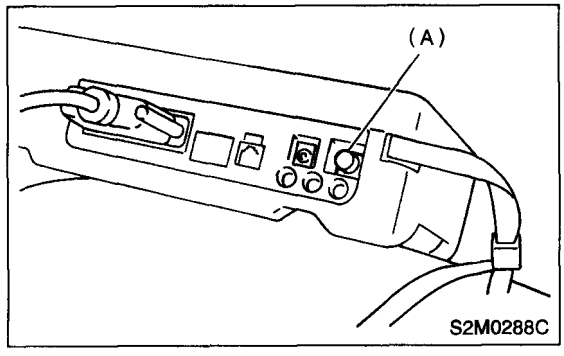

(A) Power switch

6) On the «Main Menu» display screen, select the {Each System Check} and press the [YES] key.
7) On the «System Selection Menu» display screen, select the {Transmission Control System} and press the [YES] key.
8) Press the [YES] key after displayed the information of transmission type.
9) On the «Transmission Diagnosis» display screen, select the {Diagnostic Code(s) Display} and press the [YES] key.
10) On the «Diagnostic Code(s) Display» display screen, select the {Latest Diagnostic Code(s)} or {Memorized Diagnostic Code(s)} and press the [YES] key.

NOTE:
- For detailed operation procedure, refer to the SUBARU SELECT MONITOR OPERATION MANUAL.
- For detailed concerning diagnostic trouble codes, refer to the DIAGNOSTIC TROUBLE CODE LIST (DTC). <Ref. to AT-29, List of Diagnostic Trouble Code (DTC).>

2. READ CURRENT DATA

1) On the «Main Menu» display screen, select the {Each System Check} and press the [YES] key.
2) On the «System Selection Menu» display screen, select the {Transmission Control System} and press the [YES] key.
3) Press the [YES] key after displayed the information of transmission type.
4) On the «Transmission Diagnosis» display screen, select the {Current Data Display & Save} and press the [YES] key.

5) On the «Data Display Menu» display screen, select the {Data Display} and press the [YES] key.
6) Using the scroll key, move the display screen up or down until the desired data is shown.

- A list of the support data is shown in the following table.

Contents	Display	Unit of measure
Battery voltage	Battery Voltage	V
Rear vehicle speed sensor signal	Rear Wheel Speed	km/h or MPH
Front vehicle speed sensor signal	Front Wheel Speed	km/h or MPH
Engine speed signal	Engine Speed	rpm
Automatic transmission fluid temperature signal	ATF Temp.	°C or °F
Throttle position signal	Throttle Sensor Voltage	V
Gear position	Gear Position	—
Line pressure control duty ratio	Line Pressure Duty Ratio	%
Lock up clutch control duty ratio	Lock Up Duty Ratio	%
Transfer clutch control duty ratio	Transfer Duty Ratio	%
Power supply for throttle position sensor	Throttle Sensor Power	V
Torque converter turbine speed signal	Turbine Revolution Speed	rpm
2-4 brake timing pressure control duty ratio	Brake Clutch Duty Ratio	%
Mass air flow sensor signal (Turbo model)	Air Flow Sensor Voltage	V
Intake manifold pressure sensor voltage (Non-turbo model)	Mani. Pressure Voltage	V
2 wheel drive switch signal (Non-turbo model)	FWD Switch	ON or OFF
Stop lamp switch signal	Stop Light Switch	ON or OFF
Anti lock brake system signal	ABS Signal	ON or OFF
Cruise control system signal	Cruise Control Signal	ON or OFF
Neutral/Parking range signal	N/P Range Signal	ON or OFF
Reverse range signal	R Range Signal	ON or OFF
Drive range signal	D Range Signal	ON or OFF
3rd range signal	3rd Range Signal	ON or OFF
2nd range signal	2nd Range Signal	ON or OFF
1st range signal	1st Range Signal	ON or OFF
Shift control solenoid A	Shift Solenoid #1	ON or OFF
Shift control solenoid B	Shift Solenoid #2	ON or OFF
Torque control output signal #1	Torque Control Signal 1	ON or OFF
Torque control output signal #2	Torque Control Signal 2	ON or OFF
Torque control cut signal	Torque Control Cut Sig.	ON or OFF
2-4 brake timing control solenoid valve	2-4 Brake Timing Sol.	ON or OFF
Low clutch timing control solenoid valve	Low Clutch Timing Sol.	ON or OFF
Automatic transmission diagnosis indicator lamp	Diagnosis Lamp	ON or OFF

NOTE:
For detailed operation procedure, refer to the SUBARU SELECT MONITOR OPERATION MANUAL.

3. CLEAR MEMORY MODE

1) On the «Main Menu» display screen, select the {2. Each System Check} and press the [YES] key.
2) On the «System Selection Menu» display screen, select the {Transmission Control System} and press the [YES] key.
3) Press the [YES] key after displayed the information of transmission type.
4) On the «Transmission Diagnosis» display screen, select the {Clear Memory} and press the [YES] key.
5) When the `Done' and `Turn Ignition Switch OFF' are shown on the display screen, turn the Subaru Select Monitor and ignition switch to OFF.

NOTE:
For detailed operation procedure, refer to the SUBARU SELECT MONITOR OPERATION MANUAL.

7. Read Diagnostic Trouble Code (DTC)

A: OPERATION

1. WITHOUT SUBARU SELECT MONITOR

	Step	Check	Yes	No
1	**PERFORM READ DIAGNOSTIC TROUBLE CODE.** 1)Warm-up the engine. 2)Turn the ignition switch to OFF. 3)Turn the ignition switch to ON. 4)Start the engine. 5)Drive the vehicle at speeds greater than 20 km/h (12 MPH). 6)Stop the vehicle. 7)Brake pedal depressed and move the select lever to 1 range. 8)Turn the ignition switch to OFF. 9)Turn the ignition switch to ON. 10)Move the select lever 2 range. 11)Move the select lever 1 range. 12)Move the select lever 2 range. 13)Move the select lever 3 range. 14)Move the select lever D range.	Does the indicator light blink at 4-Hz intervals? NOTE: Blinks every 0.125 (1/8) seconds (until ignition switch is turned OFF).	Repair power supply and ground circuit.<Ref. to AT-36, CHECK POWER SUPPLY AND GROUND LINE, Diagnostic Procedure for AT OIL TEMP Warning Light.>	Go to step **2.**
2	**CHECK INDICATOR LIGHT.**	Does the indicator light blink at 2-Hz intervals? NOTE: Blinks every 0.25 (1/4) seconds (until ignition switch is turned OFF).	AT system is normal.	Go to step **3.**
3	**CHECK INDICATOR LIGHT.**	Is a trouble code outputted?	Inspect the problem corresponding with diagnostic trouble code (DTC). NOTE: Record all diagnostic trouble code (DTC).	Go to step **4.**
4	**CHECK INDICATOR LIGHT.**	Does the indicator light remain illuminated?	Repair the AT OIL TEMP warning light circuit <Ref. to AT-31, Diagnostic Procedure for AT OIL TEMP Warning Light.>, or Inspect inhibitor switch, wiring, TCM, etc.	Calling up the diagnostic trouble code (DTC) again.

The AT OIL TEMP warning light flashes the code corresponding to the faulty part.
The long segment (1.2 sec on) indicates a "ten", and the short segment (0.2 sec on) signifies a "one".

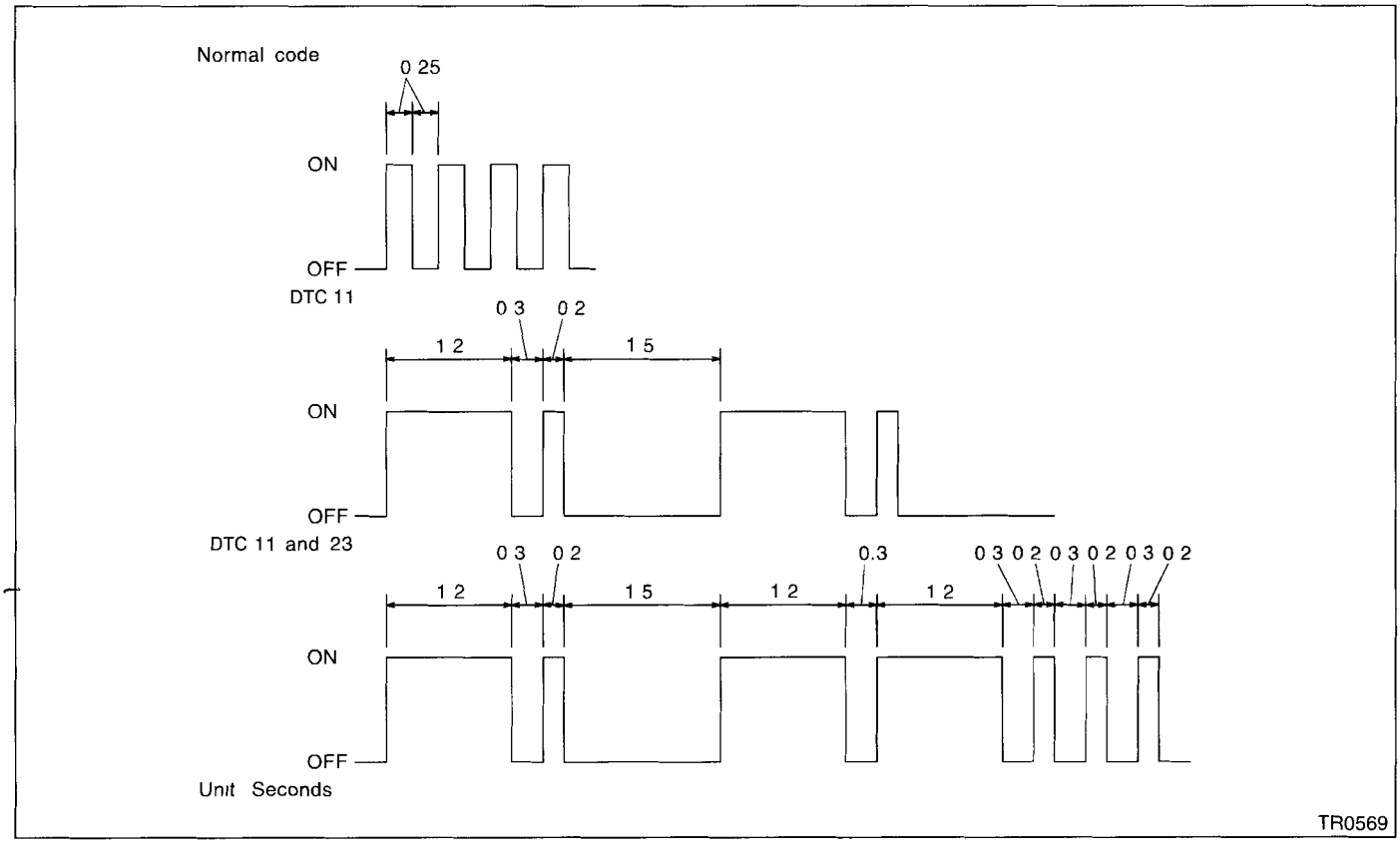

2. WITH SUBARU SELECT MONITOR

Refer to SUBARU SELECT MONITOR for information about how to obtain and understand trouble codes. <Ref. to AT-22, OPERATION, Subaru Select Monitor.>

8. Inspection Mode

A: OPERATION

Raise the vehicle using a garage jack and place on safety stands or drive the vehicle onto free rollers.

WARNING:

- **Before raising the vehicle, ensure parking brakes are applied.**
- **Do not use a pantograph jack in place of a safety stand.**
- **Secure a rope or wire to the front and rear towing or tie-down hooks to prevent the lateral runout of front wheels.**
- **Do not abruptly depress/release clutch pedal or accelerator pedal during works even when the engine is operating at low speeds since this may cause vehicle to jump off free rollers.**
- **In order to prevent the vehicle from slipping due to vibration, do not place any wooden blocks or similar items between the safety stands and the vehicle.**
- **Since the rear wheels will also rotate, do not place anything near them. Also, make sure that nobody goes in front of the vehicle.**

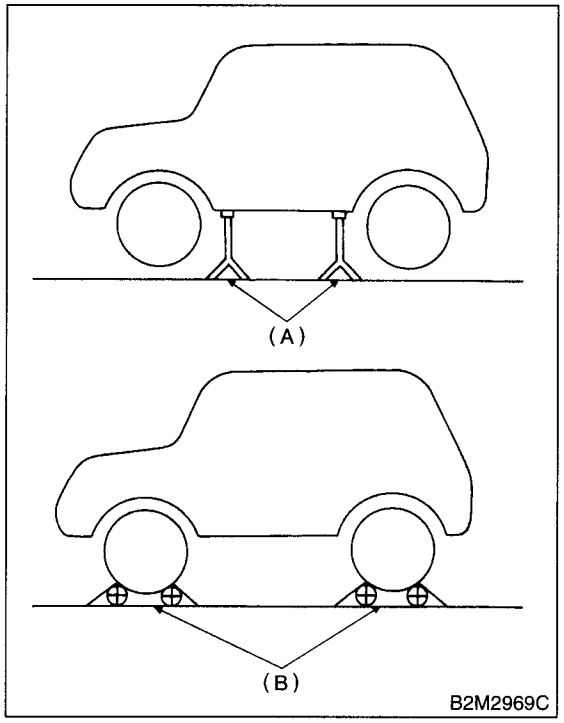

(A) Safety stand
(B) Free rollers

9. Clear Memory Mode

A: OPERATION

1. WITHOUT SUBARU SELECT MONITOR

Current trouble codes shown on the display are cleared by turning the ignition switch OFF after conducting the on-board diagnostics operation. Previous trouble codes, however, cannot be cleared since they are stored in the TCM memory which is operating on the back-up power supply. These trouble codes can be cleared by removing the specified fuse (located under the light or left lower position of the instrument panel).

CLEAR MEMORY:
Removal of No. 4 fuse (for at least one minute)

- The No. 4 fuse is located in the line to the memory back-up power supply of the TCM. Removal of this fuse clears the previous trouble codes stored in the TCM memory.
- Be sure to remove the No. 4 fuse for at least the specified length of time. Otherwise, trouble codes may not be cleared.

2. WITH SUBARU SELECT MONITOR

Refer to SUBARU SELECT MONITOR for information about how to clear trouble codes.
<Ref. to AT-23, CLEAR MEMORY MODE, OPERATION, Subaru Select Monitor.>

10.AT OIL TEMP Warning Light Display

A: INSPECTION

When any on-board diagnostics item is malfunctioning, the display on the power indicator light blinks from the time the malfunction is detected after starting the engine until the ignition switch is turned OFF. The malfunctioning part or unit can be determined by a trouble code during the on-board diagnostics operation. Problems which occurred previously can also be identified through the memory function. If the AT OIL TEMP warning does not show a problem (although a problem is occurring), the problem can be determined by checking the performance characteristics of each sensor using the select monitor. Indicator signal is as shown in the figure.

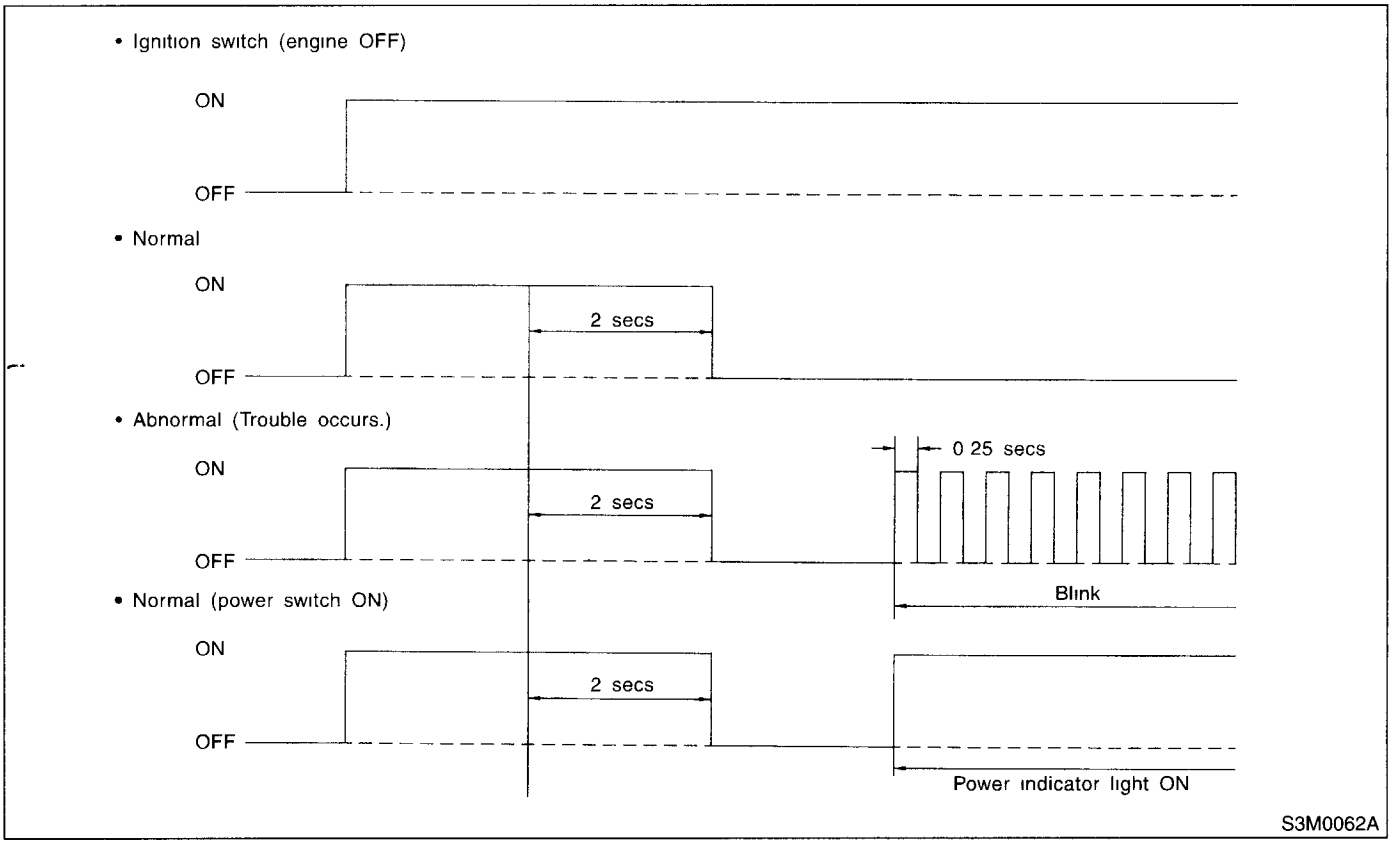

11.List of Diagnostic Trouble Code (DTC)

A: LIST

DTC No.	Item	Content of diagnosis	Index
11	Engine speed signal	Detects open or shorted input signal circuit.	<Ref. to AT-44, DTC 11 ENGINE SPEED SIGNAL, Diagnostic Procedure with Diagnostic Trouble Code (DTC).>
23	Mass air flow signal	Detects open or shorted input signal circuit.	<Ref. to AT-46, DTC 23 MASS AIR FROW SIGNAL, Diagnostic Procedure with Diagnostic Trouble Code (DTC).>
27	ATF temperature sensor	Detects open or shorted input signal circuit.	<Ref. to AT-48, DTC 27 ATF TEMPERATURE SENSOR, Diagnostic Procedure with Diagnostic Trouble Code (DTC).>
31	Throttle position sensor	Detects open or shorted input signal circuit.	<Ref. to AT-52, DTC 31 THROTTLE POSITION SENSOR, Diagnostic Procedure with Diagnostic Trouble Code (DTC).>
33	Front vehicle speed sensor	Detects open or shorted input signal circuit.	<Ref. to AT-57, DTC 33 FRONT VEHICLE SPEED SENSOR, Diagnostic Procedure with Diagnostic Trouble Code (DTC).>
36	Torque converter turbine speed sensor	Detects open or shorted input signal circuit.	<Ref. to AT-62, DTC 36 TORQUE CONVERTER TURBINE SPEED SENSOR, Diagnostic Procedure with Diagnostic Trouble Code (DTC).>
38	Torque control signal	Detects open or shorted input signal circuit.	<Ref. to AT-66, DTC 38 TORQUE CONTROL SIGNAL, Diagnostic Procedure with Diagnostic Trouble Code (DTC).>
45	Intake manifold pressure signal (Non-turbo model)	Detects open or shorted input signal circuit.	<Ref. to AT-68, DTC 45 INTAKE MANIFOLD PRESSURE SIGNAL, Diagnostic Procedure with Diagnostic Trouble Code (DTC).>
71	Shift solenoid 1	Detects open or shorted output signal circuit.	<Ref. to AT-70, DTC 71 SHIFT SOLENOID 1, Diagnostic Procedure with Diagnostic Trouble Code (DTC).>
72	Shift solenoid 2	Detects open or shorted output signal circuit.	<Ref. to AT-74, DTC 72 SHIFT SOLENOID 2, Diagnostic Procedure with Diagnostic Trouble Code (DTC).>
73	Low clutch timing solenoid	Detects open or shorted output signal circuit.	<Ref. to AT-78, DTC 73 LOW CLUTCH TIMING SOLENOID, Diagnostic Procedure with Diagnostic Trouble Code (DTC).>
74	2-4 brake timing solenoid	Detects open or shorted output signal circuit.	<Ref. to AT-82, DTC 74 2-4 BRAKE TIMING SOLENOID, Diagnostic Procedure with Diagnostic Trouble Code (DTC).>
75	Line pressure duty solenoid	Detects open or shorted output signal circuit.	<Ref. to AT-86, DTC 75 LINE PRESSURE DUTY SOLENOID, Diagnostic Procedure with Diagnostic Trouble Code (DTC).>
76	2-4 brake duty solenoid	Detects open or shorted output signal circuit.	<Ref. to AT-90, DTC 76 2–4 BRAKE DUTY SOLENOID, Diagnostic Procedure with Diagnostic Trouble Code (DTC).>
77	Lock-up duty solenoid	Detects open or shorted output signal circuit.	<Ref. to AT-94, DTC 77 LOCK-UP DUTY SOLENOID, Diagnostic Procedure with Diagnostic Trouble Code (DTC).>
79	Transfer duty solenoid	Detects open or shorted output signal circuit.	<Ref. to AT-100, DTC 79 TRANSFER DUTY SOLENOID, Diagnostic Procedure with Diagnostic Trouble Code (DTC).>
93	Rear vehicle speed sensor	Detects open or shorted input signal circuit.	<Ref. to AT-104, DTC 93 REAR VEHICLE SPEED SENSOR, Diagnostic Procedure with Diagnostic Trouble Code (DTC).>

12. Diagnostic Procedure for AT OIL TEMP Warning Light

A: AT OIL TEMP WARNING LIGHT DOES NOT COME ON OR GO OFF

DIAGNOSIS:
The AT OIL TEMP warning light circuit is open or shorted.
TROUBLE SYMPTOM:
- When the ignition switch is turned to ON (engine OFF), AT OIL TEMP warning light does not illuminate.
- When the on-board diagnostics is performed, AT OIL TEMP warning light remains illuminated.

WIRING DIAGRAM:

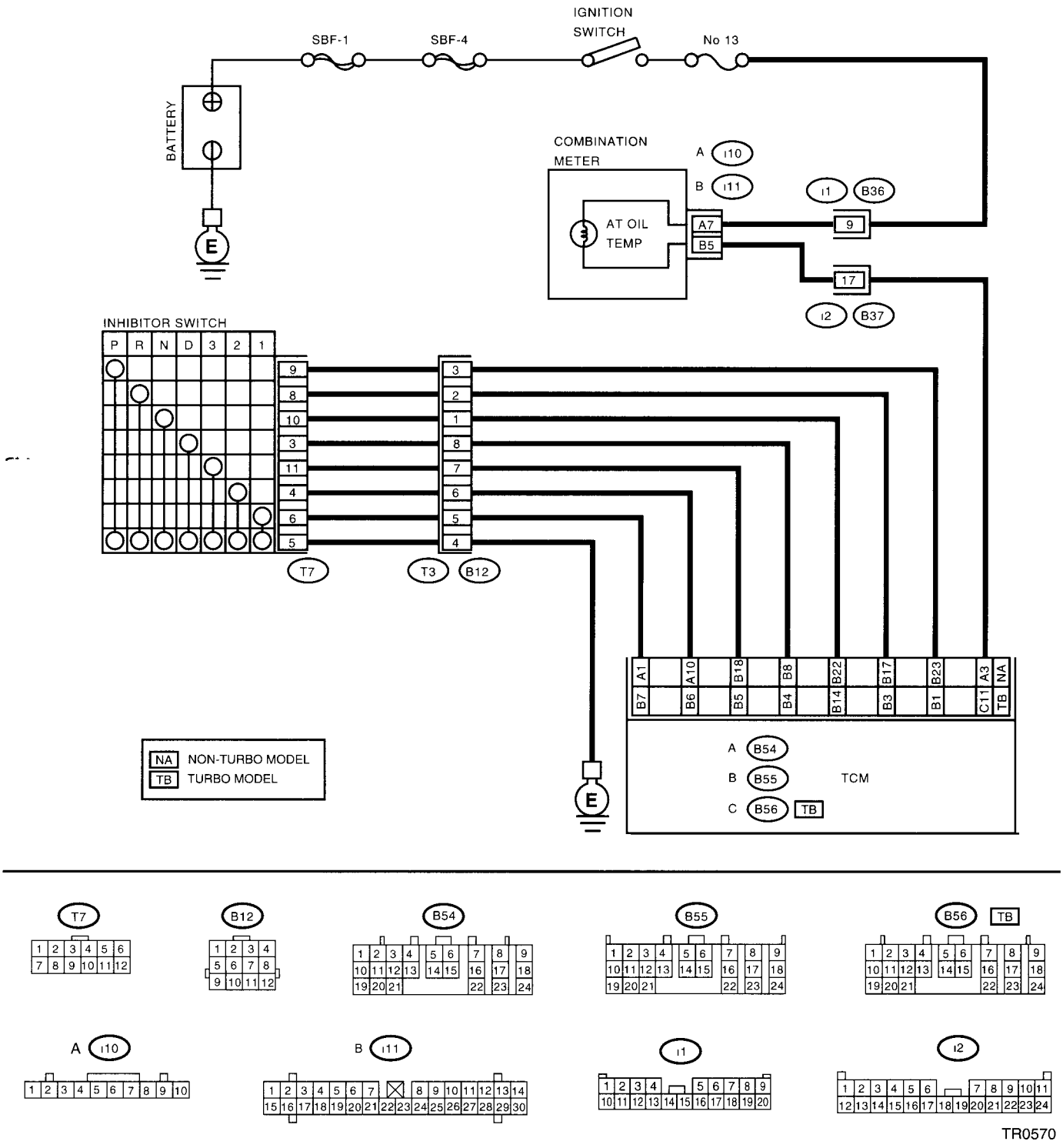

DIAGNOSTIC PROCEDURE FOR AT OIL TEMP WARNING LIGHT

	Step	Check	Yes	No
1	**CHECK AT OIL TEMP WARNING LIGHT.** Turn the ignition switch to ON (engine OFF).	Does the AT OIL TEMP warning light illuminate?	Go to step **3.**	Go to step **2.**
2	**CHECK AT OIL TEMP WARNING LIGHT.** 1)Turn the ignition switch to OFF. 2)Remove the combination meter. 3)Remove the ATF temp warning light bulb from combination meter.	Is the AT OIL TEMP warning light bulb OK?	Go to step **4.**	Replace the AT OIL TEMP warning light bulb.
3	**CHECK AT OIL TEMP WARNING LIGHT.** Perform "Read Diagnostic Trouble Code". <Ref. to AT-24, WITHOUT SUBARU SELECT MONITOR, OPERATION, Read Diagnostic Trouble Code (DTC).>	Does the AT OIL TEMP warning light blink?	A temporary poor contact of the connector or harness may be the cause. Repair the harness or connector in TCM, inhibitor switch and combination meter.	Go to step **10.**
4	**CHECK FUSE (No. 13).** Remove the fuse (No. 13).	Is the fuse (No. 13) blown out?	Replace the fuse (No. 13). If the replaced fuse (No. 13) is blown out easily, repair short circuit in harness between fuse (No. 13) and combination meter.	Go to step **5.**
5	**CHECK HARNESS CONNECTOR BETWEEN COMBINATION METER AND IGNITION SWITCH.** 1)Turn the ignition switch to ON (engine OFF). 2)Measure the voltage between combination meter connector and chassis ground. ***Connector & terminal*** ***(i10) No. 7 (+) — Chassis ground (–):***	Is the voltage more than 9 V?	Go to step **6.**	Repair open or short circuit in harness between combination meter and battery.
6	**CHECK COMBINATION METER.** Measure the voltage between combination meter connector and chassis ground. ***Connector & terminal*** ***(i11) No. 5 (+) — Chassis ground (–):***	Is the voltage less than 1 V?	Go to step **7.**	Repair the combination meter. <Ref. to IDI-11, Combination Meter Assembly.>
7	**CHECK OPEN CIRCUIT OF HARNESS.** 1)Turn the ignition switch to OFF. 2)Disconnect the connector from combination meter connector. 3)Measure the resistance of harness between combination meter. ***Connector & terminal*** ***Non-turbo model*** ***(B54) No. 3 — (i11) No. 5:*** ***Turbo model*** ***(B56) No. 11 — (i11) No. 5:***	Is the resistance less than 1 Ω?	Go to step **8.**	Repair open circuit in harness between TCM and combination meter, and poor contact in coupling connector.

	Step	Check	Yes	No
8	**CHECK INPUT SIGNAL FOR TCM.** 1)Connect the connector to TCM and combination meter. 2)Turn the ignition switch to ON (engine OFF). 3)Measure the voltage between TCM connector and chassis ground. ***Connector & terminal*** ***Non-turbo model*** ***(B54) No. 3 (+) — Chassis ground (–):*** ***Turbo model*** ***(B56) No. 11 (+) — Chassis ground (–):***	Is the voltage less than 1 V?	Even if the AT OIL TEMP warning lights up, the circuit has returned to a normal condition at this time. A temporary poor contact of the connector or harness may be the cause. Repair the harness or connector in TCM.	Replace the TCM. <Ref. to AT-45, Transmission Control Module (TCM).>
9	**CHECK SUBARU SELECT MONITOR.**	Do you have a SUBARU SELECT MONITOR?	Go to step **10.**	Go to step **11.**
10	**CHECK INHIBITOR SWITCH.** 1)Connect the Subaru Select Monitor to data link connector. 2)Turn the ignition switch to ON. 3)Subaru Select Monitor to ON. 4)Read the data of range switch using Subaru Select Monitor. •Range switch is indicated in ON ⇔ OFF.	When each range is selected, does the LED of Subaru Select Monitor light up?	Go to step **11.**	Check the inhibitor switch circuit. <Ref. to AT-115, CHECK INHIBITOR SWITCH., Diagnostic Procedure for No-Diagnostic Trouble Code (DTC).>
11	**CHECK SHORT CIRCUIT OF HARNESS.** 1)Disconnect the connector from TCM. 2)Remove the combination meter. 3)Disconnect the connector from combination meter. 4)Measure the resistance of harness connector between TCM and chassis ground. ***Connector & terminal/specified resistance*** ***Non-turbo model*** ***(B54) No. 3 (+) — Chassis ground (–):*** ***Turbo model*** ***(B56) No. 11 (+) — Chassis ground (–):***	Is the resistance less than 1 MΩ?	Replace the TCM. <Ref. to AT-45, Transmission Control Module (TCM).>	Repair short circuit in harness between combination meter connector and TCM connector.

B: CHECK POWER SUPPLY AND GROUND LINE

WIRING DIAGRAM:

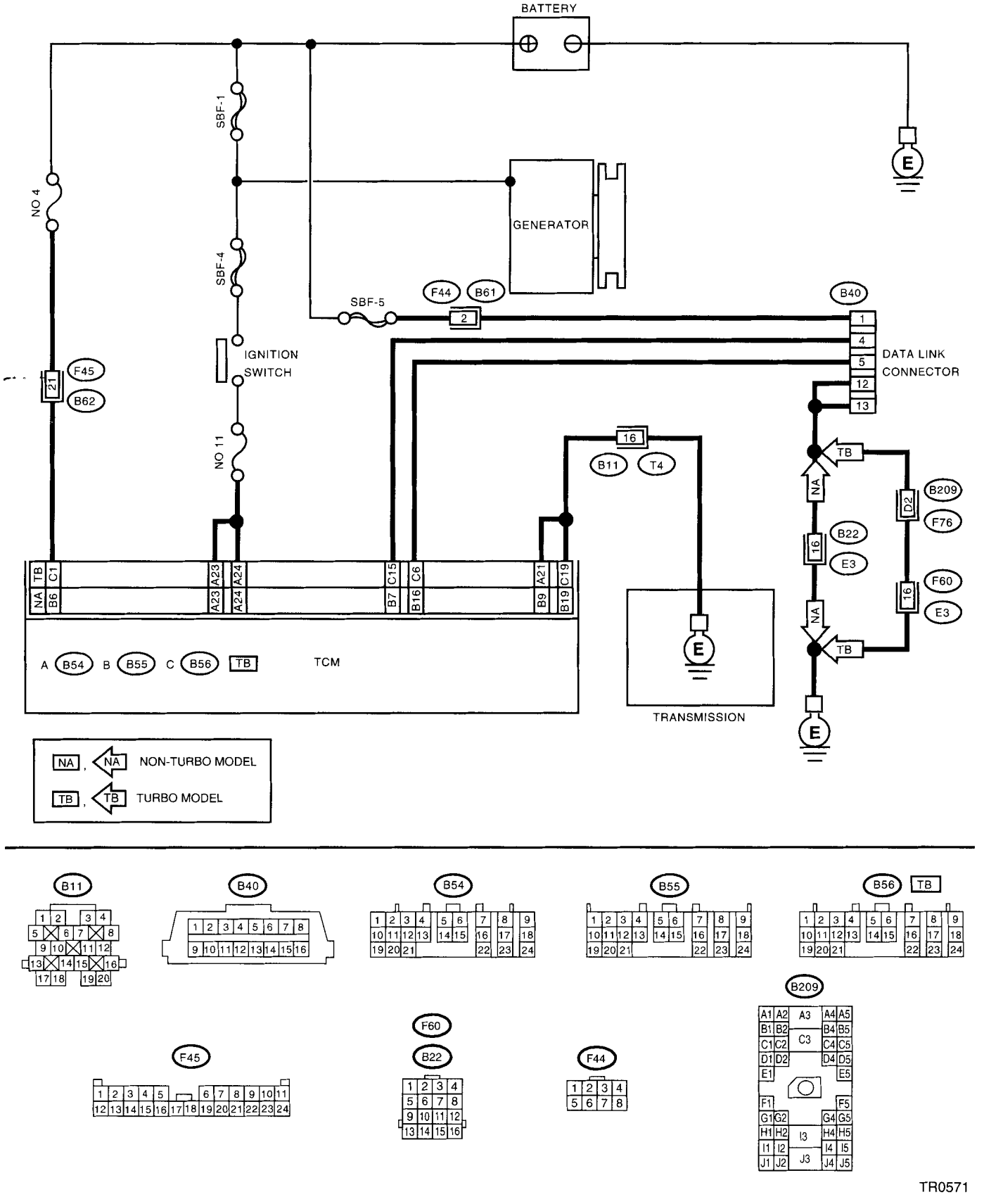

TR0571

DIAGNOSTIC PROCEDURE FOR AT OIL TEMP WARNING LIGHT

	Step	Check	Yes	No
1	**CHECK IGNITION SWITCH.**	Is the ignition switch ON?	Go to step **2.**	Turn the ignition switch ON.
2	**CHECK GENERATOR.** 1)Start the engine. 2)Idle the engine. 3)Measure the voltage between generator and chassis ground. ***Terminal*** ***Generator B terminal (+) — Chassis ground (–):***	Is the voltage between 10 and 15 V?	Go to step **3.**	Repair the generator. <Ref. to SC-13, Generator.>
3	**CHECK BATTERY TERMINAL.** Turn the ignition switch to OFF.	Is there poor contact at battery terminal?	Repair the battery terminal.	Go to step **4.**
4	**CHECK POWER SUPPLY OF TCM.** 1)Disconnect the connector from TCM. 2)Turn the ignition switch to ON. 3)Measure the voltage between TCM connector and chassis ground. ***Connector & terminal*** ***Non-turbo model*** ***(B54) No. 6 (+) — Chassis ground (–):*** ***Turbo model*** ***(B56) No. 1 (+) — Chassis ground (–):***	Is the voltage between 10 and 15 V?	Go to step **6.**	Go to step **5.**
5	**CHECK FUSE (NO. 4).** Remove fuse (No. 4).	Is the fuse (No. 4) blown out?	Replace the fuse (No. 4). If the replaced fuse (No. 4) has blown out easily, repair short circuit in harness between fuse (No. 4) and TCM.	Repair open circuit in harness between fuse (No. 4) and TCM, or fuse (No. 4) and battery, and poor contact in coupling connector.
6	**CHECK IGNITION POWER SUPPLY CIRCUIT.** 1)Turn the ignition switch to ON (engine OFF). 2)Measure the ignition power supply voltage between TCM connector and chassis ground. ***Connector & terminal*** ***(B54) No. 23 (+) — Chassis ground (–):*** ***(B54) No. 24 (+) — Chassis ground (–):***	Is the voltage more than 10 V?	Go to step **8.**	Go to step **7.**
7	**CHECK FUSE (NO. 11).** Remove the fuse (No. 11).	Is the fuse (No. 11) blown out?	Replace the fuse (No. 11). If the replaced fuse (No. 11) has blown out easily, repair short circuit in harness between fuse (No. 11) and TCM.	Repair open circuit in harness between fuse (No. 4) and TCM, or fuse (No. 4) and battery, and poor contact in coupling connector.
8	**CHECK HARNESS CONNECTOR BETWEEN TCM AND TRANSMISSION.** 1)Turn the ignition switch to OFF. 2)Disconnect the connector from TCM and transmission. 3)Measure the resistance of harness between TCM and transmission connector. ***Connector & terminal*** ***Non-turbo model*** ***(B55) No. 9 — (B11) No. 16*** ***(B55) No. 19 — (B11) No. 16*** ***Turbo model*** ***(B56) No. 19 — (B11) No. 16*** ***(B54) No. 21 — (B11) No. 16***	Is the resistance less than 1 Ω?	Go to step **9.**	Repair open circuit in harness between TCM, transmission harness connector, and poor contact in coupling connector.

	Step	Check	Yes	No
9	**CHECK HARNESS CONNECTOR BETWEEN TRANSMISSION AND TRANSMISSION GROUND.** Measure the resistance of harness between transmission and transmission ground. ***Connector & terminal*** ***(T4) No. 16 — Transmission ground:***	Is the resistance less than 1 Ω?	Go to step **10.**	Repair open circuit in harness between transmission and transmission ground.
10	**CHECK POOR CONTACT IN CONNECTORS.**	Is there poor contact in control module power supply, ground line and data link connector?	Repair the connector.	Replace the TCM. <Ref. to AT-45, Transmission Control Module (TCM).>

13.Diagnostic Procedure for Select Monitor Communication

A: COMMUNICATION FOR INITIALIZING IMPOSSIBLE

DIAGNOSIS:
- Faulty harness connector

TROUBLE SYMPTOM:
- Select the monitor communication failure

WIRING DIAGRAM:

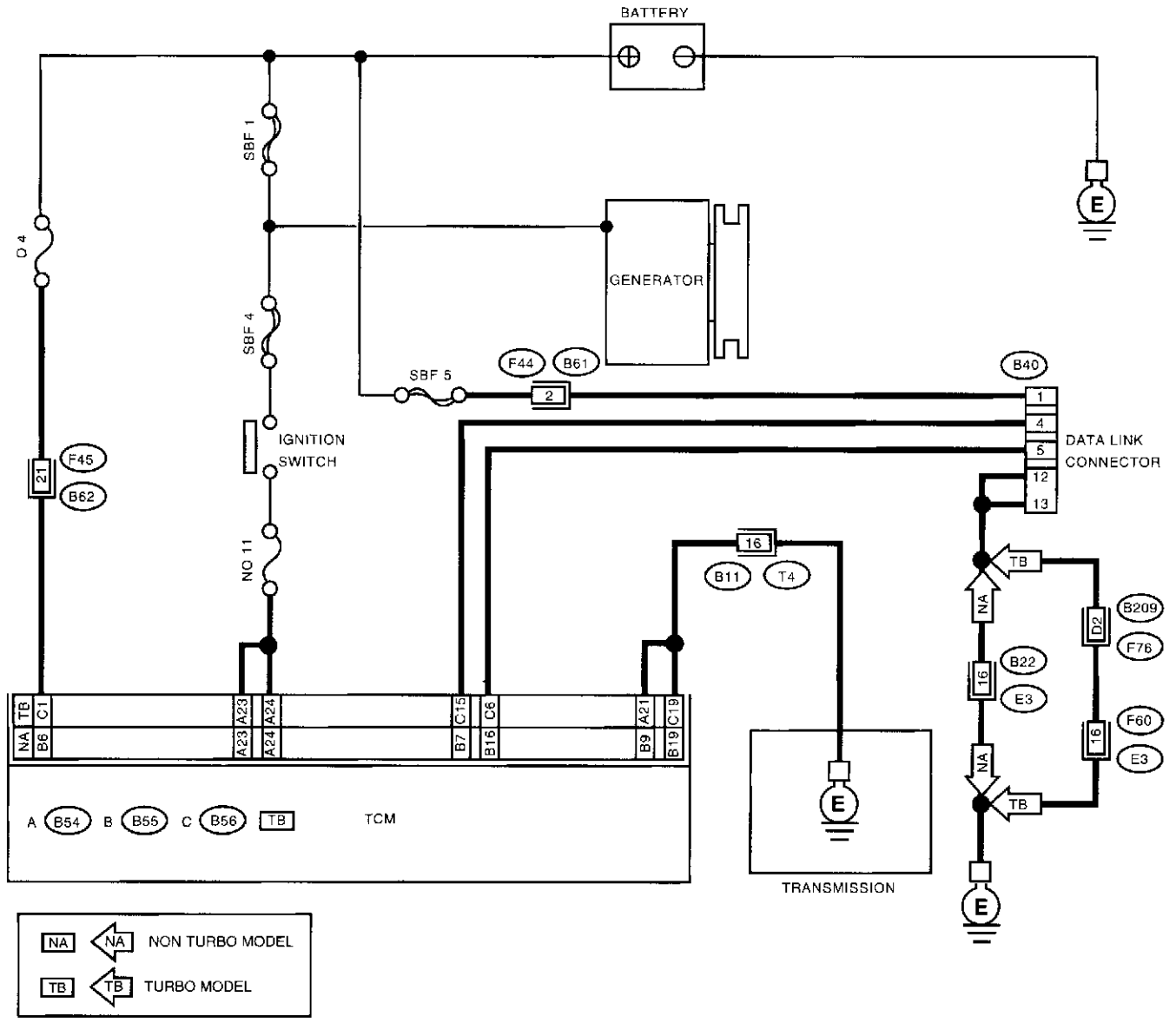

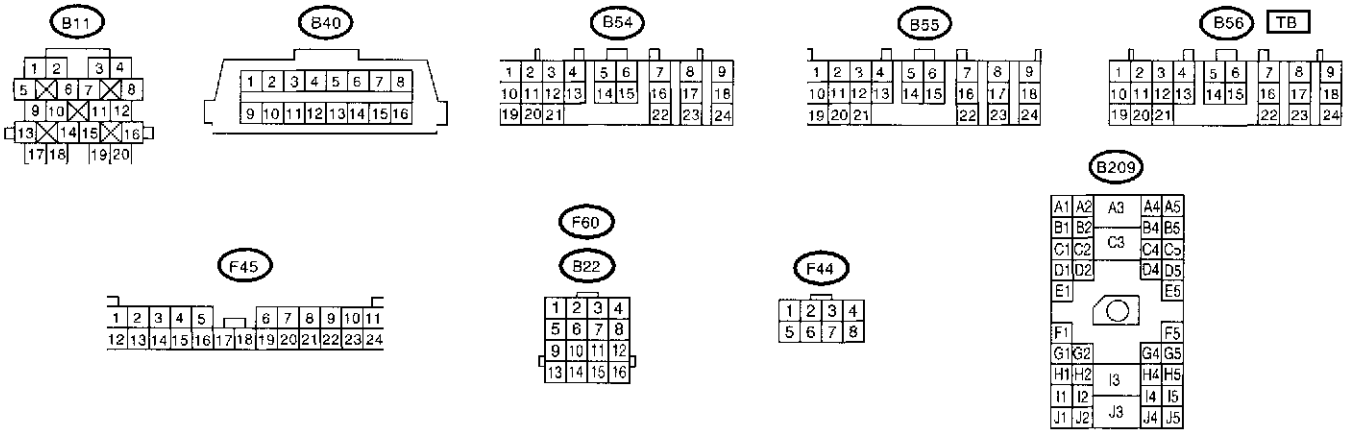

TR0571

	Step	Check	Yes	No
1	**CHECK SUBARU SELECT MONITOR POWER SUPPLY CIRCUIT.** Measure the voltage between data link connector and chassis ground. ***Connector & terminal*** ***(B40) No. 1 — Chassis ground:***	Is the voltage more than 10V?	Go to step **2.**	Repair harness and connector between battery and data link connector, and poor contact in coupling connector.
2	**CHECK SUBARU SELECT MONITOR GROUND CIRCUIT.** Measure the resistance of harness between data link connector and chassis ground. ***Connector & terminal*** ***(B40) No. 12 — Chassis ground:*** ***(B40) No. 13 — Chassis ground:***	Is the resistance less than 1Ω?	Go to step **3.**	Repair open circuit in harness between data link connector and ground terminal, and poor contact in coupling connector.
3	**CHECK COMMUNICATION OF SELECT MONITOR.** 1)Turn the ignition switch to ON. 2)Using the select monitor, check whether communication to other systems (such as engine, ABS etc.) can be executed normally.	Are the name and year of the system displayed on the select monitor?	Go to step **8.**	Go to step **4.**
4	**CHECK COMMUNICATION OF SELECT MONITOR.** 1)Turn the ignition switch to OFF. 2)Disconnect the TCM connector. 3)Check whether communication to other systems (such as ABS etc.) can be executed normally.	Are the name and year of the system displayed on the select monitor?	Go to step **10.**	Go to step **5.**
5	**CHECK COMMUNICATION OF SELECT MONITOR.** 1)Turn the ignition switch to OFF. 2)Connect the TCM connector. 3)Disconnect the ECM connector. 4)Check whether communication to other systems (such as ABS etc.) can be executed normally.	Are the name and year of the system displayed on the select monitor?	Inspect the ECM.	Go to step **6.**
6	**CHECK COMMUNICATION OF SELECT MONITOR.** 1)Turn the ignition switch to OFF. 2)Connect the ECM connector. 3)Disconnect the ABSCM&H/U connector. 4)Check whether communication to other systems (such as engine etc.) can be executed normally.	Are the name and year of the system displayed on the select monitor?	Inspect the ABSCM&H/U.	Go to step **7.**
7	**CHECK COMMUNICATION OF SELECT MONITOR.** 1)Turn the ignition switch to OFF. 2)Connect the ABSCM&H/U module connector. 3)Disconnect the cruise control module connector. 4)Check whether communication to other systems (such as engine etc.) can be executed normally. NOTE: If the vehicle is not equipped with cruise control, Go to step **8.**	Are the name and year of the system displayed on the select monitor?	Inspect the cruise control module.	Go to step **8.**

Step		Check	Yes	No
	(B40) No. 4 — Chassis ground:	Ω?	Go to step **9.**	Repair harness and connector between each control module and data link connector
9	**CHECK OUTPUT SIGNAL FOR TCM.**	Is the voltage more than 1 V?	Repair harness and connector between each control module and data link connector.	A temporary poor contact or harness may be the case. Repair harness or connector in the select monitor communication circuit.
10	**CHECK HARNESS/CONNECTOR BETWEEN TCM AND DATA LINK CONNECTOR.** Measure the resistance between TCM connector and data link connector. ***Connector & terminal*** ***Non-turbo model*** ***(B55) No. 7 — (B40) No. 5:*** ***(B55) No. 16 — (B40) No. 4:*** ***Turbo model*** ***(B56) No. 6 — (B40) No. 5:*** ***(B56) No. 15 — (B40) No. 4:***	Is the resistance less than 0.5 Ω?	Go to step **11.**	Repair harness and connector between TCM and data link connector
11	**CHECK INSTALLATION OF TCM CONNECTOR.** Turn the ignition switch to OFF	Is TCM connector inserted into TCM?	Go to step **12.**	Insert the TCM connector into TCM.
12	**CHECK POOR CONTACT IN CONNECTORS.**	Is there poor contact in control module and data link connector?	Repair the poor contact.	Replace the TCM <Ref. to AT-45, Transmission Control Module (TCM) >

14.Diagnostic Procedure with Diagnostic Trouble Code (DTC)

A: DTC 11 ENGINE SPEED SIGNAL

DIAGNOSIS:
Engine speed input signal circuit is open or shorted.
TROUBLE SYMPTOM:
- No lock-up (after engine warm-up).
- AT OIL TEMP warning light remains on when the vehicle speed is "0".

WIRING DIAGRAM:

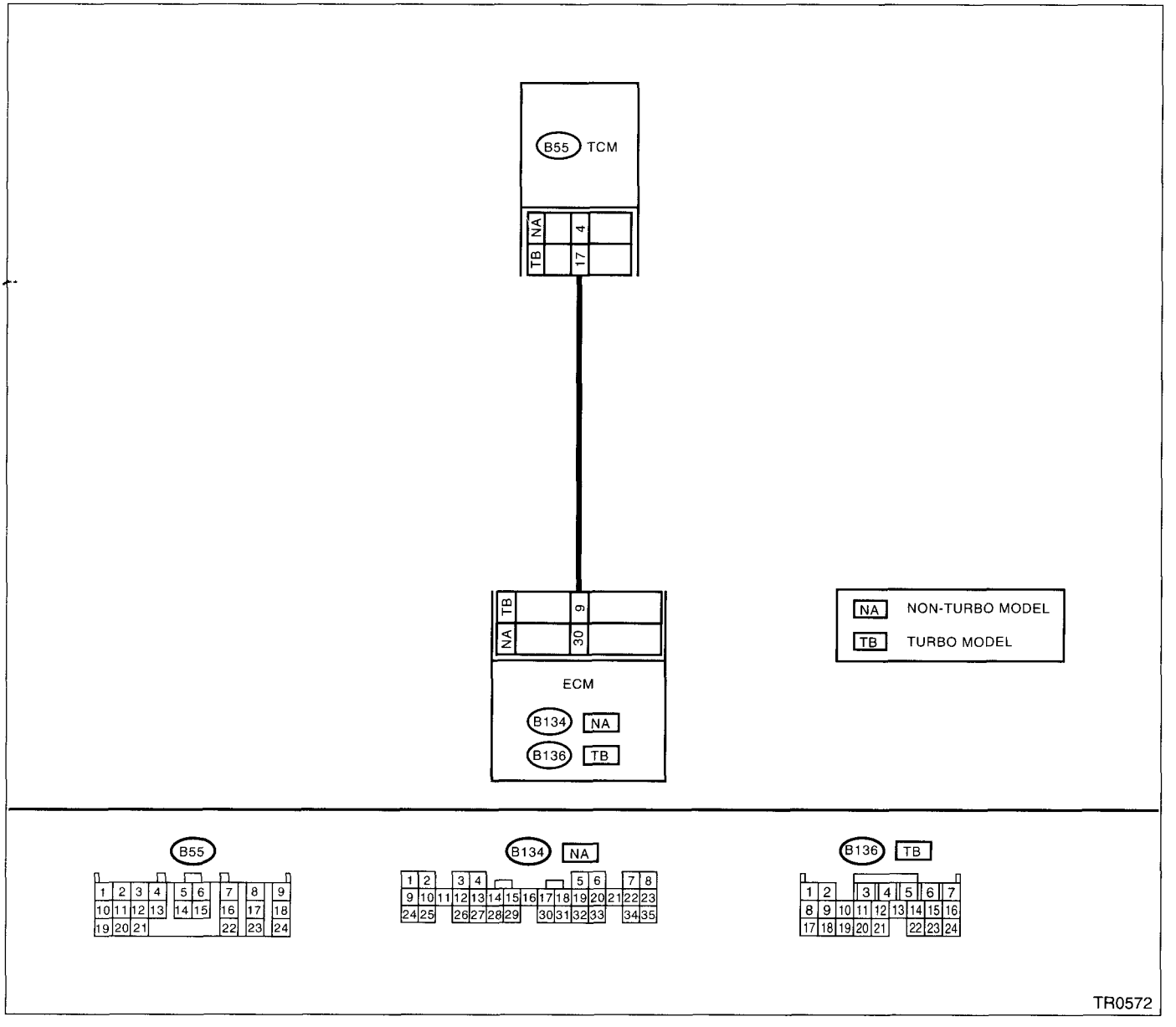

	Step	Check	Yes	No
1	**CHECK HARNESS CONNECTOR BETWEEN TCM AND ECM.** 1)Turn the ignition switch to OFF. 2)Disconnect the connectors from TCM and ECM. 3)Measure the resistance of harness between TCM and ECM connector. ***Connector & terminal*** ***Non-turbo model*** ***(B55) No. 4 — (B134) No. 30:*** ***Turbo model*** ***(B55) No. 17 — (B136) No. 9:***	Is the resistance less than 1 Ω?	Go to step **2.**	Repair open circuit in harness between TCM and ECM connector.
2	**CHECK HARNESS CONNECTOR BETWEEN TCM AND ECM.** Measure the resistance of harness between TCM connector and chassis ground. ***Connector & terminal*** ***Non-turbo model*** ***(B55) No. 4 — Chassis ground:*** ***Turbo model*** ***(B55) No. 17 — Chassis ground:***	Is the resistance more than 1 MΩ?	Go to step **3.**	Repair short circuit in harness between TCM and ECM connector.
3	**PREPARE SUBARU SELECT MONITOR.**	Do you have a Subaru Select Monitor?	Go to step **5.**	Go to step **4.**
4	**CHECK INPUT SIGNAL FOR TCM.** 1)Connect the connectors to TCM and ECM. 2)Turn the ignition switch to ON (engine OFF). 3)Measure the voltage between TCM connector and chassis ground. ***Connector & terminal*** ***Non-turbo model*** ***(B55) No. 4 (+) — Chassis ground (–):*** ***Turbo model*** ***(B55) No. 17 (+) — Chassis ground (–):***	Is the voltage 0 V?	Even if the AT OIL TEMP warning lights up, the circuit has returned to a normal condition at this time. A temporary poor contact of the connector or harness may be the cause. Repair harness or connector in the TCM and ECM.	Go to step **6.**
5	**CHECK INPUT SIGNAL FOR TCM USING SUBARU SELECT MONITOR.** 1)Connect the connectors to TCM and ECM. 2)Connect the Subaru Select Monitor to data link connector. 3)Start the engine, and turn the Subaru Select Monitor switch to ON. 4)Warm-up the engine until engine coolant temperature is above 80°C (176°F). 5)Engine idling. 6)Read the data of engine speed using the Subaru Select Monitor. •Display shows engine speed signal value sent from ECM.	Is the revolution value the same as the tachometer reading shown on the combination meter?	Even if the AT OIL TEMP warning lights up, the circuit has returned to a normal condition at this time. A temporary poor contact of the connector or harness may be the cause. Repair harness or connector in the TCM and ECM.	Go to step **6.**
6	**CHECK POOR CONTACT.**	Is there poor contact in engine speed signal circuit?	Repair poor contact.	Go to step **7.**
7	**CONFIRM DTC 11.**	Replace the ECM with a new one. Does the trouble code appear again, after the memory has been cleared?	Replace the TCM. <Ref. to AT-45, Transmission Control Module (TCM).>	Replace the ECM.

B: DTC 23 MASS AIR FROW SIGNAL

DIAGNOSIS:
Input signal circuit of TCM from ECM is open or shorted.
TROUBLE SYMPTOM:
Excessive shift shock.
WIRING DIAGRAM:

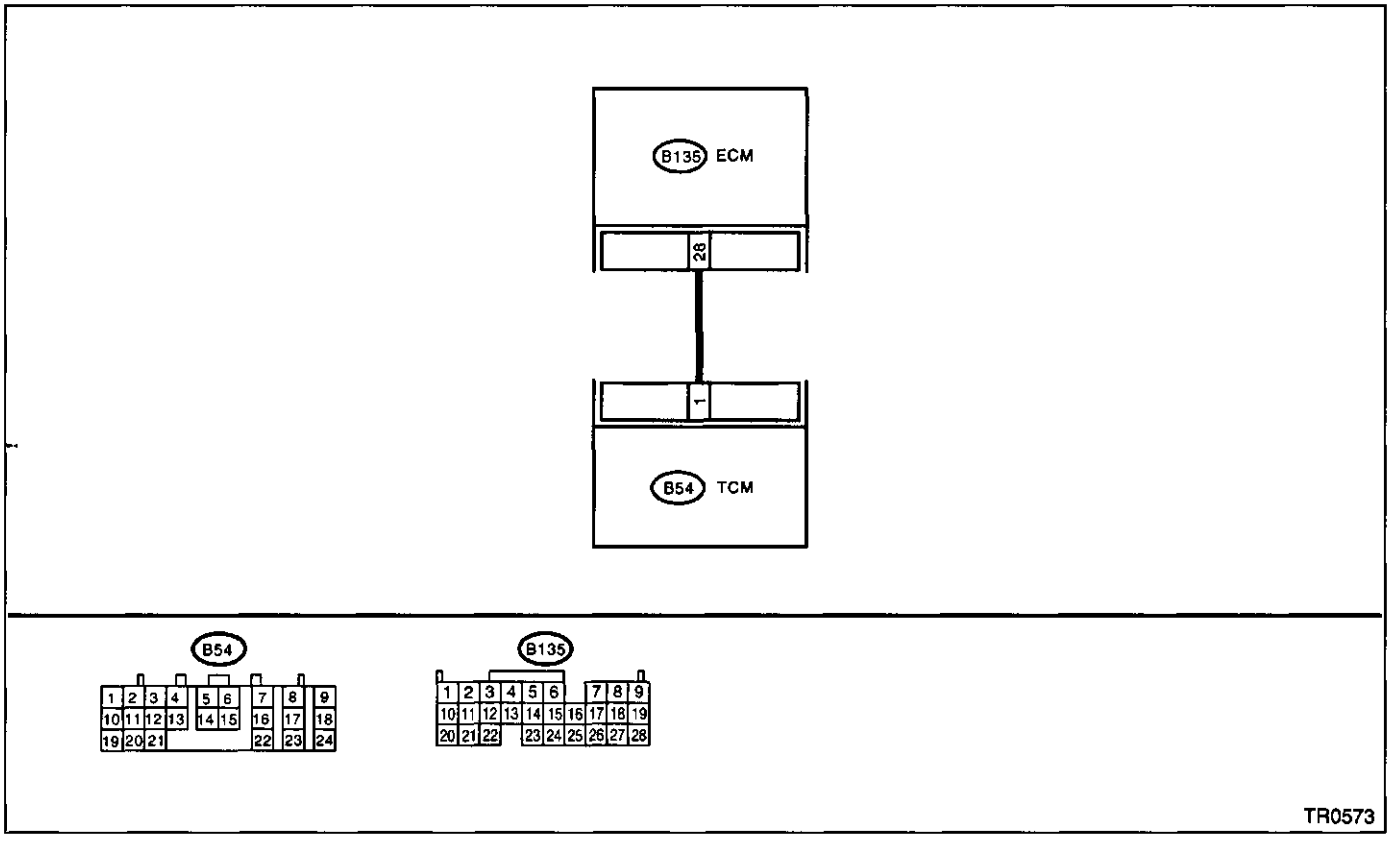

Step		Check	Yes	No
	GROUND CIRCUIT OF ECM <Ref. to AT-52, DTC 31 THROTTLE POSITION SENSOR, Diagnostic Procedure with Diagnostic Trouble Code (DTC) >		Repair ground terminal and/or ground circuit of ECM.	Go to step **2.**
2	**CHECK HARNESS CONNECTOR BETWEEN TCM AND ECM.** 1)Turn the ignition switch to OFF. 2)Disconnect the connectors from TCM and ECM. 3)Measure the resistance of harness between TCM and ECM connector ***Connector & terminal*** ***(B54) No. 1 — (B135) No. 28:***	s the resistance less than 1 Ω?	Go to step **3.**	Repair open circuit in harness between TCM and ECM connector.
3	**CHECK HARNESS CONNECTOR BETWEEN TCM AND ECM.** Measure the resistance of harness between TCM connector and chassis ground. ***Connector & terminal*** ***(B54) No. 1 — Chassis ground:***	s the resistance more than 1 MΩ?	Go to step **4.**	Repair short circuit in harness between TCM and ECM connector.
4	**PREPARE SUBARU SELECT MONITOR.**	Do you have a Subaru Select Monitor?	Go to step **6.**	Go to step **5.**

	Step	Check	Yes	No
5	**CHECK INPUT SIGNAL FOR TCM.** 1)Connect the connectors to TCM and ECM. 2)Start the engine, and warm-up the transmission until ATF temperature is above 80°C (176°F). NOTE: If ambient temperature is below 0°C (32°F), drive the vehicle until the ATF reaches its operating temperature. 3)Engine idling. 4)Measure the voltage between TCM connector and chassis ground. ***Connector & terminal*** ***(B54) No. 1 (+) — Chassis ground (–):***	Is the voltage between 0.4 and 1.8 V?	Even if the AT OIL TEMP warning lights up, the circuit has returned to a normal condition at this time. A temporary poor contact of the connector or harness may be the cause. Repair harness or connector in the TCM and ECM.	Go to step **7.**
6	**CHECK INPUT SIGNAL FOR TCM USING SUBARU SELECT MONITOR.** 1)Connect the connectors to TCM and ECM. 2)Connect the Subaru Select Monitor to data link connector. 3)Start the engine, and turn the Subaru Select monitor switch to ON. 4)Warm-up the engine until the engine coolant temperature is above 80°C (176°F). 5)Engine idling. 6)Read the data of intake manifold pressure signal using Subaru Select Monitor. •Display shows the intake manifold pressure signal value sent from ECM.	Is the value between 0.4 and 1.8 V?	Even if the AT OIL TEMP warning lights up, the circuit has returned to a normal condition at this time. A temporary poor contact of the connector or harness may be the cause. Repair harness or connector in the TCM and ECM.	Go to step **7.**
7	**CHECK POOR CONTACT.**	Is there poor contact in intake manifold pressure signal circuit?	Repair the poor contact.	Replace the TCM. <Ref. to AT-45, Transmission Control Module (TCM).>

C: DTC 27 ATF TEMPERATURE SENSOR

DIAGNOSIS:
Input signal circuit of TCM to ATF temperature sensor is open or shorted.
TROUBLE SYMPTOM:
Excessive shift shock.
WIRING DIAGRAM:

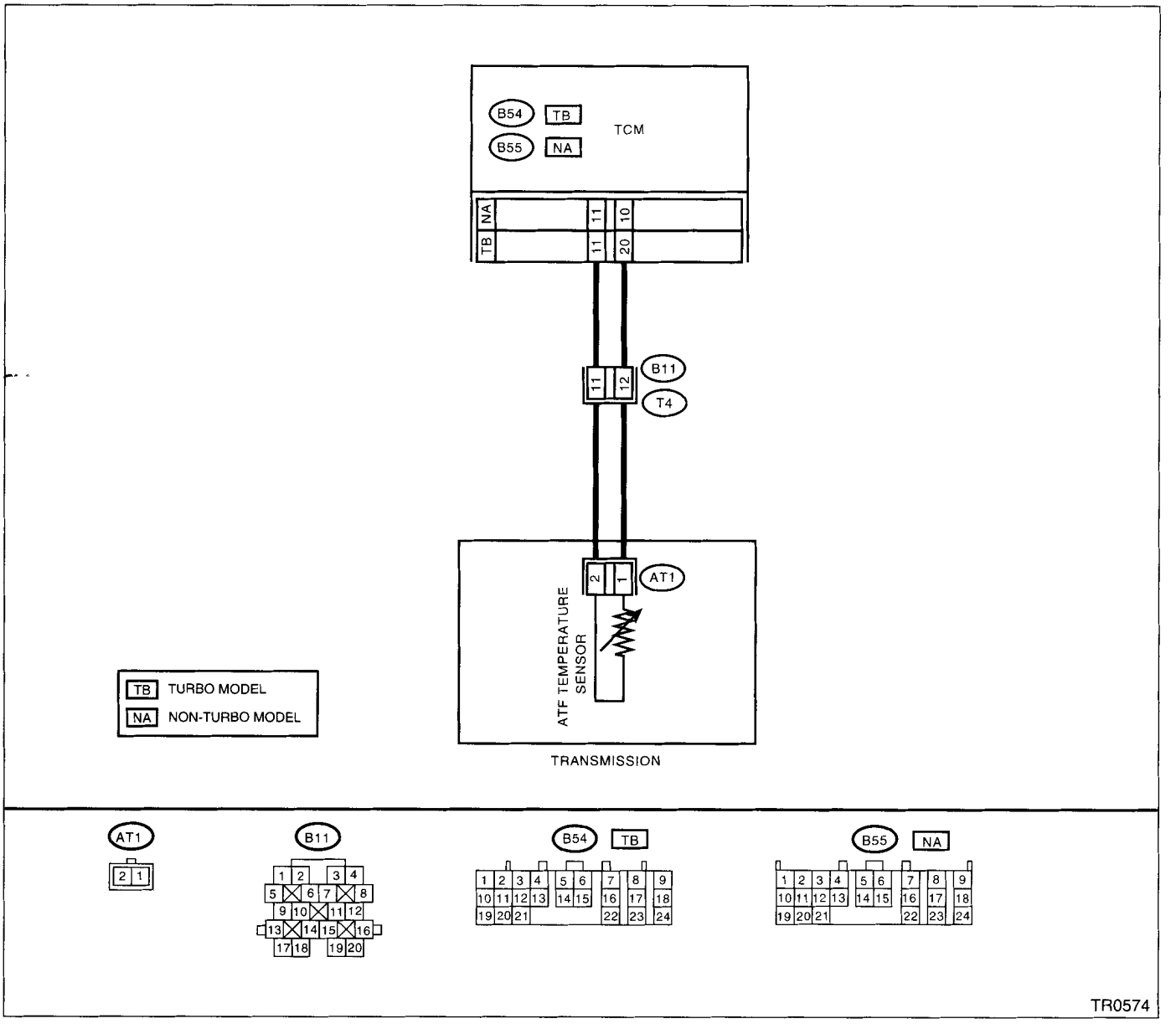

	Step	Check	Yes	No
1	**CHECK HARNESS CONNECTOR BETWEEN TCM AND ATF TEMPERATURE SENSOR.** 1)Turn the ignition switch to OFF. 2)Disconnect the connector from transmission and TCM. 3)Measure the resistance of harness between TCM and transmission connector. ***Connector & terminal*** ***Non-turbo model*** ***(B55) No. 10 — (B11) No. 12:*** ***Turbo mode*** ***(B54) No. 20 — (B11) No. 12:***	Is the resistance less than 1 Ω?	Go to step **2.**	Repair open circuit in harness between TCM and transmission connector.
2	**CHECK HARNESS CONNECTOR BETWEEN TCM AND ATF TEMPERATURE SENSOR.** Measure the resistance of harness between TCM and transmission connector. ***Connector & terminal*** ***Non-turbo model*** ***(B55) No. 11 — (B11) No. 11:*** ***Turbo mode*** ***(B54) No. 11 — (B11) No. 11:***	Is the resistance less than 1 Ω?	Go to step **3.**	Repair open circuit in harness between TCM and transmission connector.
3	**CHECK HARNESS CONNECTOR BETWEEN TCM AND ATF TEMPERATURE SENSOR.** Measure the resistance of harness between TCM connector and chassis ground. ***Connector & terminal*** ***Non-turbo model*** ***(B55) No. 10 — Chassis ground:*** ***Turbo mode*** ***(B54) No. 20 — Chassis ground:***	Is the resistance more than 1 MΩ?	Go to step **4.**	Repair short circuit in harness between TCM and transmission connector.
4	**CHECK HARNESS CONNECTOR BETWEEN TCM AND ATF TEMPERATURE SENSOR.** Measure the resistance of harness between TCM connector and chassis ground. ***Connector & terminal*** ***Non-turbo model*** ***(B55) No. 11 — Chassis ground:*** ***Turbo mode*** ***(B54) No. 11 — Chassis ground:***	Is the resistance more than 1 MΩ?	Go to step **5.**	Repair short circuit in harness between TCM and transmission connector.
5	**CHECK ATF TEMPERATURE SENSOR.** 1)Turn the ignition switch to OFF. 2)Connect the connectors to transmission and TCM. 3)Turn the ignition switch to ON and start engine. 4)Warm-up the transmission until the ATF temperature reaches to 80°C (176°F). NOTE: If ambient temperature is below 0°C (32°F), drive the vehicle until the ATF reaches its operating temperature. 5)Disconnect the connector from transmission. 6)Measure the resistance between transmission connector terminals. ***Connector & terminal*** ***(T4) No. 11 — No. 12:***	Is the resistance between 275 and 375 Ω?	Go to step **6.**	Go to step **11.**

	Step	Check	Yes	No
6	**CHECK ATF TEMPERATURE SENSOR.** 1)Turn the ignition switch to ON (engine OFF). 2)Measure the resistance between transmission connector terminals. ***Connector & terminal*** ***(T4) No. 11 — No. 12:***	Does the resistance value increase while the ATF temperature decreases?	Go to step **7.**	Go to step **11.**
7	**PREPARE SUBARU SELECT MONITOR.**	Do you have a Subaru Select Monitor?	Go to step **9.**	Go to step **8.**
8	**CHECK INPUT SIGNAL FOR TCM.** 1)Connect the connector to transmission. 2)Warm-up the transmission until the ATF temperature is about 80°C (176°F). NOTE: If ambient temperature is below 0°C (32°F), drive the vehicle until the ATF reaches its operating temperature. 3)Measure the voltage between TCM connector terminal. ***Connector & terminal*** ***Non-turbo model*** ***(B55) No. 11 (+) — No. 10 (–):*** ***Turbo model*** ***(B54) No. 11 (+) — No. 20 (–):***	Is the voltage between 0.4 and 0.9 V?	Even if the AT OIL TEMP warning lights up, the circuit has returned to a normal condition at this time. Temporary poor contact of the connector or harness may be the case. Repair harness or contact in the ATF temperature sensor and transmission connector.	Go to step **10.**
9	**CHECK INPUT SIGNAL FOR TCM USING SUBARU SELECT MONITOR.** 1)Connect the connector to transmission. 2)Turn the ignition switch to ON (engine OFF).	Does the ATF temperature gradually decrease?	Even if the AT OIL TEMP warning lights up, the circuit has returned to a normal condition at this time. Temporary poor contact of the connector or harness may be the case. Repair harness or contact in the ATF temperature sensor and transmission connector.	Go to step **10.**
10	**CHECK POOR CONTACT.**	Is there poor contact in ATF temperature sensor circuit?	Repair poor contact.	Replace the TCM. <Ref. to AT-45, Transmission Control Module (TCM).>

	Step	Check	Yes	No
11	**CHECK HARNESS CONNECTOR BETWEEN TRANSMISSION AND ATF TEMPERATURE SENSOR.** 1)Turn the ignition switch to OFF. 2)Disconnect the connector from transmission. 3)Remove the transmission connector from bracket. 4)Lift-up the vehicle and place safety stand. **CAUTION:** **On AWD models, raise all wheels off ground.** 5)Drain the automatic transmission fluid. **CAUTION:** ***Do not drain the automatic transmission fluid until it cools down.*** 6)Remove the oil pan, and disconnect the connector from ATF temperature sensor connector. 7)Measure the resistance of harness between ATF temperature sensor and transmission connector. ***Connector & terminal*** ***(T4) No. 11 — (AT1) No. 2:***	Is the resistance less than 1 Ω?	Go to step **12.**	Repair open circuit in harness between ATF temperature sensor and transmission connector.
12	**CHECK HARNESS CONNECTOR BETWEEN TRANSMISSION AND ATF TEMPERATURE SENSOR.** Measure the resistance of harness between ATF temperature sensor and transmission connector. ***Connector & terminal*** ***(T4) No. 12 — (AT1) No. 1:***	Is the resistance less than 1 Ω?	Go to step **13.**	Repair open circuit in harness between ATF temperature sensor and transmission connector.
13	**CHECK HARNESS CONNECTOR BETWEEN TRANSMISSION AND ATF TEMPERATURE SENSOR.** Measure the resistance of harness between transmission connector and transmission ground. ***Connector & terminal*** ***(T4) No. 11 — Transmission ground:***	Is the resistance more than 1 MΩ?	Go to step **14.**	Repair short circuit in harness between ATF temperature sensor and transmission connector.
14	**CHECK HARNESS CONNECTOR BETWEEN TRANSMISSION AND ATF TEMPERATURE SENSOR.** Measure the resistance of harness between transmission connector and transmission ground. ***Connector & terminal*** ***(T4) No. 12 — Transmission ground:***	Is the resistance more than 1 MΩ?	Replace the ATF temperature sensor. <Ref. to AT-39, Shift Solenoids, Duty Solenoids and ATF Temperature Sensor.>	Repair short circuit in harness between ATF temperature sensor and transmission connector.

D: DTC 31 THROTTLE POSITION SENSOR

DIAGNOSIS:
Input signal circuit of throttle position sensor is open or shorted.
TROUBLE SYMPTOM:
Shift point too high or too low; excessive shift shock; excessive tight corner “braking”.
WIRING DIAGRAM:
NON-TURBO MODEL

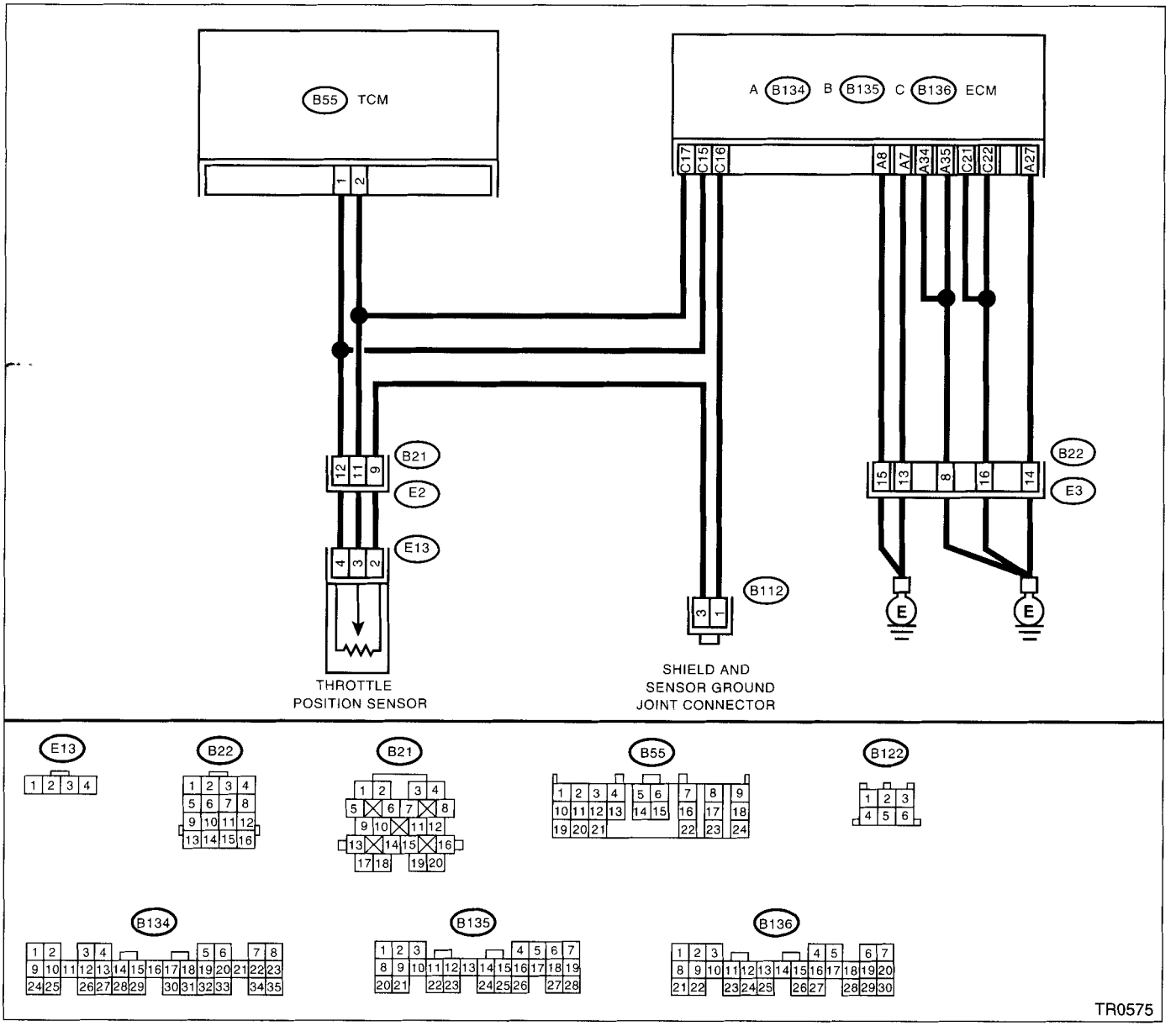

TURBO MODEL

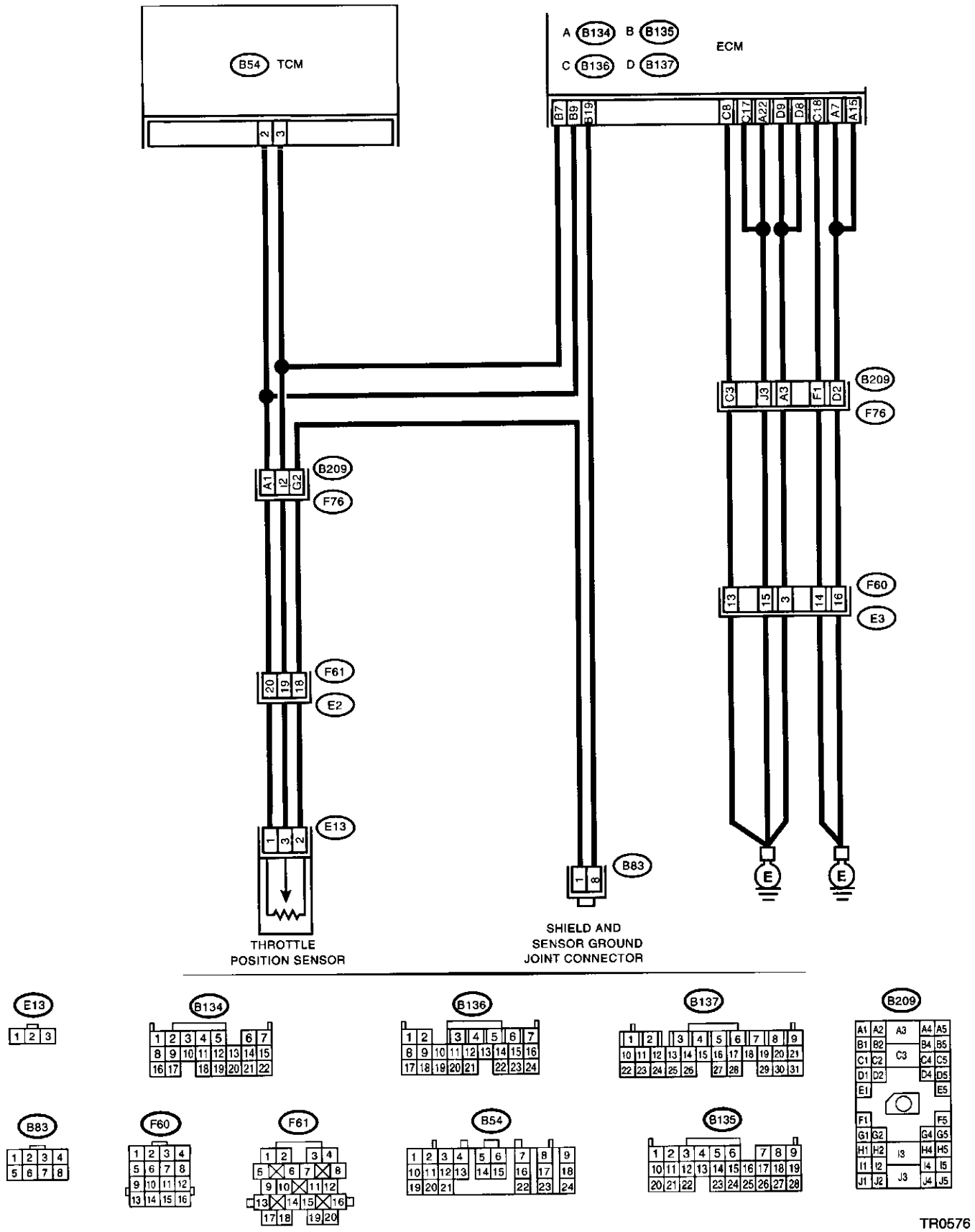
B54 TCM
A B134 B B135
C B136 D B137
ECM
B209
F76
F60
E3
F61
E2
E13
B83
THROTTLE POSITION SENSOR
SHIELD AND SENSOR GROUND JOINT CONNECTOR
TR0576

	Step	Check	Yes	No
1	**CHECK ENGINE GROUND TERMINALS.**	Have engine ground terminals been tightened?	Go to step **2.**	Tighten the engine ground terminals.
2	**CHECK GROUND CIRCUIT OF ECM.** 1)Turn the ignition switch to OFF. 2)Disconnect the connector from ECM. 3)Measure the resistance of harness between ECM and engine ground. ***Connector & terminal*** ***Non-turbo model*** ***(B134) No. 27 — Engine ground:*** ***(B134) No. 8 — Engine ground:*** ***(B134) No. 7 — Engine ground:*** ***(B136) No. 21 — Engine ground:*** ***(B136) No. 22 — Engine ground:*** ***(B134) No. 35 — Engine ground:*** ***(B134) No. 34 — Engine ground:*** ***Turbo model*** ***(B134) No. 7 — Engine ground:*** ***(B134) No. 15 — Engine ground:*** ***(B134) No. 22 — Engine ground:*** ***(B136) No. 8 — Engine ground:*** ***(B136) No. 17 — Engine ground:*** ***(B136) No. 18 — Engine ground:*** ***(B137) No. 8 — Engine ground:*** ***(B137) No. 9 — Engine ground:***	Is the resistance less than 5 Ω?	Go to step **3.**	Repair open circuit in harness between ECM connector and engine grounding terminal.
3	**CHECK THROTTLE POSITION SENSOR.** 1)Disconnect the connector from throttle position sensor. 2)Measure the resistance between throttle position sensor connector receptacle's terminals. ***Terminals*** ***Non-turbo model*** ***No. 4 — No. 2:*** ***Turbo model*** ***No. 1 — No. 2:***	Is the resistance between 3.0 and 4.2 kΩ?	Go to step **4.**	Replace the throttle position sensor.
4	**CHECK THROTTLE POSITION SENSOR.** Measure the resistance between throttle position sensor connector receptacle's terminals. ***Terminals*** ***No. 2 — No. 3:***	Is the resistance between 0.35 and 0.5 kΩ?	Go to step **5.**	Replace the throttle position sensor.
5	**CHECK HARNESS CONNECTOR BETWEEN TCM AND THROTTLE POSITION SENSOR.** 1)Disconnect the connector from TCM. 2)Measure the resistance of harness between TCM and throttle position sensor connector. ***Connector & terminal*** ***Non-turbo model*** ***(B55) No. 2 — (E13) No. 3:*** ***Turbo model*** ***(B54) No. 3 — (E13) No. 3:***	Is the resistance less than 1 Ω?	Go to step **6.**	Repair open circuit in harness between TCM and throttle position sensor connector, and poor contact in coupling connector.
6	**CHECK HARNESS CONNECTOR BETWEEN TCM AND THROTTLE POSITION SENSOR.** Measure the resistance of harness between TCM and throttle position sensor connector. ***Connector & terminal*** ***Non-turbo model*** ***(B55) No. 1 — (E13) No. 4:*** ***Turbo model*** ***(B54) No. 2 — (E13) No. 4:***	Is the resistance less than 1 Ω?	Go to step **7.**	Repair open circuit in harness between TCM and throttle position sensor connector, and poor contact in coupling connector.

	Step	Check	Yes	No
7	**CHECK HARNESS CONNECTOR BETWEEN TCM AND THROTTLE POSITION SENSOR.** Measure the resistance of harness between TCM connector and chassis ground. ***Connector & terminal*** ***Non-turbo model*** ***(B55) No. 2 — Chassis ground:*** ***Turbo model*** ***(B54) No. 3 — Chassis ground:***	Is the resistance more than 1 MΩ?	Go to step **8.**	Repair short circuit in harness between TCM and throttle position sensor connector.
8	**CHECK HARNESS CONNECTOR BETWEEN TCM AND THROTTLE POSITION SENSOR.** Measure the resistance of harness between TCM connector and chassis ground. ***Connector & terminal*** ***Non-turbo model*** ***(B55) No. 1 — Chassis ground:*** ***Turbo model*** ***(B54) No. 2 — Chassis ground:***	Is the resistance more than 1 MΩ?	Go to step **9.**	Repair short circuit in harness between TCM and throttle position sensor connector.
9	**CHECK HARNESS CONNECTOR BETWEEN TCM AND ECM.** Measure the resistance of harness between TCM and ECM connector. ***Connector & terminal*** ***Non-turbo model*** ***(B55) No. 2 — (B136) No. 17:*** ***Turbo model*** ***(B54) No. 3 — (B135) No. 7:***	Is the resistance less than 1 Ω?	Go to step **10.**	Repair open circuit in harness between TCM and ECM connector.
10	**CHECK HARNESS CONNECTOR BETWEEN TCM AND ECM.** Measure the resistance of harness between TCM and ECM connector. ***Connector & terminal*** ***Non-turbo model*** ***(B55) No. 1 — (B136) No. 15:*** ***Turbo model*** ***(B54) No. 2 — (B135) No. 9:***	Is the resistance less than 1 Ω?	Go to step **11.**	Repair open circuit in harness between TCM and ECM connector.
11	**PREPARE SUBARU SELECT MONITOR.**	Do you have a Subaru Select Monitor?	Go to step **14.**	Go to step **12.**
12	**CHECK INPUT SIGNAL FOR TCM.** 1)Connect the connectors to TCM, throttle position sensor and ECM. 2)Turn the ignition switch to ON (engine OFF). 3)Close the throttle completely. 4)Measure the voltage between TCM connector and chassis ground. ***Connector & terminal*** ***Non-turbo model*** ***(B55) No. 2 (+) — Chassis ground (–):*** ***Turbo model*** ***(B54) No. 3 (+) — Chassis ground (–):***	Is the voltage between approx. 0.5 V in throttle fully closed?	Go to step **13.**	Go to step **18.**
13	**CHECK INPUT SIGNAL FOR TCM.** 1)Open the throttle completely. 2)Measure the voltage between TCM connector and chassis ground. ***Connector & terminal*** ***Non-turbo model*** ***(B55) No. 2 (+) — Chassis ground (–):*** ***Turbo model*** ***(B54) No. 3 (+) — Chassis ground (–):***	Is the voltage between approx. 4.3 V with throttle fully open?	Go to step **16.**	Go to step **18.**

	Step	Check	Yes	No
14	**CHECK INPUT SIGNAL FOR TCM USING SUBARU SELECT MONITOR.** 1)Connect the connectors to TCM, throttle position sensor and ECM. 2)Connect the Subaru Select Monitor to data link connector. 3)Turn the ignition switch to ON (engine OFF). 4)Turn the Subaru Select Monitor switch to ON. 5)Throttle fully closed. 6)Read the data of throttle position sensor using Subaru Select Monitor. •Throttle position sensor input signal is indicated.	Is the value voltage between approx. 0.5 V?	Go to step **15.**	Go to step **18.**
15	**CHECK INPUT SIGNAL FOR TCM USING SUBARU SELECT MONITOR.** Throttle fully open. NOTE: Must be changed correspondingly with accelerator pedal operation (from "released" to "depressed" position).	Is the value voltage between approx. 4.3 V?	Go to step **17.**	Go to step **18.**
16	**CHECK INPUT SIGNAL FOR TCM (THROTTLE POSITION SENSOR POWER SUPPLY).** Measure the voltage between TCM connector and chassis ground. ***Connector & terminal*** ***Non-turbo model*** ***(B55) No. 1 (+) — Chassis ground (–):*** ***Turbo model*** ***(B54) No. 2 (+) — Chassis ground (–):***	Is the voltage between 4.8 and 5.3 V?	Even if the AT OIL TEMP warning lights up, the circuit has returned to a normal condition at this time. A temporary poor contact of the connector or harness may be the cause. Repair harness or connector in throttle position sensor circuit.	Go to step **18.**
17	**CHECK INPUT SIGNAL FOR TCM USING SUBARU SELECT MONITOR (THROTTLE POSITION SENSOR POWER SUPPLY).** Read the data of throttle position sensor power supply using Subaru Select Monitor. •Throttle position sensor power supply voltage is indicated.	Is the value voltage between 4.8 and 5.3 V?	Even if the AT OIL TEMP warning lights up, the circuit has returned to a normal condition at this time. A temporary poor contact of the connector or harness may be the cause. Repair harness or connector in throttle position sensor circuit.	Go to step **18.**
18	**CHECK POOR CONTACT.**	Is there poor contact in throttle position sensor circuit?	Repair the poor contact.	Replace the TCM. <Ref. to AT-45, Transmission Control Module (TCM).>

E: DTC 33 FRONT VEHICLE SPEED SENSOR

DIAGNOSIS:
- The vehicle speed signal is abnormal.
- The circuit in combination meter is faulty.
- The harness connector between TCM and vehicle speed sensor is in short or open.

TROUBLE SYMPTOM:
- Erroneous idling.
- Engine stalls.
- Poor driving performance.

WIRING DIAGRAM:

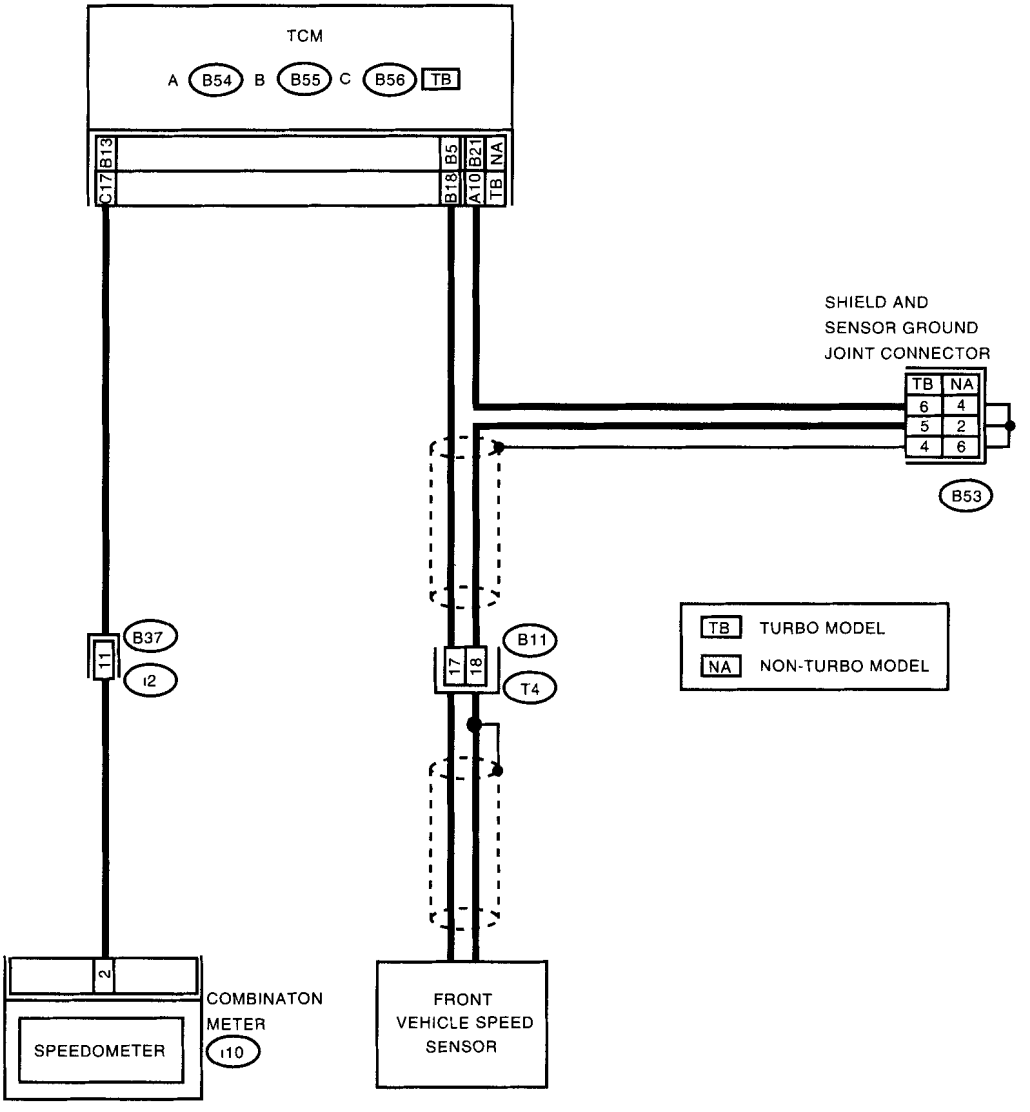

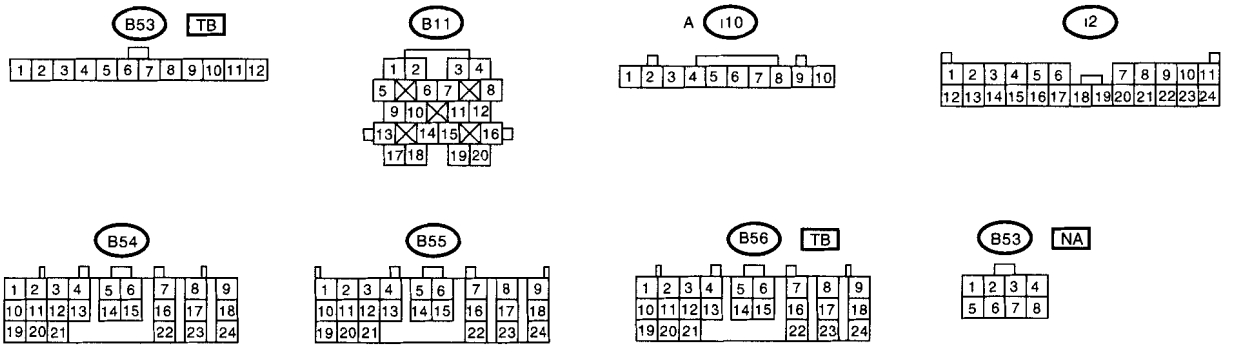

TR0577

	Step	Check	Yes	No
1	**CHECK HARNESS CONNECTOR BETWEEN TCM AND TRANSMISSION.** 1)Turn the ignition switch to OFF. 2)Disconnect the connector from TCM and transmission. 3)Measure the resistance of harness between TCM and transmission connector. ***Connector & terminal*** ***Non-turbo model*** ***(B55) No. 5 — (B11) No. 17:*** ***Turbo model*** ***(B55) No. 18 — (B11) No. 17:***	Is the resistance less than 1 Ω?	Go to step **2.**	Repair open circuit in harness between TCM and transmission connector.
2	**CHECK HARNESS CONNECTOR BETWEEN TCM AND TRANSMISSION.** Measure the resistance of harness between TCM and transmission connector. ***Connector & terminal*** ***Non-turbo model*** ***(B55) No. 21 — (B11) No. 18:*** ***Turbo model*** ***(B54) No. 10 — (B11) No. 18:***	Is the resistance less than 1 Ω?	Go to step **3.**	Repair open circuit in harness between TCM and transmission connector, and poor contact in coupling connector.
3	**CHECK HARNESS CONNECTOR BETWEEN TCM AND TRANSMISSION.** Measure the resistance of harness between TCM and transmission connector. ***Connector & terminal*** ***Non-turbo model*** ***(B55) No. 21 — Chassis ground:*** ***Turbo model*** ***(B54) No. 10 — Chassis ground:***	Is the resistance more than 1 MΩ?	Go to step **4.**	Repair short circuit in harness between TCM and transmission connector.
4	**CHECK HARNESS CONNECTOR BETWEEN TCM AND TRANSMISSION.** Measure the resistance of harness between TCM and transmission connector. ***Connector & terminal*** ***Non-turbo model*** ***(B55) No. 5 — Chassis ground:*** ***Turbo model*** ***(B55) No. 18 — Chassis ground:***	Is the resistance more than 1 MΩ?	Go to step **5.**	Repair short circuit in harness between TCM and transmission connector, and poor contact in coupling connector.
5	**CHECK FRONT VEHICLE SPEED SENSOR.** Measure the resistance between transmission connector receptacle's terminals. ***Connector & terminal*** ***(T4) No. 17 — No. 18:***	Is the resistance between 450 and 650 Ω?	Go to step **6.**	Replace the front vehicle speed sensor. <Ref. to AT-32, Front Vehicle Speed Sensor.>
6	**PREPARE OSCILLOSCOPE.**	Do you have an oscilloscope?	Go to step **9.**	Go to step **7.**
7	**PREPARE SUBARU SELECT MONITOR.**	Do you have a Subaru Select Monitor?	Go to step **10.**	Go to step **8.**

	Step	Check	Yes	No
8	**CHECK INPUT SIGNAL FOR TCM.** 1)Connect all connectors. 2)Lift-up or raise the vehicle and place safety stands. **CAUTION:** **On AWD models, raise all wheels off floor.** 3)Start the engine and set the vehicle in 20 km/h (12 MPH) condition. NOTE. The speed difference between front and rear wheels may light the ABS warning light, but this indicates no malfunction. When the AT control diagnosis is finished, perform the ABS memory clearance procedure of on-board diagnostics system. <Ref. to ABS-22, Clear Memory Mode.> 4)Measure the voltage between TCM connector terminals. ***Connector & terminal*** ***Non-turbo model*** ***(B55) No. 5 (+) — (B54) No. 21 (–):*** ***Turbo model*** ***(B55) No. 18 (+) — (B54) No. 10 (–):***	Is the voltage more than AC 1 V?	Even if the AT OIL TEMP warning lights up, the circuit has returned to a normal condition at this time. A temporary poor contactor or harness may be the case. Repair harness or connector in the front vehicle speed sensor circuit.	Go to step **11.**
9	**CHECK FRONT VEHICLE SPEED SENSOR USING OSCILLOSCOPE.** 1)Connect all connectors. 2)Lift-up the vehicle and place safety stands. **CAUTION:** **On AWD models, raise all wheels off ground.** 3)Set the oscilloscope to TCM connector terminals. **Non-turbo model** Positive probe; (B55) No. 18 Earth lead; (B54) No. 10 **Turbo model** Positive probe; (B55) No. 5 Earth lead; (B54) No. 21 4)Start the engine, and drive the wheels slowly. NOTE: The speed difference between front and rear wheels may light the ABS warning light, but this indicates no malfunctions. When the AT control diagnosis is finished, perform the ABS memory clearance procedure of self-diagnosis system. <Ref. to ABS-22, Clear Memory Mode.> 5)Measure the signal voltage indicated on oscilloscope.	Is the voltage more than AC 4 V?	Even if the AT OIL TEMP warning lights up, the circuit has returned to a normal condition at this time. A temporary poor contactor or harness may be the case. Repair harness or connector in the front vehicle speed sensor circuit.	Go to step **11.**

	Step	Check	Yes	No
10	**CHECK INPUT SIGNAL FOR TCM USING SUBARU SELECT MONITOR.** 1)Connect all connectors. 2)Connect the Subaru Select Monitor to data link connector. 3)Lift-up or raise the vehicle and place safety stands. **CAUTION:** **On AWD models, raise all wheels off floor.** 4)Turn the ignition switch to ON and turn the Subaru Select Monitor switch to ON. 5)Start the engine. 6)Read the data of vehicle speed using Subaru Select Monitor. •Compare the speedometer with Subaru Select Monitor indications. •Vehicle speed is indicated in "km/h" or "MPH". 1)Slowly increase the vehicle speed to 60 km/h or 37 MPH. NOTE: The speed difference between front and rear wheels may light the ABS warning light, but this indicates no malfunction. When the AT control diagnosis is finished, perform the ABS memory clearance procedure of on-board diagnostics system. <Ref. to ABS-22, Clear Memory Mode.>	Does the speedometer indication increase as the Subaru Select Monitor data increases?	Even if the AT OIL TEMP warning lights up, the circuit has returned to a normal condition at this time. A temporary poor connector or harness may be the case. Repair harness or connector in the front vehicle speed sensor circuit.	Go to step **11.**
11	**CHECK POOR CONTACT.**	Is there poor contact in front vehicle speed sensor circuit?	Repair poor contact.	Replace the TCM. <Ref. to AT-45, *Transmission Control Module (TCM).*>

F: DTC 36 TORQUE CONVERTER TURBINE SPEED SENSOR

DIAGNOSIS:
Input signal circuit of TCM is open or shorted.
TROUBLE SYMPTOM:
Excessive shift shock.
WIRING DIAGRAM:

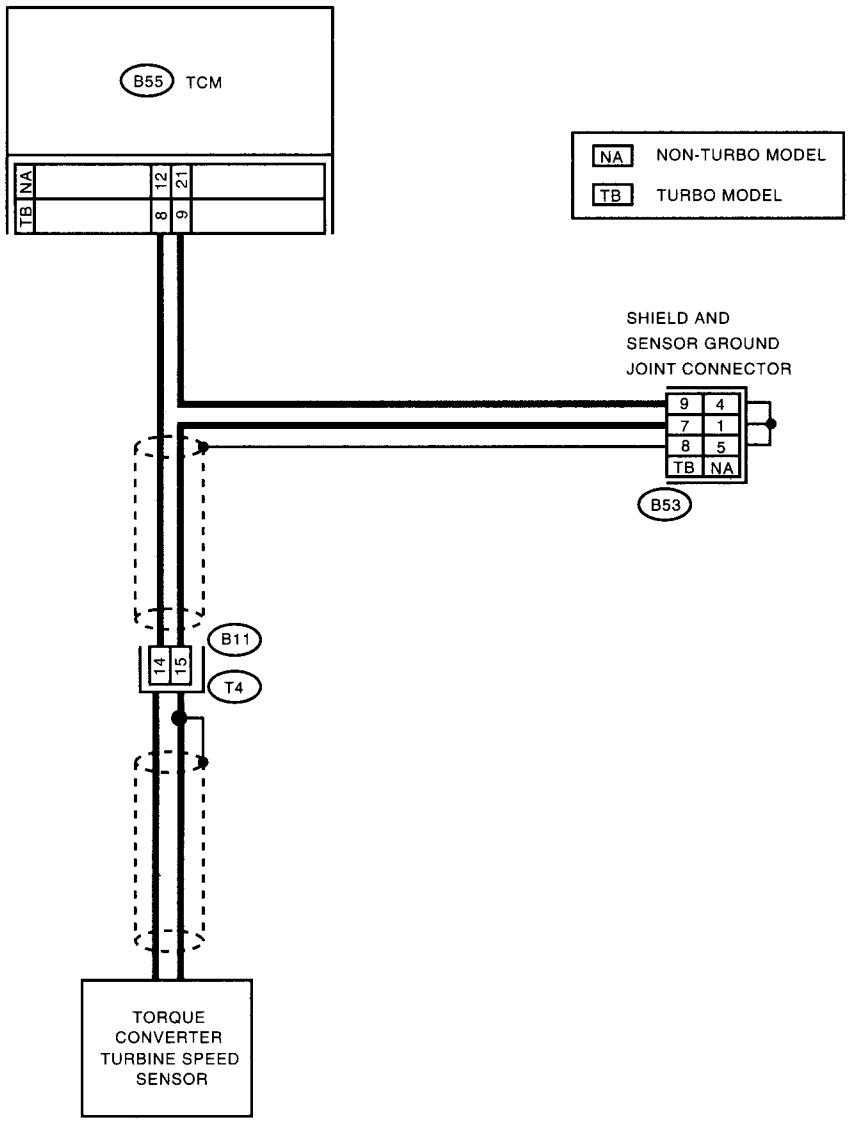

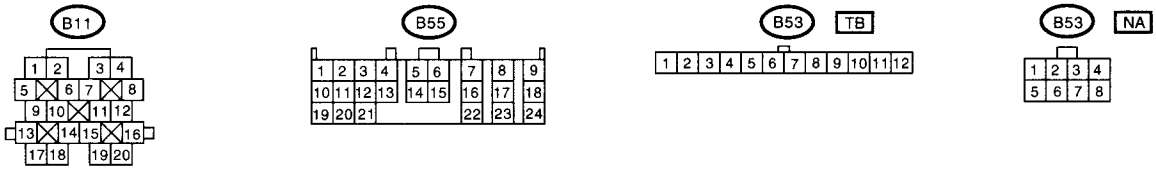

TR0578

	Step	Check	Yes	No
1	**CHECK TORQUE CONVERTER TURBINE SPEED SENSOR.** 1)Turn the ignition switch to OFF. 2)Disconnect the connector from transmission. 3)Measure the resistance between transmission connector receptacle's terminals. ***Connector & terminal*** ***(T4) No. 14 — No. 15:***	Is the resistance between 450 and 650 Ω?	Go to step **2.**	Replace the turbine speed sensor. <Ref. to AT-36, Torque Converter Turbine Speed Sensor.>
2	**CHECK HARNESS CONNECTOR BETWEEN TCM AND TRANSMISSION.** 1)Disconnect the connector from TCM. 2)Measure the resistance of harness between TCM and transmission connector. ***Connector & terminal*** ***Non-turbo model*** ***(B55) No. 12 — (B11) No. 14:*** ***Turbo model*** ***(B55) No. 8 — (B11) No. 14:***	Is the resistance less than 1 Ω?	Go to step **3.**	Repair open circuit in harness between TCM and transmission connector.
3	**CHECK HARNESS CONNECTOR BETWEEN TCM AND TRANSMISSION.** Measure the resistance of harness between TCM and transmission connector. ***Connector & terminal*** ***Non-turbo model*** ***(B55) No. 21 — (B11) No. 15:*** ***Turbo model*** ***(B55) No. 9 — (B11) No. 15:***	Is the resistance less than 1 Ω?	Go to step **4.**	Repair open circuit in harness between TCM and transmission connector, and poor contact in coupling connector.
4	**CHECK HARNESS CONNECTOR BETWEEN TCM AND TRANSMISSION.** Measure the resistance of harness between TCM and chassis ground. ***Connector & terminal*** ***Non-turbo model*** ***(B55) No. 21 — Chassis ground:*** ***Turbo model*** ***(B55) No. 9 — Chassis ground:***	Is the resistance more than 1 MΩ?	Go to step **5.**	Repair short circuit in harness between TCM and transmission connector.
5	**CHECK HARNESS CONNECTOR BETWEEN TCM AND TRANSMISSION.** Measure the resistance of harness between TCM and chassis ground. ***Connector & terminal*** ***Non-turbo model*** ***(B55) No. 12 — Chassis ground:*** ***Turbo model*** ***(B55) No. 8 — Chassis ground:***	Is the resistance more than 1 MΩ?	Go to step **6.**	Repair short circuit in harness between TCM and transmission connector, and poor contact in coupling connector.
6	**PREPARE OSCILLOSCOPE.**	Do you have an oscilloscope?	Go to step **10.**	Go to step **7.**
7	**PREPARE SUBARU SELECT MONITOR.**	Do you have a Subaru Select Monitor?	Go to step **9.**	Go to step **8.**

	Step	Check	Yes	No
8	**CHECK INPUT SIGNAL FOR TCM.** 1)Connect the connectors to TCM and transmission. 2)Start the engine and move select lever to "P" or "N" range. 3)Measure the voltage between TCM connector terminals. ***Connector & terminal*** ***Non-turbo model*** ***(B55) No. 12 (+) — No. 21 (–):*** ***Turbo model*** ***(B55) No. 8 (+) — No. 9 (–):***	Is the voltage more than AC 1 V?	Even if the AT OIL TEMP warning lights up, the circuit has returned to a normal condition at this time. A temporary poor contact of the connector or harness may be the cause. Repair harness or connector in the TCM and transmission.	Go to step **11.**
9	**CHECK INPUT SIGNAL FOR TCM USING SUBARU SELECT MONITOR.** 1)Connect the connectors to TCM and transmission. 2)Connect the Subaru Select Monitor to data link connector. 3)Turn the ignition switch to ON and turn the Subaru Select Monitor switch to ON. 4)Start the engine. 5)Move the select lever to "P" or "N" range. 6)Read the data of turbine speed using Subaru Select Monitor. •Compare the tachometer with Subaru Select Monitor indications.	Is the revolution value same as the tachometer reading shown on the combination meter?	Even if the AT OIL TEMP warning lights up, the circuit has returned to a normal condition at this time. A temporary poor contact of the connector or harness may be the cause. Repair harness or connector in the TCM and transmission.	Go to step **11.**
10	**CHECK INPUT SIGNAL FOR TCM USING OSCILLOSCOPE.** 1)Connect the connectors to TCM and transmission. 2)Set the oscilloscope to TCM connector terminals. **Turbo model** Positive probe; (B55) No. 8 Earth lead; (B55) No. 9 **Non-turbo model** Positive probe; (B55) No. 12 Earth lead; (B55) No. 21 3)Start the engine and move the select lever to "P" or "N" range.	Is the signal voltage more than AC 1 V?	Even if the AT OIL TEMP warning lights up, the circuit has returned to a normal condition at this time. A temporary poor contact of the connector or harness may be the cause. Repair harness or connector in the TCM and transmission.	Go to step **11.**
11	**CHECK POOR CONTACT.**	Is there poor contact in torque converter turbine speed sensor circuit?	Repair poor contact.	Replace the TCM. <Ref. to AT-45, Transmission Control Module (TCM).>

G: DTC 38 TORQUE CONTROL SIGNAL

DIAGNOSIS:

- The signal circuit is open or shorted.

TROUBLE SYMPTOM:

Excessive shift shock.

WIRING DIAGRAM:

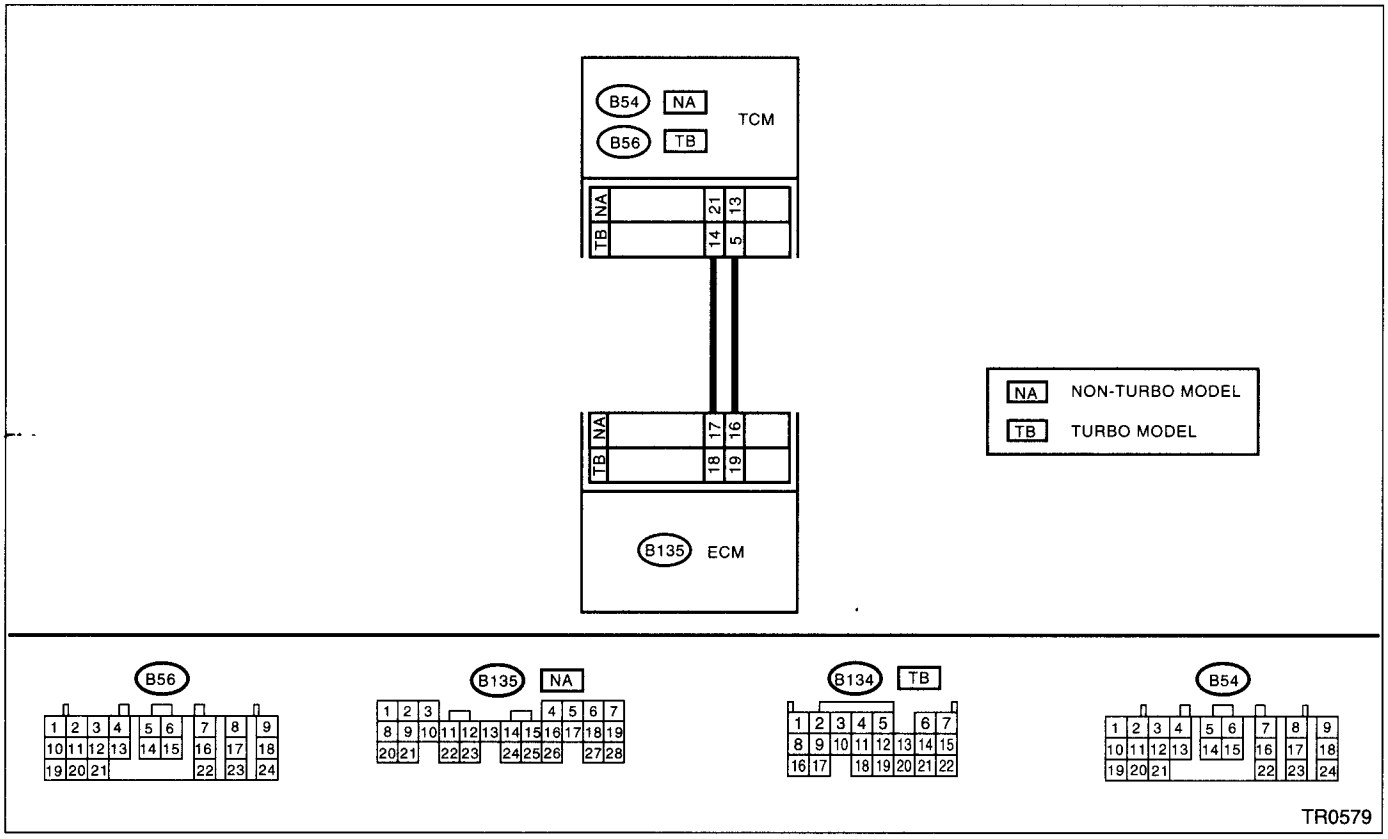

Step		Check	Yes	No
1	**CHECK HARNESS CONNECTOR BETWEEN TCM AND ECM.** 1)Turn the ignition switch to OFF. 2)Disconnect the connectors from TCM and ECM. 3)Measure the resistance of harness between TCM and ECM connector. ***Connector & terminal*** ***Non-turbo model*** ***(B54) No. 21 — (B134) No. 17:*** ***(B54) No. 13 — (B134) No. 16:*** ***Turbo model*** ***(B56) No. 14 — (B135) No. 18:*** ***(B56) No. 5 — (B135) No. 19:***	Is the resistance less than 1 Ω?	Go to step **2.**	Repair open circuit in harness between TCM and ECM connector.

	Step	Check	Yes	No
	CHECK HARNESS CONNECTOR BETWEEN TCM AND ECM. Measure the resistance of harness between TCM connector and chassis ground. ***Connector & terminal*** ***Non-turbo model*** ***(B56) No. 21 — Chassis ground:*** ***(B54) No. 13 — Chassis ground:*** ***Turbo model*** ***(B56) No. 14 — Chassis ground:*** ***(B56) No. 5 — Chassis ground:***	s the resistance more than 1 MΩ?	Go to step **3.**	Repair short circuit n harness etween TCM and CM connector.
	CHECK OUTPUT SIGNAL EMITTED FROM TCM. 1)Connect the connectors to TCM and ECM 2)Turn the ignition switch to ON (engine OFF). 3)Measure the voltage between TCM connector terminals. ***Connector & terminal*** ***Non-turbo model*** ***(B54) No. 21 (+) — Chassis ground (–):*** ***(B54) No. 13 (+) — Chassis ground (–):*** ***Turbo model*** ***(B56) No. 14 (+) — Chassis ground (–):*** ***(B56) No. 5 (+) — Chassis ground (–):***	s the voltage more than 4.8 V'	Even if the AT OIL TEMP warning lights up, the circuit has returned to a normal condition at this time. A temporary poor contact of the connector or harness may be the cause Repair harness or connector in the TCM and ECM	Go to step **4.**
	CHECK POOR CONTACT.	s there poor contact in torque control signal circuit?	Repair poor contact	Go to step **5.**
	CHECK GROUND LINE BETWEEN TRANSMISSION AND BODY. Check the installing condition of ground line in transmission and body.	s there any dirt or rust at ground line installing point?	Remove dirt and rust.	Go to step **6.**
	CHECK GROUND LINE BETWEEN TRANSMISSION AND BODY. Check the installing condition of ground line in transmission and body. ***Tightening torque:*** ***13±3 N·m (1.3±0.3 kgf-m, 9.4±2.2 ft-lb)***	s the tightening torque value within specification?	Go to step **7.**	Tighten to specified torque.
	CHECK GROUND LINE INSIDE TRANSMISSION. 1)Drain the AT fluid and remove the oil pan 2)Check the tightening torque value of ground line installing bolt. ***Tightening torque:*** ***T: 8±1 N·m (0.8±0.1 kgf-m, 5.8±0.7 ft-lb)***	s the tightening torque value within specification?	Go to step **9.**	Tighten to specified torque.
	CHECK GROUND CIRCUIT OF ECM. <Ref. to AT-52, DTC 31 THROTTLE POSITION SENSOR, Diagnostic Procedure with Diagnostic Trouble Code (DTC).>	s there any trouble?	Repair ground terminal and/or ground circuit of ECM	Go to step **9.**
	RECHECK OUTPUT SIGNAL EMITTED FROM TCM. Measure the voltage between TCM connector and chassis ground. ***Connector & terminal*** ***Non-turbo model*** ***(B54) No. 21 (+) — Chassis ground (–):*** ***(B54) No. 13 (+) — Chassis ground (–):*** ***Turbo model*** ***(B56) No. 14 (+) — Chassis ground (–):*** ***(B56) No. 5 (+) — Chassis ground (–):***	s each voltage more than 4 8 /?	Replace the TCM. <Ref. to AT-45, Transmission Control Module (TCM).>	Replace the ECM.

H: DTC 45 INTAKE MANIFOLD PRESSURE SIGNAL

DIAGNOSIS:
Input signal circuit of TCM from ECM is open or shorted.
TROUBLE SYMPTOM:
Excessive shift shock.
WIRING DIAGRAM:

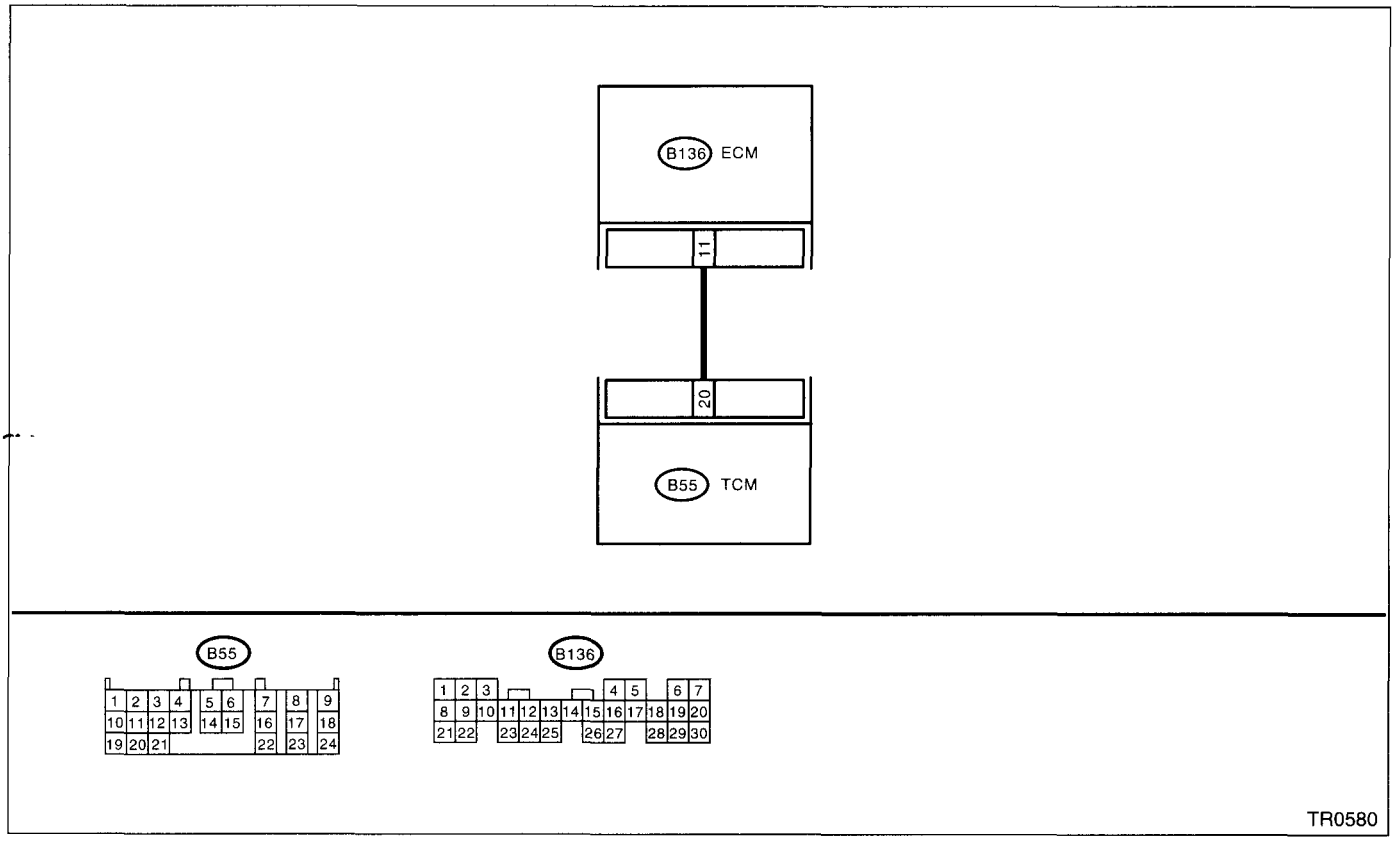

	Step	Check	Yes	No
1	**CHECK ENGINE GROUND TERMINALS AND GROUND CIRCUIT OF ECM** <Ref. to AT-52, DTC 31 THROTTLE POSITION SENSOR, Diagnostic Procedure with Diagnostic Trouble Code (DTC).>	Is there any trouble?	Repair ground terminal and/or ground circuit of ECM.	Go to step **2.**
2	**CHECK HARNESS CONNECTOR BETWEEN TCM AND ECM.** 1)Turn the ignition switch to OFF. 2)Disconnect the connectors from TCM and ECM. 3)Measure the resistance of harness between TCM and ECM connector. ***Connector & terminal*** ***(B55) No. 20 — (B136) No. 11:***	Is the resistance less than 1 Ω?	Go to step **3.**	Repair open circuit in harness between TCM and ECM connector.
3	**CHECK HARNESS CONNECTOR BETWEEN TCM AND ECM.** Measure the resistance of harness between TCM connector and chassis ground. ***Connector & terminal*** ***(B55) No. 20 — Chassis ground:***	Is the resistance more than 1 MΩ?	Go to step **4.**	Repair short circuit in harness between TCM and ECM connector.
4	**PREPARE SUBARU SELECT MONITOR.**	Do you have a Subaru Select Monitor?	Go to step **6.**	Go to step **5.**

	Step	Check	Yes	No
5	**CHECK INPUT SIGNAL FOR TCM.** 1)Connect the connectors to TCM and ECM. 2)Start the engine, and warm-up the transmission until the ATF temperature is above 80°C (176°F). NOTE: If ambient temperature is below 0°C (32°F), drive the vehicle until the ATF reaches its operating temperature. 3)Engine idling. 4)Measure the voltage between TCM connector and chassis ground. ***Connector & terminal*** ***(B55) No. 20 (+) — Chassis ground (–):***	Is the voltage between 1.2 and 1.8 V?	Even if the AT OIL TEMP warning lights up, the circuit has returned to a normal condition at this time. A temporary poor contact of the connector or harness may be the cause. Repair harness or connector in the TCM and ECM.	Go to step **7.**
6	**CHECK INPUT SIGNAL FOR TCM USING SUBARU SELECT MONITOR.** 1)Connect the connectors to TCM and ECM. 2)Connect the Subaru Select Monitor to data link connector. 3)Start the engine, and turn the Subaru Select monitor switch to ON. 4)Warm-up the engine until the engine coolant temperature is above 80°C (176°F). 5)Engine idling. 6)Read the data of intake manifold pressure signal using Subaru Select Monitor. •Display shows the intake manifold pressure signal value sent from ECM.	Is the value between 1.2 and 1.8 V?	Even if the AT OIL TEMP warning lights up, the circuit has returned to a normal condition at this time. A temporary poor contact of the connector or harness may be the cause. Repair harness or connector in the TCM and ECM.	Go to step **7.**
7	**CHECK POOR CONTACT.**	Is there poor contact in intake manifold pressure signal circuit?	Repair poor contact.	Replace the TCM. <Ref. to AT-45, Transmission Control Module (TCM).>

I: DTC 71 SHIFT SOLENOID 1

DIAGNOSIS:
Output signal circuit of shift solenoid 1 is open or shorted.
TROUBLE SYMPTOM:
Does not shift.
WIRING DIAGRAM:

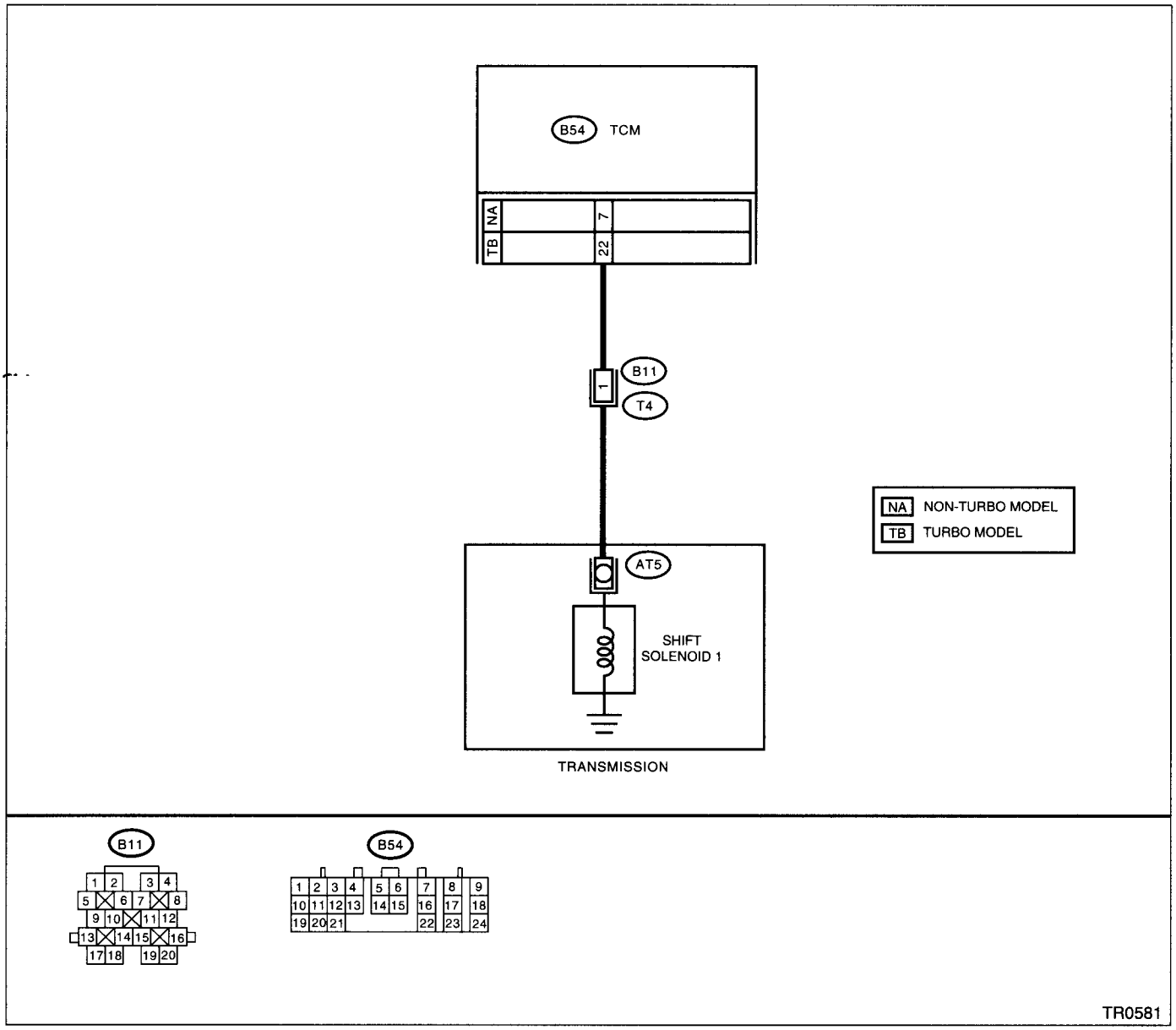

	Step	Check	Yes	No
1	**CHECK HARNESS CONNECTOR BETWEEN TCM AND TRANSMISSION.** 1)Turn the ignition switch to OFF. 2)Disconnect the connector from TCM and transmission. 3)Measure the resistance of harness between TCM and shift solenoid 1 connector. ***Connector & terminal*** ***Non-turbo model*** ***(B54) No. 7 — (B11) No. 1:*** ***Turbo model*** ***(B54) No. 22 — (B11) No. 1:***	Is the resistance less than 1 Ω?	Go to step **2.**	Repair open circuit in harness between TCM and transmission connector.
2	**CHECK HARNESS CONNECTOR BETWEEN TCM AND TRANSMISSION.** Measure the resistance of harness between TCM connector and chassis ground. ***Connector & terminal*** ***Non-turbo model*** ***(B54) No. 7 — Chassis ground:*** ***Turbo model*** ***(B54) No. 22 — Chassis ground:***	Is the resistance more than 1 MΩ?	Go to step **3.**	Repair short circuit in harness between TCM and transmission connector.
3	**CHECK SHIFT SOLENOID 1.** Measure the resistance between transmission connector terminals. ***Connector & terminal*** ***(T4) No. 1 — No. 16:***	Is the resistance between 10 and 16 Ω?	Go to step **4.**	Go to step **7.**
4	**CHECK OUTPUT SIGNAL EMITTED FROM TCM.** 1)Connect the connectors to TCM and transmission. 2)Turn the ignition switch to ON (engine OFF). 3)Move the select lever to "D" range. 4)Measure the voltage between TCM connector and chassis ground. ***Connector & terminal*** ***Non-turbo model*** ***(B54) No. 7 (+) — Chassis ground (–):*** ***Turbo model*** ***(B54) No. 22 (+) — Chassis ground (–):***	Is the voltage more than 9V?	Go to step **5.**	Go to step **6.**
5	**CHECK OUTPUT SIGNAL EMITTED FROM TCM.** 1)Move the select lever to "2" range. 2)Measure the voltage between TCM connector and chassis ground. ***Connector & terminal*** ***Non-turbo model*** ***(B54) No. 7 (+) — Chassis ground (–):*** ***Turbo model*** ***(B54) No. 22 (+) — Chassis ground (–):***	Is the voltage less than 1V?	Even if the AT OIL TEMP warning lights up, the circuit has returned to a normal condition at this time. A temporary poor contact of the connector or harness may be the cause. Repair harness or contact in the TCM.	Go to step **6.**
6	**CHECK POOR CONTACT.**	Is there poor contact in shift solenoid 1 circuit?	Repair poor contact.	Replace the TCM. <Ref. to AT-45, Transmission Control Module (TCM).>

	Step	Check	Yes	No
7	**CHECK SHIFT SOLENOID 1 (IN TRANSMISSION).** 1)Remove the transmission connector from bracket. 2)Lift-up or raise the vehicle and support with safety stand. **CAUTION:** **On AWD models, raise all wheels off ground.** 3)Drain the automatic transmission fluid. **CAUTION:** **Do not drain the automatic transmission fluid until it cools down.** 4)Remove the oil pan, and disconnect the connector from shift solenoid 1. 5)Measure the resistance between shift solenoid 1 connector and transmission ground. ***Terminal*** ***No. 1 — Transmission ground:***	Is the resistance between 10 and 16 Ω?	Go to step **8.**	Replace the shift solenoid 1. <Ref. to AT-39, Shift Solenoids, Duty Solenoids and ATF Temperature Sensor.>
8	**CHECK HARNESS CONNECTOR BETWEEN SHIFT SOLENOID 1 AND TRANSMISSION.** Measure the resistance of harness between shift solenoid 1 and transmission connector. ***Connector & terminal*** ***(AT5) No. 1 — (T4) No. 1:***	Is the resistance less than 1 Ω?	Go to step **9.**	Repair open circuit in harness between shift solenoid 1 and transmission connector.
9	**CHECK HARNESS CONNECTOR BETWEEN SHIFT SOLENOID 1 AND TRANSMISSION.** Measure the resistance of harness between shift solenoid 1 connector and transmission ground. ***Connector & terminal*** ***(T4) No. 1 — Transmission ground:***	Is the resistance more than 1 MΩ?	Even if the AT OIL TEMP warning lights up, the circuit has returned to a normal condition at this time. A temporary poor contact of the connector or harness may be the cause. Repair harness or connector in shift solenoid 1 and transmission.	Repair short circuit harness between shift solenoid 1 and transmission connector.

J: DTC 72 SHIFT SOLENOID 2

DIAGNOSIS:
Output signal circuit of shift solenoid 2 is open or shorted.
TROUBLE SYMPTOM:
Does not shift.
WIRING DIAGRAM:

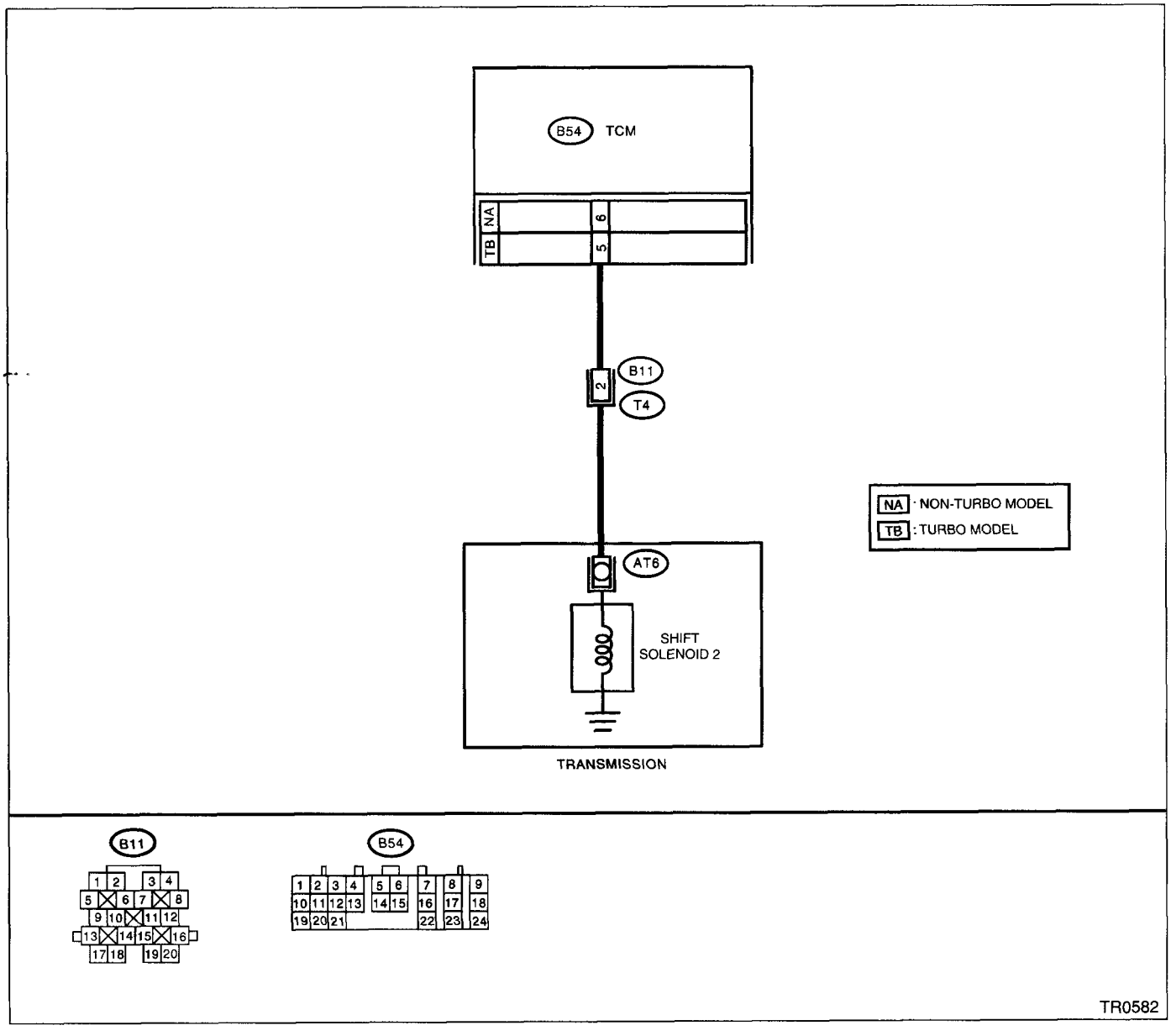

	Step	Check	Yes	No
1	**CHECK HARNESS CONNECTOR BETWEEN TCM AND TRANSMISSION.** 1)Turn the ignition switch to OFF. 2)Disconnect the connector from TCM and transmission. 3)Measure the resistance of harness between TCM and shift solenoid 2 connector. ***Connector & terminal*** ***Non-turbo model*** ***(B54) No. 6 — (B11) No. 2:*** ***Turbo model*** ***(B54) No. 5 — (B11) No. 2:***	Is the resistance less than 1 Ω?	Go to step **2.**	Repair open circuit in harness between TCM and transmission connector.
2	**CHECK HARNESS CONNECTOR BETWEEN TCM AND TRANSMISSION.** Measure the resistance of harness between TCM connector and chassis ground. ***Connector & terminal*** ***Non-turbo model*** ***(B54) No. 6 — Chassis ground:*** ***Turbo model*** ***(B54) No. 5 — Chassis ground:***	Is the resistance more than 1 MΩ?	Go to step **3.**	Repair short circuit in harness between TCM and transmission connector.
3	**CHECK SHIFT SOLENOID 2.** Measure the resistance between transmission connector terminals. ***Connector & terminal*** ***(T4) No. 2 — No. 16:***	Is the resistance between 10 and 16 Ω?	Go to step **4.**	Go to step **6.**

	Step	Check	Yes	No
4	**CHECK OUTPUT SIGNAL EMITTED FROM TCM.** 1)Connect the connectors to TCM and transmission. 2)Lift-up or raise the vehicle and support with safety stand. **CAUTION:** **On AWD models, raise all wheels off ground.** 3)Start the engine and warm-up the transmission until the ATF temperature is above 80°C (176°F). NOTE: If the ambient temperature is below 0°C (32°F), drive the vehicle until the ATF reaches its operating temperature. 4)Move the selector lever to "D", and slowly increase the vehicle speed to 50 km/h (31 MPH). NOTE: The speed difference between front and rear wheels may light the ABS warning light, but this indicates no malfunction. When the AT control diagnosis is finished, perform the ABS memory clearance procedure of on-board diagnostics system. <Ref. to ABS-22, Clear Memory Mode.> 5)Measure the voltage between TCM connector and chassis ground. ***Connector & terminal*** ***Non-turbo model*** ***(B54) No. 6 (+) — Chassis ground (–):*** ***Turbo model*** ***(B54) No. 5 (+) — Chassis ground (–):***	Is the voltage less than 1 V?	Even if the AT OIL TEMP warning lights up, the circuit has returned to a normal condition at this time. A temporary poor contact of the connector or harness may be the cause. Repair harness or connector in the TCM and transmission.	Go to step **5.**
5	**CHECK POOR CONTACT.**	Is there poor contact in shift solenoid 2 circuit?	Repair poor contact.	Replace the TCM. <Ref. to AT-45, Transmission Control Module (TCM).>
6	**CHECK SHIFT SOLENOID 2 (IN TRANSMISSION).** 1)Remove the transmission connector from bracket. 2)Drain the automatic transmission fluid. **CAUTION:** **Do not drain the automatic transmission fluid until it cools down.** 3)Remove the oil pan, and disconnect the connector from shift solenoid 2. 4)Measure the resistance between shift solenoid 2 connector and transmission ground. ***Connector & terminal*** ***No. 1 — Transmission ground:***	Is the resistance between 10 and 16 Ω?	Go to step **7.**	Replace the shift solenoid 2 assembly. <Ref. to AT-39, Shift Solenoids, Duty Solenoids and ATF Temperature Sensor.>
7	**CHECK HARNESS CONNECTOR BETWEEN SHIFT SOLENOID 2 AND TRANSMISSION.** Measure the resistance of harness between shift solenoid 2 and transmission connector. ***Connector & terminal*** ***(AT6) No. 1 — (T4) No. 2:***	Is the resistance less than 1 Ω?	Go to step **8.**	Repair open circuit in harness between shift solenoid 2 and transmission connector.

	Step	Check	Yes	No
8	**CHECK HARNESS CONNECTOR BETWEEN SHIFT SOLENOID 2 AND TRANSMISSION.** Measure the resistance of harness between shift solenoid 2 connector and transmission ground. ***Connector & terminal*** ***(T4) No. 2 — Transmission ground:***	Is the resistance more than 1 MΩ?	Even if the AT OIL TEMP warning lights up, the circuit has returned to a normal condition at this time. A temporary poor contact of the connector or harness may be the cause. Repair harness or connector in shift solenoid 2 and transmission.	Repair short circuit harness between shift solenoid 2 and transmission connector.

K: DTC 73 LOW CLUTCH TIMING SOLENOID

DIAGNOSIS:
Output signal circuit of low clutch timing solenoid is open or shorted.
TROUBLE SYMPTOM:
Excessive shift shock.
WIRING DIAGRAM:

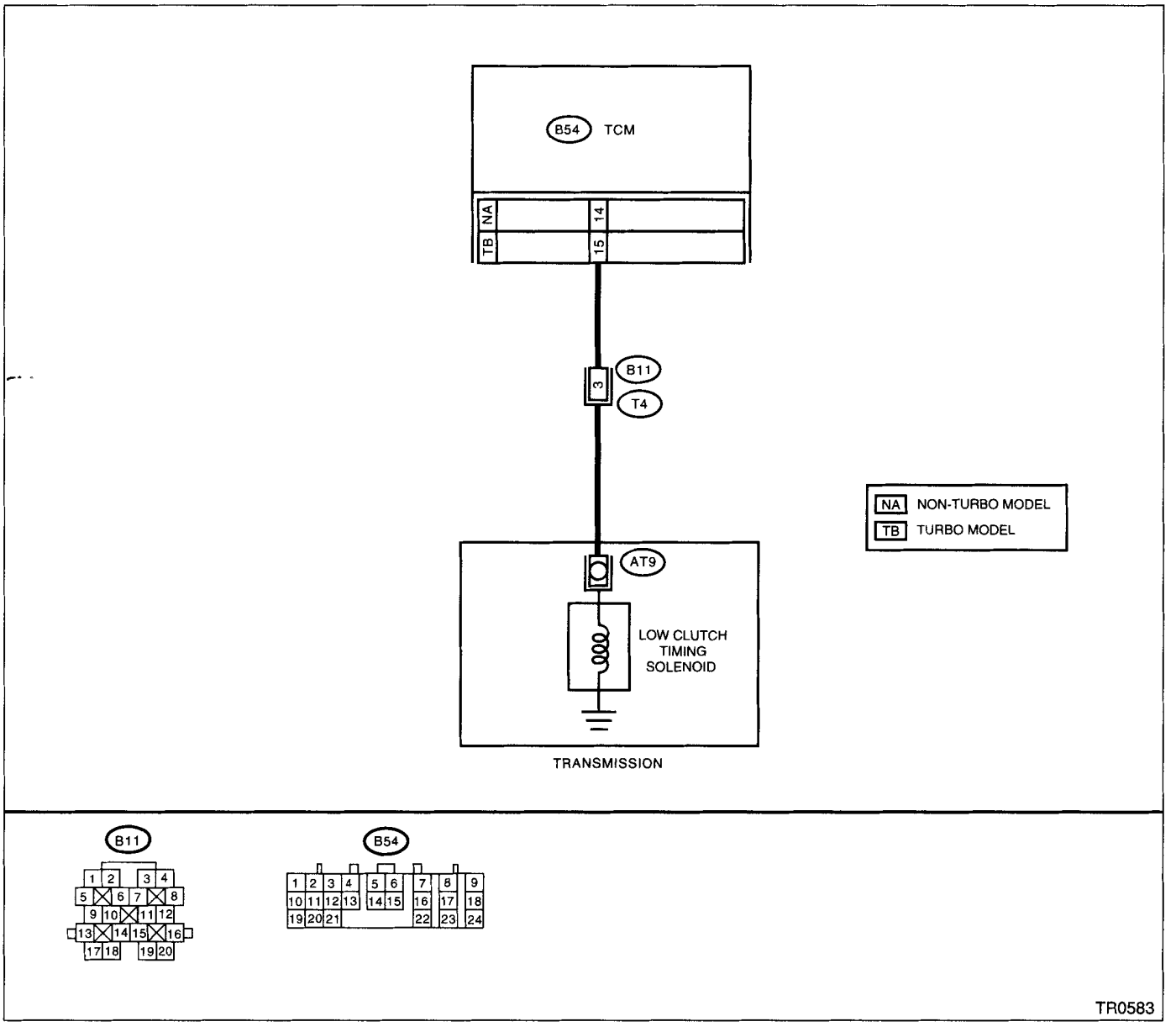

	Step	Check	Yes	No
1	**CHECK HARNESS CONNECTOR BETWEEN TCM AND TRANSMISSION.** 1)Turn the ignition switch to OFF. 2)Disconnect the connector from TCM and transmission. 3)Measure the resistance of harness between TCM and transmission connector. ***Connector & terminal*** ***Non-turbo model*** ***(B54) No. 14 — (B11) No. 3:*** ***Turbo model*** ***(B54) No. 15 — (B11) No. 3:***	Is the resistance less than 1 Ω?	Go to step **2.**	Repair open circuit in harness between TCM and transmission connector.
2	**CHECK HARNESS CONNECTOR BETWEEN TCM AND TRANSMISSION.** Measure the resistance of harness between TCM connector and transmission ground. ***Connector & terminal*** ***Non-turbo model*** ***(B54) No. 14 — Chassis ground:*** ***Turbo model*** ***(B54) No. 15 — Chassis ground:***	Is the resistance more than 1 MΩ?	Go to step **3.**	Repair short circuit in harness between TCM and transmission connector.
3	**CHECK LOW CLUTCH TIMING SOLENOID.** Measure the resistance between transmission connector terminals. ***Connector & terminal*** ***(T4) No. 3 — No. 16:***	Is the resistance between 10 and 16 Ω?	Go to step **4.**	Go to step **7.**
4	**CHECK OUTPUT SIGNAL EMITTED FROM TCM.** 1)Connect the connectors to TCM and transmission. 2)Turn the ignition switch to ON (engine OFF). 3)Move the select lever to "D" range. 4)Measure the voltage between TCM connector and chassis ground. ***Connector & terminal*** ***Non-turbo model*** ***(B54) No. 14 (+) — Chassis ground (–):*** ***Turbo model*** ***(B54) No. 15 (+) — Chassis ground (–):***	Is the voltage more than 9V?	Go to step **5.**	Go to step **6.**
5	**CHECK OUTPUT SIGNAL EMITTED FROM TCM.** 1)Move the select lever to "2" range. 2)Measure the voltage between TCM connector and chassis ground. ***Connector & terminal*** ***Non-turbo model*** ***(B54) No. 14 (+) — Chassis ground (–):*** ***Turbo model*** ***(B54) No. 15 (+) — Chassis ground (–):***	Is the voltage less than 1V?	Even if the AT OIL TEMP warning lights up, the circuit has returned to a normal condition at this time. A temporary poor contact of the connector or harness may be the cause. Repair harness or contact in the TCM and transmission.	Go to step **6.**
6	**CHECK POOR CONTACT.**	Is there poor contact in low clutch timing solenoid circuit?	Repair poor contact.	Replace the TCM. <Ref. to AT-45, Transmission Control Module (TCM).>

	Step	Check	Yes	No
7	**CHECK LOW CLUTCH TIMING SOLENOID (IN TRANSMISSION).** 1)Remove the transmission connector from bracket. 2)Lift-up or raise the vehicle and support with safety stands. **CAUTION:** **On AWD models, raise all wheels off ground.** 3)Drain the automatic transmission fluid. **CAUTION:** **Do not drain the automatic transmission fluid until it cools down.** 4)Remove the oil pan, and disconnect the connector from low clutch timing solenoid. 5)Measure the resistance between low clutch timing solenoid connector and transmission ground. ***Terminal*** ***No. 1 — Transmission ground:***	Is the resistance between 10 and 16 Ω?	Go to step **8.**	Replace the low clutch timing solenoid. <Ref. to AT-39, Shift Solenoids, Duty Solenoids and ATF Temperature Sensor.>
8	**CHECK HARNESS CONNECTOR BETWEEN LOW CLUTCH TIMING SOLENOID AND TRANSMISSION.** Measure the resistance of harness between low clutch timing solenoid and transmission connector. ***Connector & terminal*** ***(AT9) No. 1 — (T4) No. 3:***	Is the resistance less than 1 Ω?	Go to step **9.**	Repair open circuit in harness between low clutch timing solenoid and transmission connector.
9	**CHECK HARNESS CONNECTOR BETWEEN LOW CLUTCH TIMING SOLENOID AND TRANSMISSION.** Measure the resistance of harness between low clutch timing solenoid connector and transmission ground. ***Connector & terminal*** ***(T4) No. 3 — Transmission ground:***	Is the resistance more than 1 MΩ?	Even if the AT OIL TEMP warning lights up, the circuit has returned to a normal condition at this time. A temporary poor contact of the connector or harness may be the cause. Repair harness or connector in low clutch timing solenoid and transmission.	Repair short circuit harness between low clutch timing solenoid and transmission connector.

L: DTC 74 2-4 BRAKE TIMING SOLENOID

DIAGNOSIS:
Output signal circuit of 2-4 brake timing solenoid is open or shorted.
TROUBLE SYMPTOM:
Excessive shift shock.
WIRING DIAGRAM:

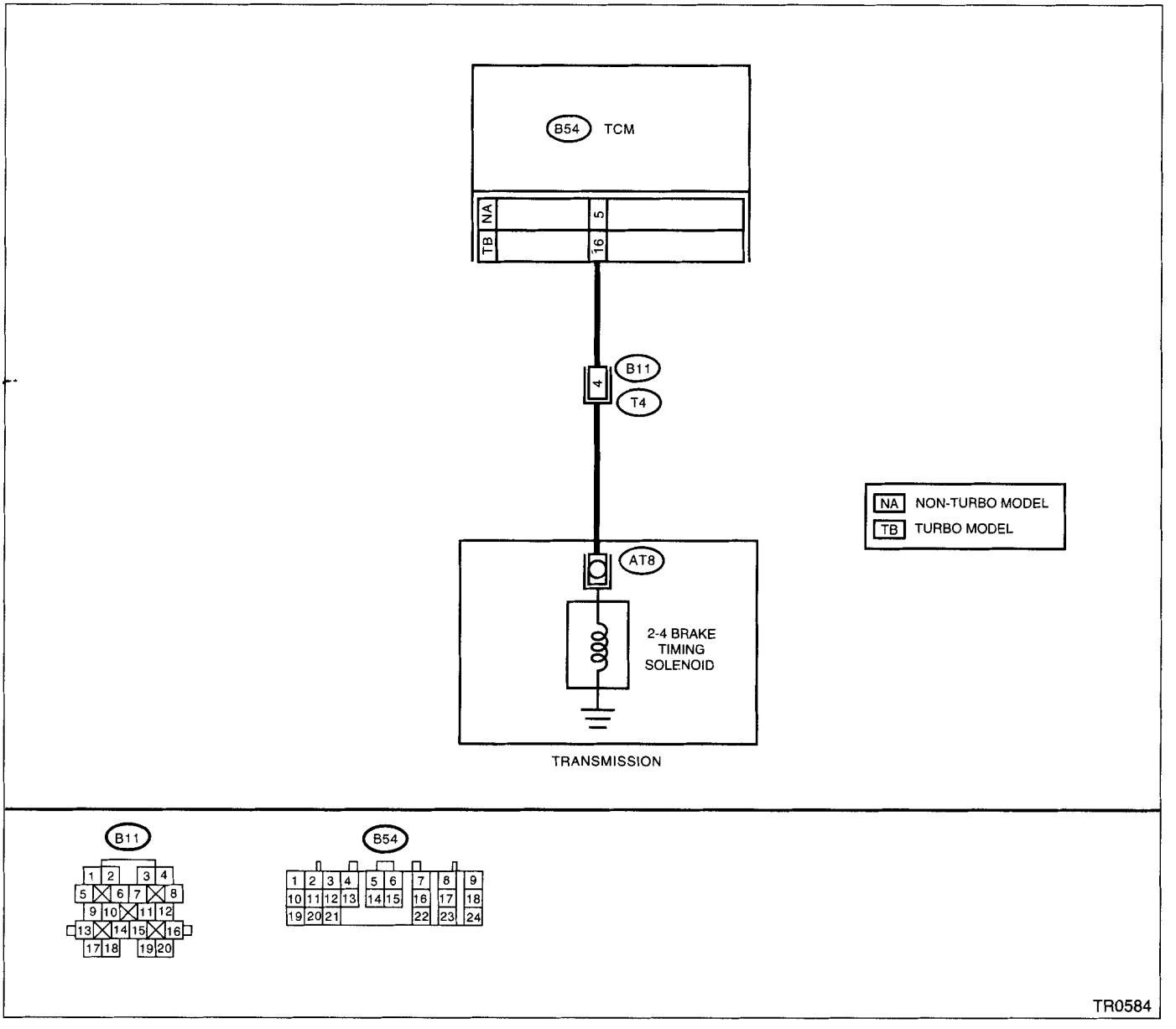

	Step	Check	Yes	No
1	**CHECK HARNESS CONNECTOR BETWEEN TCM AND TRANSMISSION.** 1)Turn the ignition switch to OFF. 2)Disconnect the connector from TCM and transmission. 3)Measure the resistance of harness between TCM and transmission connector. ***Connector & terminal*** ***Non-turbo model*** ***(B54) No. 5 — (B11) No. 4:*** ***Turbo model*** ***(B54) No. 16 — (B11) No. 4:***	Is the resistance less than 1 Ω?	Go to step **2.**	Repair open circuit in harness between TCM and transmission connector.
2	**CHECK HARNESS CONNECTOR BETWEEN TCM AND TRANSMISSION.** Measure the resistance of harness between TCM connector and transmission ground. ***Connector & terminal*** ***Non-turbo model*** ***(B54) No. 5 — Chassis ground:*** ***Turbo model*** ***(B54) No. 16 — Chassis ground:***	Is the resistance more than 1 MΩ?	Go to step **3.**	Repair short circuit in harness between TCM and transmission connector.
3	**CHECK 2-4 BRAKE TIMING SOLENOID.** Measure the resistance between transmission connector terminals. ***Connector & terminal*** ***(T4) No. 4 — No. 16:***	Is the resistance between 10 and 16 Ω?	Go to step **4.**	Go to step **7.**
4	**CHECK OUTPUT SIGNAL EMITTED FROM TCM.** 1)Connect the connectors to TCM and transmission. 2)Lift-up or raise the vehicle and support with safety stands. **CAUTION:** **On AWD models, raise all wheels off ground.** 3)Start the engine and warm-up the transmission until the ATF temperature is above 80°C (176°F). NOTE: If the ambient temperature is below 0°C (32°F), drive the vehicle until the ATF reaches its operating temperature. 4)Move the select lever to "1", and slowly increase vehicle speed to 10 km/h (6 MPH). NOTE: The speed difference between front and rear wheels may light the ABS warning light, but this indicates no malfunction. When the AT control diagnosis is finished, perform the ABS memory clearance procedure of on-board diagnostics system. <Ref. to ABS-22, Clear Memory Mode.> 5)Measure the voltage between TCM connector and chassis ground. ***Connector & terminal*** ***Non-turbo model*** ***(B54) No. 5 (+) — Chassis ground (–):*** ***Turbo model*** ***(B54) No. 16 (+) — Chassis ground (–):***	Is the voltage less than 1 V?	Go to step **5.**	Go to step **6.**

	Step	Check	Yes	No
5	**CHECK OUTPUT SIGNAL EMITTED FROM TCM.** 1)Move the select lever to "D", and slowly increase vehicle speed to 65 km/h (40 MPH). NOTE: The speed difference between front and rear wheels may light the ABS warning light, but this indicates no malfunction. When the AT control diagnosis is finished, perform the ABS memory clearance procedure of on-board diagnostics system. <Ref. to ABS-22, Clear Memory Mode.> 2)Measure the voltage between TCM connector and chassis ground. ***Connector & terminal*** ***Non-turbo model*** ***(B54) No. 5 (+) — Chassis ground (–):*** ***Turbo model*** ***(B54) No. 16 (+) — Chassis ground (–):***	Is the voltage more than 9 V?	Even if the AT OIL TEMP warning lights up, the circuit has returned to a normal condition at this time. A temporary poor contact of the connector or harness may be the cause. Repair harness or contact in the transmission.	Go to step **6.**
6	**CHECK POOR CONTACT.**	Is there poor contact in 2-4 brake timing solenoid circuit?	Repair poor contact.	Replace the TCM. <Ref. to AT-45, Transmission Control Module (TCM).>
7	**CHECK 2-4 BRAKE TIMING SOLENOID (IN TRANSMISSION).** 1)Remove the transmission connector from bracket. 2)Lift-up or raise the vehicle and support with safety stands. **CAUTION:** **On AWD models, raise all wheels off ground.** 3)Drain the automatic transmission fluid. **CAUTION:** **Do not drain the automatic transmission fluid until it cools down.** 4)Remove the oil pan, and disconnect the connector from 2-4 brake timing solenoid. 5)Measure the resistance between 2-4 brake timing solenoid connector and transmission ground. ***Terminal*** ***No. 1 — Transmission ground:***	Is the resistance between 10 and 16 Ω?	Go to step **8.**	Replace the 2-4 brake timing solenoid. <Ref. to AT-39, Shift Solenoids, Duty Solenoids and ATF Temperature Sensor.>
8	**CHECK HARNESS CONNECTOR BETWEEN 2-4 BRAKE TIMING SOLENOID AND TRANSMISSION.** Measure the resistance of harness between 2-4 brake timing solenoid and transmission connector. ***Connector & terminal*** ***(AT8) No. 1 — (T4) No. 4:***	Is the resistance less than 1 Ω?	Go to step **9.**	Repair open circuit in harness between 2-4 brake timing solenoid and transmission connector.

	Step	Check	Yes	No
9	**CHECK HARNESS CONNECTOR BETWEEN 2-4 BRAKE TIMING SOLENOID AND TRANSMISSION.** Measure the resistance of harness between 2-4 brake timing solenoid connector and transmission ground. ***Connector & terminal*** ***(T4) No. 4 — Transmission ground:***	Is the resistance more than 1 MΩ?	Even if the AT OIL TEMP warning lights up, the circuit has returned to a normal condition at this time. A temporary poor contact of the connector or harness may be the cause. Repair harness or connector in 2-4 brake timing solenoid and transmission.	Repair short circuit harness between 2-4 brake timing solenoid and transmission connector.

M: DTC 75 LINE PRESSURE DUTY SOLENOID

DIAGNOSIS:
Output signal circuit of line pressure duty solenoid is open or shorted.
TROUBLE SYMPTOM:
Excessive shift shock.
WIRING DIAGRAM:

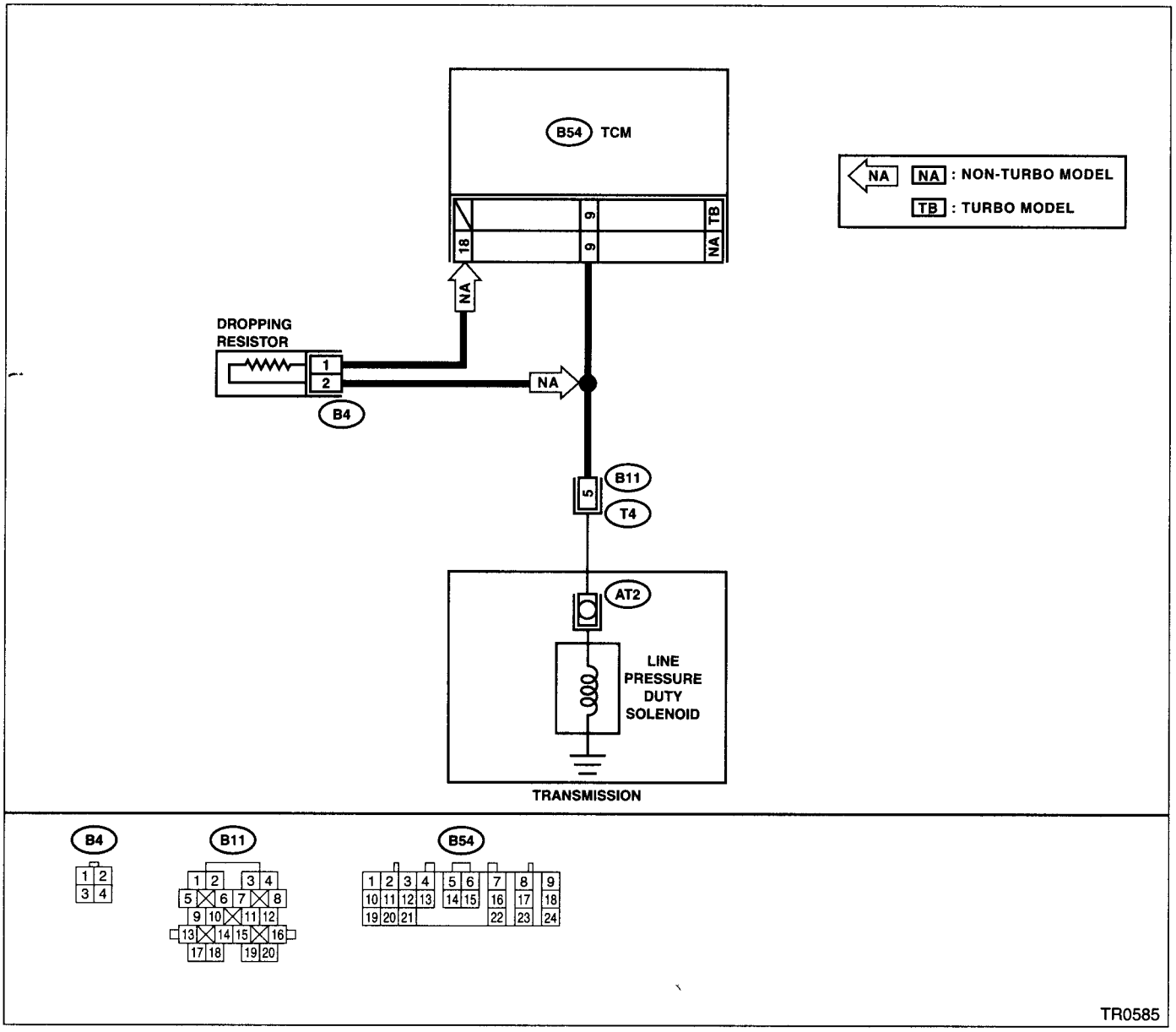

Step		Check	Yes	No
1	**CHECK VEHICLE.**	Is the target non-turbo model?	Go to step **2.**	Go to step **7.**
2	**CHECK RESISTOR.** 1)Turn the ignition switch to OFF. 2)Disconnect the connector from dropping resistor. 3)Measure the resistance between dropping resistor terminal. ***Terminals*** ***No. 1 — No. 2:***	Is the resistance between 9 and 15 Ω?	Go to step **3.**	Replace the dropping resistor. <Ref. to AT-46, Dropping Resistor.>

	Step	Check	Yes	No
3	**CHECK HARNESS CONNECTOR BETWEEN TCM AND DROPPING RESISTOR.** 1)Disconnect the connector from TCM. 2)Measure the resistance of harness between TCM connector and dropping resistor connector. ***Connector & terminal*** ***(B54) No. 18 — (B4) No. 1:***	Is the resistance less than 1 Ω?	Go to step **4.**	Repair open circuit in harness between TCM and dropping resistor connector.
4	**CHECK HARNESS CONNECTOR BETWEEN TCM AND DROPPING RESISTOR.** Measure the resistance of harness between dropping resistor connector and chassis ground. ***Connector & terminal*** ***(B4) No. 1 — Chassis ground:***	Is the resistance more than 1 MΩ?	Go to step **5.**	Repair short circuit in harness between TCM and dropping resistor connector.
5	**CHECK HARNESS CONNECTOR BETWEEN TRANSMISSION AND DROPPING RESISTOR.** 1)Disconnect the connector from transmission 2)Measure the resistance of harness between transmission and dropping resistor connector. ***Connector & terminal*** ***(B4) No. 2 — (B11) No. 5:***	Is the resistance less than 1 Ω?	Go to step **6.**	Repair open circuit in harness between dropping resistor and transmission connector.
6	**CHECK HARNESS CONNECTOR BETWEEN TRANSMISSION AND DROPPING RESISTOR.** Measure the resistance of harness between dropping resistor connector and chassis ground ***Connector & terminal*** ***(B4) No. 2 — Chassis ground:***	Is the resistance more than 1 MΩ?	Go to step **7.**	Repair short circuit in harness between dropping resistor and transmission connector.
7	**CHECK HARNESS CONNECTOR BETWEEN TCM AND TRANSMISSION.** 1)Turn the ignition switch to OFF. 2)Disconnect the connector from transmission and TCM. 3)Measure the resistance of harness between TCM and transmission connector. ***Connector & terminal*** ***(B54) No. 9 — (B11) No. 5:***	Is the resistance less than 1 Ω?	Go to step **8.**	Repair open circuit in harness between TCM and transmission connector
8	**CHECK HARNESS CONNECTOR BETWEEN TCM AND CHASSIS GROUND.** Measure the resistance of harness between TCM and chassis ground. ***Connector & terminal*** ***(B54) No. 9 — Chassis ground:***	Is the resistance more than 1 MΩ?	Go to step **9.**	Repair short circuit in harness between TCM and transmission connector.
9	**CHECK LINE PRESSURE DUTY SOLENOID.** Measure the resistance between transmission connector receptacle's terminals. ***Terminal*** ***(T4) No. 5 — No. 16:***	Is the resistance between 2.0 and 4.5 Ω?	Go to step **10.**	Go to step **16.**
10	**PREPARE SUBARU SELECT MONITOR.**	Do you have a Subaru Select Monitor?	Go to step **13.**	Go to step **11.**

	Step	Check	Yes	No
11	**CHECK OUTPUT SIGNAL EMITTED FROM TCM.** 1)Connect all connectors. 2)Start the engine and warm-up the transmission until the ATF temperature is above 80°C (176°F). NOTE: If the ambient temperature is below 0°C (32°F), drive the vehicle until the ATF reaches its operating temperature. 3)Turn the ignition switch to ON (engine OFF). 4)Move the select lever to "N". 5)Measure the voltage between TCM connector and chassis ground. ***Connector & terminal*** ***(B54) No. 9 (+) — Chassis ground (–):***	Is the voltage between 1.5 and 5.0 V with throttle fully closed?	Go to step **12.**	Go to step **15.**
12	**CHECK OUTPUT SIGNAL EMITTED FROM TCM.** Measure the voltage between TCM connector and chassis ground. ***Connector & terminal*** ***(B54) No. 9 (+) — Chassis ground (–):***	Is the voltage less than 1 V with throttle fully open?	Even if the AT OIL TEMP warning lights up, the circuit has returned to a normal condition at this time. A temporary poor contact of the connector or harness may be the cause. Repair harness or connector in transmission.	Go to step **15.**
13	**CHECK OUTPUT SIGNAL EMITTED FROM TCM USING SUBARU SELECT MONITOR.** 1)Connect the connectors to TCM and transmission. 2)Connect the Subaru Select Monitor to data link connector. 3)Start the engine, and turn the Subaru Select Monitor switch to ON. 4)Warm-up the transmission until the ATF temperature is above 80°C (176°F). NOTE: If the ambient temperature is below 0°C (32°F), drive the vehicle until the ATF reaches its operating temperature. 5)Stop the engine and turn the ignition switch to ON (engine OFF). 6)Move the select lever to "N". 7)Read the data of line pressure duty solenoid using Subaru Select Monitor. •Line pressure duty solenoid is indicated in "%". 1)Throttle is fully closed.	Is the value 100%?	Go to step **14.**	Go to step **15.**

	Step	Check	Yes	No
14	**CHECK OUTPUT SIGNAL EMITTED FROM TCM USING SUBARU SELECT MONITOR.** 1)Turn the ignition switch to ON (Engine OFF). 2)Throttle is fully open.	Is the value less than 25%?	Even if the AT OIL TEMP warning lights up, the circuit has returned to a normal condition at this time. A temporary poor contact of the connector or harness may be the cause. Repair harness or connector in transmission.	Go to step **15.**
15	**CHECK POOR CONTACT.**	Is there poor contact in line pressure duty solenoid circuit?	Repair poor contact.	Replace the TCM. <Ref. to AT-45, Transmission Control Module (TCM).>
16	**CHECK LINE PRESSURE DUTY SOLENOID (IN TRANSMISSION).** 1)Remove the transmission connector from bracket. 2)Drain the automatic transmission fluid. **CAUTION:** **Do not drain the automatic transmission fluid until it cools down.** 3)Remove the oil pan, and disconnect the connector from line pressure duty solenoid. 4)Measure the resistance between line pressure duty solenoid connector and transmission ground. ***Terminal*** ***No. 1 — Transmission ground:***	Is the resistance between 2.0 and 4.5 Ω?	Go to step **17.**	Replace the line pressure duty solenoid. <Ref. to AT-39, Shift Solenoids, Duty Solenoids and ATF Temperature Sensor.>
17	**CHECK HARNESS CONNECTOR BETWEEN TRANSMISSION AND LINE PRESSURE DUTY SOLENOID.** Measure the resistance of harness between line pressure duty solenoid and transmission connector. ***Connector & terminal*** ***(T4) No. 5 — (AT2) No. 1:***	Is the resistance less than 1 Ω?	Go to step **18.**	Repair open circuit in harness between line pressure duty solenoid and transmission connector.
18	**CHECK HARNESS CONNECTOR BETWEEN TRANSMISSION AND LINE PRESSURE DUTY SOLENOID.** Measure the resistance of harness between transmission connector and transmission ground. ***Connector & terminal*** ***(T4) No. 5 — Transmission ground:***	Is the resistance more than 1 MΩ?	Even if the AT OIL TEMP warning lights up, the circuit has returned to a normal condition at this time. A temporary poor contact of the connector or harness may be the cause. Repair harness or connector in line pressure duty solenoid and transmission.	Repair short circuit in harness between line pressure duty solenoid and transmission connector.

N: DTC 76 2–4 BRAKE DUTY SOLENOID

DIAGNOSIS:
Output signal circuit of 2-4 brake duty solenoid is open or shorted.
TROUBLE SYMPTOM:
Excessive shift shock.
WIRING DIAGRAM:

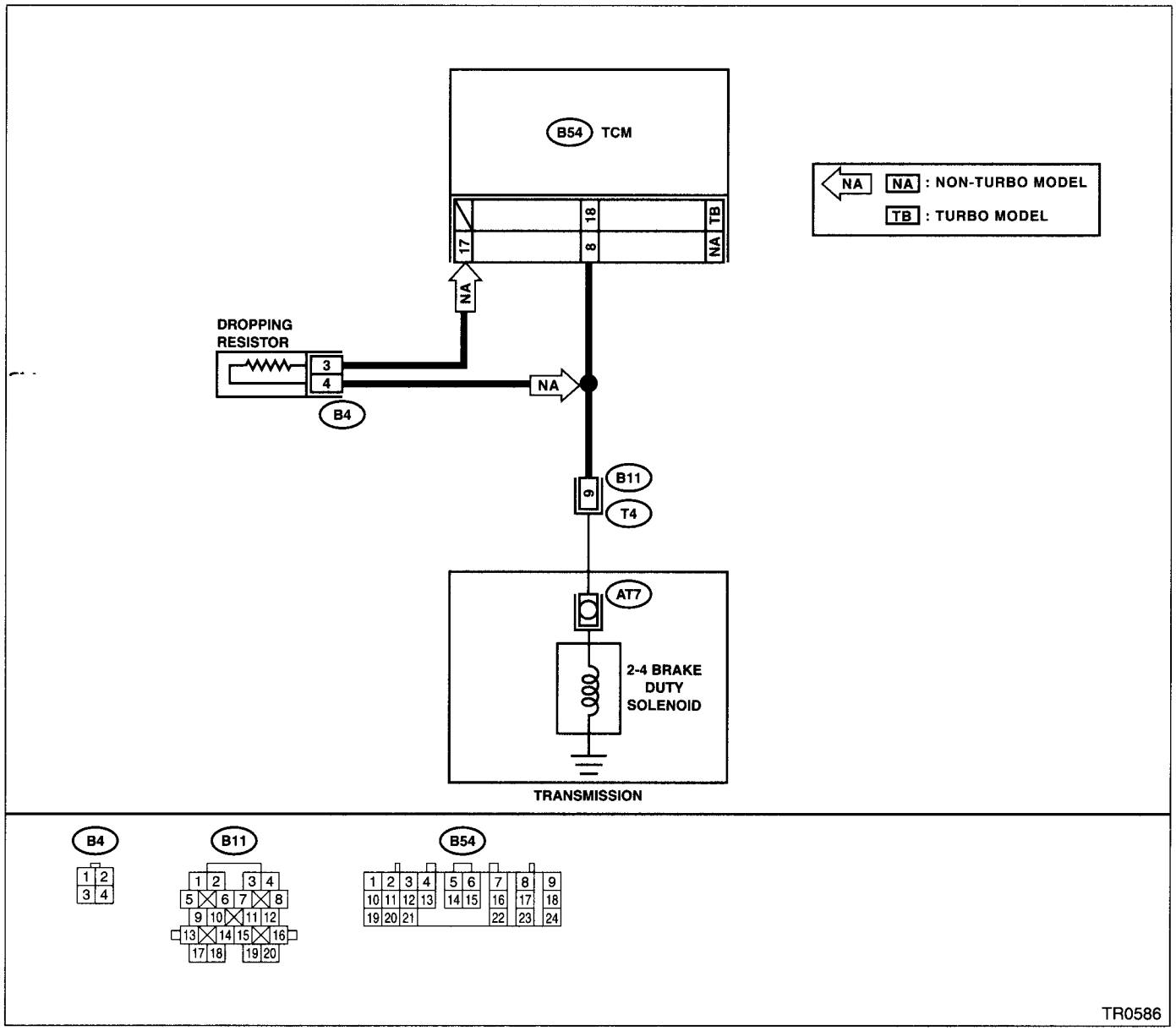

Step		Check	Yes	No
1	**CHECK VEHICLE.**	Is the target non-turbo model?	Go to step **2.**	Go to step **7.**
2	**CHECK RESISTOR.** 1)Turn the ignition switch to OFF. 2)Disconnect the connector from dropping resistor. 3)Measure the resistance between dropping resistor terminal. ***Terminals*** ***No. 3 — No. 4:***	Is the resistance between 9 and 15 Ω?	Go to step **3.**	Replace the dropping resistor. <Ref. to AT-46, Dropping Resistor.>

	Step	Check	Yes	No
3	**CHECK HARNESS CONNECTOR BETWEEN TCM AND DROPPING RESISTOR.** 1)Disconnect the connector from TCM. 2)Measure the resistance of harness between TCM connector and dropping resistor connector. ***Connector & terminal*** ***(B54) No. 17 — (B4) No. 3:***	Is the resistance less than 1 Ω?	Go to step **4.**	Repair open circuit in harness between TCM and dropping resistor connector.
4	**CHECK HARNESS CONNECTOR BETWEEN TCM AND DROPPING RESISTOR.** Measure the resistance of harness between dropping resistor connector and chassis ground. ***Connector & terminal*** ***(B4) No. 3 — Chassis ground:***	Is the resistance more than 1 MΩ?	Go to step **5.**	Repair short circuit in harness between TCM and dropping resistor connector.
5	**CHECK HARNESS CONNECTOR BETWEEN TRANSMISSION AND DROPPING RESISTOR.** 1)Disconnect the connector from transmission. 2)Measure the resistance of harness between transmission and dropping resistor connector. ***Connector & terminal*** ***(B4) No. 4 — (B11) No. 9:***	Is the resistance less than 1 Ω?	Go to step **6.**	Repair open circuit in harness between dropping resistor and transmission connector.
6	**CHECK HARNESS CONNECTOR BETWEEN TRANSMISSION AND DROPPING RESISTOR.** Measure the resistance of harness between dropping resistor connector and chassis ground. ***Connector & terminal*** ***(B4) No. 4 — Chassis ground:***	Is the resistance more than 1 MΩ?	Go to step **7.**	Repair short circuit in harness between dropping resistor and transmission connector.
7	**CHECK HARNESS CONNECTOR BETWEEN TCM AND TRANSMISSION.** 1)Turn the ignition switch to OFF. 2)Disconnect the connector from transmission and TCM. 3)Measure the resistance of harness between TCM and transmission connector. ***Connector & terminal*** ***Non-turbo model*** ***(B54) No. 8 — (B11) No. 9:*** ***Turbo model*** ***(B54) No. 18 — (B11) No. 9:***	Is the resistance less than 1 Ω?	Go to step **8.**	Repair open circuit in harness between TCM and transmission connector.
8	**CHECK HARNESS CONNECTOR BETWEEN TCM AND CHASSIS GROUND.** Measure the resistance of harness between TCM and chassis ground. ***Connector & terminal*** ***Non-turbo model*** ***(B54) No. 8 — Chassis ground:*** ***Turbo model*** ***(B54) No. 18 — Chassis ground:***	Is the resistance more than 1 MΩ?	Go to step **9.**	Repair short circuit in harness between TCM and transmission connector.
9	**CHECK 2-4 BRAKE DUTY SOLENOID.** Measure the resistance between transmission connector receptacle's terminals. ***Terminal*** ***(T4) No. 16 — No. 9:***	Is the resistance between 2.0 and 4.5 Ω?	Go to step **10.**	Go to step **16.**
10	**PREPARE SUBARU SELECT MONITOR.**	Do you have a Subaru Select Monitor?	Go to step **13.**	Go to step **11.**

	Step	Check	Yes	No
11	**CHECK OUTPUT SIGNAL EMITTED FROM TCM.** 1)Connect all connectors. 2)Start the engine and warm-up the transmission until the ATF temperature is above 80°C (176°F). NOTE: If the ambient temperature is below 0°C (32°F), drive the vehicle until the ATF reaches its operating temperature. 3)Turn the ignition switch to ON (engine OFF). 4)Move the select lever to "N". 5)Measure the voltage between TCM connector and chassis ground. ***Connector & terminal*** ***Non-turbo model*** ***(B54) No. 8 (+) — Chassis ground (–):*** ***Turbo model*** ***(B54) No. 18 (+) — Chassis ground (–):***	Is the voltage between 1.5 and 5.0 V with throttle fully closed?	Go to step **12.**	Go to step **15.**
12	**CHECK OUTPUT SIGNAL EMITTED FROM TCM.** Measure the voltage between TCM connector and chassis ground. ***Connector & terminal*** ***Non-turbo model*** ***(B54) No. 8 (+) — Chassis ground (–):*** ***Non-turbo model*** ***(B54) No. 18 (+) — Chassis ground (–):***	Is the voltage less than 1 V with throttle fully open?	Even if the AT OIL TEMP warning lights up, the circuit has returned to a normal condition at this time. A temporary poor contact of the connector or harness may be the cause. Repair harness or connector in TCM and transmission.	Go to step **15.**
13	**CHECK OUTPUT SIGNAL EMITTED FROM TCM USING SUBARU SELECT MONITOR.** 1)Connect all connectors. 2)Connect the Subaru Select Monitor to data link connector. 3)Start the engine, and turn the Subaru Select Monitor switch to ON. 4)Warm-up the transmission until the ATF temperature is above 80°C (176°F). NOTE: If the ambient temperature is below 0°C (32°F), drive the vehicle until the ATF reaches its operating temperature. 5)Stop the engine and turn the ignition switch to ON (engine OFF). 6)Move the select lever to "N". 7)Read the data of 2-4 brake duty solenoid using Subaru Select Monitor. •2-4 brake duty solenoid is indicated in "%". 1)Throttle is fully closed.	Is the value 100%?	Go to step **14.**	Go to step **15.**

	Step	Check	Yes	No
14	**CHECK OUTPUT SIGNAL EMITTED FROM TCM USING SUBARU SELECT MONITOR.** 1)Turn the ignition switch to ON (Engine OFF). 2)Throttle is fully open.	Is the value less than 25%?	Even if the AT OIL TEMP warning lights up, the circuit has returned to a normal condition at this time. A temporary poor contact of the connector or harness may be the cause. Repair harness or connector in TCM and transmission.	Go to step **15.**
15	**CHECK POOR CONTACT.**	Is there poor contact in 2-4 brake duty solenoid circuit?	Repair poor contact.	Replace the TCM. <Ref. to AT-45, Transmission Control Module (TCM).>
16	**CHECK 2-4 BRAKE DUTY SOLENOID (IN TRANSMISSION).** 1)Remove the transmission connector from bracket. 2)Drain the automatic transmission fluid. **CAUTION:** **Do not drain the automatic transmission fluid until it cools down.** 3)Remove the oil pan, and disconnect the connector from 2-4 brake duty solenoid. 4)Measure the resistance between 2-4 brake duty solenoid connector and transmission ground. ***Terminal*** ***No. 1 — Transmission ground:***	Is the resistance between 2.0 and 4.5 Ω?	Go to step **17.**	Replace the 2-4 brake duty solenoid. <Ref. to AT-39, Shift Solenoids, Duty Solenoids and ATF Temperature Sensor.>
17	**CHECK HARNESS CONNECTOR BETWEEN TRANSMISSION AND 2-4 BRAKE DUTY SOLENOID.** Measure the resistance of harness between 2-4 brake duty solenoid and transmission connector. ***Connector & terminal*** ***(T4) No. 9 — (AT7) No. 1:***	Is the resistance less than 1 Ω?	Go to step **18.**	Repair open circuit in harness between 2-4 brake duty solenoid and transmission connector.
18	**CHECK HARNESS CONNECTOR BETWEEN TRANSMISSION AND 2-4 BRAKE DUTY SOLENOID.** Measure the resistance of harness between transmission connector and transmission ground. ***Connector & terminal*** ***(T4) No. 9 — Transmission ground:***	Is the resistance more than 1 MΩ?	Even if the AT OIL TEMP warning lights up, the circuit has returned to a normal condition at this time. A temporary poor contact of the connector or harness may be the cause. Repair harness or connector in line pressure duty solenoid and transmission.	Repair short circuit in harness between 2-4 brake duty solenoid and transmission connector.

O: DTC 77 LOCK-UP DUTY SOLENOID

DIAGNOSIS:
Output signal circuit of lock-up duty solenoid is open or shorted.
TROUBLE SYMPTOM:
No "lock-up" (after engine warm-up).
WIRING DIAGRAM:

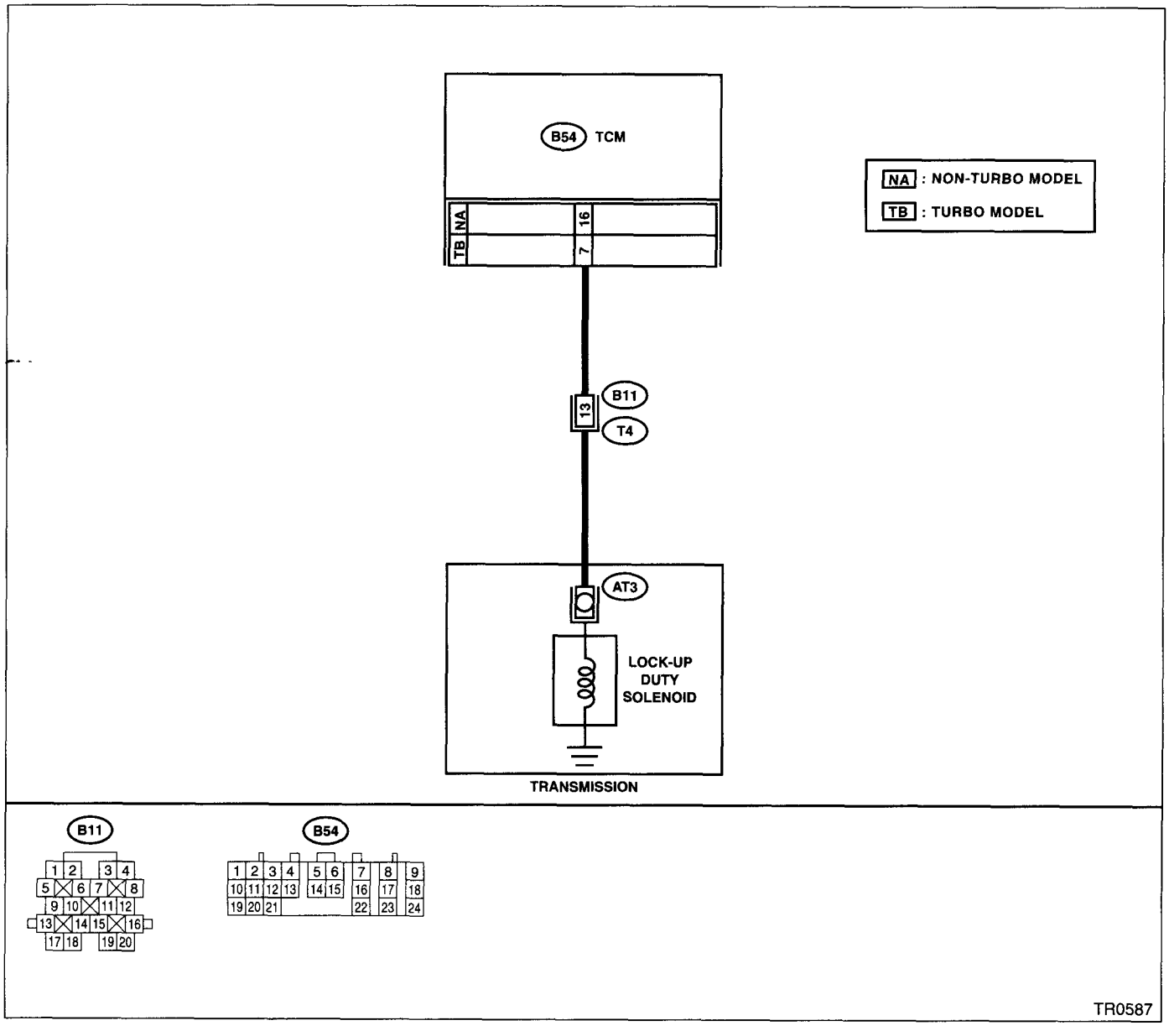

	Step	Check	Yes	No
1	**CHECK DTC.**	Do multiple trouble codes appear in the on-board diagnostics test mode?	Go to another trouble code.	Go to step **2.**
2	**CHECK HARNESS CONNECTOR BETWEEN TCM AND TRANSMISSION.** 1)Turn the ignition switch to OFF. 2)Disconnect the connector from TCM and transmission. 3)Measure the resistance of harness between TCM and transmission connector. ***Connector & terminal*** ***Non-turbo model*** ***(B54) No. 16 — (B11) No. 13:*** ***Turbo model*** ***(B54) No. 7 — (B11) No. 13:***	Is the resistance less than 1 Ω?	Go to step **3.**	Repair open circuit in harness between TCM and transmission connector.
3	**CHECK HARNESS CONNECTOR BETWEEN TCM AND TRANSMISSION.** Measure the resistance of harness connector between TCM and chassis ground. ***Connector & terminal*** ***Non-turbo model*** ***(B54) No. 16 — Chassis ground:*** ***Turbo model*** ***(B54) No. 7 — Chassis ground:***	Is the resistance more than 1 MΩ?	Go to step **4.**	Repair short circuit in harness between TCM and transmission connector.
4	**CHECK LOCK-UP DUTY SOLENOID.** Measure the resistance between transmission connector receptacle's terminals. ***Connector & terminal*** ***(T4) No. 13 — No. 16:***	Is the resistance between 10 and 17 Ω?	Go to step **5.**	Go to step **11.**
5	**PREPARE SUBARU SELECT MONITOR.**	Do you have a Subaru Select Monitor?	Go to step **8.**	Go to step **6.**

	Step	Check	Yes	No
6	**CHECK OUTPUT SIGNAL EMITTED FROM TCM.** 1)Connect the connectors to TCM and transmission. 2)Lift-up the vehicle and place safety stand. **CAUTION:** **On AWD models, raise all wheels off ground.** 3)Start the engine and warm-up the transmission until the ATF temperature is above 80°C (176°F). NOTE: If the ambient temperature is below 0°C (32°F), drive the vehicle until the ATF reaches its operating temperature. 4)Move the select lever to "D" and slowly increase the vehicle speed to 75 km/h (47 MPH). Wheels will lock-up. NOTE: The speed difference between front and rear wheels may light the ABS warning light, but this indicates no malfunction. When the AT control diagnosis is finished, perform the ABS memory clearance procedure of on-board diagnostics system. <Ref. to ABS-22, Clear Memory Mode.> 5)Measure the voltage between TCM connector and chassis ground. ***Connector & terminal*** ***Non-turbo model*** ***(B54) No. 16 (+) — Chassis ground (–):*** ***Turbo model*** ***(B54) No. 7 (+) — Chassis ground (–):***	Is the voltage more than 8.5 V?	Go to step **7.**	Go to step **10.**
7	**CHECK OUTPUT SIGNAL EMITTED FROM TCM.** 1)Return the engine to idling speed and move the select lever to "N". 2)Measure the voltage between TCM connector and chassis ground. ***Connector & terminal*** ***Non-turbo model*** ***(B54) No. 16 (+) — Chassis ground (–):*** ***Turbo model*** ***(B54) No. 7 (+) — Chassis ground (–):***	Is the voltage less than 0.5 V?	Even if the AT OIL TEMP warning lights up, the circuit has returned to a normal condition at this time. A temporary poor contact of the connector or harness may be the cause. Repair harness or connector in TCM and transmission.	Go to step **10.**

	Step	Check	Yes	No
8	**CHECK OUTPUT SIGNAL EMITTED FROM TCM USING SUBARU SELECT MONITOR.** 1)Connect the connectors to TCM and transmission. 2)Lift-up the vehicle and place safety stand. **CAUTION:** **On AWD models, raise all wheels off ground.** 3)Connect the Subaru Select Monitor to data link connector. 4)Start the engine, and turn the Subaru Select Monitor switch to ON. 5)Start the engine and warm-up the transmission until the ATF temperature is above 80°C (176°F). NOTE: If the ambient temperature is below 0°C (32°F), drive the vehicle until the ATF reaches its operating temperature. 6)Read the data of lock-up duty solenoid using Subaru Select Monitor. •Lock-up duty solenoid is indicated in "%". 1)Move the select lever to "D" and slowly increase the vehicle speed to 75 km/h (47 MPH). Wheels will lock-up. NOTE: The speed difference between front and rear wheels may light the ABS warning light, but this indicates no malfunction. When the AT control diagnosis is finished, perform the ABS memory clearance procedure of on-board diagnostics system. <Ref. to ABS-22, Clear Memory Mode.>	Is the value 95%?	Go to step **9.**	Go to step **10.**
9	**CHECK OUTPUT SIGNAL EMITTED FROM TCM USING SUBARU SELECT MONITOR.** Return the engine to idling speed and move the select lever to "N". NOTE: The speed difference between front and rear wheels may light the ABS warning light, but this indicates no malfunction. When AT control diagnosis is finished, perform the ABS memory clearance procedure of on-board diagnostics system. <Ref. to ABS-22, Clear Memory Mode.>	Is the value 5%?	Even if the AT OIL TEMP warning lights up, the circuit has returned to a normal condition at this time. A temporary poor contact of the connector or harness may be the cause. Repair harness or connector in TCM and transmission.	Go to step **10.**
10	**CHECK POOR CONTACT.**	Is there poor contact in lock-up duty solenoid circuit?	Repair poor contact.	Replace the TCM. <Ref. to AT-45, Transmission Control Module (TCM).>

	Step	Check	Yes	No
11	**CHECK LOCK-UP DUTY SOLENOID (IN TRANSMISSION).** 1)Remove the transmission connector from bracket. 2)Drain the automatic transmission fluid. **CAUTION:** **Do not drain the automatic transmission fluid until it cools down.** 3)Remove the oil pan, and disconnect the connector from lock-up duty solenoid. 4)Measure the resistance between lock-up duty solenoid connector and transmission ground. ***Terminal*** ***No. 1 — Transmission ground:***	Is the resistance between 10 and 17 Ω?	Go to step **12.**	Replace the lock-up duty solenoid. <Ref. to AT-39, Shift Solenoids, Duty Solenoids and ATF Temperature Sensor.>
12	**CHECK HARNESS CONNECTOR BETWEEN LOCK-UP DUTY SOLENOID AND TRANSMISSION.** Measure the resistance of harness between lock-up duty solenoid and transmission connector. ***Connector & terminal*** ***(T4) No. 13 — (AT3) No. 1:***	Is the resistance less than 1 Ω?	Go to step **13.**	Repair open circuit in harness between TCM and transmission connector.
13	**CHECK HARNESS CONNECTOR BETWEEN LOCK-UP DUTY SOLENOID AND TRANSMISSION.** Measure the resistance of harness between transmission connector and transmission ground. ***Connector & terminal*** ***(T4) No. 13 — Transmission ground:***	Is the resistance more than 1 MΩ?	Even if the AT OIL TEMP warning lights up, the circuit has returned to a normal condition at this time. A temporary poor contact of the connector or harness may be the cause. Repair harness or connector in lock-up duty solenoid and transmission.	Repair short circuit in harness between lock-up duty solenoid and transmission connector.

P: DTC 79 TRANSFER DUTY SOLENOID

DIAGNOSIS:
Output signal circuit of transfer duty solenoid is open or shorted.
TROUBLE SYMPTOM:
Excessive "braking" in tight corners.
WIRING DIAGRAM:

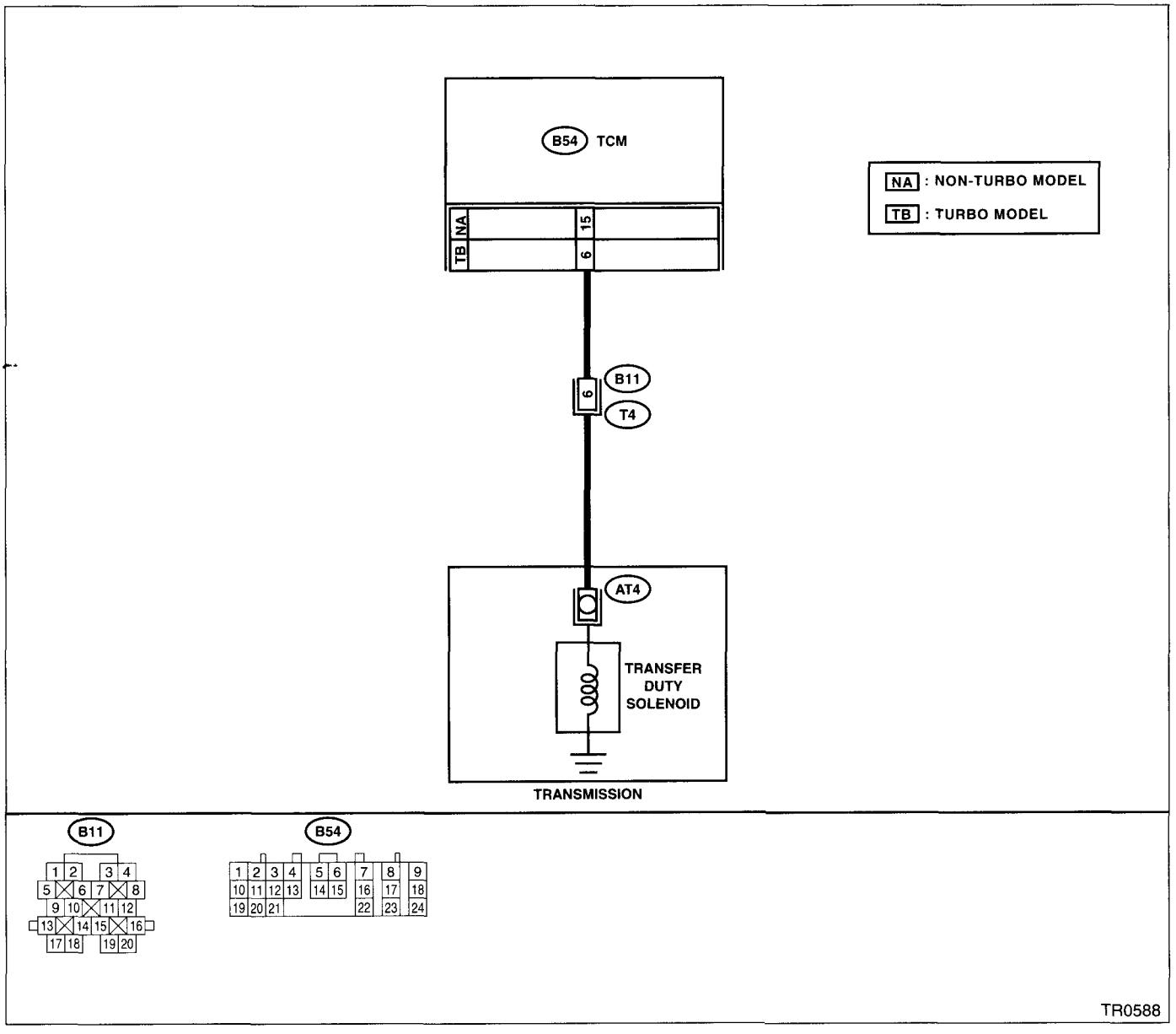

	Step	Check	Yes	No
1	**CHECK HARNESS CONNECTOR BETWEEN TCM AND TRANSMISSION.** 1)Turn the ignition switch to OFF. 2)Disconnect the connector from TCM and transmission. 3)Measure the resistance of harness between TCM and transmission connector. ***Connector & terminal*** ***Non-turbo model*** ***(B54) No. 15 — (B11) No. 6:*** ***Turbo model*** ***(B54) No. 6 — (B11) No. 6:***	Is the resistance less than 1 Ω?	Go to step **2.**	Repair open circuit in harness between TCM and transmission connector.
2	**CHECK HARNESS CONNECTOR BETWEEN TCM AND TRANSMISSION.** Measure the resistance harness connector between TCM and chassis ground. ***Connector & terminal*** ***Non-turbo model*** ***(B54) No. 15 — Chassis ground:*** ***Turbo model*** ***(B54) No. 6 — Chassis ground:***	Is the resistance more than 1 MΩ?	Go to step **3.**	Repair short circuit in harness between TCM and transmission connector.
3	**CHECK TRANSFER DUTY SOLENOID.** Measure the resistance between transmission connector and transmission terminals. ***Connector & terminal*** ***(T4) No. 6 — No. 16:***	Is the resistance between 10 and 17 Ω?	Go to step **4.**	Go to step **13.**
4	**PREPARE SUBARU SELECT MONITOR.**	Do you have a Subaru Select Monitor?	Go to step **7.**	Go to step **5.**
5	**CHECK OUTPUT SIGNAL EMITTED FROM TCM.** 1)Connect the connectors to TCM and transmission. 2)Turn the ignition switch to ON (engine OFF). 3)Throttle is fully closed. 4)Measure the voltage between TCM connector and chassis ground. ***Connector & terminal*** ***Non-turbo model*** ***(B54) No. 15 (+) — Chassis ground (–):*** ***Turbo model*** ***(B54) No. 6 (+) — Chassis ground (–):***	Is the voltage less than 1 V in "P" range?	Go to step **6.**	Go to step **12.**
6	**CHECK OUTPUT SIGNAL EMITTED FROM TCM.** Measure the voltage between TCM connector and chassis ground. ***Connector & terminal*** ***Non-turbo model*** ***(B54) No. 15 (+) — Chassis ground (–):*** ***Turbo model*** ***(B54) No. 6 (+) — Chassis ground (–):***	Is the voltage between 5 and 7 V in "D" range?	Even if the AT OIL TEMP warning lights up, the circuit has returned to a normal condition at this time. A temporary poor contact of the connector or harness may be the cause. Repair harness or connector in the TCM and transmission.	Go to step **12.**
7	**CHECK VEHICLE**	Is the target non-turbo model ?	Go to step **8.**	Go to step **10.**

	Step	Check	Yes	No
8	**CHECK OUTPUT SIGNAL EMITTED FROM TCM USING SUBARU SELECT MONITOR.** 1)Connect the connectors to TCM and transmission. 2)Connect the Subaru Select Monitor to data link connector. 3)Turn the ignition switch to ON (engine OFF) and turn the Subaru Select Monitor switch to ON. 4)Move the select lever to "D" with throttle fully open (vehicle speed 0 km/h or 0 MPH). 5)Read the data of transfer duty solenoid using Subaru Select Monitor. •Transfer duty solenoid is indicated in "%".	Is the value between 5 and 10%?	Go to step **9.**	Go to step **12.**
9	**CHECK OUTPUT SIGNAL EMITTED FROM TCM USING SUBARU SELECT MONITOR.** 1)Move the select lever to "D" with throttle fully closed (vehicle speed 0 km/h or 0 MPH). 2)Rear the data of transfer duty solenoid using Subaru Select Monitor. •Transfer duty solenoid is indicated in "%".	Is the value between approx. 60% and approx. 70%?	Even if the AT OIL TEMP warning lights up, the circuit has returned to a normal condition at this time. A temporary poor contact of the connector or harness may be the cause. Repair harness or connector in the TCM and transmission.	Go to step **12.**
10	**CHECK OUTPUT SIGNAL EMITTED FROM TCM USING SUBARU SELECT MONITOR.** 1)Connect connectors to TCM and transmission. 2)Connect Subaru Select Monitor to data link connector. 3)Turn ignition switch to ON (engine OFF) and turn Subaru Select Monitor switch to ON. 4)Move select lever to "D" with throttle fully open (vehicle speed 0 km/h or 0 MPH). 5)Read data of transfer duty solenoid using Subaru Select Monitor. •Transfer duty solenoid is indicated in "%".	Is the value between 80 and 95%?	Go to step **11.**	Go to step **12.**
11	**CHECK OUTPUT SIGNAL EMITTED FROM TCM USING SUBARU SELECT MONITOR.** 1)Move select lever to "N" with throttle fully close (vehicle speed 0 km/h or 0 MPH). 2)Rear data of transfer duty solenoid using Subaru Select Monitor. •Transfer duty solenoid is indicated in "%".	Is the value approx. 40%?	Even if the AT OIL TEMP warning lights up, the circuit has returned to a normal condition at this time. A temporary poor contact of the connector or harness may be the cause. Repair harness or connector in the transfer duty solenoid and TCM connector.	Go to step **12.**

	Step	Check	Yes	No
12	**CHECK POOR CONTACT.**	Is there poor contact in transfer duty solenoid circuit?	Repair poor contact.	Replace the TCM. <Ref. to AT-45, Transmission Control Module (TCM).>
13	**CHECK TRANSFER DUTY SOLENOID (IN TRANSMISSION).** 1)Lift-up the vehicle and place safety stand. **CAUTION:** **On AWD models, raise all wheels off ground.** 2)Drain the automatic transmission fluid. **CAUTION:** **Do not drain the automatic transmission fluid until it cools down.** 3)Remove the extension case, and disconnect the connector from transfer duty solenoid. 4)Measure the resistance between transfer duty solenoid connector and transmission ground. ***Connector & terminal*** ***(AT4) No. 1 — Transmission ground:***	Is the resistance between 10 and 17 Ω?	Go to step **14.**	Replace the transfer duty solenoid.
14	**CHECK HARNESS CONNECTOR BETWEEN TRANSFER DUTY SOLENOID AND TRANSMISSION.** Measure the resistance of harness between transfer duty solenoid and transmission connector. ***Connector & terminal*** ***(T4) No. 6 — (AT4) No. 1:***	Is the resistance less than 1 Ω?	Go to step **15.**	Repair open circuit in harness between transfer duty solenoid and transmission connector.
15	**CHECK HARNESS CONNECTOR BETWEEN TRANSFER DUTY SOLENOID AND TRANSMISSION.** Measure the resistance of harness between transmission connector and transmission ground. ***Connector & terminal*** ***(T4) No. 6 — Transmission ground:***	Is the resistance more than 1 MΩ?	Even if the AT OIL TEMP warning lights up, the circuit has returned to a normal condition at this time. A temporary poor contact of the connector or harness may be the cause. Repair harness or contact in the transfer duty solenoid and transmission.	Repair short circuit in harness between transfer duty solenoid and transmission connector.

Q: DTC 93 REAR VEHICLE SPEED SENSOR

DIAGNOSIS:
Input signal circuit of TCM is open or shorted.
TROUBLE SYMPTOM:
No lock-up or excessive tight corner "braking".
WIRING DIAGRAM:

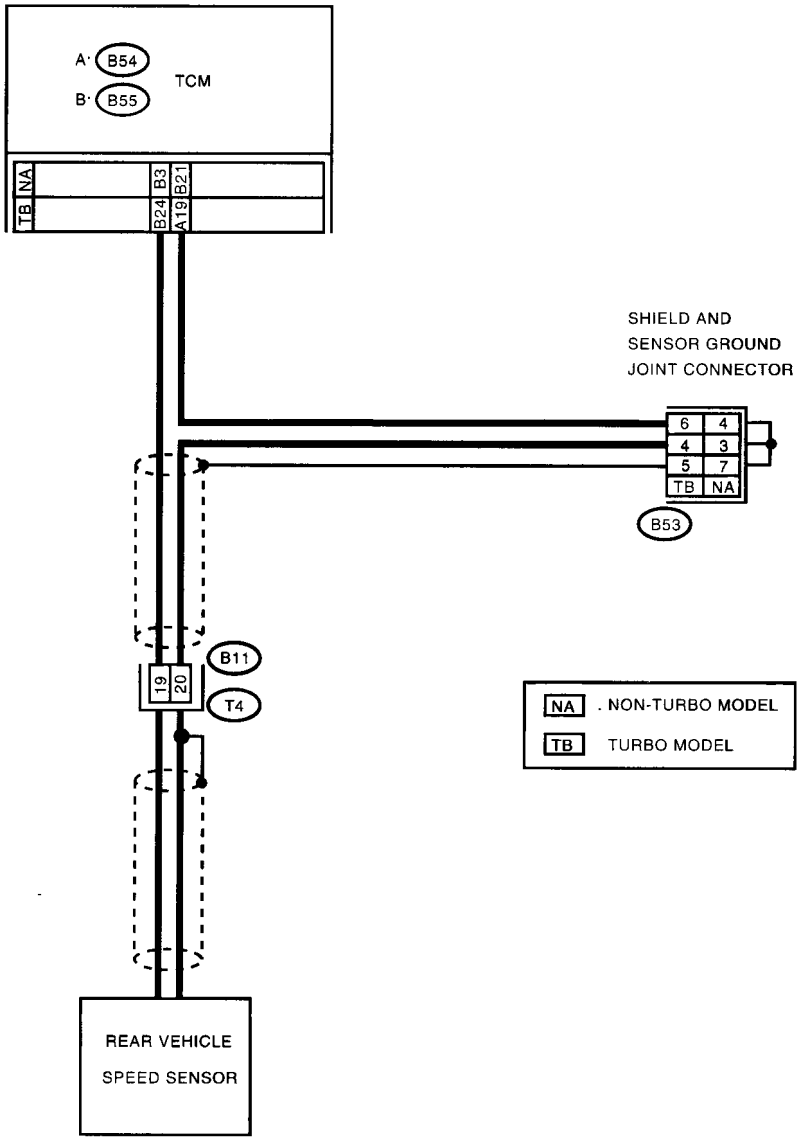

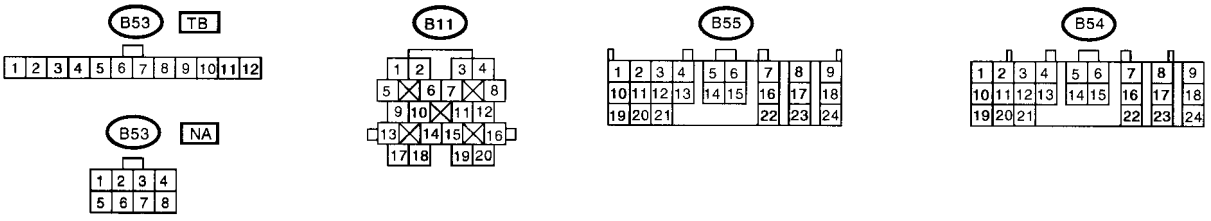

TR0589

Step	Check	Yes	No
CHECK HARNESS CONNECTOR BETWEEN TCM AND TRANSMISSION. 1)Turn the ignition switch to OFF 2)Disconnect the connector from TCM and transmission 3)Measure the resistance of harness between TCM and transmission connector. ***Connector & terminal*** ***Non-turbo model*** ***(B55) No. 3 — (B11) No. 19:*** ***Turbo model*** ***(B55) No. 24 — (B11) No. 19:***	s the resistance less than 1 Ω?	Go to step **2.**	Repair open circuit in harness between TCM and transmission connector.
CHECK HARNESS CONNECTOR BETWEEN TCM AND TRANSMISSION. Measure the resistance of harness between TCM and transmission connector ***Connector & terminal*** ***Non-turbo model*** ***(B55) No. 21 — (B11) No. 20:*** ***Turbo model*** ***(B54) No. 19 — (B11) No. 20:***	s the resistance less than 1 Ω?	Go to step **3.**	Repair open circuit in harness between TCM and transmission, and poor contact in coupling connector.
CHECK HARNESS CONNECTOR BETWEEN TCM AND TRANSMISSION. Measure the resistance of harness between TCM and chassis ground. ***Connector & terminal*** ***Non-turbo model*** ***(B55) No. 3 — Chassis ground:*** ***Turbo model*** ***(B55) No. 24 — Chassis ground:***	s the resistance more than 1 MΩ?	Go to step **4.**	Repair short circuit in harness between TCM and transmission connector.
CHECK HARNESS CONNECTOR BETWEEN TCM AND TRANSMISSION. Measure the resistance of harness between TCM and chassis ground. ***Connector & terminal*** ***Non-turbo model*** ***(B55) No. 21 — Chassis ground:*** ***Turbo model*** ***(B54) No. 19 — Chassis ground:***	s the resistance more than 1 MΩ?	Go to step **5.**	Repair short circuit in harness between TCM and transmission connector.
CHECK REAR VEHICLE SPEED SENSOR. Measure the resistance between transmission connector receptacle's terminals ***Connector & terminal*** ***(T4) No. 19 — No. 20:***	s the resistance between 450 and 650 Ω?	Go to step **6.**	Replace the rear vehicle speed sen sor. <Ref to AT-35, Rear Vehicle Speed Sensor.>
PREPARE OSCILLOSCOPE.	Do you have an oscilloscope?	Go to step **10.**	Go to step **7.**
PREPARE SUBARU SELECT MONITOR.	Do you have a Subaru Select Monitor?	Go to step **9.**	Go to step **8.**

	Step	Check	Yes	No
8	**CHECK INPUT SIGNAL FOR TCM.** 1)Connect the connectors to TCM and transmission. 2)Lift-up or raise the vehicle and place safety stands. **CAUTION:** **On AWD models, raise all wheels off floor.** 3)Start the engine and set vehicle in 20 km/h (12 MPH) condition. NOTE: The speed difference between front and rear wheels may light the ABS warning light, but this indicates no malfunction. When the AT control diagnosis is finished, perform the ABS memory clearance procedure of on-board diagnostics system. <Ref. to ABS-22, Clear Memory Mode.> 4)Measure the voltage between TCM connector terminals. ***Connector & terminal*** ***Non-turbo model*** ***(B55) No. 3 (+) — (B54) No. 21 (–):*** ***Turbo model*** ***(B55) No. 24 (+) — (B54) No. 19 (–):***	Is the voltage more than AC 1 V?	Even if the AT OIL TEMP warning lights up, the circuit has returned to a normal condition at this time. A temporary poor contact of the connector or harness may be the cause. Repair harness or connector in the TCM and transmission.	Go to step **11.**
9	**CHECK INPUT SIGNAL FOR TCM USING SUBARU SELECT MONITOR.** 1)Connect the connectors to TCM and transmission. 2)Connect the Subaru Select Monitor to data link connector. 3)Lift-up or raise the vehicle and place safety stands. **CAUTION:** **Raise all wheels off floor.** 4)Turn the ignition switch to ON and turn the Subaru Select Monitor switch to ON. 5)Start the engine. 6)Read the data of vehicle speed using Subaru Select Monitor. •Compare the speedometer with Subaru Select Monitor indications. •Vehicle speed is indicated in "km/h" or "MPH". 1)Slowly increase the vehicle speed to 60 km/h or 37 MPH. NOTE: The speed difference between front and rear wheels may light the ABS warning light, but this indicates no malfunction. When the AT control diagnosis is finished, perform the ABS memory clearance procedure of on-board diagnostics system. <Ref. to ABS-22, Clear Memory Mode.>	Does the speedometer indication increase as the Subaru Select Monitor data increases?	Even if the AT OIL TEMP warning lights up, the circuit has returned to a normal condition at this time. A temporary poor contact of the connector or harness may be the cause. Repair harness or connector in the TCM and transmission.	Go to step **11.**

	Step	Check	Yes	No
10	**CHECK INPUT SIGNAL FOR TCM USING OSCILLOSCOPE.** 1)Connect the connectors to TCM and transmission. 2)Lift-up or raise the vehicle and place safety stands. **CAUTION:** **Raise all wheels off floor.** 3)Set the oscilloscope to TCM connector terminals. **Turbo model** Positive probe; (B55) No. 24 Earth lead; (B55) No. 19 **Non-turbo model** Positive probe; (B55) No. 3 Earth lead; (B55) No. 21 4)Start the engine and set the vehicle in 20 km/h (12 MPH) condition. NOTE: The speed difference between front and rear wheels may light the ABS warning light, but this indicates no malfunction. When the AT control diagnosis is finished, perform the ABS memory clearance procedure of on-board diagnostics system. <Ref. to ABS-22, Clear Memory Mode.> 5)Measure the signal voltage indicated on oscilloscope.	Is the signal voltage more than AC 1 V?	Even if the AT OIL TEMP warning lights up, the circuit has returned to a normal condition at this time. A temporary poor contact of the connector or harness may be the cause. Repair harness or connector in the TCM and transmission.	Go to step **11.**
11	**CHECK POOR CONTACT.**	Is there poor contact in rear vehicle speed sensor circuit?	Repair poor contact.	Replace the TCM. <Ref. to AT-45, Transmission Control Module (TCM).>

15.Diagnostic Procedure for No-Diagnostic Trouble Code (DTC)

A: CHECK GEAR POSITION.

	Step	Check	Yes	No
1	**CHECK GEAR POSITION.** 1)Lift-up the vehicle and place safety stand. **CAUTION:** **On AWD models, raise all wheels off ground.** 2)Start the engine. 3)Move the select lever to "D", and drive the vehicle. 4)Read the data of gear position using Subaru Select Monitor. •Gear position is indicated. NOTE: The speed difference between front and rear wheels may light the ABS warning light, but this indicates no malfunction. When the AT control diagnosis is finished, perform the ABS memory clearance procedure of on-board diagnostics system. <Ref. to ABS-22, Clear Memory Mode.>	Does the transmission gear correspond to the gear which is shown on display?	Go to step **2.**	Check shift solenoid 1 and shift solenoid 2 signal circuit. <Ref. to AT-70, DTC 71 SHIFT SOLENOID 1, Diagnostic Procedure with Diagnostic Trouble Code (DTC).> and <Ref. to AT-74, DTC 72 SHIFT SOLENOID 2, Diagnostic Procedure with Diagnostic Trouble Code (DTC).>
2	**CHECK VEHICLE.**	Is the target non-turbo model?	Go to step CHECK FWD SWITCH.<Ref. to AT-110, CHECK FWD SWITCH., Diagnostic Procedure for No-Diagnostic Trouble Code (DTC).>	Go to step CHECK BRAKE SWITCH. <Ref. to AT-112, CHECK BRAKE SWITCH., Diagnostic Procedure for No-Diagnostic Trouble Code (DTC).>

B: CHECK FWD SWITCH.

DIAGNOSIS:

- LED does not come on even if FWD switch is ON.
- FWD switch circuit is open or short.

WIRING DIAGRAM:

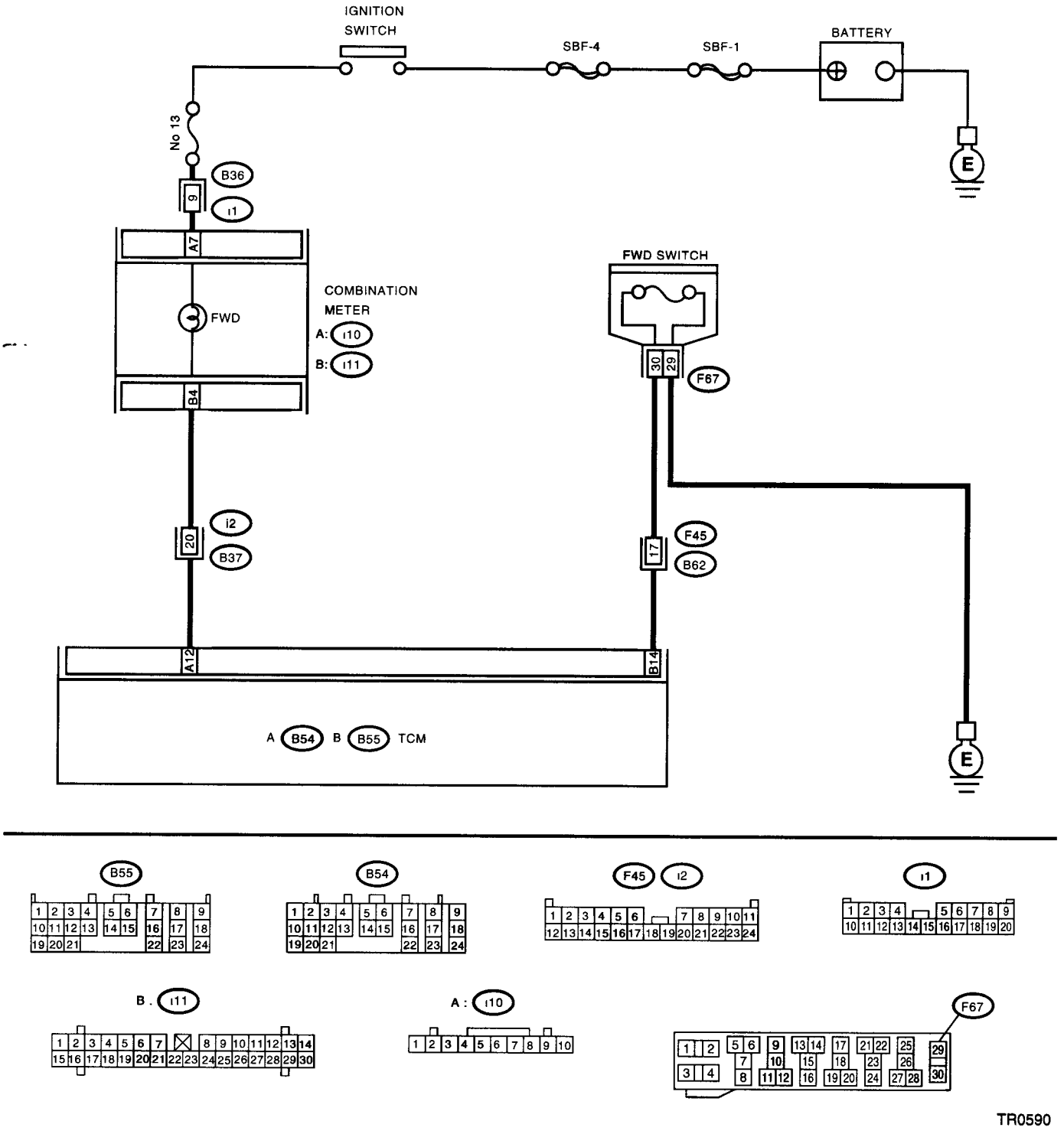

	Step	Check	Yes	No
1	**CHECK FWD SWITCH.**	When the fuse is inserted to FWD switch, does the LED light up?	Go to step CHECK BRAKE SWITCH.<Ref. to AT-112, CHECK BRAKE SWITCH., Diagnostic Procedure for No-Diagnostic Trouble Code (DTC).>	Go to step **2.**
2	**CHECK FWD INDICATOR LIGHT.** 1)Turn the ignition switch to OFF. 2)Remove the combination meter. 3)Remove the FWD indicator light bulb from combination meter.	Is the FWD indicator light bulb OK?	Go to step **3.**	Replace the FWD indicator light bulb. <Ref. to IDI-11, Combination Meter Assembly.>
3	**CHECK HARNESS CONNECTOR BETWEEN TCM AND FWD SWITCH.** 1)Turn the ignition switch to OFF. 2)Disconnect the connector from TCM and FWD switch. 3)Measure the resistance of harness between TCM and FWD switch connector. ***Connector & terminal*** ***(B55) No. 14 — (F67) No. 30:***	Is the resistance less than 1 Ω?	Go to step **4.**	Repair open circuit in harness between TCM and FWD switch connector.
4	**CHECK HARNESS CONNECTOR BETWEEN FWD SWITCH AND CHASSIS GROUND.** Measure the resistance of harness between FWD switch and chassis ground. ***Connector & terminal*** ***(F67) No. 29 — Chassis ground:***	Is the resistance less than 1 Ω?	Go to step **5.**	Repair open circuit in harness between FWD switch connector and chassis ground.
5	**CHECK HARNESS CONNECTOR BETWEEN TCM AND FWD SWITCH.** Measure the resistance of harness connector between TCM and body to make sure that circuit does not short. ***Connector & terminal*** ***(B55) No. 14 — Chassis ground:***	Is the resistance more than 1 MΩ?	Go to step **6.**	Repair short circuit in harness between TCM and FWD switch connector.
6	**CHECK INPUT SIGNAL FOR TCM.** 1)Turn the ignition switch to OFF. 2)Connect the connector to TCM and FWD switch. 3)Turn the ignition switch to ON. 4)Measure the signal voltage for TCM while installing the fuse to FWD switch connector. ***Connector & terminal*** ***(B55) No. 14 (+) — Chassis ground (–):***	Is the voltage less than 1 V in FWD switch while installing?	Go to step **7.**	Go to step **12.**
7	**CHECK INPUT SIGNAL FOR TCM.** Measure the signal voltage for TCM while removing the fuse from FWD switch connector. ***Connector & terminal*** ***(B55) No. 14 (+) — Chassis ground (–):***	Is the voltage more than 6 V in FWD switch while removing?	Go to step **8.**	Replace the TCM. <Ref. to AT-45, Transmission Control Module (TCM).>
8	**CHECK HARNESS CONNECTOR BETWEEN TCM AND COMBINATION METER.** 1)Turn the ignition switch to OFF. 2)Disconnect the connector from TCM and combination meter. 3)Measure the resistance of harness between TCM and diagnosis connector. ***Connector & terminal*** ***(B54) No. 12 — (i11) No. 4:***	Is the resistance less than 1 Ω?	Go to step **9.**	Repair open circuit in harness between TCM and combination meter and poor contact in coupling connector.

	Step	Check	Yes	No
9	**CHECK HARNESS CONNECTOR BETWEEN TCM AND COMBINATION METER.** Measure the resistance of harness connector between TCM and chassis ground to make sure that circuit does not short. ***Connector & terminal*** ***(B54) No. 12 — Chassis ground:***	Is the resistance more than 1 MΩ?	Go to step **10.**	Repair short circuit in harness between TCM and combination meter connector.
10	**CHECK OUTPUT SIGNAL EMITTED FROM TCM.** 1)Turn the ignition switch to OFF. 2)Connect the connector to TCM and combination meter. 3)Turn the ignition switch to ON. 4)Measure the signal voltage for TCM while installing and removing the fuse to FWD switch connector. ***Connector & terminal*** ***(B54) No. 12 — Chassis ground:***	Is the voltage less than 1 V in FWD switch while installing?	Go to step **11.**	Go to step **12.**
11	**CHECK OUTPUT SIGNAL EMITTED FROM TCM.** Measure the signal voltage for TCM while removing the fuse from FWD switch connector. ***Connector & terminal*** ***(B54) No. 12 — Chassis ground:***	Is the voltage more than 9 V in FWD switch while removing?	Go to step **12.**	Replace the TCM. <Ref. to AT-45, Transmission Control Module (TCM).>
12	**CHECK POOR CONTACT.**	Is there poor contact in FWD switch circuit?	Repair poor contact.	Replace the TCM. <Ref. to AT-45, Transmission Control Module (TCM).>

C: CHECK BRAKE SWITCH.

	Step	Check	Yes	No
1	**CHECK BRAKE SWITCH.**	When the brake pedal is depressed, does the LED light up?	Go to step CHECK ABS SWITCH. <Ref. to AT-113, CHECK ABS SWITCH., Diagnostic Procedure for No-Diagnostic Trouble Code (DTC).>	Check the brake switch circuit.

D: CHECK ABS SWITCH.

Step	Check	Yes	No
1 **CHECK ABS SWITCH.**	Does the LED of ABS switch light up?	Check the ABS switch circuit. <Ref. to ABS-138, DTC 44 ABS-AT CONTROL (NON CONTROLLED), Diagnostics Chart with Subaru Select Monitor.> and <Ref. to ABS-140, DTC 44 ABS-AT CONTROL (CONTROLLED), Diagnostics Chart with Subaru Select Monitor.>	Go to step CHECK CRUISE CONTROL SWITCH. <Ref. to AT-113, CHECK CRUISE CONTROL SWITCH., Diagnostic Procedure for No-Diagnostic Trouble Code (DTC).>

E: CHECK CRUISE CONTROL SWITCH.

Step	Check	Yes	No
1 **CHECK CRUISE CONTROL SWITCH.**	When cruise control is set, does the LED light up?	Go to step CHECK INHIBITOR SWITCH. <Ref. to AT-115, CHECK INHIBITOR SWITCH., Diagnostic Procedure for No-Diagnostic Trouble Code (DTC).>	Check the cruise control. <Ref. to CC-28, Diagnostics Chart with Diagnostic Trouble Code.>

F: CHECK INHIBITOR SWITCH.

DIAGNOSIS:
Input signal circuit of inhibitor switch is open or shorted.
TROUBLE SYMPTOM:
- Shift characteristics are erroneous.
- Engine brake is not effected when selector lever is in "3" range.
- Engine brake is not effected when selector lever is in "2" range.
- Engine brake is not effected when selector lever is in "1" range.

WIRING DIAGRAM:

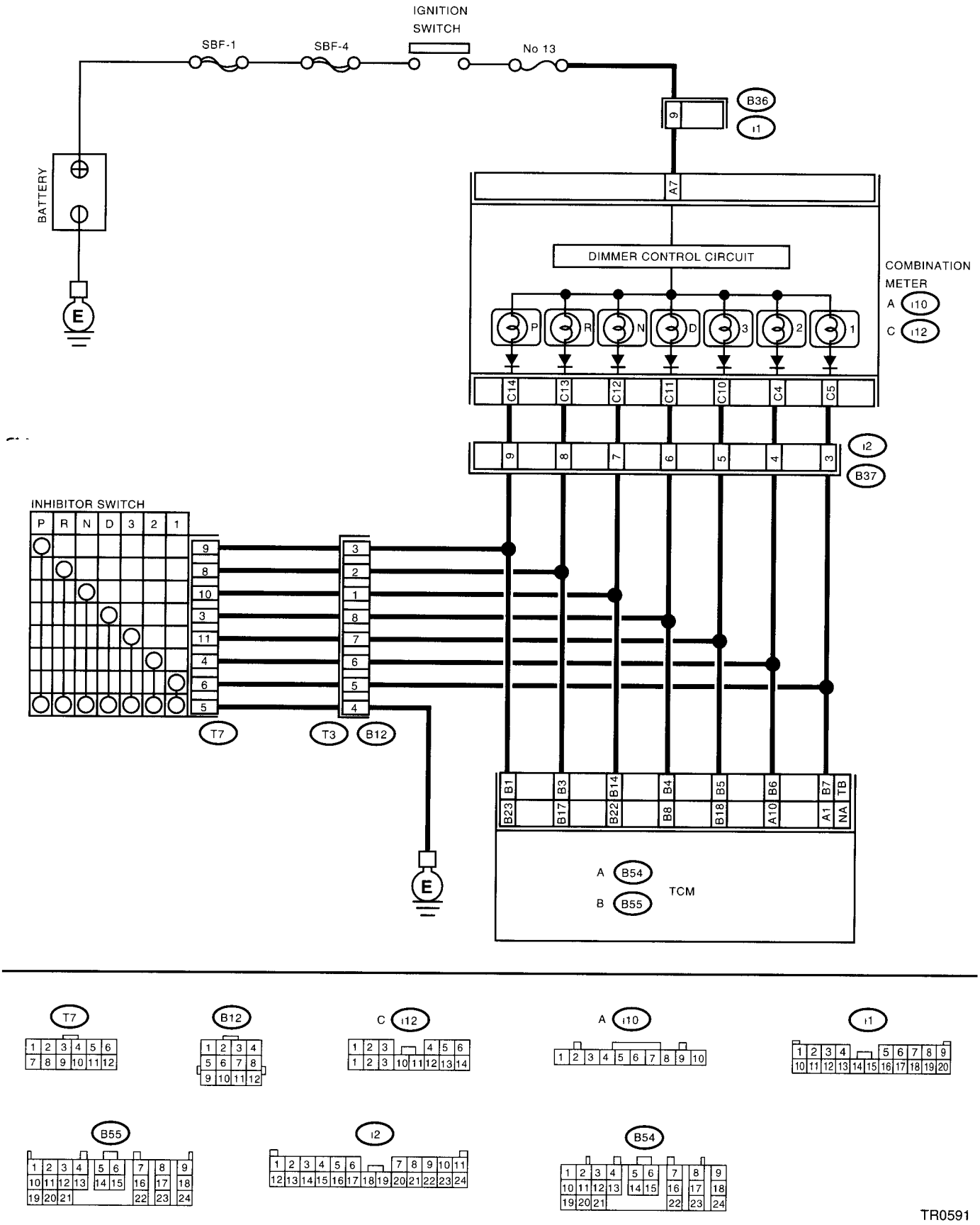

	Step	Check	Yes	No
1	**CHECK "P" RANGE SWITCH.**	When "P" range is selected, does the LED light up?	Go to step **2.**	Go to step **22.**
2	**CHECK INDICATOR LIGHT.**	Does the combination meter "P" range indicator illuminate?	Go to step **3.**	Go to step **26.**
3	**CHECK "P" RANGE SWITCH.**	When the "R" range is selected, does the "P" range LED light up?	Go to step **28.**	Go to step **4.**
4	**CHECK "R" RANGE SWITCH.**	When the "R" range is selected, does the LED light up?	Go to step **5.**	Go to step **29.**
5	**CHECK INDICATOR LIGHT.**	Does the combination meter "R" range indicator illuminate?	Go to step **6.**	Go to step **32.**
6	**CHECK "R" RANGE SWITCH.**	When the "N" range is selected, does the "R" range LED light up?	Go to step **34.**	Go to step **7.**
7	**CHECK "N" RANGE SWITCH.**	When the "N" range is selected, does the LED light up?	Go to step **8.**	Go to step **35.**
8	**CHECK INDICATOR LIGHT.**	Does the combination meter "N" range indicator illuminate?	Go to step **9.**	Go to step **38.**
9	**CHECK "N" RANGE SWITCH.**	When the "D" range is selected, does the "N" range LED light up?	Go to step **40.**	Go to step **10.**
10	**CHECK "D" RANGE SWITCH.**	When the "D" range is selected, does the LED light up?	Go to step **11.**	Go to step **41.**
11	**CHECK INDICATOR LIGHT.**	Does the combination meter "D" range indicator illuminate?	Go to step **12.**	Go to step **44.**
12	**CHECK "D" RANGE SWITCH.**	When the "3" range is selected, does the "D" range LED light up?	Go to step **46.**	Go to step **13.**
13	**CHECK "3" RANGE SWITCH.**	When the "3" range is selected, does the LED light up?	Go to step **14.**	Go to step **47.**
14	**CHECK INDICATOR LIGHT.**	Does the combination meter "3" range indicator illuminate?	Go to step **15.**	Go to step **50.**
15	**CHECK "3" RANGE SWITCH.**	When the "2" range is selected, does the "3" range LED light up?	Go to step **52.**	Go to step **16.**
16	**CHECK "2" RANGE SWITCH.**	When the "2" range is selected, does the LED light up?	Go to step **17.**	Go to step **53.**
17	**CHECK INDICATOR LIGHT.**	Does the combination meter "2" range indicator illuminate?	Go to step **18.**	Go to step **56.**
18	**CHECK "2" RANGE SWITCH.**	When the "1" range is selected, does the "2" range LED light up?	Go to step **58.**	Go to step **19.**
19	**CHECK "1" RANGE SWITCH.**	When the "1" range is selected, does the LED light up?	Go to step **20.**	Go to step **59.**
20	**CHECK INDICATOR LIGHT.**	Does the combination meter "1" range indicator illuminate?	Go to step **21.**	Go to step **62.**
21	**CHECK "1" RANGE SWITCH.**	When the "P" range is selected, does the "1" range LED light UP?	Go to step **64.**	Go to step Symptom Related Diagnostic. <Ref. to AT-127, Symptom Related Diagnostic.>

	Step	Check	Yes	No
22	**CHECK HARNESS CONNECTOR BETWEEN INHIBITOR SWITCH AND CHASSIS GROUND.** 1)Turn the ignition switch to OFF. 2)Disconnect the connector from inhibitor switch. 3)Measure the resistance of harness between inhibitor switch and chassis ground. ***Connector & terminal*** ***(T7) No. 5 — Chassis ground:***	Is the resistance less than 1 Ω?	Go to step **23.**	Repair open circuit in harness between inhibitor switch connector and chassis ground, and poor contact in coupling connector.
23	**CHECK HARNESS CONNECTOR BETWEEN TCM AND INHIBITOR SWITCH.** 1)Turn the ignition switch to OFF. 2)Disconnect the connectors from TCM and inhibitor switch. 3)Measure the resistance of harness between TCM and inhibitor switch connector. ***Connector & terminal*** ***Non-turbo model*** ***(B55) No. 23 — (T7) No. 9*** ***Turbo model*** ***(B55) No. 1 — (T7) No. 9***	Is the resistance less than 1 Ω?	Go to step **24.**	Repair open circuit in harness between TCM and inhibitor switch connector, and poor contact in coupling connector.
24	**CHECK INPUT SIGNAL FOR TCM.** 1)Turn the ignition switch to OFF. 2)Connect the connector to TCM and inhibitor switch. 3)Turn the ignition switch to ON. 4)Measure the voltage between TCM and chassis ground. ***Connector & terminal*** ***Non-turbo model*** ***(B55) No. 23 (+) — Chassis ground (–):*** ***Turbo model*** ***(B55) No. 1 (+) — Chassis ground (–):***	Is the voltage less than 1 V in "P" range?	Go to step **25.**	Go to step **65.**
25	**CHECK INPUT SIGNAL FOR TCM.** Measure the voltage between TCM and chassis ground. ***Connector & terminal*** ***Non-turbo model*** ***(B55) No. 23 (+) — Chassis ground (–):*** ***Turbo model*** ***(B55) No. 1 (+) — Chassis ground (–):***	Is the voltage more than 8 V in other ranges?	Go to step **65.**	Replace the TCM. <Ref. to AT-45, Transmission Control Module (TCM).>
26	**CHECK "P" RANGE INDICATOR LIGHT BULB.** 1)Turn the ignition switch to OFF. 2)Remove the combination meter. 3)Remove the "P" range indicator light bulb from combination meter.	Is the "P" range indicator light bulb OK?	Go to step **27.**	Replace the "P" range indicator light bulb. <Ref. to IDI-11, Combination Meter Assembly.>
27	**CHECK HARNESS CONNECTOR BETWEEN TCM AND COMBINATION METER.** 1)Disconnect the connectors from TCM and combination meter. 2)Measure the resistance of harness between TCM and combination meter. ***Connector & terminal*** ***Non-turbo model*** ***(B55) No. 23 — (i12) No. 14:*** ***Turbo model*** ***(B55) No. 1 — (i12) No. 14:***	Is the resistance more than 1 Ω?	Go to step **65.**	Repair open circuit in harness between TCM connector and combination meter, and poor contact in coupling connector.

	Step	Check	Yes	No
28	**CHECK HARNESS CONNECTOR BETWEEN TCM AND INHIBITOR SWITCH.** 1)Turn the ignition switch to OFF. 2)Disconnect the connectors from TCM, inhibitor switch and combination meter. 3)Measure the resistance of harness between TCM and chassis ground. ***Connector & terminal*** ***Non-turbo model*** ***(B55) No. 23 — Chassis ground:*** ***Turbo model*** ***(B55) No. 1 — Chassis ground:***	s the resistance less than 1 MΩ?	Go to step **29.**	Repair ground hort circuit in "P" ange circuit.
29	**CHECK HARNESS CONNECTOR BETWEEN TCM AND INHIBITOR SWITCH.** 1)Turn the ignition switch to OFF. 2)Disconnect the connectors from TCM and inhibitor switch. 3)Measure the resistance of harness between TCM and inhibitor switch connector ***Connector & terminal*** ***Non-turbo model*** ***(B55) No. 17 — (T7) No. 8:*** ***Turbo model*** ***(B55) No. 3 — (T7) No. 8:***	s the resistance less than 1 Ω?	Go to step **30.**	Repair open circui n harness etween TCM anc nhibitor switch onnector, and oor contact in oupling connec- or.
30	**CHECK INPUT SIGNAL FOR TCM.** 1)Turn the ignition switch to OFF. 2)Connect the connector to TCM and inhibitor switch 3)Turn the ignition switch to ON. 4)Measure the voltage between TCM and chassis ground ***Connector & terminal*** ***Non-turbo model*** ***(B55) No. 17 (+) — Chassis ground (–):*** ***Turbo model*** ***(B55) No. 3 (+) — Chassis ground (–):***	s the voltage less than 1 V in R" range?	Go to step **31.**	Go to step **65.**
31	**CHECK INPUT SIGNAL FOR TCM.** Measure the voltage between TCM and chassis ground. ***Connector & terminal*** ***Non-turbo model*** ***(B55) No. 17 (+) — Chassis ground (–):*** ***Turbo model*** ***(B55) No. 3 (+) — Chassis ground (–):***	s the voltage more than 8 V in ther ranges?	Go to step **65.**	Replace the TCM. :Ref. to AT-45, Transmission Con rol Module TCM).>
32	**CHECK "R" RANGE INDICATOR LIGHT BULB.** 1)Turn the ignition switch to OFF 2)Remove the combination meter 3)Remove the "R" range indicator light bulb from combination meter	s the "R" range indicator light ulb OK?	Go to step **33.**	Replace the "R" ange indicator ght bulb <Ref. to DI-11, Combina- ion Meter Assem ly.>

	Step	Check	Yes	No
33	**CHECK HARNESS CONNECTOR BETWEEN TCM AND COMBINATION METER.** 1)Disconnect the connectors from TCM and combination meter. 2)Measure the resistance of harness between TCM and combination meter. ***Connector & terminal*** ***Non-turbo model*** ***(B55) No. 17 — (i12) No. 13:*** ***Turbo model*** ***(B55) No. 3 — (i12) No. 13:***	Is the resistance less than 1 Ω?	Go to step **65.**	Repair open circuit in harness between TCM connector and combination meter, and poor contact in TCM connector.
34	**CHECK HARNESS CONNECTOR BETWEEN TCM AND INHIBITOR SWITCH.** 1)Turn the ignition switch to OFF. 2)Disconnect the connectors from TCM, inhibitor switch and combination meter. 3)Measure the resistance of harness between TCM and chassis ground. ***Connector & terminal*** ***Non-turbo model*** ***(B55) No. 17 — Chassis ground:*** ***Turbo model*** ***(B55) No. 3 — Chassis ground:***	Is the resistance more than 1 MΩ?	Go to step **35.**	Repair ground short circuit in "R" range circuit.
35	**CHECK HARNESS CONNECTOR BETWEEN TCM AND INHIBITOR SWITCH.** 1)Turn the ignition switch to OFF. 2)Disconnect the connectors from TCM and inhibitor switch. 3)Measure the resistance of harness between TCM and inhibitor switch connector. ***Connector & terminal*** ***Non-turbo model*** ***(B55) No. 22 — (T7) No. 10:*** ***Turbo model*** ***(B55) No. 14 — (T7) No. 10:***	Is the resistance less than 1 Ω?	Go to step **36.**	Repair open circuit in harness between TCM and inhibitor switch connector, and poor contact in coupling connector.
36	**CHECK INPUT SIGNAL FOR TCM.** 1)Turn the ignition switch to OFF. 2)Connect the connector to TCM and inhibitor switch. 3)Turn the ignition switch to ON. 4)Measure the voltage between TCM and chassis ground. ***Connector & terminal*** ***Non-turbo model*** ***(B55) No. 22 (+) — Chassis ground (–):*** ***Turbo model*** ***(B55) No. 14 (+) — Chassis ground (–):***	Is the voltage less than 1 V in "N" range?	Go to step **37.**	Go to step **65.**
37	**CHECK INPUT SIGNAL FOR TCM.** Measure the voltage between TCM and chassis ground. ***Connector & terminal*** ***Non-turbo model*** ***(B55) No. 22 (+) — Chassis ground (–):*** ***Turbo model*** ***(B55) No. 14 (+) — Chassis ground (–):***	Is the voltage more than 8 V in other ranges?	Go to step **65.**	Replace the TCM. <Ref. to AT-45, Transmission Control Module (TCM).>

	Step	Check	Yes	No
38	**CHECK "N" RANGE INDICATOR LIGHT BULB.** 1)Turn the ignition switch to OFF. 2)Remove the combination meter. 3)Remove the "N" range indicator light bulb from combination meter.	Is the "N" range indicator light bulb OK?	Go to step **39.**	Replace the "N" range indicator light bulb. <Ref. to IDI-11, Combination Meter Assembly.>
39	**CHECK HARNESS CONNECTOR BETWEEN TCM AND COMBINATION METER.** 1)Disconnect the connectors from TCM and combination meter. 2)Measure the resistance of harness between TCM and combination meter. ***Connector & terminal*** ***Non-turbo model*** ***(B55) No. 22 — (i12) No. 12:*** ***Turbo model*** ***(B55) No. 14 — (i12) No. 12:***	Is the resistance less than 1 Ω?	Go to step **65.**	Repair open circuit in harness between TCM connector and combination meter, and poor contact in TCM connector.
40	**CHECK HARNESS CONNECTOR BETWEEN TCM AND INHIBITOR SWITCH.** 1)Turn the ignition switch to OFF. 2)Disconnect the connectors from TCM, inhibitor switch and combination meter. 3)Measure the resistance of harness between TCM and chassis ground. ***Connector & terminal*** ***Non-turbo model*** ***(B55) No. 22 — Chassis ground:*** ***Turbo model*** ***(B55) No. 14 — Chassis ground:***	Is the resistance more than 1 MΩ?	Go to step **41.**	Repair ground short circuit in "N" range circuit.
41	**CHECK HARNESS CONNECTOR BETWEEN TCM AND INHIBITOR SWITCH.** 1)Turn the ignition switch to OFF. 2)Disconnect the connectors from TCM and inhibitor switch. 3)Measure the resistance of harness between TCM and inhibitor switch connector. ***Connector & terminal*** ***Non-turbo model*** ***(B55) No. 8 — (T7) No. 3:*** ***Turbo model*** ***(B55) No. 4 — (T7) No. 3:***	Is the resistance less than 1 Ω?	Go to step **42.**	Repair open circuit in harness between TCM and inhibitor switch connector, and poor contact in coupling connector.
42	**CHECK INPUT SIGNAL FOR TCM.** 1)Turn the ignition switch to OFF. 2)Connect the connector to TCM and inhibitor switch. 3)Turn the ignition switch to ON. 4)Measure the voltage between TCM and chassis ground. ***Connector & terminal*** ***Non-turbo model*** ***(B55) No. 8 (+) — Chassis ground (–):*** ***Turbo model*** ***(B55) No. 4 (+) — Chassis ground (–):***	Is the voltage less than 1 V in "D" range?	Go to step **43.**	Go to step **65.**

	Step	Check	Yes	No
43	**CHECK INPUT SIGNAL FOR TCM.** Measure the voltage between TCM and chassis ground. ***Connector & terminal*** ***Non-turbo model*** ***(B55) No. 8 (+) — Chassis ground (–):*** ***Turbo model*** ***(B55) No. 4 (+) — Chassis ground (–):***	Is the voltage more than 8 V in other ranges?	Go to step **65.**	Replace the TCM. <Ref. to AT-45, Transmission Control Module (TCM).>
44	**CHECK "D" RANGE INDICATOR LIGHT BULB.** 1)Turn the ignition switch to OFF. 2)Remove the combination meter. 3)Remove the "D" range indicator light bulb from combination meter.	Is the "D" range indicator light bulb OK?	Go to step **45.**	Replace the "D" range indicator light bulb. <Ref. to IDI-11, Combination Meter Assembly.>
45	**CHECK HARNESS CONNECTOR BETWEEN TCM AND COMBINATION METER.** 1)Disconnect the connectors from TCM and combination meter. 2)Measure the resistance of harness between TCM and combination meter. ***Connector & terminal*** ***Non-turbo model*** ***(B55) No. 8 — (i12) No. 11:*** ***Turbo model*** ***(B55) No. 4 — (i12) No. 11:***	Is the resistance less than 1 Ω?	Go to step **65.**	Repair open circuit in harness between TCM connector and combination meter, and TCM connector.
46	**CHECK HARNESS CONNECTOR BETWEEN TCM AND INHIBITOR SWITCH.** 1)Turn the ignition switch to OFF. 2)Disconnect the connectors from TCM, inhibitor switch and combination meter. 3)Measure the resistance of harness between TCM and chassis ground. ***Connector & terminal*** ***Non-turbo model*** ***(B55) No. 8 — Chassis ground:*** ***Turbo model*** ***(B55) No. 4 — Chassis ground:***	Is the resistance more than 1 MΩ?	Go to step **47.**	Repair ground short circuit in "D" range circuit.
47	**CHECK HARNESS CONNECTOR BETWEEN TCM AND INHIBITOR SWITCH.** 1)Turn the ignition switch to OFF. 2)Disconnect the connector from TCM and inhibitor switch. 3)Measure the resistance of harness between TCM and inhibitor switch connector. ***Connector & terminal*** ***Non-turbo model*** ***(B55) No. 18 — (T7) No. 11:*** ***Turbo model*** ***(B55) No. 5 — (T7) No. 11:***	Is the resistance less than 1 Ω?	Go to step **48.**	Repair open circuit in harness between TCM and inhibitor switch connector, and poor contact in coupling connector.

	Step	Check	Yes	No
48	**CHECK INPUT SIGNAL FOR TCM.** 1)Turn the ignition switch to OFF. 2)Connect the connector to TCM and inhibitor switch. 3)Turn the ignition switch to ON. 4)Measure the voltage between TCM and chassis ground. ***Connector & terminal*** ***Non-turbo model*** ***(B55) No. 18 (+) — Chassis ground (–):*** ***Turbo model*** ***(B55) No. 5 (+) — Chassis ground (–):***	Is the voltage less than 1 V in "3" range?	Go to step **49.**	Go to step **65.**
49	**CHECK INPUT SIGNAL FOR TCM.** Measure the hvoltage between TCM and chassis ground. ***Connector & terminal*** ***Non-turbo model*** ***(B55) No. 18 (+) — Chassis ground (–):*** ***Turbo model*** ***(B55) No. 5 (+) — Chassis ground (–):***	Is the voltage more than 8 V in other ranges?	Go to step **65.**	Replace the TCM. <Ref. to AT-45, Transmission Control Module (TCM).>
50	**CHECK "3" RANGE INDICATOR LIGHT BULB.** 1)Turn the ignition switch to OFF. 2)Remove the combination meter. 3)Remove the "3" range indicator light bulb from combination meter.	Is the "3" range indicator light bulb OK?	Go to step **51.**	Replace the "3" range indicator light bulb. <Ref. to IDI-11, Combination Meter Assembly.>
51	**CHECK HARNESS CONNECTOR BETWEEN TCM AND COMBINATION METER.** 1)Disconnect the connectors from TCM and combination meter. 2)Measure the resistance of harness between TCM and combination meter. ***Connector & terminal*** ***Non-turbo model*** ***(B55) No. 18 — (i12) No. 10:*** ***Turbo model*** ***(B55) No. 5 — (i12) No. 10:***	Is the resistance more than 1 Ω?	Go to step **65.**	Repair open circuit in harness between TCM connector and combination meter, and poor contact in TCM connector.
52	**CHECK HARNESS CONNECTOR BETWEEN TCM AND INHIBITOR SWITCH.** 1)Turn the ignition switch to OFF. 2)Disconnect the connectors from TCM, inhibitor switch and combination meter. 3)Measure the resistance of harness between TCM and chassis ground. ***Connector & terminal*** ***Non-turbo model*** ***(B55) No. 18 — Chassis ground:*** ***Turbo model*** ***(B55) No. 5 — Chassis ground:***	Is the resistance more than 1 MΩ?	Go to step **53.**	Repair ground short circuit in "3" range circuit.

	Step	Check	Yes	No
53	**CHECK HARNESS CONNECTOR BETWEEN TCM AND INHIBITOR SWITCH.** 1)Turn the ignition switch to OFF. 2)Disconnect the connector from TCM and inhibitor switch. 3)Measure the resistance of harness between TCM and inhibitor switch connector. ***Connector & terminal*** ***Non-turbo model*** ***(B54) No. 10 — (T7) No. 4:*** ***Turbo model*** ***(B55) No. 6 — (T7) No. 4:***	Is the resistance less than 1 Ω?	Go to step **54.**	Repair open circuit in harness between TCM and inhibitor switch connector, and poor contact in coupling connector.
54	**CHECK INPUT SIGNAL FOR TCM.** 1)Turn the ignition switch to OFF. 2)Connect the connector to TCM and inhibitor switch. 3)Turn the ignition switch to ON. 4)Measure the voltage between TCM and chassis ground. ***Connector & terminal*** ***Non-turbo model*** ***(B54) No. 10 (+) — Chassis ground (–):*** ***Turbo model*** ***(B55) No. 6 (+) — Chassis ground (–):***	Is the voltage less than 1 V in "2" range?	Go to step **55.**	Go to step **65.**
55	**CHECK INPUT SIGNAL FOR TCM.** Measure the voltage between TCM and chassis ground. ***Connector & terminal*** ***Non-turbo model*** ***(B54) No. 10 (+) — Chassis ground (–):*** ***Turbo model*** ***(B55) No. 6 (+) — Chassis ground (–):***	Is the voltage more than 8 V in other ranges?	Go to step **65.**	Replace the TCM. <Ref. to AT-45, Transmission Control Module (TCM).>
56	**CHECK "2" RANGE INDICATOR LIGHT BULB.** 1)Turn the ignition switch to OFF. 2)Remove the combination meter. 3)Remove the "2" range indicator light bulb from combination meter.	Is the "2" range indicator light bulb OK?	Go to step **57.**	Replace the "2" range indicator light bulb. <Ref. to IDI-11, Combination Meter Assembly.>
57	**CHECK HARNESS CONNECTOR BETWEEN TCM AND COMBINATION METER.** 1)Disconnect the connectors from TCM and combination meter. 2)Measure the resistance of harness between TCM and combination meter. ***Connector & terminal*** ***Non-turbo model*** ***(B54) No. 10 — (i12) No. 4:*** ***Turbo model*** ***(B55) No. 6 — (i12) No. 4:***	Is the resistance less than 1 Ω?	Go to step **65.**	Repair open circuit in harness between TCM and combination meter, and poor contact in TCM connector.

	Step	Check	Yes	No
58	**CHECK HARNESS CONNECTOR BETWEEN TCM AND INHIBITOR SWITCH.** 1)Turn the ignition switch to OFF. 2)Disconnect the connectors from TCM, inhibitor switch and combination meter. 3)Measure the resistance of harness between TCM and chassis ground. ***Connector & terminal*** ***Non-turbo model*** ***(B54) No. 10 — Chassis ground:*** ***Turbo model*** ***(B55) No. 6 — Chassis ground:***	Is the resistance more than 1 MΩ?	Go to step **59.**	Repair ground short circuit in "2" range circuit.
59	**CHECK HARNESS CONNECTOR BETWEEN TCM AND INHIBITOR SWITCH.** 1)Turn the ignition switch to OFF. 2)Disconnect the connectors from TCM and inhibitor switch. 3)Measure the resistance of harness between TCM and inhibitor switch connector. ***Connector & terminal*** ***Non-turbo model*** ***(B54) No. 1 — (T7) No. 6:*** ***Turbo model*** ***(B55) No. 7 — (T7) No. 6:***	Is the resistance less than 1 Ω?	Go to step **60.**	Repair open circuit in harness between TCM and inhibitor switch connector, and poor contact in coupling connector.
60	**CHECK INPUT SIGNAL FOR TCM.** 1)Turn the ignition switch to OFF. 2)Connect the connector to TCM and inhibitor switch. 3)Turn the ignition switch to ON. 4)Measure the voltage between TCM and chassis ground. ***Connector & terminal*** ***Non-turbo model*** ***(B54) No. 1 (+) — Chassis ground (–):*** ***Turbo model*** ***(B55) No. 7 (+) — Chassis ground (–):***	Is the voltage less than 1 V in "1" range?	Go to step **61.**	Go to step **65.**
61	**CHECK INPUT SIGNAL FOR TCM.** Measure the voltage between TCM and chassis ground. ***Connector & terminal*** ***Non-turbo model*** ***(B54) No. 1 (+) — Chassis ground (–):*** ***Turbo model*** ***(B55) No. 7 (+) — Chassis ground (–):***	Is the voltage more than 8 V in other ranges?	Go to step **65.**	Replace the TCM. <Ref. to AT-45, Transmission Control Module (TCM).>
62	**CHECK "1" RANGE INDICATOR LIGHT BULB.** 1)Turn the ignition switch to OFF. 2)Remove the combination meter. 3)Remove the "1" range indicator light bulb from combination meter.	Is the "1" range indicator light bulb OK?	Go to step **63.**	Replace the "1" range indicator light bulb. <Ref. to IDI-11, Combination Meter Assembly.>

	Step	Check	Yes	No
63	**CHECK HARNESS CONNECTOR BETWEEN TCM AND COMBINATION METER.** 1)Disconnect the connectors from TCM and combination meter. 2)Measure the resistance of harness between TCM and combination meter. ***Connector & terminal*** ***Non-turbo model*** ***(B54) No. 1 — (i12) No. 5:*** ***Turbo model*** ***(B55) No. 7 — (i12) No. 5:***	Is the resistance less than 1Ω?	Go to step **65.**	Repair open circuit in harnes between TCM and combination meter, poor contact in TCM connector.
64	**CHECK HARNESS CONNECTOR BETWEEN TCM AND INHIBITOR SWITCH.** 1)Turn the ignition switch to OFF. 2)Disconnect the connectors from TCM, inhibitor switch and combination meter. 3)Measure the resistance of harness between TCM and chassis ground. ***Connector & terminal*** ***Non-turbo model*** ***(B54) No. 1 — Chassis ground:*** ***Turbo model*** ***(B55) No. 7 — Chassis ground:***	Is the resistance more than 1 MΩ?	Go to step **65.**	Repair ground short circuit in "1" range circuit.
65	**CHECK POOR CONTACT.**	Is there poor contact in inhibitor switch circuit?	Repair poor contact.	Adjust the inhibitor switch and select cable. <Ref. to AT-28, ADJUSTMENT, Inhibitor Switch.> and <Ref. to CS-26, Select Cable.>

16.Symptom Related Diagnostic

A: INSPECTION

Symptom	Problem parts
Starter does not rotate when the select lever is in "P" or "N"; starter rotates when the select lever is in "R", "D", "3" or "2".	• Inhibitor switch • Select cable • Select lever • Starter motor and harness
Abnormal noise when the select lever is in "P" or "N".	• Strainer • Transfer duty solenoid • Oil pump • Drive plate • ATF level too high or too low
Hissing noise occurs during standing start.	• Strainer • ATF level too high or too low
Noise occurs while driving in "D1".	• Final gear • Planetary gear • Reduction gear • Differential gear oil level too high or too low
Noise occurs while driving in "D2".	
Noise occurs while driving in "D3".	• Final gear • Low & reverse brake • Reduction gear • Differential gear oil level too high or too low
Noise occurs while driving in "D4".	• Final gear • Low & reverse brake • Planetary gear • Reduction gear • Differential gear oil level too high or too low
Engine stalls while shifting from one range to another.	• Control valve • Lock-up damper • Engine performance • Input shaft
Vehicle moves when the select lever is in "N".	• TCM • Low clutch
Shock occurs when the select lever is moved from "N" to "D".	• TCM • Harness • Control valve • ATF deterioration
Excessive time lag occurs when the select lever is moved from "N" to "D".	• Control valve • Low clutch • Line pressure duty solenoid • Seal ring • Front gasket transmission case
Shock occurs when the select lever is moved from "N" to "R".	• TCM • Harness • Control valve • ATF deterioration
Excessive time lag occurs when the select lever is moved from "N" to "R".	• Control valve • Low & reverse clutch • Reverse clutch • Line pressure duty solenoid • Seal ring • Front gasket transmission case
Vehicle does not start in any shift range (engine stalls).	• Parking brake mechanism • Planetary gear

Symptom	Problem parts
Vehicle does not start in any shift range (engine revving up).	• Strainer • Line pressure duty solenoid • Control valve • Drive pinion • Hypoid gear • Axle shaft • Differential gear • Oil pump • Input shaft • Output shaft • Planetary gear • Drive plate • ATF level too low • Front gasket transmission case
Vehicle does not start in "R" range only (engine revving up).	• Select cable • Select lever • Control valve • Low & reverse clutch • Reverse clutch
Vehicle does not start in "R" range only (engine stalls).	• Low clutch • 2-4 brake • Planetary gear • Parking brake mechanism
Vehicle does not start in "D", "3" range only (engine revving up).	• Low clutch • One-way clutch
Vehicle does not start in "D", "3" or "2" range only (engine revving up).	• Low clutch
Vehicle does not start in "D", "3" or "2" range only (engine stalls).	• Reverse clutch
Vehicle starts in "R" range only (engine revving up).	• Control valve
Acceleration during standing starts is poor (high stall rpm).	• Control valve • Low clutch • Reverse clutch • ATF level too low • Front gasket transmission case • Differential gear oil level too high or too low
Acceleration during standing starts is poor (low stall rpm).	• Oil pump • Torque converter one-way clutch • Engine performance
Acceleration is poor when the select lever is in "D", "3" or "2" range (normal stall rpm).	• TCM • Control valve • High clutch • 2-4 brake • Planetary gear
Acceleration is poor when the select lever is in "R" (normal stall rpm).	• Control valve • High clutch • 2-4 brake • Planetary gear
No shift occurs from 1st to 2nd gear.	• TCM • Rear vehicle speed sensor • Front vehicle speed sensor • Throttle position sensor • Shift solenoid 1 • Control valve • 2-4 brake
No shift occurs from 2nd to 3rd gear.	• TCM • Control valve • High clutch • Shift solenoid 2

Symptom	Problem parts
No shift occurs from 3rd to 4th gear.	• TCM • Shift solenoid 1 • ATF temperature sensor • Control valve • 2-4 brake
Engine brake is not effected when the select lever is in "3" range.	• Inhibitor switch • TCM • Throttle position sensor • Control valve
Engine brake is not effected when the select lever is in "3" or "2" range.	• Control valve
Engine brake is not effected when the select lever is in "1" range.	• Control valve • Low & reverse brake
Shift characteristics are erroneous.	• Inhibitor switch • TCM • Front vehicle speed sensor • Rear vehicle speed sensor • Throttle position sensor • Control valve • Ground earth
No lock-up occurs.	• TCM • Throttle position sensor • ATF temperature sensor • Control valve • Lock-up facing • Engine speed signal
Parking brake is not effected.	• Select cable • Select lever • Parking mechanism
Shift lever cannot be moved or is hard to move from "P" range.	
ATF spurts out.	• ATF level too high
Differential oil spurts out.	• Differential gear oil too high
Differential oil level changes excessively.	• Seal pipe • Double oil seal
Odor is produced from ATF supply pipe.	• High clutch • 2-4 brake • Low & reverse clutch • Reverse clutch • Lock-up facing • ATF deterioration
Shock occurs from 1st to 2nd gear.	• TCM • Throttle position sensor • 2-4 brake duty solenoid • ATF temperature sensor • Line pressure duty solenoid • Control valve • 2-4 brake • ATF deterioration • Engine performance • 2-4 brake timing solenoid
Slippage occurs from 1st to 2nd gear.	• TCM • Throttle position sensor • 2-4 brake duty solenoid • ATF temperature sensor • Line pressure duty solenoid • Control valve • 2-4 brake • 2-4 brake timing solenoid • High clutch

Symptom	Problem parts
Shock occurs from 2nd to 3rd gear.	• TCM • Throttle position sensor • 2-4 brake duty solenoid • ATF temperature sensor • Line pressure duty solenoid • Control valve • High clutch • 2-4 brake • ATF deterioration • Engine performance • 2-4 brake timing solenoid
Slippage occurs from 2nd to 3rd gear.	• TCM • Throttle position sensor • 2-4 brake duty solenoid • ATF temperature sensor • Line pressure duty solenoid • Control valve • High clutch • 2-4 brake • 2-4 brake timing solenoid
Shock occurs from 3rd to 4th gear.	• TCM • Throttle position sensor • 2-4 brake duty solenoid • ATF temperature sensor • Line pressure duty solenoid • Control valve • 2-4 brake timing solenoid • 2-4 brake • ATF deterioration • Engine performance • Low clutch timing solenoid • Low clutch
Slippage occurs from 3rd to 4th gear.	• TCM • Throttle position sensor • 2-4 brake duty solenoid • ATF temperature sensor • Line pressure duty solenoid • Control valve • 2-4 brake • 2-4 brake timing solenoid
Shock occurs when the select lever is moved from “3” to “2” range.	• TCM • Throttle position sensor • ATF temperature sensor • Line pressure duty solenoid • Control valve • 2-4 brake duty solenoid • 2-4 brake • ATF deterioration • 2-4 brake timing solenoid
Shock occurs when the select lever is moved from “D” to “1” range.	• TCM • Throttle position sensor • ATF temperature sensor • Line pressure duty solenoid • Control valve • ATF deterioration • 2-4 brake duty solenoid • 2-4 brake timing solenoid • Low clutch timing solenoid

Symptom	Problem parts
Shock occurs when the select lever is moved from "2" to "1" range.	• TCM • Throttle position sensor • ATF temperature sensor • Line pressure duty solenoid • Control valve • Low & reverse clutch • ATF deterioration • 2-4 brake duty solenoid • 2-4 brake timing solenoid • Low clutch timing solenoid
Shock occurs when the accelerator pedal is released at medium speeds.	• TCM • Throttle position sensor • ATF temperature sensor • Line pressure duty solenoid • Control valve • Lock-up damper • Engine performance • 2-4 brake duty solenoid • 2-4 brake timing solenoid • Low clutch timing solenoid
Vibration occurs during straight-forward operation.	• TCM • Lock-up duty solenoid • Lock-up facing • Lock-up damper
Vibration occurs during turns (tight corner "braking" phenomenon).	• TCM • Front vehicle speed sensor • Rear vehicle speed sensor • Throttle position sensor • ATF temperature sensor • Transfer clutch • Transfer valve • Transfer duty solenoid • ATF deterioration • Harness
Front wheel slippage occurs during standing starts.	• TCM • Front vehicle speed sensor • Throttle position sensor • ATF temperature sensor • Control valve • Transfer clutch • Transfer valve • Transfer pipe • Transfer duty solenoid
Vehicle is not set in FWD mode.	• TCM • Transfer clutch • Transfer valve • Transfer duty solenoid
Select lever is hard to move.	• Select cable • Select lever • Detent spring • Manual plate
Select lever is too high to move (unreasonable resistance).	• Detent spring • Manual plate
Select lever slips out of operation during acceleration or while driving on rough terrain.	• Select cable • Select lever • Detent spring • Manual plate

MANUAL TRANSMISSION AND DIFFERENTIAL

MT

		Page
1.	General Description	2
2.	Transmission Gear Oil	26
3.	Manual Transmission Assembly	27
4.	Transmission Mounting System	34
5.	Oil Seal	36
6.	Switches and Harness	37
7.	Vehicle Speed Sensor	39
8.	Preparation for Overhaul	40
9.	Transfer Case and Extension Case Assembly	41
10.	Transfer Drive Gear	45
11.	Transfer Driven Gear	47
12.	Center Differential	49
13.	Reverse Check Sleeve	50
14.	Transmission Case	54
15.	Main Shaft Assembly for Single-Range	57
16.	Drive Pinion Shaft Assembly	63
17.	Front Differential Assembly	71
18.	Speedometer Gear	77
19.	Reverse Idler Gear	78
20.	Shifter Fork and Rod	80
21.	General Diagnostic	84

1. General Description

A: SPECIFICATIONS

1. MANUAL TRANSMISSION AND DIFFERENTIAL

Item			Model		
			Non-turbo		Turbo
			Sedan	Wagon	
Type			5-forward speeds with synchromesh and 1-reverse		
Transmission gear ratio		1st	3.454		3.454
		2nd	2.062		1.947
		3rd	1.448		1.366
		4th	1.088		0.972
		5th	0.780		0.738
		Reverse	3.333		
Front reduction gear	Final	Type of gear	Hypoid		
		Gear ratio	4.111	3.900	
Rear reduction gear	Transfer	Type of gear	Helical		
		Gear ratio	1.000		1.100
	Final	Type of gear	Hypoid		
		Gear ratio	4.111	3.900	3.545
Front differential	Type and number of gear		Straight bevel gear (Bevel pinion: 2, Bevel gear: 2)		
Center differential	Type and number of gear		Straight bevel gear (Bevel pinion: 2, Bevel gear: 2 and viscous coupling)		
Transmission gear oil			GL-5		
Transmission gear oil capacity			3.5 ℓ (3.7 US qt, 3.1 Imp qt)		

2. TRANSMISSION GEAR OIL

Recommended oil

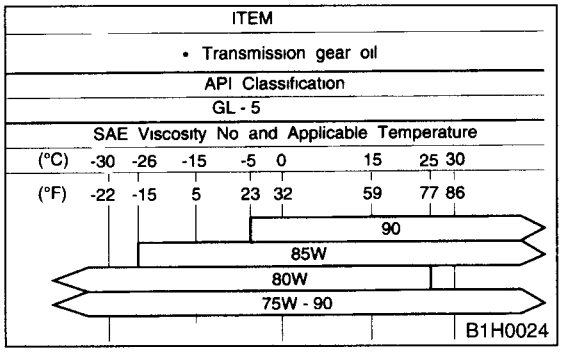

3. TRANSMISSION CASE ASSEMBLY

Drive pinion shim adjustment
Hypoid gear backlash
0.13 — 0.18 mm (0.0051 — 0.0071 in)

Drive pinion shim			
Part No.	Thickness mm (in)	Part No.	Thickness mm (in)
32295AA031	0.150 (0.0059)	32295AA071	0.250 (0.0098)
32295AA041	0.175 (0.0069)	32295AA081	0.275 (0.0108)
32295AA051	0.200 (0.0079)	32295AA091	0.300 (0.0118)
32295AA061	0.225 (0.0089)	32295AA101	0.500 (0.0197)

Selection of main shaft rear plate

Main shaft rear plate		
Dimension "A" mm (in)	Part No.	Mark
4.00 — 4.13 (0.1575 — 0.1626)	32294AA041	1
3.87 — 3.99 (0.1524 — 0.1571)	32294AA051	2

Input shaft holder adjustment

Dimension "D" mm (in)	Number of shim
52.50 — 53.11 (2.0669 — 2.0909)	—
52.00 — 52.49 (2.0472 — 2.0665)	1
51.26 — 51.99 (2.0181 — 2.0468)	2

4. DRIVE PINION ASSEMBLY

Preload adjustment of thrust bearing
Starting torque
0.3 — 0.8 N·m (0.03 — 0.08 kgf-m, 0.2 — 0.6 ft-lb)

Adjusting washer No. 1	
Part No.	Thickness mm (in)
803025051	3.925 (0.1545)
803025052	3.950 (0.1555)
803025053	3.975 (0.1565)
803025054	4.000 (0.1575)
803025055	4.025 (0.1585)
803025056	4.050 (0.1594)
803025057	4.075 (0.1604)

Adjusting washer No. 2	
Part No.	Thickness mm (in)
803025059	3.850 (0.1516)
803025054	4.000 (0.1575)
803025058	4.150 (0.1634)

5. MAIN SHAFT

Snap ring (Outer-25) to synchronizer hub clearance
0.060 — 0.100 mm (0.0024 — 0.0039 in)

Snap ring (Outer-25)			
Part No.	Thickness mm (in)	Part No.	Thickness mm (in)
805025051	2.42 (0.0953)	805025055	2.62 (0.1031)
805025052	2.47 (0.0972)	805025056	2.67 (0.1051)
805025053	2.52 (0.0992)	805025057	2.72 (0.1071)
805025054	2.57 (0.1012)	805025058	2.37 (0.0933)

6. REVERSE IDLER GEAR

Adjustment of reverse idler gear position
Reverse idler gear to transmission case (LH) wall clearance
6.0 — 7.5 mm (0.236 — 0.295 in)

Reverse shifter lever		
Part No.	Mark	Remarks
32820AA070	7	Further from case wall
32820AA080	8	Standard
32820AA090	9	Closer to the case wall

After installing a suitable reverse shifter lever, adjust reverse idler gear to transmission case wall clearance to within 0 to 0.5 mm (0 to 0.020 in) using washers.

Washer (20.5 × 26 × t)			
Part No.	Thickness mm (in)	Part No.	Thickness mm (in)
803020151	0.4 (0.016)	803020154	1.9 (0.075)
803020152	1.1 (0.043)	803020155	2.3 (0.091)
803020153	1.5 (0.059)	—	—

7. SHIFTER FORK AND ROD

Select suitable shifter forks so that both coupling sleeve and reverse driven gear are positioned in the center of their synchromesh mechanisms.
Rod end clearance
A: 1st-2nd — 3rd-4th
0.4 — 1.4 mm (0.016 — 0.055 in)
B: 3rd-4th — 5th
0.5 — 1.3 mm (0.020 — 0.051 in)

1st-2nd shifter fork		
Part No.	Mark	Remarks
32804AA060	1	Approach to 1st gear by 0.2 mm (0.008 in)
32804AA070	No mark	Standard
32804AA080	3	Approach to 2nd gear by 0.2 mm (0.008 in)

3rd-4th shifter fork		
Part No.	Mark	Remarks
32810AA061	1	Approach to 4th gear by 0.2 mm (0.008 in)
32810AA071	No mark	Standard
32810AA101	3	Approach to 3rd gear by 0.2 mm (0.008 in)

5th shifter fork (Non-turbo)		
Part No.	Mark	Remarks
32812AA201	4	Approach to 5th gear by 0.2 mm (0.008 in)
32812AA211	5	Standard
32812AA221	6	Become distant from 5th gear by 0.2 mm (0.008 in)

5th shifter fork (Turbo)		
Part No.	Mark	Remarks
32812AA231	7	Approach to 5th gear by 0.2 mm (0.008 in)
32812AA241	No mark	Standard
32812AA251	9	Become distant from 5th gear by 0.2 mm (0.008 in)

8. TRANSFER CASE

Neutral position adjustment

Adjustment shim	
Part No.	Thickness mm (in)
32190AA000	0.15 (0.0059)
32190AA010	0.30 (0.0118)

Reverse accent shaft		
Part No.	Mark	Remarks
32188AA090	3	Neutral position is closer to 1st.
32188AA100	0	Standard
32188AA110	1	Neutral position is closer to reverse gear.

Reverse check plate adjustment

Reverse check plate			
Part No.	Mark	Angle θ	Remarks
32189AA000	0	28°	Arm stops closer to 5th gear.
32189AA010	1	31°	Arm stops closer to 5th gear.
33189AA020	2	34°	Arm stops in the center.
32189AA030	3	37°	Arm stops closer to reverse gear.
32189AA040	4	40°	Arm stops closer to reverse gear.

9. EXTENSION ASSEMBLY

Thrust washer (50 × 61 × t) to taper roller bearing table outer race side clearance
0.2 — 0.3 mm T (0.0008 — 0.012 in T)

NOTE:
T: Tight

Thrust washer (50 × 61 × t)	
Part No.	Thickness mm (in)
803050060	0.50 (0.0197)
803050061	0.55 (0.0217)
803050062	0.60 (0.0236)
803050063	0.65 (0.0256)
803050064	0.70 (0.0276)
803050065	0.75 (0.0295)
803050066	0.80 (0.0315)
803050067	0.85 (0.0335)
803050068	0.90 (0.0354)
803050069	0.95 (0.0374)
803050070	1.00 (0.0394)
803050071	1.05 (0.0413)
803050072	1.10 (0.0433)
803050073	1.15 (0.0453)
803050074	1.20 (0.0472)
803050075	1.25 (0.0492)
803050076	1.30 (0.0512)
803050077	1.35 (0.0531)
803050078	1.40 (0.0551)
803050079	1.45 (0.0571)

Thrust washer to center differential side clearance
0.15 — 0.35 mm (0.0059 — 0.0138 in)

Thrust washer	
Part No.	Thickness mm (in)
803036050	0.9 (0.035)
803036054	1.0 (0.039)
803036051	1.1 (0.043)
803036055	1.2 (0.047)
803036052	1.3 (0.051)
803036056	1.4 (0.055)
803036053	1.5 (0.059)
803036057	1.6 (0.063)
803036058	1.7 (0.067)

10.FRONT DIFFERENTIAL

Bevel gear to pinion backlash
0.13 — 0.18 mm (0.0051 — 0.0071 in)

Washer (38.1 × 50 × t)			
Part No.	Thickness mm (in)	Part No.	Thickness mm (in)
803038021	0.925 — 0.950 (0.0364 — 0.0374)	803038023	1.025 — 1.050 (0.0404 — 0.0413)
803038022	0.975 — 1.000 (0.0384 — 0.0394)	—	—

Pinion shaft to axle drive shaft clearance
0 — 0.2 mm (0 — 0.008 in)

Snap ring (Outer-28)			
Part No.	Thickness mm (in)	Part No.	Thickness mm (in)
805028011	1.05 (0.0413)	805028012	1.20 (0.0472)

11.TRANSFER DRIVE GEAR

Snap ring (Outer-30) to ball bearing clearance
0.01 — 0.15 mm (0.0004 — 0.0059 in)

Snap ring (Outer-30)	
Part No.	Thickness mm (in)
805030041	1.53 (0.0602)
805030042	1.65 (0.0650)
805030043	1.77 (0.0697)

B: COMPONENT

1. TRANSMISSION CASE

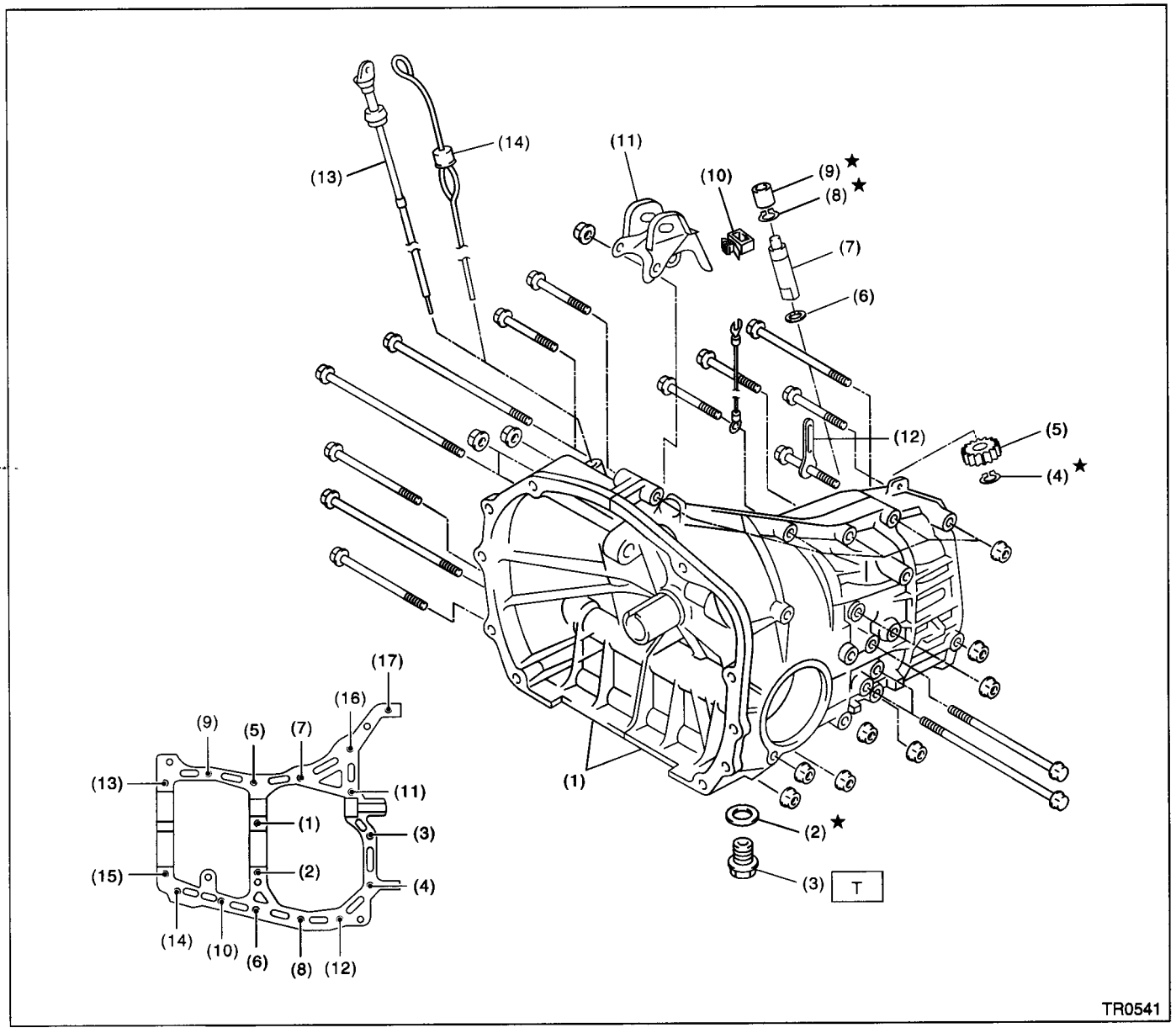

(1) Transmission case ASSY
(2) Gasket
(3) Drain plug
(4) Snap ring (Outer)
(5) Speedometer driven gear
(6) Washer
(7) Speedometer shaft
(8) Snap ring (Outer)
(9) Oil seal
(10) Clamp
(11) Pitching stopper bracket
(12) Clip
(13) Oil level gauge (Non-turbo model)
(14) Oil level gauge (Turbo model)

Tightening torque: N·m (kgf-m, ft-lb)
T: 44 (4.5, 32.5)

Size	All models	Tightening torque: N·m (kgf-m, ft-lb)
8 mm bolt	<5> — <15>	25 (2.5, 18.1)
10 mm bolt	<1> — <4> <16> — <17>	39 (4.0, 28.9)

2. DRIVE PINION ASSEMBLY

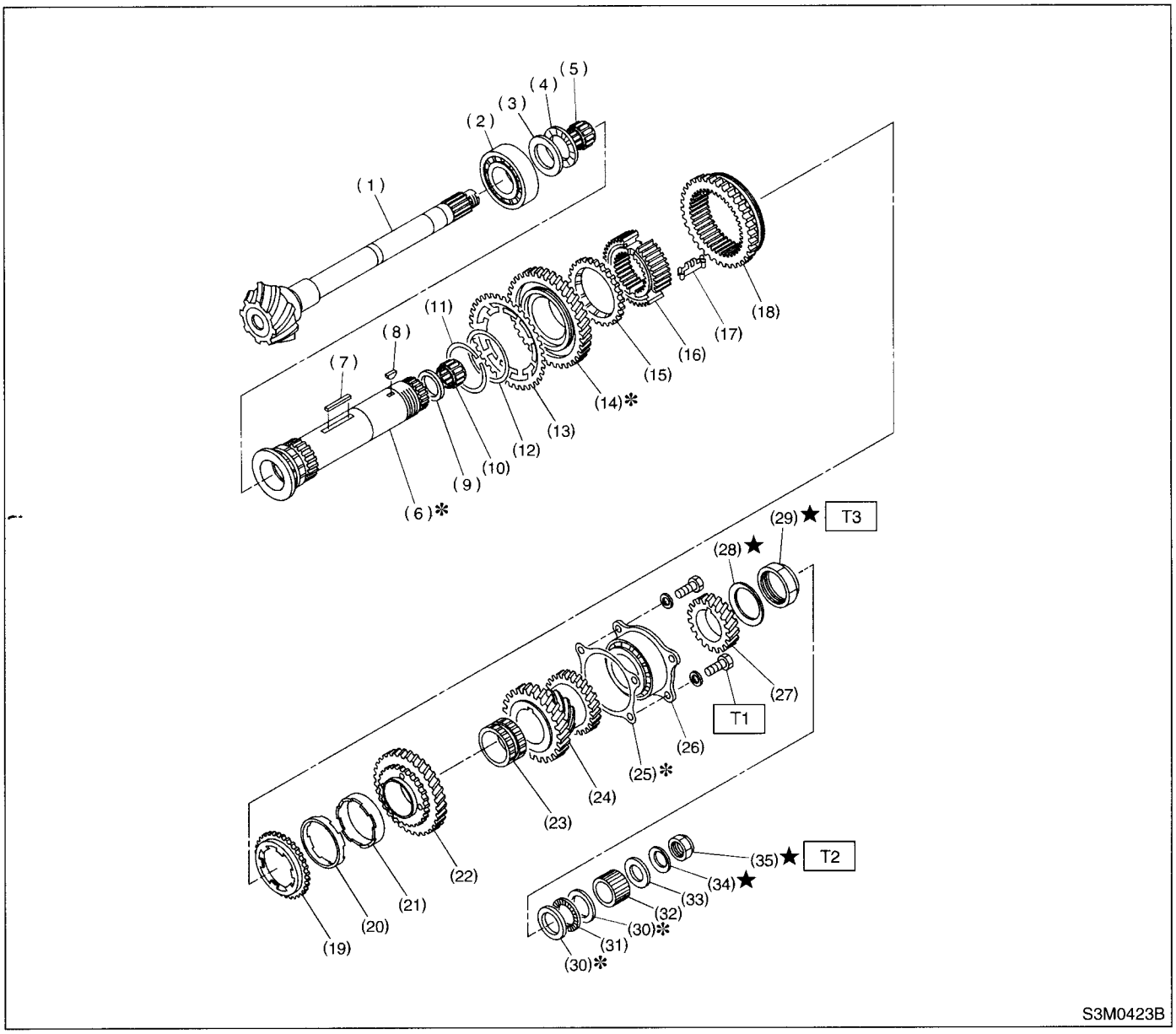

(1)	Drive pinion shaft	(15)	Baulk ring	(29)	Lock nut
(2)	Roller bearing	(16)	1st-2nd synchronizer hub	(30)	Washer
(3)	Washer	(17)	Insert key	(31)	Thrust bearing
(4)	Thrust bearing	(18)	Reverse driven gear	(32)	Differential bevel gear sleeve
(5)	Needle bearing	(19)	Outer baulk ring	(33)	Washer
(6)	Driven shaft	(20)	Synchro cone	(34)	Lock washer
(7)	Key	(21)	Inner baulk ring	(35)	Lock nut
(8)	Woodruff key	(22)	2nd driven gear		
(9)	Drive pinion collar	(23)	2nd driven gear bush		
(10)	Needle bearing	(24)	3rd-4th driven gear		
(11)	Snap ring (Outer)	(25)	Driven pinion shim		
(12)	Washer	(26)	Roller bearing		
(13)	Sub gear	(27)	5th driven gear		
(14)	1st driven gear	(28)	Lock washer		

Tightening torque: N·m (kgf-m, ft-lb)

T1: 29 (3.0, 21.7)
T2: 118 (12.0, 86.8)
T3: 265 (27, 195)

3. MAIN SHAFT ASSEMBLY

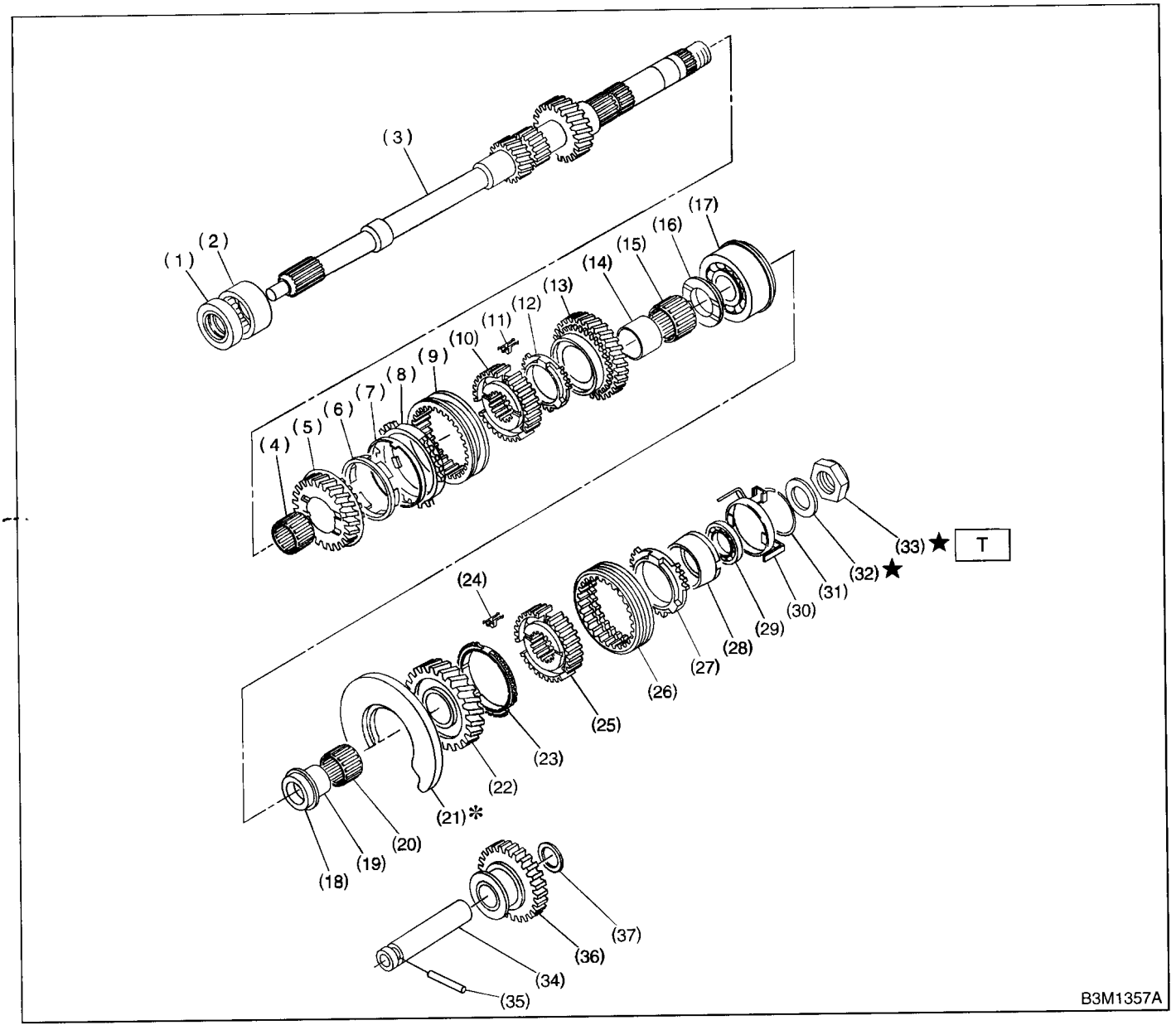

(1) Oil seal
(2) Needle bearing
(3) Transmission main shaft
(4) Needle bearing
(5) 3rd drive gear
(6) Inner baulk ring
(7) Synchro cone (3rd)
(8) Outer baulk ring
(9) Coupling sleeve (3rd-4th)
(10) Synchronizer hub (3rd-4th)
(11) Shifting insert key (3rd-4th)
(12) 4th baulk ring
(13) 4th drive gear
(14) 4th needle bearing race
(15) Needle bearing
(16) 4th gear thrust washer
(17) Ball bearing
(18) 5th gear thrust washer
(19) 5th needle bearing race
(20) Needle bearing
(21) Main shaft rear plate
(22) 5th drive gear
(23) 5th baulk ring
(24) Shifting insert key (5th-Rev)
(25) Synchronizer hub (5th-Rev)
(26) Coupling sleeve (5th-Rev)
(27) Rev baulk ring
(28) Synchro cone (Rev)
(29) Ball bearing
(30) Synchro cone stopper
(31) Snap ring
(32) Lock washer
(33) Lock nut
(34) Reverse idler gear shaft
(35) Straight pin
(36) Reverse idler gear
(37) Washer

Tightening torque: N·m (kgf-m, ft-lb)
T: 118 (12.0, 86.8)

4. SHIFTER FORK AND SHIFTER ROD

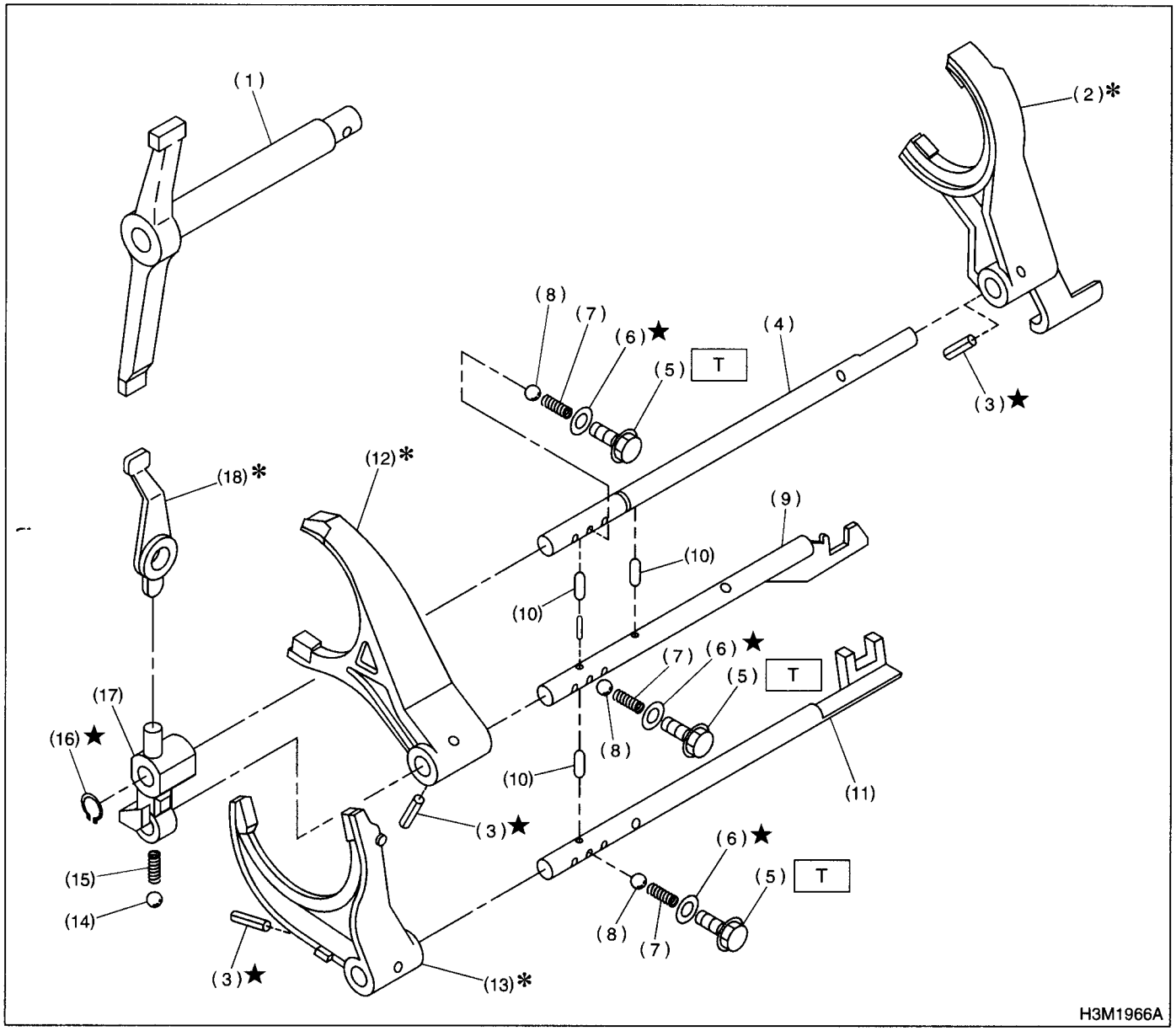

(1)	Shifter arm	(9)	3rd-4th fork rod	(17)	Reverse fork rod arm
(2)	5th shifter fork	(10)	Interlock plunger	(18)	Reverse shifter lever
(3)	Straight pin	(11)	1st-2nd fork rod		
(4)	Reverse fork rod	(12)	3rd-4th shifter fork		
(5)	Checking ball plug	(13)	1st-2nd shifter fork		
(6)	Gasket	(14)	Ball		
(7)	Checking ball spring	(15)	Spring		
(8)	Ball	(16)	Snap ring (Outer)		

Tightening torque: N·m (kgf-m, ft-lb)
T: 19.6 (2.0, 14.5)

5. TRANSFER CASE AND EXTENSION

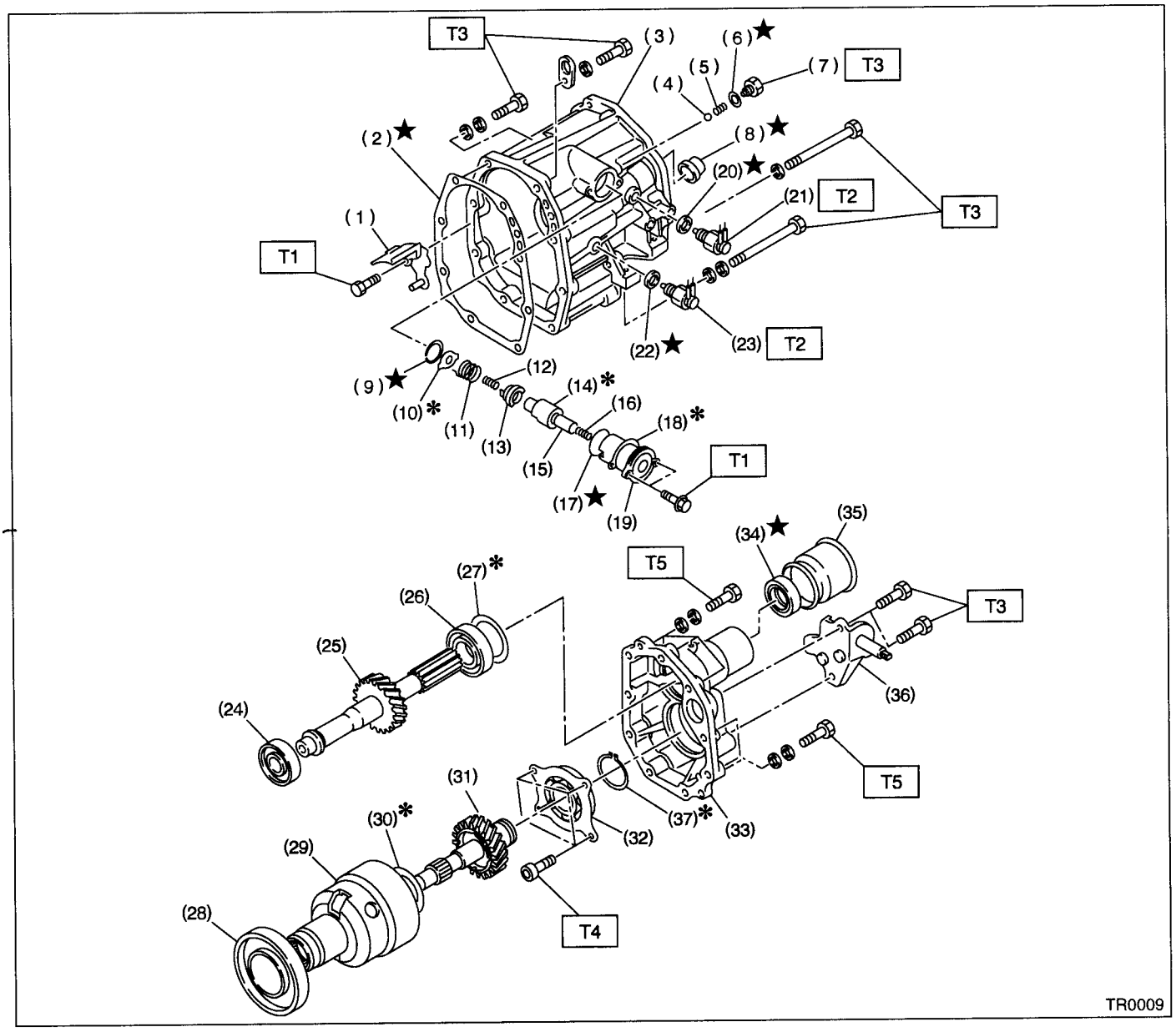

(1) Oil guide
(2) Gasket
(3) Transfer case
(4) Ball
(5) Reverse accent spring
(6) Gasket
(7) Plug
(8) Oil seal
(9) Snap ring (Inner)
(10) Reverse check plate
(11) Reverse check spring
(12) Reverse return spring
(13) Reverse check cam
(14) Reverse accent shaft
(15) Return spring cap
(16) Return spring
(17) O-ring
(18) Adjusting select shim
(19) Reverse check sleeve
(20) Gasket
(21) Neutral switch
(22) Gasket
(23) Back-up light switch
(24) Roller bearing
(25) Transfer driven gear
(26) Roller bearing
(27) Adjusting washer
(28) Ball bearing
(29) Center differential
(30) Adjusting washer
(31) Transfer drive gear
(32) Ball bearing
(33) Extension
(34) Oil seal
(35) Dust cover
(36) Shift bracket
(37) Snap ring

Tightening torque: N·m (kgf-m, ft-lb)
T1: 6.4 (0.65, 4.7)
T2: 10 (1.0, 7.2)
T3: 25 (2.5, 18.1)
T4: 26 (2.7, 20)
T5: 40 (4.1, 29.7)

6. FRONT DIFFERENTIAL

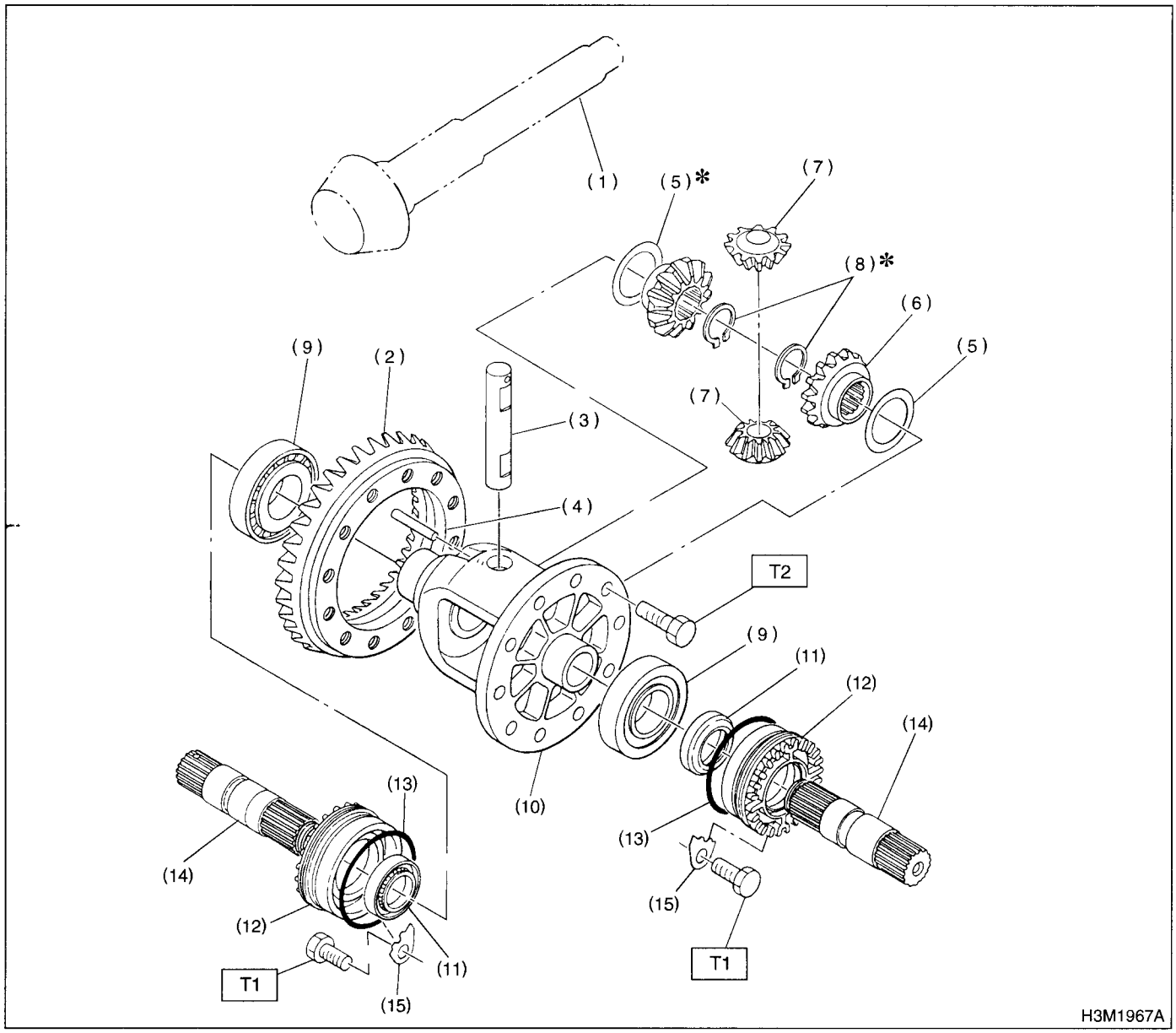

(1)	Drive pinion shaft	(8)	Snap ring (Outer)	(15)	Retainer lock plate
(2)	Hypoid driven gear	(9)	Roller bearing		
(3)	Pinion shaft	(10)	Differential case		
(4)	Straight pin	(11)	Oil seal		
(5)	Washer	(12)	Differential side retainer		
(6)	Differential bevel gear	(13)	O-ring		
(7)	Differential bevel pinion	(14)	Axle drive shaft		

Tightening torque: N·m (kgf-m, ft-lb)
T1: 25 (2.5, 18.1)
T2: 62 (6.3, 45.6)

7. TRANSMISSION MOUNTING

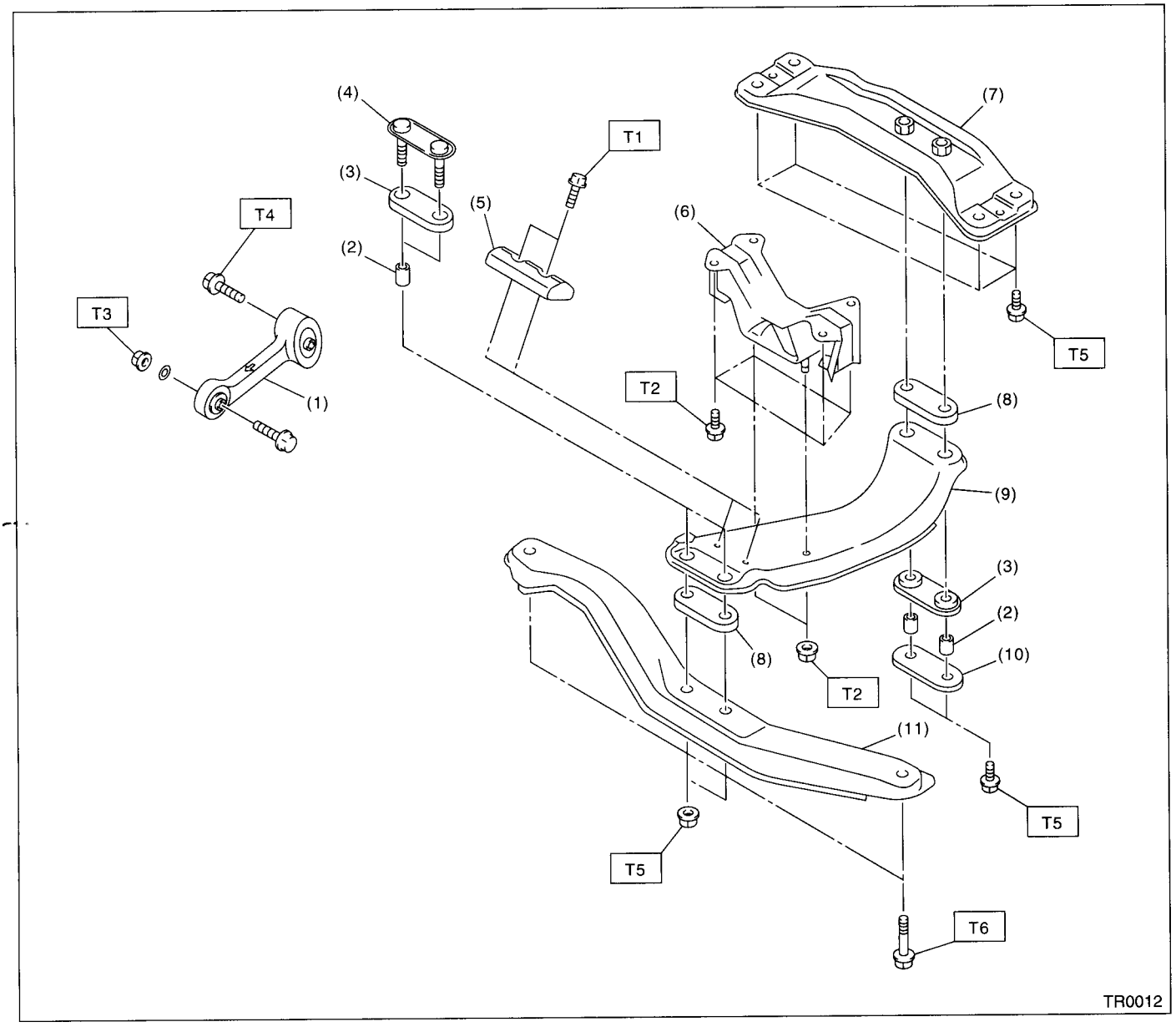

(1) Pitching stopper
(2) Spacer
(3) Cushion C
(4) Front plate
(5) Damper
(6) Rear cushion rubber
(7) Rear crossmember
(8) Cushion D
(9) Center crossmember
(10) Rear plate
(11) Front crossmember

Tightening torque: N·m (kgf-m, ft-lb)

T1: 7.5 (0.76, 5.5)
T2: 35 (3.6, 26)
T3: 50 (5.1, 37)
T4: 58 (5.9, 43)
T5: 70 (7.1, 51)
T6: 140 (14.3, 103)

C: CAUTION

- Wear working clothing, including a cap, protective goggles, and protective shoes during operation.
- Remove contamination including dirt and corrosion before removal, installation, and disassembly.
- Keep the disassembled parts in order and protect them from dust or dirt.
- Before removal, installation or disassembly, be sure to clarify the failure. Avoid unnecessary removal, installation, disassembly and replacement.
- When disassembling the case and other light alloy parts, use a plastic hammer to force it apart. Do not pry it apart with a screwdriver or other tool.
- Be careful not to burn your hands, because each part on the vehicle is hot after running.
- Use SUBARU genuine gear oil, grease etc. or the equivalent. Do not mix gear oil, grease etc. with that of another grade or from other manufacturers.
- Be sure to tighten fasteners including bolts and nuts to the specified torque.
- Place shop jacks or safety stands at the specified points.
- Apply gear oil onto sliding or revolution surfaces before installation.
- Replace deformed or otherwise damaged snap rings with new ones.
- Before installing O-rings or oil seals, apply sufficient amount of gear oil to avoid damage and deformation.
- Be careful not to incorrectly install or fail to install O-rings, snap rings and other such parts.
- Before securing a part on a vice, place cushioning material such as wood blocks, aluminum plate, or shop cloth between the part and the vice.
- Avoid damaging the mating surface of the case.
- Before applying sealant, completely remove the old seal.

D: PREPARATION TOOL

1. SPECIAL TOOLS

ILLUSTRATION	TOOL NUMBER	DESCRIPTION	REMARKS
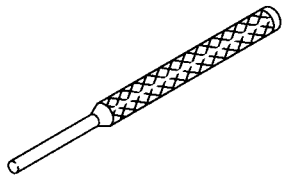 B3M1938	398791700	REMOVER	Used for removing and installing spring pin (6 mm).
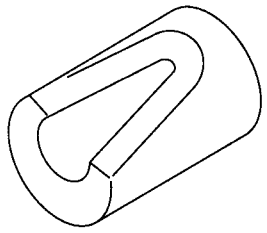 B3M1939	399411700	ACCENT BALL INSTALLER	Used for installing reverse shifter rail arm.

ILLUSTRATION	TOOL NUMBER	DESCRIPTION	REMARKS
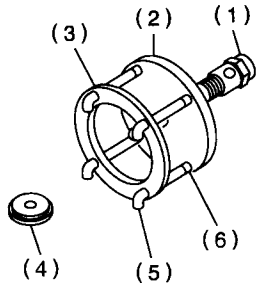 B3M1940A	399527700	PULLER SET	Used for removing and installing roller bearing (Differential). (1) BOLT (899521412) (2) PULLER (399527702) (3) HOLDER (399527703) (4) ADAPTER (398497701) (5) BOLT (899520107) (6) NUT (021008000)
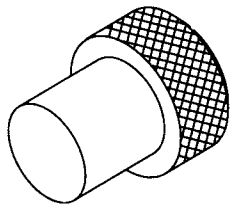 B3M1941	399780104	WEIGHT	Used for measuring preload on roller bearing.
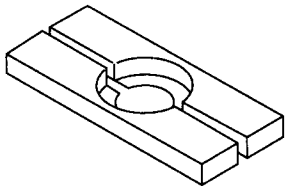 B3M1942	498077000	REMOVER	Used for removing roller bearing of drive pinion shaft.
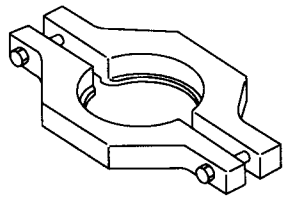 B3M1943	498077300	CENTER DIFFERENTIAL BEARING REMOVER	Used for removing the center differential cover ball bearing.

ILLUSTRATION	TOOL NUMBER	DESCRIPTION	REMARKS
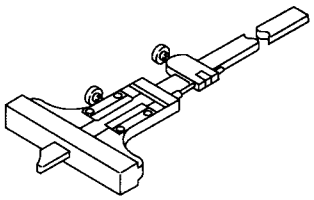 B3M1944	498147000	DEPTH GAUGE	Used for adjusting main shaft axial end play.
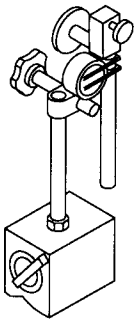 B3M1945	498247001	MAGNET BASE	• Used for measuring backlash between side gear and pinion, and hypoid gear. • Used with DIAL GAUGE (498247100).
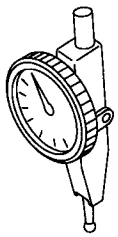 B3M1946	498247100	DIAL GAUGE	• Used for measuring backlash between side gear and pinion, and hypoid gear. • Used with MAGNET BASE (498247001).
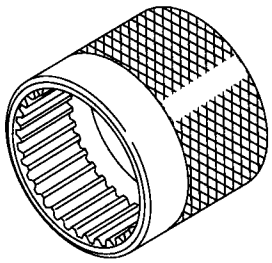 B3M1947	498427100	STOPPER	Used for securing the drive pinion shaft assembly and driven gear assembly when removing the drive pinion shaft assembly lock nut.

ILLUSTRATION	TOOL NUMBER	DESCRIPTION	REMARKS
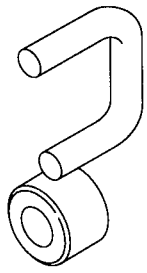 B3M1948	498787100	MAIN SHAFT STOPPER	Used for removing and installing transmission main shaft lock nut.
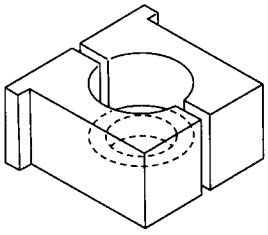 B3M1949	498937000	TRANSMISSION HOLDER	Used for removing and installing transmission main shaft lock nut.
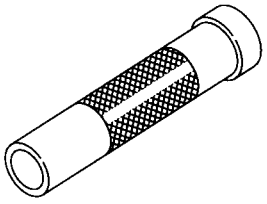 B3M1950	499277100	BUSH 1-2 INSTALLER	• Used for installing 1st driven gear thrust plate and 1st-2nd driven gear bush. • Used for installing roller bearing outer races to differential case.
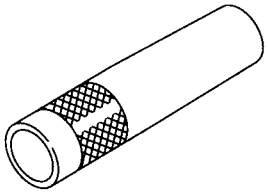 B3M1951	499277200	INSTALLER	Used for press-fitting the 2nd driven gear, roller bearings, and 5th driven gear onto the driven shaft.

ILLUSTRATION	TOOL NUMBER	DESCRIPTION	REMARKS
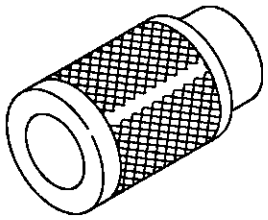 B3M1952	499757002	INSTALLER	• Used for installing snap ring (OUT 25), and ball bearing (25 x 26 x 17). • Used for installing bearing cone of transfer driven gear (extension core side).
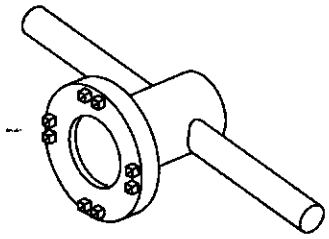 B3M1953	499787000	WRENCH ASSY	Used for removing and installing differential side retainer.
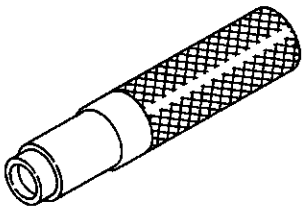 B3M1954	499827000	PRESS	Used for installing speedometer oil seal when installing speedometer cable to transmission.
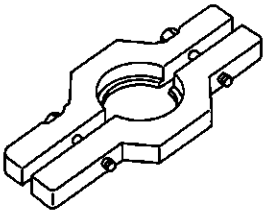 B3M1955	499857000	5TH DRIVEN GEAR REMOVER	Used for removing 5th driven gear

ILLUSTRATION	TOOL NUMBER	DESCRIPTION	REMARKS
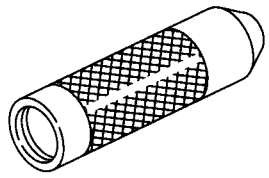 B3M1956	499877000	RACE 4-5 INSTALLER	• Used for installing 4th needle bearing race and ball bearing onto transmission main shaft. • Used with REMOVER (899714110).
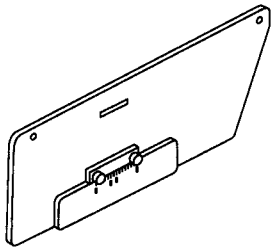 B3M1957	499917500	DRIVE PINION GAUGE ASSY	Used for adjusting drive pinion shim.
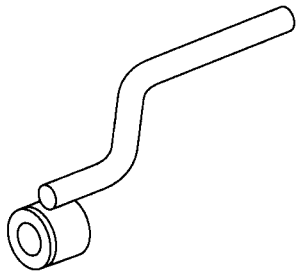 B3M1958	499927100	HANDLE	Used for fitting transmission main shaft.
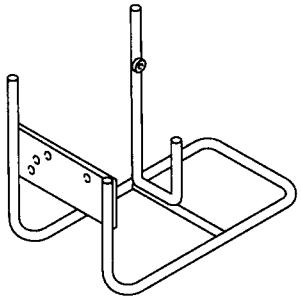 B3M1959	499937100	TRANSMISSION STAND SET	Stand used for transmission disassembly and assembly.

ILLUSTRATION	TOOL NUMBER	DESCRIPTION	REMARKS
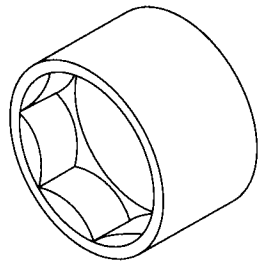 B3M1960	499987003	SOCKET WRENCH (35)	Used for removing and installing driven pinion lock nut and main shaft lock nut.
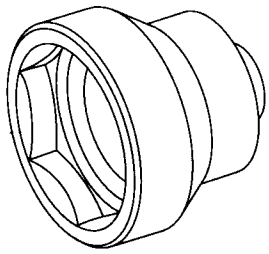 B3M1961	499987300	SOCKET WRENCH (50)	Used for removing and installing driven gear assembly lock nut.
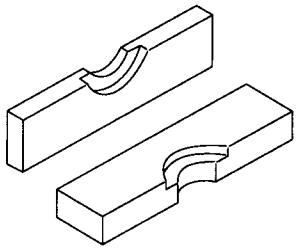 B3M1962	899714110	REMOVER	Used for fixing transmission main shaft, drive pinion, rear drive shaft.
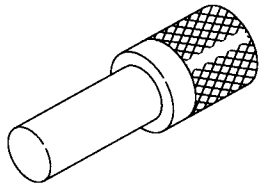 B3M1963	899864100	REMOVER	Used for removing parts on transmission main shaft and drive pinion.

ILLUSTRATION	TOOL NUMBER	DESCRIPTION	REMARKS
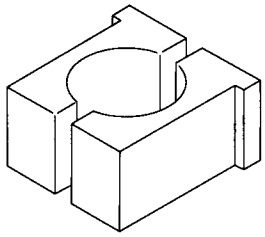 B3M1964	899884100	HOLDER	Used for tightening lock nut on sleeve.
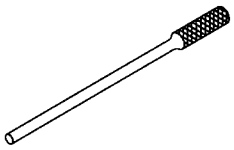 B3M1965	899904100	REMOVER	Used for removing and installing straight pin.
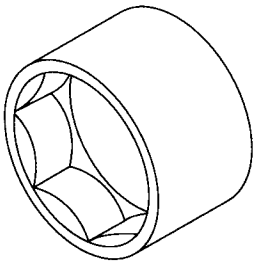 B3M1966	899988608	SOCKET WRENCH (27)	Used for removing and installing drive pinion lock nut.
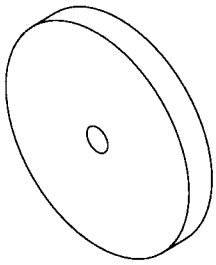 B3M1967	398497701	ADAPTER	• Used for installing roller bearing onto differential case. • Used with INSTALLER (499277100).

ILLUSTRATION	TOOL NUMBER	DESCRIPTION	REMARKS
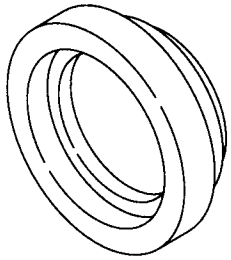 B3M1968	499587000	INSTALLER	Used for installing driven gears to driven shaft.
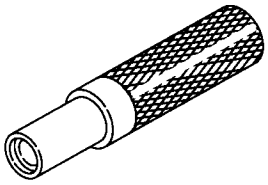 B3M1969	899824100	PRESS	Used for installing speedometer shaft oil seal.
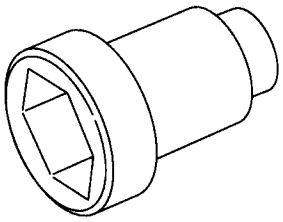 B3M1970	499987100	SOCKET WRENCH (35)	Used for removing and installing drive pinion lock nut.
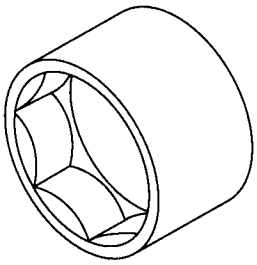 B3M1971	899984103	SOCKET WRENCH (35)	Used for removing and installing drive pinion lock nut.

ILLUSTRATION	TOOL NUMBER	DESCRIPTION	REMARKS
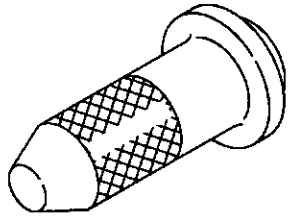 B3M1972	498057300	NSTALLER	Jsed for installing extension oil seal.
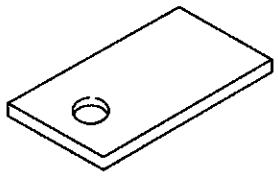 B3M1973	498255400	PLATE	Used for measuring backlash.
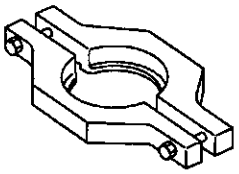 B3M1974	498077400	REMOVER	• Used for removing synchronizer cone of main shaft. • Used for removing 5th driven gear of drive pinion shaft.
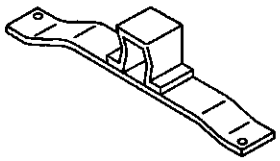 B3M1975	41099AA010	ENGINE SUPPORT BRACKET	Used for supporting engine.

ILLUSTRATION	TOOL NUMBER	DESCRIPTION	REMARKS
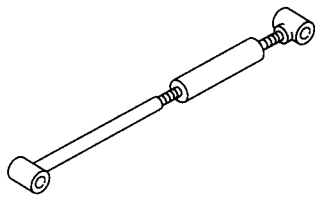 B3M1976	41099AA020	ENGINE SUPPORT	Used for supporting engine.
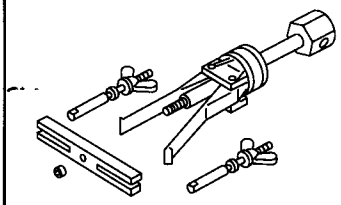 B3M1977	398527700	PULLER ASSY	Used for removing and installing extension case roller bearing.
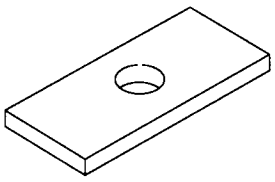 B3M1978	398643600	GAUGE	Used for measuring total end play, extension end play and drive pinion height.
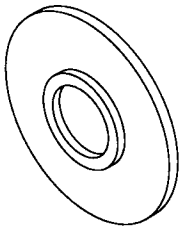 B3M1905	38177700	INSTALLER	• Used for installing bearing cone of transfer driven gear (transfer case side). • Used for installing ball bearing of transfer drive gear.

2. GENERAL PURPOSE TOOLS

TOOL NAME	REMARKS
Circuit Tester	Used for measuring resistance, voltage and ampere.

2. Transmission Gear Oil

A: INSPECTION

1) Park vehicle on a level surface.
2) Turn the ignition switch to OFF, and wait until the engine cools.
3) Remove the oil level gauge and wipe it clean.
4) Reinsert the level gauge all the way. Be sure that the level gauge is correctly inserted and in the proper direction.
5) Pull out the oil level gauge again and check the oil level on it. If it is below the lower level, add oil through the oil level gauge hole to bring the level up to the upper level.

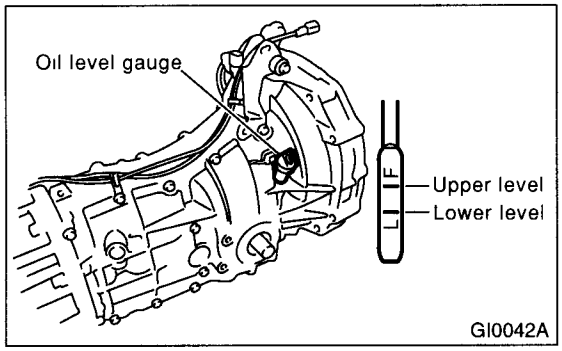

B: REPLACEMENT

1) Pull out oil level gauge.
2) Lift-up the vehicle.
3) Drain the transmission gear oil completely.

CAUTION:
Directly after the engine has been running, the transmission gear oil is hot. Be careful not to burn yourself.

NOTE:
Tighten the transmission gear oil drain plug after draining transmission gear oil.

Tightening torque:
44 N·m (4.5 kgf-m, 32.5 ft-lb)

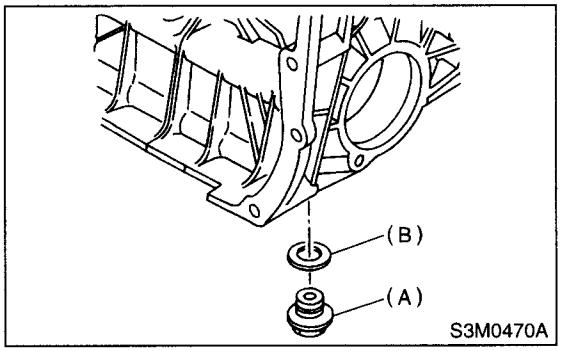

(A) Drain plug
(B) Gasket

4) Lower the vehicle.
5) Pour the gear oil into the gauge hole.

Recommended gear oil:
Use GL-5 or equivalent.

Gear oil capacity:
3.5 ℓ (3.7 US qt, 3.1 Imp qt)

6) Check the level of the transmission gear oil.

CAUTION:
When inserting the level gauge into transmission gear, align the protrusion on the side of the top part of the level gauge with the notch in the gauge hole.

NOTE:
The level should be within the specified range marked on the gauge.

3. Manual Transmission Assembly

A: REMOVAL

1) Open the front hood fully, and support with stay.
2) Disconnect the battery ground terminal.
3) Remove the air intake duct and cleaner case. (Non-turbo model) <Ref. to IN(SOHC)-7, REMOVAL, Air Intake Duct.> and <Ref. to IN(SOHC)-6, REMOVAL, Air Cleaner Case.>
4) Remove the air cleaner case stay. (Non-turbo model)

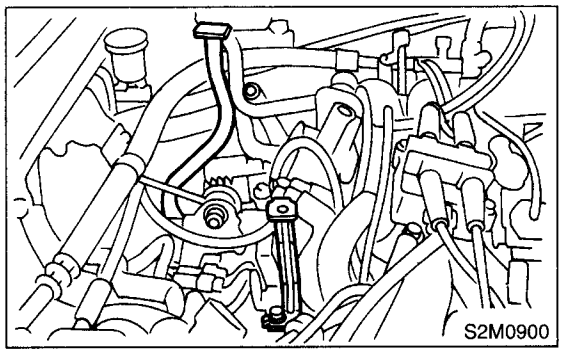

5) Remove the intercooler (Turbo model) <Ref. to IN(DOHC TURBO)-10, REMOVAL, Intercooler.>
6) Disconnect the following connectors.
   (1) Neutral position switch connector
   (2) Back-up light switch connector

- Non-turbo model

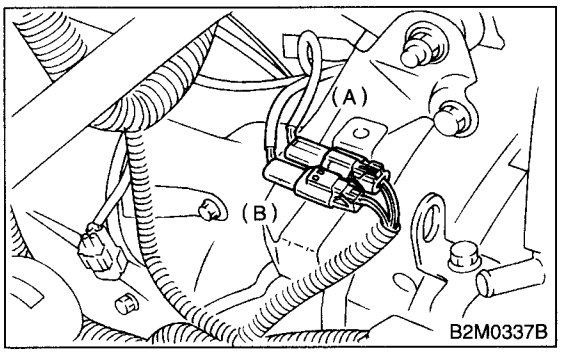

(A) Neutral switch (Brown)
(B) Back-up light switch (Gray)

- Turbo model

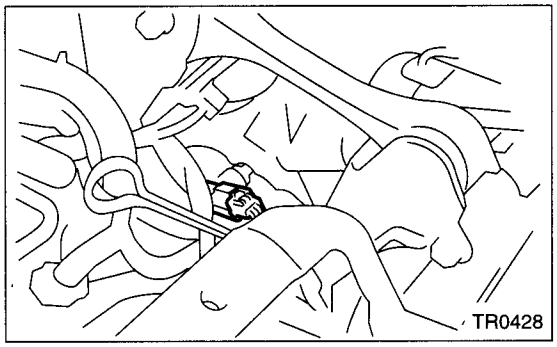

(3) Vehicle speed sensor

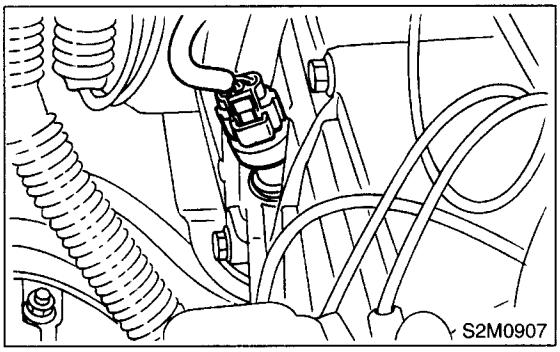

7) Remove the starter. <Ref. to SC-6, REMOVAL, Starter.>
8) Remove the operating cylinder from the transmission.

- Non-turbo model

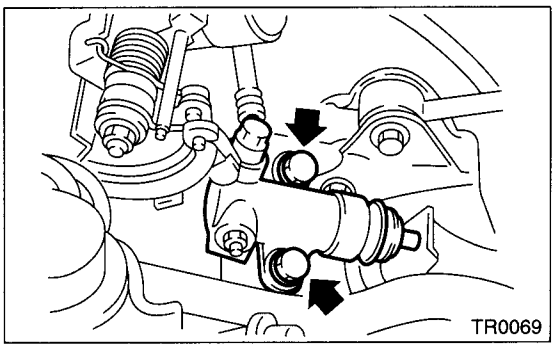

- Turbo model

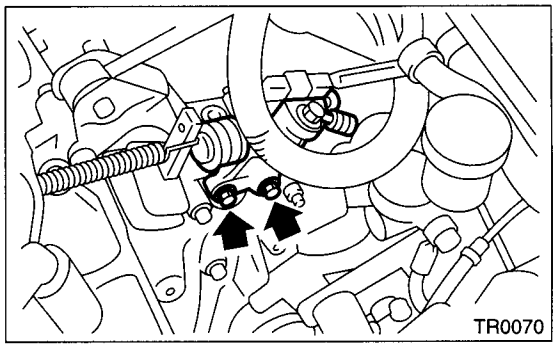

9) Remove the pitching stopper.

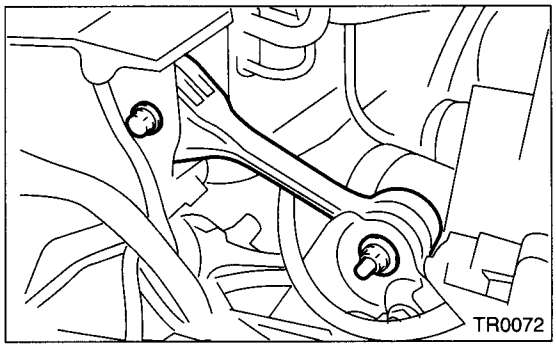

10) Separate the clutch release fork from the release bearing. (Turbo model)

(1) Remove the clutch operating cylinder from the transmission.

(2) Remove the plug using 10 mm hexagon wrench.

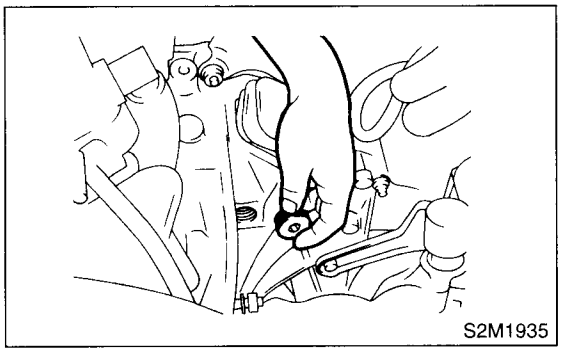

(3) Screw the 6 mm dia. bolt into the release fork shaft, and remove it.

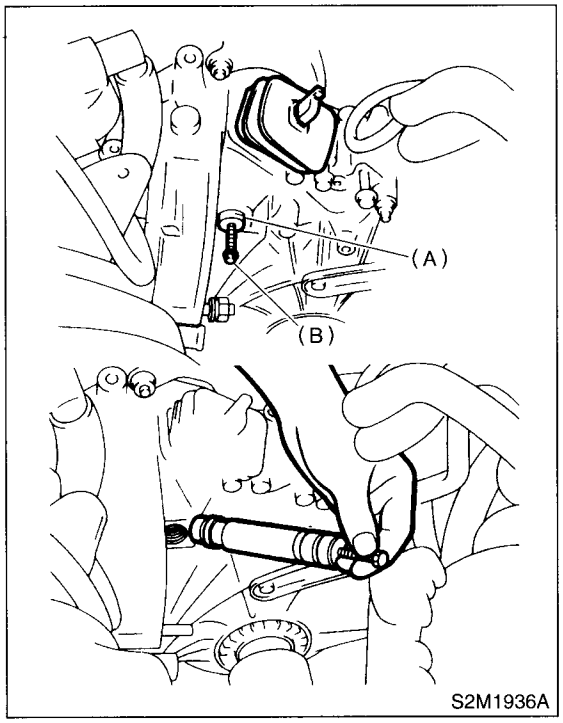

(A) Shaft
(B) Bolt

(4) Raise the release fork and unfasten the release bearing tabs to free release fork.

CAUTION:
Step (4) is required to prevent interference with engine when removing engine from transmission.

11) Set ST.

NOTE:
Also is available Part No. 927670000.

ST 41099AA020 ENGINE SUPPORT ASSY

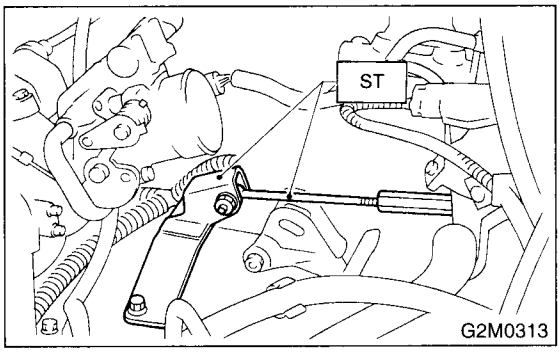

12) Remove the bolt which holds right upper side of transmission to the engine.

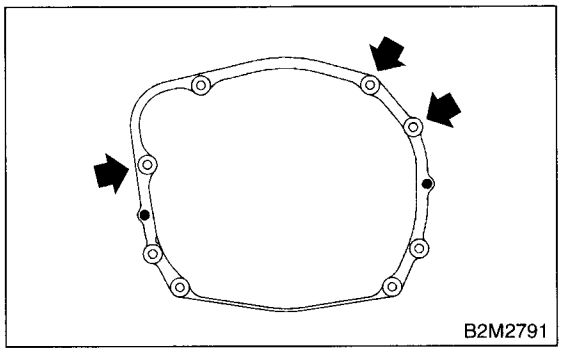

13) Remove the front and center exhaust pipes. (Non-turbo model) with OBD <Ref. to EX(SOHC)-5, REMOVAL, Front Exhaust Pipe.>

14) Remove the center exhaust pipe. (Turbo model). <Ref. to EX(DOHC TURBO)-8, REMOVAL, Center Exhaust Pipe.>

15) Remove the rear exhaust pipe and muffler.

CAUTION:
When removing exhaust pipes, be careful each exhaust pipe does not drop out.

16) Remove the heat shield cover. (If equipped)

17) Remove the hanger bracket from right side of transmission.

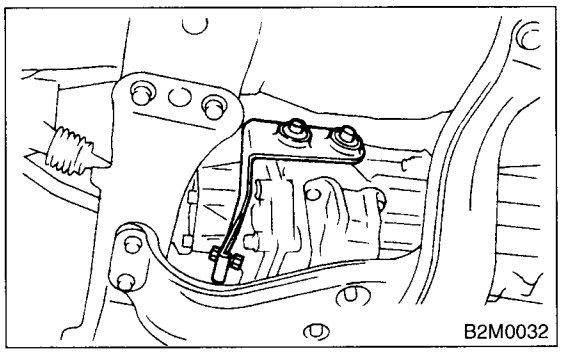

18) Remove the propeller shaft. <Ref. to DS-14, REMOVAL, Propeller Shaft.>

19) Remove the gear shift rod and stay from transmission.
(1) Disconnect the stay from the transmission.
(2) Disconnect the rod from the transmission.

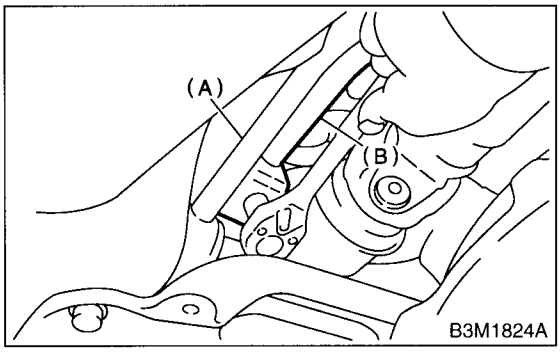

(A) Stay
(B) Rod

20) Disconnect the stabilizer link from the transverse link.
21) Remove the bolt securing ball joint of transverse link to housing.
- Except sedan turbo model

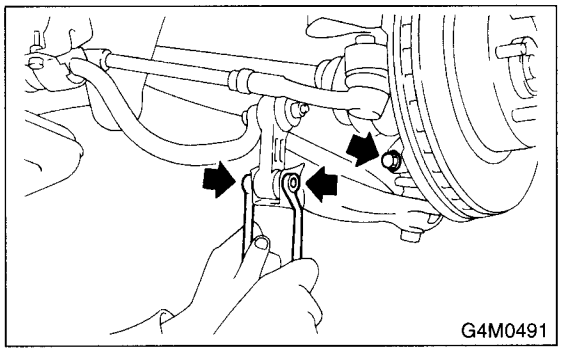

- Sedan turbo model

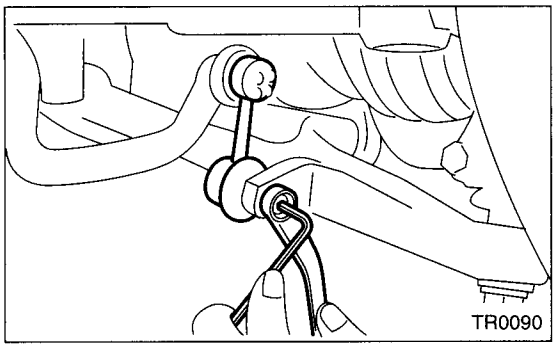

22) Remove the spring pins and separate front drive shafts from each side of the transmission.

CAUTION:
Discard removing spring pin. Replace with a new one.

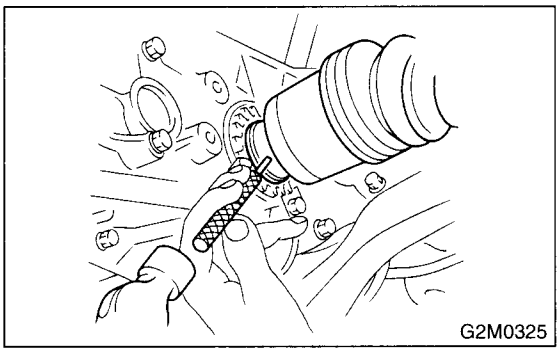

23) Remove the nuts which hold lower side of transmission to the engine.

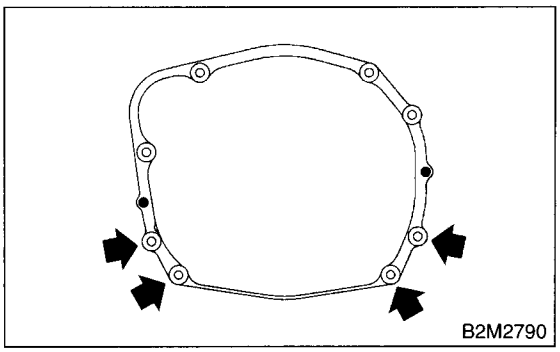

24) Place the transmission jack under transmission.

CAUTION:
Always support transmission case with a transmission jack.

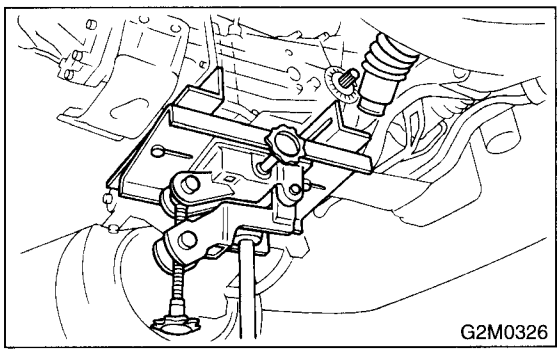

25) Remove the transmission rear crossmember from the vehicle.

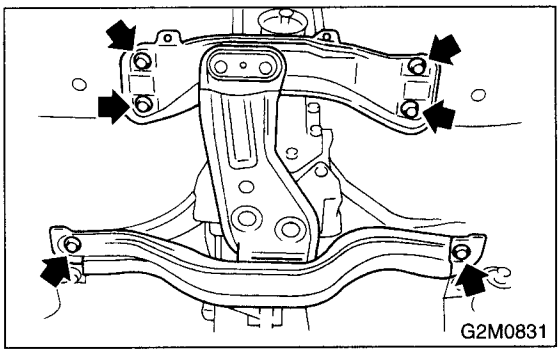

26) Remove the transmission.

CAUTION:
Move transmission jack toward rear until main shaft is withdrawn from clutch cover.

27) Separate the transmission assembly and rear cushion rubber.

B: INSTALLATION

1) Install the rear cushion rubber to the transmission assembly.

Tightening torque:
35 N·m (3.6 kgf-m, 26.3 ft-lb)

2) Install the clutch release lever and bearing onto the transmission. (Turbo model) <Ref. to CL-15, INSTALLATION, Release Bearing and Lever.>

3) Install the transmission onto the engine.
   (1) Gradually raise the transmission with transmission jack.
   (2) Engage them at splines.

CAUTION:
Be careful not to strike main shaft against clutch cover.

4) Install the transmission rear crossmember.

Tightening torque:
T1: 70 N·m (7.1 kgf-m, 51 ft-lb)
T2: 140 N·m (14.3 kgf-m, 103 ft-lb)

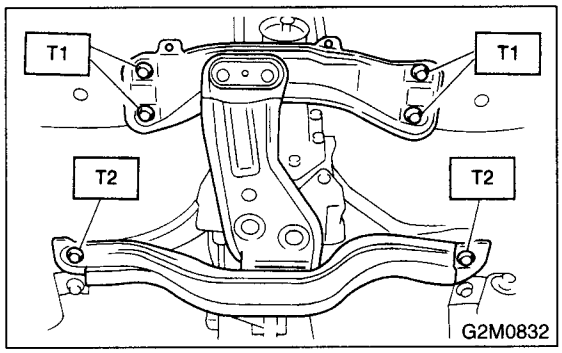

5) Take off the transmission jack.

6) Tighten the nuts which hold lower side of transmission to the engine.

Tightening torque:
50 N·m (5.1 kgf-m, 36.9 ft-lb)

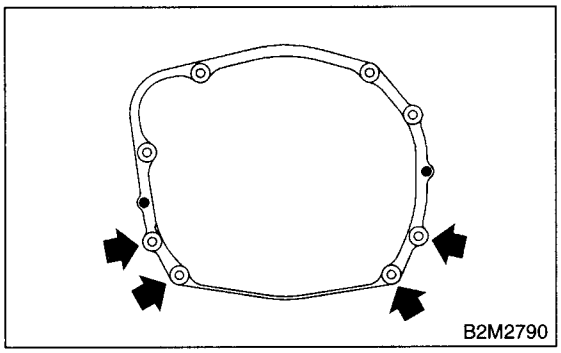

7) Connect the engine and transmission.
   (1) Install the starter.
   <Ref. to SC-7, INSTALLATION, Starter.>
   (2) Tighten the bolt which holds right upper side of transmission to the engine.

Tightening torque:
50 N·m (5.1 kgf-m, 36.9 ft-lb)

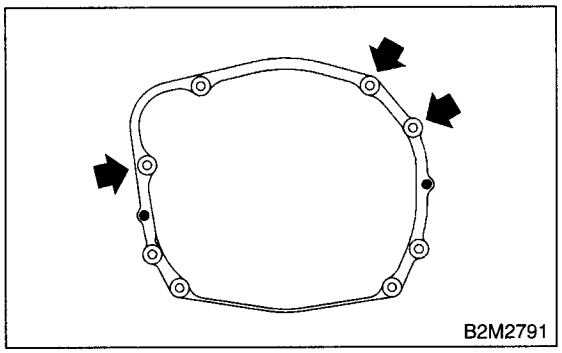

8) Remove ST.

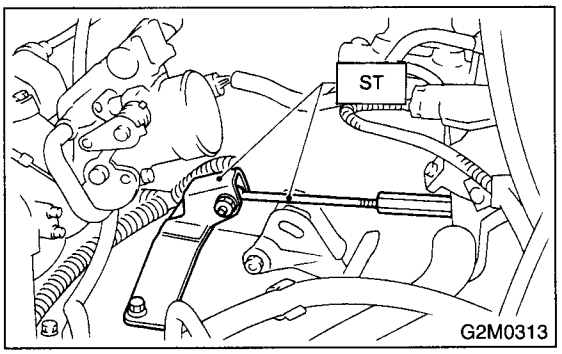

9) Push the clutch release lever to fit bearing into clutch cover.

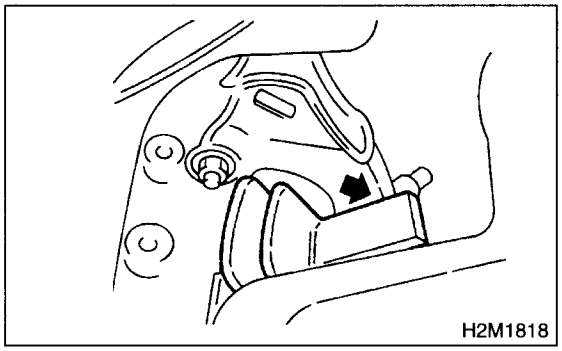

10) Install the plug.

Tightening torque:
44 N·m (4.5 kgf-m, 32.5 ft-lb)

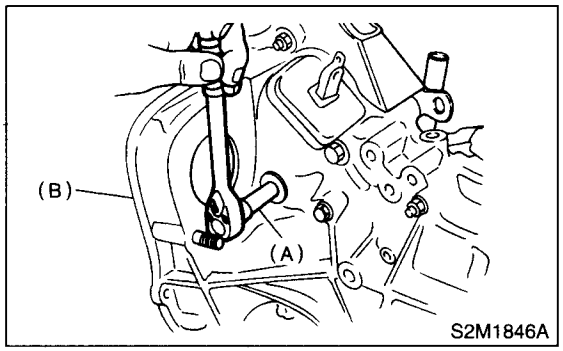

(A) Plug
(B) Transmission ASSY

11) Install the pitching stopper.

Tightening torque:
T1: 50 N·m (5.1 kgf-m, 37 ft-lb)
T2: 58 N·m (5.9 kgf-m, 43 ft-lb)

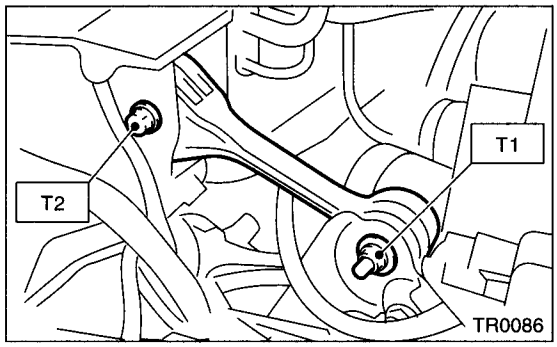

12) Lift-up the vehicle.
13) Install the front drive shaft into the transmission.

14) Drive the spring pin into the chamfered hole of drive shaft.

CAUTION:
Always use a new spring pin.

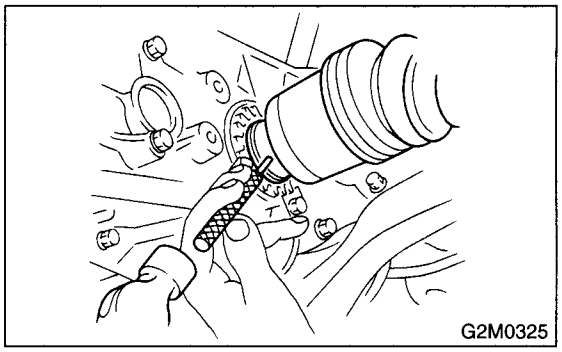

15) Install the ball joints of lower arm into knuckle arm of housing, and tighten the installing bolts.

Tightening torque:
49 N·m (5.0 kgf-m, 36 ft-lb)

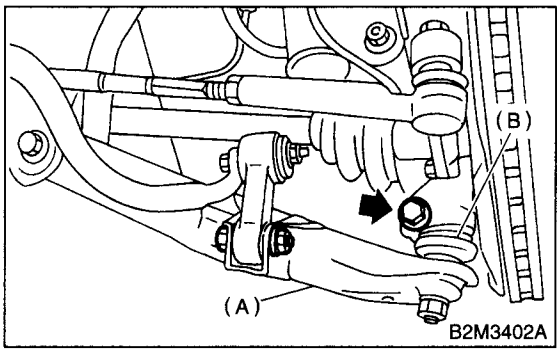

(A) Transverse link
(B) Ball joint

16) Install the stabilizer link from the transverse link.

- Except sedan turbo model

Tightening torque:
30 N·m (3.1 kgf-m, 22.1 ft-lb)

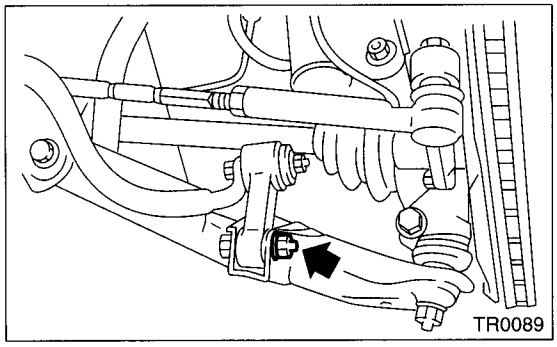

- Sedan turbo model

Tightening torque:
45 N·m (4.6 kgf-m, 33.2 ft-lb)

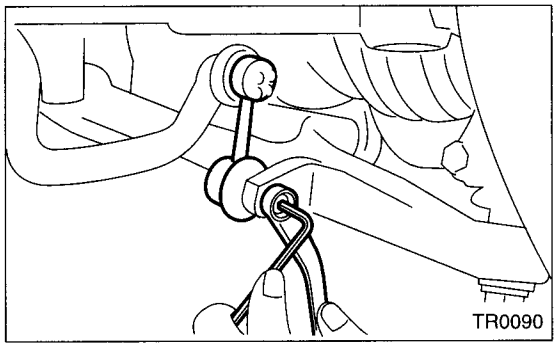

17) Install the gear shift rod and stay.
(1) Connect the rod to the joint.

Tightening torque:
18 N·m (1.8 kgf-m, 13.0 ft-lb)

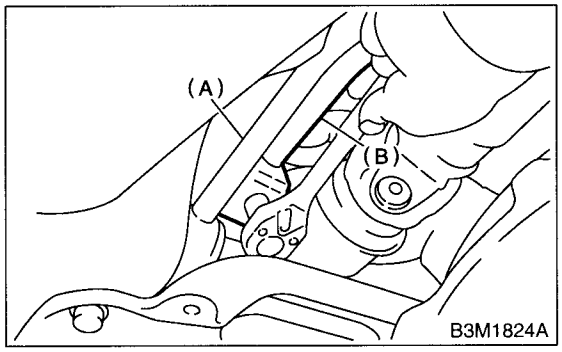

(A) Stay
(B) Rod

(2) Connect the stay to the transmission bracket.

Tightening torque:
18 N·m (1.8 kgf-m, 13.0 ft-lb)

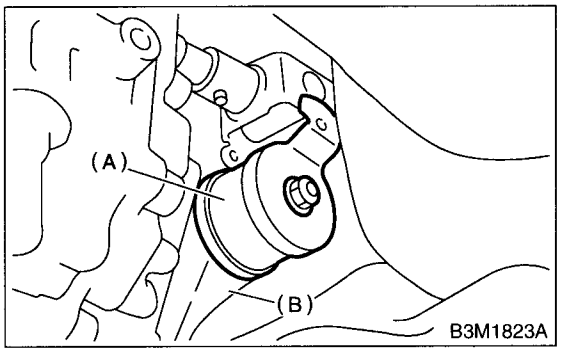

(A) Stay
(B) Transmission bracket

18) Install the propeller shaft. <Ref. to DS-15, INSTALLATION, Propeller Shaft.>
19) Install the heat shield cover. (If equipped)
20) Install the rear exhaust pipe and muffler.
21) Install the hanger bracket on the right side of transmission.

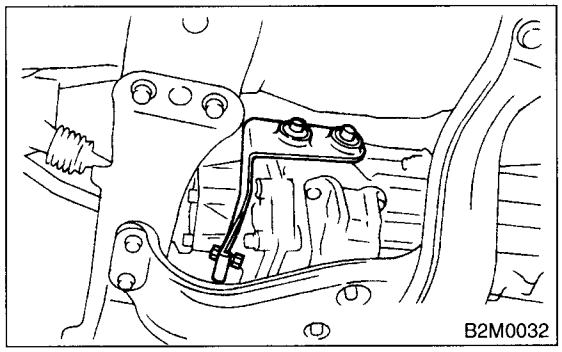

22) Install the front exhaust pipe and center exhaust pipe. (Non-turbo model)
<Ref. to EX(SOHC)-6, INSTALLATION, Front Exhaust Pipe.>
23) Install the center exhaust pipe. (Turbo model)
<Ref. to EX(DOHC TURBO)-9, INSTALLATION, Center Exhaust Pipe.>
24) Install the under cover.

25) Install the operating cylinder.

Tightening torque:
37 N·m (3.8 kgf-m, 27.5 ft-lb)

- Non-turbo model

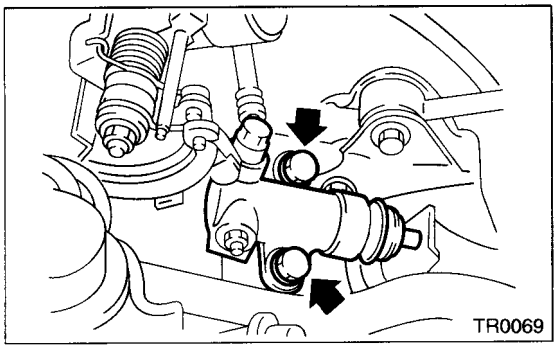

- Turbo model

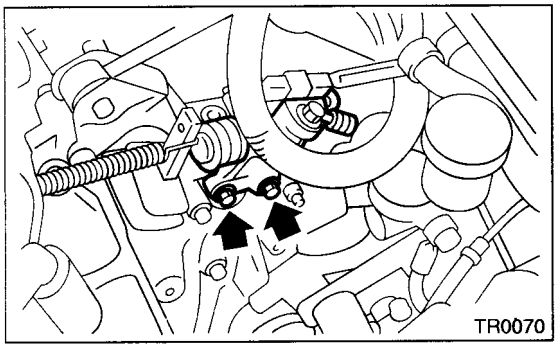

26) Connect the following connectors.
(1) Transmission ground terminal

Tightening torque:
13 N·m (1.3 kgf-m, 9.4 ft-lb)

(2) Vehicle speed sensor connector
(3) Neutral position switch connector
(4) Back-up light switch connector

27) Install the air cleaner case stay.

Tightening torque:
16 N·m (1.6 kgf-m, 11.6 ft-lb)

28) Install the air cleaner case and intake duct. (Non-turbo model) <Ref. to IN(SOHC)-6, INSTALLATION, Air Cleaner Case.> and <Ref. to IN(SOHC)-7, INSTALLATION, Air Intake Duct.>
29) Install the intercooler. (Turbo model) <Ref. to IN(DOHC TURBO)-11, INSTALLATION, Intercooler.>
30) Connect the battery ground terminal.
31) Take off the vehicle from lift arms.

4. Transmission Mounting System

A: REMOVAL

1. PITCHING STOPPER

1) Disconnect the battery ground terminal.
2) Remove the air intake duct and cleaner case.
3) Remove the air intake duct (Non-turbo model). <Ref. to IN(SOHC)-7, REMOVAL, Air Intake Duct.>
4) Remove the air cleaner case (Non-turbo model). <Ref. to IN(SOHC)-6, REMOVAL, Air Cleaner Case.>
5) Remove the inter cooler (Turbo model). <Ref. to IN(DOHC TURBO)-10, REMOVAL, Intercooler.>
6) Remove the pitching stopper.

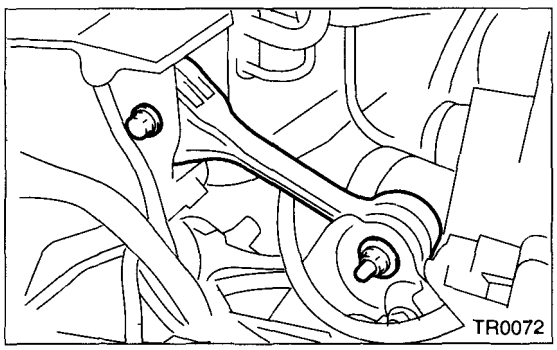

2. CROSSMEMBER AND CUSHION RUBBER

1) Disconnect the battery ground terminal.
2) Jack-up the vehicle and support it with sturdy racks.
3) Remove the front, center exhaust pipes. (Non-turbo model)
<Ref. to EX(SOHC)-5, REMOVAL, Front Exhaust Pipe.>

CAUTION:
When removing exhaust pipes, be careful each exhaust pipe does not drop out.

4) Remove the center exhaust pipe. (Turbo model)
<Ref. to EX(DOHC TURBO)-8, REMOVAL, Center Exhaust Pipe.>
5) Remove the rear exhaust pipe and muffler.
6) Remove the heat shield cover. (If equipped)
7) Set the transmission jack under the transmission body.

CAUTION:
Always support transmission case with a transmission jack.

8) Remove the rear crossmember.

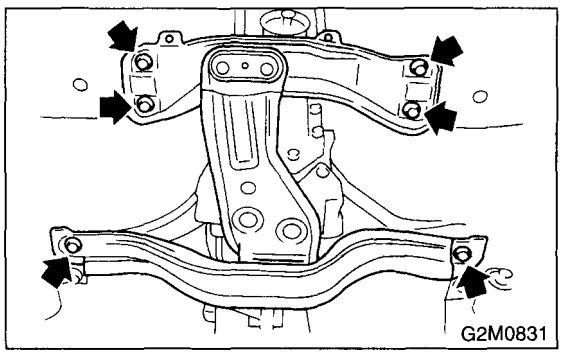

9) Remove the rear cushion rubber.

B: INSTALLATION

1. PITCHING STOPPER

1) Install the pitching stopper.

Tightening torque:
T1: 50 N·m (5.1 kgf-m, 37 ft-lb)
T2: 58 N·m (5.9 kgf-m, 43 ft-lb)

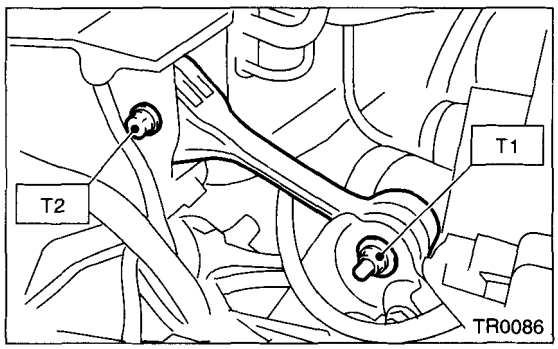

2) Install the air intake duct and cleaner case. (Non-turbo model)
<Ref. to IN(SOHC)-6, INSTALLATION, Air Cleaner Case.> and <Ref. to IN(SOHC)-7, INSTALLATION, Air Intake Duct.>
3) Install the intercooler. (Turbo model)
<Ref. to IN(DOHC TURBO)-11, INSTALLATION, Intercooler.>
4) Connect the battery ground terminal.

2. CROSSMEMBER AND CUSHION RUBBER

1) Install for rear cushion rubber.

Tightening torque:
35 N·m (3.6 kgf-m, 26 ft-lb)

2) Install the crossmember.

Tightening torque:
T1: 70 N·m (7.1 kgf-m, 51 ft-lb)
T2: 140 N·m (14.3 kgf-m, 103 ft-lb)

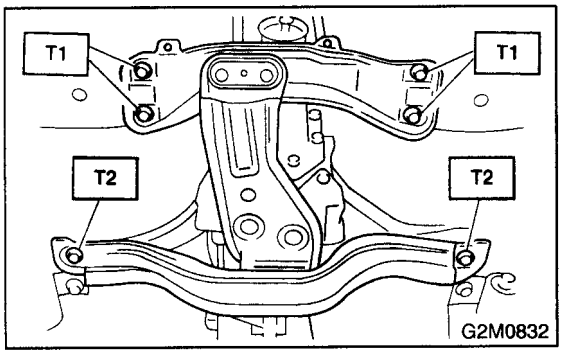

3) Remove the transmission jack.
4) Install the heat shield cover. (If equipped)
5) Install the front and center exhaust pipes. (Non-turbo model)
<Ref. to EX(SOHC)-6, INSTALLATION, Front Exhaust Pipe.>
6) Install the center exhaust pipe. (Turbo model)
<Ref. to EX(DOHC TURBO)-9, INSTALLATION, Center Exhaust Pipe.>
7) Install the rear exhaust pipe and muffler.

C: INSPECTION

Repair or replace parts if the results of the inspection below are not satisfactory.

1. PITCHING STOPPER

Make sure that the pitching stopper is not bent or damaged. Make sure that the rubber is not stiff, cracked, or otherwise damaged.

2. CROSSMEMBER AND CUSHION RUBBER

Make sure that the crossmember is not bent or damaged. Make sure that the cushion rubber is not stiff, cracked, or otherwise damaged.

5. Oil Seal

A: INSPECTION

Inspect for oil leakage from the oil seal. Replace the oil seal if the lips is deformed, hardened, damaged, worn or defective if any.

B: REPLACEMENT

1) Clean the transmission exterior.
2) Drain the gear oil completely.

NOTE:
Tighten the drain plug after draining gear oil.

Tightening torque:
44 N·m (4.5 kgf-m, 32.5 ft-lb)

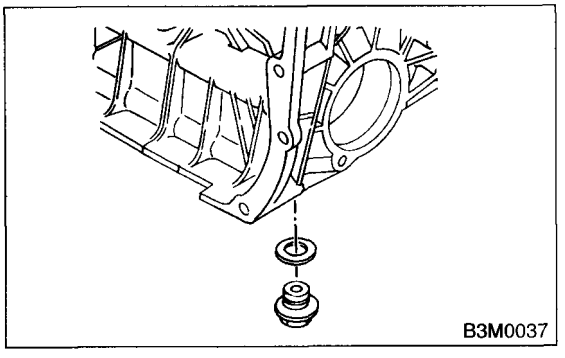

3) Remove the rear exhaust pipe and muffler.
4) Remove the heat shield cover. (If equipped)
5) Remove the propeller shaft. <Ref. to DS-14, REMOVAL, Propeller Shaft.>
6) Using ST, remove the oil seal.
ST 398527700 PULLER ASSY

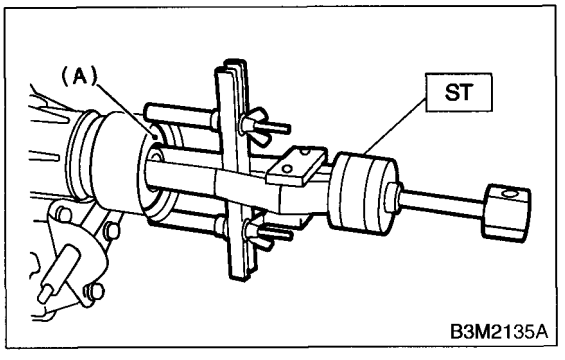

(A) Oil seal

7) Using ST, install the oil seal.
ST 498057300 INSTALLER

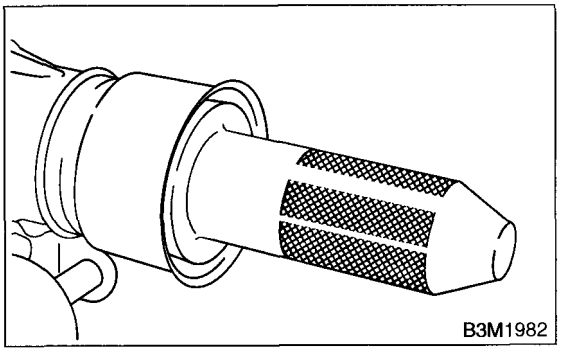

8) Install the propeller shaft. <Ref. to DS-15, INSTALLATION, Propeller Shaft.>
9) Install the heat shield cover. (If equipped)
10) Install the rear exhaust pipe and muffler.
11) Pour the gear oil and check the oil level. <Ref. to MT-26, Transmission Gear Oil.>

6. Switches and Harness

A: REMOVAL

1. BACK-UP LIGHT AND NEUTRAL POSITION SWITCH

1) Disconnect the connector battery ground terminal.
2) Remove the air intake duct and cleaner case. (Non-turbo model) <Ref. to IN(SOHC)-6, REMOVAL, Air Cleaner Case.> and <Ref. to IN(SOHC)-7, REMOVAL, Air Intake Duct.>
3) Remove the intercooler (Turbo model). <Ref. to IN(DOHC TURBO)-10, REMOVAL, Intercooler.>
4) Disconnect the connector back-up light switch and neutral position switch.

- Non-turbo model

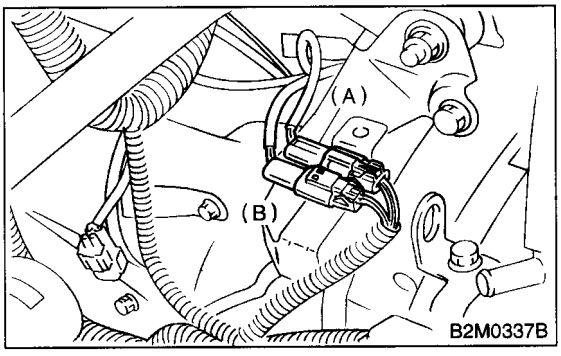

(A) Neutral switch (Brown)
(B) Back-up light switch (Gray)

- Turbo model

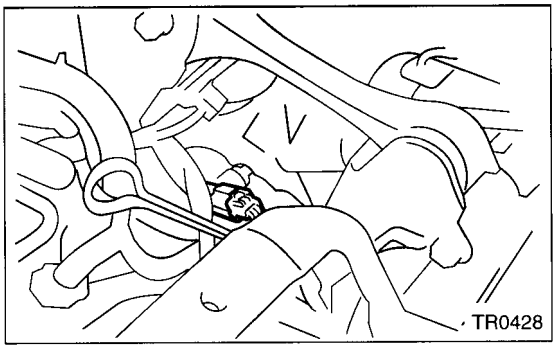

5) Lift-up the vehicle.

6) Remove the back-up light switch and neutral position switch with harness.

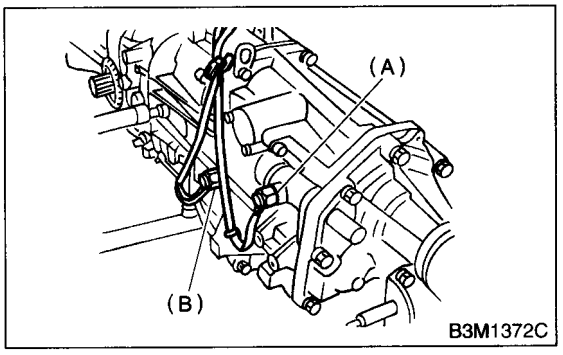

(A) Neutral switch (Brown connector)
(B) Back-up light switch (Gray connector)

B: INSTALLATION

1. BACK-UP LIGHT SWITCH AND NEUTRAL POSITION SWITCH

1) Install the back-up light switch and neutral position switch with harness.

Tightening torque:
24.5 N·m (2.5 kgf-m, 18.1 ft-lb)

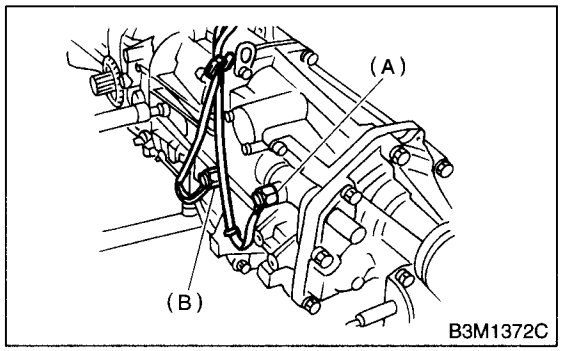

(A) Neutral switch
(B) Back-up light switch

2) Connect the connector of back-up light switch and neutral position switch.
3) Install the air intake duct and cleaner case. (Non-turbo model) <Ref. to IN(SOHC)-6, INSTALLATION, Air Cleaner Case.> and <Ref. to IN(SOHC)-7, INSTALLATION, Air Intake Duct.>
4) Install the intercooler. (Turbo model)
<Ref. to IN(DOHC TURBO)-11, INSTALLATION, Intercooler.>
5) Connect the battery ground terminal.

C: INSPECTION

1. BACK-UP LIGHT SWITCH

Inspect the back-up light switch. <Ref. to LI-6, INSPECTION, Back-up Light System.>

2. NEUTRAL POSITION SWITCH

1) Turn the ignition switch to OFF.
2) Disconnect the connector neutral position switch.
3) Measure the resistance between neutral position switch terminal.
Non-turbo model

Gear shift position	Terminal No.	Specified resistance
Neutral position	1 and 2	Less than 1Ω
Other positions		More than 1MΩ

Turbo model

Gear shift position	Terminal No.	Specified resistance
Neutral position	1 and 3	Less than 1Ω
Other positions		More than 1MΩ

- Non-turbo model

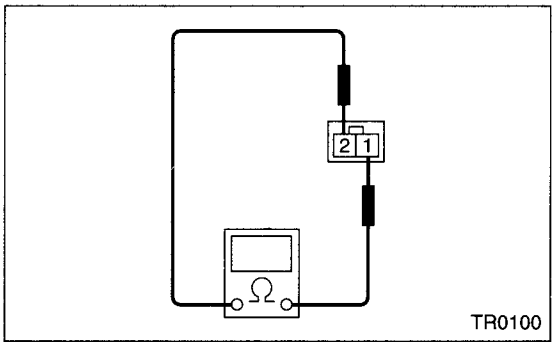

- Turbo model

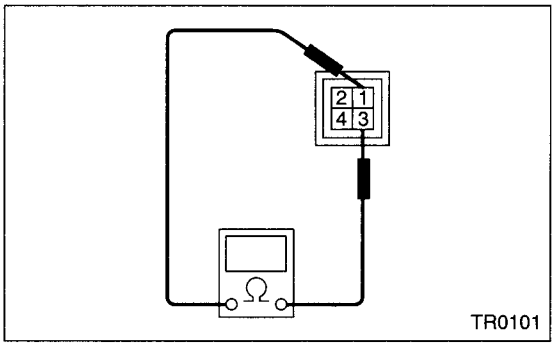

4) Replace defective parts.

7. Vehicle Speed Sensor

A: REMOVAL

1) Disconnect the ground terminal from battery.
2) Lift-up the vehicle.
3) Remove the front and center exhaust pipes.
4) Disconnect the connector from vehicle speed sensor.
5) Turn and remove the vehicle speed sensor.

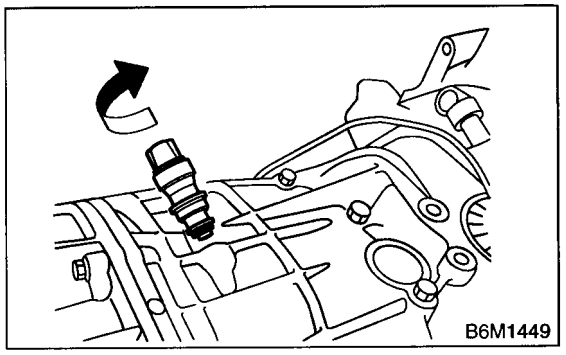

B: INSTALLATION

NOTE:
- Discard the vehicle speed sensor and after removal, replace with a new one.
- Ensure the sensor mounting hole is clean and free of foreign matter.
- Align the tip end of key with key groove on the end of speedometer shaft during installation.

1) Hand tighten the vehicle speed sensor.
2) Tighten the vehicle speed sensor using suitable tool.

Tightening torque:
5.9 N·m (0.6 kgf-m, 4.3 ft-lb)

3) Connect the connector to vehicle speed sensor.
4) Install the front and center exhaust pipes.
5) Lower the vehicle.
6) Connect the battery ground terminal.

C: INSPECTION

Inspect the vehicle speed sensor.
Non-Turbo model
<Ref. to EN(SOHC)-238, DTC P0500 — VEHICLE SPEED SENSOR MALFUNCTION —, Diagnostic Procedure with Diagnostic Trouble Code (DTC).>
Turbo model
<Ref. to EN(DOHC TURBO)-246, DTC P0500 — VEHICLE SPEED SENSOR MALFUNCTION —, Diagnostic Procedure with Diagnostic Trouble Code (DTC).>

8. Preparation for Overhaul

A: PROCEDURE

1) Clean the oil, grease, dirt and dust from transmission.
2) Remove the drain plug to drain oil. After draining, retighten it as before.

CAUTION:
Replace gasket with a new one.

Tightening torque:
44 N·m (4.5 kgf-m, 32.5 ft-lb)

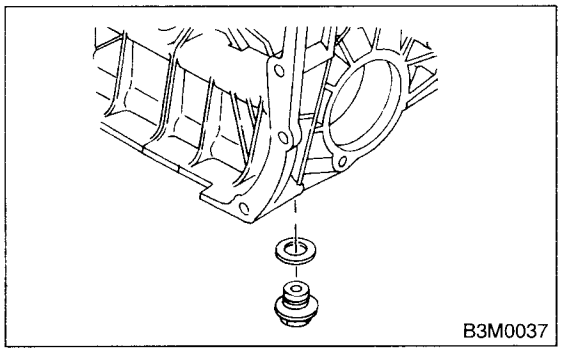

3) Attach the transmission to ST.
ST 499937100 TRANSMISSION STAND

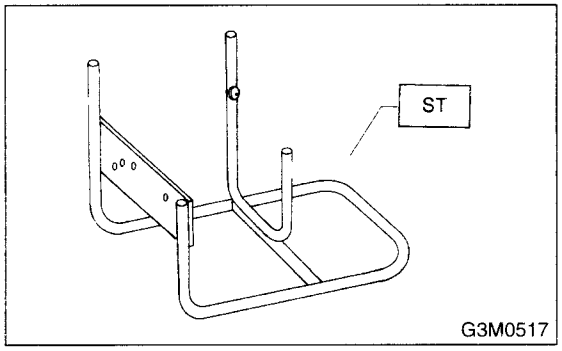

4) Rotating parts should be coated with oil prior to assembly.
5) All disassembled parts, if to be reused, should be reinstalled in the original positions and directions.
6) Gaskets, lock washers and lock nut must be replaced with new ones.
7) Liquid gasket should be used where specified to prevent leakage.

9. Transfer Case and Extension Case Assembly

A: REMOVAL

1) Remove the manual transmission assembly from vehicle. <Ref. to MT-27, REMOVAL, Manual Transmission Assembly.>
2) Remove the back-up light switch and neutral position switch. <Ref. to MT-37, REMOVAL, Switches and Harness.>
3) Remove the transfer case with extension case assembly.

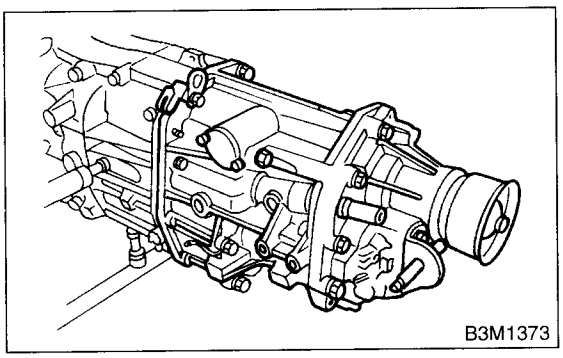

4) Remove the shifter arm.
5) Remove the extension case assembly.

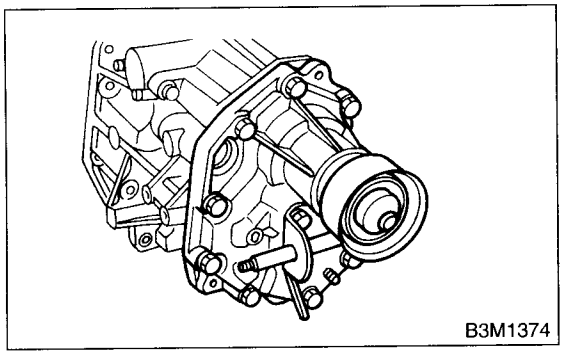

B: INSTALLATION

1) Install the center differential and transfer driven gear into transfer case.

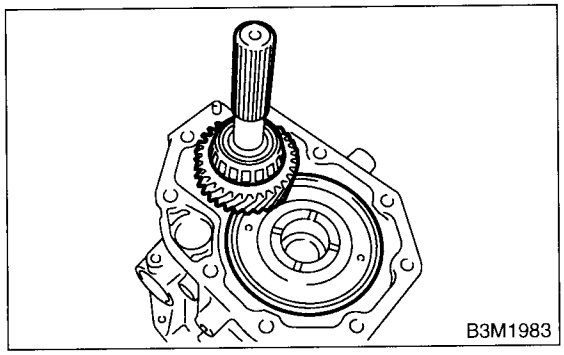

2) Remove the bearing cone from the extension case assembly, and install to taper roller bearing of the transfer driven gear.

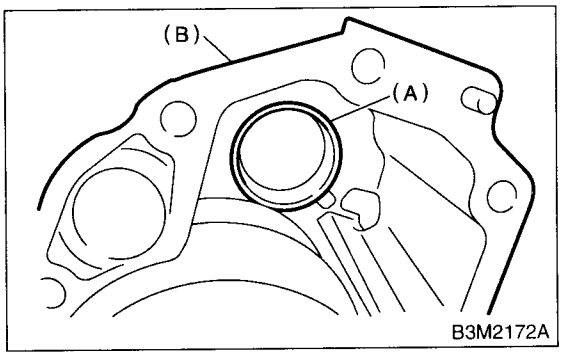

(A) Bearing cone (Extension case)
(B) Extension case

3) While pressing the bearing cone horizontally, turn the driven shaft ten rotations.
4) Measure the height "W" between transfer case and taper roller bearing on the transfer driven gear.

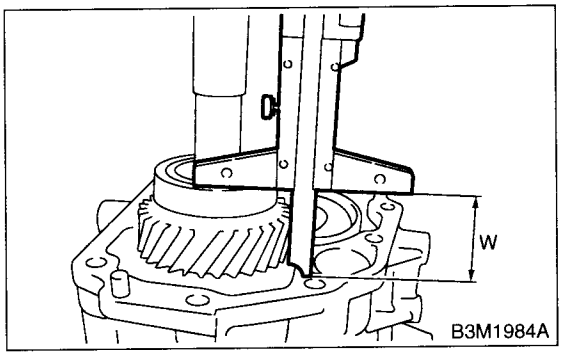

5) Measure the depth "X".

NOTE:
Measure with bearing cone and thrust washer removed.

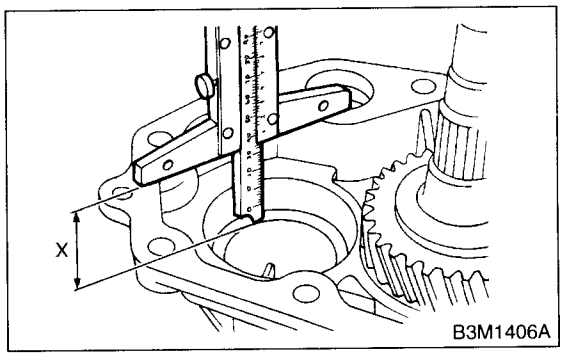

6) Calculate space "t" using the following equation:
t = X − W + 0.2 to 0.3 mm (0.008 to 0.012 in)

7) Select the nearest washer in the following table:

Standard clearance between thrust washer and taper roller bearing:
0.2 — 0.3 mm T (0.008 — 0.012 in T)

NOTE:
T: Tight

Thrust washer (50 × 61 × t)	
Part No.	Thickness mm (in)
803050060	0.50 (0.0197)
803050061	0.55 (0.0217)
803050062	0.60 (0.0236)
803050063	0.65 (0.0256)
803050064	0.70 (0.0276)
803050065	0.75 (0.0295)
803050066	0.80 (0.0315)
803050067	0.85 (0.0335)
803050068	0.90 (0.0354)
803050069	0.95 (0.0374)
803050070	1.00 (0.0394)
803050071	1.05 (0.0413)
803050072	1.10 (0.0433)
803050073	1.15 (0.0453)
803050074	1.20 (0.0472)
803050075	1.25 (0.0492)
803050076	1.30 (0.0512)
803050077	1.35 (0.0531)
803050078	1.40 (0.0551)
803050079	1.45 (0.0571)

8) Fit the thrust washers on transfer drive shaft.
9) Measure the depth "S" between transfer case and center differential.
ST 398643600 GAUGE

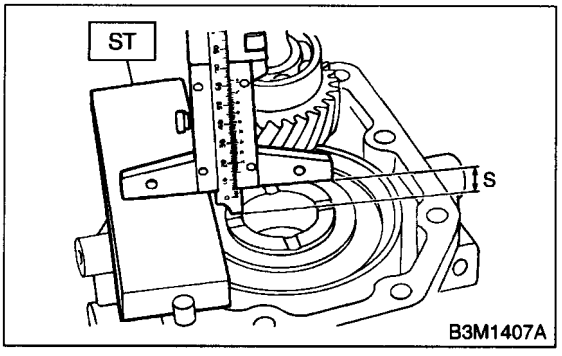

10) Measure the depth "T" between extension case and transfer drive gear.
ST 398643600 GAUGE

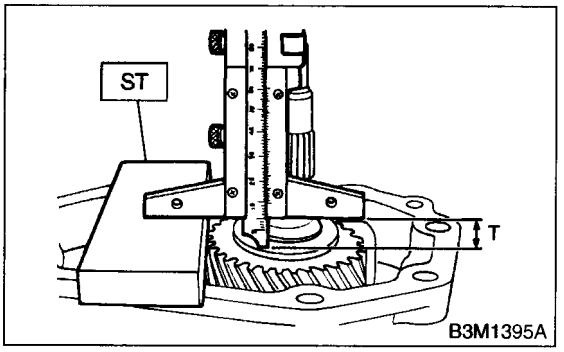

11) Calculate the space "U" using the following equation: U = S – T
12) Select the suitable washer in the following table:

Standard clearance:
0.15 — 0.35 mm (0.0059 — 0.0138 in)

Thrust washer	
Part No.	Thickness mm (in)
803036050	0.9 (0.035)
803036054	1.0 (0.039)
803036051	1.1 (0.043)
803036055	1.2 (0.047)
803036052	1.3 (0.051)
803036056	1.4 (0.055)
803036053	1.5 (0.059)
803036057	1.6 (0.063)
803036058	1.7 (0.067)

13) Fit the thrust washer on center differential.
14) Install the bearing cone into extention case.
15) Apply proper amount of liquid gasket to the transfer case mating surace.

Liquid gasket:
THREE BOND 1215B

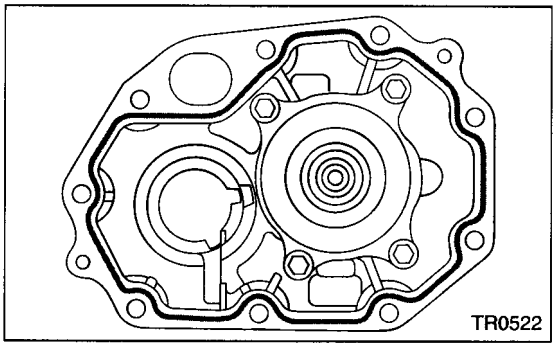

16) Install the extension assembly into the transfer case.

Tightening torque:
40N·m (4.1 kgf-m, 29.7 ft-lb)

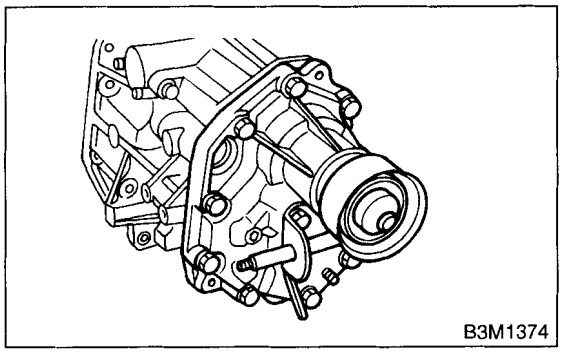

17) Install the shifter arm to the transfer case.

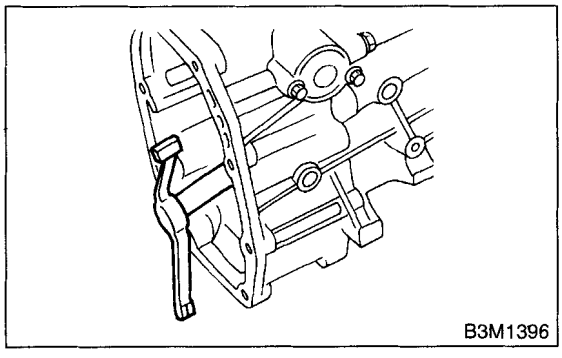

18) Hang the shifter arm on the 3rd-4th fork rod.

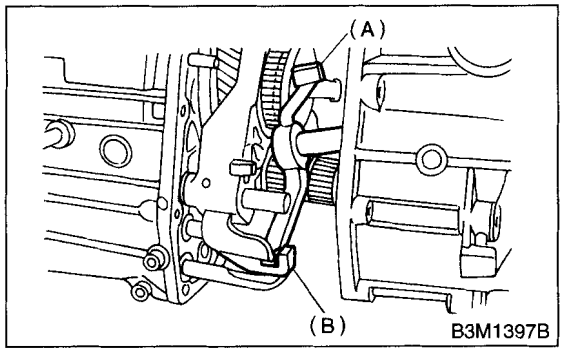

19) Install the transfer case with extension case assembly to the transmission case.

Tightening torque:
25N·m (2.5 kgf-m, 18.1 ft-lb)

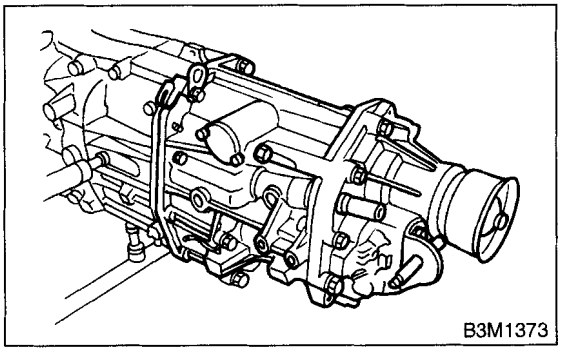

C: DISASSEMBLY

1. TRANSFER CASE

1) Remove the reverse check assembly. <Ref. to MT-50, REMOVAL, Reverse Check Sleeve.>
2) Remove the oil guide.

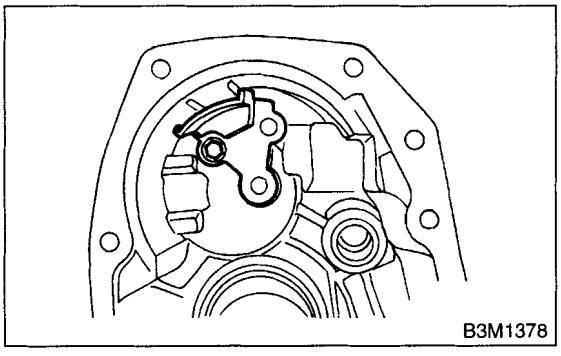

2. EXTENSION CASE

1) Remove the transfer drive gear assembly. <Ref. to MT-45, REMOVAL, Transfer Drive Gear.>
2) Remove the shift bracket.

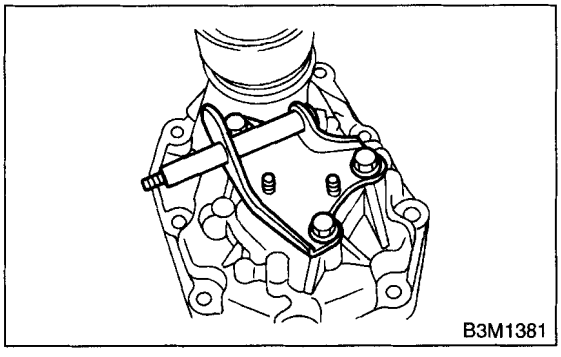

3) Remove the oil seal from the extension case. <Ref. to MT-36, OIL SEAL, .>

D: ASSEMBLY

1. EXTENSION CASE

1) Using ST, install the oil seal to the extension case. <Ref. to MT-36, Oil Seal.>

CAUTION:
Use new oil seal.

2) Install the shift bracket to the extension case.

Tightening torque:
25 N·m (2.5 kgf-m, 18.1 ft-lb)

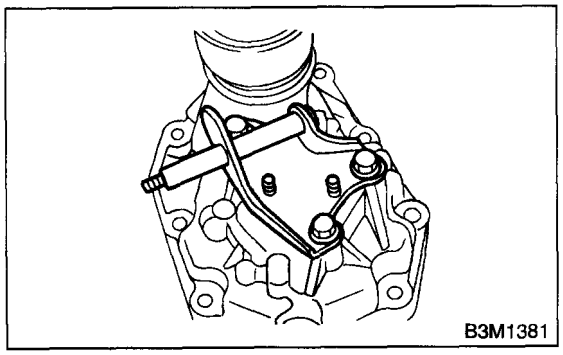

3) Install the transfer drive gear to the extension case. <Ref. to MT-45, INSTALLATION, Transfer Drive Gear.>

2. TRANSFER CASE

1) Install the oil guide to the transfer case.

Tightening torque:
6.4 N·m (0.65 kgf-m, 4.7 ft-lb)

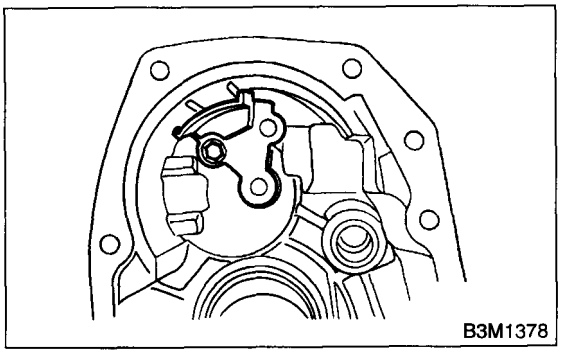

2) Install the reverse check sleeve assembly to the transfer case. <Ref. to MT-50, INSTALLATION, Reverse Check Sleeve.>

10.Transfer Drive Gear

A: REMOVAL

1) Remove the manual transmission assembly from vehicle. <Ref. to MT-27, REMOVAL, Manual Transmission Assembly.>
2) Remove the back-up light switch and neutral position switch. <Ref. to MT-37, REMOVAL, Switches and Harness.>
3) Remove the transfer case with extension case assembly. <Ref. to MT-41, REMOVAL, Transfer Case and Extension Case Assembly.>
4) Remove the extension case assembly.
5) Remove the transfer driven gear.
6) Remove the transfer drive gear.

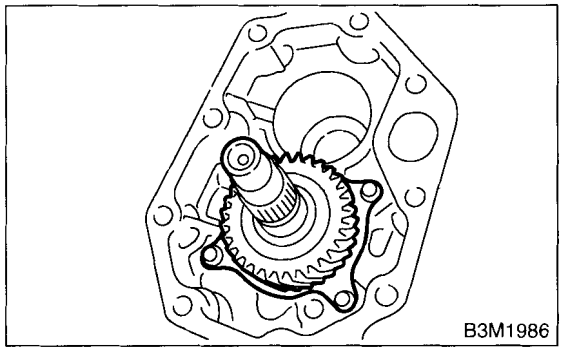

B: INSTALLATION

1) Install the transfer drive gear.

Tightening torque:
26 N·m (2.7 kgf-m, 20 ft-lb)

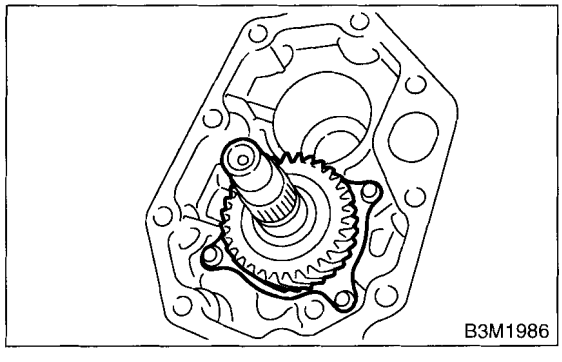

2) Install the transfer driven gear.
3) Install the extension case assembly.
4) Install the transfer case and extension case assembly. <Ref. to MT-41, INSTALLATION, Transfer Case and Extension Case Assembly.>
5) Install the back-up light switch and neutral position switch. <Ref. to MT-38, INSTALLATION, Switches and Harness.>
6) Install the manual transmission assembly from vehicle. <Ref. to MT-30, INSTALLATION, Manual Transmission Assembly.>

C: DISASSEMBLY

1) Remove the snap ring.

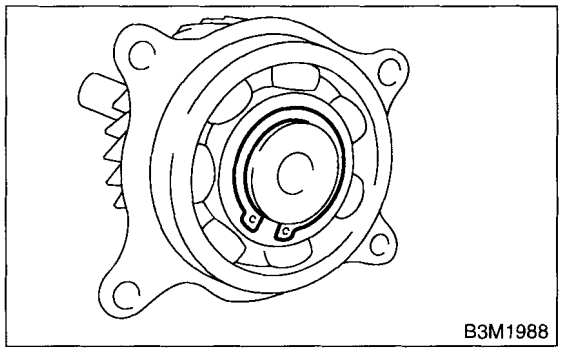

2) Remove the ball bearing.

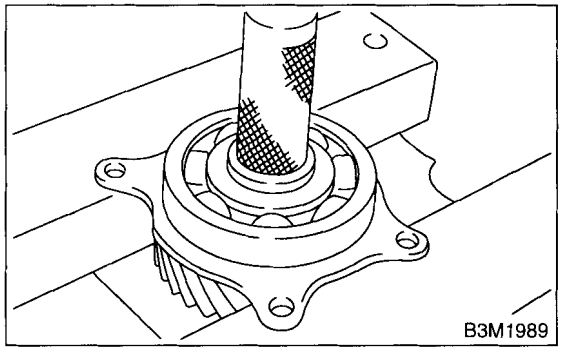

D: ASSEMBLY

1) Set the ST applying to inner race of bearing and instal to drive shaft.
ST 398177700 INSTALLER

CAUTION:
Do not apply pressure in excess of 10 kN (1 ton, 1.1 US ton, 1.0 Imp ton)

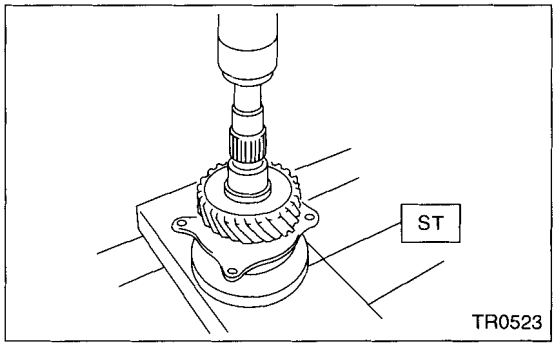

2) Install the snap ring on transfer drive shaft.
3) Inspect the clearance between snap ring and inner race of ball bearing. <Ref. to MT-46, INSPECTION, Transfer Drive Gear.>

E: INSPECTION

1) Bearings

Replace bearings in the following cases:

- Broken or rusty bearings
- Worn or damaged
- Bearings that fail to turn smoothly or make abnormal noise when turned after gear oil lubrication.

2) Drive gear

Replace drive gear in the following cases:

- If their tooth surfaces and shaft are excessively broken or damaged.

3) Measure the clearance between snap ring and inner race of ball bearing with a thickness gauge.

Clearance:

0.01 — 0.15 mm (0.0004 — 0.0059 in)

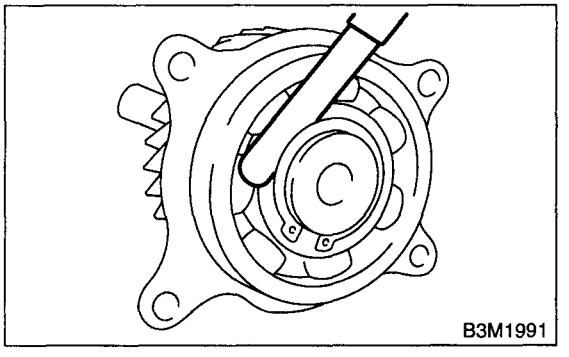

If the measurement is not within the specification, select suitable snap ring.

Snap ring (Outer-30)	
Part No.	Thickness mm (in)
805030041	1.53 (0.0602)
805030042	1.65 (0.0650)
805030043	1.77 (0.0697)

11.Transfer Driven Gear

A: REMOVAL

1) Remove the manual transmission assembly from vehicle. <Ref. to MT-27, REMOVAL, Manual Transmission Assembly.>
2) Remove the back-up light switch and neutral position switch. <Ref. to MT-37, REMOVAL, Switches and Harness.>
3) Remove the transfer case with extension case assembly. <Ref. to MT-41, REMOVAL, Transfer Case and Extension Case Assembly.>
4) Remove the extension case assembly.
5) Remove the transfer driven gear.

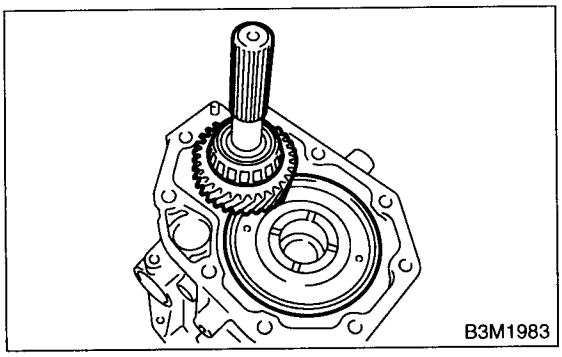

6) Remove the bearing cup from extension case and transfer case.

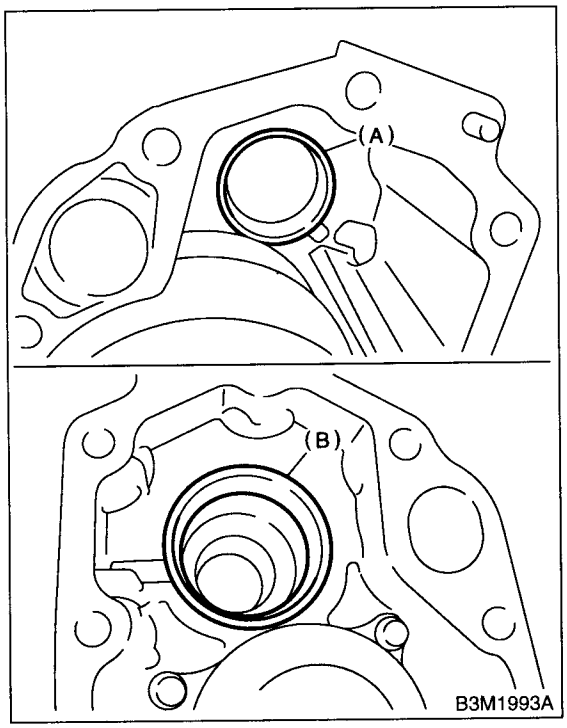

(A) Bearing cup (transfer case)
(B) Bearing cup (extension case)

B: INSTALLATION

1) Install the bearing cup to extension case and transfer case.

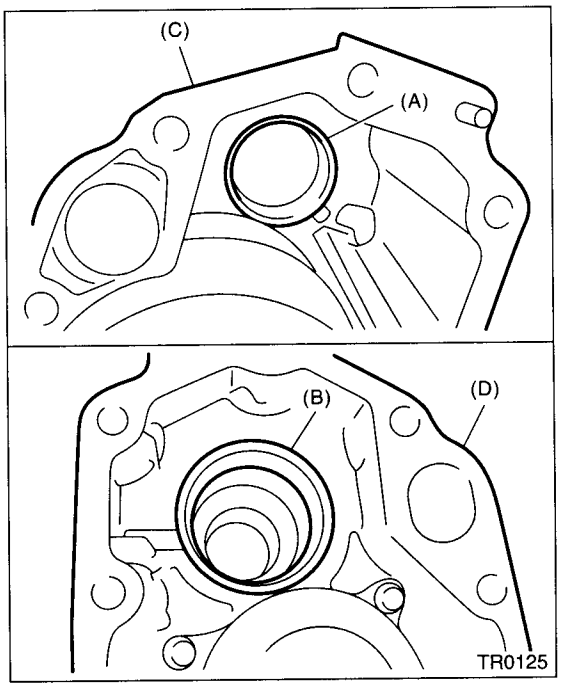

(A) Bearing cup
(B) Bearing cup
(C) Transfer case
(D) Extension case

2) Install the transfer driven gear.

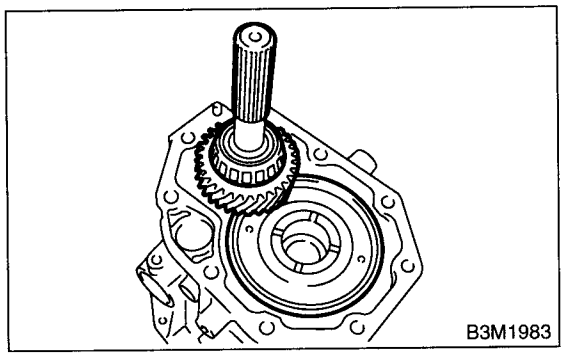

3) Install the transfer case and extension case assembly.<Ref. to MT-41, INSTALLATION, Transfer Case and Extension Case Assembly.>
4) Install the back-up light switch and neutral position switch. <Ref. to MT-38, INSTALLATION, Switches and Harness.>
5) Install the manual transmission assembly to vehicle. <Ref. to MT-30, INSTALLATION, Manual Transmission Assembly.>

C: DISASSEMBLY

1) Using ST, remove the roller bearing (extension case side).
ST 498077000 REMOVER

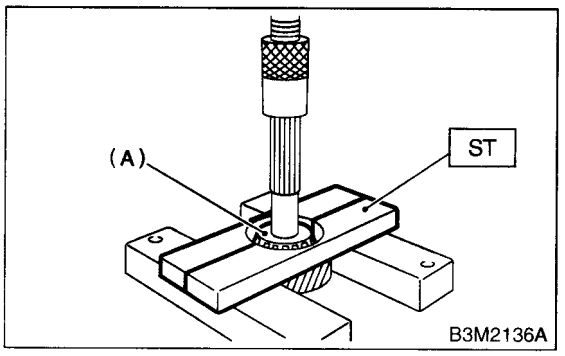

(A) Roller bearing

2) Using ST1 and ST2, remove the roller bearing (transfer case side).
ST1 498077000 REMOVER
ST2 899864100 REMOVER

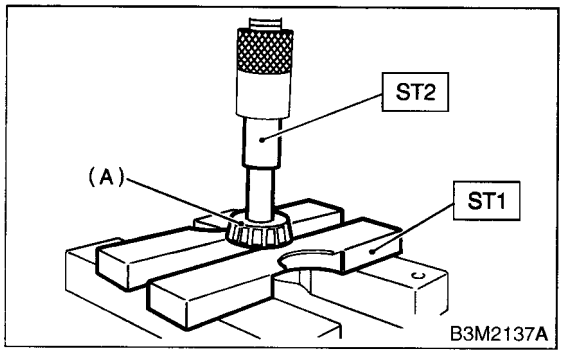

(A) Roller bearing

D: ASSEMBLY

1) Using ST, install the roller bearing (extension case side).
ST1 398177700 INSTALLER
ST2 899864100 REMOVER

CAUTION:
Do not apply pressure in excess of 10 kN (1 ton, 1.1 US ton, 1.0 Imp ton)

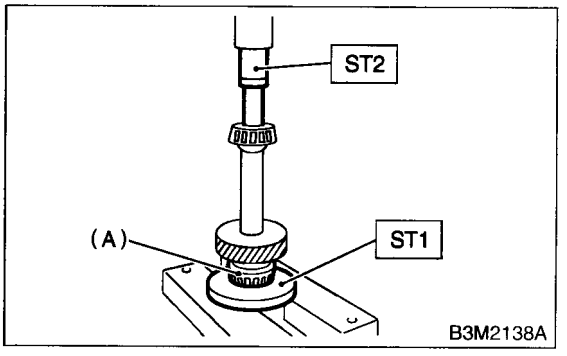

(A) Roller bearing

2) Using ST, install the roller bearing (transfer case side).
ST 499757002 INSTALLER

CAUTION:
Do not apply pressure in excess of 10 kN (1 ton, 1.1 US ton, 1.0 Imp ton)

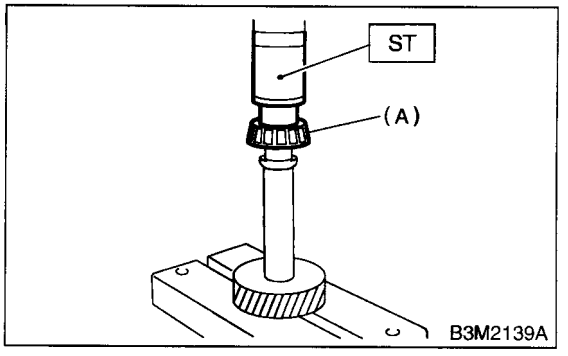

(A) Roller bearing

E: INSPECTION

1) Bearings
Replace the bearings in the following cases:
- Broken or rusty bearings
- Worn or damaged
- Bearings that fail to turn smoothly or make abnormal noise when turned after gear oil lubrication.

2) Driven gear
Replace drive gear in the following cases:
- If their tooth surfaces and shaft are excessively broken or damaged.

12.Center Differential

A: REMOVAL

1) Remove the manual transmission assembly from vehicle. <Ref. to MT-27, REMOVAL, Manual Transmission Assembly.>
2) Remove the transfer case with extension case assembly.<Ref. to MT-41, REMOVAL, Transfer Case and Extension Case Assembly.>
3) Remove the extension case assembly. <Ref. to MT-41, REMOVAL, Transfer Case and Extension Case Assembly.>
4) Remove the transfer driven gear. <Ref. to MT-47, REMOVAL, Transfer Driven Gear.>
5) Remove the center differential.

B: INSTALLATION

1) Install the center differential into transfer case.
2) Install the transfer driven gear. <Ref. to MT-47, INSTALLATION, Transfer Driven Gear.>
3) Install the extension case assembly. <Ref. to MT-41, INSTALLATION, Transfer Case and Extension Case Assembly.>
4) Install the transfer case with extension case assembly. <Ref. to MT-41, REMOVAL, Transfer Case and Extension Case Assembly.>
5) Install the back-up light switch and neutral position switch. <Ref. to MT-37, REMOVAL, Switches and Harness.>
6) Install the manual transmission assembly to vehicle. <Ref. to MT-30, INSTALLATION, Manual Transmission Assembly.>

C: DISASSEMBLY

NOTE:
Do not disassemble center differential because it is a non-disassemble part.

Remove ball bearing using ST.

CAUTION:
Do not reuse ball bearing.

ST 498077300 CENTER DIFFERENTIAL BEARING REMOVER

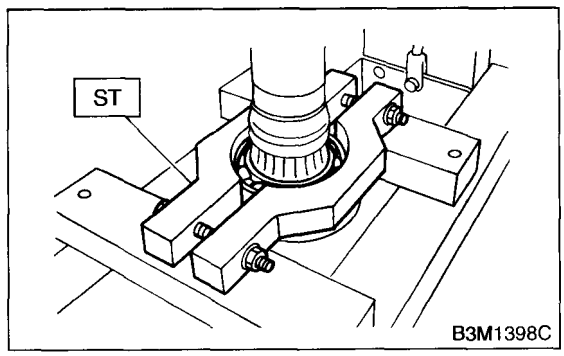

D: ASSEMBLY

Install the ball bearing to center differential assembly.

CAUTION:
Do not apply pressure in excess of 10 kN (1 ton, 1.1 US ton, 1.0 Imp ton).

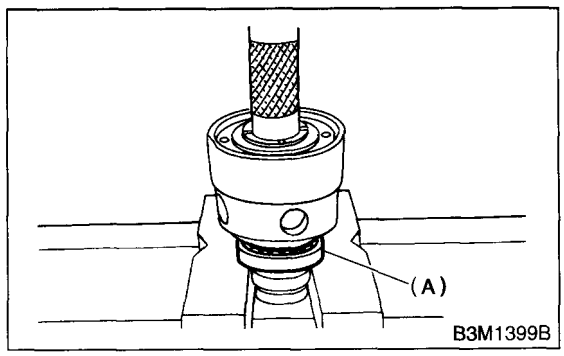

(A) Ball bearing

E: INSPECTION

1) Bearings
Replace the bearings in the following cases:
- Broken or rusty bearings
- Worn or damaged
- Bearings that fail to turn smoothly or make abnormal noise when turned after gear oil lubrication.
- Bearings having other defects

2) Center differential
Replace the center differential assembly in the following case:
- Worn or damaged

13.Reverse Check Sleeve

A: REMOVAL

1) Remove the manual transmission assembly from vehicle. <Ref. to MT-27, REMOVAL, Manual Transmission Assembly.>
2) Remove the transfer case with extension case assembly. <Ref. to MT-41, REMOVAL, Transfer Case and Extension Case Assembly.>
3) Remove the shifter arm.
4) Remove the plug, spring washer and reverse check ball.

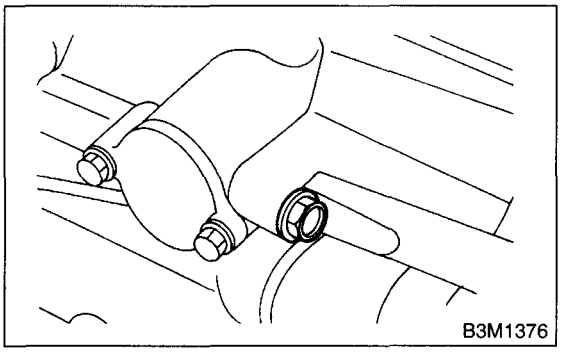

5) Remove the reverse check sleeve.

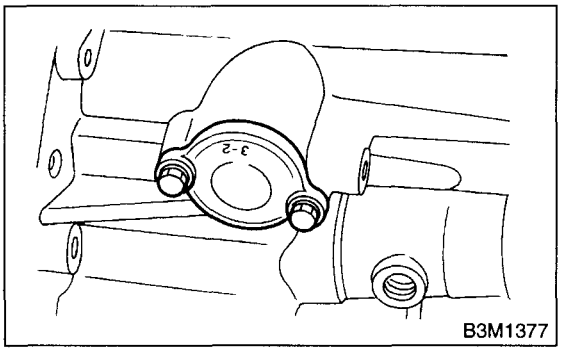

B: INSTALLATION

1) Install the reverse check sleeve.

Tightening torque:
6.4 N·m (0.65 kgf-m, 4.7 ft-lb)

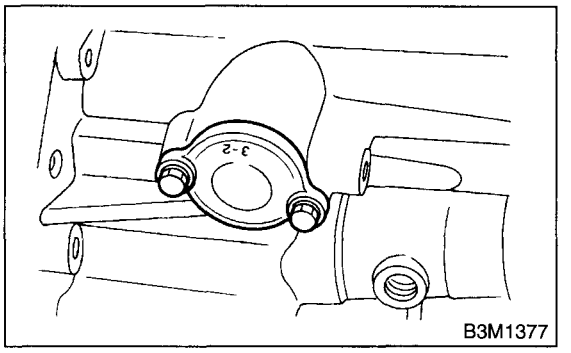

2) Install the ball, spring, washer and plug to transfer case.

Tightening torque:
10 N·m (1.0 kgf-m, 7.2 ft-lb)

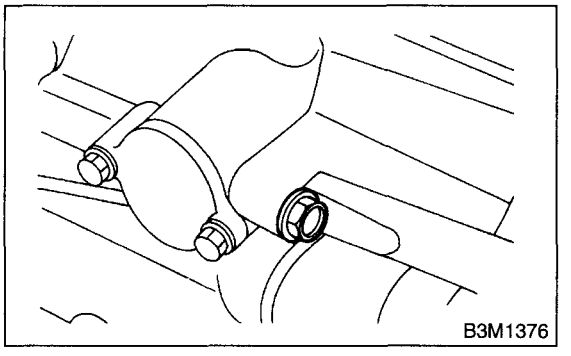

3) Install the shifter arm to transfer case assembly.
4) Install the transfer case with extension case assembly. <Ref. to MT-41, INSTALLATION, Transfer Case and Extension Case Assembly.>
5) Install the manual transmission assembly to vehicle. <Ref. to MT-30, INSTALLATION, Manual Transmission Assembly.>

C: DISASSEMBLY

1) Cover the reverse check sleeve with a rag, and remove snap ring using a screwdriver.

NOTE:
Replace the snap ring with a new one if deformed or weakened.

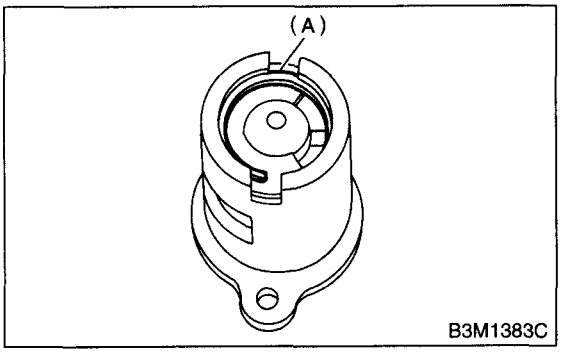

(A) Snap ring

2) Remove the reverse check plate, reverse check spring, reverse check cam, return spring (5th-Rev), reverse accent shaft, return spring cap and return spring (1st-2nd).

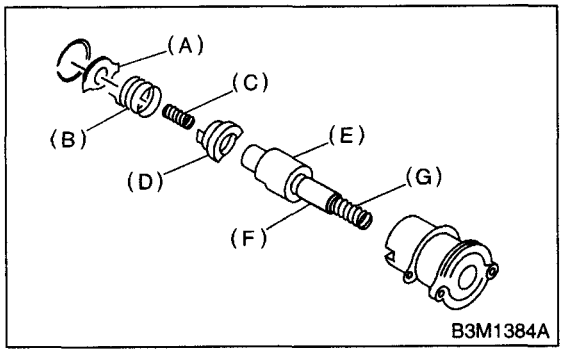

(A) Reverse check plate
(B) Reverse check spring
(C) Return spring (5th-Rev)
(D) Reverse check cam
(E) Reverse accent shaft
(F) Return spring cap
(G) Return spring (1st-2nd)

3) Remove O-ring.

NOTE:
- Reverse check sleeve assembly uses an O-ring which should not be scratched.
- Be careful not to break adjustment shim placed between reverse check sleeve assembly and case.

D: ASSEMBLY

1) Install the return spring (1st-2nd), return spring cap, reverse accent shaft, check cam, return spring and check spring onto reverse check sleeve.

NOTE:
Be sure the bent section of reverse check spring is positioned in the groove in check cam.

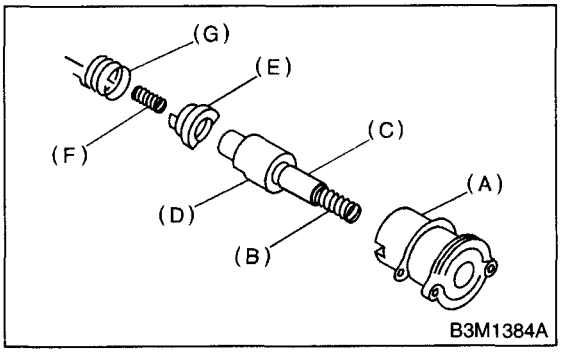

(A) Reverse check spring
(B) Reverse check cam
(C) Return spring (5th-Rev)
(D) Reverse accent shaft
(E) Return spring cap
(F) Return spring (1st-2nd)
(G) Reverse check sleeve

2) Hook the bent section of reverse check spring over reverse check plate.
3) Rotate the cam so that the protrusion of reverse check cam is at the opening in plate.
4) With cam held in that position, install plate onto reverse check sleeve and hold with snap ring.
5) Position O-ring in groove in sleeve.

E: INSPECTION

- Make sure the cutout section of reverse accent shaft is aligned with the opening in reverse check sleeve.
- Spin cam by hand for smooth rotation.
- Move cam and shaft all the way toward plate and release.

If the cam does not return properly, replace reverse check spring; if the shaft does not, check for scratches on the inner surface of sleeve. If the sleeve is in good order, replace spring.

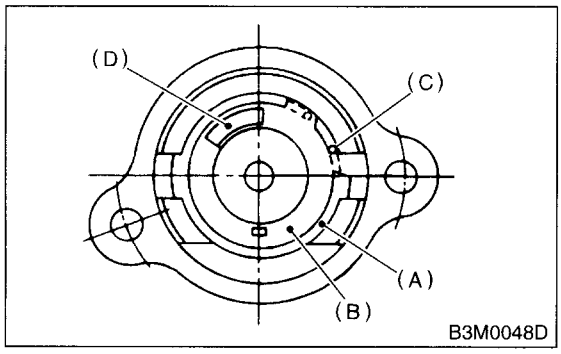

(A) Snap ring
(B) Reverse check plate
(C) Check spring
(D) Check cam

- Select a suitable reverse accent shaft and reverse check plate.<Ref. to MT-52, ADJUSTMENT, Reverse Check Sleeve.>

F: ADJUSTMENT

1. NEUTRAL POSITION ADJUSTMENT

1) Shift the gear into 3rd gear position.
2) Shifter arm turns lightly toward the 1st/2nd gear side but heavily toward the reverse gear side because of the function of the return spring, until arm contacts the stopper.
3) Make adjustment so that the heavy stroke (reverse side) is a little more than the light stroke (1st/2nd side).
4) To adjust, remove bolts holding reverse check sleeve assembly to the case, move sleeve assembly outward, and place adjustment shim (0 to 1 ea.) between sleeve assembly and case to adjust the clearance.

CAUTION:
Be careful not to break O-ring when placing shim(s).

NOTE:
- When the shim is removed, the neutral position will move closer to reverse; when the shim is added, the neutral position will move closer to 1st gear.
- If the shims alone cannot adjust the clearance, replace the reverse accent shaft and re-adjust.

Adjustment shim	
Part No.	Thickness mm (in)
32190AA000	0.15 (0.0059)
32190AA010	0.30 (0.0118)

Reverse accent shaft		
Part No.	Mark	Remarks
32188AA090	3	Neutral position is closer to 1st gear.
32188AA100	0	Standard
32188AA110	1	Neutral position is closer to reverse gear.

2. REVERSE CHECK PLATE ADJUSTMENT

1) Shift the shifter arm to "5th" and then to reverse to see if reverse check mechanism operates properly.
2) Also check to see if the arm returns to neutral when released from the reverse position. If the arm does not return properly, replace reverse check plate.

Reverse check plate			
Part No.	(A): No.	Angle θ	Remarks
32189AA000	0	28°	Arm stops closer to 5th gear.
32189AA010	1	31°	Arm stops closer to 5th gear.
32189AA020	2	34°	Arm stops in the center.
32189AA030	3	37°	Arm stops closer to reverse gear.
32189AA040	4	40°	Arm stops closer to reverse gear.

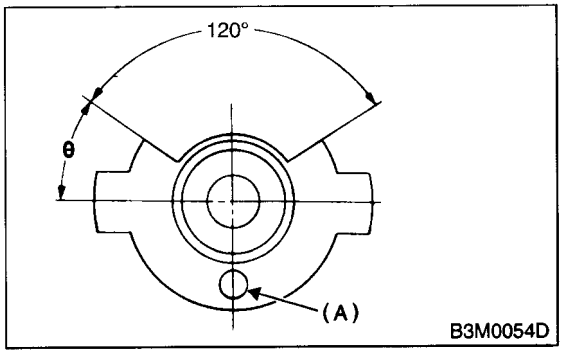

14.Transmission Case

A: REMOVAL

1) Remove the manual transmission assembly from vehicle. <Ref. to MT-27, REMOVAL, Manual Transmission Assembly.>
2) Remove the clutch release lever. <Ref. to CL-15, REMOVAL, Release Bearing and Lever.>
3) Remove the transfer case with extension case assembly. <Ref. to MT-41, REMOVAL, Transfer Case and Extension Case Assembly.>
4) Remove the bearing mounting bolts.

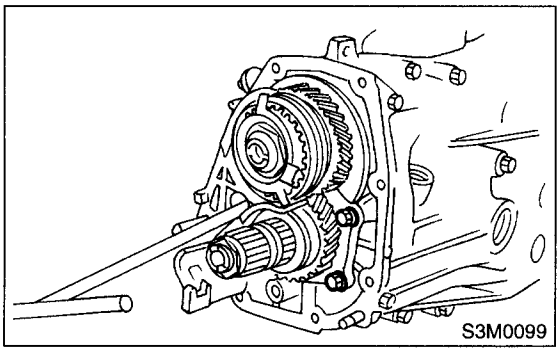

5) Remove the main shaft rear plate.

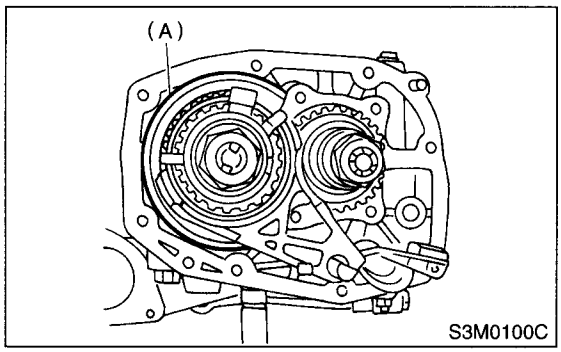

(A) Main shaft rear plate

6) Put the vinyl tape around splines of the right and left axle drive shafts to prevent damage to oil seal.

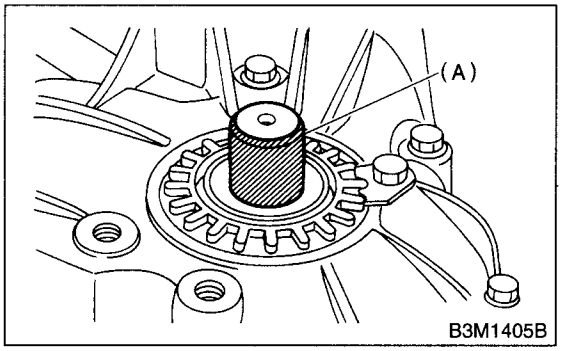

(A) Vinyl tape

7) Separate the transmission case into the right and left cases by loosening coupling bolts and nuts.

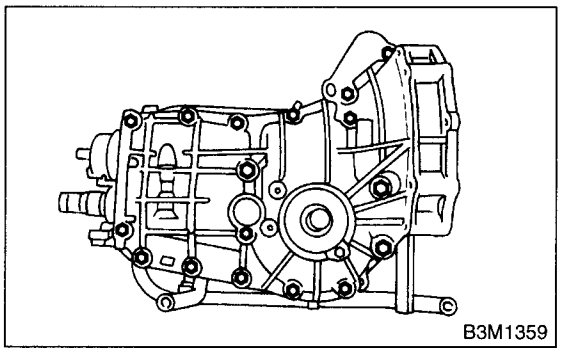

8) Remove the drive pinion shaft assembly from left side transmission case.

NOTE:
Use a hammer handle, etc. to remove if too tight.

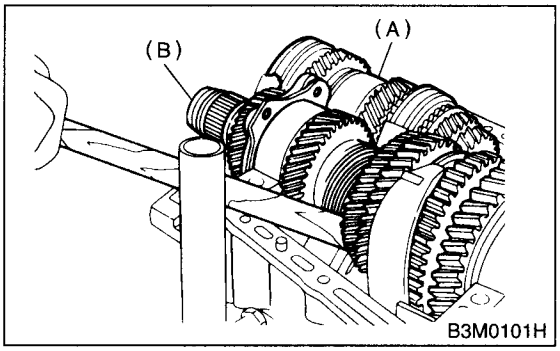

(A) Main shaft assembly
(B) Drive pinion shaft assembly

9) Remove the main shaft assembly.
10) Remove the differential assembly.

CAUTION:
- **Be careful not to confuse right and left roller bearing outer races.**
- **Be careful not to damage retainer oil seal.**

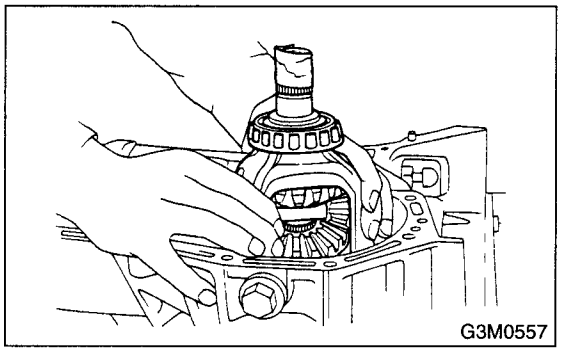

B: INSTALLATION

1) Wipe off grease, oil and dust on the mating surfaces of transmission cases with white gasoline.
2) Install the front differential assembly.
3) Install the main shaft assembly.
Install the needle bearing knock pin hole into transmission case knock pin.
4) Install the drive pinion shaft assembly.
Install the roller bearing knock pin hole into transmission case knock pin.
5) Apply the liquid gasket, and then put the case right side and left side together.

Liquid gasket:
THREE BOND 1215 or equivalent

6) Tighten seventeen bolts with bracket, clip, etc. as shown in the figure.

NOTE:
- Insert the bolts from the bottom and tighten nuts at the top.
- Put the cases together so that the drive pinion shim and input shaft holder shim are not caught up in between.
- Confirm that speedometer gear is meshed.

Tightening torque:
8 mm bolt
25 N·m (2.5 kgf-m, 18.1 ft-lb)
★ 10 mm bolt
39 N·m (4.0 kgf-m, 28.9 ft-lb)

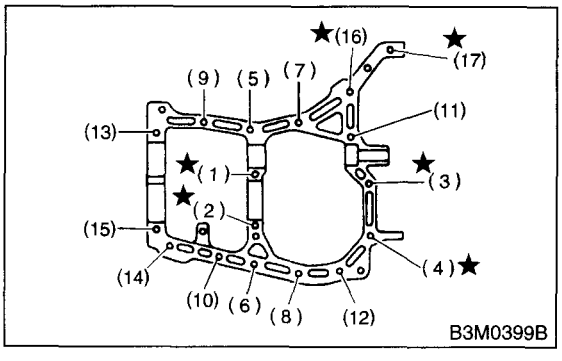

7) Tighten the ball bearing attachment bolts.

Tightening torque:
29 N·m (3.0 kgf-m, 21.7 ft-lb)

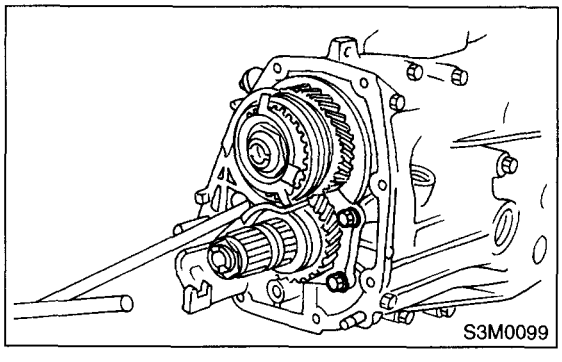

8) Backlash adjustment of hypoid gear and preload adjustment of roller bearing

NOTE:
Support the drive pinion assembly with ST. (AWD model)

ST 498427100 STOPPER

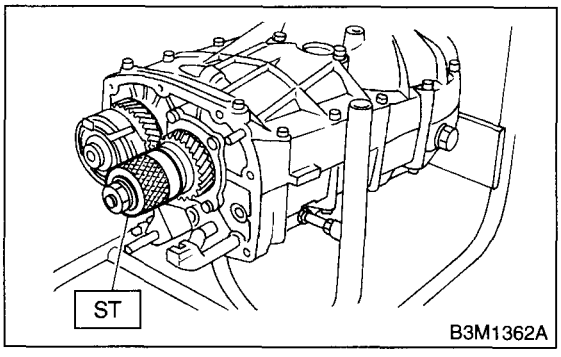

9) Place the transmission with case left side facing downward and put ST1 on bearing cup.
10) Screw the retainer assembly into left case from the bottom with ST2. Fit ST3 on the transmission main shaft. Shift gear into 4th or 5th and turn the shaft several times. Screw in the retainer while turning ST3 until a slight resistance is felt on ST2. This is the contact point of hypoid gear and drive pinion shaft. Repeat the above sequence several times to ensure the contact point.

ST1 399780104 WEIGHT
ST2 499787000 WRENCH ASSY
ST3 499927100 HANDLE

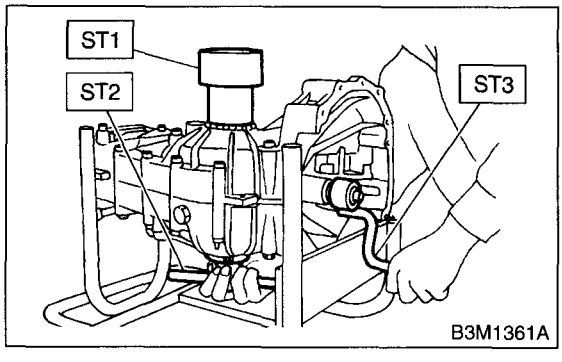

11) Remove weight and screw in retainer without O-ring on the upper side and stop at the point where slight resistance is felt.

NOTE:
At this point, the backlash between the hypoid gear and drive pinion shaft is zero.

ST 499787000 WRENCH ASSY

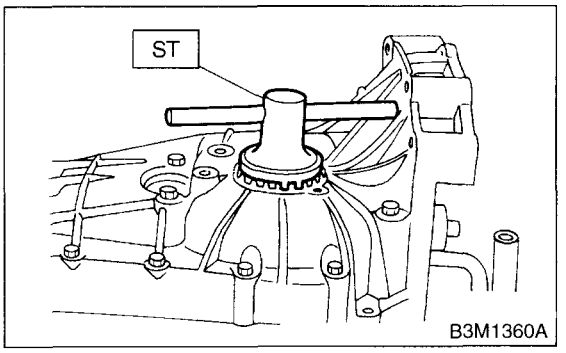

12) Fit lock plate. Loosen the retainer on the lower side by 1-1/2 notches of lock plate and turn in the retainer on the upper side by the same amount in order to obtain the backlash.

NOTE:
The notch on the lock plate moves by 1/2 notch if the plate is turned upside down.

13) Turn in the retainer on the upper side additionally by 1 notch in order to apply preload on taper roller bearing.

14) Tighten temporarily both the upper and lower lock plates and mark both holder and lock plate for later readjustment.

15) Turn the transmission main shaft several times while tapping around retainer lightly with plastic hammer.

16) Inspect and adjust backlash and tooth contact of hypoid gear. <Ref. to MT-74, INSPECTION, Front Differential Assembly.>

17) After checking the tooth contact of hypoid gears, remove the lock plate. Then loosen the retainer until the O-ring groove appears. Fit O-ring into the groove and tighten the retainer into the position where retainer has been tightened in.
Tighten the lock plate.

NOTE:
Carry out this job on both upper and lower retainers.

Tightening torque:
T: 25 N·m (2.5 kgf-m, 18.1 ft-lb)

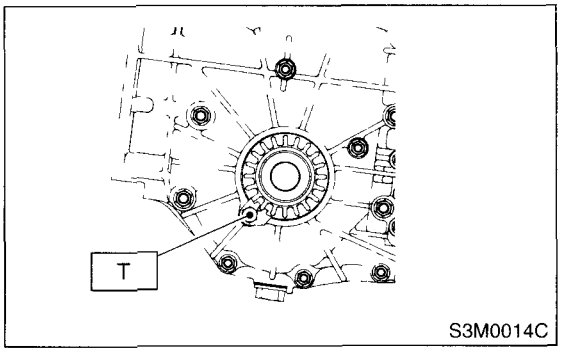

18) Selecting of main shaft rear plate <Ref. to MT-62, ADJUSTMENT, Main Shaft Assembly for Single-Range.>

19) Install the clutch release lever and bearing. <Ref. to CL-15, INSTALLATION, Release Bearing and Lever.>

20) Install the transfer case with extension case assembly. <Ref. to MT-41, INSTALLATION, Transfer Case and Extension Case Assembly.>

21) Install the manual transmission assembly into the vehicle.<Ref. to MT-30, INSTALLATION, Manual Transmission Assembly.>

C: INSPECTION

Check the transmission case for cracks, damage, and oil leaks.

15.Main Shaft Assembly for Single-Range

A: REMOVAL

1) Remove the manual transmission assembly from vehicle. <Ref. to MT-27, REMOVAL, Manual Transmission Assembly.>
2) Remove the transfer case with extension case assembly. <Ref. to MT-41, REMOVAL, Transfer Case and Extension Case Assembly.>
3) Remove the transmission case. <Ref. to MT-41, REMOVAL, Transfer Case and Extension Case Assembly.>
4) Remove the drive pinion shaft assembly. <Ref. to MT-63, REMOVAL, Drive Pinion Shaft Assembly.>
5) Remove the main shaft assembly.

B: INSTALLATION

1) Install the needle bearing and oil seal onto the front of transmission main shaft assembly.

CAUTION:
- **Wrap clutch splined section with vinyl tape to prevent damage to oil seal.**
- **Apply grease (Unilube #2 or equivalent) to the sealing lip of oil seal.**
- **Use a new one.**

2) Install the needle bearing outer race knock pin hole into transmission case knock pin.

NOTE:
Align the end face of seal with surface (A) when installing oil seal.

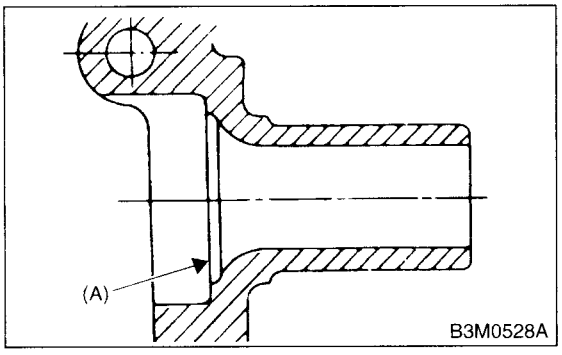

3) Install the drive pinion assembly. <Ref. to MT-63, INSTALLATION, Drive Pinion Shaft Assembly.>
4) Install the transmission case. <Ref. to MT-55, INSTALLATION, Transmission Case.>
5) Install the transfer case with extension case assembly. <Ref. to MT-41, INSTALLATION, Transfer Case and Extension Case Assembly.>
6) Install the manual transmission assembly to vehicle. <Ref. to MT-30, INSTALLATION, Manual Transmission Assembly.>

C: DISASSEMBLY

1) Put the vinyl tape around main shaft splines to protet oil seal from damage. Then pull out the oil seal and needle bearing by hand.
2) Remove the lock nut from transmission main shaft assembly.

NOTE:
Remove the caulking before off lock nut.

ST1	499987000	TRANSMISSION HOLDER
ST2	498937003	SOCKET WRENCH (35)

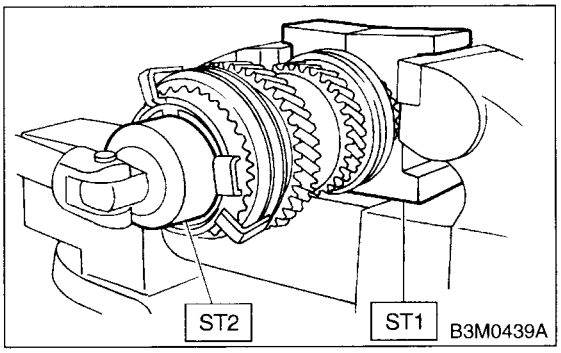

3) Remove the 5th-Rev sleeve and hub assembly, baulk ring, 5th drive gear and needle bearing.

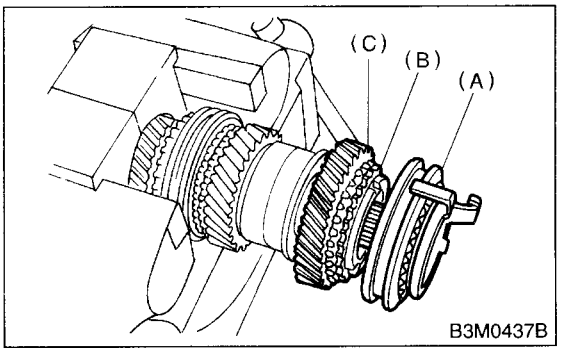

(A) 5th-Rev sleeve and hub ASSY
(B) Baulk ring
(C) 5th drive gear

4) Remove the snap ring and synchro cone stopper from 5th-Rev sleeve and hub assembly.

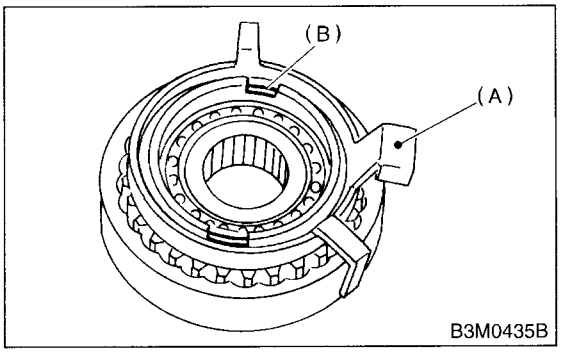

(A) Synchro cone stopper
(B) Snap ring

5) Using ST1, ST2 and a press, remove the ball bearing, synchro cone and baulk ring (Rev).

NOTE:
- Replace the sleeve and hub with new ones. Do not attempt to disassemble because they must engage at a specified point. If they should be disassembled, mark engagement point on the splines beforehand.
- Do not reuse the ball bearing.

ST1 499757002 INSTALLER
ST2 498077400 SYNCHRO CONE REMOVER

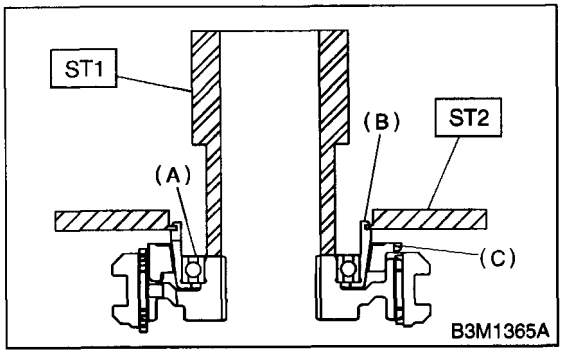

(A) Ball bearing
(B) Synchro cone
(C) Baulk ring

6) Using ST1 and ST2, remove the rest of parts.

NOTE:
Replace sleeve and hub with new ones. Do not attempt to disassemble because they must engage at a specified point. If they should be disassembled, marking engagement point on splines beforehand.

ST1 899864100 REMOVER
ST2 899714110 REMOVER

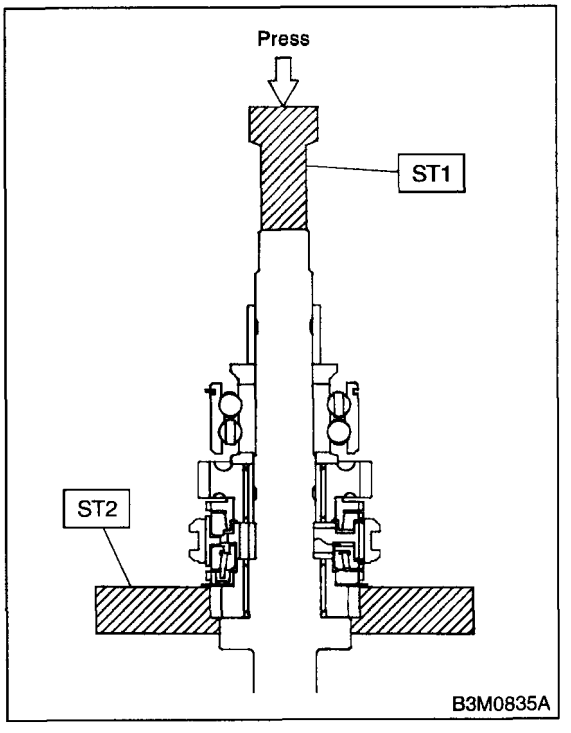

D: ASSEMBLY

1) Assemble each sleeve and hub assembly.

NOTE:
Position open ends of spring 120° apart.

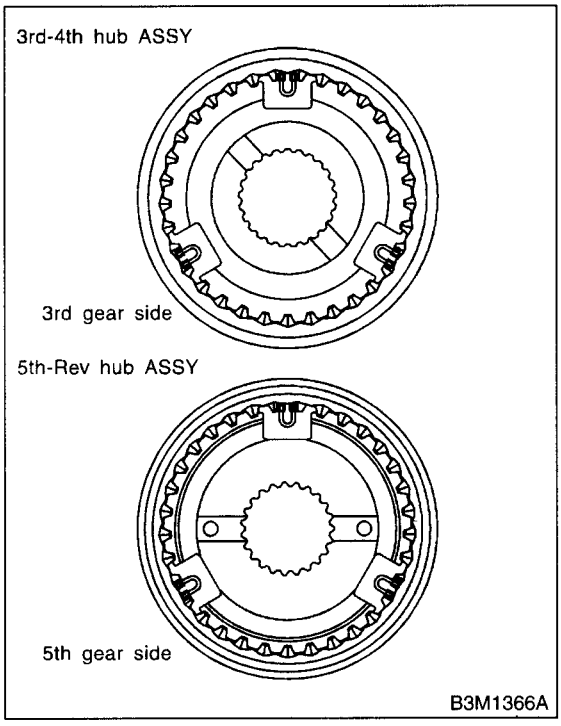

2) Install the 3rd drive gear, outer baulk ring, synchro cone, inner baulk ring, sleeve and hub assembly for 3rd needle bearing on the transmission main shaft.

NOTE:
Align the groove in baulk ring with shifting insert.

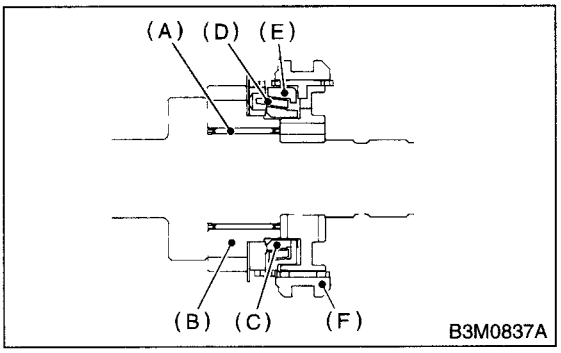

(A) 3rd needle bearing
(B) 3rd drive gear
(C) Inner baulk ring
(D) Synchro cone
(E) Outer baulk ring
(F) Sleeve and hub ASSY

3) Install the 4th needle bearing race onto transmission main shaft using ST1, ST2 and a press.

CAUTION:
Do not apply pressure in excess of 10 kN (1 ton, 1.1 US ton, 1.0 Imp ton).

ST1 899714110 REMOVER
ST2 499877000 RACE 4-5 INSTALLER

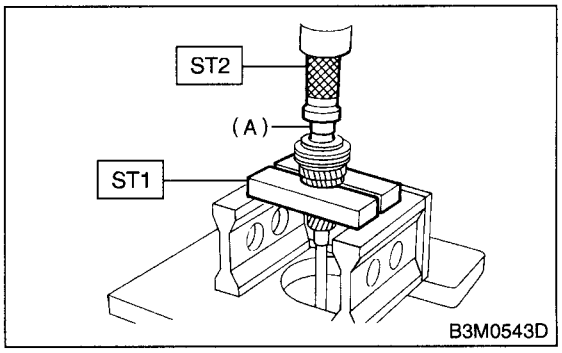

(A) 4th needle bearing race

4) Install the baulk ring, needle bearing, 4th drive gear and 4th gear thrust washer to the transmission main shaft.

NOTE:
Align the baulk ring and gear & hub assembly with key groove.

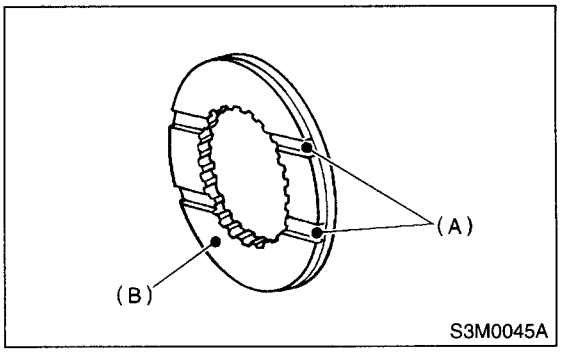

(A) Groove
(B) 4th gear side

5) Drive the ball bearing onto the rear section of transmission main shaft using ST1, ST2 and a press.

CAUTION:
Do not apply pressure in excess of 10 kN (1 ton, 1.1 US ton, 1.0 Imp ton).

ST1 899714110 REMOVER
ST2 499877000 RACE 4-5 INSTALLER

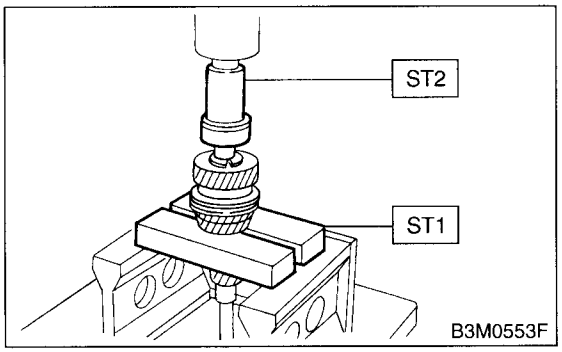

6) Using ST1 and ST2, install the 5th gear thrust washer and 5th needle bearing race onto the rear section of transmission main shaft.

CAUTION:
Do not apply pressure in excess of 10 kN (1 ton, 1.1 US ton, 1.0 Imp ton).

NOTE:
Face the thrust washer in the correct direction.

ST1 899714110 REMOVER
ST2 499877000 RACE 4-5 INSTALLER

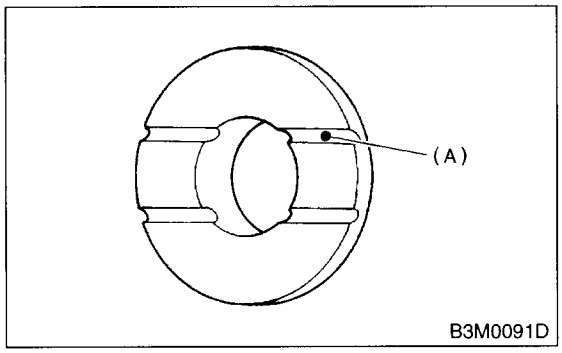

(A) Face this surface to 5th gear side.

7) Install the bearing onto synchro cone.
8) Install the baulk ring and synchro cone onto 5th-Rev sleeve and hub assembly using ST and a press.

CAUTION:
Do not apply pressure in excess of 10 kN (1 ton, 1.1 US ton, 1.0 Imp ton).

NOTE:
- Use new ball bearing.
- After press fitting, make sure synchro cone rotates freely.

ST 499757002 INSTALLER

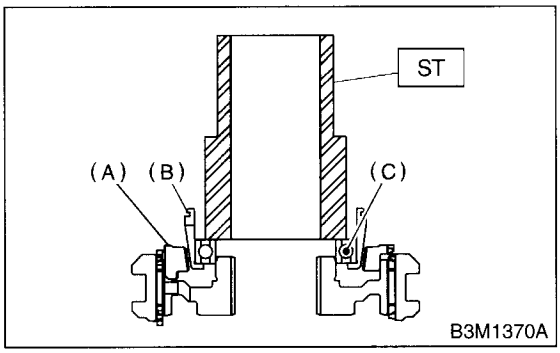

(A) Baulk ring
(B) Synchro cone
(C) Ball bearing

9) Install the synchro cone stopper and snap ring to 5th-Rev sleeve and hub assembly.

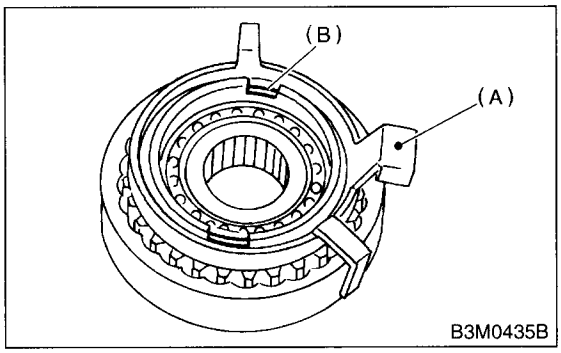

(A) Synchro cone stopper
(B) Snap ring

10) Install the rest parts to the rear section of transmission main shaft.

NOTE:
Align the groove in baulk ring with shifting insert.

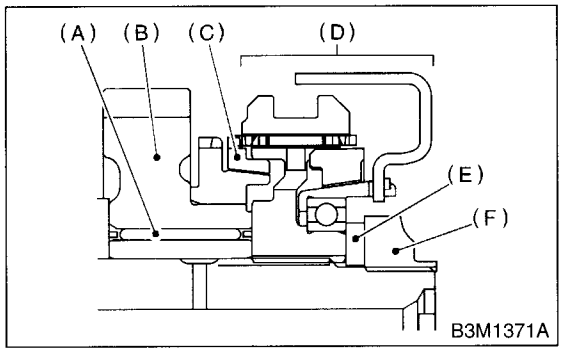

(A) Needle bearing
(B) 5th drive gear
(C) Baulk ring
(D) 5th-Rev sleeve and hub ASSY
(E) Lock washer
(F) Lock nuts

11) Tighten the lock nuts to the specified torque using ST1 and ST2.

NOTE:
Secure the lock nuts in two places after tightening.

ST1 499987003 SOCKET WRENCH
ST2 498937000 TRANSMISSION HOLDER

Tightening torque:
118 N·m (12.0 kgf-m, 86.8 ft-lb)

E: INSPECTION

Disassembled parts should be washed clean first and then inspected carefully.

1) Bearings
Replace the bearings in the following cases:
- Bearings whose balls, outer races and inner races are broken or rusty.
- Worn bearings
- Bearings that fail to turn smoothly or make abnormal noise when turned after gear oil lubrication.
- Bearings having other defects

2) Bushing (each gear)
Replace the bushing in the following cases:
- When the sliding surface is damaged or abnormally worn.
- When the inner wall is abnormally worn.

3) Gears
- Replace the gears with new ones if their tooth surfaces are broken, damaged, or excessively worn.
- Correct or replace if the cone that contacts the baulk ring is rough or damaged.
- Correct or replace if the inner surface or end face is damaged.

4) Baulk ring
Replace the ring in the following cases:
- When the inner surface and end face are damaged.
- When the ring inner surface is abnormally or partially worn down.
- When the contact surface of the synchronizer ring insert is scored or abnormally worn down.

5) Shifting insert key
Replace the insert if deformed, excessively worn, or defective in any way.

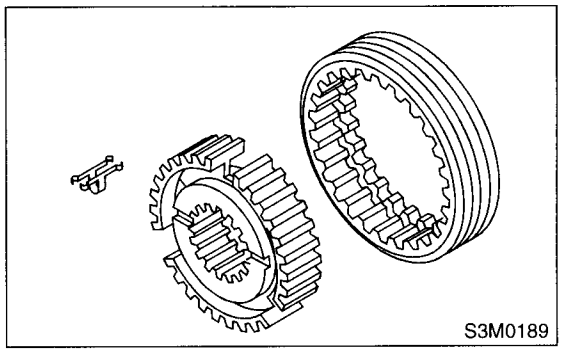

6) Oil seal
Replace the oil seal if the lip is deformed, hardened, damaged, worn, or defective in any way.

7) O-ring
Replace the O-ring if the sealing face is deformed, hardened, damaged, worn, or defective in any way.

8) Gearshift mechanism
Repair or replace the gearshift mechanism if excessively worn, bent, or defective in any way.

F: ADJUSTMENT

Selection of main shaft rear plate
Using ST, measure the amount (A) of ball bearing protrusion from transmission main case surface and select the proper plate in the following table:

NOTE:
Before measuring, tap the end of main shaft with a plastic hammer lightly in order to make the clearance zero between the main case surface and the moving flange of bearing.

ST 498147000 DEPTH GAUGE

Dimension (A) mm (in)	Part No.	Mark
4.00 — 4.13 (0.1575 — 0.1626)	32294AA041	1
3.87 — 3.99 (0.1524 — 0.1571)	32294AA051	2

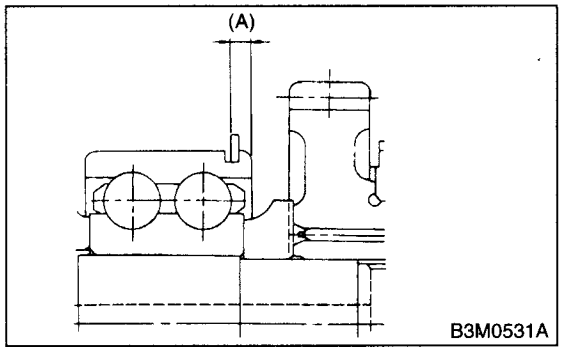

16.Drive Pinion Shaft Assembly

A: REMOVAL

1) Remove the manual transmission assembly from vehicle. <Ref. to MT-27, REMOVAL, Manual Transmission Assembly.>
2) Remove the transfer case with extension case assembly. <Ref. to MT-41, REMOVAL, Transfer Case and Extension Case Assembly.>
3) Remove transmission case. <Ref. to MT-54, REMOVAL, Transmission Case.>
4) Remove the drive pinion shaft assembly.

NOTE:
Use a hammer handle, etc. to remove if too tight.

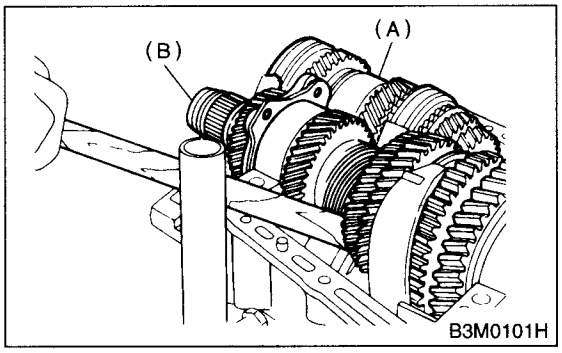

(A) Main shaft assembly
(B) Drive pinion shaft assembly

B: INSTALLATION

1) Remove the differential assembly.
2) Alignment marks/numbers on hypoid gear set
The upper number on driven pinion is the match number for combining it with hypoid driven gear. The lower number is for shim adjustment. If no lower number is shown, the value is zero. The number on hypoid driven gear indicates a number for combination with drive pinion.

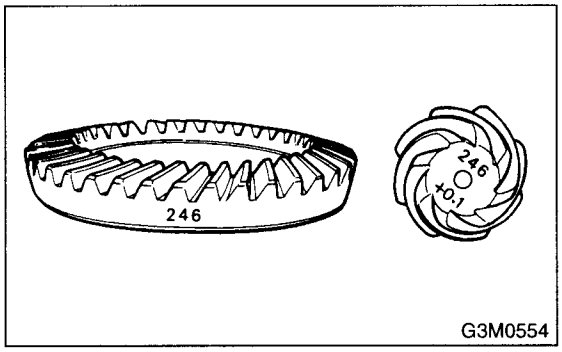

3) Place the drive pinion shaft assembly on right hand transmission main case without shim and tighten the bearing mounting bolts.

4) Inspection and adjustment of ST

NOTE:
- Loosen the two bolts and adjust so that the scale indicates 0.5 correctly when the plate end and the scale end are on the same level.
- Tighten the two bolts.

ST 499917500 DRIVE PINION GAUGE ASSY

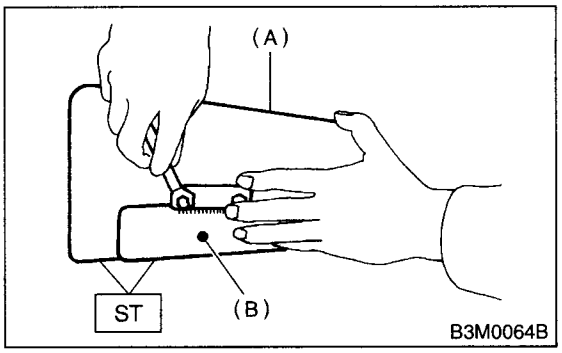

(A) Plate
(B) Scale

5) Position the ST by inserting the knock pin of ST into the knock hole in the transmission case.
ST 499917500 DRIVE PINION GAUGE ASSY
6) Slide the drive pinion gauge scale with finger tip and read the value at the point where it matches with the end face of drive pinion.
ST 499917500 DRIVE PINION GAUGE ASSY

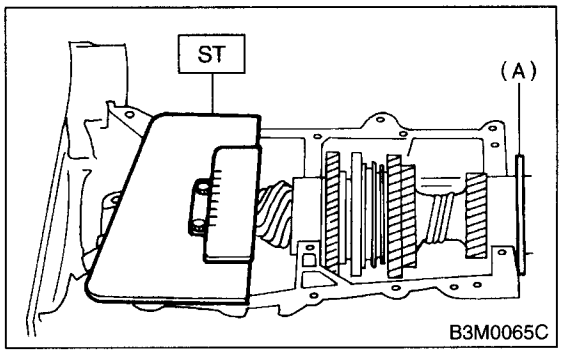

(A) Adjust clearance to zero without shim.

7) The thickness of shim shall be determined by adding the value indicated on drive pinion to the value indicated on the ST. (Add if the number on drive pinion is prefixed by + and subtract if the number is prefixed by –.)
ST 499917500 DRIVE PINION GAUGE ASSY

8) Select one to three shims from the next table for the value determined as described above and take a shim thickness which is closest to the said value.

Drive pinion shim	
Part No.	Thickness mm (in)
32295AA031	0.150 (0.0059)
32295AA041	0.175 (0.0069)
32295AA051	0.200 (0.0079)
32295AA061	0.225 (0.0089)
32295AA071	0.250 (0.0098)
32295AA081	0.275 (0.0108)
32295AA091	0.300 (0.0118)
32295AA101	0.500 (0.0197)

9) Install the differential assembly. <Ref. to MT-71, INSTALLATION, Front Differential Assembly.>
10) Set the transmission main shaft assembly and drive pinion assembly in position. (So there is no clearance between the two when moved all the way to the front). Inspect the suitable 1st — 2nd, 3rd — 4th and 5th shifter fork so that the coupling sleeve and reverse driven gear are positioned in the center of their cynchronizing mechanisms. <Ref. to MT-68, INSPECTION, Drive Pinion Shaft Assembly.>
11) Install the transmission case. <Ref. to MT-55, INSTALLATION, Transmission Case.>
12) Install the transfer case with extension case assembly. <Ref. to MT-41, INSTALLATION, Transfer Case and Extension Case Assembly.>
13) Install the manual transmission assembly to vehicle.<Ref. to MT-27, Manual Transmission Assembly.>

C: DISASSEMBLY

CAUTION:
Attach a cloth to the end of driven shaft (on the frictional side of thrust needle bearing) during disassembly or reassembly to prevent damage.

1) Straighten the lock nut at staked portion. Remove the lock nut using ST1, ST2 and ST3.
ST1 899884100 HOLDER
ST2 498427100 STOPPER
ST3 899988608 SOCKET WRENCH (27)

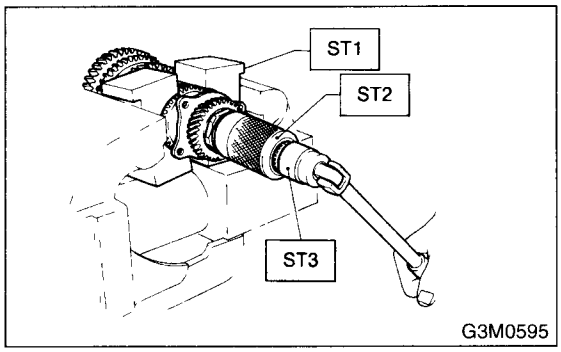

2) Withdraw the drive pinion from driven shaft. Remove the differential bevel gear sleeve, adjusting washer No. 1, adjusting washer No. 2, thrust bearing, needle bearing, drive pinion collar, needle bearing and thrust bearing.

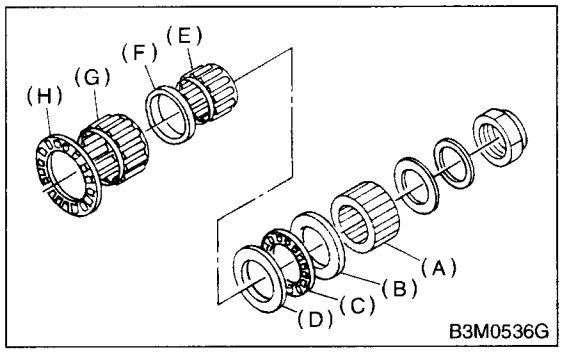

(A) Differential bevel gear sleeve
(B) Washer No. 1 (25 × 37.5 × t)
(C) Thrust bearing (25 × 37.5 × 3)
(D) Washer No. 2 (25 × 37.5 × 4)
(E) Needle bearing (25 × 30 × 20)
(F) Drive pinion collar
(G) Needle bearing (30 × 37 × 23)
(H) Thrust bearing (33 × 50 × 3)

3) Remove the roller bearing and washer using ST and press.

CAUTION:
Do not reuse roller bearing.

ST 498077000 REMOVER

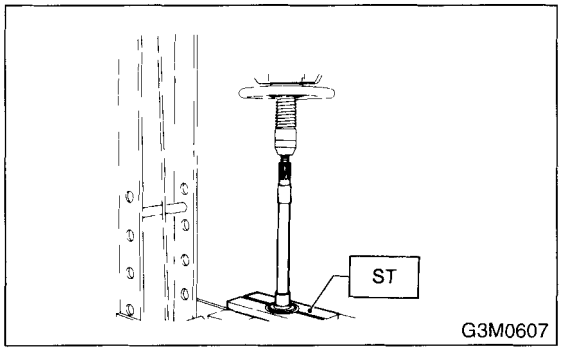

4) Straighten the lock nut at staked portion. Remove the lock nut using ST1 and ST2.

ST1 499987300 SOCKET WRENCH (50)
ST2 899884100 HOLDER

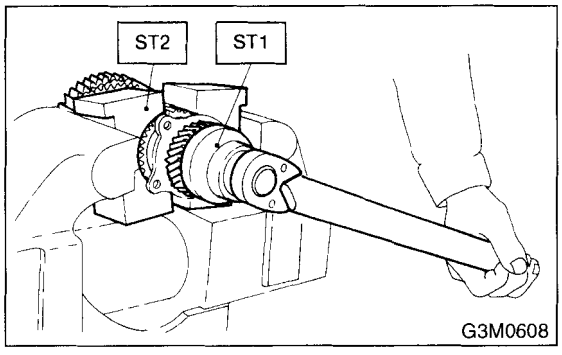

5) Remove the 5th driven gear using ST.

ST 499857000 5TH DRIVEN GEAR REMOVER

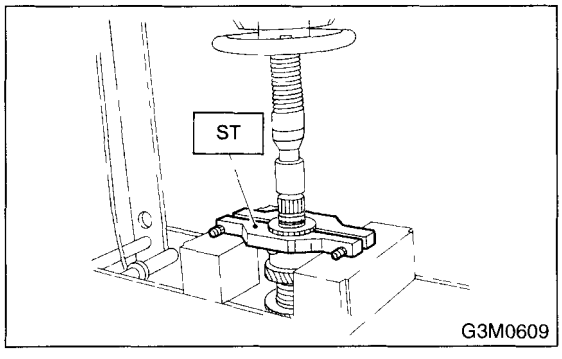

6) Remove the woodruff key.

7) Remove the roller bearing, 3rd-4th driven gear using ST1 and ST2.

ST1 499757002 INSTALLER
ST2 899714110 REMOVER

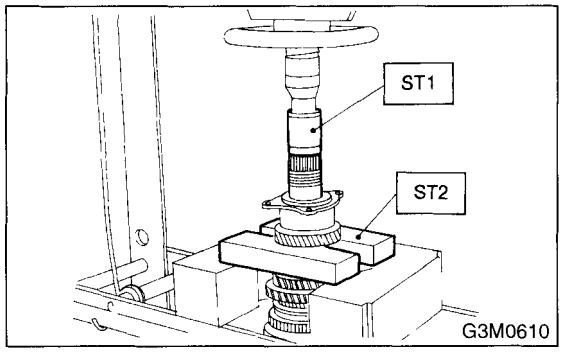

8) Remove the key.

9) Remove the 2nd driven gear, inner baulk ring, synchro cone and outer baulk ring.

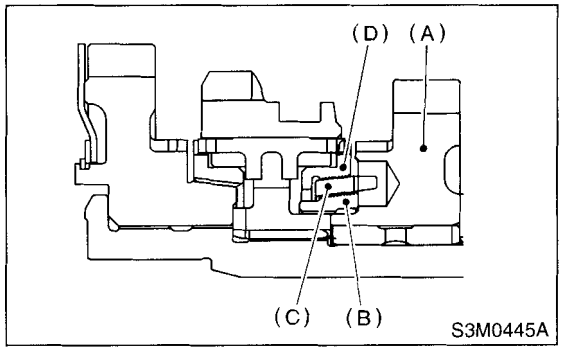

(A) 2nd driven gear
(B) Inner baulk ring
(C) Synchro cone
(D) Outer baulk ring

10) Remove the 1st driven gear, 2nd gear bushing, gear and hub using ST1 and ST2.

NOTE:
Replace the gear and hub if necessary. Do not attempt to disassemble if at all possible because they must engage at a specified point. If they have to be disassembled, mark the engaging point beforehand.

ST1 499757002 INSTALLER
ST2 899714110 REMOVER

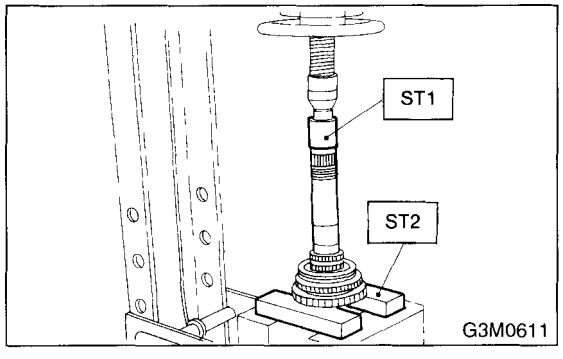

11) Remove the sub gear for 1st driven gear.

D: ASSEMBLY

1) Install the sleeve and assembly by matching alignment marks.

NOTE:
- Use the new gear and hub assembly, if the gear or hub have been replaced.

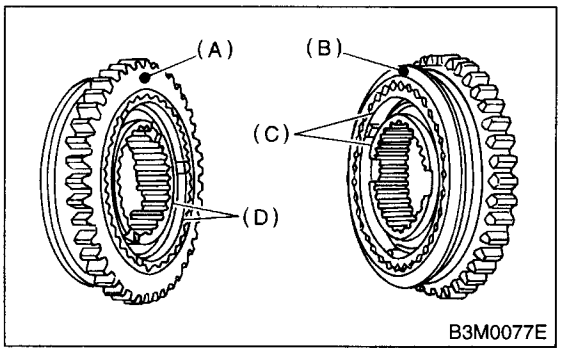

(A) 1st gear side
(B) 2nd gear side
(C) Flush surface
(D) Stepped surface

2) Install the washer, snap ring and sub gear to 1st driven gear.
3) Install the 1st driven gear, 1st baulk ring, gear and hub assembly onto driven shaft.

NOTE:
- Take care to install gear and hub assembly in proper direction.
- Align the baulk ring and gear & hub assembly with key groove.

4) Install the 2nd driven gear bushing onto driven shaft using ST1, ST2 and press.

CAUTION:
- **Attach a cloth to the end of driven shaft to prevent damage.**
- **Do not apply pressure in excess of 10 kN (1 ton, 1.1 US ton, 1.0 Imp ton).**

NOTE:
When press fitting, align the oil holes of shaft and bush.

ST1 499277200 INSTALLER
ST2 499587000 INSTALLER

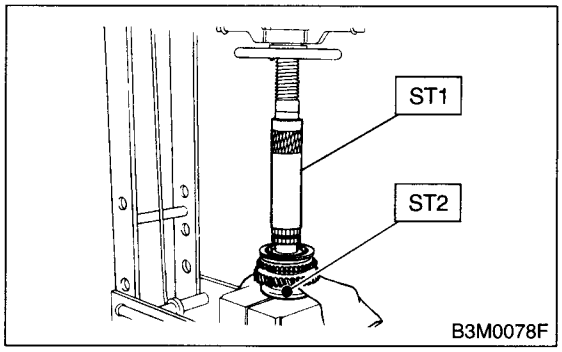

5) Install the 2nd driven gear, inner baulk ring, synchro cone, outer baulk ring and insert onto driven shaft.

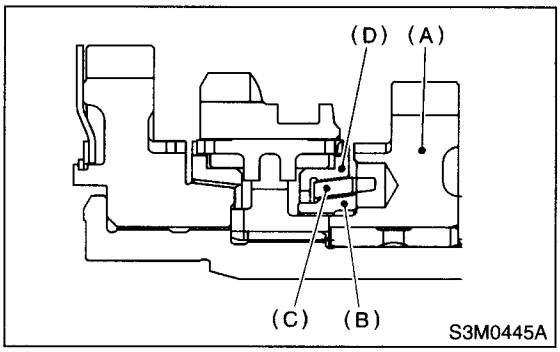

(A) 2nd driven gear
(B) Inner baulk ring
(C) Synchro cone
(D) Outer baulk ring

6) After installing key on driven shaft, install the 3rd-4th driven gear using ST and press.

CAUTION:
Do not apply pressure in excess of 10 kN (1 ton, 1.1 US ton, 1.0 Imp ton).

NOTE:
Align the groove in baulk ring with insert.

ST 499277200 INSTALLER

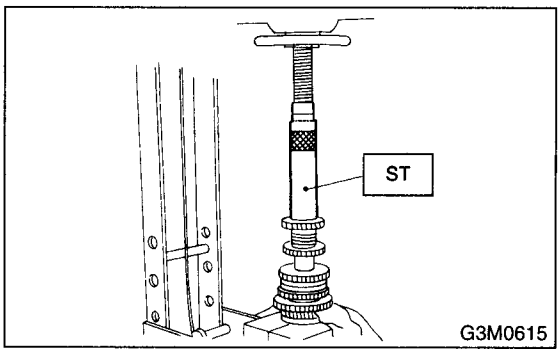

7) Install a set of roller bearings onto the driven shaft using ST and press.

CAUTION:
Do not apply pressure in excess of 10 kN (1 ton, 1.1 US ton, 1.0 Imp ton).

ST 499277200 INSTALLER

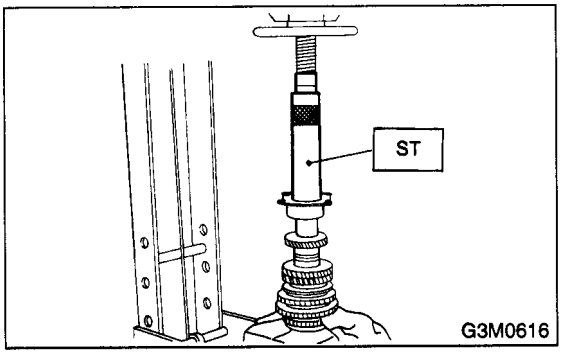

8) Position the woodruff key in groove on the rear of driven shaft. Install 5th driven gear onto drive shaft using ST and press.

CAUTION:
Do not apply pressure in excess of 10 kN (1 ton, 1.1 US ton, 1.0 Imp ton).

ST 499277200 INSTALLER

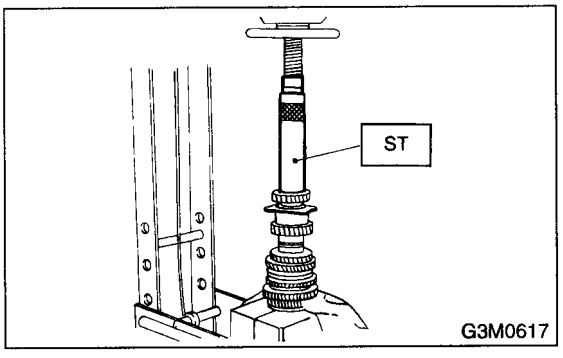

9) Install the lock washer. Install lock nut and tighten to the specified torque using ST.

ST 499987300 SOCKET WRENCH (50)

Tightening torque:
265 N·m (27 kgf-m, 195 ft-lb)

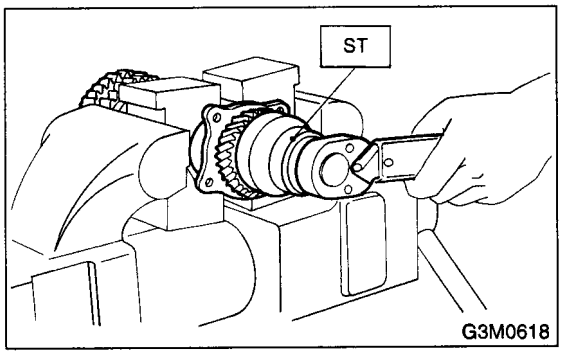

NOTE:
- Stake the lock nut at two points.
- Using spring balancer, check that starting torque of roller bearing is 0.1 to 1.5 N (0.01 to 0.15 kgf, 0.02 to 0.33ft).

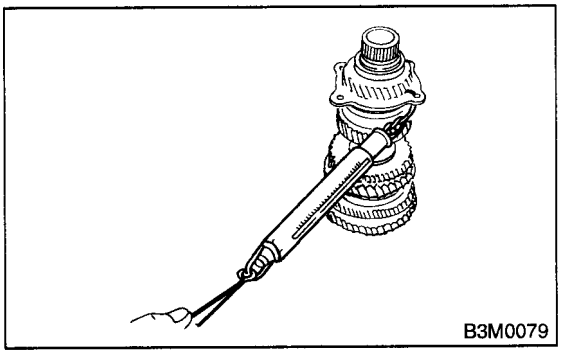

10) Install the roller bearing onto drive pinion.

NOTE:
When installing roller bearing, note its directions (front and rear) because the knock pin hole in outer race is offset.

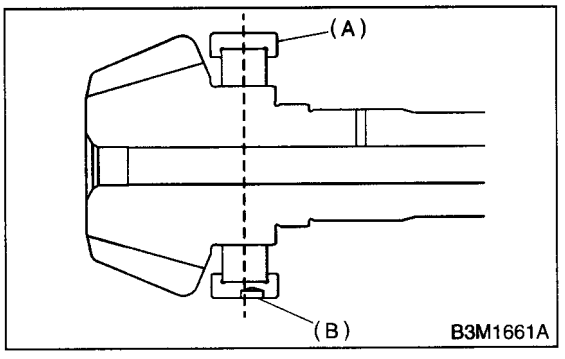

(A) Roller bearing
(B) Knock pin hole

11) Install the washer using ST1, ST2 and press.

CAUTION:
- **Discard old lock nuts, replace with new ones.**
- **Secure lock nut in four places.**

ST1 499277100 BUSH 1-2 INSTALLER
ST2 499277200 INSTALLER

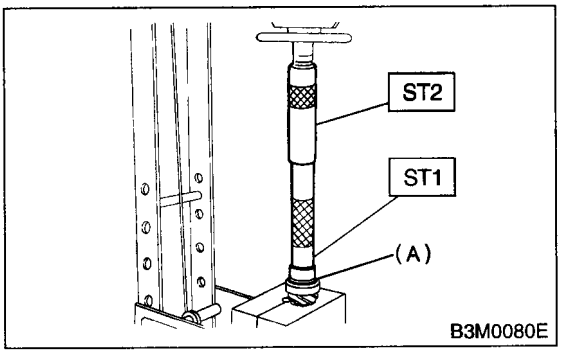

(A) Washer

12) Install the thrust bearing and needle bearing. Install the driven shaft assembly.

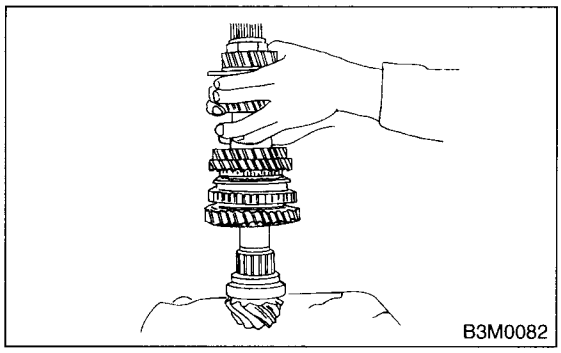

13) Install the drive pinion collar, needle bearing, adjusting washer No. 2, thrust bearing, adjusting washer No. 1 and differential bevel gear sleeve in that order.

NOTE:
Be careful because the spacer must be installed in proper direction.

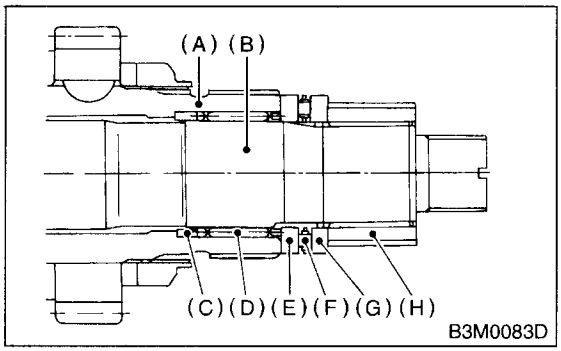

(A) Driven shaft
(B) Drive shaft
(C) Drive pinion collar
(D) Needle bearing (25 × 30 × 20)
(E) Washer No. 2 (25 × 36 × 4)
(F) Thrust bearing (25 × 37.5 × 3)
(G) Washer No. 1 (25 × 36 × t)
(H) Differential bevel gear sleeve

E: INSPECTION

Disassembled parts should be washed clean first and then inspected carefully.

1) Bearings
Replace bearings in the following cases:
- Bearings whose balls, outer races and inner races are broken or rusty.
- Worn bearings
- Bearings that fail to turn smoothly or make abnormal noise when turned after gear oil lubrication.
- The ball bearing on the rear side of the drive pinion shaft should be checked for smooth rotation before the drive pinion assembly is disassembled. In this case, because a preload is working on the bearing, its rotation feels like it is slightly dragging unlike the other bearings.

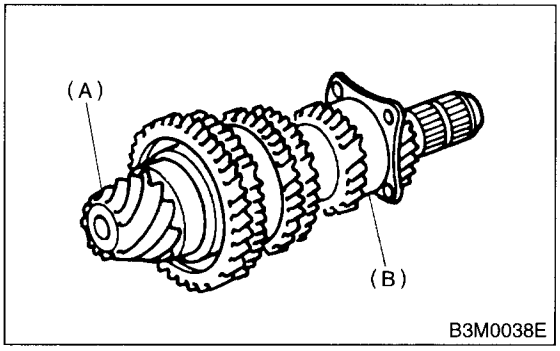

(A) Drive pinion shaft
(B) Ball bearing

- Bearings having other defects

2) Bushing (each gear)
Replace the bushing in the following cases:
- When the sliding surface is damaged or abnormally worn.
- When the inner wall is abnormally worn.

3) Gears
- Replace gears with new ones if their tooth surfaces are broken, damaged, or excessively worn.
- Correct or replace if the cone that contacts the baulk ring is rough or damaged.
- Correct or replace if the inner surface or end face is damaged.

4) Baulk ring
Replace the ring in the following cases:
- When the inner surface and end face are damaged.
- When the ring inner surface is abnormally or partially worn down.
- If the gap between the end faces of the ring and the gear splined part is excessively small when the ring is pressed against the cone.

Clearance (A):
0.5 — 1.0 mm (0.020 — 0.040 in)

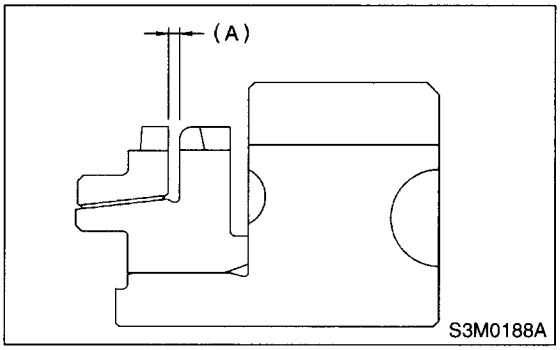

• When the contact surface of the synchronizer ring insert is scored or abnormally worn down.

5) Shifting insert key

Replace the insert if deformed, excessively worn, or defective in any way

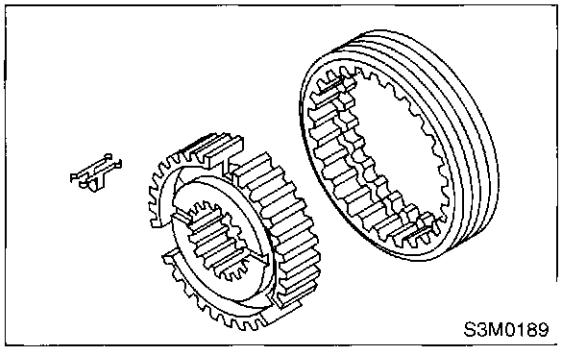

6) Oil seal

Replace the oil seal if the lip is deformed, hardened, damaged, worn, or defective in any way

7) O-ring

Replace the O-ring if the sealing face is deformed, hardened, damaged, worn, or defective in any way.

F: ADJUSTMENT

1. THRUST BEARING PRELOAD

1) After completing the preceding steps 1) through 3), select adjusting washer No. 1 so that the dimension (H) is zero through visual check Position washer (18 3 × 30 × 4) and lock washer (18 × 30 × 2) and install lock nut (18 × 13.5)

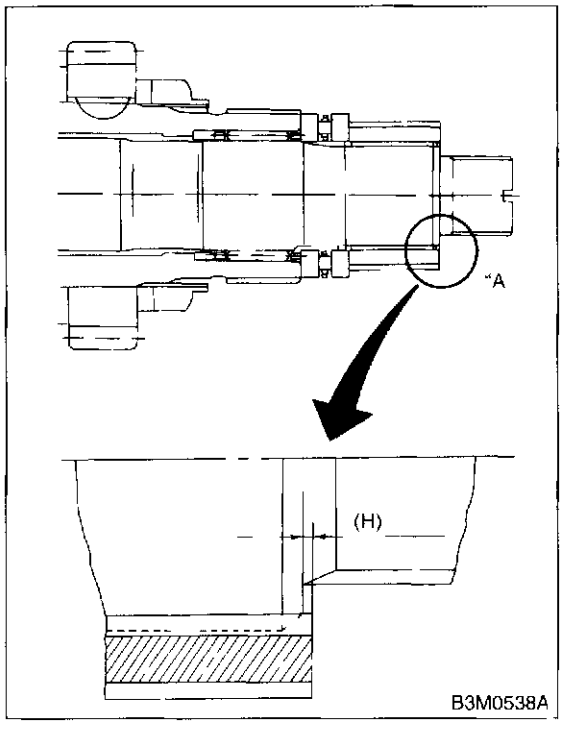

2) Using ST1, ST2 and ST3, tighten the lock nut to the specified torque

ST1	899884100	HOLDER
ST2	498427100	STOPPER
ST3	899988608	SOCKET WRENCH (27)

Tightening torque:
118 N·m (12 kgf-m, 86.8 ft-lb)

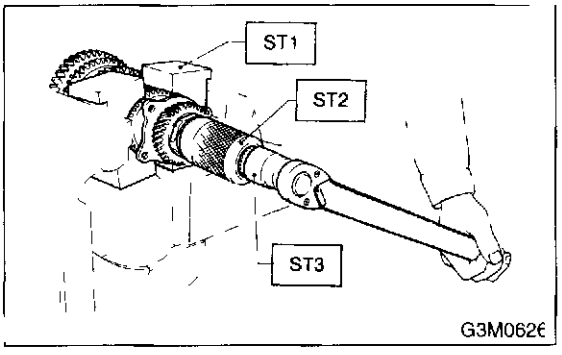

3) After removing ST2, measure the starting torque using torque driver.

ST1	899884100	HOLDER
ST3	899988608	SOCKET WRENCH (27)

Starting torque:
0.3 — 0.8 N·m
(0.03 — 0.08 kgf-m, 0.2 — 0.6 ft-lb)

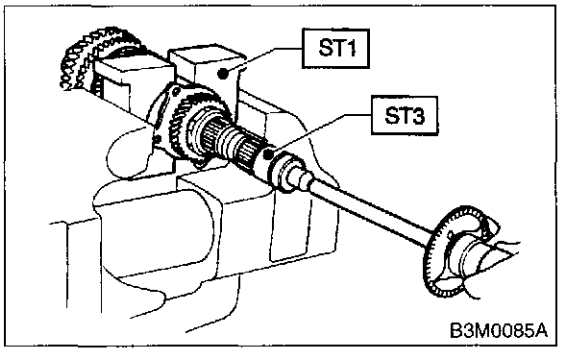

4) If starting torque is not within specified limit, select new adjusting washer No 1 and recheck starting torque.

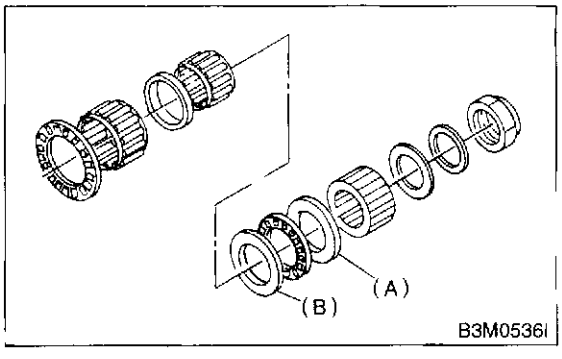

(A) Adjusting washer No 1
(B) Adjusting washer No 2

Adjusting washer No. 1	
Part No.	Thickness mm (in)
803025051	3.925 (0.1545)
803025052	3.950 (0.1555)
803025053	3.975 (0.1565)
803025054	4.000 (0.1575)
803025055	4.025 (0.1585)
803025056	4.050 (0.1594)
803025057	4.075 (0.1604)

5) If specified starting torque range cannot be obtained when a No. 1 adjusting washer is used, then select a suitable No. 2 adjusting washer from those listed in the following table. Repeat steps 1) through 4) to adjust starting torque.

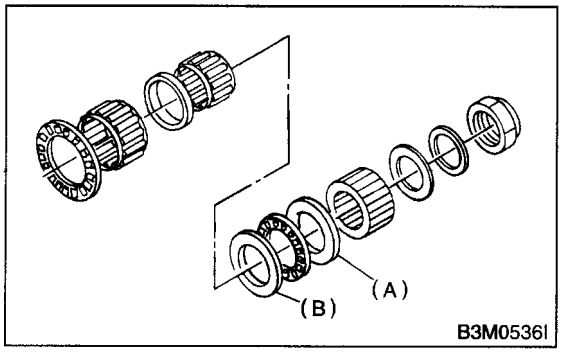

(A) Adjusting washer No. 1
(B) Adjusting washer No. 2

Starting torque	Dimension H	Washer No. 2
Low	Small	Select thicker one.
High	Large	Select thinner one.

Adjusting washer No. 2	
Part No.	Thickness mm (in)
803025059	3.850 (0.1516)
803025054	4.000 (0.1575)
803025058	4.150 (0.1634)

6) Recheck that the starting torque is within specified range, then clinch the lock nut at four positions.

17.Front Differential Assembly

A: REMOVAL

1) Remove the manual transmission assembly from vehicle. <Ref. to MT-27, REMOVAL, Manual Transmission Assembly.>
2) Remove the transfer case with extension case assembly. <Ref. to MT-41, REMOVAL, Transfer Case and Extension Case Assembly.>
3) Remove the transmission case. <Ref. to MT-54, REMOVAL, Transmission Case.>
4) Removes the drive pinion shaft assembly. <Ref. to MT-63, REMOVAL, Drive Pinion Shaft Assembly.>
5) Remove the main shaft assembly.
<Ref. to MT-57, REMOVAL, Main Shaft Assembly for Single-Range.>
6) Remove the differential assembly.

CAUTION:
- **Be careful not to confuse right and left roller bearing outer races.**
- **Be careful not to damage retainer oil seal.**

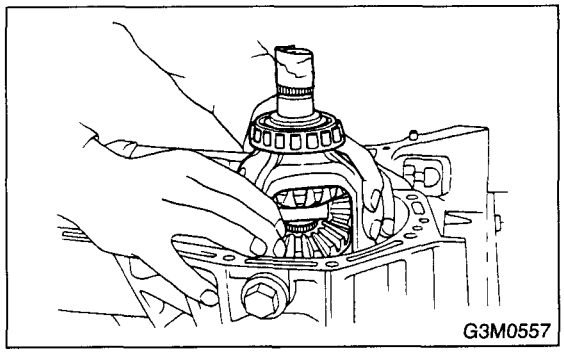

7) Remove the differential side retainers using ST.
ST 499787000 WRENCH ASSY

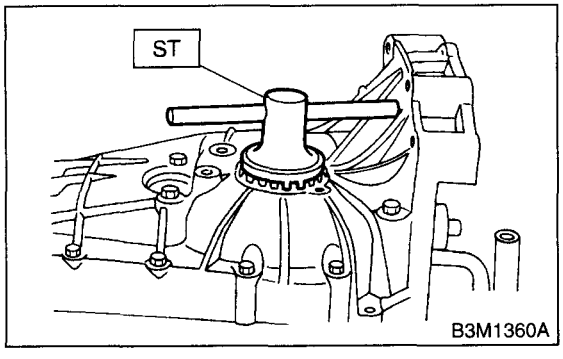

B: INSTALLATION

1) Install the differential side retainers using ST.
ST 499787000 WRENCH ASSY
2) Install the differential assembly.

CAUTION:
Be careful not to fold the sealing lip of oil seal.

NOTE:
Wrap the left and right splines sections of axle shaft with vinyl tape to prevent scratches.

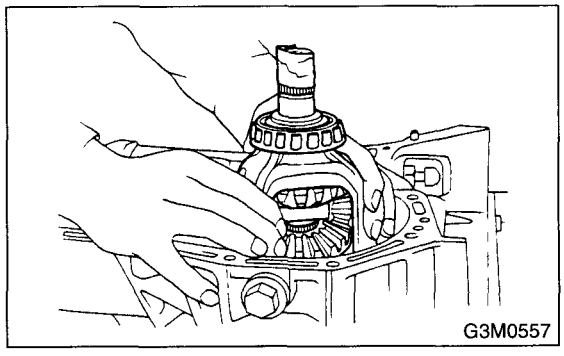

3) Install the main shaft assembly. <Ref. to MT-57, INSTALLATION, Main Shaft Assembly for Single-Range.>
4) Install the drive pinion assembly. <Ref. to MT-63, INSTALLATION, Drive Pinion Shaft Assembly.>
5) Install the transmission case. <Ref. to MT-55, INSTALLATION, Transmission Case.>
6) Install the transfer case with extension case assembly. <Ref. to MT-41, INSTALLATION, Transfer Case and Extension Case Assembly.>
7) Install the manual transmission assembly to vehicle. <Ref. to MT-30, INSTALLATION, Manual Transmission Assembly.>

C: DISASSEMBLY

1) Remove the right and left snap rings from differential, and then remove the two axle drive shafts.

NOTE:
During reassembly, reinstall each axle drive shaft in the same place from which it was removed.

2) Loosen the twelve bolts and remove hypoid driven gear.

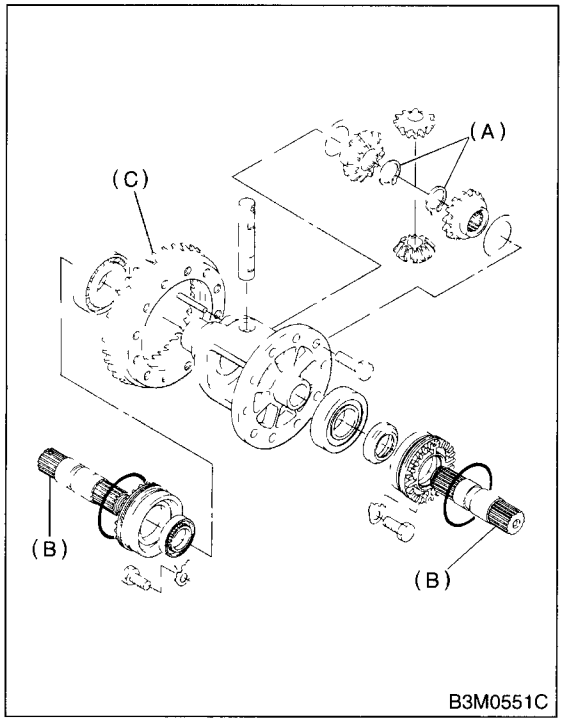

(A) Snap ring
(B) Axle drive shaft
(C) Hypoid driven gear

3) Drive out the straight pin from differential assembly toward hypoid driven gear.
ST 899904100 REMOVER

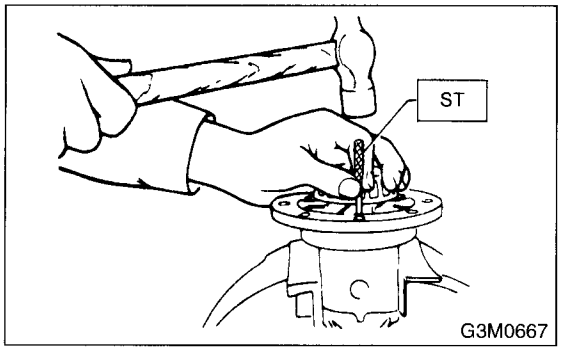

4) Pull out the pinion shaft, and remove the differential bevel pinion and gear and washer.

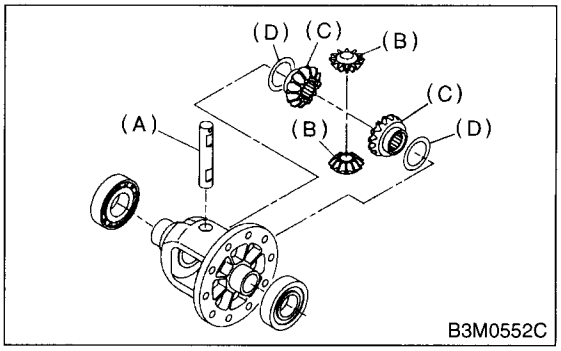

(A) Pinion shaft
(B) Bevel pinion
(C) Bevel gear
(D) Washer

5) Remove the roller bearing using ST.
ST 399527700 PULLER SET

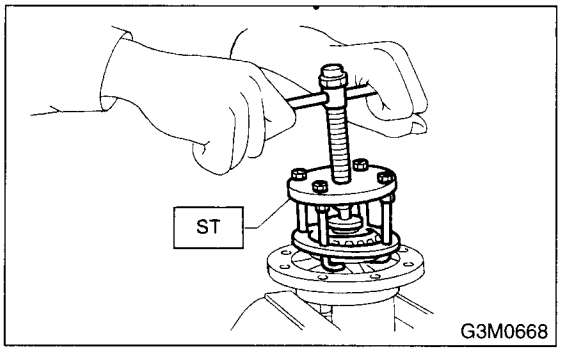

D: ASSEMBLY

1) Install the bevel gear and bevel pinion together with washers, and insert pinion shaft.

NOTE:
Face the chamfered side of washer toward gear.

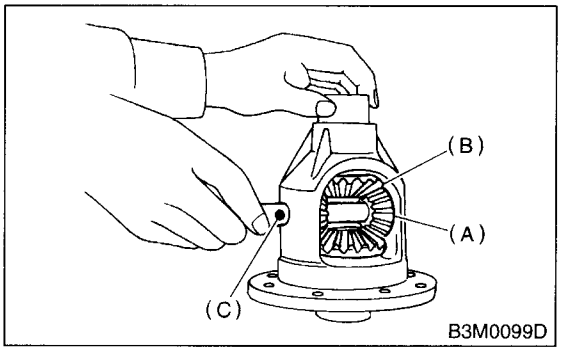

(A) Bevel pinion
(B) Bevel gear
(C) Pinion shaft

2) Measure the backlash between bevel gear and pinion. If it is not within specifications, install a suitable washer to adjust it. <Ref. to MT-75, ADJUSTMENT, Front Differential Assembly.>

NOTE:
Be sure the pinion gear tooth contacts adjacent gear teeth during measurement.

ST1 498247001 MAGNET BASE
ST2 498247100 DIAL GAUGE

Standard backlash:
0.13 — 0.18 mm (0.0051 — 0.0071 in)

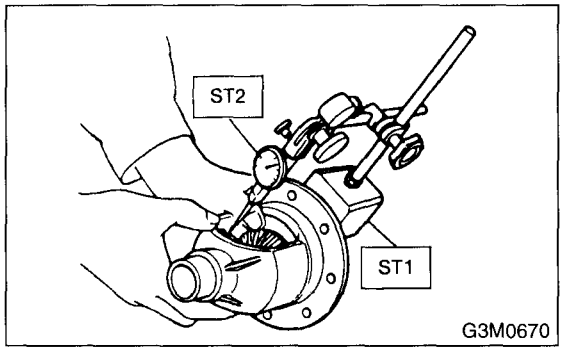

3) Align the pinion shaft and differential case at their holes, and drive straight pin into holes from the hypoid driven gear side, using ST.

NOTE:
Lock the straight pin after installing.

ST 899904100 REMOVER

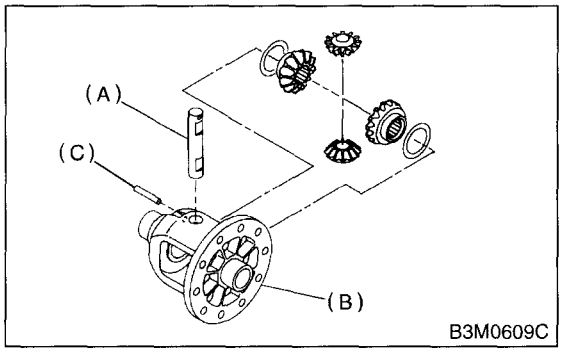

(A) Pinion shaft
(B) Differential case
(C) Straight pin

4) Install the roller bearing to differential case.

CAUTION:
Do not apply pressure in excess of 10 kN (1 ton, 1.1 US ton, 1.0 Imp ton).

NOTE:
Be careful because roller bearing outer races are used as a set.

ST1 499277100 BUSH 1-2 INSTALLER
ST2 398497701 ADAPTER

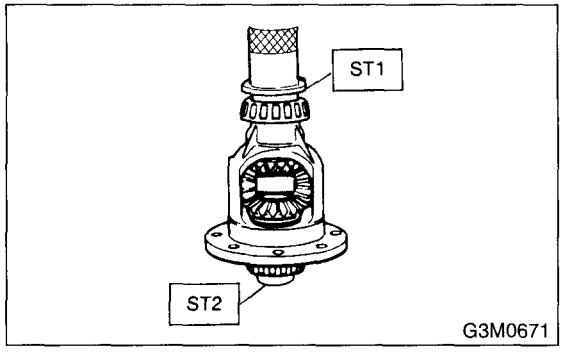

5) Install the hypoid driven gear to differential case using twelve bolts.

Tightening torque:
T: 62 N·m (6.3 kgf-m, 45.6 ft-lb)

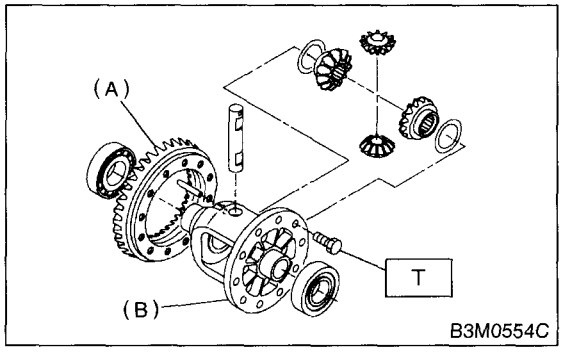

(A) Hypoid driven gear
(B) Differential case

E: INSPECTION

Repair or replace the differential gear in the following cases:

- The hypoid drive gear and drive pinion shaft tooth surface are damaged, excessively worn, or seized.
- The roller bearing on the drive pinion shaft has a worn or damaged roller path.
- There is damage, wear, or seizure of the differential bevel pinion, differential bevel gear, washer, pinion shaft, and straight pin.
- The differential case has worn or damaged sliding surfaces.

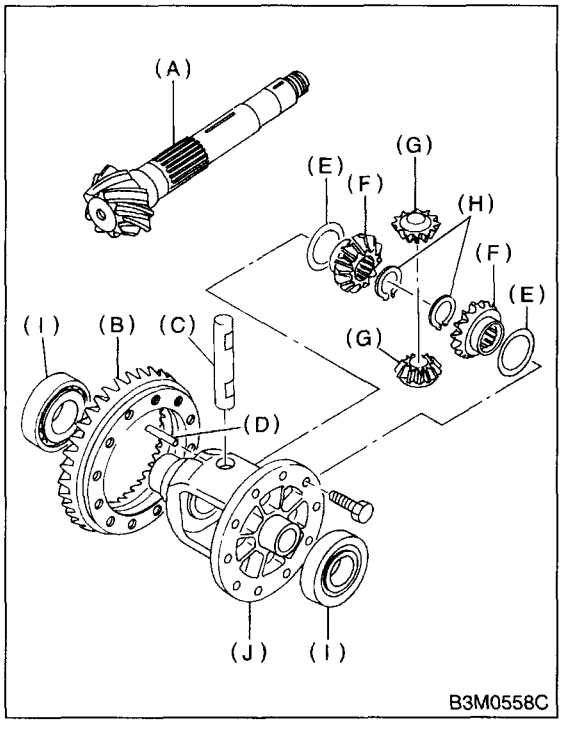

(A) Drive pinion shaft
(B) Hypoid driven gear
(C) Pinion shaft
(D) Straight pin
(E) Washer
(F) Differential bevel gear
(G) Differential bevel pinion
(H) Snap ring
(I) Roller bearing
(J) Differential case

1. BEVEL PINION GEAR BACKLASH

Measure the backlash between bevel gear and pinion. If it is not within specifications, install a suitable washer to adjust it.

NOTE:
Be sure the pinion gear tooth contacts adjacent gear teeth during measurement.

ST1 498247001 MAGNET BASE
ST2 498247100 DIAL GAUGE

Standard backlash:
0.13 — 0.18 mm (0.0051 — 0.0071 in)

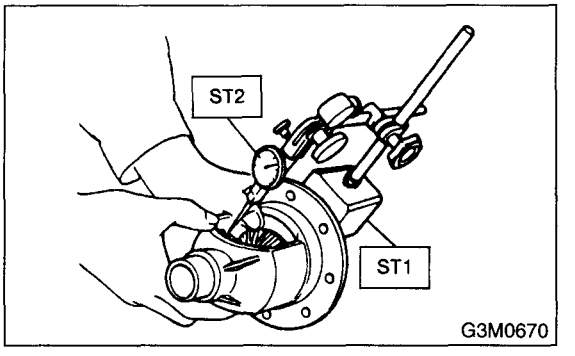

2. HYPOID GEAR BACKLASH

Set the ST1, ST2 and ST3. Insert the needle through transmission oil drain plug hole so that the needle comes in contact with the tooth surface at a right angle and check the backlash.

ST1 498247001 MAGNET BASE
ST2 498247100 DIAL GAUGE
ST3 498255400 PLATE

Backlash:
0.13 — 0.18 mm (0.0051 — 0.0071 in)

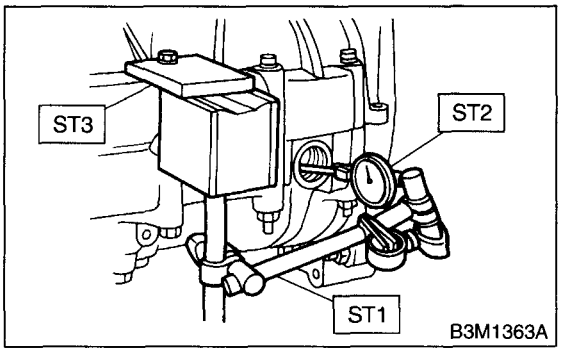

NOTE:
If the backlash is outside specified range, adjust it by turning holder in right side case.

3. TOOTH CONTACT OF HYPOID GEAR

Check tooth contact of hypoid gear as follows: Apply a uniform thin coat of red lead on both tooth surfaces of 3 or 4 teeth of the hypoid gear. Move the hypoid gear back and forth by turning the transmission main shaft until a definite contact pattern is developed on hypoid gear, and judge whether face contact is correct. If it is inaccurate, make adjustment. <Ref. to MT-75, ADJUSTMENT, Front Differential Assembly.>

- Tooth contact is correct.

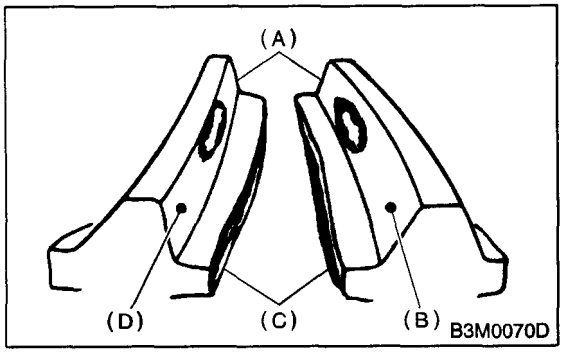

(A) Toe
(B) Coast side
(C) Heel
(D) Drive side

F: ADJUSTMENT

1. BEVEL PINION GEAR BACKLASH

1) Disassemble the front differential. <Ref. to MT-71, REMOVAL, Front Differential Assembly.>
2) Select a different washer from the table and install.

Washer	
Part No.	Thickness mm (in)
803038021	0.925 — 0.950 (0.0364 — 0.0374)
803038022	0.975 — 1.000 (0.0384 — 0.0394)
803038023	1.025 — 1.050 (0.0404 — 0.0413)

3) Adjust until the specified value is obtained.

Standard backlash:
0.13 — 0.18 mm (0.0051 — 0.0071 in)

2. HYPOID GEAR BACKLASH

Adjust the backlash by turning holder in right side case.
ST 499787000 WRENCH ASSY

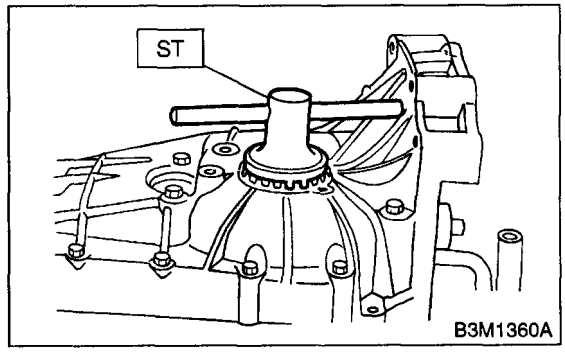

NOTE:
Each time holder rotates one tooth, backlash changes by 0.05 mm (0.020 in).

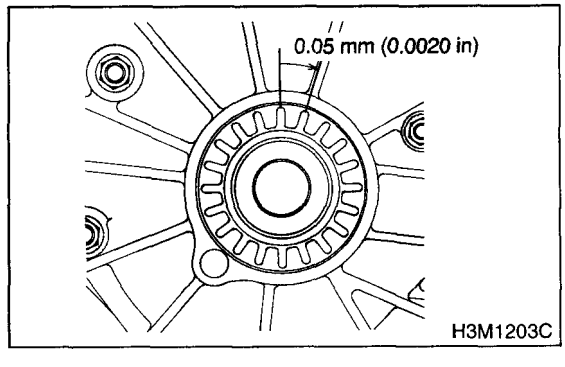

3. TOOTH CONTACT OF HYPOID GEAR

Adjust until the teeth contact is correct.

- Backlash is excessive.

To reduce backlash, loosen holder on the upper side (case right side) and turn in the holder on the lower side (case left side) by the same amount.

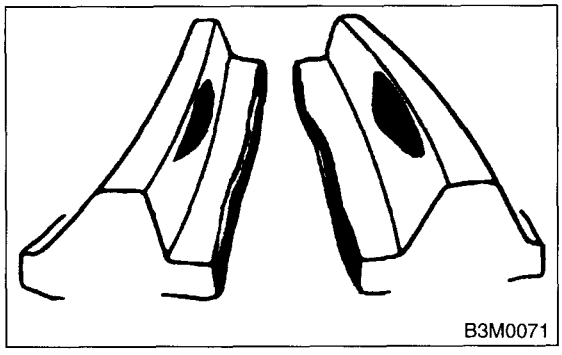

- Backlash is insufficient.

To increase backlash, loosen holder on the lower side (case left side) and turn in the holder on the upper side (case right side) by the same amount.

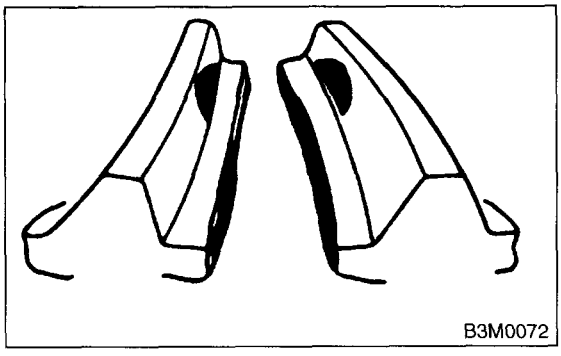

- The drive pinion shim selected before is too thick.

Reduce its thickness.

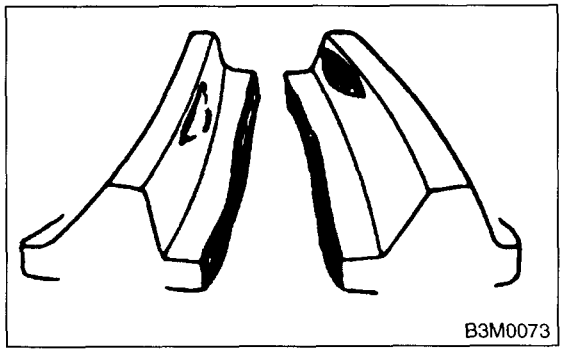

- The drive pinion shim selected before is too thin.

Increase its thickness.

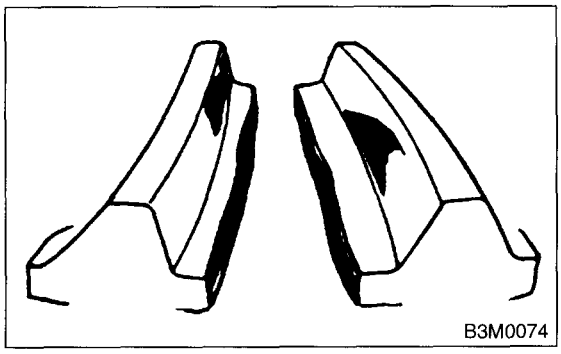

18.Speedometer Gear

A: REMOVAL

1) Remove the manual transmission assembly from vehicle. <Ref. to MT-27, REMOVAL, Manual Transmission Assembly.>
2) Remove the back-up light switch and neutral position switch. <Ref. to MT-37, REMOVAL, Switches and Harness.>
3) Remove the transfer case with extension case assembly. <Ref. to MT-41, REMOVAL, Transfer Case and Extension Case Assembly.>
4) Remove the transmission case. <Ref. to MT-54, REMOVAL, Transmission Case.>
5) Remove the vehicle speed sensor. <Ref. to MT-39, REMOVAL, Vehicle Speed Sensor.>
6) Remove the outer snap ring and pull out the speedometer driven gear. Next, remove the oil seal, speedometer shaft and washer.

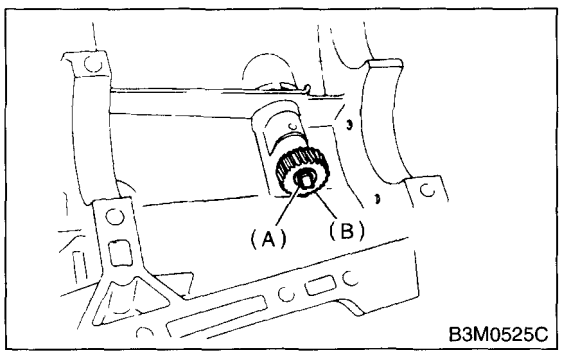

(A) Outer snap ring
(B) Speedometer driven gear

B: INSTALLATION

1) Install the washer and speedometer shaft, and press fit oil seal with ST.

CAUTION:
Use new oil seal, if it has been removed.

ST 899824100 or 499827000PRESS

2) Install the vehicle speed sensor. <Ref. to MT-39, INSTALLATION, Vehicle Speed Sensor.>
3) Install the speedometer driven gear and snap ring.

CAUTION:
Use new snap ring, if it has been removed.

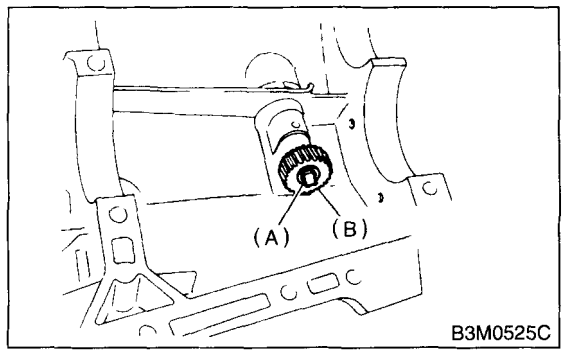

(A) Outer snap ring
(B) Speedometer driven gear

4) Install the transmission case. <Ref. to MT-55, INSTALLATION, Transmission Case.>
5) Install the transfer case with extension case assembly. <Ref. to MT-41, INSTALLATION, Transfer Case and Extension Case Assembly.>
6) Install the back-up light switch and neutral position switch. <Ref. to MT-38, INSTALLATION, Switches and Harness.>
7) Install the manual transmission assembly to vehicle.<Ref. to MT-30, INSTALLATION, Manual Transmission Assembly.>

C: INSPECTION

Check the speedometer gear, oil seal and speedometer shaft for damage. Replace if damaged.

19.Reverse Idler Gear

A: REMOVAL

1) Remove the manual transmission assembly from vehicle. <Ref. to MT-27, REMOVAL, Manual Transmission Assembly.>
2) Remove the back-up light switch and neutral position switch. <Ref. to MT-37, REMOVAL, Switches and Harness.>
3) Remove the transfer case with extension case assembly. <Ref. to MT-41, REMOVAL, Transfer Case and Extension Case Assembly.>
4) Remove the transmission case. <Ref. to MT-63, REMOVAL, Drive Pinion Shaft Assembly.>
5) Remove the drive pinion shaft assembly. <Ref. to MT-63, REMOVAL, Drive Pinion Shaft Assembly.>
6) Remove the main shaft assembly.
<Ref. to MT-57, REMOVAL, Main Shaft Assembly for Single-Range.>
7) Remove the differential assembly. <Ref. to MT-71, REMOVAL, Front Differential Assembly.>
8) Remove the shifter forks and rods. <Ref. to MT-80, REMOVAL, Shifter Fork and Rod.>
9) Pull out the straight pin, and remove the idler gear shaft, reverse idler gear and washer.

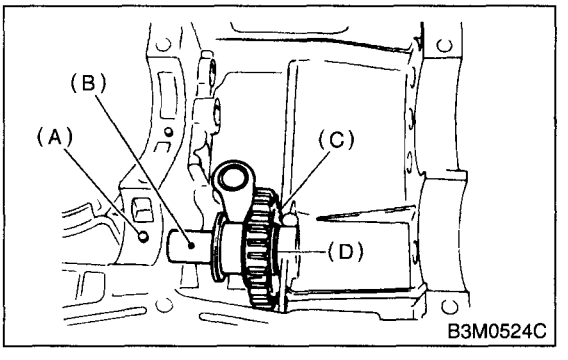

(A) Straight pin
(B) Idler gear shaft
(C) Idler gear
(D) Washer

10) Remove the reverse shifter lever.

B: INSTALLATION

1) Install the reverse shifter lever, reverse idler gear and reverse idler gear shaft, and secure with straight pin.

NOTE:
Be sure to install the reverse idler shaft from the rear side.

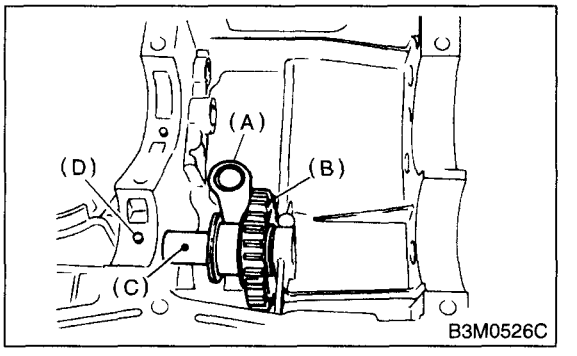

(A) Reverse shifter lever
(B) Reverse idler gear
(C) Reverse idler gear shaft
(D) Straight pin

2) Inspect and adjust the clearance between reverse idler gear and transmission case wall. <Ref. to MT-78, INSTALLATION, Reverse Idler Gear.> and <Ref. to MT-79, ADJUSTMENT, Reverse Idler Gear.>
3) Install the shifter forks and rods. <Ref. to MT-80, INSTALLATION, Shifter Fork and Rod.>
4) Install the differential assembly. <Ref. to MT-71, INSTALLATION, Front Differential Assembly.>
5) Install the main shaft assembly.
<Ref. to MT-57, INSTALLATION, Main Shaft Assembly for Single-Range.>
6) Install the drive pinion shaft assembly. <Ref. to MT-63, INSTALLATION, Drive Pinion Shaft Assembly.>
7) Install the transmission case. <Ref. to MT-55, INSTALLATION, Transmission Case.>
8) Install the transfer case with extension case assembly. <Ref. to MT-41, INSTALLATION, Transfer Case and Extension Case Assembly.>
9) Install the back-up light switch and neutral position switch. <Ref. to MT-38, INSTALLATION, Switches and Harness.>
10) Install the manual transmission assembly to vehicle. <Ref. to MT-30, INSTALLATION, Manual Transmission Assembly.>

C: INSPECTION

1) Move the reverse shifter rod toward the reverse side. Inspect the clearance between reverse idler gear and transmission case wall.
If out of specification, select the appropriate reverse shifter lever and adjust.

Clearance A:
6.0 — 7.5 mm (0.236 — 0.295 in)

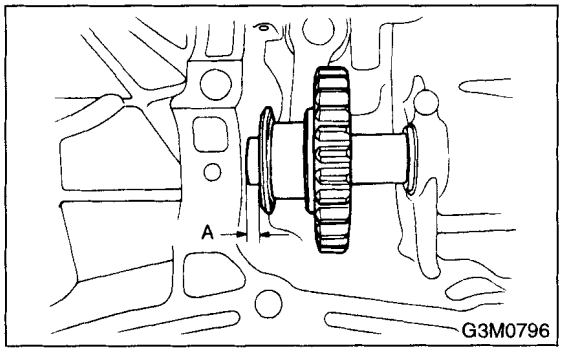

2) After installing a suitable reverse shifter lever, shift into neutral. Inspect the clearance between reverse idler gear and transmission case wall.
If out of specification, select the appropriate washer and adjust.

Clearance:
0 — 0.5 mm (0 — 0.020 in)

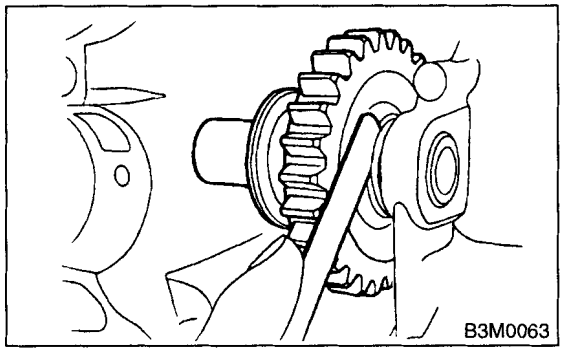

3) Check the reverse idler gear and shaft for damage. Replace if damaged.

D: ADJUSTMENT

1) Select the appropriate reverse shifter lever from the table below, and adjust until the gap between the reverse idler gear and transmission case wall is within specification.

Clearance A:
6.0 — 7.5 mm (0.236 — 0.295 in)

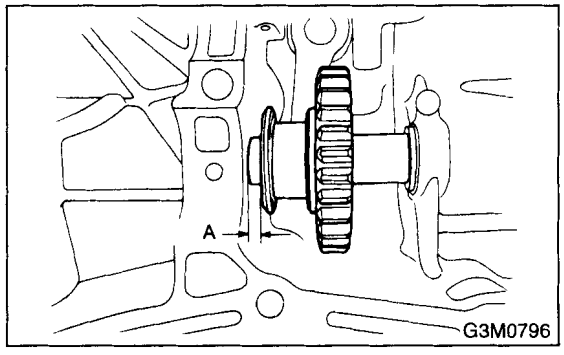

Reverse shifter lever		
Part No.	Mark	Remarks
32820AA070	7	Further from case wall
32820AA080	8	Standard
32820AA090	9	Closer to case wall

2) Select the appropriate washer from the table below, and adjust until the gap between the reverse idler gear and transmission case wall is within specification.

Clearance:
0 — 0.5 mm (0 — 0.020 in)

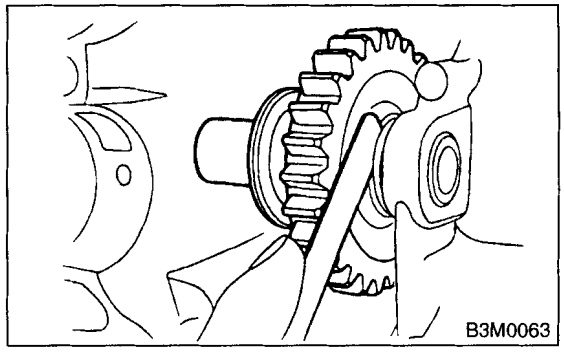

Washer	
Part No.	Thickness mm (in)
803020151	0.4 (0.016)
803020152	1.1 (0.043)
803020153	1.5 (0.059)
803020154	1.9 (0.075)
803020155	2.3 (0.091)

20.Shifter Fork and Rod

A: REMOVAL

1) Remove the manual transmission assembly from vehicle. <Ref. to MT-27, REMOVAL, Manual Transmission Assembly.>
2) Remove the back-up light switch and neutral position switch. <Ref. to MT-37, REMOVAL, Switches and Harness.>
3) Remove the transfer case with extension case assembly. <Ref. to MT-41, REMOVAL, Transfer Case and Extension Case Assembly.>
4) Remove the transmission case. <Ref. to MT-54, REMOVAL, Transmission Case.>
5) Removes the drive pinion shaft assembly. <Ref. to MT-63, REMOVAL, Drive Pinion Shaft Assembly.>
6) Remove the main shaft assembly.
<Ref. to MT-57, REMOVAL, Main Shaft Assembly for Single-Range.>
7) Remove the differential assembly. <Ref. to MT-71, REMOVAL, Front Differential Assembly.>
8) Drive out the straight pin with ST, and 5th shifter fork.
ST 398791700 STRAIGHT PIN REMOVER

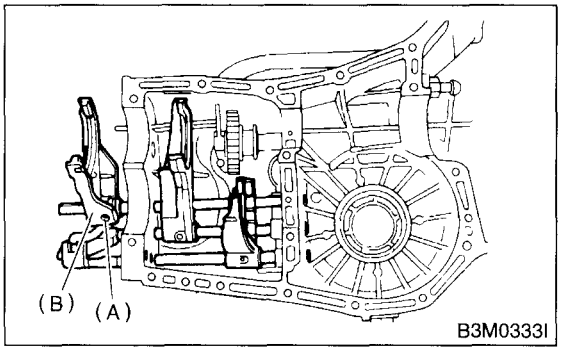

(A) Straight pin
(B) 5th shifter fork

9) Remove the plugs, springs and checking balls.

10) Drive out the straight pin, and pull out 3-4 fork rod and shifter fork.

NOTE:
When removing rod, keep other rods in neutral. Also, when pulling out straight pin, remove it toward the inside of the case so that it does not hit against the case.

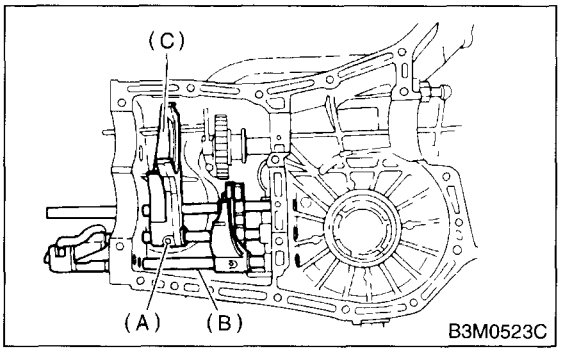

(A) Straight pin
(B) 3-4 fork rod
(C) Shifter fork

11) Drive out the straight pin, and pull out the 1-2 fork rod and shifter fork.
12) Remove the outer snap ring, and pull out reverse shifter rod arm from reverse fork rod. Then take out the ball, spring and interlock plunger from rod. And then remove the rod.

NOTE:
When pulling out reverse shifter rod arm, be careful not to let ball pop out of arm.

13) Remove the reverse shifter lever.

B: INSTALLATION

1) Install the reverse arm fork spring, ball and interlock plunger to reverse fork rod arm. Insert the reverse fork rod into hole in reverse fork rod arm, and hold it with outer snap ring using ST.

CAUTION:
Apply grease to plunger to prevent it from falling.

ST 399411700 ACCENT BALL INSTALLER
2) Position the ball, spring and gasket in reverse shifter rod hole, on left side transmission case, and tighten the checking ball plug.

CAUTION:
Replace gasket with a new one.

3) Install the 1-2 fork rod into 1-2 shifter fork via the hole on the rear of the transmission case.

4) Align the holes in rod and fork, and drive straight pin into these holes using ST.

CAUTION:
Replace straight pin with a new one.

NOTE:
- Set other rods to neutral.
- Make sure interlock plunger is on the 3-4 fork rod side.

ST 398791700 STRAIGHT PIN REMOVER

5) Install the interlock plunger onto 3-4 fork rod.

CAUTION:
Apply a coat of grease to plunger to prevent it from falling.

6) Install the 3-4 fork rod into 3-4 shifter fork via the hole on the rear of transmission case.

7) Align the holes in rod and fork, and drive straight pin into these holes.

CAUTION:
Replace straight pin with a new one.

NOTE:
- Set the reverse fork rod to neutral.
- Make sure the interlock plunger (installing before) is on the reverse fork rod side.

ST 398791700 STRAIGHT PIN REMOVER

8) Install the 5th shifter fork onto the rear of reverse fork rod. Align the holes in the two parts and drive straight pin into place.

CAUTION:
Replace straight pin with a new one.

ST 398791700 STRAIGHT PIN REMOVER

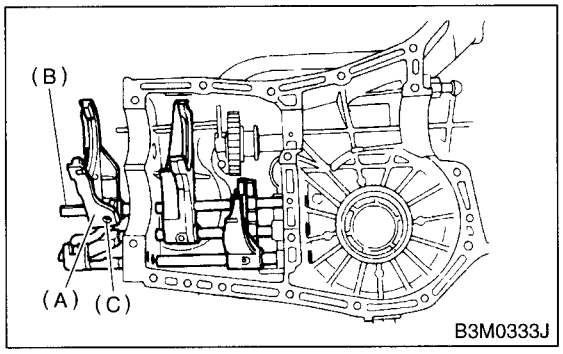

(A) 5th shifter fork
(B) Reverse fork rod
(C) Straight pin

9) Position the balls, checking ball springs and gaskets into 3-4 and 1-2 rod holes, and install plugs.

CAUTION:
Replace gasket with a new one.

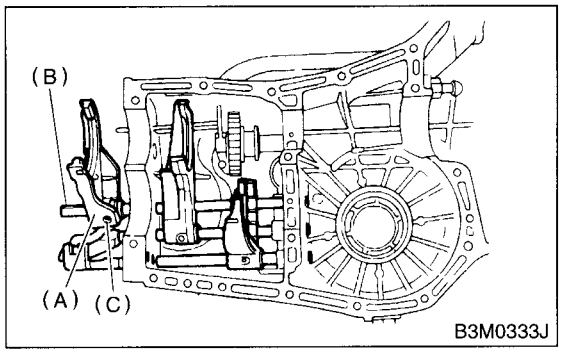

(A) 5th shifter fork
(B) Reverse fork rod
(C) Straight pin

10) Install the differential assembly. <Ref. to MT-71, INSTALLATION, Front Differential Assembly.>

11) Install the main shaft assembly.
Single-range model:
<Ref. to MT-57, INSTALLATION, Main Shaft Assembly for Single-Range.>

12) Install the drive pinion shaft assembly. <Ref. to MT-63, INSTALLATION, Drive Pinion Shaft Assembly.>

13) Install the transmission case. <Ref. to MT-55, INSTALLATION, Transmission Case.>

14) Install the transfer case with extension case assembly. <Ref. to MT-41, INSTALLATION, Transfer Case and Extension Case Assembly.>

15) Install the back-up light switch and neutral position switch. <Ref. to MT-38, INSTALLATION, Switches and Harness.>

16) Install the manual transmission assembly to vehicle. <Ref. to MT-30, INSTALLATION, Manual Transmission Assembly.>

C: INSPECTION

1) Check the shift shaft and shift rod for damage. Replace if damaged.
2) Gearshift mechanism
Repair or replace the gearshift mechanism if excessively worn, bent, or defective in any way.
3) Inspect the clearance between 1st, 2nd driven gear and reverse driven gear. If any clearance is not within specifications, replace the shifter fork as required.

Clearance (a) and (b):
9.5 mm (0.374 in)

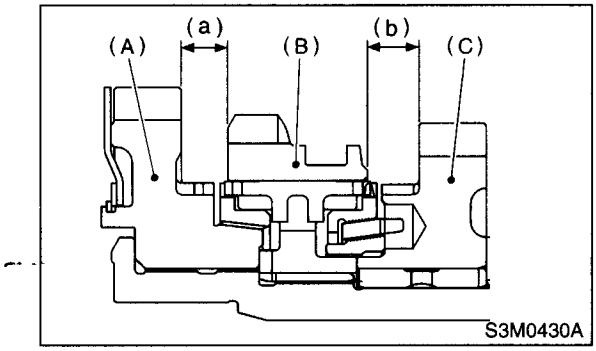

(A) 1st driven gear
(B) Reverse driven gear
(C) 2nd driven gear

1st-2nd shifter fork		
Part No.	Mark	Remarks
32804AA060	1	Approach to 1st gear by 0.2 mm (0.008 in).
32804AA070	—	Standard
32804AA080	3	Become distant from 2nd gear by 0.2 mm (0.008 in).

4) Inspect the clearance between 3rd, 4th drive gear and coupling sleeve. If any clearance is not within specifications, replace shifter fork as required.

Clearance (a) and (b):
9.3 mm (0.366 in)

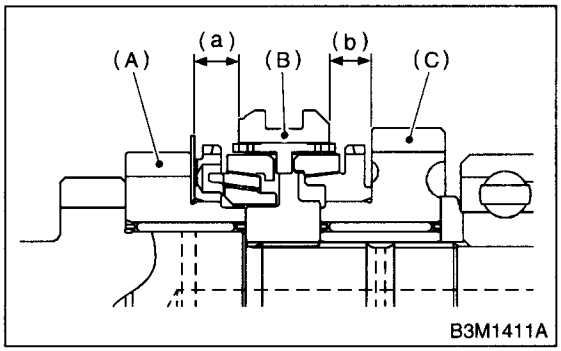

(A) 3rd drive gear
(B) Coupling sleeve
(C) 4th drive gear

3rd-4th shifter fork		
Part No.	Mark	Remarks
32810AA061	1	Approach to 4th gear by 0.2 mm (0.008 in).
32810AA071	—	Standard
32810AA101	3	Become distant from 3rd gear by 0.2 mm (0.008 in).

5) Inspect the clearance between 5th drive gear and coupling sleeve. If any clearance is not within specifications, replace shifter fork as required.

Clearance (a):
9.3 mm (0.366 in)

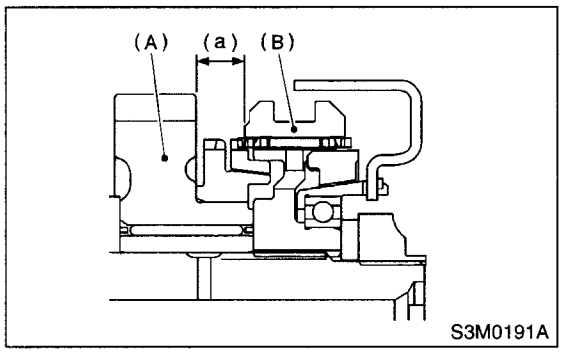

(A) 5th drive gear
(B) Coupling sleeve

5th shifter fork (Non-turbo)		
Part No.	Mark	Remarks
32812AA201	4	Approach to 5th gear by 0.2 mm (0.008 in).
32812AA211	5	Standard
32812AA221	6	Become distant from 5th gear by 0.2 mm (0.008 in).

5th shifter fork (Turbo)		
Part No.	Mark	Remarks
32812AA231	7	Approach to 5th gear by 0.2 mm (0.008 in).
32812AA241	—	Standard
32812AA251	9	Become distant from 5th gear by 0.2 mm (0.008 in).

6) Inspect the rod end clearances (A) and (B). If any clearance is not within specifications, replace the rod or fork as required.

Clearance (A):
1st — 2nd to 3rd — 4th:
0.4 — 1.4 mm(0.016 — 0.055 in)

Clearance (B):
3rd — 4th to 5th:
0.5 — 1.3 mm(0.020 — 0.051 in)

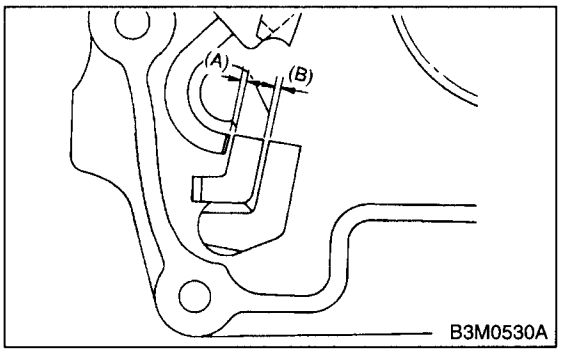

21.General Diagnostic

A: INSPECTION

1. MANUAL TRANSMISSION

Symptom	Possible cause	Remedy
1. Gears are difficult to intermesh. NOTE: The cause for difficulty in shifting gears can be classified into two kinds: one is malfunction of the gear shift system and the other is malfunction of the transmission. However, if the operation is heavy and engagement of the gears is difficult, defective clutch disengagement may also be responsible. Check whether the clutch is correctly functioning, before checking the gear shift system and transmission.	(a) Worn, damaged or burred chamfer of internal spline of sleeve and reverse driven gear	Replace.
	(b) Worn, damaged or burred chamfer of spline of gears	Replace.
	(c) Worn or scratched bushings	Replace.
	(d) Incorrect contact between synchronizer ring and gear cone or wear	Correct or replace.
2. Gear slips out. • Gear slips out when coasting on rough road. • Gear slips out during acceleration.	(a) Defective pitching stopper adjustment	Adjust.
	(b) Loose engine mounting bolts	Tighten or replace.
	(c) Worn fork shifter, broken shifter fork rail spring	Replace.
	(d) Worn or damaged ball bearing	Replace.
	(e) Excessive clearance between splines of synchronizer hub and synchronizer sleeve	Replace.
	(f) Worn tooth step of synchronizer hub (responsible for slip-out of 3rd gear)	Replace.
	(g) Worn 1st driven gear, needle bearing and race	Replace.
	(h) Worn 2nd driven gear, needle bearing and race	Replace.
	(i) Worn 3rd drive gear and bushing	Replace.
	(j) Worn 4th drive gear and bushing	Replace.
	(k) Worn reverse idler gear and bushing	Replace.
3. Unusual noise comes from transmission. NOTE: If an unusual noise is heard when the vehicle is parked with its engine idling and if the noise ceases when the clutch is disengaged, it may be considered that the noise comes from the transmission.	(a) Insufficient or improper lubrication	Lubricate or replace with specified oil.
	(b) Worn or damaged gears and bearings NOTE: If the trouble is only wear of the tooth surfaces, merely a high roaring noise will occur at high speeds, but if any part is broken, rhythmical knocking sound will be heard even at low speeds.	Replace.

2. DIFFERENTIAL

Symptom	Possible cause	Remedy
1. Broken differential (case, gear, bearing, etc.) NOTE: Abnormal noise will develop and finally it will become impossible to continue to run due to broken pieces obstructing the gear revolution.	(a) Insufficient or improper oil	Disassemble differential and replace broken components and at the same time check other components for any trouble, and replace if necessary.
	(b) Use of vehicle under severe conditions such as excessive load and improper use of clutch	Readjust bearing preload and backlash and face contact of gears.
	(c) Improper adjustment of taper roller bearing	Adjust.
	(d) Improper adjustment of drive pinion and hypoid driven gear	Adjust.
	(e) Excessive backlash due to worn differential side gear, washer or differential pinion vehicle under severe operating conditions	Add recommended oil to specified level. Do not use vehicle under severe operating conditions.
	(f) Loose hypoid driven gear clamping bolts	Tighten.
2. Differential and hypoid gear noises Troubles of the differential and hypoid gear always appear as noise problems. Therefore noise is the first indication of the trouble. However noises from the engine, muffler, tire, exhaust gas, bearing, body, etc. are easily mistaken for the differential noise. Pay special attention to the hypoid gear noise because it is easily confused with other gear noises. There are the following four kinds of noises. • Gear noise when driving: If noise increases as vehicle speed increases it may be due to insufficient gear oil, incorrect gear engagement, damaged gears, etc. • Gear noise when coasting: Damaged gears due to maladjusted bearings and incorrect shim adjustment • Bearing noise when driving or when coasting: Cracked, broken or damaged bearings • Noise which mainly occurs when turning: Unusual noise from differential side gear, differential pinion, differential pinion shaft, etc.	(a) Insufficient oil	Lubricate.
	(b) Improper adjustment of hypoid driven gear and drive pinion	Check tooth contact.
	(c) Worn teeth of hypoid driven gear and drive pinion	Replace as a set. Readjust bearing preload.
	(d) Loose roller bearing	Readjust hypoid driven gear to drive pinion backlash and check tooth contact.
	(e) Distorted hypoid driven gear or differential case	Replace.
	(f) Worn washer and differential pinion shaft	Replace.

CLUTCH SYSTEM

CL

		Page
1.	General Description	2
2.	Clutch Disc and Cover	11
3.	Flywheel	14
4.	Release Bearing and Lever	15
5.	Operating Cylinder	18
6.	Master Cylinder	20
7.	Clutch Pipe and Hose	22
8.	Clutch Fluid	23
9.	Clutch Fluid Air Bleeding	24
10.	Clutch Pedal	26
11.	Clutch Switch	30
12.	General Diagnostic Table	31

1. General Description

A: SPECIFICATIONS

Model				NON-TURBO	TURBO
Clutch cover	Type			Push type	Pull type
	Diaphragm set load		kg (lb)	580 (1,279)	830 (1,830)
Clutch disk	Facing material			Woven (Non asbestos)	
	O.D. x I.D. x thickness		mm (in)	225 x 150 x 3.5 (8.86 x 5.91 x 0.138)	230 x 150 x 3.5 (9.06 x 5.91 x 0.138)
	Spline O.D.		mm (in)	25.2 (0.992), (No. of teeth: 24)	
Clutch release lever ratio				1.6	1.7
Release bearing				Grease-packed self-aligning	
Clutch pedal	Full stroke		mm (in)	130 — 135 (5.12 — 5.31)	
	Free play		mm (in)	10 — 20 (0.39 — 0.79)	3 — 13 (0.12 — 0.51)
Clutch disk	Stroke		mm (in)	12 — 13.6 (0.473 — 0.535)	13.3 — 14.7 (0.524 — 0.579)
Clutch disk	Depth of rivet head	mm (in)	Standard	1.3 — 1.9 (0.051 — 0.075)	
			Limit of sinking	0.3 (0.012)	
	Limit for deflection		mm (in)	1.0 (0.039) at R = 107 (4.21)	0.8 (0.031) at R = 110 (4.33)

I.D.: Inner diameter
O.D.: Outer diameter

B: COMPONENT

1. CLUTCH ASSEMBLY FOR NON-TURBO MODEL

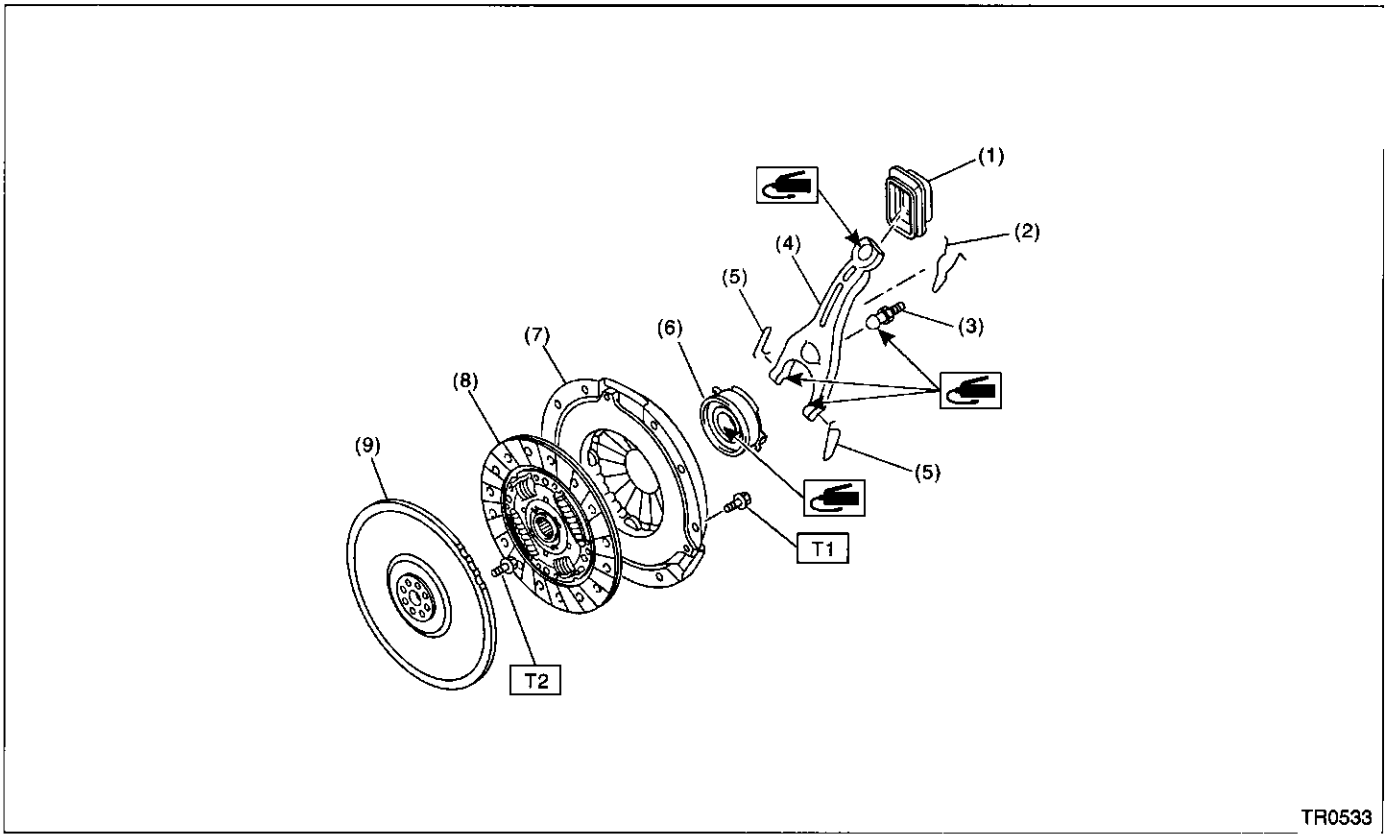

(1) Clutch release lever sealing
(2) Retainer spring
(3) Pivot
(4) Release lever
(5) Clip
(6) Release bearing
(7) Clutch cover
(8) Clutch disc
(9) Flywheel

Tightening torque: N·m (kgf-m, ft-lb)
T1: 15.7 (1.6, 11.6)
T2: 72 (7.3, 52.8)

2. CLUTCH ASSEMBLY FOR TURBO MODEL

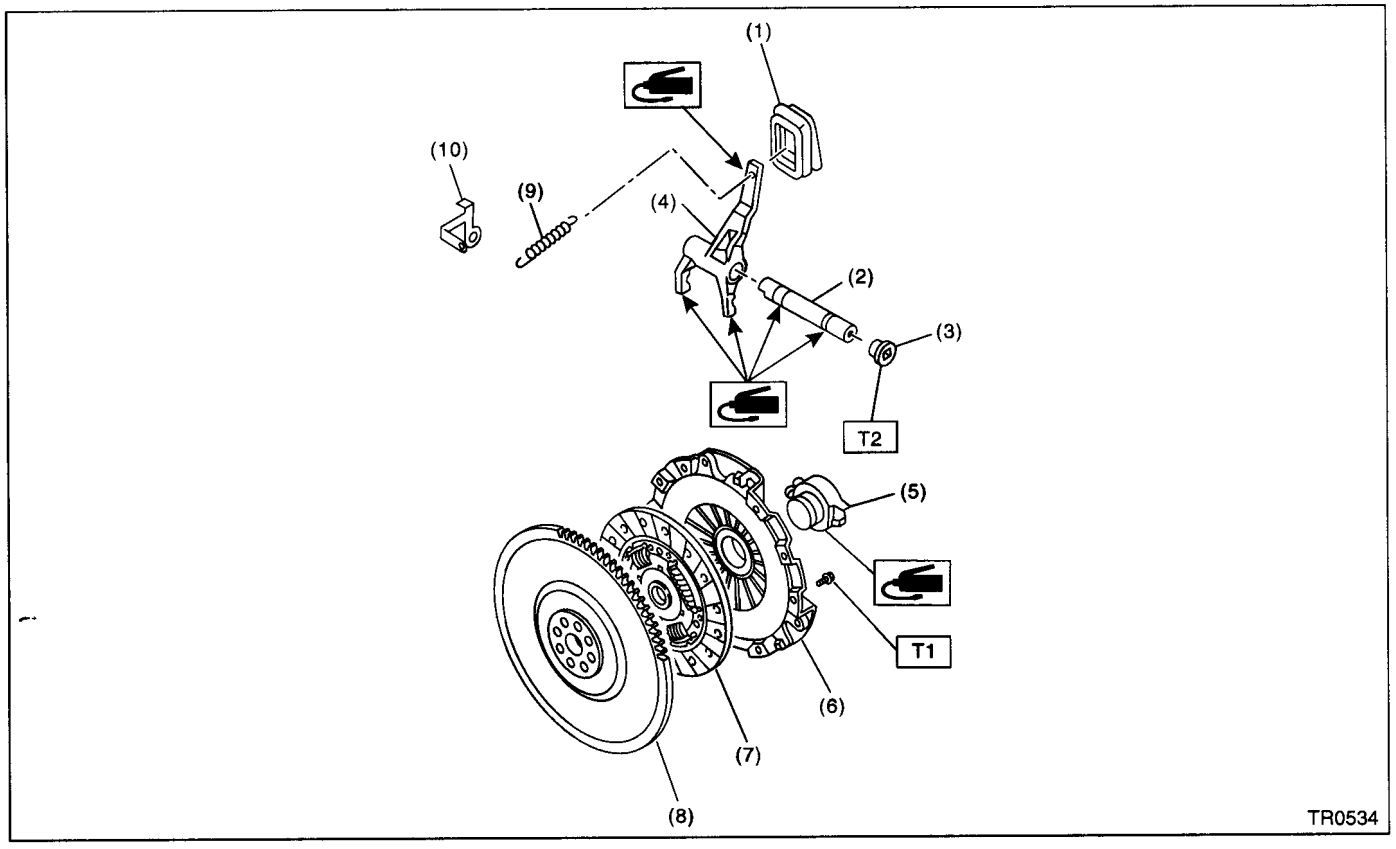

(1)	Clutch release lever sealing	(6)	Clutch cover
(2)	Release lever shaft	(7)	Clutch disc
(3)	Plug	(8)	Flywheel
(4)	Release lever	(9)	Spring
(5)	Release bearing	(10)	Bracket

Tightening torque: N·m (kgf-m, ft-lb)
T1: 15.7 (1.6, 11.6)
T2: 44 (4.5, 32.5)

3. CLUTCH PIPE AND HOSE FOR NON-TURBO MODEL

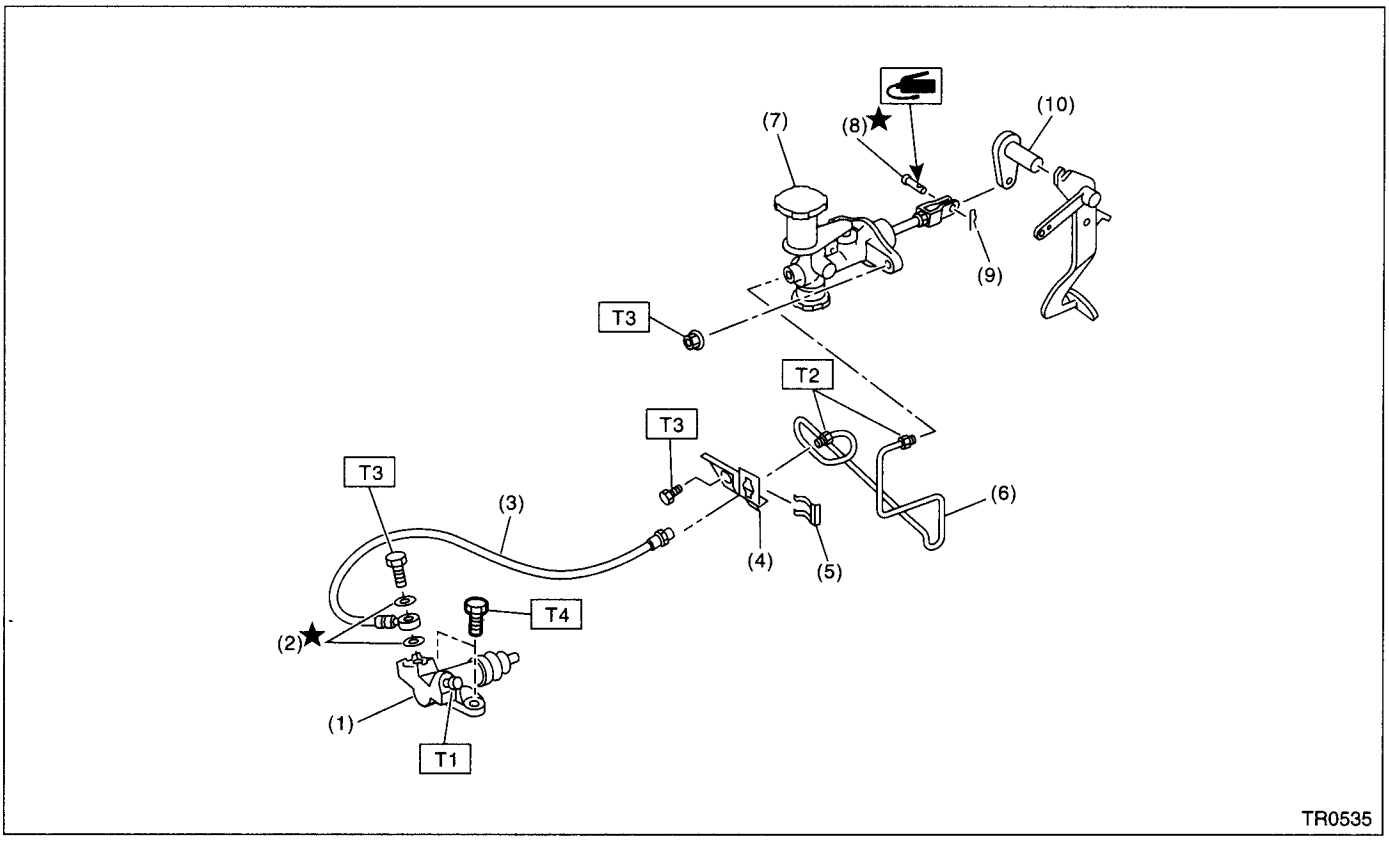

(1)	Operating cylinder	(6)	Pipe	***Tightening torque: N·m (kgf-m, ft-lb)***
(2)	Washer	(7)	Master cylinder ASSY	***T1: 8 (0.8, 5.8)***
(3)	Clutch hose	(8)	Clevis pin	***T2: 15 (1.5, 11)***
(4)	Bracket	(9)	Snap pin	***T3: 18 (1.8, 13.0)***
(5)	Clip	(10)	Lever	***T4: 37 (3.8, 27.5)***

4. CLUTCH PIPE AND HOSE FOR TURBO MODEL

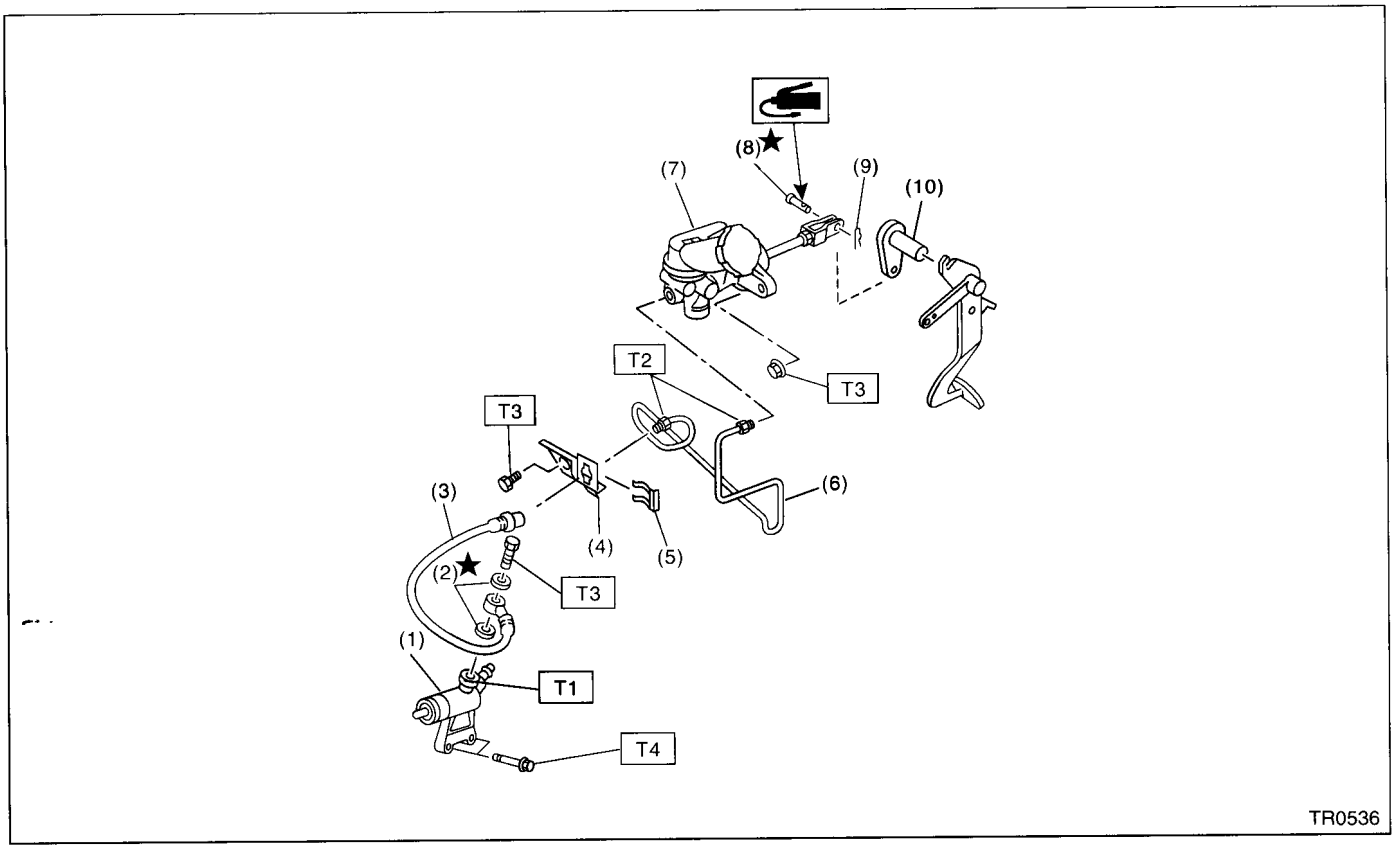

(1)	Operating cylinder	(6)	Pipe
(2)	Washer	(7)	Master cylinder ASSY
(3)	Clutch hose	(8)	Clevis pin
(4)	Bracket	(9)	Snap pin
(5)	Clip	(10)	Lever

Tightening torque: N·m (kgf-m, ft-lb)

T1: 8 (0.8, 5.8)
T2: 15 (1.5, 11)
T3: 18 (1.8, 13.0)
T4: 37 (3.8, 27.5)

5. MASTER CYLINDER

• NON-TURBO MODEL

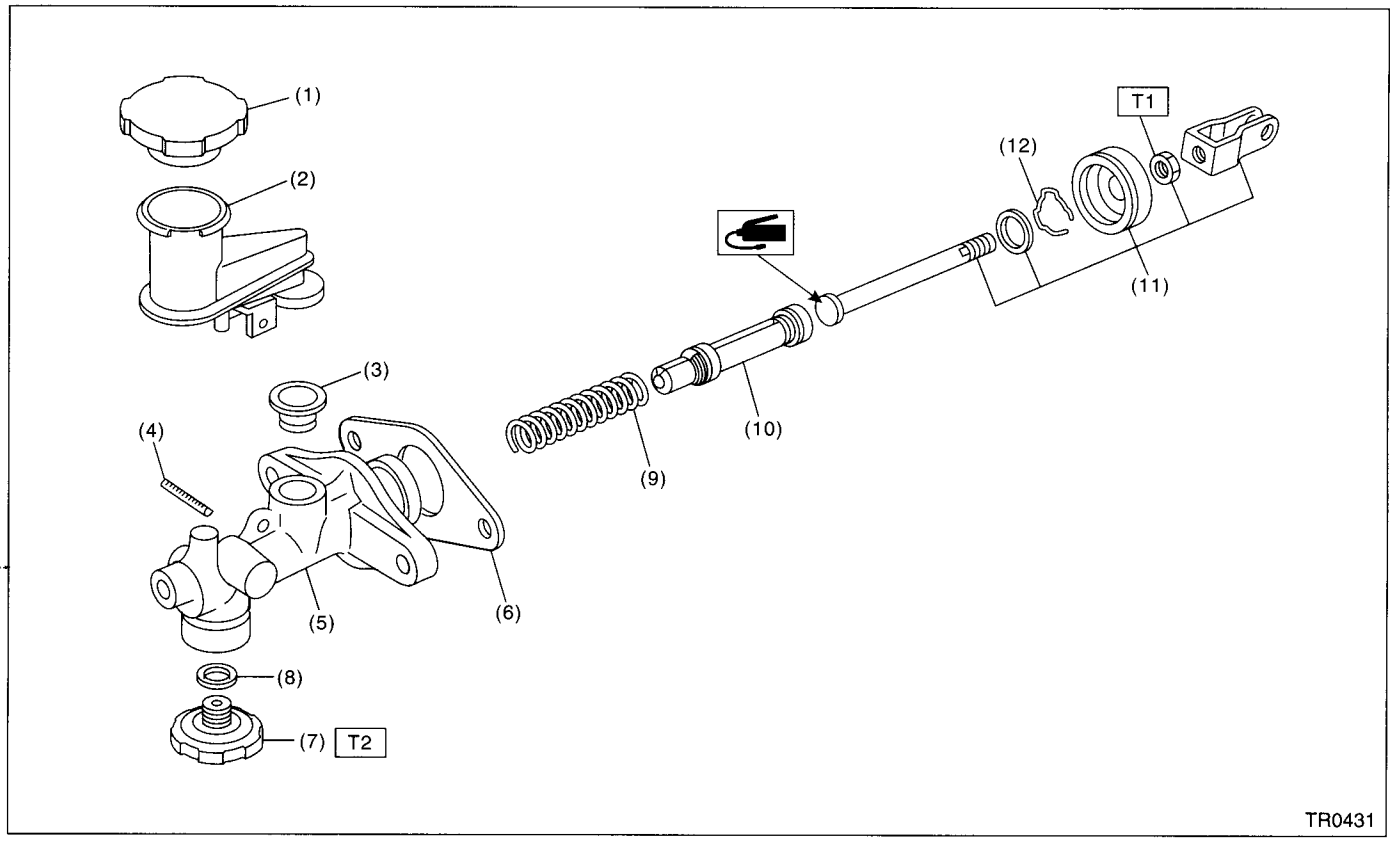

(1)	Reservoir cap	(7)	Diaphragm spring
(2)	Reservoir tank	(8)	Gasket
(3)	Oil seal	(9)	Return spring
(4)	Straight pin	(10)	Piston
(5)	Master cylinder	(11)	Push rod
(6)	Seat	(12)	Piston stop ring

Tightening torque: N·m (kgf-m, ft-lb)
T1: 10 (1.0, 7)
T2: 46.6 (4.75, 34.4)

• TURBO MODEL

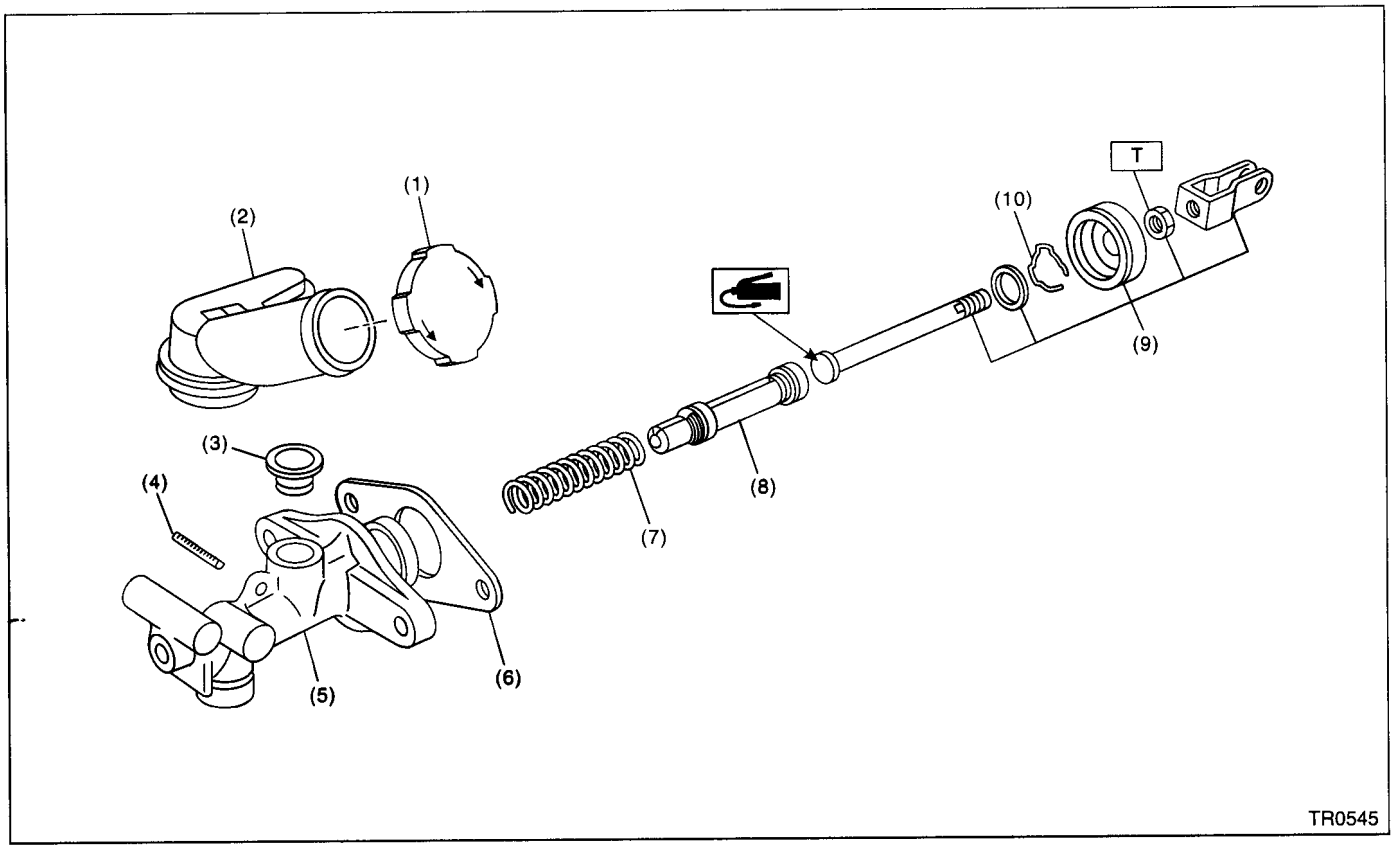

(1)	Reservoir cap	(6)	Seat
(2)	Reservoir tank	(7)	Return spring
(3)	Oil seal	(8)	Piston
(4)	Straight pin	(9)	Push rod
(5)	Master cylinder	(10)	Piston stop ring

Tightening torque: N·m (kgf-m, ft-lb)
T: 10 (1.0, 7)

6. CLUTCH PEDAL

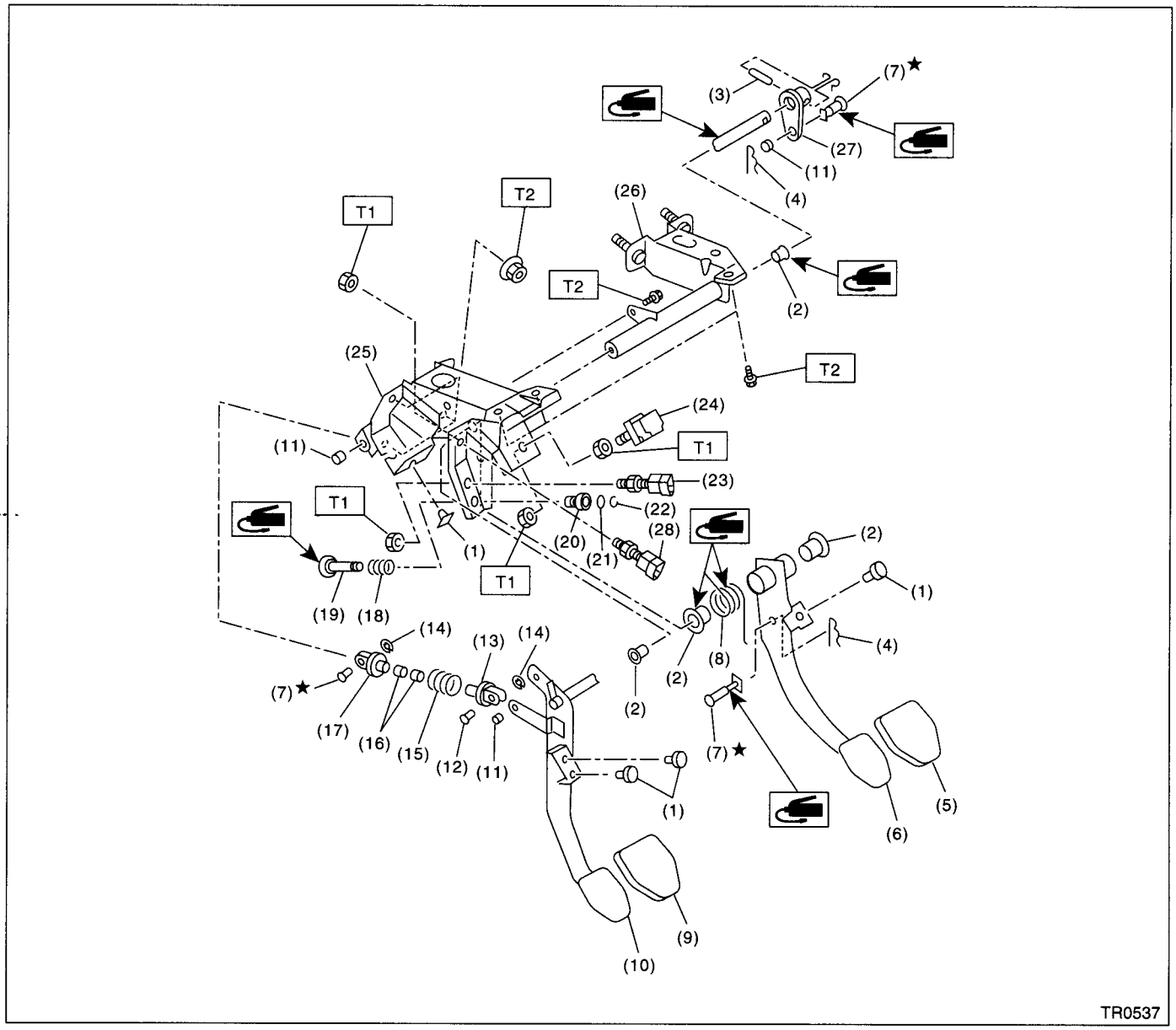

(1)	Stopper	(12)	Clutch clevis pin	(23)	Clutch switch (With cruise control)
(2)	Bushing	(13)	Assist rod A	(24)	Stop light switch
(3)	Spring pin	(14)	Clip	(25)	Pedal bracket
(4)	Snap pin	(15)	Assist spring	(26)	Clutch master cylinder bracket
(5)	Brake pedal pad	(16)	Assist bushing	(27)	Lever
(6)	Brake pedal	(17)	Assist rod B	(28)	Clutch switch (Starter interlock)
(7)	Clevis pin	(18)	Spring S		
(8)	Brake pedal spring	(19)	Rod S		
(9)	Clutch pedal pad	(20)	Bushing S		
(10)	Clutch pedal	(21)	O-ring		
(11)	Bushing C	(22)	Clip		

Tightening torque: N·m (kgf-m, ft-lb)

T1: 8 (0.8, 5.8)
T2: 18 (1.8, 13.0)
T3: 30 (3.1, 22.4)

C: CAUTION

- Wear working clothing, including a cap, protective goggles, and protective shoes during operation.
- Remove contamination including dirt and corrosion before removal, installation or disassembly.
- Keep the disassembled parts in order and protect them from dust or dirt.
- Before removal, installation or disassembly, be sure to clarify the failure. Avoid unnecessary removal, installation, disassembly, and replacement.
- Be careful not to burn your hands, because each part on the vehicle is hot after running.
- Use SUBARU genuine fluid, grease etc. or the equivalent. Do not mix fluid, grease etc. with that of another grade or from other manufacturers.
- Be sure to tighten fasteners including bolts and nuts to the specified torque.
- Place shop jacks or safety stands at the specified points.
- Apply grease onto sliding or revolution surfaces before installation.
- Before installing O-rings or snap rings, apply sufficient amount of fluid to avoid damage and deformation.
- Before securing a part on a vice, place cushioning material such as wood blocks, aluminum plate, or shop cloth between the part and the vice.
- Keep fluid away from the vehicle body. If any fluid contacts the vehicle body, immediately flush the area with water.

D: PREPARATION TOOL

1. SPECIAL TOOLS

ILLUSTRATION	TOOL NUMBER	DESCRIPTION	REMARKS
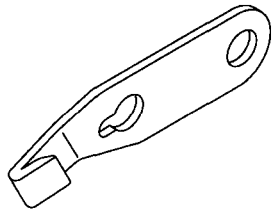 B2M3853	498497100	CRANKSHAFT STOPPER	Used for stopping rotation of flywheel when loosening/tightening bolt, etc.
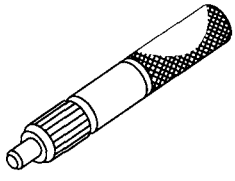 B2M4112	499747100	CLUTCH DISC GUIDE	Used when installing clutch disc to flywheel.

2. GENERAL PURPOSE TOOLS

TOOL NAME	REMARKS
Circuit Tester	Used for measuring resistance, voltage and ampere.
Dial Gauge	Used for measuring clutch disk run-out.

2. Clutch Disc and Cover

A: REMOVAL

1) Remove the transmission assembly from vehicle body. <Ref. to MT-27, REMOVAL, Manual Transmission Assembly.>
2) Install the ST on flywheel.
ST 499747100 CLUTCH DISC GUIDE

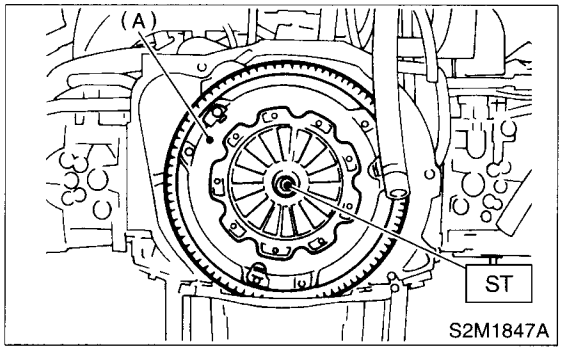

(A) Clutch cover

3) Remove the clutch cover and clutch disc.

CAUTION:
- **Take care not to allow oil on the clutch disc facing.**
- **Do not disassemble either the clutch cover or clutch disc.**

B: INSTALLATION

1) Insert the ST into the clutch disc and install them on the flywheel by inserting the ST end into the pilot bearing.
ST 499747100 CLUTCH DISC GUIDE

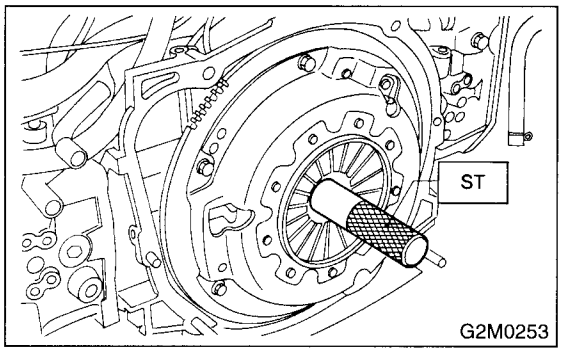

2) Install the clutch cover on flywheel and tighten bolts to the specified torque.

NOTE:
- When installing the clutch cover on the flywheel, position the clutch cover so that there is a gap of 120° or more between "0" marks on the flywheel and clutch cover. ("0" marks indicate the directions of residual unbalance.)
- Note the front and rear of the clutch disc when installing.
- Temporarily tighten the bolts by hand. Each bolt should be tightened to the specified torque in a crisscross method.

Tightening torque:
15.7 N·m (1.6 kgf-m, 11.6 ft-lb)

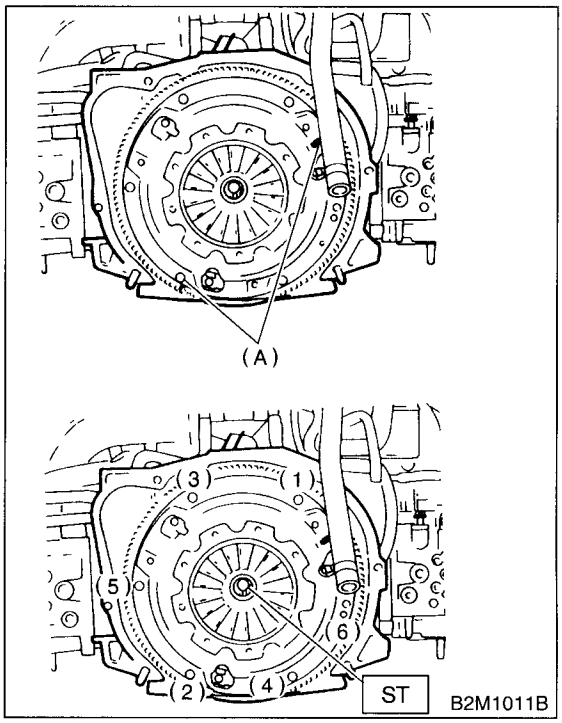

(A) "0" marks

3) Remove the ST.
ST 499747100 CLUTCH DISC GUIDE
4) Install the transmission assembly. <Ref. to MT-30, INSTALLATION, Manual Transmission Assembly.>

C: INSPECTION

1. CLUTCH DISC

1) Facing wear:
Measure the depth of rivet head from the surface of facing. Replace if the facings are worn locally or worn down to less than the specified value.

Depth of rivet head:
Limit of sinking
0.3 mm (0.012 in)

CAUTION:
Do not wash the clutch disc with any cleaning fluid.

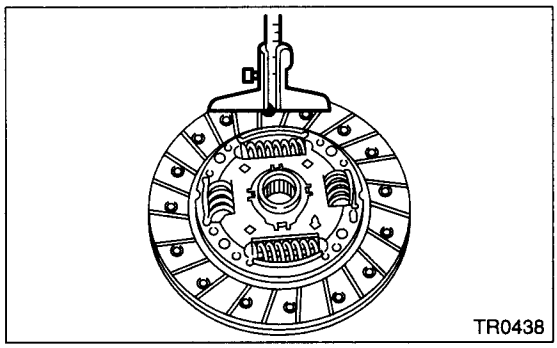

2) Hardened facing:
Correct by using emery paper or replace.
3) Oil soakage on facing:
Replace the clutch disc and inspect transmission front oil seal, transmission case mating surface, engine rear oil seal and other points for oil leakage.

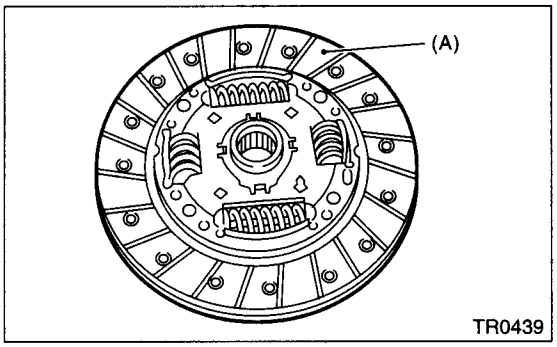

(A) Facing

4) Deflection on facing:
If deflection exceeds the specified value at the outer circumference of facing, repair or replace.
ST 499747100 CLUTCH DISC GUIDE

Limit for deflection:
Non-turbo model:
1.0 mm (0.039 in) at R = 107 mm (4.21 in)
Turbo model:
0.8 mm (0.031 in) at R = 110 mm (4.33 in)

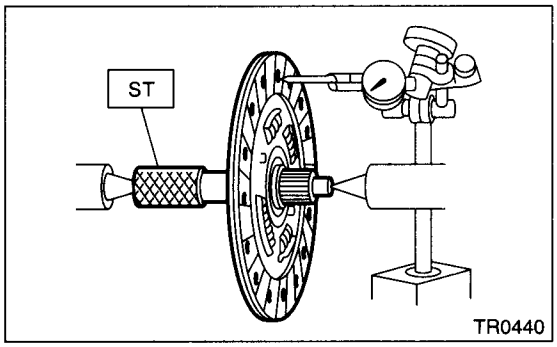

5) Worn spline, loose rivets and torsion spring failure:
Replace defective parts.

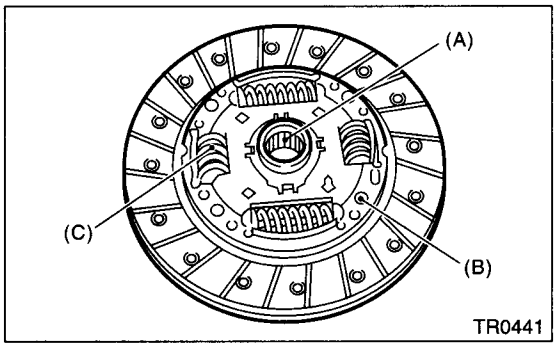

(A) Spline
(B) Rivet
(C) Torsion spring

2. CLUTCH COVER

NOTE:
Visually check for the following items without disassembling, and replace or repair if defective.

1) Loose thrust rivet.
2) Damaged or worn bearing contact area at the center of diaphragm spring.

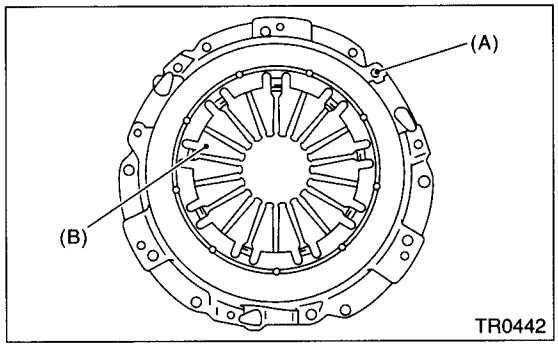

(A) Thrust rivet
(B) Diaphragm spring

3) Damaged or worn disc contact surface of pressure plate.
4) Loose strap plate setting bolt.
5) Worn diaphragm sliding surface.

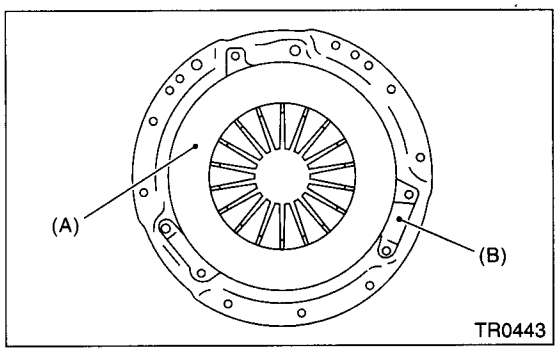

(A) Pressure plate
(B) Strap plate

3. Flywheel

A: REMOVAL

1) Remove the transmission assembly. <Ref. to MT-27, REMOVAL, Manual Transmission Assembly.>
2) Remove the clutch cover and clutch disc. <Ref. to CL-11, REMOVAL, Clutch Disc and Cover.>

CAUTION:
- **Take care not to allow oil on the clutch disc facing.**
- **Do not disassemble either the clutch cover or clutch disc.**

3) Using ST, remove the flywheel.
ST 498497100 CRANKSHAFT STOPPER

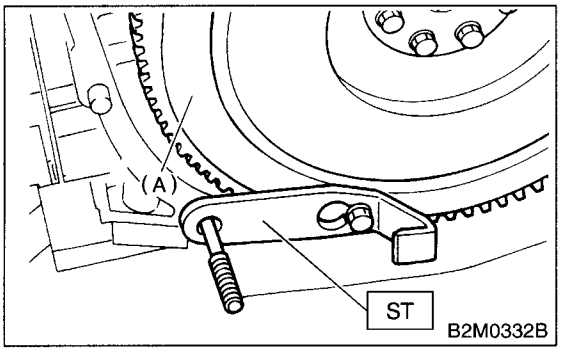

(A) Flywheel

B: INSTALLATION

1) Install the flywheel and ST.
ST 498497100 CRANKSHAFT STOPPER

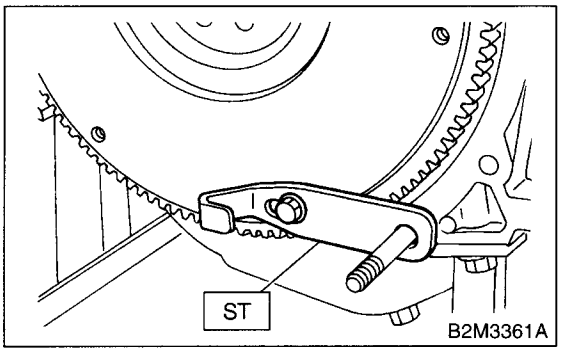

2) Tighten the flywheel attaching bolts to the specified torque.

NOTE:
Tighten the flywheel installing bolts gradually. Each bolt should be tightened to the specified torque in a crisscross method.

Tightening torque:
72 N·m (7.3 kgf-m, 52.8 ft-lb)

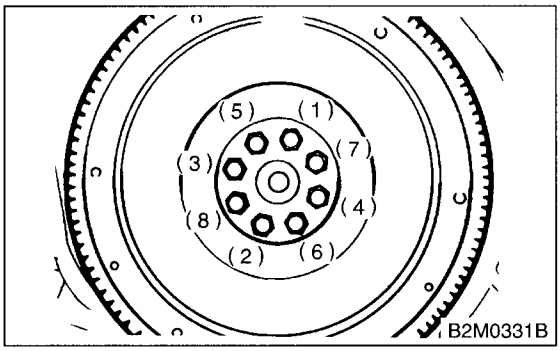

3) Install the clutch disc and cover. <Ref. to CL-11, INSTALLATION, INSTALLATION, Clutch Disc and Cover.>
4) Install the transmission assembly. <Ref. to MT-30, INSTALLATION, Manual Transmission Assembly.>

C: INSPECTION

CAUTION:
Since this bearing is grease sealed and is of a non-lubrication type, do not wash with gasoline or any solvent.

1) Damage of facing and ring gear:
If defective, replace the flywheel.

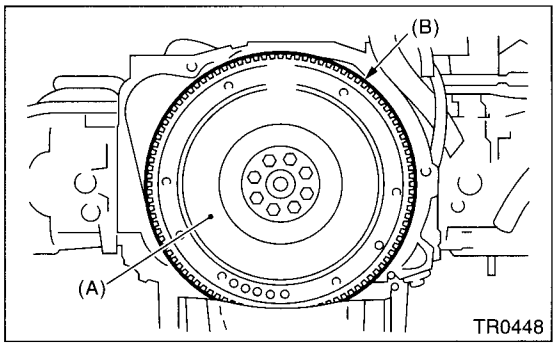

(A) Flywheel
(B) Ring gear

2) Smoothness of rotation:
Rotate the ball bearing applying pressure in thrust direction.
3) If noise or excessive play is noted, replace the flywheel.

4. Release Bearing and Lever

A: REMOVAL

1. NON-TURBO MODEL

1) Remove the transmission assembly from vehicle body.
<Ref. to MT-27, REMOVAL, Manual Transmission Assembly.>
2) Remove the two clips from clutch release lever and remove the release bearing.

CAUTION:
Be careful not to deform the clips.

3) Remove the release lever seal.

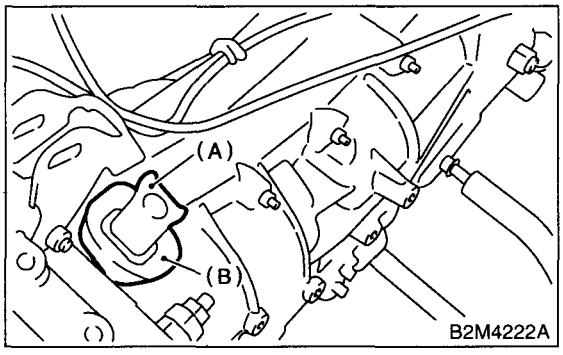

(A) Clutch release lever
(B) Release lever seal

4) Remove the release lever retainer spring from release lever pivot with a screwdriver by accessing it through the clutch housing release lever hole. Then remove the release lever.

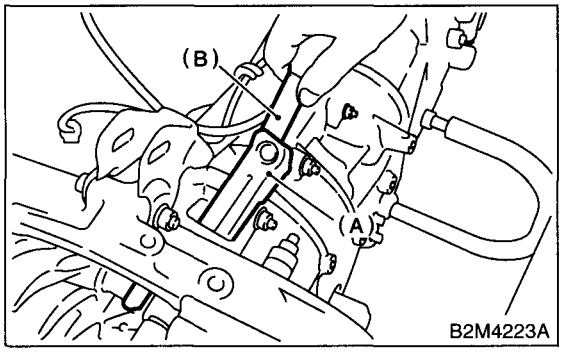

(A) Clutch release lever
(B) Screwdriver

2. TURBO MODEL

1) Remove the transmission assembly from vehicle body. <Ref. to MT-27, REMOVAL, Manual Transmission Assembly.>
2) Remove the clutch release lever from transmission.
3) Put the clutch release bearing in engine side.
4) Remove the clutch release bearing from clutch cover using a flat-type screwdriver.

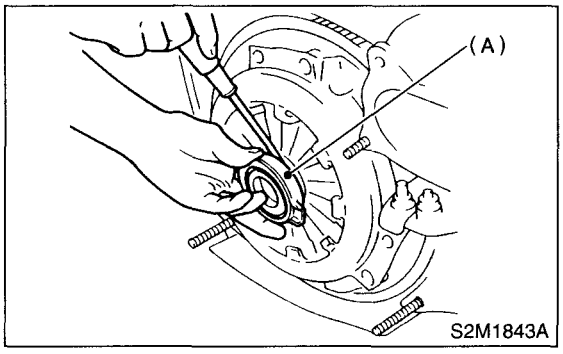

(A) Clutch release bearing

B: INSTALLATION

1. NON-TURBO MODEL

CAUTION:
Before or during assembling, lubricate the following points with a light coat of grease.
- **Contact surface of lever and pivot**
- **Contact surface of lever and bearing**
- **Transmission main shaft spline (Use grease containing molybdenum disulphide.)**
- **Contact surface of lever and operating cylinder**

1) While pushing the release lever to pivot and twisting it to both sides, fit the retainer spring onto the constricted portion of pivot.

NOTE:
- Apply grease (SUNLIGHT 2: P/N 003602010) to the contact point of release lever and operating cylinder.
- Confirm that the retainer spring is securely fitted by observing it through the main case hole.

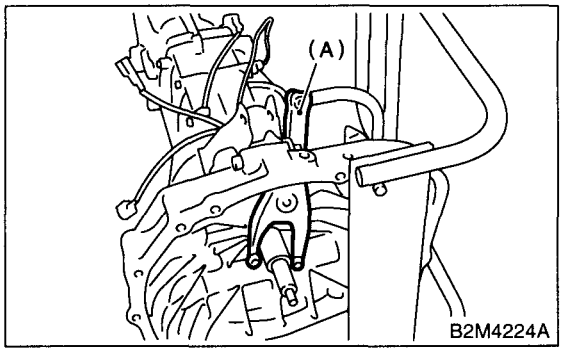

(A) Release lever

2) Install the release bearing and fasten it with two clips.

3) Install the release lever seal.

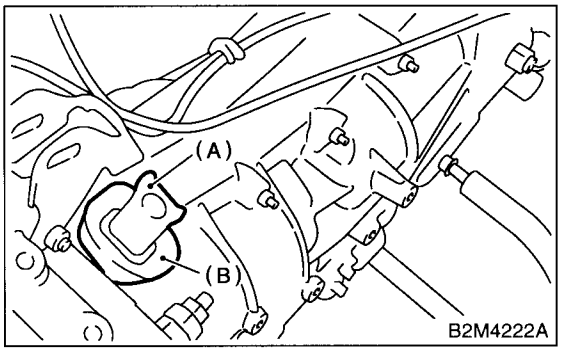

(A) Release lever
(B) Release lever seal

4) Install the transmission assembly.
<Ref. to MT-30, INSTALLATION, Manual Transmission Assembly.>

2. TURBO MODEL

1) Install the release bearing on transmission.
2) Insert the release fork into release bearing tab.

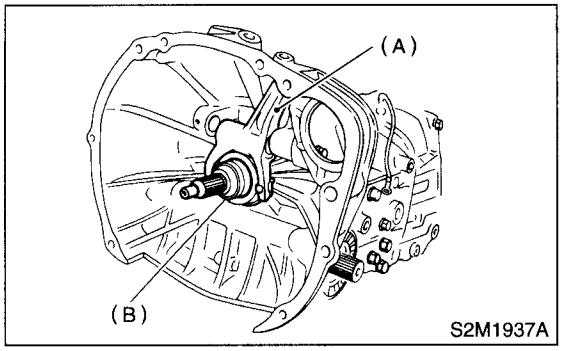

(A) Release fork
(B) Release bearing

3) Apply grease to the specified points:
- Spline FX2200
- Shaft SUNLIGHT 2

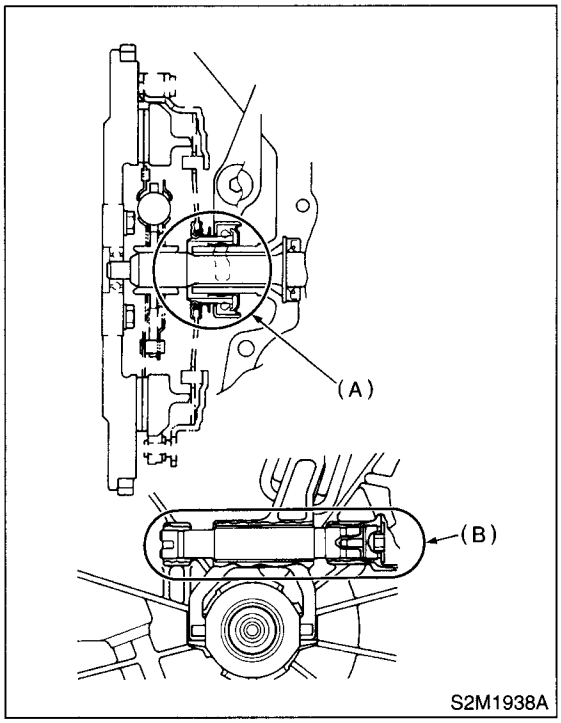

(A) Spline (FX2200)
(B) Shaft (SUNLIGHT 2)

4) Insert the release fork shaft into release fork.

CAUTION:
Make sure the cutout portion of the release fork shaft contacts spring pin.

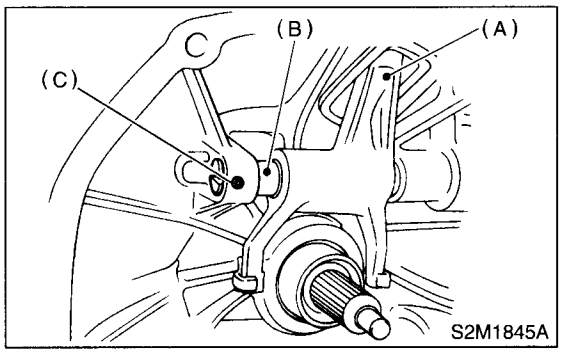

(A) Release fork
(B) Release shaft
(C) Spring pin

5) Install the transmission assembly. <Ref. to MT-30, INSTALLATION, Manual Transmission Assembly.>

C: INSPECTION

1. RELEASE BEARING

CAUTION:
Since this bearing is grease sealed and is of a non-lubrication type, do not wash with gasoline or any solvent when servicing the clutch.

1) Check the bearing for smooth movement by applying force in the radial direction.

Radial direction stroke:
1.4 mm (0.055 in)

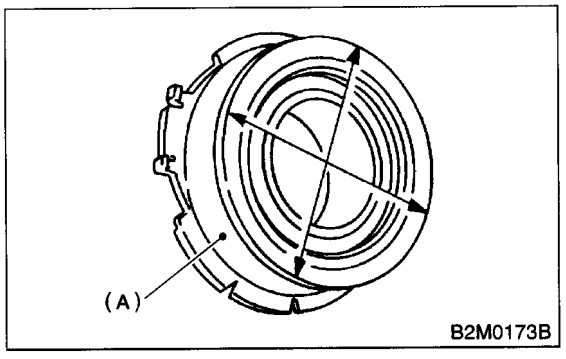

(A) Bearing case

2) Check the bearing for smooth rotation by applying pressure in the thrust direction.

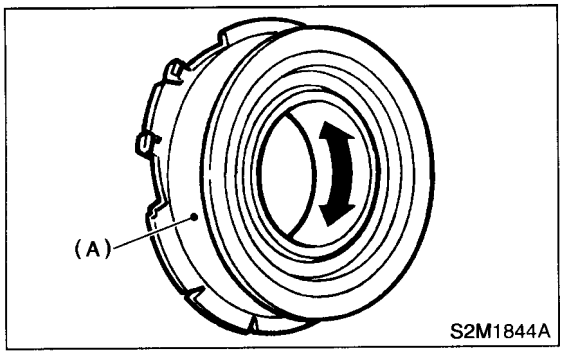

(A) Bearing case

3) Check wear and damage of bearing case surface contacting with lever.

2. RELEASE LEVER

1) Check the lever pivot portion and the point of contact with release bearing case for wear.

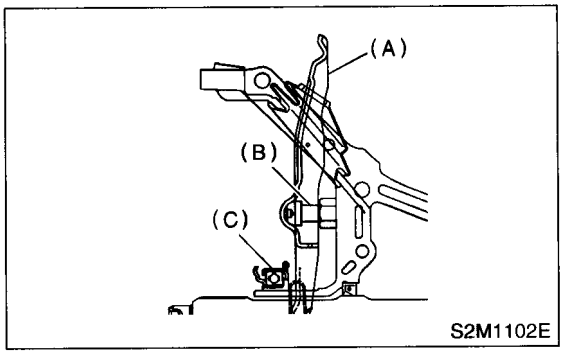

(A) Clutch release lever
(B) Pivot
(C) Clutch release bearing

5. Operating Cylinder

A: REMOVAL

1) Remove the air cleaner case and air intake duct (Non-turbo model). <Ref. to IN(SOHC)-6, REMOVAL, Air Cleaner Case.> and <Ref. to IN(SOHC)-7, REMOVAL, Air Intake Duct.>
2) Remove the intercooler (Turbo model). <Ref. to IN(DOHC TURBO)-10, REMOVAL, Intercooler.>
3) Remove the clutch hose from operating cylinder.

CAUTION:
Cover the hose joint to prevent clutch fluid from flowing out.

Non-turbo model

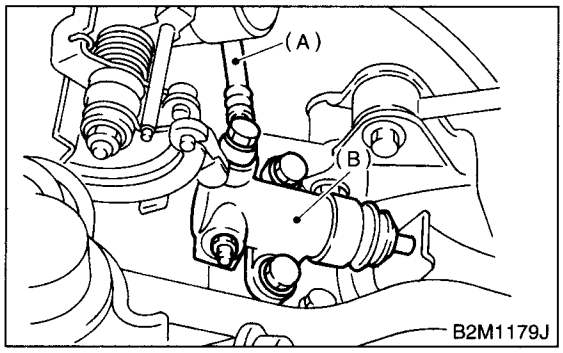

(A) Clutch hose
(B) Operating cylinder

Turbo model

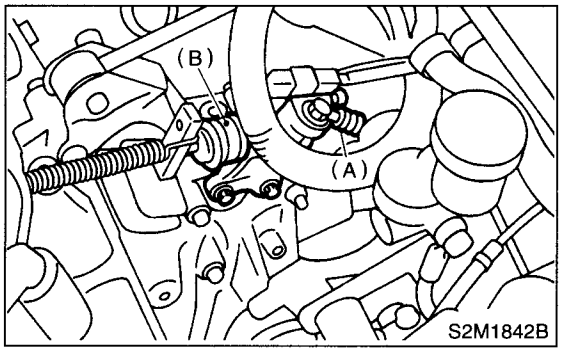

(A) Clutch hose
(B) Operating cylinder

4) Remove the operating cylinder from transmission.

Non-turbo model

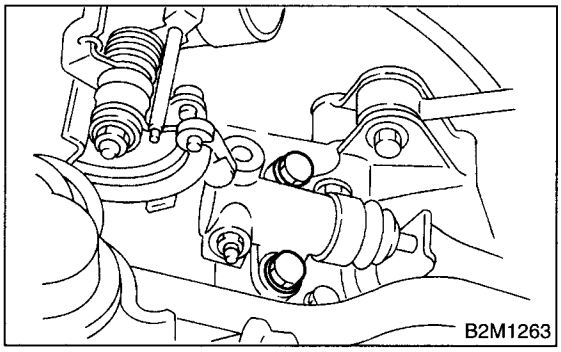

Turbo model

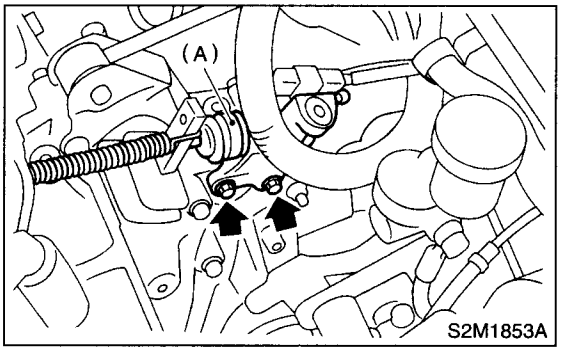

B: INSTALLATION

1) Install in the reverse order of removal.

NOTE:
Before installing the operating cylinder, apply grease (SUNLIGHT 2: P/N 003602010) to the contact point of release lever and operating cylinder.

Tightening torque:
T1: 18 N·m (1.8 kgf-m, 13.0 ft-lb)
T2: 37 N·m (3.8 kgf-m, 27.5 ft-lb)

Non-turbo model

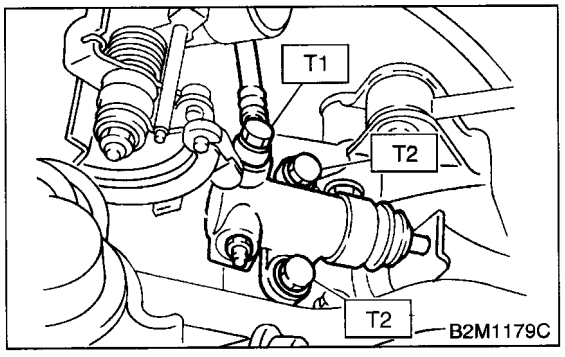

Turbo model

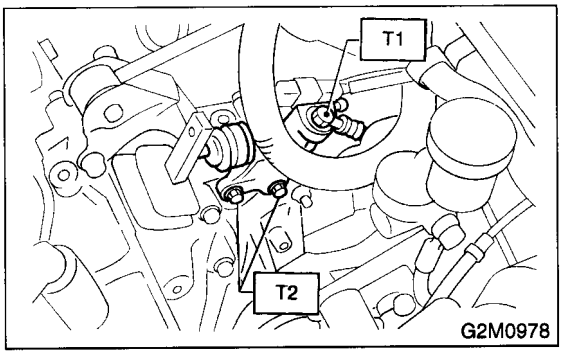

NOTE:
- Be sure to install the clutch hose with the mark side facing upward.
- Be careful not to twist the clutch hose during installation.

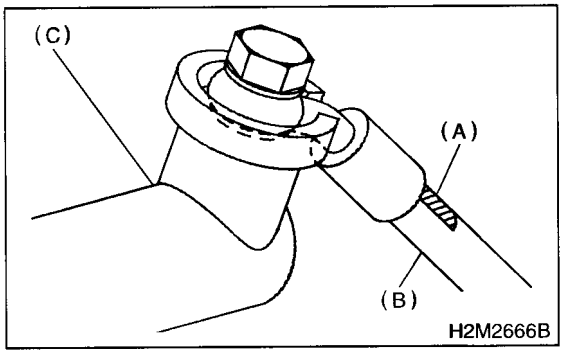

(A) Marking
(B) Clutch hose
(C) Operating cylinder

2) After bleeding air from the operating cylinder, ensure that the clutch operates properly.
<Ref. to CL-24, Clutch Fluid Air Bleeding.>

C: INSPECTION

1) Check the operating cylinder for damage. If the operating cylinder is damaged, replace it.
2) Check the operating cylinder for fluid leakage or damage on boot. If any leakage or damage is found, replace the operating cylinder.

6. Master Cylinder

A: REMOVAL

1) Thoroughly drain the brake fluid from reservoir tank.
2) Remove the snap pin, clevis pin and separate the push rod of master cylinder from clutch pedal.

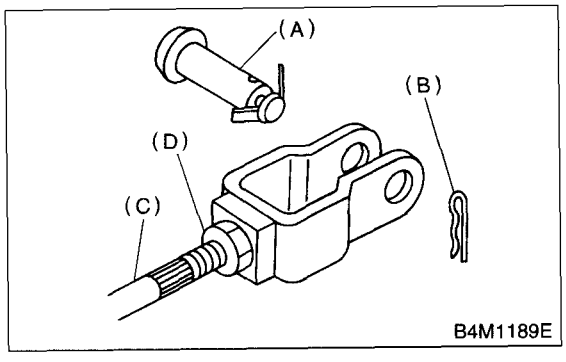

(A) Clevis pin
(B) Snap pin
(C) Push rod
(D) Lock nut

3) Remove the air cleaner case and air intake duct (Non-turbo model). <Ref. to IN(SOHC)-6, REMOVAL, Air Cleaner Case.> and <Ref. to IN(SOHC)-7, REMOVAL, Air Intake Duct.>
4) Remove the intercooler (Turbo model). <Ref. to IN(DOHC TURBO)-10, REMOVAL, Intercooler.>
5) Remove the clutch pipe from master cylinder.
6) Remove the master cylinder with reservoir tank.

CAUTION:
Be extremely careful not to spill the brake fluid. Brake fluid spilt on the vehicle body will harm the paint surface; wipe it off quickly if spilt.

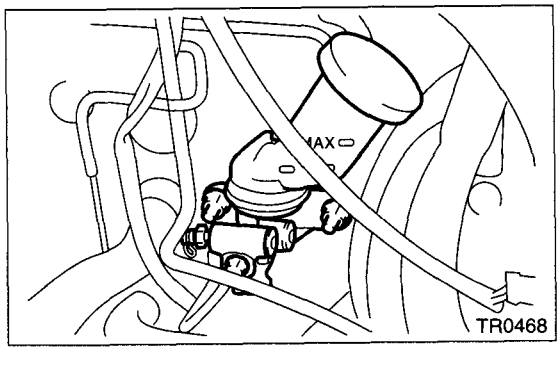

(A) Master cylinder
(B) Clutch pipe

B: INSTALLATION

1) Install the master cylinder to body, and install the clutch pipe to master cylinder.

CAUTION:
Check that the pipe is routed properly.

Tightening torque:
T1: 15 N·m (1.5 kgf-m, 10.8 ft-lb)
T2: 18 N·m (1.8 kgf-m, 13.0 ft-lb)

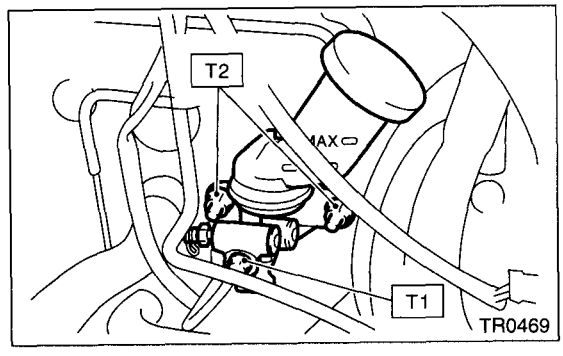

2) Connect the push rod of master cylinder to clutch pedal, and install the clevis pin and snap pin.

NOTE:
Apply grease to the clevis pin.

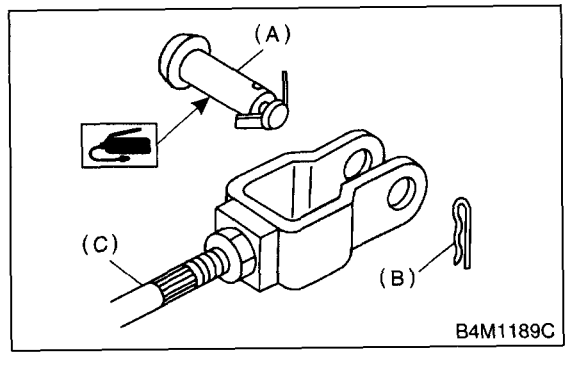

(A) Clevis pin
(B) Snap pin
(C) Push rod

3) After bleeding air from the system, ensure that the clutch operates properly.
<Ref. to CL-24, Clutch Fluid Air Bleeding.>
4) Install the air cleaner case and air intake duct (Non-turbo model). <Ref. to IN(SOHC)-6, INSTALLATION, Air Cleaner Case.> and <Ref. to IN(SOHC)-7, INSTALLATION, Air Intake Duct.>
5) Install the intercooler (Turbo model). <Ref. to IN(DOHC TURBO)-11, INSTALLATION, Intercooler.>

C: DISASSEMBLY

1) Remove the straight pin and reservoir tank.

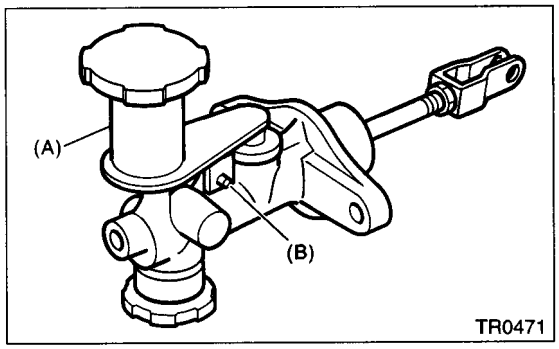

(A) Reservoir tank
(B) Straight pin

2) Remove the oil seal.

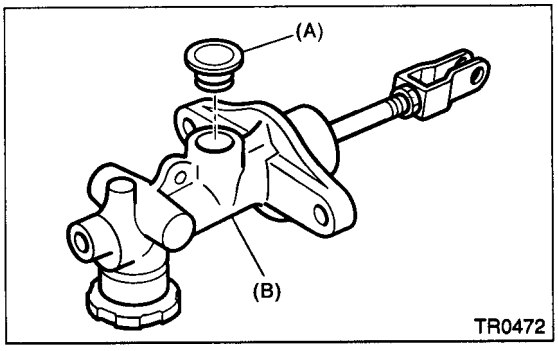

(A) Oil seal
(B) Master cylinder

3) Move the cylinder boot backward.

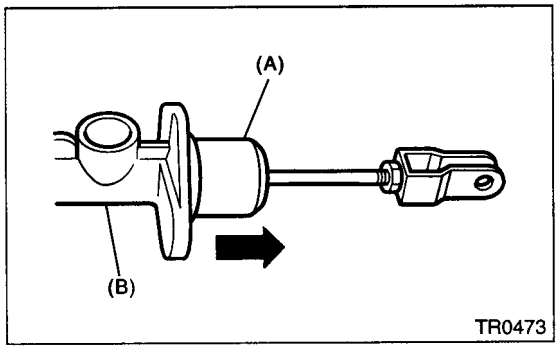

(A) Cylinder boot
(B) Master cylinder

4) Remove the stop ring.

CAUTION:
Be careful when removing the snap ring to prevent the rod, washer, piston and return spring from flying out.

5) Remove the clutch damper. (Non-turbo model)

D: ASSEMBLY

1) Install the clutch damper. (Non-turbo model)

Tightening torque:
46.6 N·m (4.75 kgf-m, 34.4 ft-lb)

2) Apply a coat of grease to the contacting surfaces of the push rod and piston before installation.

Grease:
SILICONE GREASE G40M (Part No. 004404003)

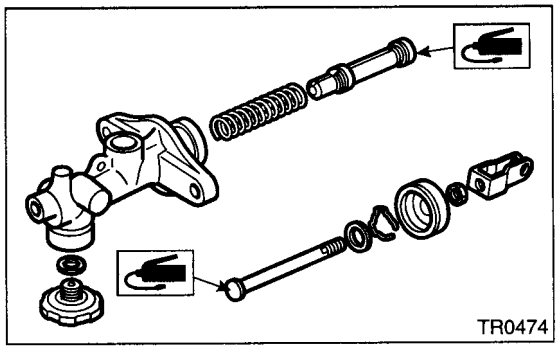

3) To assemble the master cylinder, reverse the sequence of disassembly procedure.

Tightening torque:
10 N·m (1.0 kgf-m, 7 ft-lb)

E: INSPECTION

If any damage, deformation, wear, swelling, rust or other faults are found on the cylinder, piston, push rod, fluid reservoir, return spring, gasket, clutch damper and hose replace the faulty part.

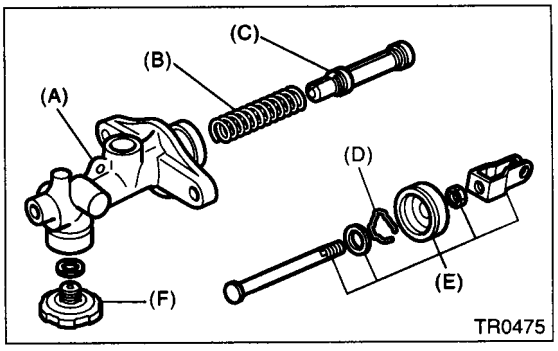

(A) Master cylinder body
(B) Return spring
(C) Piston
(D) Stop ring
(E) Rod ASSY
(F) Clutch damper (Non-turbo model)

7. Clutch Pipe and Hose

A: REMOVAL

1) Remove the air cleaner case. (Non-turbo model) <Ref. to IN(SOHC)-6, REMOVAL, Air Cleaner Case.>
2) Remove the intercooler. (Turbo model) <Ref. to IN(DOHC TURBO)-10, REMOVAL, Intercooler.>
3) Drain the clutch fluid. <Ref. to CL-23, Clutch Fluid.>
4) Remove the clutch pipe from the clutch hose and master cylinder.
5) Pull out the clamp, then remove the clutch hose from bracket.

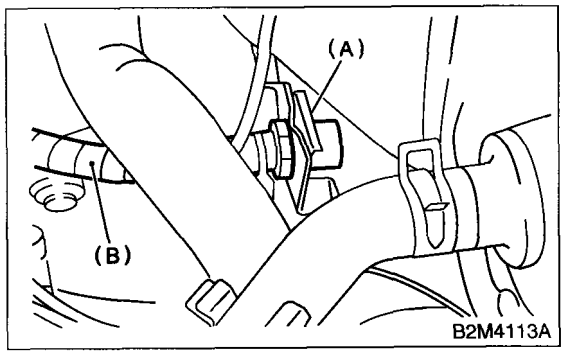

(A) Clamp
(B) Clutch hose

6) Remove the hose from operating cylinder.
7) Remove the bracket.

B: INSTALLATION

Install in the reverse order of removal.

NOTE:
Bleed the clutch fluid. <Ref. to CL-24, Clutch Fluid Air Bleeding.>

Tightening torque:
T1: 15 N·m (1.5 kgf-m, 10.8 ft-lb)
T2: 18 N·m (1.8 kgf-m, 13.0 ft-lb)
T3: 25 N·m (2.5 kgf-m, 18.1 ft-lb)

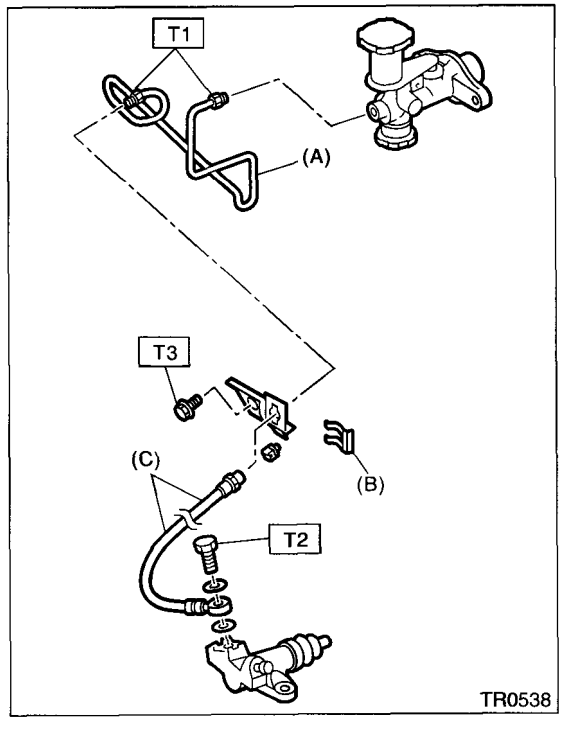

(A) Clutch pipe
(B) Clip
(C) Clutch hose

C: INSPECTION

Check pipes and hoses for cracks, breakage or damage. Check joints for fluid leakage. If any cracks, breakage, damage or leakage is found, repair or replace the applicable pipe or hose.

8. Clutch Fluid

A: INSPECTION

1) Park the vehicle on a level surface.
2) Inspect the fluid level using the scale on the outside of the reservoir tank. If the level is below "MIN", add fluid to bring it up to "MAX", and also inspect for leakage.

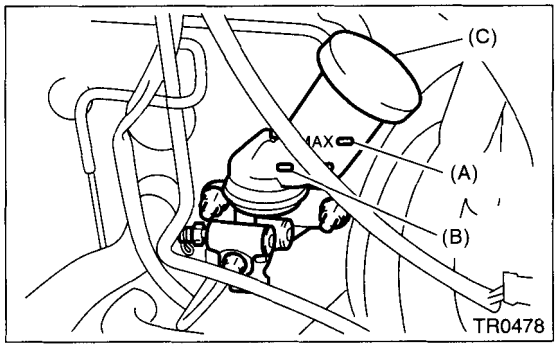

(A) Max. level
(B) Min. level
(C) Reservoir tank

B: REPLACEMENT

CAUTION:
- **The FMVSS No. 116, fresh DOT3 or 4 brake fluid must be used.**
- **Cover the bleeder with waste cloth, when loosening it, to prevent brake fluid from being splashed over surrounding parts.**
- **Avoid mixing different brands of brake fluid to prevent degrading the quality of the fluid.**
- **Be careful not to allow dirt or dust to get into the reservoir tank.**

NOTE:
- During bleeding operation, keep the clutch reservoir tank filled with brake fluid to eliminate entry of air.
- Clutch pedal operating must be very slow.
- For convenience and safety, it is advisable to have two men working.
- The amount of brake fluid required is approximately 70 m ℓ (2.4 US fl oz, 2.5 Imp fl oz) for total clutch system.

1) Remove the air cleaner case and air duct.
2) Either jack-up the vehicle and place a safety stand under it, or lift-up the vehicle.
3) Draw out the brake fluid from reservoir tank with syringe.
4) Refill the reservoir tank with recommended brake fluid.

Recommended brake fluid:
FMVSS No. 116, fresh DOT3 or 4 brake fluid

5) Drain fluid in the same method as the air bleeding.
6) Refill the brake fluid before reservoir tank becomes empty, and drain the contaminated fluid again.
7) Repeat the above procedure until the contaminated fluid is completely drained.

9. Clutch Fluid Air Bleeding

A: PROCEDURE

NOTE:
Bleed air from the oil line with the help of a co-worker.

1) Remove the air cleaner case and air intake duct. (Non-turbo model) <Ref. to IN(SOHC)-6, REMOVAL, Air Cleaner Case.> and <Ref. to IN(SOHC)-7, REMOVAL, Air Intake Duct.>
2) Remove the intercooler. (Turbo model) <Ref. to IN(DOHC TURBO)-10, REMOVAL, Intercooler.>
3) Fit one end of a vinyl tube into the air bleeder of operating cylinder and put the other end into a brake fluid container.

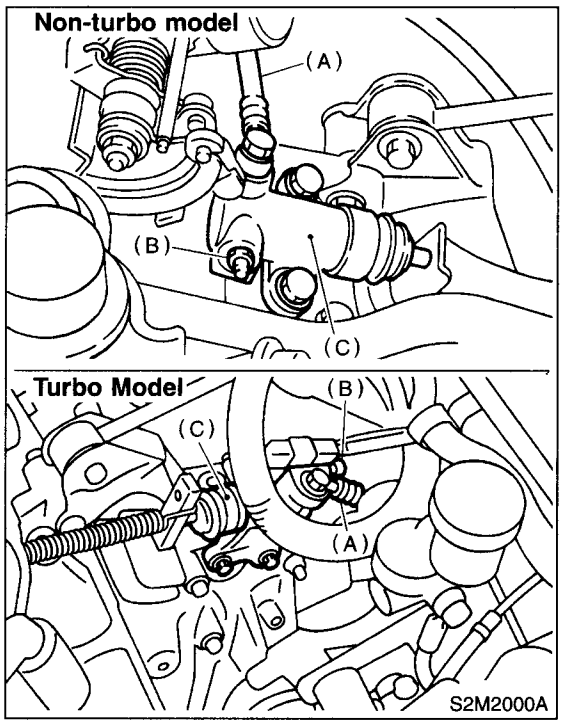

(A) Clutch hose
(B) Air bleeder
(C) Operating cylinder

4) Slowly depress the clutch pedal and keep it depressed. Then open the air bleeder to discharge air together with the fluid.
Release the air bleeder for 1 or 2 seconds. Next, with the bleeder closed, slowly release the clutch pedal.

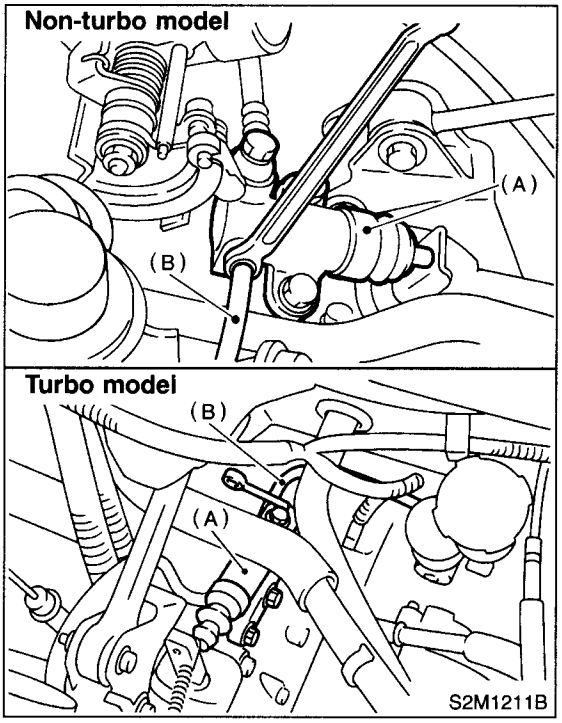

(A) Operating cylinder
(B) Vinyl tube

5) Repeat these steps until there are no more air bubbles in the vinyl tube.

CAUTION:
Cover the bleeder with waste cloth when loosening it, to prevent brake fluid from being splashed over surrounding parts.

6) Tighten the air bleeder.

Tightening torque:
T: 8 N·m (0.8 kgf-m, 5.8 ft-lb)

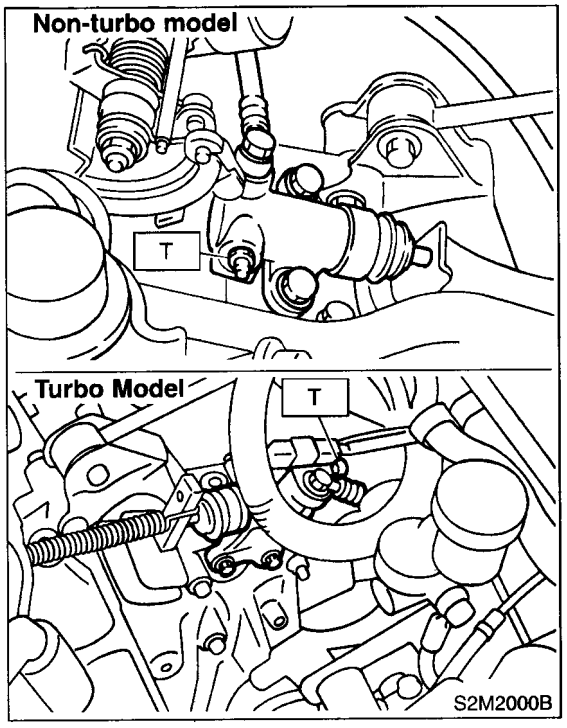

7) Repeat steps 2) through 4) using the air bleeder on operating cylinder.
8) Tighten the air bleeder.

Tightening torque:
8 N·m (0.8 kgf-m, 5.8 ft-lb)

9) After depressing the clutch pedal, make sure that there are no leaks evident in the entire system.
10) After bleeding air from the system, ensure that the clutch operates properly.

10.Clutch Pedal

A: REMOVAL

1) Remove the steering column. <Ref. to PS-23, REMOVAL, Tilt Steering Column.>
2) Disconnect the connectors from stop light and clutch switches.
3) Remove the snap pins which secure lever to push rod and operating rod.
4) Remove the clevis pins which secure lever to push rod and operating rod.

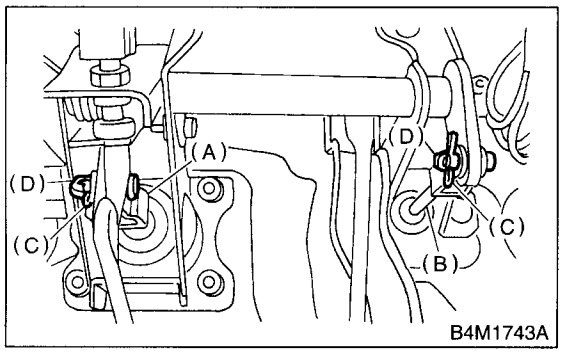

(A) Operating rod
(B) Push rod
(C) Snap pin
(D) Clevis pin

5) Remove the air cleaner case and intake duct. (Non-turbo model) <Ref. to IN(SOHC)-6, REMOVAL, Air Cleaner Case.> and <Ref. to IN(SOHC)-7, REMOVAL, Air Intake Duct.>
6) Remove intercooler. (Turbo model) <Ref. to IN(DOHC TURBO)-10, REMOVAL, Intercooler.>
7) Remove the nut which secures clutch master cylinder.

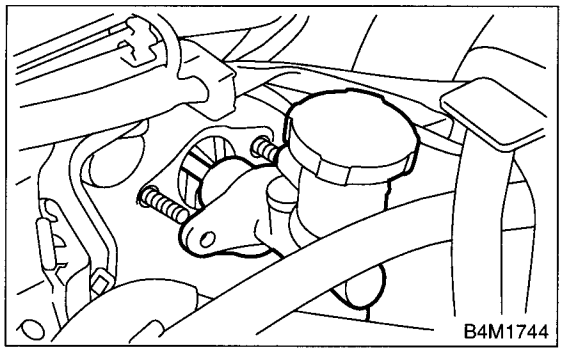

8) Remove the bolts and nuts which secure brake and clutch pedals, and remove pedal assembly.

B: INSTALLATION

1) Install in the reverse order of removal.

CAUTION:
- **If the cable clamp is damaged, replace it with a new one.**
- **Never fail to cover outer cable end with boot.**
- **Be careful not to kink the accelerator cable.**
- **Always use a new clevis pins.**

2) Adjust the clutch pedal after installation.<Ref. to CL-27, ADJUSTMENT, Clutch Pedal.>

C: DISASSEMBLY

1) Remove the clutch switches.
2) Remove the clips, assist spring, rod and bushing.

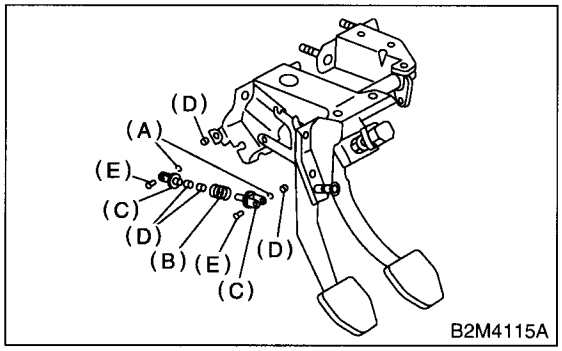

(A) Clip
(B) Assist spring
(C) Assist rod
(D) Bushing
(E) Clevis pin

3) Remove the spring pin and lever.

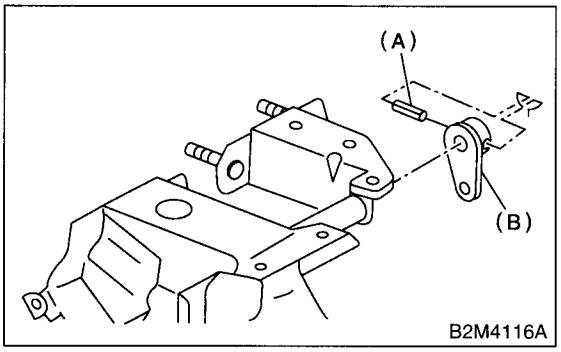

(A) Pin
(B) Lever

4) Remove the clutch pedal and bushings.

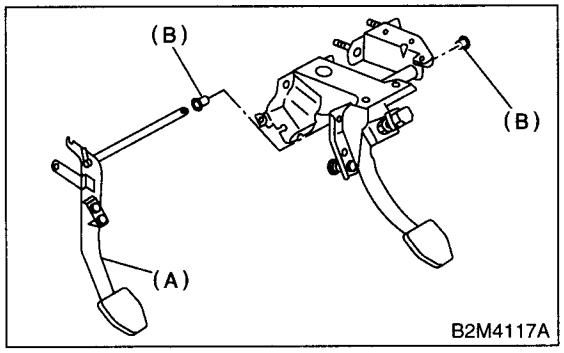

(A) Clutch pedal
(B) Bushing

5) Remove the stopper, clip, O-ring, rod S, and then remove the spring and bushing S.

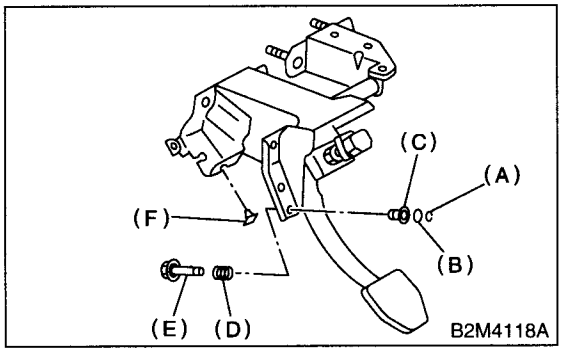

(A) Clip
(B) O-ring
(C) Bushing S
(D) Spring S
(E) Rod S
(F) Stopper

6) Remove the stoppers from clutch pedal.
7) Remove the clutch pedal pad. (Non-turbo model)

D: ASSEMBLY

1) Attach the clutch switch, etc. to pedal bracket temporarily.
2) Clean the inside of bores of clutch pedal and brake pedal, apply grease, and set bushings into bores.
3) Align the bores of pedal bracket, clutch pedal and brake pedal, attach brake pedal return spring, assist rods, and spring, and bushing.

NOTE:
Clean up inside of bushings and apply grease before installing the spacer.

E: INSPECTION

Move the clutch pedal pads in the lateral direction with a force of approximately 10 N (1 kgf, 2 lb) to ensure the pedal deflection is in specified range.

CAUTION:
If excessive deflection is noted, replace the bushings with new ones.

Deflection of clutch pedal:
Service limit
5.0 mm (0.197 in) or less

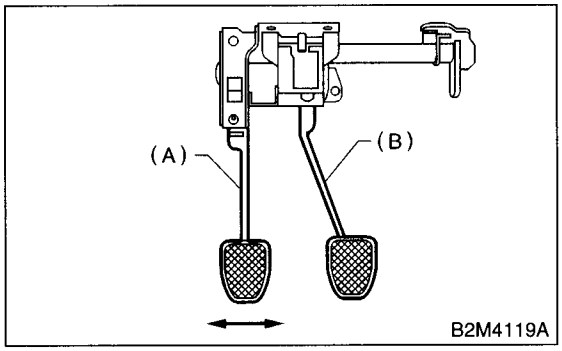

(A) Clutch pedal
(B) Brake pedal

F: ADJUSTMENT

1) Turn the lock nuts until clutch pedal full stroke length is within specifications.

CAUTION:
Do not attempt to turn the clutch switch to adjust clutch pedal full stroke length.

NOTE:
If the lock nuts cannot adjust the clutch pedal full stroke length to specifications, turn the master cylinder push rod to adjust it.

Specified clutch pedal full stroke: A
130 — 135 mm (5.12 — 5.31 in)

Tightening torque (Clutch switch lock nut):
T: 8 N·m (0.8 kgf-m, 5.8 ft-lb)

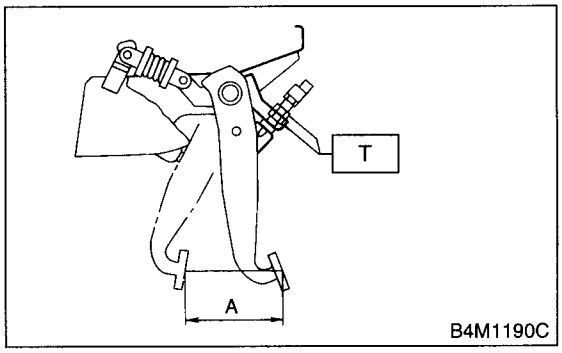

2) Turn the master cylinder push rod so that the clevis pin moves to the left and then to the right. Clevis pin must move without resistance while it is rattling.

Tightening torque (Push rod lock nut):
T: 10 N·m (1.0 kgf-m, 7 ft-lb)

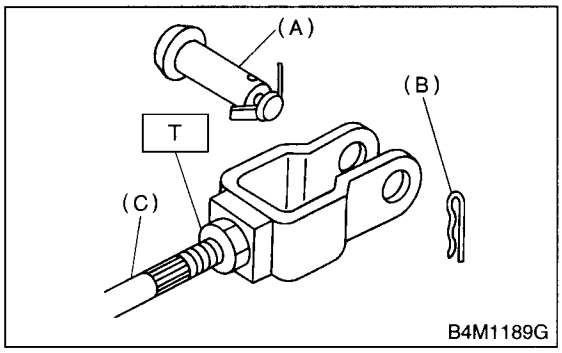

(A) Clevis pin
(B) Snap pin
(C) Push rod
(D) Lock nut

3) Depress and release the clutch pedal 2 to 3 times to ensure that the clutch pedal and release fork operates smoothly. If the clutch pedal and release fork do not operate smoothly, bleed air from the clutch hydraulic system. <Ref. to CL-24, Clutch Fluid Air Bleeding.>
4) Measure the clutch pedal full stroke length again to ensure that it is within specifications. If it is not, repeat adjustment procedures again from the beginning.

Specified clutch pedal full stroke:
130 — 135 mm (5.12 — 5.31 in)

5) Move the clevis pin to the left and then to the right. It should move without resistance while it is rattling. If resistance is felt, repeat adjustment procedures again from the beginning.

6) Push the release lever until operating cylinder push rod retracts. Ensure that the clutch fluid level in reservoir tank increases. If the clutch fluid level increases, hydraulic clutch is properly adjusted; if fluid level does not increase or push rod does not retract, replace the master cylinder with a new one.<Ref. to CL-20, Master Cylinder.>

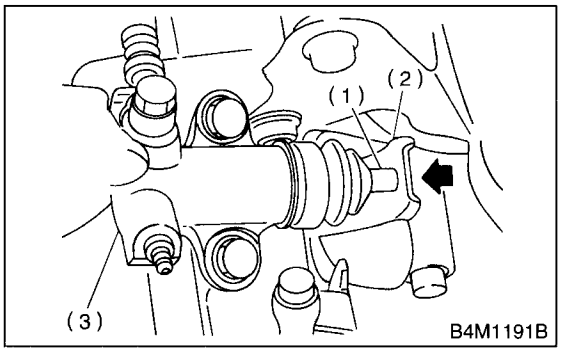

(1) Push rod
(2) Release lever
(3) Operating cylinder

7) Push the release lever until operating cylinder push rod retracts. Check that the clutch fluid level in reservoir tank increases.

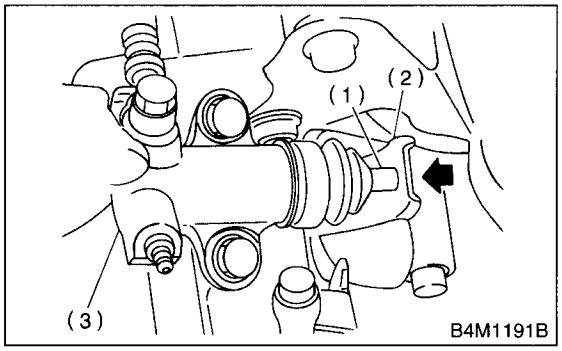

(1) Push rod
(2) Release lever
(3) Operating cylinder

8) If the clutch fluid level increases, hydraulic clutch play is correct.
9) If the clutch fluid level does not increase or push rod does not retract, clutch pedal must be readjusted.

10) Check the fluid level on the outside of the reservoir tank. If the level is below "MIN", add clutch fluid to bring it up to "MAX".

Recommended clutch fluid:
FMVSS No. 116, fresh DOT 3 or DOT 4 brake fluid

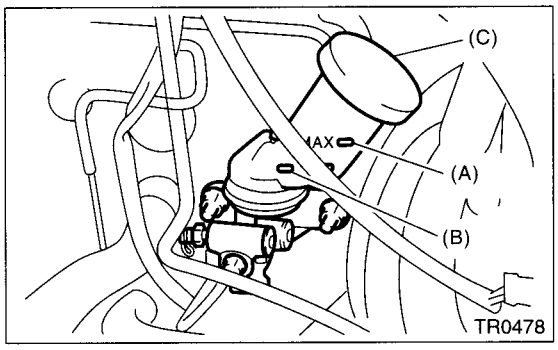

(A) Max. level
(B) Min. level
(C) Reservoir tank

11.Clutch Switch

A: REMOVAL

1) Disconnect the ground terminal from battery.
2) Disconnect the connector from clutch switch.
3) Remove the clutch switch.

B: INSTALLATION

1) Move the clevis pin of the push rod right and left and hold where it moves smoothly, then measure stroke of clutch pedal.

Specified clutch pedal full stroke:A
130 — 135 mm (5.12 — 5.31 in)

Tightening torque:
T: 8 N·m (0.8 kgf-m, 5.8 ft-lb)

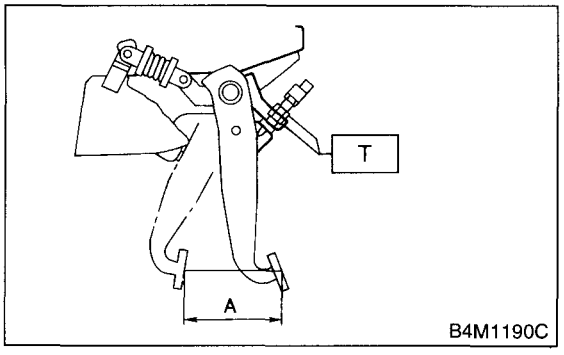

2) If the clutch pedal stroke is out of specification, adjust the stroke. <Ref. to CL-27, ADJUSTMENT, Clutch Pedal.>
3) Connect the clutch switch connector.

C: INSPECTION

1) If the clutch switch does not operate properly (or if it does not stop at the specified position), replace with a new one.

Specified position: L
$2^{+1.5}/_{0}$mm ($0.079^{+0.059}/_{0}$ in)

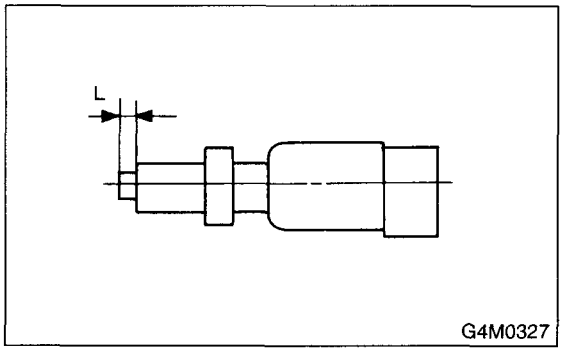

2) Check the clutch switch continuity. If continuity is not as specified, replace the switch.
   (1) Disconnect the clutch switch connector.
   (2) Measure the resistance between 1 and 2 of clutch switch terminal.

Terminals/Specified resistance
When clutch pedal depressed:
1 — 2/Less than 1Ω

Terminals/Specified resistance
When clutch pedal not depressed:
1 — 2/More than 1MΩ

Clutch switch (Starter interlock)

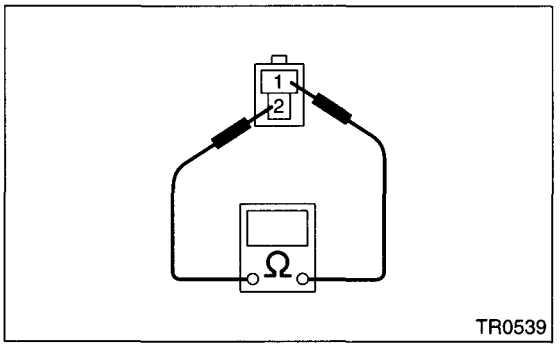

Clutch switch (With cruise control)

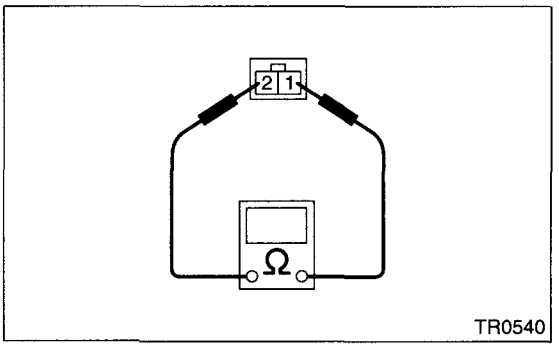

(3) If not as specified, replace the clutch switch.

12.General Diagnostic Table

A: INSPECTION

1. CLUTCH

Symptom	Possible cause	Corrective
1. Clutch slippage. It is hard to perceive clutch slippage in the early stage, but pay attention to the following symptoms • Engine speeds up when shifting. • High speeds driving is impossible; especially rapid acceleration impossible and vehicle speed does not increase in proportion to an increase in engine speed. • Power falls, particularly when ascending a slope, and there is a smell of burning of the clutch facing. • Method of testing: Put the vehicle in a stationary condition with parking brake fully applied. Disengage the clutch and shift the transmission gear into the first. Gradually allow the clutch to engage while gradually increasing the engine speed. The clutch function is satisfactory if the engine stalls. However, the clutch is slipping if the vehicle does not start off and the engine does not stall.	(a) Clutch facing smeared by oil	Replace.
	(b) Worn clutch facing	Replace.
	(c) Deteriorated diaphragm spring	Replace.
	(d) Distorted pressure plate or flywheel	Correct or replace.
	(e) Defective release bearing holder	Correct or replace.
2. Clutch drags. As a symptom of this trouble, a harsh scratching noise develops and control becomes quite difficult when shifting gears. The symptom becomes more apparent when shifting into the first gear. However, because much trouble of this sort is due to defective synchronization mechanism, carry out the test as described after. • Method of testing: <Ref. to CL-32, DIAGNOSTIC DIAGRAM OF CLUTCH DRAG, INSPECTION, General Diagnostic Table.> It may be judged as insufficient disengagement of clutch if any noise occurs during this test.	(a) Worn or rusty clutch disc hub spline	Replace clutch disc.
	(b) Excessive deflection of clutch disc facing	Correct or replace.
	(c) Seized crankshaft pilot needle bearing	Replace.
	(d) Cracked clutch disc facing	Replace.
	(e) Sticked clutch disc (smeared by oil or water)	Replace.
3. Clutch chatters. Clutch chattering is an unpleasant vibration to the whole body when the vehicle is just started with clutch partially engaged.	(a) Adhesion of oil on the facing	Replace clutch disc.
	(b) Weak or broken torsion spring	Replace clutch disc.
	(c) Defective facing contact or excessive disc	Replace clutch disc defection.
	(d) Warped pressure plate or flywheel	Correct or replace.
	(e) Loose disc rivets	Replace clutch disc.
	(f) Loose engine mounting	Retighten or replace mounting.
	(g) Improper adjustment of pitching stopper	Adjustment.

Symptom	Possible cause	Corrective
4. Noisy clutch Examine whether the noise is generated when the clutch is disengaged, engaged, or partially engaged.	(a) Broken, worn or unlubricated release bearing	Replace release bearing.
	(b) Insufficient lubrication of pilot bearing	Apply grease.
	(c) Loose clutch disc hub	Replace clutch disc.
	(d) Loose torsion spring retainer	Replace clutch disc.
	(e) Deteriorated or broken torsion spring	Replace clutch disc.
5. Clutch grabs. When starting the vehicle with the clutch partially engaged, the clutch engages suddenly and the vehicle jumps instead of making a smooth start.	(a) Grease or oil on facing	Replace clutch disc.
	(b) Deteriorated cushioning spring	Replace clutch disc.
	(c) Worn or rusted spline of clutch disc or main shaft	Take off rust, apply grease or replace clutch disc or main shaft.
	(d) Deteriorated or broken torsion spring	Replace clutch disc.
	(e) Loose engine mounting	Retighten or replace mounting.
	(f) Deteriorated diaphragm spring	Replace.

2. CLUTCH PEDAL

Trouble	Corrective action
Insufficient pedal play	Adjust pedal play.
Clutch pedal free play insufficient	Adjust pedal free play.
Excessively worn and damaged pedal shaft and/or bushing	Replace bushing and/or shaft with new one.

3. DIAGNOSTIC DIAGRAM OF CLUTCH DRAG

Step		Check	Yes	No
1	**CHECK GEAR NOISE.** 1)Start the engine. 2)Disengage the clutch and shift quickly from neutral to reverse in idling condition.	Is there any abnormal noise from the transmission gear?	Go to step **2.**	Clutch is normal.
2	**CHECK GEAR NOISE.** Disengage the clutch at idle and shift from neutral to reverse within 0.5 — 1.0 seconds.	Is there any abnormal noise from the transmission gear?	Go to step **3.**	Defective transmission or excessive clutch drag torque. Inspect Pilot bearing, clutch disc, transmission and clutch disc hub spline.
3	**CHECK GEAR NOISE.** 1)Disengage the clutch at idle and shift from neutral to reverse within 0.5 — 1.0 seconds. 2)With the clutch disengaged, shift from N to R, R to N several times.	Is there any abnormal noise from the transmission gear?	Defect in clutch disengaging. Inspect clutch disc, clutch cover, clutch release, and clutch pedal free play.	Clutch and flywheel seizure. Inspect clutch disc, spline of clutch disc hub.