1. Basic Diagnostics Procedure

A: BASIC PROCEDURES

1. GENERAL

The most important purpose of diagnostics is to determine which part is malfunctioning quickly, to save time and labor.

2. IDENTIFICATION OF TROUBLE SYMPTOM

Determine what the problem is based on symptom.

3. PROBABLE CAUSE OF TROUBLE

Look at the wiring diagram and check system's circuit. Then check the switch, relay, fuse, ground, etc.

4. LOCATION AND REPAIR OF TROUBLE

1) Using the diagnostics narrow down the causes.
2) If necessary, use a voltmeter, ohmmeter, etc.
3) Before replacing certain component parts (switch, relay, etc.), check the power supply, ground, for open wiring harness, poor connectors, etc. If no problems are encountered, check the component parts.

5. CONFIRMATION OF SYSTEM OPERATION

After repairing, ensure that the system operates properly.

B: BASIC INSPECTION

1. VOLTAGE MEASUREMENT

1) Using a voltmeter, connect the negative lead to a good ground point or negative battery terminal and the positive lead to the connector or component terminal.
2) Contact the positive probe of the voltmeter on connector (A).
The voltmeter will indicate a voltage.
3) Shift the positive probe to connector (B). The voltmeter will indicate no voltage.

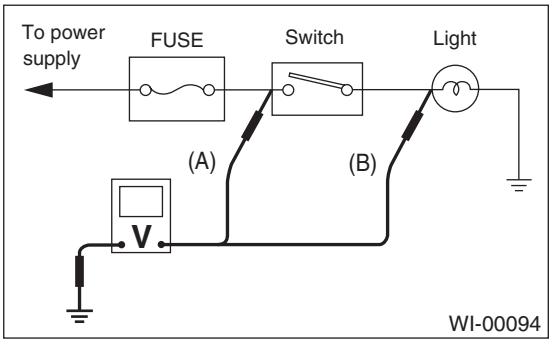

4) With test set-up held as it is, turn the switch ON. The voltmeter will indicate a voltage and, at the same time, the light will come on.
5) The circuit is in good order. If a problem such as a lamp failing to light occurs, use the procedures outlined above to track down malfunction.

2. CIRCUIT CONTINUITY CHECKS

1) Disconnect the battery cable or connector so there is no voltage between check points.
Contact the two leads of an ohmmeter to each of the check points.
If the circuit has diodes, reverse the two leads and check again.
2) Use an ohmmeter to check for the diode continuity. When contacting the negative lead to diode positive side and positive lead to negative side, there should be continuity.
When contacting the two leads in reverse, there should be no continuity.

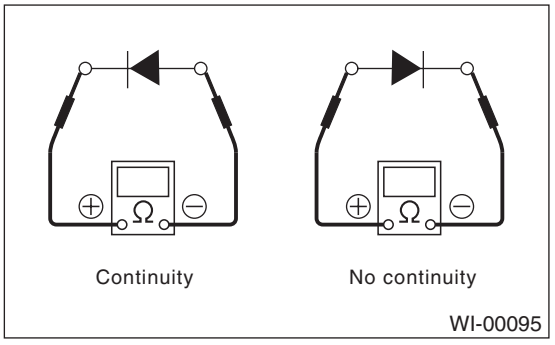

3) Symbol "❍ — ❍" indicates that continuity exists between two points or terminals. For example, when a switch position is "3", continuity exists among terminals 1, 3 and 6, as shown in table below.

Terminal / Switch Position	1	2	3	4	5	6
OFF						
1	❍				❍	❍
2	❍			❍		❍
3	❍		❍			❍
4	❍	❍				❍

WI-00096

3. HOW TO DETERMINE AN OPEN CIRCUIT

1) Voltmeter Method:
An open circuit is determined by measuring the voltage between respective connectors and ground using a voltmeter, starting with the connector closest to power supply. The power supply must be turned ON so that current flows in the circuit. If voltage is not present between a particular connector and ground, the circuit between that connector and previous connector is open.

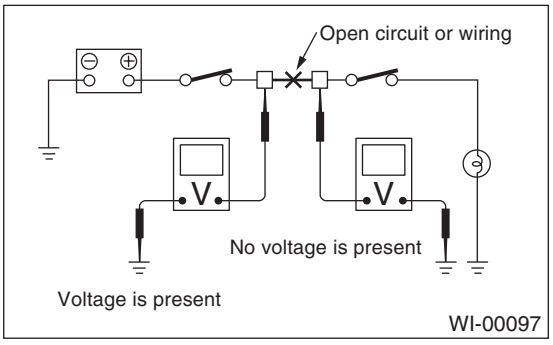

2) Ohmmeter method:
Disconnect all connectors affected, and check the continuity in wiring between adjacent connectors. When the ohmmeter indicates “infinite”, the wiring is open.

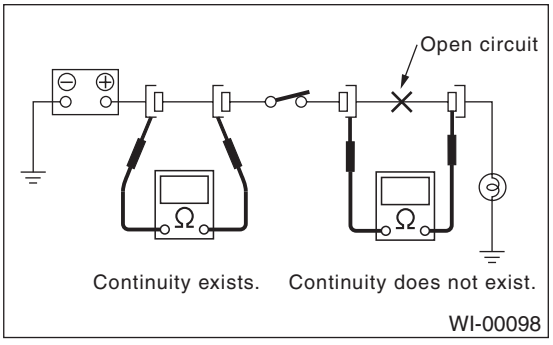

4. HOW TO DETERMINE A SHORT CIRCUIT

1) Test lamp method:
Connect a test lamp (rated at approx. 3 watts) in place of the blown fuse and allow current to flow through the circuit. Disconnect one connector at a time from the circuit, starting with the one located farthest from power supply. If the test lamp goes out when a connector is disconnected, the wiring between that connection and next connector (farther from the power supply) is shorted.

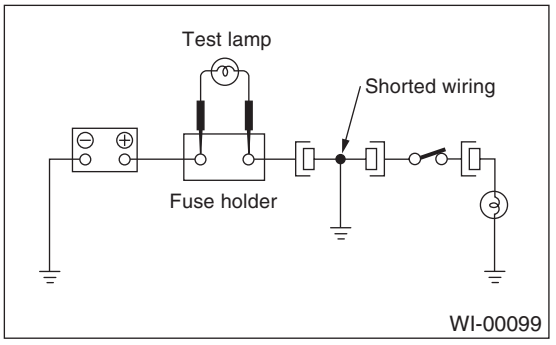

2) Ohmmeter method:
Disconnect all affected connectors, and check the continuity between each connector and ground. When the ohmmeter indicates continuity between a particular connector and ground, that the connector is shorted.

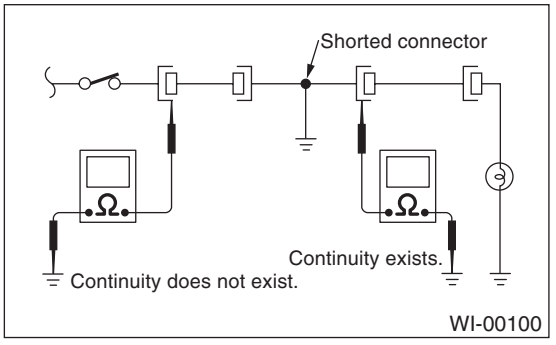

C: HOW TO READ WIRING DIAGRAMS

1. WIRING DIAGRAM

The wiring diagram of each system is illustrated so that you can understand the path through which electric current flows from battery.
Sketches and codes are used in the diagrams. They should read as follows:

- Each connector and its terminal position are indicated by a sketch of the connector in a disconnected state which is viewed from front.

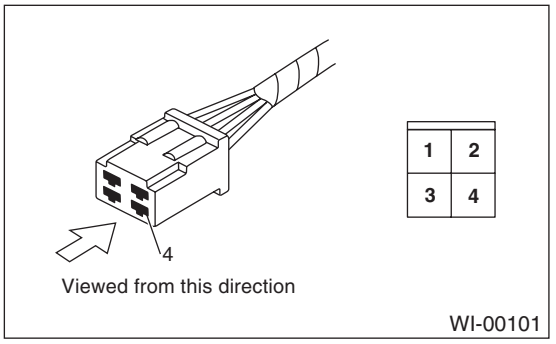

- The number of poles or pins, presence of a lock, and pin number of each terminal are indicated in the sketch of each connector. In the sketch, the highest pole number refers to the number of poles which connector has. For example, the sketch of connector shown in the figure indicates the connector has 9 poles.

Connector used in vehicle	Connector shown in wiring diagram		
	Sketch	Symbol	Number of poles
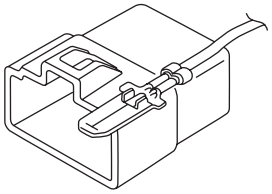	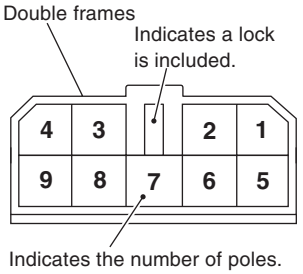	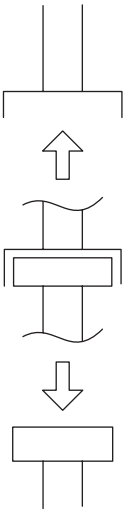	Numbered in order from upper right to lower left.
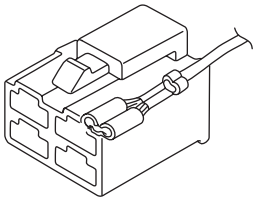	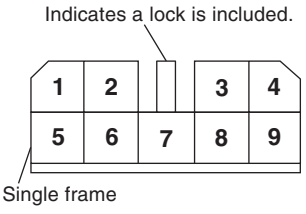		Numbered in order from upper left to lower right

WI-00102

• When one set of connectors is viewed from the front side, the pole numbers of one connector are symmetrical to those of other. When these two connectors are connected as a unit, the poles which have the same number are joined.

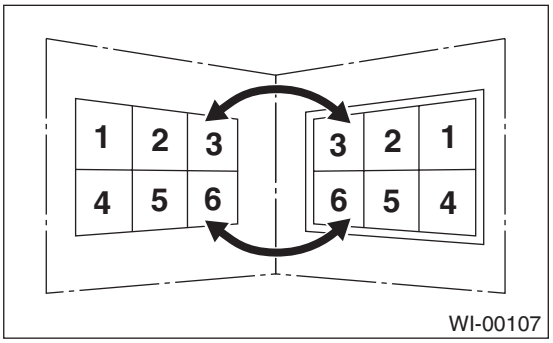

• Electrical wiring harness:
The connectors are numbered along with the number of poles, external colors, and mating connections in accompanying list.
• The sketch of each connector in the wiring diagram usually shows (A) side of the connector. The relationship between wire color, terminal number and connector is described in figure.

NOTE:
A wire which runs in one direction from a connector terminal sometimes may have a different color from that which runs in the other direction from that terminal.

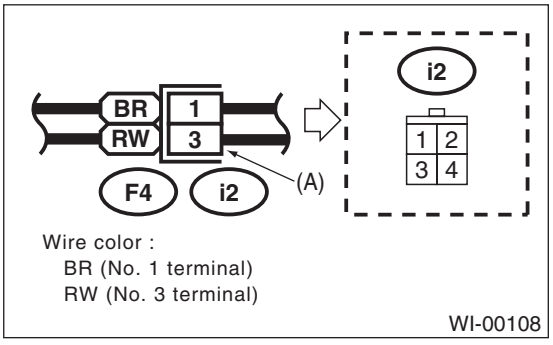

• In wiring diagram, connectors which have no terminal number refer to one-pole types. Sketches of these connectors are omitted intentionally.

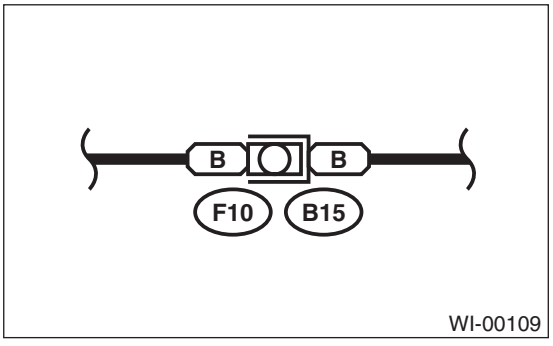

• The following color codes are used to indicate the colors of the wires used.

Color code	Color
L	Blue
B	Black
Y	Yellow
G	Green
R	Red
W	White
Br	Brown
Lg	Light green
Gr	Gray
P	Pink
Or	Orange
Lb	Light Blue
V	Violet
SA	Sealed (Inner)
SB	Sealed (Outer)

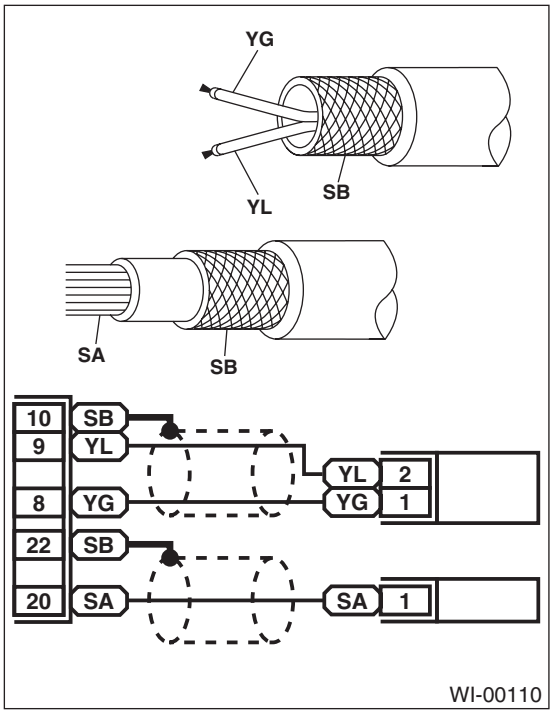

- The wire color code, which consists of two letters (or three letters including Br or Lg), indicates the standard color (base color of the wire covering) by its first letter and stripe marking by its second letter.

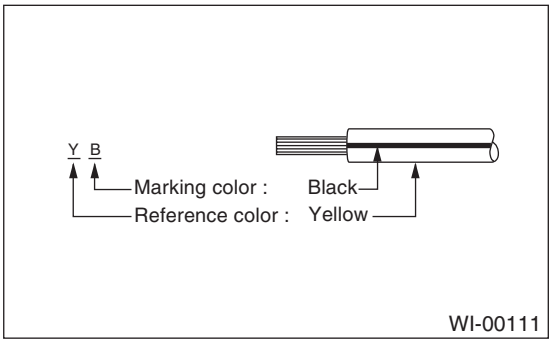

- The table lists the nominal sectional areas and allowable currents of wires.

CAUTION:
When replacing or repairing a wire, be sure to use the same size and type of wire which was originally used.

NOTE:
- The allowable current in the table indicates tolerable amperage of each wire at an ambient temperature of 40°C (104°F).
- The allowable current changes with ambient temperature. Also, it changes if a bundle of more than two wires is used.

Nominal sectional area mm^2	No. of strands/ strand diameter	Outside diameter of finished wiring mm	Allowable current Amps/ 40°C (104°F)
0.3	7/0.26	1.8	7
0.5	7/0.32	2.2 (or 2.0)	12
0.75	30/0.18	2.6 (or 2.4)	16
0.85	11/0.32	2.4 (or 2.2)	16
1.25	16/0.32	2.7 (or 2.5)	21
2	26/0.32	3.1 (or 2.9)	28
3	41/0.32	3.8 (or 3.6)	38
5	65/0.32	4.6 (or 4.4)	51
8	50/0.45	5.5	67

- Each unit is directly grounded to the body or indirectly grounds through a harness ground terminal. Different symbols are used in the wiring diagram to identify the two grounding systems.

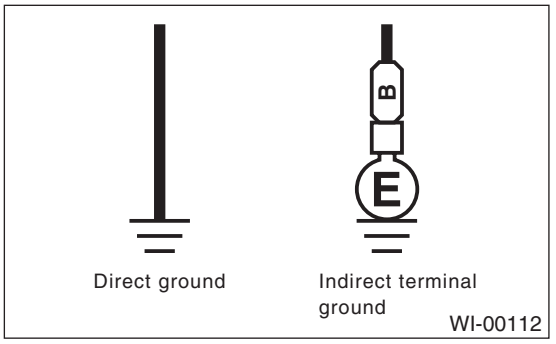

- The ground points shown in the wiring diagram refer to the following:

NOTE:
All wiring harnesses are provided with a ground point which should be securely connected.

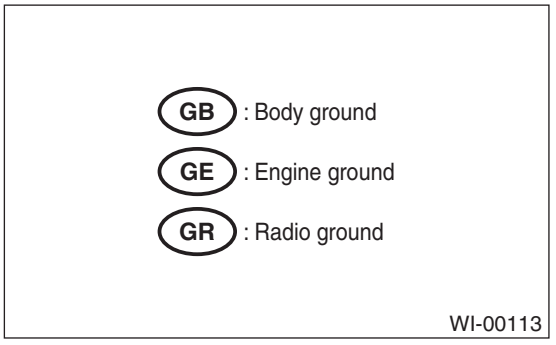

- Relays are classified as normally-open or normally-closed.

The normally-closed relay has one or more contacts.
The wiring diagram shows the relay mode when energizing circuit is OFF.

Relay type		Energizing circuit OFF	Energizing circuit ON
Normally-open type	4-pole	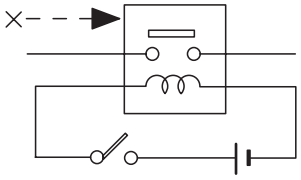	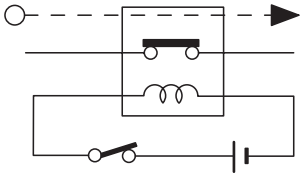
	6-pole	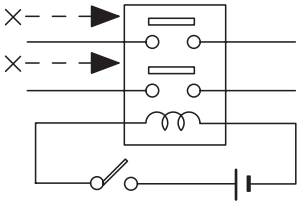	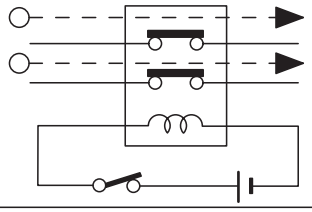
Normally-closed type	4-pole	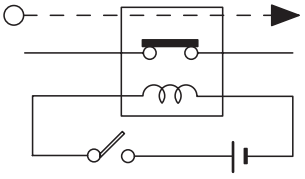	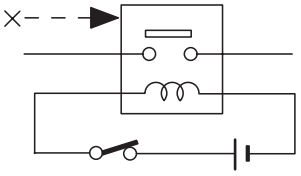
Mixed type	6-pole	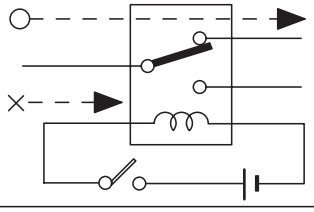	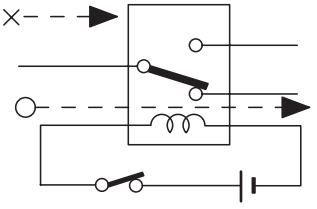

Key to symbols:

○ ⟶ : Current flows.

× ⟶ : Current does not flow.

WI-00114

- Each connector number shown in the wiring diagram corresponds to that in wiring harness. The location of each connector in actual vehicle is determined by reading the first character of the connector (for example, a “F” for F8, “i” for i16, etc.) and type of wiring harness.

The first character of each connector number refers to the area or system of the vehicle.

Symbol	Wiring harness and cord
F	Front wiring harness
B	Bulkhead wiring harness
E	Engine wiring harness
T	Transmission cord, Rear oxygen sensor cord
D	Door cord LH & RH, Rear door cord LH & RH, Rear gate cord
i	Instrument panel wiring harness
R	Rear wiring harness, Fuel tank cord, Roof cord, Trunk lid cord
AB	Airbag wiring harness

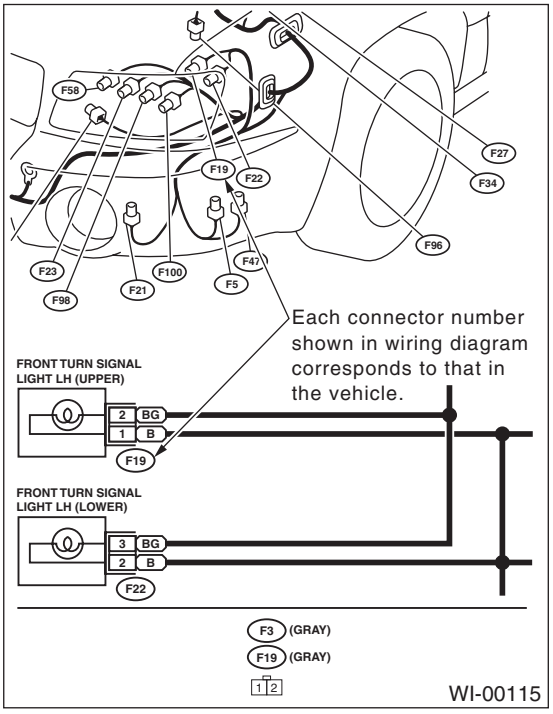

D: SYMBOLS IN WIRING DIAGRAMS

A number of symbols are used in each wiring diagram to easily identify parts or circuits.

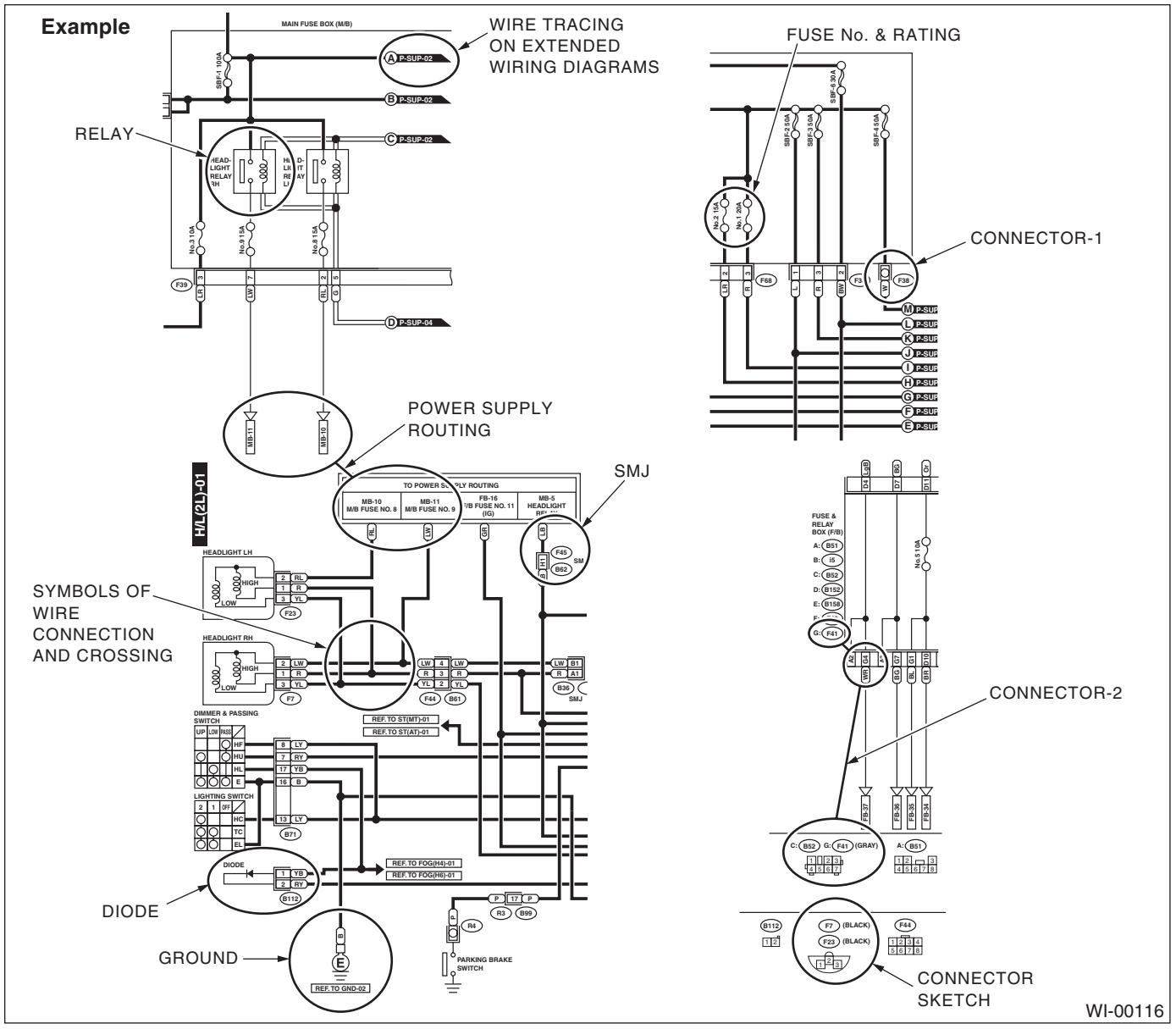

1. RELAY

A symbol used to indicate a relay.

2. CONNECTOR-1

The sketch of the connector indicates one-pole types.

3. WIRING CONNECTION

Some wiring diagrams are indicated in foldouts for convenience. Wiring destinations are indicated where necessary by corresponding symbols (as when two pages are needed for clear indication).

4. FUSE NO. & RATING

The “FUSE No. & RATING” corresponds with that used in fuse box (main fuse box, fuse and joint box).

5. CONNECTOR-2

- Each connector is indicated by a symbol.
- Each terminal number is indicated in the corresponding wiring diagram in an abbreviated form.
- For example, terminal number “G4” refers to No. 4 terminal of connector (G: F41) shown in the connector sketch.

6. CONNECTOR SKETCH

• Each connector sketch clearly identifies the shape and color of a connector as well as terminal locations. Non-colored connectors are indicated in natural color.
• When more than two types of connector number are indicated in a connector sketch, it means that the same type connectors are used.

7. GROUND

Each grounding point can be located easily by referring to the corresponding wiring harness.

8. DIODE

A symbol is used to indicate a diode.

9. WIRE TRACING ON EXTENDED WIRING DIAGRAMS

For a wiring diagram extending over at least two pages, a symbol (consisting of the same characters with arrows), facilitates wire tracing from one page to the next.
A ←→ A, B ←→ B

10.SYMBOLS OF WIRE CONNECTION AND CROSSING

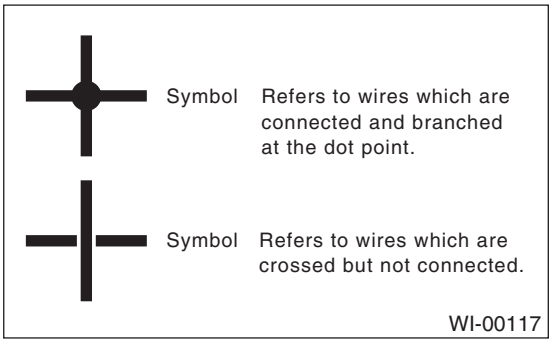

11.POWER SUPPLY ROUTING

A symbol is used to indicate the power supply in each wiring diagram.
“MB-5”, “MB-6”, etc., which are used as power-supply symbols throughout the text, correspond with those shown in POWER SUPPLY ROUTING in the wiring diagram.
Accordingly, using the POWER SUPPLY ROUTING and wiring diagrams permits service personnel to understand the entire electrical arrangement of a system.

12.CLASSIFICATION BY SPECIFICATION

When the wiring diagrams differ according to vehicle specifications, the specification difference is described by using abbreviations.

E: CONNECTOR SYMBOL IN WIRING HARNESS

Main symbols of connector (in wiring harness) are indicated in below.

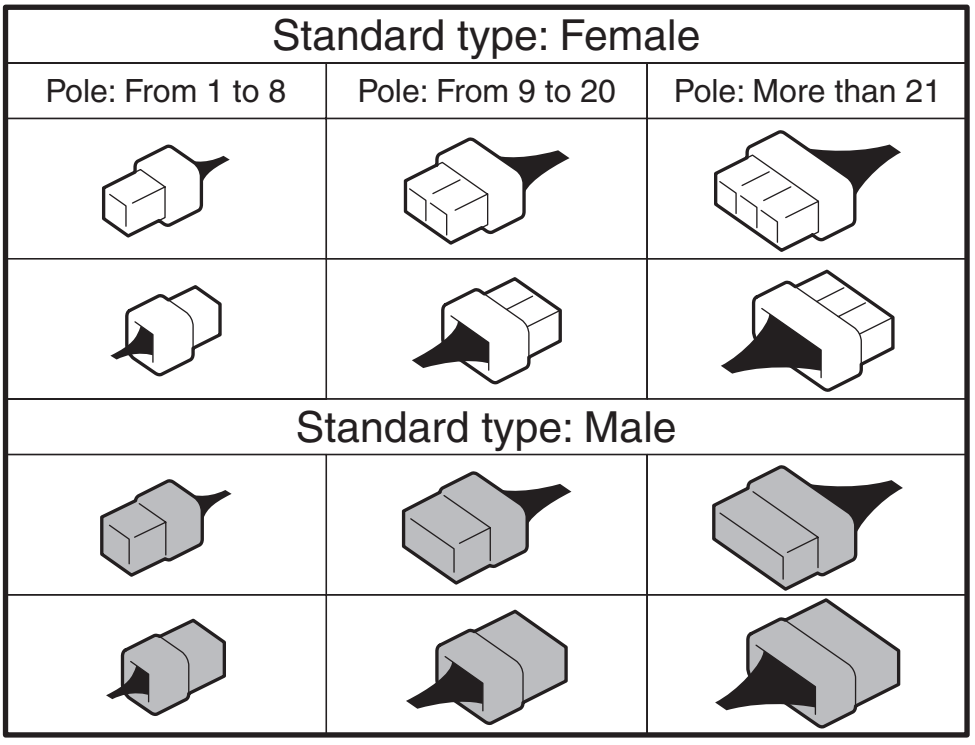

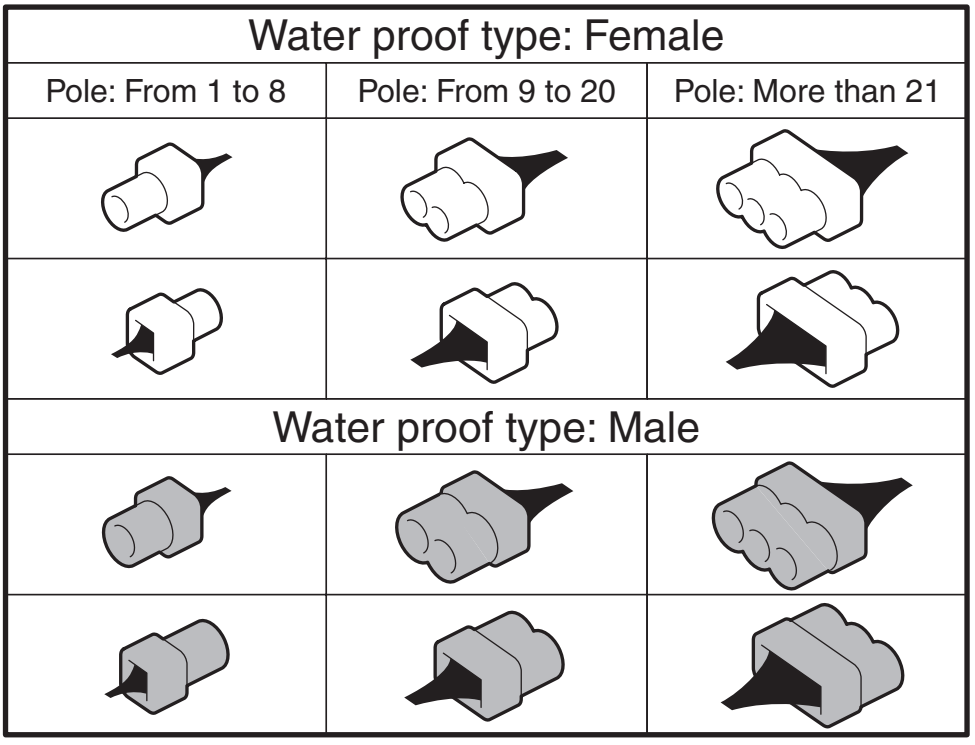

WI-02445

F: ABBREVIATION IN WIRING DIAGRAMS

Abbreviation	Full name
ABS	Antilock Brake System
ACC	Accessory
A/C	Air Conditioning
AD	Auto Down
AT	Automatic Transmission
AU	Auto Up
A/B	Air Bag
A/F	Air Fuel
ATF	Automatic Transmission Fluid
AVCS	Active Valve Control System
AWD	All Wheel Drive
B	Battery
CPC	Canister Purge Control
D	Drive Range
DN	Down
E	Ground
EGR	Exhaust Gas Recirculation
ELR	Emergency Locking Retractor
ETC	Electric Throttle Valve Control
F/B	Fuse & Joint Box
FL1.5	Fusible link 1.5 mm^2
FPC	Fuel Pump Control
FWD	Front Wheel Drive
H/L	Head Light
I/F	Interface
IG	Ignition
Illumi	Illumination
INT	Intermittent
L/C	Low Clutch
LDC	Liquid Crystal Display
LH	Left Hand
Lo	Low
M	Motor
M/B	Main Fuse Box
MG	Magnet
Mi	Middle
MT	Manual Transmission
N	Neutral
OP	Optional Parts
P	Parking Range
PASS	Passing
R	Reverse Range
RH	Right Hand
SBF	Slow Blow Fuse
SMJ	Super Multiple Junction
ST	Starter
SW	Switch
TGV	Tumble Generator Valve
UP	Up
WASH	Washer

2. Working Precautions

A: PRECAUTIONS WHEN WORKING WITH THE PARTS MOUNTED ON THE VEHICLE

1) When working under a vehicle which is jacked-up, always be sure to use safety stands.
2) The parking brake must always be applied during working. Also, in automatic transmission models, keep the select lever set to P (Parking) range.
3) Be sure the workshop is properly ventilated when running the engine. Further, be careful not to touch the belt or fan while the engine is operating.
4) Be careful not to touch hot metal parts, especially the radiator and exhaust system immediately after the engine has been shut off.

B: PRECAUTIONS IN TROUBLE DIAGNOSIS AND REPAIR OF ELECTRIC PARTS

1) The battery cable must be disconnected from battery's (–) terminal, and the ignition switch must be set to OFF position, unless otherwise required by the diagnostics.
2) Securely fasten the wiring harness with clamps and slips so that the harness does not interfere with body end parts or edges and bolts or screws.
3) When installing the parts, be careful not to catch them on the wiring harness.
4) When disconnecting a connector, do not pull the wires, but pull while holding the connector body.

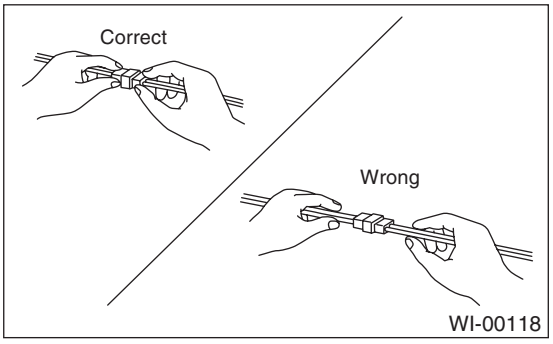

5) Some connectors are provided with a lock. One type of such a connector is disconnected by pushing the lock, and the other, by moving the lock up. In either type the lock shape must be identified before attempting to disconnect the connector.
To connect, insert the connector until it snaps and confirm that it is tightly connected.

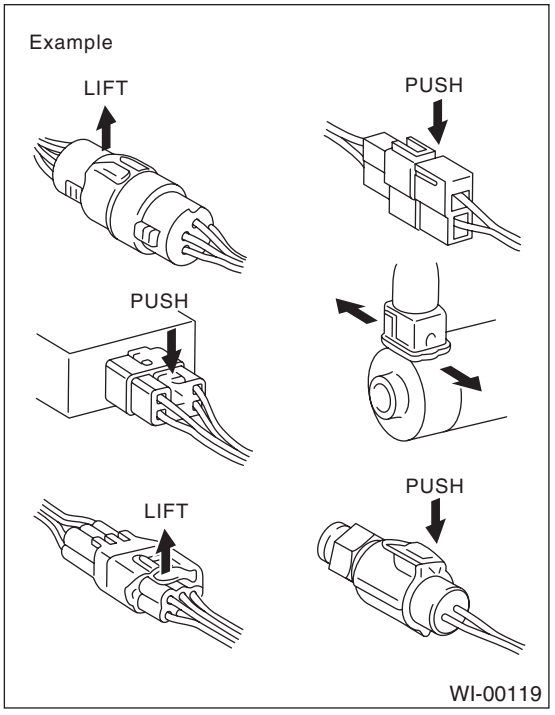

6) When checking continuity between connector terminals, or measuring the voltage across the terminal and ground, always contact tester probe(s) on terminals from the wiring connection side. If the probe is too thick to gain access to the terminal, use "mini" test leads.
To check water-proof connectors (which are not accessible from the wiring side), contact test probes on the terminal side being careful not to bend or damage terminals.

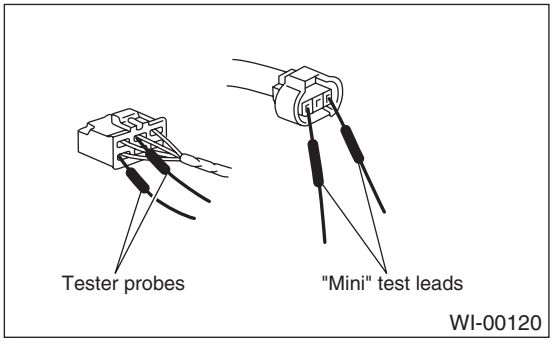

7) Sensors, relays, electrical unit, etc., are sensitive to strong impacts.
Handle them with care so that they are not dropped or mishandled.

3. Super Multiple Junction (SMJ)

A: HOW TO USE SUPER MULTIPLE JUNCTION (SMJ)

The “SMJ” indicated in wiring diagrams is shown in a simplified form.

B: TERMINAL ARRANGEMENT

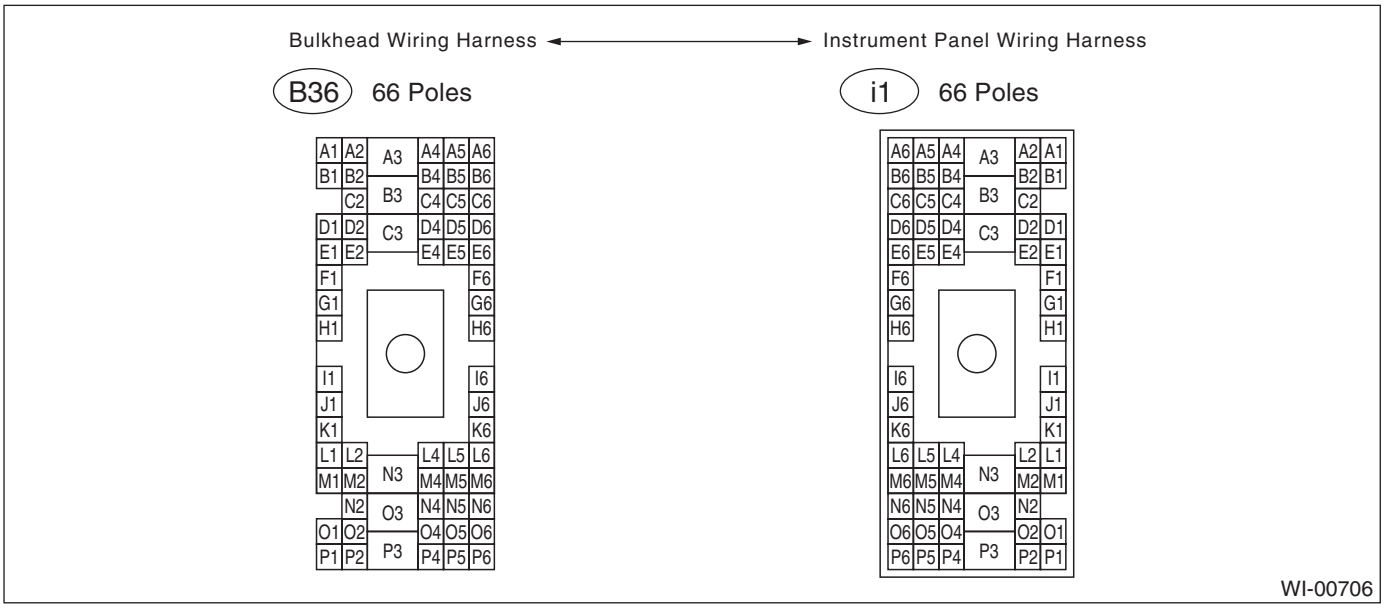

C: INSTALLATION

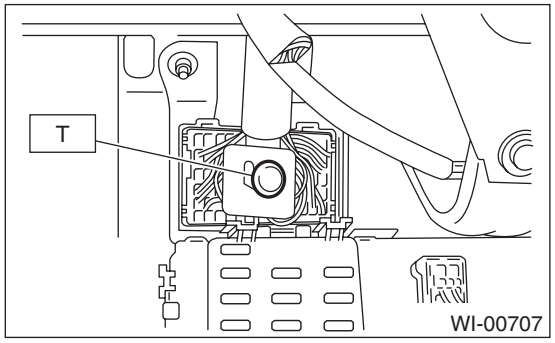

Tightening torque:

T: 4.4 N·m (0.45 kgf-m, 3.3 ft-lb)

NOTE:

- Align the cutout portion of one connector with that of other before tightening the connecting bolt.
- Do not tighten the bolt excessively since this may deform the connectors.

D: EXPLANATION OF SMJ SHOWN IN THE WIRING DIRAM

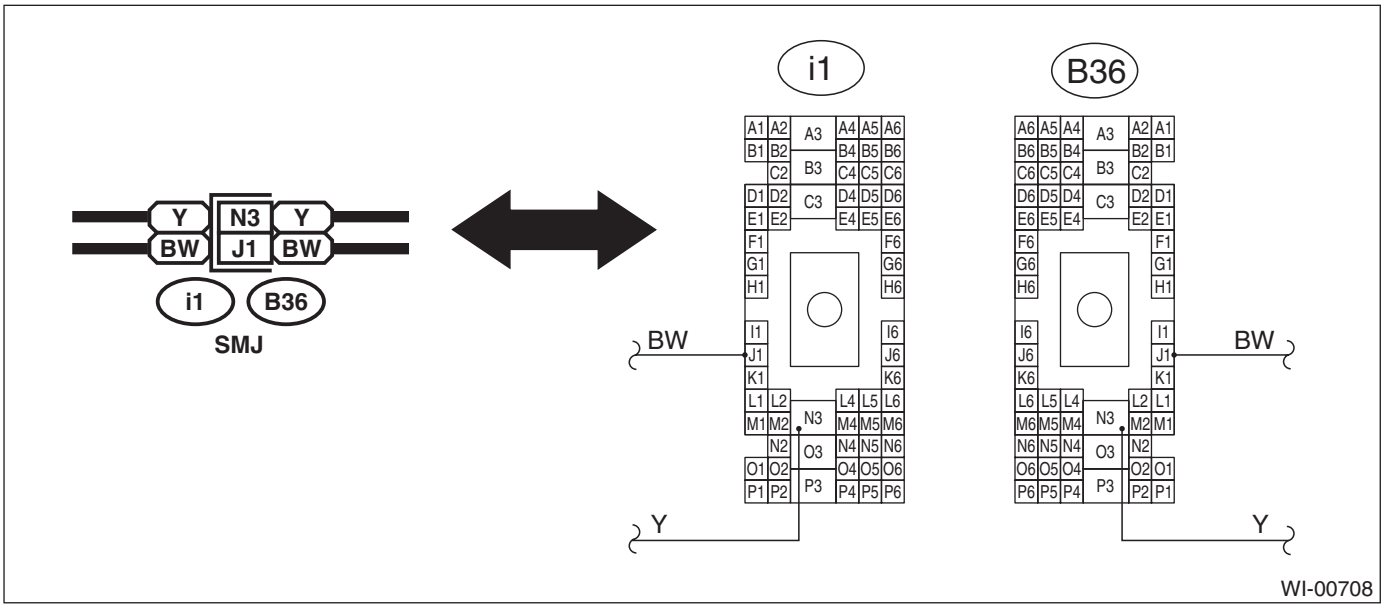

MEMO:

4. Power Supply Routing

A: SCHEMATIC

P-SUP-01

P-SUP-01

MAIN FUSE BOX (M/B)

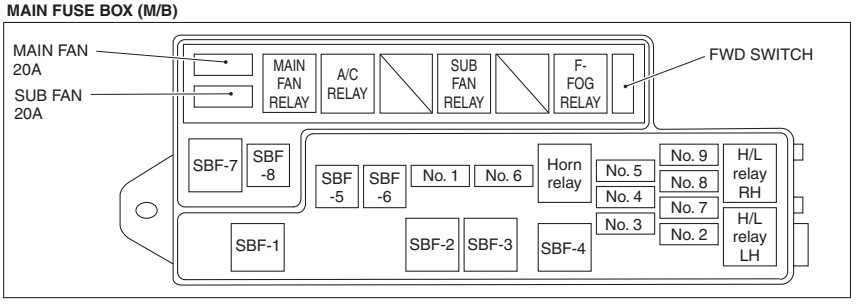

FUSE & RELAY BOX (F/B)

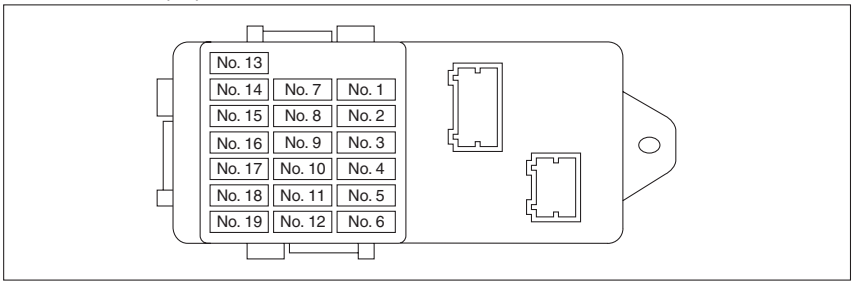

WI-05686

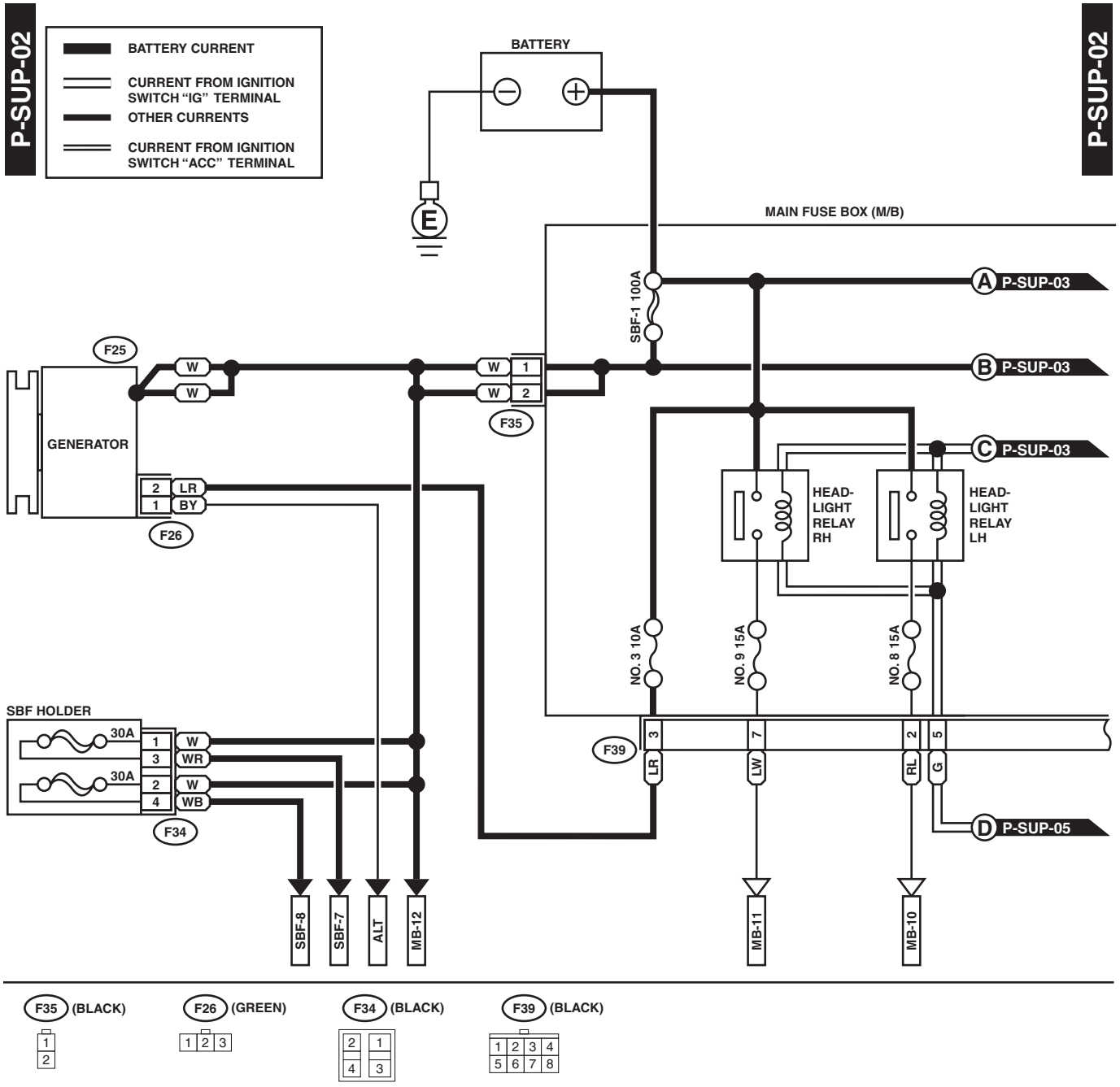
P-SUP-02
BATTERY CURRENT
CURRENT FROM IGNITION SWITCH "IG" TERMINAL
OTHER CURRENTS
CURRENT FROM IGNITION SWITCH "ACC" TERMINAL
BATTERY
E
MAIN FUSE BOX (M/B)
SBF-1 100A
A P-SUP-03
B P-SUP-03
C P-SUP-03
D P-SUP-05
F25
W
W
GENERATOR
2 LR
1 BY
F26
W 1
W 2
F35
HEAD-LIGHT RELAY RH
HEAD-LIGHT RELAY LH
NO. 3 10A
NO. 9 15A
NO. 8 15A
SBF HOLDER
30A
30A
1 W
3 WR
2 W
4 WB
F34
F39
3 LR
7 LW
2 RL
5 G
SBF-8
SBF-7
ALT
MB-12
MB-11
MB-10
F35 (BLACK)
F26 (GREEN)
F34 (BLACK)
F39 (BLACK)

WI-05687

POWER SUPPLY ROUTING

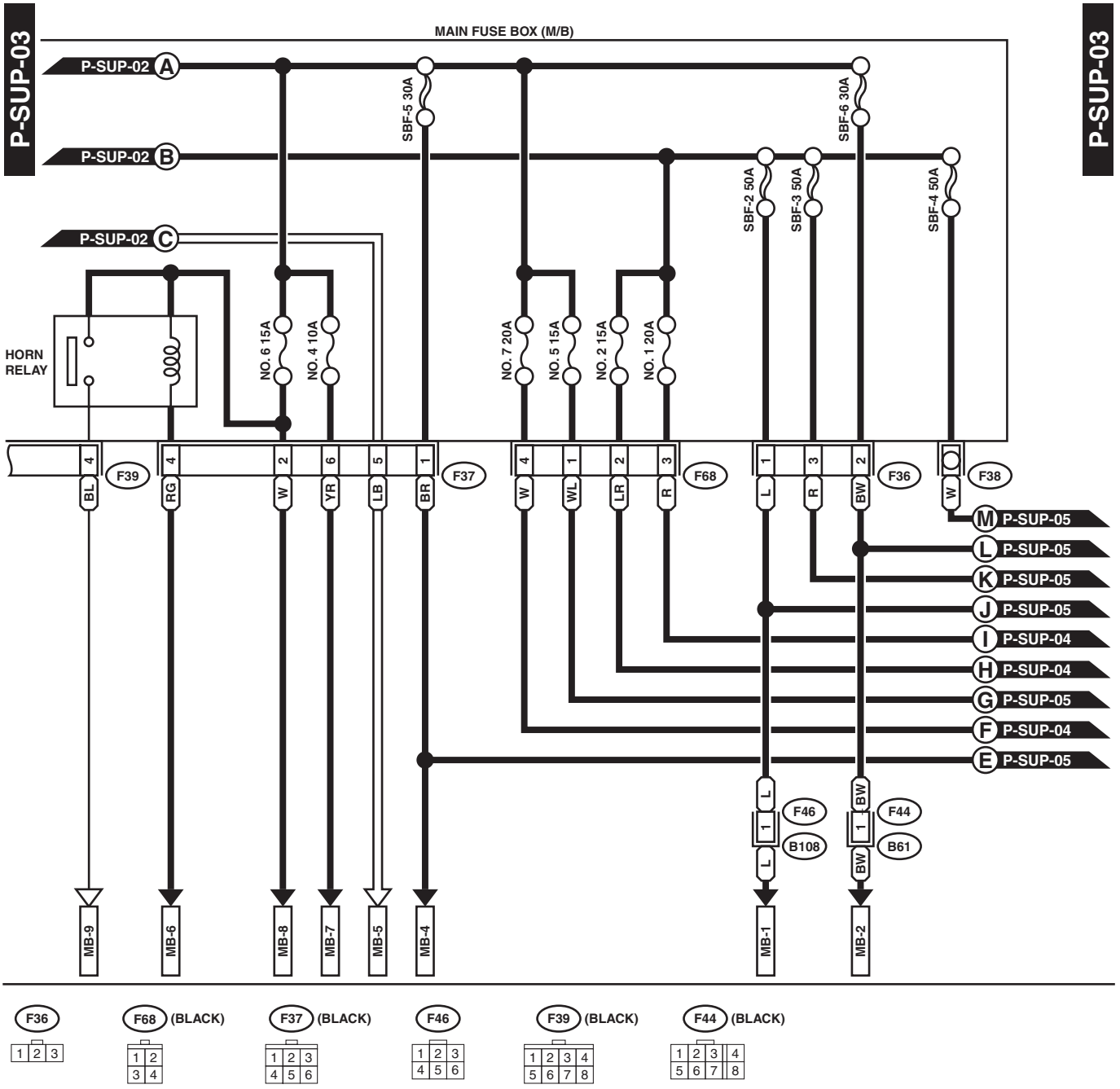

WI-05688

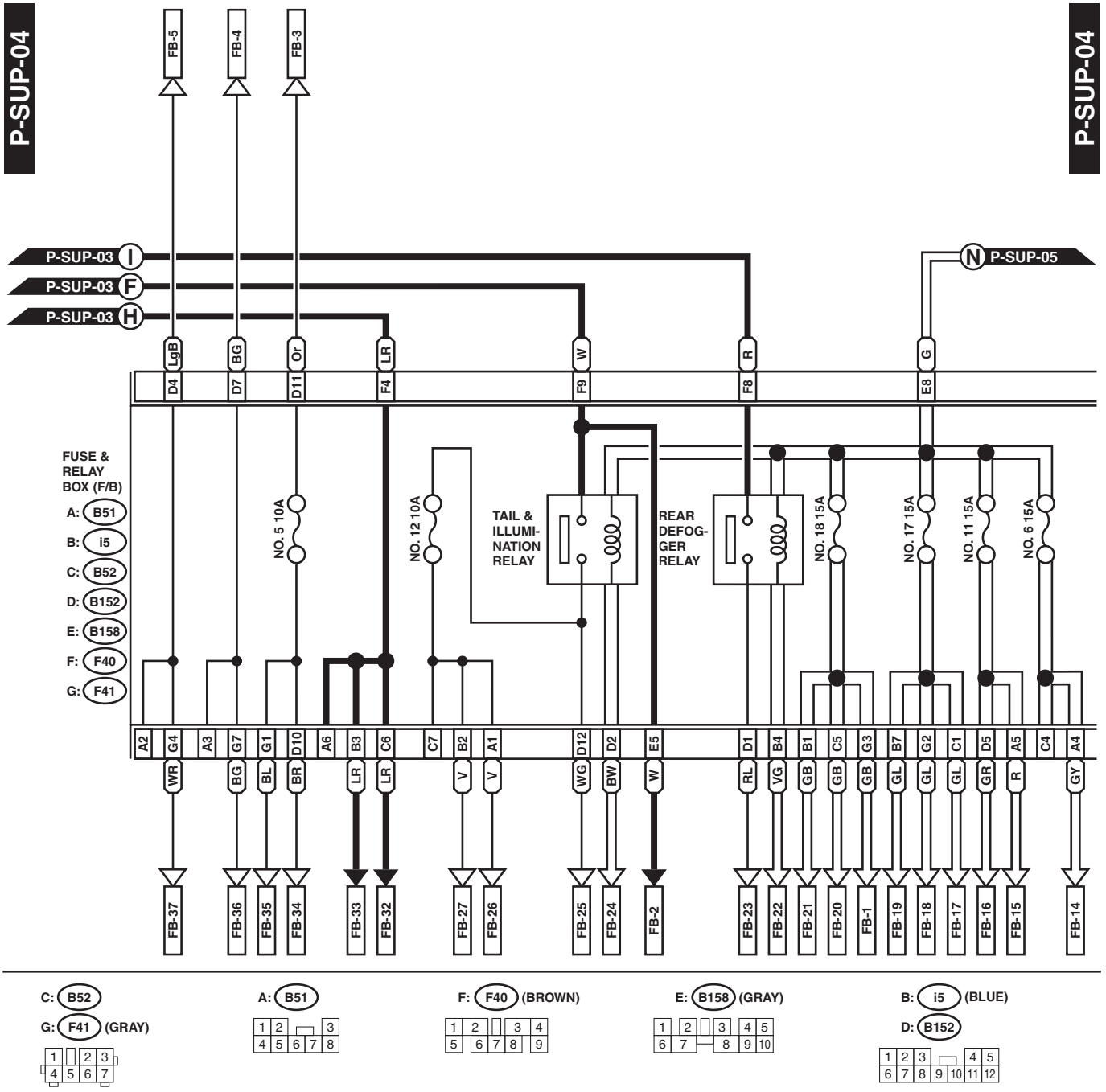
P-SUP-04
P-SUP-04
FB-5
FB-4
FB-3
P-SUP-03 I
P-SUP-03 F
P-SUP-03 H
N P-SUP-05
LgB
BG
Or
LR
W
R
G
D4
D7
D11
F4
F9
F8
E8
FUSE & RELAY BOX (F/B)
A: B51
B: i5
C: B52
D: B152
E: B158
F: F40
G: F41
NO. 5 10A
NO. 12 10A
TAIL & ILLUMI-NATION RELAY
REAR DEFOG-GER RELAY
NO. 18 15A
NO. 17 15A
NO. 11 15A
NO. 6 15A
A2 G4 A3 G7 G1 D10 A6 B3 C6 C7 B2 A1 D12 D2 E5 D1 B4 B1 C5 G3 B7 G2 C1 D5 A5 C4 A4
WR BG BL BR LR LR V V WG BW W RL VG GB GB GB GL GL GL GR R GY
FB-37 FB-36 FB-35 FB-34 FB-33 FB-32 FB-27 FB-26 FB-25 FB-24 FB-2 FB-23 FB-22 FB-21 FB-20 FB-1 FB-19 FB-18 FB-17 FB-16 FB-15 FB-14
C: B52
G: F41 (GRAY)
A: B51
F: F40 (BROWN)
E: B158 (GRAY)
B: i5 (BLUE)
D: B152

WI-05689

POWER SUPPLY ROUTING

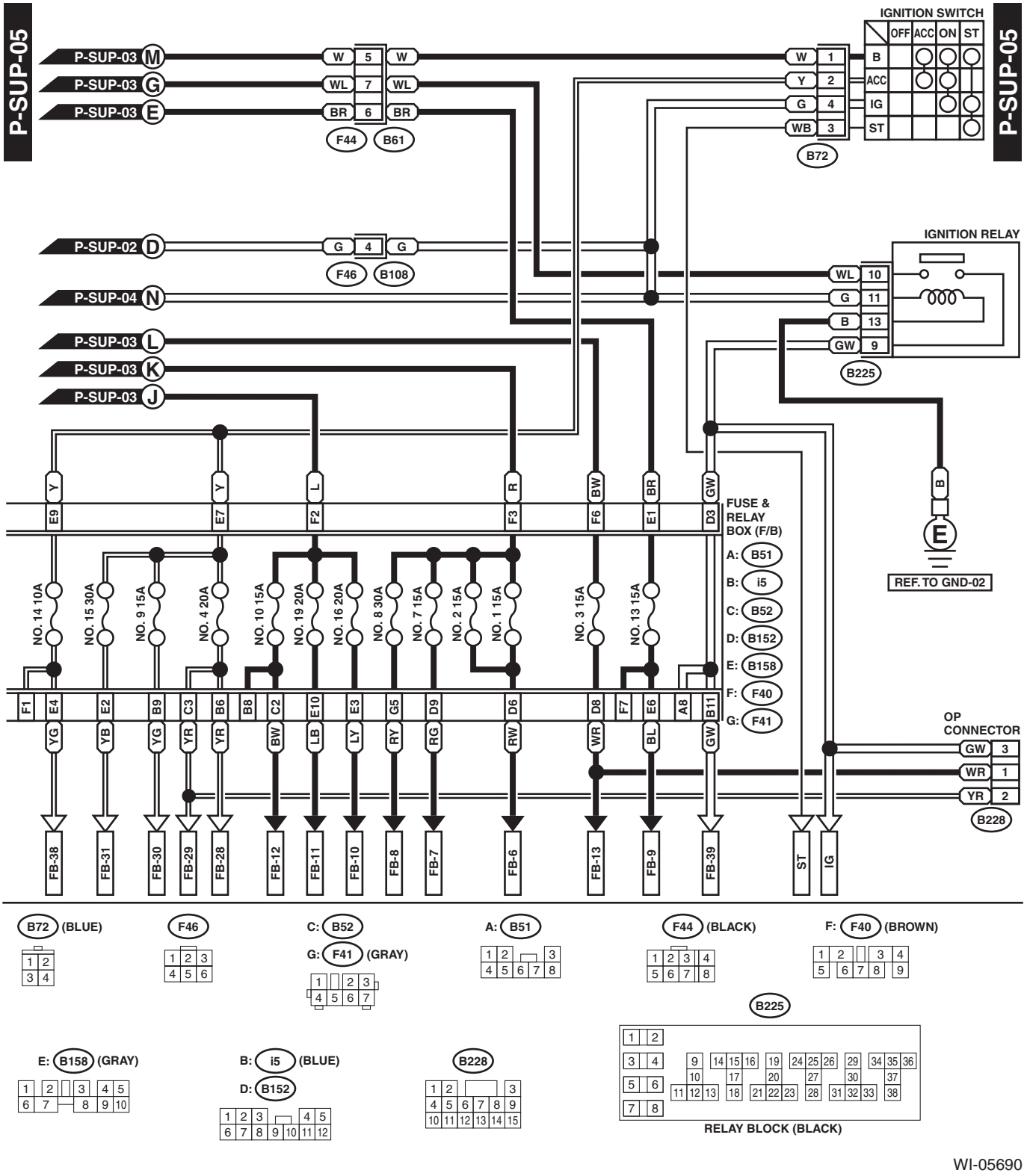

No.	Load
MB-1	Fuse (Seat heater/rear accessory power supply relay)
MB-2	Power window circuit breaker
MB-4	Data link connector Engine control module Main relay
MB-5	Cruise control sub switch Day time running light control module OP connector
MB-6	Horn switch Keyless entry control module Security horn relay SPORT shift switch
MB-7	Transmission control module (AT)
MB-8	Hazard switch Keyless entry control module Key warning switch Stop & turn module
MB-9	Horn
MB-10	Headlight LH
MB-11	Combination meter Headlight RH
MB-12	A/C relay holder SBF holder
SBF-7	ABS control module
SBF-8	Oxygen sensor heater relay
ALT	Combination meter OP connector
IG	Check connector Ignition relay-2 Keyless entry control module OP connector Security control module Vehicle speed sensor (MT)
ST	Cruise control module Engine control module (AT) Inhibitor switch (AT) Interrupt relay Starter interlock relay
FB-1	ABS control module Main fan relay
FB-2	Parking switch Security control module
FB-3	Parking switch Security control module
FB-4	Combination meter Combination switch (Lighting) Hazard switch Keyless entry control module Rear combination light Stop & turn module
FB-5	Combination meter Combination switch (Lighting) Keyless entry control module Rear combination light Stop & turn module
FB-6	Blower motor relay

No.	Load
FB-7	Front fog light relay
FB-8	ABS control module
FB-9	Fuel pump relay
FB-10	Stop light switch
FB-11	Cargo Light SPORT light relay Wiper deicer relay
FB-12	Trailer connector
FB-13	Integrated module Keyless buzzer Keyless entry control module OP connector
FB-14	Airbag control module
FB-15	Airbag control module
FB-16	Daytime running light control module Daytime running light relay Engine control module Fuel pump relay Ignition coil and ignitor Integrated module Transmission control module
FB-17	A/C pressure switch Blower motor relay
FB-18	A/C relay Sub fan relay
FB-19	Manual A/C control module
FB-20	Back-up light switch (MT) Cruise control module Inhibitor switch (AT) Power window relay
FB-21	Cruise control main switch
FB-22	Engine control module Manual A/C control module
FB-23	Choke coil Rear defogger Rear defogger condenser
FB-24	Combination switch (Lighting) Engine control module OP connector
FB-25	Parking switch
FB-26	AT select lever illumination light Integrated module OP connector Power window main switch Seat heater switch
FB-27	Audio Ashtray illumination light SPORT light switch CD illumination light Cigar lighter illumination light Front fog switch Globe box light Hazard switch Manual A/C control module Wiper deicer switch
FB-28	Front accessory power supply socket Multiple power socket relay (Option)

No.	Load
FB-29	Compass mirror Integrated module Mirror heater LH Mirror heater RH OP connector Rear accessory power supply relay Remote control rearview mirror switch Vanity mirror illumination light
FB-30	Audio
FB-31	Combination switch (Washer) Front washer motor Front wiper motor
FB-32	Combination meter Integrated module Key illumination light Key warning and step light diode Room light Security control module Security horn relay Stop light Step light
FB-33	Audio Combination meter
FB-34	License plate light LH License plate light RH Rear combination light LH Rear combination light RH Rear finisher light LH Rear finisher light RH Trailer connector
FB-35	Front clearance light LH Front clearance light RH
FB-36	Front turn signal light LH (Up, Lo)
FB-37	Front turn signal light RH (Up, Lo)
FB-39	Combination meter Hazard switch

MEMO:

5. Ground Distribution

A: SCHEMATIC

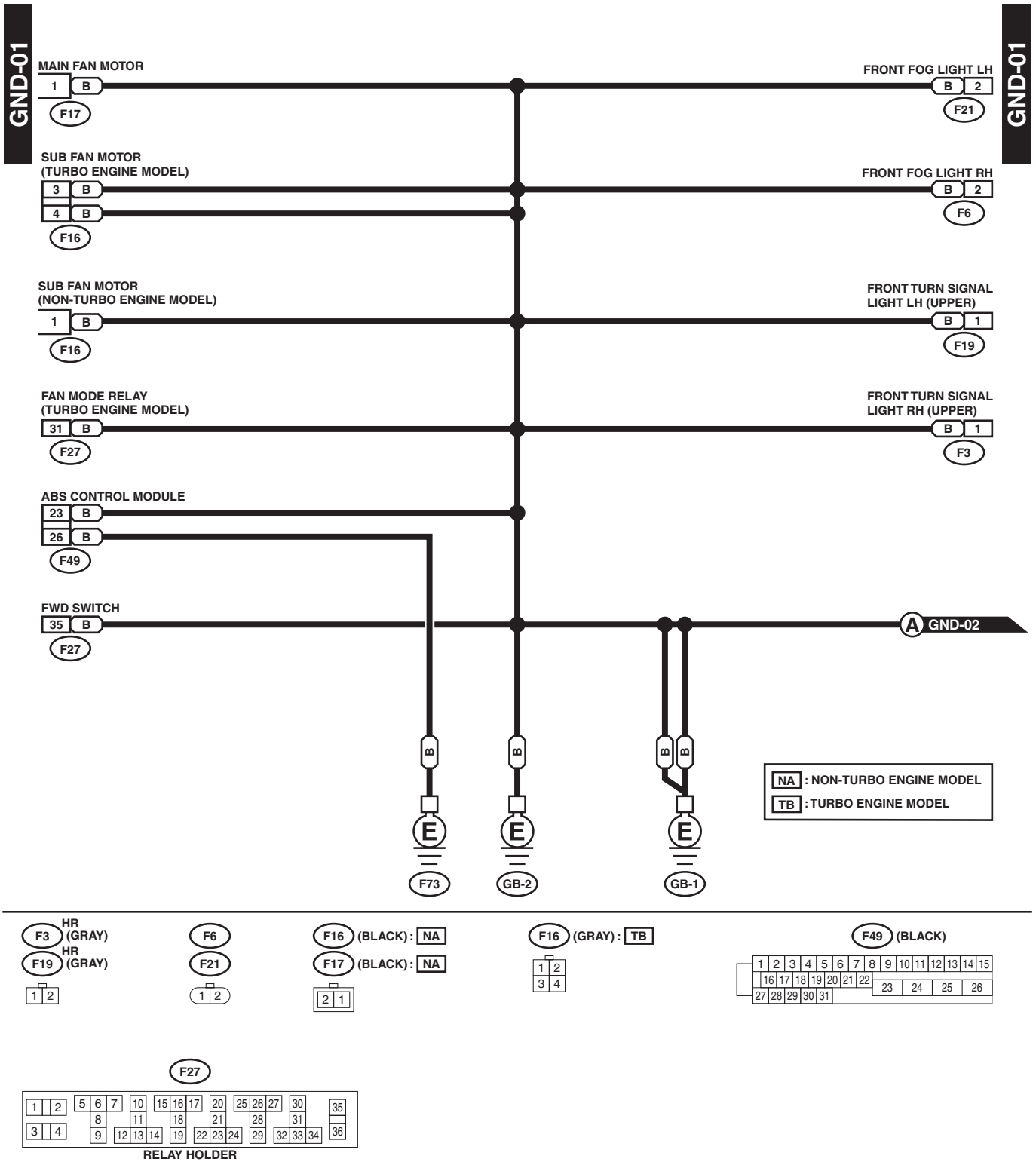

WI-06751

GROUND DISTRIBUTION

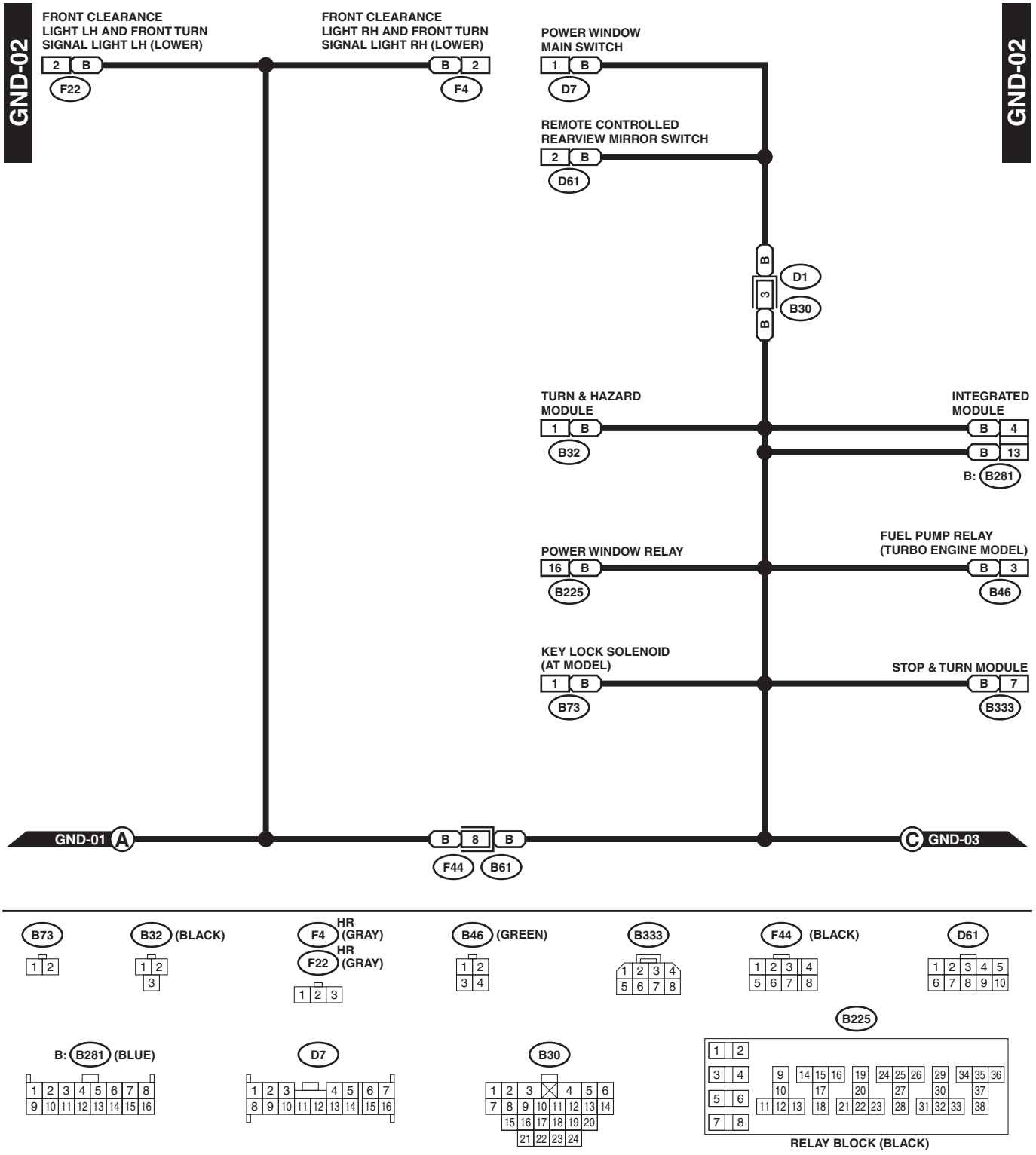

WI-06752

GROUND DISTRIBUTION

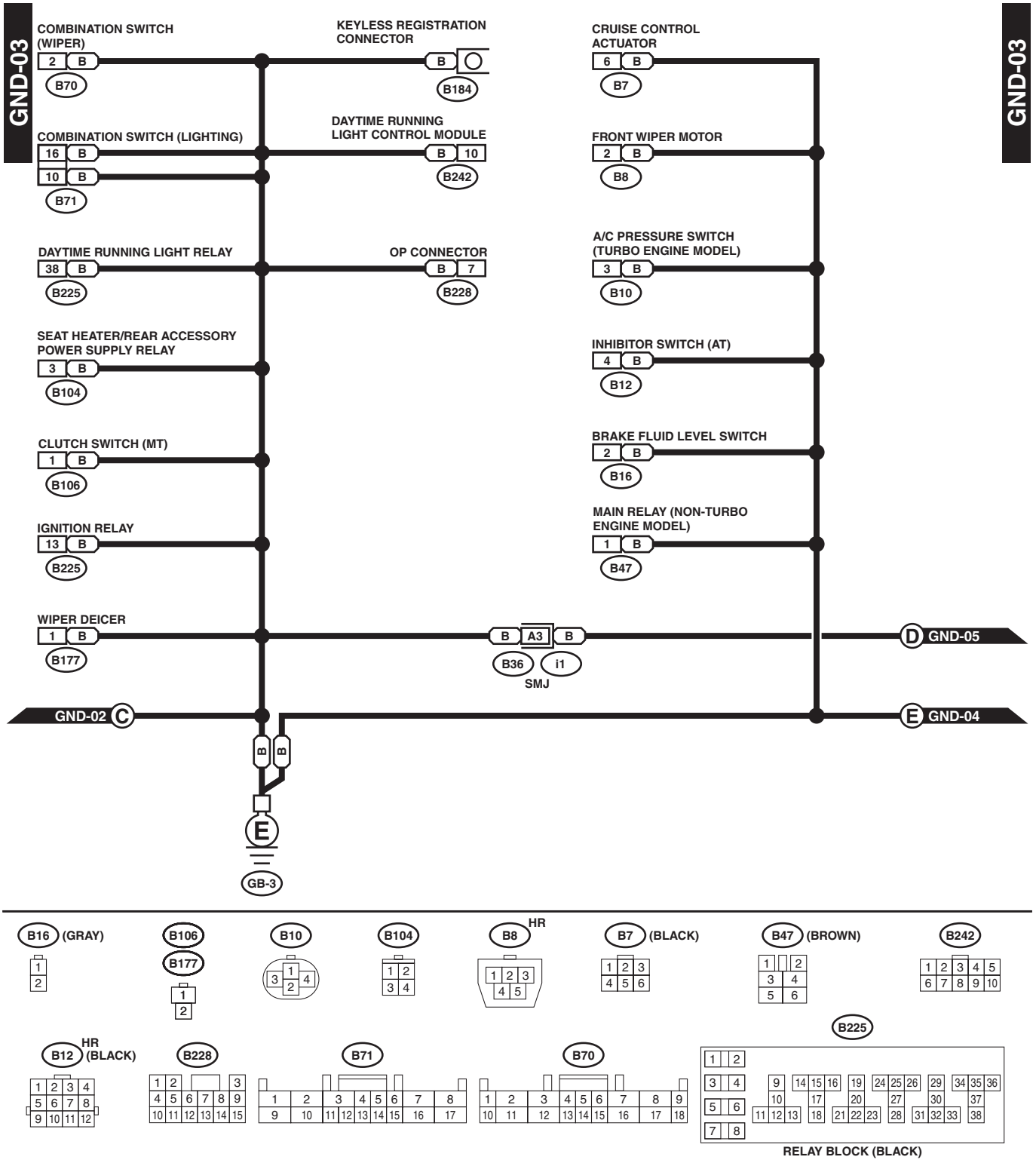

WI-06753

GROUND DISTRIBUTION

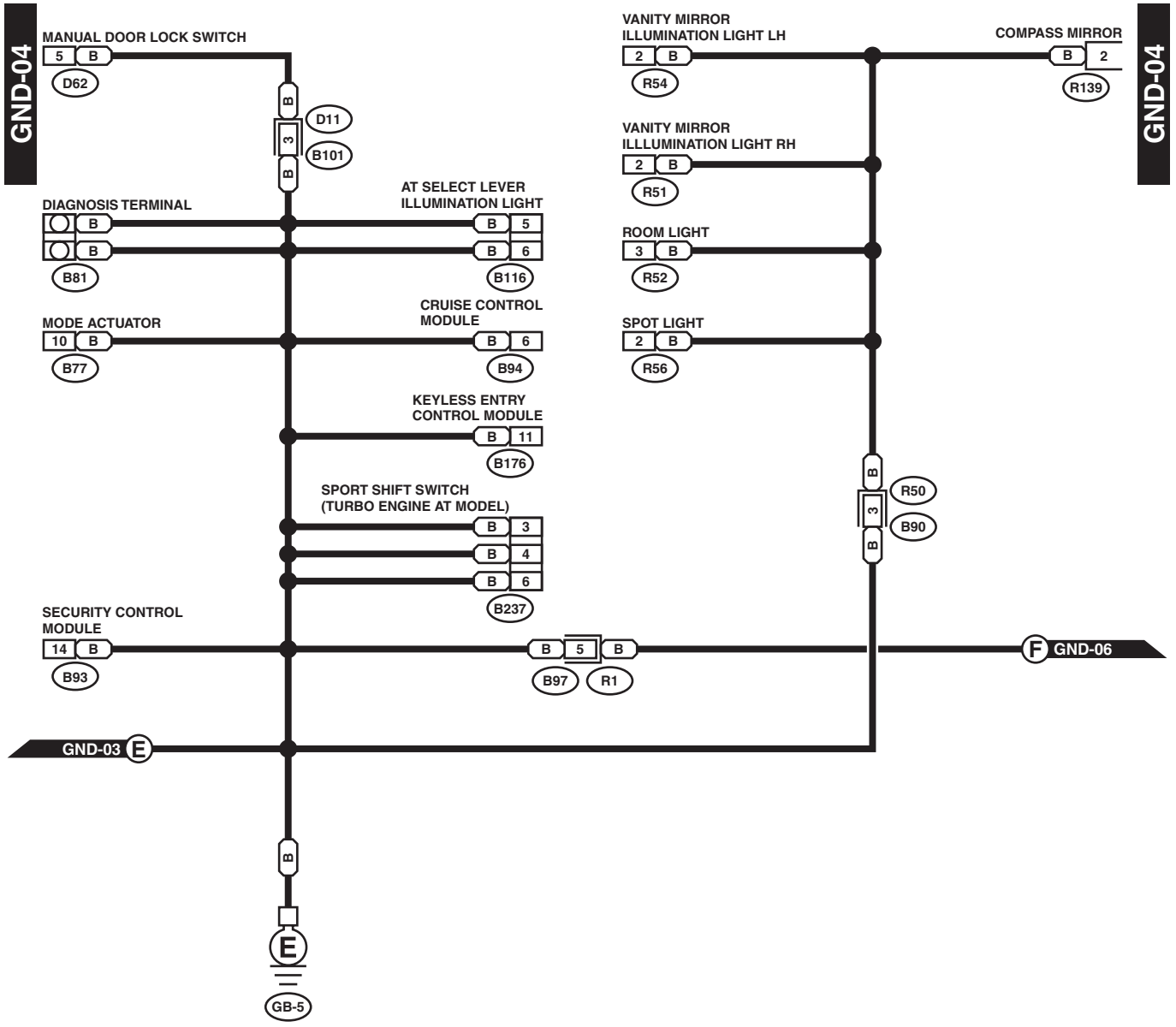

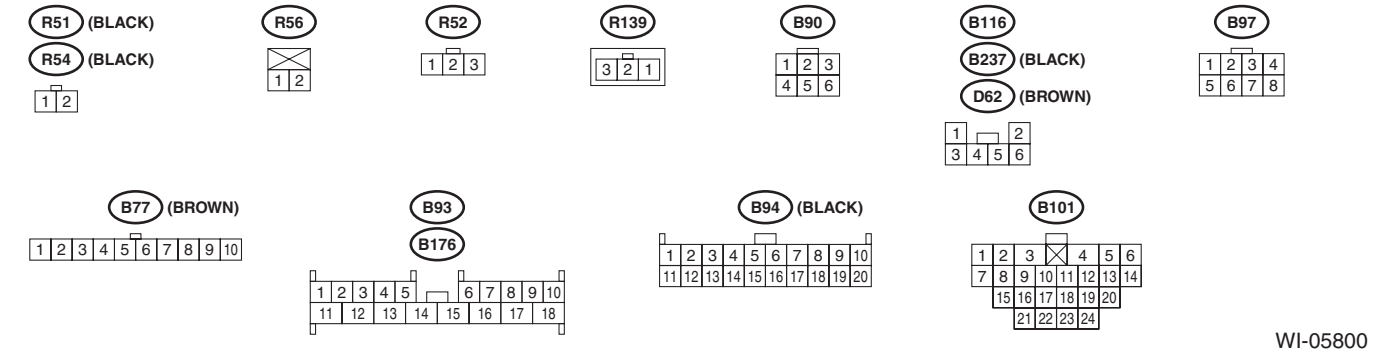

WI-05800

GROUND DISTRIBUTION

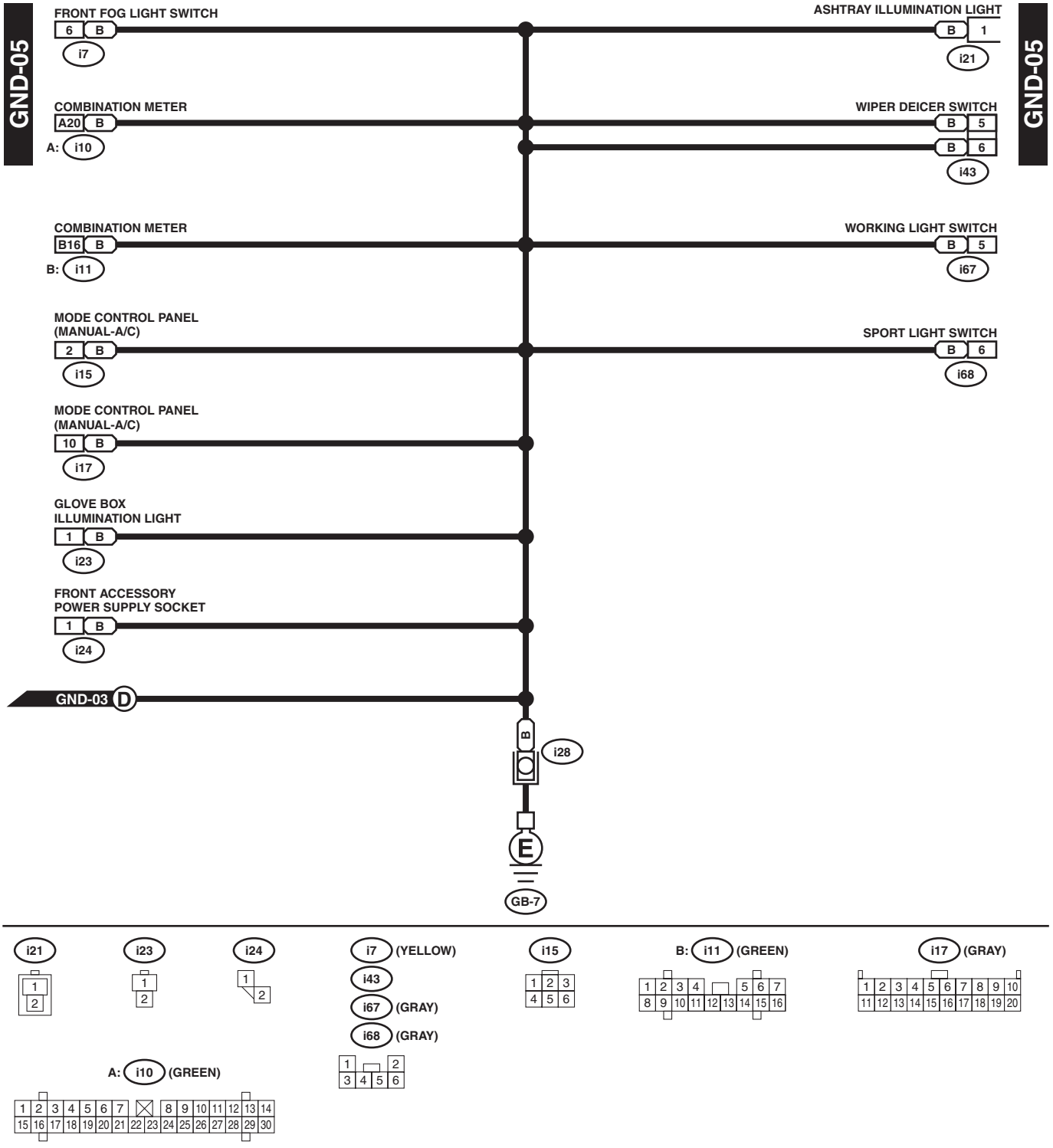

WI-05695

GROUND DISTRIBUTION

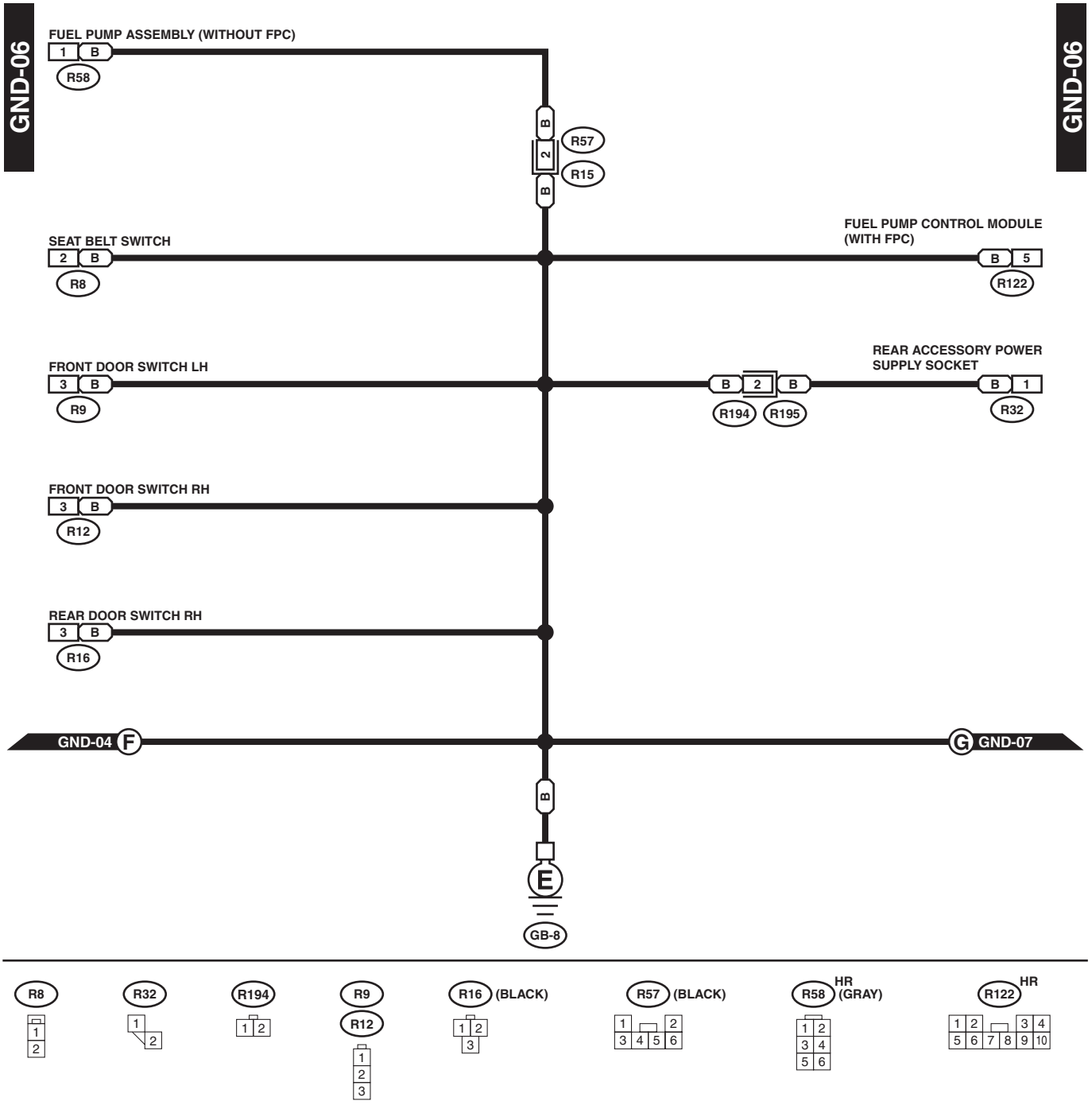

WI-06754

GROUND DISTRIBUTION

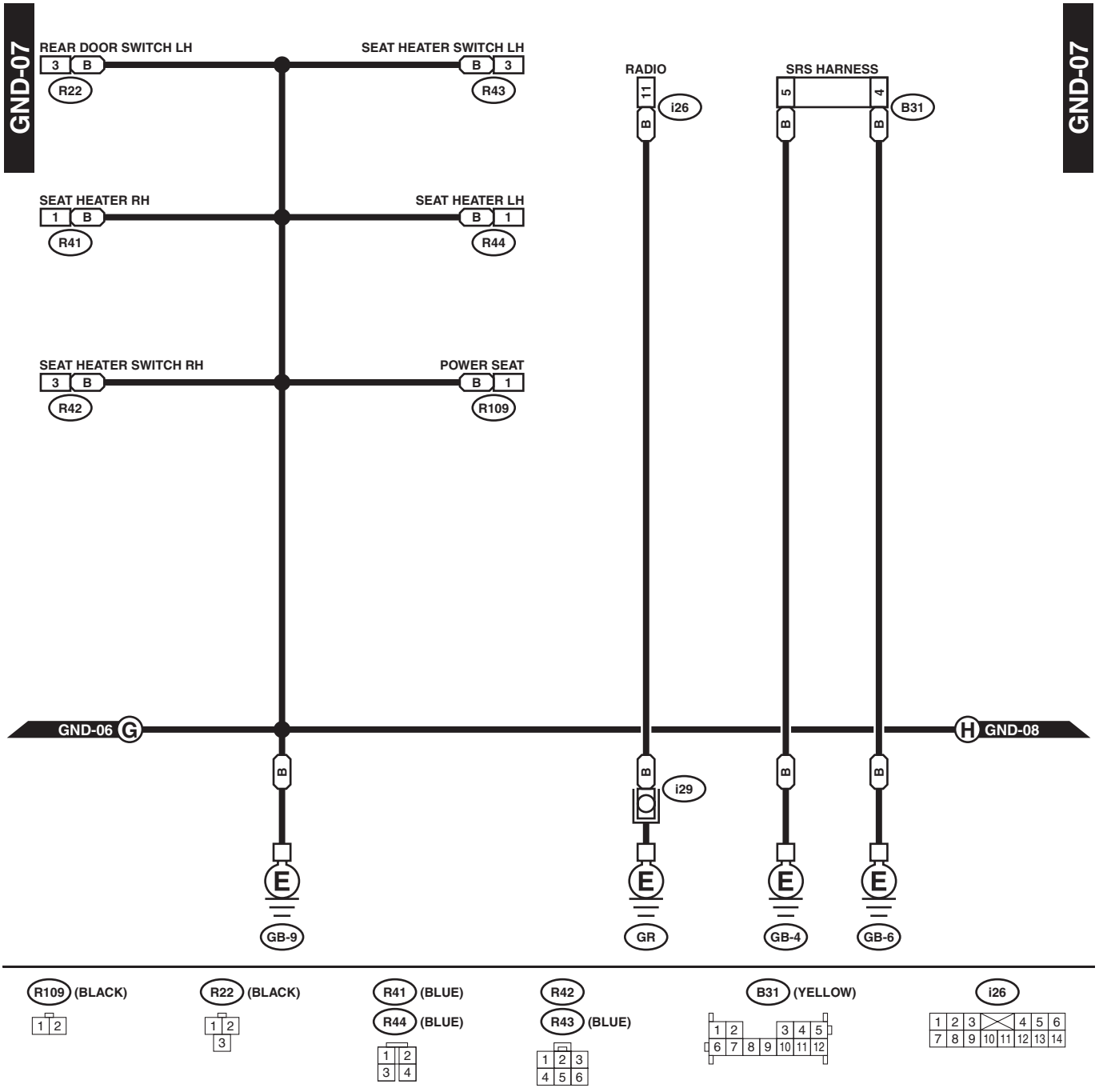

WI-05802

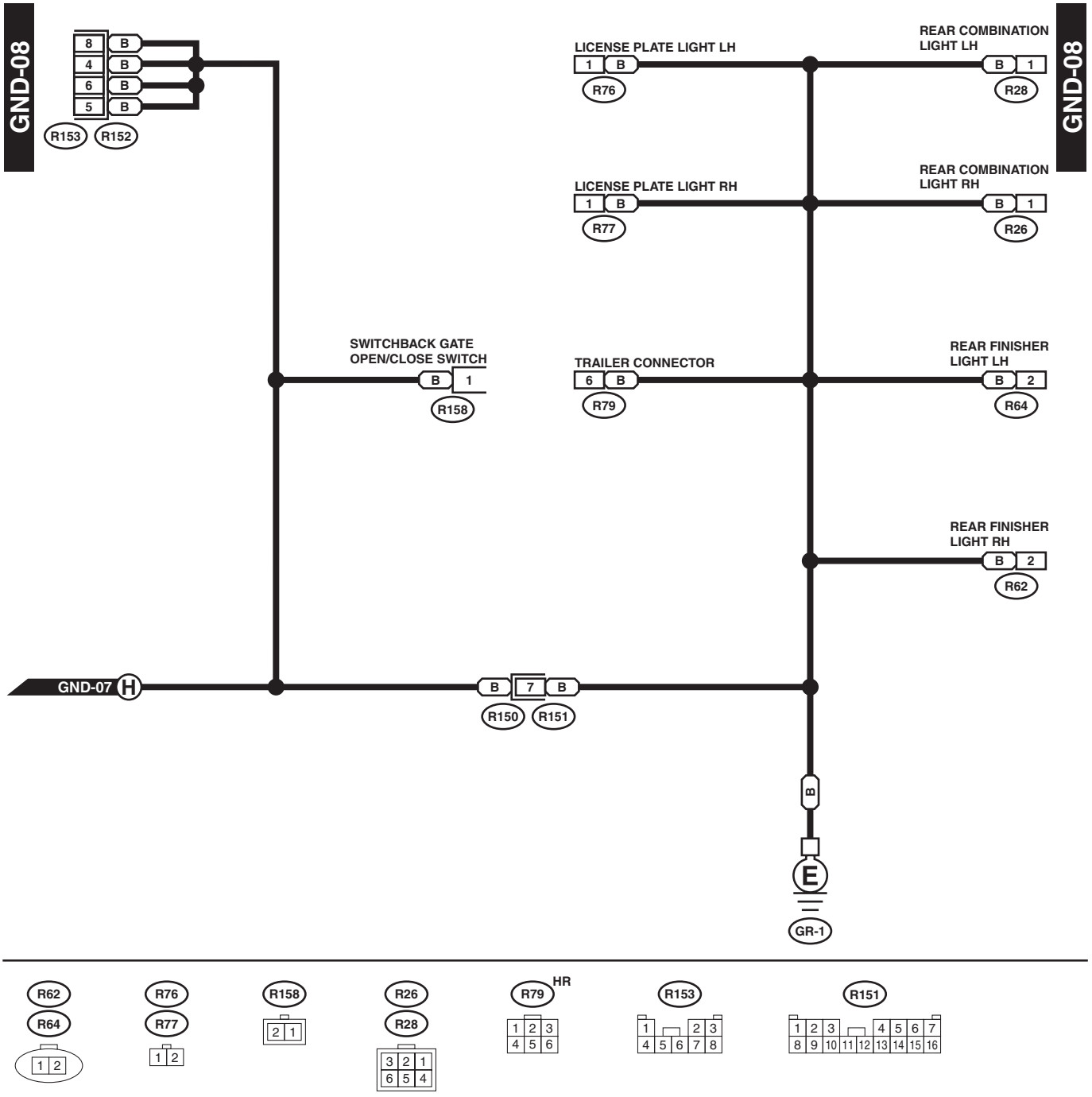
GND-08
8 B
4 B
6 B
5 B
R153
R152
LICENSE PLATE LIGHT LH
1 B
R76
REAR COMBINATION LIGHT LH
B 1
R28
GND-08
LICENSE PLATE LIGHT RH
1 B
R77
REAR COMBINATION LIGHT RH
B 1
R26
SWITCHBACK GATE OPEN/CLOSE SWITCH
B 1
R158
TRAILER CONNECTOR
6 B
R79
REAR FINISHER LIGHT LH
B 2
R64
REAR FINISHER LIGHT RH
B 2
R62
GND-07 H
B 7 B
R150
R151
B
E
GR-1
R62
R64
1 2
R76
R77
1 2
R158
2 1
R26
R28
3 2 1
6 5 4
R79
HR
1 2 3
4 5 6
R153
1 2 3
4 5 6 7 8
R151
1 2 3 4 5 6 7
8 9 10 11 12 13 14 15 16

WI-06755

GROUND DISTRIBUTION

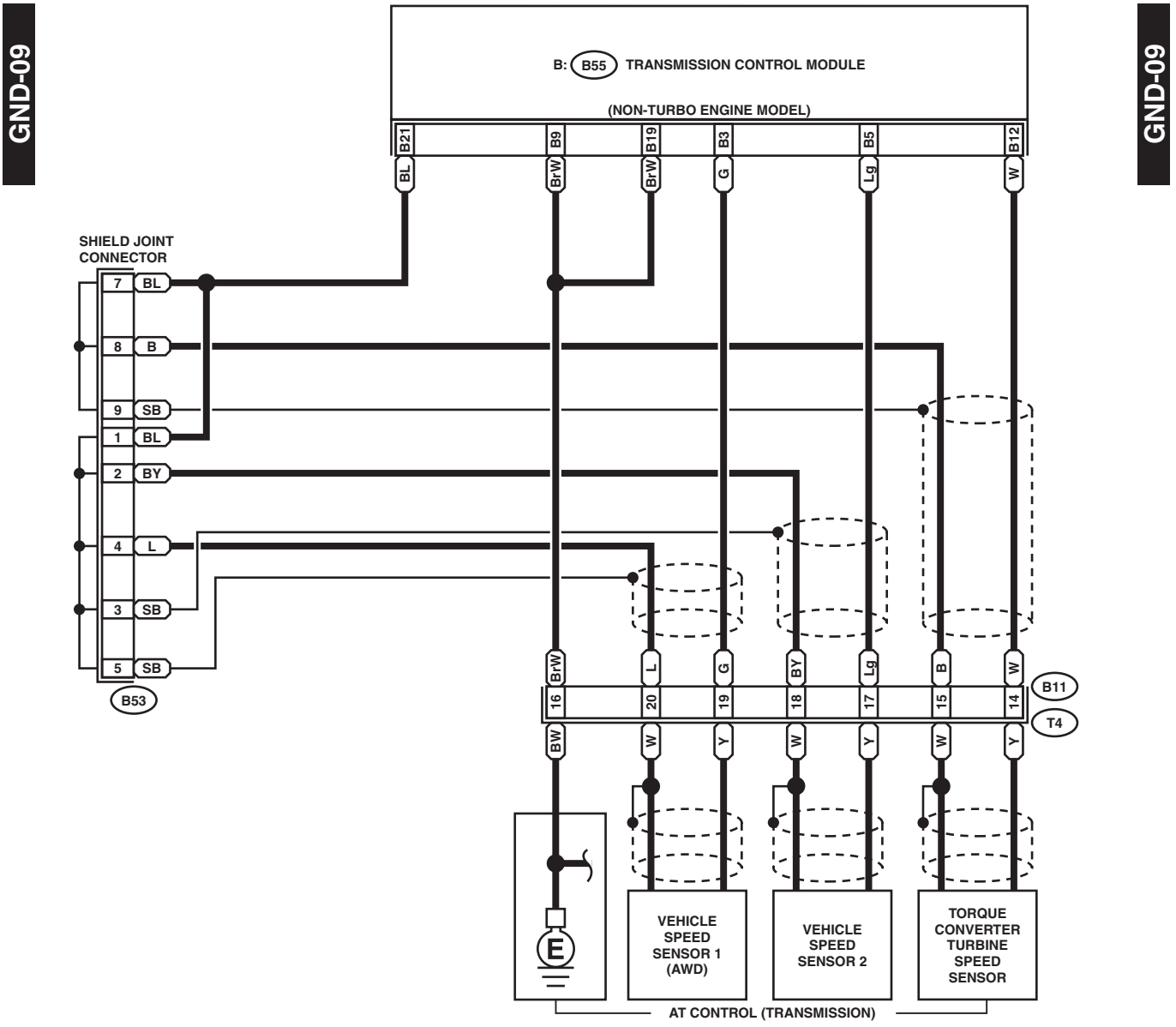

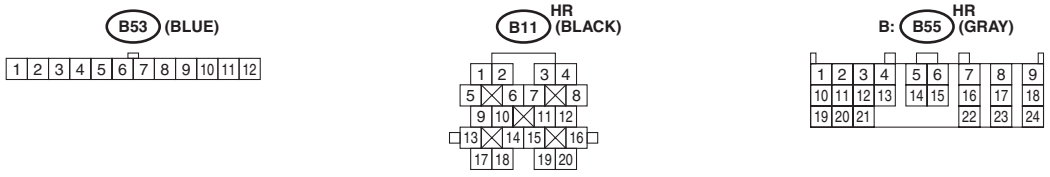

WI-06756

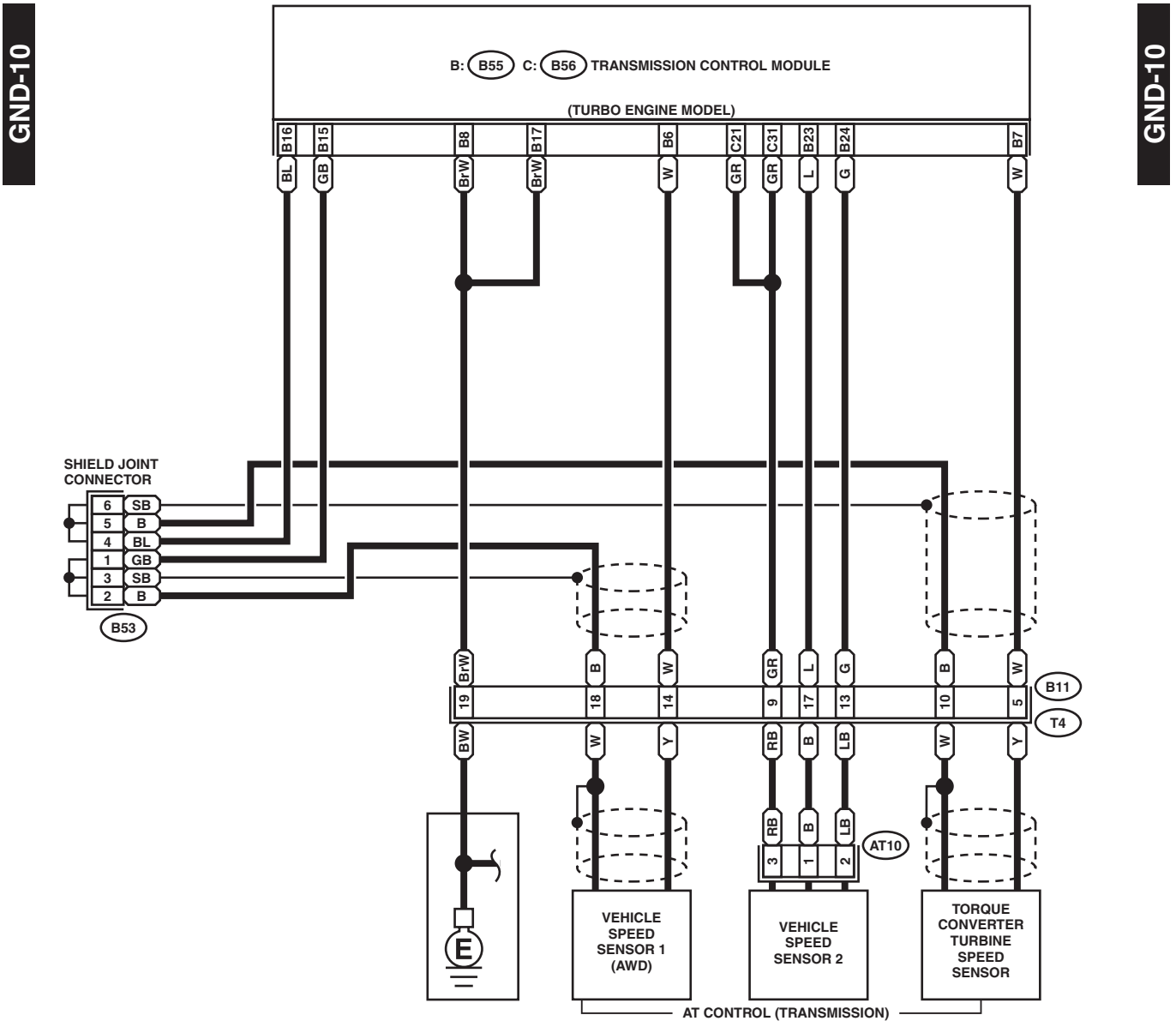
GND-10
GND-10
B: B55 C: B56 TRANSMISSION CONTROL MODULE
(TURBO ENGINE MODEL)
B16 B15 B8 B17 B6 C21 C31 B23 B24 B7
BL GB BrW BrW W GR GR L G W
SHIELD JOINT CONNECTOR
6 SB
5 B
4 BL
1 GB
3 SB
2 B
B53
BrW B W GR L G B W
19 18 14 9 17 13 10 5
B11
T4
BW W Y RB B LB W Y
RB B LB
3 1 2
AT10
E
VEHICLE SPEED SENSOR 1 (AWD)
VEHICLE SPEED SENSOR 2
TORQUE CONVERTER TURBINE SPEED SENSOR
AT CONTROL (TRANSMISSION)

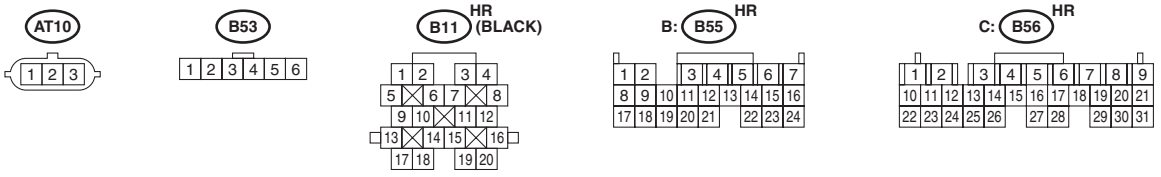
AT10
B53
B11 HR (BLACK)
B: B55 HR
C: B56 HR

WI-06757

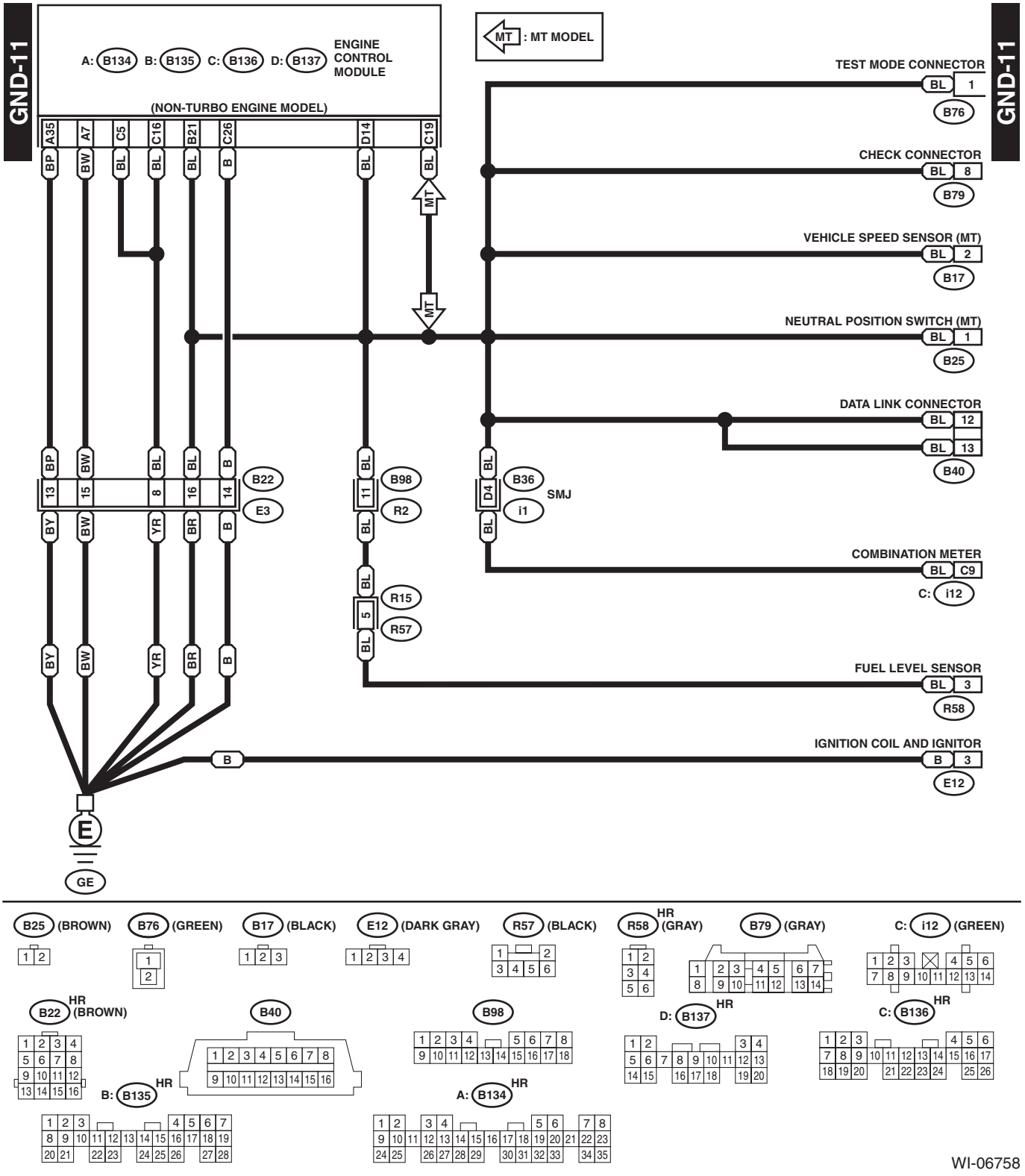
GND-11
A: B134 B: B135 C: B136 D: B137
ENGINE CONTROL MODULE
(NON-TURBO ENGINE MODEL)
MT : MT MODEL
TEST MODE CONNECTOR
CHECK CONNECTOR
VEHICLE SPEED SENSOR (MT)
NEUTRAL POSITION SWITCH (MT)
DATA LINK CONNECTOR
COMBINATION METER
FUEL LEVEL SENSOR
IGNITION COIL AND IGNITOR
SMJ
GE
B25 (BROWN)
B76 (GREEN)
B17 (BLACK)
E12 (DARK GRAY)
R57 (BLACK)
R58 (GRAY)
B79 (GRAY)
C: i12 (GREEN)
B22 (BROWN)
B40
B98
D: B137
C: B136
B: B135
A: B134
WI-06758

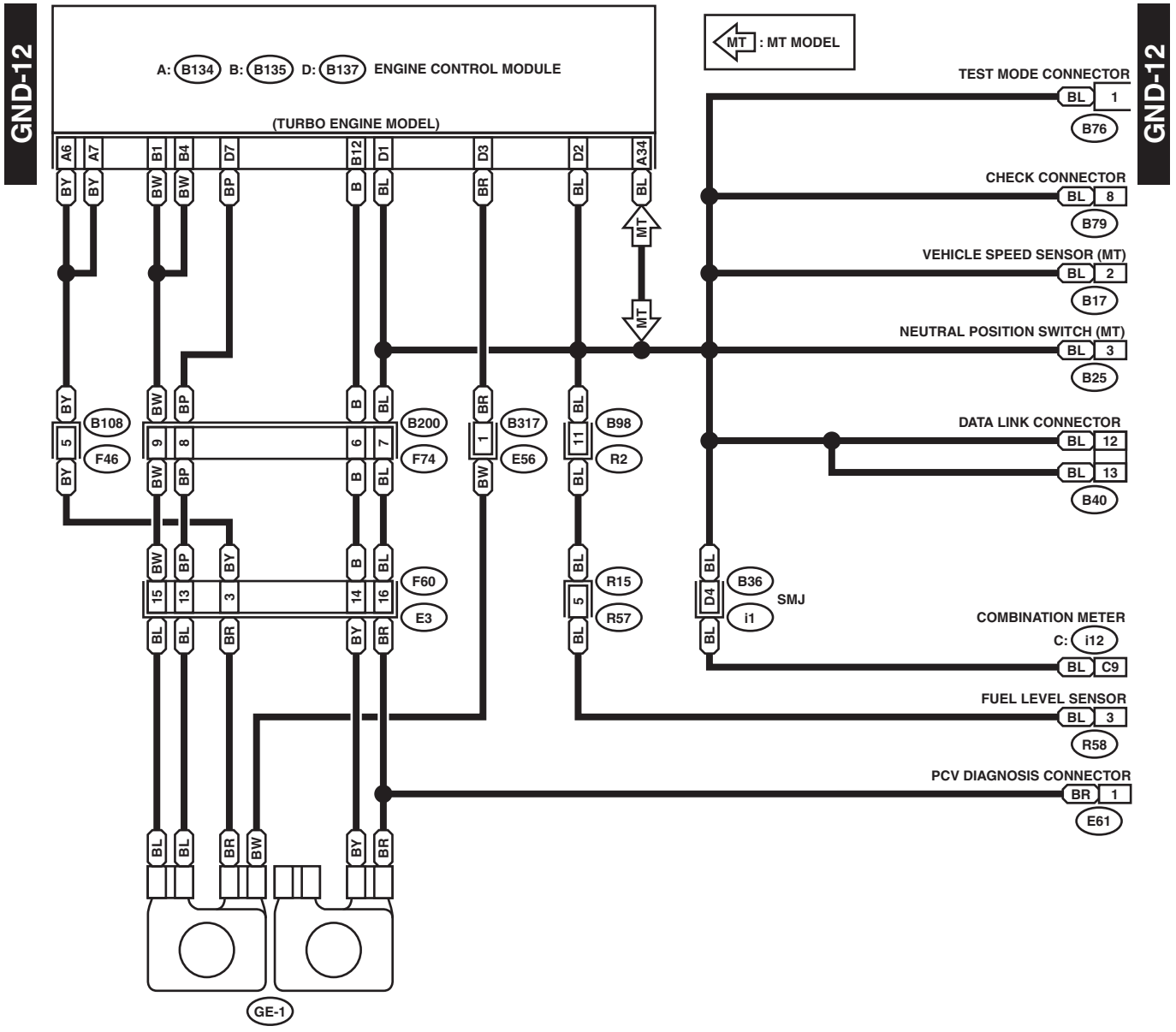
GND-12
A: B134 B: B135 D: B137 ENGINE CONTROL MODULE
(TURBO ENGINE MODEL)
MT : MT MODEL
TEST MODE CONNECTOR
B76
CHECK CONNECTOR
B79
VEHICLE SPEED SENSOR (MT)
B17
NEUTRAL POSITION SWITCH (MT)
B25
DATA LINK CONNECTOR
B40
B108
F46
B200
F74
B317
E56
B98
R2
F60
E3
R15
R57
B36
i1
SMJ
COMBINATION METER
C: i12
C9
FUEL LEVEL SENSOR
R58
PCV DIAGNOSIS CONNECTOR
E61
GE-1

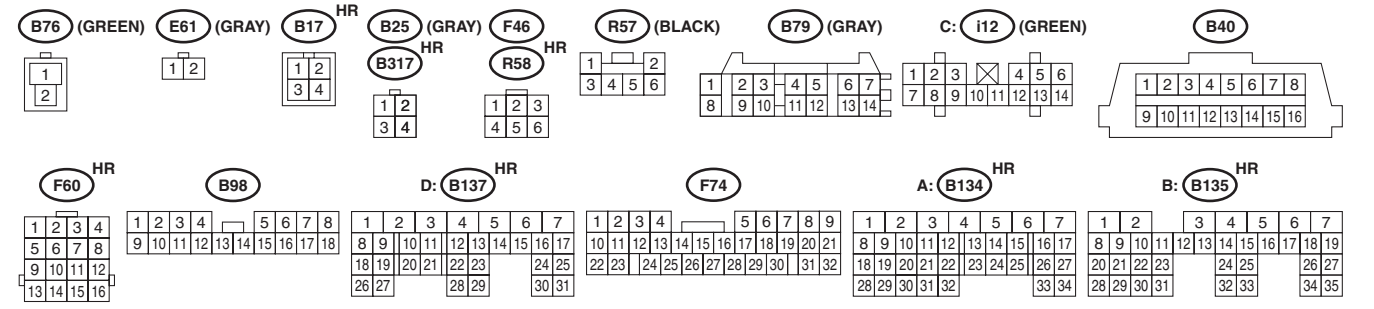
B76 (GREEN)
E61 (GRAY)
B17 HR
B25 (GRAY)
B317 HR
F46
R58 HR
R57 (BLACK)
B79 (GRAY)
C: i12 (GREEN)
B40
F60 HR
B98
D: B137 HR
F74
A: B134 HR
B: B135 HR

WI-06759

6. Airbag System

A: SCHEMATIC

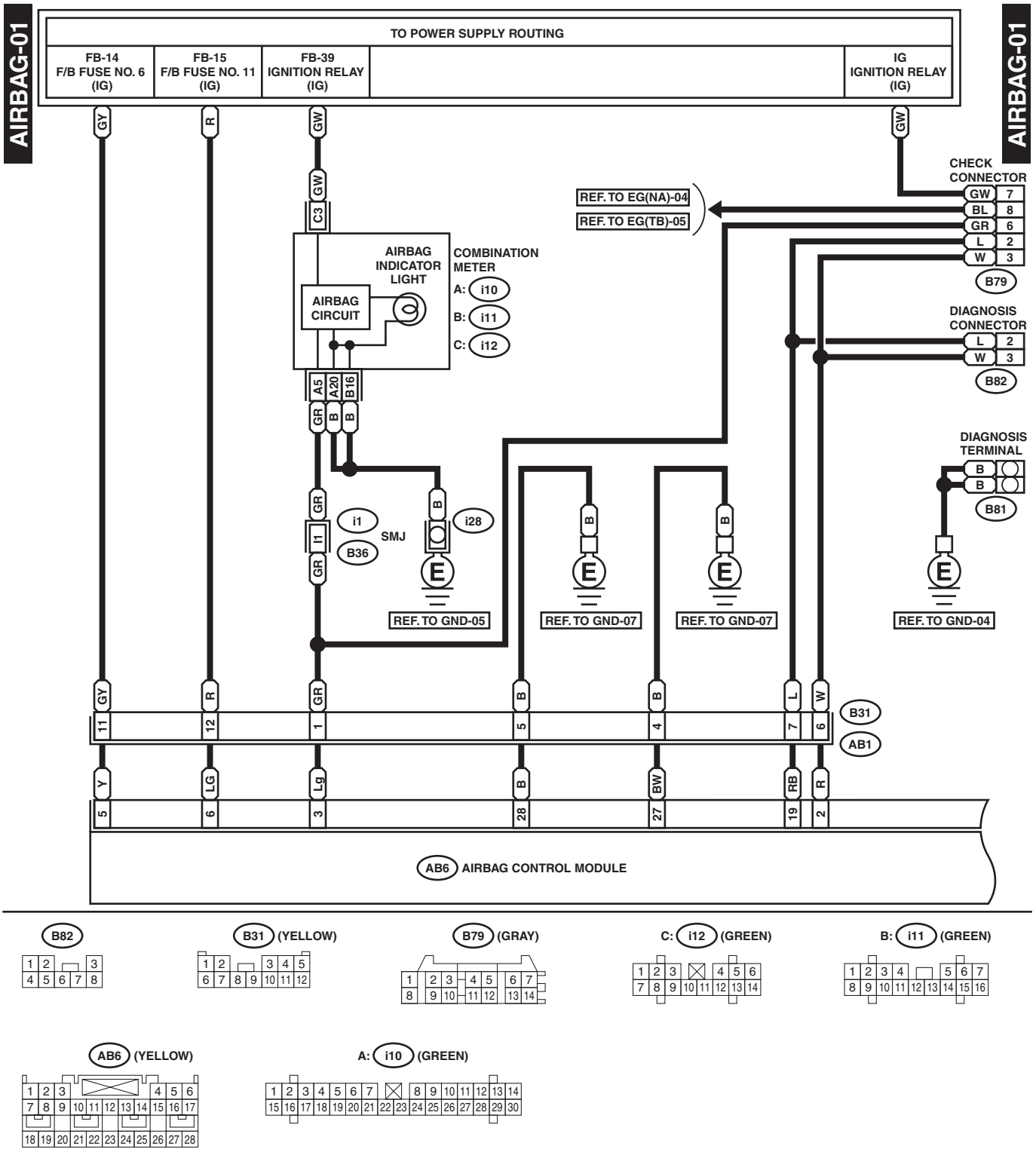

WI-05703

AIRBAG-02

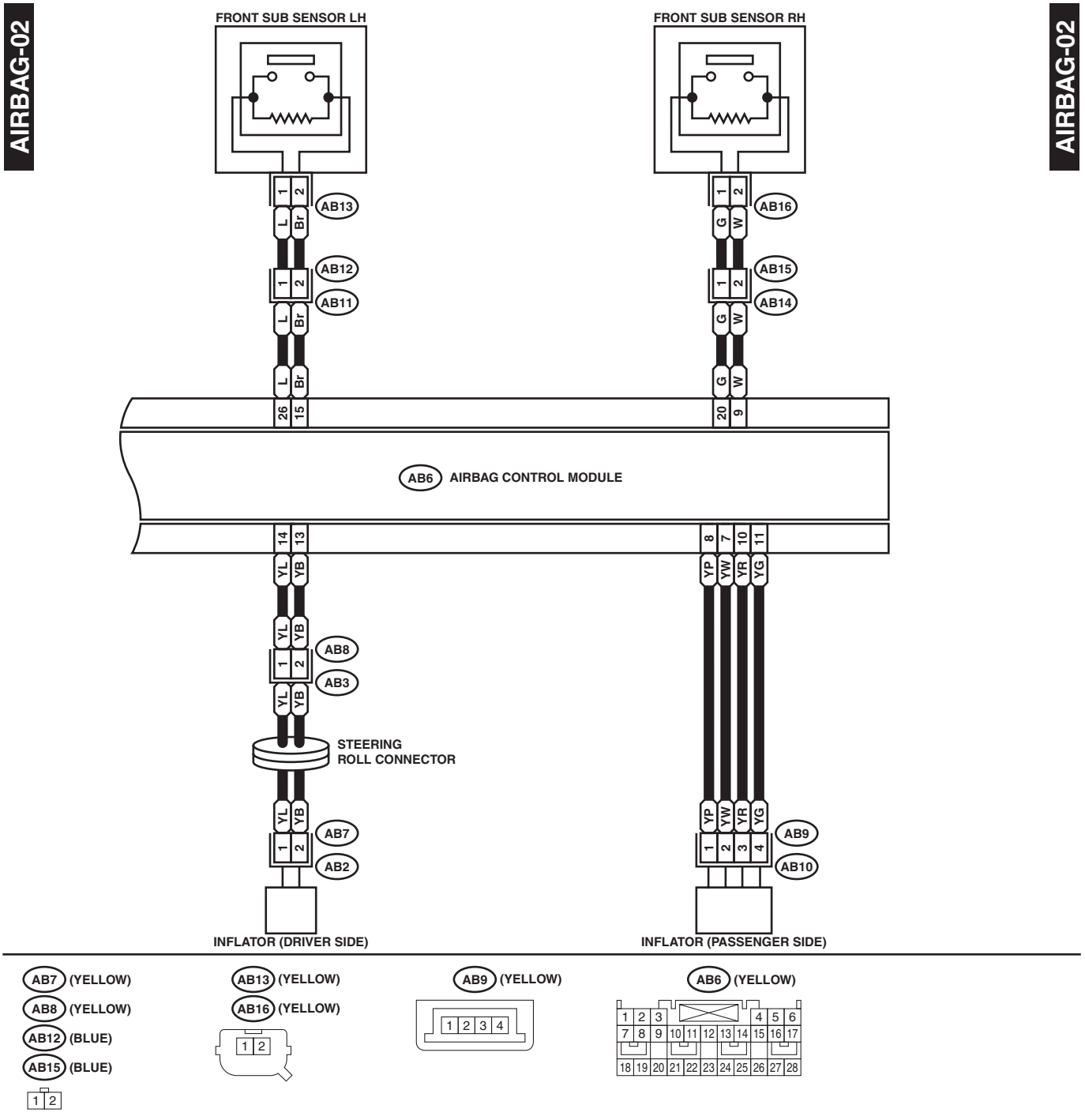

WI-00530

AIRBAG-03

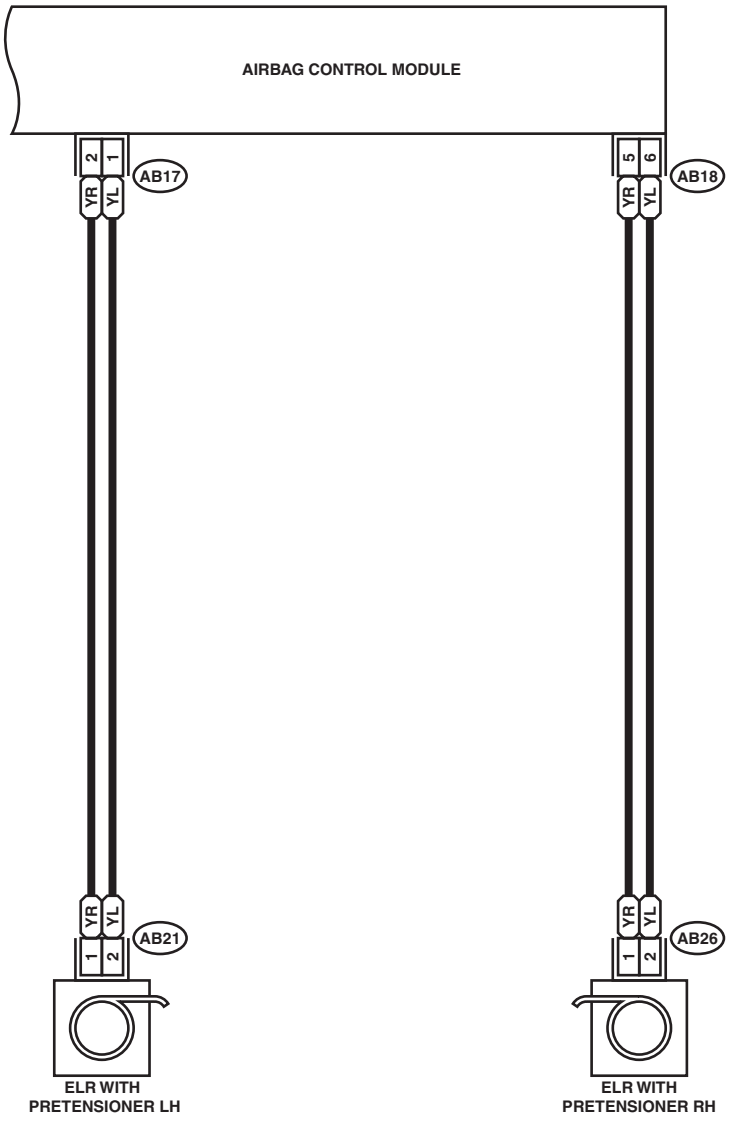

AIRBAG-03

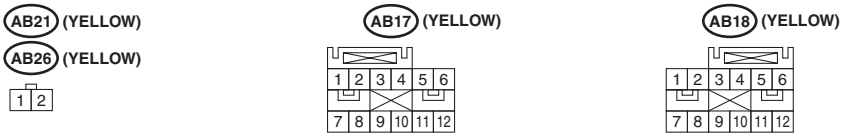

WI-06760

MEMO:

7. Air Conditioning System

A: SCHEMATIC

1. NON-TURBO ENGINE MODEL WITH MANUAL A/C

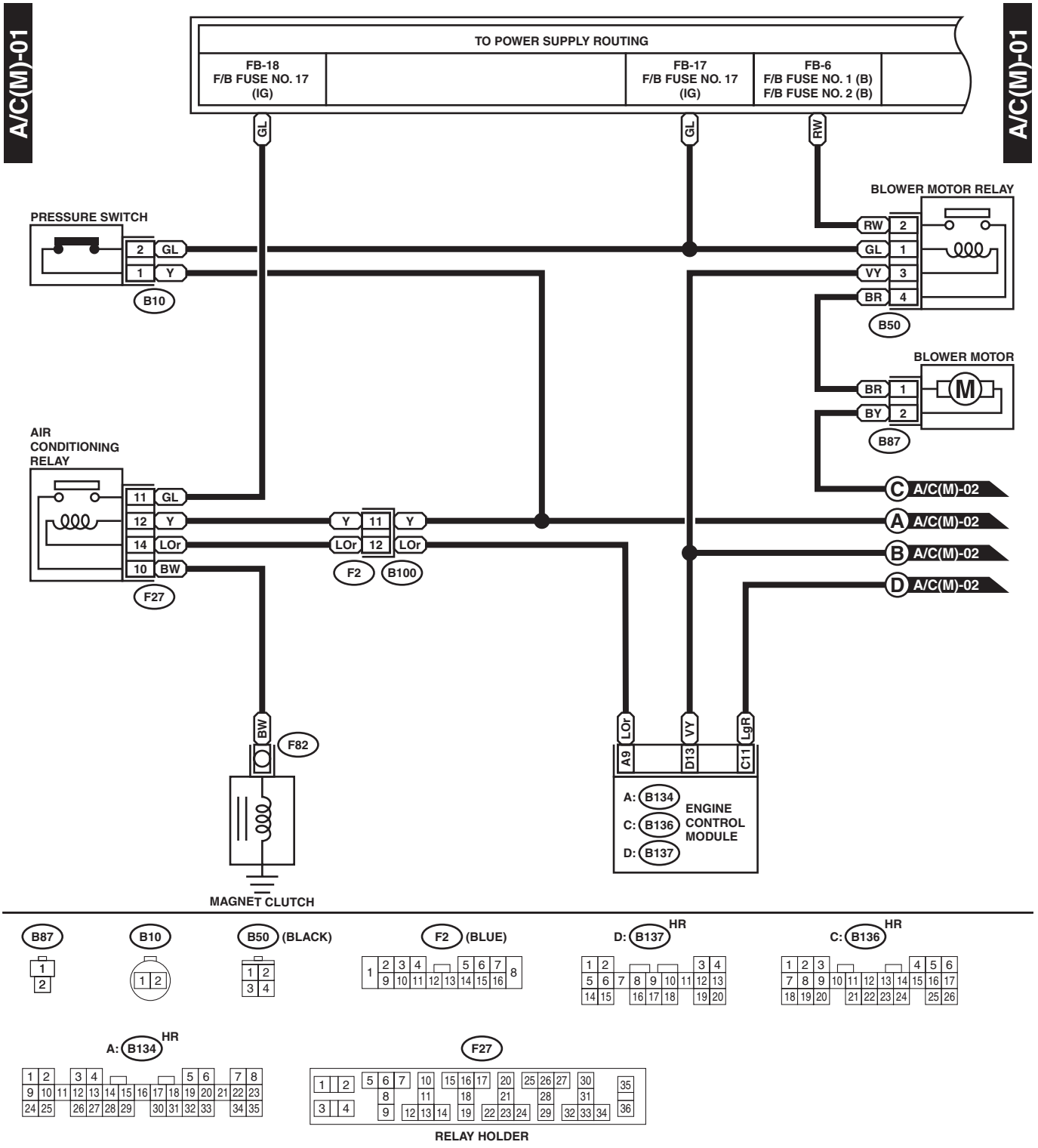

WI-06761

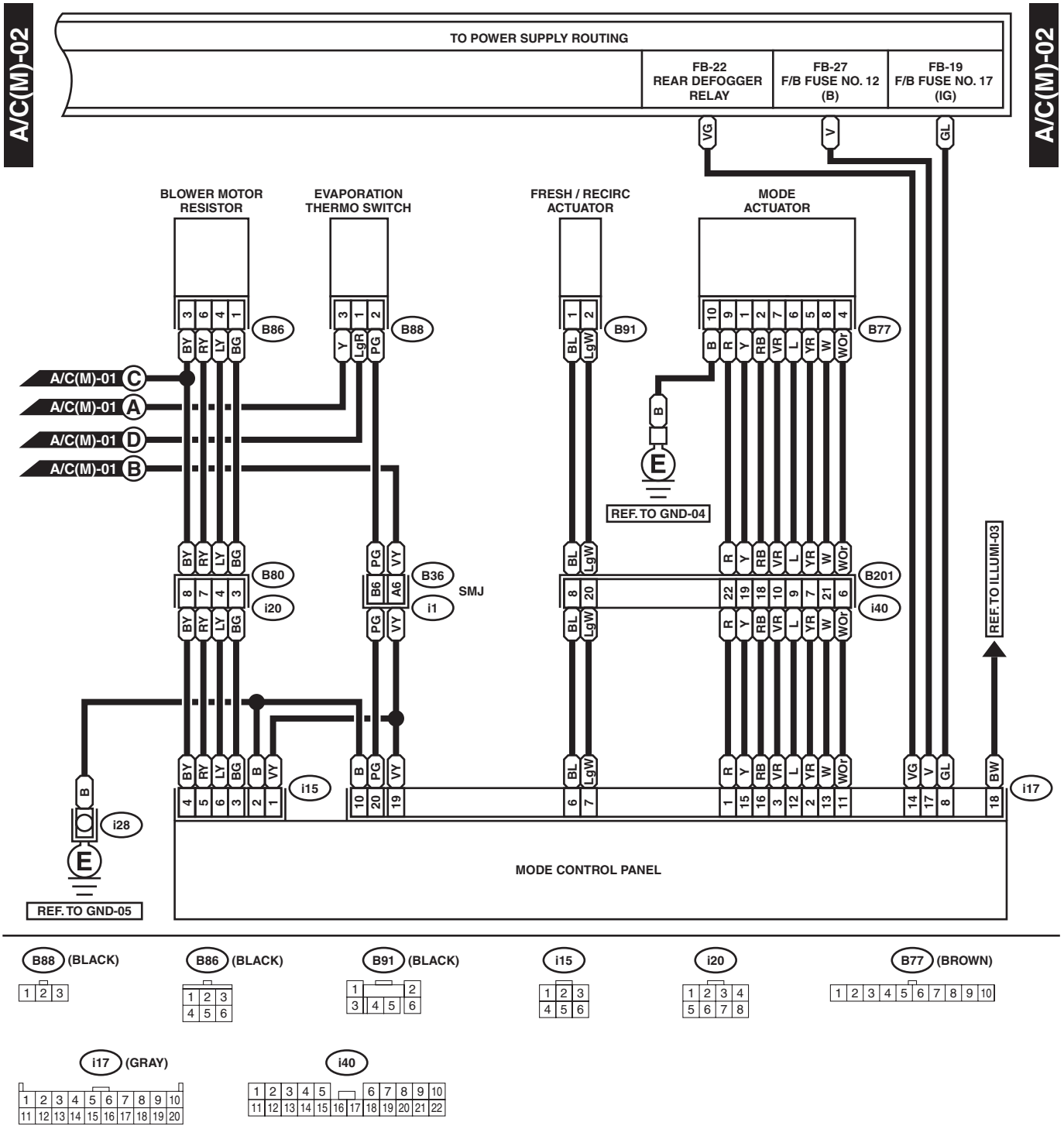
A/C(M)-02
TO POWER SUPPLY ROUTING
FB-22 REAR DEFOGGER RELAY
FB-27 F/B FUSE NO. 12 (B)
FB-19 F/B FUSE NO. 17 (IG)
VG
V
GL
BLOWER MOTOR RESISTOR
EVAPORATION THERMO SWITCH
FRESH / RECIRC ACTUATOR
MODE ACTUATOR
B86
B88
B91
B77
A/C(M)-01 C
A/C(M)-01 A
A/C(M)-01 D
A/C(M)-01 B
REF. TO GND-04
B80
i20
B36
i1
SMJ
B201
i40
REF. TO ILLUMI-03
i15
i17
i28
REF. TO GND-05
MODE CONTROL PANEL
B88 (BLACK)
B86 (BLACK)
B91 (BLACK)
i15
i20
B77 (BROWN)
i17 (GRAY)
i40

WI-05704

2. TURBO ENGINE MODEL WITH MANUAL A/C

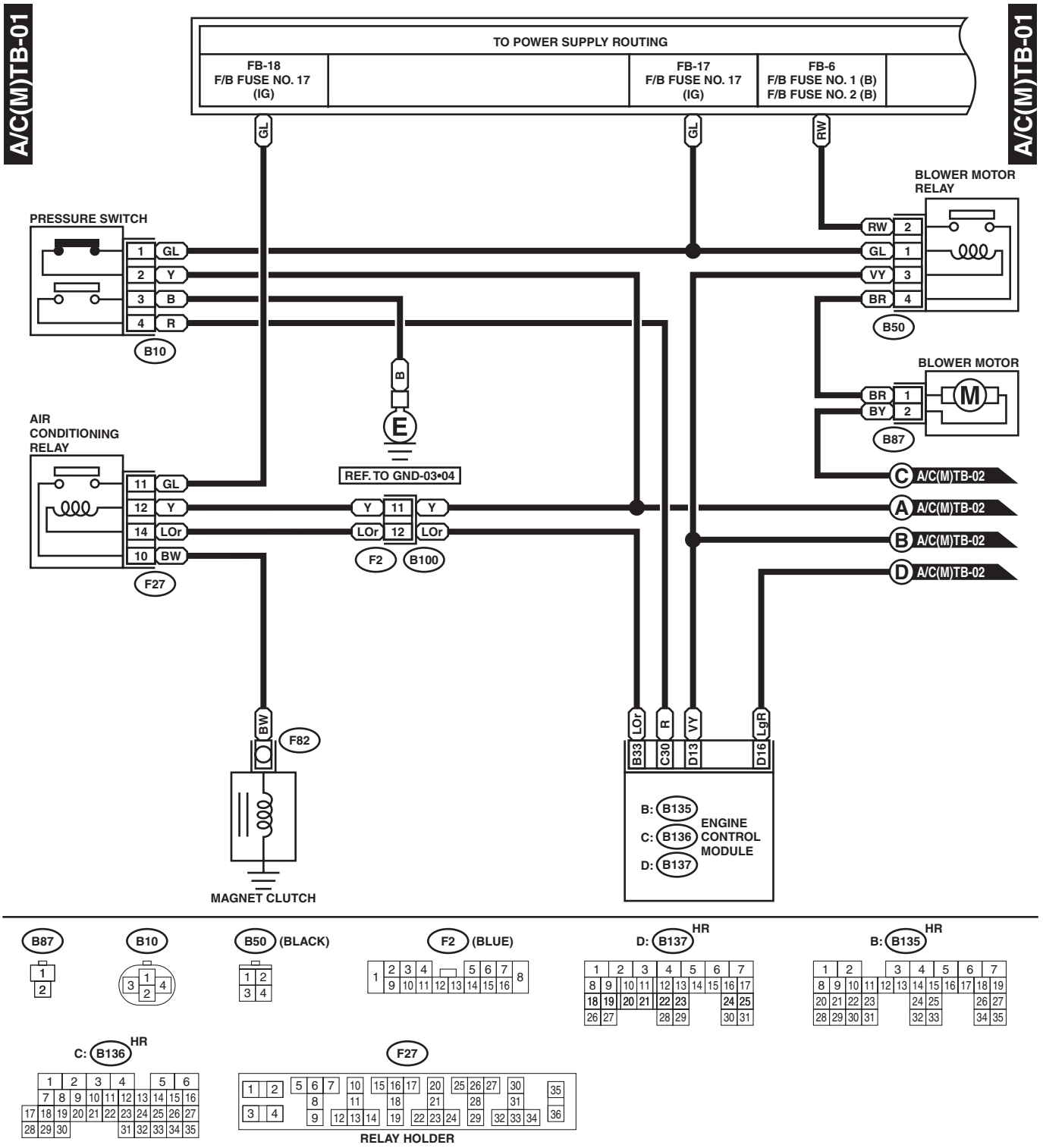

WI-06762

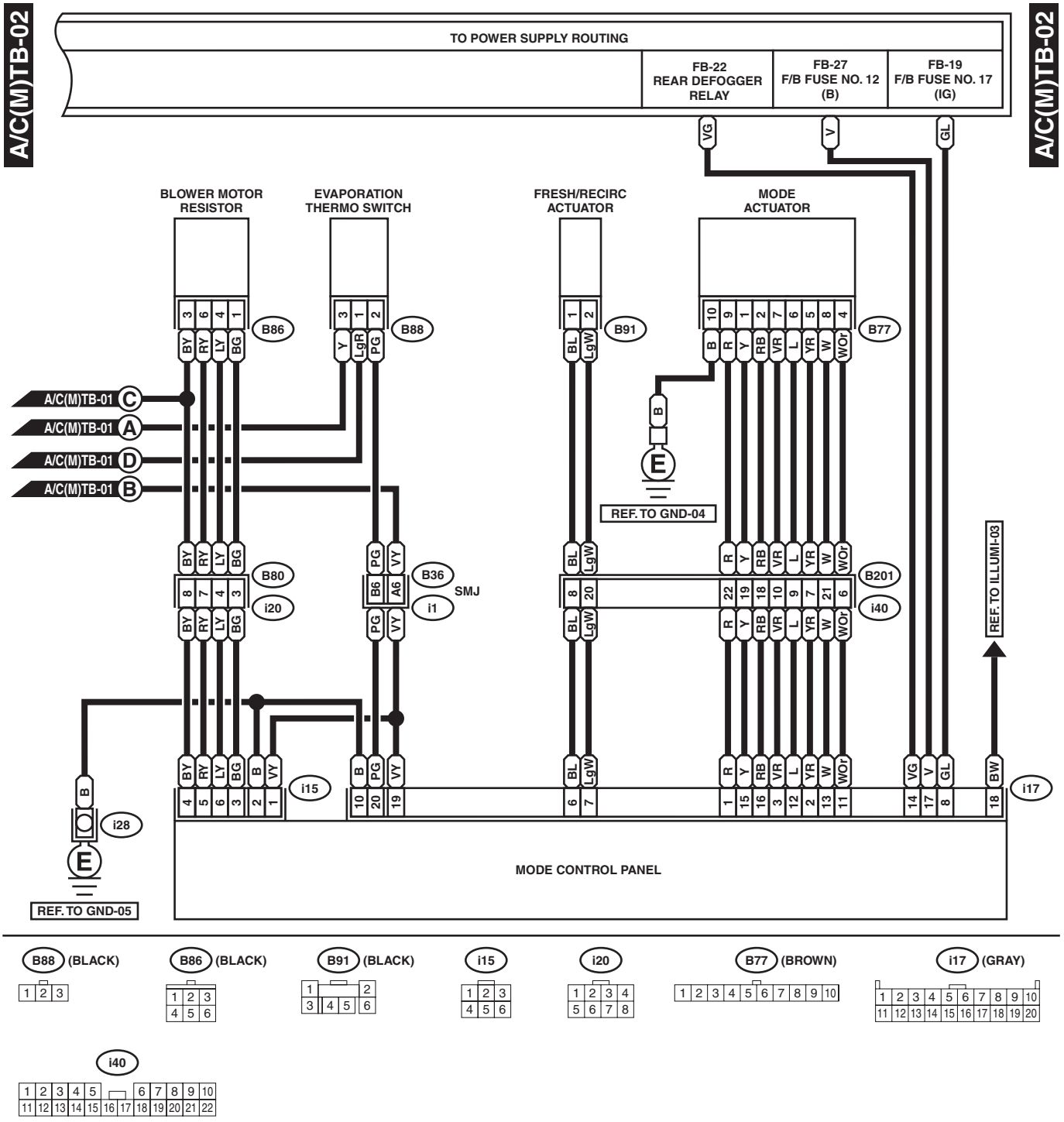
A/C(M)TB-02
TO POWER SUPPLY ROUTING
FB-22 REAR DEFOGGER RELAY
FB-27 F/B FUSE NO. 12 (B)
FB-19 F/B FUSE NO. 17 (IG)
VG
V
GL
BLOWER MOTOR RESISTOR
EVAPORATION THERMO SWITCH
FRESH/RECIRC ACTUATOR
MODE ACTUATOR
B86
B88
B91
B77
A/C(M)TB-01 C
A/C(M)TB-01 A
A/C(M)TB-01 D
A/C(M)TB-01 B
REF. TO GND-04
B80
i20
B36
i1
SMJ
B201
i40
REF. TO ILLUMI-03
i15
i17
i28
REF. TO GND-05
MODE CONTROL PANEL

B88 (BLACK)
B86 (BLACK)
B91 (BLACK)
i15
i20
B77 (BROWN)
i17 (GRAY)
i40

WI-05705

8. Anti-lock Brake System

A: SCHEMATIC

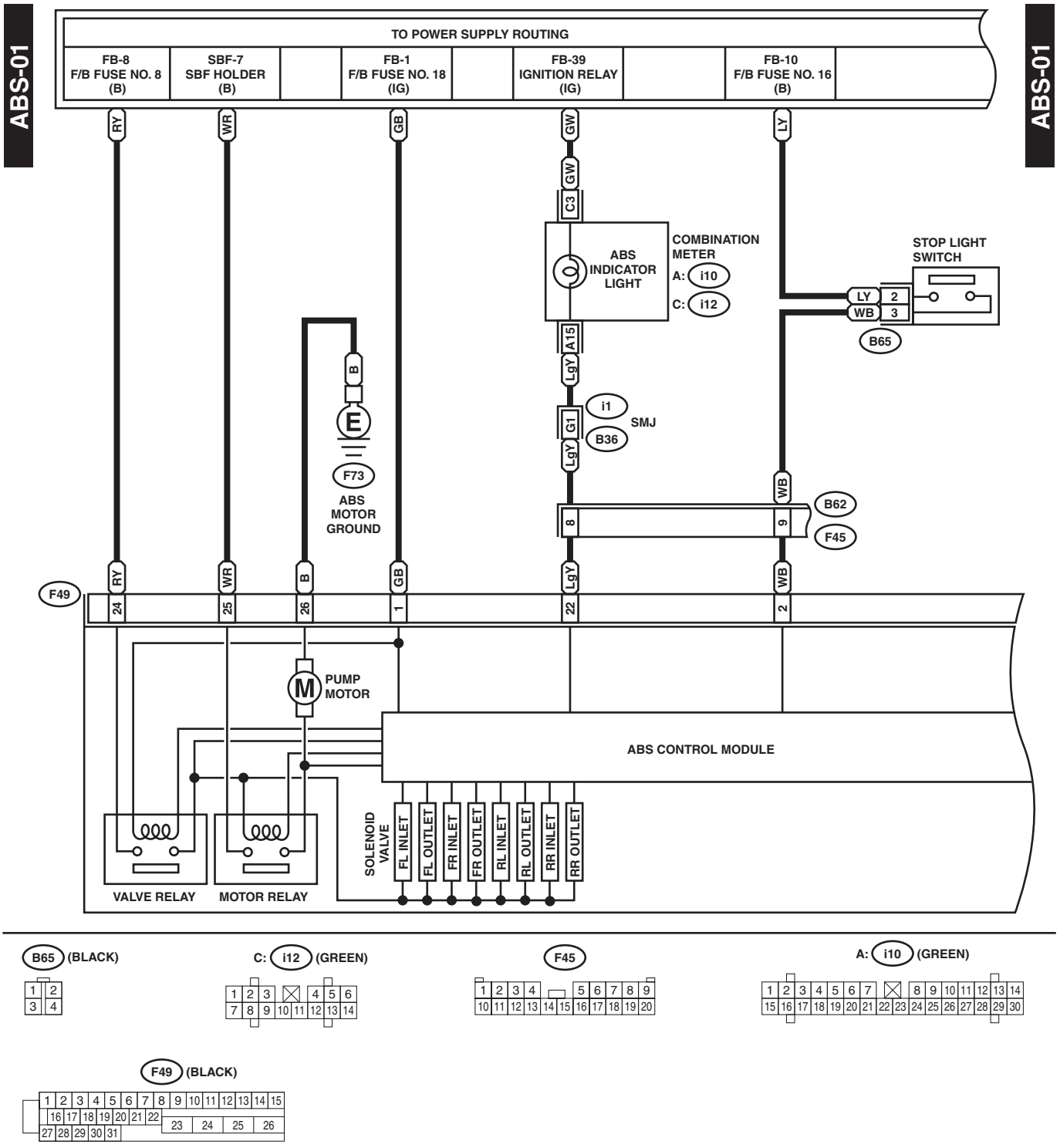

WI-05806

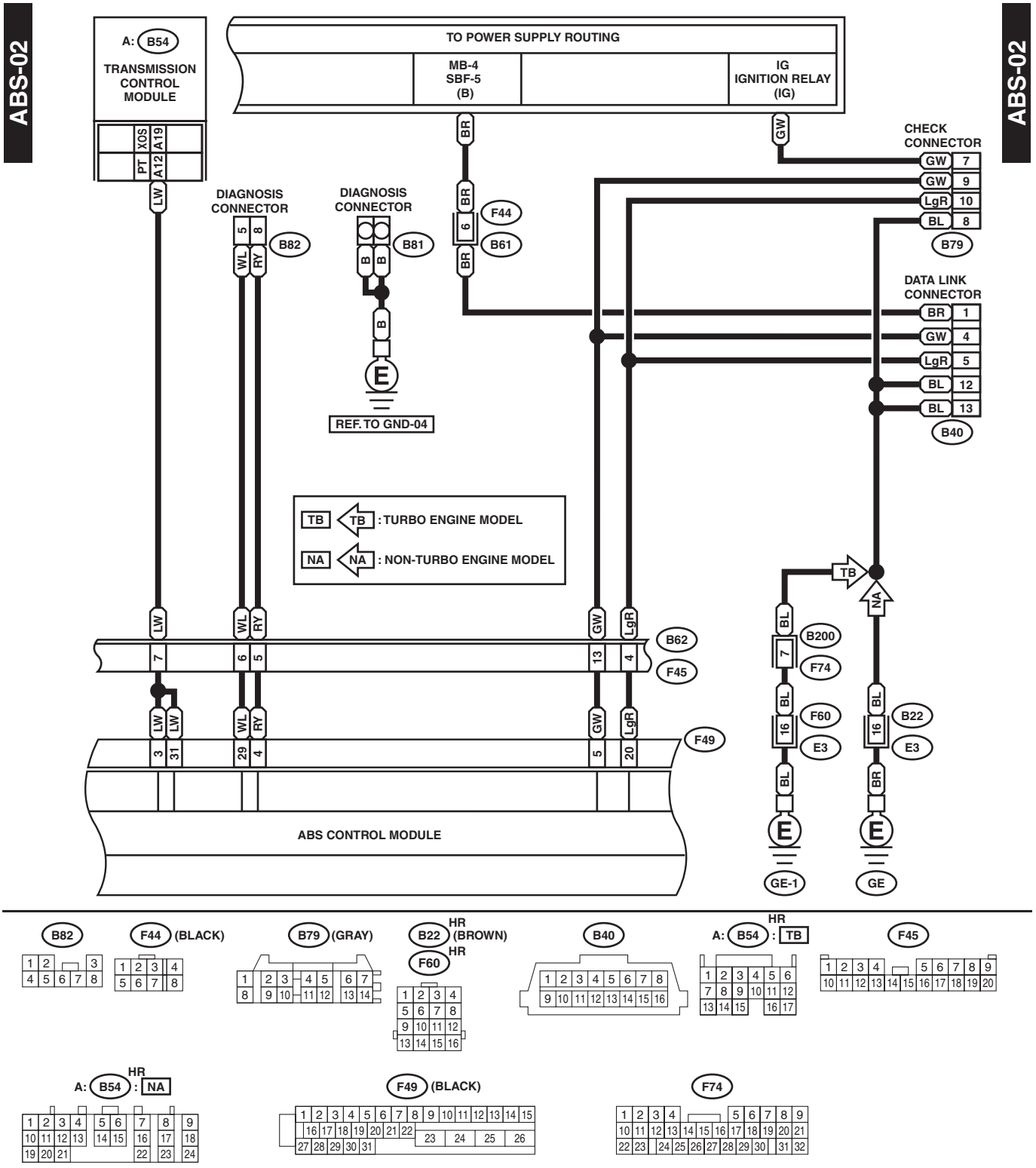
ABS-02
A: B54
TRANSMISSION CONTROL MODULE
XOS
A19
PT
A12
TO POWER SUPPLY ROUTING
MB-4
SBF-5
(B)
IG
IGNITION RELAY
(IG)
CHECK CONNECTOR
GW 7
GW 9
LgR 10
BL 8
B79
DIAGNOSIS CONNECTOR
B82
DIAGNOSIS CONNECTOR
B81
F44
B61
REF. TO GND-04
DATA LINK CONNECTOR
BR 1
GW 4
LgR 5
BL 12
BL 13
B40
TB : TURBO ENGINE MODEL
NA : NON-TURBO ENGINE MODEL
B62
F45
F49
B200
F74
F60
E3
B22
E3
ABS CONTROL MODULE
GE-1
GE

B82
F44 (BLACK)
B79 (GRAY)
B22 (BROWN)
HR
F60
B40
A: B54 : TB
F45
A: B54 : NA
F49 (BLACK)
F74

WI-06763

ABS-03

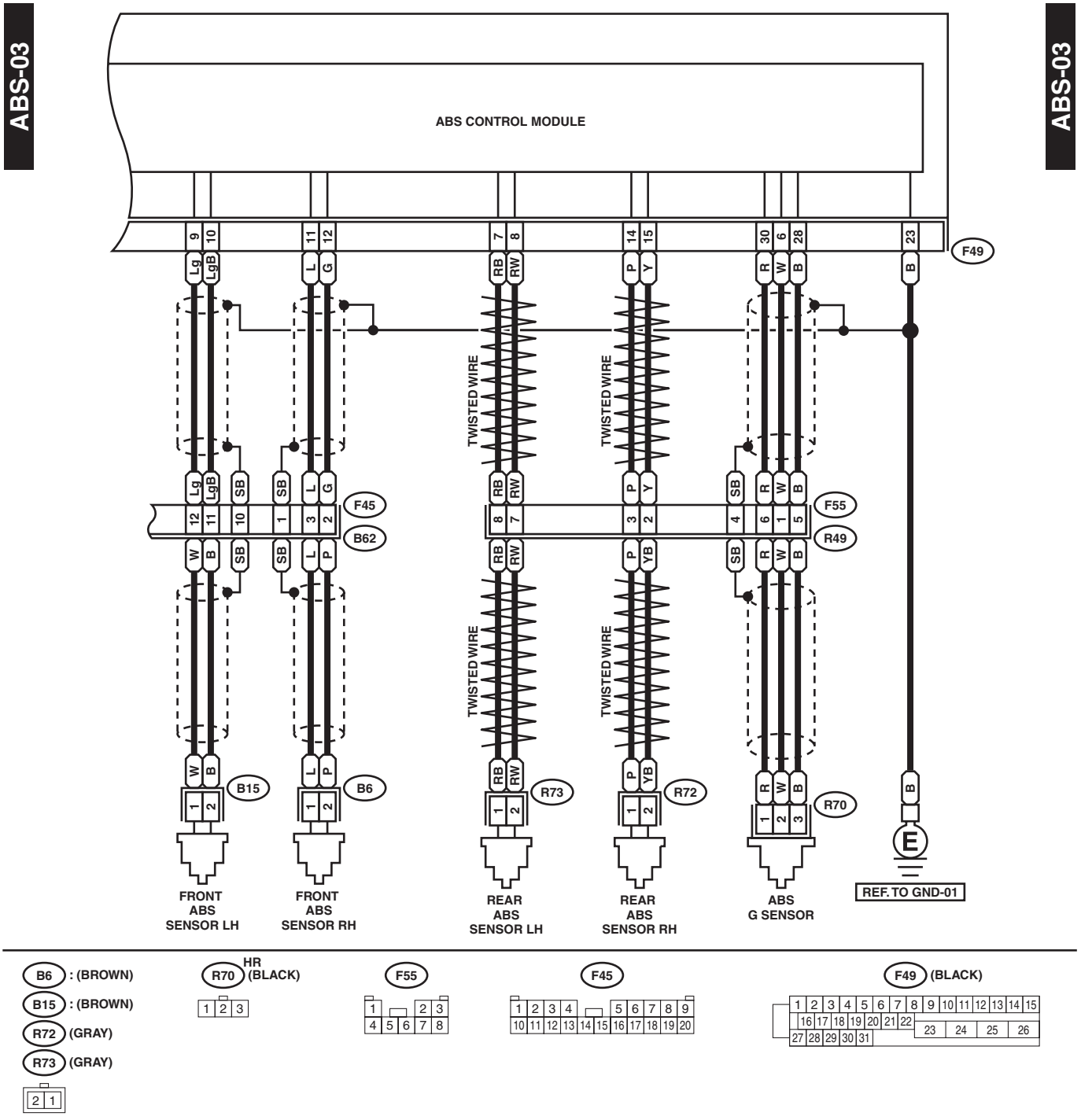

WI-06764

MEMO:

9. AT Control System

A: SCHEMATIC

1. NON-TURBO ENGINE MODEL

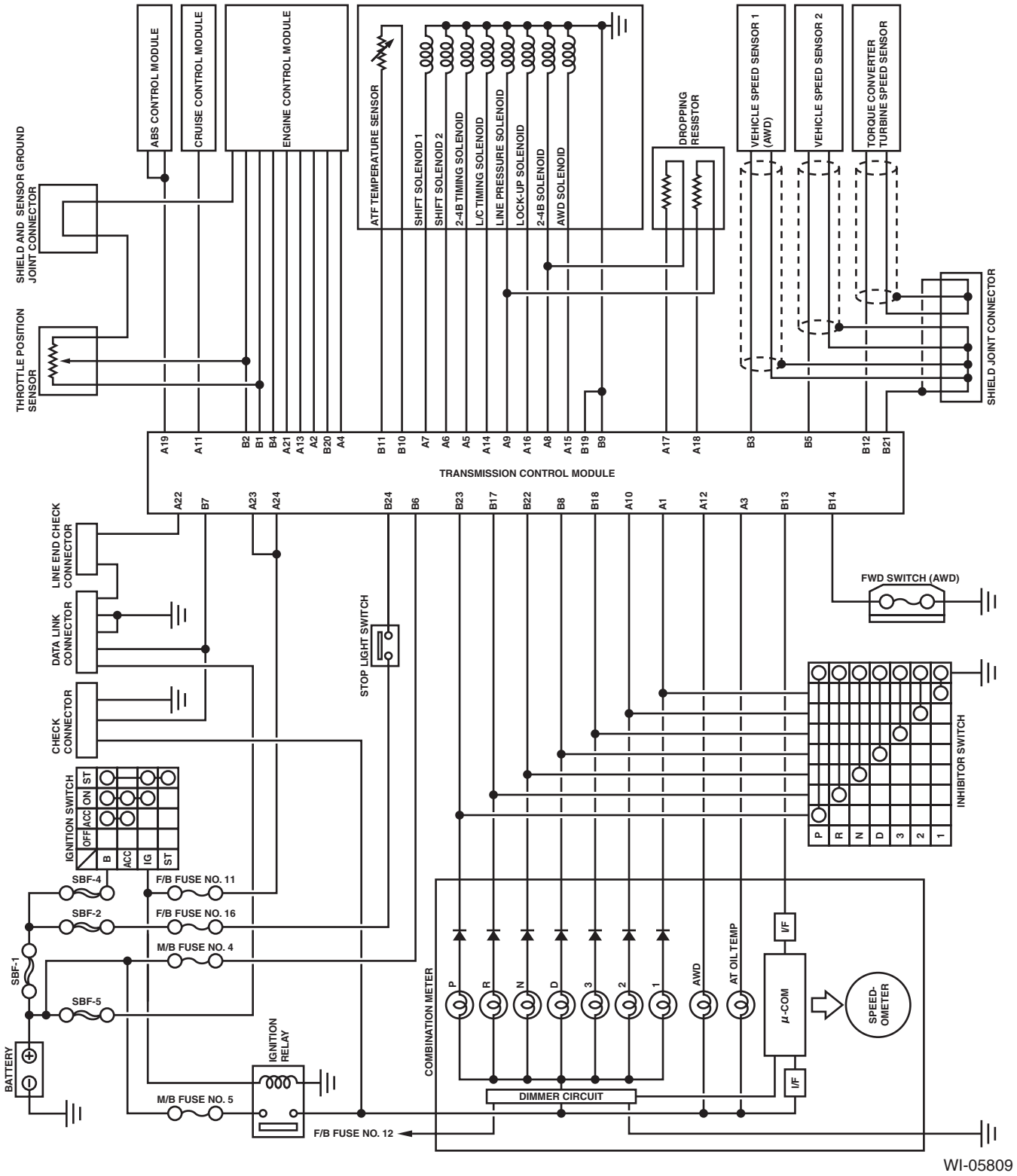

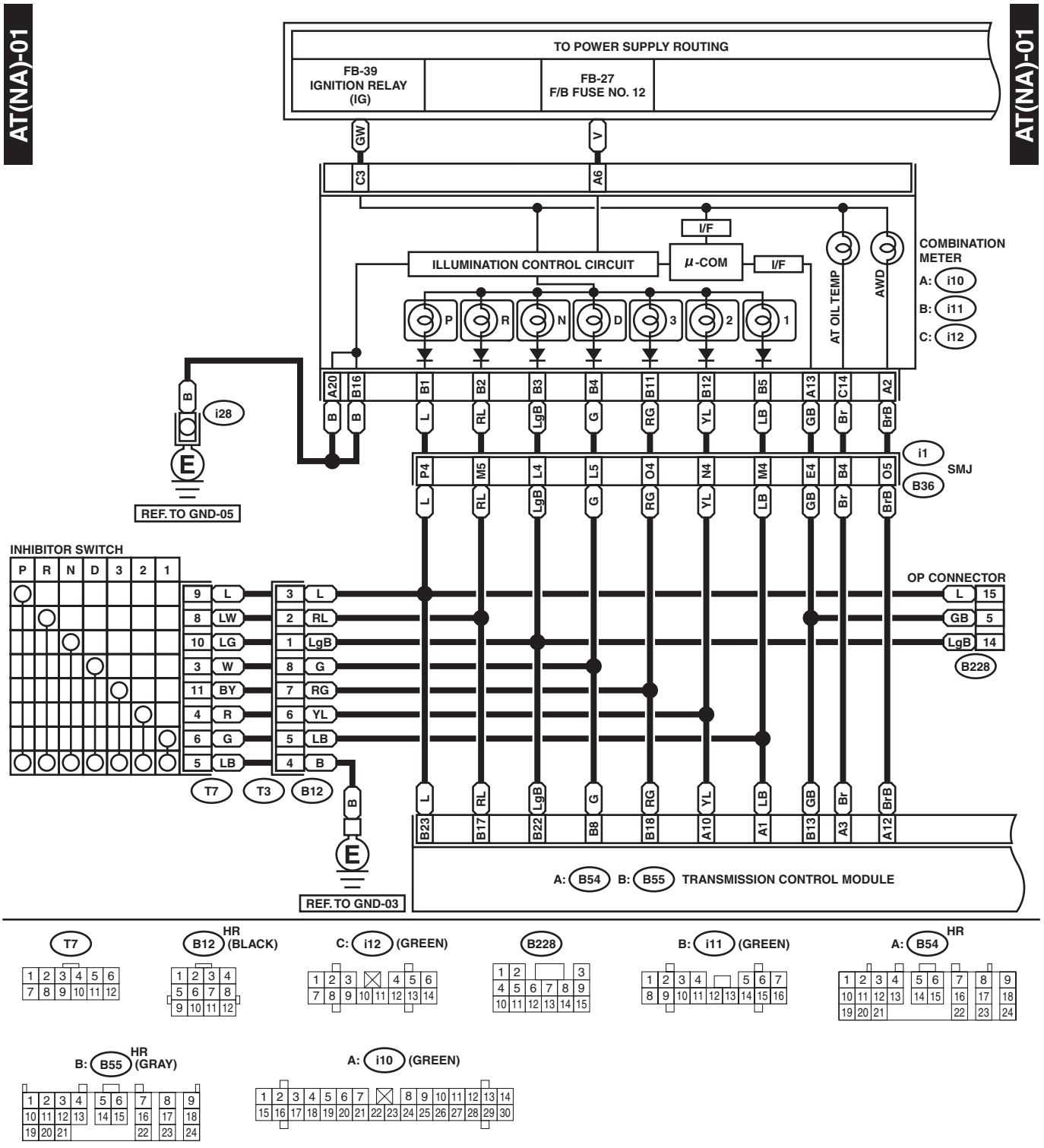
AT(NA)-01
TO POWER SUPPLY ROUTING
FB-39
IGNITION RELAY
(IG)
FB-27
F/B FUSE NO. 12
GW
V
C3
A6
I/F
ILLUMINATION CONTROL CIRCUIT
μ-COM
I/F
AT OIL TEMP
AWD
COMBINATION METER
A: i10
B: i11
C: i12
P
R
N
D
3
2
1
A20
B16
B1
B2
B3
B4
B11
B12
B5
A13
C14
A2
i28
REF. TO GND-05
P4
M5
L4
L5
O4
N4
M4
E4
B4
O5
i1
B36
SMJ
INHIBITOR SWITCH
OP CONNECTOR
L 15
GB 5
LgB 14
B228
9 L
8 LW
10 LG
3 W
11 BY
4 R
6 G
5 LB
3 L
2 RL
1 LgB
8 G
7 RG
6 YL
5 LB
4 B
T7
T3
B12
REF. TO GND-03
B23
B17
B22
B8
B18
A10
A1
B13
A3
A12
A: B54
B: B55
TRANSMISSION CONTROL MODULE
T7
B12 HR (BLACK)
C: i12 (GREEN)
B228
B: i11 (GREEN)
A: B54 HR
B: B55 HR (GRAY)
A: i10 (GREEN)

WI-06765

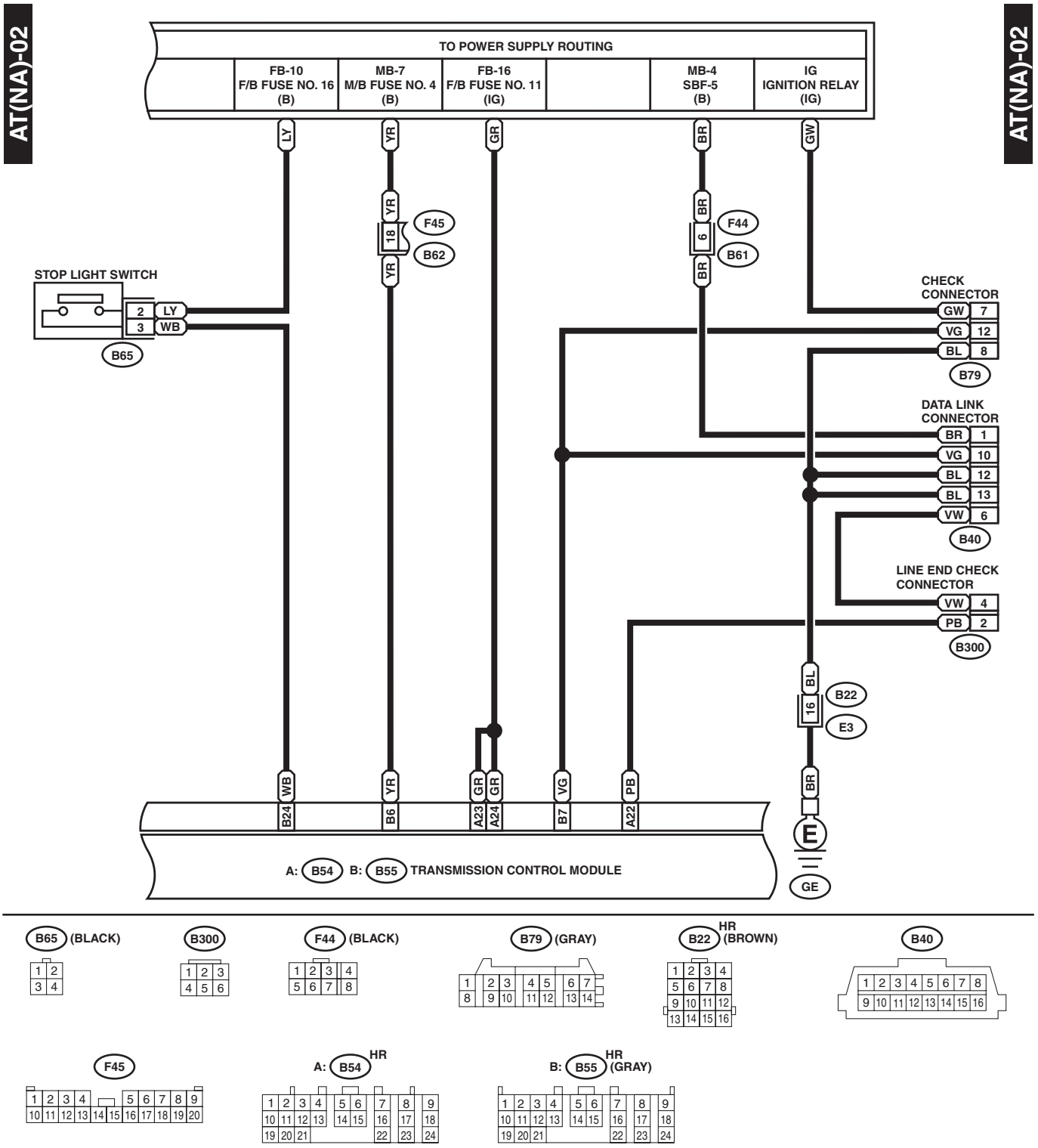
AT(NA)-02
TO POWER SUPPLY ROUTING
FB-10 F/B FUSE NO. 16 (B)
MB-7 M/B FUSE NO. 4 (B)
FB-16 F/B FUSE NO. 11 (IG)
MB-4 SBF-5 (B)
IG IGNITION RELAY (IG)
LY
YR
GR
BR
GW
F45
B62
F44
B61
STOP LIGHT SWITCH
B65
CHECK CONNECTOR
B79
DATA LINK CONNECTOR
B40
LINE END CHECK CONNECTOR
B300
B22
E3
WB
VG
PB
B24
B6
A23
A24
B7
A22
A: B54 B: B55 TRANSMISSION CONTROL MODULE
GE
B65 (BLACK)
B300
F44 (BLACK)
B79 (GRAY)
B22 HR (BROWN)
B40
F45
A: B54 HR
B: B55 HR (GRAY)

WI-06766

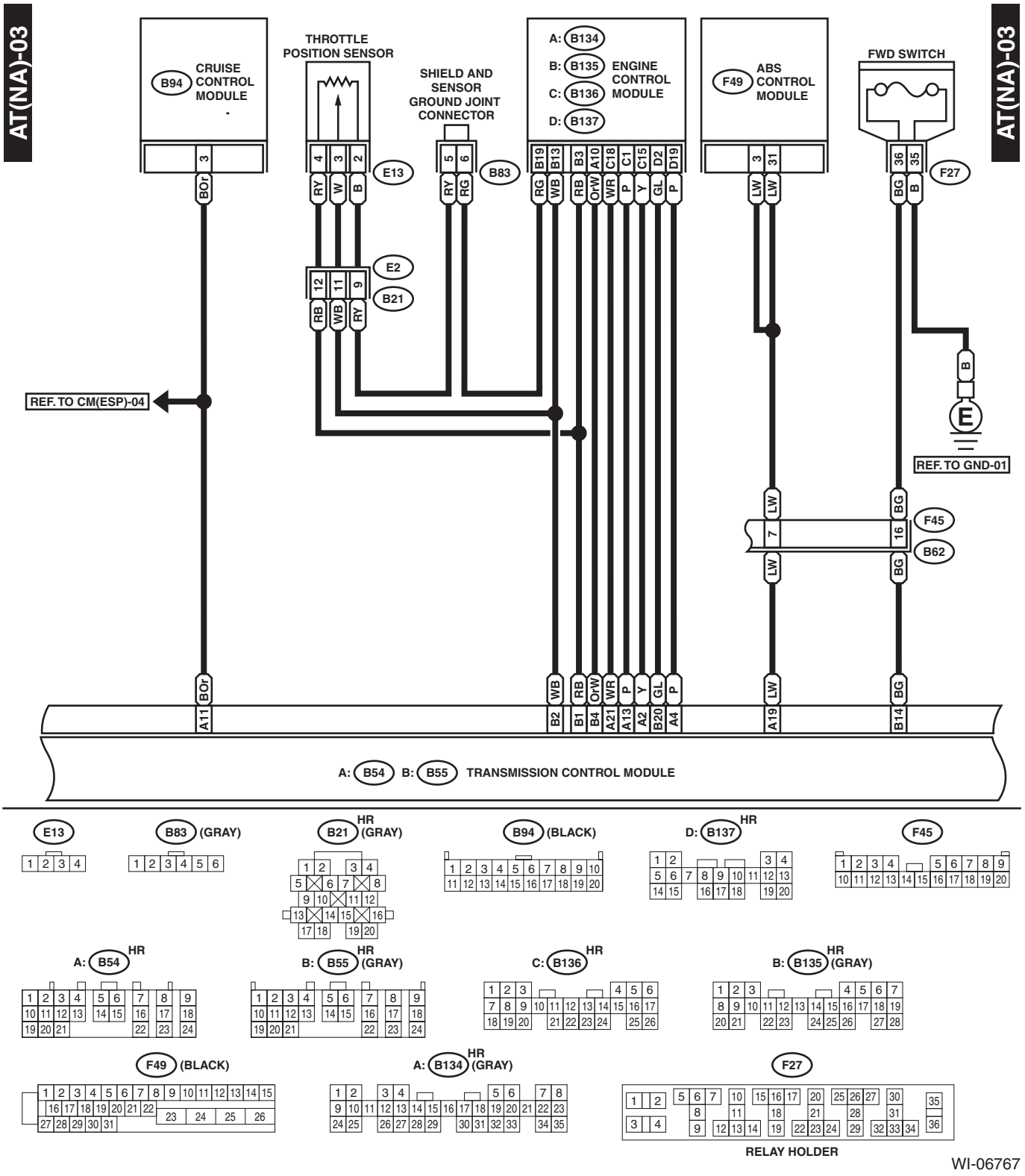
AT(NA)-03
CRUISE CONTROL MODULE
B94
THROTTLE POSITION SENSOR
SHIELD AND SENSOR GROUND JOINT CONNECTOR
A: B134
B: B135
C: B136
D: B137
ENGINE CONTROL MODULE
F49
ABS CONTROL MODULE
FWD SWITCH
F27
E13
B83
E2
B21
REF. TO CM(ESP)-04
REF. TO GND-01
F45
B62
A: B54 B: B55 TRANSMISSION CONTROL MODULE
E13
B83 (GRAY)
B21 HR (GRAY)
B94 (BLACK)
D: B137 HR
F45
A: B54 HR
B: B55 HR (GRAY)
C: B136 HR
B: B135 HR (GRAY)
F49 (BLACK)
A: B134 HR (GRAY)
F27
RELAY HOLDER
WI-06767

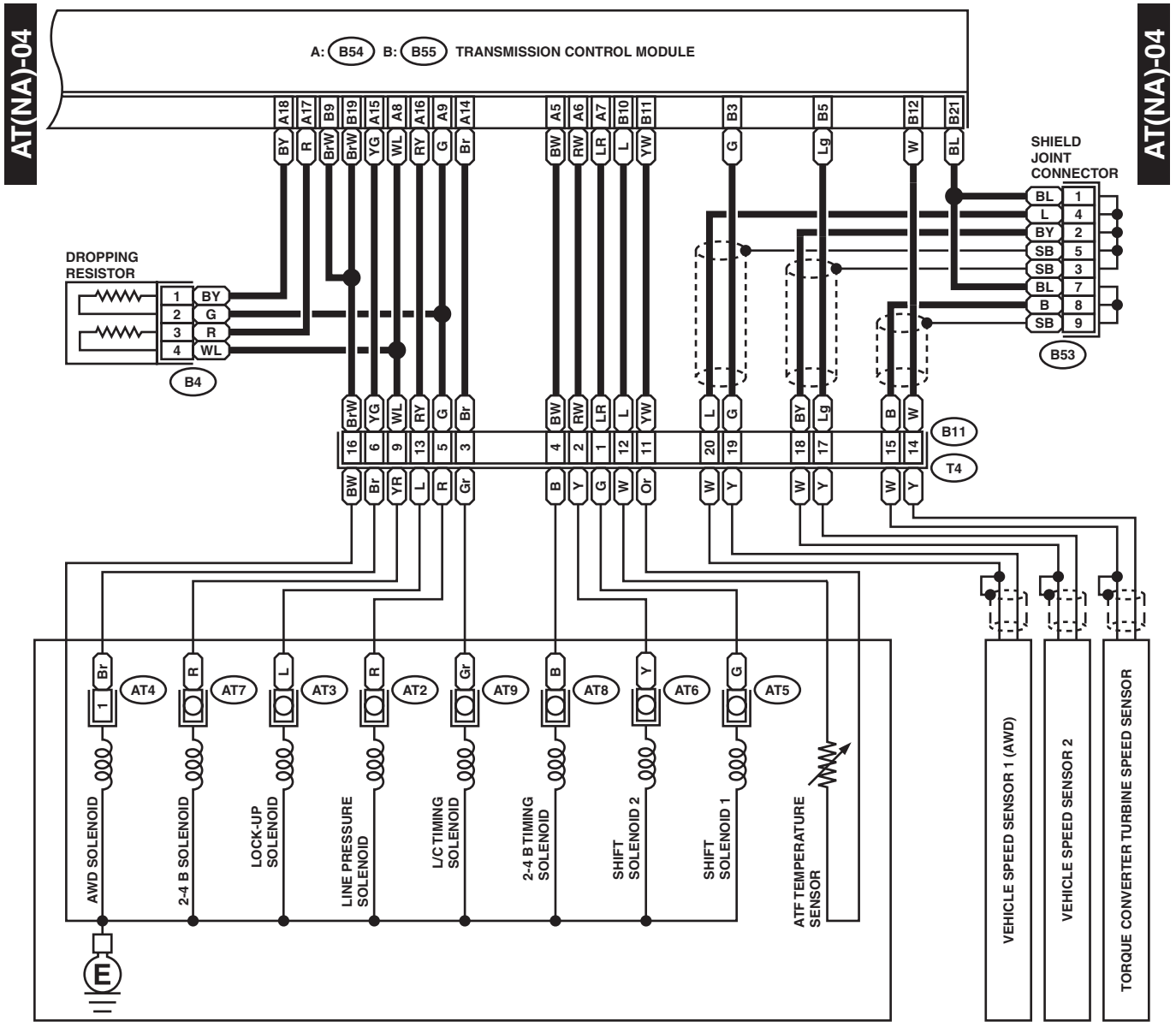
AT(NA)-04
A: B54 B: B55 TRANSMISSION CONTROL MODULE
A18 A17 B9 B19 A15 A8 A16 A9 A14 A5 A6 A7 B10 B11 B3 B5 B12 B21
BY R BrW BrW YG WL RY G Br BW RW LR L YW G Lg W BL
SHIELD JOINT CONNECTOR
BL 1
L 4
BY 2
SB 5
SB 3
BL 7
B 8
SB 9
B53
DROPPING RESISTOR
1 BY
2 G
3 R
4 WL
B4
BrW YG WL RY G Br BW RW LR L YW L G BY Lg B W
16 6 9 13 5 3 4 2 1 12 11 20 19 18 17 15 14
B11
T4
BW Br YR L R Gr B Y G W Or W Y W Y W Y
AT4 AT7 AT3 AT2 AT9 AT8 AT6 AT5
AWD SOLENOID
2-4 B SOLENOID
LOCK-UP SOLENOID
LINE PRESSURE SOLENOID
L/C TIMING SOLENOID
2-4 B TIMING SOLENOID
SHIFT SOLENOID 2
SHIFT SOLENOID 1
ATF TEMPERATURE SENSOR
VEHICLE SPEED SENSOR 1 (AWD)
VEHICLE SPEED SENSOR 2
TORQUE CONVERTER TURBINE SPEED SENSOR
E
AT4 (BROWN)
B4 (GRAY)
B53 (BLUE)
B11 HR (BLACK)
A: B54 HR
B: B55 HR (GRAY)

WI-06768

2. TURBO ENGINE MODEL

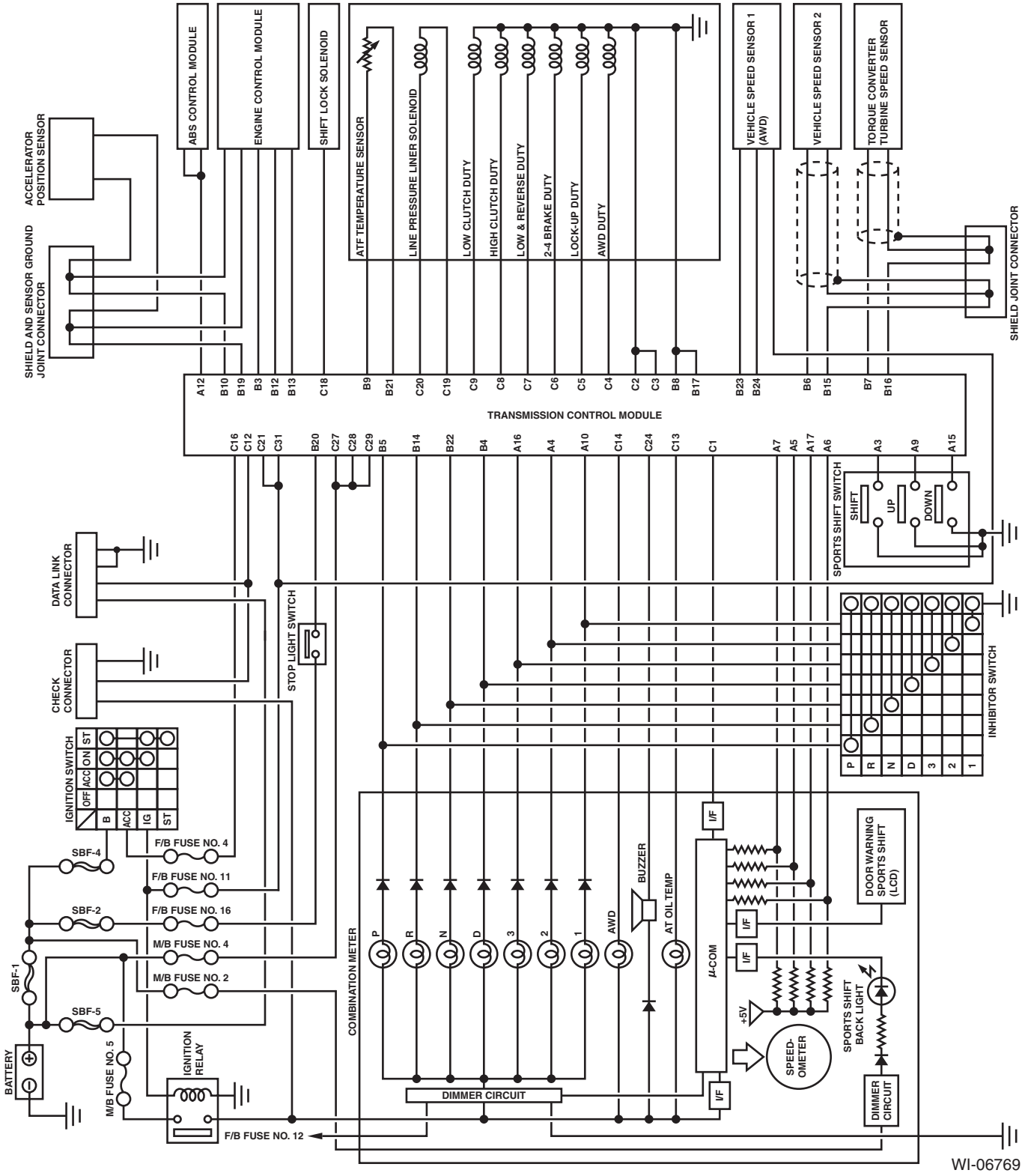

WI-06769

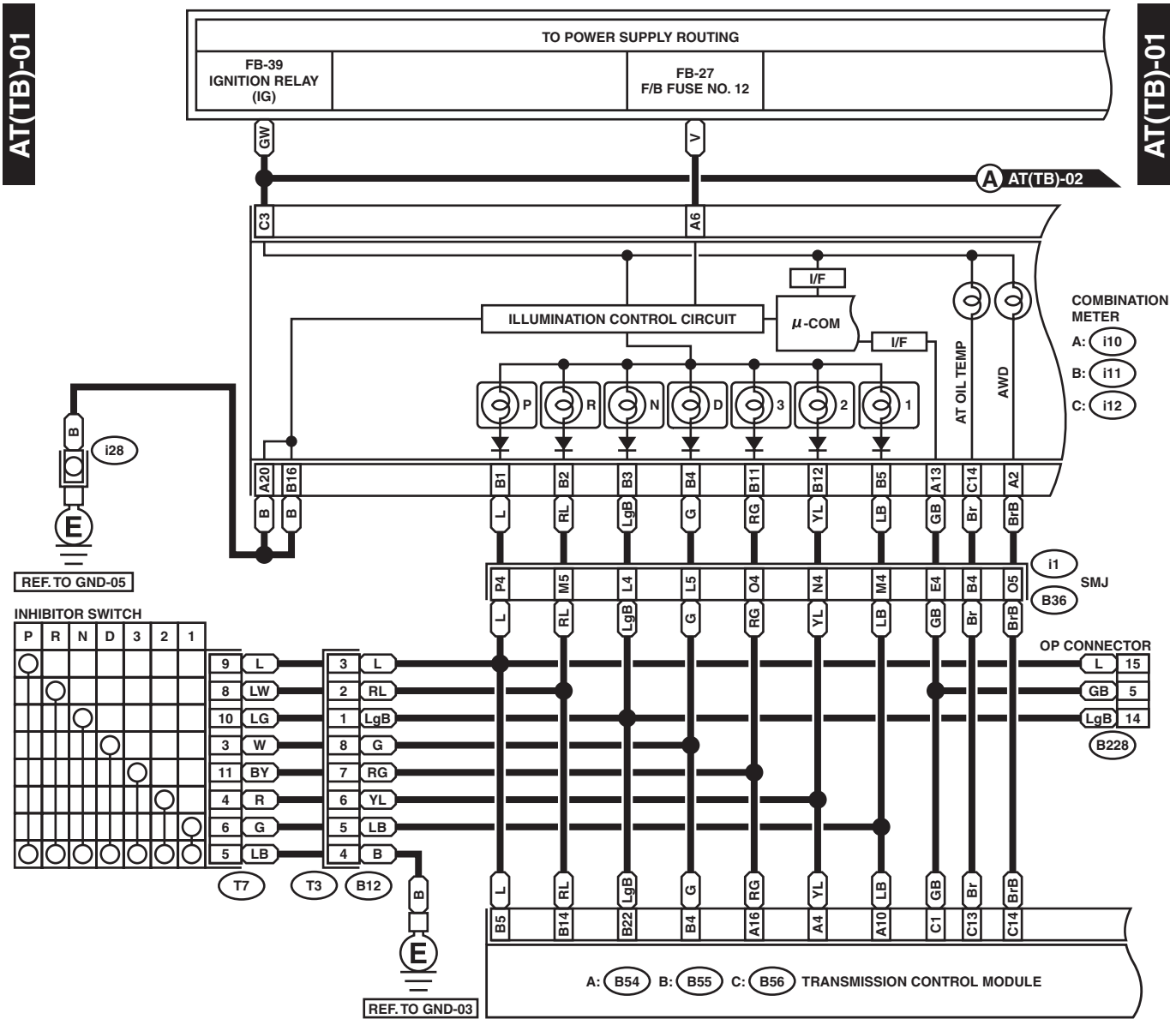
AT(TB)-01
TO POWER SUPPLY ROUTING
FB-39
IGNITION RELAY
(IG)
FB-27
F/B FUSE NO. 12
GW
V
A AT(TB)-02
C3
A6
I/F
ILLUMINATION CONTROL CIRCUIT
μ-COM
I/F
AT OIL TEMP
AWD
COMBINATION METER
A: i10
B: i11
C: i12
P
R
N
D
3
2
1
i28
REF. TO GND-05
INHIBITOR SWITCH
i1
SMJ
B36
OP CONNECTOR
B228
T7
T3
B12
REF. TO GND-03
A: B54 B: B55 C: B56 TRANSMISSION CONTROL MODULE

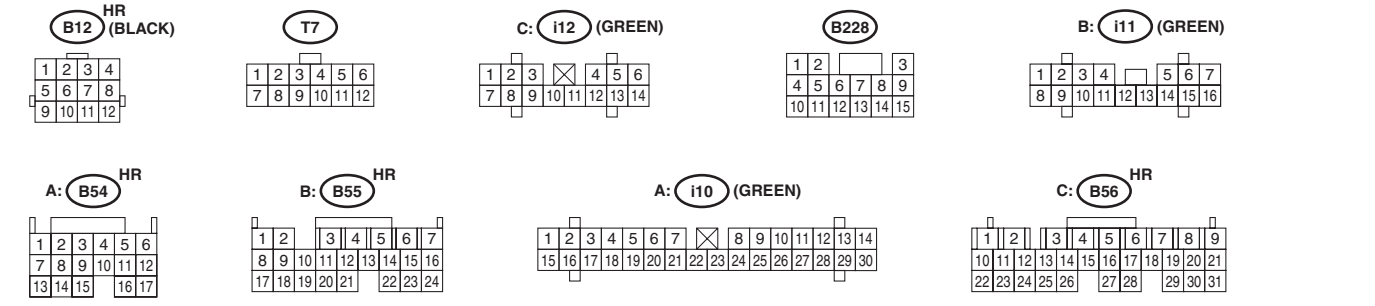
B12 HR (BLACK)
T7
C: i12 (GREEN)
B228
B: i11 (GREEN)
A: B54 HR
B: B55 HR
A: i10 (GREEN)
C: B56 HR

WI-06770

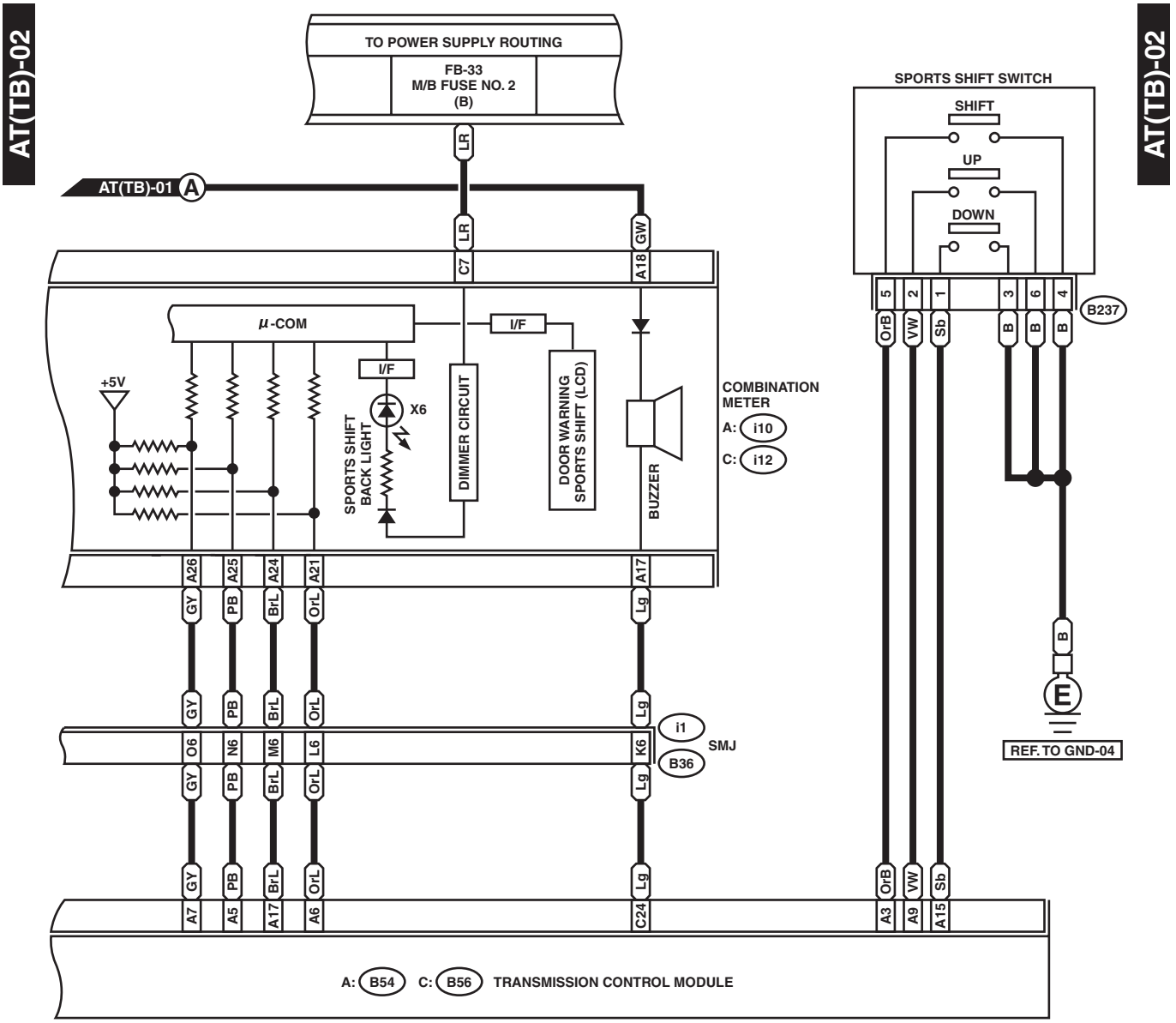
AT(TB)-02
TO POWER SUPPLY ROUTING
FB-33
M/B FUSE NO. 2
(B)
LR
AT(TB)-01 A
LR
GW
C7
A18
SPORTS SHIFT SWITCH
SHIFT
UP
DOWN
5
2
1
3
6
4
B237
OrB
VW
Sb
B
B
B
μ-COM
I/F
I/F
+5V
X6
SPORTS SHIFT BACK LIGHT
DIMMER CIRCUIT
DOOR WARNING SPORTS SHIFT (LCD)
BUZZER
COMBINATION METER
A: i10
C: i12
A26
A25
A24
A21
A17
GY
PB
BrL
OrL
Lg
B
E
REF. TO GND-04
O6
N6
M6
L6
K6
i1
B36
SMJ
A7
A5
A17
A6
C24
A3
A9
A15
A: B54
C: B56
TRANSMISSION CONTROL MODULE
B237 (BLACK)
C: i12 (GREEN)
A: B54 HR
A: i10 (GREEN)
C: B56 HR

WI-06827

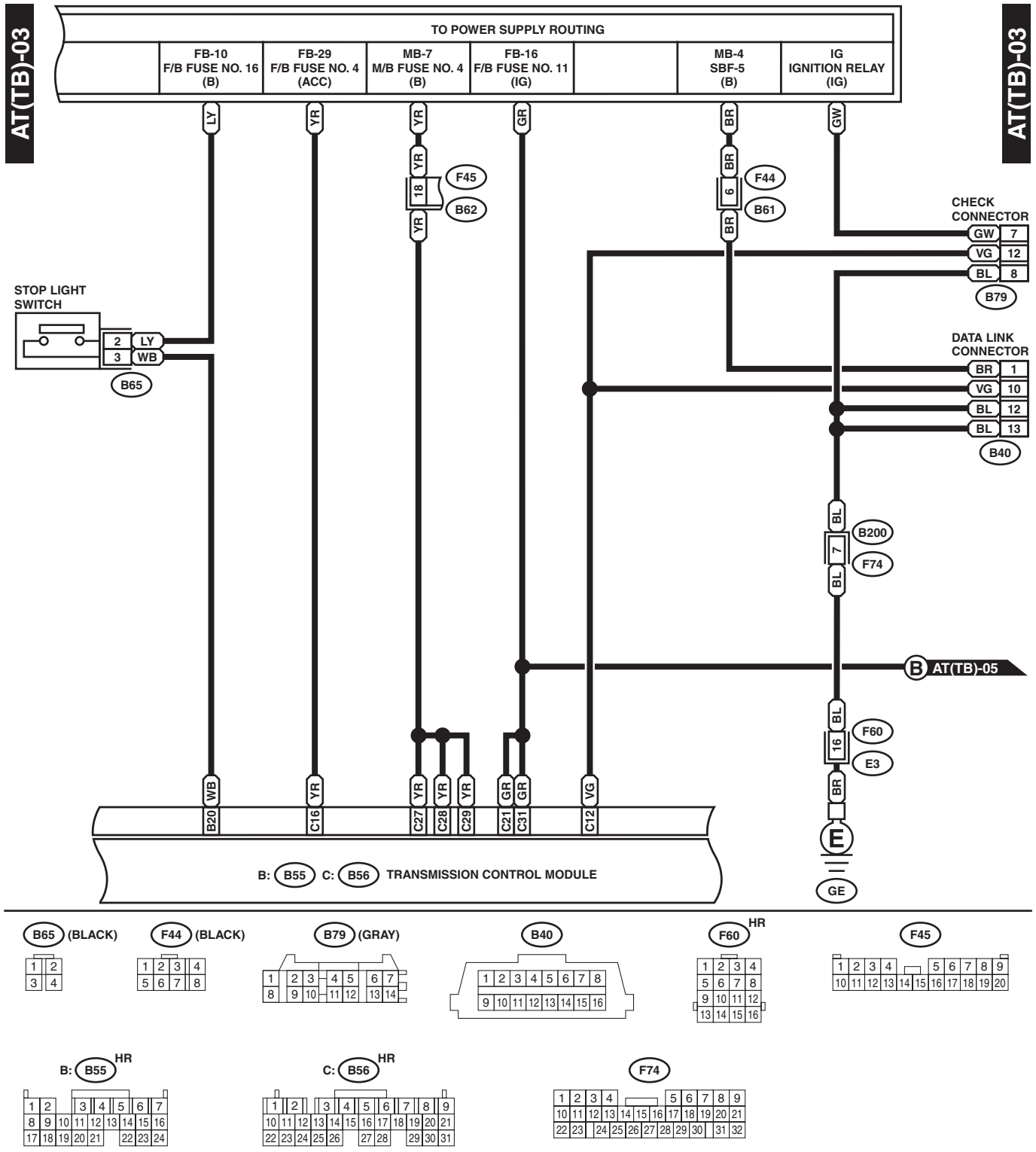
AT(TB)-03
TO POWER SUPPLY ROUTING
FB-10 F/B FUSE NO. 16 (B)
FB-29 F/B FUSE NO. 4 (ACC)
MB-7 M/B FUSE NO. 4 (B)
FB-16 F/B FUSE NO. 11 (IG)
MB-4 SBF-5 (B)
IG IGNITION RELAY (IG)
LY
YR
GR
BR
GW
F45
B62
F44
B61
CHECK CONNECTOR
GW 7
VG 12
BL 8
B79
STOP LIGHT SWITCH
2 LY
3 WB
B65
DATA LINK CONNECTOR
BR 1
VG 10
BL 12
BL 13
B40
B200
F74
B AT(TB)-05
F60
E3
E
GE
WB
B20
C16
C27
C28
C29
C21
C31
C12
B: B55 C: B56 TRANSMISSION CONTROL MODULE
B65 (BLACK)
F44 (BLACK)
B79 (GRAY)
B40
F60 HR
F45
B: B55 HR
C: B56 HR
F74
WI-06772

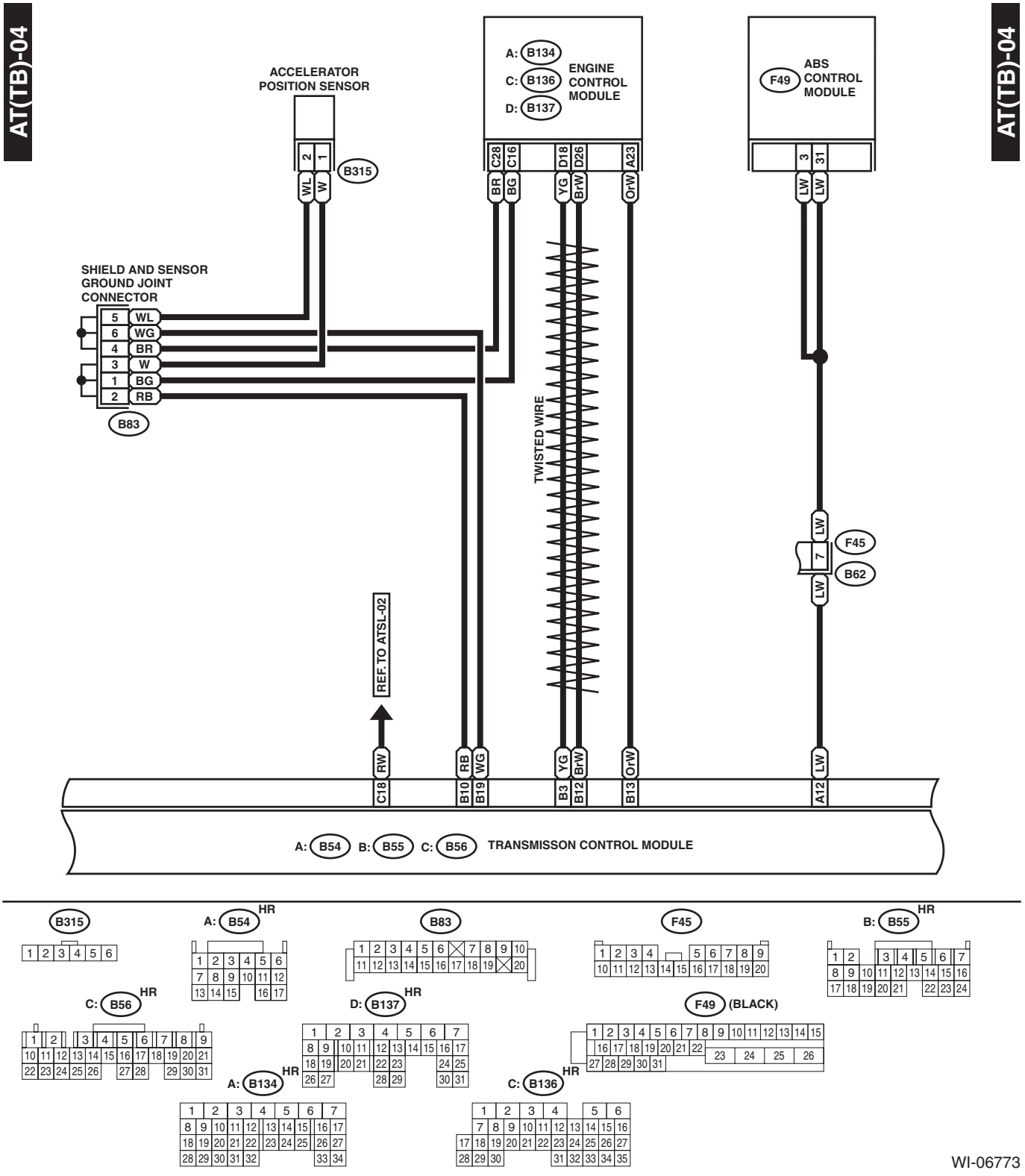
AT(TB)-04
ACCELERATOR POSITION SENSOR
B315
2
1
WL
W
A: B134
C: B136
D: B137
ENGINE CONTROL MODULE
C28
C16
D18
D26
A23
BR
BG
YG
BrW
OrW
F49
ABS CONTROL MODULE
3
31
LW
LW
SHIELD AND SENSOR GROUND JOINT CONNECTOR
5 WL
6 WG
4 BR
3 W
1 BG
2 RB
B83
TWISTED WIRE
LW
7
F45
B62
LW
REF. TO ATSL-02
RW
RB
WG
YG
BrW
OrW
LW
C18
B10
B19
B3
B12
B13
A12
A: B54
B: B55
C: B56
TRANSMISSON CONTROL MODULE
B315
A: B54 HR
B83
F45
B: B55 HR
C: B56 HR
D: B137 HR
F49 (BLACK)
A: B134 HR
C: B136 HR
WI-06773

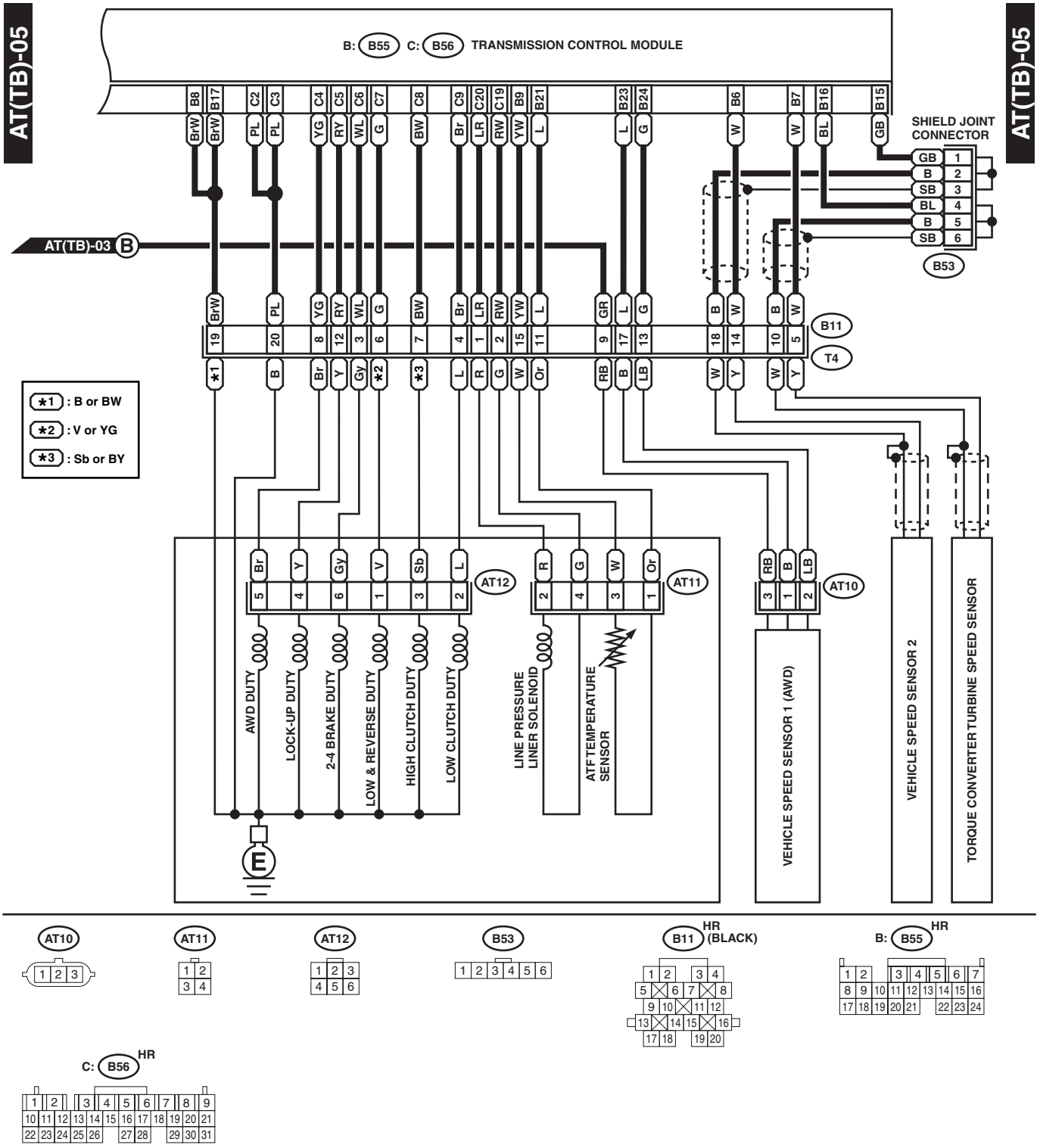
AT(TB)-05
B: B55 C: B56 TRANSMISSION CONTROL MODULE
SHIELD JOINT CONNECTOR
AT(TB)-03 B
B53
B11
T4
*1 : B or BW
*2 : V or YG
*3 : Sb or BY
AT12
AT11
AT10
AWD DUTY
LOCK-UP DUTY
2-4 BRAKE DUTY
LOW & REVERSE DUTY
HIGH CLUTCH DUTY
LOW CLUTCH DUTY
LINE PRESSURE LINER SOLENOID
ATF TEMPERATURE SENSOR
VEHICLE SPEED SENSOR 1 (AWD)
VEHICLE SPEED SENSOR 2
TORQUE CONVERTER TURBINE SPEED SENSOR
E
HR (BLACK)
HR

WI-10723

MEMO:

10.AT Shift Lock Control System

A: SCHEMATIC

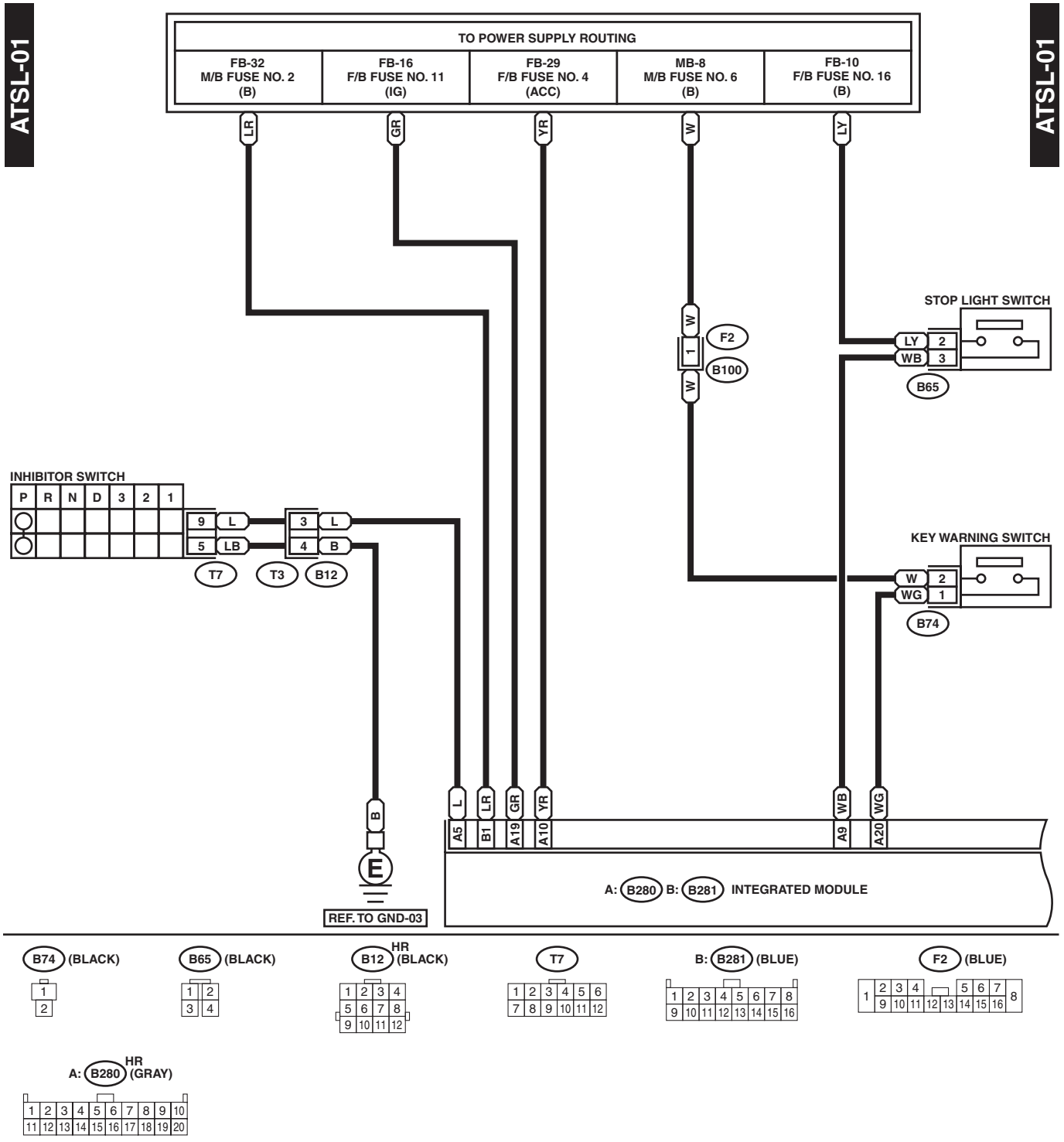

WI-06774

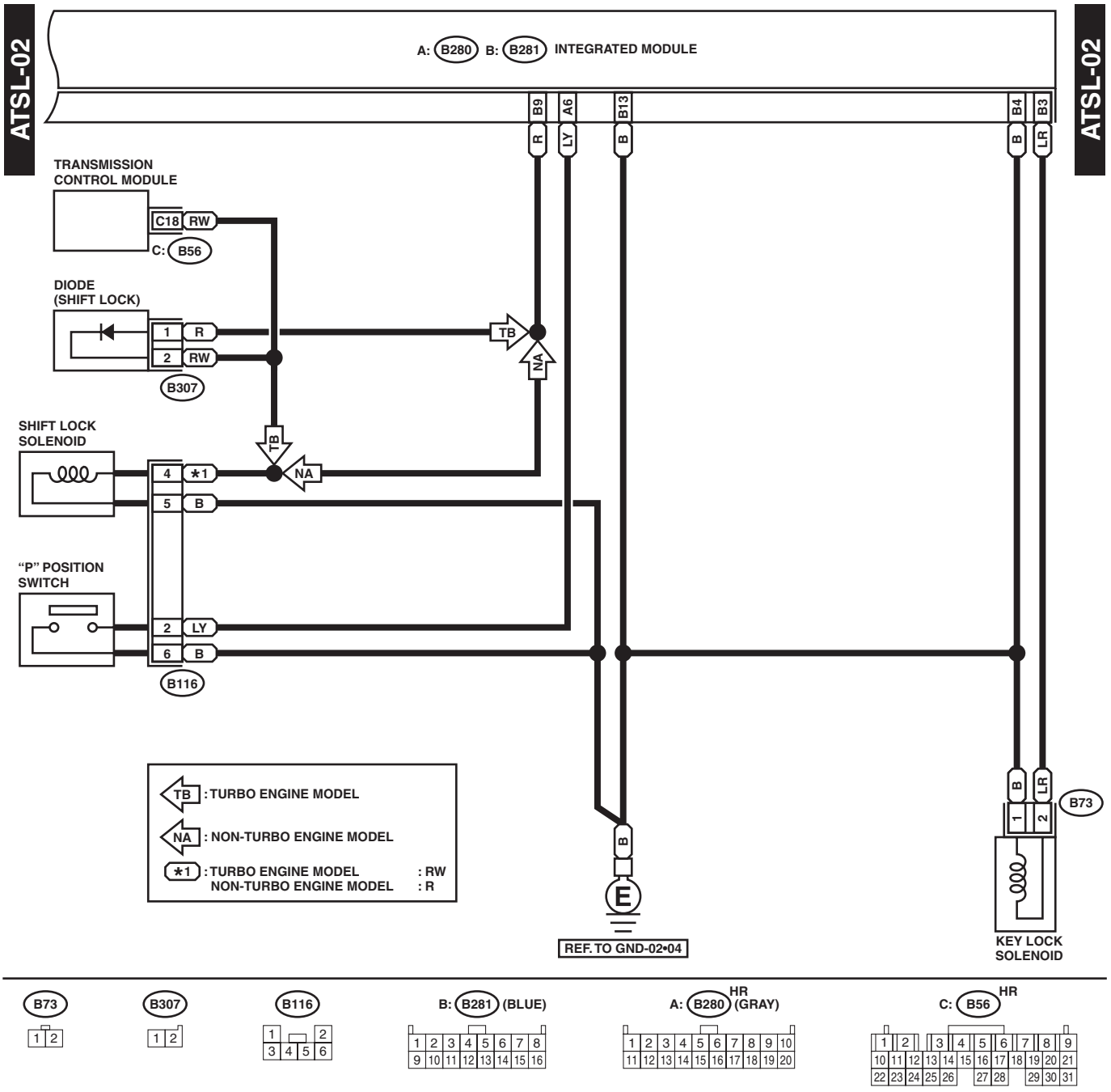
ATSL-02
A: B280 B: B281 INTEGRATED MODULE
B9
A6
B13
B4
B3
R
LY
B
B
LR
TRANSMISSION CONTROL MODULE
C18 RW
C: B56
DIODE (SHIFT LOCK)
1 R
2 RW
B307
TB
NA
SHIFT LOCK SOLENOID
4 *1
5 B
"P" POSITION SWITCH
2 LY
6 B
B116
TB : TURBO ENGINE MODEL
NA : NON-TURBO ENGINE MODEL
*1 : TURBO ENGINE MODEL : RW
NON-TURBO ENGINE MODEL : R
B
E
REF. TO GND-02•04
B73
KEY LOCK SOLENOID
B73
B307
B116
B: B281 (BLUE)
A: B280 HR (GRAY)
C: B56 HR

WI-06775

11.Audio System

A: SCHEMATIC

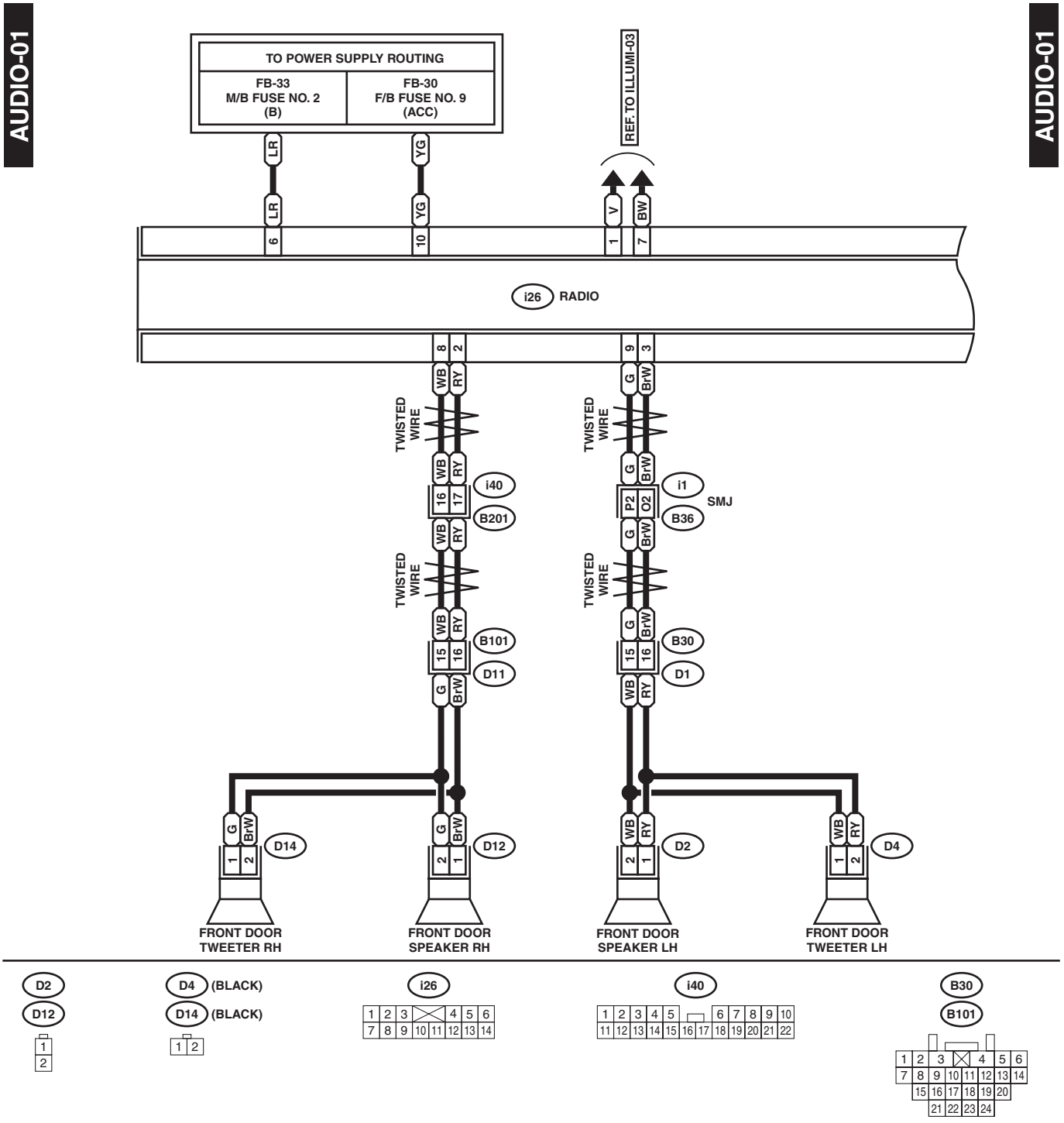

WI-05815

AUDIO-02

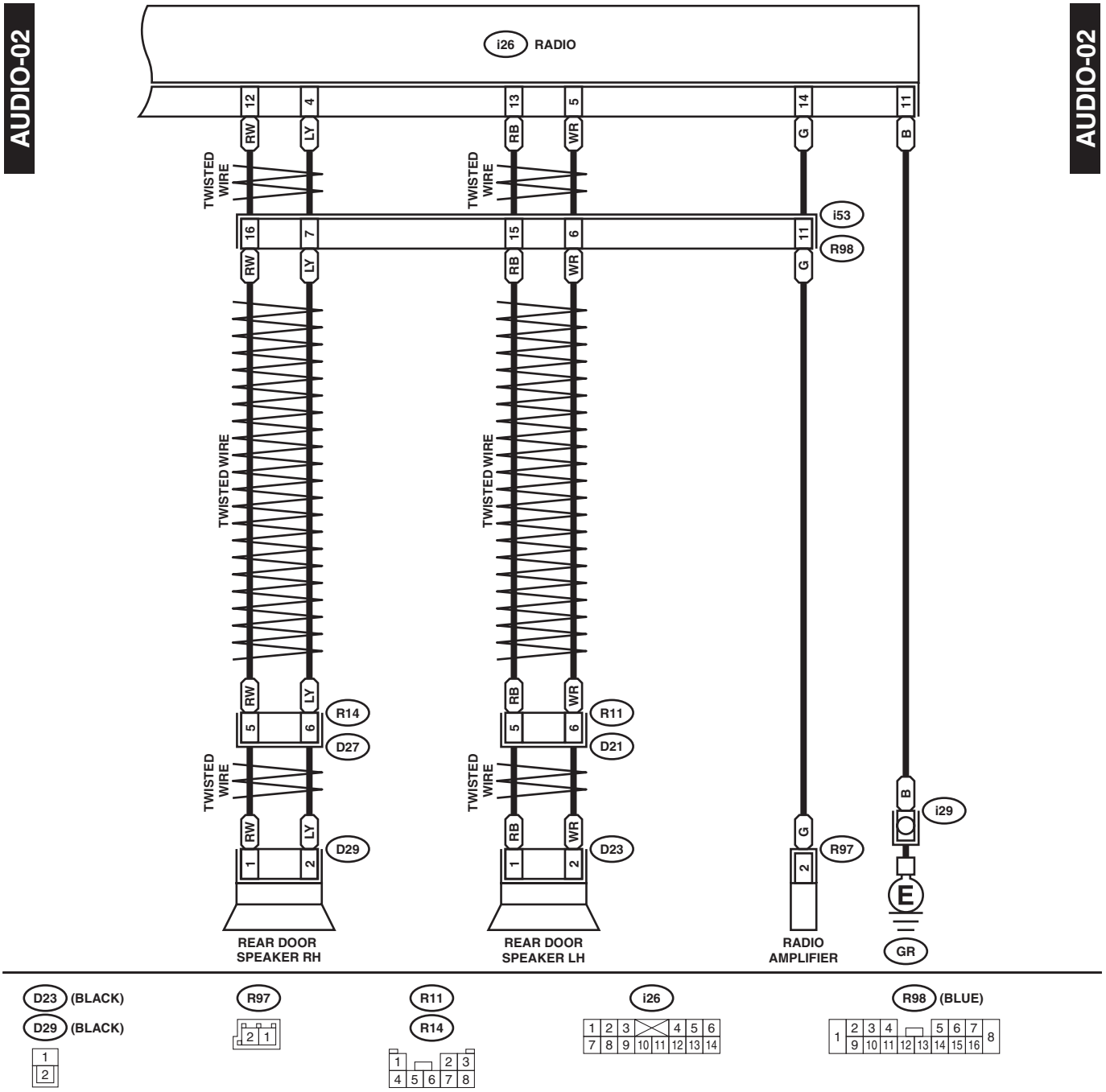

WI-05721

12.Charging System

A: SCHEMATIC

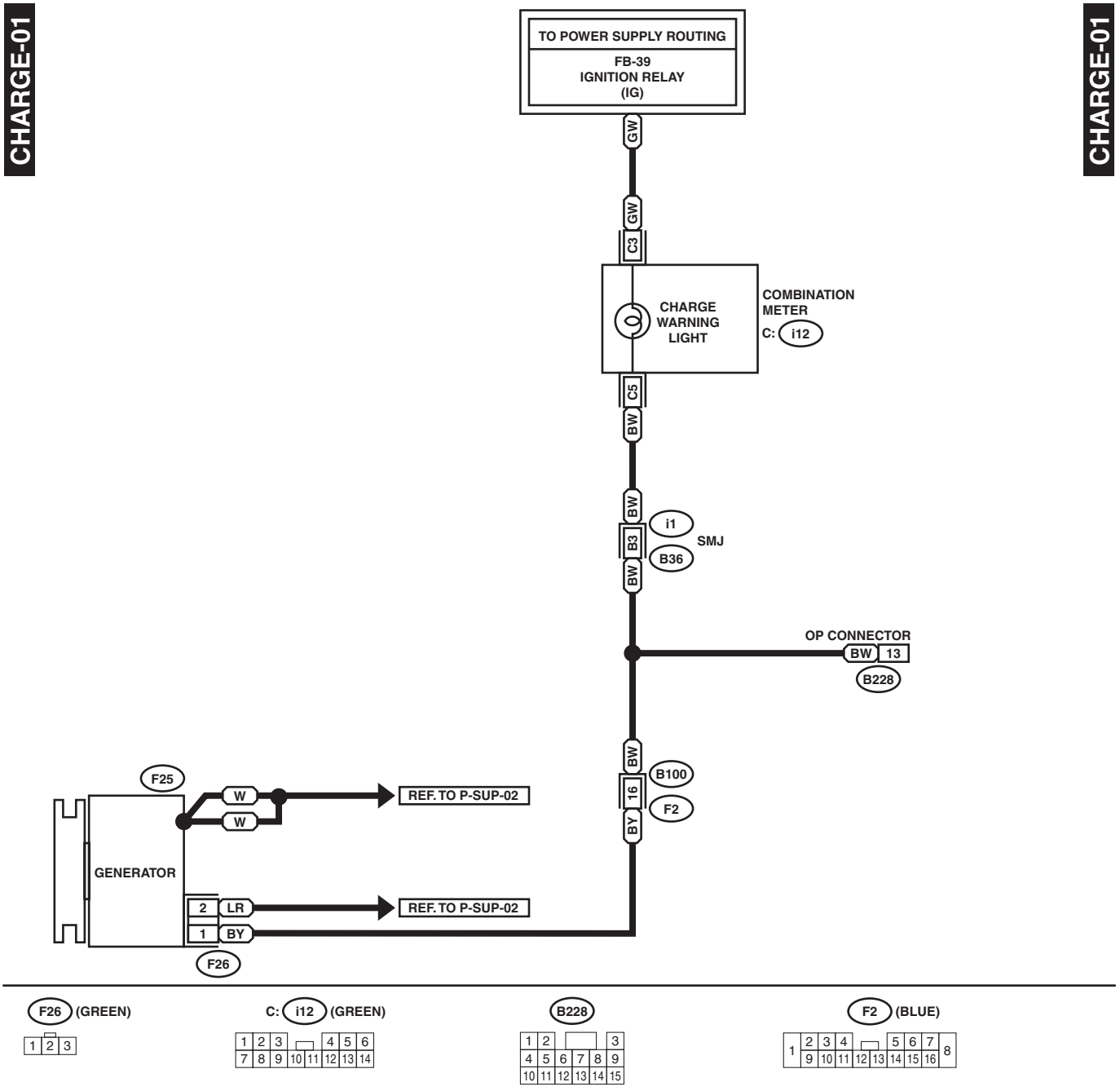

WI-05722

MEMO:

13.Combination Meter

A: SCHEMATIC

1. WITH SPORT SHIFT MODEL

CM(SP)-01

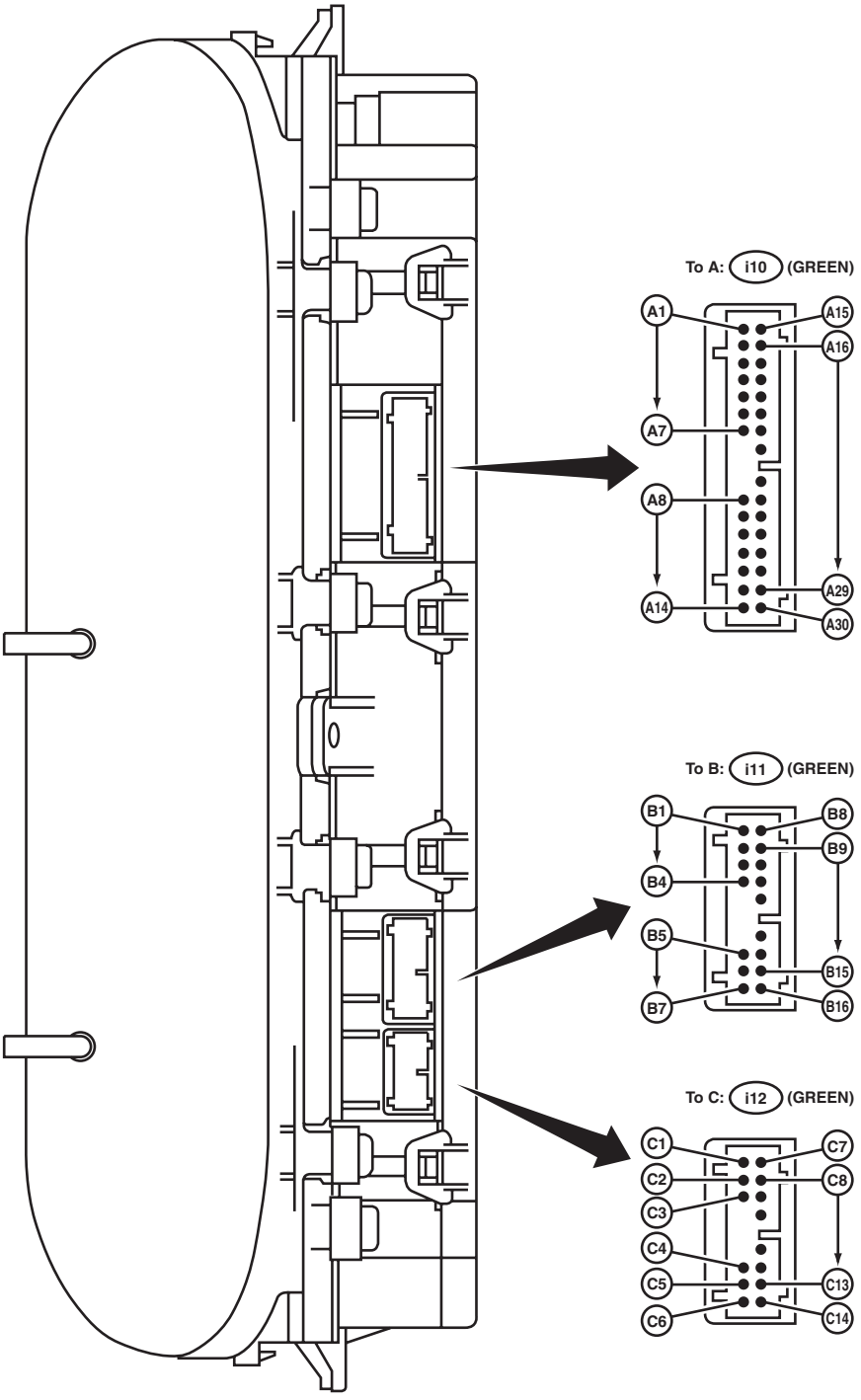

CM(SP)-01

WI-00575

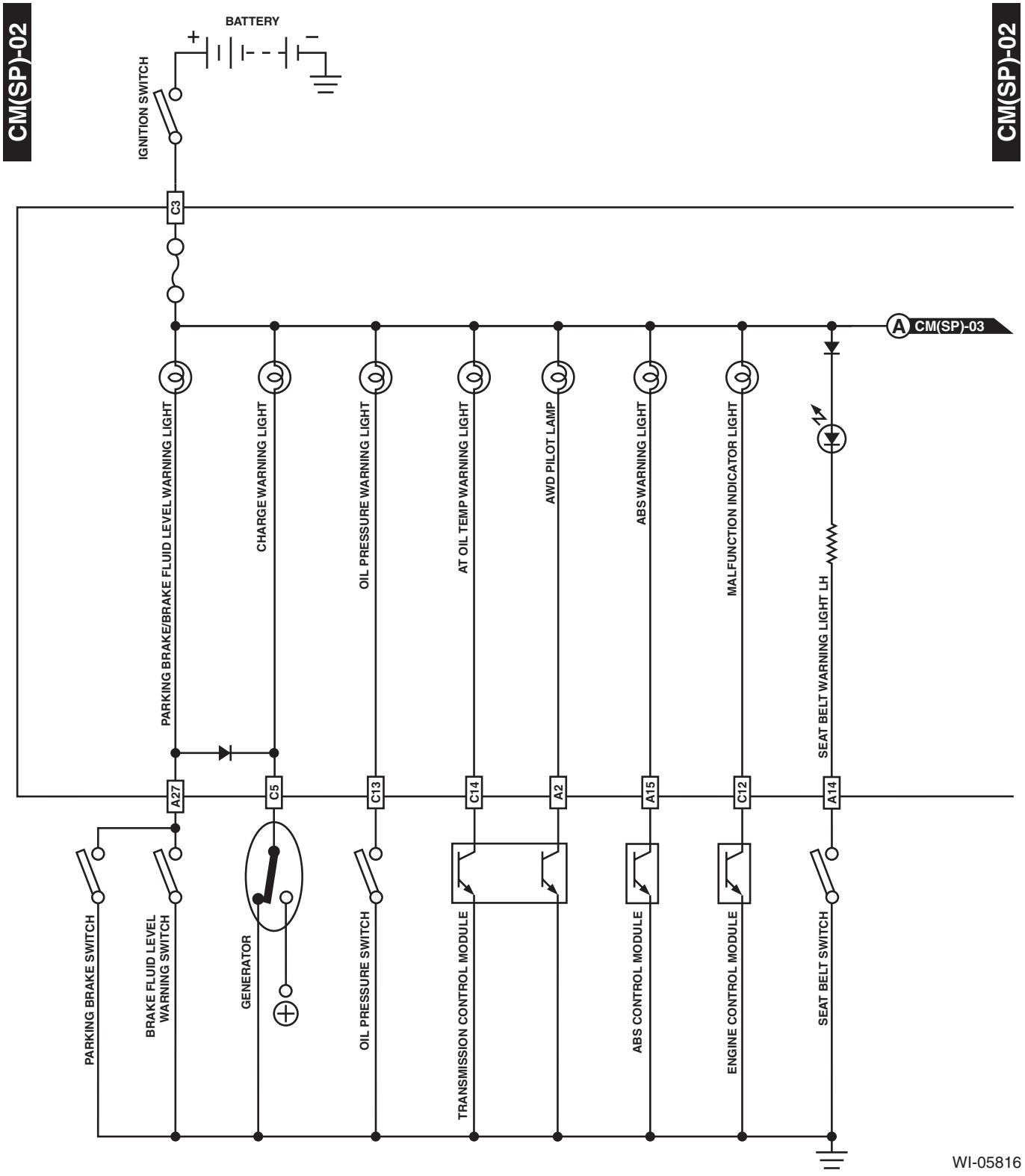
CM(SP)-02
CM(SP)-02
BATTERY
+
−
IGNITION SWITCH
C3
A
CM(SP)-03
PARKING BRAKE/BRAKE FLUID LEVEL WARNING LIGHT
CHARGE WARNING LIGHT
OIL PRESSURE WARNING LIGHT
AT OIL TEMP WARNING LIGHT
AWD PILOT LAMP
ABS WARNING LIGHT
MALFUNCTION INDICATOR LIGHT
SEAT BELT WARNING LIGHT LH
A27
C5
C13
C14
A2
A15
C12
A14
PARKING BRAKE SWITCH
BRAKE FLUID LEVEL WARNING SWITCH
GENERATOR
OIL PRESSURE SWITCH
TRANSMISSION CONTROL MODULE
ABS CONTROL MODULE
ENGINE CONTROL MODULE
SEAT BELT SWITCH
WI-05816

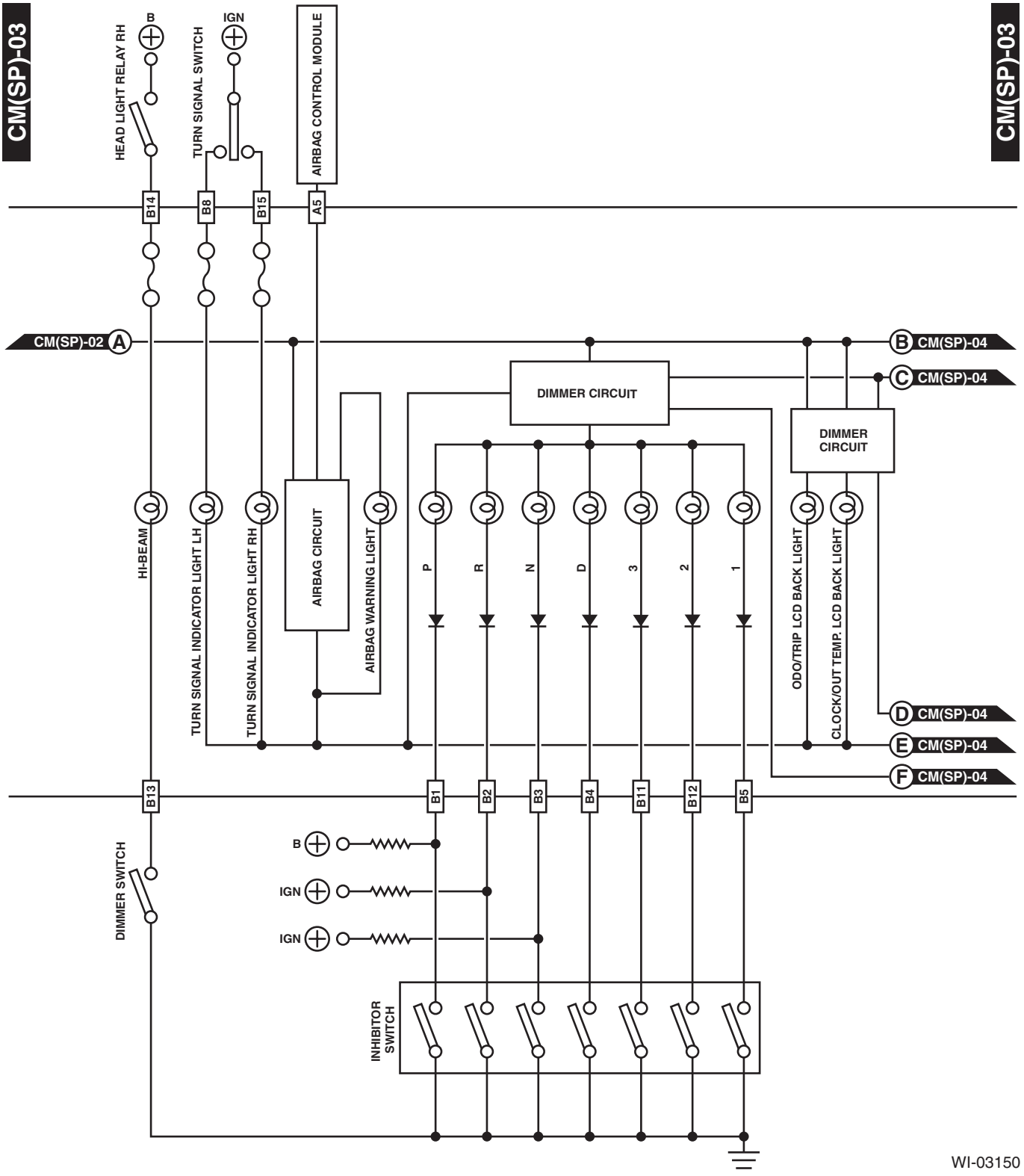
CM(SP)-03
CM(SP)-03
HEAD LIGHT RELAY RH
B
TURN SIGNAL SWITCH
IGN
AIRBAG CONTROL MODULE
B14
B8
B15
A5
CM(SP)-02 A
B CM(SP)-04
C CM(SP)-04
DIMMER CIRCUIT
DIMMER CIRCUIT
HI-BEAM
TURN SIGNAL INDICATOR LIGHT LH
TURN SIGNAL INDICATOR LIGHT RH
AIRBAG CIRCUIT
AIRBAG WARNING LIGHT
P
R
N
D
3
2
1
ODO/TRIP LCD BACK LIGHT
CLOCK/OUT TEMP. LCD BACK LIGHT
D CM(SP)-04
E CM(SP)-04
F CM(SP)-04
B13
B1
B2
B3
B4
B11
B12
B5
DIMMER SWITCH
B
IGN
IGN
INHIBITOR SWITCH

WI-03150

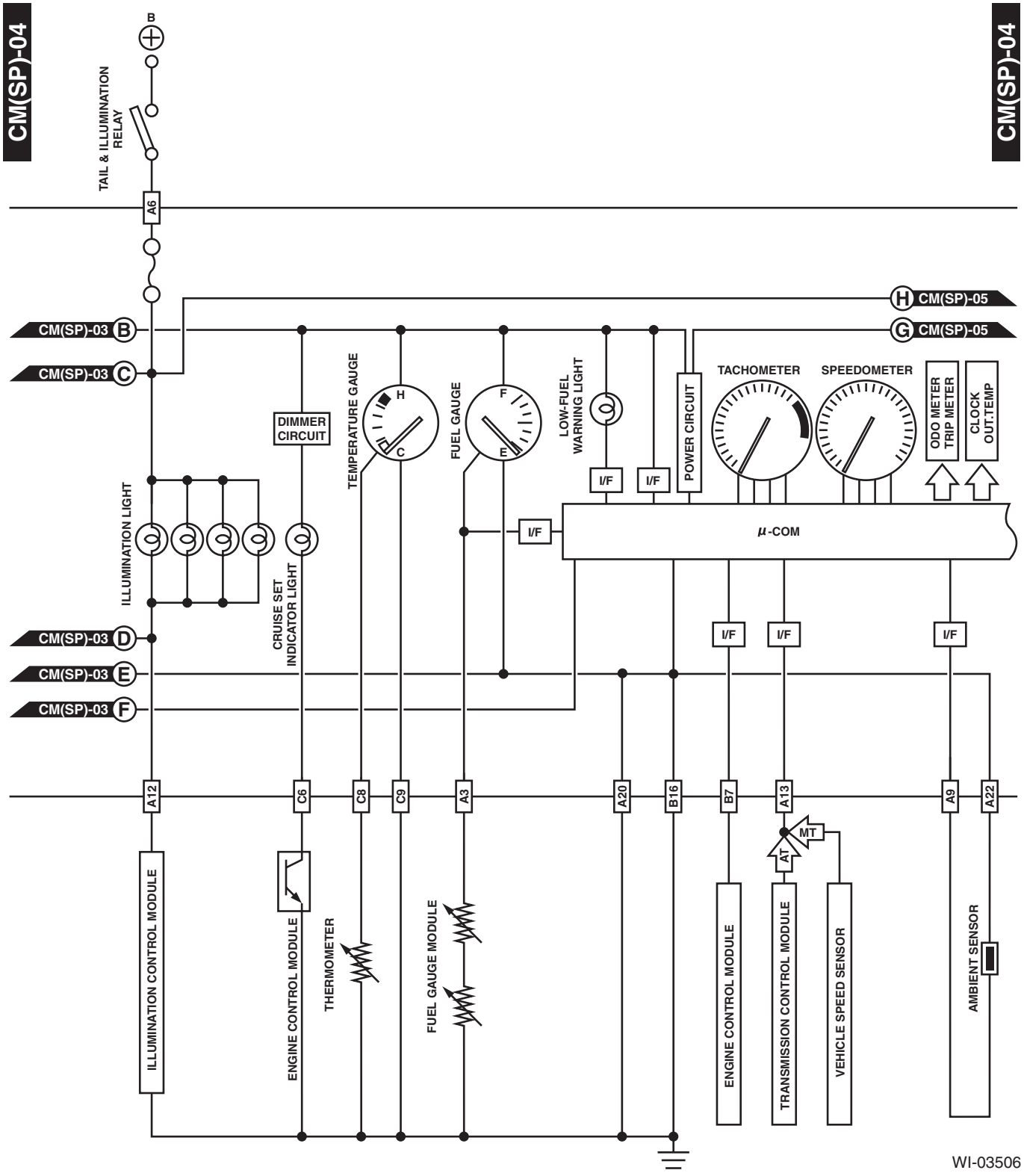
CM(SP)-04
CM(SP)-04
B
TAIL & ILLUMINATION RELAY
A6
CM(SP)-03 B
CM(SP)-03 C
CM(SP)-03 D
CM(SP)-03 E
CM(SP)-03 F
CM(SP)-05 H
CM(SP)-05 G
ILLUMINATION LIGHT
DIMMER CIRCUIT
CRUISE SET INDICATOR LIGHT
TEMPERATURE GAUGE
H
C
FUEL GAUGE
F
E
LOW-FUEL WARNING LIGHT
I/F
POWER CIRCUIT
TACHOMETER
SPEEDOMETER
ODO METER TRIP METER
CLOCK OUT.TEMP
μ-COM
A12
C6
C8
C9
A3
A20
B16
B7
A13
A9
A22
MT
AT
ILLUMINATION CONTROL MODULE
ENGINE CONTROL MODULE
THERMOMETER
FUEL GAUGE MODULE
ENGINE CONTROL MODULE
TRANSMISSION CONTROL MODULE
VEHICLE SPEED SENSOR
AMBIENT SENSOR
WI-03506

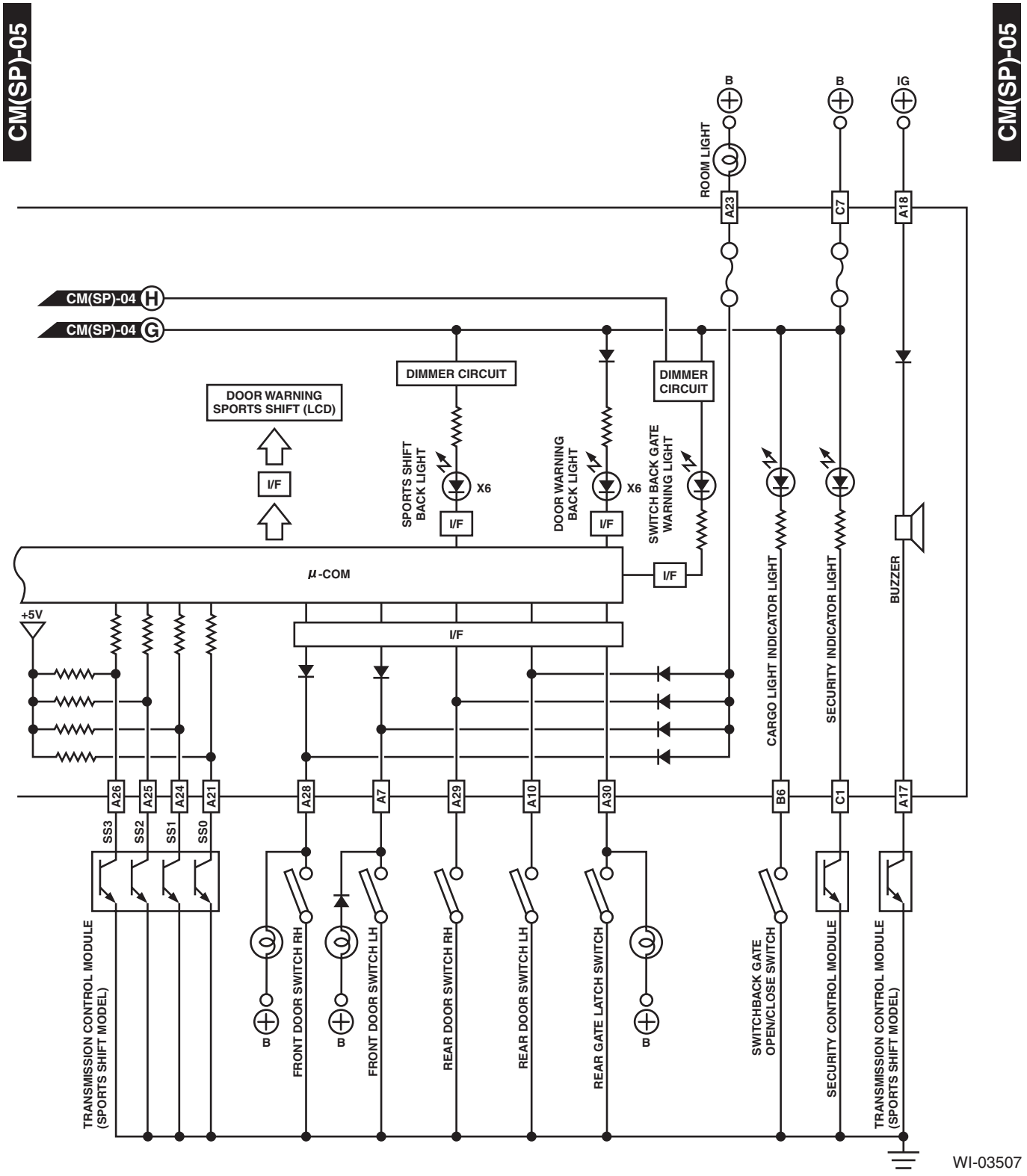
CM(SP)-05
CM(SP)-05
B
B
IG
ROOM LIGHT
A23
C7
A18
CM(SP)-04 H
CM(SP)-04 G
DIMMER CIRCUIT
DIMMER CIRCUIT
DOOR WARNING SPORTS SHIFT (LCD)
I/F
SPORTS SHIFT BACK LIGHT
X6
I/F
DOOR WARNING BACK LIGHT
X6
I/F
SWITCH BACK GATE WARNING LIGHT
I/F
μ-COM
I/F
+5V
I/F
CARGO LIGHT INDICATOR LIGHT
SECURITY INDICATOR LIGHT
BUZZER
A26
A25
A24
A21
A28
A7
A29
A10
A30
B6
C1
A17
SS3
SS2
SS1
SS0
TRANSMISSION CONTROL MODULE (SPORTS SHIFT MODEL)
B
FRONT DOOR SWITCH RH
B
FRONT DOOR SWITCH LH
REAR DOOR SWITCH RH
REAR DOOR SWITCH LH
REAR GATE LATCH SWITCH
B
SWITCHBACK GATE OPEN/CLOSE SWITCH
SECURITY CONTROL MODULE
TRANSMISSION CONTROL MODULE (SPORTS SHIFT MODEL)
WI-03507

2. WITHOUT SPORT SHIFT MODEL

CM(ESP)-01

CM(ESP)-01

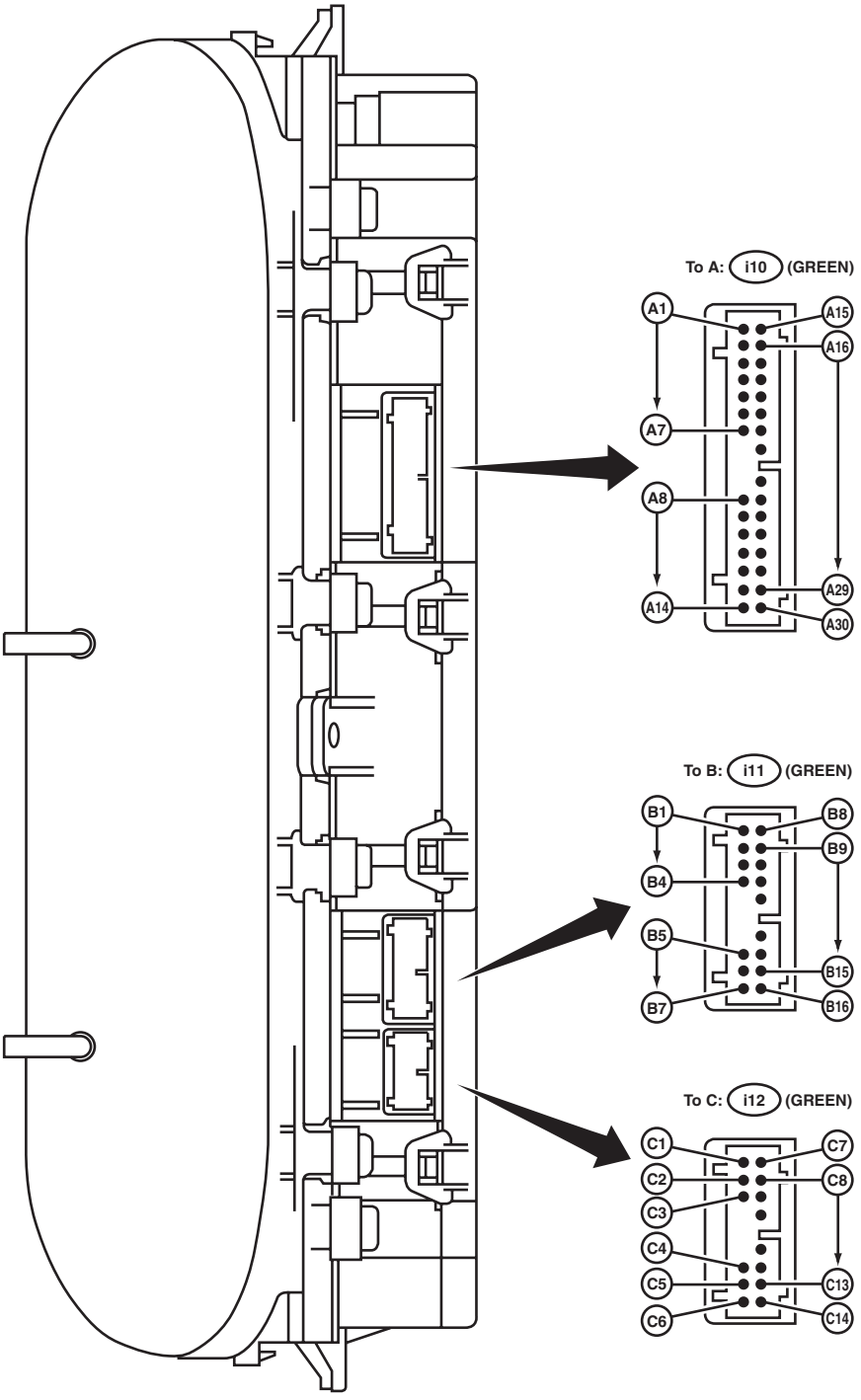

WI-00580

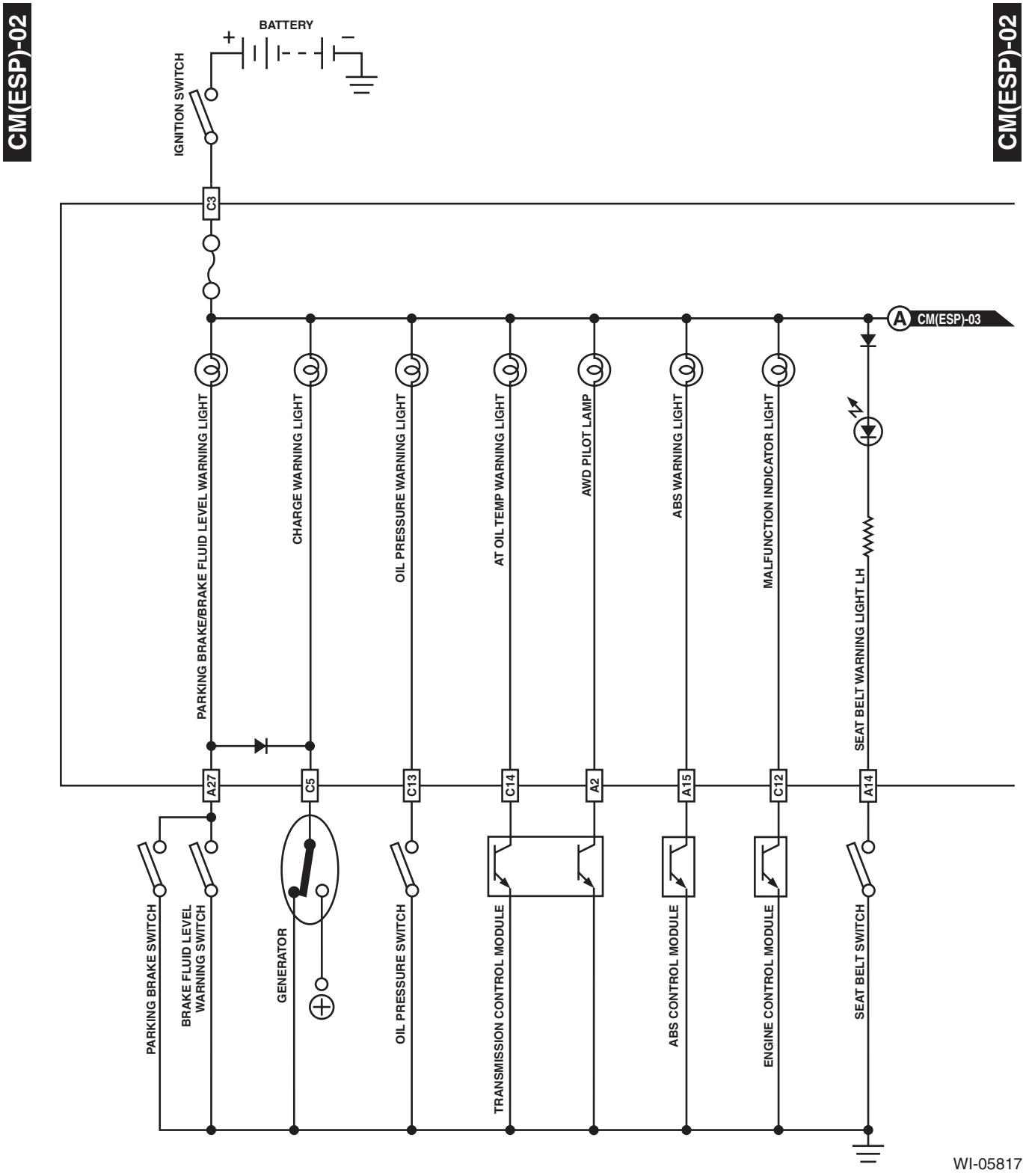
CM(ESP)-02
CM(ESP)-02
BATTERY
+
−
IGNITION SWITCH
C3
A
CM(ESP)-03
PARKING BRAKE/BRAKE FLUID LEVEL WARNING LIGHT
CHARGE WARNING LIGHT
OIL PRESSURE WARNING LIGHT
AT OIL TEMP WARNING LIGHT
AWD PILOT LAMP
ABS WARNING LIGHT
MALFUNCTION INDICATOR LIGHT
SEAT BELT WARNING LIGHT LH
A27
C5
C13
C14
A2
A15
C12
A14
PARKING BRAKE SWITCH
BRAKE FLUID LEVEL WARNING SWITCH
GENERATOR
OIL PRESSURE SWITCH
TRANSMISSION CONTROL MODULE
ABS CONTROL MODULE
ENGINE CONTROL MODULE
SEAT BELT SWITCH
WI-05817

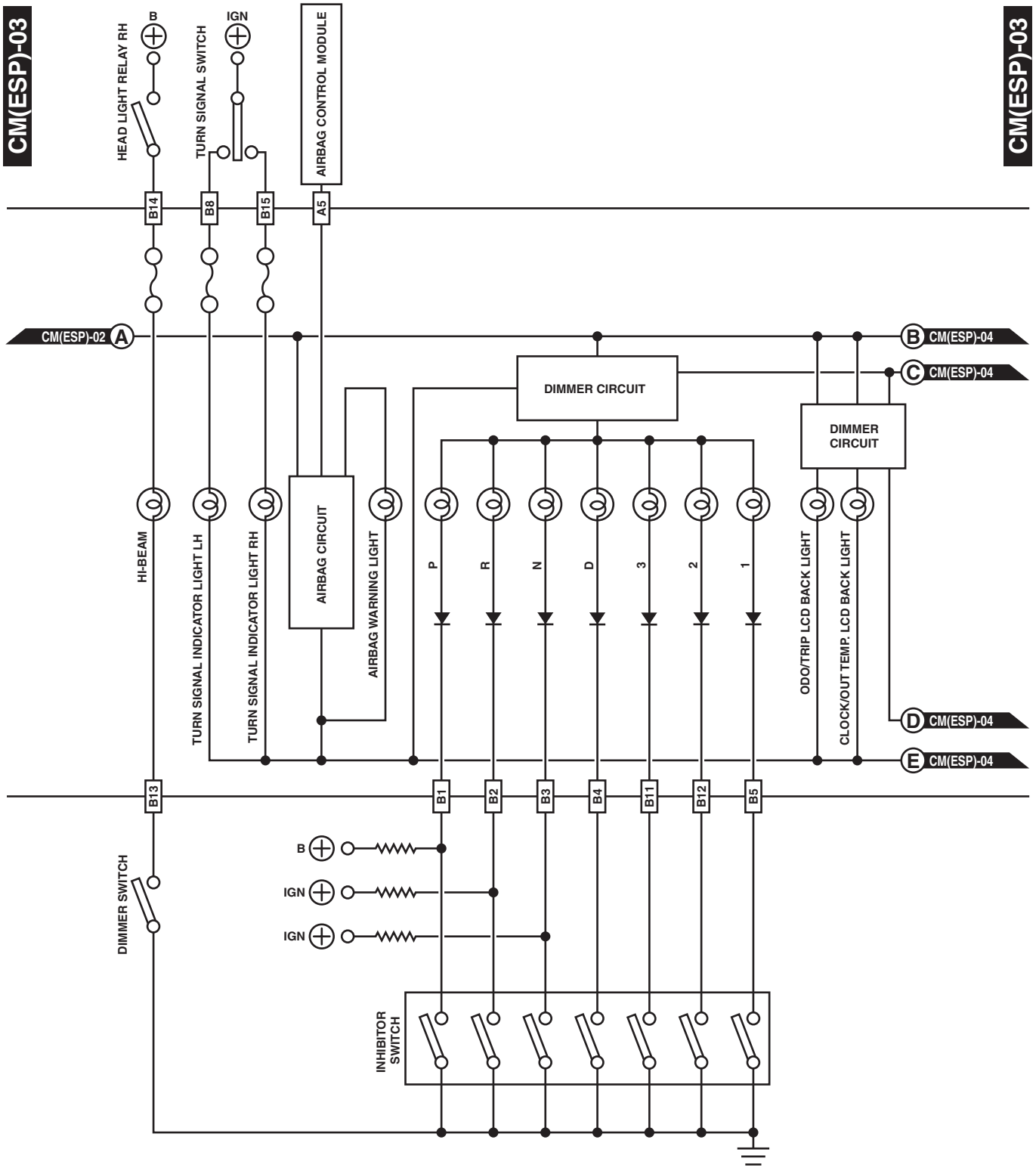
CM(ESP)-03
CM(ESP)-03
HEAD LIGHT RELAY RH
B
TURN SIGNAL SWITCH
IGN
AIRBAG CONTROL MODULE
B14
B8
B15
A5
CM(ESP)-02 A
B CM(ESP)-04
C CM(ESP)-04
DIMMER CIRCUIT
DIMMER CIRCUIT
HI-BEAM
TURN SIGNAL INDICATOR LIGHT LH
TURN SIGNAL INDICATOR LIGHT RH
AIRBAG CIRCUIT
AIRBAG WARNING LIGHT
P
R
N
D
3
2
1
ODO/TRIP LCD BACK LIGHT
CLOCK/OUT TEMP. LCD BACK LIGHT
D CM(ESP)-04
E CM(ESP)-04
B13
B1
B2
B3
B4
B11
B12
B5
B
IGN
IGN
DIMMER SWITCH
INHIBITOR SWITCH

WI-03152

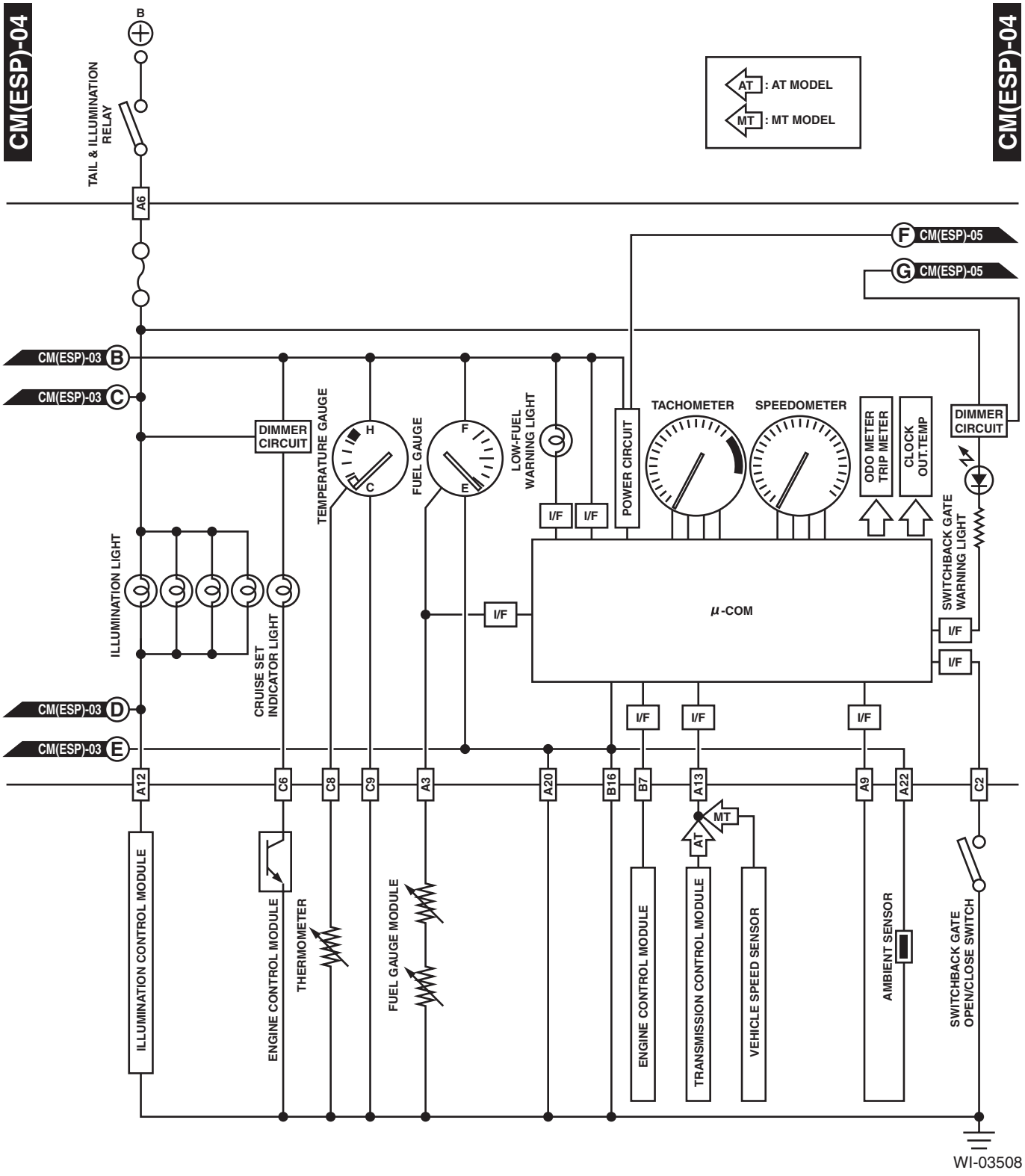
CM(ESP)-04
CM(ESP)-04
B
TAIL & ILLUMINATION RELAY
A6
AT : AT MODEL
MT : MT MODEL
F CM(ESP)-05
G CM(ESP)-05
CM(ESP)-03 B
CM(ESP)-03 C
CM(ESP)-03 D
CM(ESP)-03 E
DIMMER CIRCUIT
TEMPERATURE GAUGE
FUEL GAUGE
LOW-FUEL WARNING LIGHT
POWER CIRCUIT
TACHOMETER
SPEEDOMETER
ODO METER TRIP METER
CLOCK OUT.TEMP
DIMMER CIRCUIT
SWITCHBACK GATE WARNING LIGHT
ILLUMINATION LIGHT
CRUISE SET INDICATOR LIGHT
I/F
μ-COM
A12
C6
C8
C9
A3
A20
B16
B7
A13
A9
A22
C2
ILLUMINATION CONTROL MODULE
ENGINE CONTROL MODULE
THERMOMETER
FUEL GAUGE MODULE
ENGINE CONTROL MODULE
TRANSMISSION CONTROL MODULE
VEHICLE SPEED SENSOR
AMBIENT SENSOR
SWITCHBACK GATE OPEN/CLOSE SWITCH
WI-03508

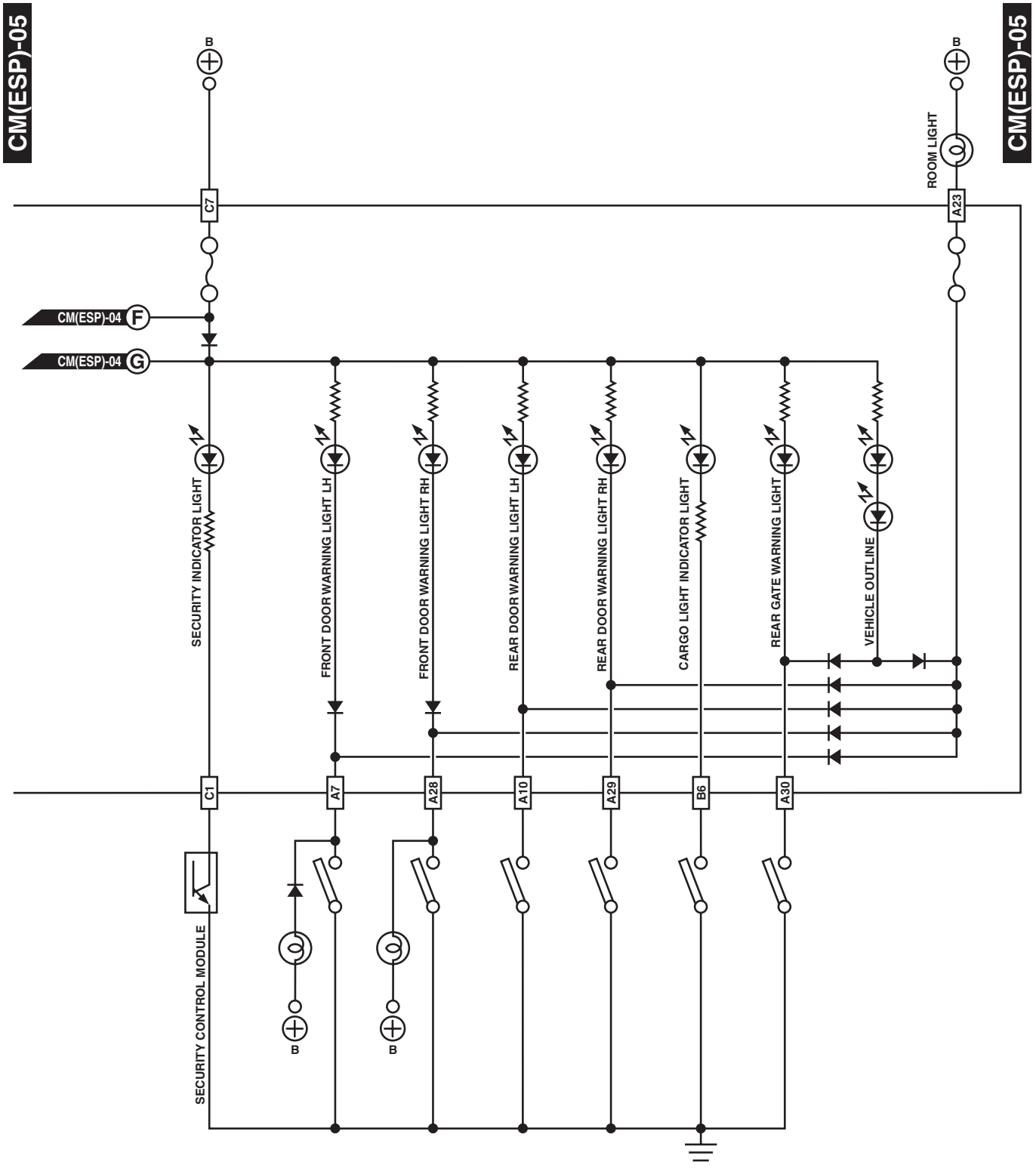
CM(ESP)-05
B
C7
CM(ESP)-04 F
CM(ESP)-04 G
SECURITY INDICATOR LIGHT
FRONT DOOR WARNING LIGHT LH
FRONT DOOR WARNING LIGHT RH
REAR DOOR WARNING LIGHT LH
REAR DOOR WARNING LIGHT RH
CARGO LIGHT INDICATOR LIGHT
REAR GATE WARNING LIGHT
VEHICLE OUTLINE
C1
A7
A28
A10
A29
B6
A30
SECURITY CONTROL MODULE
B
B
B
ROOM LIGHT
A23
CM(ESP)-05

WI-03153

14.Cruise Control System

A: SCHEMATIC

1. NON-TURBO ENGINE MODEL

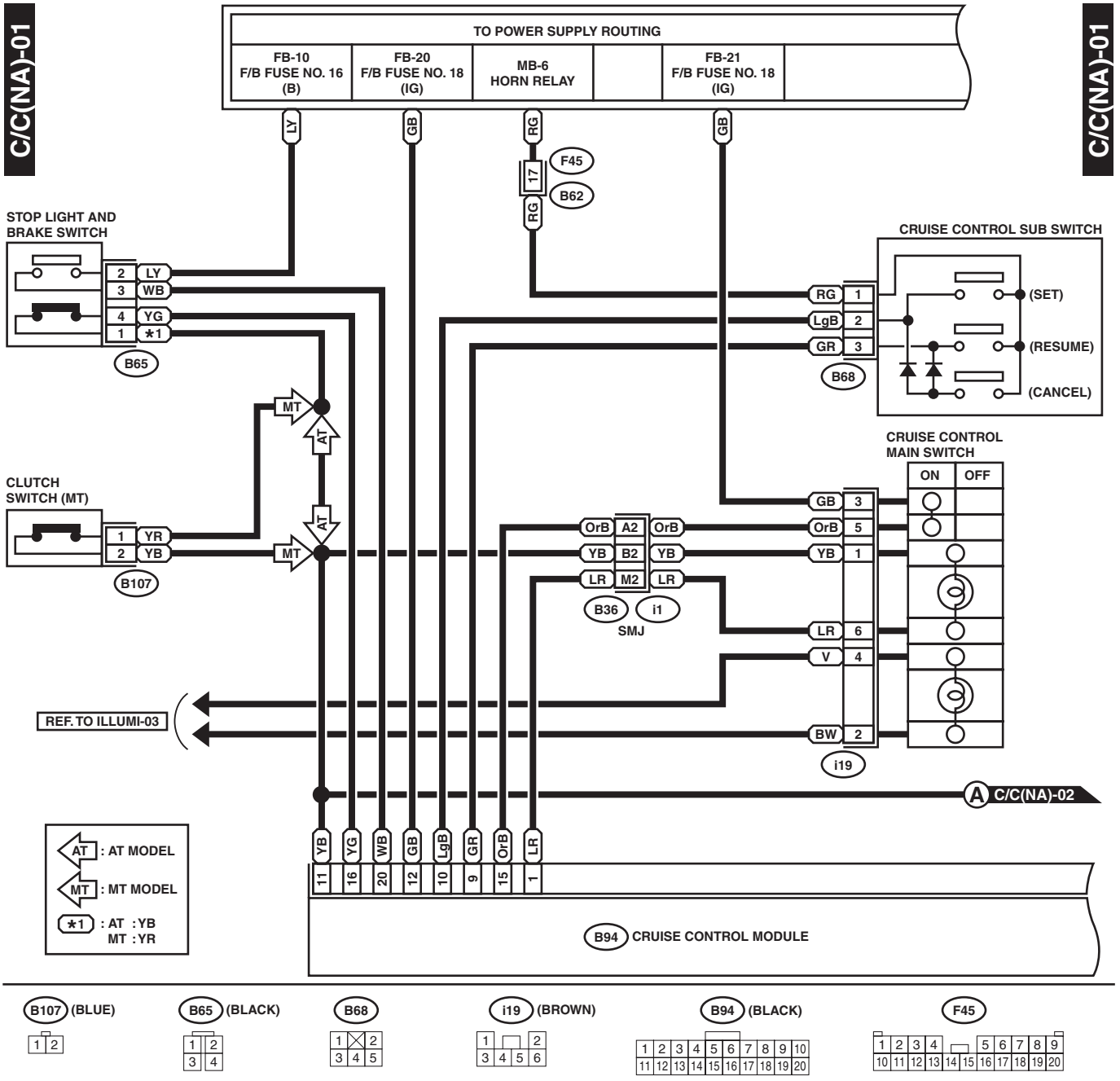

WI-05724

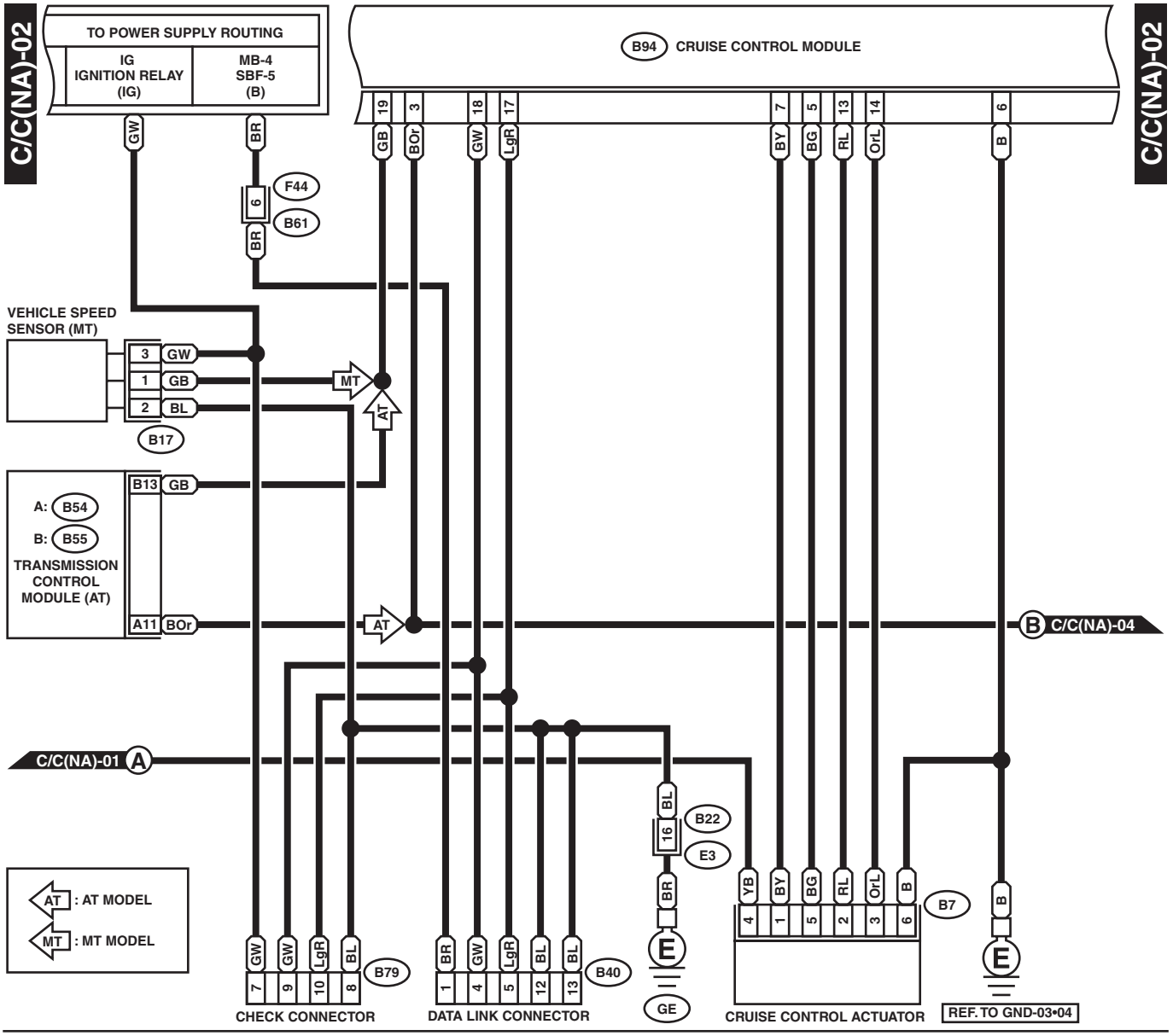
C/C(NA)-02
TO POWER SUPPLY ROUTING
IG IGNITION RELAY (IG)
MB-4 SBF-5 (B)
B94 CRUISE CONTROL MODULE
C/C(NA)-02
F44
B61
VEHICLE SPEED SENSOR (MT)
B17
A: B54
B: B55
TRANSMISSION CONTROL MODULE (AT)
B13 GB
A11 BOr
B C/C(NA)-04
C/C(NA)-01 A
B22
E3
B7
B79
B40
GE
CHECK CONNECTOR
DATA LINK CONNECTOR
CRUISE CONTROL ACTUATOR
REF. TO GND-03•04
AT : AT MODEL
MT : MT MODEL

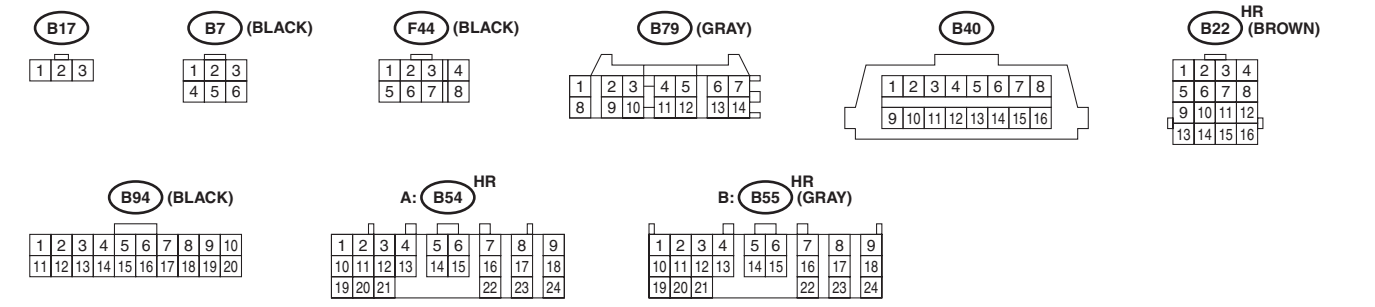
B17
B7 (BLACK)
F44 (BLACK)
B79 (GRAY)
B40
B22 HR (BROWN)
B94 (BLACK)
A: B54 HR
B: B55 HR (GRAY)

WI-06776

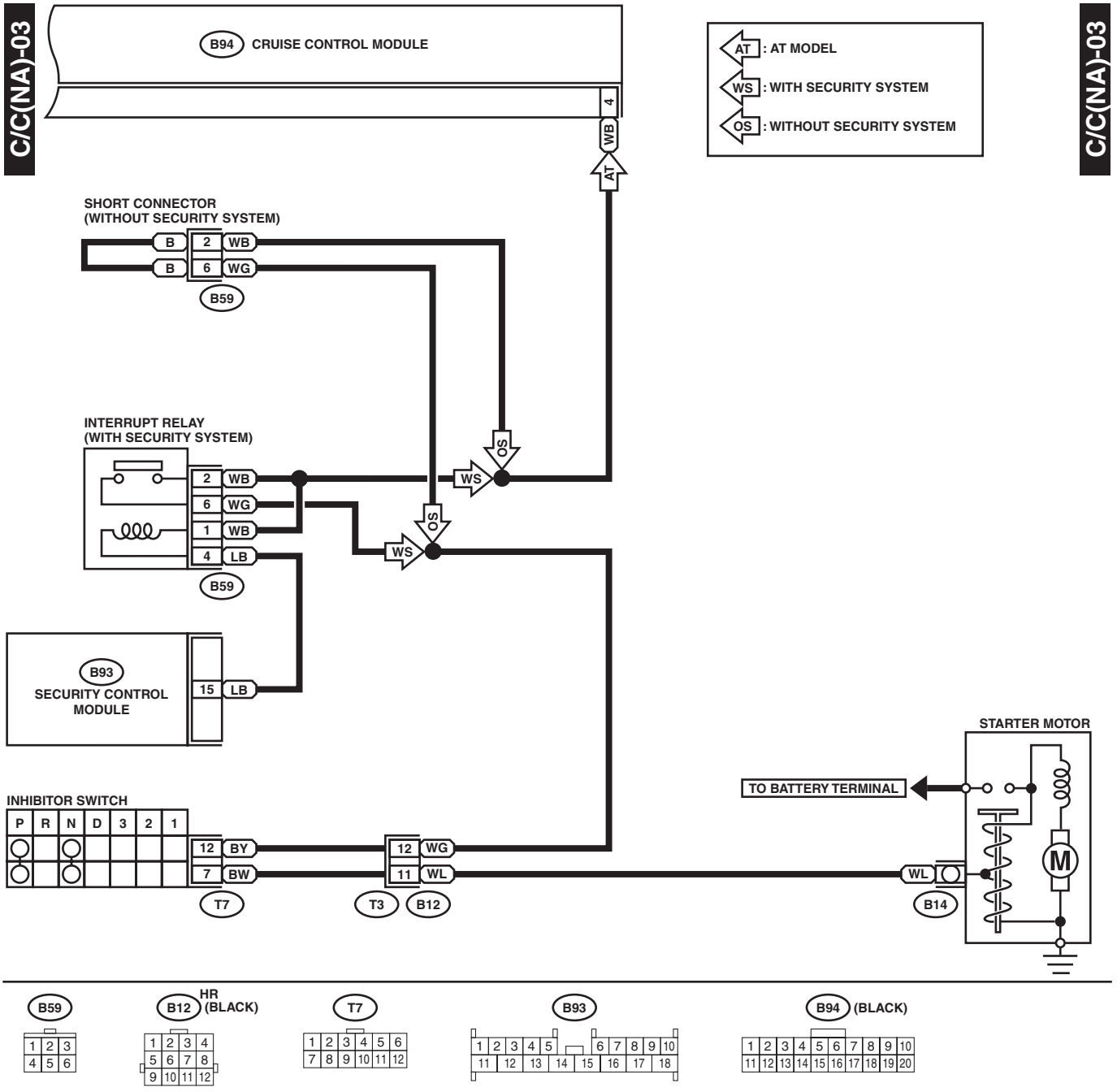
C/C(NA)-03
B94 CRUISE CONTROL MODULE
4
WB
AT
AT : AT MODEL
WS : WITH SECURITY SYSTEM
OS : WITHOUT SECURITY SYSTEM
C/C(NA)-03
SHORT CONNECTOR
(WITHOUT SECURITY SYSTEM)
B 2 WB
B 6 WG
B59
INTERRUPT RELAY
(WITH SECURITY SYSTEM)
2 WB
6 WG
1 WB
4 LB
B59
OS
WS
OS
WS
B93
SECURITY CONTROL
MODULE
15 LB
STARTER MOTOR
TO BATTERY TERMINAL
M
INHIBITOR SWITCH
P R N D 3 2 1
12 BY
7 BW
T7
12 WG
11 WL
T3 B12
WL
B14

B59
1 2 3
4 5 6
B12 HR (BLACK)
1 2 3 4
5 6 7 8
9 10 11 12
T7
1 2 3 4 5 6
7 8 9 10 11 12
B93
1 2 3 4 5 6 7 8 9 10
11 12 13 14 15 16 17 18
B94 (BLACK)
1 2 3 4 5 6 7 8 9 10
11 12 13 14 15 16 17 18 19 20

WI-06777

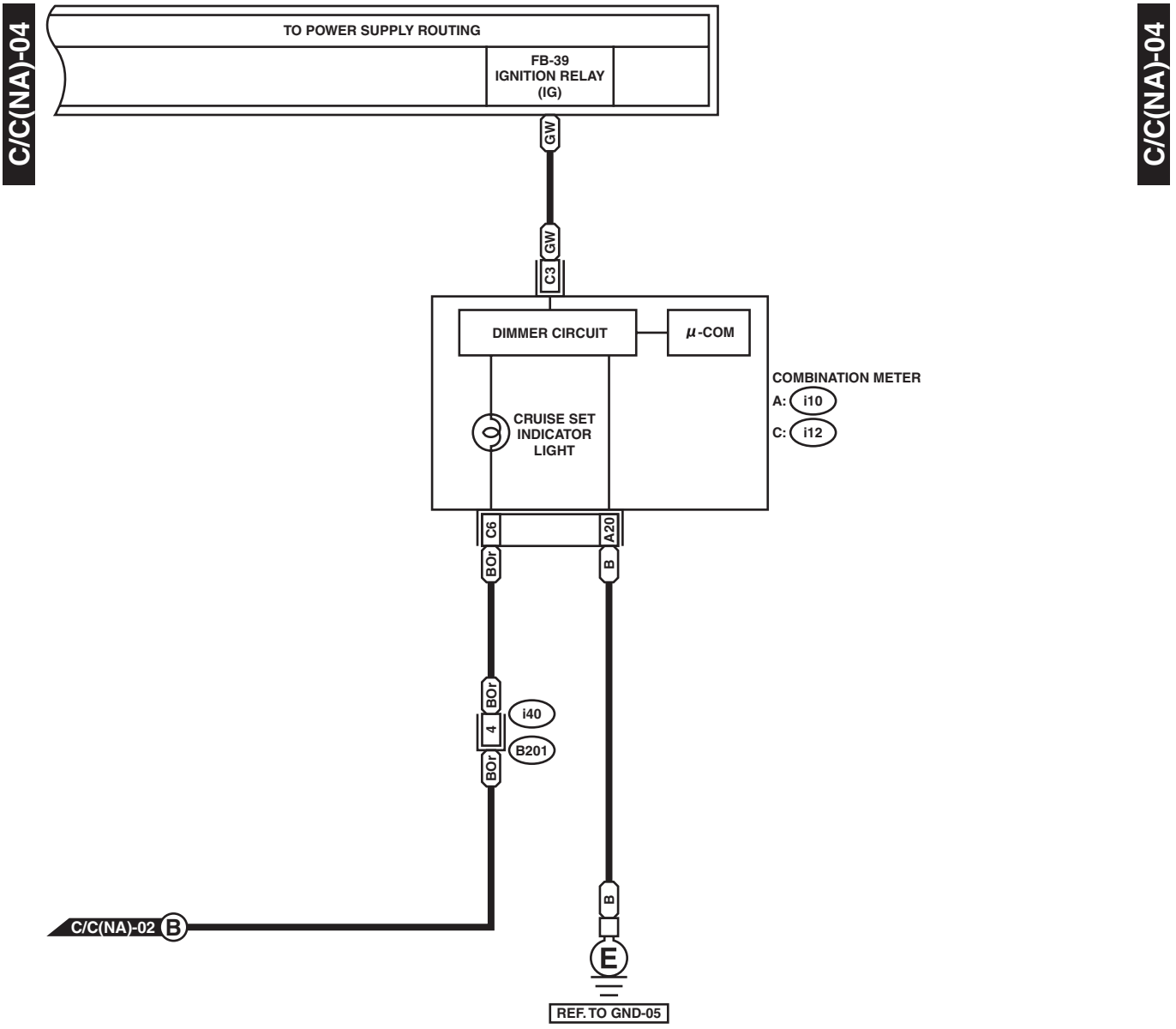
C/C(NA)-04
TO POWER SUPPLY ROUTING
FB-39
IGNITION RELAY
(IG)
GW
GW
C3
DIMMER CIRCUIT
μ-COM
CRUISE SET
INDICATOR
LIGHT
COMBINATION METER
A: i10
C: i12
C6
A20
BOr
B
BOr
4
BOr
i40
B201
C/C(NA)-02 B
B
E
REF. TO GND-05
C/C(NA)-04

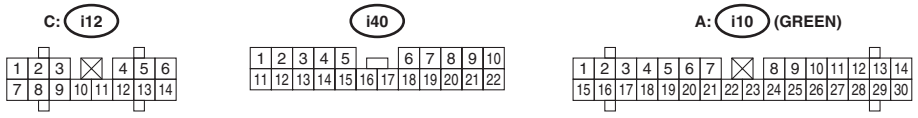
C: i12
i40
A: i10 (GREEN)

WI-05819

2. TURBO ENGINE MODEL

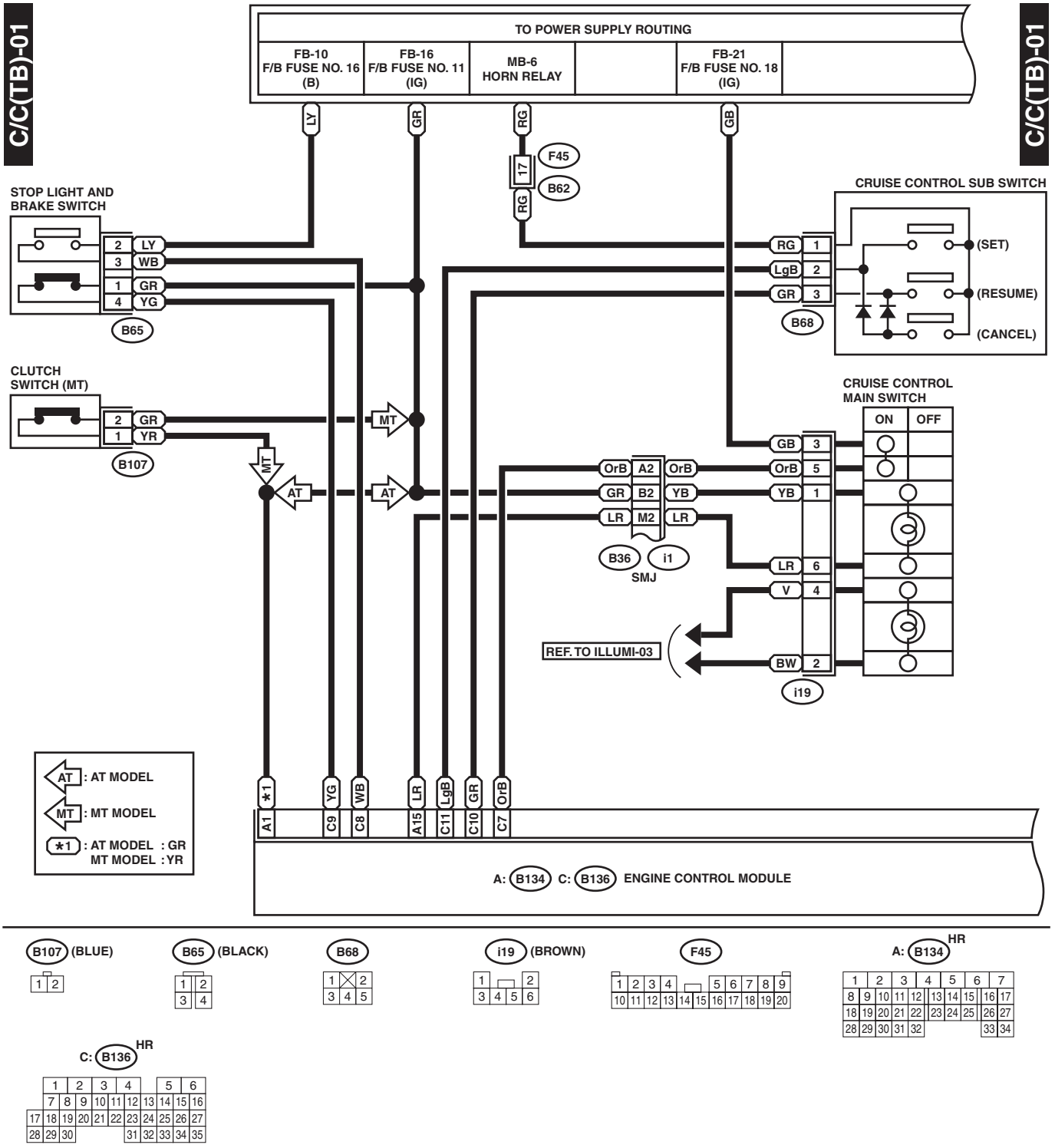

WI-06778

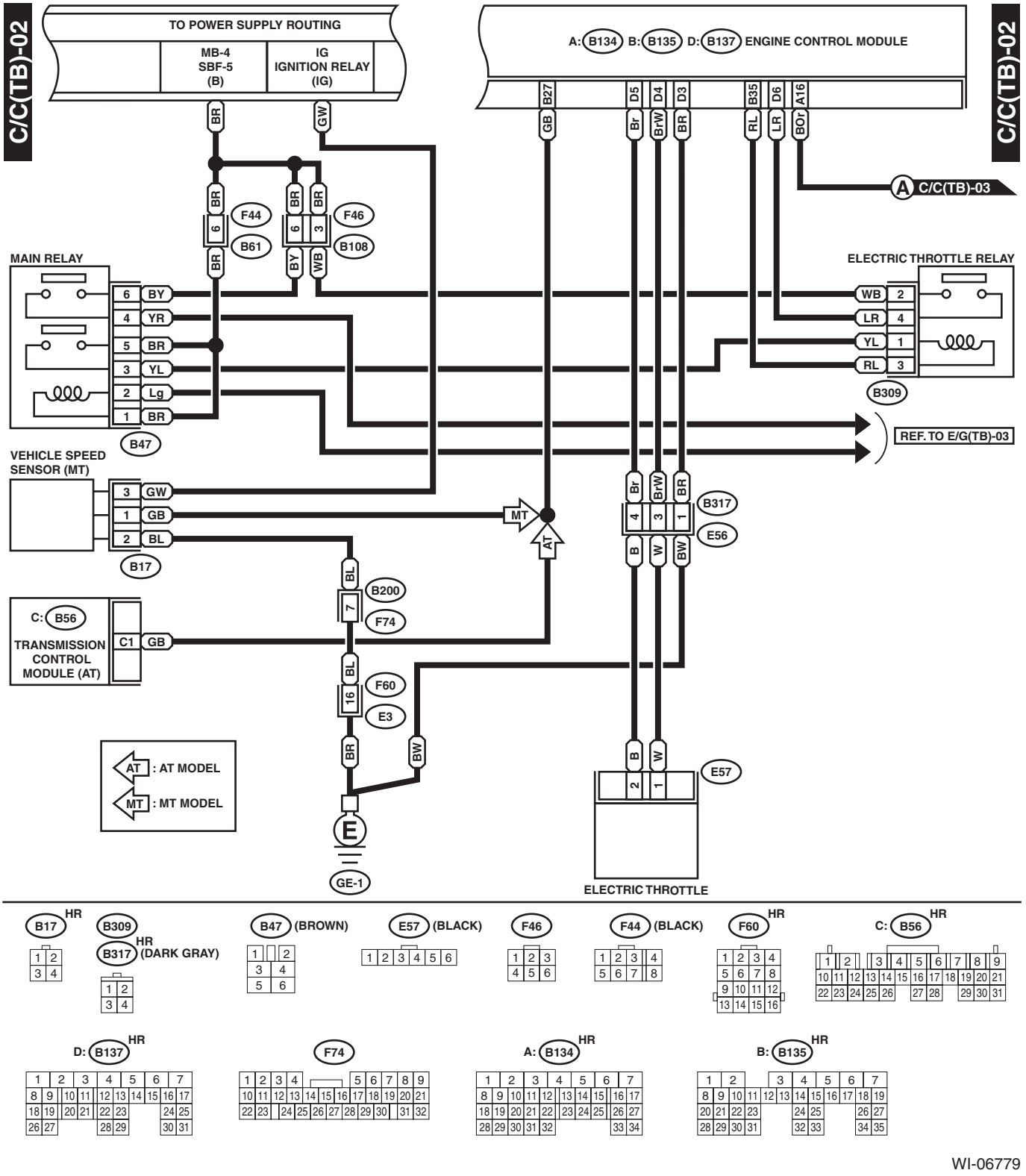
C/C(TB)-02
TO POWER SUPPLY ROUTING
MB-4
SBF-5
(B)
IG
IGNITION RELAY
(IG)
A: B134 B: B135 D: B137 ENGINE CONTROL MODULE
B27
D5
D4
D3
B35
D6
A16
GB
Br
BrW
BR
RL
LR
BOr
A C/C(TB)-03
BR
GW
F44
B61
F46
B108
BY
WB
MAIN RELAY
6 BY
4 YR
5 BR
3 YL
2 Lg
1 BR
B47
ELECTRIC THROTTLE RELAY
WB 2
LR 4
YL 1
RL 3
B309
REF. TO E/G(TB)-03
VEHICLE SPEED
SENSOR (MT)
3 GW
1 GB
2 BL
B17
MT
AT
B317
E56
B
W
BW
BL
B200
F74
C: B56
TRANSMISSION
CONTROL
MODULE (AT)
C1 GB
F60
E3
AT : AT MODEL
MT : MT MODEL
E57
E
GE-1
ELECTRIC THROTTLE
B17 HR
B309
B317 HR (DARK GRAY)
B47 (BROWN)
E57 (BLACK)
F46
F44 (BLACK)
F60 HR
C: B56 HR
D: B137 HR
F74
A: B134 HR
B: B135 HR

WI-06779

C/C(TB)-03

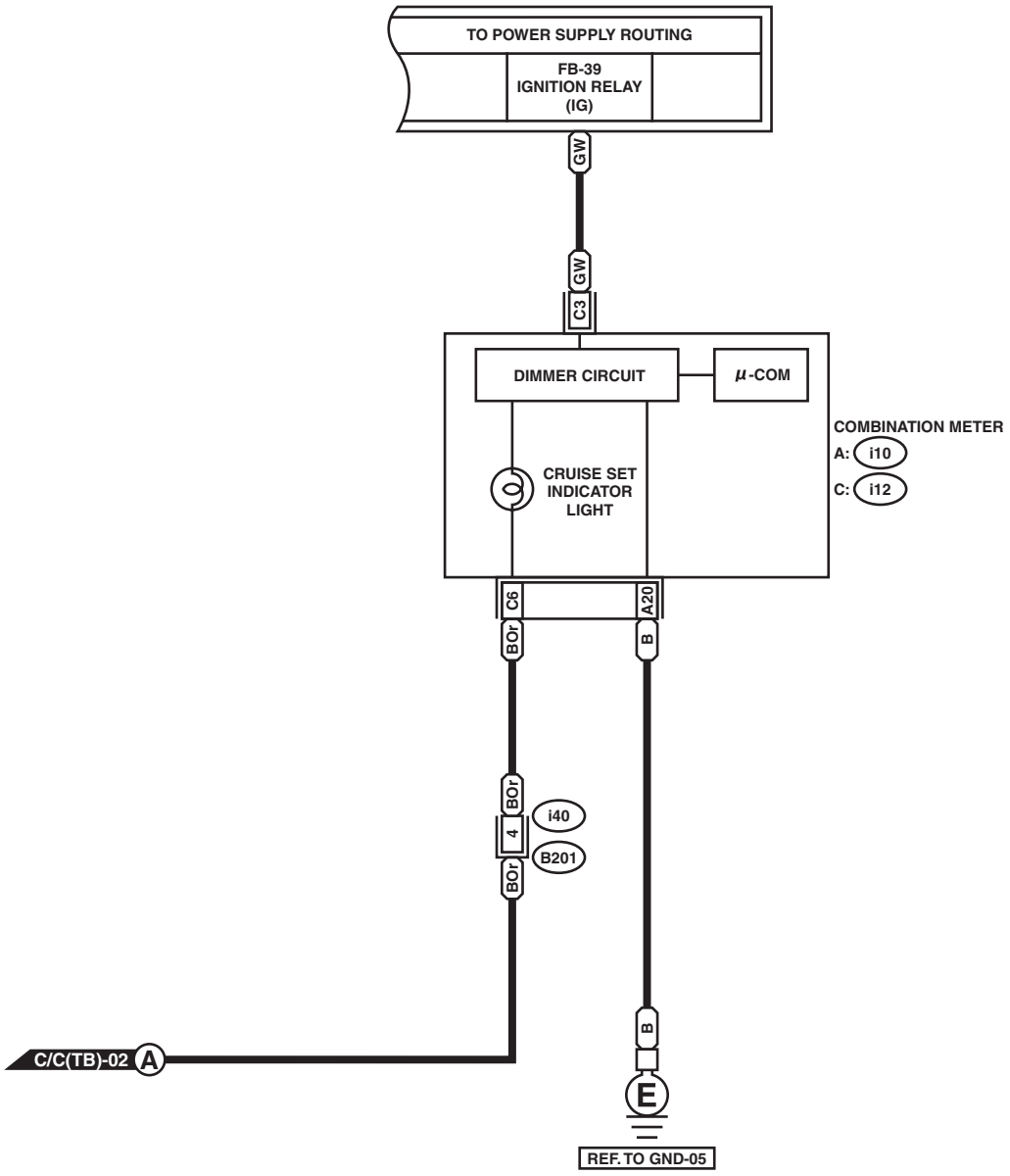

C/C(TB)-03

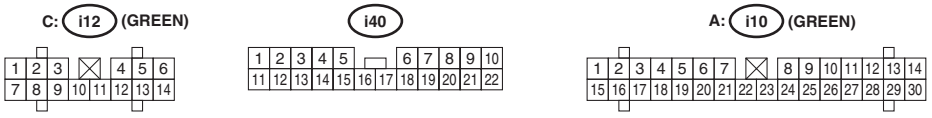

WI-05821

MEMO:

15. Lock System

A: SCHEMATIC

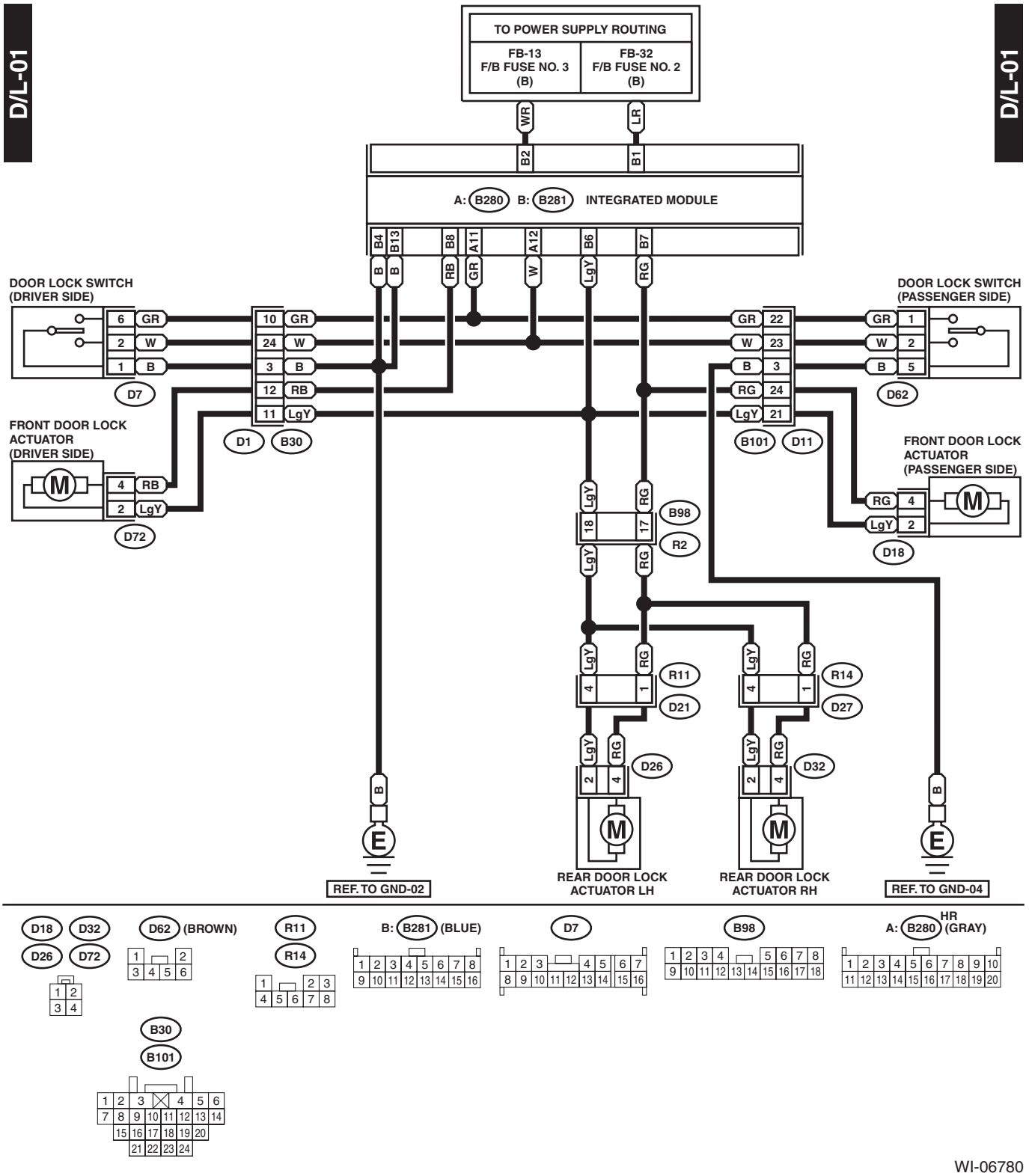

16.Engine Coolant Temperature Gauge System

A: SCHEMATIC

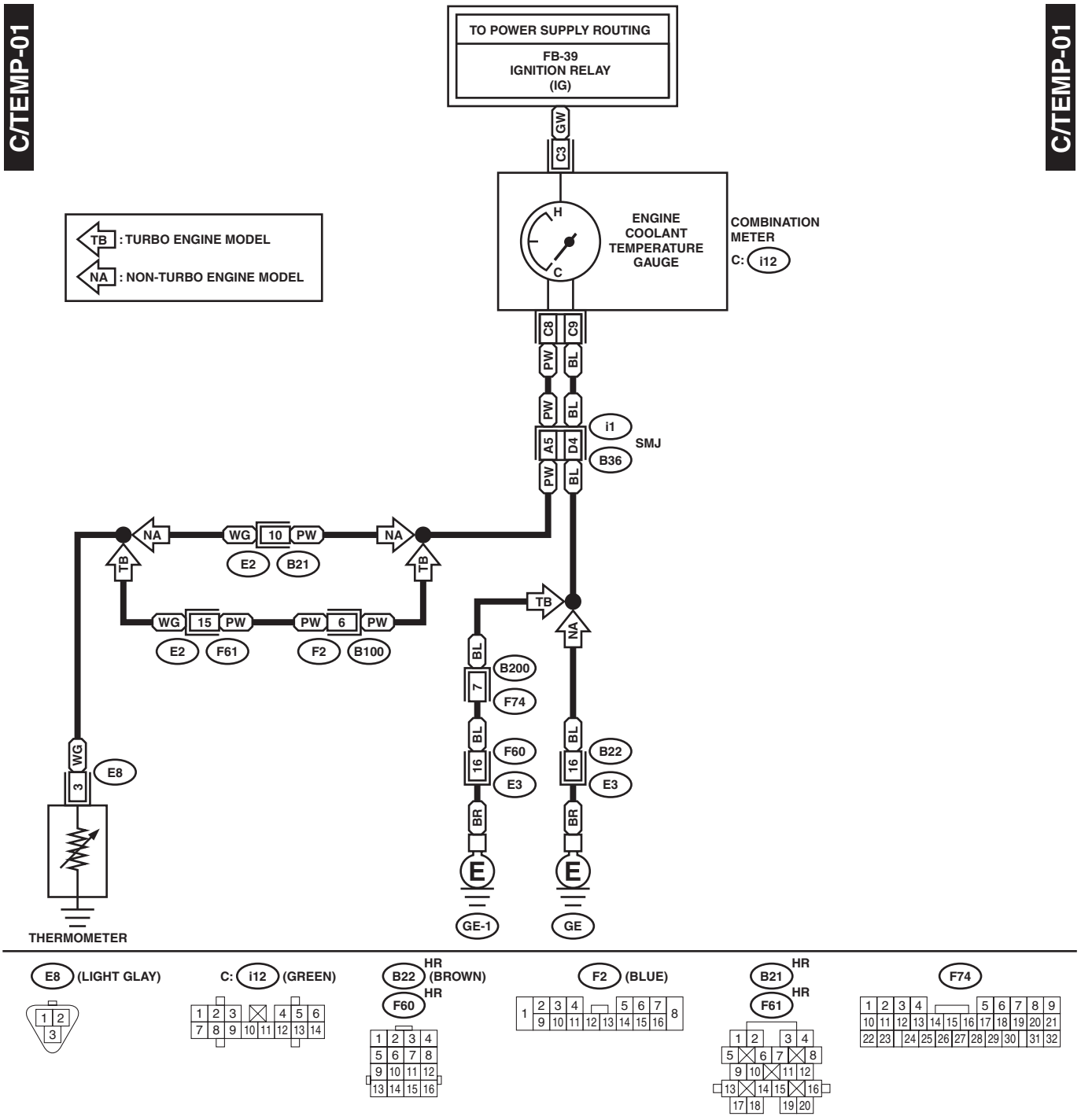

WI-06781

17.Engine Electrical System

A: SCHEMATIC

1. NON-TURBO ENGINE MODEL

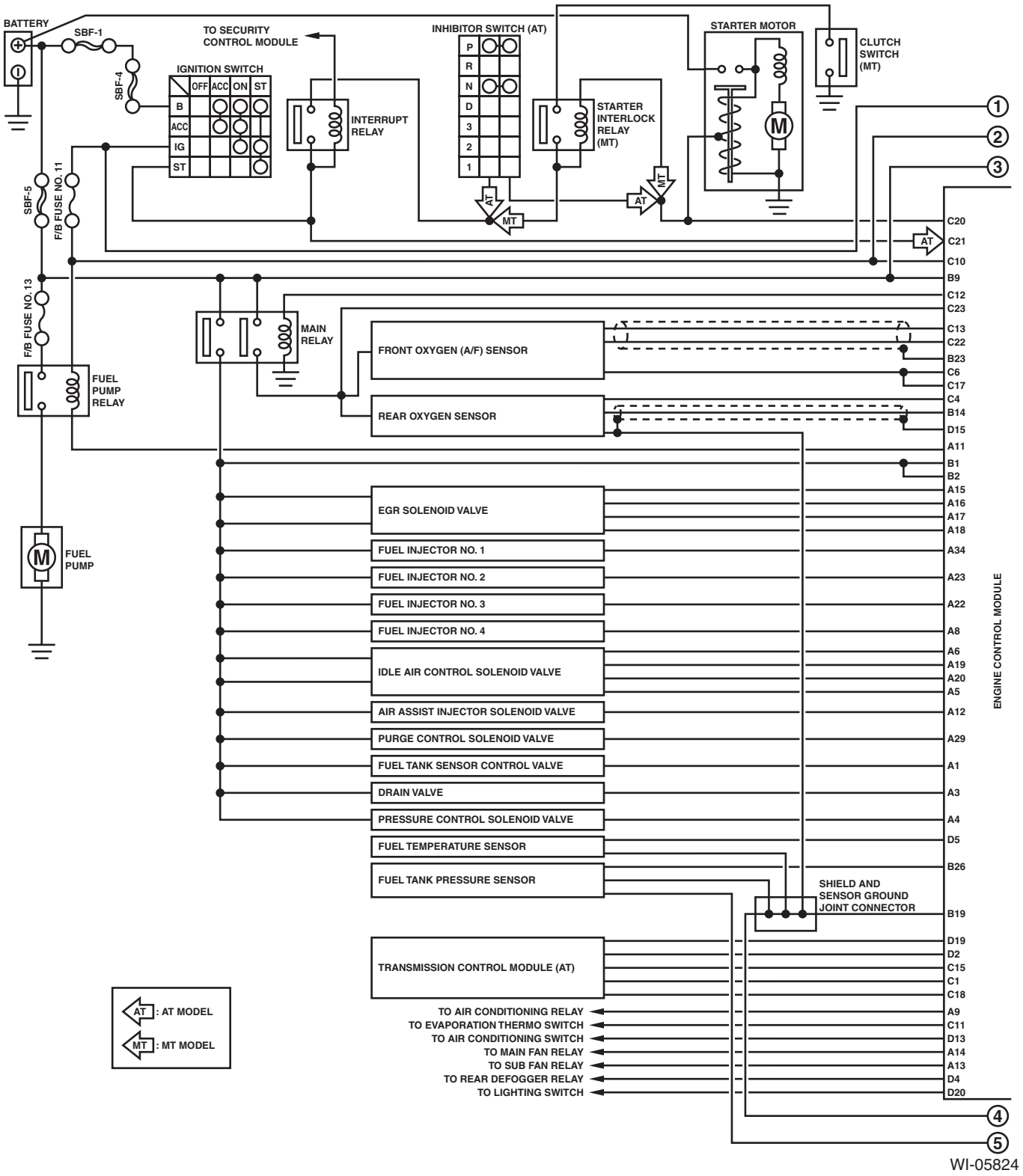

WI-05824

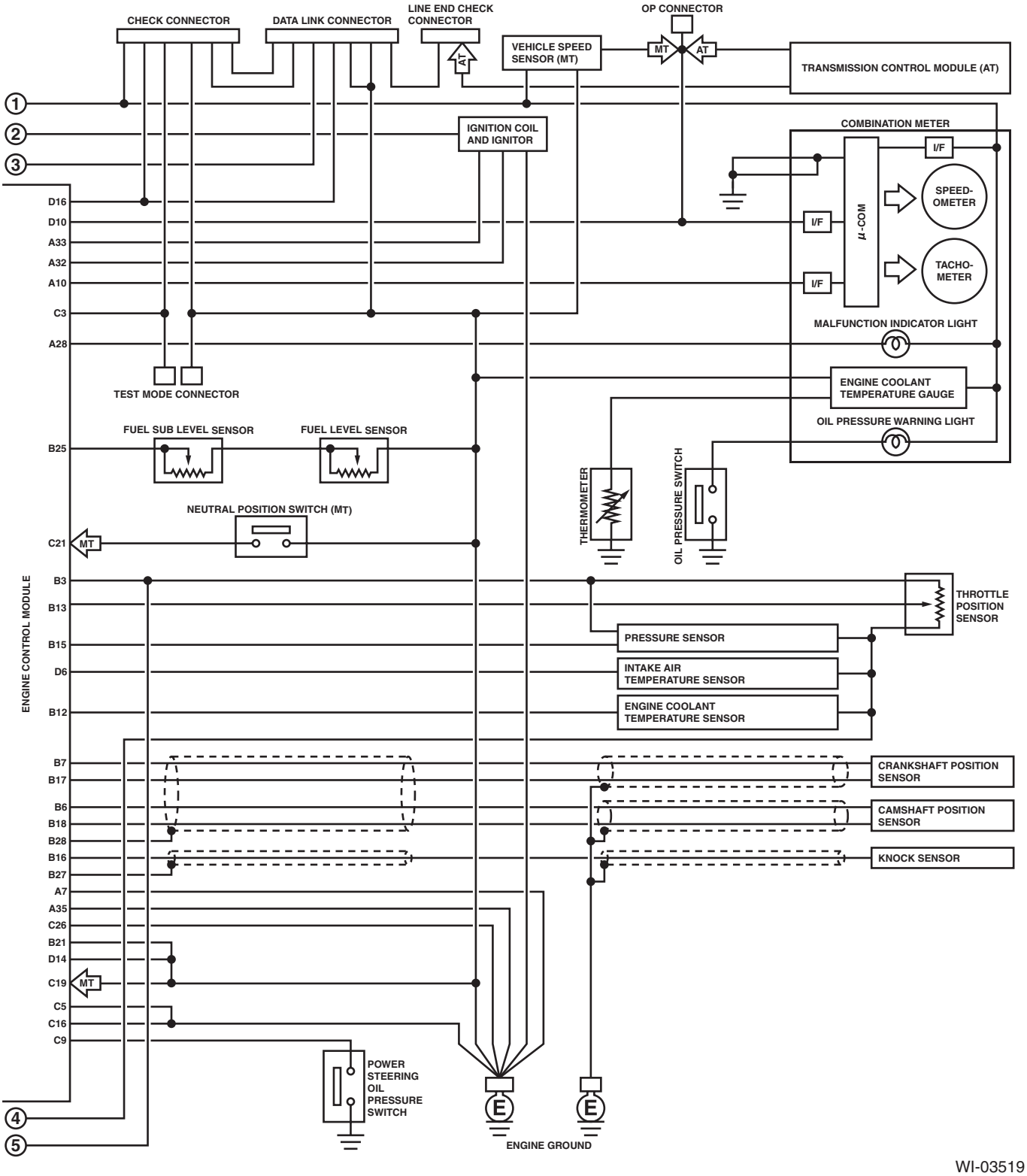
CHECK CONNECTOR
DATA LINK CONNECTOR
LINE END CHECK CONNECTOR
OP CONNECTOR
VEHICLE SPEED SENSOR (MT)
MT
AT
TRANSMISSION CONTROL MODULE (AT)
IGNITION COIL AND IGNITOR
COMBINATION METER
I/F
SPEED-OMETER
TACHO-METER
μ-COM
MALFUNCTION INDICATOR LIGHT
ENGINE COOLANT TEMPERATURE GAUGE
OIL PRESSURE WARNING LIGHT
TEST MODE CONNECTOR
FUEL SUB LEVEL SENSOR
FUEL LEVEL SENSOR
NEUTRAL POSITION SWITCH (MT)
THERMOMETER
OIL PRESSURE SWITCH
ENGINE CONTROL MODULE
THROTTLE POSITION SENSOR
PRESSURE SENSOR
INTAKE AIR TEMPERATURE SENSOR
ENGINE COOLANT TEMPERATURE SENSOR
CRANKSHAFT POSITION SENSOR
CAMSHAFT POSITION SENSOR
KNOCK SENSOR
POWER STEERING OIL PRESSURE SWITCH
ENGINE GROUND
E
D16
D10
A33
A32
A10
C3
A28
B25
C21
B3
B13
B15
D6
B12
B7
B17
B6
B18
B28
B16
B27
A7
A35
C26
B21
D14
C19
C5
C16
C9
1
2
3
4
5

WI-03519

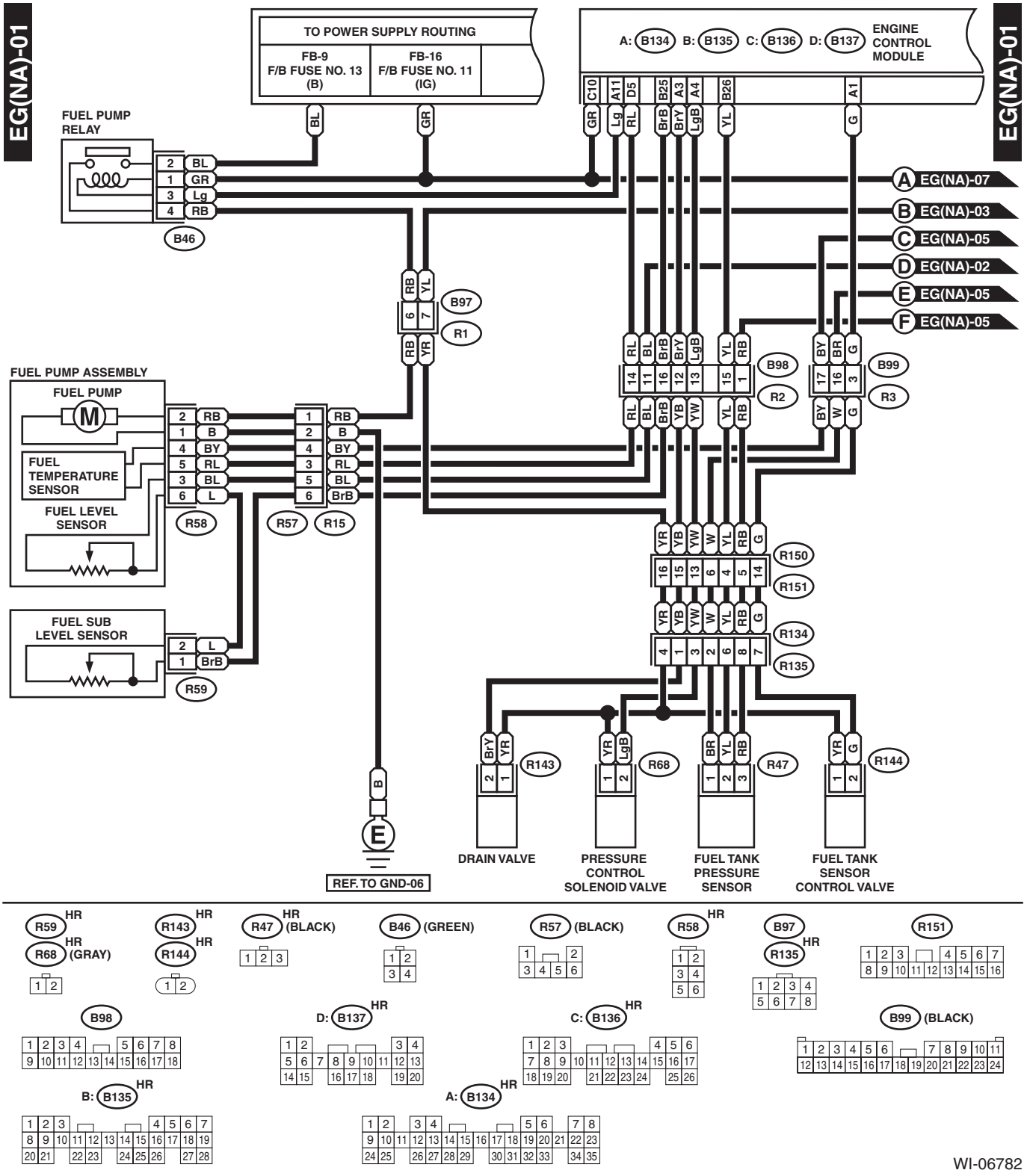
EG(NA)-01
TO POWER SUPPLY ROUTING
FB-9 F/B FUSE NO. 13 (B)
FB-16 F/B FUSE NO. 11 (IG)
A: B134 B: B135 C: B136 D: B137
ENGINE CONTROL MODULE
C10 A11 D5 B25 A3 A4 B26 A1
FUEL PUMP RELAY
B46
A EG(NA)-07
B EG(NA)-03
C EG(NA)-05
D EG(NA)-02
E EG(NA)-05
F EG(NA)-05
B97
R1
B98
R2
B99
R3
FUEL PUMP ASSEMBLY
FUEL PUMP
FUEL TEMPERATURE SENSOR
FUEL LEVEL SENSOR
R58
R57
R15
R150
R151
R134
R135
FUEL SUB LEVEL SENSOR
R59
R143
R68
R47
R144
DRAIN VALVE
PRESSURE CONTROL SOLENOID VALVE
FUEL TANK PRESSURE SENSOR
FUEL TANK SENSOR CONTROL VALVE
REF. TO GND-06
R59 HR
R68 HR (GRAY)
R143 HR
R144 HR
R47 HR (BLACK)
B46 (GREEN)
R57 (BLACK)
R58 HR
B97
R135 HR
R151
B98
D: B137 HR
C: B136 HR
B99 (BLACK)
B: B135 HR
A: B134 HR
WI-06782

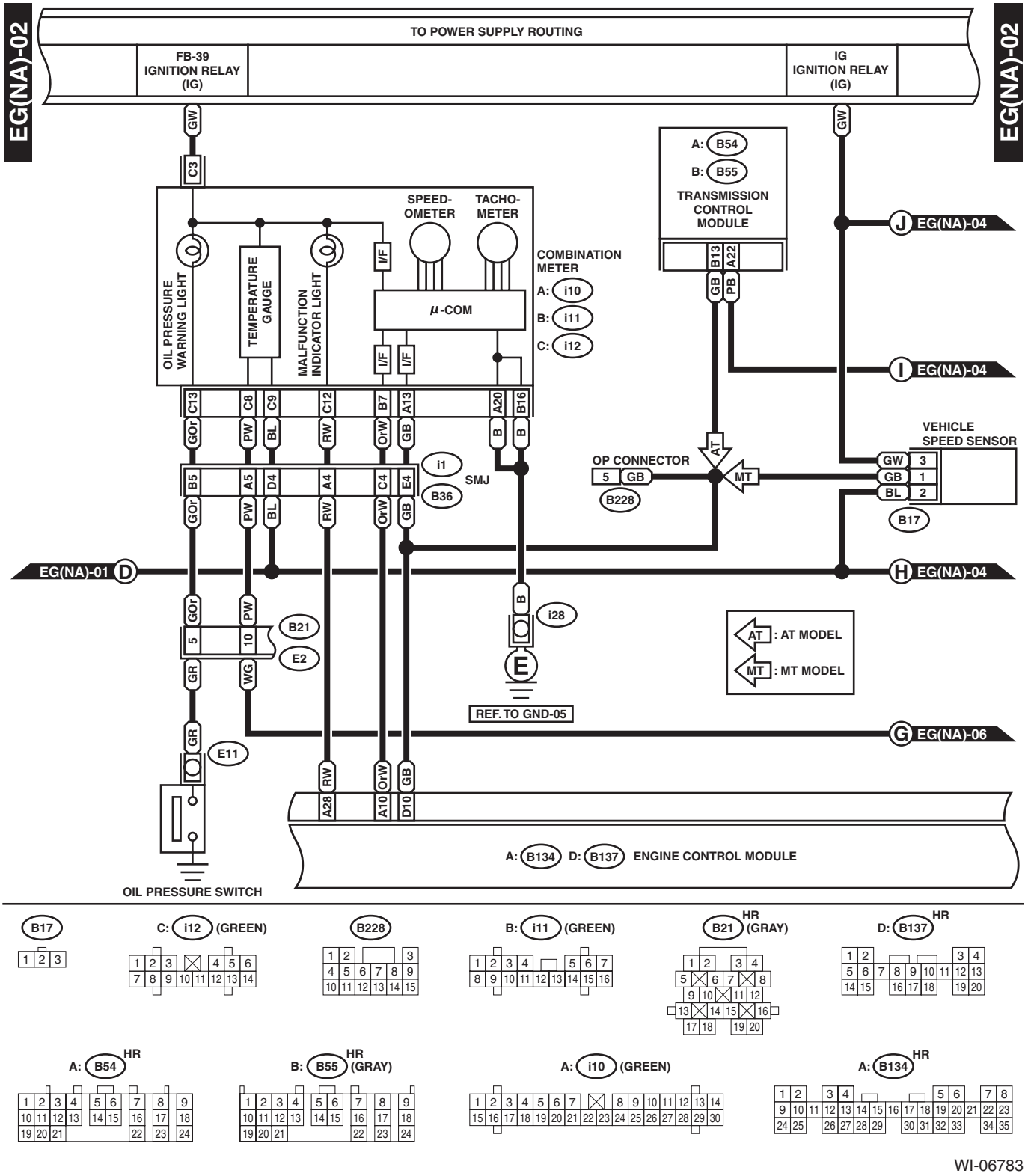
EG(NA)-02
TO POWER SUPPLY ROUTING
FB-39
IGNITION RELAY
(IG)
IG
IGNITION RELAY
(IG)
EG(NA)-02
GW
C3
A: B54
B: B55
TRANSMISSION
CONTROL
MODULE
B13
A22
GB
PB
J EG(NA)-04
I EG(NA)-04
SPEED-
OMETER
TACHO-
METER
COMBINATION
METER
A: i10
B: i11
C: i12
OIL PRESSURE
WARNING LIGHT
TEMPERATURE
GAUGE
MALFUNCTION
INDICATOR LIGHT
I/F
μ-COM
C13
C8
C9
C12
B7
A13
A20
B16
GOr
PW
BL
RW
OrW
GB
B
B
i1
B36
SMJ
B5
A5
D4
A4
C4
E4
OP CONNECTOR
5
GB
B228
AT
MT
VEHICLE
SPEED SENSOR
GW
GB
BL
3
1
2
B17
EG(NA)-01 D
H EG(NA)-04
5
10
B21
E2
GR
WG
i28
E
REF. TO GND-05
AT : AT MODEL
MT : MT MODEL
G EG(NA)-06
E11
A28
A10
D10
A: B134 D: B137 ENGINE CONTROL MODULE
OIL PRESSURE SWITCH
B17
C: i12 (GREEN)
B228
B: i11 (GREEN)
B21 HR (GRAY)
D: B137 HR
A: B54 HR
B: B55 HR (GRAY)
A: i10 (GREEN)
A: B134 HR

WI-06783

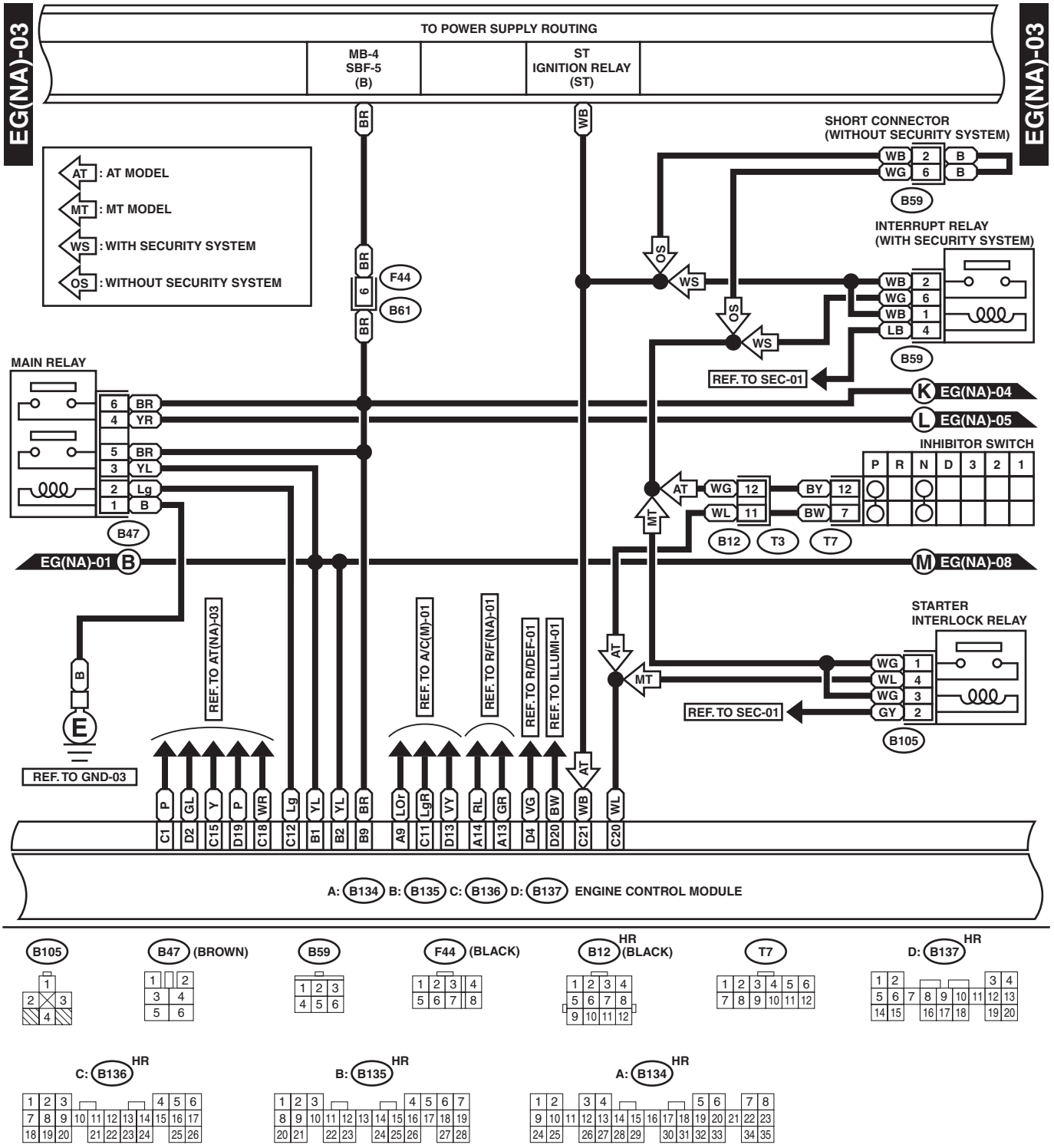
EG(NA)-03
TO POWER SUPPLY ROUTING
MB-4
SBF-5
(B)
ST
IGNITION RELAY
(ST)
AT : AT MODEL
MT : MT MODEL
WS : WITH SECURITY SYSTEM
OS : WITHOUT SECURITY SYSTEM
SHORT CONNECTOR
(WITHOUT SECURITY SYSTEM)
B59
INTERRUPT RELAY
(WITH SECURITY SYSTEM)
F44
B61
MAIN RELAY
B47
REF. TO SEC-01
EG(NA)-04
EG(NA)-05
INHIBITOR SWITCH
P R N D 3 2 1
B12 T3 T7
EG(NA)-01
EG(NA)-08
STARTER
INTERLOCK RELAY
B105
REF. TO GND-03
REF. TO AT(NA)-03
REF. TO A/C(M)-01
REF. TO R/F(NA)-01
REF. TO R/DEF-01
REF. TO ILLUMI-01
A: B134 B: B135 C: B136 D: B137 ENGINE CONTROL MODULE
B105
B47 (BROWN)
B59
F44 (BLACK)
B12 HR (BLACK)
T7
D: B137 HR
C: B136 HR
B: B135 HR
A: B134 HR

WI-06784

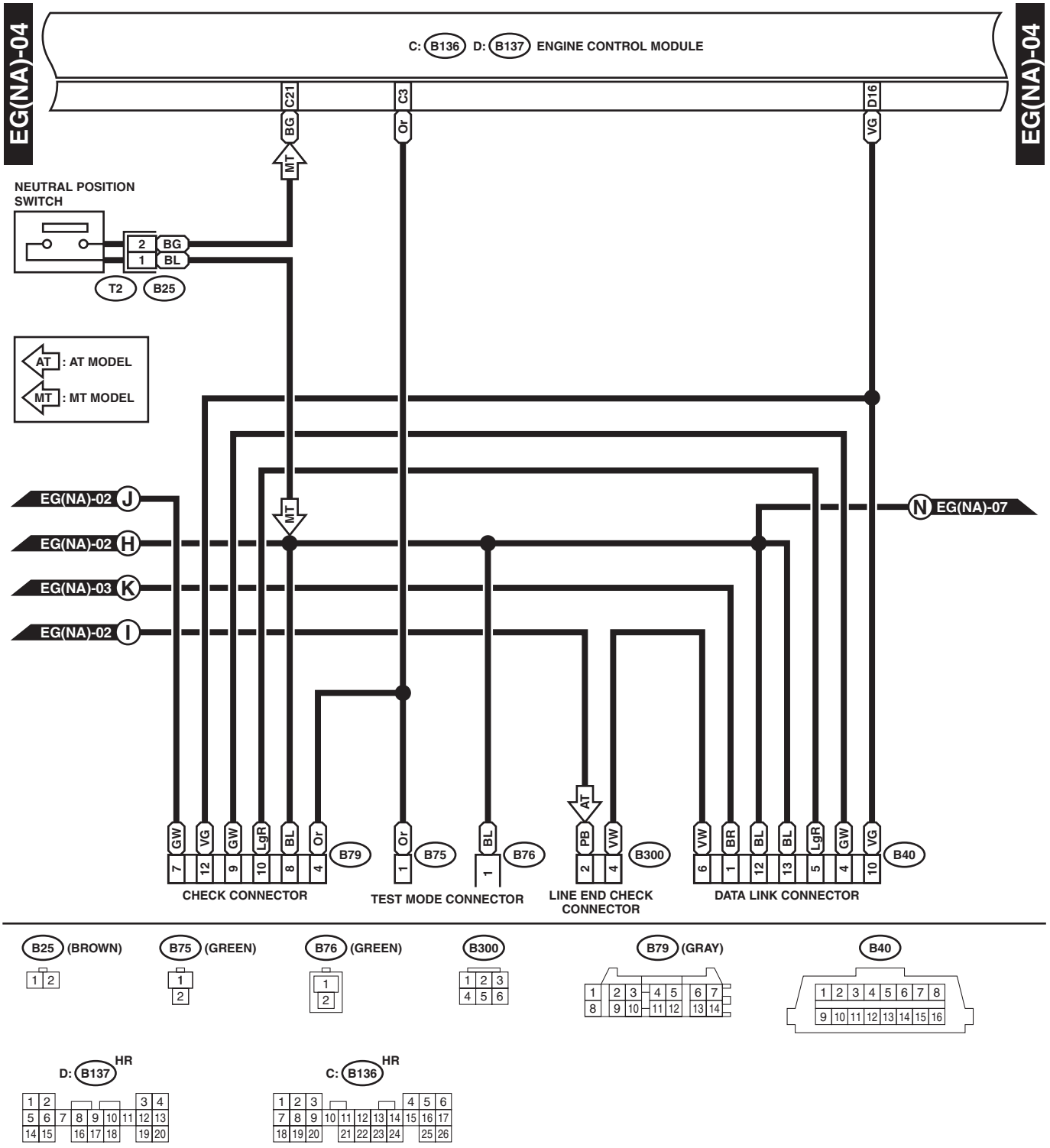
EG(NA)-04
C: B136 D: B137 ENGINE CONTROL MODULE
C21
C3
D16
BG
Or
VG
MT
NEUTRAL POSITION SWITCH
2 BG
1 BL
T2
B25
AT : AT MODEL
MT : MT MODEL
EG(NA)-02 J
EG(NA)-02 H
EG(NA)-03 K
EG(NA)-02 I
N EG(NA)-07
AT
GW 7
VG 12
GW 9
LgR 10
BL 8
Or 4
B79
Or 1
B75
BL 1
B76
PB 2
VW 4
B300
VW 6
BR 1
BL 12
BL 13
LgR 5
GW 4
VG 10
B40
CHECK CONNECTOR
TEST MODE CONNECTOR
LINE END CHECK CONNECTOR
DATA LINK CONNECTOR
B25 (BROWN)
B75 (GREEN)
B76 (GREEN)
B300
B79 (GRAY)
B40
D: B137 HR
C: B136 HR

WI-06785

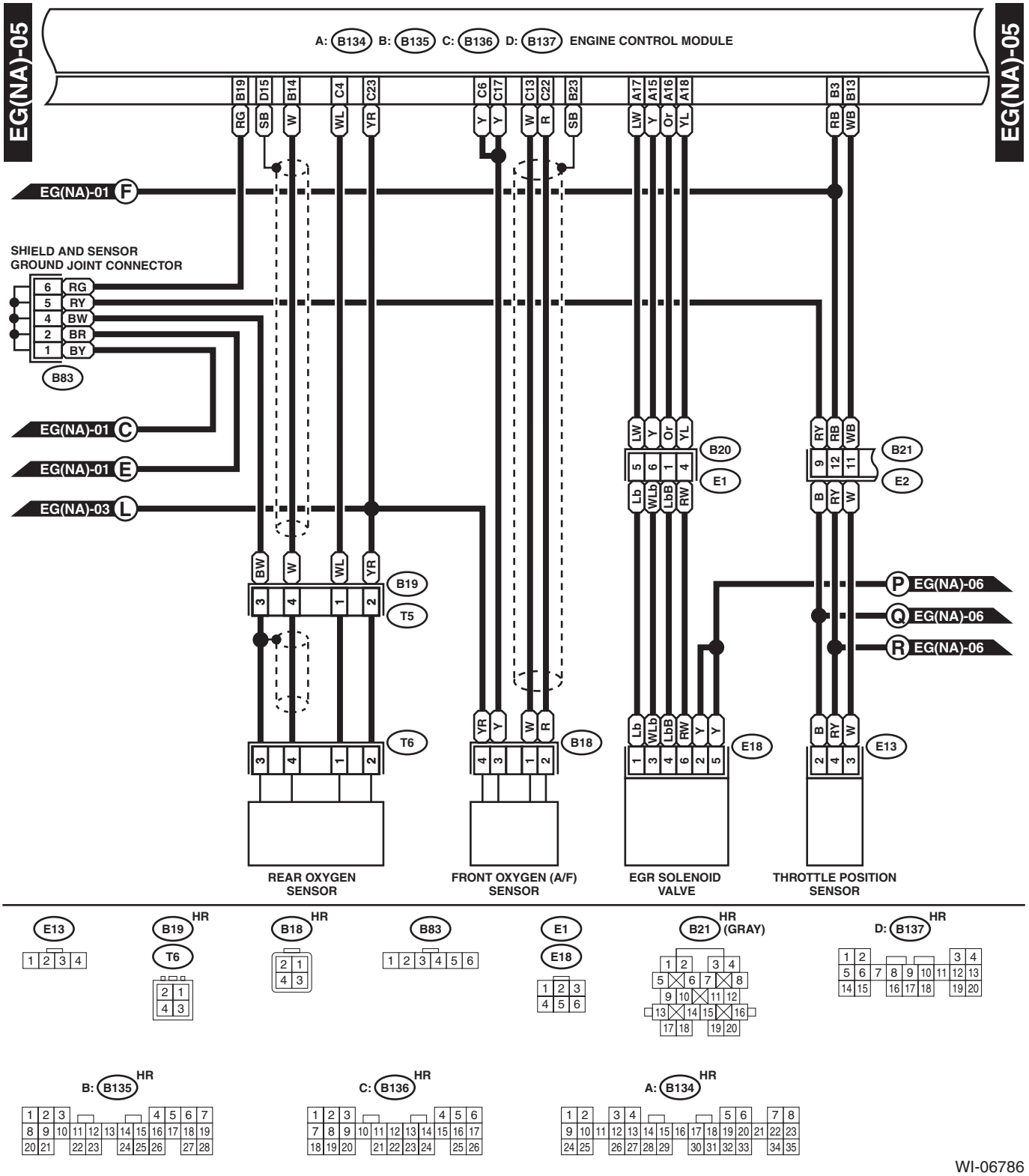
EG(NA)-05
A: B134 B: B135 C: B136 D: B137 ENGINE CONTROL MODULE
B19 D15 B14 C4 C23 C6 C17 C13 C22 B23 A17 A15 A16 A18 B3 B13
RG SB W WL YR Y Y W R SB LW Y Or YL RB WB
EG(NA)-01 F
SHIELD AND SENSOR GROUND JOINT CONNECTOR
6 RG
5 RY
4 BW
2 BR
1 BY
B83
EG(NA)-01 C
EG(NA)-01 E
EG(NA)-03 L
B20
E1
B21
E2
BW W WL YR
B19
T5
T6
YR Y W R
B18
Lb WLb LbB RW Y Y
E18
B RY W
E13
EG(NA)-06 P
EG(NA)-06 Q
EG(NA)-06 R
REAR OXYGEN SENSOR
FRONT OXYGEN (A/F) SENSOR
EGR SOLENOID VALVE
THROTTLE POSITION SENSOR
E13
B19 HR
T6
B18 HR
B83
E1
E18
B21 HR (GRAY)
D: B137 HR
B: B135 HR
C: B136 HR
A: B134 HR
WI-06786

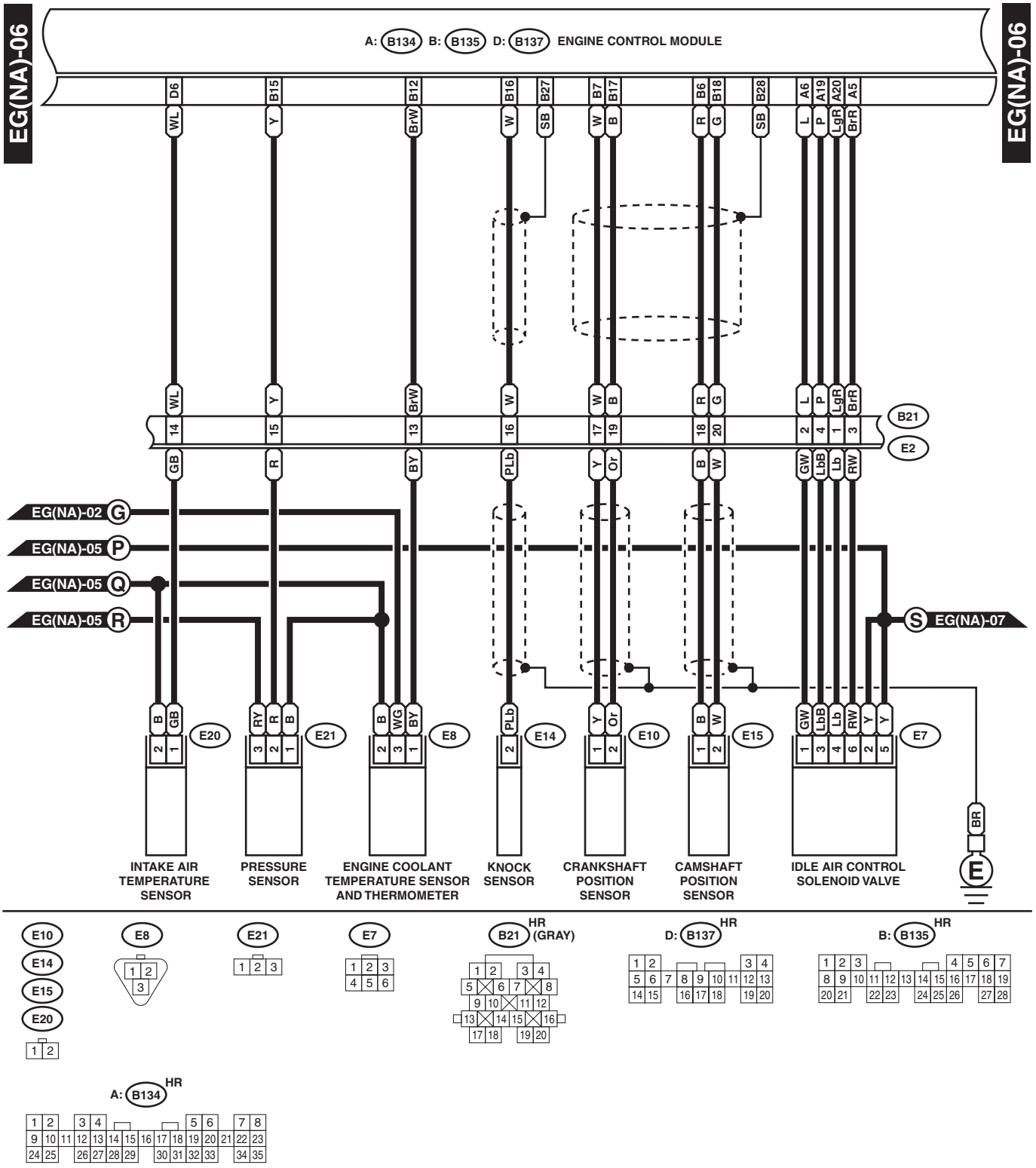
EG(NA)-06
A: B134 B: B135 D: B137 ENGINE CONTROL MODULE
D6 WL
B15 Y
B12 BrW
B16 W
B27 SB
B7 W
B17 B
B6 R
B18 G
B28 SB
A6 L
A19 P
A20 LgR
A5 BrR
B21
E2
GB
R
BY
PLb
Y Or
B W
GW LbB Lb RW
EG(NA)-02 G
EG(NA)-05 P
EG(NA)-05 Q
EG(NA)-05 R
S EG(NA)-07
E20
E21
E8
E14
E10
E15
E7
BR
E
INTAKE AIR TEMPERATURE SENSOR
PRESSURE SENSOR
ENGINE COOLANT TEMPERATURE SENSOR AND THERMOMETER
KNOCK SENSOR
CRANKSHAFT POSITION SENSOR
CAMSHAFT POSITION SENSOR
IDLE AIR CONTROL SOLENOID VALVE
E10
E14
E15
E20
E8
E21
E7
B21 HR (GRAY)
D: B137 HR
B: B135 HR
A: B134 HR

WI-06787

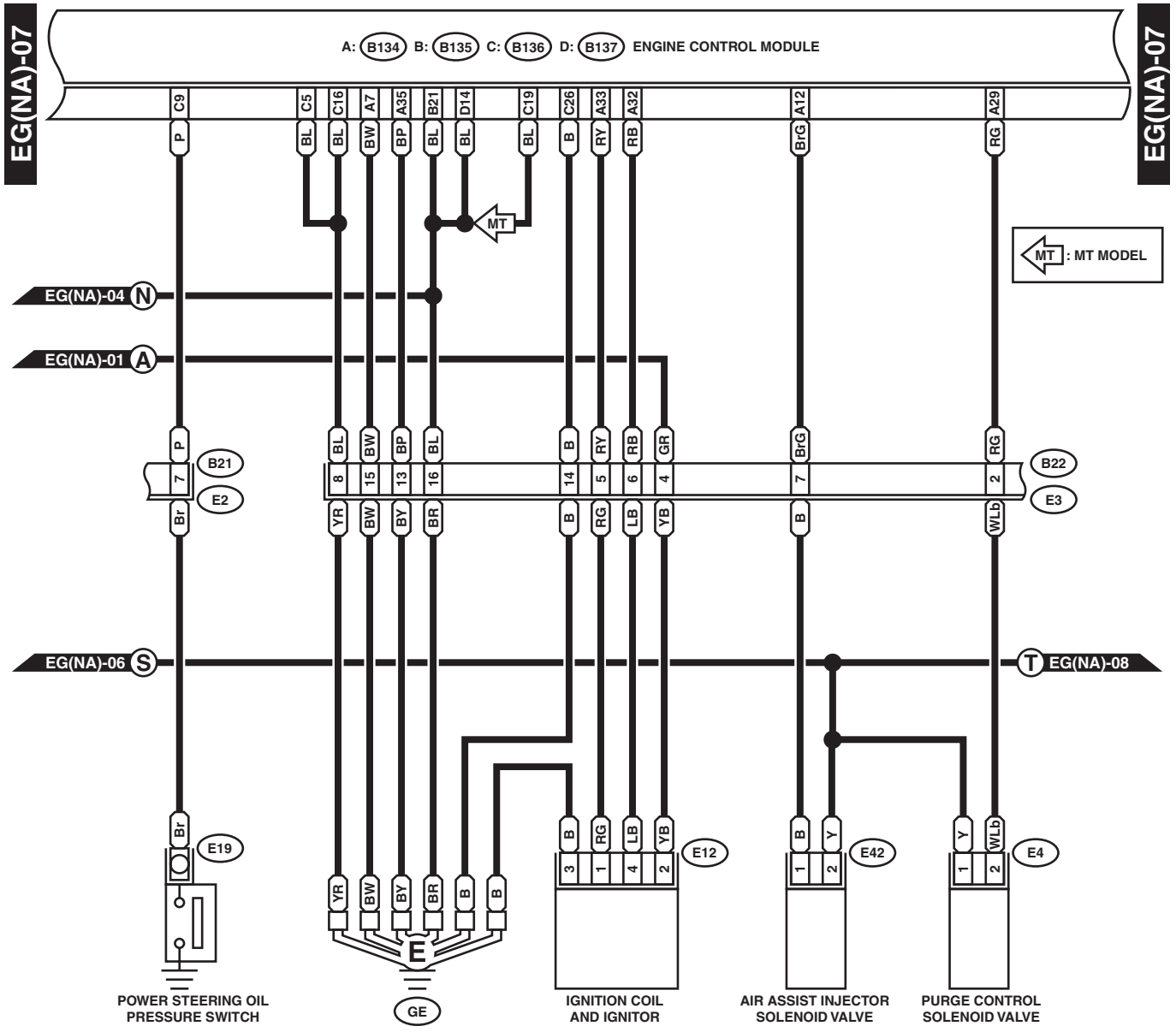
EG(NA)-07
A: B134 B: B135 C: B136 D: B137 ENGINE CONTROL MODULE
C9 C5 C16 A7 A35 B21 D14 C19 C26 A33 A32 A12 A29
P BL BL BW BP BL BL BL B RY RB BrG RG
MT
MT : MT MODEL
EG(NA)-04 N
EG(NA)-01 A
B21 E2
B22 E3
Br YR BW BY BR B RG LB YB B WLb
EG(NA)-06 S
T EG(NA)-08
E19
E12
E42
E4
POWER STEERING OIL PRESSURE SWITCH
GE
IGNITION COIL AND IGNITOR
AIR ASSIST INJECTOR SOLENOID VALVE
PURGE CONTROL SOLENOID VALVE

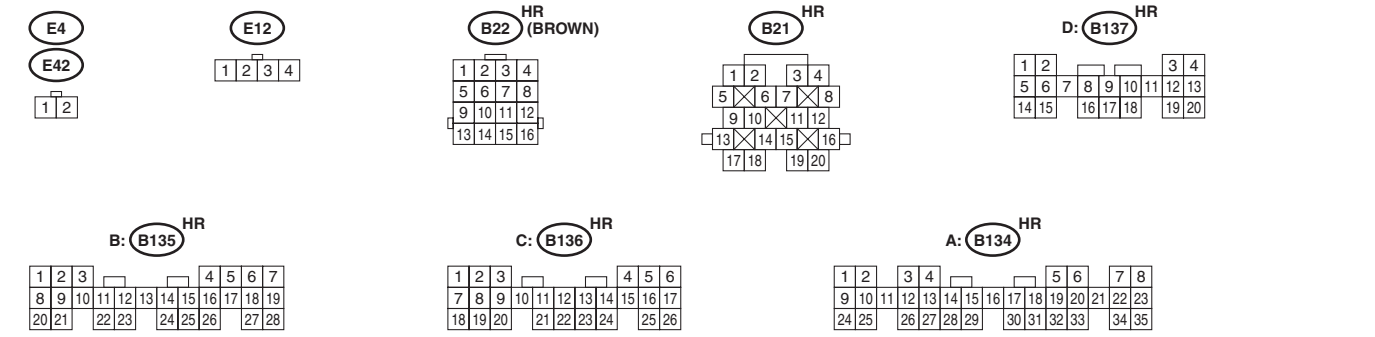
E4
E42
E12
B22 HR (BROWN)
B21 HR
D: B137 HR
B: B135 HR
C: B136 HR
A: B134 HR

WI-06788

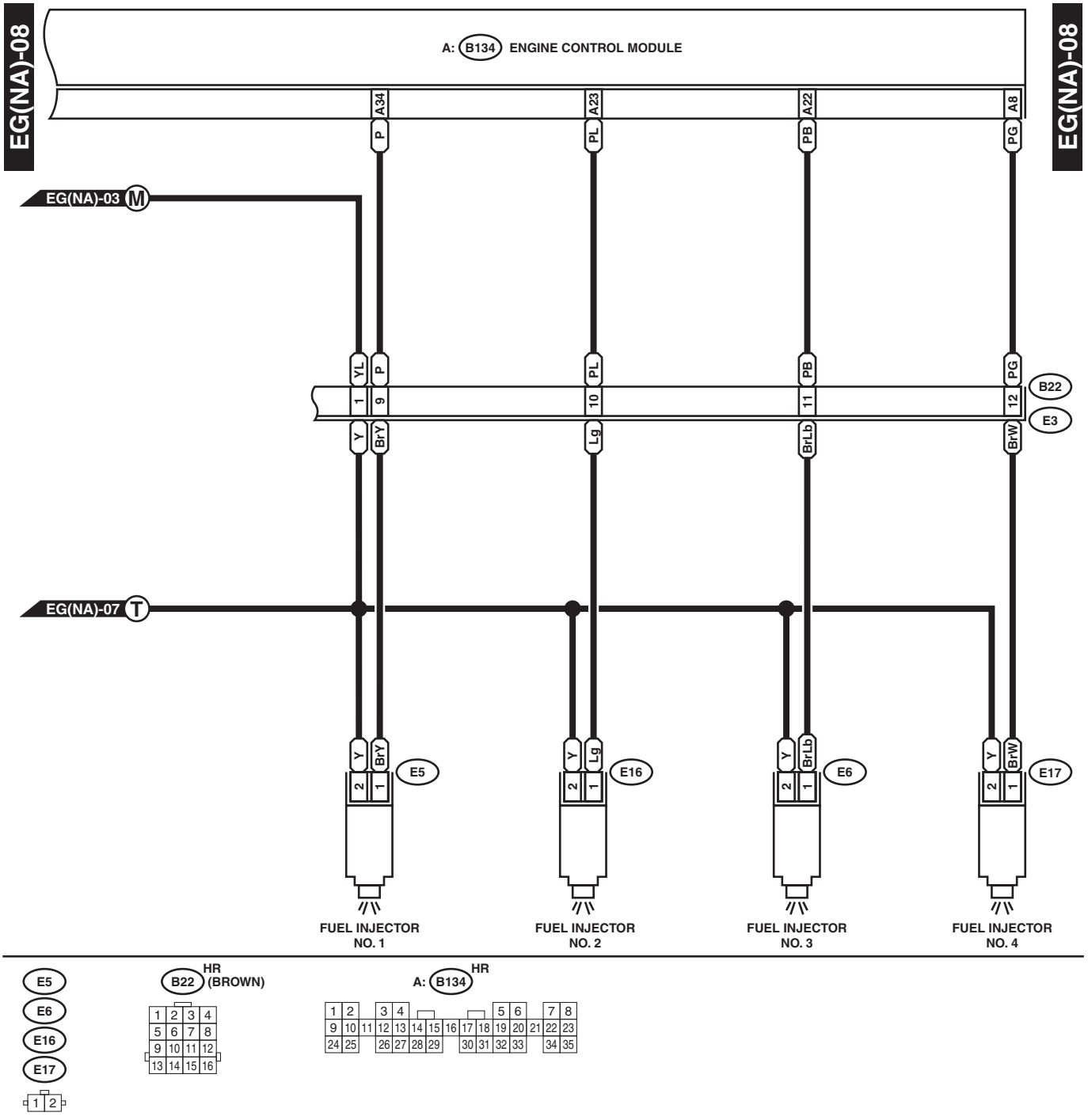
EG(NA)-08
A: B134 ENGINE CONTROL MODULE
EG(NA)-08
A34
A23
A22
A8
P
PL
PB
PG
EG(NA)-03 M
YL
P
PL
PB
PG
1
9
10
11
12
B22
E3
Y
BrY
Lg
BrLb
BrW
EG(NA)-07 T
Y
BrY
E5
Y
Lg
E16
Y
BrLb
E6
Y
BrW
E17
2
1
FUEL INJECTOR NO. 1
FUEL INJECTOR NO. 2
FUEL INJECTOR NO. 3
FUEL INJECTOR NO. 4

E5
E6
E16
E17
B22 HR (BROWN)
A: B134 HR

WI-06789

2. TURBO ENGINE MODEL

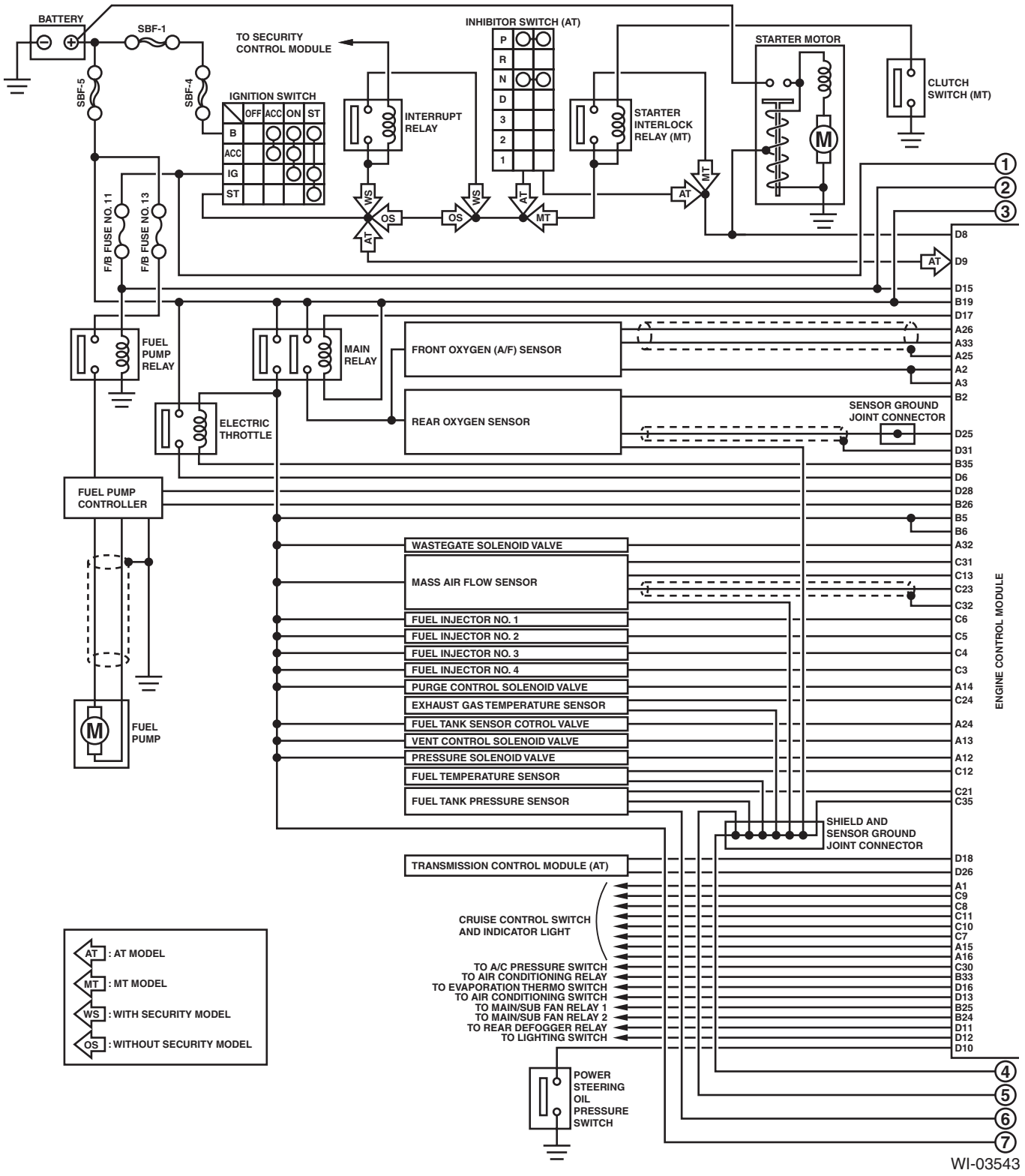

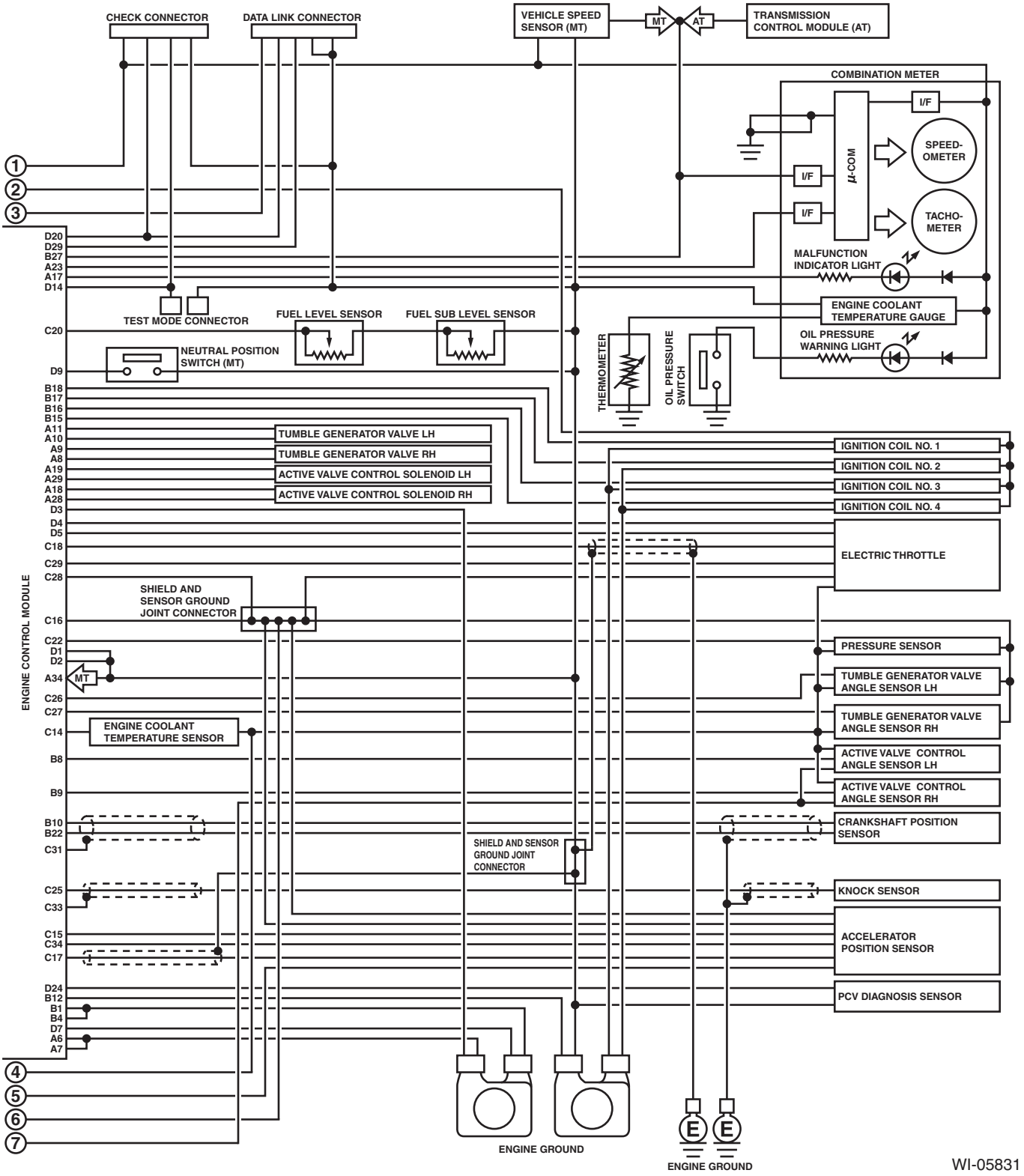
CHECK CONNECTOR
DATA LINK CONNECTOR
VEHICLE SPEED SENSOR (MT)
MT
AT
TRANSMISSION CONTROL MODULE (AT)
COMBINATION METER
I/F
SPEED-OMETER
μ-COM
TACHO-METER
MALFUNCTION INDICATOR LIGHT
ENGINE COOLANT TEMPERATURE GAUGE
OIL PRESSURE WARNING LIGHT
TEST MODE CONNECTOR
FUEL LEVEL SENSOR
FUEL SUB LEVEL SENSOR
NEUTRAL POSITION SWITCH (MT)
THERMOMETER
OIL PRESSURE SWITCH
TUMBLE GENERATOR VALVE LH
TUMBLE GENERATOR VALVE RH
ACTIVE VALVE CONTROL SOLENOID LH
ACTIVE VALVE CONTROL SOLENOID RH
IGNITION COIL NO. 1
IGNITION COIL NO. 2
IGNITION COIL NO. 3
IGNITION COIL NO. 4
ELECTRIC THROTTLE
SHIELD AND SENSOR GROUND JOINT CONNECTOR
ENGINE CONTROL MODULE
PRESSURE SENSOR
TUMBLE GENERATOR VALVE ANGLE SENSOR LH
TUMBLE GENERATOR VALVE ANGLE SENSOR RH
ENGINE COOLANT TEMPERATURE SENSOR
ACTIVE VALVE CONTROL ANGLE SENSOR LH
ACTIVE VALVE CONTROL ANGLE SENSOR RH
CRANKSHAFT POSITION SENSOR
SHIELD AND SENSOR GROUND JOINT CONNECTOR
KNOCK SENSOR
ACCELERATOR POSITION SENSOR
PCV DIAGNOSIS SENSOR
ENGINE GROUND
ENGINE GROUND
WI-05831

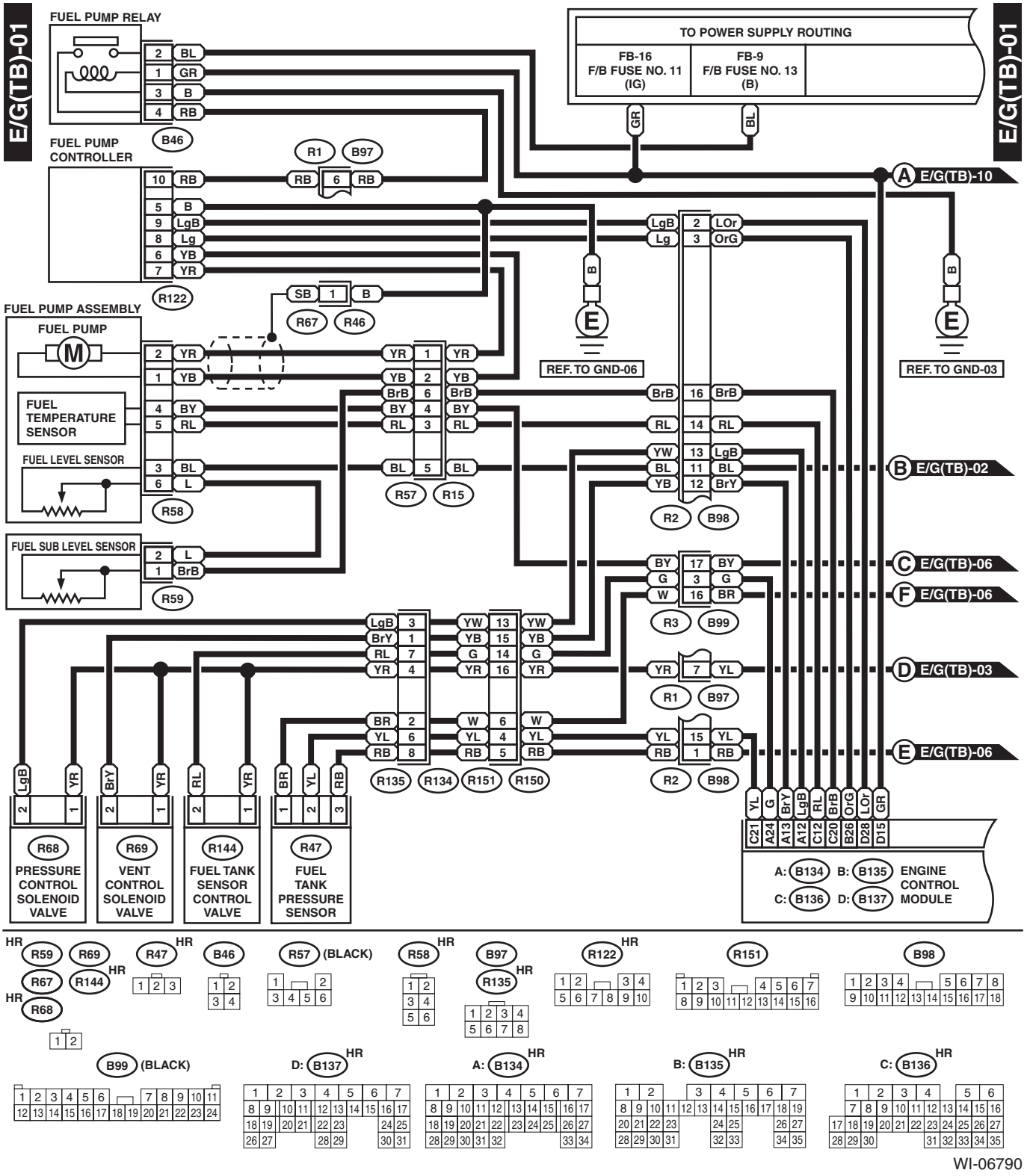
E/G(TB)-01
FUEL PUMP RELAY
B46
FUEL PUMP CONTROLLER
R122
FUEL PUMP ASSEMBLY
FUEL PUMP
FUEL TEMPERATURE SENSOR
FUEL LEVEL SENSOR
R58
FUEL SUB LEVEL SENSOR
R59
R67
R46
R57
R15
R1
B97
R2
B98
R3
B99
R135
R134
R151
R150
TO POWER SUPPLY ROUTING
FB-16 F/B FUSE NO. 11 (IG)
FB-9 F/B FUSE NO. 13 (B)
REF. TO GND-06
REF. TO GND-03
A E/G(TB)-10
B E/G(TB)-02
C E/G(TB)-06
F E/G(TB)-06
D E/G(TB)-03
E E/G(TB)-06
R68 PRESSURE CONTROL SOLENOID VALVE
R69 VENT CONTROL SOLENOID VALVE
R144 FUEL TANK SENSOR CONTROL VALVE
R47 FUEL TANK PRESSURE SENSOR
A: B134 B: B135 C: B136 D: B137 ENGINE CONTROL MODULE
R59 R69 R67 R144 R68 R47 B46 R57 (BLACK) R58 B97 R135 R122 R151 B98
B99 (BLACK) D: B137 A: B134 B: B135 C: B136
WI-06790

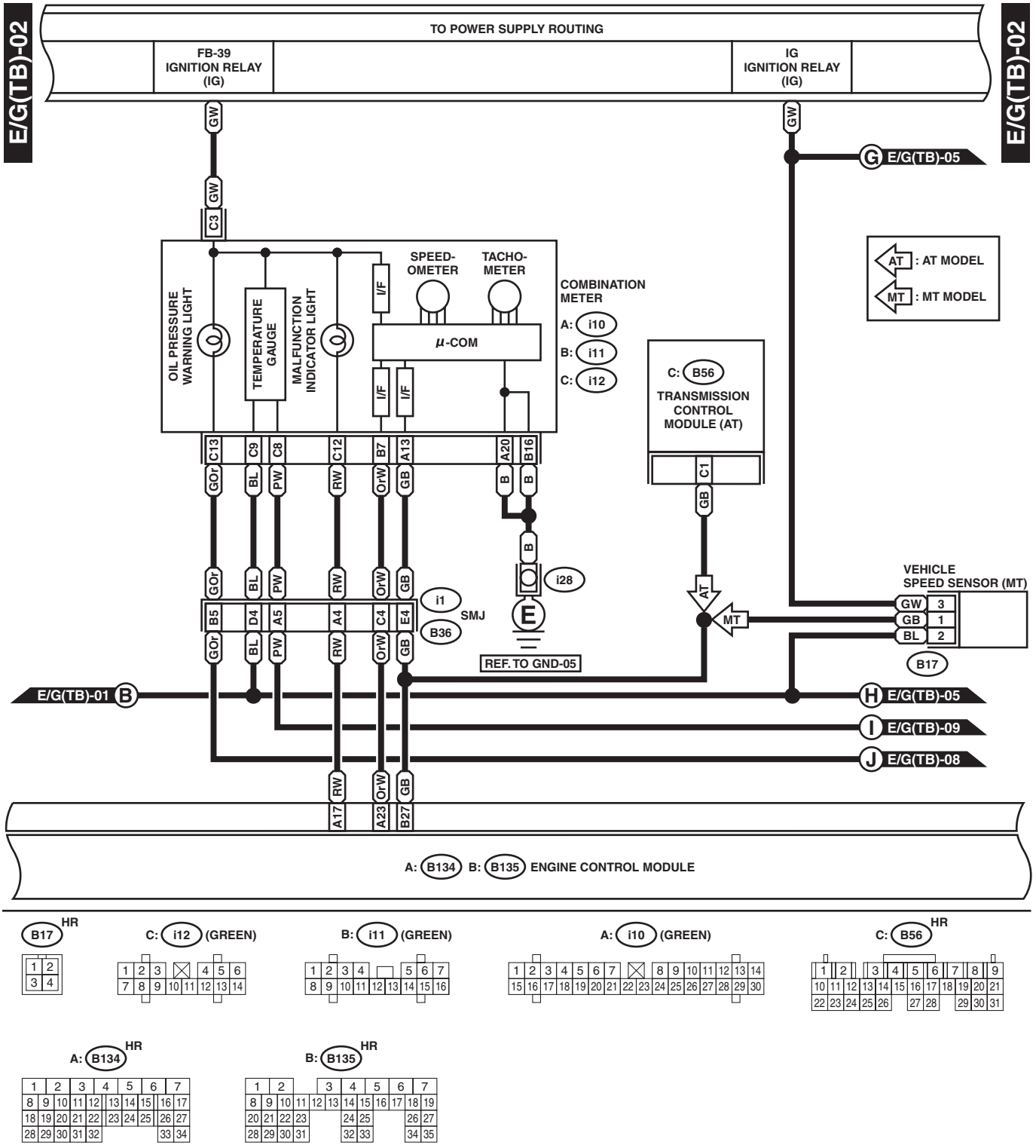
E/G(TB)-02
TO POWER SUPPLY ROUTING
FB-39 IGNITION RELAY (IG)
IG IGNITION RELAY (IG)
E/G(TB)-05
AT : AT MODEL
MT : MT MODEL
OIL PRESSURE WARNING LIGHT
TEMPERATURE GAUGE
MALFUNCTION INDICATOR LIGHT
SPEED-OMETER
TACHO-METER
I/F
μ-COM
COMBINATION METER
A: i10
B: i11
C: i12
C: B56
TRANSMISSION CONTROL MODULE (AT)
VEHICLE SPEED SENSOR (MT)
i28
i1
SMJ
B36
REF. TO GND-05
B17
E/G(TB)-01
E/G(TB)-09
E/G(TB)-08
A: B134 B: B135 ENGINE CONTROL MODULE
C: i12 (GREEN)
B: i11 (GREEN)
A: i10 (GREEN)
C: B56
A: B134
B: B135

WI-06791

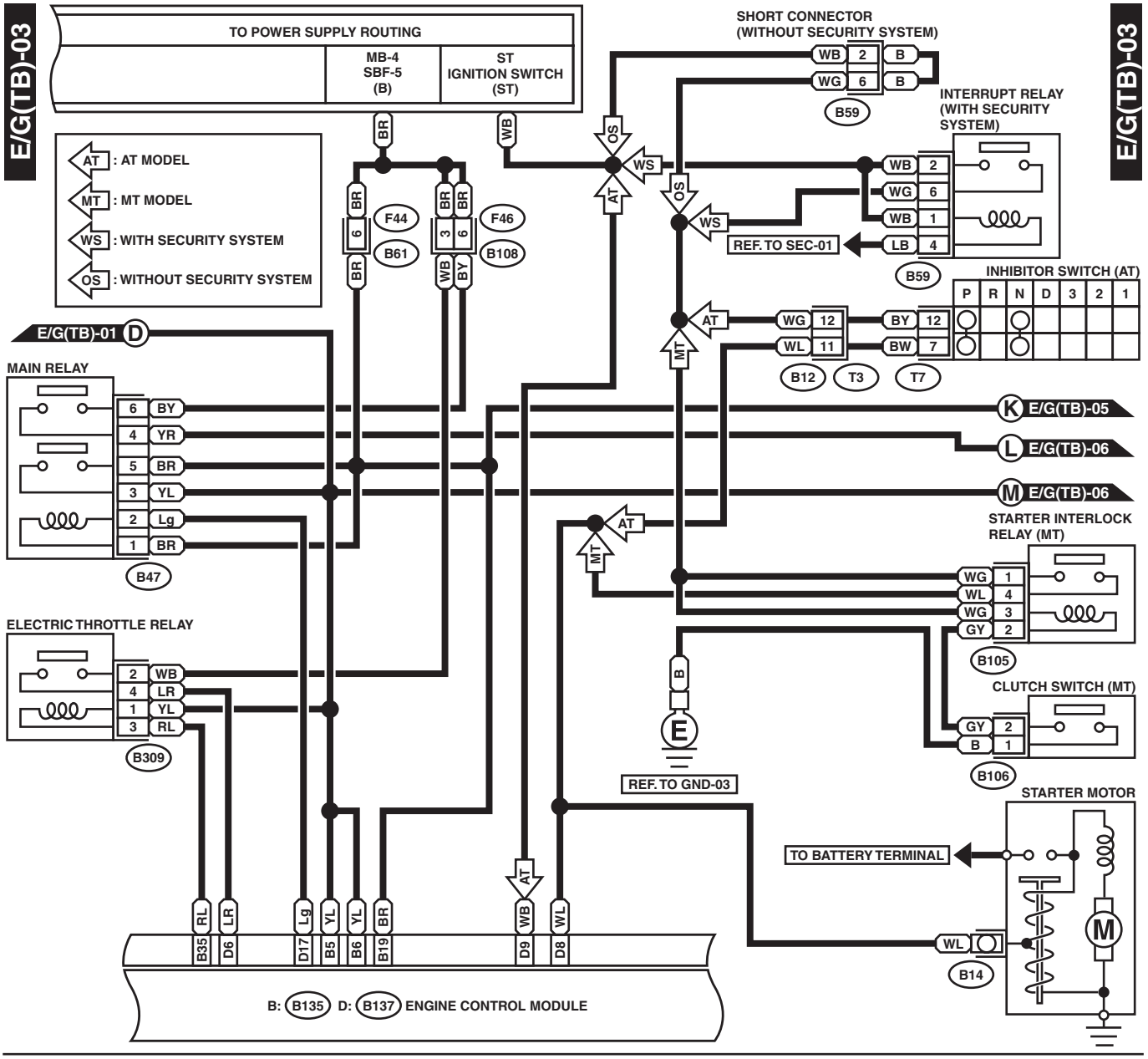
E/G(TB)-03
TO POWER SUPPLY ROUTING
MB-4
SBF-5
(B)
ST
IGNITION SWITCH
(ST)
AT : AT MODEL
MT : MT MODEL
WS : WITH SECURITY SYSTEM
OS : WITHOUT SECURITY SYSTEM
SHORT CONNECTOR
(WITHOUT SECURITY SYSTEM)
B59
INTERRUPT RELAY
(WITH SECURITY
SYSTEM)
REF. TO SEC-01
F44
B61
F46
B108
INHIBITOR SWITCH (AT)
P R N D 3 2 1
B12
T3
T7
E/G(TB)-01 D
MAIN RELAY
B47
E/G(TB)-05
E/G(TB)-06
E/G(TB)-06
STARTER INTERLOCK
RELAY (MT)
B105
ELECTRIC THROTTLE RELAY
B309
CLUTCH SWITCH (MT)
B106
REF. TO GND-03
STARTER MOTOR
TO BATTERY TERMINAL
B14
B: B135 D: B137 ENGINE CONTROL MODULE
B106
B105
B309
B47 (BROWN)
B59
F46
F44 (BLACK)
B12 HR
T7
D: B137 HR
B: B135 HR
WI-06792

E/G(TB)-04

E/G(TB)-04

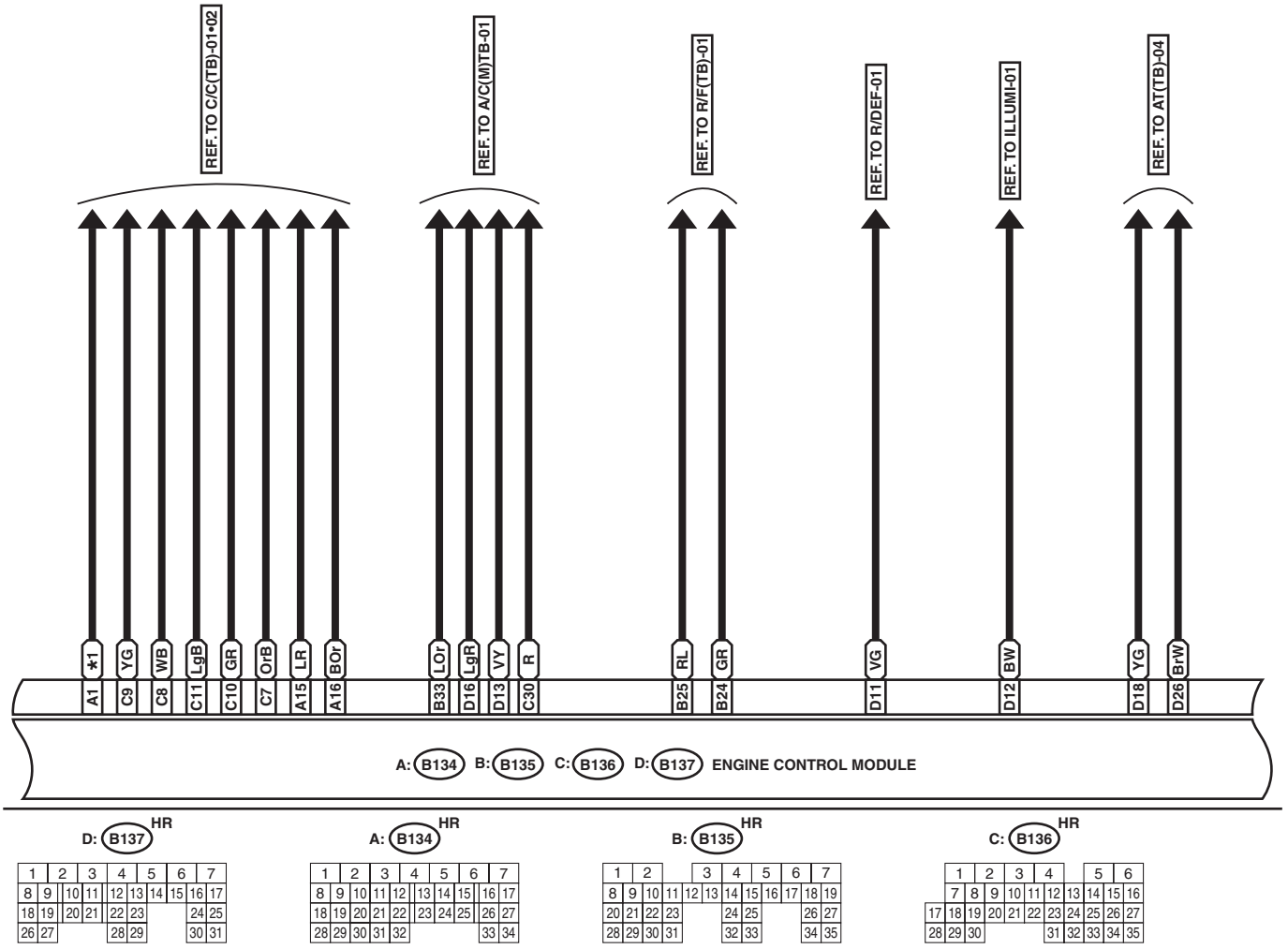

WI-06793

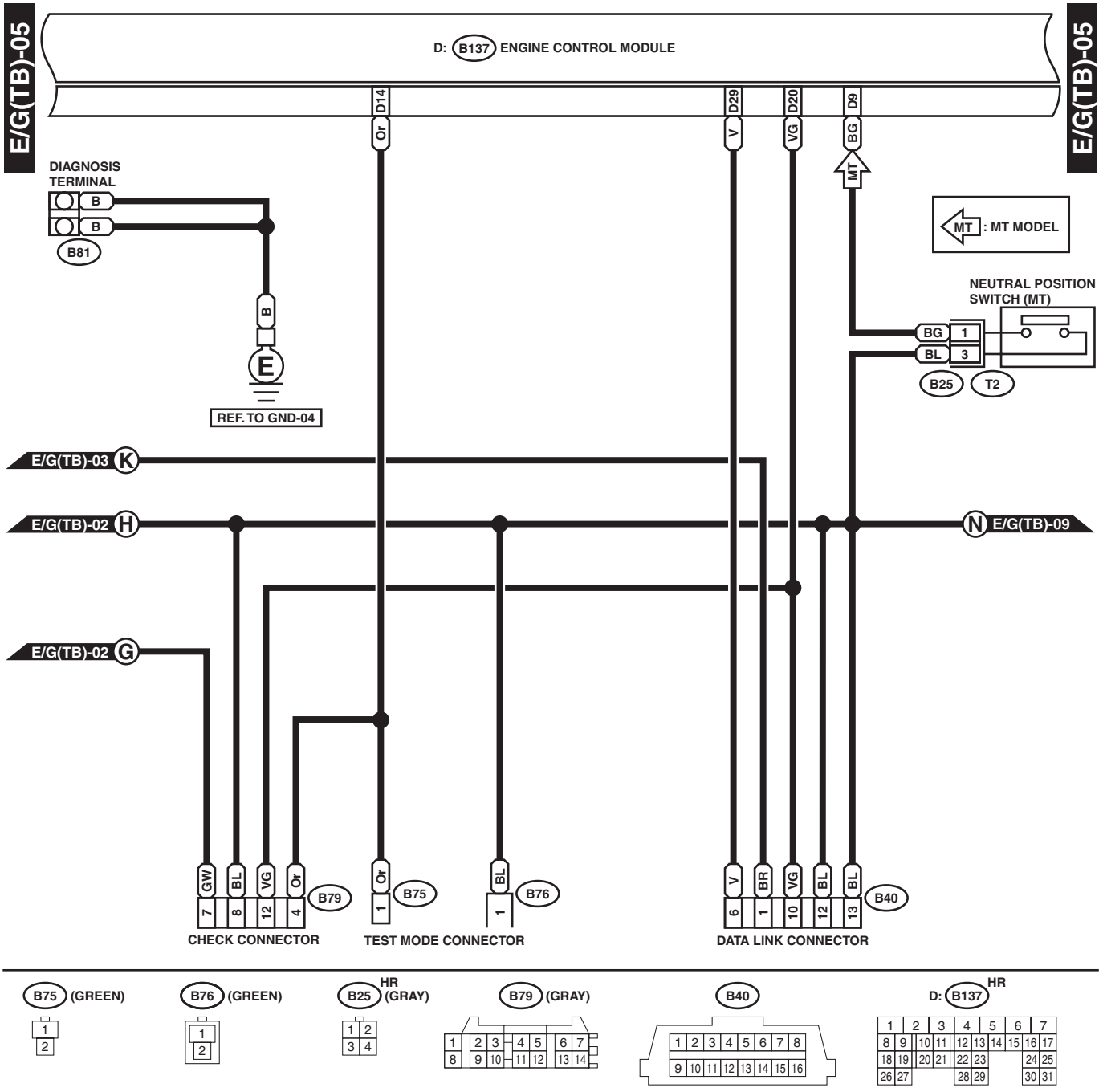
E/G(TB)-05
D: B137 ENGINE CONTROL MODULE
E/G(TB)-05
D14
D29
D20
D9
Or
V
VG
BG
MT
DIAGNOSIS TERMINAL
B
B
B81
B
E
REF. TO GND-04
MT : MT MODEL
NEUTRAL POSITION SWITCH (MT)
BG 1
BL 3
B25
T2
E/G(TB)-03 K
E/G(TB)-02 H
N E/G(TB)-09
E/G(TB)-02 G
GW
BL
VG
Or
7
8
12
4
B79
CHECK CONNECTOR
Or
1
B75
TEST MODE CONNECTOR
BL
1
B76
V
BR
VG
BL
BL
6
1
10
12
13
B40
DATA LINK CONNECTOR
B75 (GREEN)
B76 (GREEN)
B25 HR (GRAY)
B79 (GRAY)
B40
D: B137 HR

WI-06794

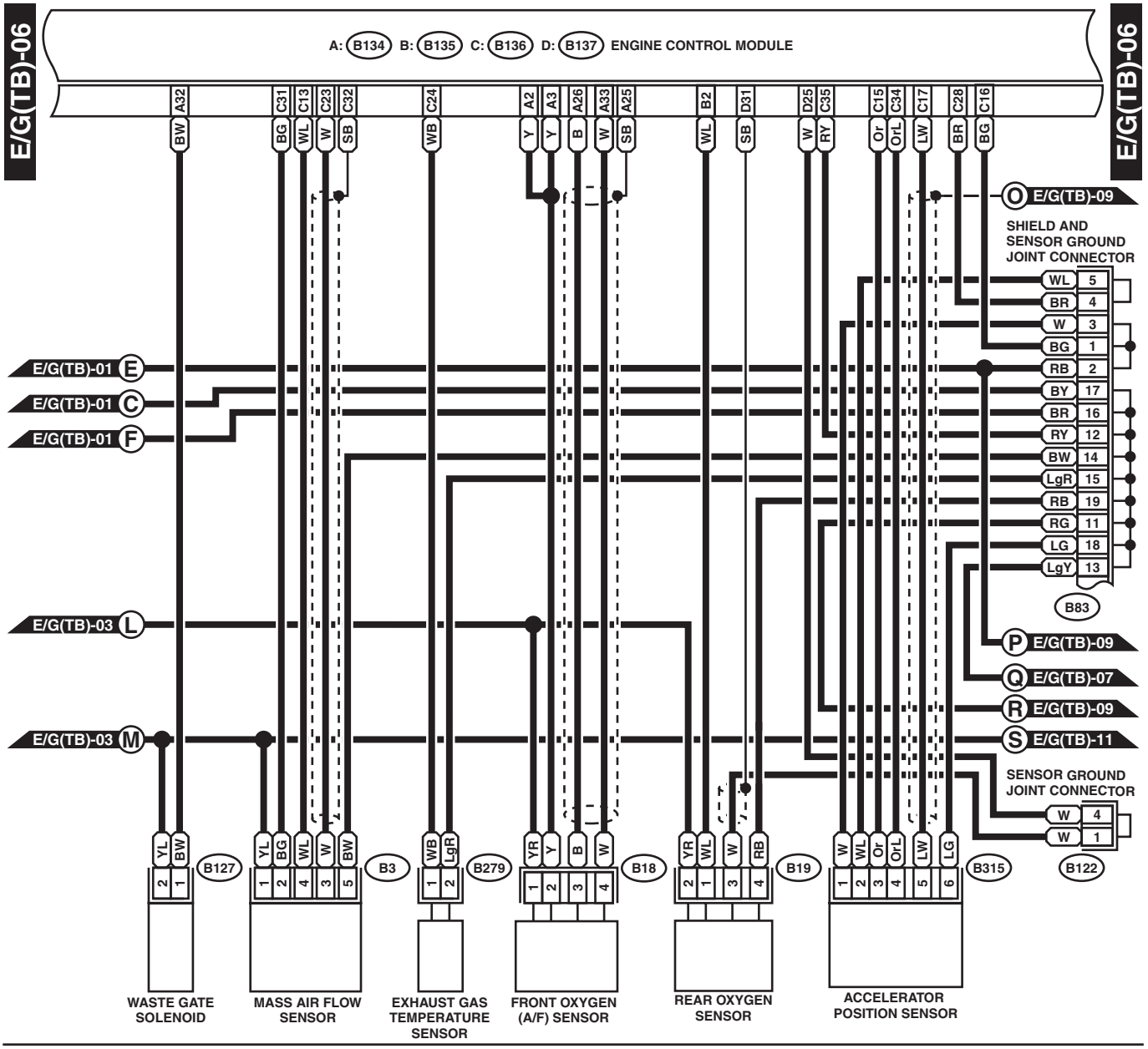
E/G(TB)-06
A: B134 B: B135 C: B136 D: B137 ENGINE CONTROL MODULE
A32 C31 C13 C23 C32 C24 A2 A3 A26 A33 A25 B2 D31 D25 C35 C15 C34 C17 C28 C16
BW BG WL W SB WB Y Y B W SB WL SB W RY Or OrL LW BR BG
E/G(TB)-09
SHIELD AND SENSOR GROUND JOINT CONNECTOR
WL 5
BR 4
W 3
BG 1
RB 2
BY 17
BR 16
RY 12
BW 14
LgR 15
RB 19
RG 11
LG 18
LgY 13
B83
E/G(TB)-01 E
E/G(TB)-01 C
E/G(TB)-01 F
E/G(TB)-03 L
E/G(TB)-03 M
E/G(TB)-09 P
E/G(TB)-07 Q
E/G(TB)-09 R
E/G(TB)-11 S
SENSOR GROUND JOINT CONNECTOR
W 4
W 1
B122
YL BW B127
YL BG WL W BW B3
WB LgR B279
YR Y B W B18
YR WL W RB B19
W WL Or OrL LW LG B315
WASTE GATE SOLENOID
MASS AIR FLOW SENSOR
EXHAUST GAS TEMPERATURE SENSOR
FRONT OXYGEN (A/F) SENSOR
REAR OXYGEN SENSOR
ACCELERATOR POSITION SENSOR
B127 HR (BLUE)
B279 HR
B18
B19 HR
B122
B3 HR
B315
B83
D: B137 HR
A: B134 HR
C: B136 HR
B: B135 HR

WI-06795

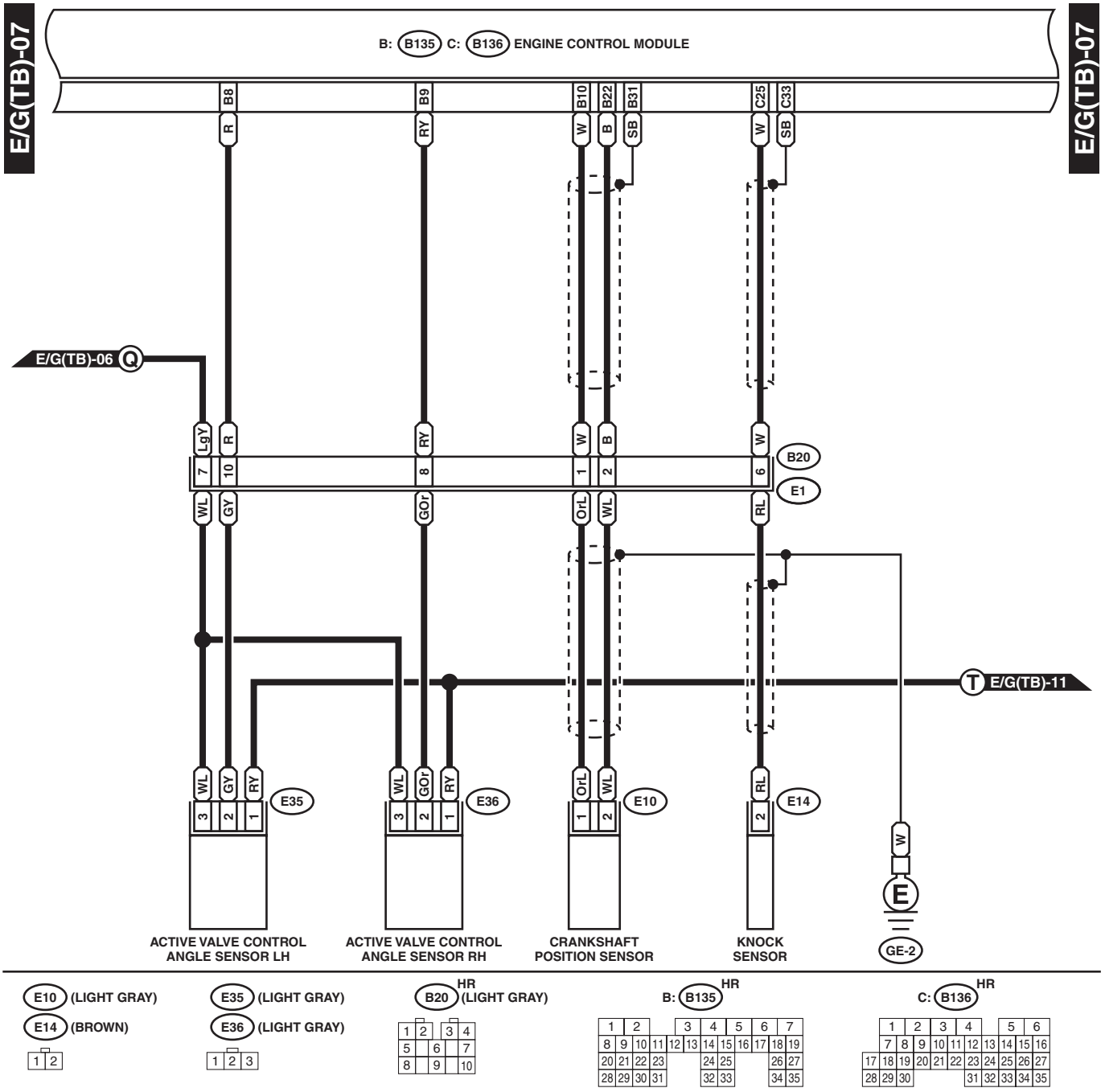
E/G(TB)-07
B: B135 C: B136 ENGINE CONTROL MODULE
B8
B9
B10
B22
B31
C25
C33
R
RY
W
B
SB
W
SB
E/G(TB)-06 Q
LgY
R
RY
W
B
W
7
10
8
1
2
6
B20
E1
WL
GY
GOr
OrL
WL
RL
T E/G(TB)-11
WL
GY
RY
E35
WL
GOr
RY
E36
OrL
WL
E10
RL
E14
3
2
1
3
2
1
1
2
2
W
E
GE-2
ACTIVE VALVE CONTROL ANGLE SENSOR LH
ACTIVE VALVE CONTROL ANGLE SENSOR RH
CRANKSHAFT POSITION SENSOR
KNOCK SENSOR
E10 (LIGHT GRAY)
E14 (BROWN)
E35 (LIGHT GRAY)
E36 (LIGHT GRAY)
B20 HR (LIGHT GRAY)
B: B135 HR
C: B136 HR

WI-06796

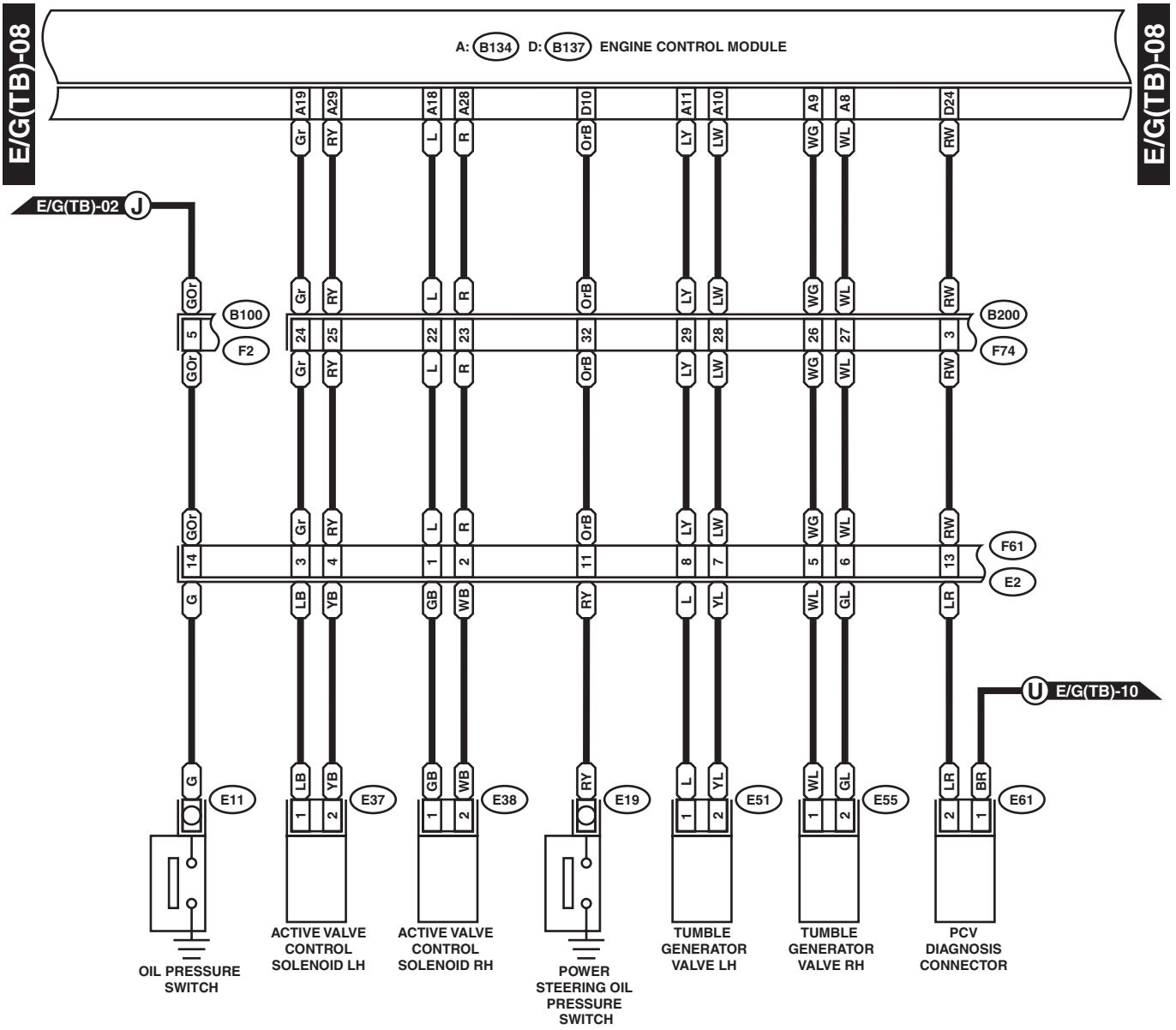
E/G(TB)-08
A: B134 D: B137 ENGINE CONTROL MODULE
E/G(TB)-08
E/G(TB)-02 J
B100
F2
B200
F74
F61
E2
U E/G(TB)-10
E11
E37
E38
E19
E51
E55
E61
OIL PRESSURE SWITCH
ACTIVE VALVE CONTROL SOLENOID LH
ACTIVE VALVE CONTROL SOLENOID RH
POWER STEERING OIL PRESSURE SWITCH
TUMBLE GENERATOR VALVE LH
TUMBLE GENERATOR VALVE RH
PCV DIAGNOSIS CONNECTOR

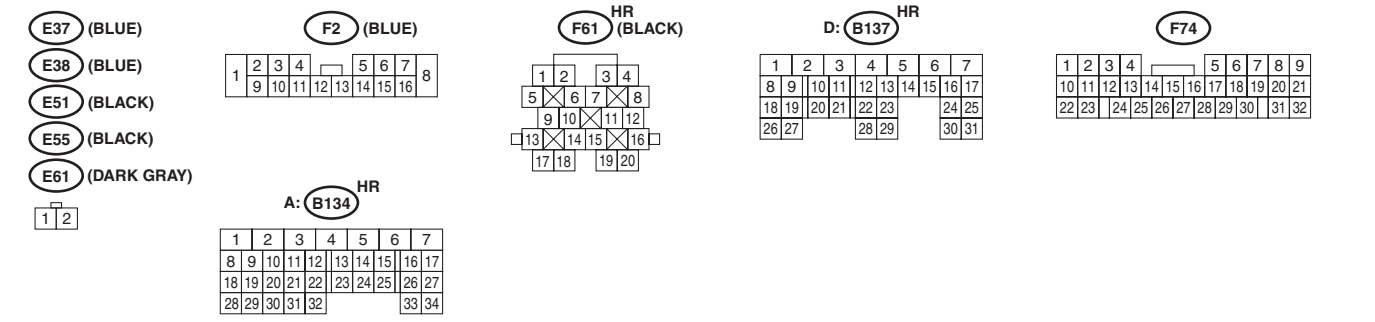
E37 (BLUE)
E38 (BLUE)
E51 (BLACK)
E55 (BLACK)
E61 (DARK GRAY)
F2 (BLUE)
F61 HR (BLACK)
D: B137 HR
F74
A: B134 HR

WI-06797

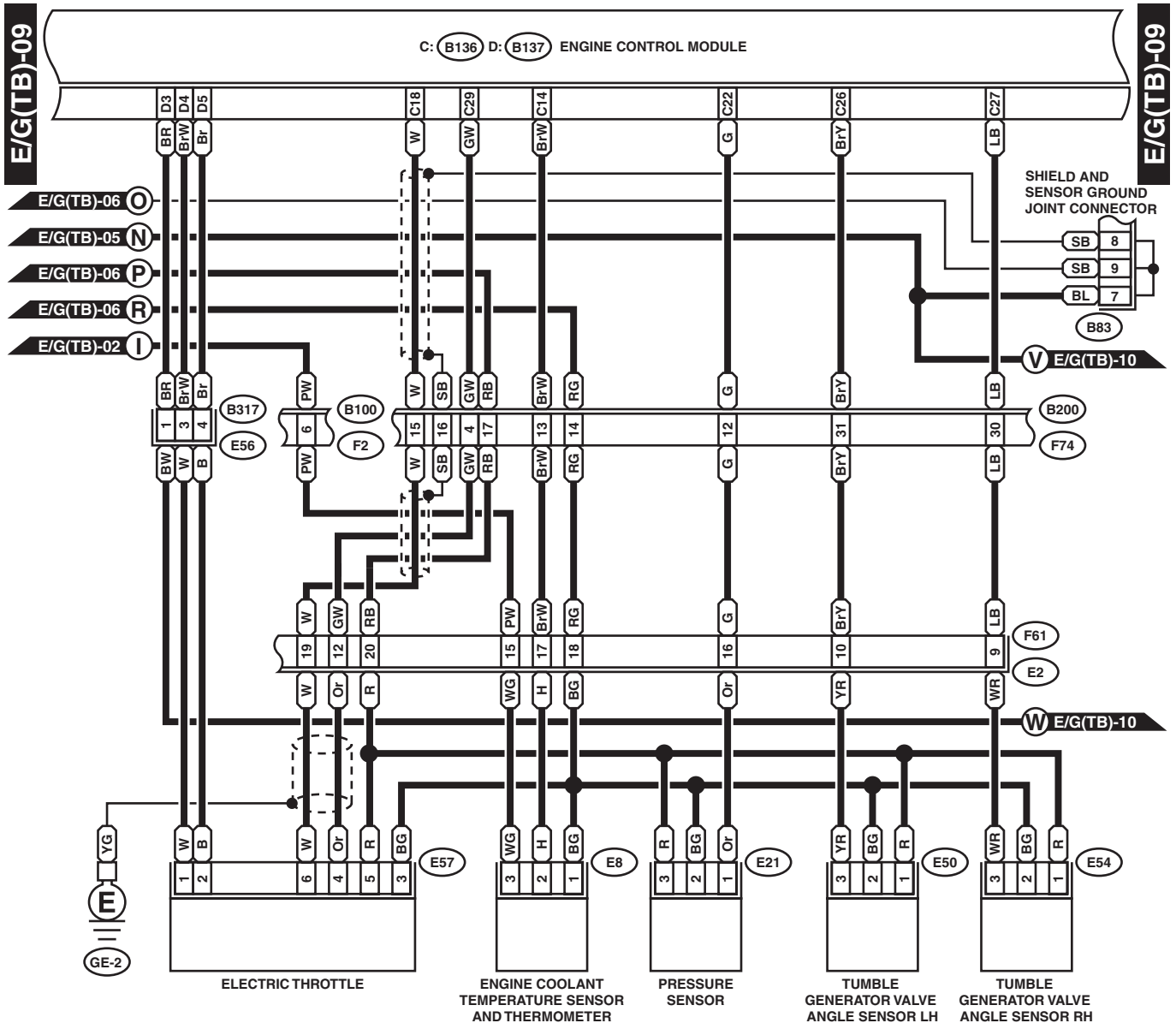
E/G(TB)-09
C: B136 D: B137 ENGINE CONTROL MODULE
E/G(TB)-06 O
E/G(TB)-05 N
E/G(TB)-06 P
E/G(TB)-06 R
E/G(TB)-02 I
SHIELD AND SENSOR GROUND JOINT CONNECTOR
B83
V E/G(TB)-10
B317
E56
B100
F2
B200
F74
F61
E2
W E/G(TB)-10
E57
E8
E21
E50
E54
GE-2
ELECTRIC THROTTLE
ENGINE COOLANT TEMPERATURE SENSOR AND THERMOMETER
PRESSURE SENSOR
TUMBLE GENERATOR VALVE ANGLE SENSOR LH
TUMBLE GENERATOR VALVE ANGLE SENSOR RH

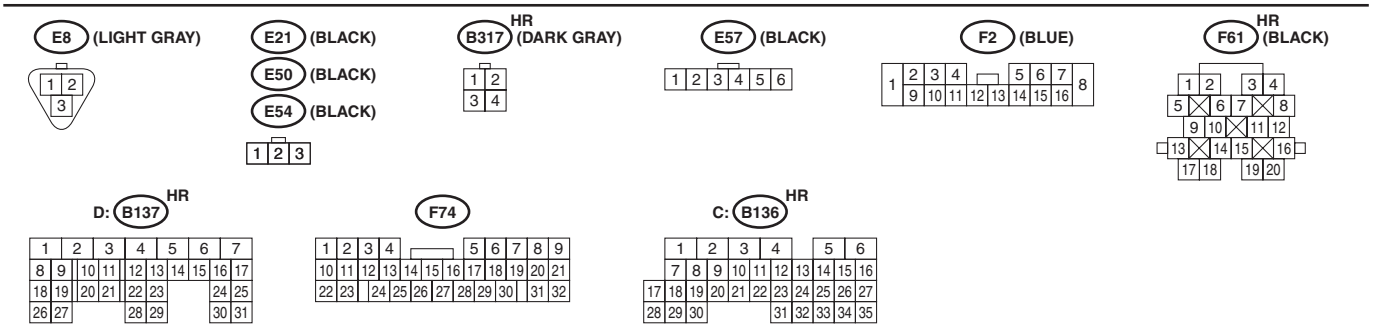
E8 (LIGHT GRAY)
E21 (BLACK)
E50 (BLACK)
E54 (BLACK)
B317 HR (DARK GRAY)
E57 (BLACK)
F2 (BLUE)
F61 HR (BLACK)
D: B137 HR
F74
C: B136 HR

WI-06798

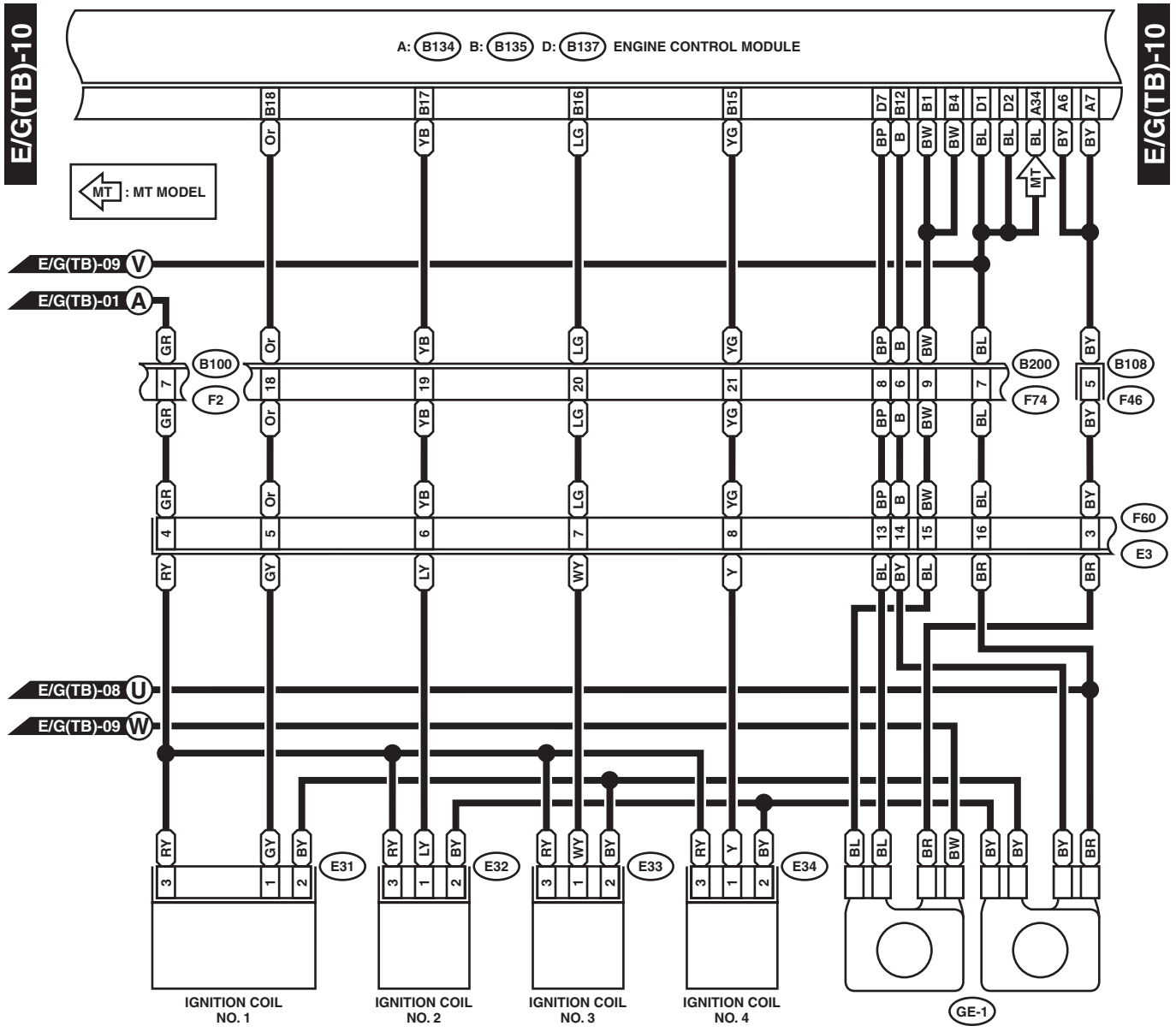
E/G(TB)-10
A: B134 B: B135 D: B137 ENGINE CONTROL MODULE
MT : MT MODEL
E/G(TB)-09 V
E/G(TB)-01 A
B100
F2
B200
F74
B108
F46
F60
E3
E/G(TB)-08 U
E/G(TB)-09 W
E31
E32
E33
E34
IGNITION COIL NO. 1
IGNITION COIL NO. 2
IGNITION COIL NO. 3
IGNITION COIL NO. 4
GE-1

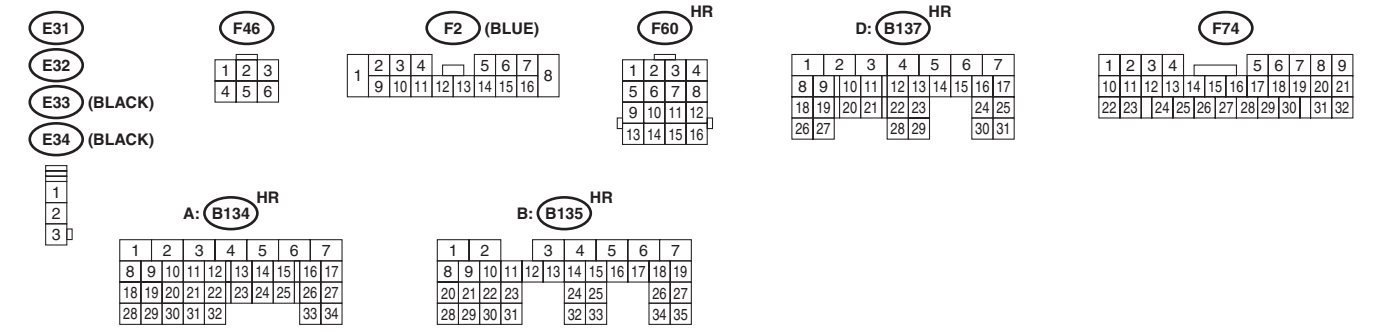
E31
E32
E33 (BLACK)
E34 (BLACK)
F46
F2 (BLUE)
F60 HR
D: B137 HR
F74
A: B134 HR
B: B135 HR

WI-06799

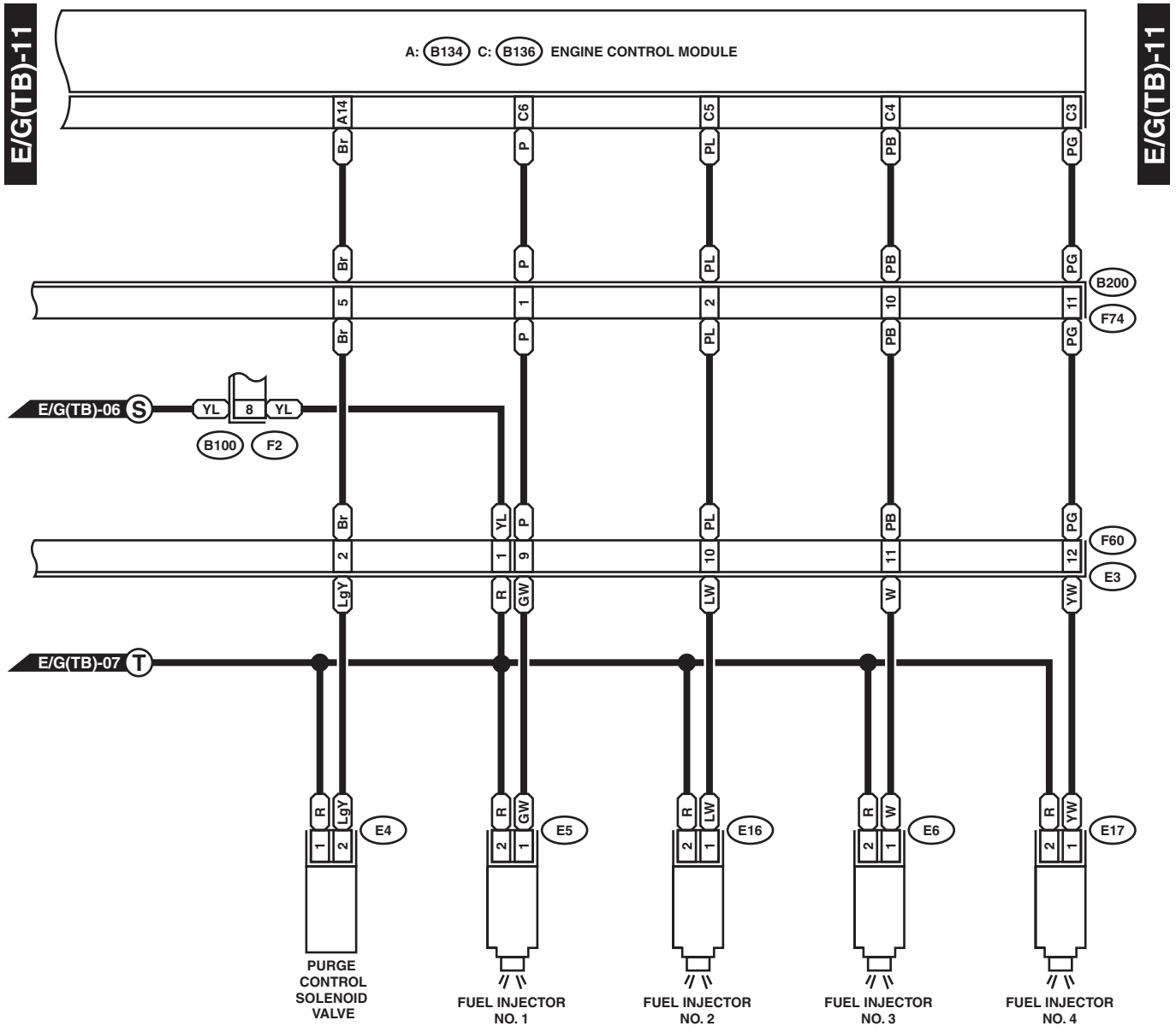
E/G(TB)-11
A: B134 C: B136 ENGINE CONTROL MODULE
A14 Br
C6 P
C5 PL
C4 PB
C3 PG
B200
F74
5 Br
1 P
2 PL
10 PB
11 PG
E/G(TB)-06 S
YL 8 YL
B100 F2
F60
E3
2 Br
1 YL
9 P
10 PL
11 PB
12 PG
LgY
R
GW
LW
W
YW
E/G(TB)-07 T
E4
E5
E16
E6
E17
PURGE CONTROL SOLENOID VALVE
FUEL INJECTOR NO. 1
FUEL INJECTOR NO. 2
FUEL INJECTOR NO. 3
FUEL INJECTOR NO. 4

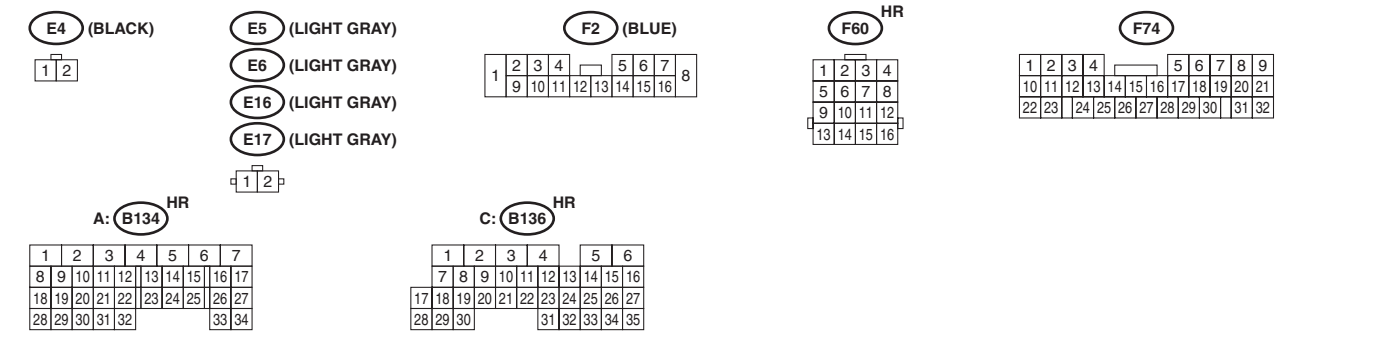
E4 (BLACK)
E5 (LIGHT GRAY)
E6 (LIGHT GRAY)
E16 (LIGHT GRAY)
E17 (LIGHT GRAY)
F2 (BLUE)
F60 HR
F74
A: B134 HR
C: B136 HR

WI-06800

MEMO:

18.Fuel Gauge System

A: SCHEMATIC

1. NON-TURBO ENGINE MODEL

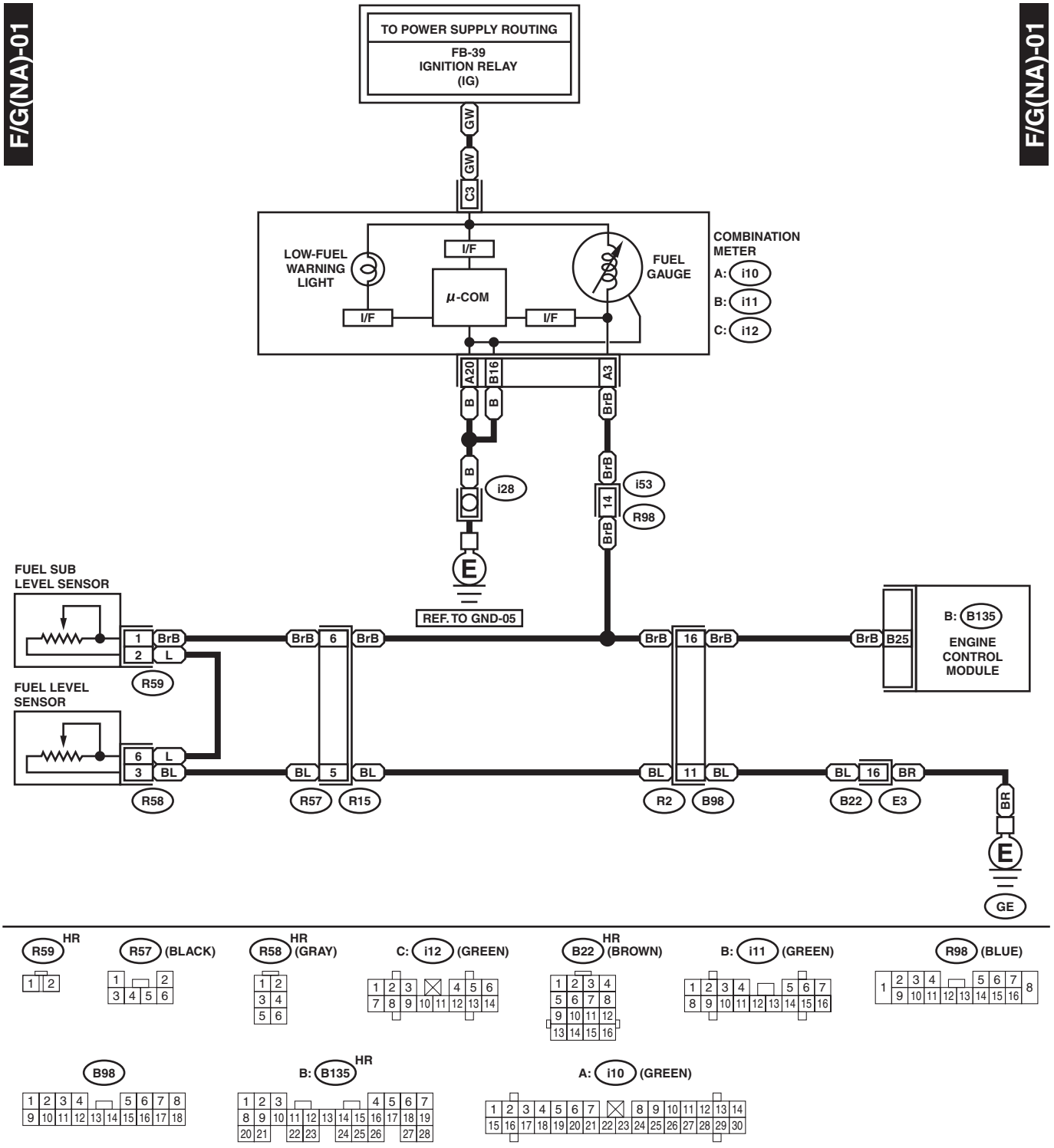

WI-06801

2. TURBO ENGINE MODEL

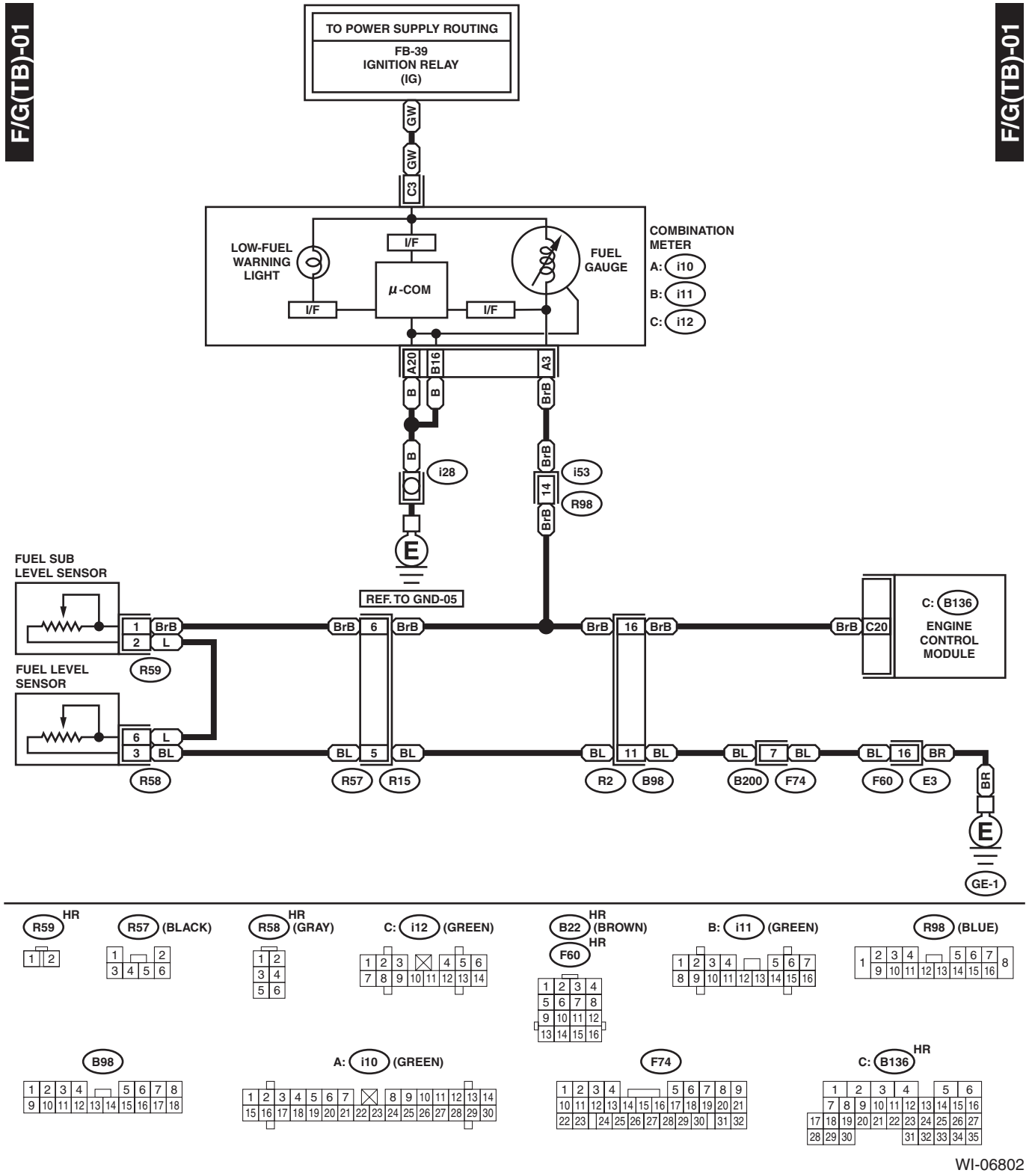

19.Front Accessory Power Supply System

A: SCHEMATIC

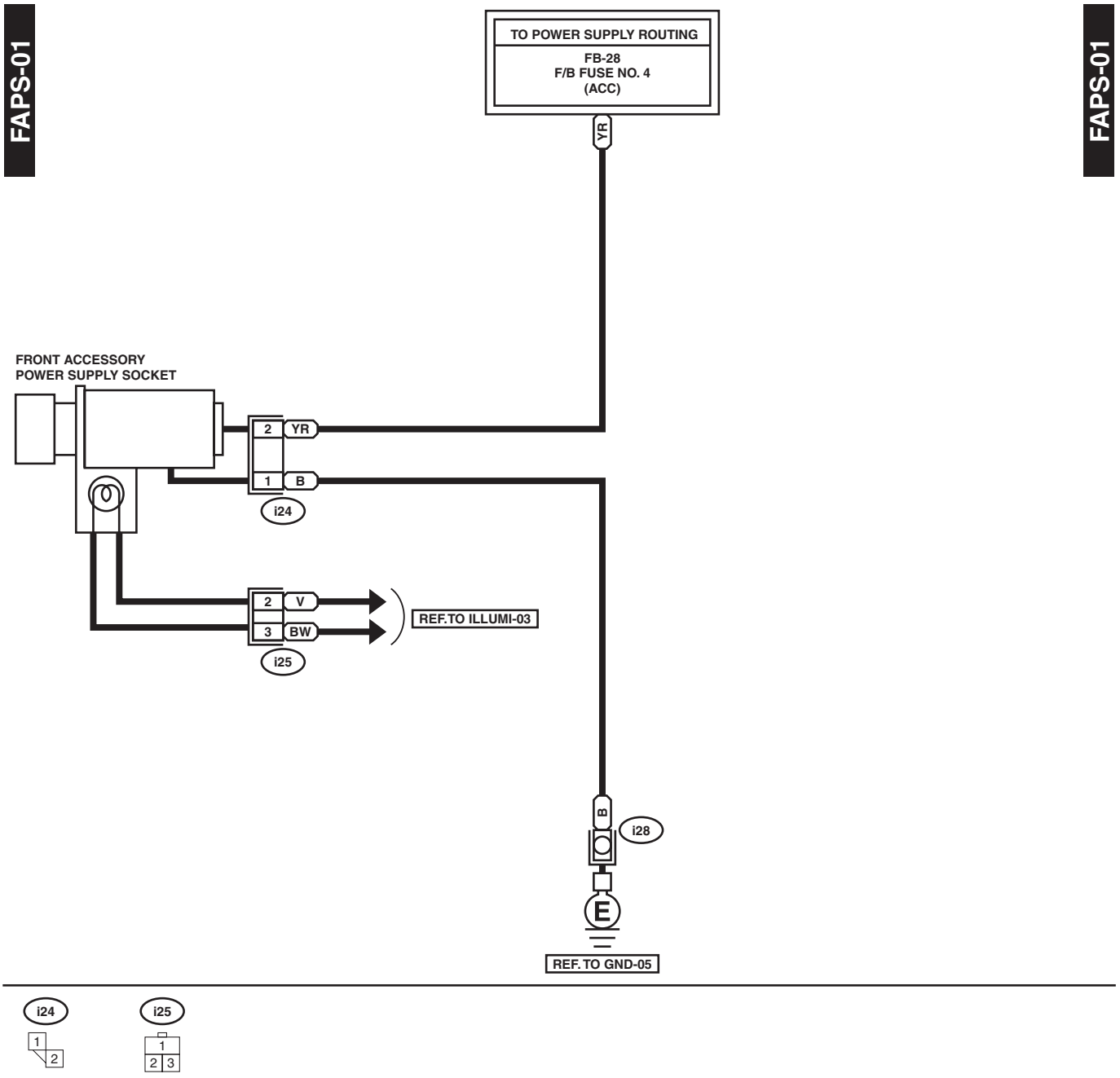

WI-05743

20.Horn System

A: SCHEMATIC

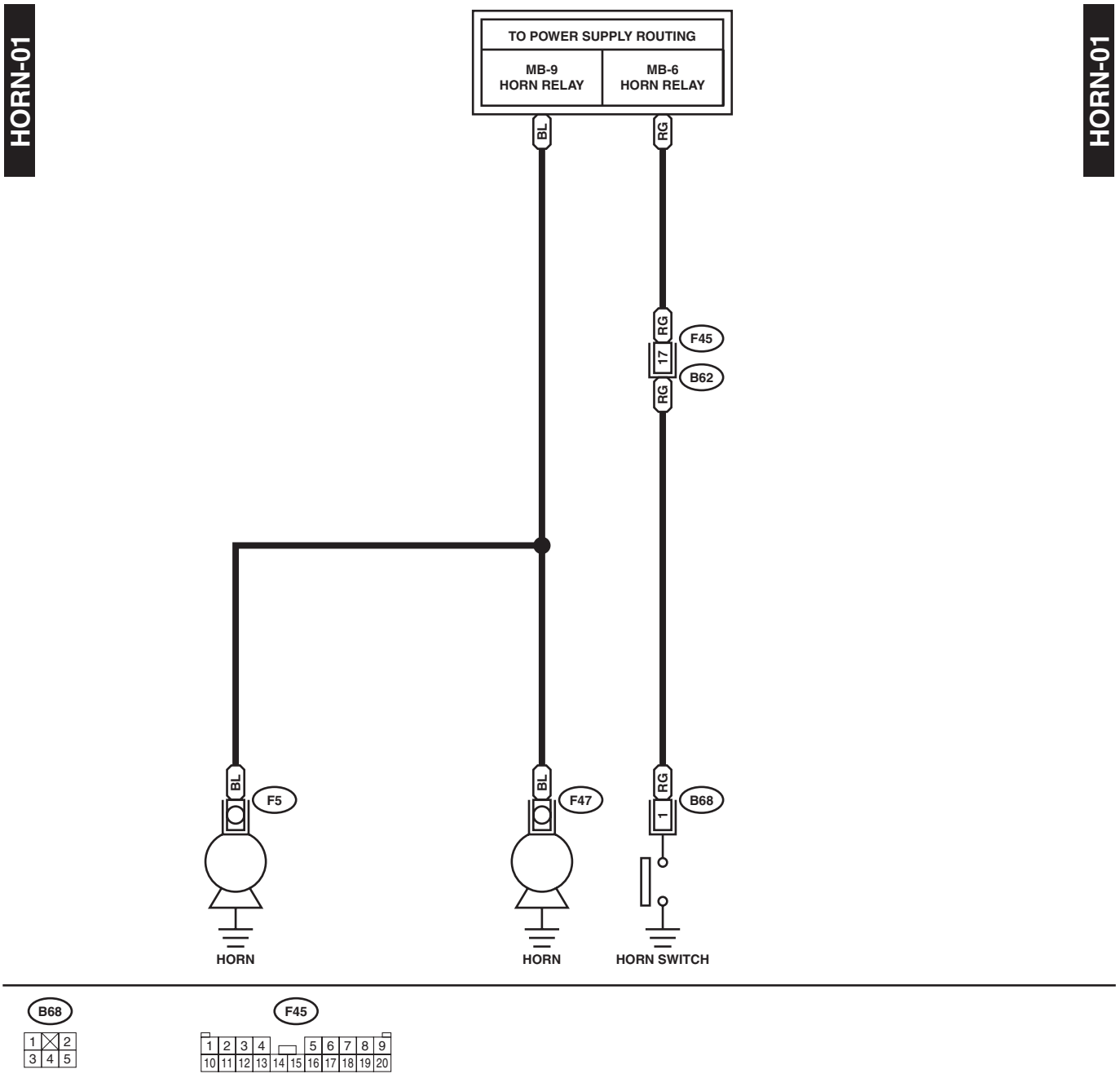

WI-05744

21.Keyless Entry System

A: SCHEMATIC

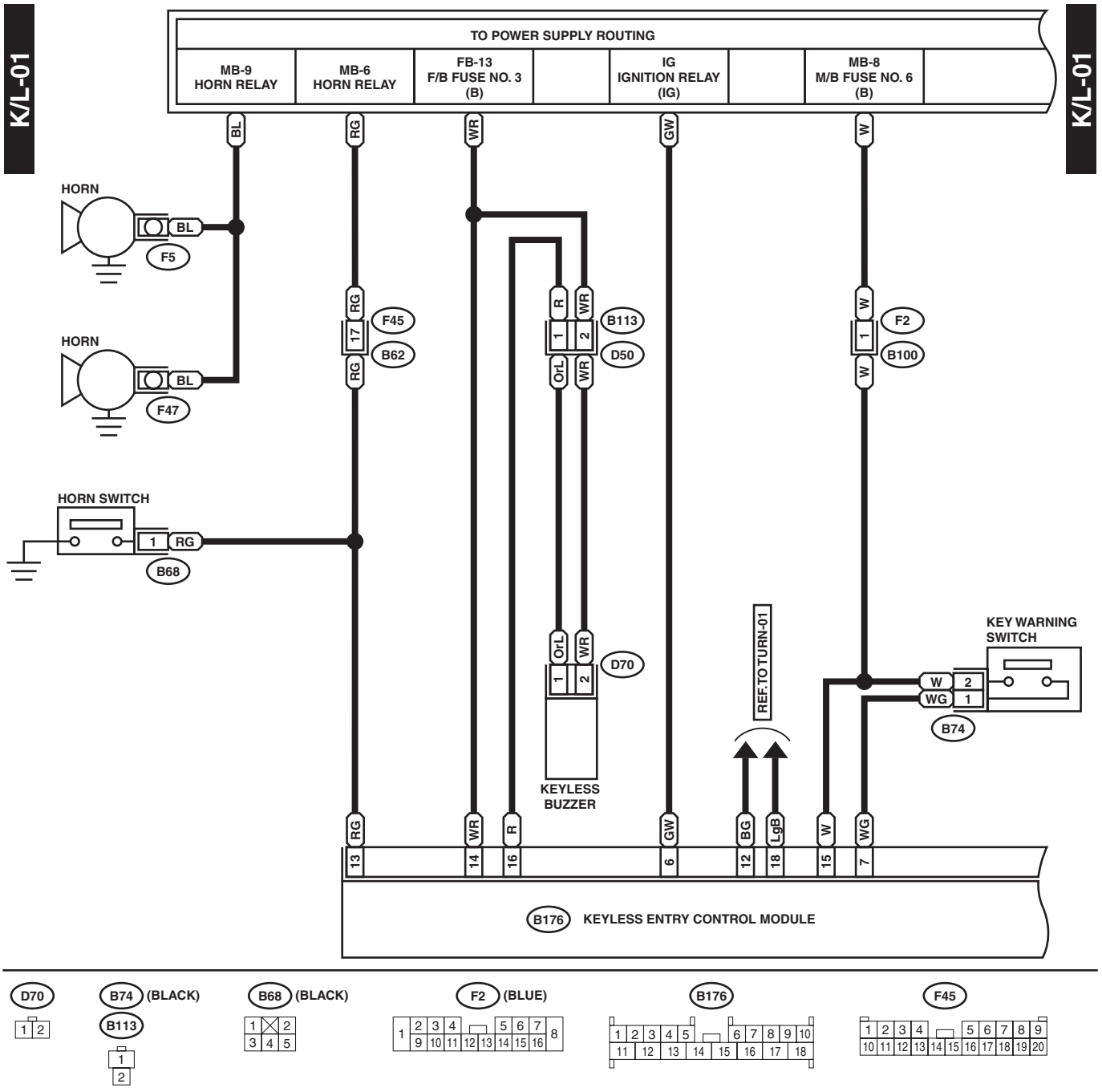

WI-05745

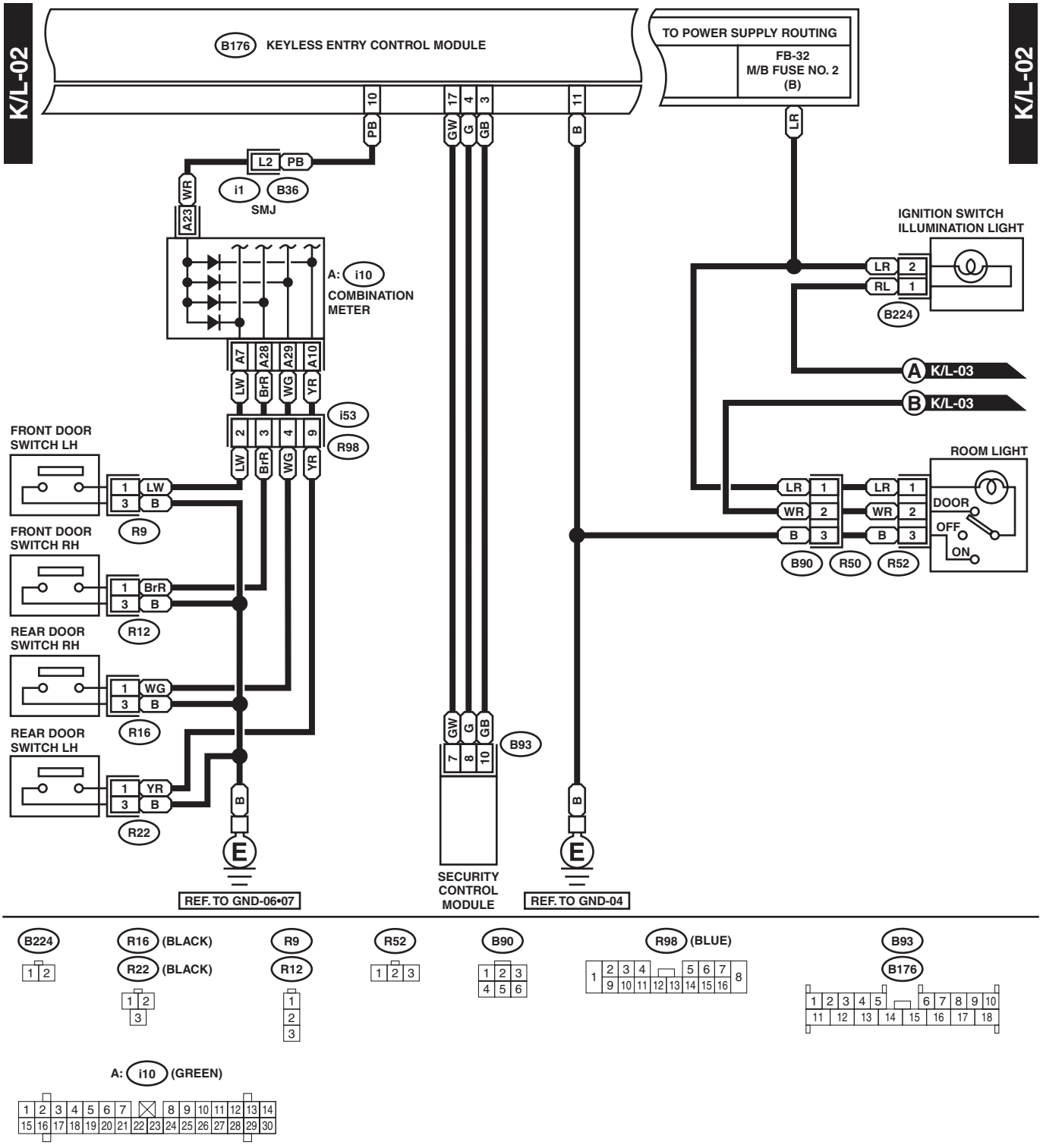
K/L-02
B176 KEYLESS ENTRY CONTROL MODULE
TO POWER SUPPLY ROUTING
FB-32
M/B FUSE NO. 2
(B)
K/L-02
10
17
4
3
11
PB
GW
G
GB
B
LR
L2
PB
i1
B36
SMJ
WR
A23
A: i10
COMBINATION METER
A7
A28
A29
A10
LW
BrR
WG
YR
i53
2
3
4
9
R98
IGNITION SWITCH ILLUMINATION LIGHT
LR
RL
2
1
B224
A K/L-03
B K/L-03
FRONT DOOR SWITCH LH
1
3
LW
B
R9
FRONT DOOR SWITCH RH
BrR
R12
REAR DOOR SWITCH RH
WG
R16
REAR DOOR SWITCH LH
YR
R22
ROOM LIGHT
WR
DOOR
OFF
ON
B90
R50
R52
7
8
10
B93
E
REF. TO GND-06•07
SECURITY CONTROL MODULE
REF. TO GND-04
B224
R16 (BLACK)
R22 (BLACK)
R9
R12
R52
B90
R98 (BLUE)
B93
B176
A: i10 (GREEN)

WI-05841

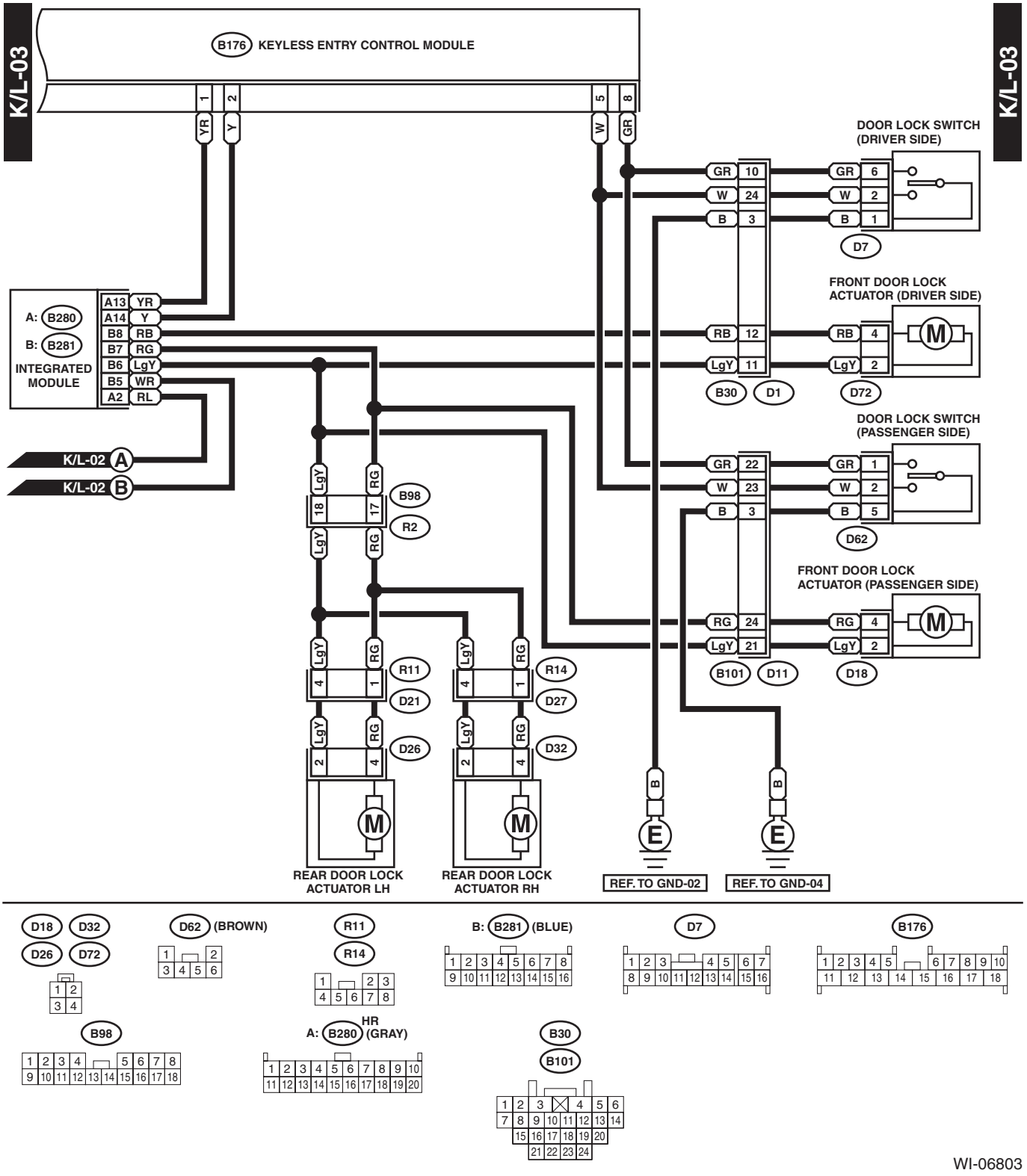
K/L-03
B176 KEYLESS ENTRY CONTROL MODULE
1 2 5 8
YR Y W GR
DOOR LOCK SWITCH (DRIVER SIDE)
GR 10 W 24 B 3
GR 6 W 2 B 1
D7
FRONT DOOR LOCK ACTUATOR (DRIVER SIDE)
RB 12 LgY 11
RB 4 LgY 2
B30 D1 D72
A: B280
B: B281
INTEGRATED MODULE
A13 YR
A14 Y
B8 RB
B7 RG
B6 LgY
B5 WR
A2 RL
K/L-02 A
K/L-02 B
DOOR LOCK SWITCH (PASSENGER SIDE)
GR 22 W 23 B 3
GR 1 W 2 B 5
D62
FRONT DOOR LOCK ACTUATOR (PASSENGER SIDE)
RG 24 LgY 21
RG 4 LgY 2
B101 D11 D18
LgY 18 RG 17
B98
R2
LgY 4 RG 1
R11
D21
LgY 2 RG 4
D26
LgY 4 RG 1
R14
D27
LgY 2 RG 4
D32
REAR DOOR LOCK ACTUATOR LH
REAR DOOR LOCK ACTUATOR RH
B
E
REF. TO GND-02
REF. TO GND-04
D18 D32 D26 D72
D62 (BROWN)
R11 R14
B: B281 (BLUE)
D7
B176
B98
A: B280 HR (GRAY)
B30 B101
WI-06803

MEMO:

22.Back-up Light System

A: SCHEMATIC

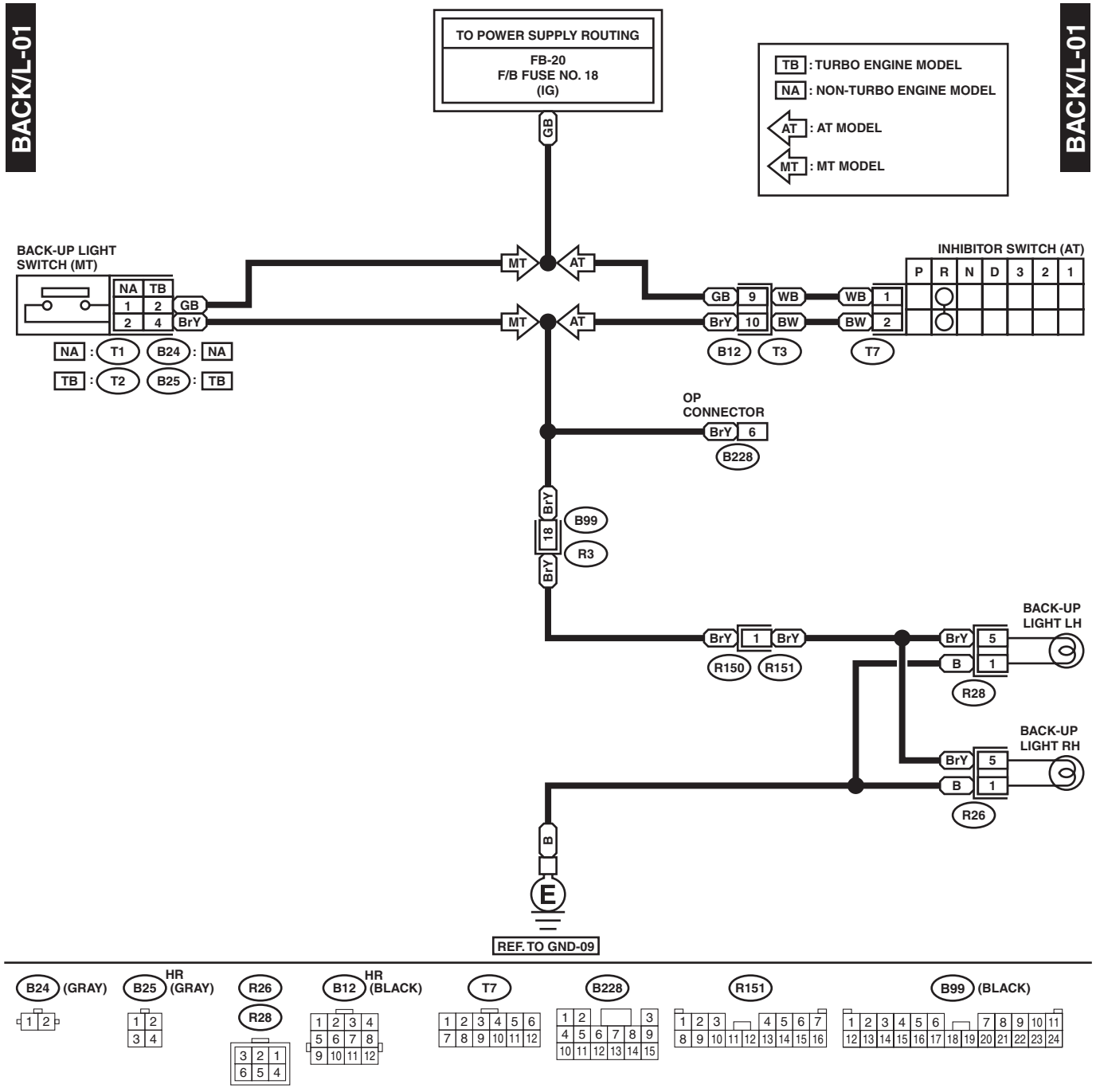

WI-06804

23.Sport Activity Light System

A: SCHEMATIC

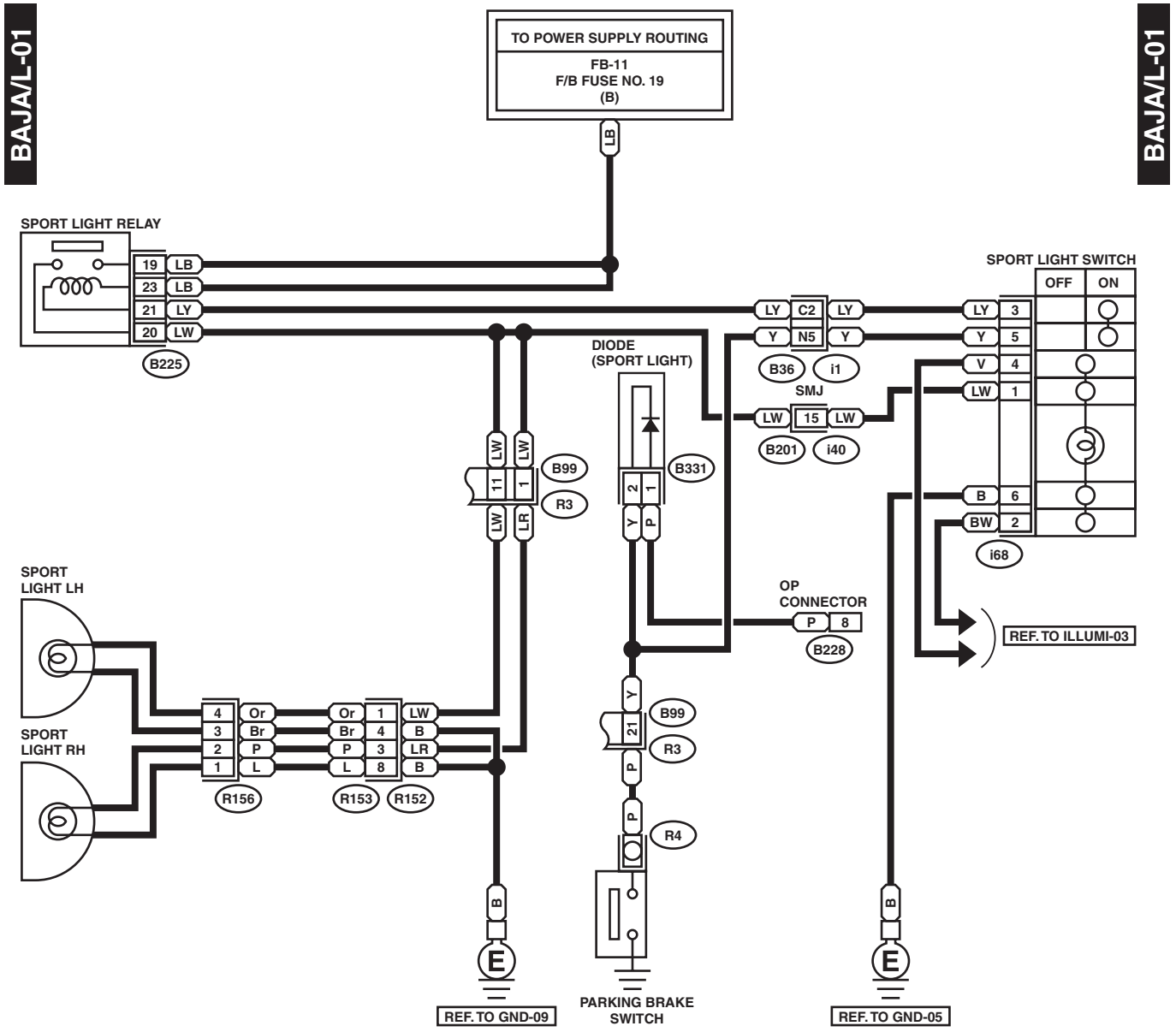

WI-05844

24.Cargo Light System

A: SCHEMATIC

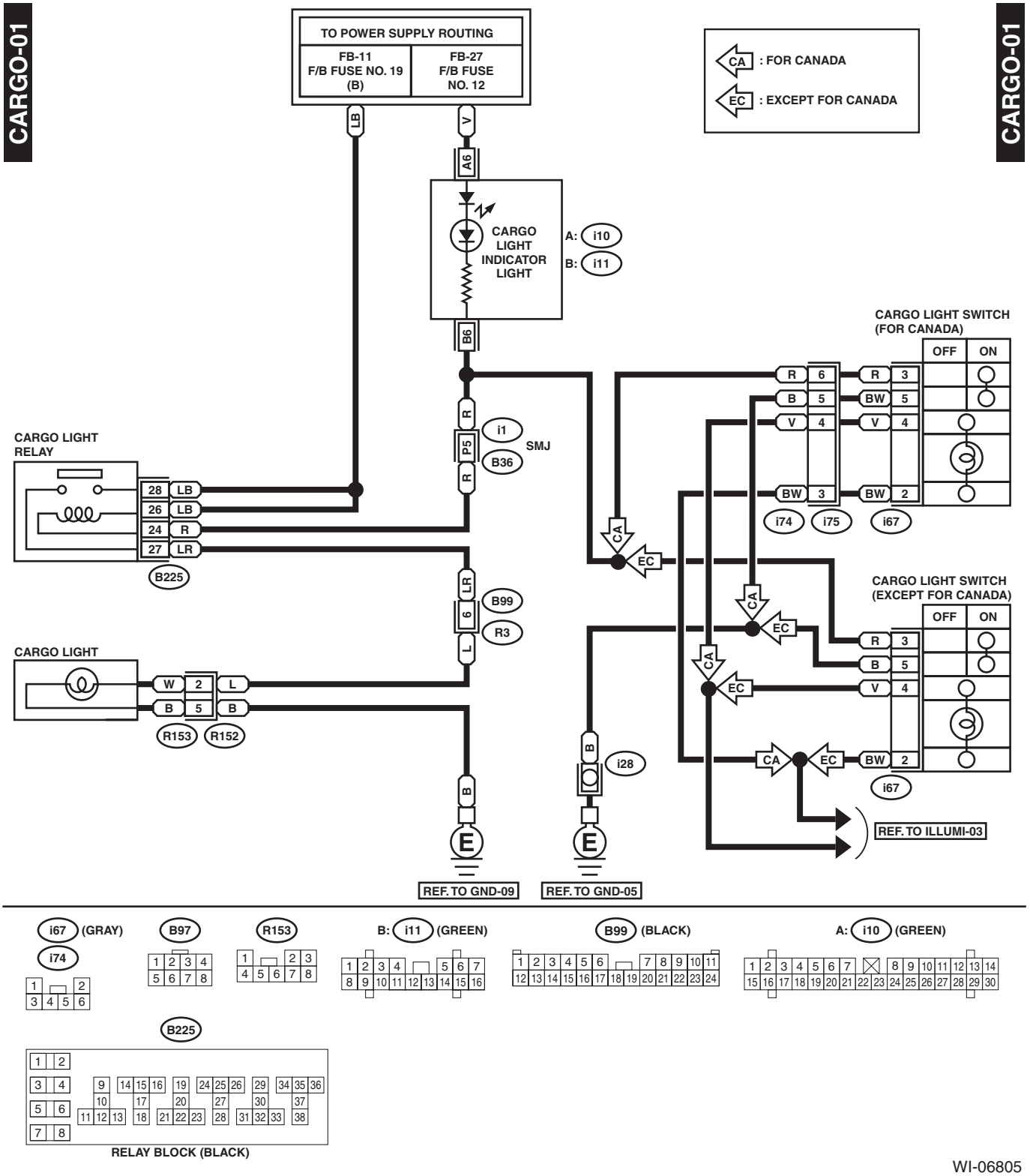

WI-06805

MEMO:

25.Clearance Light and Illumination Light System

A: SCHEMATIC

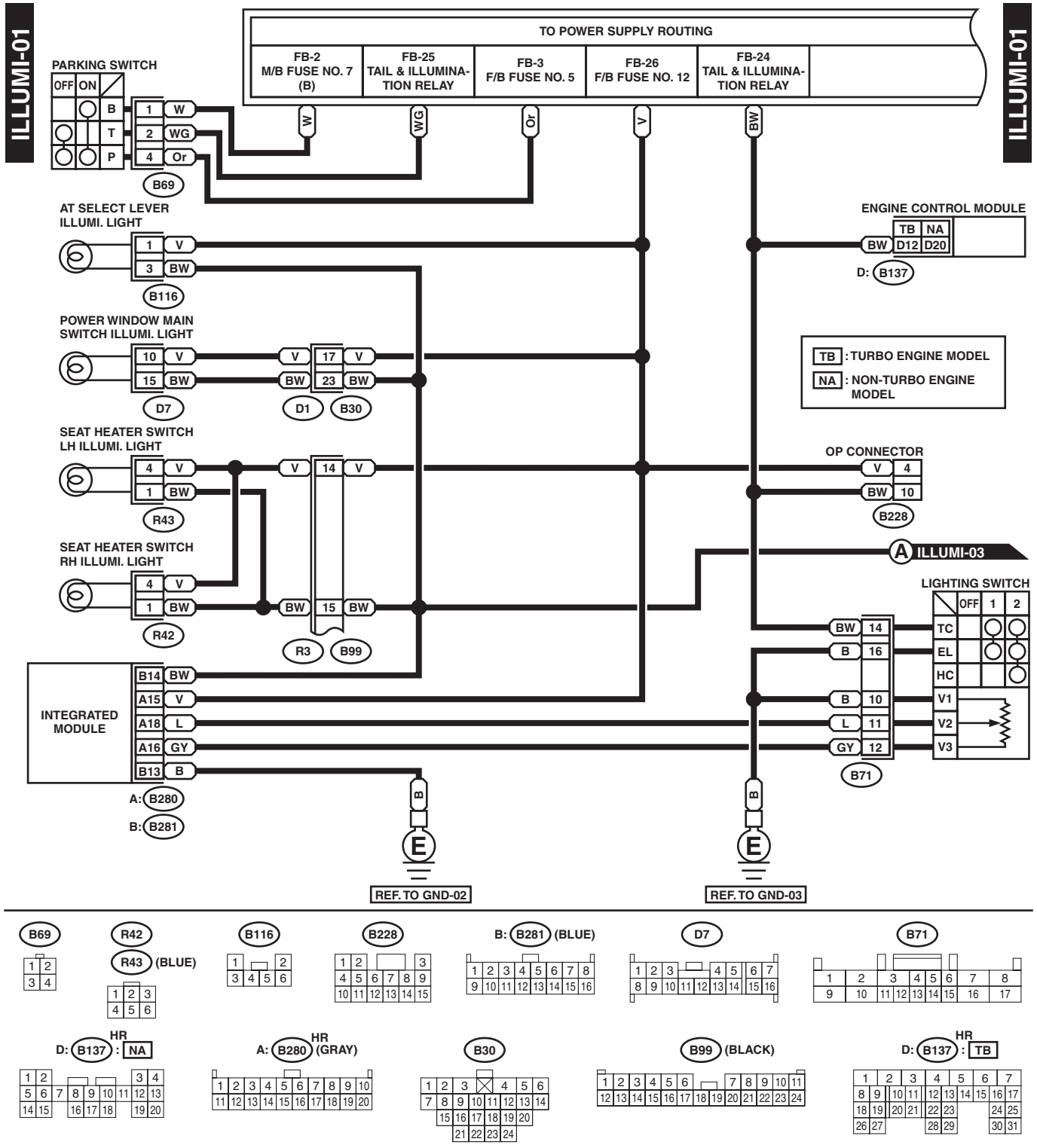

WI-06806

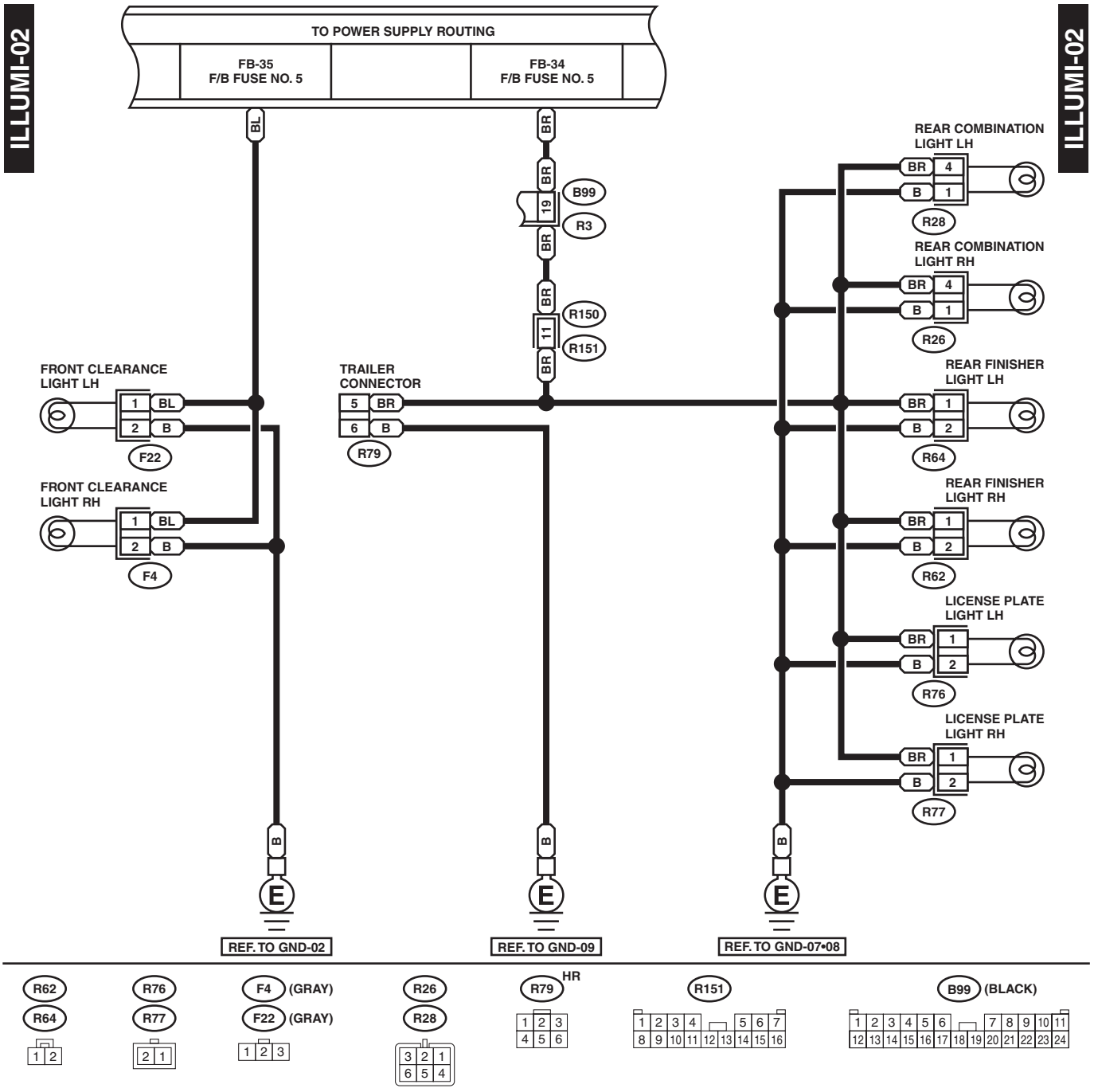
ILLUMI-02
TO POWER SUPPLY ROUTING
FB-35
F/B FUSE NO. 5
FB-34
F/B FUSE NO. 5
BL
BR
B99
19
R3
R150
11
R151
FRONT CLEARANCE
LIGHT LH
F22
FRONT CLEARANCE
LIGHT RH
F4
TRAILER
CONNECTOR
R79
REAR COMBINATION
LIGHT LH
R28
REAR COMBINATION
LIGHT RH
R26
REAR FINISHER
LIGHT LH
R64
REAR FINISHER
LIGHT RH
R62
LICENSE PLATE
LIGHT LH
R76
LICENSE PLATE
LIGHT RH
R77
B
E
REF. TO GND-02
REF. TO GND-09
REF. TO GND-07•08
R62
R64
R76
R77
F4 (GRAY)
F22 (GRAY)
R26
R28
R79
HR
R151
B99 (BLACK)

WI-06807

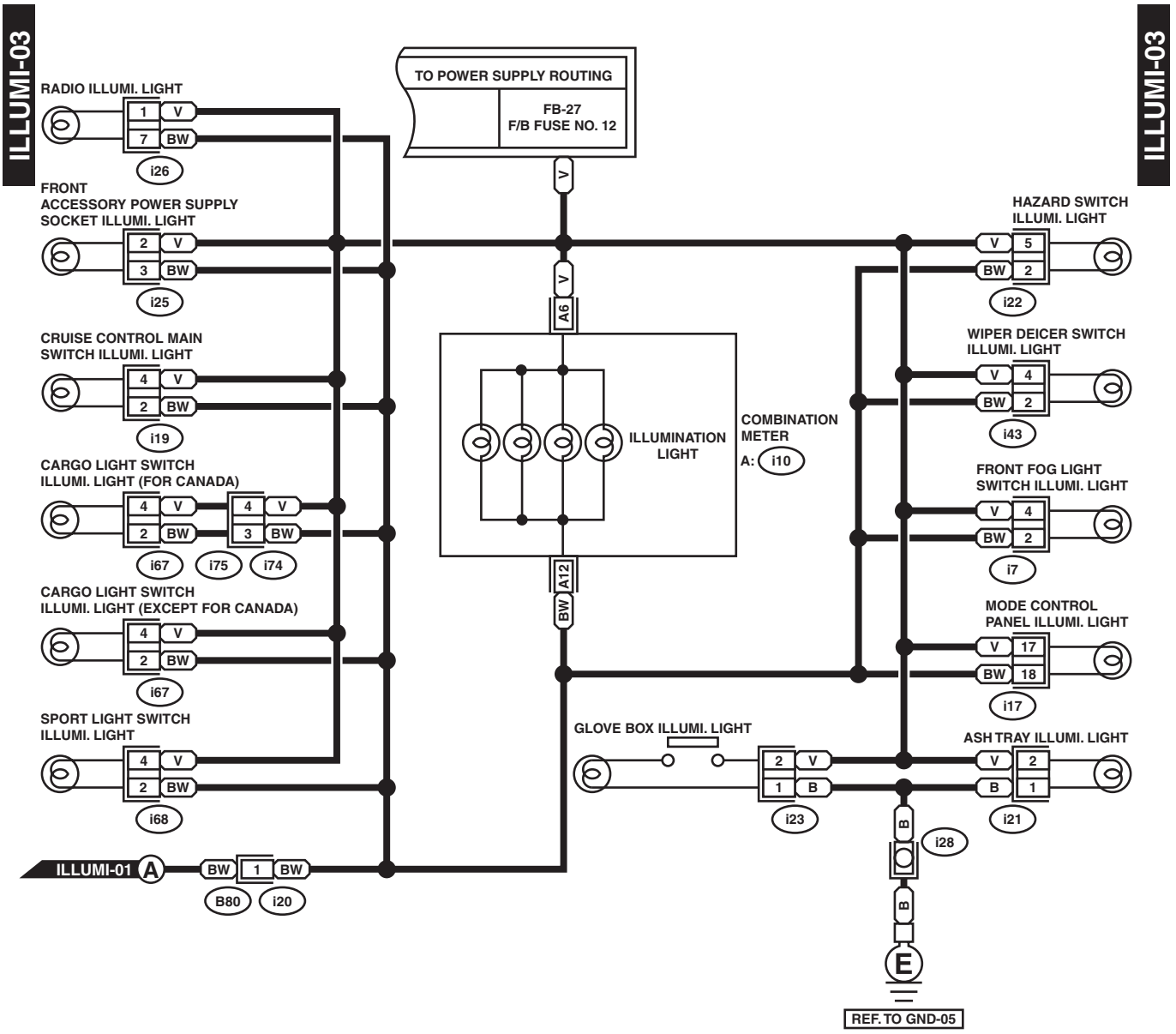
ILLUMI-03
ILLUMI-03
TO POWER SUPPLY ROUTING
FB-27
F/B FUSE NO. 12
RADIO ILLUMI. LIGHT
1 V
7 BW
i26
FRONT
ACCESSORY POWER SUPPLY
SOCKET ILLUMI. LIGHT
2 V
3 BW
i25
CRUISE CONTROL MAIN
SWITCH ILLUMI. LIGHT
4 V
2 BW
i19
CARGO LIGHT SWITCH
ILLUMI. LIGHT (FOR CANADA)
4 V
2 BW
4 V
3 BW
i67
i75
i74
CARGO LIGHT SWITCH
ILLUMI. LIGHT (EXCEPT FOR CANADA)
4 V
2 BW
i67
SPORT LIGHT SWITCH
ILLUMI. LIGHT
4 V
2 BW
i68
ILLUMI-01 A
BW
1
BW
B80
i20
V
V
A6
ILLUMINATION
LIGHT
COMBINATION
METER
A: i10
A12
BW
HAZARD SWITCH
ILLUMI. LIGHT
V 5
BW 2
i22
WIPER DEICER SWITCH
ILLUMI. LIGHT
V 4
BW 2
i43
FRONT FOG LIGHT
SWITCH ILLUMI. LIGHT
V 4
BW 2
i7
MODE CONTROL
PANEL ILLUMI. LIGHT
V 17
BW 18
i17
GLOVE BOX ILLUMI. LIGHT
2 V
1 B
i23
ASH TRAY ILLUMI. LIGHT
V 2
B 1
i21
B
i28
B
E
REF. TO GND-05

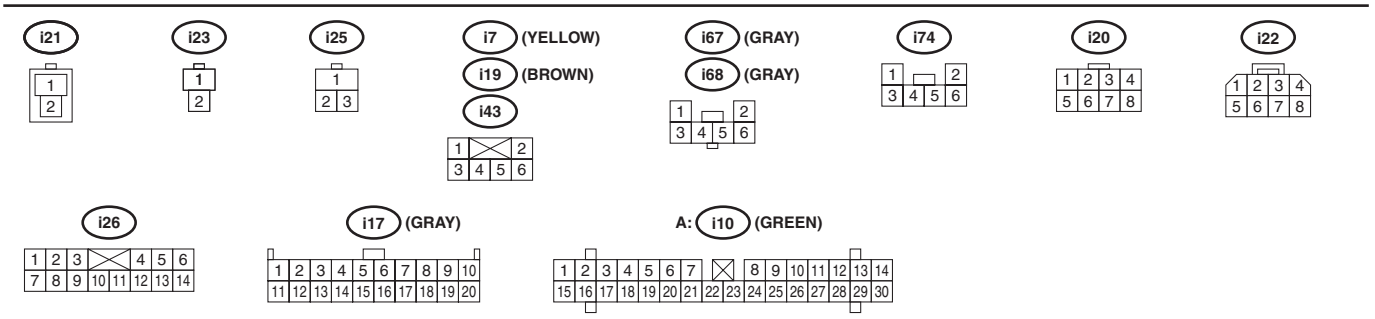
i21
i23
i25
i7 (YELLOW)
i19 (BROWN)
i43
i67 (GRAY)
i68 (GRAY)
i74
i20
i22
i26
i17 (GRAY)
A: i10 (GREEN)

WI-05753

MEMO:

26.Front Fog Light System

A: SCHEMATIC

1. NON-TURBO ENGINE MODEL

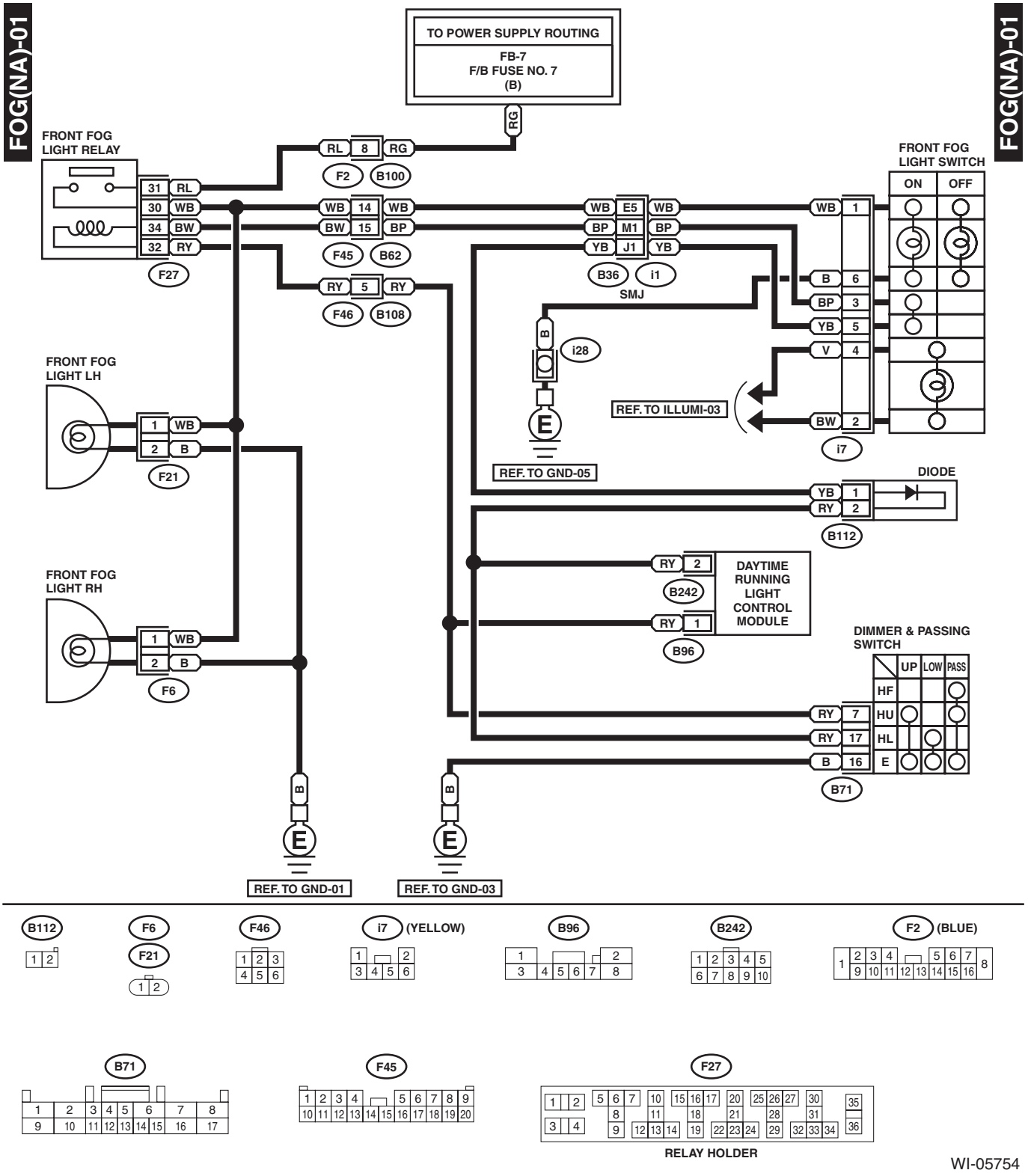

2. TURBO ENGINE MODEL

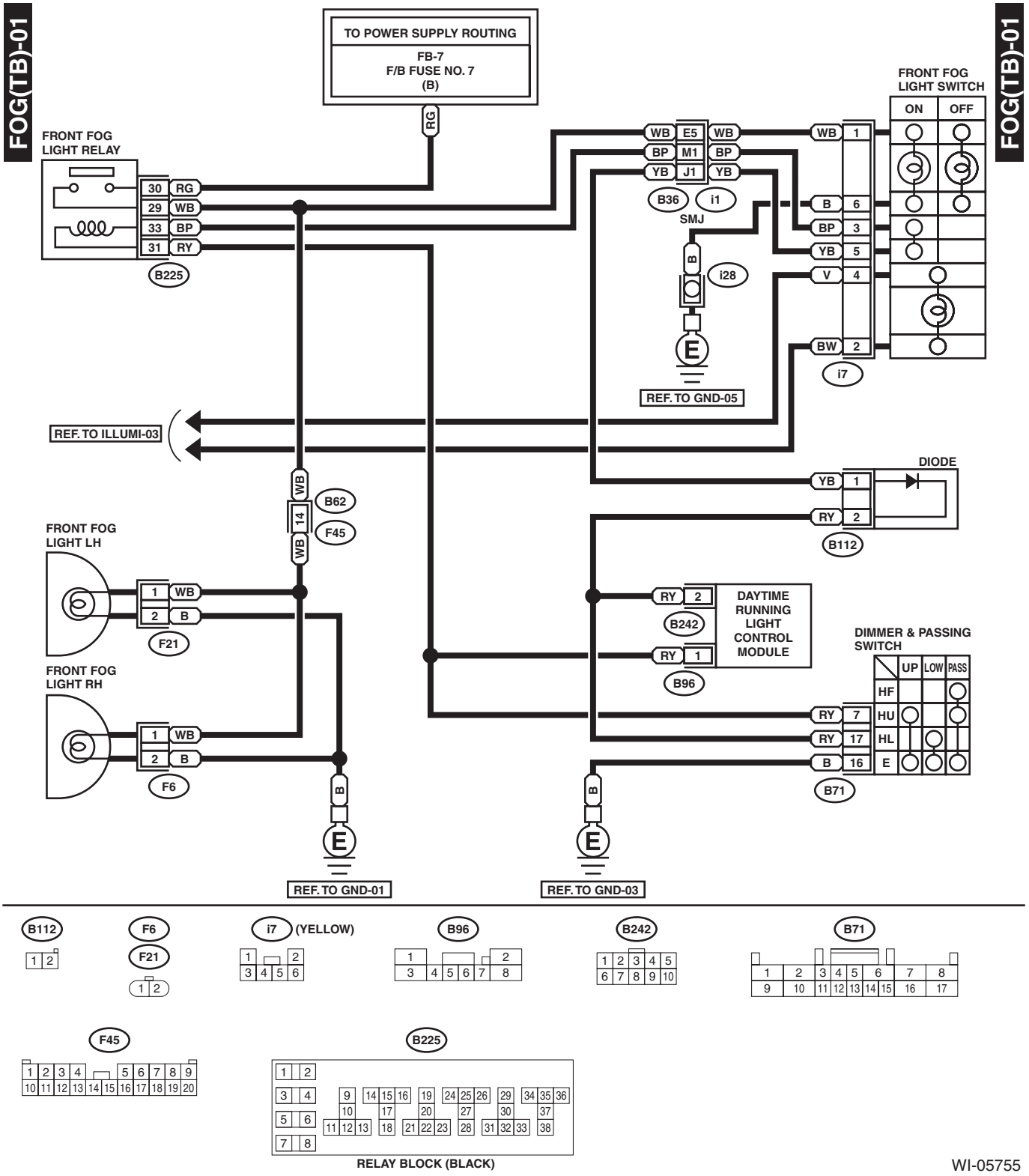

27.Headlight System

A: SCHEMATIC

1. 2-LIGHT MODEL

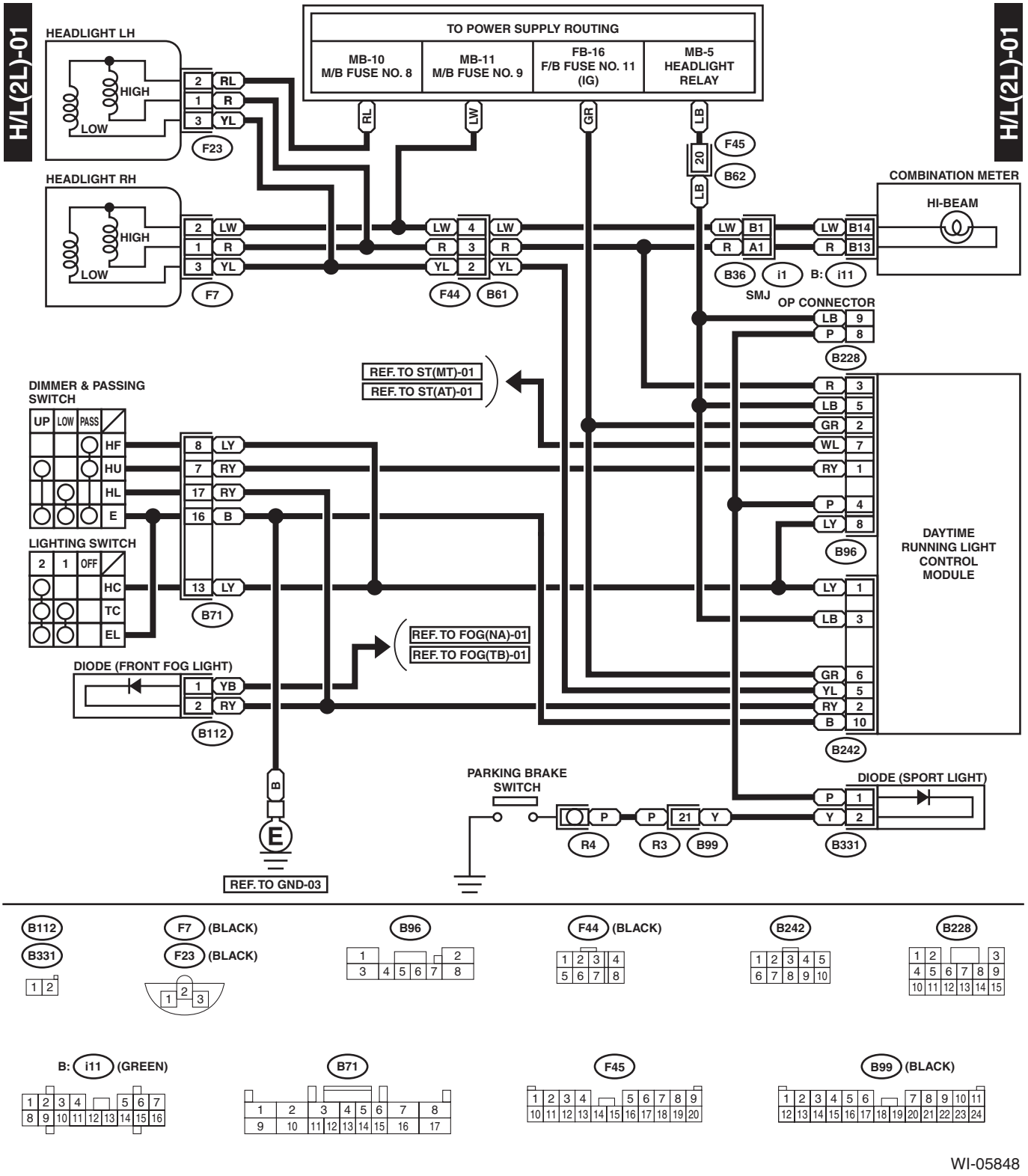

2. 4-LIGHT MODEL

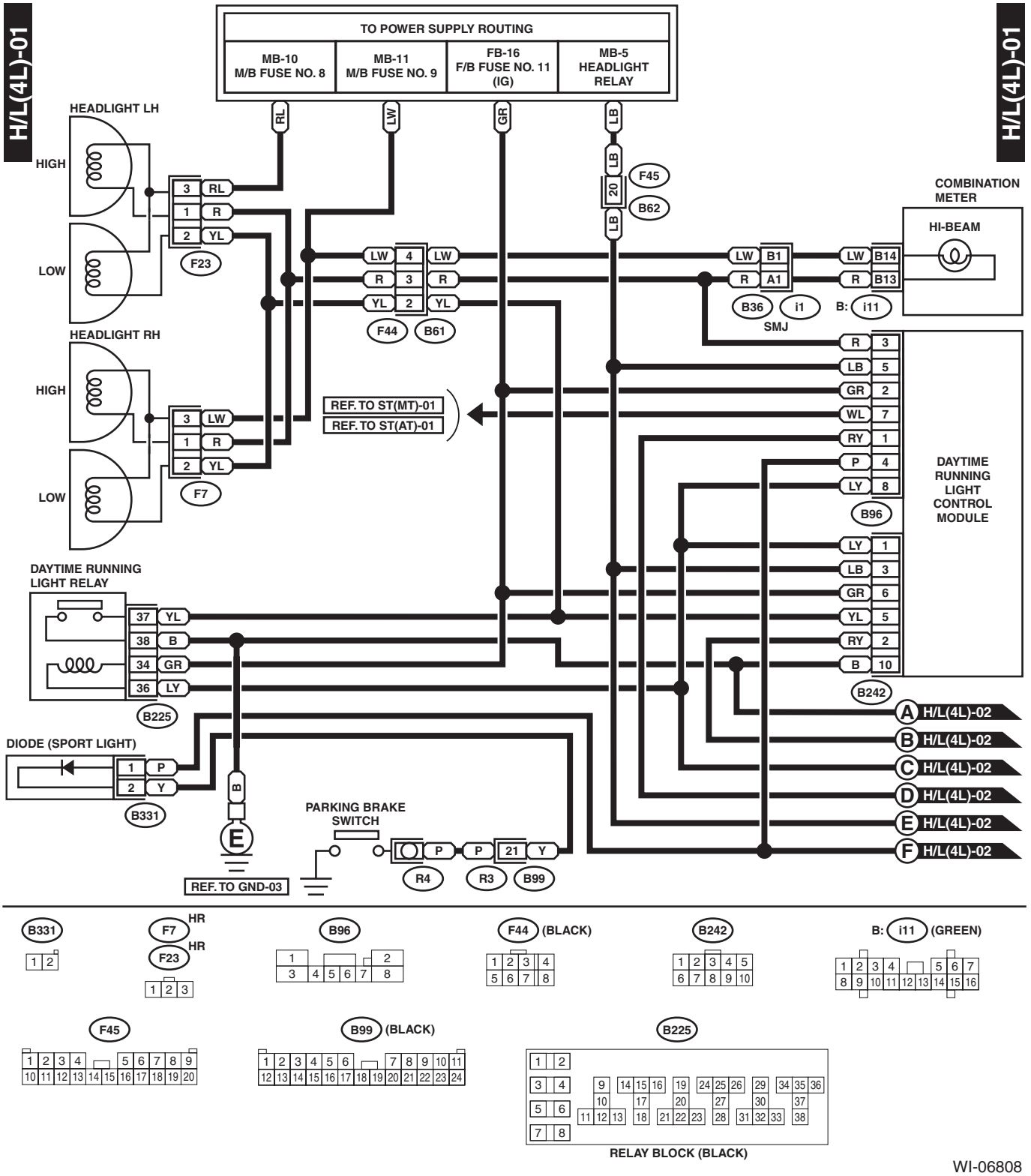

WI-06808

H/L(4L)-02

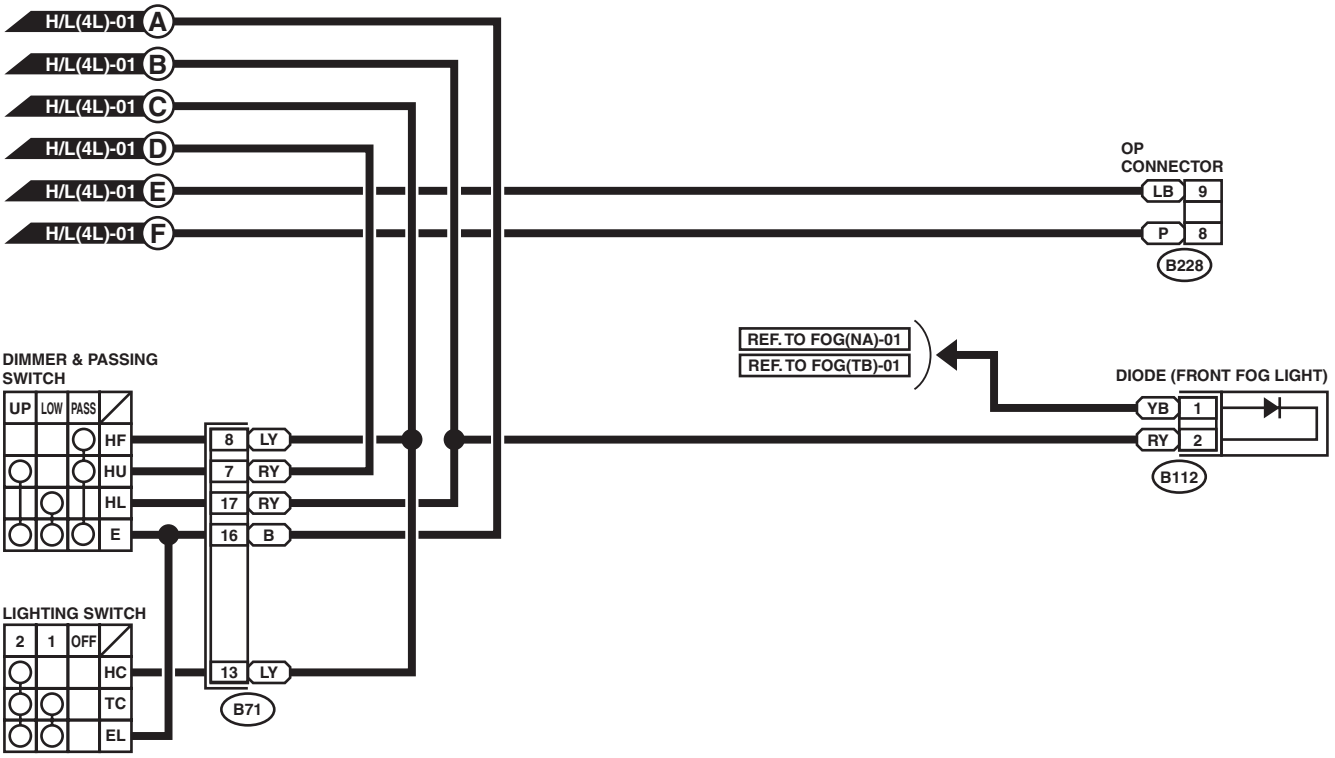

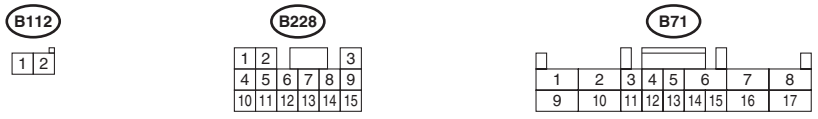

WI-05758

MEMO:

28.In Compartment Light System

A: SCHEMATIC

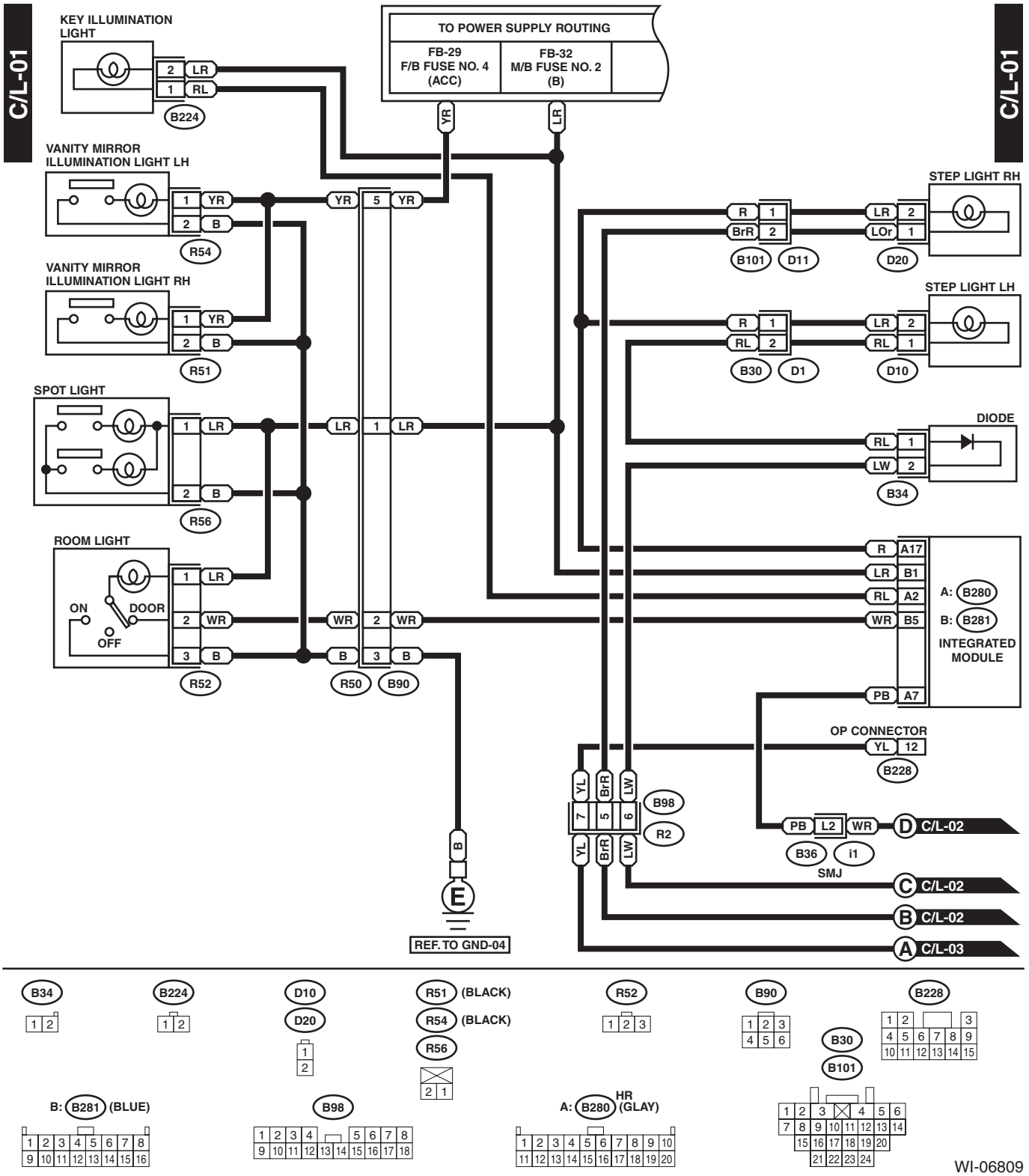

WI-06809

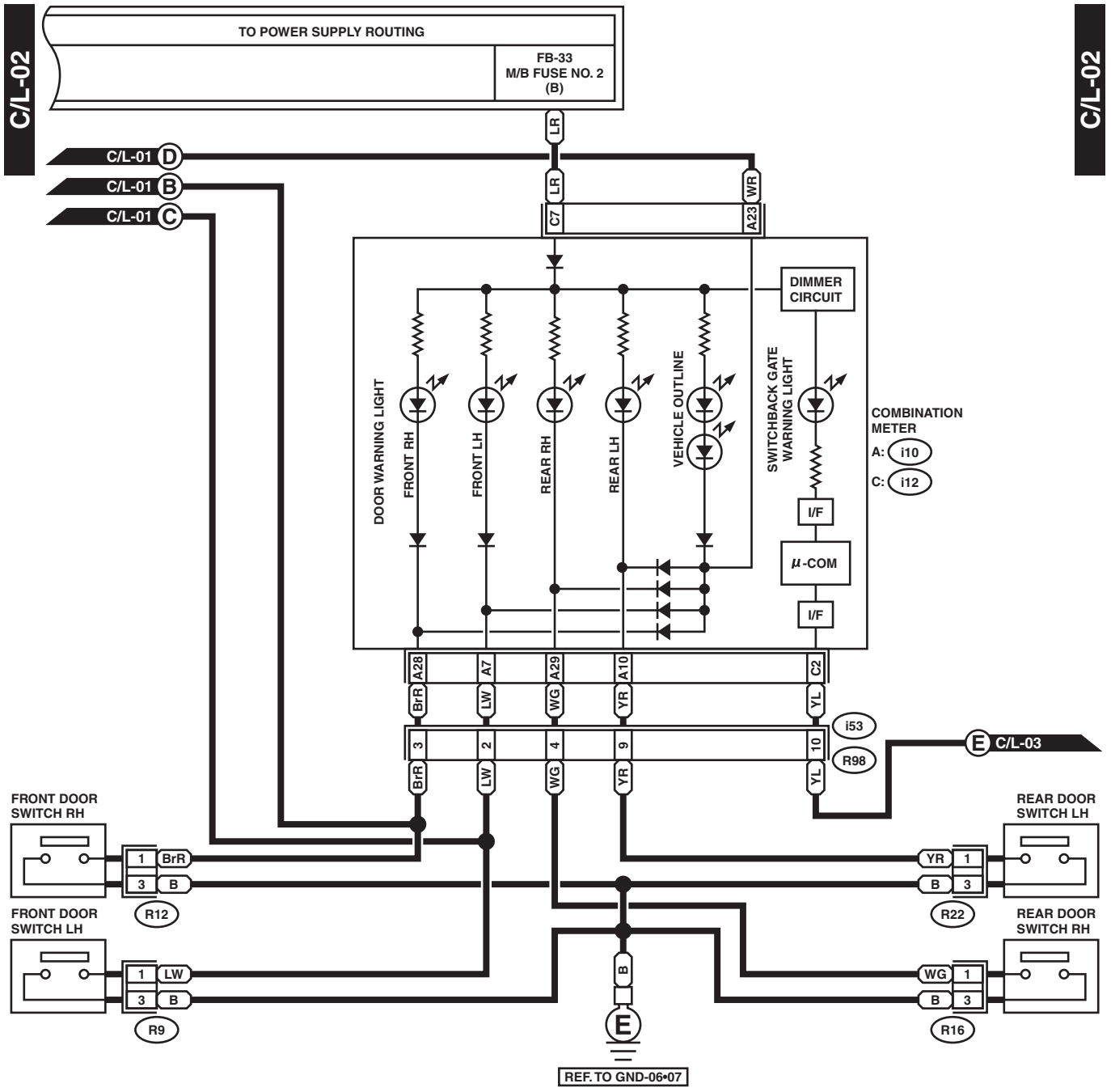
C/L-02
TO POWER SUPPLY ROUTING
FB-33
M/B FUSE NO. 2
(B)
C/L-01 D
C/L-01 B
C/L-01 C
LR
WR
C7
A23
DIMMER CIRCUIT
DOOR WARNING LIGHT
FRONT RH
FRONT LH
REAR RH
REAR LH
VEHICLE OUTLINE
SWITCHBACK GATE WARNING LIGHT
COMBINATION METER
A: i10
C: i12
I/F
μ-COM
I/F
A28
A7
A29
A10
C2
BrR
LW
WG
YR
YL
i53
R98
E C/L-03
FRONT DOOR SWITCH RH
FRONT DOOR SWITCH LH
REAR DOOR SWITCH LH
REAR DOOR SWITCH RH
R12
R9
R22
R16
B
E
REF. TO GND-06•07

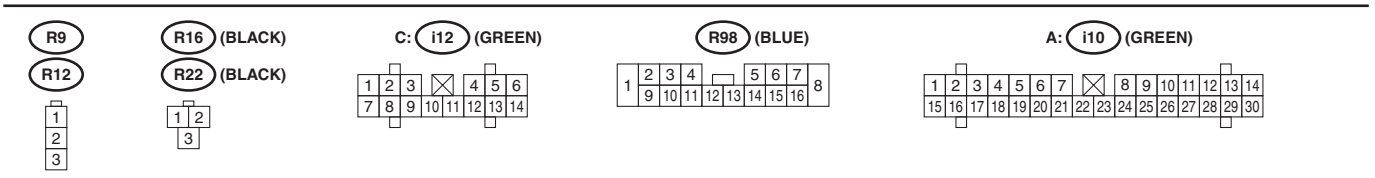
R9
R12
R16 (BLACK)
R22 (BLACK)
C: i12 (GREEN)
R98 (BLUE)
A: i10 (GREEN)

WI-05760

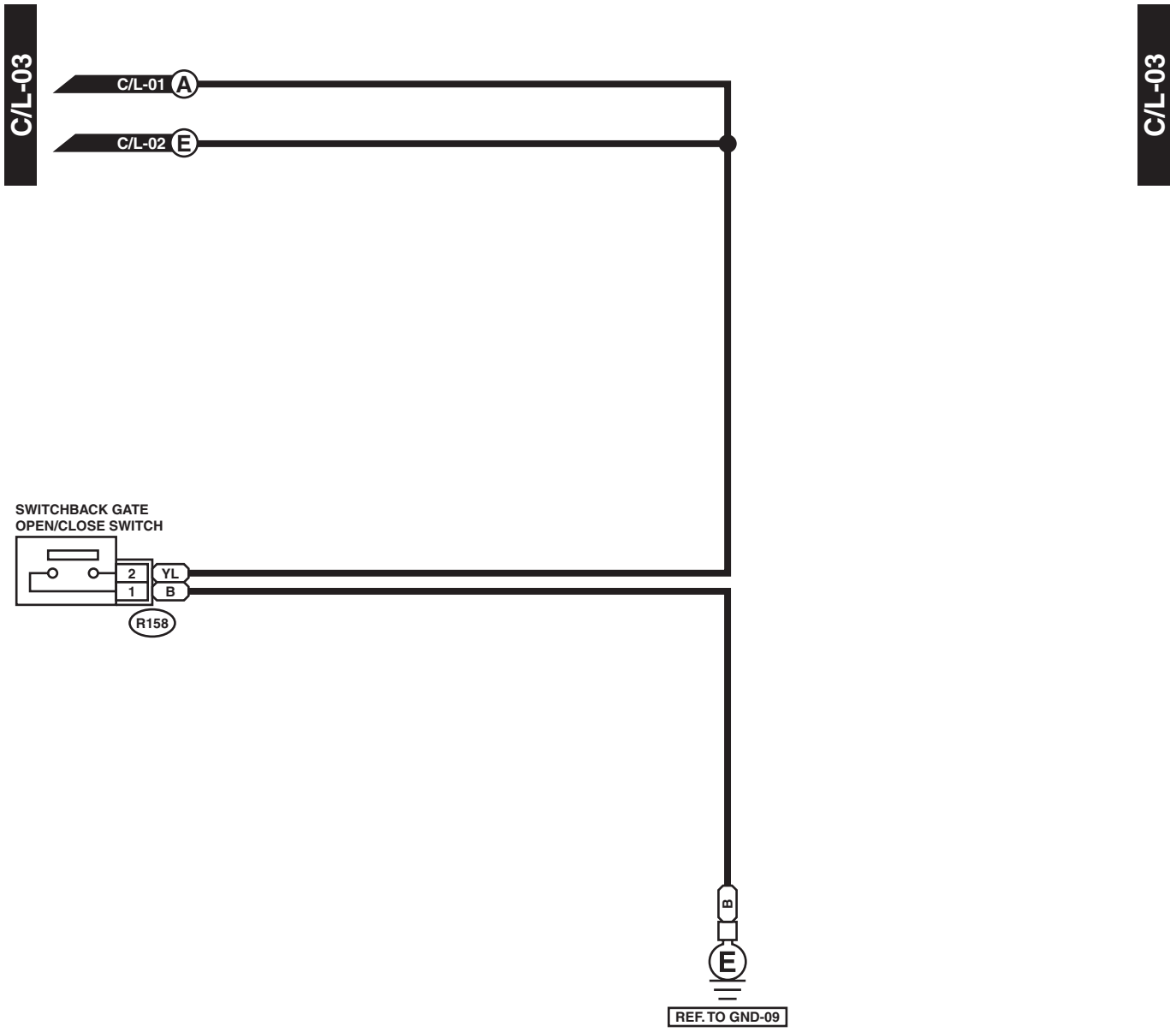
C/L-03
C/L-01 A
C/L-02 E
C/L-03
SWITCHBACK GATE
OPEN/CLOSE SWITCH
2
1
YL
B
R158
B
E
REF. TO GND-09

R158
2 1

WI-05761

29.Stop Light System

A: SCHEMATIC

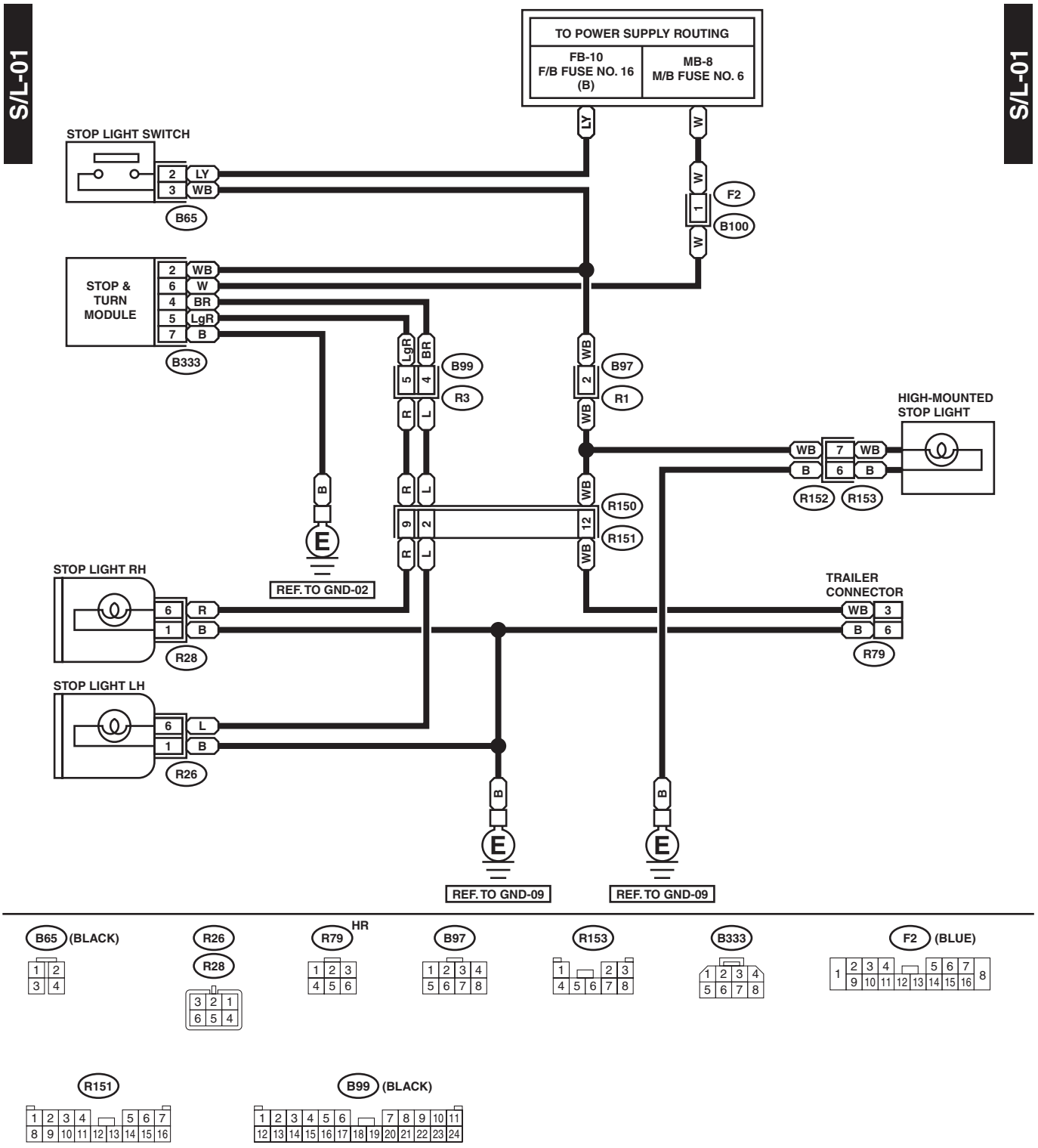

WI-06810

30.Turn Signal Light and Hazard Light System

A: SCHEMATIC

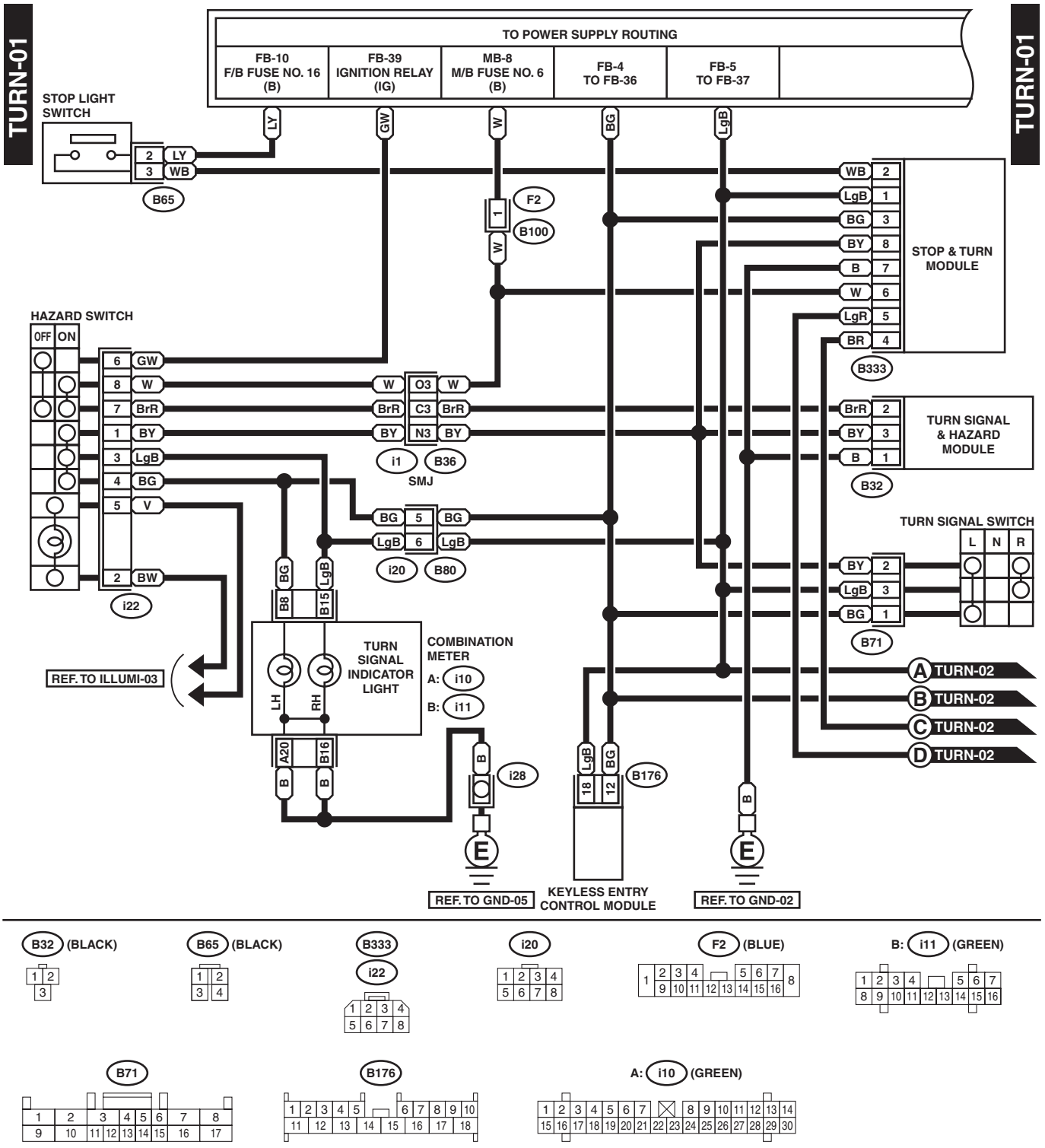

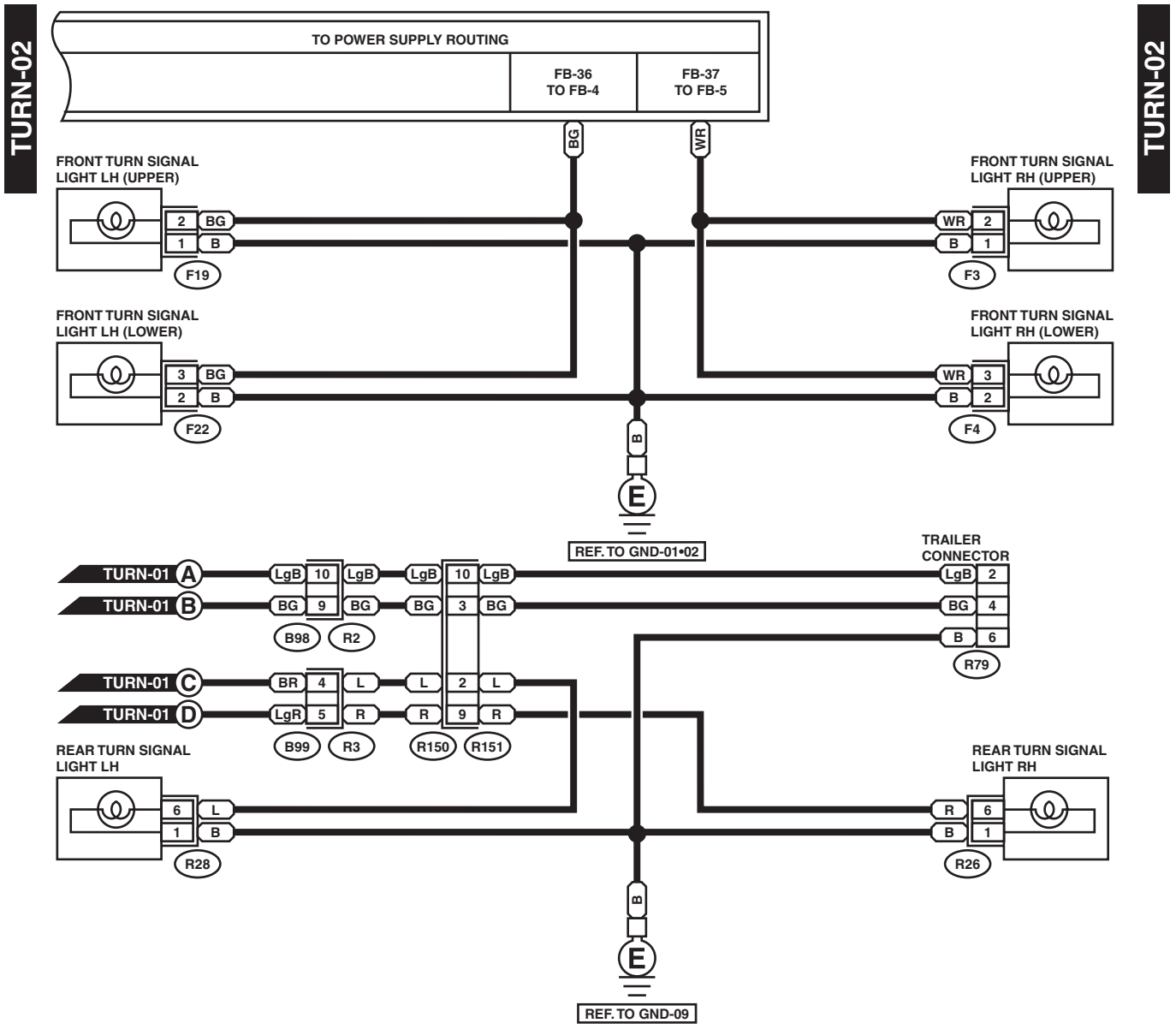
TURN-02
TO POWER SUPPLY ROUTING
FB-36 TO FB-4
FB-37 TO FB-5
BG
WR
FRONT TURN SIGNAL LIGHT LH (UPPER)
FRONT TURN SIGNAL LIGHT RH (UPPER)
2 BG
1 B
F19
WR 2
B 1
F3
FRONT TURN SIGNAL LIGHT LH (LOWER)
FRONT TURN SIGNAL LIGHT RH (LOWER)
3 BG
2 B
F22
WR 3
B 2
F4
B
E
REF. TO GND-01•02
TRAILER CONNECTOR
TURN-01 A
TURN-01 B
TURN-01 C
TURN-01 D
LgB 10 LgB
LgB 10 LgB
LgB 2
BG 9 BG
BG 3 BG
BG 4
B 6
B98
R2
R79
BR 4 L
L 2 L
LgR 5 R
R 9 R
B99
R3
R150
R151
REAR TURN SIGNAL LIGHT LH
REAR TURN SIGNAL LIGHT RH
6 L
1 B
R 6
B 1
R28
R26
B
E
REF. TO GND-09
F3 HR (GRAY)
F19 HR (GRAY)
F4 HR (GRAY)
F22 HR (GRAY)
R26
R28
R79 HR
R151
B98
B99 (BLACK)

WI-06811

31.Multiple Power Socket System (Option)

A: SCHEMATIC

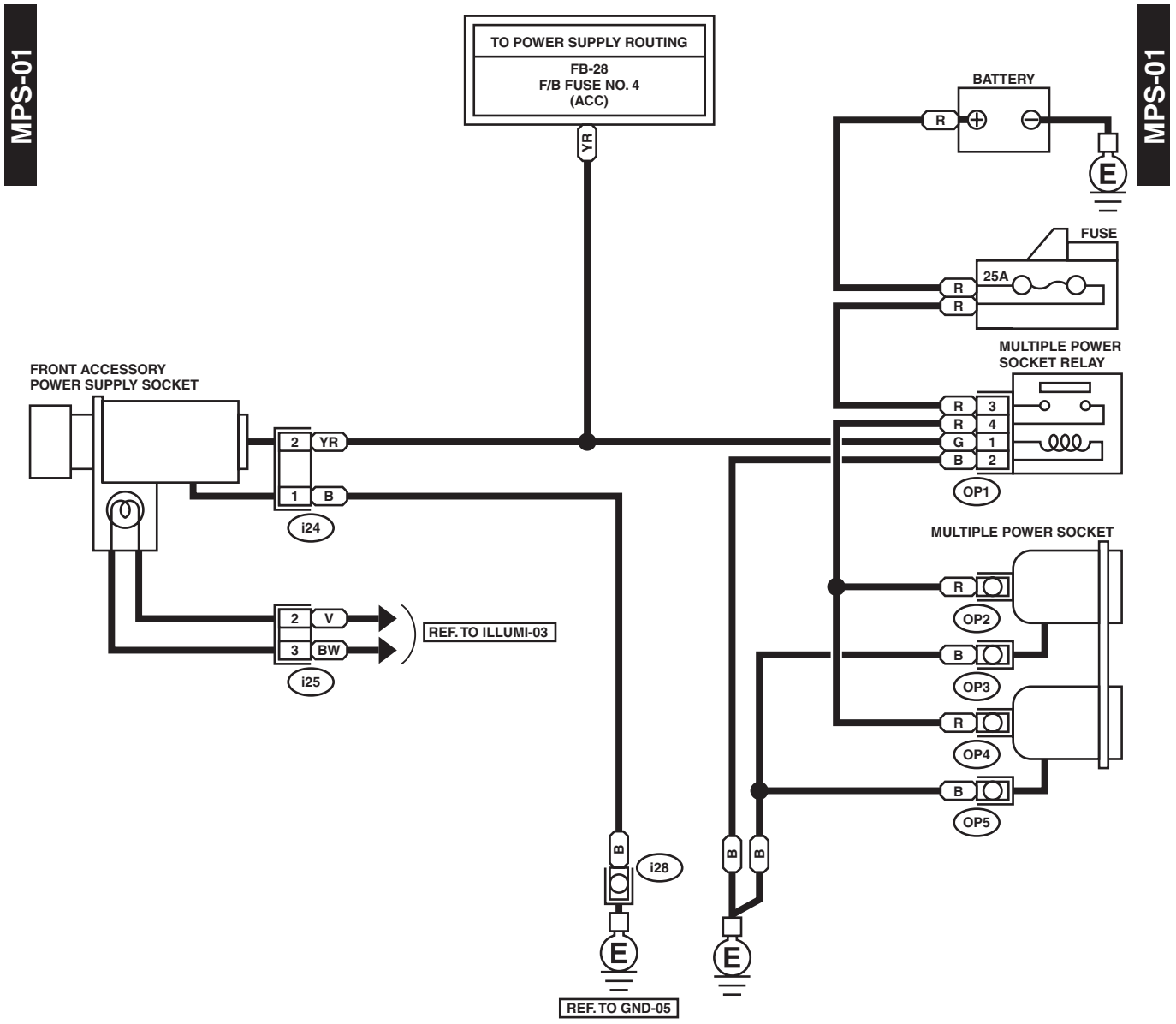

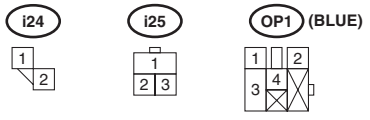

WI-05765

MEMO:

32.Oil Pressure Warning Light System

A: SCHEMATIC

1. NON-TURBO ENGINE MODEL

OIL/P(NA)-01

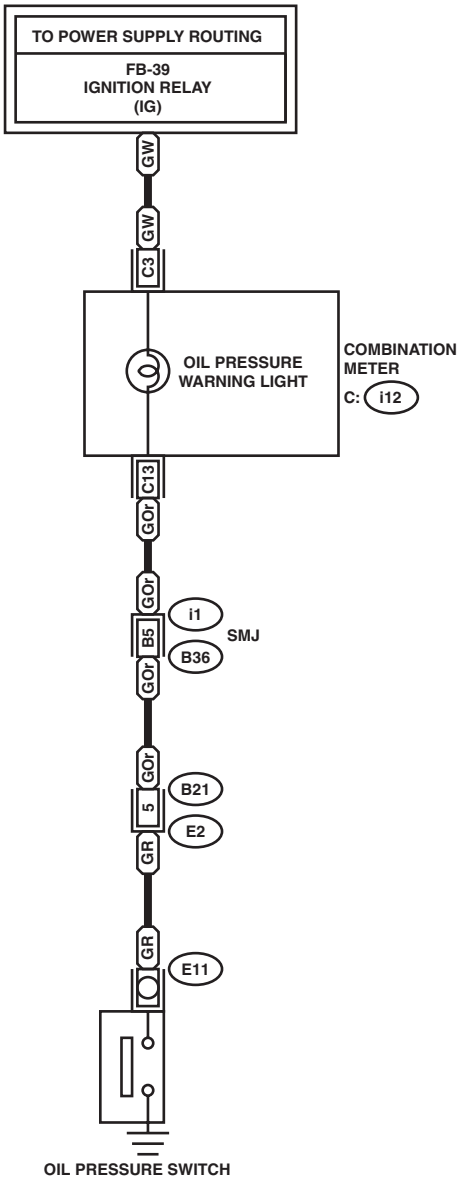

OIL/P(NA)-01

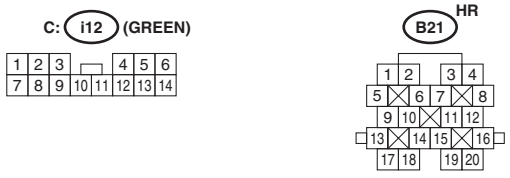

WI-06812

2. TURBO ENGINE MODEL

OIL/P(TB)-01

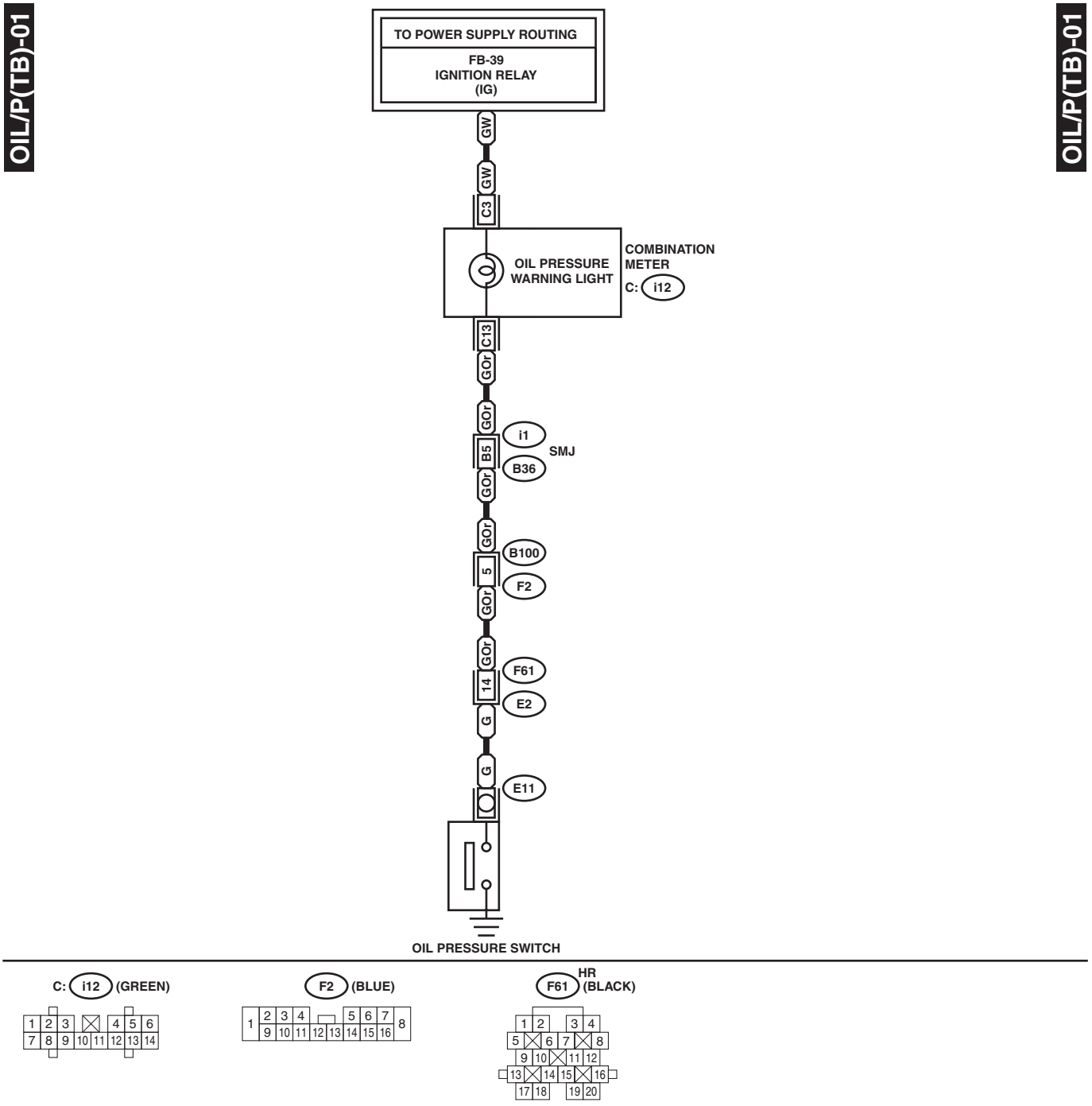

OIL/P(TB)-01

WI-06813

33.Outside Temperature Display System

A: SCHEMATIC

O/TEMP-01

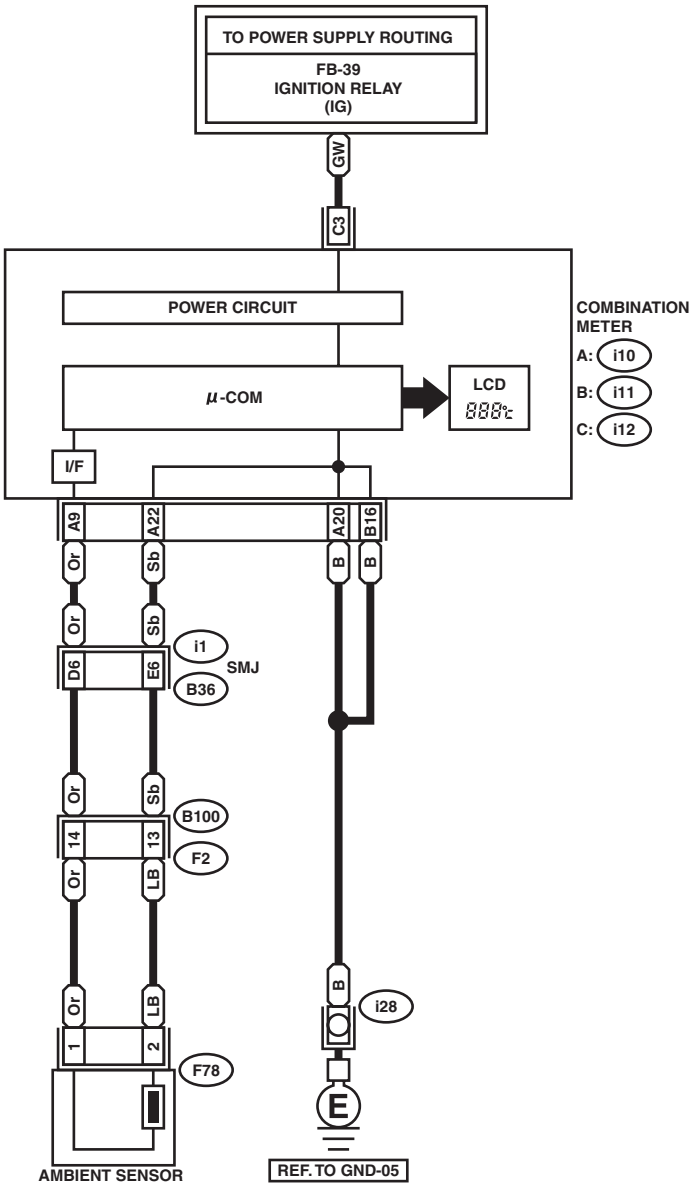

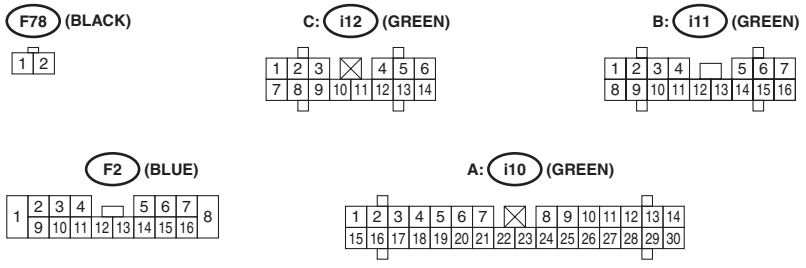

WI-00674

34.Parking Brake and Brake Fluid Level Warning System

A: SCHEMATIC

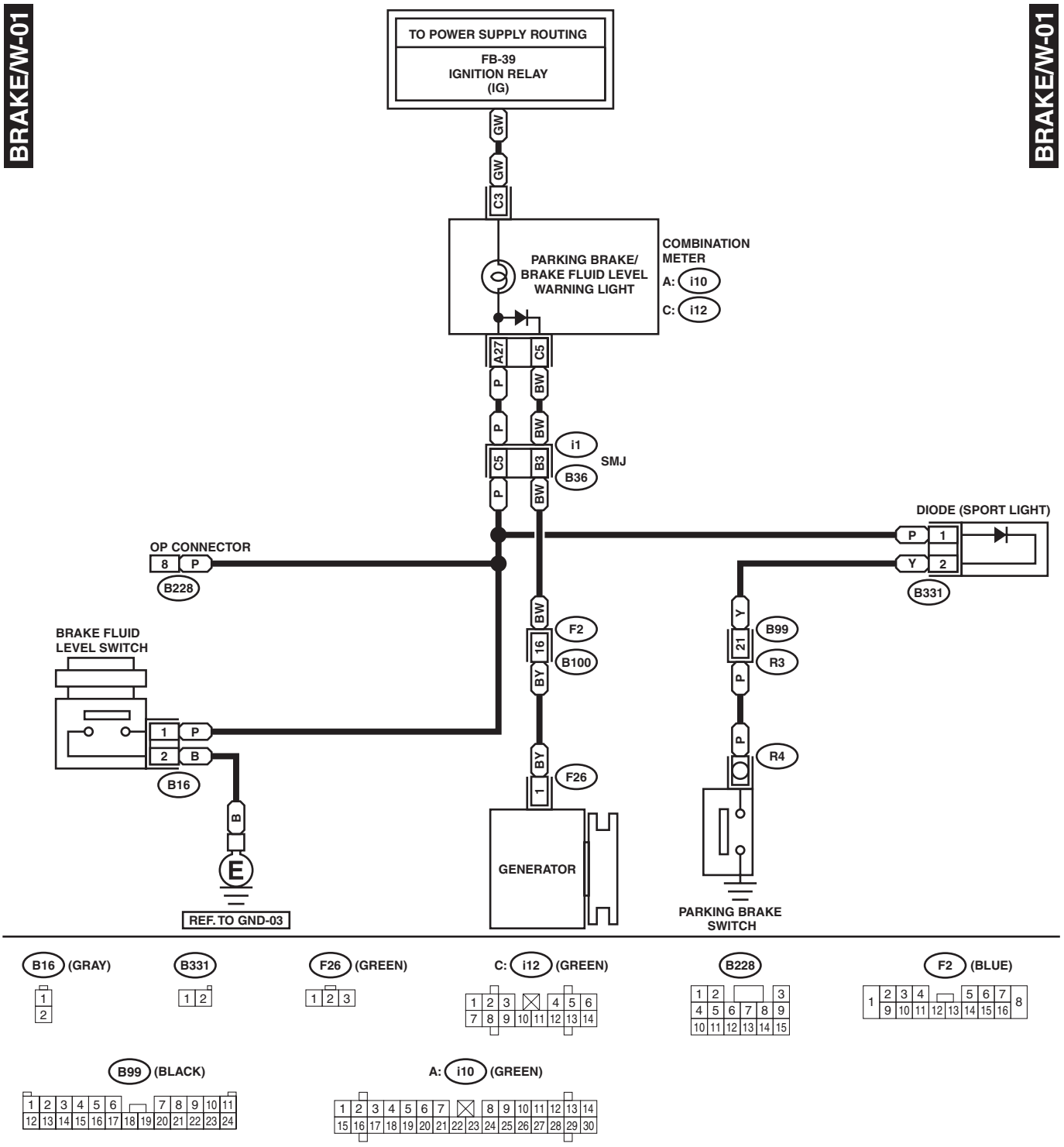

WI-05854

35.Power Seat System

A: SCHEMATIC

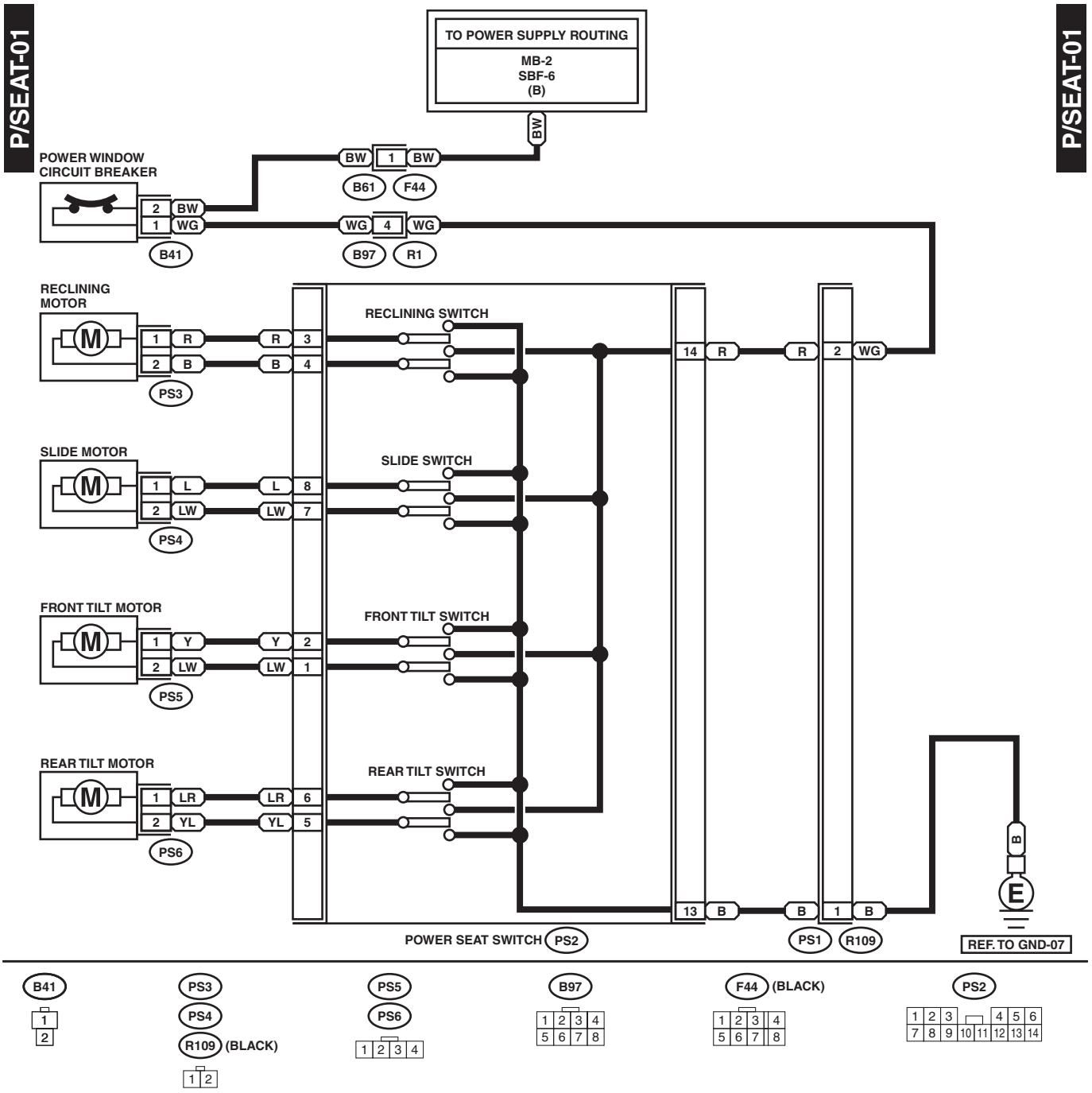

WI-05855

MEMO:

36.Power Window System

A: SCHEMATIC

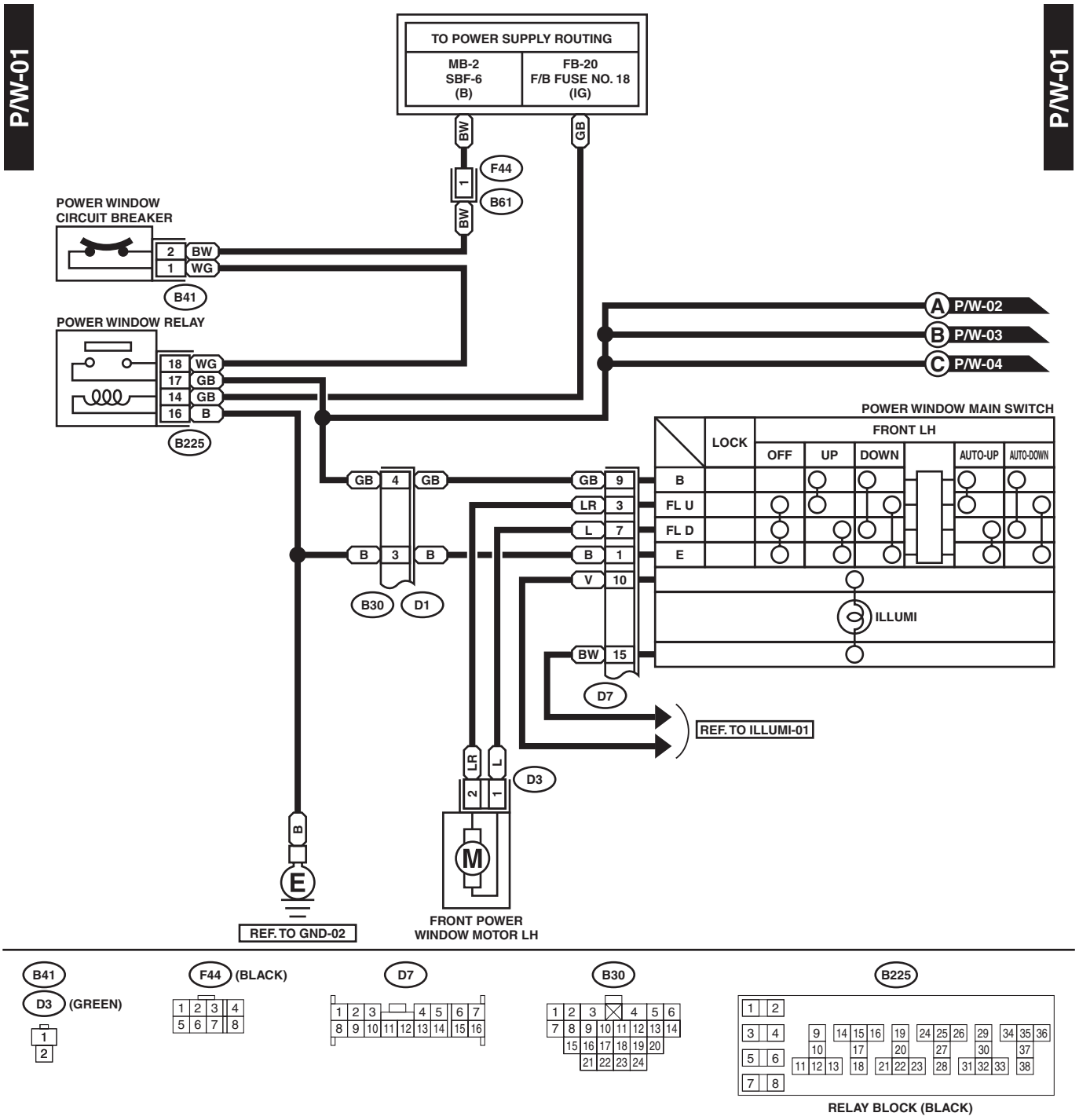

WI-05768

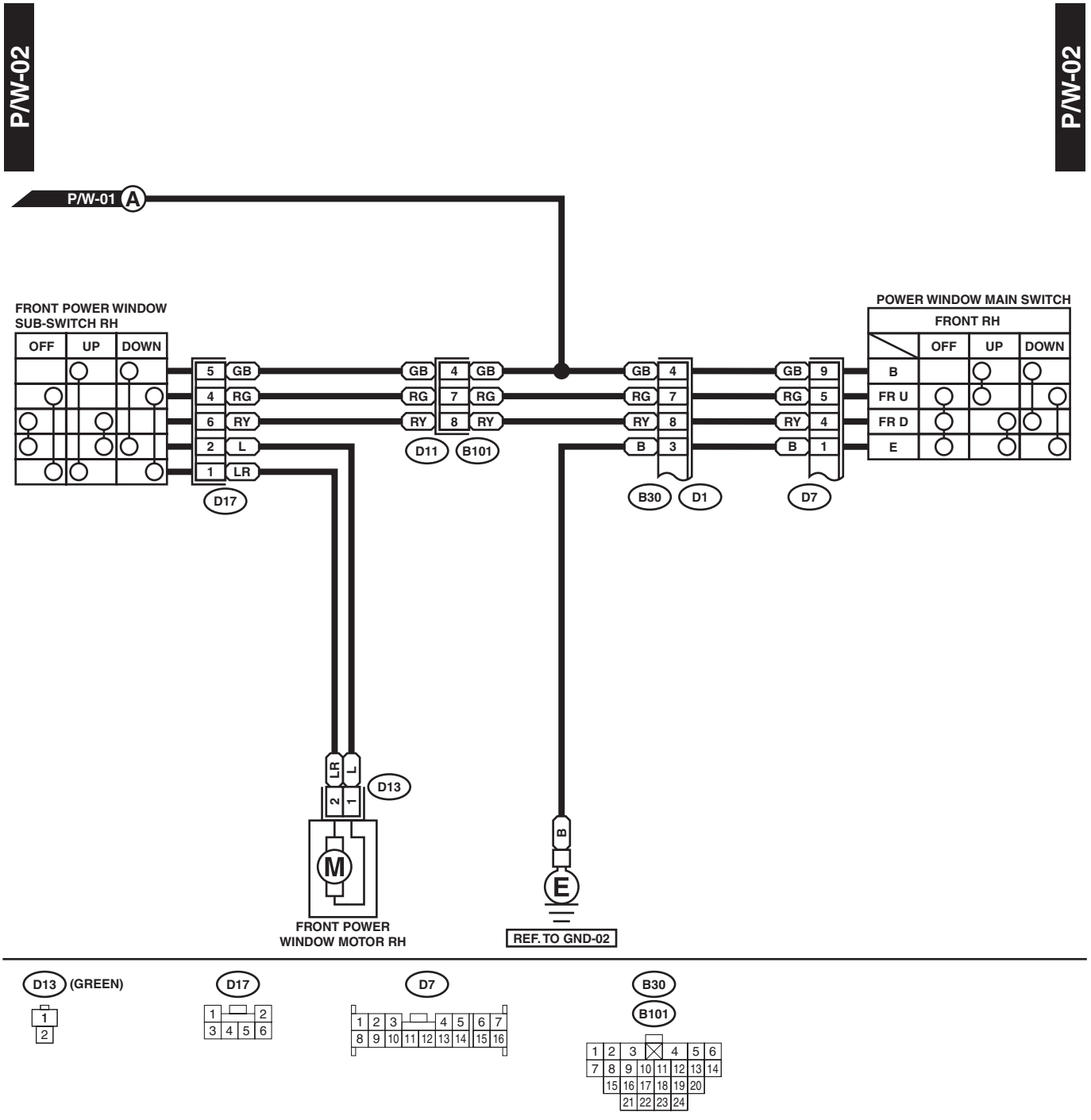
P/W-02
P/W-02
P/W-01 A
FRONT POWER WINDOW SUB-SWITCH RH
OFF
UP
DOWN
5 GB
4 RG
6 RY
2 L
1 LR
D17
GB 4 GB
RG 7 RG
RY 8 RY
D11
B101
GB 4
RG 7
RY 8
B 3
B30
D1
GB 9
RG 5
RY 4
B 1
D7
POWER WINDOW MAIN SWITCH
FRONT RH
OFF
UP
DOWN
B
FR U
FR D
E
LR
L
2
1
D13
M
FRONT POWER WINDOW MOTOR RH
B
E
REF. TO GND-02
D13 (GREEN)
D17
D7
B30
B101

WI-00678

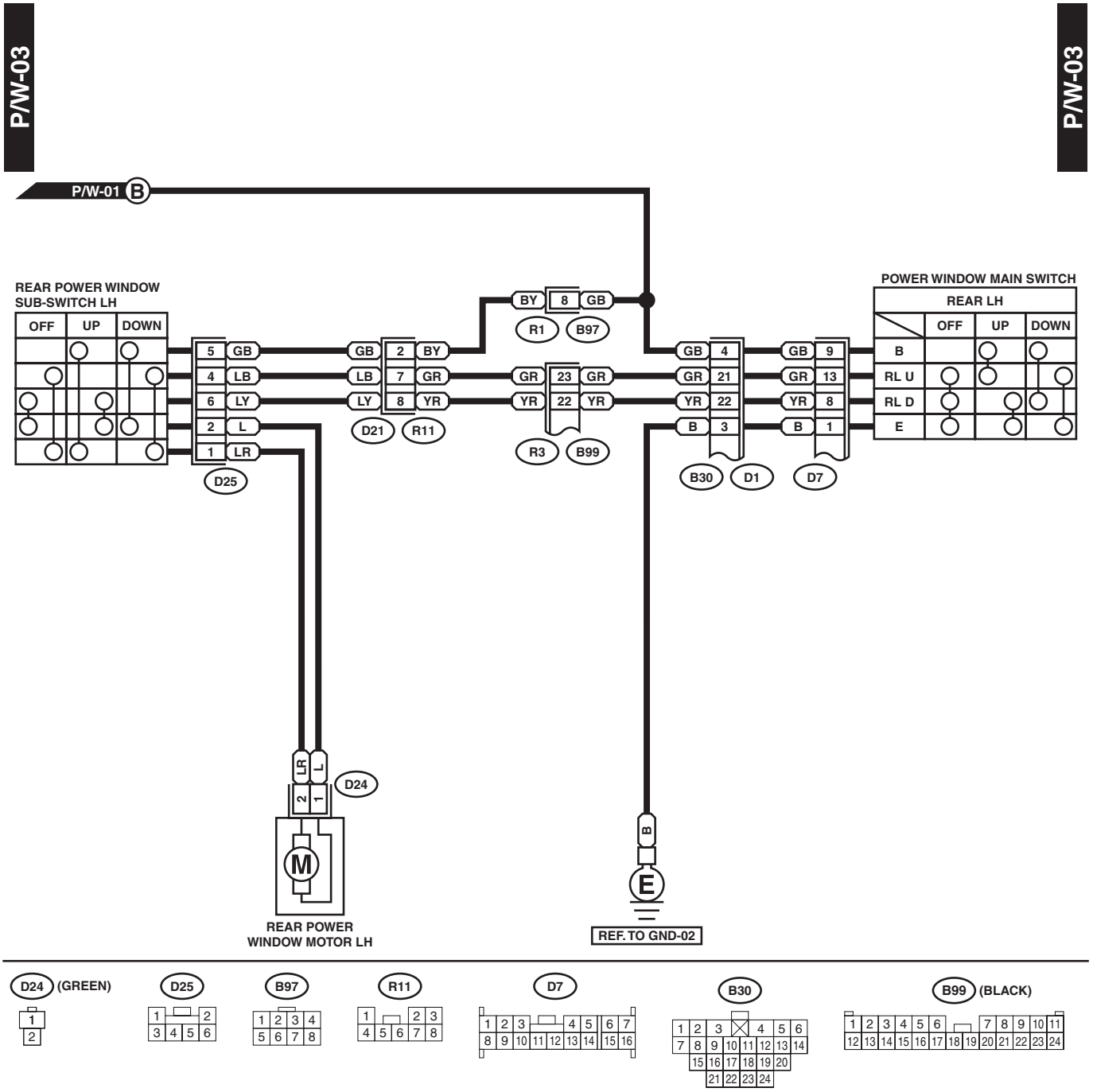
P/W-03
P/W-03
P/W-01 B
REAR POWER WINDOW SUB-SWITCH LH
OFF
UP
DOWN
5 GB
4 LB
6 LY
2 L
1 LR
D25
GB 2 BY
LB 7 GR
LY 8 YR
D21
R11
BY 8 GB
R1
B97
GR 23 GR
YR 22 YR
R3
B99
GB 4
GR 21
YR 22
B 3
B30
D1
GB 9
GR 13
YR 8
B 1
D7
POWER WINDOW MAIN SWITCH
REAR LH
OFF
UP
DOWN
B
RL U
RL D
E
LR
L
2
1
D24
M
REAR POWER WINDOW MOTOR LH
B
E
REF. TO GND-02
D24 (GREEN)
D25
B97
R11
D7
B30
B99 (BLACK)

WI-05856

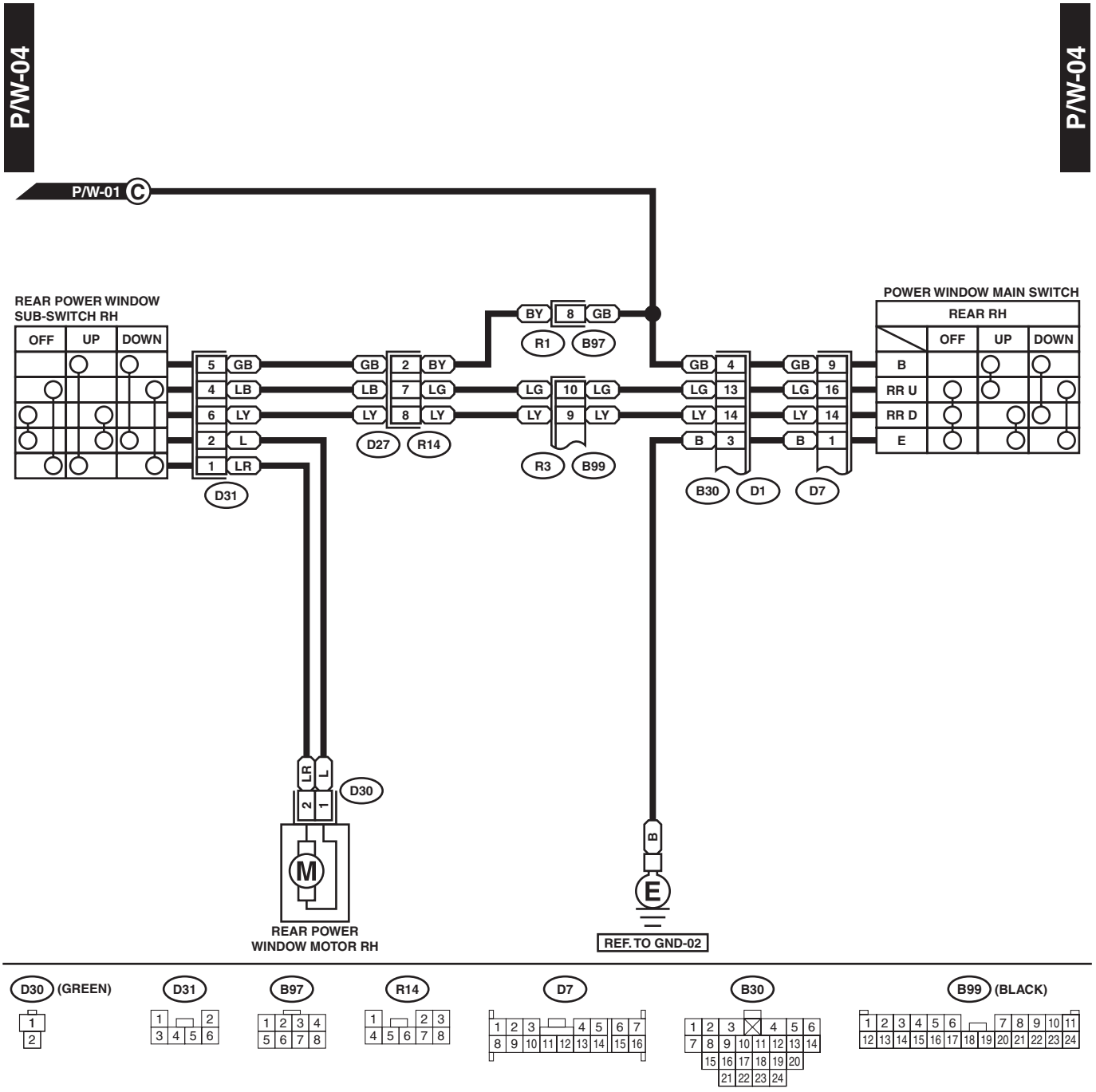
P/W-04
P/W-04
P/W-01 C
REAR POWER WINDOW SUB-SWITCH RH
OFF
UP
DOWN
5 GB
4 LB
6 LY
2 L
1 LR
D31
GB 2 BY
LB 7 LG
LY 8 LY
D27
R14
BY 8 GB
R1
B97
LG 10 LG
LY 9 LY
R3
B99
GB 4
LG 13
LY 14
B 3
B30
D1
GB 9
LG 16
LY 14
B 1
D7
POWER WINDOW MAIN SWITCH
REAR RH
OFF
UP
DOWN
B
RR U
RR D
E
LR
L
2
1
D30
M
REAR POWER WINDOW MOTOR RH
B
E
REF. TO GND-02
D30 (GREEN)
D31
B97
R14
D7
B30
B99 (BLACK)

WI-05857

37.Radiator Fan System

A: SCHEMATIC

1. NON-TURBO ENGINE MODEL

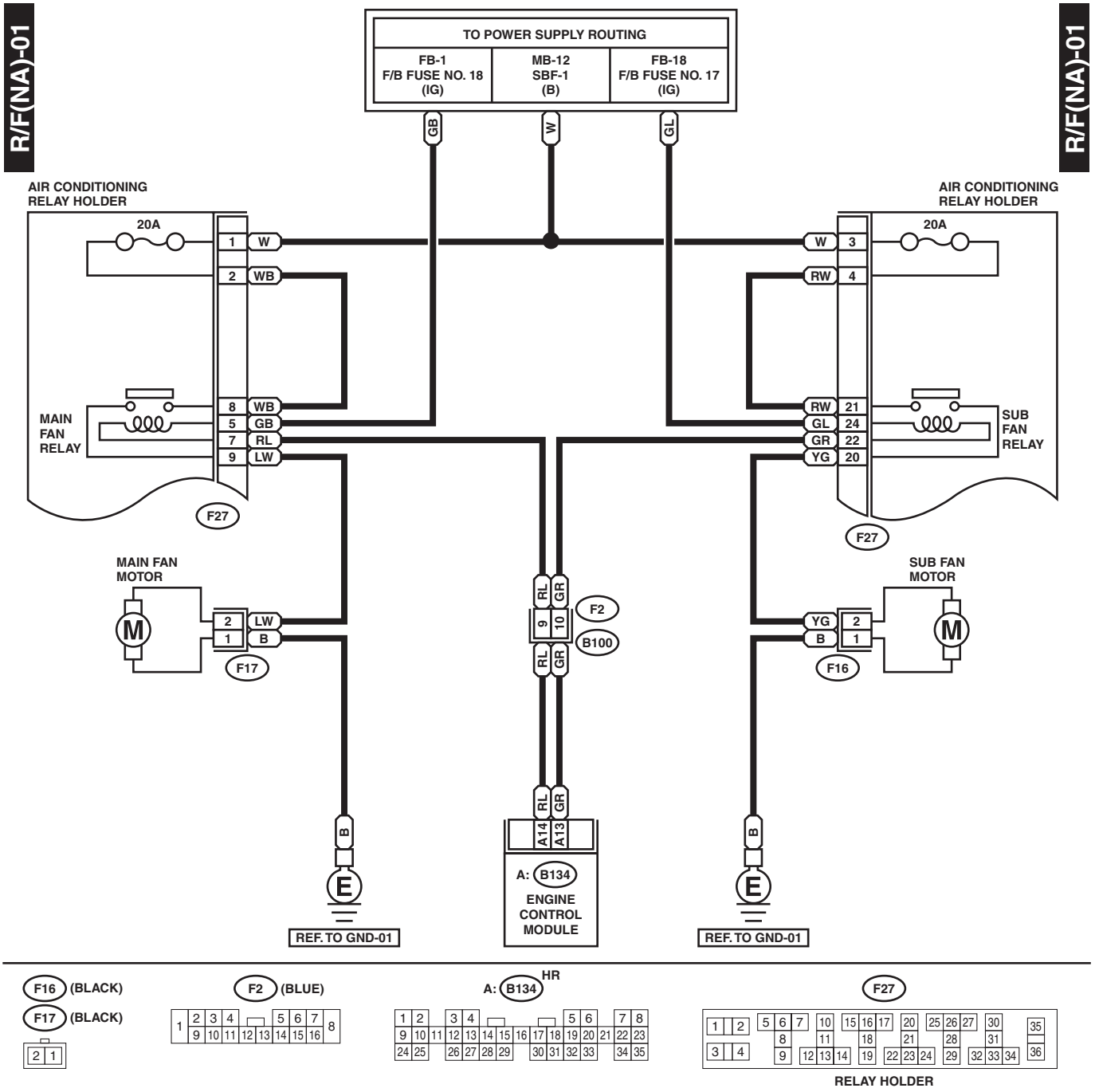

WI-06815

2. TURBO ENGINE MODEL

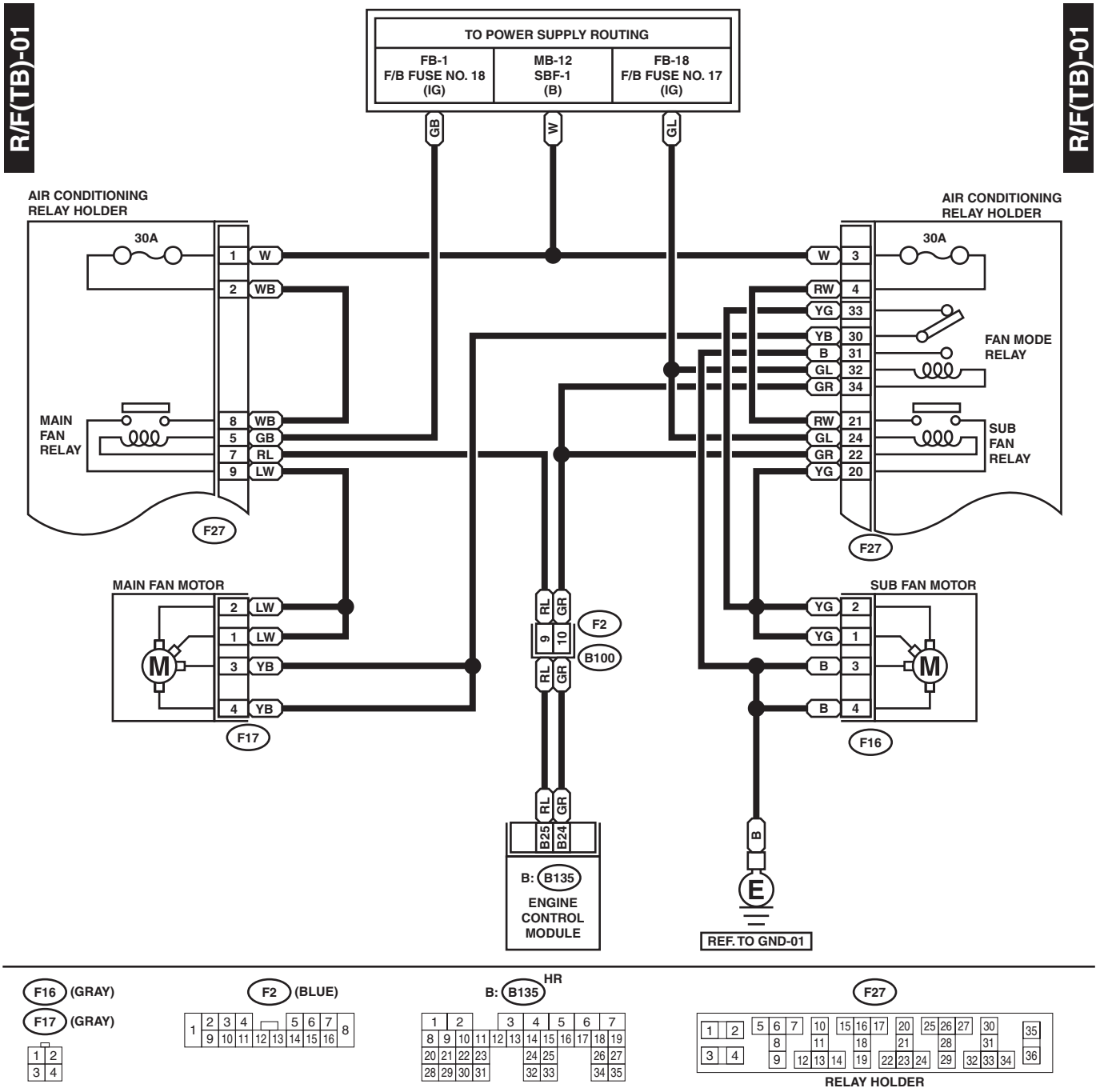

WI-06816

38.Rear Accessory Power Supply System

A: SCHEMATIC

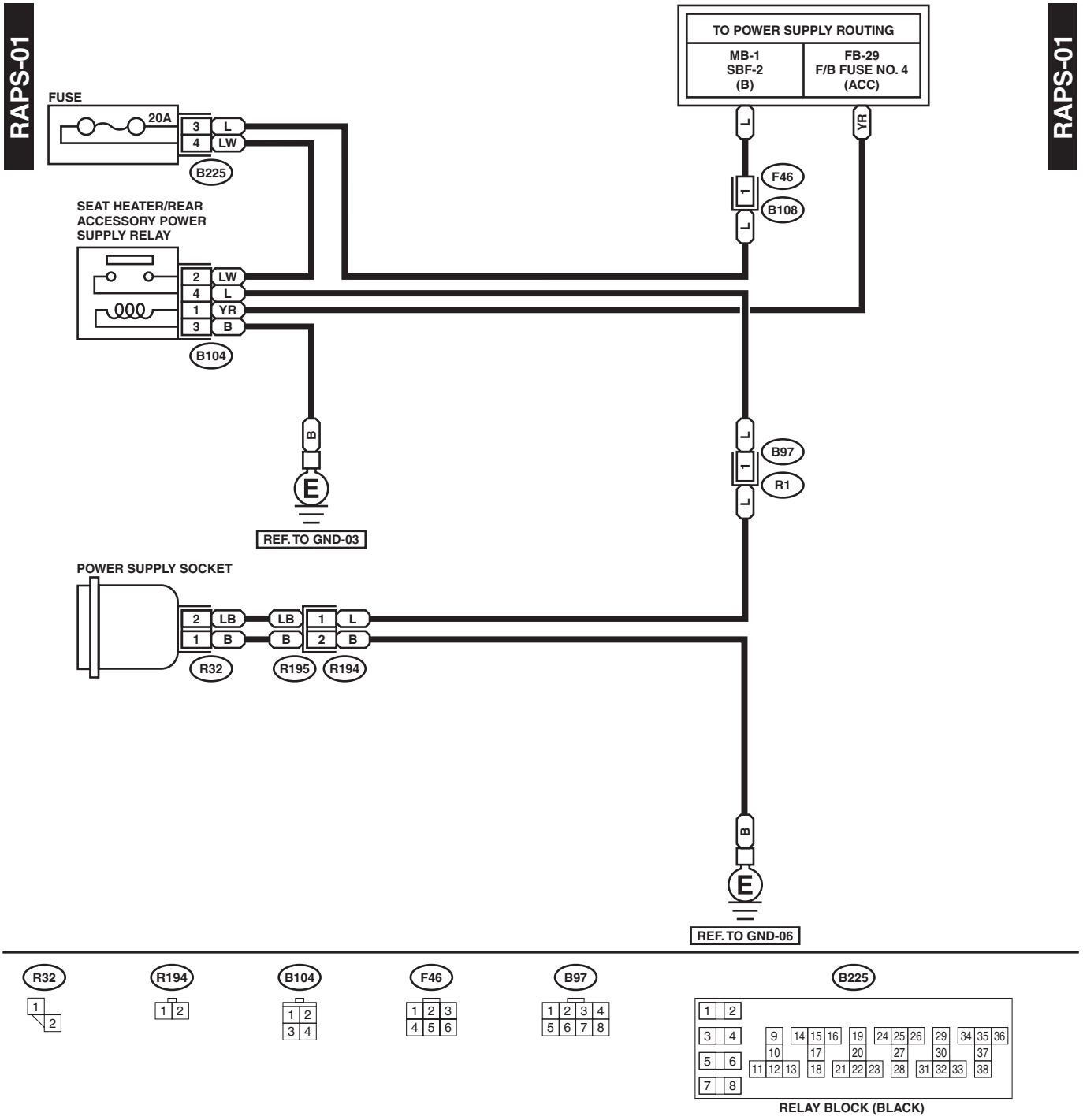

WI-05865

39.Rear Window Defogger System

A: SCHEMATIC

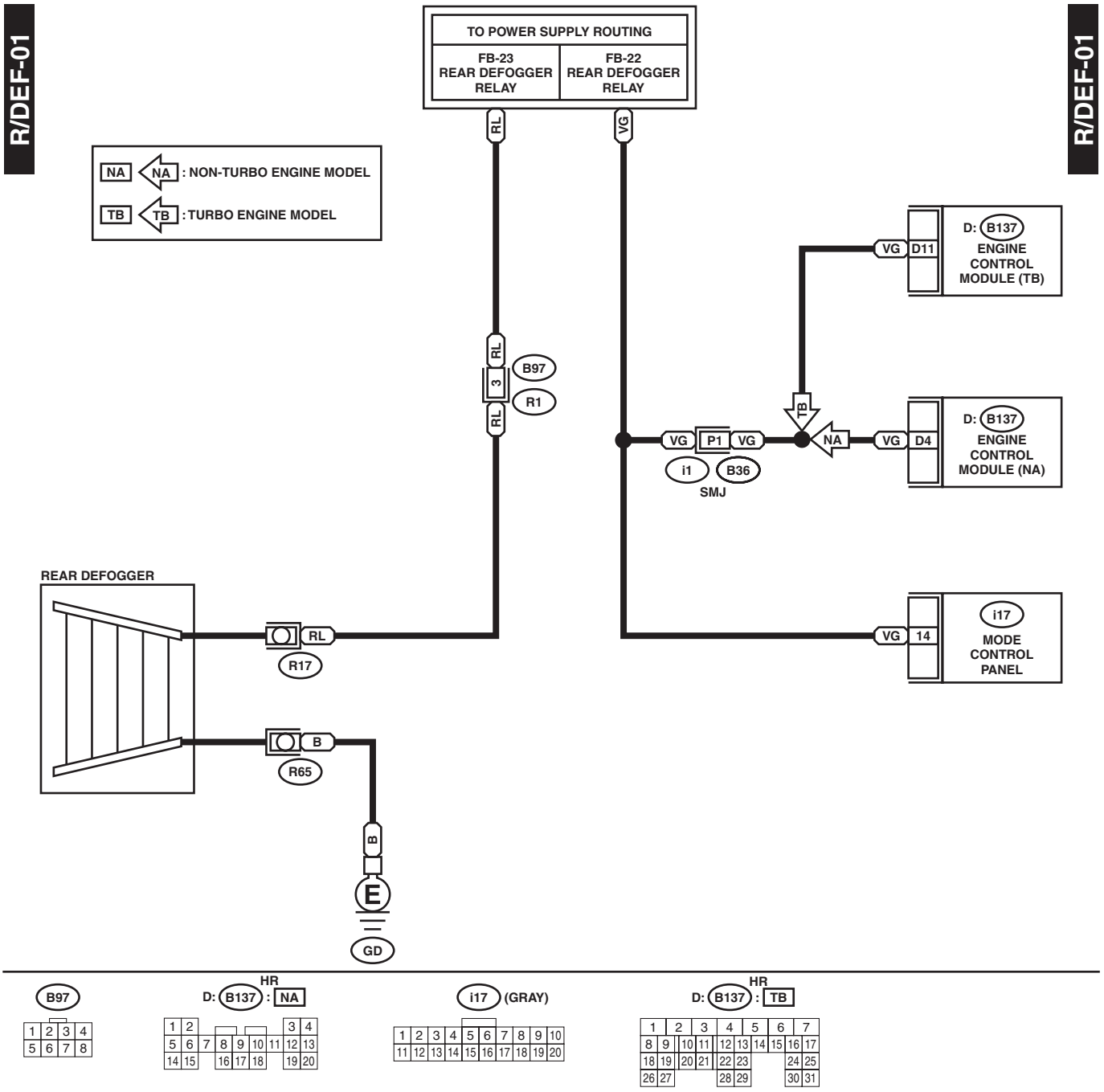

WI-06817

40.Remote Controlled Rearview Mirror System

A: SCHEMATIC

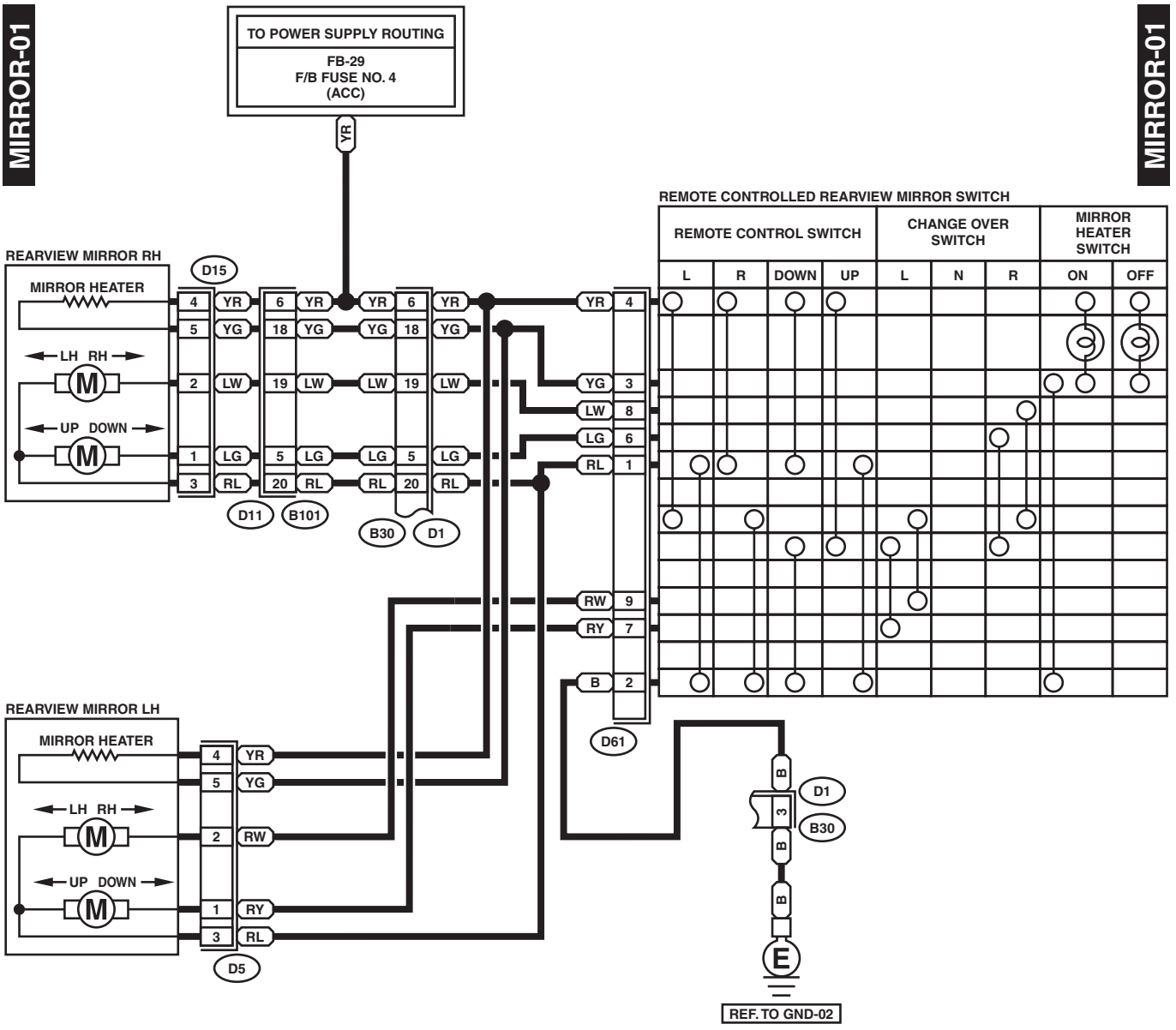

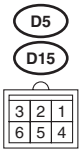

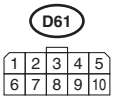

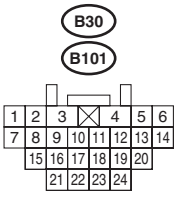

WI-05859

41.Seat Belt Warning System

A: SCHEMATIC

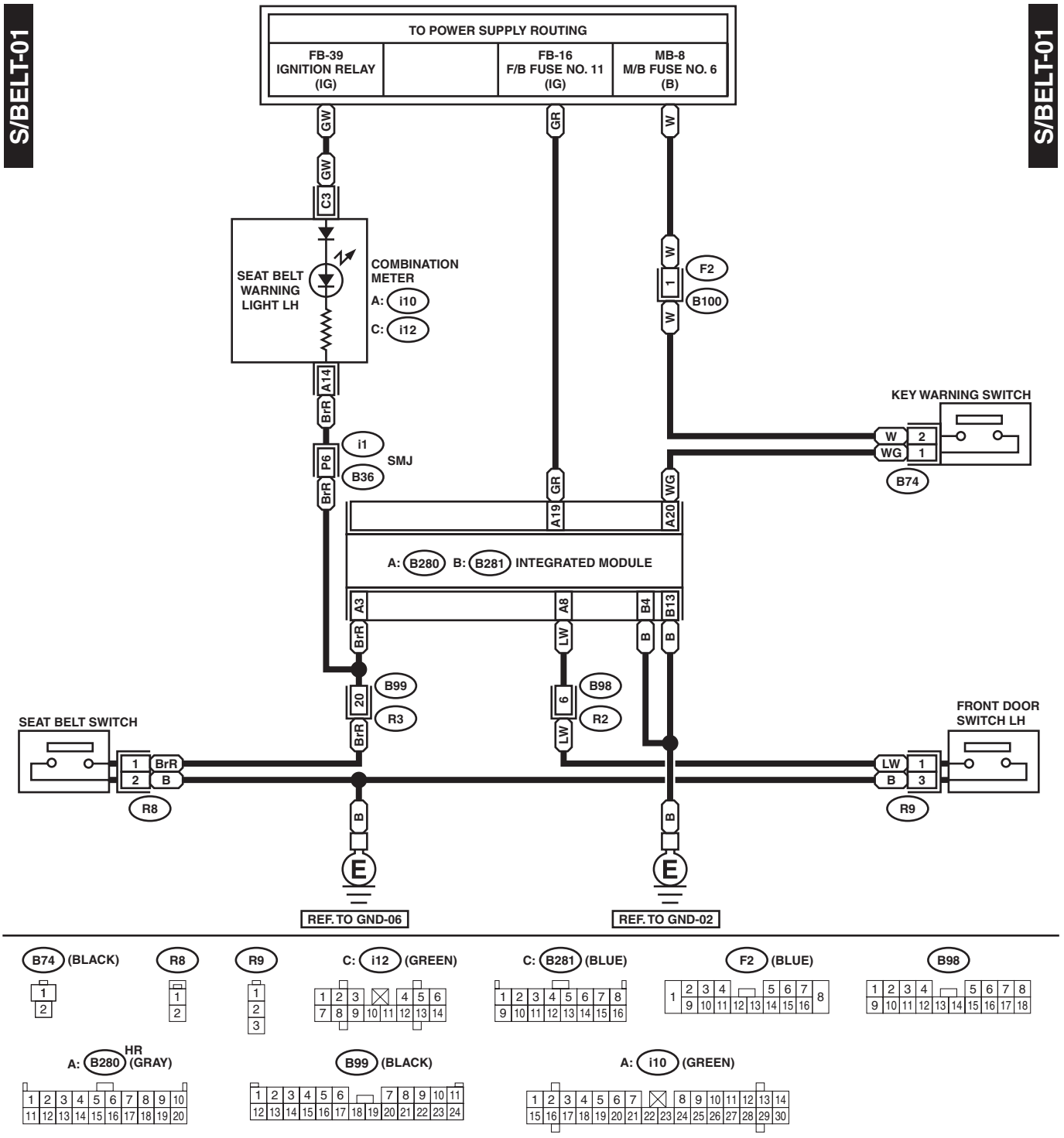

WI-06818

42.Seat Heater System

A: SCHEMATIC

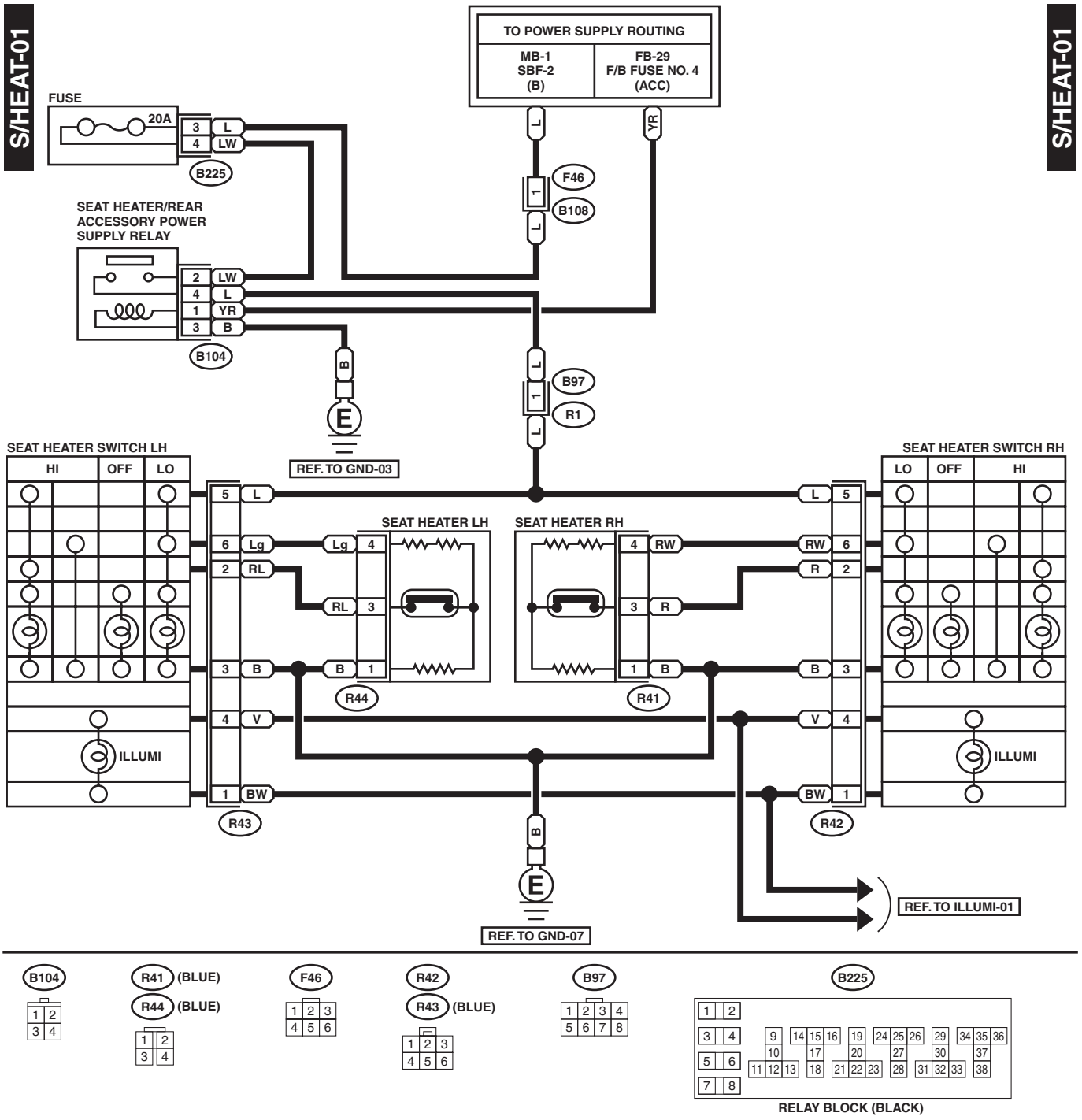

WI-05773

MEMO:

43.Security System

A: SCHEMATIC

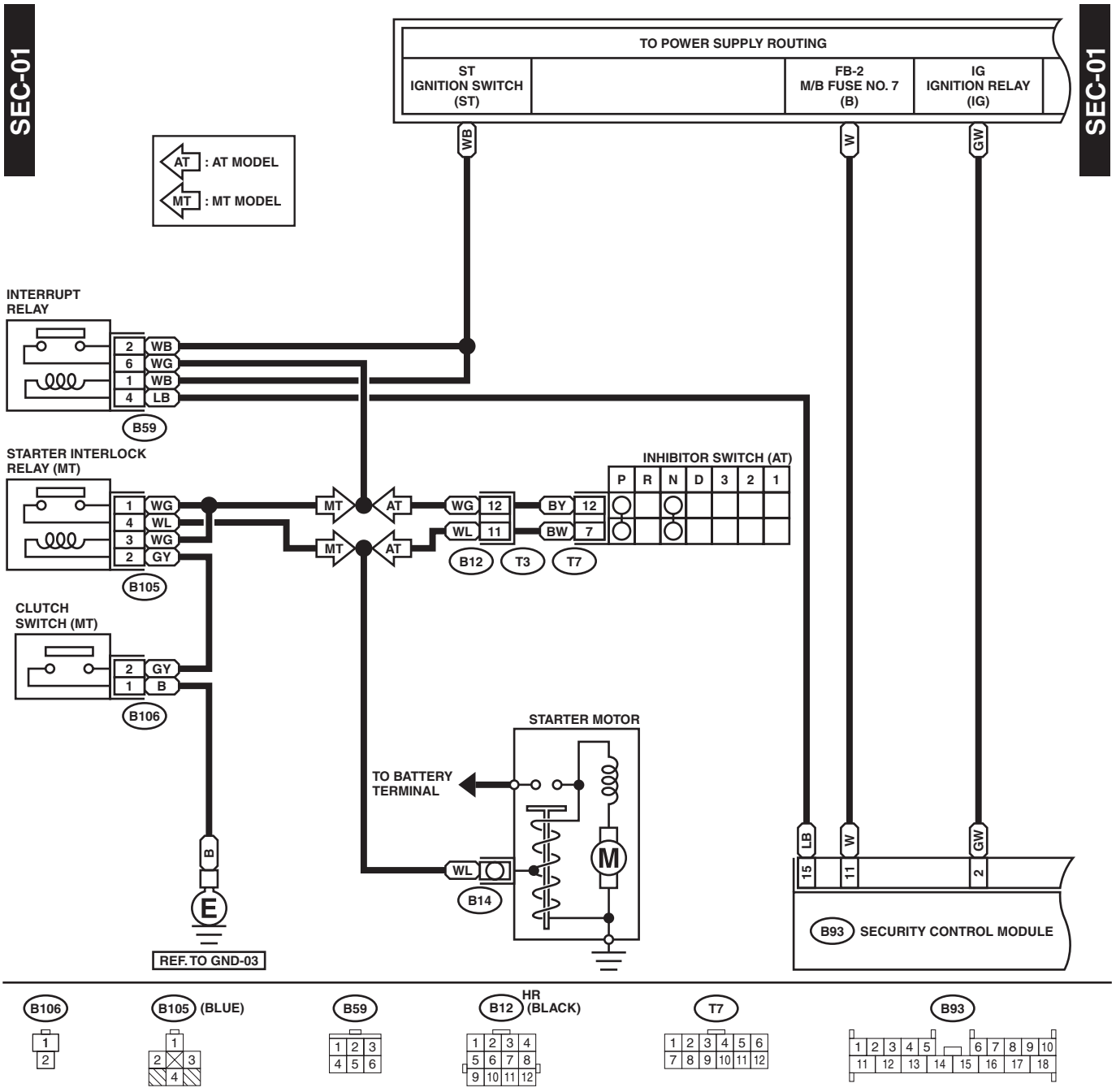

WI-06819

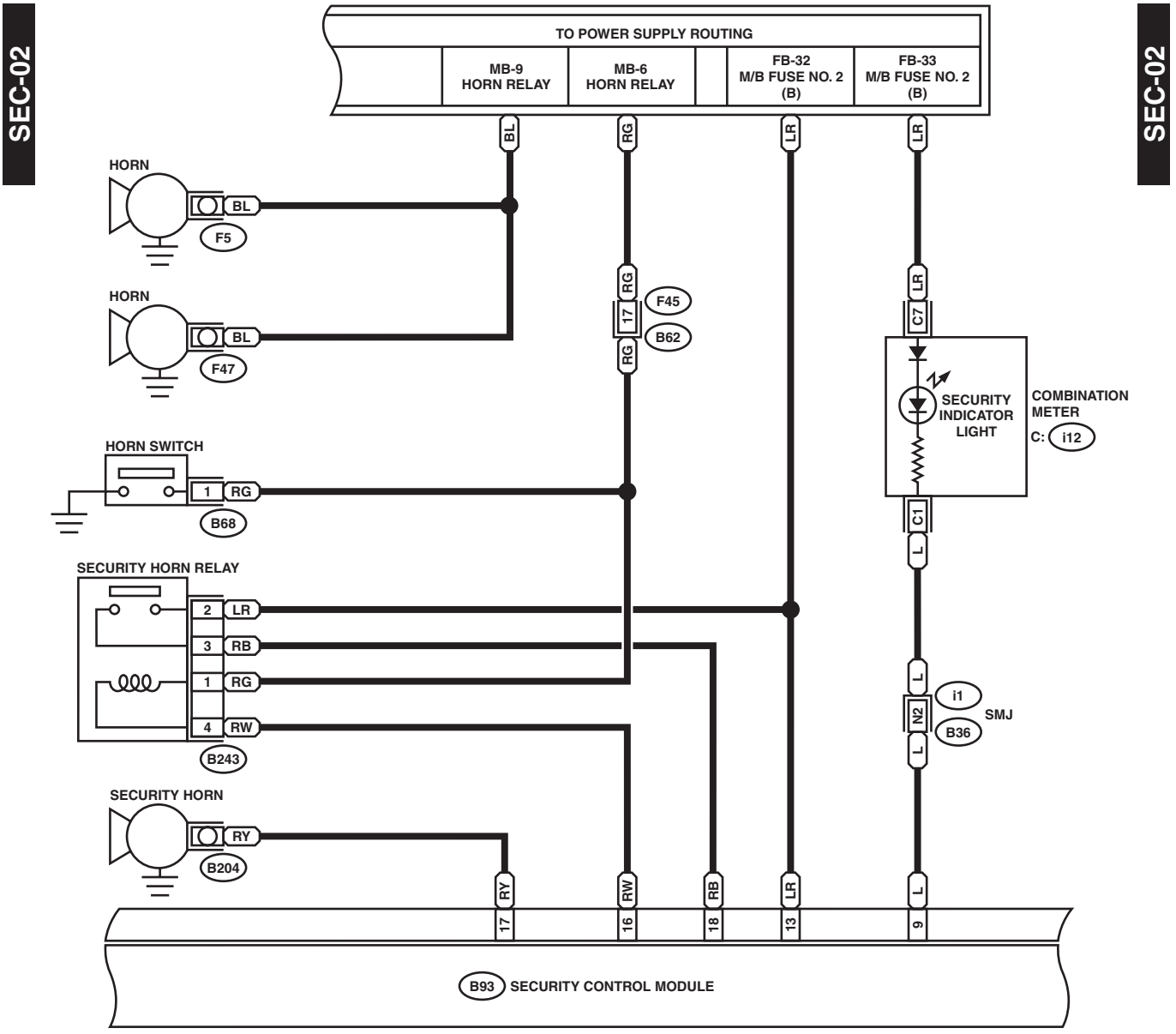
SEC-02
TO POWER SUPPLY ROUTING
MB-9 HORN RELAY
MB-6 HORN RELAY
FB-32 M/B FUSE NO. 2 (B)
FB-33 M/B FUSE NO. 2 (B)
BL
RG
LR
LR
HORN
BL
F5
HORN
BL
F47
RG
17
RG
F45
B62
LR
C7
SECURITY INDICATOR LIGHT
COMBINATION METER
C: i12
HORN SWITCH
1 RG
B68
C1
L
SECURITY HORN RELAY
2 LR
3 RB
1 RG
4 RW
B243
L
i1
N2
SMJ
B36
L
SECURITY HORN
RY
B204
RY
RW
RB
LR
L
17
16
18
13
9
B93 SECURITY CONTROL MODULE
SEC-02

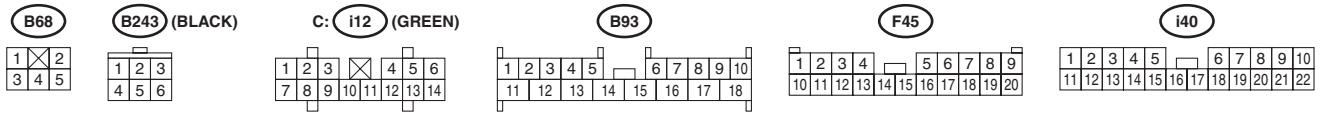
B68
B243 (BLACK)
C: i12 (GREEN)
B93
F45
i40

WI-05775

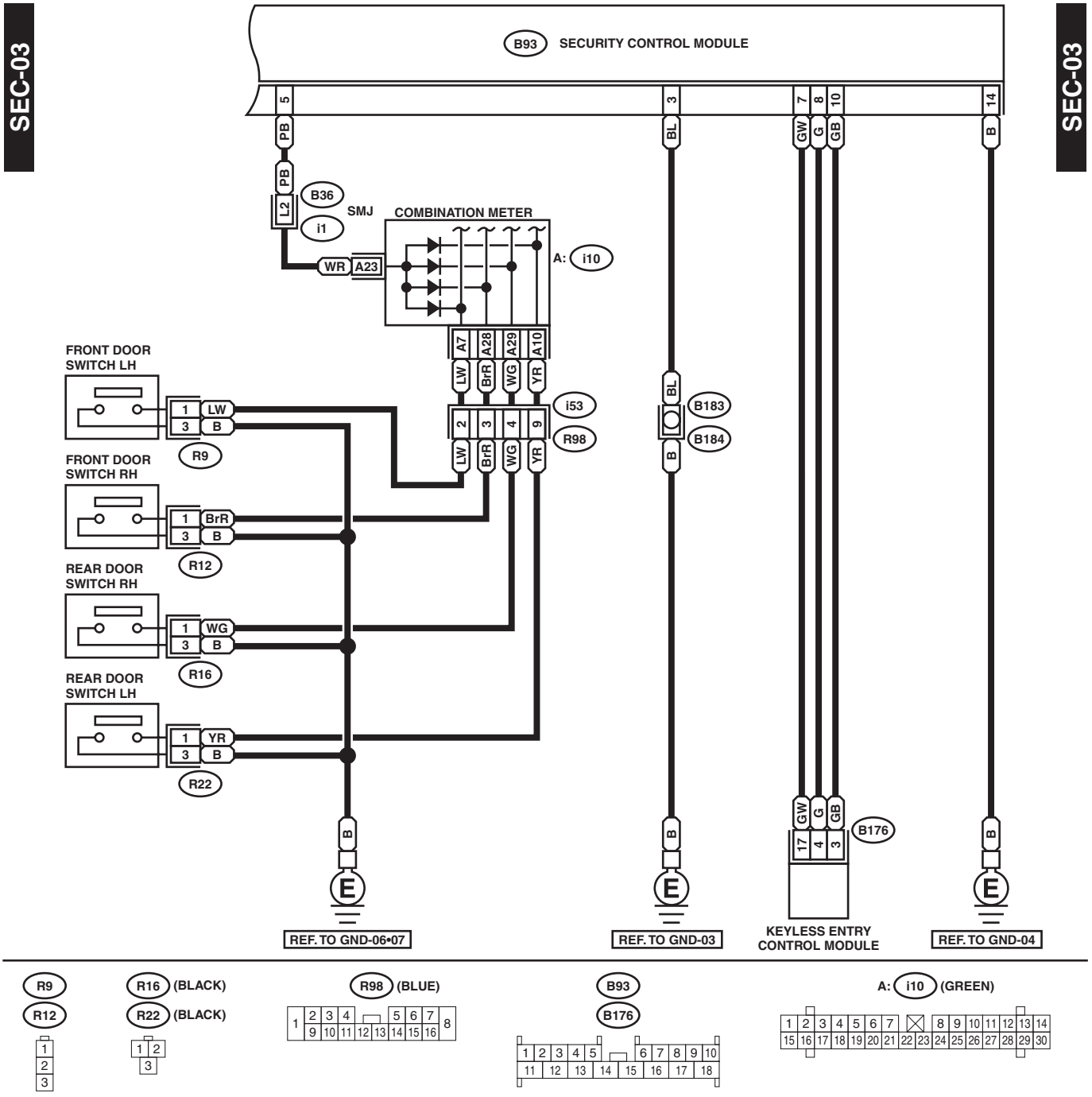
SEC-03
B93
SECURITY CONTROL MODULE
5
3
7
8
10
14
PB
BL
GW
G
GB
B
PB
L2
B36
SMJ
i1
COMBINATION METER
WR
A23
A: i10
A7
A28
A29
A10
LW
BrR
WG
YR
i53
R98
FRONT DOOR SWITCH LH
1
3
LW
B
R9
FRONT DOOR SWITCH RH
BrR
R12
REAR DOOR SWITCH RH
WG
R16
REAR DOOR SWITCH LH
YR
R22
B183
B184
B176
17
4
E
REF. TO GND-06•07
REF. TO GND-03
KEYLESS ENTRY CONTROL MODULE
REF. TO GND-04
R9
R12
R16 (BLACK)
R22 (BLACK)
R98 (BLUE)
B93
B176
A: i10 (GREEN)

WI-05861

MEMO:

44.Starter System

A: SCHEMATIC

1. MT MODEL

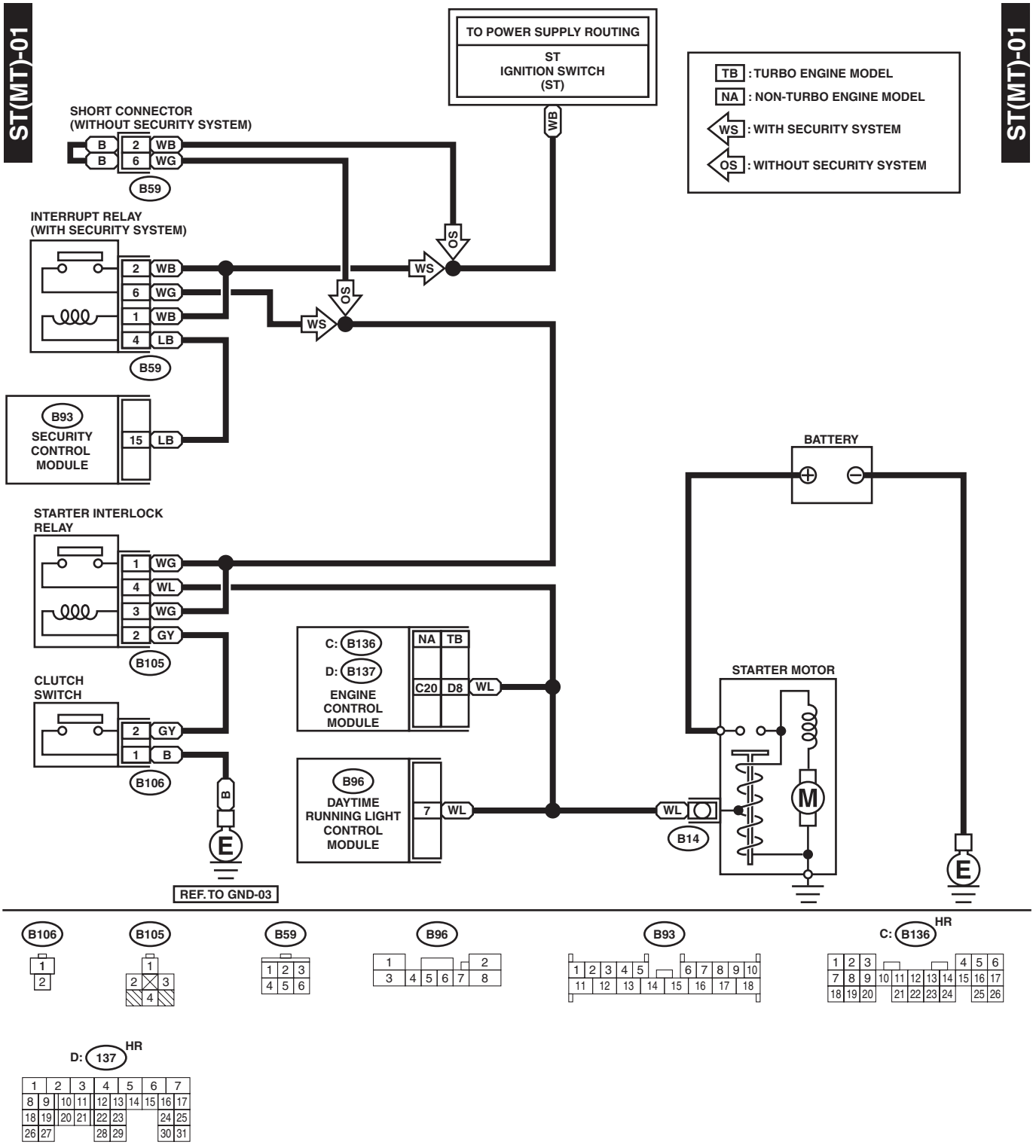

WI-06820

2. AT MODEL

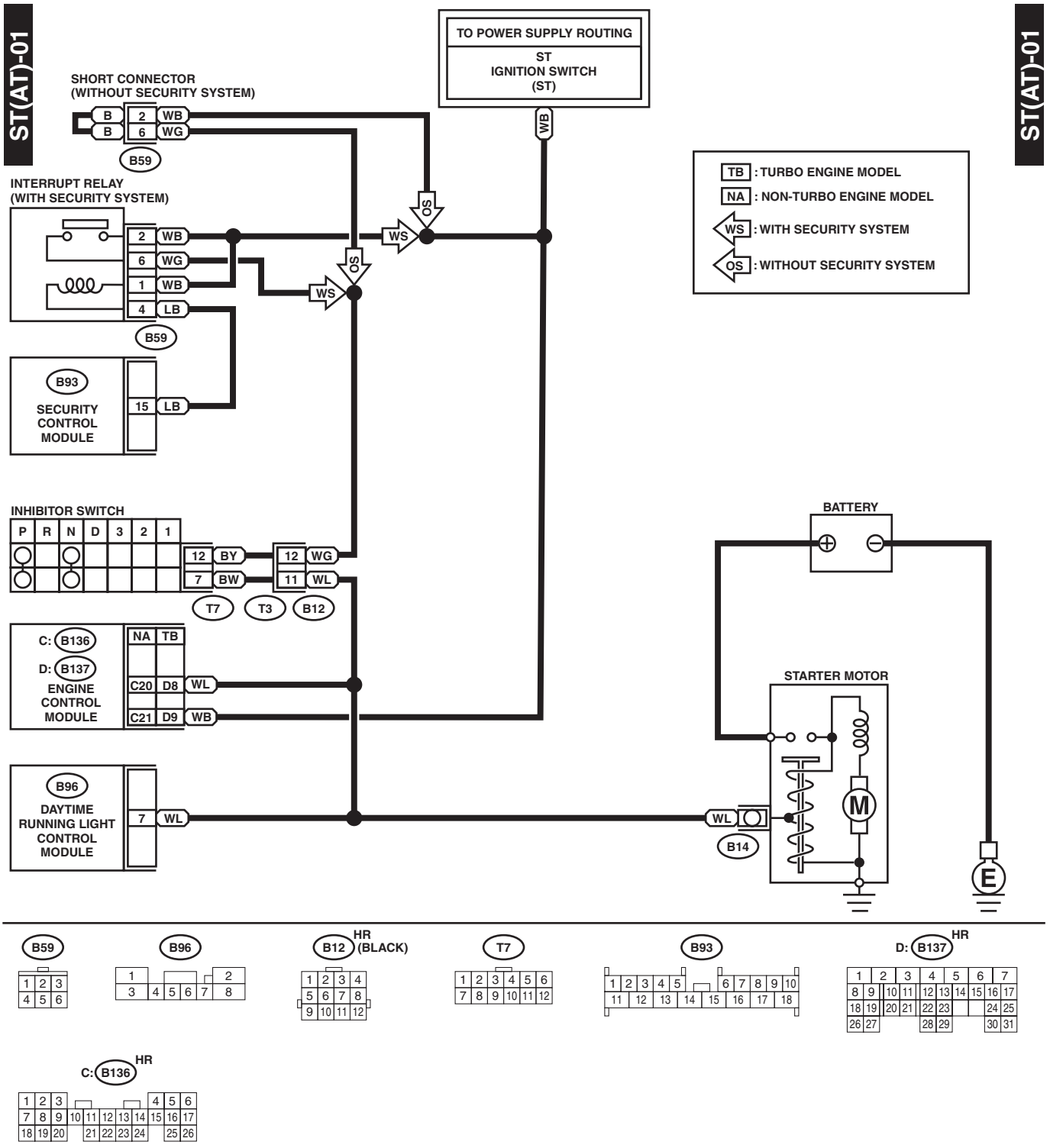

WI-06821

45.Sunroof System

A: SCHEMATIC

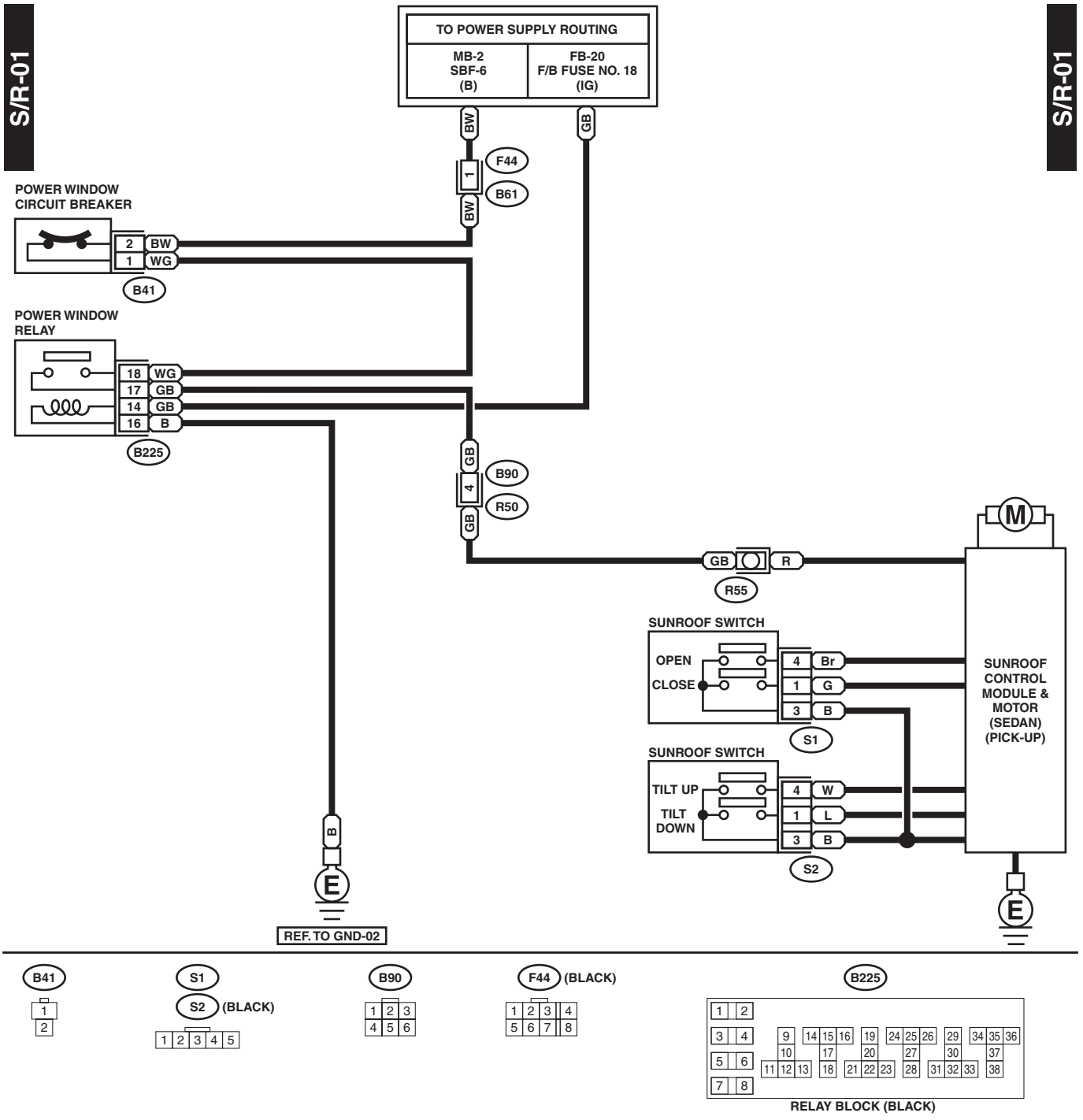

WI-05780

46.Trailer Wire Harness (Option)

A: SCHEMATIC

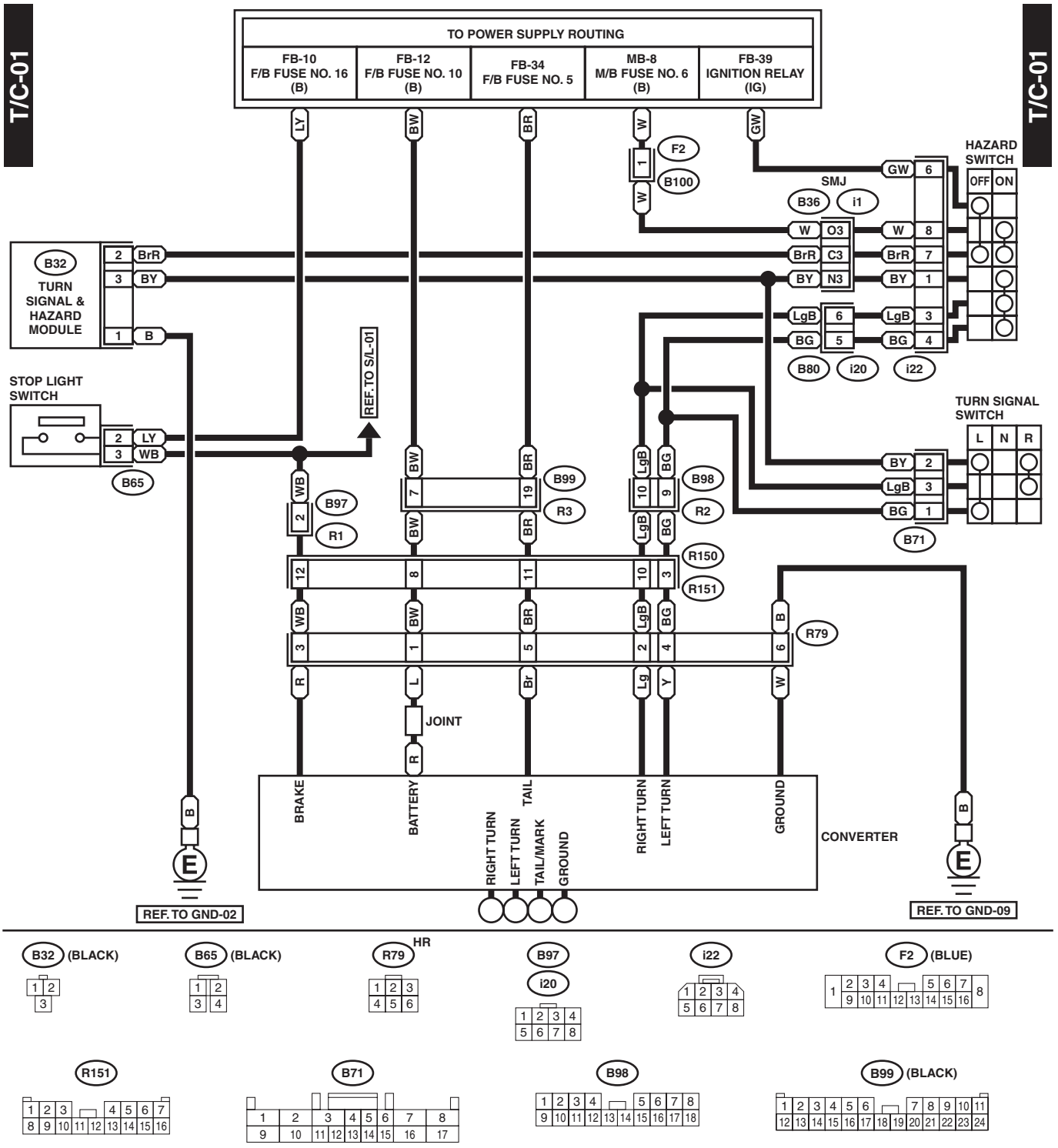

WI-06822

47.Wiper and Washer System (Front)

A: SCHEMATIC

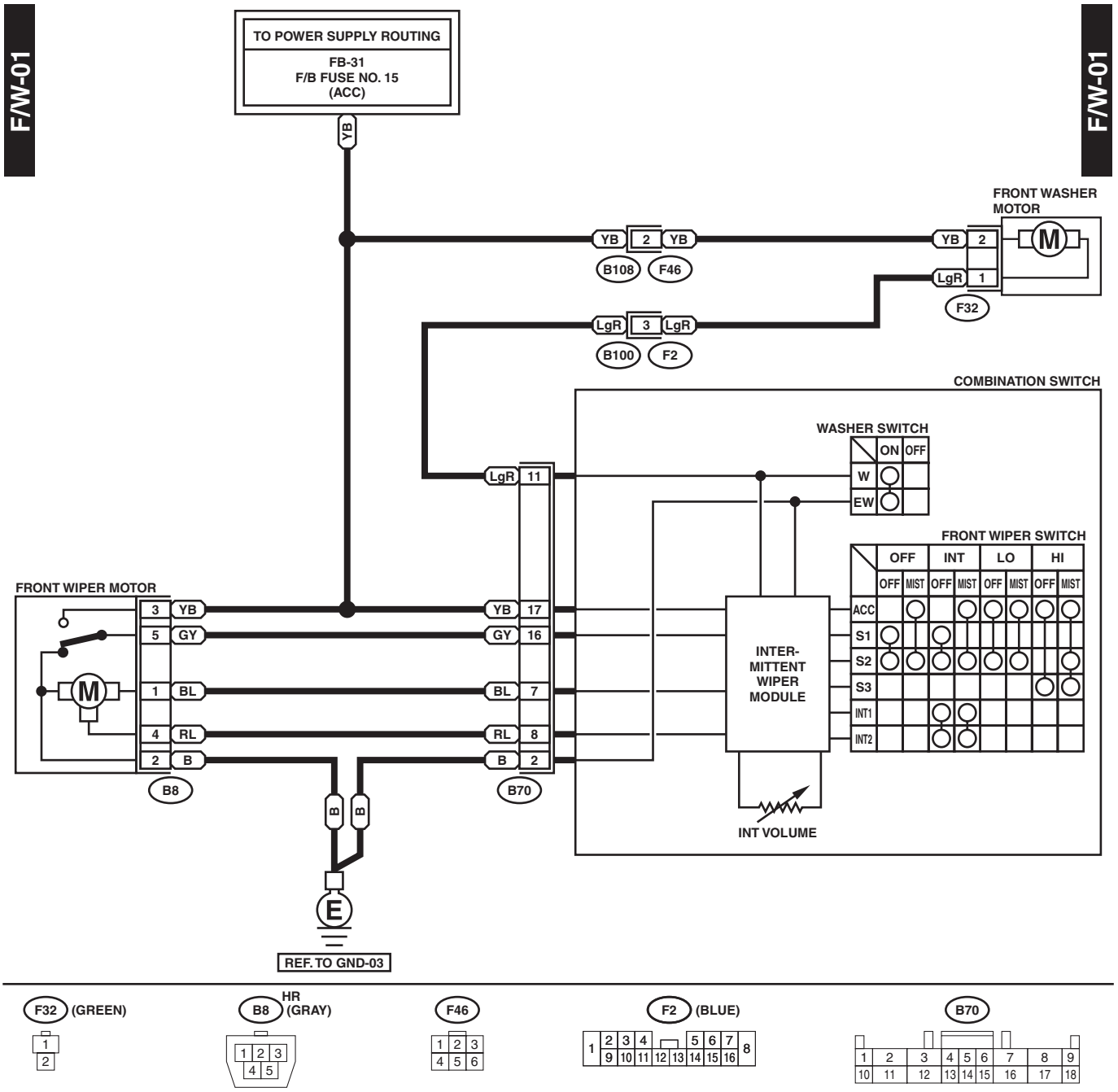

WI-06823

48.Wiper Deicer System

A: SCHEMATIC

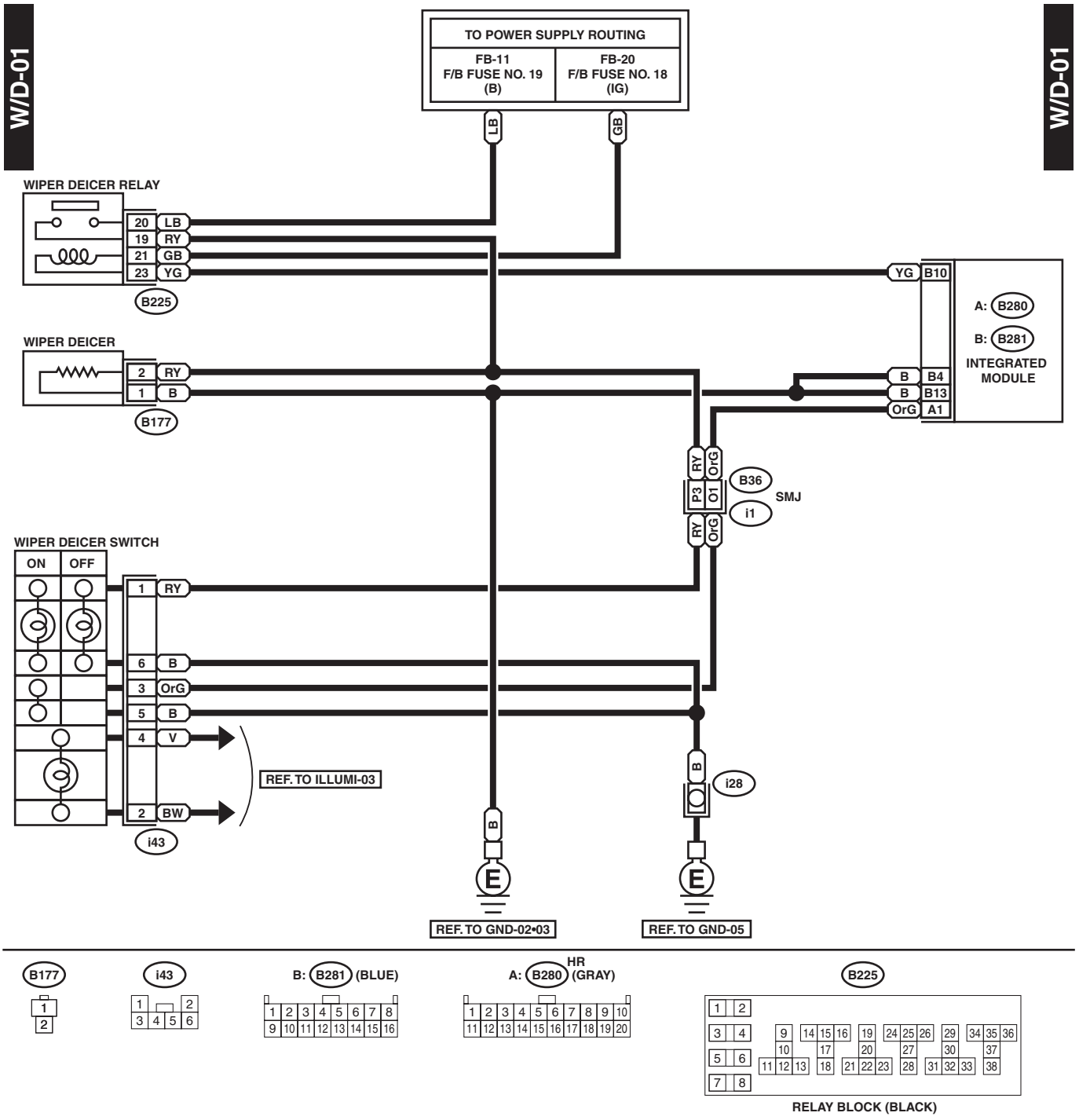

WI-06824

49.Harness Components Location

A: LOCATION

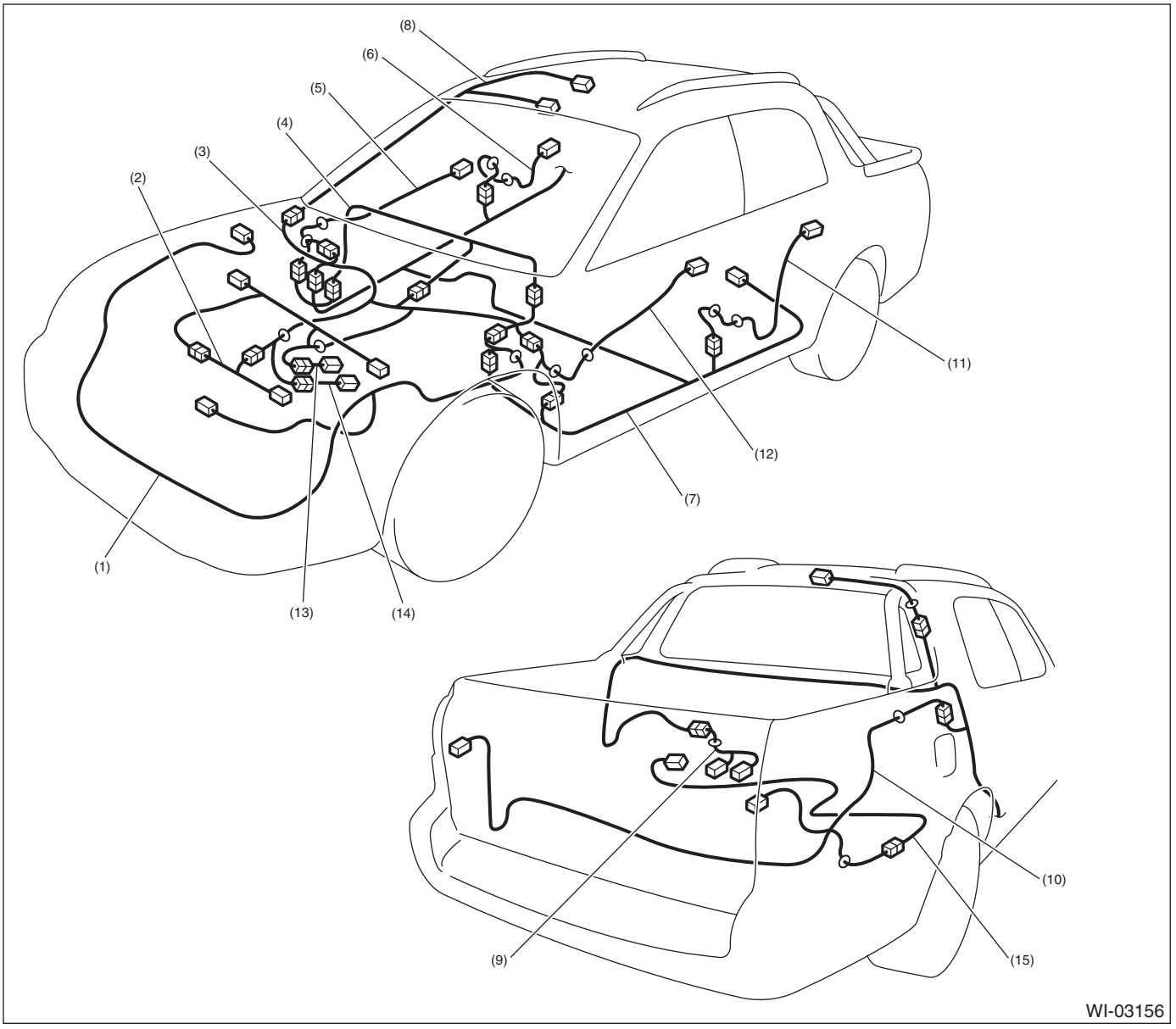

(1)	Front wiring harness	(6)	Rear door cord RH	(11)	Rear door cord LH
(2)	Engine wiring harness	(7)	Rear wiring harness (Front)	(12)	Front door cord LH
(3)	Bulkhead wiring harness	(8)	Roof cord	(13)	Transmission cord
(4)	Instrument panel wiring harness	(9)	Fuel tank cord	(14)	Rear oxygen sensor cord
(5)	Front door cord RH	(10)	Rear wiring harness (Rear)	(15)	On refueling vapor recovery cord

MEMO:

50.Front Wiring Harness

A: LOCATION

Connector				Connecting to	
No.	Pole	Color	Area	No.	Name
F2	16	Blue	B-5	B100	Bulkhead wiring harness
F3	2	Gray	C-1		Front turn signal light upper RH
F4	3	Gray	C-1		Front clearance light RH and front turn signal light lower RH
F5	1	Black	C-1		Horn
F6	2	★	C-1		Front fog light RH
F7	3	Black	C-1		Headlight RH (2-lights)
	3	★	C-1		Headlight RH (4-lights)
F16	2	Black	C-1		Sub fan motor (NON-TURBO model)
	4	Gray	C-1		Sub fan motor (TURBO model)
F17	2	Black	C-2		Radiator main fan motor (NON-TURBO model)
	4	Gray	C-2		Radiator main fan motor (TURBO model)
F19	2	Gray	D-3		Front turn signal light upper LH
F21	2	★	D-3		Front fog light LH
F22	3	Gray	C-3		Front clearance light LH and front turn signal light lower LH
F23	3	Black	C-3		Headlight LH (2-lights)
	3	★	C-3		Headlight LH (4-lights)
F25	1	★	C-2		A/C compressor
F26	3	Green	C-2		Alternator
F27	4	Black	B-3		A/C fuse (Relay holder)
	5	Black	B-3		A/C sub fan relay (Relay holder)
	5	Black	B-3		Radiator main fan relay (Relay holder)
	5	Black	B-3		A/C relay (Relay holder)
	5	Black	B-3		Front fog light relay (Relay holder)
	2	Black	B-3		FWD switch
	5	Black	B-3		Fan mode relay (TURBO model)
F32	2	Black	C-3		Front washer motor
F33	2	★	B-3		Rear washer motor
F34	4	Black	C-4		SBF holder
F35	2	Black	B-4		Main fuse box (M/B)
F36	3	★	C-4		
F37	6	Black	B-4		
F38	1	Brown	C-5		
F39	8	Black	C-4		
F40	9	Brown	C-5		Fuse and relay box (F/B)
F41	7	Gray	C-5		
F44	8	Black	B-4	B61	Bulkhead wiring harness
F45	20	Gray	B-4	B62	Bulkhead wiring harness
F46	6	★	B-4	B108	Bulkhead wiring harness
F47	1	Black	C-2		Horn
F49	31	Black	B-2		ABS control module
F55	8	★	C-5	R49	Rear wiring harness
F60	16	Brown	C-3	E3	Bulkhead wiring harness (TURBO model)
F61	20	Black	C-4	E2	
F68	4	Black	C-5		Main fuse box (M/B)
F73	1	★	B-2		ABS motor ground
F74	32	★	B-4	B200	Bulkhead wiring harness (TURBO model)
F78	2	Black	D-2		Ambient sensor

Connector				Connecting to	
No.	Pole	Color	Area	No.	Name
F82	1	Black	C-3		A/C compressor
★: Non-colored					

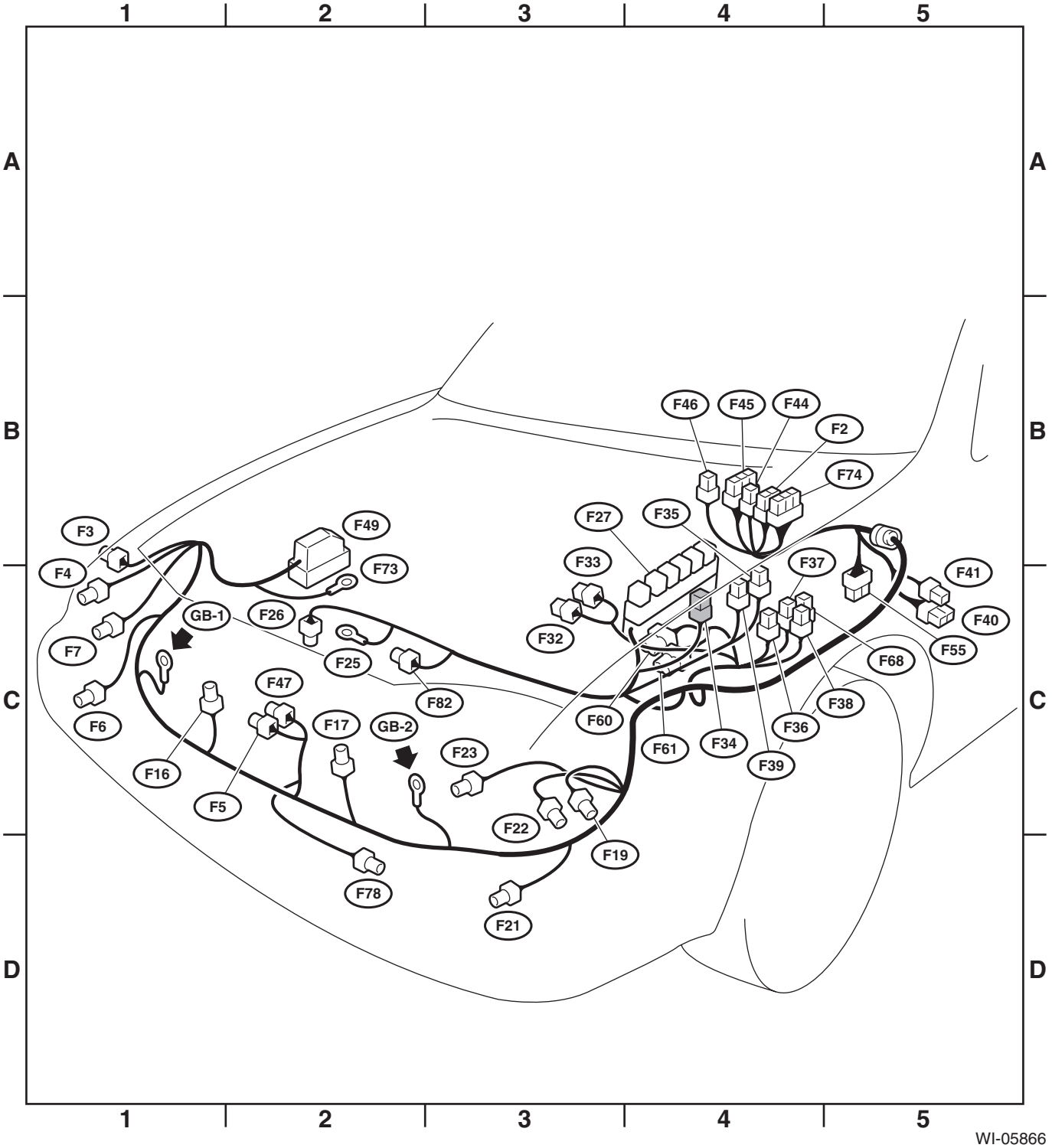

WI-05866

51.Bulkhead Wiring Harness (In Engine Room)

A: LOCATION

1. NON-TURBO ENGINE MODEL

Connector				Connecting to	
No.	Pole	Color	Area	No.	Name
B4	4	Gray	B-2		AT dropping resistor
B6	2	Brown	B-2		ABS front sensor RH
B7	6	Black	B-2		Cruise control actuator
B8	5	Gray	B-4		Front wiper motor
B10	2	Brown	A-3		A/C pressure switch
B11	20	Black	B-3	T4	Transmission (AT)
B12	12	Black	B-4	T3	
B14	1	Black	B-4		Starter (Magnet)
B15	2	Brown	B-4		ABS front sensor LH
B16	2	Gray	B-4		Brake fluid level switch
B17	3	Black	B-2		Vehicle speed sensor (MT)
B18	4	Black	B-3		Front oxygen (A/F) sensor
B19	4	★	B-3		Rear oxygen sensor cord
B20	6	★	B-2	E1	Engine wiring harness
B21	20	Gray	B-3	E2	
B22	16	Brown	B-3	E3	
B24	2	Gray	B-3	T1	Back-up light switch (MT)
B25	2	Brown	B-3	T2	Neutral position switch (MT)
B204	1	Black	B-2		Security horn
★: Non-colored					

BULKHEAD WIRING HARNESS (IN ENGINE ROOM)

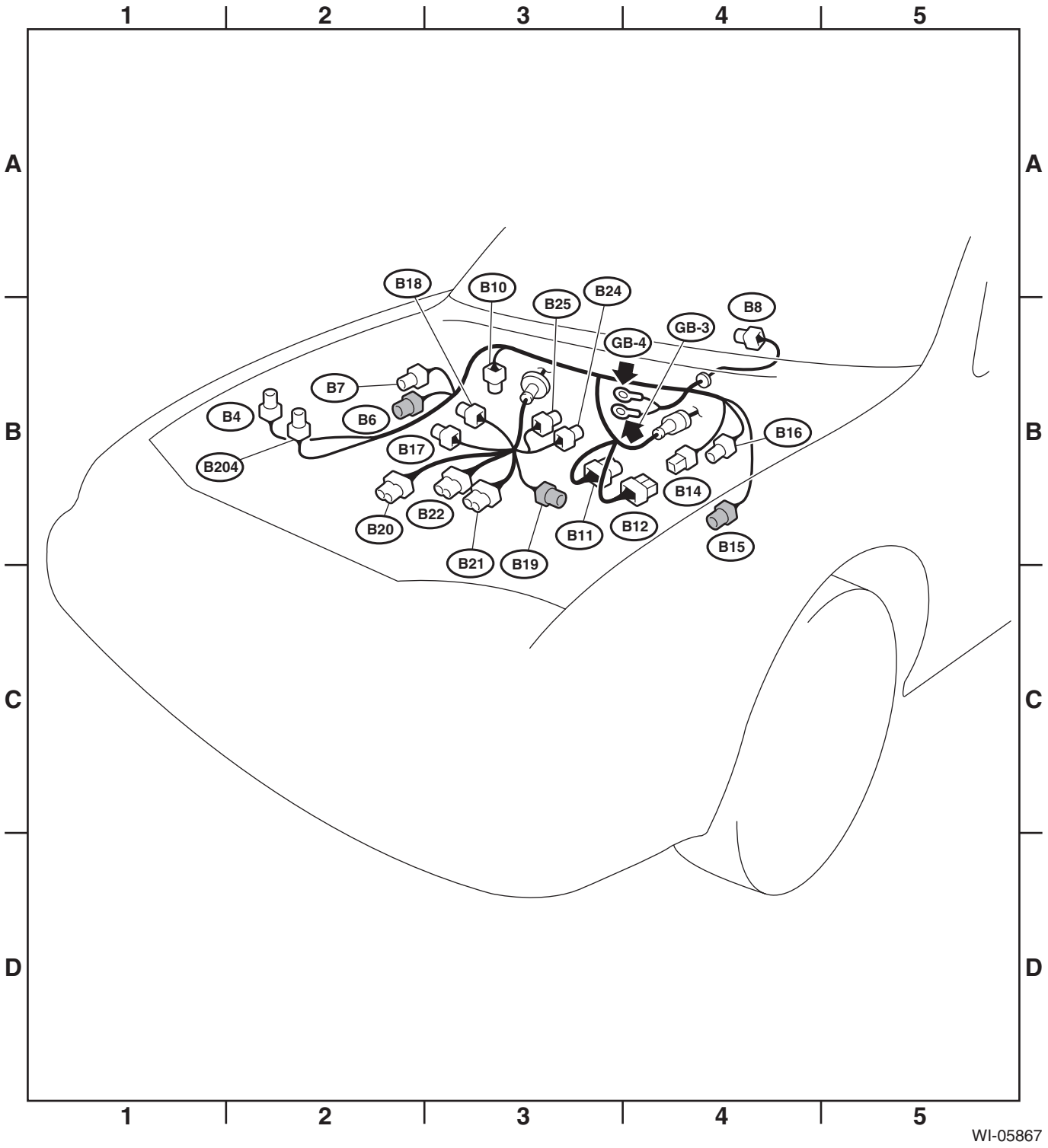

2. TURBO ENGINE MODEL

Connector				Connecting to	
No.	Pole	Color	Area	No.	Name
B3	5	★	B-2		Mass air flow meter
B6	2	Brown	B-2		ABS front sensor RH
B8	5	Gray	B-4		Front wiper motor
B10	4	★	A-3		A/C pressure switch
B11	20	★	B-3	T4	Transmission (AT)
B12	12	Black	B-4	T3	
B14	1	Black	B-4		Starter (Magnet)
B15	2	Brown	B-4		ABS front sensor LH
B16	2	Gray	B-4		Brake fluid level switch
B17	4	★	B-2		Vehicle speed sensor (MT)
B18	4	★	B-4		Front oxygen (A/F) sensor
B19	4	★	B-3		Rear oxygen sensor cord
B20	10	★	B-2	E1	Engine wiring harness
B25	4	Gray	B-3	T2	Neutral position switch (MT)
B127	2	★	B-2		Wast gate solenoid
B204	1	Black	B-2		Security horn
B279	2	★	B-2		Exhaust gas temperature sensor
B317	4	★	B-2	E56	Engine wiring harness
★: Non-colored					

BULKHEAD WIRING HARNESS (IN ENGINE ROOM)

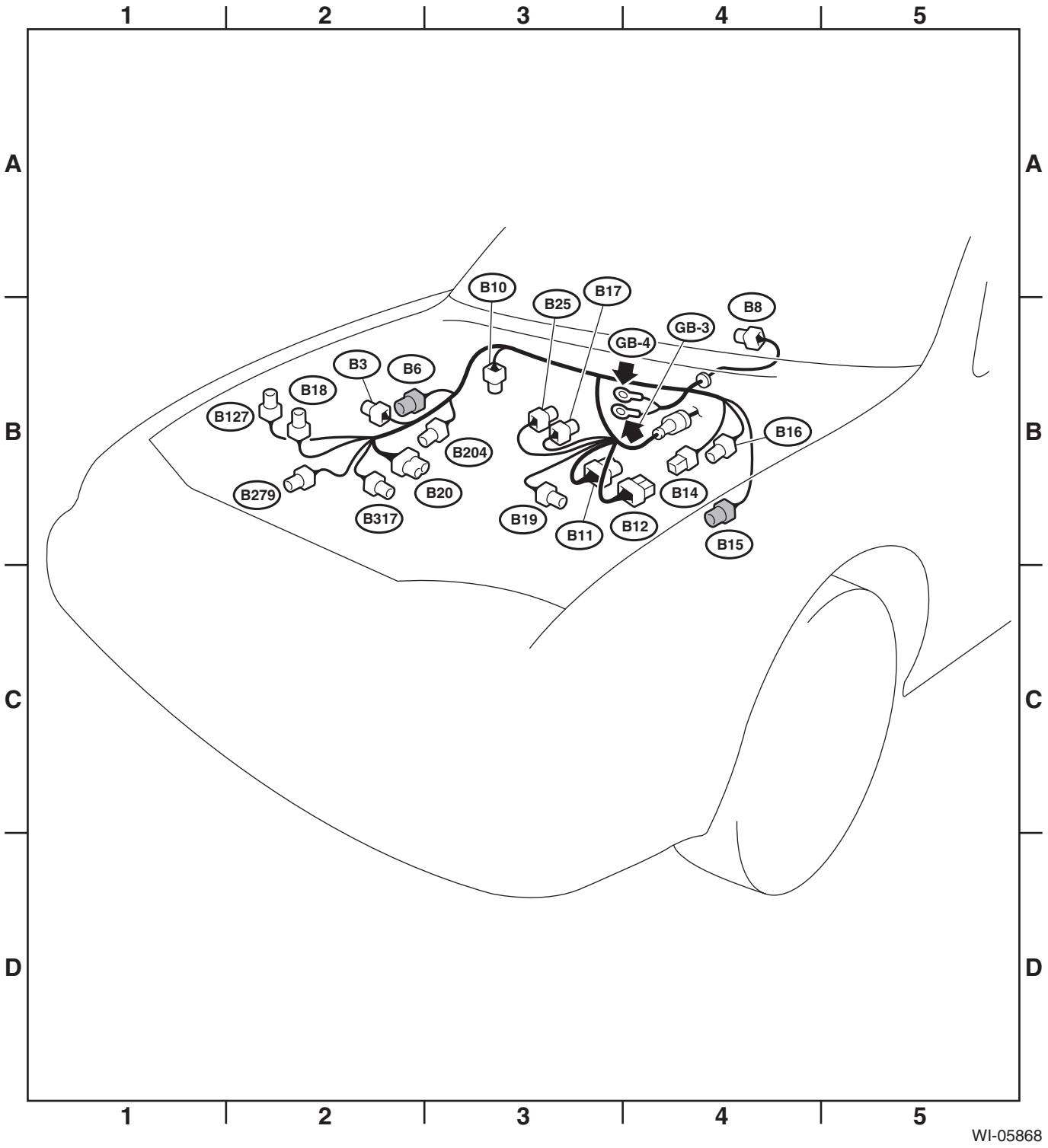

52.Bulkhead Wiring Harness (In Compartment)

A: LOCATION

Connector				Connecting to	
No.	Pole	Color	Area	No.	Name
B30	24	★	C-1	D1	Front door cord LH
B31	12	Yellow	D-1	AB1	SRS (Airbag) harness
B32	3	Black	B-3		Turn & hazard module
B34	2	Black	B-4		Diode (Key warning)
B36	66	★	B-1	i1	Instrument panel wiring harness (SMJ)
B40	16	★	C-1		Data link connector
B41	2	★	C-1		Power window circuit breaker
B46	4	Green	B-1		Fuel pump relay
B47	6	Brown	C-5		Main relay
B50	4	Black	D-1		Blower relay
B51	8	★	B-1		Fuse & relay box (F/B)
B52	7	★	B-1		
B53	12	Blue	C-3		Shield joint connector (NON-TURBO model)
	6	★	C-3		Shield joint connector (TURBO model)
B54	24	★	C-2		Transmission control module (NON-TURBO model)
	17	★	C-2		Transmission control module (TURBO model)
B55	24	Gray	C-3		Transmission control module (NON-TURBO model)
	24	★	C-3		Transmission control module (TURBO model)
B56	31	★	C-3		Transmission control module (TURBO model)
B59	6	★	B-1		Interrupt relay (Security)
B61	8	Black	C-2	F44	Front wiring harness
B62	20	Black	B-2	F45	
B65	4	Black	B-2		Stop & brake switch (With cruise control)
B68	5	★	D-2		Cruise control sub switch
B69	4	★	D-3		Parking switch
B70	18	★	D-3		Combination switch
B71	17	★	D-3		
B72	4	Blue	C-2		Ignition switch
B73	2	★	C-2		Key lock solenoid
B74	2	Black	C-2		Key warning switch
B75	2	Green	B-3	B76	Test mode connector
B76	2	Green	B-3	B75	
B77	10	★	C-3		Mode actuator

Connector				Connecting to	
No.	Pole	Color	Area	No.	Name
B79	14	Gray	C-1		Check connector
B80	8	★	C-3	i20	Instrument panel wiring harness
B81	1 × 2	★	C-3		Diagnosis terminal (Ground)
B82	8	★	C-3		Diagnosis connector
B83	22	★	C-5		Shield & sensor ground joint connector (E/G) (TURBO model)
	6	Gray	C-5		Shield & sensor ground joint connector (E/G)(NON-TURBO model)
B86	6	Black	C-4		Blower motor resistor
B87	2	★	C-5		Blower motor
B88	3	Black	C-4		Evaporator thermo switch
B90	6	Black	B-5	R50	Roof cord
B91	6	Black	B-5		FRESH/RECIRC actuator
B93	18	★	C-3		Security control module
B94	20	Black	B-5		Cruise control module
B96	8	★	C-2		Daytime running light control module
B97	8	★	C-5	R-1	Rear wiring harness
B98	18	★	C-5	R-2	
B99	24	Black	C-5	R-3	
B100	16	Blue	B-1	F-2	Front wiring harness
B101	24	★	C-5	D11	Front door cord RH
B104	4	★	B-2		Seat heater/rear accessory power supply relay
B105	4	Black	C-2		Starter interlock relay
B106	2	★	B-2		Clutch switch
B107	2	Blue	B-2		Clutch switch (Cruise control)
B108	6	★	B-2	F46	Front wiring harness
B112	2	★	C-2		Diode (DRL)
B113	2	★	D-1	D50	Front door cord LH
B116	6	Blue	C-3		Select lever illumination light (AT)
B122	8	★	C-4		Shield & sensor ground joint connector (TURBO model)
B134	35	★	C-4		Engine control module (NON-TURBO model)
	34	★	C-4		Engine control module (TURBO model)

BULKHEAD WIRING HARNESS (IN COMPARTMENT)

Connector				Connecting to	
No.	Pole	Color	Area	No.	Name
B135	28	★	C-4		Engine control module (NON-TURBO model)
	35	★	C-4		Engine control module (TURBO model)
B136	26	★	C-4		Engine control module (NON-TURBO model)
	35	★	C-4		Engine control module (TURBO model)
B137	20	★	C-4		Engine control module (NON-TURBO model)
	31	★	C-4		Engine control module (TURBO model)
B152	12	★	C-1		Fuse & relay box (F/B)
B158	10	Gray	C-1		
B176	18	★	B-5		Keyless entry control module
B177	2	★	B-1		Wiper deicer
B183	1	★	C-1	B184	Joint connector (Keyless entry)
B184	1	★	C-1	B183	
B201	22	★	C-3	i40	Instrument panel wiring harness
B224	2	★	D-3		Key switch light
B225	8	Black	C-1		Fuse (Relay block)
	5	Black	C-1		Wiper deicer relay (Relay block)
	5	Black	C-1		Power window relay (Relay block)
	5	Black	C-1		SPORT light relay (Relay block)
	5	Black	C-1		Daytime running light relay (Relay block)
	5	Black	C-1		Ignition relay (Relay block)
	5	Black	C-1		Front fog light relay (Relay block)
B228	15	★	B-3		OP connector
B237	6	Black	D-4		SPORT shift switch (Turbo engine model)
B242	10	★	C-3		Daytime running light control module
B243	6	Black	B-1		Security relay
B280	20	Gray	C-2		Integrated module
B281	16	Blue	C-2		
B300	6	★	B-3		Line end check connector
B307	2	★	C-3		Diode (TURBO model)
B309	4	★	C-5		ETC relay (TURBO model)

Connector				Connecting to	
No.	Pole	Color	Area	No.	Name
B315	6	★	C-3		Accelerator pedal position sensor (TURBO model)
B331	2	★	C-5		Diode (Baja light)
B333	8	★	C-1		Stop & turn module
★: Non-colored					

BULKHEAD WIRING HARNESS (IN COMPARTMENT)

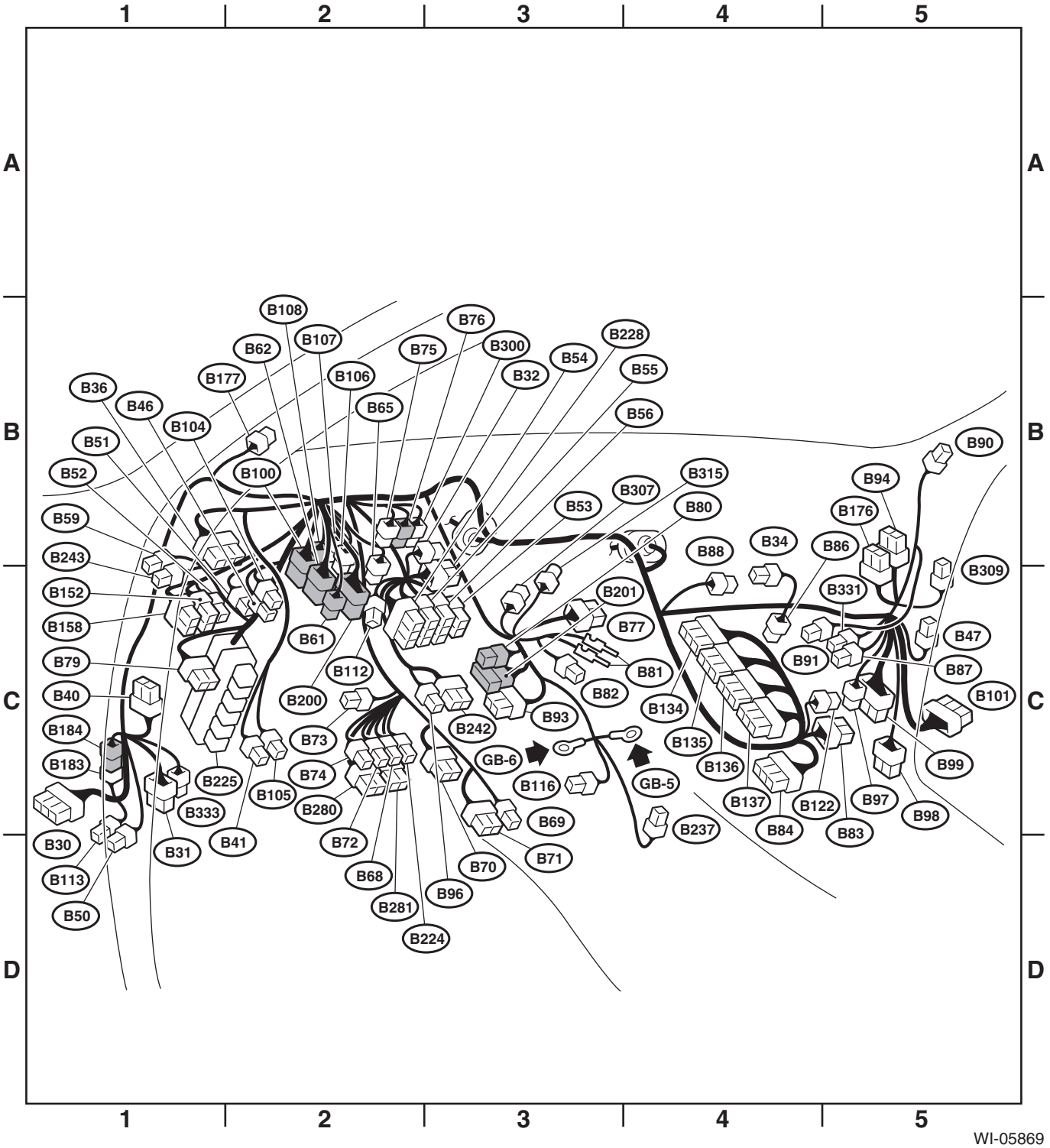

MEMO:

53.Engine Wiring Harness and Transmission Cord

A: LOCATION

1. NON-TURBO ENGINE MODEL

Connector				Connecting to	
No.	Pole	Color	Area	No.	Name
E1	6	★	A-4	B20	Bulkhead wiring harness
E2	20	★	A-4	B21	
E3	16	Brown	A-4	B22	
E4	2	★	A-3		CPC solenoid valve
E5	2	★	A-2		Injector #1
E6	2	★	A-2		Injector #3
E7	6	★	A-4		Idle air control solenoid valve
E8	3	★	A-3		Engine coolant temperature sensor and thermometer
E10	2	★	C-2		Crankshaft position sensor
E11	1	★	B-2		Oil pressure switch
E12	4	★	A-4		Ignition coil and ignitor
E13	4	★	A-4		Throttle position sensor
E14	2	★	A-5		Knock sensor
E15	2	★	C-4		Camshaft position sensor
E16	2	★	B-4		Injector #2
E17	2	★	B-4		Injector #4
E18	6	★	A-5		EGR solenoid valve
E19	1	★	B-2		Power steering oil pressure switch
E20	2	★	C-3		Intake air temperature sensor
E21	3	★	A-3		Pressure sensor
E42	2	★	A-2		Air assist injector solenoid valve
★: Non-colored					

Connector				Connecting to	
No.	Pole	Color	Area	No.	Name
T1	2	★	D-2	B24	Bulkhead wiring harness (MT)
T2	2	★	D-2	B25	
T3	12	★	C-4	B12	Bulkhead wiring harness (AT)
T4	20	Black	C-4	B11	
T7	12	★	C-5		Inhibitor switch
★: Non-colored					

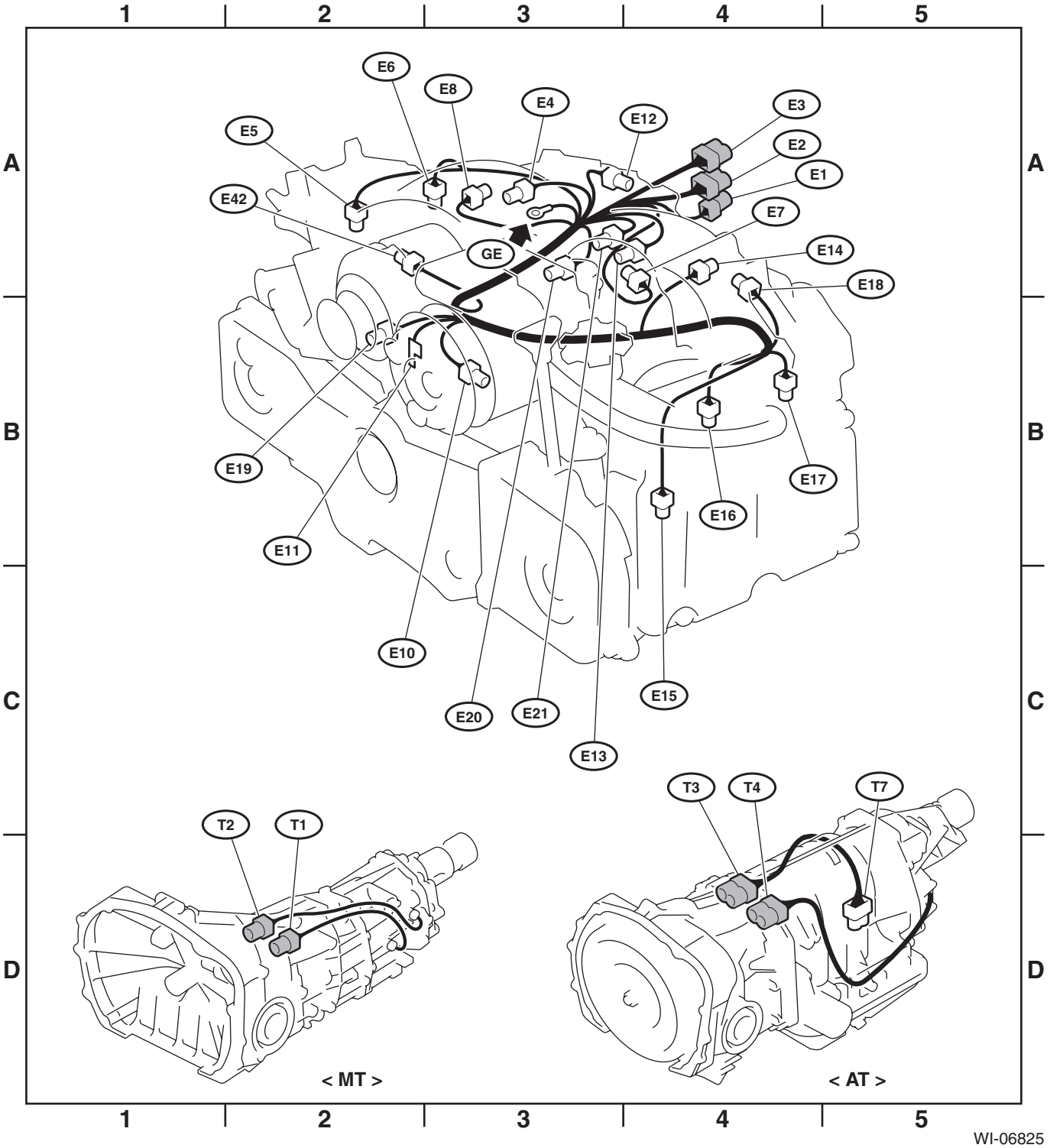
1
2
3
4
5
A
B
C
D
E6
E8
E4
E12
E3
E5
E2
E1
E42
E7
GE
E14
E18
E19
E17
E16
E11
E10
E15
E20
E21
E13
T3
T4
T7
T2
T1
< MT >
< AT >

WI-06825

2. TURBO ENGINE MODEL

Connector				Connecting to	
No.	Pole	Color	Area	No.	Name
E1	10	Gray	A-2	B20	Bulkhead wiring harness
E2	20	Black	B-4	F61	Front wiring harness
E3	16	Brown	B-5	F60	
E4	2	Black	B-3		CPC solenoid valve
E5	2	Light gray	A-2		Fuel injector No. 1
E6	2	Light gray	A-2		Fuel injector No. 3
E8	3	Light gray	B-3		Engine coolant temperature sensor and thermometer
E10	2	Light gray	B-2		Crankshaft position sensor
E11	1	★	B-2		Oil pressure switch
E14	2	Brown	A-4		Knock sensor
E16	2	Light gray	B-4		Fuel injector No. 2
E17	2	Light gray	B-5		Fuel injector No. 4
E19	1	★	B-2		Power steering oil pressure switch
E21	3	Black	A-3		Pressure sensor (MT)
E31	3	★	B-2		Ignition coil No. 1
E32	3	★	B-4		Ignition coil No. 2
E33	3	Black	A-3		Ignition coil No. 3
E34	3	Black	B-4		Ignition coil No. 4
E35	3	Light gray	A-4		AVSC camshaft position sensor LH
E36	3	Light gray	A-3		AVSC camshaft position sensor RH
E37	2	★	B-5		AVSC solenoid RH
E38	2	★	A-2		AVSC solenoid RH
E50	3	Black	B-3		Tumble generator valve opening angle sensor LH
E51	2	Black	A-4		Tumble generator valve LH
E54	3	Black	A-3		Tumble generator valve opening angle sensor RH
E55	2	Black	A-1		Tumble generator valve RH
E56	4	Dark gray	A-2	B317	Bulkhead wiring harness
E57	6	Black	A-4		Electronic control throttle
E61	2	Dark gray	A-3		PVC diagnosis connector
★: Non-colored					

Connector				Connecting to	
No.	Pole	Color	Area	No.	Name
T2	4	Gray	C-2	B25	Bulkhead wiring harness (MT)
T3	12	★	C-4	B12	Bulkhead wiring harness (AT)
T4	20	Black	C-4	B11	
T7	12	★	C-5		Inhibitor switch
★: Non-colored					

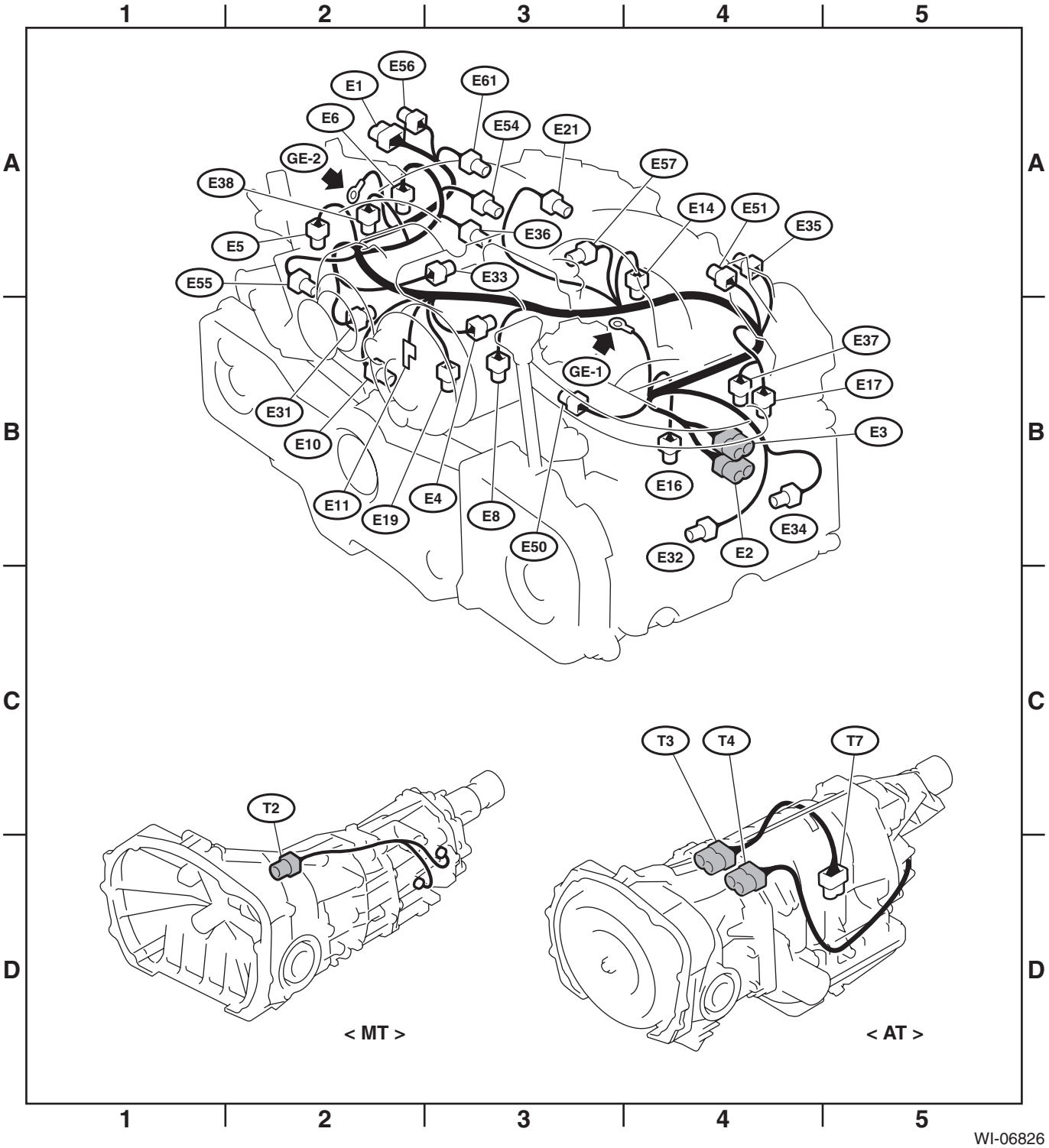
1
2
3
4
5
A
B
C
D
E56
E1
E61
E6
E54
E21
GE-2
E57
E38
E14
E51
E35
E5
E36
E55
E33
E37
GE-1
E17
E31
E3
E10
E16
E11
E4
E19
E8
E34
E50
E32
E2
T3
T4
T7
T2
< MT >
< AT >

WI-06826

54.Instrument Panel Wiring Harness

A: LOCATION

Connector				Connecting to	
No.	Pole	Color	Area	No.	Name
i1	66	★	C-1	B36	Bulkhead wiring harness
i5	12	★	C-1		Fuse & relay box (F/B)
i7	6	Yellow	C-2		Front fog light switch
i10	30	Green	C-2		Combination meter
i11	16	Green	B-2		
i12	14	Green	C-2		
i15	6	★	C-3		Mode control panel (Heater control)
i17	20	Gray	B-3		
i19	6	Brown	C-2		Cruise control main switch
i20	8	★	C-3	B80	Bulkhead wiring harness
i21	2	★	C-3		Ash tray illumination light
i22	8	★	B-3		Hazard switch
i23	2	★	B-5		Glove box illumination light
i24	2	★	D-4		Cigarette lighter
i25	3	★	D-4		Cigarette lighter illumination light
i26	14	★	C-4		Radio
i28	1	Black	C-3		Body ground
i29	1	Black	C-4		Body ground (Radio)
i40	22	★	C-3	B201	Bulkhead wiring harness
i43	6	★	C-2		Wiper deicer switch
i53	16	Blue	C-5	R98	Rear wiring harness
i67	6	Gray	B-5		Cargo light switch (For CANADA)
i67	6	Gray	C-2		Cargo light switch (Except For CANADA)
i68	6	Gray	C-5		Sport light
i74	6	★	C-4	i75	Cargo light switch adapter cord
i75	6	★	C-4	i74	
★: Non-colored					

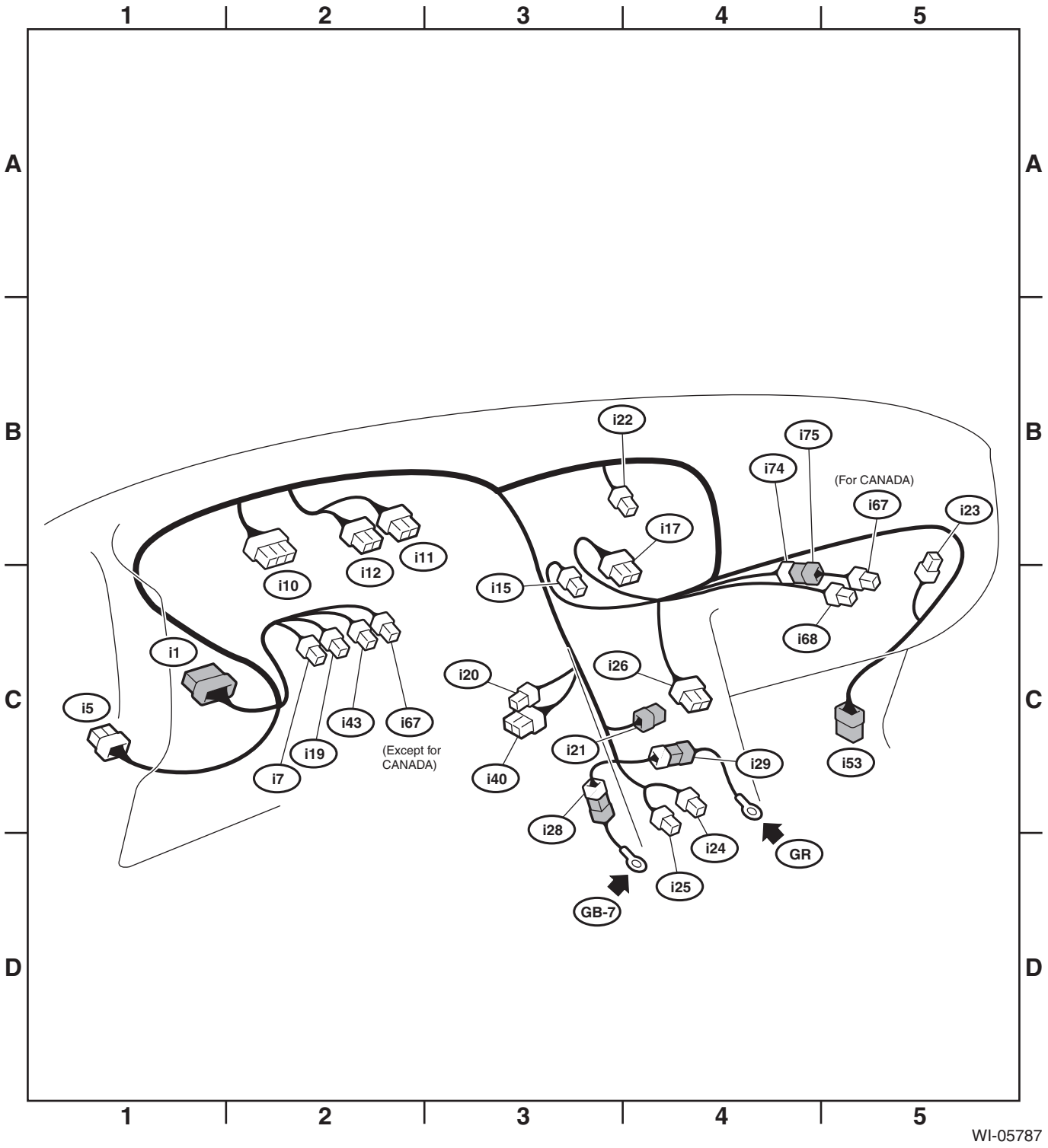
1
2
3
4
5
A
B
C
D
i22
i75
i74
(For CANADA)
i67
i23
i17
i11
i12
i10
i15
i68
i1
i26
i20
i5
i43
i67
(Except for CANADA)
i19
i7
i21
i29
i53
i40
i28
i24
GR
i25
GB-7

WI-05787

55.Rear Wiring Harness

A: LOCATION

Connector				Connecting to	
No.	Pole	Color	Area	No.	Name
R1	8	★	B-2	B97	Bulkhead wiring harness
R2	18	★	B-2	B98	Bulkhead wiring harness
R3	24	★	B-2	B99	Bulkhead wiring harness
R4	1	Black	B-4		Parking brake switch
R8	2	★	C-4		Seat belt switch
R9	3	★	C-4		Front door switch LH
R11	8	★	C-5	D21	Rear door cord LH
R12	3	★	B-3		Front door switch RH
R14	8	★	B-3	D27	Rear door cord RH
R16	3	Black	B-4		Rear door switch RH
R32	2	★	B-4		Power supply socket
R41	4	Blue	B-3		Seat heater RH
R42	6	★	C-2		Seat heater switch RH
R43	6	Blue	C-2		Seat heater switch LH
R44	4	Blue	C-4		Seat heater LH
R49	8	★	C-3	F55	Front wiring harness
R50	6	★	B-2	B90	Bulkhead wiring harness
R51	2	Black	B-2		Vanity mirror illumination light RH
R52	3	★	B-3		Room light
R54	2	Black	B-3		Vanity mirror illumination light LH
R55	1	★	B-2		Sunroof
R56	2	★	B-3		Spot light
R70	3	★	C-4		ABS G sensor
R72	2	Gray	B-4		Rear ABS sensor RH
R73	2	Gray	B-4		Rear ABS sensor LH
R98	16	Blue	B-2	i53	Instrument panel wiring harness
R109	2	Black	C-4		Power seat motor
R139	3	★	B-3		Compass mirror
R194	2	★	B-3	R195	Socket adapter cord
R195	2	★	B-4	R194	Socket adapter cord
★: Non-colored					

REAR WIRING HARNESS

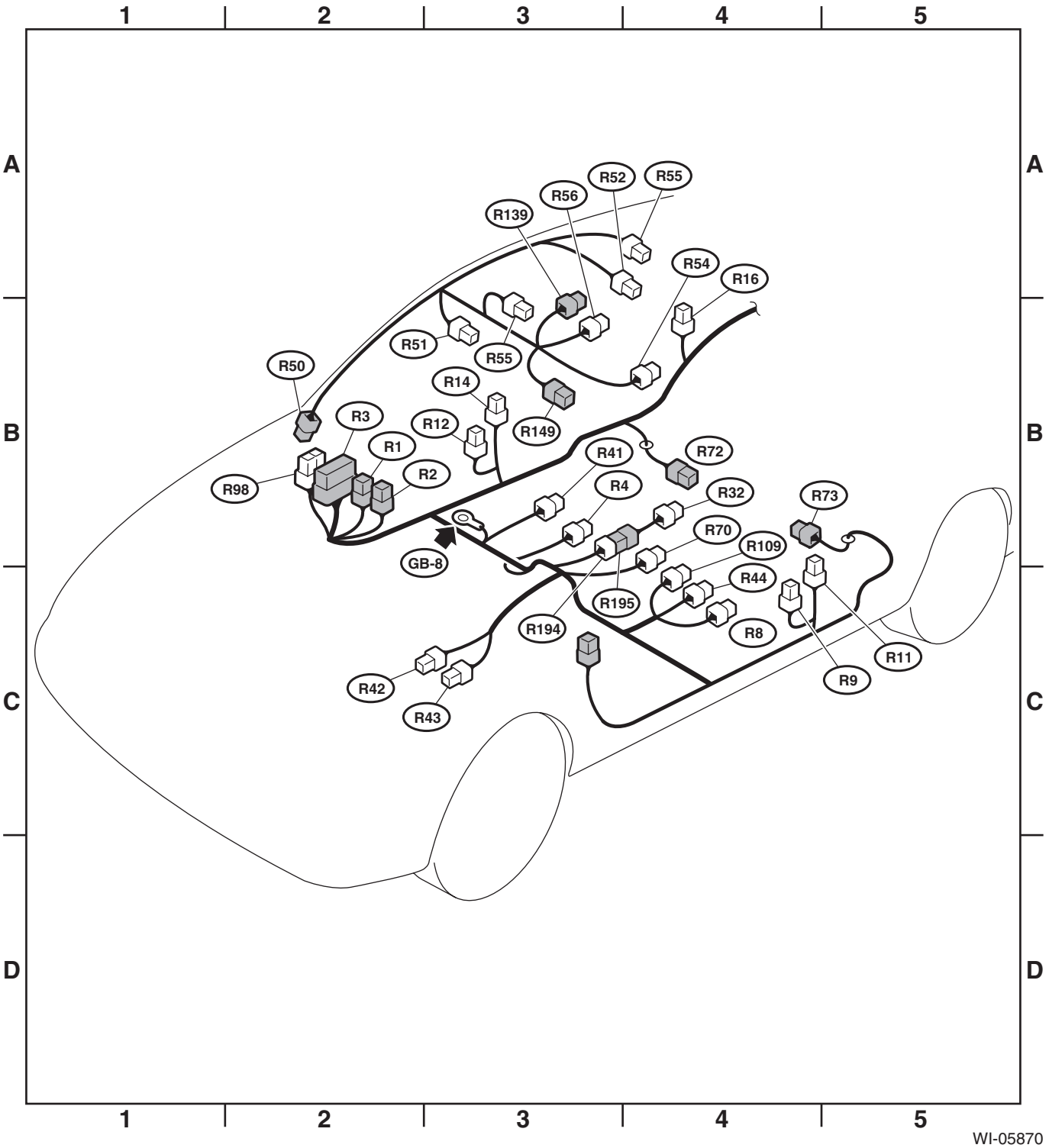

WI-05870

56.Door Cord

A: LOCATION

Connector				Connecting to	
No.	Pole	Color	Area	No.	Name
D1	24	★	C-2	B30	Bulkhead wiring harness
D2	2	★	C-3		Front door speaker LH
D3	2	Green	C-3		Front power window motor LH
D4	2	Black	C-3		Front door tweeter LH
D5	6	★	C-3		Remote control rearview mirror LH
D7	16	★	C-3		Power window main switch
D10	2	★	C-3		Step light LH
D11	24	★	C-2	B101	Bulkhead wiring harness
D12	2	★	C-2		Front door speaker RH
D13	2	Green	B-2		Front power window motor RH
D14	2	Black	B-2		Front door tweeter RH
D15	6	★	B-2		Remote control rearview mirror RH
D17	6	★	B-2		Front power window sub switch RH
D18	4	★	B-2		Front door lock actuator RH
D20	2	★	B-2		Step light RH
D21	8	★	C-3	R11	Rear wiring harness
D23	2	Black	C-4		Rear door speaker LH
D24	2	Green	C-4		Rear power window motor LH
D25	6	★	B-4		Rear power window sub switch LH
D26	4	★	B-4		Rear door lock actuator LH
D27	8	★	B-2	R14	Rear wiring harness
D29	2	Black	B-2		Rear door speaker RH
D30	2	Green	B-2		Rear power window motor RH
D31	6	★	B-2		Rear power window sub switch RH
D32	4	★	B-3		Rear door lock actuator RH
D50	2	★	C-3	B113	Bulkhead wiring harness
D61	10	★	C-3		Remote control rearview mirror switch
D62	6	Brown	B-2		Front door lock switch RH
D70	2	Gray	C-3		Keyless buzzer
D72	4	★	C-3		Front door lock actuator LH
★: Non-colored					

DOOR CORD

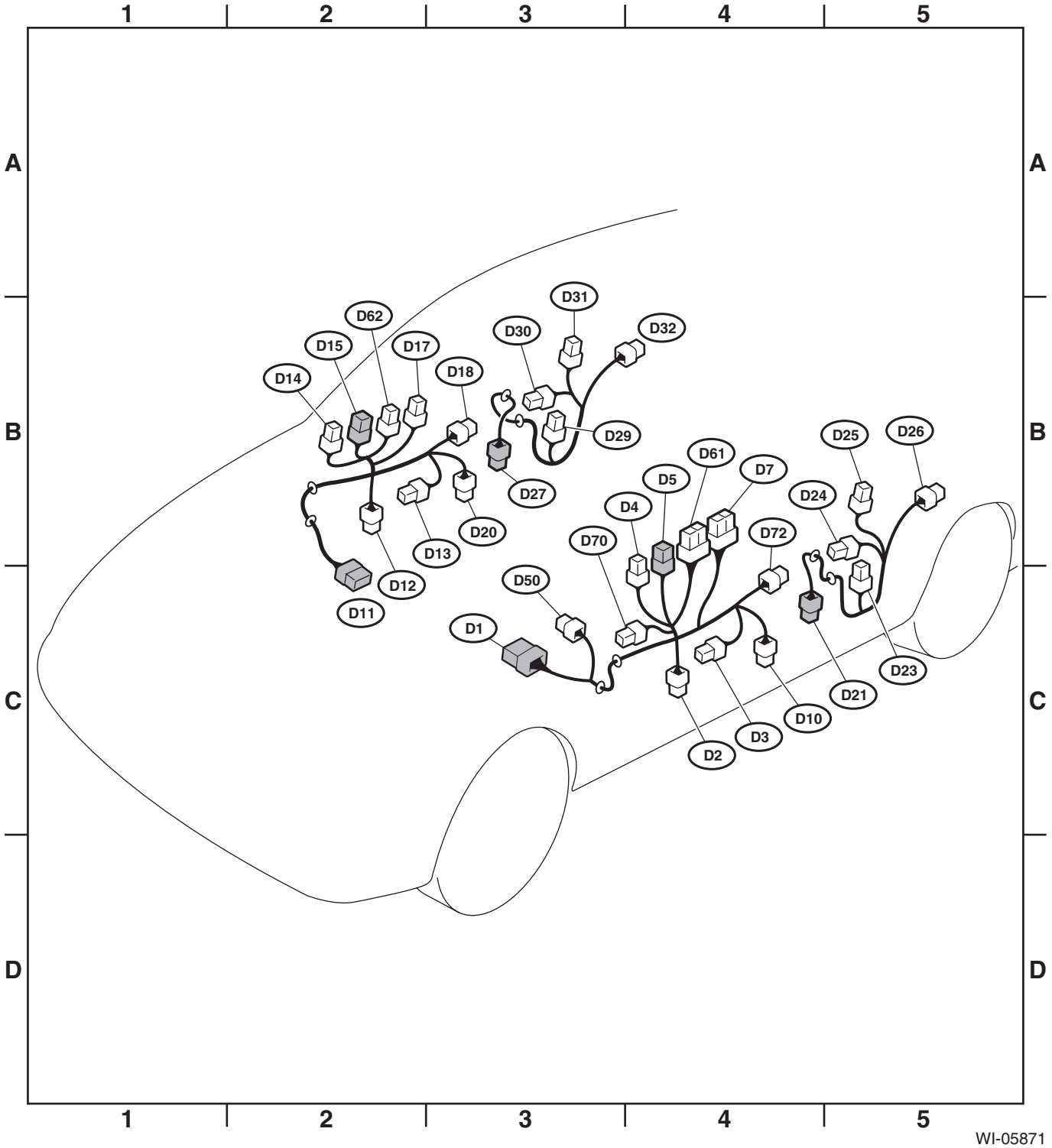
1
2
3
4
5
A
B
C
D
D31
D62
D30
D32
D15
D17
D18
D14
D29
D25
D26
D61
D7
D5
D27
D24
D4
D20
D70
D72
D13
D12
D50
D11
D1
D23
D21
D10
D3
D2
WI-05871

57.Rear Wiring Harness and Rear Tail Gate Cord

A: LOCATION

Connector				Connecting to	
No.	Pole	Color	Area	No.	Name
R15	6	Black	B-2	R57	Fuel tank cord
R17	1	★	B-4		Rear defogger (Power) (Without choke coil model)
R22	3	Black	B-3		Rear door switch LH
R26	6	★	C-3		Rear combination light RH
R28	6	★	C-1		Rear combination light LH
R46	2	★	C-2	R67	Fuel tank cord (With fuel pump control module model)
R47	3	★	C-3		Fuel tank pressure sensor
R57	6	★	B-3	R15	Rear wiring harness
R58	6	★	C-3		Fuel gauge module & fuel pump assembly
R59	2	★	C-3		Fuel gauge sub module
R62	2	★	C-3		Rear finisher light RH
R64	2	★	B-1		Rear finisher light LH
R67	2	★	B-2	R46	Rear wiring harness
R68	2	★	C-3		Pressure control solenoid valve
R69	2	★	C-4		Vent control solenoid valve
R76	2	★	C-2		License plate light LH
R77	2	★	C-2		License plate light RH
R79	2	★	C-4		Trailer connector
R97	2	★	B-4		Antenna amp.
R122	10	★	B-2		Fuel pump control module
R134	8	★	C-4	R135	On refueling vapor recovery cord
R135	8	★	C-4	R134	Rear wiring harness
R143	2	★	B-3		Drain valve
R144	2	★	C-4		Fuel tank sensor control valve
R150	16	★	C-4	R151	Rear wiring harness (Rear)
R151	16	★	B-4	R150	Rear wiring harness (Front)
R152	8	★	B-4	R153	Roof light cord
R153	8	★	B-4	R152	Rear wiring harness (Front)
R156	4	★	B-4		SPORT light
R158	2	★	B-3		Switch back gate latch switch
★: Non-colored					

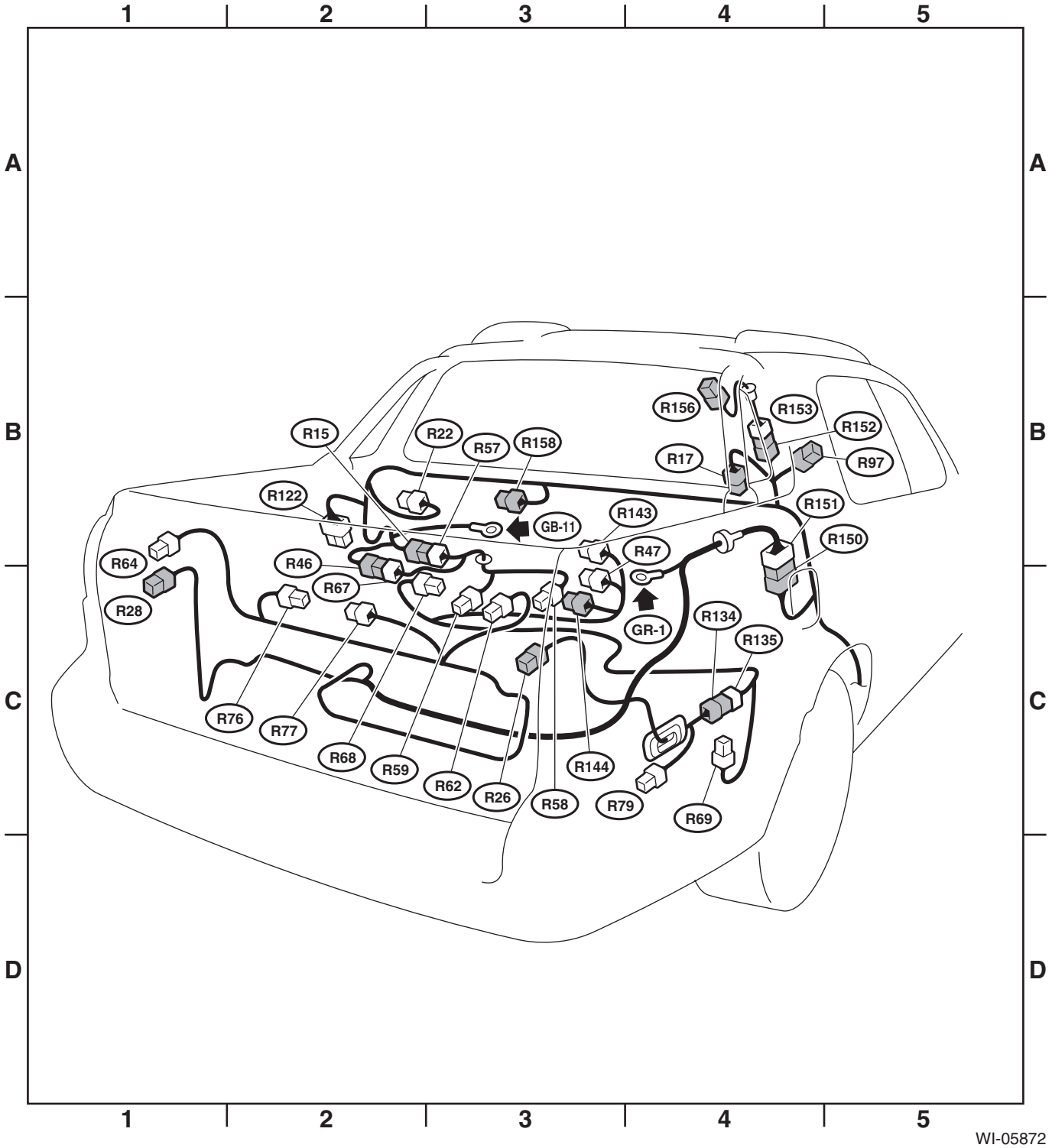
1
2
3
4
5
A
B
C
D
R156
R153
R152
R97
R15
R22
R57
R158
R17
R122
R143
R151
GB-11
R150
R64
R46
R47
R67
R28
R134
GR-1
R135
R76
R77
R68
R59
R62
R26
R144
R58
R79
R69
WI-05872

58.Harness Repair Kit

A: SPECIFICATION

1. ADAPTATION TABLE

Connector No.	Adaptive repair kit	Terminal No.	Harness repair kit No.
B3	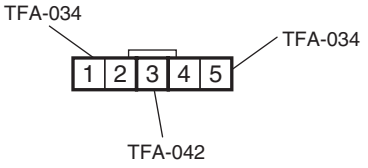 WI-06229	1, 2, 4, 5	TFA-034
		3	TFA-042
B8	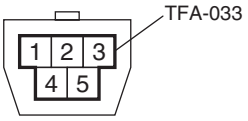 WI-06230	All	TFA-033
B11	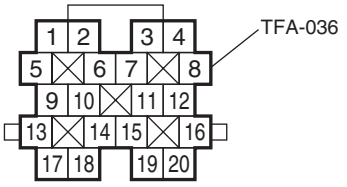 WI-06231	All	TFA-036
B12	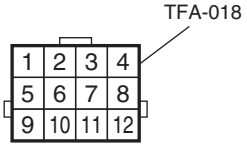 WI-06232	All	TFA-018

Connector No.	Adaptive repair kit	Terminal No.	Harness repair kit No.
B17	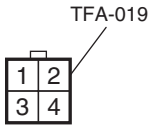 WI-06234	All	TFA-019
B18	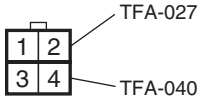 WI-06235	1, 2	TFA-027
		3, 4	TFA-040
B19 (NON-TURBO model)	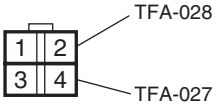 WI-06237	1, 2	TFA-028
		3, 4	TFA-027
B19 (TURBO model)	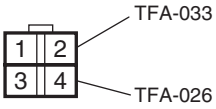 WI-06236	1, 2	TFA-033
		3, 4	TFA-026

HARNESS REPAIR KIT

Connector No.	Adaptive repair kit	Terminal No.	Harness repair kit No.
B20 (NON-TURBO model)	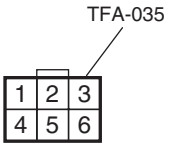 WI-06240	All	TFA-035
B20 (TURBO model)	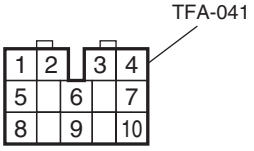 WI-06242	All	TFA-041
B21	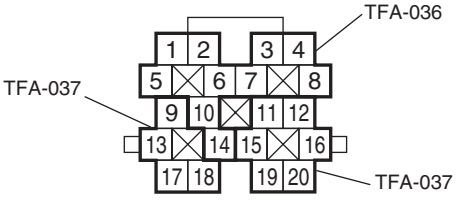 WI-06244	1 - 8, 10, 14	TFA-036
		9, 11 - 13, 15 - 20	TFA-037
B22	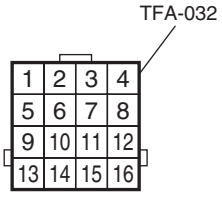 WI-06216	All	TFA-032

Connector No.	Adaptive repair kit	Terminal No.	Harness repair kit No.
B25	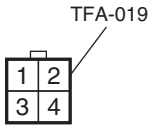 WI-06234	All	TFA-019
B54 (NON-TURBO model)	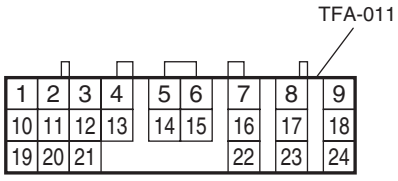 WI-06250	All	TFA-011
B54 (TURBO model)	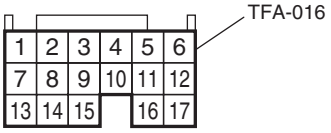 WI-06251	All	TFA-016
B55 (NON-TURBO model)	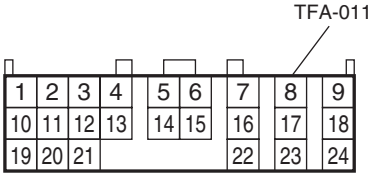 WI-06252	All	TFA-011

HARNESS REPAIR KIT

Connector No.	Adaptive repair kit	Terminal No.	Harness repair kit No.
B55 (TURBO model)	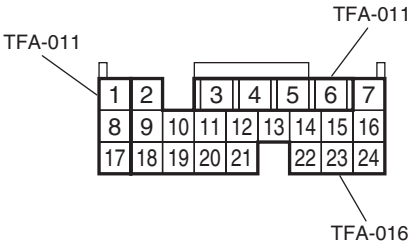 WI-06253	1, 3 - 6, 8, 17	TFA-011
		2, 7, 9 - 16, 18 - 24	TFA-016
B56 (NON-TURBO model)	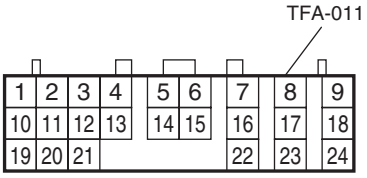 WI-06254	All	TFA-011
B56 (TURBO model)	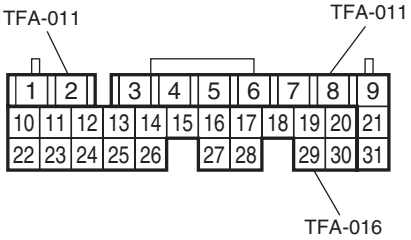 WI-06255	1 - 9, 21, 31	TFA-011
		10 - 20, 22 - 30	TFA-016
B127	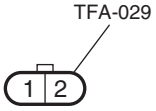 WI-06220	All	TFA-029

Connector No.	Adaptive repair kit	Terminal No.	Harness repair kit No.
B134 (NON-TURBO model)	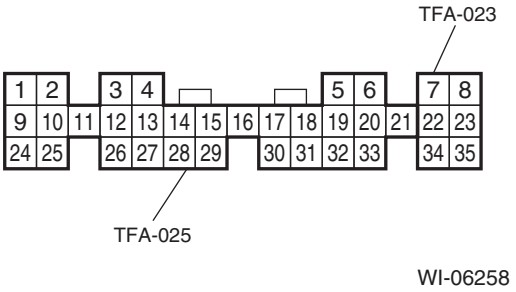	7, 8, 22, 23, 34, 35	TFA-023
		1 - 6, 9 - 21, 24 - 33	TFA-025
B134 (TURBO model)	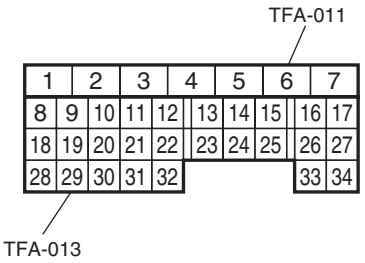	1 - 7	TFA-011
		8 - 34	TFA-013
B135 (NON-TURBO model)	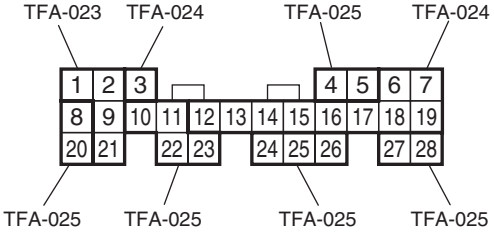	1, 2, 9, 21	TFA-023
		3, 6, 7, 12 - 19	TFA-024
		4, 5, 8, 10, 11, 20, 22 - 28	TFA-025
B135 (TURBO model)	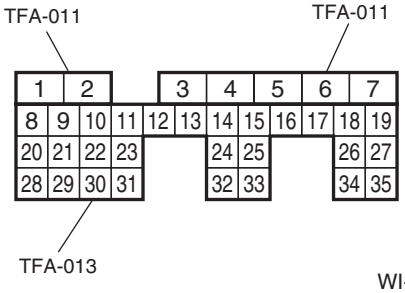	1 - 7	TFA-011
		8 - 35	TFA-013

HARNESS REPAIR KIT

Connector No.	Adaptive repair kit	Terminal No.	Harness repair kit No.
B136 (NON-TURBO model)	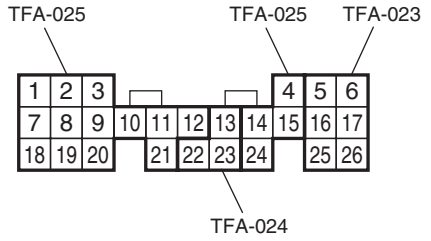 WI-06265	1 - 4, 7 - 12, 14, 15, 18 - 21, 24	TFA-025
		5, 6, 16, 17, 25, 26	TFA-023
		13, 22, 23	TFA-024
B136 (TURBO model)	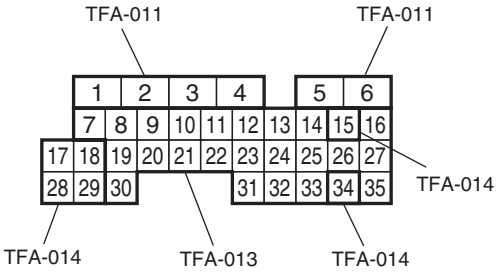 WI-06267	1 - 6	TFA-011
		7 - 14, 16, 19 - 27, 30 - 33, 35	TFA-013
		15, 17, 18, 28, 29, 34	TFA-014
B137 (NON-TURBO model)	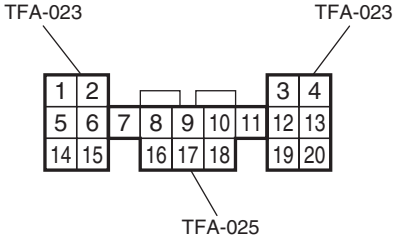 WI-06269	1 - 6, 12 - 15, 19, 20	TFA-023
		7 - 11, 16 - 18	TFA-025
B137 (TURBO model)	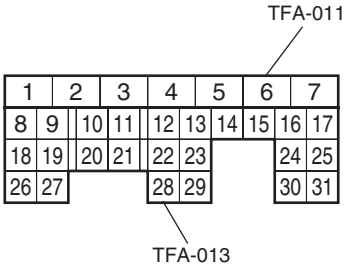 WI-06271	1 - 7	TFA-011
		8 - 31	TFA-013

Connector No.	Adaptive repair kit	Terminal No.	Harness repair kit No.
B279	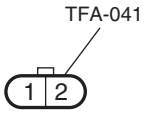 WI-06275	All	TFA-041
B280	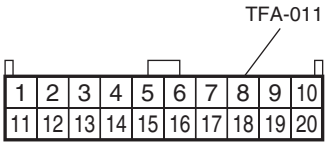 WI-06276	All	TFA-011
B317	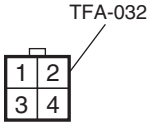 WI-06277	All	TFA-032
F3	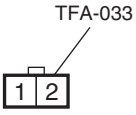 WI-06211	All	TFA-033

HARNESS REPAIR KIT

Connector No.	Adaptive repair kit	Terminal No.	Harness repair kit No.
F4	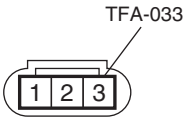 WI-06212	All	TFA-033
F7	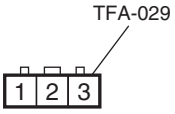 WI-06213	All	TFA-029
F19	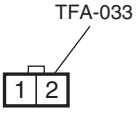 WI-06211	All	TFA-033
F22	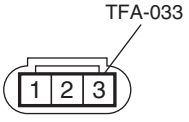 WI-06212	All	TFA-033

Connector No.	Adaptive repair kit	Terminal No.	Harness repair kit No.
F23	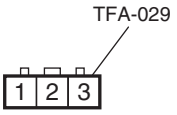 WI-06213	All	TFA-029
F25	WI-06214	All	TFA-018
F60	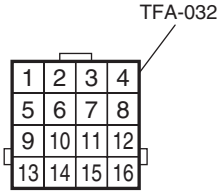 WI-06216	All	TFA-032
F61	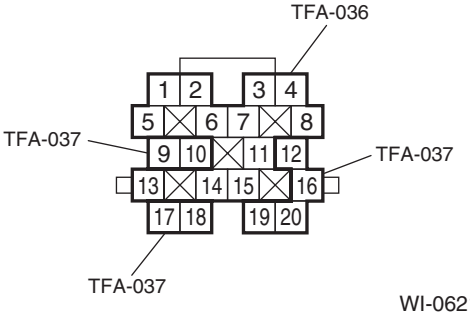 WI-06217	1 - 8, 11, 13 - 15	TFA-036
		9, 10, 12, 16 - 20	TFA-037

HARNESS REPAIR KIT

Connector No.	Adaptive repair kit	Terminal No.	Harness repair kit No.
R47	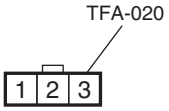 WI-06218	All	TFA-020
R58	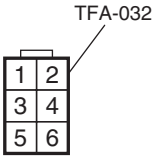 WI-06219	All	TFA-032
R59	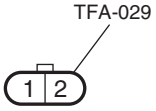 WI-06220	All	TFA-029
R68	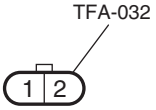 WI-06221	All	TFA-032

Connector No.	Adaptive repair kit	Terminal No.	Harness repair kit No.
R70	 WI-04703	All	TFA-012
R79	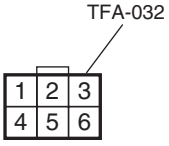 WI-06223	All	TFA-032
R122	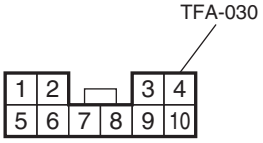 WI-06224	All	TFA-030
R135	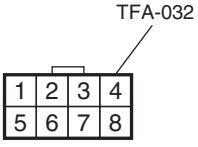 WI-06227	All	TFA-032

Connector No.	Adaptive repair kit	Terminal No.	Harness repair kit No.
R143	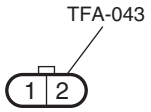 WI-06228	All	TFA-043
R144	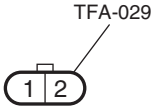 WI-06220	All	TFA-029