25.Front Fog Light System

A: WIRING DIAGRAM

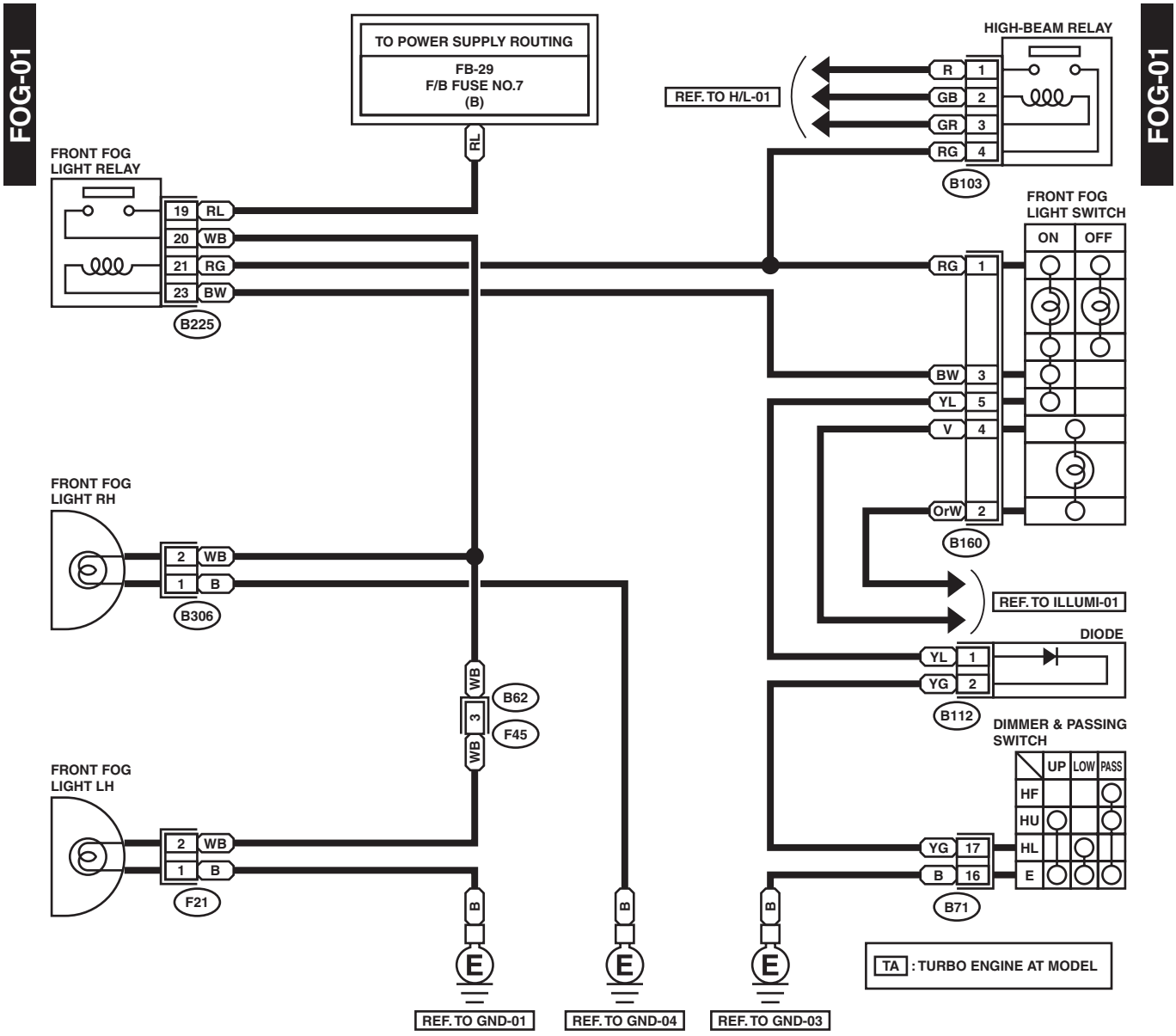

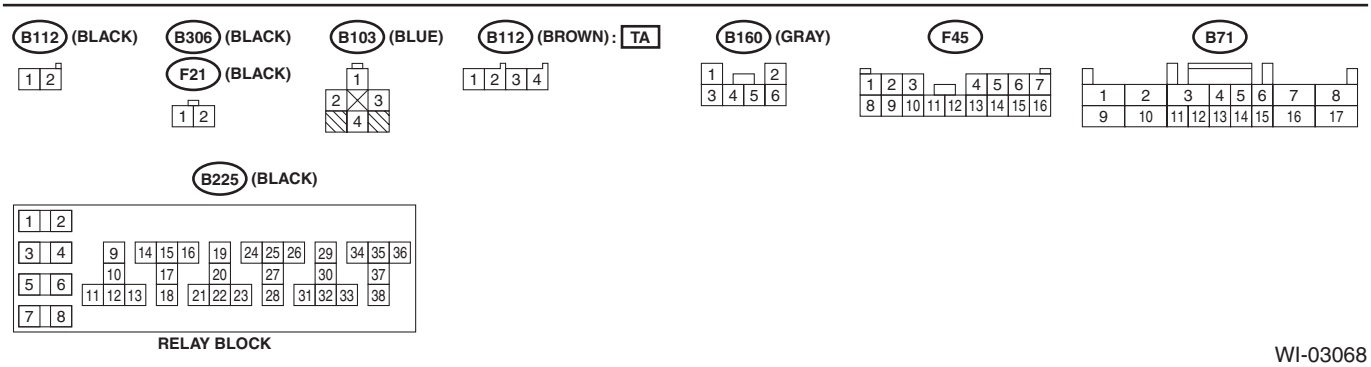

WI-03068