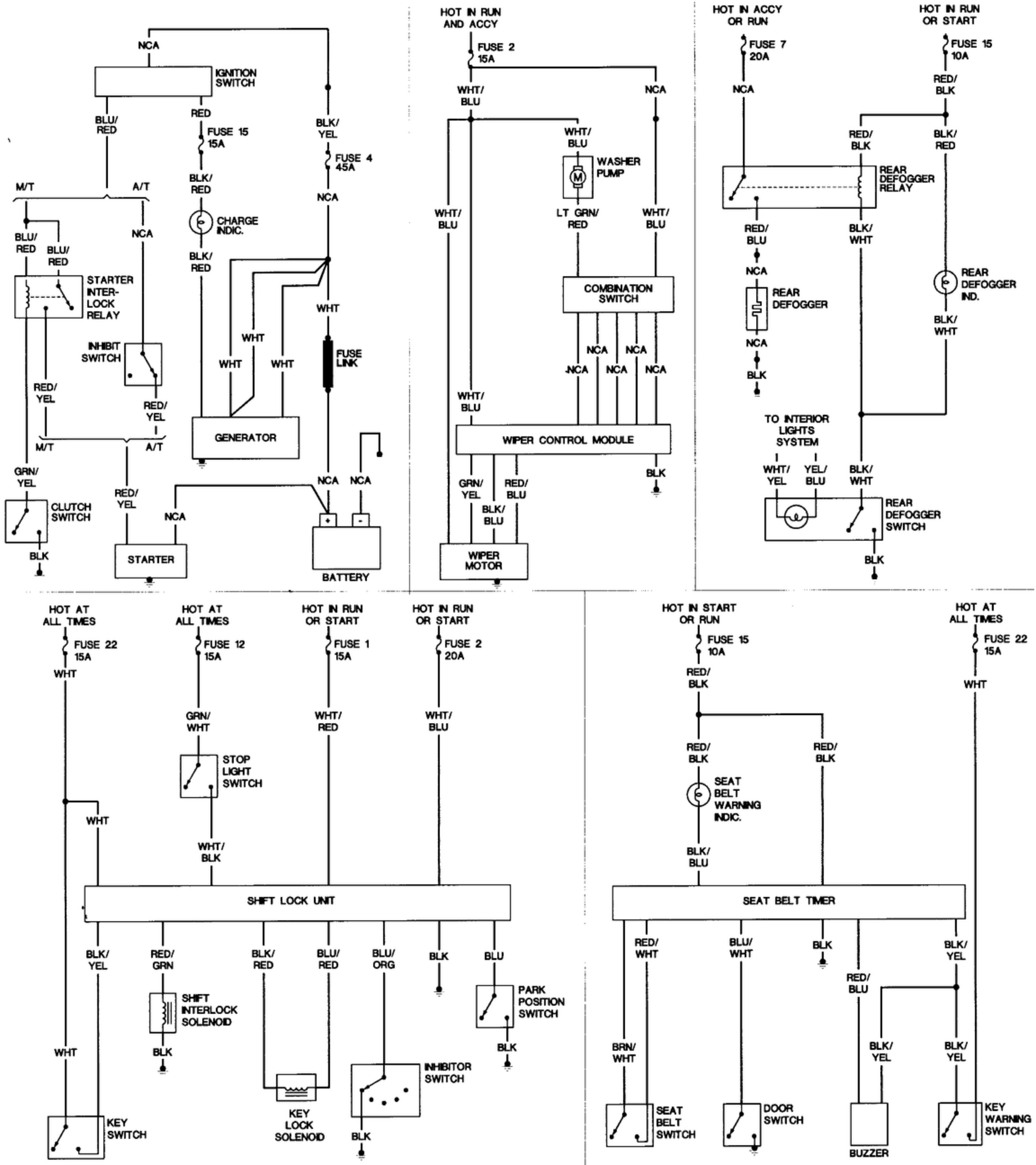
NCA
IGNITION SWITCH
BLU/ RED
RED
FUSE 15 15A
BLK/ YEL
FUSE 4 45A
BLK/ RED
NCA
M/T
A/T
CHARGE INDIC.
BLU/ RED
BLU/ RED
NCA
BLK/ RED
STARTER INTER-LOCK RELAY
WHT
INHIBIT SWITCH
WHT
WHT
WHT
FUSE LINK
RED/ YEL
RED/ YEL
GENERATOR
M/T
A/T
GRN/ YEL
NCA
NCA
CLUTCH SWITCH
RED/ YEL
NCA
BLK
STARTER
BATTERY
HOT IN RUN AND ACCY
FUSE 2 15A
WHT/ BLU
NCA
WHT/ BLU
WASHER PUMP
WHT/ BLU
LT GRN/ RED
WHT/ BLU
COMBINATION SWITCH
NCA
NCA
NCA
NCA
NCA
WHT/ BLU
WIPER CONTROL MODULE
BLK
GRN/ YEL
RED/ BLU
BLK/ BLU
WIPER MOTOR
HOT IN ACCY OR RUN
FUSE 7 20A
NCA
HOT IN RUN OR START
FUSE 15 10A
RED/ BLK
RED/ BLK
BLK/ RED
REAR DEFOGGER RELAY
RED/ BLU
BLK/ WHT
NCA
REAR DEFOGGER
NCA
BLK
REAR DEFOGGER IND.
BLK/ WHT
TO INTERIOR LIGHTS SYSTEM
WHT/ YEL
YEL/ BLU
BLK/ WHT
REAR DEFOGGER SWITCH
BLK
HOT AT ALL TIMES
FUSE 22 15A
WHT
HOT AT ALL TIMES
FUSE 12 15A
GRN/ WHT
HOT IN RUN OR START
FUSE 1 15A
WHT/ RED
HOT IN RUN OR START
FUSE 2 20A
WHT/ BLU
STOP LIGHT SWITCH
WHT
WHT/ BLK
SHIFT LOCK UNIT
BLK/ YEL
RED/ GRN
BLK/ RED
BLU/ RED
BLU/ ORG
BLK
BLU
SHIFT INTERLOCK SOLENOID
BLK
PARK POSITION SWITCH
BLK
WHT
INHIBITOR SWITCH
KEY LOCK SOLENOID
BLK
KEY SWITCH
HOT IN START OR RUN
FUSE 15 10A
RED/ BLK
RED/ BLK
RED/ BLK
SEAT BELT WARNING INDIC.
BLK/ BLU
HOT AT ALL TIMES
FUSE 22 15A
WHT
SEAT BELT TIMER
RED/ WHT
BLU/ WHT
BLK
BLK/ YEL
RED/ BLU
BRN/ WHT
BLK/ YEL
BLK/ YEL
SEAT BELT SWITCH
DOOR SWITCH
BUZZER
KEY WARNING SWITCH