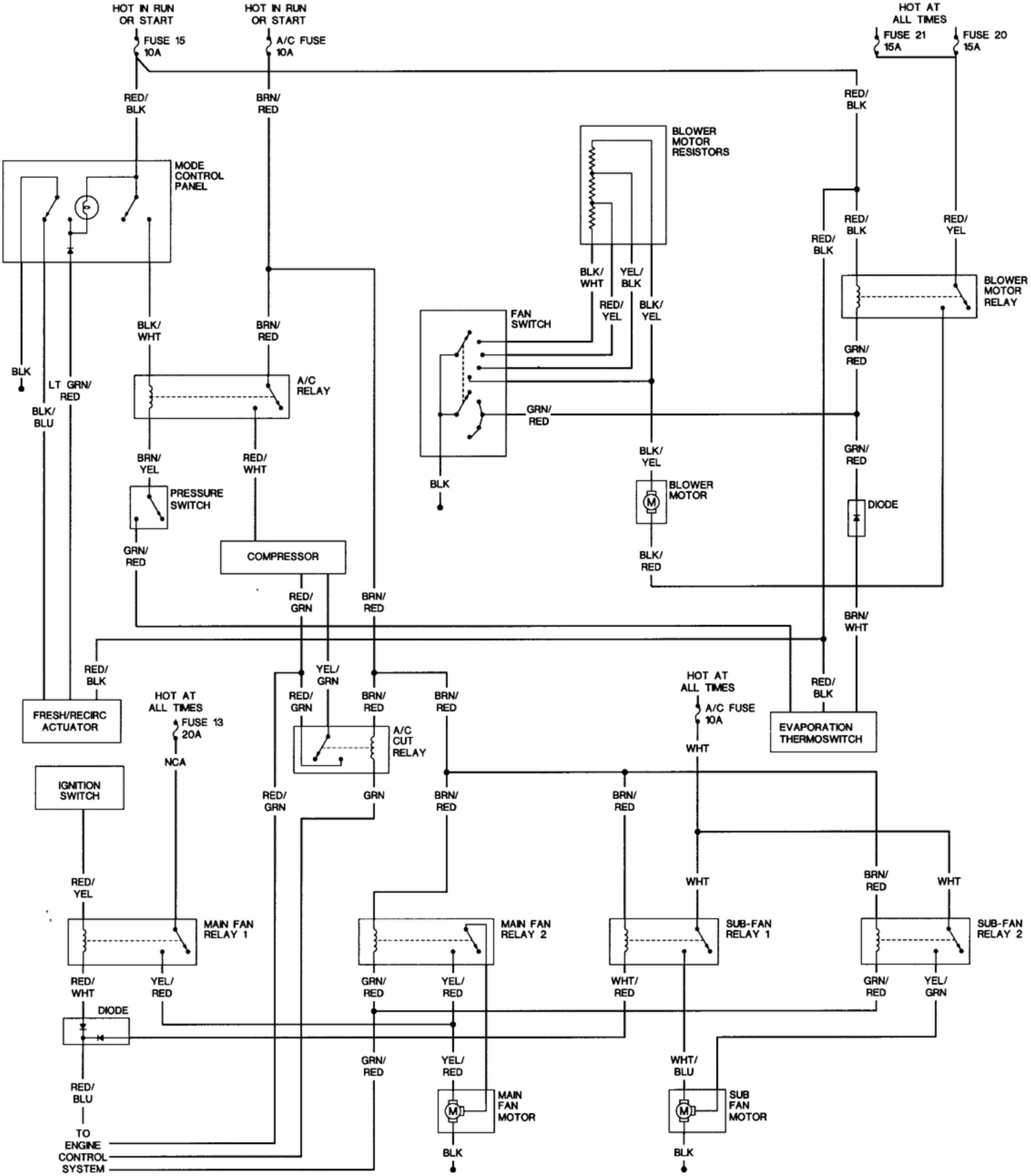
HOT IN RUN OR START
FUSE 15 10A
HOT IN RUN OR START
A/C FUSE 10A
HOT AT ALL TIMES
FUSE 21 15A
FUSE 20 15A
RED/ BLK
BRN/ RED
RED/ BLK
MODE CONTROL PANEL
BLOWER MOTOR RESISTORS
RED/ BLK
RED/ BLK
RED/ YEL
BLK/ WHT
YEL/ BLK
RED/ YEL
BLK/ YEL
BLOWER MOTOR RELAY
FAN SWITCH
BLK/ WHT
BRN/ RED
BLK
LT GRN/ RED
BLK/ BLU
A/C RELAY
GRN/ RED
GRN/ RED
GRN/ RED
BRN/ YEL
RED/ WHT
BLK/ YEL
BLK
PRESSURE SWITCH
BLOWER MOTOR
DIODE
GRN/ RED
COMPRESSOR
BLK/ RED
RED/ GRN
BRN/ RED
BRN/ WHT
RED/ BLK
YEL/ GRN
HOT AT ALL TIMES
RED/ GRN
BRN/ RED
BRN/ RED
HOT AT ALL TIMES
A/C FUSE 10A
RED/ BLK
FRESH/RECIRC ACTUATOR
FUSE 13 20A
A/C CUT RELAY
WHT
EVAPORATION THERMOSWITCH
NCA
IGNITION SWITCH
RED/ GRN
GRN
BRN/ RED
BRN/ RED
RED/ YEL
WHT
BRN/ RED
WHT
MAIN FAN RELAY 1
MAIN FAN RELAY 2
SUB-FAN RELAY 1
SUB-FAN RELAY 2
RED/ WHT
YEL/ RED
GRN/ RED
YEL/ RED
WHT/ RED
GRN/ RED
YEL/ GRN
DIODE
GRN/ RED
YEL/ RED
WHT/ BLU
RED/ BLU
MAIN FAN MOTOR
SUB FAN MOTOR
TO ENGINE CONTROL SYSTEM
BLK
BLK