SECTION CL

CONTENTS

PRECAUTIONS AND PREPARATION
Precaution 2
Preparation 3
CLUTCH PEDAL
On-Vehicle Inspection and Adjustment 4
Clutch Switch Position Adjustment 4
Freeplay Inspection 5
Pedal Height Inspection 5
Removal • Installation 5
CLUTCH FLUID
Air Bleeding 6
CLUTCH MASTER CYLINDER
Removal • Installation 7
Disassembly • Assembly 8
OPERATING CYLINDER
Removal • Installation 9
Disassembly • Assembly 9
CLUTCH PIPE
Removal • Installation 10
CLUTCH RELEASE MECHANISM
Removal • Installation 11
CLUTCH DISC, CLUTCH COVER & FLYWHEEL
Removal • Installation 14
Clutch Cover 15
Flywheel Runout 15
SERVICE DATA
Clutch Pedal 16
Clutch Disc 16
Clutch Cover 16

Precaution

Caution

- Use the brake fluid and “DOT3” or “DOT4” for the clutch fluid.
- Do not apply the brake fluid to the component. If applied, immediately wipe it out and clean with water.
- Use a clean brake fluid when cleaning the components such as master cylinder and operating cylinder.
- The use of gasoline or refined oil when cleaning the rubber may deform the rubber characteristics and cause defective operation. Avoid using them.
- Use the pipe nut torque wrench for clutch tube installation.
- When inspecting the clearance between the dash panel clutch pedal, remove the floor carpet before inspection.

Preparation

Special Service Tools

Item	Description	
Diaphragm spring adjusting wrench ST20050240	 ZZA0508D_D1	Clutch cover inspection
Clutch aligning bar ST20610000	 ZZA1178D_D1	Installing clutch disc

Clutch Pedal

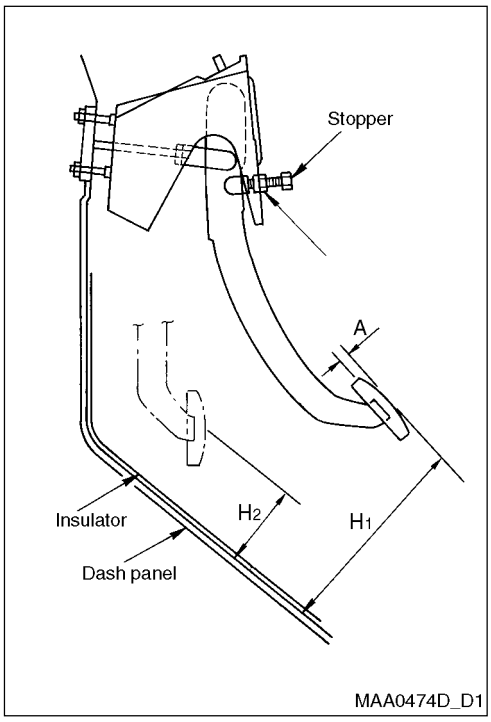

On-Vehicle Inspection and Adjustment

HEIGHT ADJUSTMENT

1. Inspect if the clutch pedal height H1 falls under the standard value from the dash panel.

   Pedal height H1: 155 - 166 mm

2. When the pedal height is out of the standard value, loosen the stopper bolt lock nut B and adjust using the stopper bolt.
3. Adjust the pedal height to the standard value and tighten the stopper bolt lock nut B to the specified torque.

   Tightening torque: 16 - 21 N•m (1.6 - 2.2 kgf-m)

4. Inspect if the freeplay A, from the pedal pad surface, and clutch pedal height H2, when disengaged, falls under the standard value.

   Pedal freepaly A: 9 - 16 mm

   (Clevis pin clearance: 1.0 - 3.0 mm)

   Pedal height H2 when disengaged: More than 86 mm

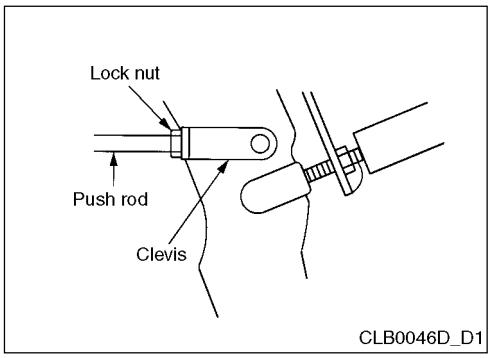

5. When the freeplay A and pedal height H2 are out of the standard value, loosen the lock nut A and adjust by rotating the pushrod.

CAUTION:

- **The threads on the pushrod end should be inside of the clevis.**

6. Tighten the lock nut A to specified torque.

   Tightening torque: 0.8 - 1.1 kgf-m

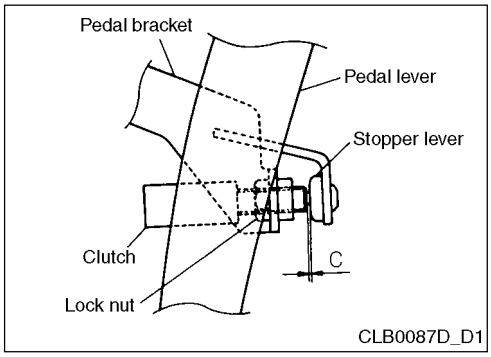

Clutch Switch Position Adjustment

- Adjust the switch position so that the gap between the stopper rubber and clutch switch end becomes gap C while pedal is fully depressed, then tighten the lock nut D.

  Gap C: 0.1 - 1.0 mm

  Tightening torque: 12 - 14 N•m (1.2 - 1.5 kgf-m)

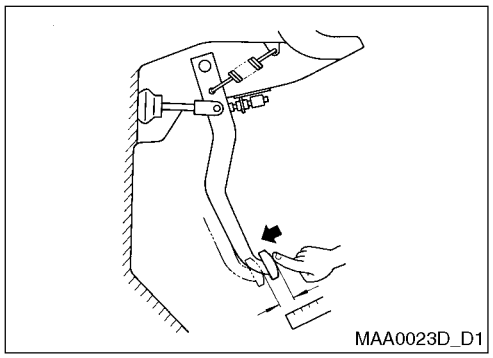

FREEPLAY INSPECTION

- Push the clutch pedal with hand to the resistance and visually inspect if the freeplay falls within the specified value.

  Pedal freeplay: 9 - 16 mm

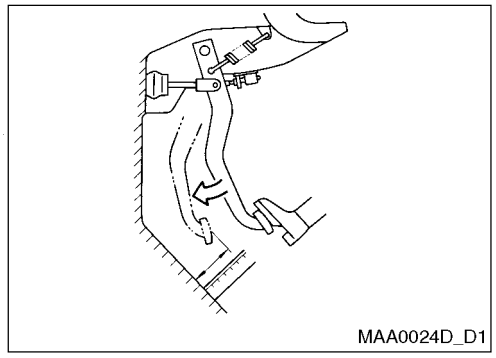

PEDAL HEIGHT INSPECTION

1. Start the engine and stay at idle.
2. Apply the parking brake.
3. Depress the brake pedal.
4. Fully depress the clutch pedal and shift into 1st gear.
5. Visually inspect if the distance between the pedal and dash panel falls within the specified value by slowly releasing the clutch pedal until the clutch starts to engage.

   Pedal height when disengaged: More than 86 mm

REFERENCE:

- **The pedal height while clutch is disengaged and engaged is slightly different. But for the convenience of inspection, let engaged point be the disengaged point.**

Removal • Installation

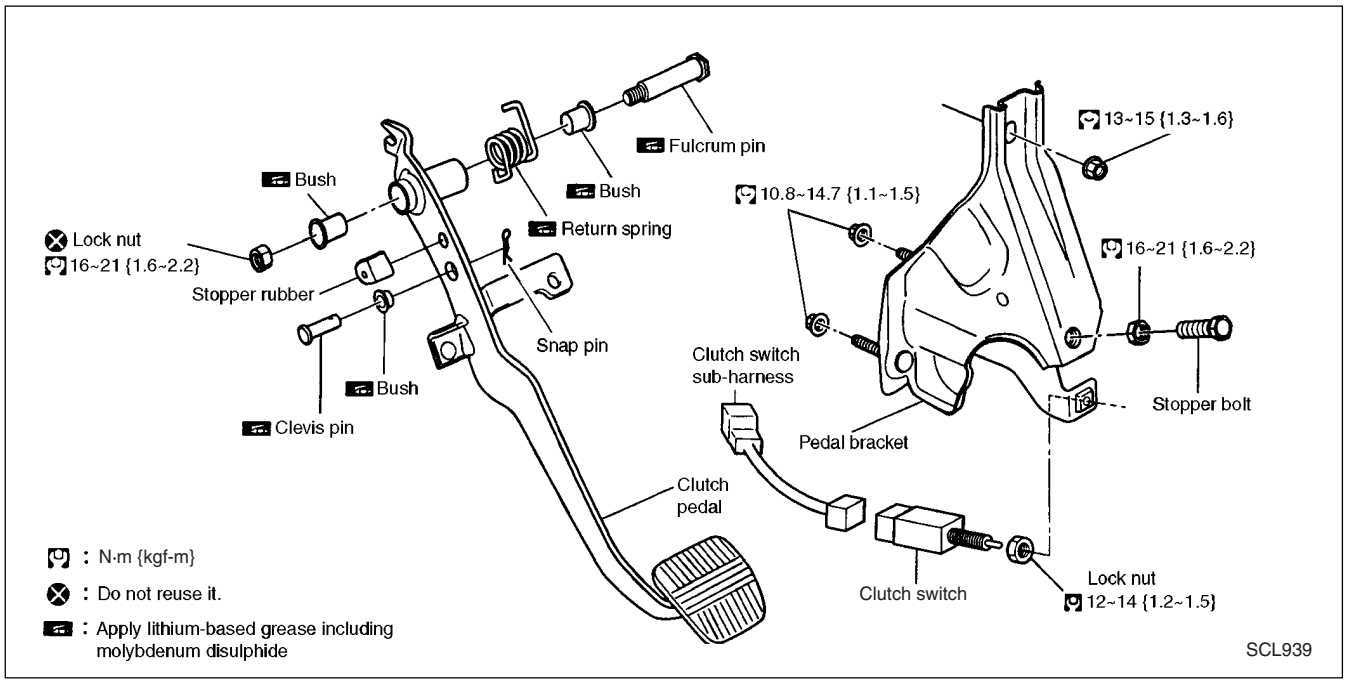

REFERENCE:

- **Tighten the stopper bolt to the specified torque after installing the clutch pedal assembly to the vehicle and adjusting the height.**

INSPECTION AFTER REMOVAL

- Inspect for any bending, damage or welding point splitting in the clutch pedal and replace if any damages.
- Inspect the wear in the return spring and replace if necessary.

Clutch Fluid

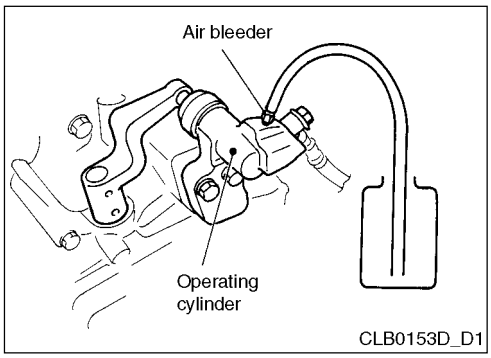

Air Bleeding

CAUTION:

- **Be careful not to empty the brake fluid in the reservoir tank.**
- **Be careful not to stain the brake fluid in vehicle surface. If stained, wipe out immediately and wash out.**
- **Use the operating cylinder to bleed air.**

1. Fill the brake fluid.
2. Connect the transparent vinyl hose to the air bleeder.
3. Depress the clutch pedal with full stroke and release the clutch pedal. Repeat it several times with 2 - 3 seconds of interval.
4. Open the air bleeder while depressing the clutch pedal.
5. Close the air bleeder.
6. Release the clutch pedal and wait about 5 seconds.
7. Repeat the steps 3 to 6 until air is released in the clutch fluid.

   Air bleeder tightening torque:

   5.9 - 9.8 N•m (0.6 - 1.0 kgf-m)

Clutch Master Cylinder

Removal • Installation

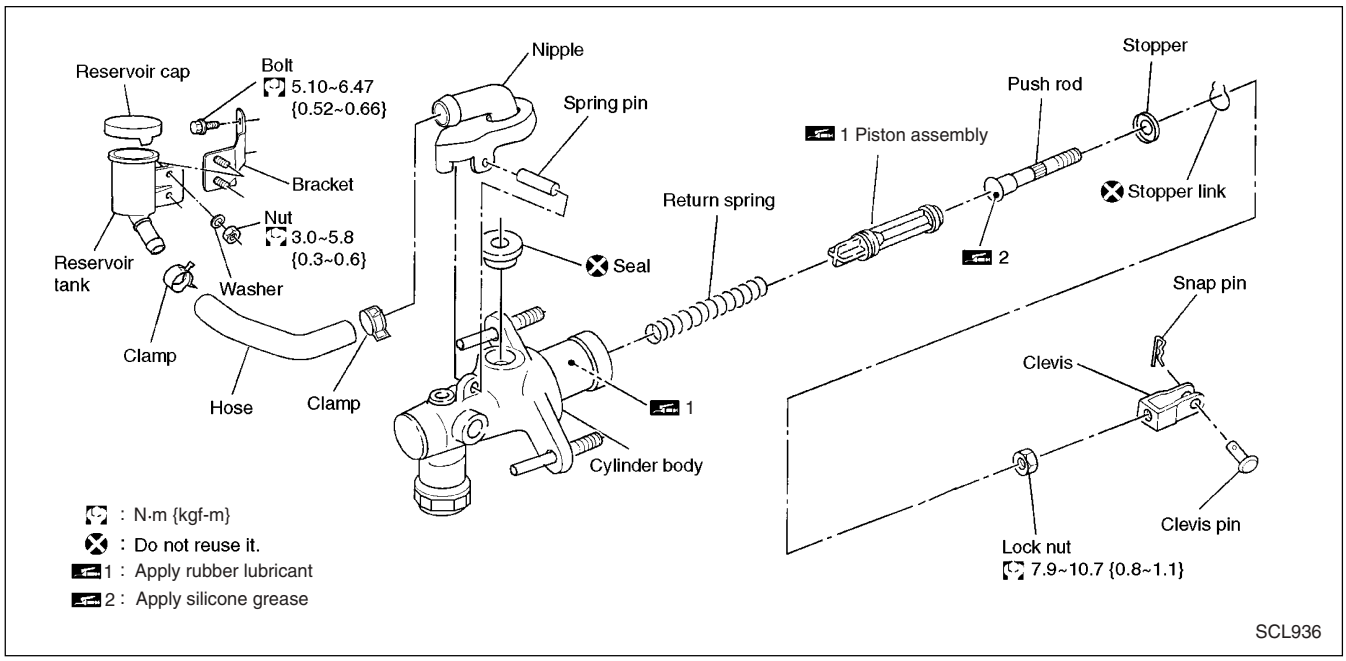

REMOVAL

1. Remove the brake fluid in the reservoir tank.

CAUTION:

- **Be careful not to stain the brake fluid at the vehicle surface. If stained, immediately wipe it out and clean with water.**

2. Remove the clutch tube using the pipe nut wrench.
3. Remove the clevis pin and snap pin on the clevis from the vehicle inside and separate it from the clutch pedal.
4. Remove the master cylinder assembly mounting nut and reservoir tank bracket mounting bolts and remove the master assembly from the vehicle.

INSTALLATION

1. Install the clutch nut to the master cylinder and temporarily tighten the flare nut.
2. Install the master cylinder and reservoir tank bracket to the vehicle and tighten the mounting nuts and bolts to the specified torque.
3. Tighten the clutch tube to the specified torque using the pipe nut wrench.
4. Connect the clevis to the clutch pedal and install the clevis pin.
5. Install the snap pin to the clevis pin.
6. After installation, inspect and adjust the pedal height and bleed air from the clutch tube.
   - Refer to “On-Vehicle Inspection and Adjustment” (CL-4) and “Air Bleeding” (CL-6).

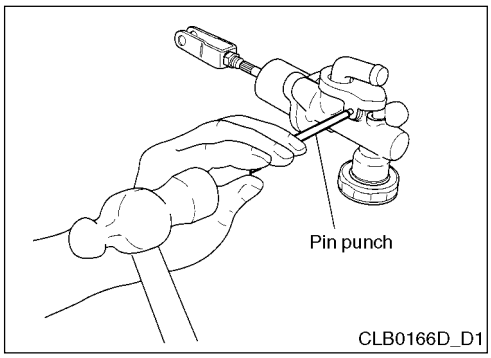

Disassembly • Assembly

DISASSEMBLY

1. Remove the spring pin using the long pin punch (commercial tool) and remove the nipple and seal from the cylinder body.
2. Loosen the pushrod lock nut and remove the clevis and lock nut.
3. Remove the stopper ring and stopper and disassembly the push rod from the cylinder body. The piston may bounce out from the master cylinder. So perform the disassembly while pressing the pushrod.
4. Disassemble the piston assembly and return spring from the cylinder body.

INSPECTION AFTER DISASSEMBLY

Inspect the following items and replace if necessary.

- Damage at cylinder inner walls, foreign particles insertion, wear, rust and pinhole.
- Damage or deformation in the nipple and reservoir tank.
- Spring wear.

ASSEMBLY

1. Apply the lubricant at the cylinder body inner, piston assembly moving sections and piston cup. Insert the piston assembly and return spring to the cylinder body.
2. Apply the silicon grease to the pushrod and install the pushrod. Install the stopper ring by pressing so that the piston assembly does not come out.
3. Install the clevis to the pushrod and tighten the lock nut to the specified torque.
4. Install the seal and nipple to the cylinder body and install the spring pin using the pin punch.

Operating Cylinder

Removal • Installation

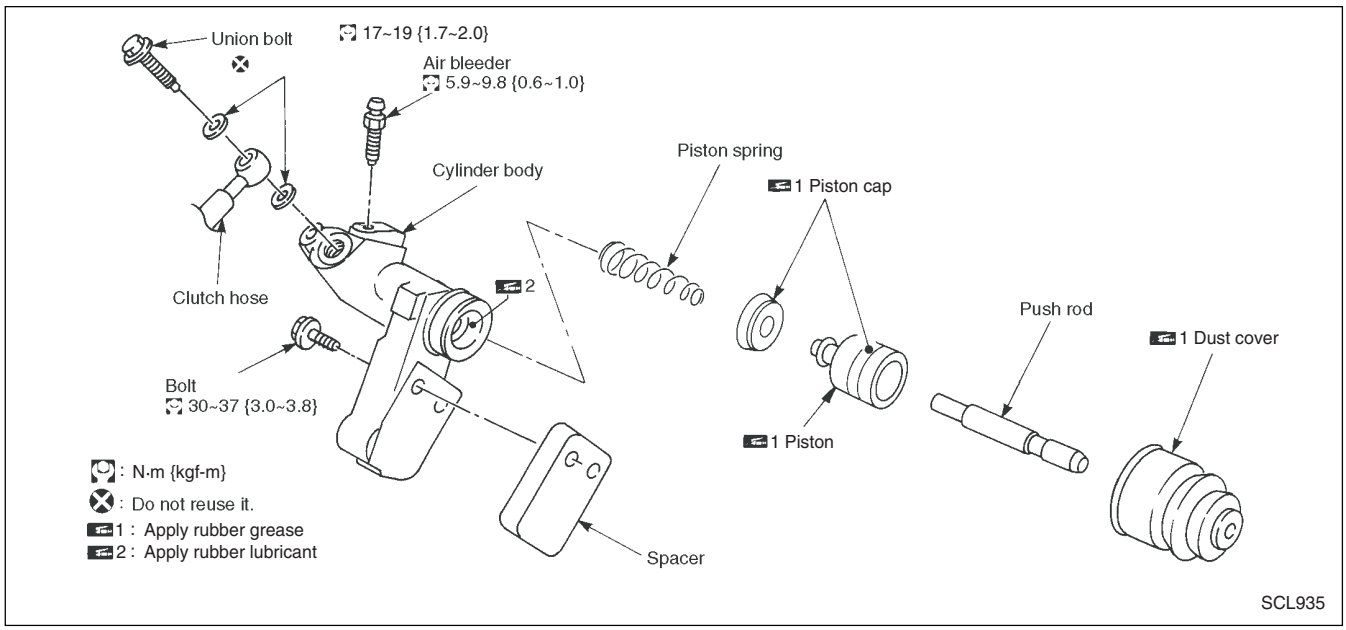

REMOVAL

1. Remove the brake fluid.

CAUTION:

- **Be careful not to stain the brake fluid at the vehicle surface. If stained, immediately wipe it out and clean with water.**

2. Disconnect the clutch hose from the operating cylinder.
3. Remove the mounting bolts from the operating cylinder and remove the operating cylinder and the spacer from the vehicle.

INSTALLATION

Install in the reverse order of removal by cautioning as below.

- Install the hose without twists or disconnections.
- After service, perform the air bleeding for the clutch tube.
  Refer to "Air Bleeding" (CL-6).

Disassembly • Assembly

DISASSEMBLY

- Remove the dust cover and push rod. Disassemble the piston, piston cup and piston spring from the cylinder body.

INSPECTION AFTER REMOVAL

Inspect the below items and replace if necessary.

- Damage at cylinder inner walls, foreign particles insertion, wear, rust and pinhole.
- Spring wear.
- Crack or deformation of dust cover.

ASSEMBLY

1. Apply the lubricant on the cylinder body inner and rubber grease on the piston cup and piston, and insert the piston assembly to the cylinder body.
2. Apply the rubber grease to the dust cover and install the pushrod and dust cover.

Clutch Pipe

Removal • Installation

Perform the tube removal/installation cautioning below items.

- Be careful not to stain the brake fluid in vehicle surface. If stained, immediately wipe it out and clean with water.
- Install the hose without twists or disconnections. Also, be careful not to damage the clutch hose.
- Tighten the clutch tube flare nut to the specified torque.

  Tightening torque: 14.7 - 17.64 N•m (1.5 - 1.8 kgf-m)

- Tighten the clutch hose union bolt to the specified torque.

  Tightening torque: 16.7 - 19. 6 N•m (1.7 - 2.0 kgf-m)

- After service, perform the air bleeding for the clutch tube.

  Refer to “Air Bleeding” (CL-6).

Clutch Release Mechanism

Removal • Installation

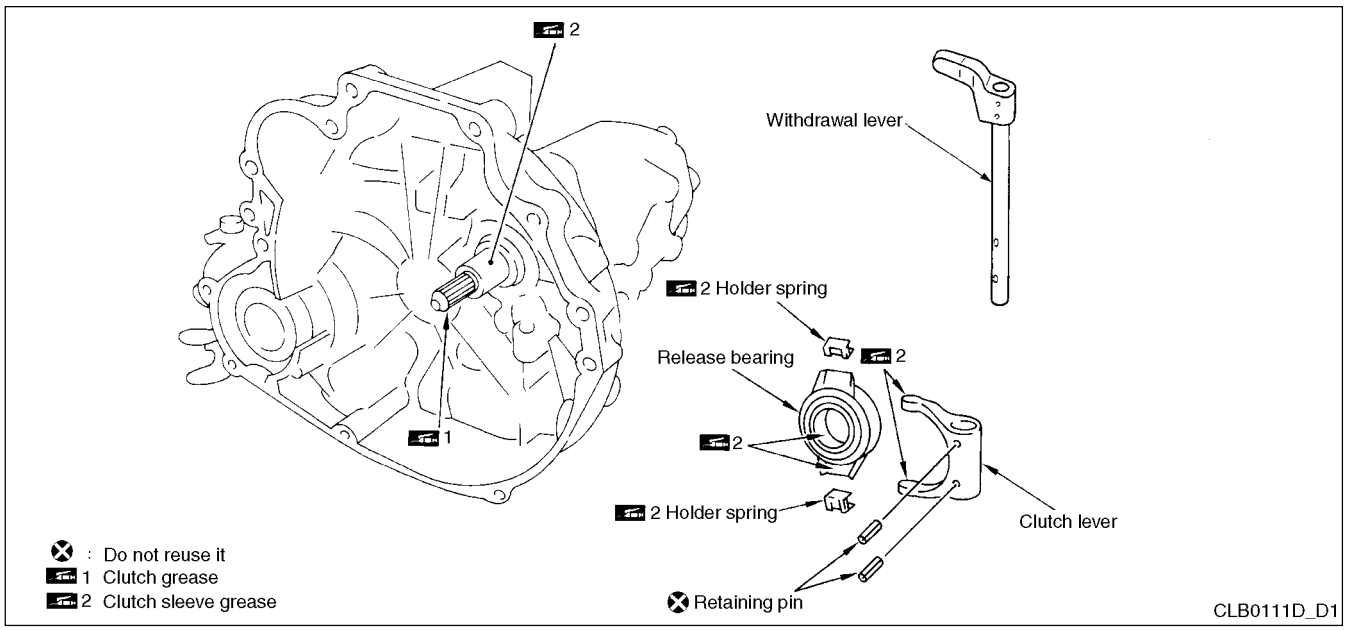

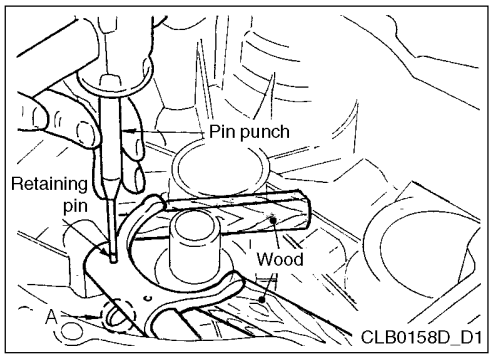

REMOVAL

1. Remove the manual transaxle from the vehicle.
   - Refer to "Removal • Installation" (MT-8).
2. Operate the withdrawal lever at the location the release bearing was disconnected and remove the release bearing from the clutch lever.
3. Place a wood at the end of the clutch lever. Adjust the retaining pin location as shown in the illustration and remove the retaining pin using the pin punch.
4. Separate the withdrawal lever and remove the clutch lever.

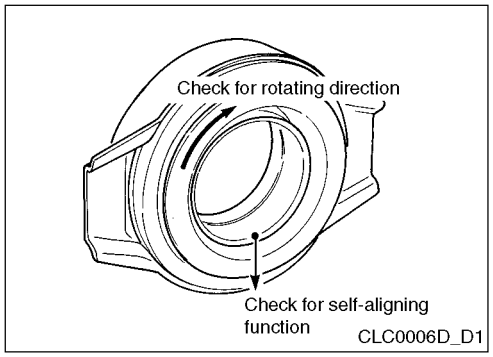

INSPECTION AFTER REMOVAL

- Inspect the release bearing for stick, damage, bad rotation and self-aligning function. Replace if necessary.
- Replace the withdrawal lever if the surface has worn.
- Replace the clutch lever if the contacting surface has worn.

INSTALLATION

CAUTION:

- **Strange noise, bad disengagement and clutch damage may occur if grease is not applied. Be sure to apply it. If too much grease is applied, it may become slippery and may cause vibration. Wipe out the excessive grease.**

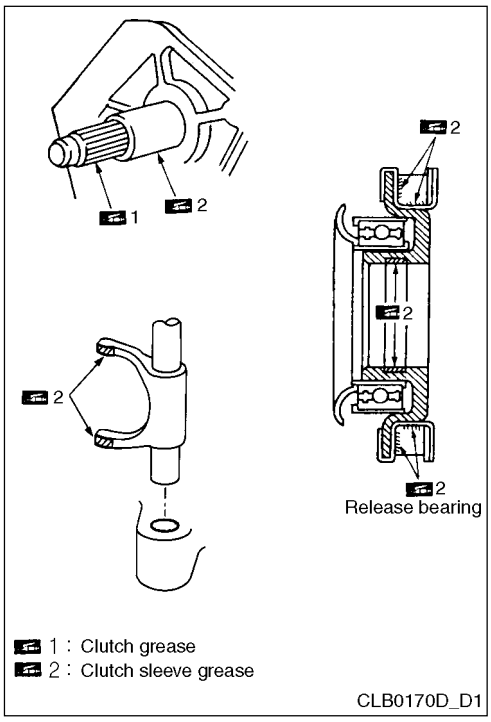

- Be careful not to stain fluid at the clutch disc face, pressure plate surface and flywheel surface.

1. Apply grease at locations specified below.

CAUTION:

- **Wipe out all grease and worn particles in the surfaces to apply the grease.**

  - Apply the clutch spring grease at the clutch lever and holder spring's moving surfaces for about 1 mm thickness.
  - Apply the clutch sleeve grease at the release bearing inner groove.
  - Lightly apply the clutch sleeve grease at the release bearing's moving surfaces and attach the release bearing. Wipe out the used grease and remove the release bearing.

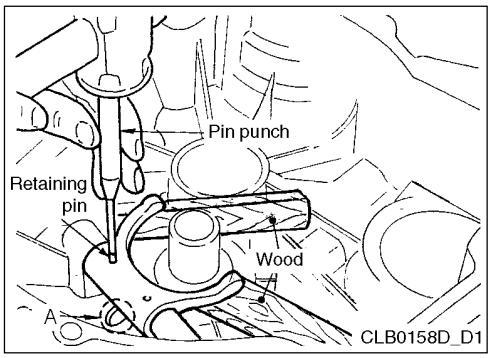

2. Install the clutch lever to the clutch housing and insert the withdrawal lever.
3. Place a wood at the end of the clutch lever. Insert the retaining pin using a pin punch.

CAUTION:

- **The retaining pin cannot be reused. Do not reuse.**

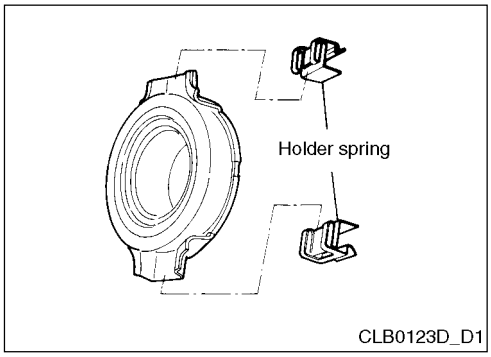

4. Assembly the holder spring to the release bearing as in the illustration.

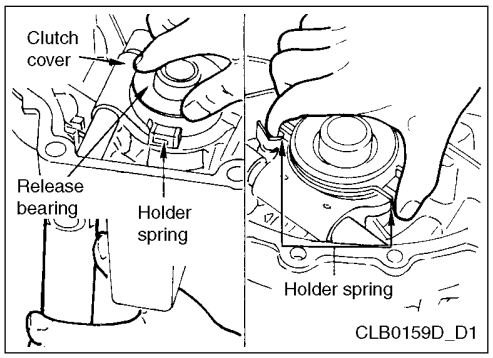

5. Operate the withdrawal lever with hand and press the holder spring at both sides, then assembly the release bearing to the clutch lever.

CAUTION:

- **Check for a "click" sound when pressing the holder spring at both sides.**

6. Move the withdrawal lever and check if each moving parts are moving smoothly.

CAUTION:

- **Wipe out the excessive grease.**

7. Install the manual transaxle.
   Refer to "Removal • Installation" (MT-8).

Clutch Disc, Clutch Cover & Flywheel

Removal • Installation

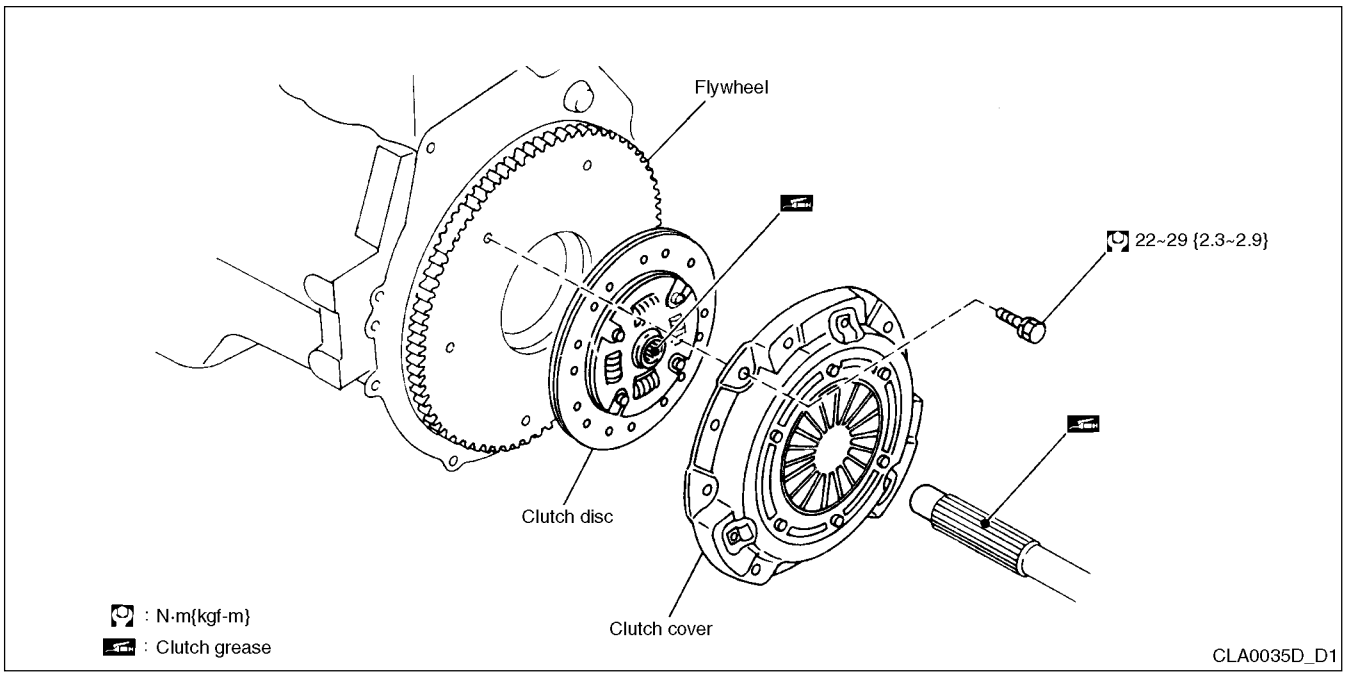

CAUTION:

- **Be careful not to stain any fluid at the clutch disc face, pressure plate and flywheel surface.**

REMOVAL

1. Remove the manual transaxle from the vehicle.
   - Refer to “Removal • Installation” (MT-8).
2. Loosen the clutch cover mounting bolts evenly and remove the clutch cover and clutch disc.

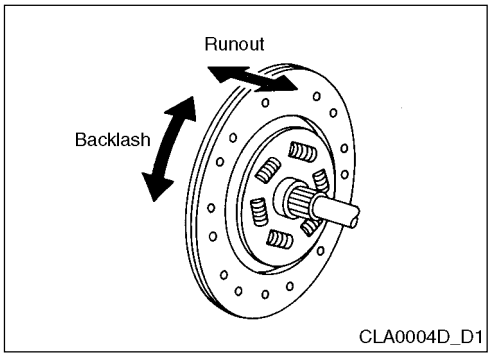

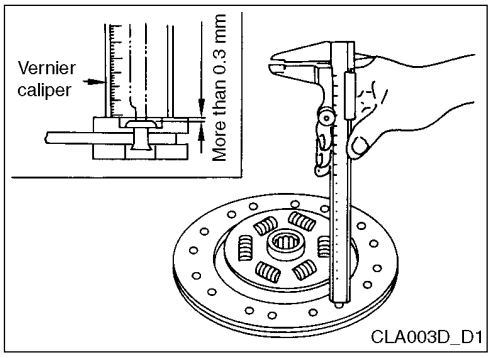

INSPECTION, ADJUSTMENT AFTER REMOVAL

Clutch Disc

- Measure the clutch disc outer runout against the center of the spline. Replace if out of the standard value.

  Runout limit/Measuring radius:
  Less than 1.0 mm/ϕ 190 mm (R95)

- Measure the backlash on the clutch disc spline and input shaft spline from the outside of the disc and replace if out of the standard value.

  Max. spline backlash: 0.8 mm

- Measure the depth between the clutch disc facing and rivet head using a vernier caliper and replace if measured value is out of the standard.

  Wear limit between the facing and rivet head: 0.3 mm

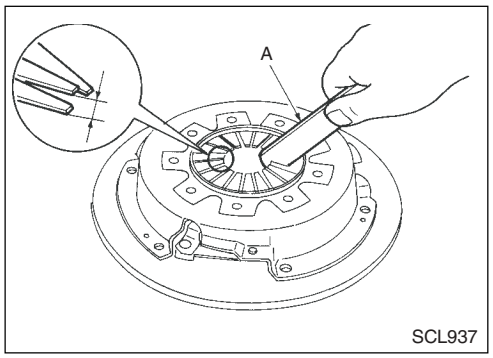

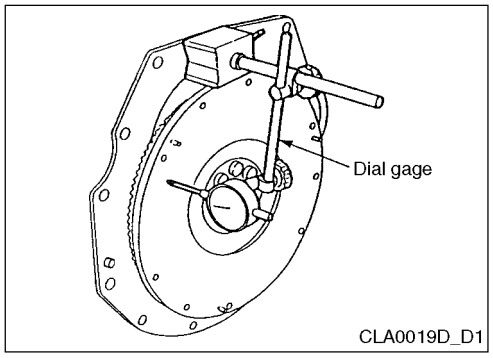

CLUTCH COVER

Inspect the evenness of the diaphragm spring tips while installed on the vehicle and adjust it using a diaphragm adjust wrench (A: ST20050240) if out of the standard value.

Unevenness limit: 0.7 mm

- Inspect for any wear or damages at the clutch cover fulcrum plate. Replace the clutch cover assembly if defective.

REFERENCE:

- **Fulcrum plate clangs if worn when tap the rivet with a hammer.**
- **Fulcrum plate makes strange noise if worn when shake the cover vertically.**
- If you find any sootiness or discoloration at the clutch cover pressure plate and contacting surfaces on the clutch disc, clean it with sand paper and replace it as an assembly if the surface is distorted or damaged.

FLYWHEEL RUNOUT

Measure the flywheel runout on the clutch surface using a dial gage and replace it if out of the standard value. Repair it with sand paper if any sootiness or discoloration at the surface.

Flywheel surface runout: Less than 0.15 mm

CAUTION:

- **Perform the measurement at the outer side of the flywheel (on where does not touch any obstacles).**

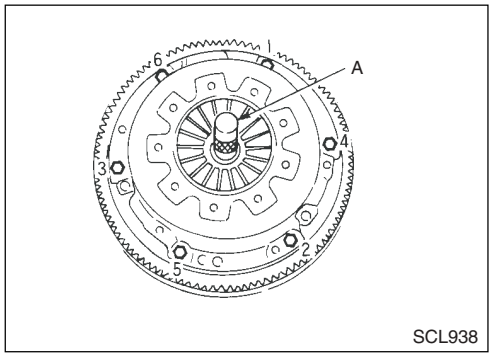

INSTALLATION

1. Apply the clutch grease at the clutch disc and input shaft spline.

CAUTION:

- **Strange noise, separation and clutch damage may occur if grease is not applied. Be sure to apply it. If too much grease is applied, it may become slippery and may cause vibration. Wipe out the excessive grease.**

2. Install the clutch disc and clutch cover. Temporarily tighten the mounting bolts and install the clutch aligning bar (A: ST20610000).
3. Tighten the clutch cover mounting bolts in 2 stages evenly in the order shown in the illustration.

   Tightening torque:

   Stage 1: 9.8 19.6 N•m (1.0 - 2.0 kgf-m)

   Stage 2: 21.6 - 29.4 N•m (2.2 - 3.0 kgf-m)

4. Install the manual transaxle.
   - Refer to “Removal • Installation” (MT-8).

Service Data

Clutch Pedal

Engine model		QG16DE
Pedal Height when released	(mm)	156 - 166
Pedal Height when disengaged	(mm)	More than 80
Pedal freeplay (Cover of the clevis pin)	(mm)	9 - 16 (1.0 - 3.0)
Clearance between the clutch switch end and stopper rubber	(mm)	0.3 - 1.0

Clutch Disc

Engine model		QG16DE
Size	(mm)	ϕ 215
Wear limit (Depth to rivet head)	(mm)	0.3
Facing runout / Measuring radius	(mm)	Less than 1.0 / ϕ 190 (R 95)
Max. spline backlash	(mm)	0.8

Clutch Cover

Engine model		QG16DE
Size	(mm)	ϕ 215
Diaphragm spring lever height	(mm)	31.0 - 33.0
Unevenness limit of diaphragm spring lever height	(mm)	Less than 0.7