SECTION ACC

ACCELERATOR CONTROL SYSTEM

CONTENTS

PRECAUTION 2

PRECAUTIONS 2
Precaution for Supplemental Restraint System (SRS) "AIR BAG" and "SEAT BELT PRE-TENSIONER" 2

REMOVAL AND INSTALLATION 3

ACCELERATOR CONTROL SYSTEM 3
Exploded View 3
Removal and Installation 3
Inspection 3

PRECAUTION

PRECAUTIONS

Precaution for Supplemental Restraint System (SRS) "AIR BAG" and "SEAT BELT PRE-TENSIONER"

INFOID:0000000006046772

The Supplemental Restraint System such as “AIR BAG” and “SEAT BELT PRE-TENSIONER”, used along with a front seat belt, helps to reduce the risk or severity of injury to the driver and front passenger for certain types of collision. Information necessary to service the system safely is included in the “SRS AIR BAG” and “SEAT BELT” of this Service Manual.

WARNING:

- **To avoid rendering the SRS inoperative, which could increase the risk of personal injury or death in the event of a collision which would result in air bag inflation, all maintenance must be performed by an authorized NISSAN/INFINITI dealer.**
- **Improper maintenance, including incorrect removal and installation of the SRS, can lead to personal injury caused by unintentional activation of the system. For removal of Spiral Cable and Air Bag Module, see the “SRS AIR BAG”.**
- **Do not use electrical test equipment on any circuit related to the SRS unless instructed to in this Service Manual. SRS wiring harnesses can be identified by yellow and/or orange harnesses or harness connectors.**

PRECAUTIONS WHEN USING POWER TOOLS (AIR OR ELECTRIC) AND HAMMERS

WARNING:

- **When working near the Air Bag Diagnosis Sensor Unit or other Air Bag System sensors with the ignition ON or engine running, DO NOT use air or electric power tools or strike near the sensor(s) with a hammer. Heavy vibration could activate the sensor(s) and deploy the air bag(s), possibly causing serious injury.**
- **When using air or electric power tools or hammers, always switch the ignition OFF, disconnect the battery, and wait at least 3 minutes before performing any service.**

REMOVAL AND INSTALLATION

ACCELERATOR CONTROL SYSTEM

Exploded View

INFOID:0000000005988502

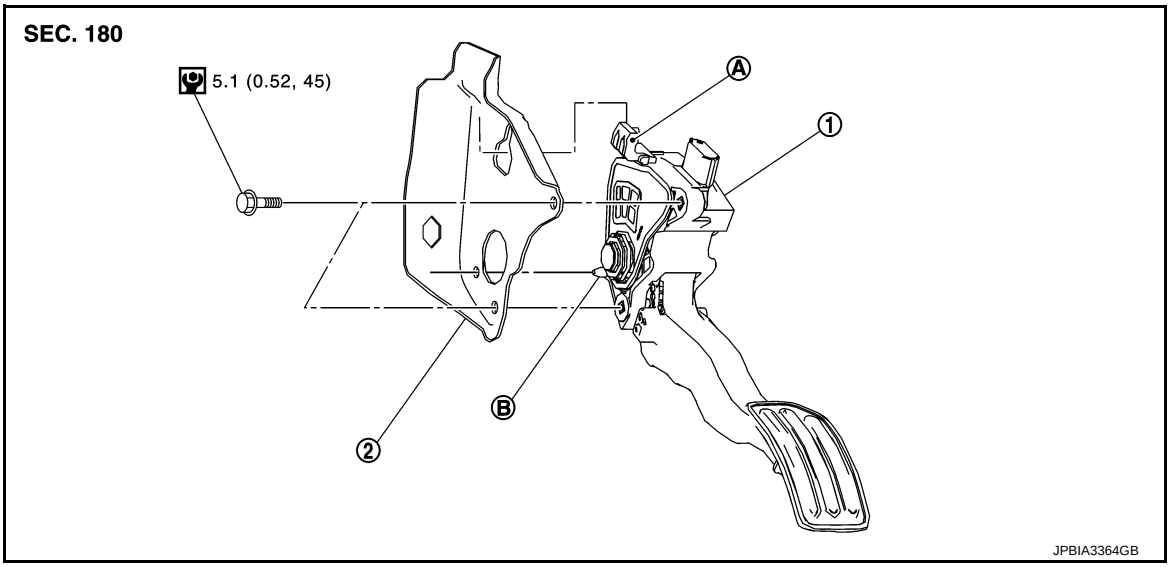

1. Accelerator pedal assembly
2. Bracket

Refer to GI-4, "Components" for symbols in the figure.

Removal and Installation

INFOID:0000000005988503

REMOVAL

1. Disconnect accelerator pedal position sensor harness connector.
2. Loosen mounting bolts, and remove accelerator pedal assembly.
   CAUTION:
   - **Never disassemble accelerator lever. Never remove accelerator pedal position sensor from accelerator lever.**
   - **Avoid impact from dropping etc. during handling.**
   - **Be careful to keep accelerator lever away from water.**
3. Fold the floor carpet and remove accelerator pedal stopper.
   - Remove pedal stopper by turning it counterclockwise with fingers.

INSTALLATION

Note the following, and install in the reverse order of removal.

- Insert locating pin into vehicle side to position accelerator pedal assembly. Tighten mounting bolts to accelerator pedal assembly.

Inspection

INFOID:0000000005988504

INSPECTION AFTER INSTALLATION

- Check accelerator pedal moves smoothly within the whole operation range when it is fully depressed and released.
- Check accelerator pedal securely returns to the fully released position.
- For the electrical inspection of accelerator pedal position sensor. Refer to following;

- HR12DE (TYPE 1): EC-269, "Component Inspection"
- HR12DE (TYPE 2): EC-464, "Component Inspection"

CAUTION:

When harness connector of accelerator pedal position sensor is disconnected, perform “ACCELERATOR PEDAL RELEASED POSITION LEARNING”. Refer to following;

- **HR12DE (TYPE 1): EC-104, "Work Procedure"**

- **HR12DE (TYPE 2):** EC-377, "Work Procedure"

SECTION AV

AUDIO, VISUAL & NAVIGATION SYSTEM

CONTENTS

AUDIO SYSTEM

PRECAUTION 2

PRECAUTIONS 2
Precaution for Supplemental Restraint System (SRS) "AIR BAG" and "SEAT BELT PRE-TENSIONER" 2

SYSTEM DESCRIPTION 3

COMPONENT PARTS 3
Component Parts Location 3
Component Description 4

SYSTEM 5
System Description 5

DIAGNOSIS SYSTEM (AUDIO UNIT) 6
Diagnosis Description 6

ECU DIAGNOSIS INFORMATION 8

AUDIO UNIT 8
Reference Value 8

WIRING DIAGRAM 10

AUDIO SYSTEM 10
Wiring Diagram 10

BASIC INSPECTION 11

DIAGNOSIS AND REPAIR WORKFLOW 11
Work Flow 11

DTC/CIRCUIT DIAGNOSIS 13

POWER SUPPLY AND GROUND CIRCUIT 13

AUDIO UNIT 13
AUDIO UNIT : Diagnosis Procedure 13

SYMPTOM DIAGNOSIS 14

AUDIO SYSTEM SYMPTOMS 14
Symptom Table 14

NORMAL OPERATING CONDITION 15
Description 15

REMOVAL AND INSTALLATION 16

AUDIO UNIT 16
Removal and Installation 16

FRONT DOOR SPEAKER 17
Removal and Installation 17

REAR DOOR SPEAKER 18
Removal and Installation 18

ANTENNA BASE 19
Exploded View 19
Removal and Installation 19

ANTENNA FEEDER 20
Feeder Layout 20

PRECAUTION

PRECAUTIONS

Precaution for Supplemental Restraint System (SRS) "AIR BAG" and "SEAT BELT PRE-TENSIONER"

INFOID:0000000006033855

The Supplemental Restraint System such as “AIR BAG” and “SEAT BELT PRE-TENSIONER”, used along with a front seat belt, helps to reduce the risk or severity of injury to the driver and front passenger for certain types of collision. Information necessary to service the system safely is included in the “SRS AIR BAG” and “SEAT BELT” of this Service Manual.

WARNING:

- **To avoid rendering the SRS inoperative, which could increase the risk of personal injury or death in the event of a collision which would result in air bag inflation, all maintenance must be performed by an authorized NISSAN/INFINITI dealer.**
- **Improper maintenance, including incorrect removal and installation of the SRS, can lead to personal injury caused by unintentional activation of the system. For removal of Spiral Cable and Air Bag Module, see the “SRS AIR BAG”.**
- **Do not use electrical test equipment on any circuit related to the SRS unless instructed to in this Service Manual. SRS wiring harnesses can be identified by yellow and/or orange harnesses or harness connectors.**

PRECAUTIONS WHEN USING POWER TOOLS (AIR OR ELECTRIC) AND HAMMERS

WARNING:

- **When working near the Air Bag Diagnosis Sensor Unit or other Air Bag System sensors with the ignition ON or engine running, DO NOT use air or electric power tools or strike near the sensor(s) with a hammer. Heavy vibration could activate the sensor(s) and deploy the air bag(s), possibly causing serious injury.**
- **When using air or electric power tools or hammers, always switch the ignition OFF, disconnect the battery, and wait at least 3 minutes before performing any service.**

SYSTEM DESCRIPTION

COMPONENT PARTS

Component Parts Location

INFOID:0000000005911597

AUDIO LESS

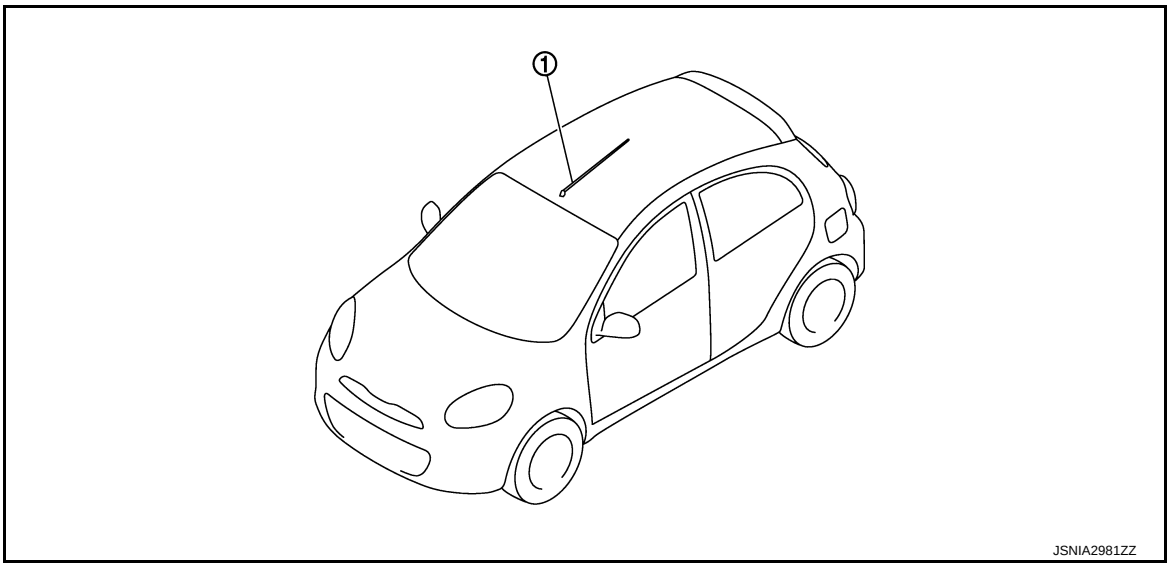

1. Rod antenna

AUDIO

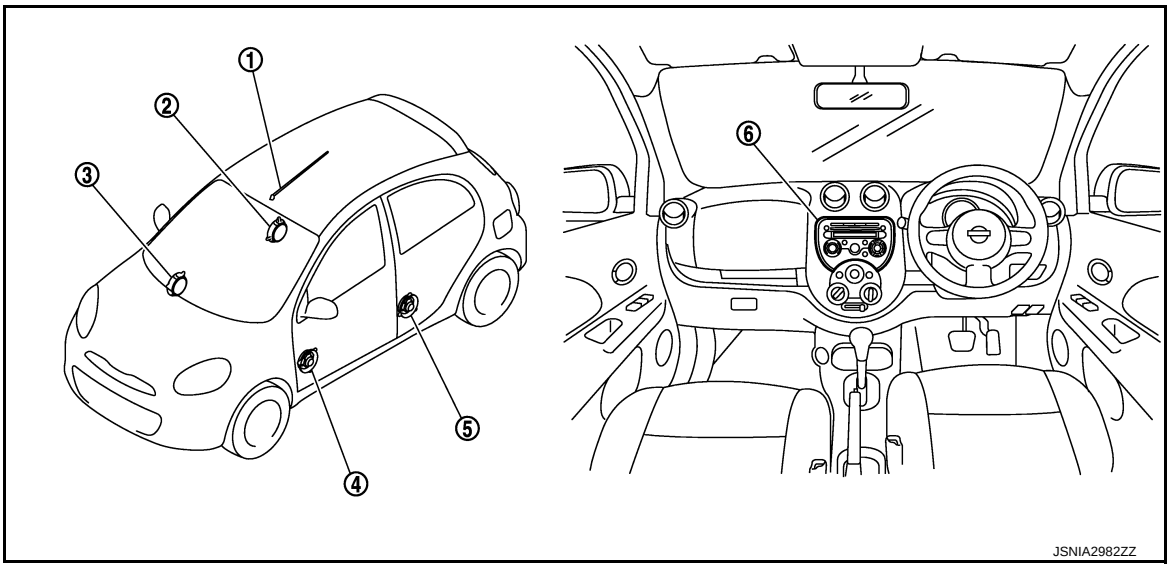

1. Rod antenna
2. Rear door speaker RH
3. Front door speaker RH
4. Front door speaker LH
5. Rear door speaker LH
6. Audio unit

Component Description

INFOID:0000000005911598

Part name	Description
Audio unit	• AM/FM radio, replaying function of CD, auxiliary Input functions are integrated. • Sound signals are output to each speaker.
Front door speaker	• Outputs sound signal from audio unit. • Outputs high, mid and low range sounds.
Rear door speaker	• Outputs sound signal from audio unit. • Outputs high, mid and low range sounds.
Rod antenna	Radio signal received by antenna is sent to audio unit.

SYSTEM

System Description

INFOID:0000000005911596

AUDIO SYSTEM

When the audio system is on, radio signals are received by the radio antenna. The audio unit then sends audio signals to the each speaker.

FUNCTION DESCRIPTION

AM/FM Radio Mode

- AM/FM radio tuner is built into audio unit.
- Radio signals are received by radio antenna, next they are input to audio unit.
- Audio unit outputs the sound signal to each speaker.

CD Mode

- CD function is built into audio unit.
- Audio unit outputs sound signal to each speaker when CD is inserted to audio unit.

AUX Connection

- When the external device is connected to the AUX (auxiliary) input jack of the audio unit, the external device inputs a sound signal to the audio unit.
- When AUX mode is selected, audio unit outputs sound signal to each speaker.

DIAGNOSIS SYSTEM (AUDIO UNIT)

Diagnosis Description

INFOID:0000000005911604

Self-diagnosis mode can check the following items.
- Display all icons and segments
- Display LCD
- Audio unit hardware/software/EEP versions

OPERATION PROCEDURE

1. Turn ignition switch to the ON position.
2. Turn the audio unit OFF.
3. While pressing the “1”button, turn the volume control dial clockwise or counterclockwise for 30 clicks or more. (When the self-diagnosis mode is started, a short beep will be heard.)

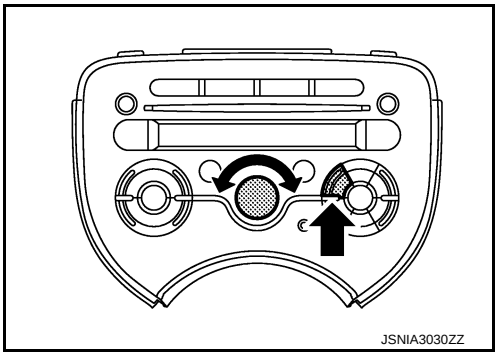

Icons, Segments and LCD Check

1. All display icons and segments will be illuminated for 2 seconds.
2. Press the “DISP” switch to display LCD check segments pattern.

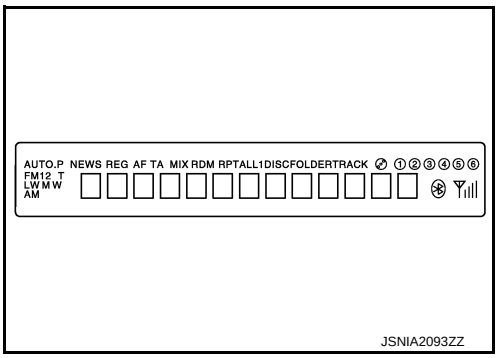

Version Check

1. Press the “DISP” switch to enter version diagnostics. “Soft” (audio software version) is displayed.

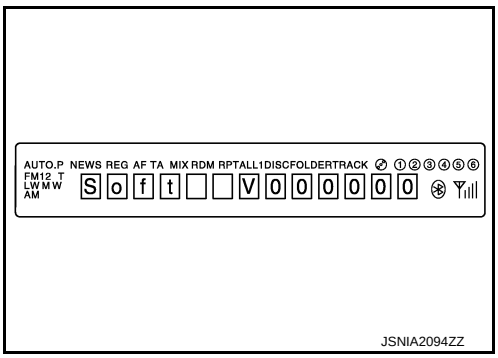

2. Press the “DISP” switch again to display the “Hard” (audio hardware version).

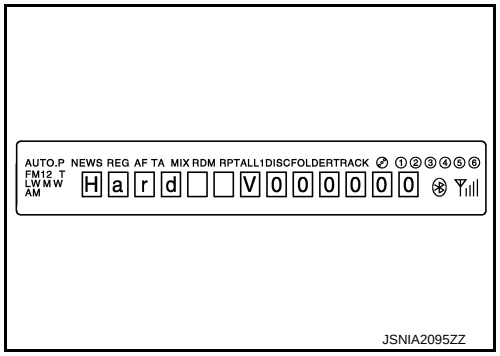

JSNIA2095ZZ

3. Press the “DISP” switch again to display the “CD Mech” (CD mechanism version).

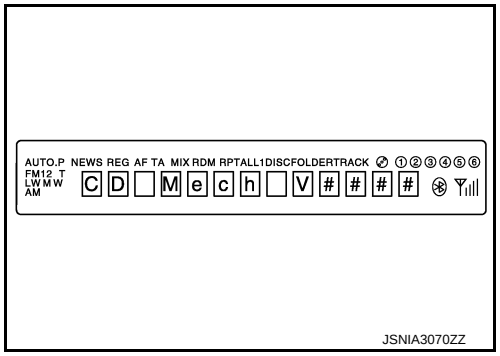

JSNIA3070ZZ

4. Press the “DISP” switch again to display the “EEP” (audio unit EEPROM version).

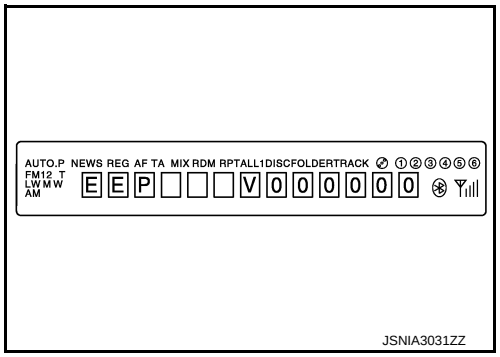

JSNIA3031ZZ

Finishing Self-diagnosis Mode

1. self-diagnosis mode is canceled when turning the ignition switch OFF.

ECU DIAGNOSIS INFORMATION

AUDIO UNIT

Reference Value

INFOID:0000000005911628

TERMINAL LAYOUT

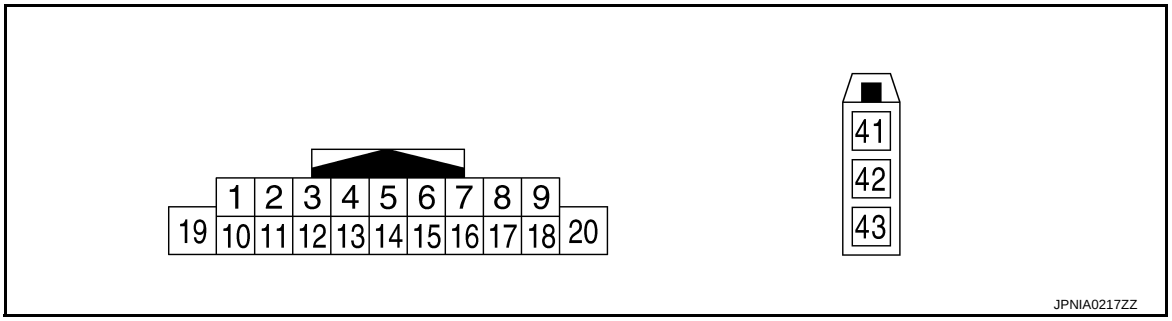

PHYSICAL VALUES

Terminal (Wire color)		Description		Condition		Reference value (Approx.)
+	–	Signal name	Input/ Output			
2 (GR)	3 (P)	Sound signal front door speaker LH	Output	Ignition switch ON	Sound signal output	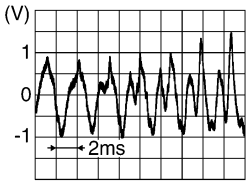 SKIB3609E
4 (W)	5 (R)	Sound signal rear door speaker LH	Output	Ignition switch ON	Sound signal output	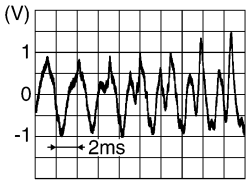 SKIB3609E
7 (L)	Ground	ACC power supply	Input	Ignition switch ACC	—	Battery voltage
9 (Y)	Ground	Illumination signal	Input	Ignition switch ON	Lighting switch is OFF.	0 V
					Lighting switch is 1st or 2nd.	12.0 V
11 (BG)	12 (V)	Sound signal front door speaker RH	Output	Ignition switch ON	Sound signal output	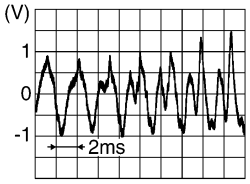 SKIB3609E

Terminal (Wire color)		Description		Condition		Reference value (Approx.)
+	–	Signal name	Input/ Output			
13 (L)	14 (Y)	Sound signal rear door speaker RH	Output	Ignition switch ON	Sound signal output	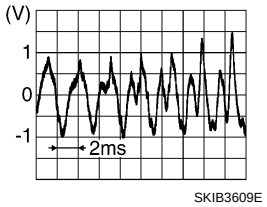
19 (LG)	Ground	Battery power supply	Input	Ignition switch OFF	—	Battery voltage
42	—	Antenna signal	Input	—	—	—

WIRING DIAGRAM

AUDIO SYSTEM

Wiring Diagram

INFOID:0000000005986786

For connector terminal arrangements, harness layouts, and alphabets in a ⬡ (option abbreviation; if not described in wiring diagram), refer to GI-12, "Connector Information".

BASIC INSPECTION

DIAGNOSIS AND REPAIR WORKFLOW

Work Flow

INFOID:0000000005911594

OVERALL SEQUENCE

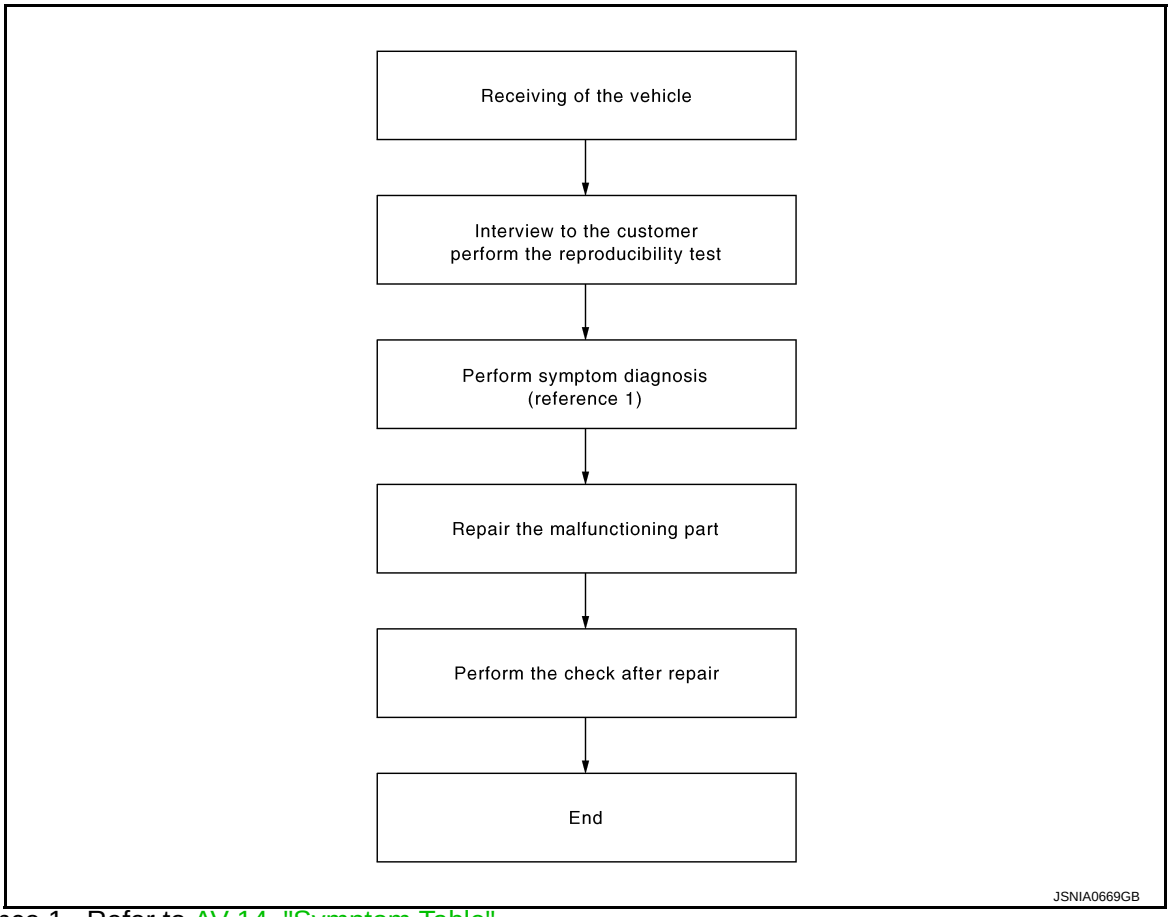

Reference 1···Refer to AV-14, "Symptom Table".

DETAILED FLOW

1. CHECK SYMPTOM

Check the malfunction symptoms by performing the following items.
- Interview the customer to obtain the malfunction information (conditions and environment when the malfunction occurred).
- Check the symptom.

>> GO TO 2.

2. PERFORM DIAGNOSIS BY SYMPTOM

Perform the relevant diagnosis referring to the diagnosis chart by symptom. Refer to AV-14, "Symptom Table" .

>> GO TO 3.

3. REPAIR OR REPLACE MALFUNCTIONING PARTS

Repair or replace the malfunctioning parts.

>> GO TO 4.

4. FINAL CHECK

Perform the operation to check that the malfunction symptom is solved or any other symptoms are present.

Is there any symptom?

YES >> GO TO 2.
NO >> INSPECTION END

DTC/CIRCUIT DIAGNOSIS

POWER SUPPLY AND GROUND CIRCUIT

AUDIO UNIT

AUDIO UNIT : Diagnosis Procedure

INFOID:0000000005921602

1.CHECK FUSE

Check for blown fuses.

Power source	Fuse No.
Battery	37
Ignition switch ACC or ON	19

Is inspection result normal?

YES >> GO TO 2.
NO >> Be sure to eliminate cause of malfunction before installing new fuse.

2.CHECK POWER SUPPLY CIRCUIT

Check voltage between audio unit harness connectors and ground.

Signal name	(+)		(-)	Ignition switch position	Voltage (Approx.)
	Audio unit				
	Connector	Terminal			
Battery power supply	M46	19	Ground	OFF	Battery voltage
ACC power supply		7		ACC	

Is inspection result normal?

YES >> INSPECTION END
NO >> Check harness between audio unit and fuse.

SYMPTOM DIAGNOSIS

AUDIO SYSTEM SYMPTOMS

Symptom Table

INFOID:0000000005911634

AUDIO SYSTEM

Symptoms	Check items	Possible malfunction location / Action to take
Audio sound is not heard.	No sound from all speakers.	• Audio unit power supply and ground circuit. Refer to AV-13, "AUDIO UNIT : Diagnosis Procedure".
	Sound is not heard only from the specific places.	Sound signal circuit of malfunctioning system.
AM/FM radio is not received.	Other audio sounds are normal.	Antenna feeder

NORMAL OPERATING CONDITION

Description

INFOID:0000000005911636

RELATED TO AUDIO

- The majority of the audio malfunctions are the result of outside causes (bad CD, electromagnetic interference, etc.). Check the symptoms below to diagnose the malfunction.
- The vehicle itself can be a source of noise if noise prevention parts or electrical equipment is malfunctioning. Check that noise is caused and/or changed by engine speed, ignition switch turned to each position, and operation of each piece of electrical equipment. Then determine the cause.

NOTE:

- CD-R is not guaranteed to play because they can contain compressed audio (MP3, WMA) or could be incorrectly mastered by the customer on a computer.
- Check that the CDs carry the Compact Disc Logo. If not, the disc is not mastered to the red book Compact Disc Standard and may not play.

Symptoms	Cause and Counter measure
Cannot play	Check that the disc was inserted correctly.
	Check that the disc is scratched or dirty.
	Check if there is condensation inside the player. If there is, wait until the condensation is gone (about 1 hour) before using the player.
	If there is a temperature increase error, the CD player will play correctly after it returns to the normal temperature.
	Files with extensions other than “.MP3”, “.WMA”, “.M4A”, “.mp3”, “.wma”, “.m4a”cannot be played. In addition, the character codes and number of characters for folder names and file names should be in compliance with the specifications.
	If there is mixture of music CD files (CD-DA data) and MP3/WMA/AAC files on a CD, only the music CD files (CD-DA) will be played.
	Check if the disc or the file is generated in an irregular format. This may occur depending on the variation or the setting of MP3/WMA writing applications or other text editing applications.
	Check if the finalization process, such as session close and disc close, is done for the disc.
	Check if the disc is protected by copyright.
Poor sound quality	Check if the disc is scratched or dirty.
	Bit rate may be too low.
It takes a relatively long time before the music starts playing.	If there are many folder or file levels on the MP3/WMA CD, or if it is a multisession disc, some time may be required before the music starts playing.
Music cuts off or skips	The writing software and hardware combination might not match, or the writing speed, writing depth, writing width, etc., might not match the specifications. Try using the slowest writing speed.
Skipping with high bit rate files	Skipping may occur with large quantities of data, such as for high bit rate data.
Move immediately to the next song when playing.	When a non-MP3/WMA file has been given an extension of “.MP3”, “.WMA”, “.mp3” or “.wma”, or when play is prohibited by copyright protection, there will be approximately 5 seconds of no sound and then the player will skip to the next song.
The songs do not play back in the desired order.	The playback order is the order in which the files were written by the writing software. Therefore, the files might not play in the desired order.

Noise resulting from variations in field strength, such as fading noise and multi-path noise, or external noise from trains and other sources, is not a malfunction.

NOTE:

- Fading noise: This noise occurs because of variations in the field strength in a narrow range due to mountains or buildings blocking the signal.
- Multi-path noise: This noise results from a time difference between the broadcast waves directly from the station arriving at the antenna and the waves reflected by mountains or buildings.

REMOVAL AND INSTALLATION

AUDIO UNIT

Removal and Installation

INFOID:0000000005911642

REMOVAL

1. Remove the cluster lid C. Refer to IP-13, "Removal and Installation".
2. Remove the screws and disconnect the connector to remove the audio unit.
3. Remove the bracket screws to remove the audio unit.

INSTALLATION

Install in the reverse order of removal.

FRONT DOOR SPEAKER

Removal and Installation

INFOID:0000000005911644

REMOVAL

1. Remove the front door finisher. Refer to INT-14, "Removal and Installation".
2. Remove the screws and disconnect the connector to remove the front door speaker.

INSTALLATION

Install in the reverse order of removal.

REAR DOOR SPEAKER

Removal and Installation

INFOID:0000000005911648

REMOVAL

1. Remove the rear door finisher. Refer to INT-18, "Removal and Installation".
2. Remove the screws and disconnect the connector to remove the rear door speaker.

INSTALLATION

Install in the reverse order of removal.

ANTENNA BASE

Exploded View

INFOID:0000000005911649

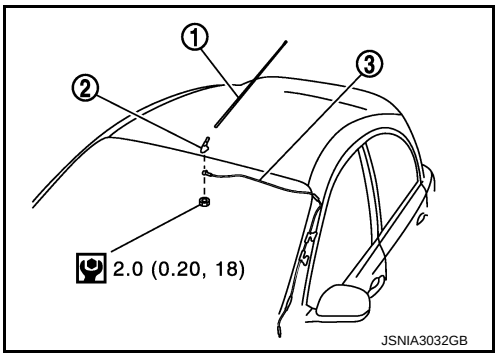

1. Antenna rod
2. Antenna base
3. Antenna feeder

Refer to GI-4, "Components" for symbols in the figure.

Removal and Installation

INFOID:0000000005911650

REMOVAL

1. Remove the headlining. Refer to INT-28, "Removal and Installation".
2. Remove the mounting nut to remove the antenna base from the roof panel.

INSTALLATION

Install in the reverse order of removal.

CAUTION:

When antenna base mounting nut tightening torque is loose, be careful about tightening torque. Antenna sensitivity becomes poor, and when it is excessive, roof panel may become deformed.

ANTENNA FEEDER

Feeder Layout

INFOID:0000000005911659

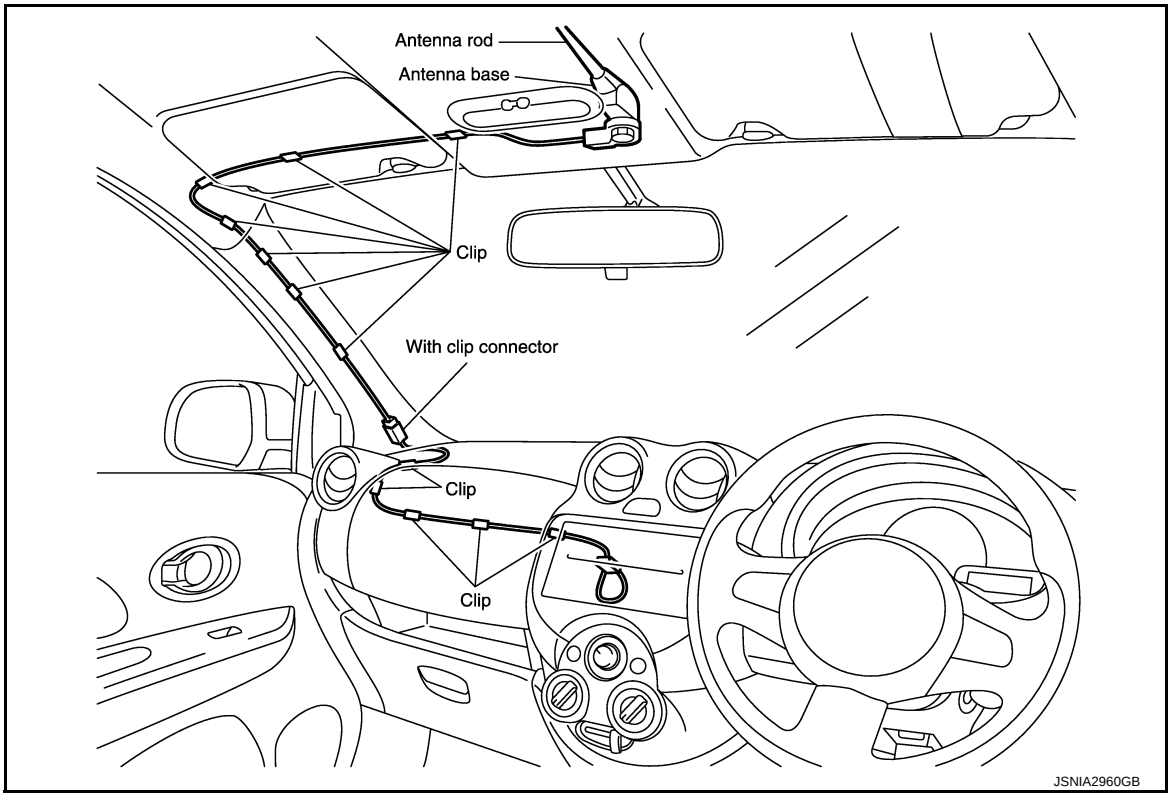

SECTION BCS
BODY CONTROL SYSTEM

CONTENTS

WITH INTELLIGENT KEY SYSTEM

PRECAUTION 4

PRECAUTIONS 4
Precaution for Supplemental Restraint System (SRS) "AIR BAG" and "SEAT BELT PRE-TENSIONER" 4

SYSTEM DESCRIPTION 5

COMPONENT PARTS 5

BODY CONTROL SYSTEM 5
BODY CONTROL SYSTEM : Component Parts Location 5

POWER CONSUMPTION CONTROL SYSTEM 5
POWER CONSUMPTION CONTROL SYSTEM : Component Parts Location 5

SYSTEM 6

BODY CONTROL SYSTEM 6
BODY CONTROL SYSTEM : System Description 6
BODY CONTROL SYSTEM : Fail-safe 6

COMBINATION SWITCH READING SYSTEM 8
COMBINATION SWITCH READING SYSTEM : System Diagram 9
COMBINATION SWITCH READING SYSTEM : System Description 9

SIGNAL BUFFER SYSTEM 12
SIGNAL BUFFER SYSTEM : System Diagram 12
SIGNAL BUFFER SYSTEM : System Description 12

POWER CONSUMPTION CONTROL SYSTEM 12
POWER CONSUMPTION CONTROL SYSTEM : System Diagram 13
POWER CONSUMPTION CONTROL SYSTEM : System Description 13

DIAGNOSIS SYSTEM (BCM) 15

COMMON ITEM 15
COMMON ITEM : CONSULT-III Function (BCM - COMMON ITEM) 15

COMB SW 16
COMB SW : CONSULT-III Function (BCM - COMB SW) 16

BCM 17
BCM : CONSULT-III Function (BCM - BCM) 17

SIGNAL BUFFER 17
SIGNAL BUFFER : CONSULT-III Function (BCM - SIGNAL BUFFER) 17

ECU DIAGNOSIS INFORMATION 18

BCM 18
Reference Value 18
Fail-safe 37
DTC Inspection Priority Chart 39
DTC Index 40

WIRING DIAGRAM 43

BCM 43
Wiring Diagram 43

BASIC INSPECTION 44

ADDITIONAL SERVICE WHEN REPLACING CONTROL UNIT 44
Description 44
Work Procedure 44

CONFIGURATION (BCM) 45
Description 45
Work Procedure 45
Configuration list 46

DTC/CIRCUIT DIAGNOSIS 47

U1000 CAN COMM 47

Description 47
DTC Logic 47
Diagnosis Procedure 47

U1010 CONTROL UNIT (CAN) 48
DTC Logic 48
Diagnosis Procedure 48

U0415 VEHICLE SPEED 49
Description 49
DTC Logic 49
Diagnosis Procedure 49

B2562 LOW VOLTAGE 50
DTC Logic 50
Diagnosis Procedure 50

POWER SUPPLY AND GROUND CIRCUIT 51
Diagnosis Procedure 51

COMBINATION SWITCH OUTPUT CIRCUIT ... 52
Diagnosis Procedure 52

COMBINATION SWITCH INPUT CIRCUIT 54
Diagnosis Procedure 54

SYMPTOM DIAGNOSIS 56

COMBINATION SWITCH SYSTEM SYMPTOMS 56
Symptom Table 56

REMOVAL AND INSTALLATION 57

BCM 57
Removal and Installation 57

COMBINATION SWITCH 58
Exploded View 58
Removal and Installation 58

WITHOUT INTELLIGENT KEY SYSTEM

PRECAUTION 59

PRECAUTIONS 59
Precaution for Supplemental Restraint System (SRS) "AIR BAG" and "SEAT BELT PRE-TENSIONER" 59

SYSTEM DESCRIPTION 60

COMPONENT PARTS 60

BODY CONTROL SYSTEM 60
BODY CONTROL SYSTEM : Component Parts Location 60

POWER CONSUMPTION CONTROL SYSTEM 60
POWER CONSUMPTION CONTROL SYSTEM : Component Parts Location 60

SYSTEM 61

BODY CONTROL SYSTEM 61
BODY CONTROL SYSTEM : System Description... 61
BODY CONTROL SYSTEM : Fail-safe 61

COMBINATION SWITCH READING SYSTEM 62
COMBINATION SWITCH READING SYSTEM : System Diagram 62
COMBINATION SWITCH READING SYSTEM : System Description 62

SIGNAL BUFFER SYSTEM 65
SIGNAL BUFFER SYSTEM : System Diagram 66
SIGNAL BUFFER SYSTEM : System Description... 66

POWER CONSUMPTION CONTROL SYSTEM 66
POWER CONSUMPTION CONTROL SYSTEM : System Diagram 66
POWER CONSUMPTION CONTROL SYSTEM : System Description 67

DIAGNOSIS SYSTEM (BCM) 69

COMMON ITEM 69
COMMON ITEM : CONSULT-III Function (BCM - COMMON ITEM) 69

COMB SW 69
COMB SW : CONSULT-III Function (BCM - COMB SW) 70

BCM 70
BCM : CONSULT-III Function (BCM - BCM) 70

SIGNAL BUFFER 70
SIGNAL BUFFER : CONSULT-III Function (BCM - SIGNAL BUFFER) 70

ECU DIAGNOSIS INFORMATION 72

BCM 72
Reference Value 72
Fail-safe 85
DTC Inspection Priority Chart 85
DTC Index 86

WIRING DIAGRAM 87

BCM 87
Wiring Diagram 87

BASIC INSPECTION 88

ADDITIONAL SERVICE WHEN REPLACING CONTROL UNIT 88
Description 88
Work Procedure 88

CONFIGURATION (BCM) 89
Description 89
Work Procedure 89
Configuration list 90

DTC/CIRCUIT DIAGNOSIS 91

U1000 CAN COMM **91**
Description 91
DTC Logic 91
Diagnosis Procedure 91

U1010 CONTROL UNIT (CAN) **92**
DTC Logic 92
Diagnosis Procedure 92

POWER SUPPLY AND GROUND CIRCUIT **93**
Diagnosis Procedure 93

COMBINATION SWITCH OUTPUT CIRCUIT **94**
Diagnosis Procedure 94

COMBINATION SWITCH INPUT CIRCUIT **96**
Diagnosis Procedure 96

SYMPTOM DIAGNOSIS **98**

COMBINATION SWITCH SYSTEM SYMPTOMS **98**
Symptom Table 98

REMOVAL AND INSTALLATION **99**

BCM **99**
Removal and Installation 99

COMBINATION SWITCH **100**
Exploded View 100
Removal and Installation 100

PRECAUTION

PRECAUTIONS

Precaution for Supplemental Restraint System (SRS) "AIR BAG" and "SEAT BELT PRE-TENSIONER"

INFOID:0000000006014812

The Supplemental Restraint System such as “AIR BAG” and “SEAT BELT PRE-TENSIONER”, used along with a front seat belt, helps to reduce the risk or severity of injury to the driver and front passenger for certain types of collision. This system includes seat belt switch inputs and dual stage front air bag modules. The SRS system uses the seat belt switches to determine the front air bag deployment, and may only deploy one front air bag, depending on the severity of a collision and whether the front occupants are belted or unbelted.
Information necessary to service the system safely is included in the “SRS AIR BAG” and “SEAT BELT” of this Service Manual.

WARNING:

- **To avoid rendering the SRS inoperative, which could increase the risk of personal injury or death in the event of a collision that would result in air bag inflation, all maintenance must be performed by an authorized NISSAN/INFINITI dealer.**
- **Improper maintenance, including incorrect removal and installation of the SRS, can lead to personal injury caused by unintentional activation of the system. For removal of Spiral Cable and Air Bag Module, see the “SRS AIR BAG”.**
- **Do not use electrical test equipment on any circuit related to the SRS unless instructed to in this Service Manual. SRS wiring harnesses can be identified by yellow and/or orange harnesses or harness connectors.**

PRECAUTIONS WHEN USING POWER TOOLS (AIR OR ELECTRIC) AND HAMMERS

WARNING:

- **When working near the Air Bag Diagnosis Sensor Unit or other Air Bag System sensors with the ignition ON or engine running, DO NOT use air or electric power tools or strike near the sensor(s) with a hammer. Heavy vibration could activate the sensor(s) and deploy the air bag(s), possibly causing serious injury.**
- **When using air or electric power tools or hammers, always switch the ignition OFF, disconnect the battery, and wait at least 3 minutes before performing any service.**

SYSTEM DESCRIPTION

COMPONENT PARTS

BODY CONTROL SYSTEM

BODY CONTROL SYSTEM : Component Parts Location

INFOID:0000000006014813

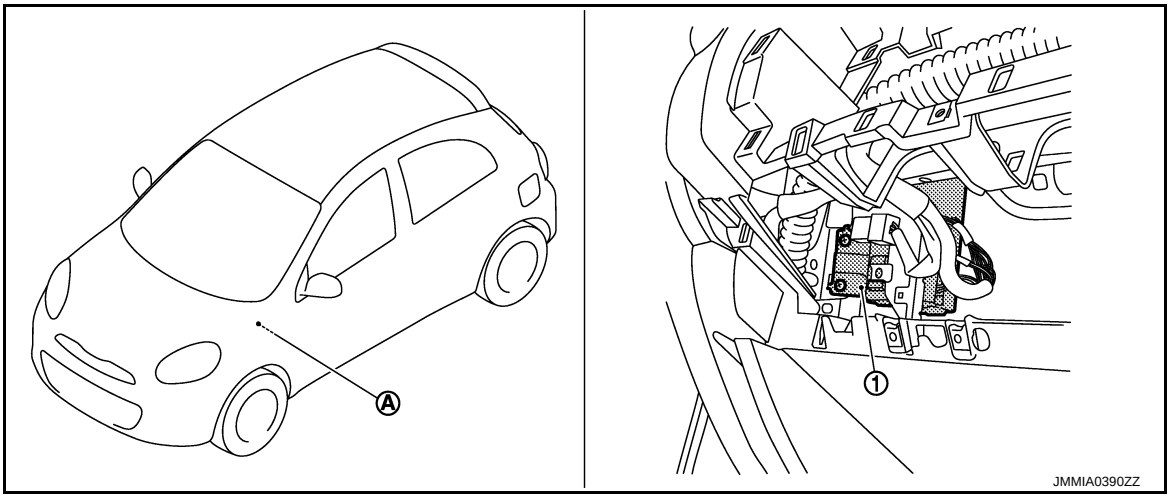

1. BCM
A. Left side of glove box

POWER CONSUMPTION CONTROL SYSTEM

POWER CONSUMPTION CONTROL SYSTEM : Component Parts Location

INFOID:0000000006014814

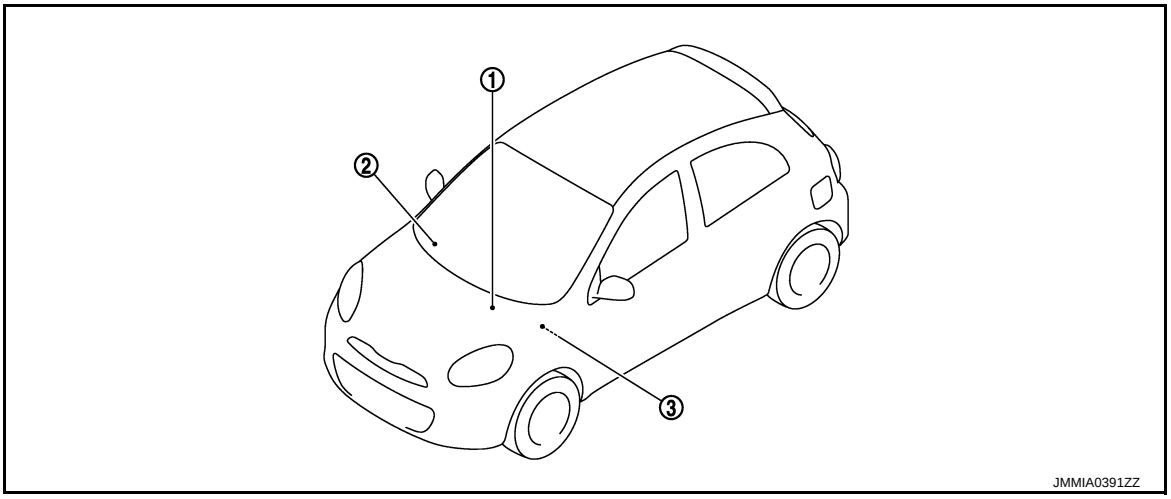

1. IPDM E/R
Refer to PCS-5, "Component Parts Location".
2. Combination meter
3. BCM
Refer to BCS-5, "BODY CONTROL SYSTEM : Component Parts Location".

SYSTEM

BODY CONTROL SYSTEM

BODY CONTROL SYSTEM : System Description

INFOID:0000000006014815

OUTLINE

- BCM (Body Control Module) controls the various electrical components. It inputs the information required to the control from CAN communication and the signal received from each switch and sensor.
- BCM has combination switch reading function for reading the operation status of combination switches (light, turn signal, wiper and washer) in addition to a function for controlling the operation of various electrical components. It also has the signal transmission function as the passed point of signal and the power saving control function that reduces the power consumption with the ignition switch OFF.
- BCM is equipped with the diagnosis function that performs the diagnosis with CONSULT-III and various settings.

BCM CONTROL FUNCTION LIST

System	Reference
Combination switch reading system	BCS-9, "COMBINATION SWITCH READING SYSTEM : System Diagram"
Signal buffer system	BCS-12, "SIGNAL BUFFER SYSTEM : System Diagram"
Power consumption control system	BCS-13, "POWER CONSUMPTION CONTROL SYSTEM : System Diagram"
Turn signal and hazard warning lamp system	EXL-8, "TURN SIGNAL AND HAZARD WARNING LAMP SYSTEM : System Diagram"
Headlamp system	EXL-7, "HEADLAMP SYSTEM : System Diagram"
Parking, license plate, side maker and tail lamps system	EXL-9, "PARKING, LICENSE PLATE AND TAIL LAMP SYSTEM : System Diagram"
Front fog lamp system	EXL-8, "FRONT FOG LAMP SYSTEM : System Diagram"
Exterior lamp battery saver system	EXL-10, "EXTERIOR LAMP BATTERY SAVER SYSTEM : System Diagram"
Interior room lamp control system	INL-7, "INTERIOR ROOM LAMP CONTROL SYSTEM (WITH INTELLIGENT KEY SYSTEM) : System Diagram"
Interior room lamp battery saver system	INL-10, "INTERIOR ROOM LAMP BATTERY SAVER SYSTEM : System Diagram"
Front wiper and washer system	WW-6, "FRONT WIPER AND WASHER SYSTEM : System Diagram"
Rear wiper and washer system	WW-9, "REAR WIPER AND WASHER SYSTEM : System Diagram"
Automatic air conditioner	HAC-13, "System Diagram"
Warning chime system	WCS-6, "WARNING CHIME SYSTEM : System Diagram"
Power door lock system	DLK-13, "System Diagram"
Nissan anti-theft system (NATS)	SEC-15, "NISSAN ANTI-THEFT SYSTEM : System Diagram"
Rear window defogger system	DEF-6, "REAR WINDOW DEFOGGER : System Diagram"
Intelligent Key system/engine start system	DLK-14, "INTELLIGENT KEY SYSTEM : System Diagram"
Power window system	PWC-6, "POWER WINDOW SYSTEM : System Diagram"

BODY CONTROL SYSTEM : Fail-safe

INFOID:0000000006037233

FAIL-SAFE CONTROL BY DTC

BCM performs fail-safe control when any DTC are detected.

Display contents of CONSULT	Fail-safe	Cancellation
B2013: ID DISCORD BCM-S/L	Inhibit engine cranking	When communication between BCM and steering lock unit are communicated normally.
B2014: CHAIN OF S/L-BCM	Inhibit engine cranking	When communication between BCM and steering lock unit are communicated normally.
B2192: ID DISCORD BCM-ECM	Inhibit engine cranking	Erase DTC
B2193: CHAIN OF BCM-ECM	Inhibit engine cranking	Erase DTC
B2195: ANTI-SCANNING	Inhibit engine cranking	Ignition switch ON → OFF
B2198: NATS ANTENNA AMP	Inhibit engine cranking	Erase DTC
B2557: VEHICLE SPEED	Inhibit steering lock	When the following CAN signal status (vehicle speed signal) becomes consistent • Vehicle speed signal (ABS) • Vehicle speed signal (Meter)
B2601: SHIFT POSITION	Inhibit steering lock	500 ms after the following signal reception status becomes consistent • Selector lever P position switch signal • P range signal (CAN)
B2602: SHIFT POSITION	Inhibit steering lock	5 seconds after the following BCM recognition conditions are fulfilled • Ignition switch is in the ON position • Selector lever P position switch signal: Except P position (12 V) • Vehicle speed: 4 km/h (2.5 MPH) or more
B2603: SHIFT POSI STATUS	Inhibit steering lock	500 ms after any of the following BCM recognition conditions are fulfilled • Status 1 - Ignition switch is in the ON position - Selector lever P position switch signal: Except P position (12 V) - Selector lever P/N position signal: Except P and N positions (0 V) • Status 2 - Ignition switch is in the ON position - Selector lever P position switch signal: P position (0 V) - Selector lever P/N position signal: P or N positions (12 V)
B2604: PNP/CLUTCH SW	Inhibit steering lock	500 ms after any of the following BCM recognition conditions are fulfilled • Status 1 - Ignition switch is in the ON position - Selector lever P/N position signal: P or N position (12 V) - Shift position signal (CAN): P or N position • Status 2 - Ignition switch is in the ON position - Selector lever P/N position signal: Except P and N positions (0 V) - Shift position signal (CAN): Except P and N position
B2605: PNP/CLUTCH SW	Inhibit steering lock	500 ms after any of the following BCM recognition conditions are fulfilled • Status 1 - Power position: IGN - Selector lever P/N position signal: Except P and N positions (0 V) - Interlock/PNP switch signal (CAN): OFF • Status 2 - Ignition switch is in the ON position - Selector lever P/N position signal: P or N position (12 V) - Interlock/PNP switch signal (CAN): ON
B2608: STARTER RELAY	Inhibit engine cranking	500 ms after the following signal communication status becomes consistent • Starter motor relay control signal • Starter relay status signal (CAN)
B2609: S/L STATUS	• Inhibit engine cranking • Inhibit steering lock	When the following steering lock conditions agree • BCM steering lock control status • Steering lock condition No. 1 signal status • Steering lock condition No. 2 signal status
B260B: STEERING LOCK UNIT	Inhibit steering lock	Erase DTC
B260D: STEERING LOCK UNIT	Inhibit steering lock	Erase DTC

Display contents of CONSULT	Fail-safe	Cancellation
B260F: ENG STATE SIG LOST	Inhibit engine cranking	When any of the following conditions are fulfilled • Power position changes to ACC • Receives engine status signal (CAN)
B2612: S/L STATUS	• Inhibit engine cranking • Inhibit steering lock	When any of the following conditions are fulfilled • Steering lock unit status signal (CAN) is received normally • The BCM steering lock control status matches the steering lock status recognized by the steering lock unit status signal (CAN from IPDM E/R)
B2619: BCM	Inhibit engine cranking	1 second after the steering lock unit power supply output control inside BCM becomes normal
B26EF: STRG LCK RELAY OFF	Inhibit engine cranking	When the following conditions are fulfilled • Steering lock relay signal (CAN): ON • Steering lock unit status signal (CAN): ON
B26F0: STRG LCK RELAY ON	Inhibit engine cranking	When the following conditions are fulfilled • Steering lock relay signal (CAN): OFF • Steering lock unit status signal (CAN): OFF
B26F1: IGN RELAY OFF	Inhibit engine cranking	When the following conditions are fulfilled • Ignition switch ON signal (CAN: Transmitted from BCM): ON • Ignition switch ON signal (CAN: Transmitted from IPDM E/R): ON
B26F2: IGN RELAY ON	Inhibit engine cranking	When the following conditions are fulfilled • Ignition switch ON signal (CAN: Transmitted from BCM): OFF • Ignition switch ON signal (CAN: Transmitted from IPDM E/R): OFF
B26F3: START CONT RLY ON	Inhibit engine cranking	When the following conditions are fulfilled • Starter control relay signal (CAN: Transmitted from BCM): OFF • Starter control relay signal (CAN: Transmitted from IPDM E/R): OFF
B26F4: START CONT RLY OFF	Inhibit engine cranking	When the following conditions are fulfilled • Starter control relay signal (CAN: Transmitted from BCM): ON • Starter control relay signal (CAN: Transmitted from IPDM E/R): ON
B26F7: BCM	Inhibit engine cranking by Intelligent Key system	When room antenna and luggage room antenna functions normally
U0415: VEHICLE SPEED	Inhibit steering lock	When vehicle speed signal (Meter) (CAN) is received normally

REAR WIPER MOTOR PROTECTION

BCM detects the rear wiper stopping position according to the rear wiper stop position signal.
When the rear wiper stop position signal does not change for more than 5 seconds while driving the rear wiper, BCM stops power supply to protect the rear wiper motor.

Condition of cancellation

1. More than 1 minute is passed after the rear wiper stop.
2. Turn rear wiper switch OFF.
3. Operate the rear wiper switch or rear washer switch.

COMBINATION SWITCH READING SYSTEM

COMBINATION SWITCH READING SYSTEM : System Diagram

INFOID:0000000006014817

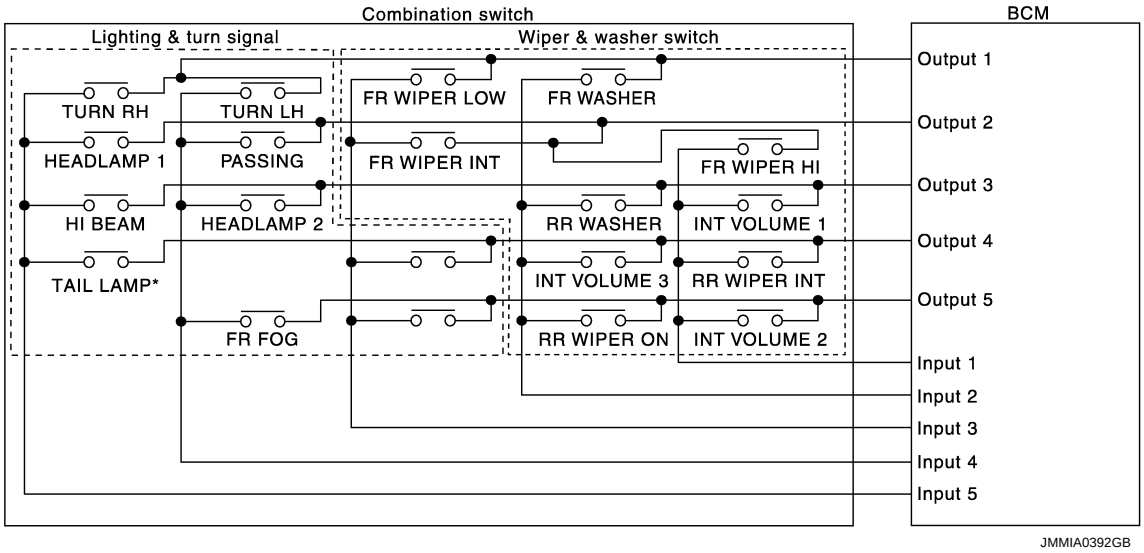

NOTE:
*: TAIL LAMP switch links lighting switch 1ST position.

COMBINATION SWITCH READING SYSTEM : System Description

INFOID:0000000006014818

OUTLINE

- BCM reads the status of the combination switch (light, turn signal, wiper and washer) and recognizes the status of each switch.
- BCM has a combination of 5 output terminals (OUTPUT 1 - 5) and 5 input terminals (INPUT 1 - 5). It reads a maximum of 20 switch status.

COMBINATION SWITCH MATRIX

Combination switch circuit

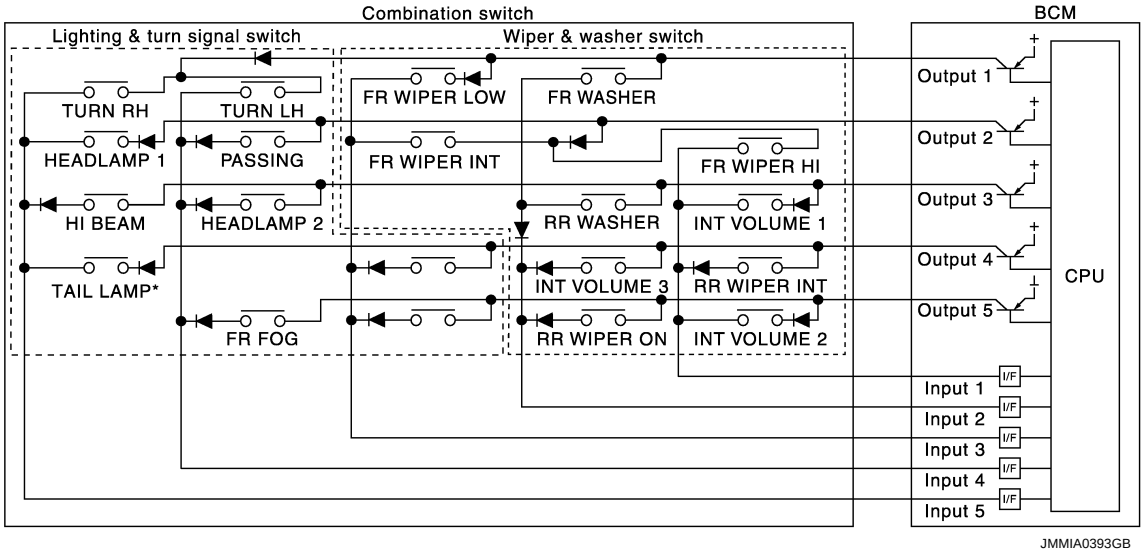

NOTE:
*: TAIL LAMP switch links lighting switch 1ST position.

Combination switch INPUT-OUTPUT system list

System	INPUT 1	INPUT 2	INPUT 3	INPUT 4	INPUT 5
OUTPUT 1	—	FR WASHER	FR WIPER LOW	TURN LH	TURN RH
OUTPUT 2	FR WIPER HI	—	FR WIPER INT	PASSING	HEADLAMP 1
OUTPUT 3	INT VOLUME 1	RR WASHER	—	HEADLAMP 2	HI BEAM

System	INPUT 1	INPUT 2	INPUT 3	INPUT 4	INPUT 5
OUTPUT 4	RR WIPER INT	INT VOLUME 3	—	—	TAIL LAMP
OUTPUT 5	INT VOLUME 2	RR WIPER	—	FR FOG	—

NOTE:

Headlamp has a dual system switch.

COMBINATION SWITCH READING FUNCTION

Description

- BCM reads the status of the combination switch at 10 ms interval normally.

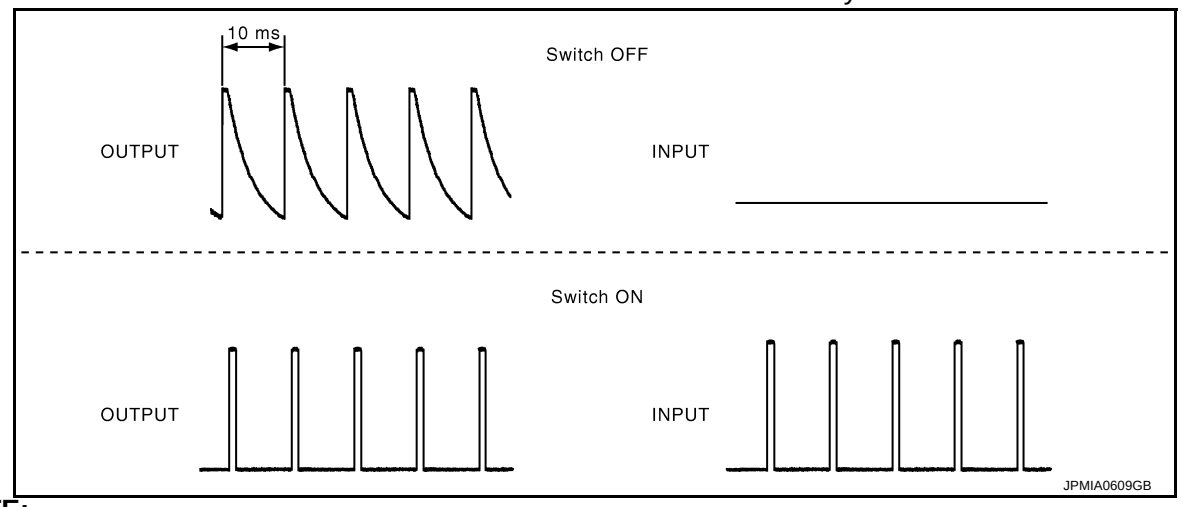

NOTE:

BCM reads the status of the combination switch at 60 ms interval when BCM is controlled at low power consumption control mode.

- BCM operates as follows and judges the status of the combination switch.
- It operates the transistor on OUTPUT side in the following order: OUTPUT 1 → 2 → 3 → 4 → 5, and outputs voltage waveform.
- The voltage waveform of OUTPUT corresponding to the formed circuit is input into the interface on INPUT side if any (1 or more) switches are ON.
- It reads this change of the voltage as the status signal of the combination switch.

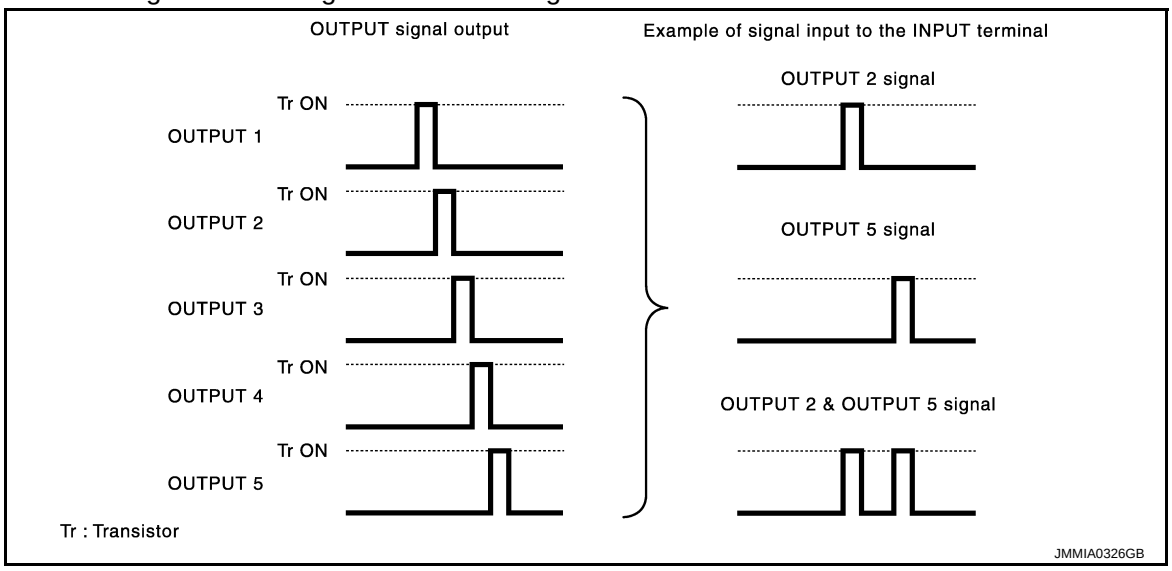

Operation Example

In the following operation example, the combination of the status signals of the combination switch is replaced as follows: INPUT 1 - 5 to “1 - 5” and OUTPUT 1 - 5 to “A - E”.

Example 1: When a switch (TAIL LAMP switch) is turned ON

- The circuit between OUTPUT 4 and INPUT 5 is formed when the TAIL LAMP switch is turned ON.

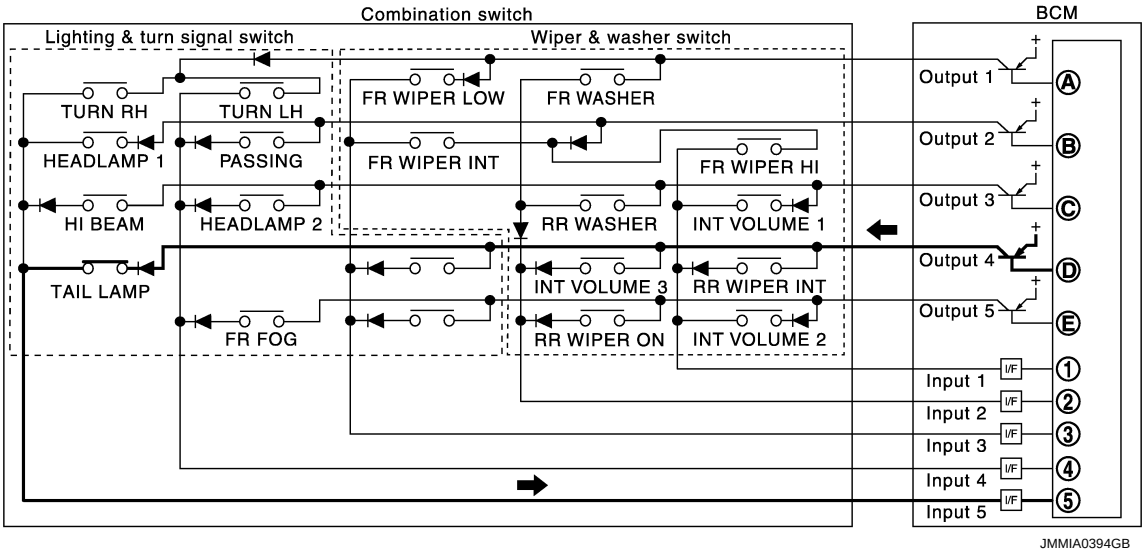

- BCM detects the combination switch status signal “5D” when the signal of OUTPUT 4 is input to INPUT 5.
- BCM judges that the TAIL LAMP switch is ON when the signal “5D” is detected.

Example 2: When some switches (TURN RH switch, TAIL LAMP switch) are turned ON

- The circuits between OUTPUT 1 and INPUT 5 and between OUTPUT 4 and INPUT 5 are formed when the TURN RH switch and TAIL LAMP switch are turned ON.

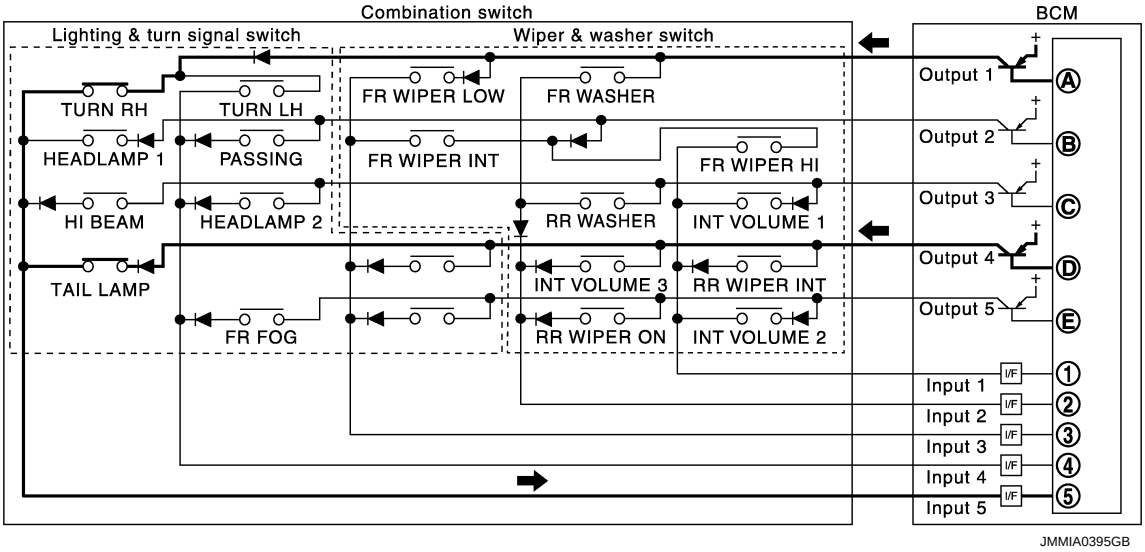

- BCM detects the combination switch status signal “5AD” when the signals of OUTPUT 1 and OUTPUT 4 are input to INPUT 5.
- BCM judges that the TURN RH switch and TAIL LAMP switch are ON when the signal “5AD” is detected.

WIPER INTERMITTENT DIAL POSITION

BCM judges the wiper intermittent dial 1 - 7 by the status of INT VOLUME 1, 2 and 3 switches.

Wiper intermittent dial position	Switch status		
	INT VOLUME 1	INT VOLUME 2	INT VOLUME 3
1	ON	ON	ON
2	ON	ON	OFF
3	ON	OFF	OFF
4	OFF	OFF	OFF
5	OFF	OFF	ON

Wiper intermittent dial position	Switch status		
	INT VOLUME 1	INT VOLUME 2	INT VOLUME 3
6	OFF	ON	ON
7	OFF	ON	OFF

NOTE:

For details of wiper intermittent dial position, refer to WW-6, "FRONT WIPER AND WASHER SYSTEM : System Description".

SIGNAL BUFFER SYSTEM

SIGNAL BUFFER SYSTEM : System Diagram

INFOID:0000000006014819

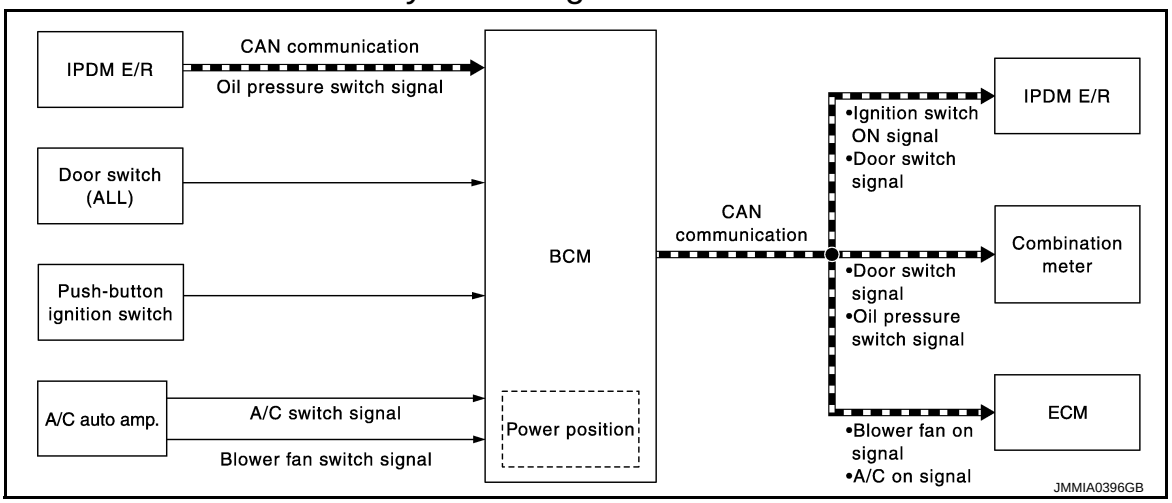

SIGNAL BUFFER SYSTEM : System Description

INFOID:0000000006014820

OUTLINE

BCM has the signal transmission function that outputs/transmits each input/received signal to each unit.

Signal transmission function list

Signal name	Input	Output	Description
Ignition switch ON signal	Push-button ignition switch (Push switch)	IPDM E/R (CAN)	Inputs the push-button ignition switch (push switch) signal and transmits the ignition switch status judged with BCM via CAN communication.
Door switch signal	Any door switch	• Combination meter (CAN) • IPDM E/R (CAN)	Inputs the door switch signal and transmits it via CAN communication.
Blower fan on signal	A/C auto amp.	ECM (CAN)	Input blower fan switch signal, and transmit the blower fan on signal via CAN communication.
A/C on signal	A/C auto amp.	ECM (CAN)	Input A/C switch signal, and transmit the A/C on signal via CAN communication.
Oil pressure switch signal	IPDM E/R (CAN)	Combination meter (CAN)	Transmits the received oil pressure switch signal via CAN communication.

POWER CONSUMPTION CONTROL SYSTEM

POWER CONSUMPTION CONTROL SYSTEM : System Diagram

INFOID:0000000006014821

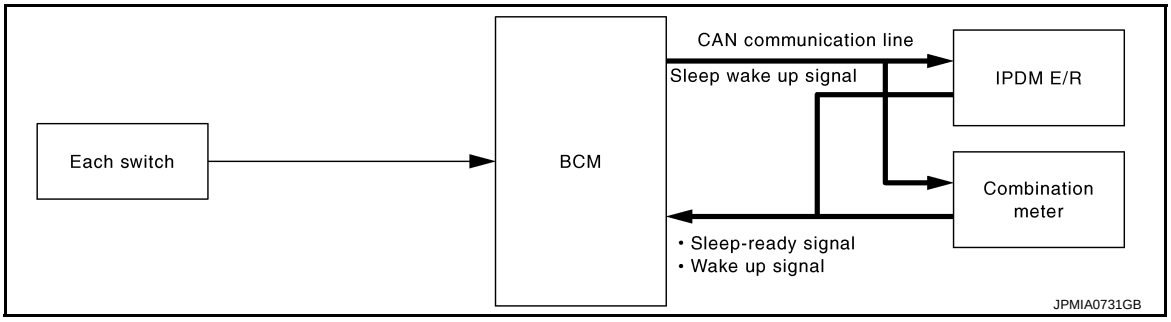

POWER CONSUMPTION CONTROL SYSTEM : System Description

INFOID:0000000006014822

OUTLINE

- BCM incorporates a power saving control function that reduces the power consumption according to the vehicle status.
- BCM switches the status (control mode) by itself with the power saving control function. It performs the sleep request to each unit (IPDM E/R and combination meter) that operates with the ignition switch OFF.

Normal mode (wake-up)
- CAN communication is normally performed with other units
- Each control with BCM is operating properly

CAN communication sleep mode (CAN sleep)
- CAN transmission is stopped
- Control with BCM only is operating

Low power consumption mode (BCM sleep)
- Low power consumption control is active
- CAN transmission is stopped

LOW POWER CONSUMPTION CONTROL WITH BCM

BCM reduces the power consumption with the following operation in the low power consumption mode.
- The reading interval of the each switches changes from 10 ms interval to 60 ms interval.

Sleep mode activation

- BCM receives the sleep-ready signal (ready) from IPDM E/R and combination meter via CAN communication.
- BCM transmits the sleep wake up signal (sleep) to each unit when all of the CAN sleep conditions are fulfilled.
- Each unit stops the transmission of CAN communication with the sleep wake up signal. BCM is in CAN communication sleep mode.
- BCM is in the low power consumption mode and perform the low power consumption control when all of the BCM sleep conditions are fulfilled with CAN sleep condition.

Sleep condition

CAN sleep condition	BCM sleep condition
• Receiving the sleep-ready signal (ready) from all units • Ignition switch: OFF • Panic alarm: Not operation • Warning chime: Not operation • Intelligent Key system buzzer: Not operation • Stop lamp switch: OFF • Turn signal indicator lamp: Not operation • Exterior lamp: OFF • Door lock status: No change • CONSULT-III communication status: Not communication • Meter display signal: Non-transmission • Door switch status: No change • Rear window defogger: OFF • Driver door lock status: No change	• Interior room lamp battery saver: Time out • Nissan anti-theft system (NATS): Not operation • Remote keyless entry receiver communication status: No communication • ACC/ON indicator lamp: Not operation

Wake-up operation

- BCM transmits sleep wake up signal (wake up) to each unit when any condition listed below is established, and then goes into normal mode from low power consumption mode.
- Each unit starts transmissions with CAN communication by receiving sleep wake up signals. Each unit transmit wake up signals to BCM with CAN communication to convey the start of CAN communication.

Wake-up condition

Wake-up condition
• Receiving the sleep-ready signal (Not-ready) from any units • Push-button ignition switch (push switch): OFF→ ON • Hazard switch: ON • HI BEAM switch: OFF → ON, ON → OFF • PASSING switch: OFF → ON, ON → OFF • HEADLAMP 1 switch: OFF → ON, ON → OFF • HEADLAMP 2 switch: OFF → ON, ON → OFF • TAIL LAMP switch: OFF → ON • FR FOG switch: OFF → ON, ON → OFF • TURN RH: OFF → ON, ON → OFF • TURN LH: OFF → ON, ON → OFF • Driver door switch: OFF → ON, ON → OFF • Passenger door switch: OFF → ON, ON → OFF • Rear RH door switch: OFF → ON, ON → OFF • Rear LH door switch: OFF → ON, ON → OFF • Back door switch: OFF → ON, ON → OFF • Driver door request switch: OFF → ON • Passenger door request switch: OFF → ON • Back door request switch: OFF → ON • Stop lamp switch: ON • Door lock and unlock switch: NEUTRAL → LOCK, NEUTRAL → UNLOCK • Remote keyless entry receiver communication: Receiving • Front door lock assembly (driver side) (unlock sensor): OFF → ON, ON → OFF

DIAGNOSIS SYSTEM (BCM)

COMMON ITEM

COMMON ITEM : CONSULT-III Function (BCM - COMMON ITEM)

INFOID:0000000006014823

APPLICATION ITEM

CONSULT-III performs the following functions via CAN communication with BCM.

Diagnosis mode	Function Description
Work Support	Changes the setting for each system function.
Self Diagnostic Result	Displays the diagnosis results judged by BCM.
CAN Diag Support Monitor	Monitors the reception status of CAN communication viewed from BCM. Refer to CONSULT-III operation manual.
Data Monitor	The BCM input/output signals are displayed.
Active Test	The signals used to activate each device are forcibly supplied from BCM.
Ecu Identification	The BCM part number is displayed.
Configuration	• Read and save the vehicle specification. • Write the vehicle specification when replacing BCM.

SYSTEM APPLICATION

BCM can perform the following functions for each system.

NOTE:

It can perform the diagnosis modes except the following for all sub system selection items.

×: Applicable item

System	Sub system selection item	Diagnosis mode		
		Work Support	Data Monitor	Active Test
Door lock	DOOR LOCK	×	×	×
Rear window defogger	REAR DEFOGGER		×	×
Warning chime	BUZZER		×	×
Interior room lamp timer	INT LAMP	×	×	×
Exterior lamp	HEAD LAMP	×	×	×
Wiper and washer	WIPER	×	×	×
Turn signal and hazard warning lamps	FLASHER	×	×	×
Automatic air conditioner	AIR CONDITONER		×	×
• Intelligent Key system • Engine start system	INTELLIGENT KEY	×	×	×
Combination switch	COMB SW		×	
Body control system	BCM	×		
NATS	IMMU	×	×	×
Interior room lamp battery saver	BATTERY SAVER	×	×	×
Back door	TRUNK		×	
—	THEFT ALM*	×	×	×
—	RETAINED PWR*		×	
Signal buffer system	SIGNAL BUFFER		×	×

*: This item is displayed, but is not used.

FREEZE FRAME DATA (FFD)

The BCM records the following vehicle condition at the time a particular DTC is detected, and displays on CONSULT-III.

CONSULT screen item	Indication/Unit	Description	
Vehicle Speed	km/h	Vehicle speed of the moment a particular DTC is detected	
Odo/Trip Meter	km	Total mileage (Odometer value) of the moment a particular DTC is detected	
Vehicle Condition	SLEEP>LOCK	Power position status of the moment a particular DTC is detected	While turning BCM status from low power consumption mode to normal mode (Power supply position is “LOCK”)
	SLEEP>OFF		While turning BCM status from low power consumption mode to normal mode (Power supply position is “OFF”.)
	LOCK>ACC		While turning power supply position from “LOCK” to “ACC”
	ACC>ON		While turning power supply position from “ACC” to “IGN”
	RUN>ACC		While turning power supply position from “RUN” to “ACC” (Vehicle is stopping and selector lever is except P position.)
	CRANK>RUN		While turning power supply position from “CRANKING” to “RUN” (From cranking up the engine to run it)
	RUN>URGENT		While turning power supply position from “RUN“ to “ACC” (Emergency stop operation)
	ACC>OFF		While turning power supply position from “ACC” to “OFF”
	OFF>LOCK		While turning power supply position from “OFF” to “LOCK”
	OFF>ACC		While turning power supply position from “OFF” to “ACC”
	ON>CRANK		While turning power supply position from “IGN” to “CRANKING”
	OFF>SLEEP		While turning BCM status from normal mode (Power supply position is “OFF”.) to low power consumption mode
	LOCK>SLEEP		While turning BCM status from normal mode (Power supply position is “LOCK”.) to low power consumption mode
	LOCK		Power supply position is “LOCK” (Ignition switch OFF with steering is locked.)
	OFF		Power supply position is “OFF” (Ignition switch OFF with steering is unlocked.)
	ACC		Power supply position is “ACC” (Ignition switch ACC)
	ON		Power supply position is “IGN” (Ignition switch ON with engine stopped)
	ENGINE RUN		Power supply position is “RUN” (Ignition switch ON with engine running)
	CRANKING		Power supply position is “CRANKING” (At engine cranking)
IGN Counter	0 - 39	The number of times that ignition switch is turned ON after DTC is detected • The number is 0 when a malfunction is detected now. • The number increases like 1 → 2 → 3...38 → 39 after returning to the normal condition whenever ignition switch OFF → ON. • The number is fixed to 39 until the self-diagnosis results are erased if it is over 39.	

COMB SW

COMB SW : CONSULT-III Function (BCM - COMB SW)

INFOID:0000000006014834

DATA MONITOR

Monitor item [UNIT]	Description
FR WIPER HI [Off/On]	Displays the status of the FR WIPER HI switch in combination switch judged by BCM with the combination switch reading function.
FR WIPER LOW [Off/On]	Displays the status of the FR WIPER LOW switch in combination switch judged by BCM with the combination switch reading function.
FR WASHER SW [Off/On]	Displays the status of the FR WASHER switch in combination switch judged by BCM with the combination switch reading function.

Monitor item [UNIT]	Description
FR WIPER INT [Off/On]	Displays the status of the FR WIPER INT switch in combination switch judged by BCM with the combination switch reading function.
INT VOLUME [1 - 7]	Displays the status of wiper intermittent dial position judged by BCM with the combination switch reading function.
RR WIPER ON [Off/On]	Displays the status of the RR WIPER ON switch in combination switch judged by BCM with the combination switch reading function.
RR WIPER INT [Off/On]	Displays the status of the RR WIPER INT switch in combination switch judged by BCM with the combination switch reading function.
RR WASHER SW [Off/On]	Displays the status of the RR WASHER switch in combination switch judged by BCM with the combination switch reading function.
TURN SIGNAL R [Off/On]	Displays the status of the TURN RH switch in combination switch judged by BCM with the combination switch reading function.
TURN SIGNAL L [Off/On]	Displays the status of the TURN LH switch in combination switch judged by BCM with the combination switch reading function.
TAIL LAMP SW [Off/On]	Displays the status of the TAIL LAMP switch in combination switch judged by BCM with the combination switch reading function.
HI BEAM SW [Off/On]	Displays the status of the HI BEAM switch in combination switch judged by BCM with the combination switch reading function.
HEAD LAMP SW 1 [Off/On]	Displays the status of the HEADLAMP 1 switch in combination switch judged by BCM with the combination switch reading function.
HEAD LAMP SW 2 [Off/On]	Displays the status of the HEADLAMP 2 switch in combination switch judged by BCM with the combination switch reading function.
PASSING SW [Off/On]	Displays the status of the PASSING switch in combination switch judged by BCM with the combination switch reading function.
FR FOG SW [Off/On]	Displays the status of the FR FOG switch in combination switch judged by BCM with the combination switch reading function.
RR FOG SW [Off/On]	**NOTE:** The item is indicated, but not monitored.

BCM

BCM : CONSULT-III Function (BCM - BCM)

INFOID:0000000006014835

WORK SUPPORT

Item	Description
RESET SETTING VALUE	Return a value set with Work Support of each system to a default value in factory shipment.

SIGNAL BUFFER

SIGNAL BUFFER : CONSULT-III Function (BCM - SIGNAL BUFFER)

INFOID:0000000006014840

DATA MONITOR

Monitor item [UNIT]	Description
PUSH SW [Off/On]	Displays the status of the push-button ignition switch (push switch) judged by BCM.

ACTIVE TEST

Test item	Operation	Description
OIL PRESSURE SW	Off	OFF
	On	BCM transmits the oil pressure switch signal to the combination meter via CAN communication, which illuminates the oil pressure warning lamp in the combination meter.

ECU DIAGNOSIS INFORMATION

BCM

Reference Value

INFOID:0000000006014841

VALUES ON THE DIAGNOSIS TOOL

CONSULT-III MONITOR ITEM

Monitor Item	Condition	Value/Status
FR WIPER HI	Other than front wiper switch HI	Off
	Front wiper switch HI	On
FR WIPER LOW	Other than front wiper switch LO	Off
	Front wiper switch LO	On
FR WASHER SW	Front washer switch OFF	Off
	Front washer switch ON	On
FR WIPER INT	Other than front wiper switch INT/AUTO	Off
	Front wiper switch INT/AUTO	On
FR WIPER STOP	Front wiper is not in STOP position	Off
	Front wiper is in STOP position	On
INT VOLUME	Wiper intermittent dial is in a dial position 1 - 7	Wiper intermittent dial position
RR WIPER ON	Other than rear wiper switch ON	Off
	Rear wiper switch ON	On
RR WIPER INT	Other than rear wiper switch INT	Off
	Rear wiper switch INT	On
RR WASHER SW	Rear washer switch OFF	Off
	Rear washer switch ON	On
RR WIPER STOP	Rear wiper is in STOP position	Off
	Rear wiper is not in STOP position	On
TURN SIGNAL R	Other than turn signal switch RH	Off
	Turn signal switch RH	On
TURN SIGNAL L	Other than turn signal switch LH	Off
	Turn signal switch LH	On
TAIL LAMP SW	Other than lighting switch 1ST and 2ND	Off
	Lighting switch 1ST or 2ND	On
HI BEAM SW	Other than lighting switch HI	Off
	Lighting switch HI	On
HEAD LAMP SW 1	Other than lighting switch 2ND	Off
	Lighting switch 2ND	On
HEAD LAMP SW 2	Other than lighting switch 2ND	Off
	Lighting switch 2ND	On
PASSING SW	Other than lighting switch PASS	Off
	Lighting switch PASS	On
FR FOG SW	Front fog lamp switch OFF	Off
	Front fog lamp switch ON	On
RR FOG SW	**NOTE:** The item is indicated, but not monitored.	Off

Monitor Item	Condition	Value/Status
DOOR SW-DR	Driver door closed	Off
	Driver door opened	On
DOOR SW-AS	Passenger door closed	Off
	Passenger door opened	On
DOOR SW-RR	Rear RH door closed	Off
	Rear RH door opened	On
DOOR SW-RL	Rear LH door closed	Off
	Rear LH door opened	On
DOOR SW-BK	Back door closed	Off
	Back door opened	On
CDL LOCK SW	Other than power door lock switch LOCK	Off
	Power door lock switch LOCK	On
CDL UNLOCK SW	Other than power door lock switch UNLOCK	Off
	Power door lock switch UNLOCK	On
KEY CYL LK-SW	**NOTE:** The item is indicated, but not monitored.	Off
KEY CYL UN-SW	**NOTE:** The item is indicated, but not monitored.	Off
HAZARD SW	Hazard switch is OFF	Off
	Hazard switch is ON	On
REAR DEF SW	Rear window defogger switch OFF	Off
	Rear window defogger switch ON	On
TR/BD OPEN SW	**NOTE:** The item is indicated, but not monitored.	Off
TRNK/HAT MNTR	**NOTE:** The item is indicated, but not monitored.	Off
FAN ON SIG	Blower fan OFF	Off
	Blower fan ON	On
AIR COND SW	Air conditioner OFF (A/C switch indicator OFF)	Off
	Air conditioner ON (A/C switch indicator ON)	On
RKE-LOCK	LOCK button of the Intelligent Key is not pressed	Off
	LOCK button of the Intelligent Key is pressed	On
RKE-UNLOCK	UNLOCK button of the Intelligent Key is not pressed	Off
	UNLOCK button of the Intelligent Key is pressed	On
RKE-TR/BD	**NOTE:** The item is indicated, but not monitored.	Off
RKE-PANIC	PANIC button of the Intelligent Key is not pressed	Off
	PANIC button of the Intelligent Key is pressed	On
RKE-MODE CHG	LOCK/UNLOCK button of the Intelligent Key is not pressed and held simultaneously	Off
	LOCK/UNLOCK button of the Intelligent Key is pressed and held simultaneously	On
RAIN SENSOR	**NOTE:** The item is indicated, but not monitored.	Off
REQ SW -DR	Driver door request switch is not pressed	Off
	Driver door request switch is pressed	On

Monitor Item	Condition	Value/Status
REQ SW -AS	Passenger door request switch is not pressed	Off
	Passenger door request switch is pressed	On
REQ SW -RR	**NOTE:** The item is indicated, but not monitored.	Off
REQ SW -RL	**NOTE:** The item is indicated, but not monitored.	Off
REQ SW -BD/TR	Back door request switch is not pressed	Off
	Back door request switch is pressed	On
PUSH SW	Push-button ignition switch (push switch) is not pressed	Off
	Push-button ignition switch (push switch) is pressed	On
CLUCH SW	**NOTE:** The item is indicated, but not monitored.	Off
BRAKE SW 1	The brake pedal is not depressed	Off
	The brake pedal is depressed	On
BRAKE SW 2	The brake pedal is depressed when No. 7 fuse is blown	Off
	The brake pedal is not depressed when No. 7 fuse is blown, or No. 7 fuse is normal	On
DETE/CANCL SW	Selector lever in P position	Off
	Selector lever in any position other than P	On
SFT PN/N SW	Selector lever in any position other than P and N	Off
	Selector lever in P or N position	On
S/L -LOCK	Steering is locked	Off
	Steering is unlocked	On
S/L -UNLOCK	Steering is unlocked	Off
	Steering is locked	On
S/L RELAY-F/B	Steering is unlocked	Off
	Steering is locked	On
UNLK SEN -DR	Driver door is locked	Off
	Driver door is unlocked	On
PUSH SW -IPDM	Push-button ignition switch (push-switch) is not pressed	Off
	Push-button ignition switch (push-switch) is pressed	On
IGN RLY1 -F/B	Ignition switch in OFF or ACC position	Off
	Ignition switch in ON position	On
DETE SW -IPDM	Selector lever in any position other than P	Off
	Selector lever in P position	On
SFT PN -IPDM	Selector lever in any position other than P and N	Off
	Selector lever in P or N position	On
SFT P -MET	Selector lever in any position other than P	Off
	Selector lever in P position	On
SFT N -MET	Selector lever in any position other than N	Off
	Selector lever in N position	On
ENGINE STATE	Engine stopped	Stop
	While the engine stalls	Stall
	At engine cranking	Crank
	Engine running	Run

Monitor Item	Condition	Value/Status
S/L LOCK-IPDM	Steering is locked	Off
	Steering is unlocked	On
S/L UNLK-IPDM	Steering is unlocked	Off
	Steering is locked	On
S/L RELAY-REQ	Steering is unlocked	Off
	Steering is locked	On
VEH SPEED 1	While driving	Equivalent to speed-ometer reading
VEH SPEED 2	While driving	Equivalent to speed-ometer reading
DOOR STAT-DR	Driver door is locked	LOCK
	Wait with selective UNLOCK operation (5 seconds)	READY
	Driver door is unlocked	UNLOCK
DOOR STAT-AS	Passenger door is locked	LOCK
	Wait with selective UNLOCK operation (5 seconds)	READY
	Passenger door is unlocked	UNLOCK
ID OK FLAG	Steering is locked	Reset
	Steering is unlocked	Set
PRMT ENG STRT	The engine start is prohibited	Reset
	The engine start is permitted	Set
PRMT RKE STRT	**NOTE:** The item is indicated, but not monitored.	Reset
RKE OPE COUN1	During the operation of the Intelligent Key	Operation frequency of the Intelligent Key
RKE OPE COUN2	**NOTE:** The item is indicated, but not monitored.	—
CONFRM ID ALL	The key ID that the key slot receives is not recognized by any key ID registered to BCM.	Yet
	The key ID that the key slot receives is recognized by any key ID registered to BCM.	Done
CONFIRM ID4	The key ID that the key slot receives is not recognized by the fourth key ID registered to BCM.	Yet
	The key ID that the key slot receives is recognized by the fourth key ID registered to BCM.	Done
CONFIRM ID3	The key ID that the key slot receives is not recognized by the third key ID registered to BCM.	Yet
	The key ID that the key slot receives is recognized by the third key ID registered to BCM.	Done
CONFIRM ID2	The key ID that the key slot receives is not recognized by the second key ID registered to BCM.	Yet
	The key ID that the key slot receives is recognized by the second key ID registered to BCM.	Done
CONFIRM ID1	The key ID that the key slot receives is not recognized by the first key ID registered to BCM.	Yet
	The key ID that the key slot receives is recognized by the first key ID registered to BCM.	Done
NOT REGISTERED	BCM detects registered key ID, or BCM does not detect key ID.	ID OK
	BCM detects non-registration key ID.	ID NG

Monitor Item	Condition	Value/Status
TP 4	The ID of fourth Intelligent Key is not registered to BCM	Yet
	The ID of fourth Intelligent Key is registered to BCM	Done
TP 3	The ID of third Intelligent Key is not registered to BCM	Yet
	The ID of third Intelligent Key is registered to BCM	Done
TP 2	The ID of second Intelligent Key is not registered to BCM	Yet
	The ID of second Intelligent Key is registered to BCM	Done
TP 1	The ID of first Intelligent Key is not registered to BCM	Yet
	The ID of first Intelligent Key is registered to BCM	Done

TERMINAL LAYOUT

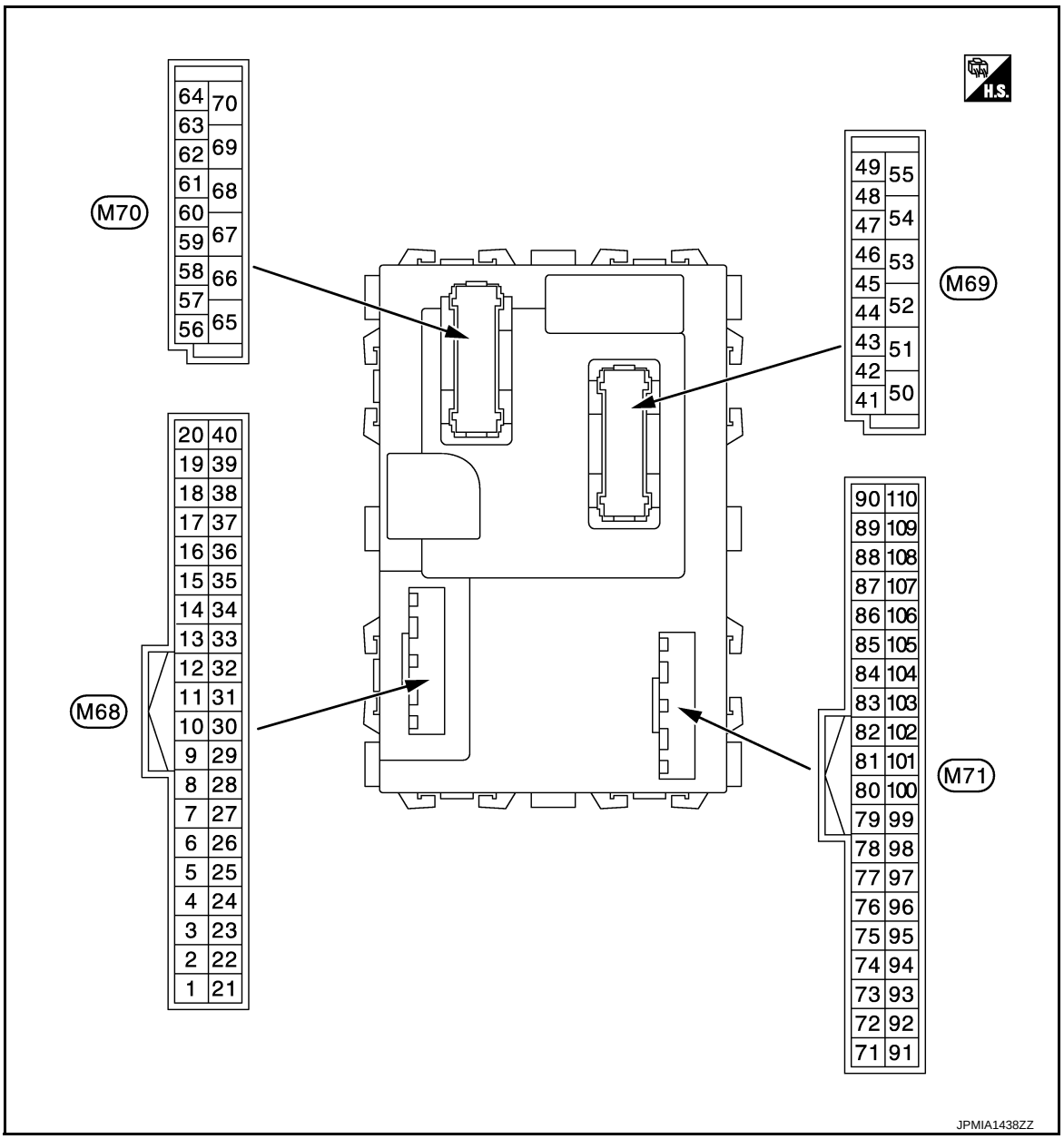

NOTE:
Connector color
- M68, M70: Black
- M69, M71: White

PHYSICAL VALUES

Terminal No. (Wire color)		Description		Condition		Value (Approx.)
+	–	Signal name	Input/ Output			
1 (GR)	Ground	Rear window defogger relay control	Input	Rear window defogger	OFF	Battery voltage
					ON	0 V
2 (BR)	Ground	Combination switch INPUT 5	Input	Combination switch (Wiper intermittent dial 4)	All switches OFF	0 V
					Turn signal switch RH	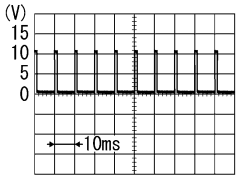 PKIB4958J 1.0 V
					Lighting switch HI	
					Lighting switch 1ST	
					Lighting switch 2ND	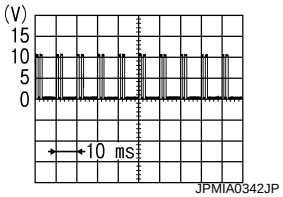 JPMIA0342JP 2.0 V
3 (Y)	Ground	Combination switch INPUT 4	Input	Combination switch (Wiper intermittent dial 4)	All switches OFF	0 V
					Turn signal switch LH	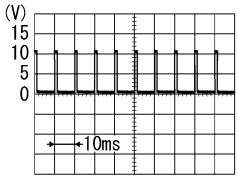 PKIB4958J 1.0 V
					Lighting switch PASS	
					Lighting switch 2ND	
					Front fog lamp switch ON	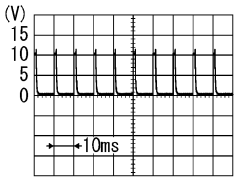 PKIB4956J 0.8 V
4 (L)	Ground	Combination switch INPUT 3	Input	Combination switch (Wiper intermittent dial 4)	All switches OFF	0 V
					Front wiper switch LO	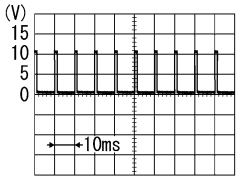 PKIB4958J 1.0 V
					Front wiper switch MIST	
					Front wiper switch INT	

Terminal No. (Wire color)		Description		Condition		Value (Approx.)
+	–	Signal name	Input/ Output			
5 (G)	Ground	Combination switch INPUT 2	Input	Combination switch	All switches OFF (Wiper intermittent dial 4)	0 V
					Front washer switch ON (Wiper intermittent dial 4)	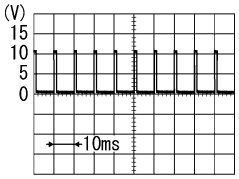 PKIB4958J 1.0 V
					Rear washer switch ON (Wiper intermittent dial 4)	
					Any of the condition below with all switches OFF • Wiper intermittent dial 1 • Wiper intermittent dial 5 • Wiper intermittent dial 6	
					Rear wiper switch ON (Wiper intermittent dial 4)	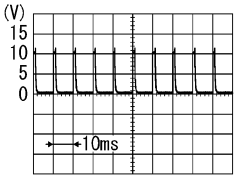 PKIB4956J 0.8 V
6 (R)	Ground	Combination switch INPUT 1	Input	Combination switch	All switches OFF (Wiper intermittent dial 4)	0 V
					Front wiper switch HI (Wiper intermittent dial 4)	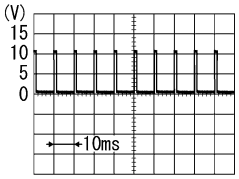 PKIB4958J 1.0 V
					Rear wiper switch INT (Wiper intermittent dial 4)	
					Wiper intermittent dial 3 (All switches OFF)	
					Any of the condition below with all switches OFF • Wiper intermittent dial 1 • Wiper intermittent dial 2	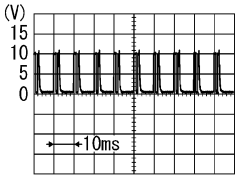 PKIB4952J 1.9 V
					Any of the condition below with all switches OFF • Wiper intermittent dial 6 • Wiper intermittent dial 7	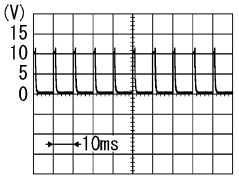 PKIB4956J 0.8 V

Terminal No. (Wire color)		Description		Condition		Value (Approx.)
+	–	Signal name	Input/ Output			
9 (W)	Ground	Stop lamp switch 1	Input	Stop lamp switch	OFF (Brake pedal is not depressed)	0 V
					ON (Brake pedal is depressed)	Battery voltage
11 (L)	Ground	ACC feedback	Input	Ignition switch OFF		0 V
				Ignition switch ACC or ON		Battery voltage
12 (P)	Ground	Passenger door switch	Input	Passenger door switch	OFF (When passenger door closed)	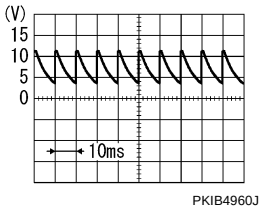 7.0 - 8.0 V
					ON (When passenger door opened)	0 V
13 (LG)	Ground	Rear RH door switch	Input	Rear RH door switch	OFF (When rear RH door closed)	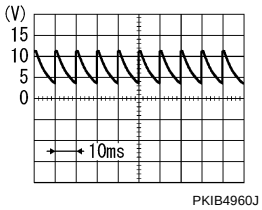 7.0 - 8.0 V
					ON (When rear RH door opened)	0 V
15 (G)	Ground	Rear window defogger switch	Input	Rear window defogger switch	Not pressed	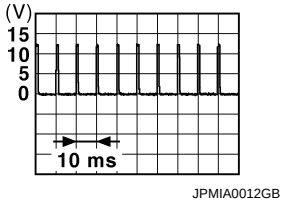 1.0 - 1.5 V
					Pressed	0 V
18 (V)	Ground	Receiver and sensor ground	Input	Ignition switch ON		0 V
19 (LG)	Ground	Remote keyless entry receiver power supply	Output	Ignition switch OFF		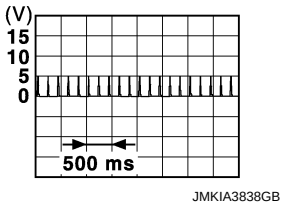

Terminal No. (Wire color) +	Terminal No. (Wire color) –	Description: Signal name	Description: Input/Output	Condition		Value (Approx.)
20 (G)	Ground	Remote keyless entry receiver communication	Input	Waiting		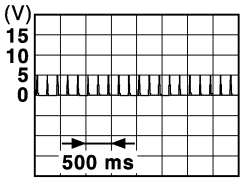 JMKIA3838GB
				Signal receiving		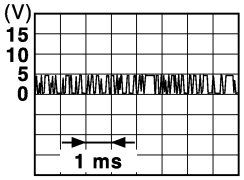 JMKIA3841GB
21 (P)	Ground	NATS antenna amp.	Input/Output	During waiting	Intelligent Key backside is contacted to push-button ignition switch, turn ignition switch ON.	Just after pressing push-button ignition switch. Pointer of analog tester should move.
22 (W)	Ground	Remote keyless entry receiver RSSI	Input	Waiting		0 V
				Signal receiving		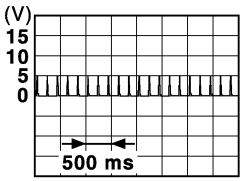 JMKIA3838GB
23 (G)	Ground	Security indicator lamp	Output	Security indicator lamp	ON	0 V
					Blinking (Ignition switch OFF)	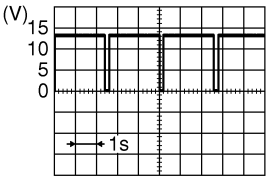 JPMIA0590GB 12.0 V
					OFF	12 V
25 (LG)	Ground	NATS antenna amp.	Input/Output	During waiting	Intelligent Key backside is contacted to push-button ignition switch, turn ignition switch ON.	Just after pressing push-button ignition switch. Pointer of analog tester should move.
27 (W)	Ground	A/C switch	Input	A/C	OFF (A/C switch indicator: OFF)	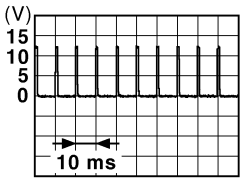 JPMIA0012GB 1.0 - 1.5 V
					ON (A/C switch indicator: ON)	0 V

Terminal No. (Wire color)		Description		Condition		Value (Approx.)
+	–	Signal name	Input/ Output			
28 (SB)	Ground	Blower fan switch	Input	Fan switch	Blower fan switch OFF	0 V
					Blower fan switch ON	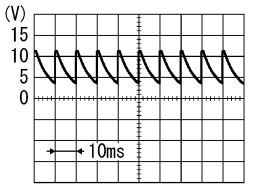 PKIB4960J 7.0 - 8.0 V
29 (SB)	Ground	Hazard switch	Input	Hazard switch	OFF	12 V
					ON	0 V
31 (Y)	Ground	Front door lock assembly driver side (Unlock sensor)	Input	Driver door	LOCK status (Unlock sensor switch OFF)	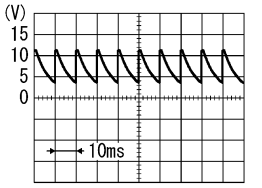 PKIB4960J 7.0 - 8.0 V
					UNLOCK status (Unlock sensor switch ON)	0 V
32 (P)	Ground	Combination switch OUTPUT 5	Output	Combination switch	All switches OFF (Wiper intermittent dial 4)	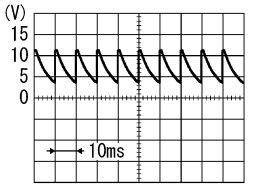 PKIB4960J 7.0 - 8.0 V
					Front fog lamp switch ON (Wiper intermittent dial 4)	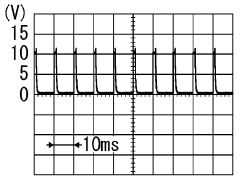 PKIB4956J 1.0 V
					Rear wiper switch ON (Wiper intermittent dial 4)	
					Any of the condition below with all switches OFF • Wiper intermittent dial 1 • Wiper intermittent dial 2 • Wiper intermittent dial 6 • Wiper intermittent dial 7	

Terminal No. (Wire color)		Description		Condition		Value (Approx.)
+	–	Signal name	Input/ Output			
33 (V)	Ground	Combination switch OUTPUT 4	Output	Combination switch	All switches OFF (Wiper intermittent dial 4)	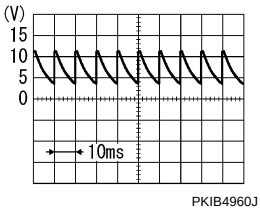 7.0 - 8.0 V
					Lighting switch 1ST (Wiper intermittent dial 4)	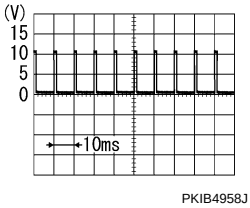 1.2 V
					Rear wiper switch INT (Wiper intermittent dial 4)	
					Any of the condition below with all switches OFF • Wiper intermittent dial 1 • Wiper intermittent dial 5 • Wiper intermittent dial 6	
34 (W)	Ground	Combination switch OUTPUT 3	Output	Combination switch	All switches OFF (Wiper intermittent dial 4)	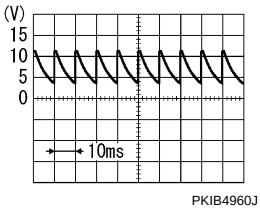 7.0 - 8.0 V
					Lighting switch 2ND (Wiper intermittent dial 4)	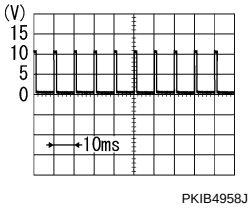 1.2 V
					Lighting switch HI (Wiper intermittent dial 4)	
					Rear washer switch ON (Wiper intermittent dial 4)	
					Any of the condition below with all switches OFF • Wiper intermittent dial 1 • Wiper intermittent dial 2 • Wiper intermittent dial 3	

Terminal No. (Wire color)		Description		Condition		Value (Approx.)
+	–	Signal name	Input/ Output			
35 (GR)	Ground	Combination switch OUTPUT 2	Output	Combination switch (Wiper intermittent dial 4)	All switches OFF	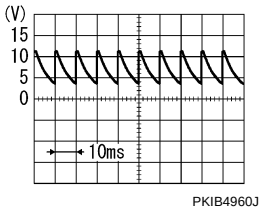 7.0 - 8.0 V
					Lighting switch 2ND	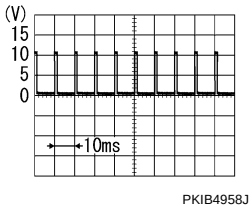 1.2 V
					Lighting switch PASS	
					Front wiper switch INT	
					Front wiper switch HI	
36 (LG)	Ground	Combination switch OUTPUT 1	Output	Combination switch (Wiper intermittent dial 4)	All switches OFF	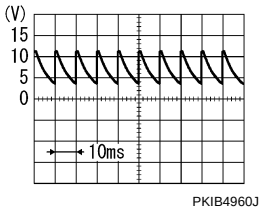 7.0 - 8.0 V
					Turn signal switch RH	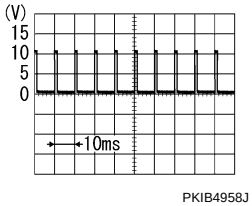 1.2 V
					Turn signal switch LH	
					Front wiper switch LO	
					Front wiper switch MIST	
					Front washer switch ON	
37 (R)	Ground	Selector lever P position switch	Input	Selector lever	P position	0 V
					Any position other than P	12 V
38 (BG)	Ground	IGN feedback	Input	Ignition switch	OFF or ACC	0 V
					ON	Battery voltage
39 (L)	Ground	CAN-H	Input/ Output	—		—
40 (P)	Ground	CAN-L	Input/ Output	—		—

Terminal No. (Wire color)		Description		Condition		Value (Approx.)
+	–	Signal name	Input/ Output			
43 (P)	Ground	Back door switch	Input	Back door switch	OFF (When back door closed)	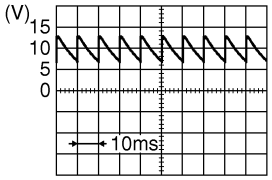 JPMIA0593GB 9.0 - 10.0 V
					ON (When back door opened)	0 V
44 (LG)	Ground	Rear wiper stop position	Input	Ignition switch ON	Rear wiper stop position	12 V
					Any position other than rear wiper stop position	0 V
45 (GR)	Ground	Door lock and unlock switch LOCK	Input	Door lock and unlock switch	NEUTRAL position	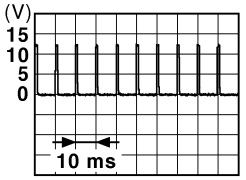 JPMIA0012GB 1.0 - 1.5 V
					LOCK position	0 V
46 (BR)	Ground	Door lock and unlock switch UNLOCK	Input	Door lock and unlock switch	NEUTRAL position	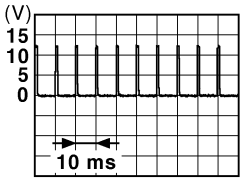 JPMIA0012GB 1.0 - 1.5 V
					UNLOCK position	0 V
47 (SB)	Ground	Driver door switch	Input	Driver door switch	OFF (When driver door closed)	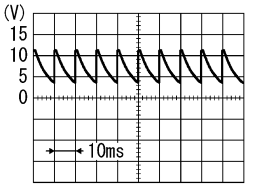 PKIB4960J 7.0 - 8.0 V
					ON (When driver door opened)	0 V

Terminal No. (Wire color)		Description		Condition		Value (Approx.)
+	–	Signal name	Input/ Output			
48 (W)	Ground	Rear LH door switch	Input	Rear LH door switch	OFF (When rear LH door closed)	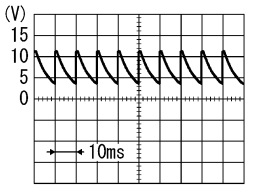 PKIB4960J 7.0 - 8.0 V
					ON (When rear door LH opened)	0 V
54 (R)	Ground	Rear wiper	Output	Rear wiper	OFF (Stopped)	0 V
					ON (Activated)	12 V
57 (Y)	Ground	Battery power supply	Input	Ignition switch OFF		Battery voltage
60 (V)	Ground	Turn signal LH	Output	Ignition switch ON	Turn signal switch OFF	0 V
					Turn signal switch LH	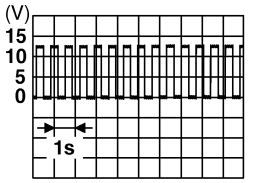 PKIC6370E 6.0 V
61 (W)	Ground	Turn signal RH	Output	Ignition switch ON	Turn signal switch OFF	0 V
					Turn signal switch RH	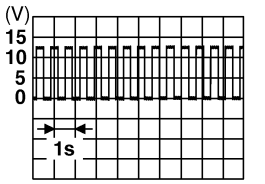 PKIC6370E 6.0 V
63 (R)	Ground	Interior room lamp timer control	Output	Interior room lamp	OFF	Battery voltage
					ON	0 V
65 (SB)	Ground	All doors LOCK	Output	All doors	LOCK (Actuator is activated)	12 V
					Other then LOCK (Actuator is not activated)	0 V
66 (G)	Ground	All doors UNLOCK	Output	All doors	UNLOCK (Actuator is activated)	12 V
					Other then UNLOCK (Actuator is not activated)	0 V
67 (B)	Ground	Ground	Output	Ignition switch ON		0 V
68 (L)	Ground	P/W power supply (IGN)	Output	Ignition switch ON		12 V
69 (P)	Ground	P/W power supply (BAT)	Output	Ignition switch OFF		12 V

Terminal No. (Wire color)		Description		Condition		Value (Approx.)
+	–	Signal name	Input/ Output			
70 (G)	Ground	Battery power supply	Input	Ignition switch OFF		Battery voltage
74 (V)	Ground	Auto retractable door mirror operation	Output	Ignition switch OFF	Within for 6 seconds after doors are locked by following operation • Pushed LOCK button of Intelligent Key • Pushed any door request switch	0 V
					After 6 seconds after doors are locked	Battery voltage
75 (GR)	Ground	Driver door request switch	Input	Driver door request switch	ON (Pressed)	0 V
					OFF (Not pressed)	12 V
76 (L)	Ground	Passenger door request switch	Input	Passenger door request switch	ON (Pressed)	0 V
					OFF (Not pressed)	12 V
77 (W)	Ground	Back door request switch	Input	Back door request switch	ON (Pressed)	0 V
					OFF (Not pressed)	12 V
78 (P)	Ground	Driver door antenna (+)	Output	When the driver door request switch is operated with ignition switch OFF	When Intelligent Key is not in the antenna detection area	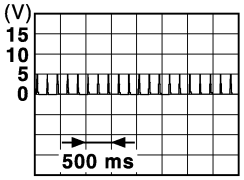 JMKIA3838GB
					When Intelligent Key is in the antenna detection area	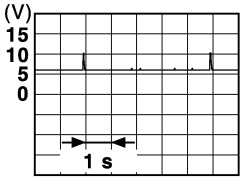 JMKIA3839GB
79 (V)	Ground	Driver door antenna (-)	Output	When the driver door request switch is operated with ignition switch OFF	When Intelligent Key is not in the antenna detection area	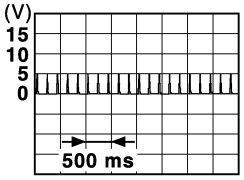 JMKIA3838GB
					When Intelligent Key is in the antenna detection area	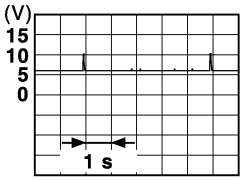 JMKIA3839GB

Terminal No. (Wire color)		Description		Condition		Value (Approx.)
+	–	Signal name	Input/ Output			
80 (LG)	Ground	Passenger door antenna (+)	Output	When the passenger door request switch is operated with ignition switch OFF	When Intelligent Key is not in the antenna detection area	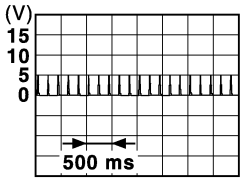 JMKIA3838GB
					When Intelligent Key is in the antenna detection area	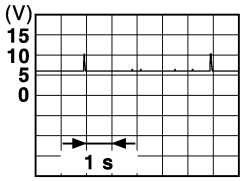 JMKIA3839GB
81 (Y)	Ground	Passenger door antenna (-)	Output	When the passenger door request switch is operated with ignition switch OFF	When Intelligent Key is not in the antenna detection area	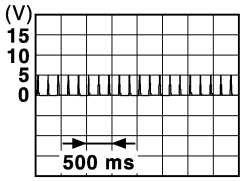 JMKIA3838GB
					When Intelligent Key is in the antenna detection area	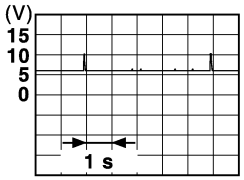 JMKIA3839GB
82 (W)	Ground	Back door antenna (+)	Output	When the back door request switch is operated with ignition switch OFF	When Intelligent Key is not in the antenna detection area	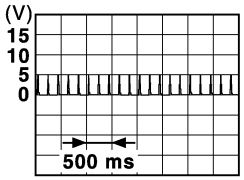 JMKIA3838GB
					When Intelligent Key is in the antenna detection area	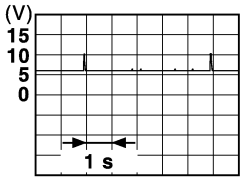 JMKIA3839GB

Terminal No. (Wire color)		Description		Condition		Value (Approx.)
+	–	Signal name	Input/ Output			
83 (B)	Ground	Back door antenna (-)	Output	When the back door request switch is operated with ignition switch OFF	When Intelligent Key is not in the antenna detection area	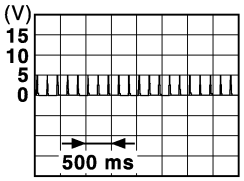 JMKIA3838GB
					When Intelligent Key is in the antenna detection area	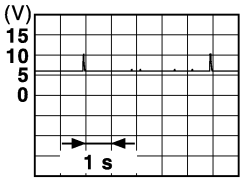 JMKIA3839GB
84 (P)	Ground	Room antenna 1 (+) (Instrument center)	Output	Ignition switch OFF	When Intelligent Key is not in the antenna detection area	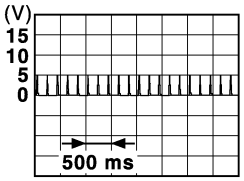 JMKIA3838GB
					When Intelligent Key is in the antenna detection area	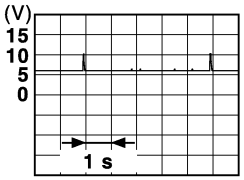 JMKIA3839GB
85 (L)	Ground	Room antenna 1 (-) (Instrument center)	Output	Ignition switch OFF	When Intelligent Key is not in the antenna detection area	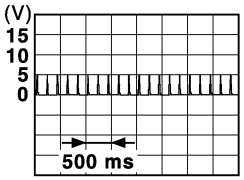 JMKIA3838GB
					When Intelligent Key is in the antenna detection area	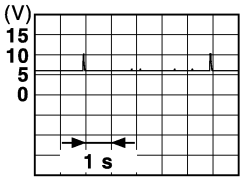 JMKIA3839GB

Terminal No. (Wire color)		Description		Condition		Value (Approx.)
+	–	Signal name	Input/ Output			
86 (G)	Ground	Room antenna 2 (+) (Console)	Output	Ignition switch OFF	When Intelligent Key is not in the antenna detection area	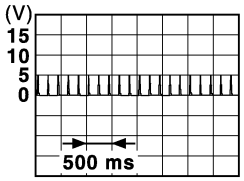 JMKIA3838GB
					When Intelligent Key is in the antenna detection area	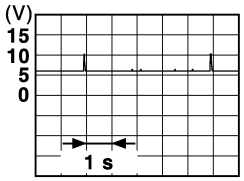 JMKIA3839GB
87 (R)	Ground	Room antenna 2 (-) (Console)	Output	Ignition switch OFF	When Intelligent Key is not in the antenna detection area	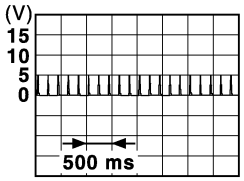 JMKIA3838GB
					When Intelligent Key is in the antenna detection area	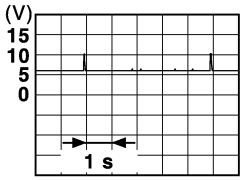 JMKIA3839GB
88 (V)	Ground	Luggage room antenna (+)	Output	Ignition switch OFF	When Intelligent Key is not in the antenna detection area	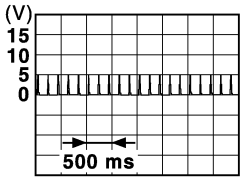 JMKIA3838GB
					When Intelligent Key is in the antenna detection area	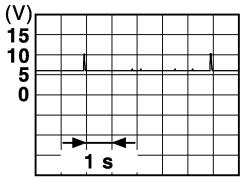 JMKIA3839GB

Terminal No. (Wire color)		Description		Condition		Value (Approx.)
+	–	Signal name	Input/ Output			
89 (LG)	Ground	Luggage room antenna (-)	Output	Ignition switch OFF	When Intelligent Key is not in the antenna detection area	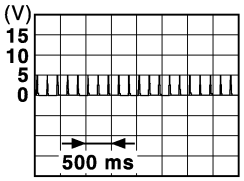 JMKIA3838GB
					When Intelligent Key is in the antenna detection area	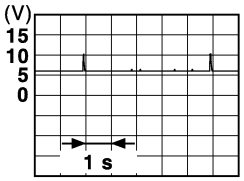 JMKIA3839GB
90 (W)	Ground	Push-button ignition switch illumination	Output	Push-button ignition switch illumination	ON	12 V
					OFF	0 V
91 (V)	Ground	ACC/ON indicator lamp	Output	Ignition switch	OFF	Battery voltage
					ACC or ON	0 V
93 (R)	Ground	Intelligent Key warning buzzer	Output	Intelligent Key warning buzzer	Sounding	0 V
					Not sounding	12 V
94 (G)	Ground	Steering lock unit communication	Input/ Output	Steering lock	LOCK status	12 V
					LOCK or UNLOCK	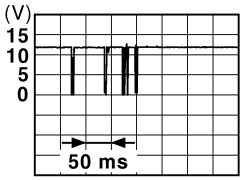 JMKIA0066GB
					For 15 seconds after UNLOCK	12 V
					15 seconds or later after UNLOCK	0 V
95 (W)	Ground	Steering lock unit power supply	Output	Ignition switch	OFF or ACC	12 V
					ON	0 V
96 (SB)	Ground	ACC relay control	Output	Ignition switch	OFF	0 V
					ACC or ON	12 V
97 (R)	Ground	Starter relay control	Output	Ignition switch ON	When selector lever is in P or N position	Battery voltage
					When selector lever is not in P or N position	0 V
98 (BG)	Ground	Ignition relay (IPDM E/R) control	Output	Ignition switch	OFF or ACC	12 V
					ON	0 V
99 (GR)	Ground	Ignition relay (F/B) control	Output	Ignition switch	OFF or ACC	0 V
					ON	12 V

Terminal No. (Wire color)		Description		Condition		Value (Approx.)
+	–	Signal name	Input/ Output			
100 (L)	Ground	Push-button ignition switch (push switch)	Input	Push-button ignition switch (push switch)	Pressed	0 V
					Not pressed	12 V
102 (BR)	Ground	Selector lever P/N position	Input	Selector lever	P or N position	Battery voltage
					Except P and N positions	0 V
104 (P)	Ground	A/T shift selector (detention switch) power supply	Output	Ignition switch ON		12 V
105 (SB)	Ground	Stop lamp switch 2	Input	Ignition switch OFF		Battery voltage
106 (Y)	Ground	Blower relay control	Output	Ignition switch	OFF or ACC	0 V
					ON	12 V
107 (GR)	Ground	Steering lock condition No. 1	Input	Steering lock	LOCK status	0 V
					UNLOCK status	12 V
108 (P)	Ground	Steering lock condition No. 2	Input	Steering lock	LOCK status	12 V
					UNLOCK status	0 V

Fail-safe

INFOID:0000000006014842

FAIL-SAFE CONTROL BY DTC

BCM performs fail-safe control when any DTC are detected.

Display contents of CONSULT	Fail-safe	Cancellation
B2013: ID DISCORD BCM-S/L	Inhibit engine cranking	When communication between BCM and steering lock unit are communicated normally.
B2014: CHAIN OF S/L-BCM	Inhibit engine cranking	When communication between BCM and steering lock unit are communicated normally.
B2192: ID DISCORD BCM-ECM	Inhibit engine cranking	Erase DTC
B2193: CHAIN OF BCM-ECM	Inhibit engine cranking	Erase DTC
B2195: ANTI-SCANNING	Inhibit engine cranking	Ignition switch ON → OFF
B2198: NATS ANTENNA AMP	Inhibit engine cranking	Erase DTC
B2557: VEHICLE SPEED	Inhibit steering lock	When the following CAN signal status (vehicle speed signal) becomes consistent • Vehicle speed signal (ABS) • Vehicle speed signal (Meter)
B2601: SHIFT POSITION	Inhibit steering lock	500 ms after the following signal reception status becomes consistent • Selector lever P position switch signal • P range signal (CAN)
B2602: SHIFT POSITION	Inhibit steering lock	5 seconds after the following BCM recognition conditions are fulfilled • Ignition switch is in the ON position • Selector lever P position switch signal: Except P position (12 V) • Vehicle speed: 4 km/h (2.5 MPH) or more
B2603: SHIFT POSI STATUS	Inhibit steering lock	500 ms after any of the following BCM recognition conditions are fulfilled • Status 1 - Ignition switch is in the ON position - Selector lever P position switch signal: Except P position (12 V) - Selector lever P/N position signal: Except P and N positions (0 V) • Status 2 - Ignition switch is in the ON position - Selector lever P position switch signal: P position (0 V) - Selector lever P/N position signal: P or N positions (12 V)

Display contents of CONSULT	Fail-safe	Cancellation
B2604: PNP/CLUTCH SW	Inhibit steering lock	500 ms after any of the following BCM recognition conditions are fulfilled • Status 1 - Ignition switch is in the ON position - Selector lever P/N position signal: P or N position (12 V) - Shift position signal (CAN): P or N position • Status 2 - Ignition switch is in the ON position - Selector lever P/N position signal: Except P and N positions (0 V) - Shift position signal (CAN): Except P and N position
B2605: PNP/CLUTCH SW	Inhibit steering lock	500 ms after any of the following BCM recognition conditions are fulfilled • Status 1 - Power position: IGN - Selector lever P/N position signal: Except P and N positions (0 V) - Interlock/PNP switch signal (CAN): OFF • Status 2 - Ignition switch is in the ON position - Selector lever P/N position signal: P or N position (12 V) - Interlock/PNP switch signal (CAN): ON
B2608: STARTER RELAY	Inhibit engine cranking	500 ms after the following signal communication status becomes consistent • Starter motor relay control signal • Starter relay status signal (CAN)
B2609: S/L STATUS	• Inhibit engine cranking • Inhibit steering lock	When the following steering lock conditions agree • BCM steering lock control status • Steering lock condition No. 1 signal status • Steering lock condition No. 2 signal status
B260B: STEERING LOCK UNIT	Inhibit steering lock	Erase DTC
B260D: STEERING LOCK UNIT	Inhibit steering lock	Erase DTC
B260F: ENG STATE SIG LOST	Inhibit engine cranking	When any of the following conditions are fulfilled • Power position changes to ACC • Receives engine status signal (CAN)
B2612: S/L STATUS	• Inhibit engine cranking • Inhibit steering lock	When any of the following conditions are fulfilled • Steering lock unit status signal (CAN) is received normally • The BCM steering lock control status matches the steering lock status recognized by the steering lock unit status signal (CAN from IPDM E/R)
B2619: BCM	Inhibit engine cranking	1 second after the steering lock unit power supply output control inside BCM becomes normal
B26EF: STRG LCK RELAY OFF	Inhibit engine cranking	When the following conditions are fulfilled • Steering lock relay signal (CAN): ON • Steering lock unit status signal (CAN): ON
B26F0: STRG LCK RELAY ON	Inhibit engine cranking	When the following conditions are fulfilled • Steering lock relay signal (CAN): OFF • Steering lock unit status signal (CAN): OFF
B26F1: IGN RELAY OFF	Inhibit engine cranking	When the following conditions are fulfilled • Ignition switch ON signal (CAN: Transmitted from BCM): ON • Ignition switch ON signal (CAN: Transmitted from IPDM E/R): ON
B26F2: IGN RELAY ON	Inhibit engine cranking	When the following conditions are fulfilled • Ignition switch ON signal (CAN: Transmitted from BCM): OFF • Ignition switch ON signal (CAN: Transmitted from IPDM E/R): OFF
B26F3: START CONT RLY ON	Inhibit engine cranking	When the following conditions are fulfilled • Starter control relay signal (CAN: Transmitted from BCM): OFF • Starter control relay signal (CAN: Transmitted from IPDM E/R): OFF
B26F4: START CONT RLY OFF	Inhibit engine cranking	When the following conditions are fulfilled • Starter control relay signal (CAN: Transmitted from BCM): ON • Starter control relay signal (CAN: Transmitted from IPDM E/R): ON

Display contents of CONSULT	Fail-safe	Cancellation
B26F7: BCM	Inhibit engine cranking by Intelligent Key system	When room antenna and luggage room antenna functions normally
U0415: VEHICLE SPEED	Inhibit steering lock	When vehicle speed signal (Meter) (CAN) is received normally

REAR WIPER MOTOR PROTECTION

BCM detects the rear wiper stopping position according to the rear wiper stop position signal.
When the rear wiper stop position signal does not change for more than 5 seconds while driving the rear wiper, BCM stops power supply to protect the rear wiper motor.

Condition of cancellation
1. More than 1 minute is passed after the rear wiper stop.
2. Turn rear wiper switch OFF.
3. Operate the rear wiper switch or rear washer switch.

DTC Inspection Priority Chart

INFOID:0000000006014843

If some DTCs are displayed at the same time, perform inspections one by one based on the following priority chart.

Priority	DTC
1	B2562: LOW VOLTAGE
2	• U1000: CAN COMM CIRCUIT • U1010: CONTROL UNIT (CAN)
3	• B2192: ID DISCORD BCM-ECM • B2193: CHAIN OF BCM-ECM • B2195: ANTI-SCANNING • B2198: NATS ANTENNA AMP

Priority	DTC
4	• B2013: ID DISCORD BCM-S/L • B2014: CHAIN OF S/L-BCM • B2553: IGNITION RELAY • B2555: STOP LAMP • B2556: PUSH-BTN IGN SW • B2557: VEHICLE SPEED • B2601: SHIFT POSITION • B2602: SHIFT POSITION • B2603: SHIFT POSI STATUS • B2604: PNP/CLUTCH SW • B2605: PNP/CLUTCH SW • B2608: STARTER RELAY • B2609: S/L STATUS • B260B: STEERING LOCK UNIT • B260C: STEERING LOCK UNIT • B260D: STEERING LOCK UNIT • B260F: ENG STATE SIG LOST • B2612: S/L STATUS • B2614: BCM • B2615: BCM • B2616: BCM • B2618: BCM • B2619: BCM • B261A: PUSH-BTN IGN SW • B26E9: LOCK MALFUNCTION • B26EF: STRG LCK RELAY OFF • B26F0: STRG LCK RELAY ON • B26F1: IGN RELAY OFF • B26F2: IGN RELAY ON • B26F3: START CONT RLY ON • B26F4: START CONT RLY OFF • B26F5: STRG LCK STS SW • B26F6: BCM • B26F7: BCM • B26F8: BCM • B26FC: KEY REGISTRATION • U0415: VEHICLE SPEED
5	• B2621: INSIDE ANTENNA • B2622: INSIDE ANTENNA • B2623: INSIDE ANTENNA
6	• B2626: OUTSIDE ANTENNA • B2627: OUTSIDE ANTENNA • B2628: OUTSIDE ANTENNA

DTC Index

INFOID:0000000006014844

NOTE:
The details of time display are as follows.
- CRNT: A malfunction is detected now.
- PAST: A malfunction was detected in the past.

IGN counter is displayed on Freeze Frame Data. For details of Freeze Frame Data, refer to BCS-15, "COMMON ITEM : CONSULT-III Function (BCM - COMMON ITEM)".

CONSULT display	Fail-safe	Freeze Frame Data •Vehicle Speed •Odo/Trip Meter •Vehicle Condition	Intelligent Key warning lamp ON	Reference page
No DTC is detected. further testing may be required.	—	—	—	—
U1000: CAN COMM	—	—	—	BCS-47
U1010: CONTROL UNIT (CAN)	—	—	—	BCS-48

CONSULT display	Fail-safe	Freeze Frame Data •Vehicle Speed •Odo/Trip Meter •Vehicle Condition	Intelligent Key warning lamp ON	Reference page
U0415: VEHICLE SPEED	×	—	×	BCS-49
B2013: ID DISCORD BCM-S/L	×	×	×	SEC-54
B2014: CHAIN OF S/L-BCM	×	×	×	SEC-55
B2192: ID DISCORD BCM-ECM	×	—	—	SEC-46
B2193: CHAIN OF BCM-ECM	×	—	—	SEC-48
B2195: ANTI-SCANNING	×	—	—	SEC-49
B2198: NATS ANTENNA AMP	×	—	—	SEC-50
B2553: IGNITION RELAY	—	×	×	PCS-71
B2555: STOP LAMP	—	×	×	SEC-58
B2556: PUSH-BTN IGN SW	—	×	×	SEC-60
B2557: VEHICLE SPEED	×	×	×	SEC-62
B2562: LOW VOLTAGE	—	×	—	BCS-50
B2601: SHIFT POSITION	×	×	×	SEC-63
B2602: SHIFT POSITION	×	×	×	SEC-66
B2603: SHIFT POSI STATUS	×	×	×	SEC-69
B2604: PNP/CLUTCH SW	×	×	×	SEC-73
B2605: PNP/CLUTCH SW	×	×	×	SEC-76
B2608: STARTER RELAY	×	×	×	SEC-78
B2609: S/L STATUS	×	×	×	SEC-80
B260B: STEERING LOCK UNIT	×	×	×	SEC-83
B260C: STEERING LOCK UNIT	—	×	×	SEC-84
B260D: STEERING LOCK UNIT	×	×	×	SEC-85
B260F: ENG STATE SIG LOST	×	×	×	SEC-86
B2612: S/L STATUS	×	×	×	SEC-87
B2614: BCM	—	×	×	PCS-73
B2615: BCM	—	×	×	PCS-75
B2616: BCM	—	×	×	PCS-77
B2618: BCM	—	×	×	PCS-79
B2619: BCM	×	×	×	SEC-90
B261A: PUSH-BTN IGN SW	—	×	×	PCS-80
B2621: INSIDE ANTENNA	—	×	—	DLK-46
B2622: INSIDE ANTENNA	—	×	—	DLK-48
B2623: INSIDE ANTENNA	—	×	—	DLK-50
B2626: OUTSIDE ANTENNA	—	×	—	DLK-52
B2627: OUTSIDE ANTENNA	—	×	—	DLK-54
B2628: OUTSIDE ANTENNA	—	×	—	DLK-56
B26E9: LOCK MALFUNCTION	—	×	× (Turn ON for 15 seconds)	SEC-91
B26EF: STRG LCK RELAY OFF	×	×	×	SEC-92
B26F0: STRG LCK RELAY ON	×	×	×	SEC-95
B26F1: IGN RELAY OFF	×	×	×	PCS-82
B26F2: IGN RELAY ON	×	×	×	PCS-84
B26F3: START CONT RLY ON	×	×	×	SEC-97

CONSULT display	Fail-safe	Freeze Frame Data •Vehicle Speed •Odo/Trip Meter •Vehicle Condition	Intelligent Key warning lamp ON	Reference page
B26F4: START CONT RLY OFF	×	×	×	SEC-98
B26F5: STRG LCK STS SW	—	×	×	SEC-99
B26F6: BCM	—	×	×	PCS-86
B26F7: BCM	×	×	×	SEC-102
B26FC: KEY REGISTRATION	—	×	×	SEC-103

WIRING DIAGRAM

BCM

Wiring Diagram

INFOID:0000000006014845

For connector terminal arrangements, harness layouts, and alphabets in a ⬡ (option abbreviation; if not described in wiring diagram), refer to GI-12, "Connector Information".
回路図待ち。。。

BASIC INSPECTION

ADDITIONAL SERVICE WHEN REPLACING CONTROL UNIT

Description

INFOID:0000000006046470

BEFORE REPLACEMENT

When replacing BCM, save or print current vehicle specification with CONSULT-III configuration before replacement.

NOTE:

If “READ CONFIGURATION” can not be used, use the “WRITE CONFIGURATION - Manual selection” after replacing BCM.

AFTER REPLACEMENT

CAUTION:

- **When replacing BCM, you must perform “WRITE CONFIGURATION” with CONSULT-III.**
- **Complete the procedure of “WRITE CONFIGURATION” in order.**
- **If you set incorrect “WRITE CONFIGURATION”, incidents might occur.**
- **Configuration is different for each vehicle model. Confirm configuration of each vehicle model.**
- **When replacing BCM, perform the system initialization (NATS).**

Work Procedure

INFOID:0000000006046471

1. SAVING VEHICLE SPECIFICATION

CONSULT-III Configuration

Perform “READ CONFIGURATION” to save or print current vehicle specification. Refer to BCS-45, "Description".

NOTE:

If “READ CONFIGURATION” can not be used, use the “WRITE CONFIGURATION - Manual selection” after replacing BCM.

>> GO TO 2.

2. REPLACE BCM

Replace BCM. Refer to BCS-57, "Removal and Installation".

>> GO TO 3.

3. WRITING VEHICLE SPECIFICATION

CONSULT-III Configuration

Perform “WRITE CONFIGURATION - Config file” or “WRITE CONFIGURATION - Manual selection” to write vehicle specification. Refer to BCS-45, "Work Procedure".

>> GO TO 4.

4. INITIALIZE BCM (NATS)

Perform BCM initialization. (NATS)

>> WORK END

CONFIGURATION (BCM)

Description

INFOID:0000000006014848

Vehicle specification needs to be written with CONSULT-III because it is not written after replacing BCM. Configuration has three functions as follows.

Function	Description
READ CONFIGURATION	• Reads the vehicle configuration of current BCM. • Saves the read vehicle configuration.
WRITE CONFIGURATION - Manual selection	Writes the vehicle configuration with manual selection.
WRITE CONFIGURATION - Config file	Writes the vehicle configuration with saved data.

NOTE:

Manual setting item: Items which need selection by vehicle specifications

Automatic setting item: Items which are written in automatically (Setting can not be changed)

CAUTION:

- **When replacing BCM, you must perform “WRITE CONFIGURATION” with CONSULT-III.**
- **Complete the procedure of “WRITE CONFIGURATION” in order.**
- **If you set incorrect “WRITE CONFIGURATION”, incidents might occur.**
- **Configuration is different for each vehicle model. Confirm configuration of each vehicle model.**
- **Never perform “WRITE CONFIGURATION” when performing operations other than the below.**

- Replacing with new BCM

- Changing “SECURITY ALARM SET(SIREN)” of work support from ON to OFF*

NOTE:

*: Perform configuration in “WRITE CONFIGURATION - Manual selection” after performing this work support.

Work Procedure

INFOID:0000000006014849

1. WRITING MODE SELECTION

CONSULT-III Configuration

Select “CONFIGURATION” of BCM.

When writing saved data>>GO TO 2.

When writing manually>>GO TO 3.

2. PERFORM “WRITE CONFIGURATION - CONFIG FILE”

CONSULT-III Configuration

Perform “WRITE CONFIGURATION - Config file”.

>> WORK END

3. PERFORM “WRITE CONFIGURATION - MANUAL SELECTION”

CONSULT-III Configuration

1. Select "WRITE CONFIGURATION - Manual selection".
2. Identify the correct model and configuration list. Refer to BCS-46, "Configuration list".
3. Confirm and/or change setting value for each item.
   CAUTION:
   Thoroughly read and understand the vehicle specification. Incorrect settings may result in abnormal control of ECU.
4. Select "SETTING".
   CAUTION:
   Make sure to select “SETTING” even if the indicated configuration of brand new BCM is same as the desirable configuration. If not, configuration which is set automatically by selecting vehicle model can not be memorized.
5. When "COMMAND FINISHED", select "END".

>> GO TO 4.

4. OPERATION CHECK

Confirm that each function controlled by BCM operates normally.

>> WORK END

Configuration list

INFOID:0000000006014850

CAUTION:
Thoroughly read and understand the vehicle specification. Incorrect settings may result in abnormal control of ECU.

SETTING ITEM		NOTE
Items	Setting value	
I-KEY SYS FREQUENCY TYPE	MODE2	—
AUTO LIGHT	WITHOUT	—
UNLK SEN LGIC	RHD ⇔ LHD	—
BLOWE FAN SIG	MODE1 ⇔ MODE2	• MODE1: With automatic air conditioner • MODE2: Without automatic air conditioner
AUTO LOCK&UNLOCK FUNC	WITHOUT	—
Key Fob Type	MODE2	—

⇔: Items which confirm vehicle specifications

DTC/CIRCUIT DIAGNOSIS

U1000 CAN COMM

Description

INFOID:0000000006014851

CAN (Controller Area Network) is a serial communication line for real time applications. It is an on-vehicle multiplex communication line with high data communication speed and excellent error detection ability. Modern vehicle is equipped with many electronic control unit, and each control unit shares information and links with other control units during operation (not independent). In CAN communication, control units are connected with 2 communication lines (CAN H-line, CAN L-line) allowing a high rate of information transmission with less wiring. Each control unit transmits/receives data but selectively reads required data only.
CAN Communication Signal Chart. Refer to LAN-23, "CAN COMMUNICATION SYSTEM : CAN Communication Signal Chart".

DTC Logic

INFOID:0000000006014852

DTC DETECTION LOGIC

DTC	CONSULT-III display description	DTC Detection Condition	Possible cause
U1000	CAN COMM	When BCM cannot communicate CAN communication signal continuously for 2 seconds or more.	CAN communication system

Diagnosis Procedure

INFOID:0000000006014853

1. PERFORM SELF DIAGNOSTIC

1. Turn ignition switch ON and wait for 2 seconds or more.
2. Check “Self Diagnostic Result”.

Is DTC “U1000” displayed?

YES >> Refer to LAN-14, "Trouble Diagnosis Flow Chart".
NO >> Refer to GI-33, "Intermittent Incident".

U1010 CONTROL UNIT (CAN)

DTC Logic

INFOID:0000000006014854

DTC DETECTION LOGIC

DTC	CONSULT-III display description	DTC Detection Condition	Possible cause
U1010	CONTROL UNIT (CAN)	BCM detected internal CAN communication circuit malfunction.	BCM

Diagnosis Procedure

INFOID:0000000006014855

1. REPLACE BCM

When DTC “U1010” is detected, replace BCM.

>> Replace BCM. Refer to BCS-57, "Removal and Installation".

U0415 VEHICLE SPEED

Description

INFOID:0000000006014856

U0415 is displayed if any unusual condition is present in the reception status of the vehicle speed signal from the ABS actuator and electric unit (control unit).

DTC Logic

INFOID:0000000006014857

DTC DETECTION LOGIC

DTC	CONSULT-III display description	DTC Detection Condition	Probable cause
U0415	VEHICLE SPEED	When the vehicle speed signal received from the ABS actuator and electric unit (control unit) remains abnormal for 2 seconds or more.	• ABS actuator and electric unit (control unit) • BCM

DTC CONFIRMATION PROCEDURE

1. DTC CONFIRMATION

1. Erase the DTC.
2. Turn ignition switch OFF.
3. Perform the “Self Diagnostic Result” of CONSULT-III, when passed 2 seconds or more after the ignition switch is turned ON.

Is any DTC detected?

YES >> Refer to BCS-49, "Diagnosis Procedure".
NO >> INSPECTION END

Diagnosis Procedure

INFOID:0000000006014858

1. ABS ACTUATOR AND ELECTRIC UNIT (CONTROL UNIT) SELF-DIAG RESULTS

Perform “Self-Diagnostic Result” of ABS actuator and electric unit (control unit) with CONSULT-III. Refer to BRC section.

Is any DTC detected?

YES >> Repair or replace the malfunctioning part.
NO >> Replace BCM. Refer to BCS-57, "Removal and Installation".

B2562 LOW VOLTAGE

DTC Logic

INFOID:0000000006014859

DTC DETECTION LOGIC

DTC	CONSULT-III display description	DTC Detection Condition	Possible cause
B2562	LOW VOLTAGE	When the power supply voltage to BCM remains less than 8.8 V for 120 seconds or more	Harness or connector (power supply circuit)

DTC CONFIRMATION PROCEDURE

1. DTC CONFIRMATION

1. Erase DTC.
2. Turn ignition switch OFF.
3. Perform the “Self Diagnostic Result” of CONSULT-III, when passed 120 seconds or more after the ignition switch is turned ON.

Is any DTC detected?

YES >> Refer to BCS-50, "Diagnosis Procedure".
NO >> INSPECTION END

Diagnosis Procedure

INFOID:0000000006014860

1. CHECK POWER SUPPLY CIRCUIT

Check BCM power supply circuit. Refer to BCS-51, "Diagnosis Procedure".

Is the circuit normal?

YES >> Replace BCM. Refer to BCS-57, "Removal and Installation".
NO >> Repair the malfunctioning part.

POWER SUPPLY AND GROUND CIRCUIT

Diagnosis Procedure

INFOID:0000000006014861

1. CHECK FUSE AND FUSIBLE LINK

Check that the following fuse and fusible link are not blown.

Signal name	Fuse and fusible link No.
Battery power supply	G
	9

Is the fuse fusing?

YES >> Replace the blown fuse or fusible link after repairing the affected circuit if a fuse or fusible link is blown.
NO >> GO TO 2.

2. CHECK POWER SUPPLY CIRCUIT

1. Turn ignition switch OFF.
2. Disconnect BCM connectors.
3. Check voltage between BCM harness connector and ground.

Terminals			Voltage (Approx.)
(+)		(–)	
BCM		Ground	
Connector	Terminal		
M70	70		Battery voltage
	57		

Is the measurement value normal?

YES >> GO TO 3.
NO >> Repair harness or connector.

3. CHECK GROUND CIRCUIT

Check continuity between BCM harness connector and ground.

BCM		Ground	Continuity
Connector	Terminal		
M70	67		Existed

Does continuity exist?

YES >> INSPECTION END
NO >> Repair harness or connector.

COMBINATION SWITCH OUTPUT CIRCUIT

Diagnosis Procedure

INFOID:0000000006014862

1. CHECK OUTPUT 1 - 5 CIRCUIT FOR OPEN

1. Turn ignition switch OFF.
2. Disconnect BCM and combination switch connectors.
3. Check continuity between BCM harness connector and combination switch harness connector.

System	BCM		Combination switch		Continuity
	Connector	Terminal	Connector	Terminal	
OUTPUT 1	M68	36	M27	11	Existed
OUTPUT 2		35		9	
OUTPUT 3		34		7	
OUTPUT 4		33		10	
OUTPUT 5		32		13	

Does continuity exist?

YES >> GO TO 2.
NO >> Repair harnesses or connectors.

2. CHECK OUTPUT 1 - 5 CIRCUIT FOR SHORT

Check for continuity between BCM harness connector and ground.

System	BCM		Ground	Continuity
	Connector	Terminal		
OUTPUT 1	M68	36	Ground	Not existed
OUTPUT 2		35		
OUTPUT 3		34		
OUTPUT 4		33		
OUTPUT 5		32		

Does continuity exist?

YES >> Repair harnesses or connectors.
NO >> GO TO 3.

3. CHECK BCM OUTPUT VOLTAGE

1. Connect BCM connector.
2. Check voltage between BCM harness connector and ground.

System	Terminals			Voltage (Approx.)
	(+)		(–)	
	BCM		Ground	
	Connector	Terminal		
OUTPUT 1	M68	36	Ground	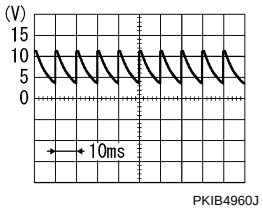 7.0 - 8.0 V
OUTPUT 2		35		
OUTPUT 3		34		
OUTPUT 4		33		
OUTPUT 5		32		

Is the measurement value normal?

YES >> Replace combination switch.
NO >> Replace BCM. Refer to BCS-57, "Removal and Installation".

COMBINATION SWITCH INPUT CIRCUIT

Diagnosis Procedure

INFOID:0000000006014863

1. CHECK INPUT 1 - 5 CIRCUIT FOR OPEN

1. Turn ignition switch OFF.
2. Disconnect BCM and combination switch connectors.
3. Check continuity between BCM harness connector and combination switch harness connector.

System	BCM		Combination switch		Continuity
	Connector	Terminal	Connector	Terminal	
INPUT 1	M68	6	M27	12	Existed
INPUT 2		5		14	
INPUT 3		4		5	
INPUT 4		3		2	
INPUT 5		2		8	

Does continuity exist?

YES >> GO TO 2.
NO >> Repair harnesses or connectors.

2. CHECK INPUT 1 - 5 CIRCUIT FOR SHORT

Check for continuity between BCM harness connector and ground.

System	BCM		Ground	Continuity
	Connector	Terminal		
INPUT 1	M68	6	Ground	Not existed
INPUT 2		5		
INPUT 3		4		
INPUT 4		3		
INPUT 5		2		

Does continuity exist?

YES >> Repair harnesses or connectors.
NO >> GO TO 3.

3. CHECK BCM INPUT SIGNAL

1. Connect BCM and combination switch connectors.
2. Turn ON any switch in the system that is malfunction.
3. Check voltage between BCM harness connector and ground.

System	Terminals			Voltage (Approx.)
	(+)		(–)	
	BCM			
	Connector	Terminal		
INPUT 1	M68	6	Ground	Refer to BCS-18, "Reference Value".
INPUT 2		5		
INPUT 3		4		
INPUT 4		3		
INPUT 5		2		

Is the measurement value normal?

Yes >> Replace BCM. Refer to BCS-57, "Removal and Installation".

No >> Replace combination switch.

SYMPTOM DIAGNOSIS

COMBINATION SWITCH SYSTEM SYMPTOMS

Symptom Table

INFOID:0000000006014864

1. Perform “Data Monitor” of CONSULT-III to check for any malfunctioning item.
2. Check the malfunction combinations.

Malfunction item: ×

Data monitor item																Malfunction combination
FR WIPER HI	FR WIPER LOW	FR WASHER SW	FR WIPER INT	RR WIPER ON	RR WIPER INT	RR WASHER SW	INT VOLUME	TURN SIGNAL R	TURN SIGNAL L	TAIL LAMP SW	HI BEAM SW	HEAD LAMP SW 1	HEAD LAMP SW 2	PASSING SW	FR FOG SW	
	×	×						×	×							A
×			×									×		×		B
						×	×				×		×			C
					×		×			×						D
				×			×								×	E
×					×		×									F
		×		×		×	×									G
	×		×													H
									×				×	×	×	I
								×		×	×	×				J
All Items																K
If only one item is detected or the item is not applicable to the combinations A to K																L

3. Identify the malfunctioning part from the agreed combination and repair or replace the part.

Malfunction combination	Malfunctioning part	Repair or replace
A	Combination switch OUTPUT 1 circuit	Inspect the combination switch output circuit applicable to the malfunctioning part. Refer to BCS-52, "Diagnosis Procedure".
B	Combination switch OUTPUT 2 circuit	
C	Combination switch OUTPUT 3 circuit	
D	Combination switch OUTPUT 4 circuit	
E	Combination switch OUTPUT 5 circuit	
F	Combination switch INPUT 1 circuit	Inspect the combination switch input circuit applicable to the malfunctioning part. Refer to BCS-54, "Diagnosis Procedure".
G	Combination switch INPUT 2 circuit	
H	Combination switch INPUT 3 circuit	
I	Combination switch INPUT 4 circuit	
J	Combination switch INPUT 5 circuit	
K	BCM	Replace BCM. Refer to BCS-57, "Removal and Installation".
L	Combination switch	Replace combination switch.

REMOVAL AND INSTALLATION

BCM

Removal and Installation

INFOID:0000000006014865

CAUTION:
Before replacing BCM, perform “READ CONFIGURATION” to save or print current vehicle specification. Refer to BCS-44, "Description".

REMOVAL

1. Remove glove box cover. Refer to IP-12, "Exploded View".
2. Remove screws.
3. Disconnect BCM connector.
4. Remove door mirror open relay, door mirror close relay and rear window defogger relay from bracket.
5. Remove relay mounting bracket.

INSTALLATION

Install in the reverse order of removal.

CAUTION:
- **Be sure to perform “WRITE CONFIGURATION” when replacing BCM.**
- **Be sure to perform the system initialization (NATS) when replacing BCM. Refer to BCS-44, "Work Procedure".**

COMBINATION SWITCH

Exploded View

INFOID:0000000006046466

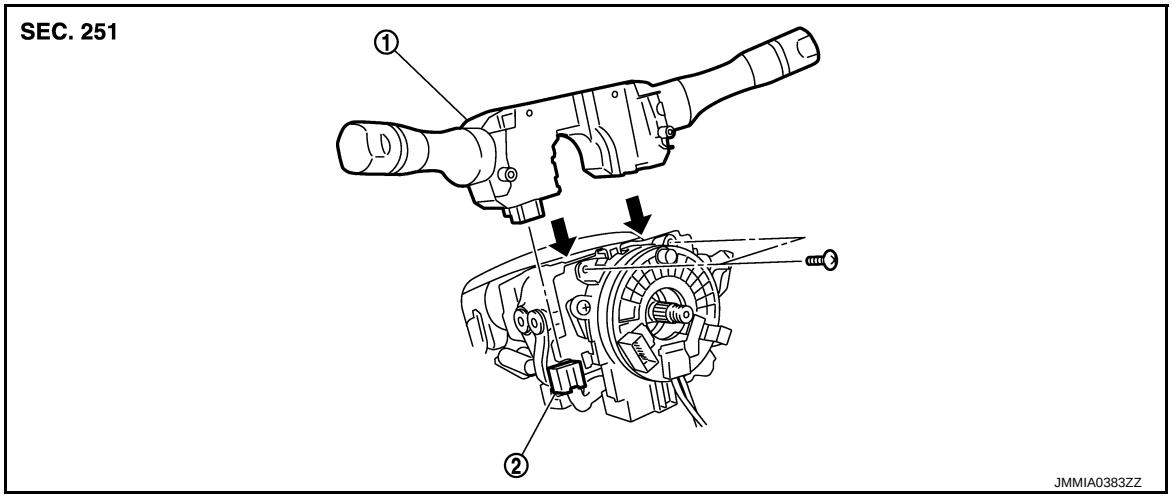

1. Combination switch
2. Combination switch connector

Removal and Installation

INFOID:0000000006014866

REMOVAL

1. Remove steering column cover. Refer to IP-12, "Exploded View".
2. Remove screws.
3. Disconnect the connector.
4. Pull up the combination switch to remove it.

INSTALLATION

Install in the reverse order of removal.

PRECAUTION

PRECAUTIONS

Precaution for Supplemental Restraint System (SRS) "AIR BAG" and "SEAT BELT PRE-TENSIONER"

INFOID:0000000006014867

The Supplemental Restraint System such as “AIR BAG” and “SEAT BELT PRE-TENSIONER”, used along with a front seat belt, helps to reduce the risk or severity of injury to the driver and front passenger for certain types of collision. This system includes seat belt switch inputs and dual stage front air bag modules. The SRS system uses the seat belt switches to determine the front air bag deployment, and may only deploy one front air bag, depending on the severity of a collision and whether the front occupants are belted or unbelted.
Information necessary to service the system safely is included in the “SRS AIR BAG” and “SEAT BELT” of this Service Manual.

WARNING:

- **To avoid rendering the SRS inoperative, which could increase the risk of personal injury or death in the event of a collision that would result in air bag inflation, all maintenance must be performed by an authorized NISSAN/INFINITI dealer.**
- **Improper maintenance, including incorrect removal and installation of the SRS, can lead to personal injury caused by unintentional activation of the system. For removal of Spiral Cable and Air Bag Module, see the “SRS AIR BAG”.**
- **Do not use electrical test equipment on any circuit related to the SRS unless instructed to in this Service Manual. SRS wiring harnesses can be identified by yellow and/or orange harnesses or harness connectors.**

PRECAUTIONS WHEN USING POWER TOOLS (AIR OR ELECTRIC) AND HAMMERS

WARNING:

- **When working near the Air Bag Diagnosis Sensor Unit or other Air Bag System sensors with the ignition ON or engine running, DO NOT use air or electric power tools or strike near the sensor(s) with a hammer. Heavy vibration could activate the sensor(s) and deploy the air bag(s), possibly causing serious injury.**
- **When using air or electric power tools or hammers, always switch the ignition OFF, disconnect the battery, and wait at least 3 minutes before performing any service.**

SYSTEM DESCRIPTION

COMPONENT PARTS

BODY CONTROL SYSTEM

BODY CONTROL SYSTEM : Component Parts Location

INFOID:0000000006046472

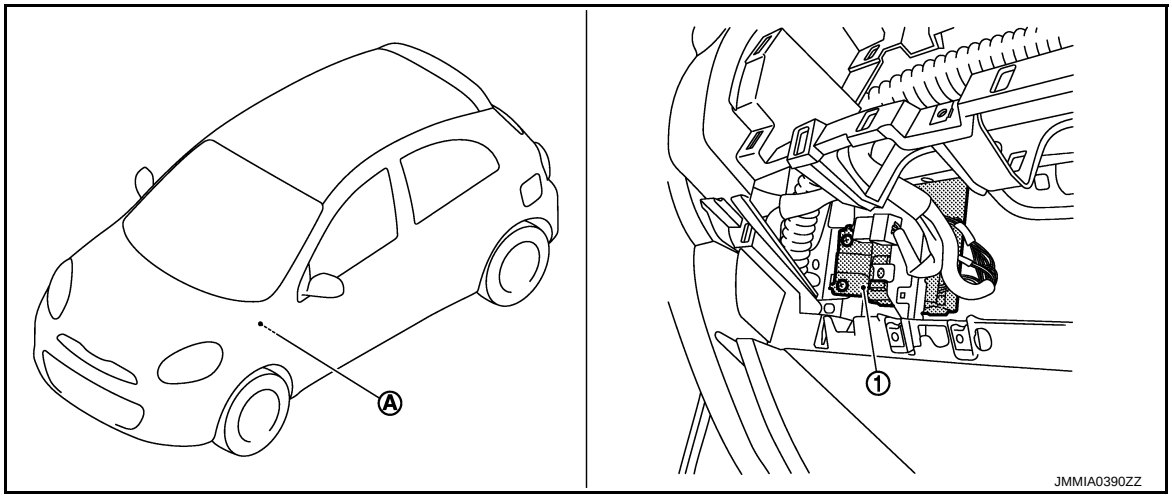

1. BCM
A. Left side of glove box

POWER CONSUMPTION CONTROL SYSTEM

POWER CONSUMPTION CONTROL SYSTEM : Component Parts Location

INFOID:0000000006046473

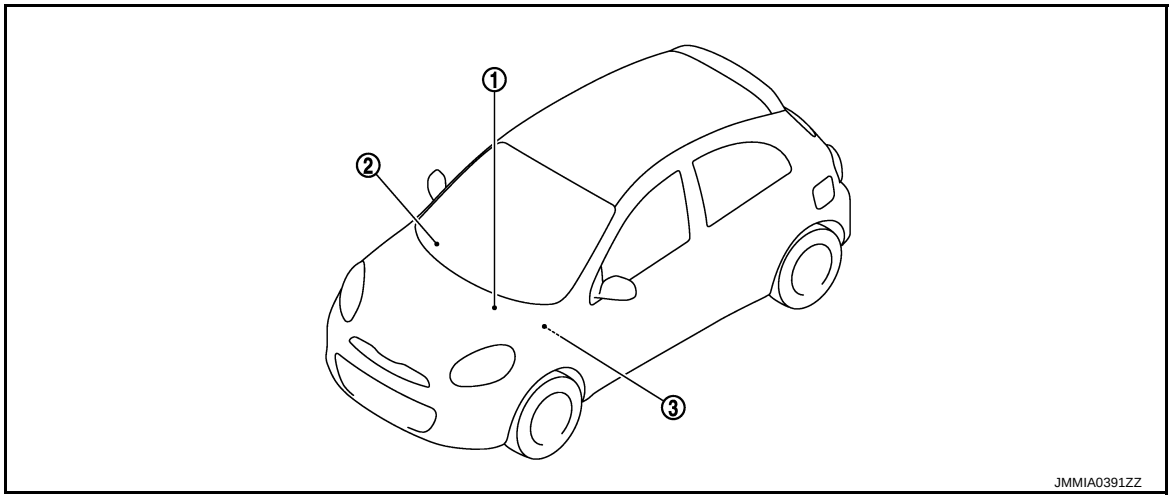

1. IPDM E/R
Refer to PCS-30, "Component Parts Location".
2. Combination meter
3. BCM
Refer to BCS-60, "BODY CONTROL SYSTEM : Component Parts Location".

SYSTEM

BODY CONTROL SYSTEM

BODY CONTROL SYSTEM : System Description

INFOID:0000000006014870

OUTLINE

- BCM (Body Control Module) controls various electrical components.It receives the information required from CAN communication and the signals received from each switch and sensor.
- BCM has a combination switch reading function for reading the status of combination switches (light, turn signal, wiper and washer) in addition to functions for controlling the operation of various electrical components. It also has a signal transmission function, for other systems, and a power consumption control function that reduces the power consumption with the ignition switch OFF.
- BCM is equipped with a diagnosis function that operates with CONSULT-III and allows for various settings to be changed.

BCM FUNCTION LIST

System	Reference page
Combination switch reading system	BCS-62, "COMBINATION SWITCH READING SYSTEM : System Diagram"
Signal buffer system	BCS-66, "SIGNAL BUFFER SYSTEM : System Diagram"
Power consumption control system	BCS-66, "POWER CONSUMPTION CONTROL SYSTEM : System Diagram"
Headlamp system	EXL-7, "HEADLAMP SYSTEM : System Diagram"
Front fog lamp system	EXL-8, "FRONT FOG LAMP SYSTEM : System Diagram"
Turn signal and hazard warning lamp system	EXL-8, "TURN SIGNAL AND HAZARD WARNING LAMP SYSTEM : System Diagram"
Parking, license plate, side maker and tail lamps system	EXL-9, "PARKING, LICENSE PLATE AND TAIL LAMP SYSTEM : System Diagram"
Exterior lamp battery saver system	EXL-10, "EXTERIOR LAMP BATTERY SAVER SYSTEM : System Diagram"
Interior room lamp control system	INL-8, "INTERIOR ROOM LAMP CONTROL SYSTEM (WITHOUT INTELLIGENT KEY SYSTEM) : System Diagram"
Interior room lamp battery saver system	INL-10, "INTERIOR ROOM LAMP BATTERY SAVER SYSTEM : System Diagram"
Front wiper and washer system	WW-6, "FRONT WIPER AND WASHER SYSTEM : System Diagram"
Rear wiper and washer system	WW-9, "REAR WIPER AND WASHER SYSTEM : System Diagram"
Automatic air conditioner system	HAC-13, "System Diagram"
Manual air conditioner system	HAC-88, "System Diagram"
Heater and ventilation	HAC-126, "System Diagram"
Warning chime system	WCS-6, "WARNING CHIME SYSTEM : System Diagram"
Power door lock system	DLK-154, "System Diagram"
Nissan anti-theft system (NATS)	SEC-132, "NISSAN ANTI-THEFT SYSTEM : System Diagram"
Rear window defogger system	DEF-6, "REAR WINDOW DEFOGGER : System Diagram"
Remote keyless entry system	DLK-155, "System Diagram"
Power window system	PWC-6, "POWER WINDOW SYSTEM : System Diagram"

BODY CONTROL SYSTEM : Fail-safe

INFOID:0000000006032442

FAIL-SAFE CONTROL BY DTC

BCM performs fail-safe control when any DTC are detected.

Display contents of CONSULT	Fail-safe	Cancellation
B2190: NATS ANTENNA AMP	Inhibit engine cranking	Erase DTC
B2191: DIFFERENCE OF KEY	Inhibit engine cranking	Erase DTC
B2192: ID DISCORD BCM-ECM	Inhibit engine cranking	Erase DTC
B2193: CHAIN OF BCM-ECM	Inhibit engine cranking	Erase DTC
B2195: ANTI SCANNING	Inhibit engine cranking	Ignition switch ON → OFF

REAR WIPER MOTOR PROTECTION

BCM detects the rear wiper stopping position according to the rear wiper auto stop signal.
When the rear wiper auto stop signal does not change more than 5 seconds while driving the rear wiper, BCM stops power supply to protect the rear wiper motor.

Condition of cancellation
1. Pass more than 1 minute after the rear wiper stop.
2. Turn rear wiper switch OFF.
3. Operate the rear wiper switch or rear washer switch.

COMBINATION SWITCH READING SYSTEM

COMBINATION SWITCH READING SYSTEM : System Diagram

INFOID:0000000006032440

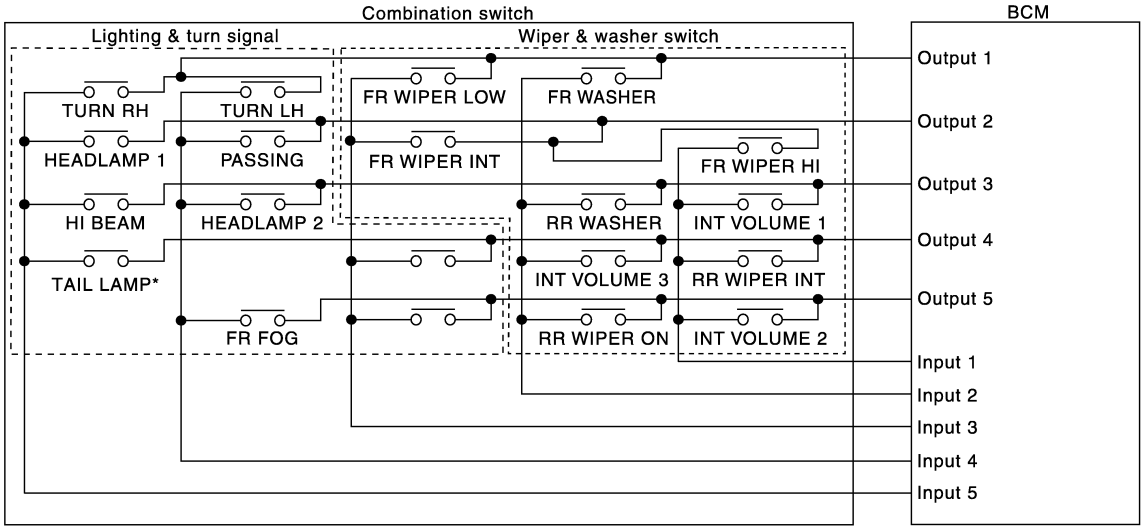

NOTE:
*: TAIL LAMP switch links lighting switch 1ST position.

COMBINATION SWITCH READING SYSTEM : System Description

INFOID:0000000006032441

OUTLINE

- BCM reads the status of the combination switch (light, turn signal, wiper and washer) and recognizes the status of each switch.
- BCM has a combination of 5 output terminals (OUTPUT 1 - 5) and 5 input terminals (INPUT 1 - 5). It reads a maximum of 20 switch status.

COMBINATION SWITCH MATRIX

Combination switch circuit

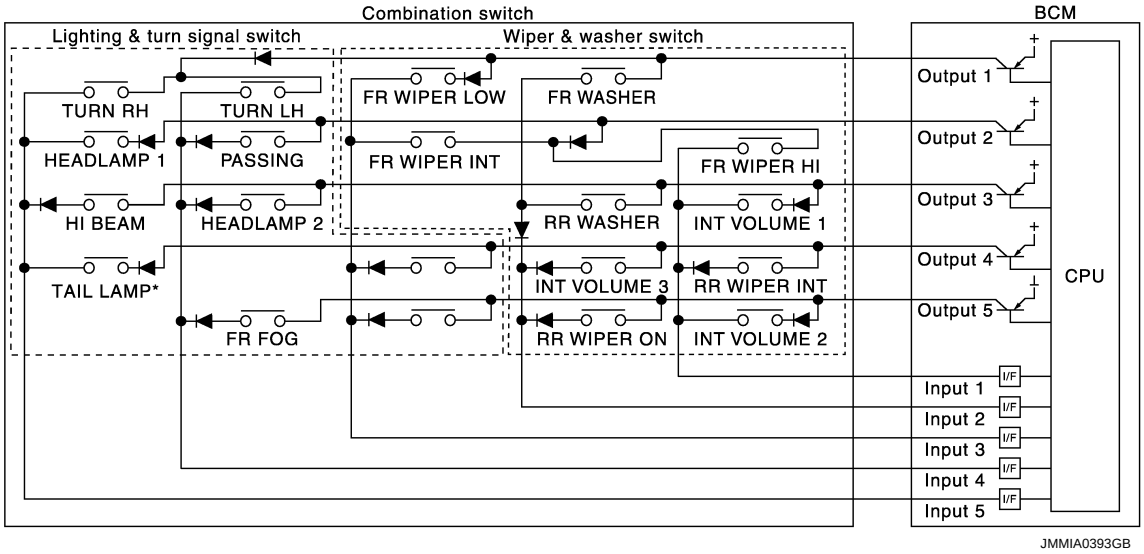

NOTE:
*: TAIL LAMP switch links lighting switch 1ST position.

Combination switch INPUT-OUTPUT system list

System	INPUT 1	INPUT 2	INPUT 3	INPUT 4	INPUT 5
OUTPUT 1	—	FR WASHER	FR WIPER LOW	TURN LH	TURN RH
OUTPUT 2	FR WIPER HI	—	FR WIPER INT	PASSING	HEADLAMP 1
OUTPUT 3	INT VOLUME 1	RR WASHER	—	HEADLAMP 2	HI BEAM
OUTPUT 4	RR WIPER INT	INT VOLUME 3	—	—	TAIL LAMP
OUTPUT 5	INT VOLUME 2	RR WIPER	—	FR FOG	—

NOTE:
Headlamp has a dual system switch.

COMBINATION SWITCH READING FUNCTION

Description

- BCM reads the status of the combination switch at 10 ms interval normally.

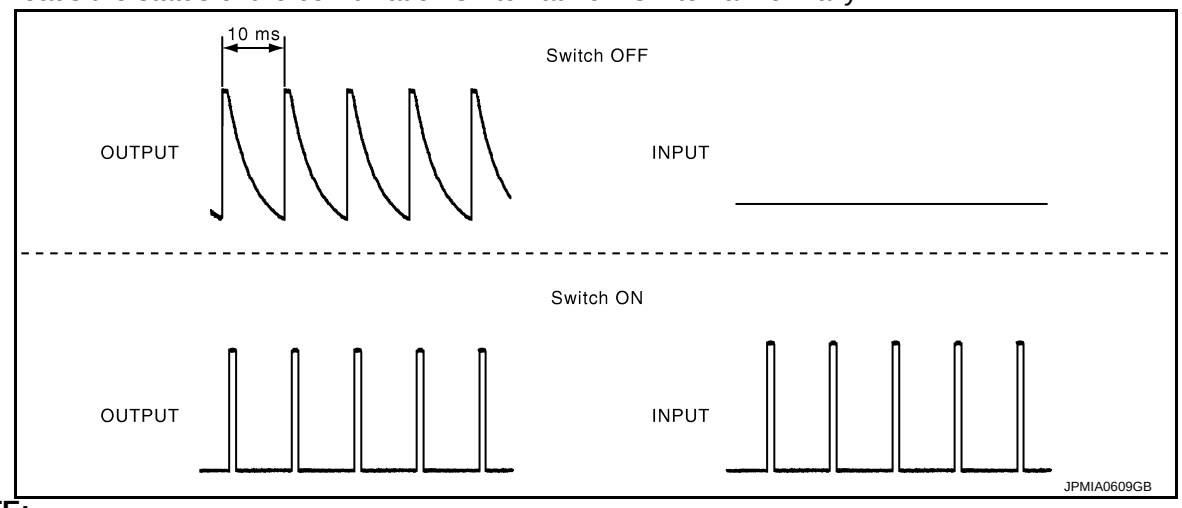

NOTE:
BCM reads the status of the combination switch at 60 ms interval when BCM is controlled at low power consumption control mode.

- BCM operates as follows and judges the status of the combination switch.
  - It operates the transistor on OUTPUT side in the following order: OUTPUT 1 → 2 → 3 → 4 → 5, and outputs voltage waveform.

- The voltage waveform of OUTPUT corresponding to the formed circuit is input into the interface on INPUT side if any (1 or more) switches are ON.
- It reads this change of the voltage as the status signal of the combination switch.

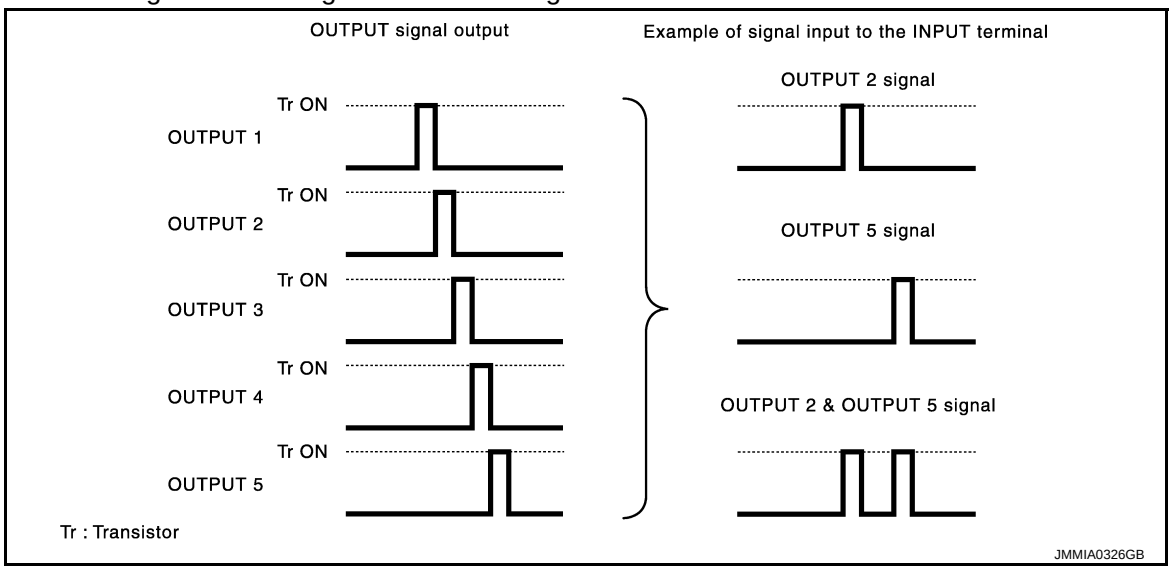

Operation Example

In the following operation example, the combination of the status signals of the combination switch is replaced as follows: INPUT 1 - 5 to “1 - 5” and OUTPUT 1 - 5 to “A - E”.

Example 1: When a switch (TAIL LAMP switch) is turned ON

- The circuit between OUTPUT 4 and INPUT 5 is formed when the TAIL LAMP switch is turned ON.

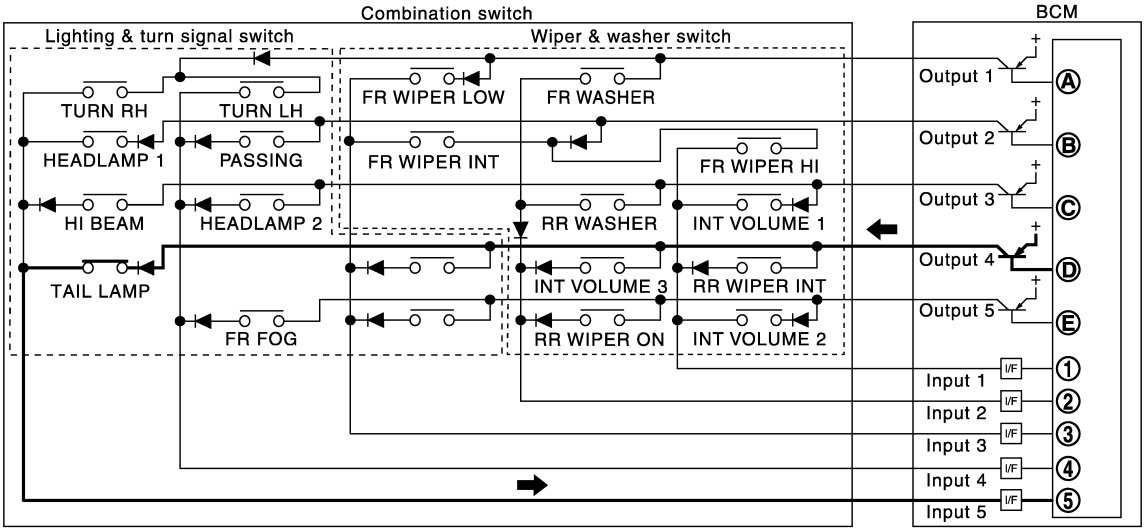

- BCM detects the combination switch status signal “5D” when the signal of OUTPUT 4 is input to INPUT 5.
- BCM judges that the TAIL LAMP switch is ON when the signal “5D” is detected.

Example 2: When some switches (TURN RH switch, TAIL LAMP switch) are turned ON

- The circuits between OUTPUT 1 and INPUT 5 and between OUTPUT 4 and INPUT 5 are formed when the TURN RH switch and TAIL LAMP switch are turned ON.

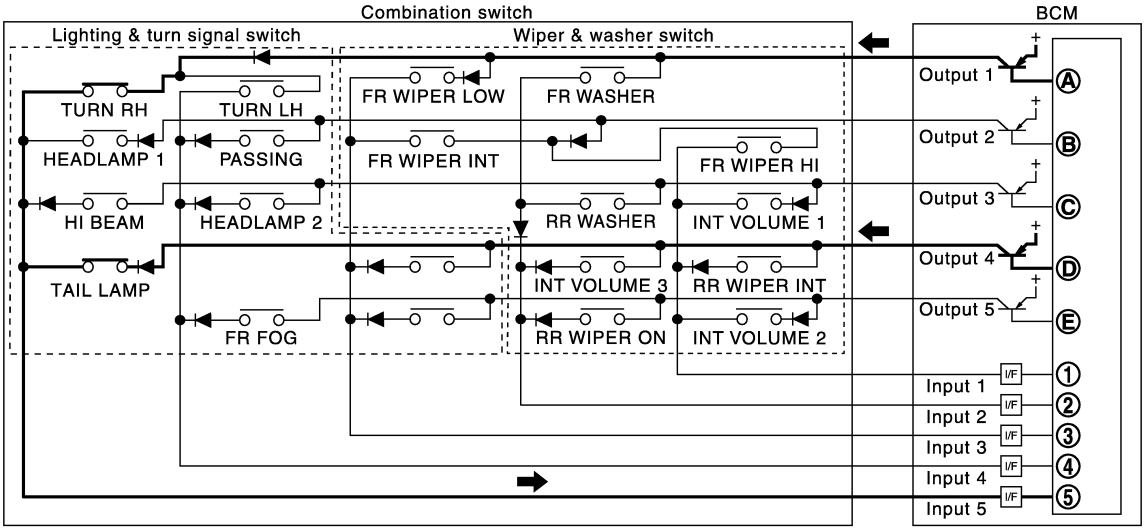

JMMIA0395GB

- BCM detects the combination switch status signal “5AD” when the signals of OUTPUT 1 and OUTPUT 4 are input to INPUT 5.
- BCM judges that the TURN RH switch and TAIL LAMP switch are ON when the signal “5AD” is detected.

WIPER INTERMITTENT DIAL POSITION

BCM judges the wiper intermittent dial 1 - 7 by the status of INT VOLUME 1, 2 and 3 switches.

Wiper intermittent dial position	Switch status		
	INT VOLUME 1	INT VOLUME 2	INT VOLUME 3
1	ON	ON	ON
2	ON	ON	OFF
3	ON	OFF	OFF
4	OFF	OFF	OFF
5	OFF	OFF	ON
6	OFF	ON	ON
7	OFF	ON	OFF

NOTE:

For details of wiper intermittent dial position, refer to WW-6, "FRONT WIPER AND WASHER SYSTEM : System Description".

SIGNAL BUFFER SYSTEM

SIGNAL BUFFER SYSTEM : System Diagram

INFOID:0000000006014874

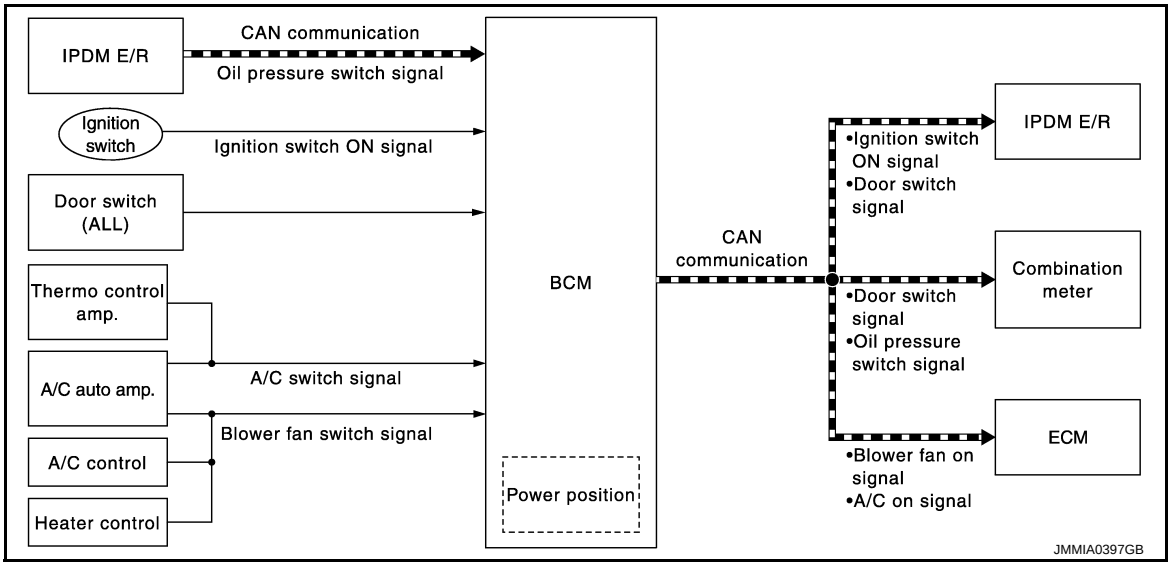

SIGNAL BUFFER SYSTEM : System Description

INFOID:0000000006014875

OUTLINE

BCM has the signal transmission function that outputs/transmits each input/received signal to each unit.

SIGNAL TRANSMISSION FUNCTION LIST

Signal name	Input	Output	Description
Ignition switch ON signal	Ignition switch	IPDM E/R (CAN)	Inputs the ignition switch signal and transmits it with CAN communication.
Door switch signal	Any door switch	• Combination meter (CAN) • IPDM E/R (CAN)	Inputs the door switch signal and transmits it with CAN communication.
Blower fan on signal	• A/C auto amp. • A/C control • Heater control	ECM (CAN)	Input blower fan switch signal, and transmit the blower fan on signal via CAN communication.
A/C on signal	• A/C auto amp. • Thermo control amp.	ECM (CAN)	Input A/C switch signal, and transmit the A/C on signal via CAN communication.
Oil pressure switch signal	IPDM E/R (CAN)	Combination meter (CAN)	Transmits the received oil pressure switch signal with CAN communication.

POWER CONSUMPTION CONTROL SYSTEM

POWER CONSUMPTION CONTROL SYSTEM : System Diagram

INFOID:0000000006014876

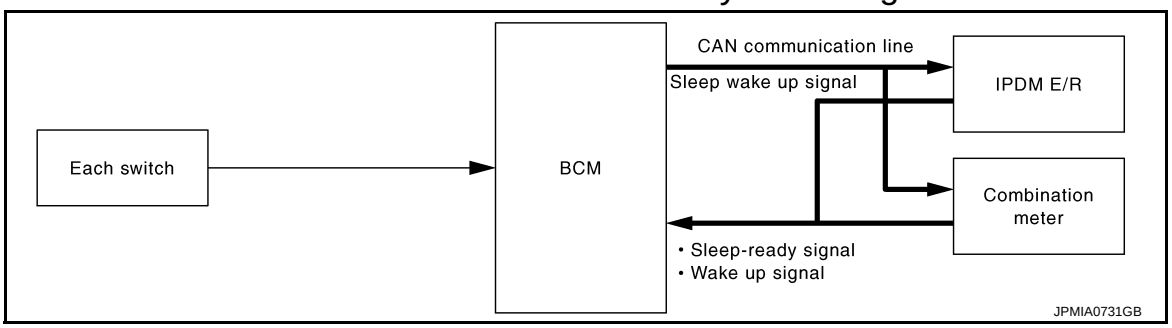

POWER CONSUMPTION CONTROL SYSTEM : System Description

INFOID:0000000006014877

OUTLINE

- BCM incorporates a power saving control function that reduces the power consumption according to the vehicle status.
- BCM switches the status (control mode) by itself with the power saving control function. It performs the sleep request to each unit (IPDM E/R and combination meter) that operates with the ignition switch OFF.

Normal mode (wake-up)
- CAN communication is normally performed with other units
- Each control with BCM is operating properly

CAN communication sleep mode (CAN sleep)
- CAN transmission is stopped
- Control with BCM only is operating

Low power consumption mode (BCM sleep)
- Low power consumption control is active
- CAN transmission is stopped

LOW POWER CONSUMPTION CONTROL WITH BCM

BCM reduces the power consumption with the following operation in the low power consumption mode.
- The reading interval of the each switches changes from 10 ms interval to 60 ms interval.

Sleep mode activation

- BCM receives the sleep-ready signal (ready) from IPDM E/R and combination meter via CAN communication.
- BCM transmits the sleep wake up signal (sleep) to each unit when all of the CAN sleep conditions are fulfilled.
- Each unit stops the transmission of CAN communication with the sleep wake up signal. BCM is in CAN communication sleep mode.
- BCM is in the low power consumption mode and perform the low power consumption control when all of the BCM sleep conditions are fulfilled with CAN sleep condition.

Sleep condition

CAN sleep condition	BCM sleep condition
• Receiving the sleep-ready signal (ready) from all units • Ignition switch: OFF • Panic alarm: Not operation • Warning chime: Not operation • Stop lamp switch: OFF • Turn signal indicator lamp: Not operation • Exterior lamp: OFF • Door lock status: No change • CONSULT-III communication status: Not communication • Door switch status: No change • Rear window defogger: OFF • Driver door lock status: No change • Key switch status: No change	• Interior room lamp battery saver: Time out • Nissan anti-theft system (NATS): Not operation • Remote keyless entry receiver communication status: No communication

Wake-up operation

- BCM transmits sleep wake up signal (wake up) to each unit when any condition listed below is established, and then goes into normal mode from low power consumption mode.
- Each unit starts transmissions with CAN communication by receiving sleep wake up signals. Each unit transmit wake up signals to BCM with CAN communication to convey the start of CAN communication.

Wake-up condition

Wake-up condition
• Receiving the sleep-ready signal (Not-ready) from any units • Hazard switch: ON • HI BEAM switch: OFF → ON, ON → OFF • PASSING switch: OFF → ON, ON → OFF • HEADLAMP 1 switch: OFF → ON, ON → OFF • HEADLAMP 2 switch: OFF → ON, ON → OFF • TAIL LAMP switch: OFF → ON • FR FOG switch: OFF → ON, ON → OFF • TURN RH: OFF → ON, ON → OFF • TURN LH: OFF → ON, ON → OFF • Driver door switch: OFF → ON, ON → OFF • Passenger door switch: OFF → ON, ON → OFF • Rear RH door switch: OFF → ON, ON → OFF • Rear LH door switch: OFF → ON, ON → OFF • Back door switch: OFF → ON, ON → OFF • Stop lamp switch: ON • Door lock and unlock switch: NEUTRAL → LOCK, NEUTRAL → UNLOCK • Door key cylinder switch (driver side): NEUTRAL → LOCK, NEUTRAL → UNLOCK • Remote keyless entry receiver communication: Receiving

DIAGNOSIS SYSTEM (BCM)

COMMON ITEM

COMMON ITEM : CONSULT-III Function (BCM - COMMON ITEM)

INFOID:0000000006014878

APPLICATION ITEM

CONSULT-III performs the following functions via CAN communication with BCM.

Diagnosis mode	Function Description
Work Support	Changes the setting for each system function.
Self Diagnostic Result	Displays the diagnosis results judged by BCM.
CAN Diag Support Monitor	Monitors the reception status of CAN communication viewed from BCM. Refer to CONSULT-III operation manual.
Data Monitor	The BCM input/output signals are displayed.
Active Test	The signals used to activate each device are forcibly supplied from BCM.
Ecu Identification	The BCM part number is displayed.
Configuration	• Read and save the vehicle specification. • Write the vehicle specification when replacing BCM.

SYSTEM APPLICATION

BCM can perform the following functions for each system.

NOTE:

It can perform the diagnosis modes except the following for all sub system selection items.

×: Applicable item

System	Sub system selection item	Diagnosis mode		
		Work Support	Data Monitor	Active Test
Door lock	DOOR LOCK		×	×
Rear window defogger	REAR DEFOGGER		×	×
Warning chime	BUZZER		×	×
Interior room lamp control	INT LAMP	×	×	×
Remote keyless entry system	MULTI REMOTE ENT	×	×	×
Exterior lamp	HEAD LAMP	×	×	×
Wiper and washer	WIPER	×	×	×
Turn signal and hazard warning lamps	FLASHER		×	×
• Automatic air conditioner • Manual air conditioner	AIR CONDITONER		×	
Combination switch	COMB SW		×	
Body control system	BCM	×		
NATS	IMMU	×*1		×
Interior room lamp battery saver	BATTERY SAVER	×	×	×
Back door	TRUNK		×	
—	THEFT ALM*2		×	×
—	RETAINED PWR*2			
Signal buffer system	SIGNAL BUFFER		×	×
Panic alarm	PANIC ALARM			×

- *1: For models without NATS this mode is not used.
- *2: This item is displayed, but is not used.

COMB SW

COMB SW : CONSULT-III Function (BCM - COMB SW)

INFOID:0000000006014889

DATA MONITOR

Monitor item [UNIT]	Description
TURN SIGNAL R [Off/On]	Displays the status of TURN RH switch in combination switch judged by the combination switch reading function.
TURN SIGNAL L [Off/On]	Displays the status of the TURN LH switch in combination switch judged by the combination switch reading function.
HI BEAM SW [Off/On]	Displays the status of HI BEAM switch in combination switch judged by the combination switch reading function.
HEAD LAMP SW 1 [Off/On]	Displays the status of HEADLAMP 1 switch in combination switch judged by the combination switch reading function.
HEAD LAMP SW 2 [Off/On]	Displays the status of HEADLAMP 2 switch in combination switch judged by the combination switch reading function.
TAIL LAMP SW [Off/On]	Displays the status of TAIL LAMP switch in combination switch judged by the combination switch reading function.
PASSING SW [Off/On]	Displays the status of PASSING switch in combination switch judged by the combination switch reading function.
FR FOG SW [Off/On]	Displays the status of FR FOG switch in combination switch judged by the combination switch reading function.
FR WIPER HI [Off/On]	Displays the status of FR WIPER HI switch in combination switch judged by the combination switch reading function.
FR WIPER LOW [Off/On]	Displays the status of FR WIPER LOW switch in combination switch judged by the combination switch reading function.
FR WIPER INT [Off/On]	Displays the status of FR WIPER INT switch in combination switch judged by the combination switch reading function.
FR WASHER SW [Off/On]	Displays the status of FR WASHER switch in combination switch judged by the combination switch reading function.
INT VOLUME [1 - 7]	Displays the status of wiper intermittent dial position judged by the combination switch reading function.
RR WIPER ON [Off/On]	Displays the status of RR WIPER switch in combination switch judged by the combination switch reading function.
RR WIPER INT [Off/On]	Displays the status of RR WIPER INT switch in combination switch judged by the combination switch reading function.
RR WASHER SW [Off/On]	Displays the status of RR WASHER switch in combination switch judged by the combination switch reading function.

BCM

BCM : CONSULT-III Function (BCM - BCM)

INFOID:0000000006014890

WORK SUPPORT

Item	Description
RESET SETTING VALUE	Return a value set with WORK SUPPORT of each system to a default value in factory shipment.

SIGNAL BUFFER

SIGNAL BUFFER : CONSULT-III Function (BCM - SIGNAL BUFFER)

INFOID:0000000006014894

DATA MONITOR

Monitor item [UNIT]	Description
OIL PRESS SW [Off/On]	Displays the status of oil pressure switch received from IPDM E/R with CAN communication.
BRAKE SW [Off/On]	Displays the switch status input from stop lamp switch.

ACTIVE TEST

Test item	Operation	Description
OIL PRESSURE SW	On	Transmits the oil pressure switch signal with CAN communication to illuminate the oil pressure warning lamp in the combination meter.
	Off	Stops the oil pressure switch signal transmission.

ECU DIAGNOSIS INFORMATION

BCM

Reference Value

INFOID:0000000006014895

VALUES ON THE DIAGNOSIS TOOL

Monitor Item	Condition	Value/Status
IGN ON SW	Ignition switch OFF or ACC	Off
	Ignition switch ON	On
KEY ON SW	Mechanical key is removed from key cylinder	Off
	Mechanical key is inserted to key cylinder	On
CDL LOCK SW	Door lock/unlock switch does not operate	Off
	Press door lock/unlock switch to the lock side	On
CDL UNLOCK SW	Door lock/unlock switch does not operate	Off
	Press door lock/unlock switch to the unlock side	On
DOOR SW-DR	Driver's door closed	Off
	Driver's door opened	On
DOOR SW-AS	Passenger door closed	Off
	Passenger door opened	On
DOOR SW-RR	Rear RH door closed	Off
	Rear RH door opened	On
DOOR SW-RL	Rear LH door closed	Off
	Rear LH door opened	On
BACK DOOR SW	Back door closed	Off
	Back door opened	On
LOCK STATUS	Driver door is locked	Off
	Driver door is unlocked	On
ACC ON SW	Ignition switch OFF	Off
	Ignition switch ACC or ON	On
KEYLESS LOCK	“LOCK” button of key fob is not pressed	Off
	“LOCK” button of key fob is pressed	On
KEYLESS UNLOCK	“UNLOCK” button of key fob is not pressed	Off
	“UNLOCK” button of key fob is pressed	On
SHOCK SENSOR	**NOTE:** The item is indicated, but not used.	NOMAL/Off
KEY CYL LK-SW	Other than driver door key cylinder LOCK position	Off
	Driver door key cylinder LOCK position	On
KEY CYL UN-SW	Other than driver door key cylinder UNLOCK position	Off
	Driver door key cylinder UNLOCK position	On
VEHICLE SPEED	While driving	Equivalent to speed-ometer reading
REAR DEF SW	Rear window defogger switch OFF	Off
	Rear window defogger switch ON	On
REVERSE SW CAN	**NOTE:** The item is indicated, but not used.	Off/On

Monitor Item	Condition	Value/Status
TAIL LAMP SW	Lighting switch OFF	Off
	Lighting switch 1ST	On
FR FOG SW	Front fog lamp switch OFF	Off
	Front fog lamp switch ON	On
BUCKLE SW	The seat belt (driver side) is fastened. [Seat belt switch (driver side) OFF]	Off
	The seat belt (driver side) is unfastened. [Seat belt switch (driver side) ON]	On
TRNK/HAT MNTR	**NOTE:** The item is indicated, but not monitored.	Off
ACC SW	Ignition switch OFF	Off
	Ignition switch ACC or ON	On
KYLS TRNK/HAT	**NOTE:** The item is indicated, but not monitored.	Off
KEYLESS PANIC	PANIC button of key fob is not pressed	Off
	PANIC button of key fob is pressed	On
HI BEAM SW	Lighting switch OFF	Off
	Lighting switch HI	On
HEAD LAMP SW 1	Lighting switch OFF	Off
	Lighting switch 2ND	On
HEAD LAMP SW 2	Lighting switch OFF	Off
	Lighting switch 2ND	On
PASSING SW	Other than lighting switch PASS	Off
	Lighting switch PASS	On
TURN SIGNAL R	Turn signal switch OFF	Off
	Turn signal switch RH	On
TURN SIGNAL L	Turn signal switch OFF	Off
	Turn signal switch LH	On
PKB SW	**NOTE:** The item is indicated, but not monitored.	Off
ENGINE RUN	Engine stopped	Off
	Engine running	On
OPTI SEN (DTCT)	**NOTE:** The item is indicated, but not monitored.	0 V
OPTI SEN (FILT)	**NOTE:** The item is indicated, but not monitored.	0 V
LIG SEN COND	Bright outside of the vehicle	Off
	Dark outside of vehicle	On
	Light sensor internal error	NG
IGN SW CAN	Ignition switch OFF or ACC	Off
	Ignition switch ON	On
FR WIPER HI	Front wiper switch OFF	Off
	Front wiper switch HI	On
FR WIPER LOW	Front wiper switch OFF	Off
	Front wiper switch LO	On
FR WIPER INT	Front wiper switch OFF	Off
	Front wiper switch INT	On

Monitor Item	Condition	Value/Status
FR WASHER SW	Front washer switch OFF	Off
	Front washer switch ON	On
INT VOLUME	Wiper intermittent dial is in a dial position 1 - 7	1 - 7
FR WIPER STOP	Any position other than front wiper stop position	Off
	Front wiper stop position	On
RR WIPER ON	Rear wiper switch OFF	Off
	Rear wiper switch ON	On
RR WIPER INT	Rear wiper switch OFF	Off
	Rear wiper switch INT	On
RR WASHER SW	Rear washer switch OFF	Off
	Rear washer switch ON	On
RR WIPER STOP	Rear wiper stop position	Off
	Other than rear wiper stop position	On
RAIN SENSOR	**NOTE:** The item is indicated, but not monitored.	Off
HAZARD SW	Hazard switch OFF	Off
	Hazard switch ON	On
FAN ON SIG	Blower control dial OFF	Off
	Other than blower control dial OFF	On
AIR COND SW	• Air conditioner OFF (A/C switch indicator OFF) (Automatic air conditioner) • A/C switch OFF (Manual air conditioner)	Off
	• Air conditioner ON (A/C switch indicator ON) (Automatic air conditioner) • A/C switch ON (Manual air conditioner)	On
THERMO AMP	**NOTE:** The item is indicated, but not monitored.	Off
FR DEF SW	**NOTE:** The item is indicated, but not monitored.	Off
KEYLESS TRUNK	**NOTE:** The item is indicated, but not monitored.	Off
TRNK OPNR SW	**NOTE:** The item is indicated, but not monitored.	Off
TRNK OPN MNTR	**NOTE:** The item is indicated, but not monitored.	Off
HOOD SW	**NOTE:** The item is indicated, but not monitored.	Off
TRANSPONDER **NOTE:** The item is indicated, but not used.	Other than the ignition switch is ON by key registered to BCM.	Off
	The ignition switch is ON by key registered to BCM.	On
INTELLI KEY	**NOTE:** The item is indicated, but not used.	Off
AUTO RELOCK	**NOTE:** The item is indicated, but not monitored.	Off
OIL PRESS SW	• Ignition switch OFF or ACC • Engine running	Off
	Ignition switch ON	On
BRAKE SW	Brake pedal is not depressed	Off
	Brake pedal is depressed	On

TERMINAL LAYOUT

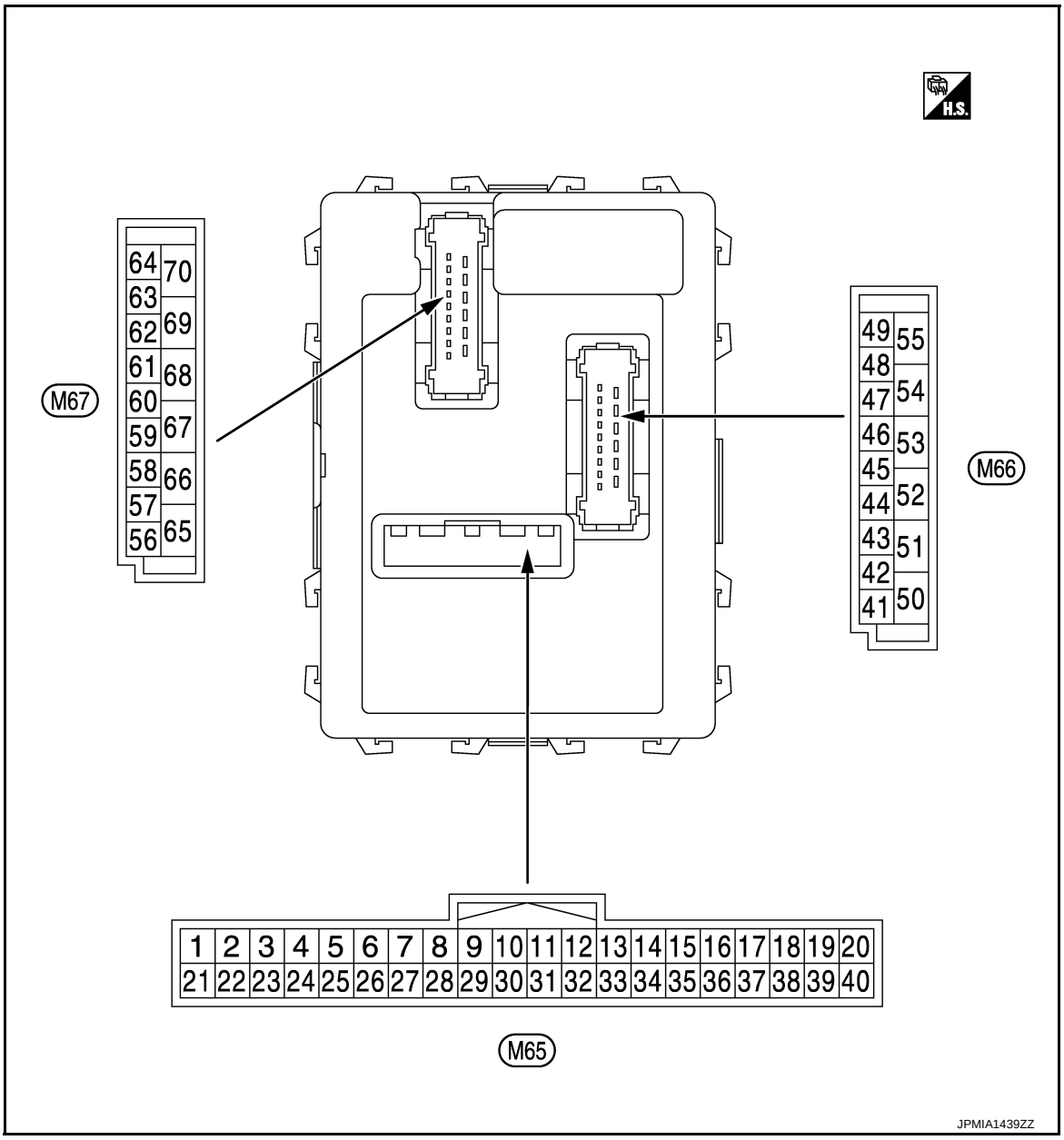

NOTE:
- M65, M66: White
- M67: Black

PHYSICAL VALUES

Terminal No. (Wire color)		Description		Condition		Value (Approx.)
+	–	Signal name	Input/ Output			
2 (BR)	Ground	Combination switch INPUT 5	Input	Combination switch (Wiper intermittent dial 4)	All switches OFF	0 V
					Turn signal switch RH	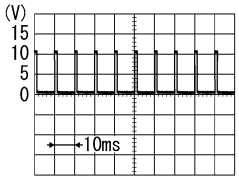 PKIB4958J 1.0 V
					Lighting switch HI	
					Lighting switch 1ST	
					Lighting switch 2ND	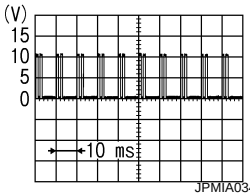 JPMIA0342JP 2.0 V
3 (Y)	Ground	Combination switch INPUT 4	Input	Combination switch (Wiper intermittent dial 4)	All switches OFF	0 V
					Turn signal switch LH	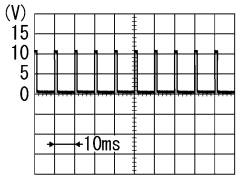 PKIB4958J 1.0 V
					Lighting switch PASS	
					Lighting switch 2ND	
					Front fog lamp switch ON	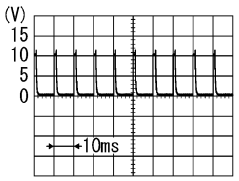 PKIB4956J 0.8 V
4 (L)	Ground	Combination switch INPUT 3	Input	Combination switch (Wiper intermittent dial 4)	All switches OFF	0 V
					Front wiper switch LO	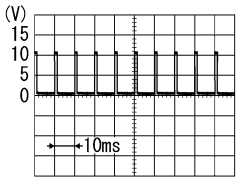 PKIB4958J 1.0 V
					Front wiper switch MIST	
					Front wiper switch INT	

Terminal No. (Wire color)		Description		Condition		Value (Approx.)
+	–	Signal name	Input/ Output			
5 (G)	Ground	Combination switch INPUT 2	Input	Combination switch	All switches OFF (Wiper intermittent dial 4)	0 V
					Front washer switch ON (Wiper intermittent dial 4) Rear washer switch ON (Wiper intermittent dial 4) Any of the condition below with all switches OFF • Wiper intermittent dial 1 • Wiper intermittent dial 5 • Wiper intermittent dial 6	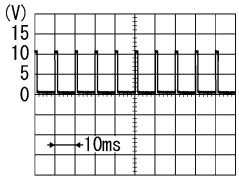 PKIB4958J 1.0 V
					Rear wiper switch ON (Wiper intermittent dial 4)	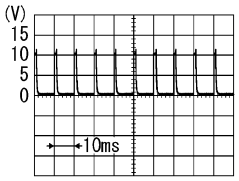 PKIB4956J 0.8 V
6 (R)	Ground	Combination switch INPUT 1	Input	Combination switch	All switches OFF (Wiper intermittent dial 4)	0 V
					Front wiper switch HI (Wiper intermittent dial 4) Rear wiper switch INT (Wiper intermittent dial 4) Wiper intermittent dial 3 (All switches OFF)	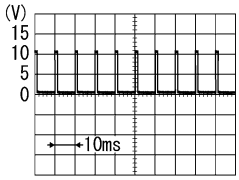 PKIB4958J 1.0 V
					Any of the condition below with all switches OFF • Wiper intermittent dial 1 • Wiper intermittent dial 2	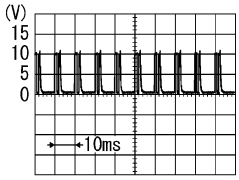 PKIB4952J 1.9 V
					Any of the condition below with all switches OFF • Wiper intermittent dial 6 • Wiper intermittent dial 7	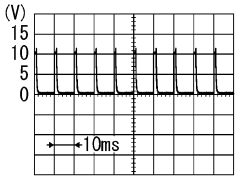 PKIB4956J 0.8 V

Terminal No. (Wire color)		Description		Condition		Value (Approx.)
+	–	Signal name	Input/ Output			
7 (Y)	Ground	Front door lock assembly driver side (Unlock sensor)	Input	Driver door	LOCK status (Unlock sensor switch OFF)	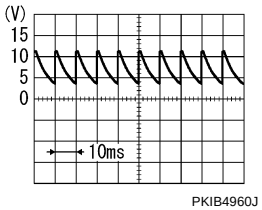 7.0 - 8.0 V
					UNLOCK status (Unlock sensor switch ON)	0 V
8 (GR)	Ground	Door key cylinder switch LOCK	Input	Door key cylinder switch	NEUTRAL position	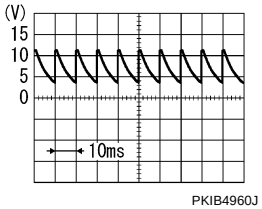 7.0 - 8.0 V
					LOCK position	0 V
9 (W)	Ground	Stop lamp switch	Input	Stop lamp switch	OFF (Brake pedal is not depressed)	0 V
					ON (Brake pedal is depressed)	Battery voltage
10 (G)	Ground	Rear window defogger switch	Input	Rear window defogger switch	OFF (Not pressed)	12 V
					ON (Pressed)	0 V
11 (L)	Ground	Ignition switch ACC	Input	Ignition switch OFF		0 V
				Ignition switch ACC or ON		Battery voltage
12 (P)	Ground	Passenger door switch	Input	Passenger door switch	OFF (When passenger door closed)	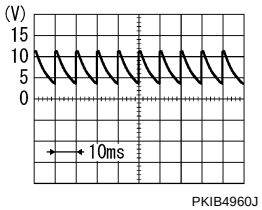 7.0 - 8.0 V
					ON (When passenger door opened)	0 V
13 (LG)	Ground	Rear RH door switch	Input	Rear RH door switch	OFF (When rear RH door closed)	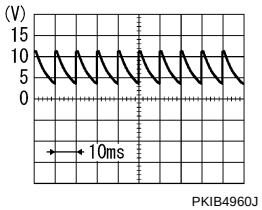 7.0 - 8.0 V
					ON (When rear RH door opened)	0 V
18 (V)	Ground	Receiver and sensor ground	Input	Ignition switch ON		0 V

Terminal No. (Wire color)		Description		Condition		Value (Approx.)
+	–	Signal name	Input/ Output			
19 (LG)	Ground	Remote keyless entry receiver power supply	Input	Ignition switch OFF	Insert mechanical key into ignition key cylinder	0 V
					Remove mechanical key from ignition key cylinder (Any door opened)	5 V
					Remove mechanical key from ignition key cylinder (Any door closed)	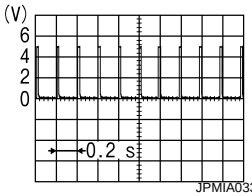 JPMIA0338JP
20 (G)	Ground	Remote keyless entry receiver communication	Input	Ignition switch OFF	Insert mechanical key into ignition key cylinder	0 V
					Waiting	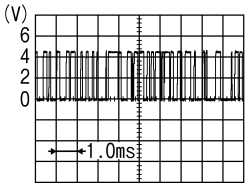 PIIB7728J
					Signal receiving	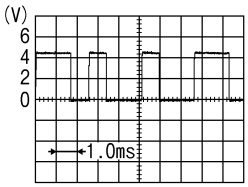 PIIB7729J
21 (P)	Ground	NATS antenna amp.	Input/ Output	Just after inserting ignition key in key cylinder		Pointer of tester should move
				Other than above		0 V
23 (G)	Ground	Security indicator lamp	Input	Security indicator lamp	ON	0 V
					Blinking (Ignition switch OFF)	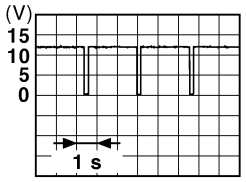 JPMIA0014GB 11.3 V
					OFF	12 V
25 (LG)	Ground	NATS antenna amp.	Input/ Output	Just after inserting ignition key in key cylinder		Pointer of tester should move
				Other than above		0 V

Terminal No. (Wire color)		Description		Condition		Value (Approx.)
+	–	Signal name	Input/ Output			
27 (W)	Ground	A/C switch (Automatic air conditioner)	Input	A/C	OFF (A/C switch indicator: OFF)	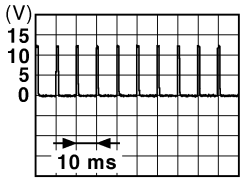 JPMIA0012GB 1.0 - 1.5 V
					ON (A/C switch indicator: ON)	0 V
		A/C switch (Manual c air conditioner)		A/C switch	OFF	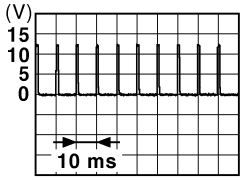 JPMIA0012GB 1.0 - 1.5 V
					ON	0 V
28 (SB)	Ground	Blower fan switch (Automatic air conditioner)	Input	Fan switch	Blower fan switch OFF	0 V
					Blower fan switch ON	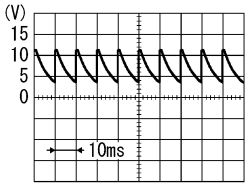 PKIB4960J 7.0 - 8.0 V
		Blower fan switch (Manual air conditioner)		Fan switch	Blower fan switch OFF	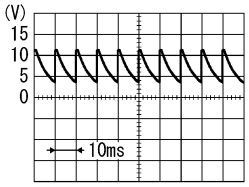 PKIB4960J 7.0 - 8.0 V
					Blower fan switch ON	0 V
29 (SB)	Ground	Hazard switch	Input	Hazard switch	OFF	12 V
					ON	0 V
31 (W)	Ground	Door key cylinder switch UNLOCK	Input	Door key cylinder switch	NEUTRAL position	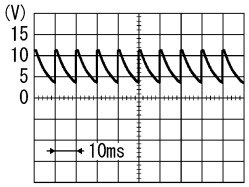 PKIB4960J 7.0 - 8.0 V
					UNLOCK position	0 V

Terminal No. (Wire color)		Description		Condition		Value (Approx.)
+	–	Signal name	Input/ Output			
32 (P)	Ground	Combination switch OUTPUT 5	Output	Combination switch	All switches OFF (Wiper intermittent dial 4)	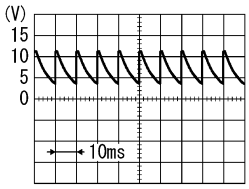 PKIB4960J 7.0 - 8.0 V
					Front fog lamp switch ON (Wiper intermittent dial 4)	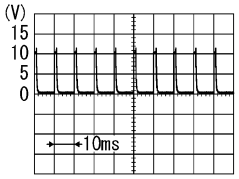 PKIB4956J 1.0 V
					Rear wiper switch ON (Wiper intermittent dial 4)	
					Any of the condition below with all switches OFF • Wiper intermittent dial 1 • Wiper intermittent dial 2 • Wiper intermittent dial 6 • Wiper intermittent dial 7	
33 (V)	Ground	Combination switch OUTPUT 4	Output	Combination switch	All switches OFF (Wiper intermittent dial 4)	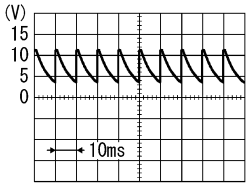 PKIB4960J 7.0 - 8.0 V
					Lighting switch 1ST (Wiper intermittent dial 4)	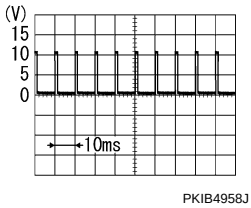 PKIB4958J 1.2 V
					Rear wiper switch INT (Wiper intermittent dial 4)	
					Any of the condition below with all switches OFF • Wiper intermittent dial 1 • Wiper intermittent dial 5 • Wiper intermittent dial 6	

Terminal No. (Wire color)		Description		Condition		Value (Approx.)
+	–	Signal name	Input/ Output			
34 (W)	Ground	Combination switch OUTPUT 3	Output	Combination switch	All switches OFF (Wiper intermittent dial 4)	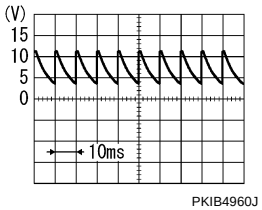 7.0 - 8.0 V
					Lighting switch 2ND (Wiper intermittent dial 4)	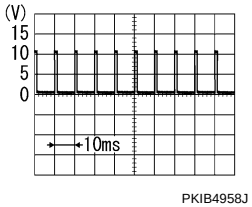 1.2 V
					Lighting switch HI (Wiper intermittent dial 4)	
					Rear washer switch ON (Wiper intermittent dial 4)	
					Any of the condition below with all switches OFF • Wiper intermittent dial 1 • Wiper intermittent dial 2 • Wiper intermittent dial 3	
35 (GR)	Ground	Combination switch OUTPUT 2	Output	Combination switch (Wiper intermittent dial 4)	All switches OFF	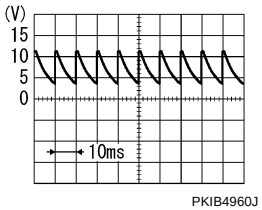 7.0 - 8.0 V
					Lighting switch 2ND	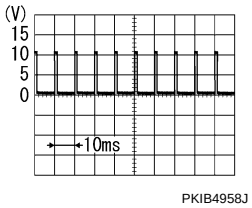 1.2 V
					Lighting switch PASS	
					Front wiper switch INT	
					Front wiper switch HI	
36 (LG)	Ground	Combination switch OUTPUT 1	Output	Combination switch (Wiper intermittent dial 4)	All switches OFF	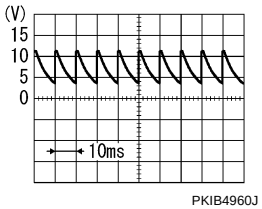 7.0 - 8.0 V
					Turn signal switch RH	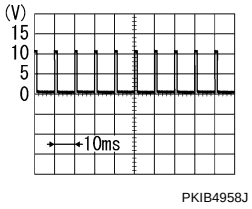 1.2 V
					Turn signal switch LH	
					Front wiper switch LO	
					Front wiper switch MIST	
					Front washer switch ON	

Terminal No. (Wire color)		Description		Condition		Value (Approx.)
+	–	Signal name	Input/ Output			
37 (Y)	Ground	Key switch	Input	Insert mechanical key into ignition key cylinder		Battery voltage
				Remove mechanical key from ignition key cylinder		0 V
38 (BG)	Ground	Ignition switch ON	Input	Ignition switch OFF or ACC		0 V
				Ignition switch ON		Battery voltage
39 (L)	Ground	CAN-H	Input/ Output	—		—
40 (P)	Ground	CAN-L	Input/ Output	—		—
43 (P)	Ground	Back door switch	Input	Back door switch	OFF (When back door closed)	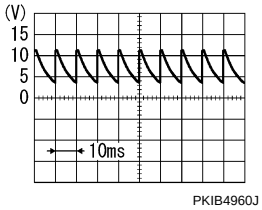 7.0 - 8.0 V
					ON (When back door opened)	0 V
44 (LG)	Ground	Rear wiper stop position	Input	Ignition switch ON	Rear wiper stop position	12 V
					Any position other than rear wiper stop position	0 V
45 (GR)	Ground	Door lock and unlock switch LOCK	Input	Door lock and unlock switch	NEUTRAL position	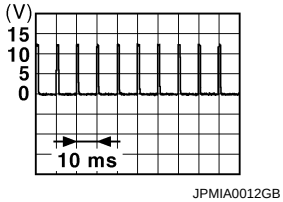 1.0 - 1.5 V
					LOCK position	0 V
46 (BR)	Ground	Door lock and unlock switch UNLOCK	Input	Door lock and unlock switch	NEUTRAL position	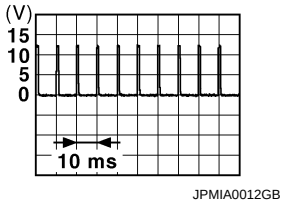 1.0 - 1.5 V
					UNLOCK position	0 V

Terminal No. (Wire color)		Description		Condition		Value (Approx.)
+	–	Signal name	Input/ Output			
47 (SB)	Ground	Driver door switch	Input	Driver door switch	OFF (When driver door closed)	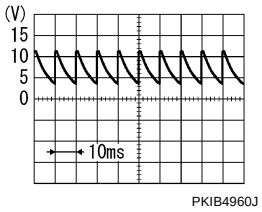 7.0 - 8.0 V
					ON (When driver door opened)	0 V
48 (W)	Ground	Rear LH door switch	Input	Rear LH door switch	OFF (When rear LH door closed)	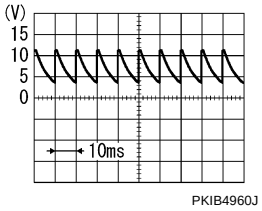 7.0 - 8.0 V
					ON (When rear LH door opened)	0 V
54 (R)	Ground	Rear wiper	Output	Ignition switch ON	Rear wiper switch OFF	0 V
					Rear wiper switch ON	12 V
57 (Y)	Ground	Battery power supply	Input	Ignition switch OFF		Battery voltage
60 (V)	Ground	Turn signal LH	Output	Ignition switch ON	Turn signal switch OFF	0 V
					Turn signal switch LH	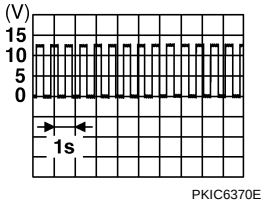 6.0 V
61 (W)	Ground	Turn signal RH	Output	Ignition switch ON	Turn signal switch OFF	0 V
					Turn signal switch RH	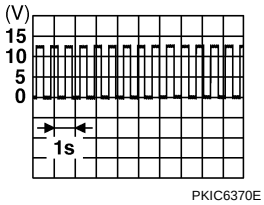 6.0 V
63 (R)	Ground	Interior room lamp timer control	Output	Interior room lamp	OFF	Battery voltage
					ON	0 V
64 (GR)	Ground	Rear window defogger relay control	Input	Rear window defogger	OFF	Battery voltage
					ON	0 V

Terminal No. (Wire color)		Description		Condition		Value (Approx.)
+	–	Signal name	Input/ Output			
65 (SB)	Ground	All doors LOCK	Output	All doors	LOCK (Actuator is activated)	12 V
					Other then LOCK (Actuator is not activated)	0 V
66 (G)	Ground	All doors UNLOCK	Output	All doors	UNLOCK (Actuator is activated)	12 V
					Other then UNLOCK (Actuator is not activated)	0 V
67 (B)	Ground	Ground	Output	Ignition switch ON		0 V
68 (L)	Ground	P/W power supply (IGN)	Output	Ignition switch ON		12 V
69 (P)	Ground	P/W power supply (BAT)	Output	Ignition switch OFF		12 V
70 (G)	Ground	Battery power supply	Input	Ignition switch OFF		Battery voltage

Fail-safe

INFOID:0000000006014896

FAIL-SAFE CONTROL BY DTC

BCM performs fail-safe control when any DTC are detected.

Display contents of CONSULT	Fail-safe	Cancellation
B2190: NATS ANTENNA AMP	Inhibit engine cranking	Erase DTC
B2191: DIFFERENCE OF KEY	Inhibit engine cranking	Erase DTC
B2192: ID DISCORD BCM-ECM	Inhibit engine cranking	Erase DTC
B2193: CHAIN OF BCM-ECM	Inhibit engine cranking	Erase DTC
B2195: ANTI SCANNING	Inhibit engine cranking	Ignition switch ON → OFF

REAR WIPER MOTOR PROTECTION

BCM detects the rear wiper stopping position according to the rear wiper auto stop signal.
When the rear wiper auto stop signal does not change more than 5 seconds while driving the rear wiper, BCM stops power supply to protect the rear wiper motor.

Condition of cancellation
1. Pass more than 1 minute after the rear wiper stop.
2. Turn rear wiper switch OFF.
3. Operate the rear wiper switch or rear washer switch.

DTC Inspection Priority Chart

INFOID:0000000006014897

If some DTCs are displayed at the same time, perform inspections one by one based on the following priority chart.

Priority	DTC
1	• U1000: CAN COMM • U1010: CONTROL UNIT (CAN)
2	• B2190: NATS ANTENNA AMP • B2191: DIFFERENCE OF KEY • B2192: ID DISCORD BCM-ECM • B2193: CHAIN OF BCM-ECM • B2195: ANTI SCANNING

DTC Index

INFOID:0000000006014898

NOTE:

Details of time display

- CRNT: Displays when there is a malfunction now or after returning to the normal condition until turning ignition switch OFF → ON again.
- 1 - 39: Displayed if any previous malfunction is present when current condition is normal. It increases like 1 → 2 → 3...38 → 39 after returning to the normal condition whenever ignition switch OFF → ON. The counter remains at 39 even if the number of cycles exceeds it. It is counted from 1 again when turning ignition switch OFF → ON after returning to the normal condition if the malfunction is detected again.

CONSULT display	Fail-safe	Reference
U1000: CAN COMM	—	BCS-91
U1010: CONTROL UNIT (CAN)	—	BCS-92
B2190: NATS ANTENNA AMP	×	SEC-151
B2191: DIFFERENCE OF KEY	×	SEC-154
B2192: ID DISCORD BCM-ECM	×	SEC-155
B2193: CHAIN OF BCM-ECM	×	SEC-156
B2195: ANTI SCANNING	×	SEC-157

WIRING DIAGRAM

BCM

Wiring Diagram

INFOID:0000000006014899

For connector terminal arrangements, harness layouts, and alphabets in a ⬡ (option abbreviation; if not described in wiring diagram), refer to GI-12, "Connector Information".
回路図待ち。。。

BASIC INSPECTION

ADDITIONAL SERVICE WHEN REPLACING CONTROL UNIT

Description

INFOID:0000000006014900

BEFORE REPLACEMENT

When replacing BCM, save or print current vehicle specification with CONSULT-III configuration before replacement.

NOTE:

If “READ CONFIGURATION” can not be used, use the “WRITE CONFIGURATION - Manual selection” after replacing BCM.

AFTER REPLACEMENT

CAUTION:

- **When replacing BCM, you must perform “WRITE CONFIGURATION” with CONSULT-III.**
- **Complete the procedure of “WRITE CONFIGURATION” in order.**
- **If you set incorrect “WRITE CONFIGURATION”, incidents might occur.**
- **Configuration is different for each vehicle model. Confirm configuration of each vehicle model.**
- **When replacing BCM, perform the system initialization (NATS).**

Work Procedure

INFOID:0000000006014901

1. SAVING VEHICLE SPECIFICATION

CONSULT-III Configuration

Perform “READ CONFIGURATION” to save or print current vehicle specification. Refer to BCS-89, "Description".

NOTE:

If “READ CONFIGURATION” can not be used, use the “WRITE CONFIGURATION - Manual selection” after replacing BCM.

>> GO TO 2.

2. REPLACE BCM

Replace BCM. Refer to BCS-99, "Removal and Installation".

>> GO TO 3.

3. WRITING VEHICLE SPECIFICATION

CONSULT-III Configuration

Perform “WRITE CONFIGURATION - Config file” or “WRITE CONFIGURATION - Manual selection” to write vehicle specification. Refer to BCS-89, "Work Procedure".

>> GO TO 4.

4. INITIALIZE BCM (NATS)

Perform BCM initialization. (NATS)

>> WORK END

CONFIGURATION (BCM)

Description

INFOID:0000000006014902

Vehicle specification needs to be written with CONSULT-III because it is not written after replacing BCM. Configuration has three functions as follows.

Function	Description
READ CONFIGURATION	• Reads the vehicle configuration of current BCM. • Saves the read vehicle configuration.
WRITE CONFIGURATION - Manual selection	Writes the vehicle configuration with manual selection.
WRITE CONFIGURATION - Config file	Writes the vehicle configuration with saved data.

NOTE:

Manual setting item: Items which need selection by vehicle specifications

Automatic setting item: Items which are written in automatically (Setting can not be changed)

CAUTION:

- **When replacing BCM, you must perform “WRITE CONFIGURATION” with CONSULT-III.**
- **Complete the procedure of “WRITE CONFIGURATION” in order.**
- **If you set incorrect “WRITE CONFIGURATION”, incidents might occur.**
- **Configuration is different for each vehicle model. Confirm configuration of each vehicle model.**
- **Never perform “WRITE CONFIGURATION” when performing operations other than the below.**

- Replacing with new BCM

- Changing “SECURITY ALARM SET(SIREN)” of work support from ON to OFF*

NOTE:

*: Perform configuration in “WRITE CONFIGURATION - Manual selection” after performing this work support.

Work Procedure

INFOID:0000000006014903

1. WRITING MODE SELECTION

CONSULT-III Configuration

Select “CONFIGURATION” of BCM.

When writing saved data>>GO TO 2.

When writing manually>>GO TO 3.

2. PERFORM “WRITE CONFIGURATION - CONFIG FILE”

CONSULT-III Configuration

Perform “WRITE CONFIGURATION - Config file”.

>> WORK END

3. PERFORM “WRITE CONFIGURATION - MANUAL SELECTION”

CONSULT-III Configuration

1. Select "WRITE CONFIGURATION - Manual selection".
2. Identify the correct model and configuration list. Refer to BCS-90, "Configuration list".
3. Confirm and/or change setting value for each item.

   CAUTION:

   Thoroughly read and understand the vehicle specification. Incorrect settings may result in abnormal control of ECU.
4. Select "SETTING".

   CAUTION:

   Make sure to select “SETTING” even if the indicated configuration of brand new BCM is same as the desirable configuration. If not, configuration which is set automatically by selecting vehicle model can not be memorized.
5. When "COMMAND FINISHED", select "END".

>> GO TO 4.

4. OPERATION CHECK

Confirm that each function controlled by BCM operates normally.

>> WORK END

Configuration list

INFOID:0000000006014904

CAUTION:
Thoroughly read and understand the vehicle specification. Incorrect settings may result in abnormal control of ECU.

SETTING ITEM		NOTE
Items	Setting value	
UNLK SEN LGIC	MODE1	—
CAN CONNECTION UNIT	MODE4 ⇔ WITHOUT	• MODE4: A/T models • WITHOUT: M/T models
KEYLESS ENTRY	WITH ⇔ WITHOUT	• WITH: With remote keyless entry system • WITHOUT: Without remote keyless entry system
AUTO LIGHT	WITHOUT	—
REAR WIPER	WITH ⇔ WITHOUT	—
AUTO LOCK&UNLOCK FUNC	WITHOUT	—
BLOWE FAN SIG	MODE1 ⇔ MODE2	• MODE1: With automatic air conditioning system • MODE2: Without automatic air conditioning system
ABS	WITH ⇔ WITHOUT	• WITH: With anti-lock braking system • WITHOUT: Without anti-lock braking system

⇔: Items which confirm vehicle specifications

DTC/CIRCUIT DIAGNOSIS

U1000 CAN COMM

Description

INFOID:0000000006014905

CAN (Controller Area Network) is a serial communication line for real time applications. It is an on-vehicle multiplex communication line with high data communication speed and excellent error detection ability. Modern vehicle is equipped with many electronic control unit, and each control unit shares information and links with other control units during operation (not independent). In CAN communication, control units are connected with 2 communication lines (CAN-H line, CAN-L line) allowing a high rate of information transmission with less wiring. Each control unit transmits/receives data but selectively reads required data only.
CAN Communication Signal Chart. Refer to LAN-23, "CAN COMMUNICATION SYSTEM : CAN Communication Signal Chart".

DTC Logic

INFOID:0000000006014906

DTC DETECTION LOGIC

DTC	DTC Detection Condition	Possible cause
U1000: CAN COMM	When BCM cannot communicate CAN communication signal continuously for 2 seconds or more.	CAN communication system

Diagnosis Procedure

INFOID:0000000006014907

1. PERFORM SELF DIAGNOSTIC

1. Turn ignition switch ON and wait for 2 seconds or more.
2. Check “Self Diagnostic Result” of BCM.

Is “CAN COMM CIRCUIT” displayed?

YES >> Refer to LAN-14, "Trouble Diagnosis Flow Chart".
NO >> Refer to GI-33, "Intermittent Incident".

U1010 CONTROL UNIT (CAN)

DTC Logic

INFOID:0000000006014908

DTC DETECTION LOGIC

DTC	CONSULT-III display description	DTC Detection Condition	Possible cause
U1010	CONTROL UNIT (CAN)	BCM detected internal CAN communication circuit malfunction.	BCM

Diagnosis Procedure

INFOID:0000000006014909

1. REPLACE BCM

When DTC “U1010” is detected, replace BCM.

>> Replace BCM. Refer to BCS-99, "Removal and Installation".

POWER SUPPLY AND GROUND CIRCUIT

Diagnosis Procedure

INFOID:0000000006014910

1. CHECK FUSES AND FUSIBLE LINK

Check that the following fuses and fusible link are not fusing.

Signal name	Fuses and fusible link No.
Battery power supply	9
	G
ACC power supply	18
Ignition power supply	6

Is the fuse fusing?

YES >> Replace the blown fuse or fusible link after repairing the affected circuit if a fuse or fusible link is blown.
NO >> GO TO 2.

2. CHECK POWER SUPPLY CIRCUIT

1. Turn ignition switch OFF.
2. Disconnect BCM connectors.
3. Check voltage between BCM harness connector and ground.

Terminals			Ignition switch position		
(+)		(–)			
BCM			OFF	ACC	ON
Connector	Terminal				
M67	70	Ground	Battery voltage	Battery voltage	Battery voltage
	57				
M65	11		Approx. 0 V	Battery voltage	Battery voltage
	38		Approx. 0 V	Approx. 0 V	Battery voltage

Is the measurement value normal?

YES >> GO TO 3.
NO >> Repair harness or connector.

3. CHECK GROUND CIRCUIT

Check continuity between BCM harness connector and ground.

BCM		Ground	Continuity
Connector	Terminal		
M67	67		Existed

Does continuity exist?

YES >> INSPECTION END
NO >> Repair harness or connector.

COMBINATION SWITCH OUTPUT CIRCUIT

Diagnosis Procedure

INFOID:0000000006014911

1. CHECK OUTPUT 1 - 5 CIRCUIT FOR OPEN

1. Turn ignition switch OFF.
2. Disconnect BCM and combination switch connectors.
3. Check continuity between BCM harness connector and combination switch harness connector.

System	BCM		Combination switch		Continuity
	Connector	Terminal	Connector	Terminal	
OUTPUT 1	M65	36	M27	11	Existed
OUTPUT 2		35		9	
OUTPUT 3		34		7	
OUTPUT 4		33		10	
OUTPUT 5		32		13	

Does continuity exist?

YES >> GO TO 2.
NO >> Repair harnesses or connectors.

2. CHECK OUTPUT 1 - 5 CIRCUIT FOR SHORT

Check for continuity between BCM harness connector and ground.

System	BCM		Ground	Continuity
	Connector	Terminal		
OUTPUT 1	M65	36	Ground	Not existed
OUTPUT 2		35		
OUTPUT 3		34		
OUTPUT 4		33		
OUTPUT 5		32		

Does continuity exist?

YES >> Repair harnesses or connectors.
NO >> GO TO 3.

3. CHECK BCM OUTPUT VOLTAGE

1. Connect BCM connector.
2. Check voltage between BCM harness connector and ground.

System	Terminals			Voltage (Approx.)
	(+)		(–)	
	BCM			
	Connector	Terminal		
OUTPUT 1	M65	36	Ground	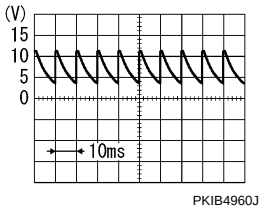 7.0 - 8.0 V
OUTPUT 2		35		
OUTPUT 3		34		
OUTPUT 4		33		
OUTPUT 5		32		

Is the measurement value normal?

YES >> Replace combination switch.
NO >> Replace BCM. Refer to BCS-99, "Removal and Installation".

COMBINATION SWITCH INPUT CIRCUIT

Diagnosis Procedure

INFOID:0000000006014912

1. CHECK INPUT 1 - 5 CIRCUIT FOR OPEN

1. Turn ignition switch OFF.
2. Disconnect BCM and combination switch connectors.
3. Check continuity between BCM harness connector and combination switch harness connector.

System	BCM		Combination switch		Continuity
	Connector	Terminal	Connector	Terminal	
INPUT 1	M65	6	M27	12	Existed
INPUT 2		5		14	
INPUT 3		4		5	
INPUT 4		3		2	
INPUT 5		2		8	

Does continuity exist?

YES >> GO TO 2.
NO >> Repair harnesses or connectors.

2. CHECK INPUT 1 - 5 CIRCUIT FOR SHORT

Check for continuity between BCM harness connector and ground.

System	BCM		Ground	Continuity
	Connector	Terminal		
INPUT 1	M65	6	Ground	Not existed
INPUT 2		5		
INPUT 3		4		
INPUT 4		3		
INPUT 5		2		

Does continuity exist?

YES >> Repair harnesses or connectors.
NO >> GO TO 3.

3. CHECK BCM INPUT SIGNAL

1. Connect BCM and combination switch connectors.
2. Turn ON any switch in the system that is malfunction.
3. Check voltage between BCM harness connector and ground.

System	Terminals			Voltage (Approx.)
	(+)		(–)	
	BCM			
	Connector	Terminal		
INPUT 1	M65	6	Ground	Refer to BCS-72, "Reference Value".
INPUT 2		5		
INPUT 3		4		
INPUT 4		3		
INPUT 5		2		

Is the measurement value normal?

Yes >> Replace BCM. Refer to BCS-99, "Removal and Installation".

No >> Replace combination switch.

SYMPTOM DIAGNOSIS

COMBINATION SWITCH SYSTEM SYMPTOMS

Symptom Table

INFOID:0000000006014913

1. Perform “Data Monitor” of CONSULT-III to check for any malfunctioning item.
2. Check the malfunction combinations.

Malfunction item: ×

Data monitor item																Malfunction combination
FR WIPER HI	FR WIPER LOW	FR WASHER SW	FR WIPER INT	RR WIPER ON	RR WIPER INT	RR WASHER SW	INT VOLUME	TURN SIGNAL R	TURN SIGNAL L	TAIL LAMP SW	HI BEAM SW	HEAD LAMP SW 1	HEAD LAMP SW 2	PASSING SW	FR FOG SW	
	×	×						×	×							A
×			×									×		×		B
						×	×				×		×			C
					×		×			×						D
				×			×								×	E
×					×		×									F
		×		×		×	×									G
	×		×													H
									×				×	×	×	I
								×		×	×	×				J
All Items																K
If only one item is detected or the item is not applicable to the combinations A to K																L

3. Identify the malfunctioning part from the agreed combination and repair or replace the part.

Malfunction combination	Malfunctioning part	Repair or replace
A	Combination switch OUTPUT 1 circuit	Inspect the combination switch output circuit applicable to the malfunctioning part. Refer to BCS-94, "Diagnosis Procedure".
B	Combination switch OUTPUT 2 circuit	
C	Combination switch OUTPUT 3 circuit	
D	Combination switch OUTPUT 4 circuit	
E	Combination switch OUTPUT 5 circuit	
F	Combination switch INPUT 1 circuit	Inspect the combination switch input circuit applicable to the malfunctioning part. Refer to BCS-96, "Diagnosis Procedure".
G	Combination switch INPUT 2 circuit	
H	Combination switch INPUT 3 circuit	
I	Combination switch INPUT 4 circuit	
J	Combination switch INPUT 5 circuit	
K	BCM	Replace BCM. Refer to BCS-99, "Removal and Installation".
L	Combination switch	Replace combination switch.

REMOVAL AND INSTALLATION

BCM

Removal and Installation

INFOID:0000000006046467

CAUTION:
Before replacing BCM, perform “READ CONFIGURATION” to save or print current vehicle specification. Refer to BCS-88, "Description".

REMOVAL

1. Remove glove box cover. Refer to IP-12, "Exploded View".
2. Remove screws.
3. Disconnect BCM connector.
4. Remove rear window defogger relay from bracket.
5. Remove relay mounting bracket.

INSTALLATION

Install in the reverse order of removal.

CAUTION:
- **Be sure to perform “WRITE CONFIGURATION” when replacing BCM.**
- **Be sure to perform the system initialization (NATS) when replacing BCM. Refer to BCS-88, "Work Procedure".**

COMBINATION SWITCH

Exploded View

INFOID:0000000006046468

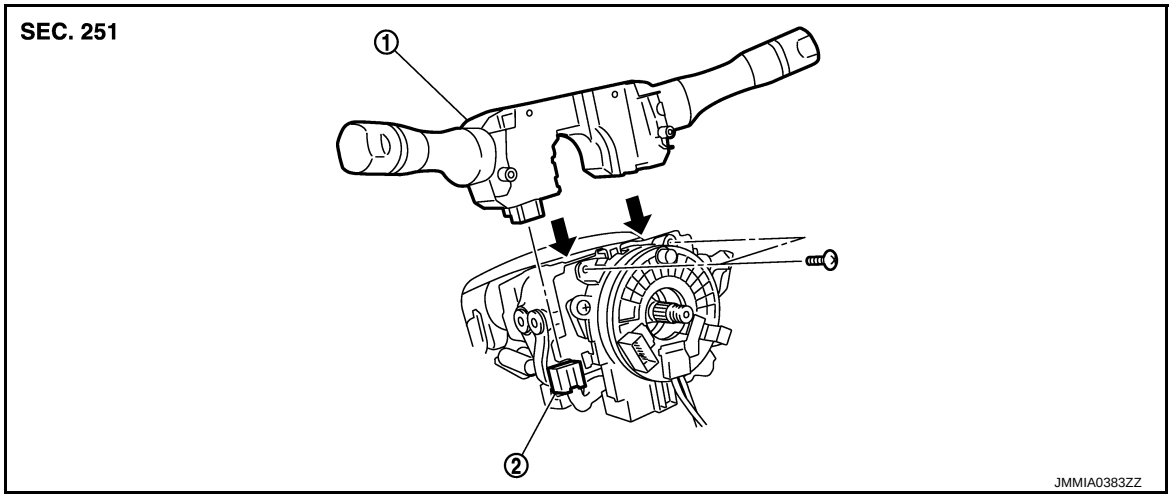

1. Combination switch
2. Combination switch connector

Removal and Installation

INFOID:0000000006046469

REMOVAL

1. Remove steering column cover. Refer to IP-12, "Exploded View".
2. Remove screws.
3. Disconnect the connector.
4. Pull up the combination switch to remove it.

INSTALLATION

Install in the reverse order of removal.

SECTION BR
BRAKE SYSTEM

CONTENTS

PRECAUTION 3

PRECAUTIONS 3
- Precaution for Supplemental Restraint System (SRS) "AIR BAG" and "SEAT BELT PRE-TENSIONER" 3
- Precaution Necessary for Steering Wheel Rotation after Battery Disconnect 3
- Precaution for Battery Service 4
- Precaution for Procedure without Cowl Top Cover 4
- Precaution for Brake System 4

PREPARATION 5

PREPARATION 5
- Commercial Service Tool 5

SYMPTOM DIAGNOSIS 6

NOISE, VIBRATION AND HARSHNESS (NVH) TROUBLESHOOTING 6
- NVH Troubleshooting Chart 6

PERIODIC MAINTENANCE 7

BRAKE PEDAL 7
- Inspection and Adjustment 7

BRAKE FLUID 9
- Inspection 9
- Draining 9
- Refilling 9
- Bleeding Brake System 10

BRAKE MASTER CYLINDER 11
- Inspection 11

BRAKE BOOSTER 12
- Inspection 12

FRONT DISC BRAKE 13

BRAKE PAD 13
- BRAKE PAD : Inspection and Adjustment 13

DISC ROTOR 13
- DISC ROTOR : Inspection and Adjustment 13

REAR DRUM BRAKE 15

BRAKE LINING 15
- BRAKE LINING : Inspection 15

BRAKE DRUM 15
- BRAKE DRUM : Inspection 15

REMOVAL AND INSTALLATION 16

BRAKE PEDAL 16
- Exploded View 16
- Removal and Installation 16
- Inspection and Adjustment 17

BRAKE PIPING 18

FRONT 18
- FRONT : Exploded View 18
- FRONT : Hydraulic Piping 18
- FRONT : Removal and Installation 19
- FRONT : Inspection 19

REAR 20
- REAR : Exploded View 20
- REAR : Hydraulic Piping 21
- REAR : Removal and Installation 21
- REAR : Inspection 22

DUAL PROPORTIONING VALVE 23
- Exploded View 23
- Removal and Installation 23
- Inspection 24

BRAKE MASTER CYLINDER 25
- Exploded View 25
- Removal and Installation 25
- Disassembly and Assembly 26

Inspection 27

BRAKE BOOSTER 28
Exploded View 28
Removal and installation 28
Inspection and Adjustment 29

VACUUM LINES 31
Exploded View 31
Removal and Installation 31
Inspection 32

FRONT DISC BRAKE 33

BRAKE PAD 33
BRAKE PAD : Exploded View 33
BRAKE PAD : Removal and Installation 33
BRAKE PAD : Inspection 34

BRAKE CALIPER ASSEMBLY 34
BRAKE CALIPER ASSEMBLY : Exploded View ... 34
BRAKE CALIPER ASSEMBLY : Removal and Installation 35
BRAKE CALIPER ASSEMBLY : Disassembly and Assembly 36
BRAKE CALIPER ASSEMBLY : Inspection 38

REAR DRUM BRAKE 39
Exploded View 39
Removal and Installation 39
Disassembly and Assembly 41
Inspection and Adjustment 41

SERVICE DATA AND SPECIFICATIONS (SDS) 42

SERVICE DATA AND SPECIFICATIONS (SDS) 42
General Specifications 42
Brake Pedal 42
Brake Booster 42
Front Disc Brake 42
Rear Drum Brake 42

PRECAUTION

PRECAUTIONS

Precaution for Supplemental Restraint System (SRS) "AIR BAG" and "SEAT BELT PRE-TENSIONER"

INFOID:0000000006037604

The Supplemental Restraint System such as “AIR BAG” and “SEAT BELT PRE-TENSIONER”, used along with a front seat belt, helps to reduce the risk or severity of injury to the driver and front passenger for certain types of collision. Information necessary to service the system safely is included in the “SRS AIR BAG” and “SEAT BELT” of this Service Manual.

WARNING:

- **To avoid rendering the SRS inoperative, which could increase the risk of personal injury or death in the event of a collision which would result in air bag inflation, all maintenance must be performed by an authorized NISSAN/INFINITI dealer.**
- **Improper maintenance, including incorrect removal and installation of the SRS, can lead to personal injury caused by unintentional activation of the system. For removal of Spiral Cable and Air Bag Module, see the “SRS AIR BAG”.**
- **Do not use electrical test equipment on any circuit related to the SRS unless instructed to in this Service Manual. SRS wiring harnesses can be identified by yellow and/or orange harnesses or harness connectors.**

PRECAUTIONS WHEN USING POWER TOOLS (AIR OR ELECTRIC) AND HAMMERS

WARNING:

- **When working near the Air Bag Diagnosis Sensor Unit or other Air Bag System sensors with the ignition ON or engine running, DO NOT use air or electric power tools or strike near the sensor(s) with a hammer. Heavy vibration could activate the sensor(s) and deploy the air bag(s), possibly causing serious injury.**
- **When using air or electric power tools or hammers, always switch the ignition OFF, disconnect the battery, and wait at least 3 minutes before performing any service.**

Precaution Necessary for Steering Wheel Rotation after Battery Disconnect

INFOID:0000000006037605

NOTE:

- Before removing and installing any control units, first turn the push-button ignition switch to the LOCK position, then disconnect both battery cables.
- After finishing work, confirm that all control unit connectors are connected properly, then re-connect both battery cables.
- Always use CONSULT-III to perform self-diagnosis as a part of each function inspection after finishing work. If a DTC is detected, perform trouble diagnosis according to self-diagnosis results.

For vehicle with steering lock unit, if the battery is disconnected or discharged, the steering wheel will lock and cannot be turned.

If turning the steering wheel is required with the battery disconnected or discharged, follow the operation procedure below before starting the repair operation.

OPERATION PROCEDURE

1. Connect both battery cables.
   NOTE:
   Supply power using jumper cables if battery is discharged.
2. Turn the push-button ignition switch to ACC position.
   (At this time, the steering lock will be released.)
3. Disconnect both battery cables. The steering lock will remain released with both battery cables disconnected and the steering wheel can be turned.
4. Perform the necessary repair operation.
5. When the repair work is completed, re-connect both battery cables. With the brake pedal released, turn the push-button ignition switch from ACC position to ON position, then to LOCK position. (The steering wheel will lock when the push-button ignition switch is turned to LOCK position.)
6. Perform self-diagnosis check of all control units using CONSULT-III.

Precaution for Battery Service

INFOID:0000000006037607

Before disconnecting the battery, lower both the driver and passenger windows. This will prevent any interference between the window edge and the vehicle when the door is opened/closed. During normal operation, the window slightly raises and lowers automatically to prevent any window to vehicle interference. The automatic window function will not work with the battery disconnected.

Precaution for Procedure without Cowl Top Cover

INFOID:0000000006037608

When performing the procedure after removing cowl top cover, cover the lower end of windshield with urethane, etc.

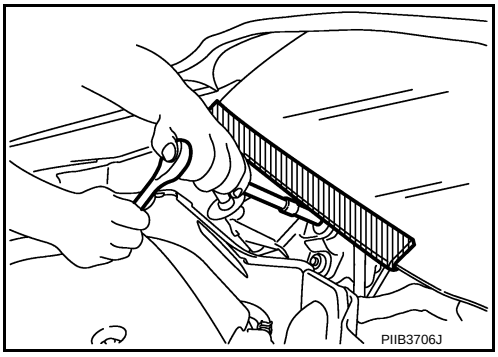

Precaution for Brake System

INFOID:0000000005986565

WARNING:

Clean any dust from the front brake and rear brake with a vacuum dust collector. Never blow with compressed air.

- Brake fluid use refer to MA-8, "Fluids and Lubricants".
- Never reuse drained brake fluid.
- Never spill or splash brake fluid on painted surfaces. Brake fluid may seriously damage paint. Wipe it off immediately and wash with water if it gets on a painted surface.
- After pressing the brake pedal more deeply or harder than normal driving, such as air bleeding, check each item of brake pedal. Adjust brake pedal if it is outside the standard value.
- Always clean with new brake fluid when cleaning the master cylinder, brake caliper and other components.
- Never use mineral oils such as gasoline or light oil to clean. They may damage rubber parts and cause improper operation.
- Always loosen the brake tube flare nut with a flare nut wrench.
- Tighten the brake tube flare nut to the specified torque with a flare nut torque wrench (A).
- Always confirm the specified tightening torque when installing the brake pipes.
- Brake system is an important safety part. If a brake fluid leak is detected, always disassemble the affected part. If a malfunction is detected, replace part with a new one.
- Turn the ignition switch OFF and the battery negative terminal before performing the work.
- Check that no brake fluid leakage is present after replacing the parts.
- Burnish the brake contact surfaces after refinishing or replacing rotors, after replacing pads, or if a soft pedal occurs at very low mileage.

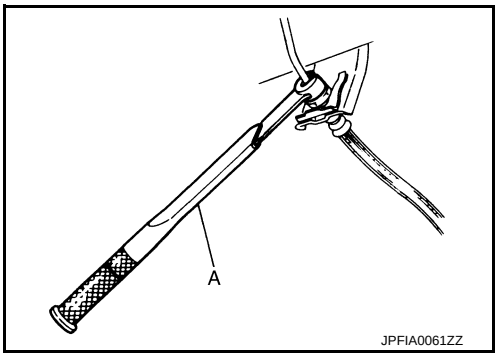

- Front brake pad: refer to BR-13, "BRAKE PAD : Inspection and Adjustment".
- Front disc rotor: refer to BR-13, "DISC ROTOR : Inspection and Adjustment".

PREPARATION

PREPARATION

Commercial Service Tool

INFOID:0000000005986566

Tool name		Description
Brake pressure gauge	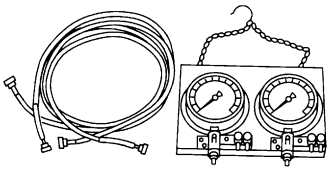 S-NT151	Check brake fluid pressure
Handy vacuum pump	ZZC1313D	• Air tight • Inspection of check valve
Brake caliper wrench	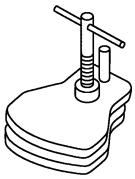 NNFIA0040ZZ	Return the piston

SYMPTOM DIAGNOSIS

NOISE, VIBRATION AND HARSHNESS (NVH) TROUBLESHOOTING

NVH Troubleshooting Chart

INFOID:0000000005986561

Use the chart below to find the cause of the symptom. If necessary, repair or replace these parts.

Reference page			BR-13, BR-15	BR-13, BR-15	BR-34	BR-13	BR-13, BR-15	BR-13	BR-13	BR-13, BR-15	BR-13, BR-15	BR-13	BR-15	NVH in FAX, RAX and FSU, RSU section	NVH in WT section	NVH in WT section	NVH in FAX section	NVH in ST section
Possible cause and SUSPECTED PARTS			Pads or lining damaged	Pads or lining uneven wear	Shims damaged	Rotor imbalance	Rotor or drum damage	Rotor runout	Rotor deformation	Rotor or drum deflection	Rotor or drum rust	Rotor thickness variation	Drum out of round	AXLE AND SUSPENSION	TIRE	ROAD WHEEL	DRIVE SHAFT	STEERING
Symptom	BRAKE	Noise	×	×	×									×	×	×	×	×
		Shake				×								×	×	×	×	×
		Shimmy, Judder				×	×	×	×	×	×	×		×	×	×		×

×: Applicable

PERIODIC MAINTENANCE

BRAKE PEDAL

Inspection and Adjustment

INFOID:0000000005986567

INSPECTION

Brake Pedal Height

Check the height (H_1) between the dash lower panel (1) and the brake pedal upper surface.

H_1 : Refer to BR-42, "Brake Pedal".

CAUTION:
Remove the floor trim.

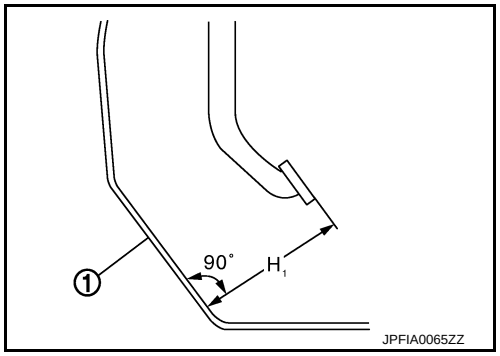

Stop Lamp Switch

Check the clearance (C) among the brake pedal lever (1) and the stop lamp switch (2) threaded end.

C : Refer to BR-42, "Brake Pedal".

CAUTION:
The stop lamp must turn off when the brake pedal is released.
NOTE:
Pull the brake pedal pad to make the clearance between the stop lamp switch threaded end and the brake peal lever.

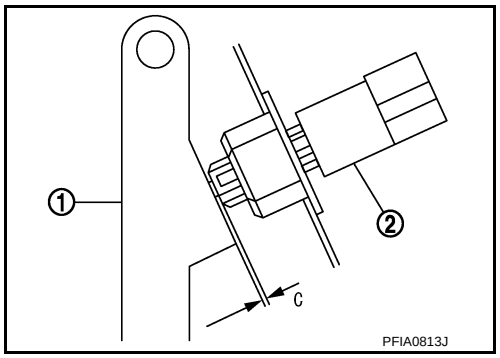

Brake Pedal Play

Press the brake pedal. Check the brake pedal play (A) (stroke until fluid pressure occurs).

A : Refer to BR-42, "Brake Pedal".

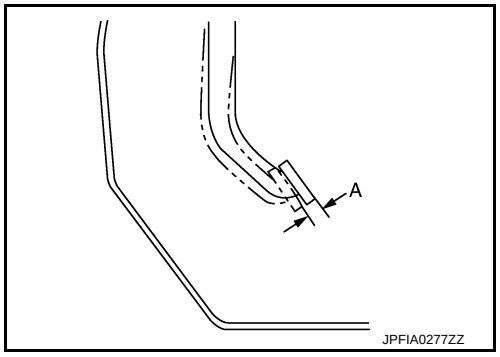

Depressed Brake Pedal Height

Check the height between the dash lower panel (1) and the brake pedal upper surface (H_2) when depressing the brake pedal at 490 N (50 kg, 110 lb) while turning engine ON.

H_2 : Refer to BR-42, "Brake Pedal".

CAUTION:
Remove the floor trim.

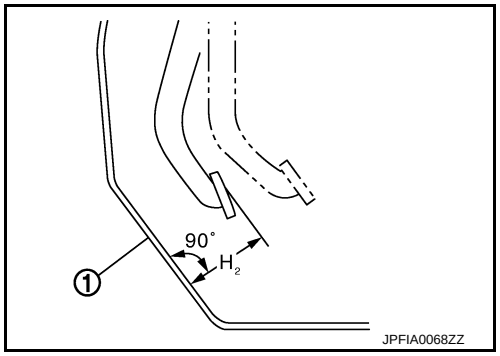

ADJUSTMENT

Brake Pedal Height

1. Remove instrument lower panel LH. Refer to IP-13, "Removal and Installation".
2. Disconnect the harness connector from stop lamp switch.
3. Loosen the stop lamp switch 45° counterclockwise.
4. Adjust the brake pedal height with the following procedure.

a. Loosen the input rod lock nut (1).
CAUTION:
The threaded end of the input rod (2) must project to the inner side (L) of the clevis (3).

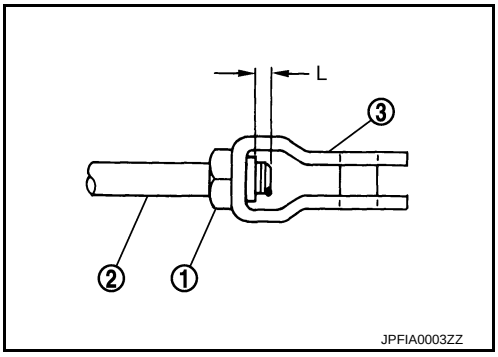

b. Rotate the input rod, adjust the brake pedal to the specified height (H_1).

H_1 : Refer to BR-42, "Brake Pedal".

c. Tighten the lock nut. Refer to BR-28, "Exploded View".
5. Check the brake pedal play.

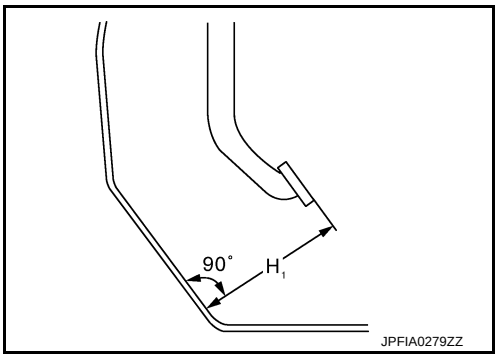

Brake Pedal Play

NOTE:
The clearance between the stop lamp switch threaded end and the brake pedal lever is adjusted by adjusting play of the brake pedal.

1. Remove instrument lower panel LH. Refer to IP-13, "Removal and Installation".
2. Disconnect the harness connector from stop lamp switch.
3. Loosen the stop lamp switch 45° counterclockwise.
4. Press-fit the stop lamp switch (2) until the stop lamp switch hits the brake pedal lever (1) 45° clockwise while pulling the brake pedal pad slightly.
CAUTION:
- **The clearance (C) between the brake pedal lever and stop lamp switch threaded and must be the specified value.**

C : Refer to BR-42, "Brake Pedal".

- **The stop lamp must be turned off when the brake pedal is released.**

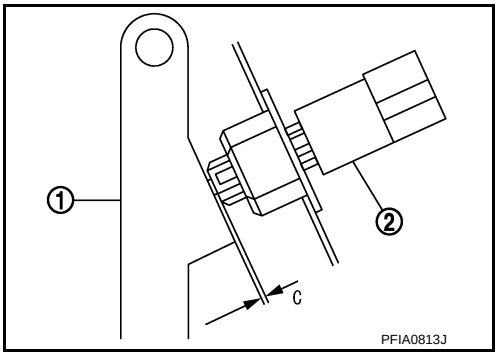

BRAKE FLUID

Inspection

INFOID:0000000005986568

BRAKE FLUID LEVEL

- Check that the fluid level in the reservoir tank is within the specified range (MAX – MIN lines).
- Visually check for any brake fluid leakage around the reservoir tank.
- Check the brake system for any leakage if the fluid level is extremely low (lower than MIN).
- Check the brake system for fluid leakage if the warning lamp remains illuminated even after the parking brake is released.
- Check the reservoir tank for the mixing of foreign matter (e.g. dust) and oils other than brake fluid.

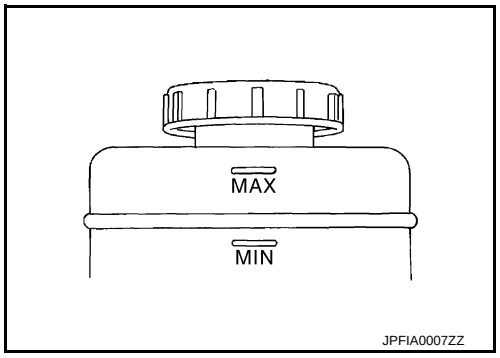

BRAKE LINE

1. Check brake line (tubes and hoses) for cracks, deterioration or other damage. Replace any damaged parts.
2. Depress the brake pedal with a force of 785 N (80 kg, 176 lb) and hold down the pedal for approximately 5 seconds with the engine running. Check for any fluid leakage.
   CAUTION:
   Retighten the applicable connection to the specified torque and repair any abnormal (damaged, worn or deformed) part if any brake fluid leakage is present.

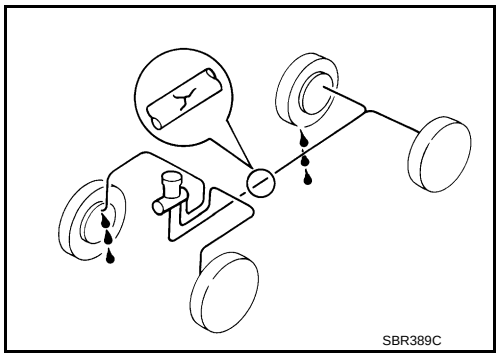

Draining

INFOID:0000000005986569

CAUTION:
- **Never spill or splash brake fluid on painted surfaces. Brake fluid may seriously damage paint. Wipe it off immediately and wash with water if it gets on a painted surface.**
- **Turn the ignition switch OFF and the battery negative terminal before performing work.**

1. Connect a vinyl tube to the bleed valve.
2. Depress the brake pedal and loosen the bleeder valve to gradually discharge brake fluid.

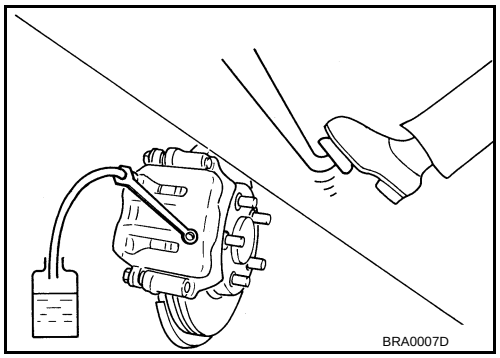

Refilling

INFOID:0000000005986570

CAUTION:
- **Turn the ignition switch OFF and the battery negative terminal before performing work.**
- **Never allow foreign matter (e.g. dust) and oils other than brake fluid to enter the reservoir tank.**

1. Check that there is no foreign material in the reservoir tank, and refill with new brake fluid.
   CAUTION:
   Never reuse drained brake fluid.
2. Loosen the bleeder valve, slowly depress the brake pedal to the full stroke, and then release the pedal. Repeat this operation at intervals of 2 or 3 seconds until all brake fluid is discharged. Then close the bleeder valve with the brake pedal depressed. Repeat the same work on each wheel.
3. Perform the air bleeding. Refer to BR-10, "Bleeding Brake System".

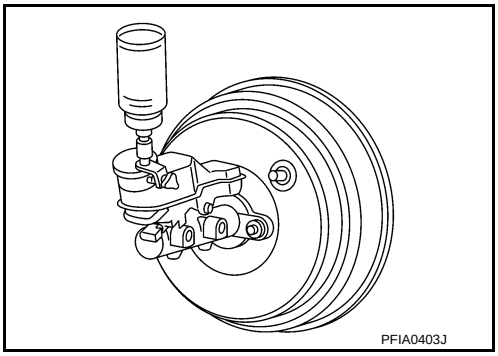

Bleeding Brake System

INFOID:0000000005986571

CAUTION:
- **Turn the ignition switch OFF and the battery negative terminal before performing the work.**
- **Monitor the fluid level in the reservoir tank while performing the air bleeding**
- **Always use new brake fluid for refilling. Never reuse the drained brake fluid.**
- **Never allow foreign matter (e.g. dust) and oils other than brake fluid to enter the reservoir tank.**

1. Connect a vinyl tube to the bleeder valve of the rear left brake.
2. Fully depress the brake pedal 4 to 5 times.
3. Loosen the bleeder valve and bleed air with the brake pedal depressed, and then quickly tighten the bleeder valve.
4. Repeat steps 2 and 3 until all of the air is out of the brake line.
5. Tighten the bleeder valve to the specified torque.
   - Front disc brake: refer to BR-34, "BRAKE CALIPER ASSEMBLY : Exploded View".
   - Rear drum brake: refer to BR-39, "Exploded View".
6. Perform steps 1 to 5 for the rear left brake → front right brake → rear right brake → and front left brake in order.
7. Check that the fluid level in the reservoir tank is within the specified range after air bleeding. Refer to BR-9, "Inspection".
8. Check each item of brake pedal. Adjust it if the measurement value is not the standard. Refer to BR-7, "Inspection and Adjustment".

BRAKE MASTER CYLINDER

Inspection

INFOID:0000000005986572

FLUID LEAK

Check for brake fluid leakage from the master cylinder mounting face, reservoir tank mounting face and brake tube connections.

BRAKE BOOSTER

Inspection

INFOID:0000000005986573

OPERATION

Depress the brake pedal several times at 5-second intervals with the engine stopped. Start the engine with the brake pedal fully depressed. Check that the clearance between brake pedal and dash lower panel decreases.

AIR TIGHT

1. Run the engine for 1 minute to apply vacuum to the brake booster, and stop the engine. Then depress the brake pedal several times at 5-second intervals until the accumulated vacuum is released to atmospheric pressure. Check that the clearance between brake pedal and dash lower panel gradually increases each time the brake pedal is depressed when performing this operation.
2. Depress the brake pedal with the engine running. Then stop the engine while holding down the brake pedal. Check that the brake pedal stroke does not change after holding down the brake pedal for 30 seconds or more.

FRONT DISC BRAKE

BRAKE PAD

BRAKE PAD : Inspection and Adjustment

INFOID:0000000005986574

INSPECTION

Check brake pad wear thickness from an inspection hole on cylinder body. Check using a scale if necessary.

Wear thickness : Refer to BR-42, "Front Disc Brake".

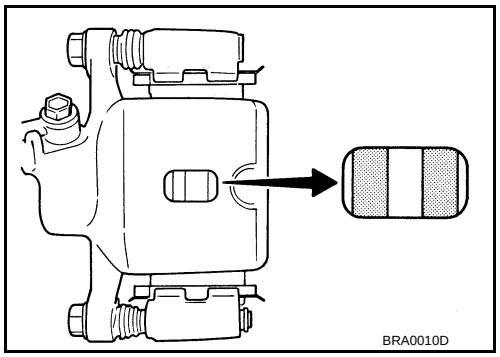

ADJUSTMENT

Burnish contact surfaces between pads according to the following procedure after refinishing or replacing pads, or if a soft pedal occurs at very low mileage.

CAUTION:

- **Be careful of vehicle speed because the brake does not operate firmly/securely until pads and disc rotor are securely fitted.**
- **Only perform this procedure under safe road and traffic conditions. Use extreme caution.**

1. Drive vehicle on straight, flat road.
2. Depress brake pedal with the power to stop vehicle within 3 to 5 seconds until the vehicle stops.
3. Drive without depressing brake for a few minutes to cool the brake.
4. Repeat steps 1 to 3 until pad and disc rotor are securely fitted.

DISC ROTOR

DISC ROTOR : Inspection and Adjustment

INFOID:0000000005986575

INSPECTION

Appearance

Check surface of disc rotor for uneven wear, cracks, and serious damage. Replace it if necessary. Refer to BR-35, "BRAKE CALIPER ASSEMBLY : Removal and Installation".

Runout

1. Fix the disc rotor to the wheel hub and bearing assembly with wheel nuts (2 points at least).
2. Check the wheel bearing axial end play before the inspection. Refer to FAX-7, "Inspection".
3. Inspect the runout with a dial indicator to measure at 10 mm (0.39 in) inside the disc edge.

Runout : Refer to BR-42, "Front Disc Brake".

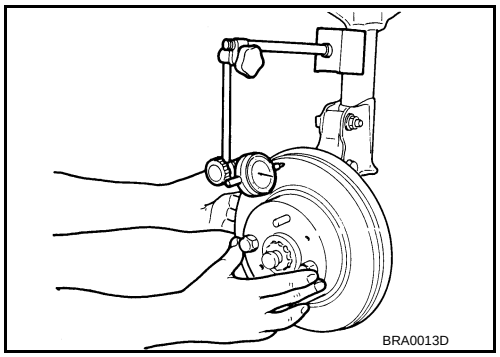

4. Find the installation position that has a minimum runout by shifting the disc rotor-to-wheel hub and bearing assembly installation position by one hole at a time if the runout exceeds the limit value.
5. Refinish or replace the disc rotor if the runout is outside the limit even after performing the above operation.

   CAUTION:

   If the thickness is less than wear thickness + 0.3 mm (0.012 in), replace the disc rotor.

Wear thickness : Refer to BR-42, "Front Disc Brake".

Thickness

Check the thickness of the disc rotor using a micrometer. Replace the disc rotor if the thickness is below the wear limit. Refer to BR-35, "BRAKE CALIPER ASSEMBLY : Removal and Installation".

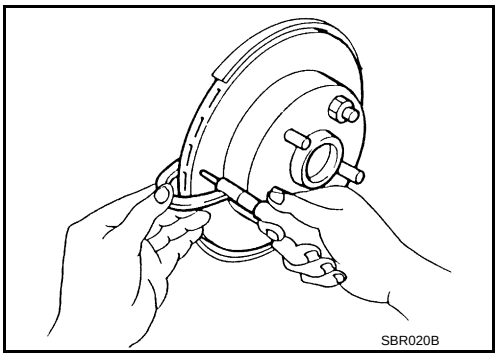

Wear thickness : Refer to BR-42, "Front Disc Brake".

ADJUSTMENT

Burnish contact surfaces between disc rotors and pads according to the following procedure after refinishing or replacing disc rotor, or if a soft pedal occurs at very low mileage.

CAUTION:

- **Be careful of vehicle speed because the brake does not operate firmly/securely until pad and disc rotor are securely fitted.**
- **Only perform this procedure under safe road and traffic conditions. Use extreme caution.**

1. Drive vehicle on straight, flat road.
2. Depress brake pedal with the power to stop vehicle within 3 to 5 seconds until the vehicle stops.
3. Drive without depressing brake for a few minutes to cool the brake.
4. Repeat steps 1 to 3 until pad and disc rotor are securely fitted.

REAR DRUM BRAKE

BRAKE LINING

BRAKE LINING : Inspection

INFOID:0000000005986576

INSPECTION OF BRAKE LINING

1. Remove brake drum. Refer to BR-39, "Exploded View".
2. Check brake lining wear thickness (A). Check using a scale necessary.

A : Refer to BR-42, "Rear Drum Brake".

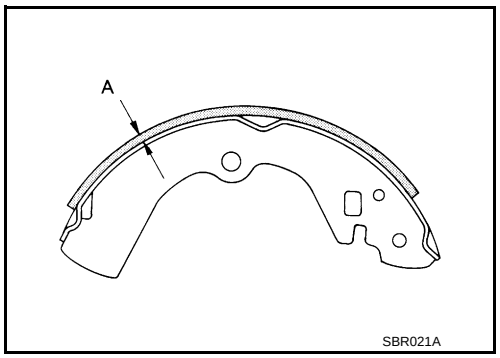

BRAKE DRUM

BRAKE DRUM : Inspection

INFOID:0000000005986577

APPEARANCE

Check surface of brake drum for uneven wear, cracks and serious damage. Replace it if necessary. Refer to BR-39, "Exploded View".

INSPECTION OF BRAKE DRUM INNER DIAMETER

Check inner diameter (B) of the brake drum.

B : Refer to BR-42, "Rear Drum Brake".

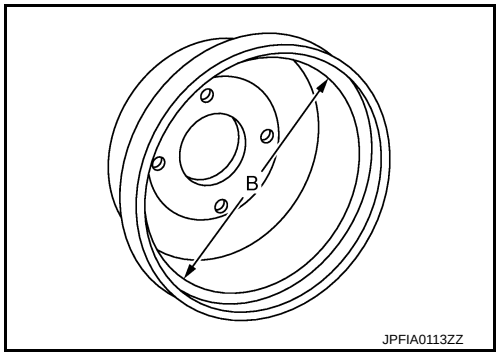

REMOVAL AND INSTALLATION

BRAKE PEDAL

Exploded View

INFOID:0000000005986578

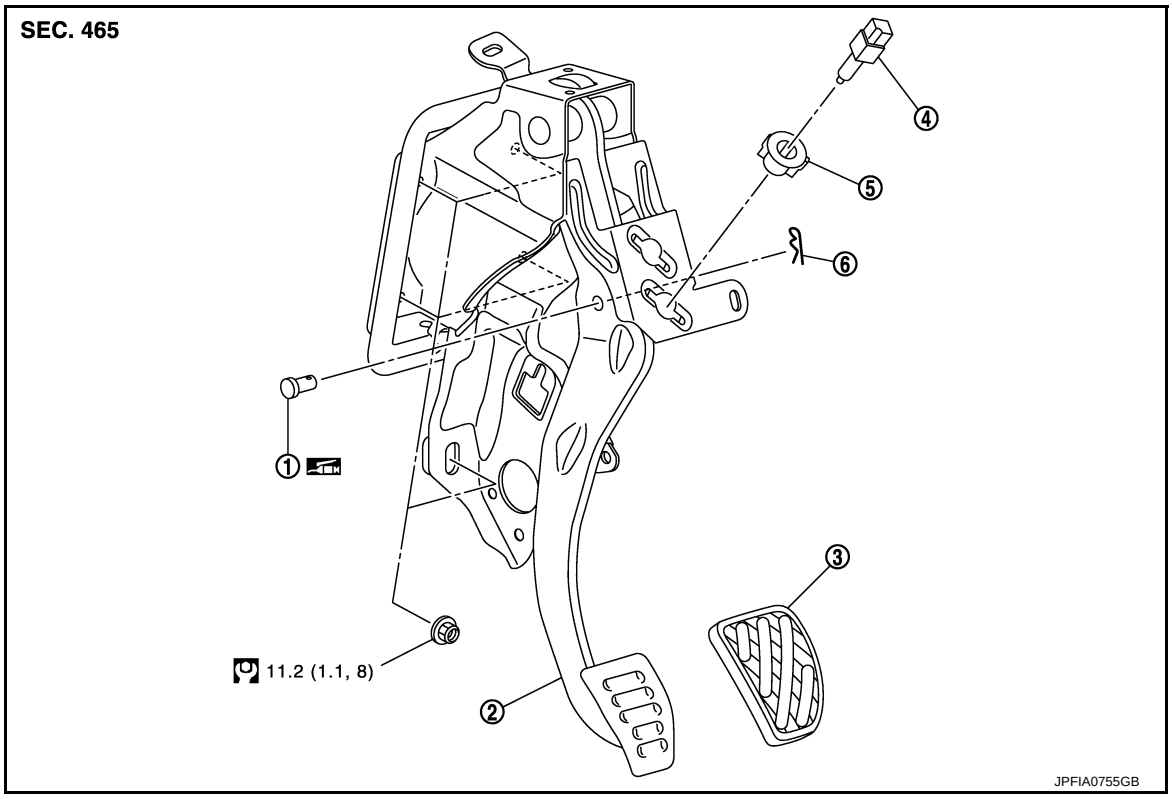

1. Clevis pin
2. Brake pedal assembly
3. Brake pedal pad
4. Stop lamp switch
5. Clip
6. Snap pin

: Apply multi-purpose grease.

Refer to GI-4, "Components" for symbols not described on the above.

Removal and Installation

INFOID:0000000005986579

REMOVAL

1. Remove instrument lower panel RH. Refer to IP-13, "Removal and Installation".
2. Disconnect the stop lamp switch harness connectors.
3. Disconnect the accelerator pedal harness connector.
4. Remove main harness from brake pedal assembly.
5. Remove snap pin and clevis pin from clevis.
6. Remove the brake pedal assembly.
   CAUTION:
   Hold the brake booster and master cylinder assembly so as not to drop out or contact them other parts.
7. Remove accelerator pedal from brake pedal assembly. Refer to ACC-3, "Removal and Installation".

INSTALLATION

Note the following, and install in the reverse order of removal.

- Apply the multi-purpose grease to the clevis pin and the mating faces. (Not necessary if grease has been already applied)

NOTE:

The clevis pin may be inserted in either direction.

Inspection and Adjustment

INFOID:0000000005986580

INSPECTION AFTER REMOVAL

- Check the brake pedal for bend, damage, and cracks on the welded parts, and replace the brake pedal assembly if necessary.

- Check clevis pin and plastic stopper (A) for damage and deformation. If any is found, replace clevis pin.

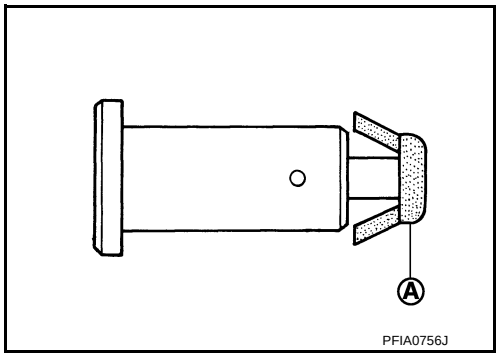

ADJUSTMENT AFTER INSTALLATION

- Adjust each item of brake pedal after installing the brake pedal assembly to the vehicle. Refer to BR-7, "Inspection and Adjustment".
- Perform the release position learning of the accelerator pedal. Refer to EC-104, "Work Procedure" (HR12DE: For Thailand), EC-377, "Work Procedure" (HR12DE: Except for Thailand).

BRAKE PIPING

FRONT

FRONT : Exploded View

INFOID:0000000005986581

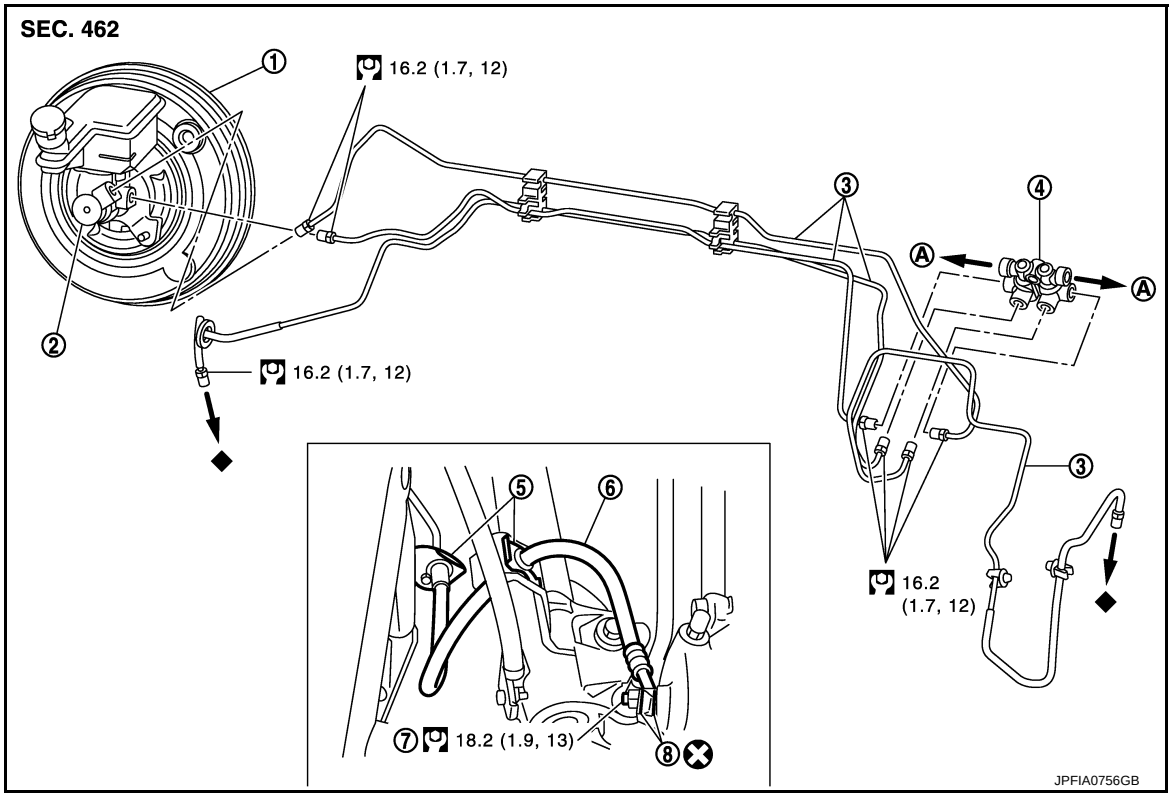

1.	Brake booster	2.	Master cylinder assembly	3.	Brake tube
4.	Dual proportioning valve	5.	Lock plate	6.	Brake hose
7.	Union bolt	8.	Copper washer		
A.	To rear brake tube				

Refer to GI-4, "Components" for symbols in the figure.

FRONT : Hydraulic Piping

INFOID:0000000005986582

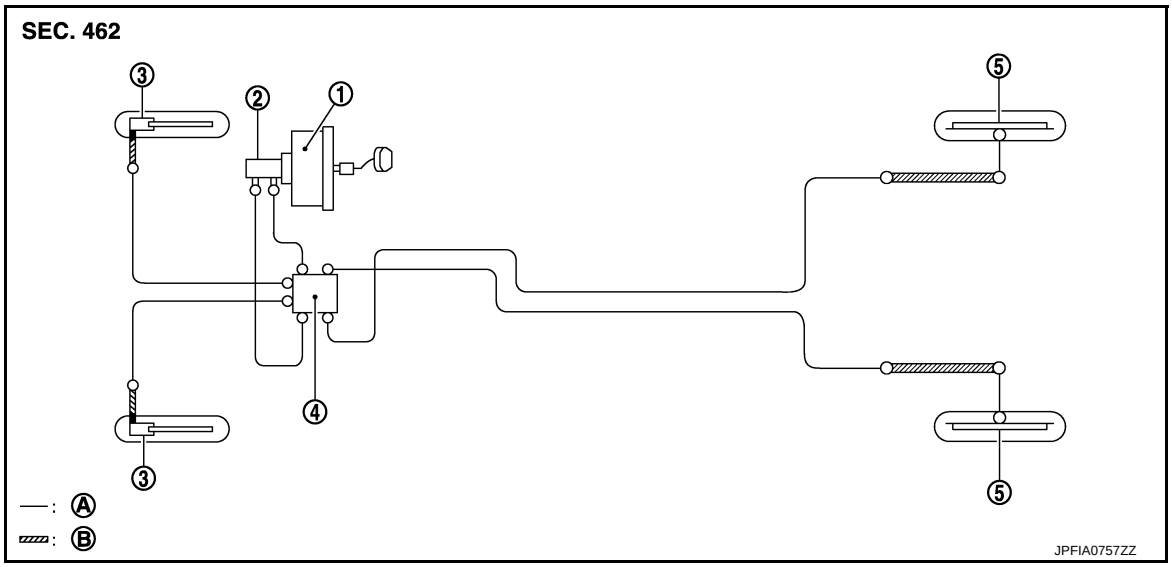

1. Brake booster
2. Master cylinder assembly
3. Front disc brake
4. Dual proportioning valve
5. Rear drum brake

A. Brake tube
B. Brake hose

◯: Flare nut

■: Union bolt

FRONT : Removal and Installation

INFOID:0000000005986583

REMOVAL

CAUTION:

Never spill or splash brake fluid on painted surfaces. Brake fluid may seriously damage paint. Wipe it off immediately and wash with water if it gets on a painted surface.

1. Remove tires.
2. Drain brake fluid. Refer to BR-9, "Draining".
3. Loosen the flare nut with a flare nut wrench and separate the brake tube from the hose.
   CAUTION:
   - **Never scratch the flare nut and the brake tube.**
   - **Never bend sharply, twist or strongly pull out the brake hoses and tubes.**
   - **Cover open end of brake tubes and hoses when disconnecting to prevent entrance of dirt.**
4. Remove the union bolt and copper washers, and remove the brake hose from the brake caliper assembly.
5. Remove the lock plate and remove the brake hose.

INSTALLATION

CAUTION:

- **Never spill or splash brake fluid on painted surfaces. Brake fluid may seriously damage paint. Wipe it off immediately and wash with water if it gets on a painted surface.**
- **Never allow foreign matter (e.g. dust) and oils other than brake fluid to enter the reservoir tank.**

1. Assemble the union bolt and the copper washer to the brake hose.
   CAUTION:
   Never reuse the copper washer.
2. Align the brake hose L-pin by aligning it with the brake caliper assembly hole, and tighten the union bolt (1) to the specified torque.

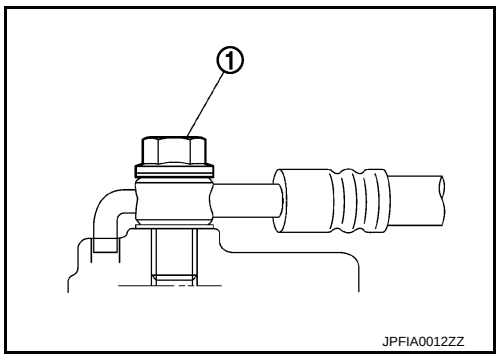

3. Install the brake tube to the brake hose, temporarily tighten the flare nut by hand until it does not rotate further, and fix the brake hose to the bracket with the lock plate.
   CAUTION:
   Check that all brake hoses and brake tubes are not twisted and bent.
4. Tighten the flare nut to the specified torque with a flare nut crow-foot and a torque wrench.
   CAUTION:
   Never scratch the flare nut and the brake tube.
5. Refill with new brake fluid and perform the air bleeding. Refer to BR-10, "Bleeding Brake System".
   CAUTION:
   Never reuse drained brake fluid.
6. Install tires.

FRONT : Inspection

INFOID:0000000005986584

INSPECTION AFTER INSTALLATION

1. Check the brake hoses and tubes for the following: no scratches; no twist and deformation; no interference with other components when steering the steering wheel; no looseness at connections.
   CAUTION:
   Clearance with brake hose and each parts being secured more than 10mm in unladen condition*.

***: Fuel, engine coolant and lubricant are full. Spare tire, jack, hand tools and mats are in designated positions.**

2. Depress the brake pedal with a force of 785 N (80 kg, 176 lb) and hold down the pedal for approximately 5 seconds with the engine running. Check for any fluid leakage.
   CAUTION:
   Retighten the applicable connection to the specified torque and repair any abnormal (damaged, worn or deformed) part if any brake fluid leakage is present.

REAR

REAR : Exploded View

INFOID:0000000005986585

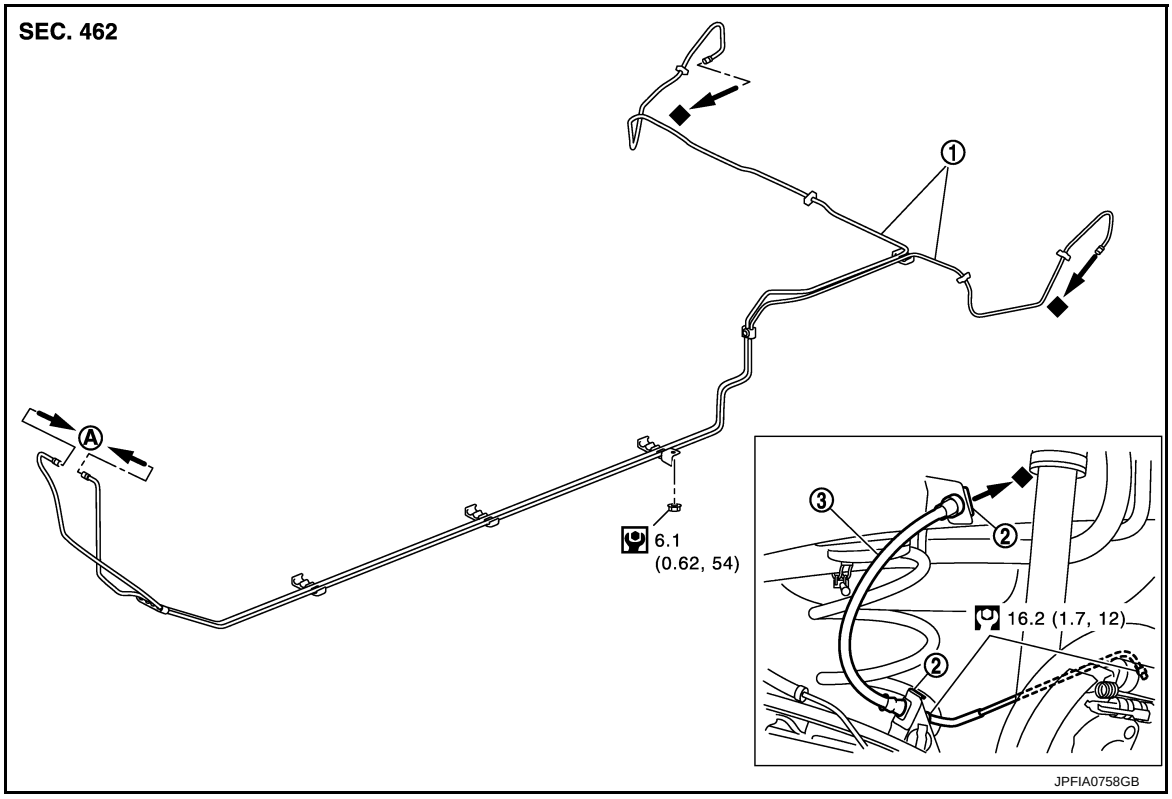

1. Brake tube
2. Lock plate
3. Brake hose

A. To dual proportioning valve

Refer to GI-4, "Components" for symbols in the figure.

REAR : Hydraulic Piping

INFOID:0000000005986586

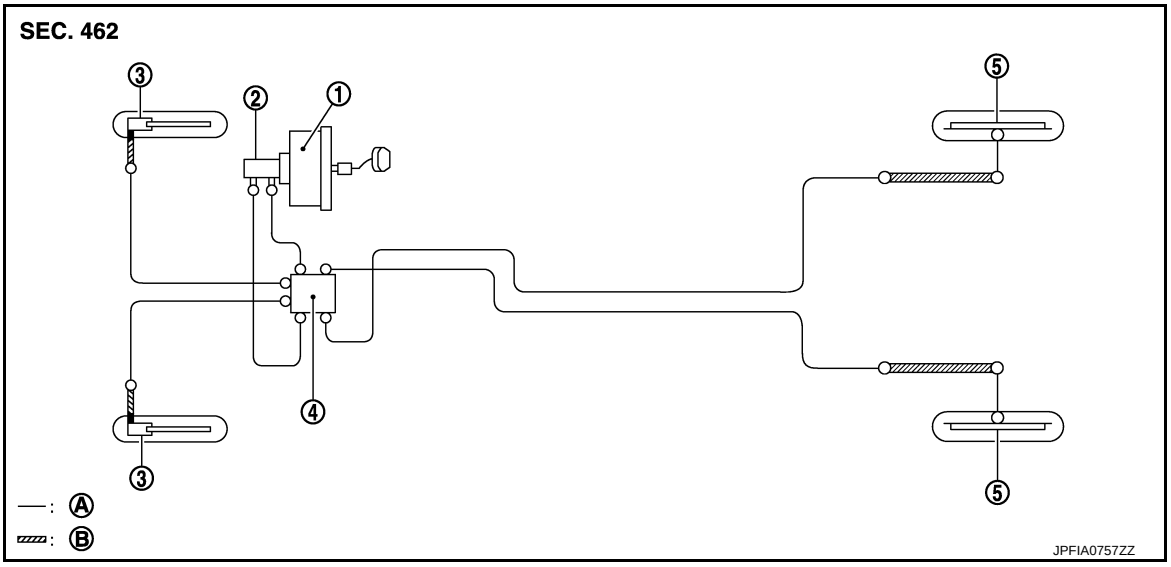

1. Brake booster
2. Master cylinder
3. Front disc brake
4. Dual proportioning valve
5. Rear drum brake

A. Brake tube
B. Brake hose

◯: Flare nut

■: Union bolt

REAR : Removal and Installation

INFOID:0000000005986587

REMOVAL

CAUTION:

Never spill or splash brake fluid on painted surfaces. Brake fluid may seriously damage paint. Wipe it off immediately and wash with water if it gets on a painted surface.

1. Remove tires.
2. Drain brake fluid. Refer to BR-9, "Draining".
3. Loosen the flare nut with a flare nut wrench and separate the brake tube from the brake hose.
   CAUTION:
   - **Never scratch the flare nut and the brake tube.**
   - **Never sharply bend, twist or strongly pull the brake hoses and tubes.**
   - **Cover the open end of brake tubes and hoses when disconnecting to prevent entrance of dirt.**
4. Remove the lock plate and remove the brake hose from the vehicle.
5. Loosen the flare nut with a flare nut wrench and separate the brake tube from the wheel cylinder, and remove the brake tube.

INSTALLATION

CAUTION:

- **Never spill or splash brake fluid on painted surfaces. Brake fluid may seriously damage paint. Wipe it off immediately and wash with water if it gets on a painted surface.**
- **Never allow foreign matter (e.g. dust) and oils other than brake fluid to enter the reservoir tank.**

1. Connect the brake tube to the wheel cylinder, temporarily tighten the flare nut by hand until it does not rotate further.
2. Connect the brake hose to the brake tube, temporarily tighten the flare nut by hand until it does not rotate further, and fix the brake hose to the bracket with the lock plate.
   CAUTION:
   Check that the brake hoses and tubes are not twisted and bent.
3. Tighten the flare nut to the specified torque with a flare nut flare nut torque wrench.
   CAUTION:

Never scratch the flare nut and the brake tube.

4. Refill with new brake fluid and perform the air bleeding. Refer to BR-10, "Bleeding Brake System".
   CAUTION:
   Never reuse drained brake fluid.
5. Install tires.

REAR : Inspection

INFOID:0000000005986588

INSPECTION AFTER INSTALLATION

1. Check the brake hoses and tubes for the following: no scratches; no twist and deformation; no looseness at connections.
   CAUTION:
   Clearance with brake hose and each parts being secured more than 10mm in unladen condition*.
   ***: Fuel, engine coolant and lubricant are full. Spare tire, jack, hand tools and mats are in designated positions.**
2. Depress the brake pedal with a force of 785 N (80kg, 176 lb) and hold down the pedal for approximately 5 seconds with the engine running. Check for any fluid leakage.
   CAUTION:
   Retighten the applicable connection to the specified torque and repair any abnormal (damaged, worn or deformed) part if any brake fluid leakage is present.

DUAL PROPORTIONING VALVE

Exploded View

INFOID:0000000006034297

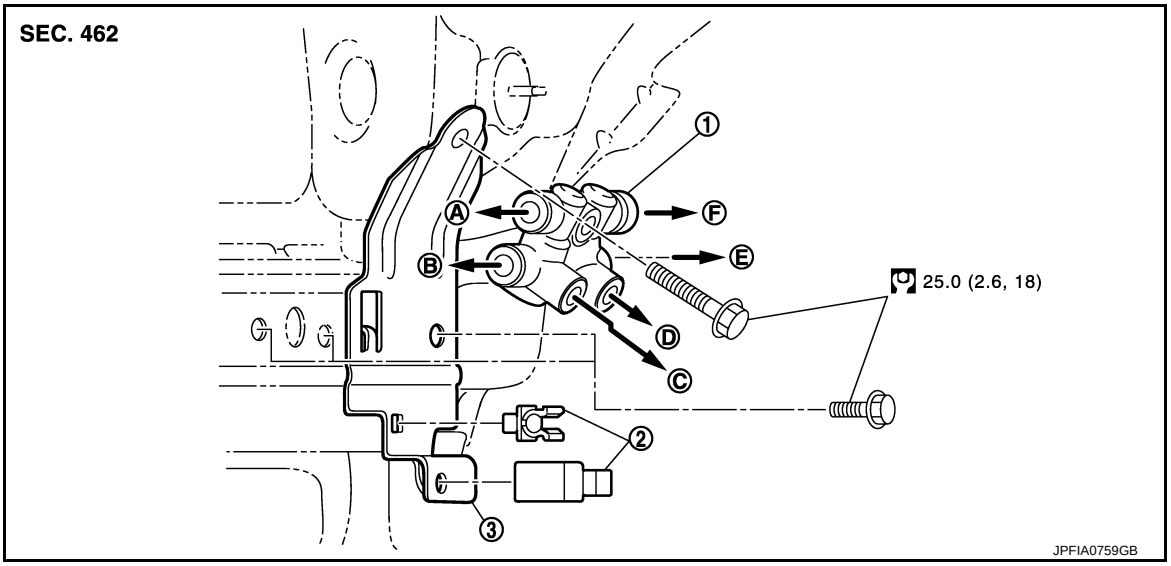

1.	Dual proportioning valve	2	Clip	3.	Bracket
A.	To rear LH wheel cylinder	B.	To master cylinder primary side	C.	To front RH brake caliper
D.	To front LH brake caliper	E.	To master cylinder secondary side	F.	To rear RH wheel cylinder

⇦: Vehicle front

Refer to GI-4, "Components" for symbols in the figure.

Removal and Installation

INFOID:0000000006034298

REMOVAL

1. Remove the air duct and air cleaner case. Refer to EM-24, "Removal and Installation"
2. Drain brake fluid. Refer to BR-9, "Draining".
3. Loosen the brake tube flare nuts, and then remove brake tubes from dual proportioning valve. Refer to BR-18, "FRONT : Exploded View".
   CAUTION:
   Never scratch the flare nut and the brake tube.
4. Remove the dual proportioning valve from bracket.
   CAUTION:
   Never apply excessive impact to dual proportioning valve, such as dropping it.
5. Remove the bracket from vehicle.

INSTALLATION

Note the following, and install in the reverse order of removal.

- Install the brake tube with flare nut torque wrench. Refer to BR-18, "FRONT : Exploded View".
  CAUTION:
  Never scratch the flare nut and the brake tube.
- Never apply excessive impact to dual proportioning valve, such as dropping it.
- After work is completed, bleed air from brake tube. Refer to BR-10, "Bleeding Brake System".

Inspection

INFOID:0000000006034299

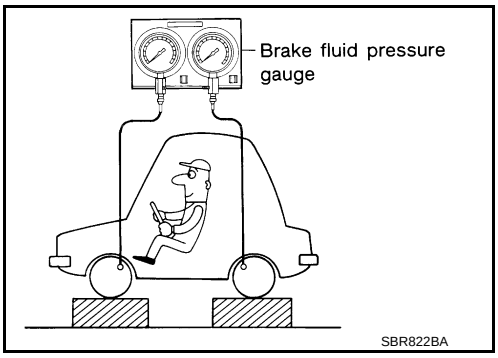

1. Connect brake fluid pressure gauge to bleeder valve of front and rear brake on either LH and RH side.
2. Refill with new brake fluid and perform the air bleeding from brake fluid pressure gauge.
3. Check brake fluid pressure by depressing the brake pedal according to the following steps.

a. Raise front brake fluid pressure to the following value.

Front brake fluid pressure **: 4.90 MPa (49.0 bar, 50.0 kg/cm^2, 711 psi)**

b. Check that the value of rear brake fluid pressure is as follows.

Rear brake fluid pressure **: 3.07 MPa (30.7 bar, 31.3 kg/cm^2, 445 psi)**

CAUTION:
- **The difference between right and left rear brake fluid pressure must be less than 0.39 MPa (3.9 bar, 4 kg/cm^2, 57 psi).**
- **If the difference between light and left rear brake fluid pressure is more than 0.39 Mpa (3.9 bar, 4 kg/cm^2, 57 psi), replace dual proportioning valve.**

4. Check brake fluid pressure by depressing the brake pedal according to the following steps.

a. Raise front brake fluid pressure to the following value.

Front brake fluid pressure **: 9.81 MPa (98.1 bar, 100.1 kg/cm^2, 1422 psi)**

b. Check that the value of rear brake fluid pressure is as follows.

Rear brake fluid pressure **: 4.30 MPa (43.0 bar, 43.9 kg/cm^2, 624 psi)**

CAUTION:
If brake fluid pressure is outside the reference value, replace dual proportioning valve.

5. Check that brake fluid pressure does not decrease when depressing brake pedal for 15 seconds with brake fluid pressure (front) reached 14.71 MPa (147.1 bar, 150 kg/cm^2, 2133 psi).

CAUTION:
If brake fluid pressure decreases, check if there is leakage of brake fluid or damage.

6. Remove the brake pressure gauge.
7. Refill with new brake fluid and perform the air bleeding. Refer to BR-10, "Bleeding Brake System".

BRAKE MASTER CYLINDER

Exploded View

INFOID:0000000005986589

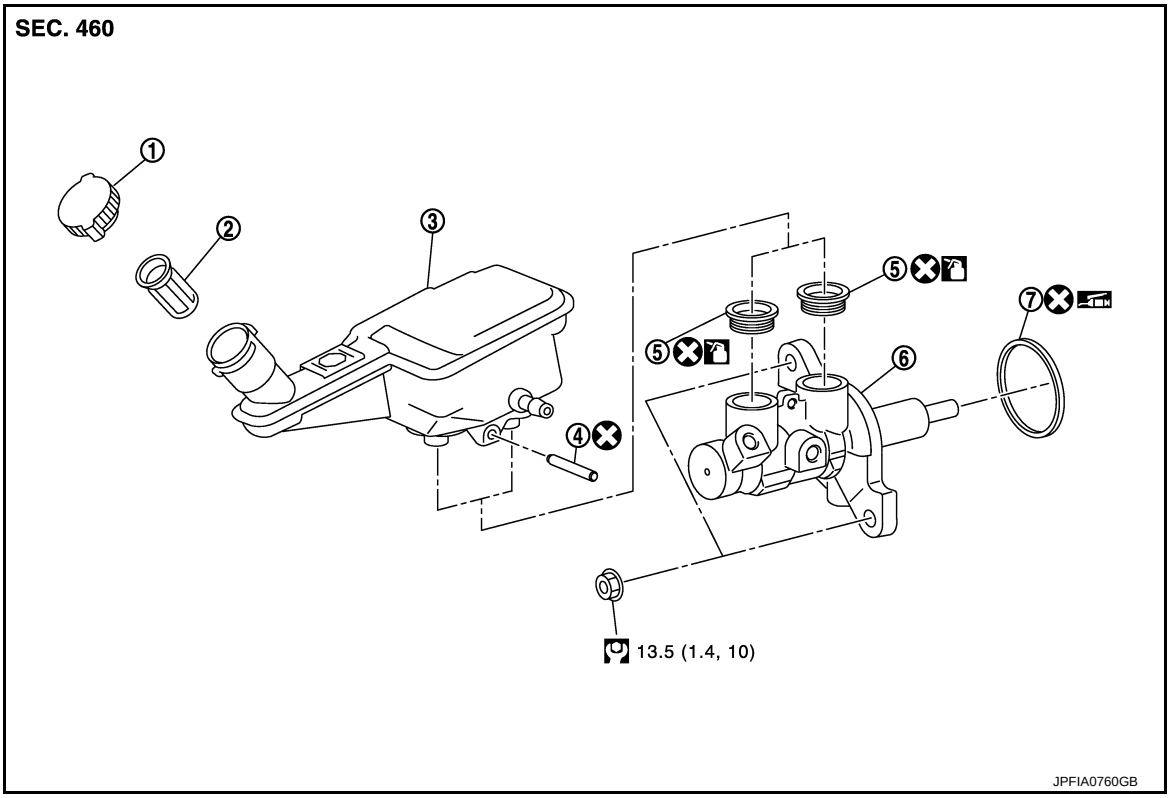

1.	Reservoir cap	2.	Oil strainer	3.	Reservoir tank
4.	Pin	5.	Grommet	6.	Cylinder body
7.	O-ring				

: Apply PBC (Poly Butyl Cuprysil) grease or silicone-based grease.

: Apply brake fluid.

Refer to GI-4, "Components" for symbols not described on the above.

Removal and Installation

INFOID:0000000005986590

REMOVAL

CAUTION:

- **Never spill or splash brake fluid on painted surfaces. Brake fluid may seriously damage paint. Wipe it off immediately and wash with water if it gets on a painted surface.**
- **Depress the brake pedal several times to release the vacuum pressure from the brake booster. Then remove the master cylinder assembly.**

1. Drain brake fluid. Refer to BR-9, "Draining".
2. Disconnect the brake fluid level switch harness connector.
3. Remove the brake tube from between dual proportioning valve and master cylinder assembly with a flare nut wrench.
   CAUTION:
   Never scratch the flare nut and the brake tube.
4. Remove the master cylinder assembly.
   CAUTION:
   - **Never deform or bend the brake tubes.**
   - **Never depress the brake pedal after the master cylinder assembly is removed.**

- **The piston of the master cylinder assembly is exposed. Never damage it when removing the master cylinder.**
- **The piston may drop off when pulled out strongly. Never hold the piston. Hold the cylinder body when handling the master cylinder assembly.**

INSTALLATION

CAUTION:

Never spill or splash brake fluid on painted surfaces. Brake fluid may seriously damage paint. Wipe it off immediately and wash with water if it gets on a painted surface.

Note the following, and install in the reverse order of removal.

- Never reuse the O-ring.
- Never depress the brake pedal after the master cylinder assembly is removed.
- Apply silicone grease to the brake booster [see (A) in the figure] when installing the master cylinder assembly to the brake booster.
- The piston of the master cylinder assembly is exposed. Never damage it when handling the master cylinder and check that no dirt and dust are present on the piston before installation. Clean it with new brake fluid if necessary.
- The piston may drop off when pulled strongly. Never hold the piston. Hold the cylinder body when handling the master cylinder assembly.
- Never deform or bend the brake tubes.
- Temporarily tighten the brake tube flare nut to the master cylinder assembly by hand. Then tighten it to the specified torque with a flare nut flare nut torque wrench. Refer to BR-18, "FRONT : Exploded View".

  CAUTION:

  Never scratch the flare nut and the brake tube.
- Never allow foreign matter (e.g. dust) and oils other than brake fluid to enter the reservoir tank.
- After installation, perform the air bleeding. Refer to BR-10, "Bleeding Brake System"

  CAUTION:

  Never reuse drained brake fluid.
- Adjust each item of brake pedal after installing the brake pedal assembly to the vehicle. Refer to BR-7, "Inspection and Adjustment".

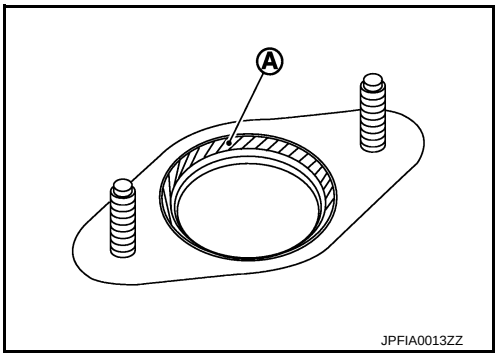

Disassembly and Assembly

INFOID:0000000005986591

DISASSEMBLY

CAUTION:

- **Never disassemble the cylinder body.**
- **Remove the reservoir tank only when necessary.**
- **Never drop the removed parts. The parts must not be reused if they are dropped.**

1. Fix the master cylinder assembly to a vise.

   CAUTION:
   - **Always set copper plates or cloth between vise grips when fixing the cylinder body to a vise.**
   - **Never overtighten the vise.**
2. Remove the reservoir tank mounting pin with a pin punch [4 mm (0.157 in)].
3. Remove master cylinder from vise.
4. Remove the reservoir tank and grommet from the cylinder body.

ASSEMBLY

CAUTION:

- **Never use mineral oils such as kerosene or gasoline and rubber grease during the cleaning and assembly process.**
- **Never drop the when installing. The parts must not be reused if they are dropped.**
- **Never allow foreign matter (e.g. dust) and oils other than brake fluid to enter the reservoir tank.**

1. Apply new brake fluid to the grommet and install it to the cylinder body.

   CAUTION:

   Never reuse the grommets.
2. Install the reservoir tank to the cylinder body.
3. Fix the cylinder body to a vise.

CAUTION:
- **Place the reservoir tank with the chamfered pin hole facing up.**
- **Always set copper plates or cloth between vise grips when fixing the cylinder body to a vise.**
- **Never overtighten the vise.**

4. Tilt the reservoir tank so that a mounting pin can be inserted. Insert a mounting pin. Return the reservoir tank to the horizontal position. Insert another mounting pin into the pin hole on the opposite side in the same manner after the mounting pin passes through the cylinder body pin hole.
   CAUTION:
   Never reuse the mounting pin.

Inspection

INFOID:0000000005986592

INSPECTION BEFORE REMOVAL

Check the brake fluid level switch. Refer to BRC-4, "Component Inspection".

INSPECTION AFTER INSTALLATION

Check the following items and replace if necessary.
- Check the master cylinder for deformation, twist, contact with other parts or looseness of connection.
- Check for fluid leakage from connection. Refer to BR-19, "FRONT : Inspection".
  CAUTION:
  If the fluid leakage is present, retighten to the specified torque. Replace if necessary.

BRAKE BOOSTER

Exploded View

INFOID:0000000005986593

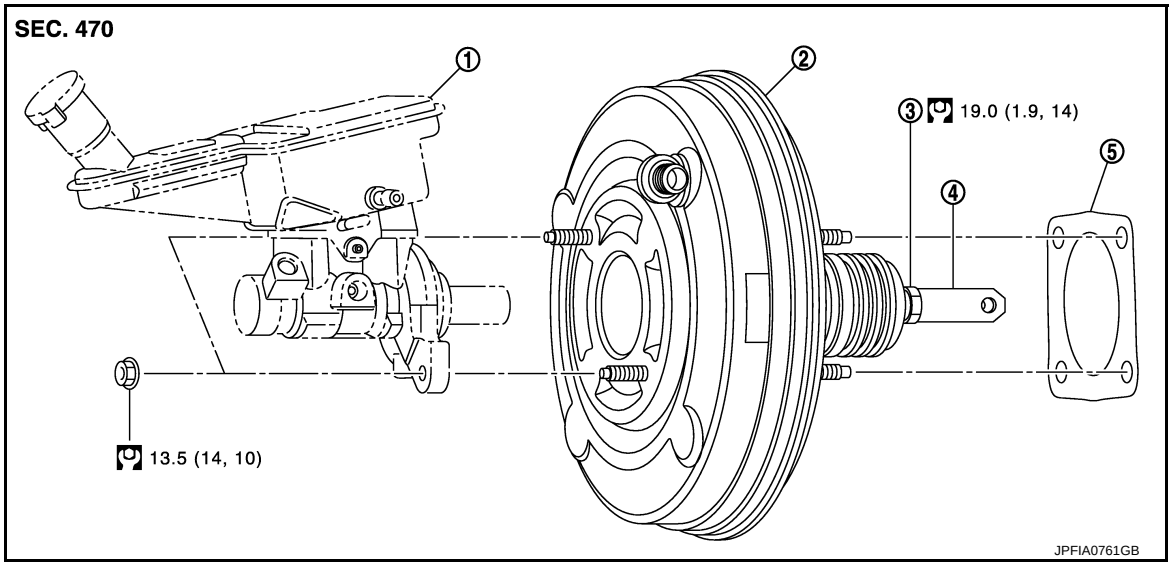

1. Master cylinder assembly
2. Brake booster
3. Lock nut
4. Clevis
5. Gasket

Refer to GI-4, "Components" for symbols in the figure.

Removal and installation

INFOID:0000000005986594

REMOVAL

CAUTION:

Never spill or splash brake fluid on painted surfaces. Brake fluid may seriously damage paint. Wipe it off immediately and wash with water if it gets on a painted surface.

1. Drain brake fluid. Refer to BR-9, "Draining".
2. Remove brake master cylinder assembly. Refer to BR-25, "Removal and Installation".
3. Remove vacuum hose from brake booster. Refer to BR-31, "Removal and Installation".
4. Remove intake manifold. Refer to EM-30, "WITH EGR CONTROL VALVE : Removal and Installation".
5. Remove low-pressure flexible hose. Refer to HA-34, "LOW-PRESSURE FLEXIBLE HOSE : Removal and Installation".
6. Separate brake tube from dual prpportioning valve and front RH brake hose (dual proportioning valve side only).
7. Remove snap pin (1) and clevis pin (2). Refer to BR-16, "Exploded View".
8. Remove nuts on brake booster and brake pedal assembly. Refer to BR-16, "Exploded View".
9. Remove engine mounting bracket and rear torque rod, and slid the engine forward with a jack.
10. Remove brake booster from dash panel in engine room side.
    CAUTION:
    Never deform or bend the brake tubes.
    NOTE:
    If removing brake booster is difficult, remove clevis from brake booster.

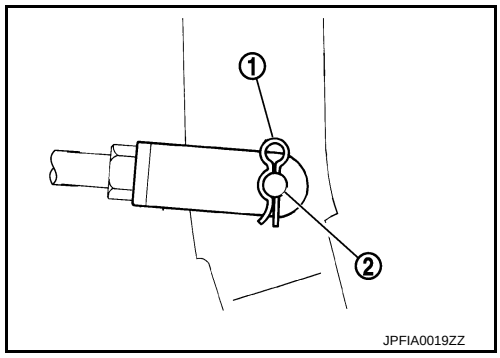

INSTALLATION

CAUTION:

Never spill or splash brake fluid on painted surfaces. Brake fluid may seriously damage paint. Wipe it off immediately and wash with water if it gets on a painted surface.

Note the following, and install in the reverse order of removal.

- Be careful not to damage brake booster stud bolt threads. If brake booster is tilted during installation, the dash panel may damage the threads.
- Never deform or bend the brake tubes.
- Always use a new gasket between the brake booster and the dash panel.
- Replace the clevis pin if it is damaged. Refer to BR-17, "Inspection and Adjustment".
- Never allow foreign matter (e.g. dust) and oils other than brake fluid to enter the reservoir tank.
- After installation, perform the air bleeding. Refer to BR-10, "Bleeding Brake System".

  CAUTION:

  Never reuse drained brake fluid.
- Check each item of brake pedal. Adjust it if the measurement value is not the standard. Refer to BR-7, "Inspection and Adjustment".

Inspection and Adjustment

INFOID:0000000005986595

INSPECTION BEFORE REMOVAL

Air Tight

CAUTION:

Check the air tight condition when the master cylinder and the brake booster is installed.

1. With a handy vacuum pump, apply vacuum pressure of –66.7 kPa (–500 mmHg, –19.70 inHg, –0.667 bar) to the brake booster.
2. If the air tight condition cannot be maintained, perform the following operation.

a. Check the no dirt and dust are present on the brake booster and brake master cylinder mating faces. Clean it if necessary.

b. Check the O-ring on the master cylinder. If anything is found, replace the O-ring.

c. Check the air tight condition again. If the condition still cannot be maintained, replace the brake booster.

INSPECTION AFTER REMOVAL

Input Rod Length Inspection

1. Loosen the lock nut (1) and adjust the input rod (2) to the specified length (A).

   A : Refer to BR-42, "Brake Booster".
2. Tighten the lock nut to the specified torque.

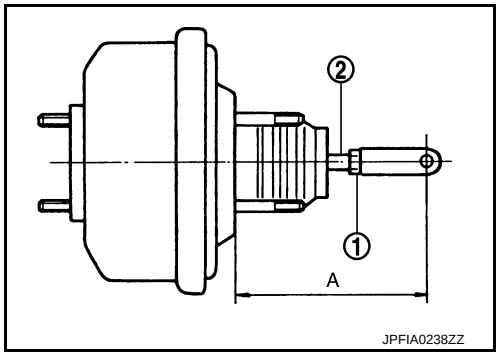

INSPECTION AFTER INSTALLATION

Operation

Depress the brake pedal several times at 5-second intervals with the engine stopped. Start the engine with the brake pedal fully depressed. Check that the clearance between brake pedal and dash lower pane decreases.

Air Tight

1. Run the engine for 1 minute to apply vacuum to the brake booster, and stop the engine. Then depress the brake pedal several times at 5-second intervals until the accumulated vacuum is released to atmospheric pressure. Check that the clearance between brake pedal and dash lower panel gradually increases each time the brake pedal is depressed when performing this operation.
2. Depress the brake pedal with the engine running. Then stop the engine while holding down the brake pedal. Check that the brake pedal stroke does not change after holding down the brake pedal for 30 seconds or more.

ADJUSTMENT AFTER INSTALLATION

Perform the brake pedal adjustment after installing the brake pedal assembly. Refer to BR-7, "Inspection and Adjustment".

VACUUM LINES

Exploded View

INFOID:0000000005986596

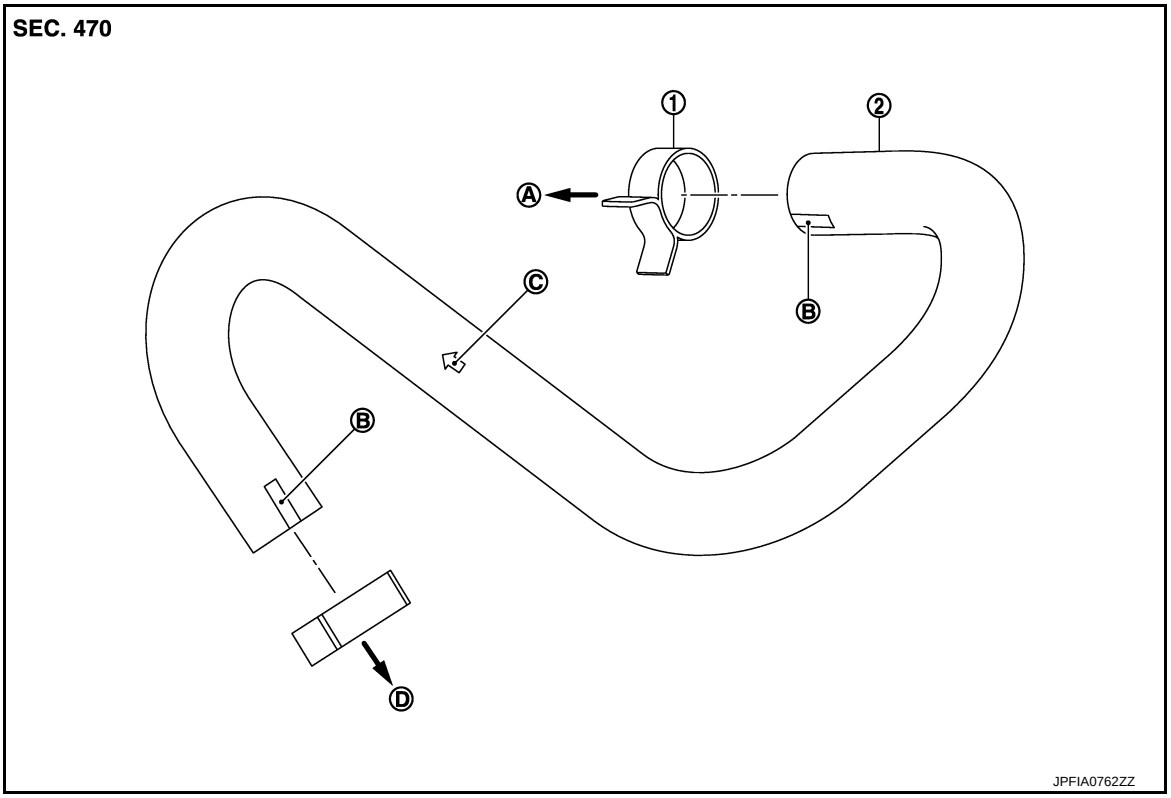

1. Clamp
2. Vacuum hose (built-in check valve)

A. To brake booster
B. Paint mark
C. Stamp indicating engine direction
D. To intake manifold

Removal and Installation

INFOID:0000000005986597

REMOVAL

Remove the vacuum hose.

INSTALLATION

Note the following, install the vacuum hose.

- Because vacuum hose contains a check valve, it must be installed in the correct position. Refer to the stamp to confirm correct installation. Brake booster will not operate normally if the hose is installed in the wrong direction.
- When installing vacuum hose, insert it until its tip reaches the back-end of length (A) or further as shown in the figure.

A : 24 mm (0.95 in) or more

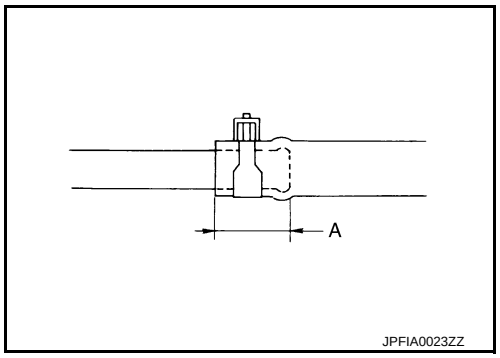

- Face the paint marks of vacuum hose (built-in check valve) (brake booster side) to vehicle front side to assemble.
  CAUTION:
  Never use lubricating oil during assembly.
- Face the paint marks of vacuum hose (built-in check valve) (intake manifold side) to the upward to assemble.
  CAUTION:
  Never use lubricating oil during assembly.

Inspection

INFOID:0000000005986598

INSPECTION AFTER REMOVAL

Appearance
Check for correct assembly, damage and deterioration.

Check Valve Airtightness

- Use a handy vacuum pump (A) to check.

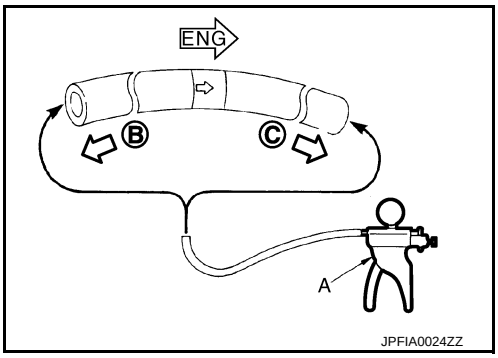

When connected to the booster side (B):

Vacuum should decrease within 1.3 kPa (9.8 mmHg, 0.38 inHg, 0.013 bar) for 15 seconds under a vacuum of –66.7 kPa (–500 mmHg, –19.69 inHg, –0.067 bar).

When connected to the engine side (C):

Vacuum should not exist.

- Replace vacuum hose assembly if vacuum hose and check valve are malfunctioning.

FRONT DISC BRAKE

BRAKE PAD

BRAKE PAD : Exploded View

INFOID:0000000005986599

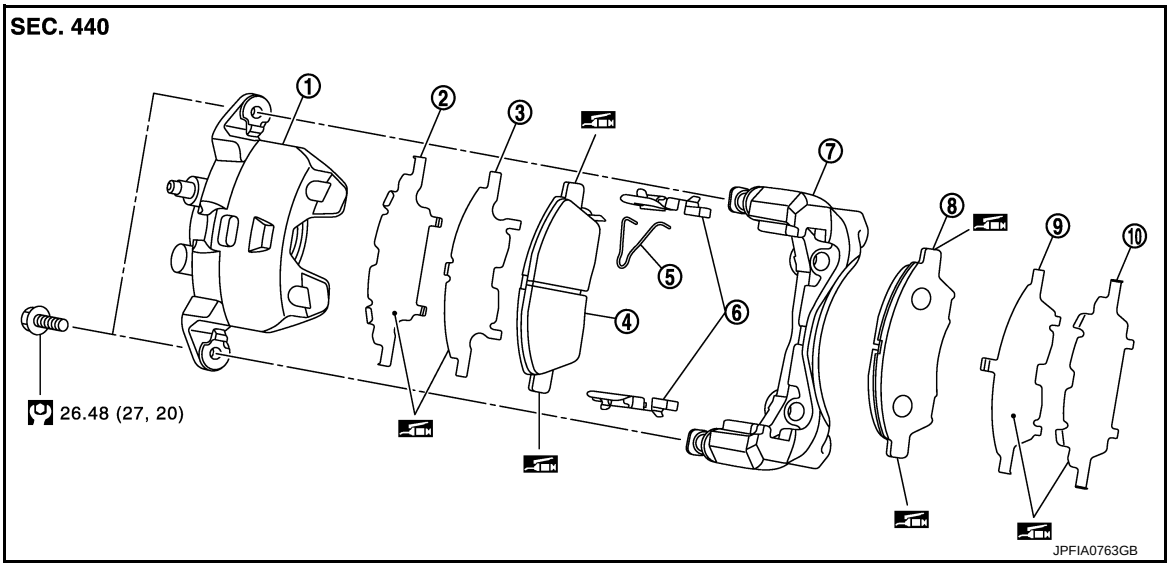

1.	Cylinder body	2.	Inner shim cover	3.	Inner shim
4.	Inner pad (with pad wear sensor)	5.	Pad return spring	6.	Pad retainer
7.	Torque member	8.	Outer pad	9.	Outer shim
10.	Outer shim cover				

: Apply PBC (Poly Butyl Cuprysil) grease or silicone-based grease.

Refer to GI-4, "Components" for symbols not described on the above.

BRAKE PAD : Removal and Installation

INFOID:0000000005986600

REMOVAL

WARNING:

Clean any dust from the brake caliper and brake pads with a vacuum dust collector. Never blow with compressed air.

CAUTION:

- **Never depress the brake pedal while removing the brake pads because the piston may pop out.**
- **Never spill or splash brake fluid on the disc rotor.**

1. Remove tires.
2. Remove lower sliding pin bolt.
3. Suspend the cylinder body with suitable wire so that the brake hose will not stretch. Then remove the pad return spring, brake pads, shims, shim covers and pad retainers from the torque member.

   CAUTION:
   - **Never deform the pad return spring when removing the pad return spring from the brake pad.**
   - **Never deform the pad retainer when removing the pad retainer from the torque member.**
   - **Never damage the piston boot.**
   - **Never drop the brake pads, shims, and the shim covers.**
   - **Remember each position of the removed brake pads.**

INSTALLATION

WARNING:

Clean any dust from the brake caliper and brake pads with a vacuum dust collector. Never blow with compressed air.

CAUTION:

- **Never depress the brake pedal while removing the brake pads or the cylinder body because the piston may pop out.**
- **Never spill or splash brake fluid on the disc rotor.**

1. Install the pad retainers to the torque member if the pad retainers has been removed.
   CAUTION:
   - **Securely assemble the pad retainers so that it will not be lifted up from the torque member.**
   - **Never deform the pad retainers.**
2. Apply PBC (Poly Butyl Cuprysil) grease or silicone-based grease to the mating faces between the inner shim (A) and the inner shim cover (B), and install them to the inner pad.
   CAUTION:
   Always replace the shim together with the shim cover when replacing the brake pad.
3. Apply PBC (Poly Butyl Cuprysil) grease or silicone-based grease to the mating faces between the outer shim (A) and the outer shim cover (B), and install them to the outer pad.
   CAUTION:
   Always replace the shim together with the shim cover when replacing the brake pad.

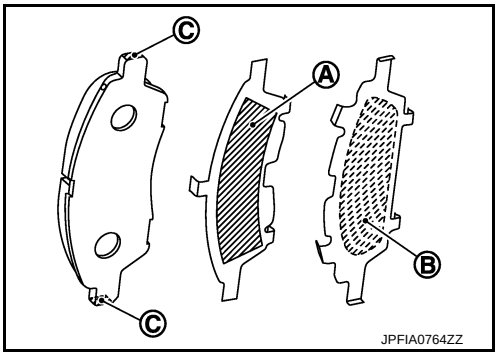

4. Apply PBC (Poly Butyl Cuprysil) grease or silicone-based grease to the mating faces between the brake pads (C) and the pad retainers, and Install the brake pads to the torque member.
5. Install the pad return spring to the brake pad.
   CAUTION:
   Never deform the pad return spring.
6. Install cylinder body to torque member.
   CAUTION:
   - **Never damage the piston boot.**
   - **When replacing brake pad with new one, check a brake fluid level in the reservoir tank because brake fluid returns to master cylinder reservoir tank when pressing piston in.**

   NOTE:
   Use a disc brake piston tool to easily press piston.
7. Install the lower sliding pin bolt and tighten it to the specified torque.
8. Depress the brake pedal several times to check that no drag feel is present for the front disc brake. Refer to BR-34, "BRAKE PAD : Inspection".
9. Install tires.

BRAKE PAD : Inspection

INFOID:0000000005986601

INSPECTION AFTER REMOVAL

Replace the shims and the shim covers if rust is excessively attached.

INSPECTION AFTER INSTALLATION

1. Check a drag of front disc brake. If any drag is found, follow the procedure described below.
2. Remove brake pads. Refer to BR-33, "BRAKE PAD : Removal and Installation".
3. Press the pistons. Refer to BR-33, "BRAKE PAD : Removal and Installation".
4. Install brake pads. Refer to BR-33, "BRAKE PAD : Removal and Installation".
5. Depress the brake pedal several times.
6. Check a drag of front disc brake again. If any drag is found, disassemble the cylinder body. Refer to BR-36, "BRAKE CALIPER ASSEMBLY : Disassembly and Assembly"
7. Burnish contact surfaces brake pads and disc rotor after refinishing or replacing brake pads, or if a soft pedal occurs at very low mileage. Refer to BR-13, "BRAKE PAD : Inspection and Adjustment".

BRAKE CALIPER ASSEMBLY

BRAKE CALIPER ASSEMBLY : Exploded View

INFOID:0000000005986602

REMOVAL

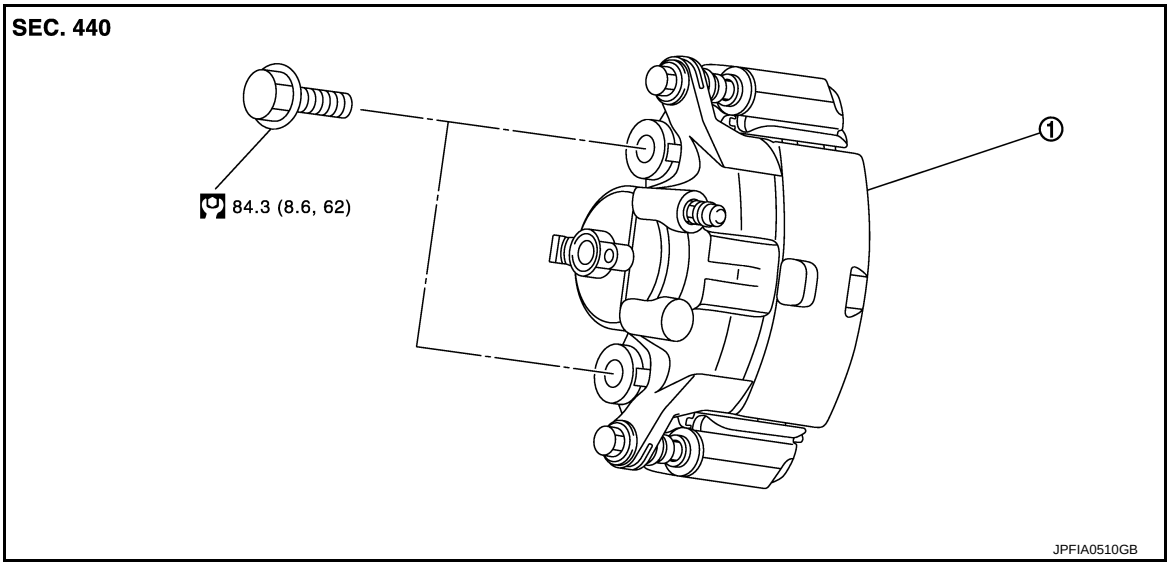

1. Brake caliper assembly

Refer to GI-4, "Components" for symbols in the figure.

DISASSEMBLY

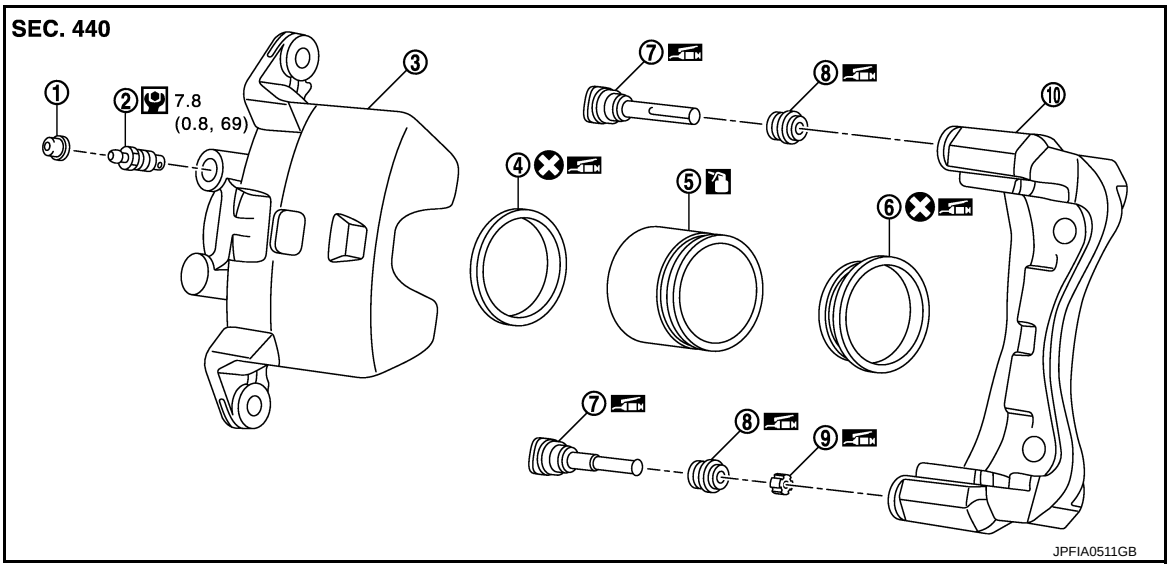

1.	Cap	2.	Bleeder valve	3.	Cylinder body
4.	Piston seal	5.	Piston	6.	Piston boot
7.	Sliding pin	8.	Sliding pin boot	9.	Bushing
10.	Torque member				

: Apply rubber grease.

: Apply brake fluid.

Refer to GI-4, "Components" for symbols not described on the above.

BRAKE CALIPER ASSEMBLY : Removal and Installation

INFOID:0000000005986603

REMOVAL

WARNING:

Clean any dust from the brake caliper and brake pads with a vacuum dust collector. Never blow with compressed air.

CAUTION:
Never spill or splash brake fluid on painted surfaces. Brake fluid may seriously damage paint. Wipe it out immediately and wash with water if it gets on a protect surface.

1. Remove tires.
2. Fix the disc rotor using wheel nuts.
3. Drain brake fluid. Refer to BR-9, "Draining".
   CAUTION:
   Never spill or splash brake fluid on the disc rotor.
4. Remove union bolt and copper washer, and disconnect brake hose from caliper assembly. Refer to BR-19, "FRONT : Removal and Installation".
   CAUTION:
   Never depress the brake pedal. Brake fluid may splash while removing the brake hose.
5. Remove torque member mounting bolts, and remove brake caliper assembly.
   CAUTION:
   Never drop brake pad and caliper assembly.
6. Remove disc rotor. Refer to FAX-9, "Removal and Installation".

INSTALLATION

WARNING:
Clean any dust from the brake caliper and brake pads with a vacuum dust collector. Never blow with compressed air.
CAUTION:
- **Never depress the brake pedal. Brake fluid may splash while removing the brake hose.**
- **Never spill or splash brake fluid on painted surfaces. Brake fluid may seriously damage paint. Wipe it out immediately and wash with water if it gets on a protect surface.**
- **Never allow foreign matter (e.g. dust) and oils other than brake fluid to enter the reservoir tank.**

1. Install disc rotor. Refer to FAX-9, "Removal and Installation".
2. Install the brake caliper assembly to the steering knuckle and tighten the torque member mounting bolts to the specified torque.
   CAUTION:
   Never spill or splash any grease and moisture on the brake caliper assembly mounting face, threads, mounting bolts and washers. Wipe out any grease and moisture.
3. Install brake hose and copper washers to brake caliper assembly, and tighten union bolts to the specified torque. Refer to BR-19, "FRONT : Removal and Installation".
   CAUTION:
   Never reuse copper washer.
4. Refill with new brake fluid and perform the air bleeding. Refer to BR-10, "Bleeding Brake System".
   CAUTION:
   - **Never reuse drained brake fluid.**
   - **Never spill or splash brake fluid on the disc rotor.**
5. Check a drag of front disc brake. If any drag is found, refer to BR-38, "BRAKE CALIPER ASSEMBLY : Inspection".
6. Install tires.

BRAKE CALIPER ASSEMBLY : Disassembly and Assembly

INFOID:0000000005986604

DISASSEMBLY

NOTE:
Never remove the torque member, brake pad and pad retainers when disassembling and assembling the cylinder body.

1. Remove the sliding pin bolt, and remove the cylinder body from the torque member. Refer to BR-33, "BRAKE PAD : Removal and Installation".
   CAUTION:
   Fix the brake pad at suitable tape so that the brake pad will not drop.
2. Remove sliding pins and sliding pin boots from torque member.
3. Remove bushing from sliding pin.

4. Place a wooden block as shown in the figure, and blow air from union bolt mounting hole to remove pistons and piston boots.
   CAUTION:
   Never get fingers caught in the pistons.

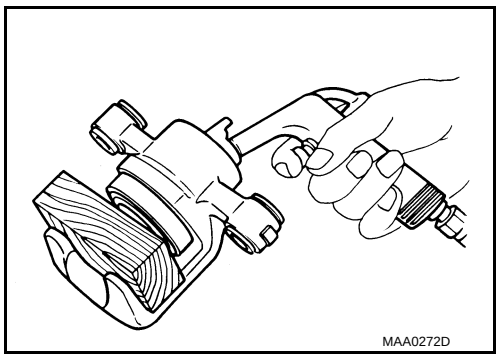

5. Remove piston seal from cylinder body using suitable tool.
   CAUTION:
   Be careful not to damage a cylinder inner wall.
6. Remove bleeder valve and cap.

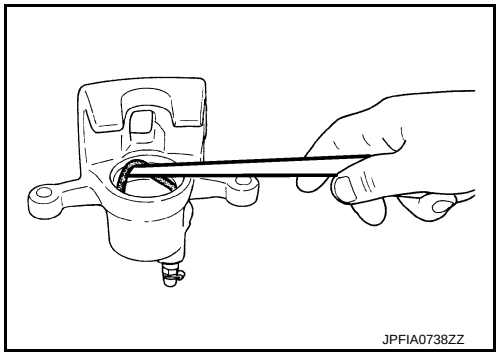

ASSEMBLY

1. Install bleeder valve and cap.
2. Apply rubber grease to piston seals (1), and install them to cylinder body.
   CAUTION:
   Never reuse piston seals.

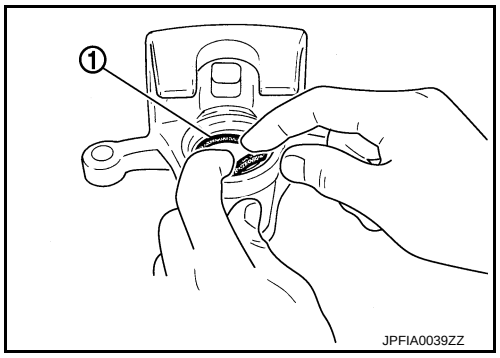

3. Apply rubber grease to piston boots (1). Cover the piston (2) end with piston boot, and then install cylinder side lip on piston boot securely into a groove on cylinder body.
   CAUTION:
   Never reuse piston boots.

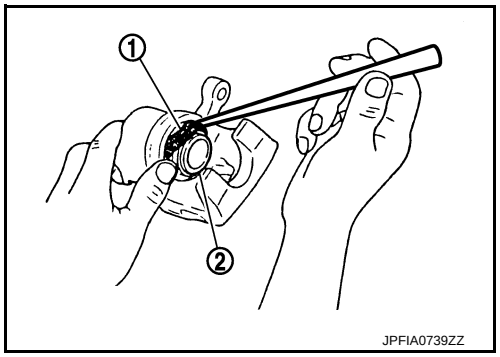

4. Apply brake fluid to pistons (1). Push piston into cylinder body by hand and push piston boot (2) piston-side lip into the piston groove.
   CAUTION:
   Press the pistons evenly and vary the pressing point to prevent cylinder inner wall from being rubbed.
5. Apply rubber grease to bushing, and install bushing to sliding pin.
6. Apply rubber grease to sliding pins and sliding boots, and install sliding pins and sliding pin boots to torque member.
7. Install the cylinder body to tighten cylinder body mounting bolts to the specified torque.

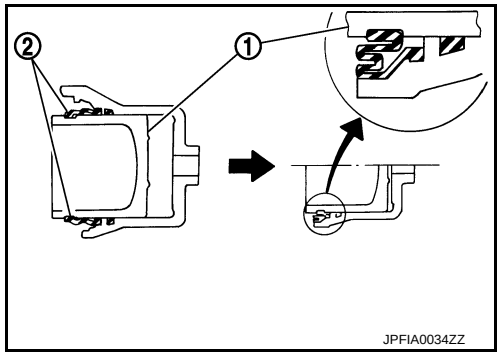

BRAKE CALIPER ASSEMBLY : Inspection

INFOID:0000000005986605

INSPECTION AFTER DISASSEMBLY

Check the following items and replace if necessary.

Cylinder Body

Check the inner wall of the cylinder for rust, wear, cracks or damage.

CAUTION:
Always clean with new brake fluid. Never clean with mineral oil such as gasoline and light oil.

Torque Member

Check the torque member for rust, wear, cracks or damage.

Pistons

Check the surface of the piston for rust, wear, cracks or damage.

CAUTION:
A piston sliding surface is plated. Never polish with sandpaper.

Sliding Pin and Sliding Pin Boot

Check the sliding pins and sliding boots for rust, wear, cracks or damage.

INSPECTION AFTER INSTALLATION

1. Check a drag of front disc brake. If any drag is found, follow the procedure described below.
2. Remove brake pads. Refer to BR-33, "BRAKE PAD : Removal and Installation".
3. Press the pistons. Refer to BR-33, "BRAKE PAD : Removal and Installation".
4. Install brake pads. Refer to BR-33, "BRAKE PAD : Removal and Installation".
5. Depress the brake pedal several times.
6. Check a drag of front disc brake again. If any drag is found, disassemble the cylinder body. Refer to BR-36, "BRAKE CALIPER ASSEMBLY : Disassembly and Assembly".
7. Burnish contact surface between disc rotor and brake pads after refinishing or replacing disc rotor, or if a soft pedal occurs at very low mileage. Refer to BR-13, "DISC ROTOR : Inspection and Adjustment".

REAR DRUM BRAKE

Exploded View

INFOID:0000000005986606

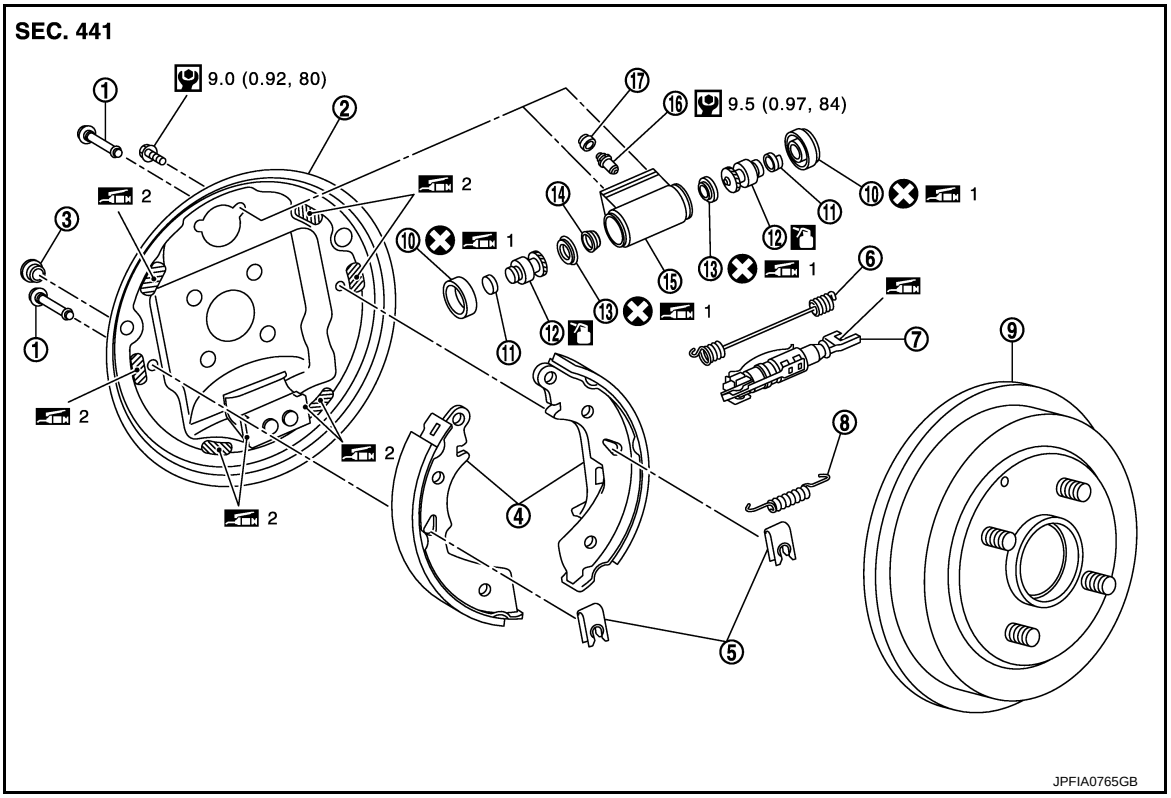

1.	Shoe hold pin	2.	Back plate	3.	Plug
4.	Brake shoe	5.	Spring	6.	Adjuster spring
7.	Adjuster	8.	Return spring	9.	Brake drum
10.	Boot	11.	Piston cover	12.	Piston
13.	Piston cup	14.	Spring	15.	Wheel cylinder
16.	Bleeder valve	17.	Cap		

1: Apply polyglycol ether based lubricant.

2: Apply PBC (Poly Butyl Cuprysil) grease or silicone-based grease.

: Apply brake fluid

Refer to GI-4, "Components" for symbols not described on the above.

Removal and Installation

INFOID:0000000005986607

REMOVAL

WARNING:

Clean any dust from the brake caliper and brake pads with a vacuum dust collector. Never blow with compressed air.

CAUTION:

- **Never depress the brake pedal while removing the brake pads drum.**
- **Never drop the removed parts.**

1. Remove tires.
2. Perform drain the brake fluid when remove or disassemble the wheel cylinder. Refer to BR-9, "Draining".

3. While pushing and rotating the spring (1), pull out shoe hold pin, and remove brake shoe assembly (brake shoe, each spring, and adjuster).
   CAUTION:
   Never damage the boot of the wheel cylinder.
4. Remove the parking brake cable from operating lever.
   CAUTION:
   Never bend sharply the parking brake lever.

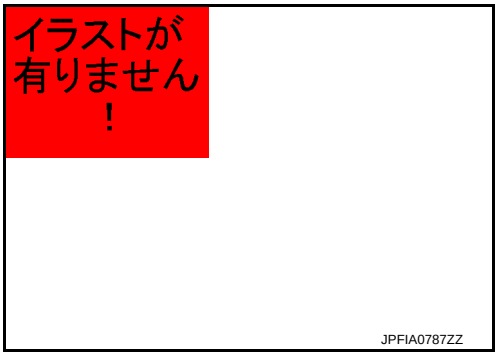

5. Disassemble the brake shoe assembly (brake shoe, each spring, and adjuster).
6. Separate the brake tube from the wheel cylinder.
7. Remove the wheel cylinder from back plate.

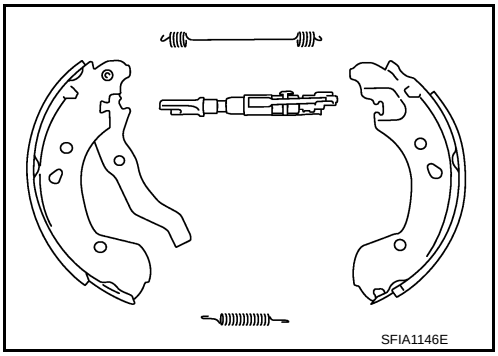

INSTALLATION

WARNING:
Clean any dust from the brake caliper and brake pads with a vacuum dust collector. Never blow with compressed air.
CAUTION:
- **Never depress the brake pedal while removing the brake drum.**
- **Never spill or splash brake fluid on the brake drum.**

Note the following, and install in the reverse of removal.
- Check the difference between left and right wheel of adjuster.
  ⇦: Vehicle front

Adjuster	Direction
Left side	Left screw
Right side	Right screw

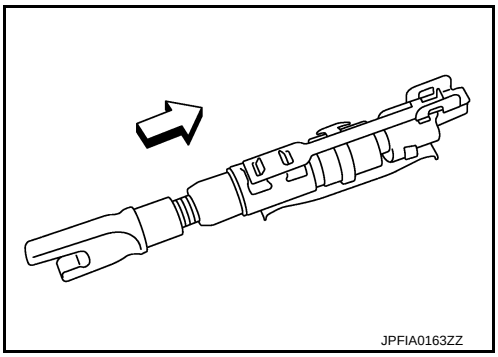

- Shorten adjuster by rotating it.
- Apply PBC (Poly Butyl Cuprysil) silicone-based grease to the mating faces between the adjuster and brake shoe.
- Apply PBC (Poly Butyl Cuprysil) silicone-based grease to the mating faces between the back plate and brake shoe.
- Install the brake shoe assembly so that it does damage the wheel cylinder.
- Check the component parts of brake shoe assembly are installed properly.
- Check the brake shoe sliding surface and brake drum inner surface for grease. Wipe it out any adheres to the surfaces.
- Perform the air bleeding when removed or disassembled the wheel cylinder. Refer to BR-10, "Bleeding Brake System".
- Never allow foreign matter (e.g. dust) and oils other than brake fluid to enter the reservoir tank.
- Adjust the brake shoe (parking brake lever stroke) after install and air bleeding. Refer to BR-41, "Inspection and Adjustment".

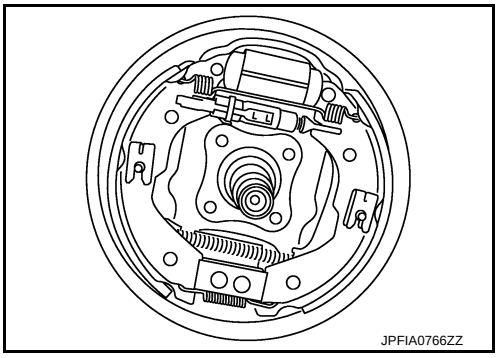

Disassembly and Assembly

INFOID:0000000005986608

DISASSEMBLY

1. Remove the boot from wheel cylinder. Refer to BR-39, "Exploded View".
2. Remove the piston cover, piston, piston cup and spring from wheel cylinder.
   CAUTION:
   Pull the piston out from the wheel cylinder to prevent the wheel cylinder inner wall from being damaged.
3. Remove boot and piston cup from piston.

ASSEMBLY

1. Apply polyglycol ether based lubricant to the piston cup (1) and boot (2), and install them to piston (3).
   CAUTION:
   - **Never mistake the direction.**
   - **Never reuse piston cup and boot.**
2. Apply brake fluid to piston and wheel cylinder inner wall, and install spring, piston cover, piston to wheel cylinder.
   CAUTION:
   Never damage the wheel cylinder inner wall.
3. Install the boot to wheel cylinder. Refer to BR-39, "Exploded View".

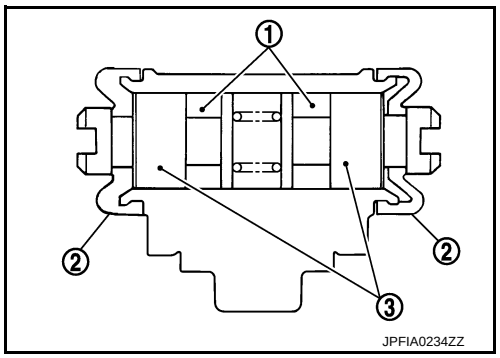

Inspection and Adjustment

INFOID:0000000005986609

INSPECTION AFTER REMOVAL

Check the following items and replace if necessary.
- Check the brake lining for excessive wear, damage, and peeling.
- Check the brake shoe sliding surface for excessive wear and damage.
- Check each spring for settling, excessive wear, damage, and rust.
- Check the adjuster for smoothness, and check it for excessive wear, damage, and rust.
- Check the back plate for damage, cracks, and deformation.
- Check the wheel cylinder for cracks, damage, and leakage of brake fluid.
- Visually check the brake drum for excessive wear, cracks, and damage with a pair of vernier calipers.
- Check the drum brake component parts for excessive wear, damage, and rust.

INSPECTION AFTER DISASSEMBLY

Check the following items and replace if necessary.
- Check the wheel cylinder inner wall for excessive wear, cracks, and damage.
- Check the piston for excessive wear and damage.

INSPECTION AFTER ASSEMBLY

Check that the piston moves smoothly.

INSPECTION AFTER INSTALLATION

1. Check that the component parts of drum brake assembly are installed properly.
2. Rotate the brake drum and check that there is no drag. Perform the following procedure if necessary.

a. Remove the brake shoe. Refer to BR-39, "Removal and Installation".
b. Push the piston.
   CAUTION:
   Push both side of the piston simultaneously.
c. Install the brake shoe. Refer to BR-39, "Removal and Installation".
d. Operate the brake pedal with a force of 196 N (20 kg, 44 lb) for 10 strokes or more.
e. Check a drag of rear disc brake again. If any drag is found, disassemble the wheel cylinder. Refer to BR-41, "Disassembly and Assembly".

ADJUSTMENT AFTER INSTALLATION

Adjust the brake shoe (parking brake lever stroke). Refer to PB-2, "Inspection and Adjustment".

SERVICE DATA AND SPECIFICATIONS (SDS)

SERVICE DATA AND SPECIFICATIONS (SDS)

General Specifications

INFOID:0000000005986610

Unit: mm (in)

Front brake	Cylinder bore diameter	51.1 (2.012)
	Pad length × width × thickness	115.0 × 41.0 × 9.0 (4.53 × 1.614 × 0.354)
	Rotor outer diameter × thickness	238 × 22.0 (9.37 × 0.866)
Rear brake	Cylinder bore diameter	17.46 (11/16)
	Lining length × width × thickness	172.0 × 26.0 × 4.5 (6.77 × 1.024 × 0.177)
	Drum inner diameter	180.0 (7.09)
Master cylinder	Cylinder bore diameter	20.6 (13/16)
Control valve	Valve type	Dual proportioning valve
Brake booster	Diaphragm diameter	228 (9)
Recommended brake fluid		Refer to MA-8, "Fluids and Lubricants"

Brake Pedal

INFOID:0000000005986611

Unit: mm (in)

Item	Standard
Brake pedal height	153.7 – 163.7 (6.05 – 6.44)
Clearance among the brake pedal lever and the stop lamp switch threaded end	0.2 – 1.96 (0.008 – 0.0772)
Brake pedal play	2 – 9 (0.08 – 0.35)
Depressed brake pedal height [Depressing 490 N (50 kg, 110 lb) while turning the engine ON]	80 (3.15) or more

Brake Booster

INFOID:0000000005986612

Unit: mm (in)

Item	Standard
Input rod length	125 (4.92)

Front Disc Brake

INFOID:0000000005986613

Unit: mm (in)

Item		Limit
Brake pad	Wear thickness	2.0 (0.079)
Disc rotor	Wear thickness	20.0 (0.787)
	Thickness variation (measured at 8 positions)	0.008 (0.0003)
	Runout (with it attached to the vehicle)	0.055 (0.0022)

Rear Drum Brake

INFOID:0000000005986614

Unit: mm (in)

Item		Limit
Brake lining	Wear thickness	1.5 (0.059)
Brake drum	Wear inner diameter	181.0 (7.13)

SECTION BRC
BRAKE CONTROL SYSTEM

CONTENTS

WITHOUT ABS

WIRING DIAGRAM **2**

BRAKE CONTROL SYSTEM **2**
Wiring Diagram 2

DTC/CIRCUIT DIAGNOSIS **3**

BRAKE FLUID LEVEL SWITCH **3**
Component Function Check 3
Diagnosis Procedure 3
Component Inspection 4

PARKING BRAKE SWITCH **5**
Component Function Check 5
Diagnosis Procedure 5
Component Inspection 5

WIRING DIAGRAM

BRAKE CONTROL SYSTEM

Wiring Diagram

INFOID:0000000006034867

For connector terminal arrangements, harness layouts, and alphabets in a ⬡ (option abbreviation; if not described in wiring diagram), refer to GI-12, "Connector Information".

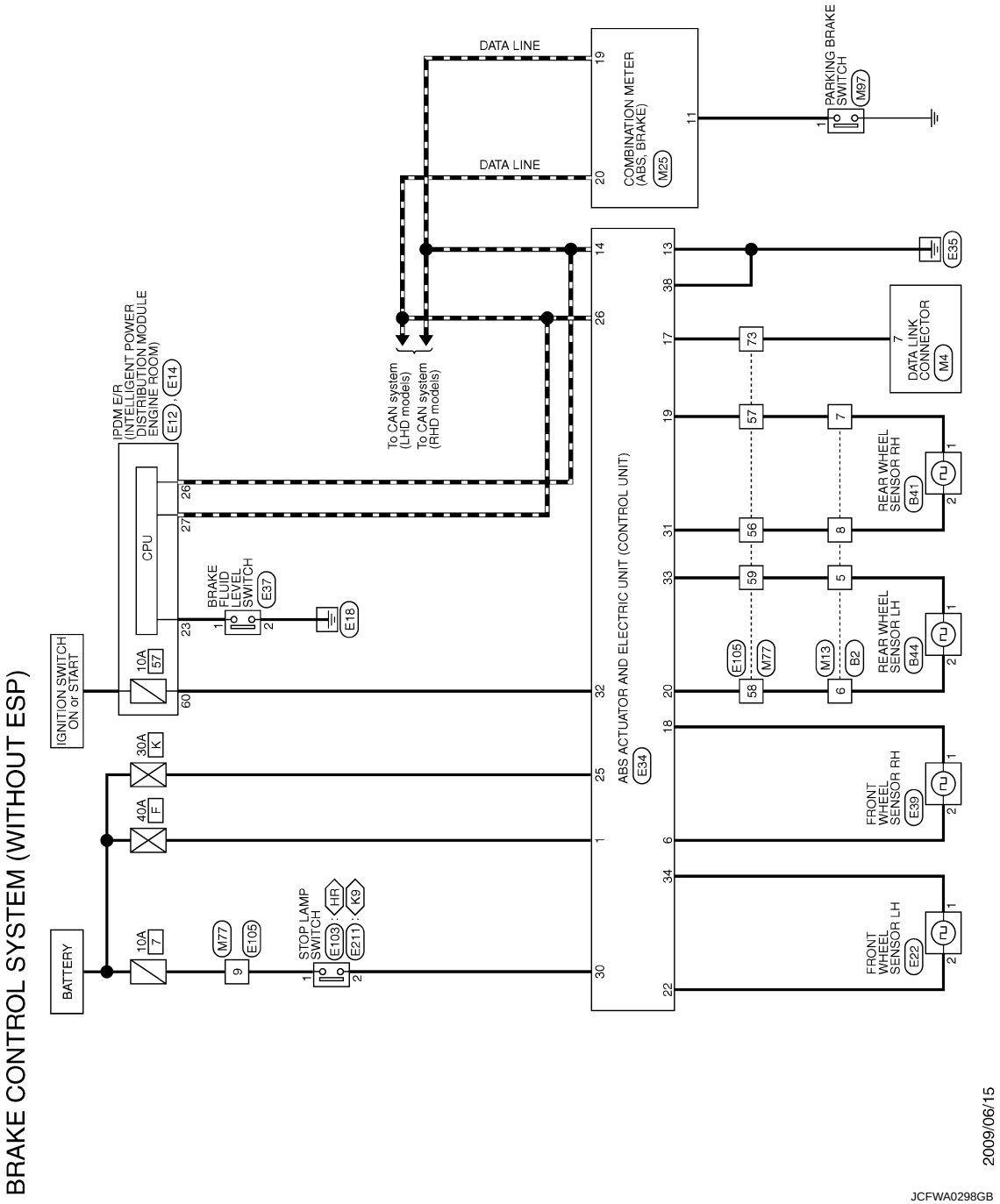

DTC/CIRCUIT DIAGNOSIS

BRAKE FLUID LEVEL SWITCH

Component Function Check

INFOID:0000000006037678

1. CHECK BRAKE FLUID LEVEL SWITCH OPERATION

When the brake fluid is full or empty. Then check that the brake warning lamp in the combination meter turns ON/OFF correctly.

Condition	Brake warning lamp illumination status
When the brake fluid is empty in the reservoir tank.	ON
When the brake fluid is full in the reservoir tank.	OFF

Is the inspection result normal?

YES >> INSPECTION END
NO >> Proceed to diagnosis procedure. Refer to BRC-3, "Diagnosis Procedure".

Diagnosis Procedure

INFOID:0000000006034868

1. CHECK THE BRAKE FLUID LEVEL

Check the brake fluid level. Refer to BR-9, "Inspection".

Is the inspection result normal?

YES >> GO TO 2.
NO >> Refill the brake fluid. Refer to BR-9, "Refilling".

2. CHECK BRAKE FLUID LEVEL SWITCH CIRCUIT

1. Check continuity between brake fluid level switch harness connector and combination meter harness connector.

Brake fluid level switch		Combination meter		Continuity
Connector	Terminal	Connector	Terminal	
E37	1	M34	36	Existed

2. Check continuity between brake fluid level switch harness connector and ground.

Brake fluid level switch		—	Continuity
Connector	Terminal		
E37	1	Ground	Not existed

Is the inspection result normal?

YES >> GO TO 3.
NO >> Repair or replace error-detected parts.

3. CHECK BRAKE FLUID LEVEL SWITCH GROUND CIRCUIT

Check continuity between brake fluid level switch harness connector and ground.

Brake fluid level switch		—	Continuity
Connector	Terminal		
E37	2	Ground	Existed

Is the inspection result normal?

YES >> GO TO 4.
NO >> Repair or replace error-detected parts.

4. CHECK BRAKE FLUID LEVEL SWITCH

Check brake fluid level switch. Refer to BRC-4, "Component Inspection".

Is the inspection result normal?

YES >> GO TO 5.
NO >> Replace reservoir tank. Refer to BR-26, "Disassembly and Assembly"

5. CHECK TERMINALS AND HARNESS CONNECTORS

1. Check brake fluid level switch pin terminals for damage or loose connection with harness connector.
2. Check combination meter pin terminals for damage or loose connection with harness connector.

Is the inspection result normal?

YES >> Check the combination meter. Refer to MWI-22, "Reference Value".
NO >> Repair or replace error-detected parts.

Component Inspection

INFOID:0000000006034869

1. CHECK BRAKE FLUID LEVEL SWITCH

1. Turn the ignition switch OFF.
2. Disconnect brake fluid level switch harness connector.
3. Check continuity between brake fluid level switch harness connector.

Brake fluid level switch Terminal	Condition	Continuity
1 – 2	When brake fluid is full in the reservoir tank.	Not existed
	When brake fluid is empty in the reservoir tank.	Existed

Is the inspection result normal?

YES >> INSPECTION END
NO >> Replace reservoir tank. Refer to BR-26, "Disassembly and Assembly"

PARKING BRAKE SWITCH

Component Function Check

INFOID:0000000006037679

1. CHECK PARKING BRAKE SWITCH OPERATION

Operate the parking brake lever. Then check that the brake warning lamp in the combination meter turns ON/OFF correctly.

Condition	Brake warning lamp illumination status
When the parking brake switch is operation	ON
When the parking brake switch is not operation.	OFF

Is the inspection result normal?

YES >> INSPECTION END
NO >> Proceed to diagnosis procedure. Refer to BRC-5, "Diagnosis Procedure".

Diagnosis Procedure

INFOID:0000000006034870

1. CHECK PARKING BRAKE SWITCH CIRCUIT

1. Turn the ignition switch OFF.
2. Disconnect parking brake switch harness connector.
3. Disconnect combination meter harness connector.
4. Check continuity between parking brake switch harness connector and combination meter harness connector.

Parking brake switch		Combination meter		Continuity
Connector	Terminal	Connector	Terminal	
M11	1	M34	37	Existed

5. Check continuity between parking brake switch harness connector and ground.

Parking brake switch		—	Continuity
Connector	Terminal		
M97	1	Ground	Not existed

Is the inspection result normal?

YES >> GO TO 2.
NO >> Repair or replace error-detected parts.

2. CHECK PARKING BRAKE SWITCH

Check the parking brake switch. Refer to BRC-5, "Component Inspection".

Is the inspection result normal?

YES >> GO TO 3.
NO >> Replace parking brake switch. Refer to PB-3, "Removal and Installation".

3. CHECK TERMINALS AND HARNESS CONNECTORS

1. Check parking brake switch pin terminals for damage or loose connection with harness connector.
2. Check combination meter pin terminals for damage or loose connection with harness connector.

Is the inspection result normal?

YES >> Check combination meter. Refer to MWI-22, "Reference Value".
NO >> Repair or replace error-detected parts.

Component Inspection

INFOID:0000000006034871

1. CHECK PARKING BRAKE SWITCH

1. Turn the ignition switch OFF.

2. Disconnect parking brake switch harness connector.
3. Check continuity between parking brake switch harness connector.

Parking brake switch	—	Condition	Continuity
Terminal		When the parking brake switch is operated.	Existed
1	Ground	When the parking brake switch is not operated.	Not existed

Is the inspection result normal?

YES >> INSPECTION END
NO >> Replace parking brake switch. Refer to PB-3, "Removal and Installation".

SECTION BRM

BODY REPAIR

CONTENTS

SERVICE DATA AND SPECIFICATIONS (SDS) 2

BODY ALIGNMENT 2
Description 2
Engine Compartment 2
Underbody 4
Passenger Compartment 7
Rear Body 10

SERVICE DATA AND SPECIFICATIONS (SDS)

BODY ALIGNMENT

Description

INFOID:0000000006024210

- All dimensions indicated in the figures are actual.
- When using a tracking gauge, adjust both pointers to equal length. Then check the pointers and gauge itself to make sure there is no free play.
- When a measuring tape is used, check that there is no elongation, twisting, or bending.
- Measurements should be taken at the center of the mounting holes.
- An asterisk (*) following the value at the measuring point indicates that the measuring point on the other side is symmetrically the same value.
- The coordinates of the measurement points are the distances measured from the standard line of ″X″, ″Y″ and ″Z″.
- ″Z″: Imaginary base line [200 mm (7.87 in) below datum line (″0Z″ at design plan)]

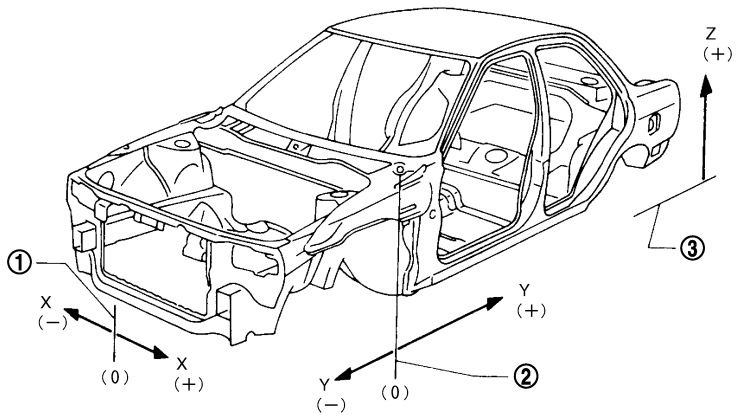

JSKIA0073GB

1. Vehicle center
2. Front axle center
3. Imaginary base line

Engine Compartment

INFOID:0000000006024211

Measurement

Dimensions marked with ″*″ indicate symmetrically identical dimensions on both the right and left hand of the vehicle.

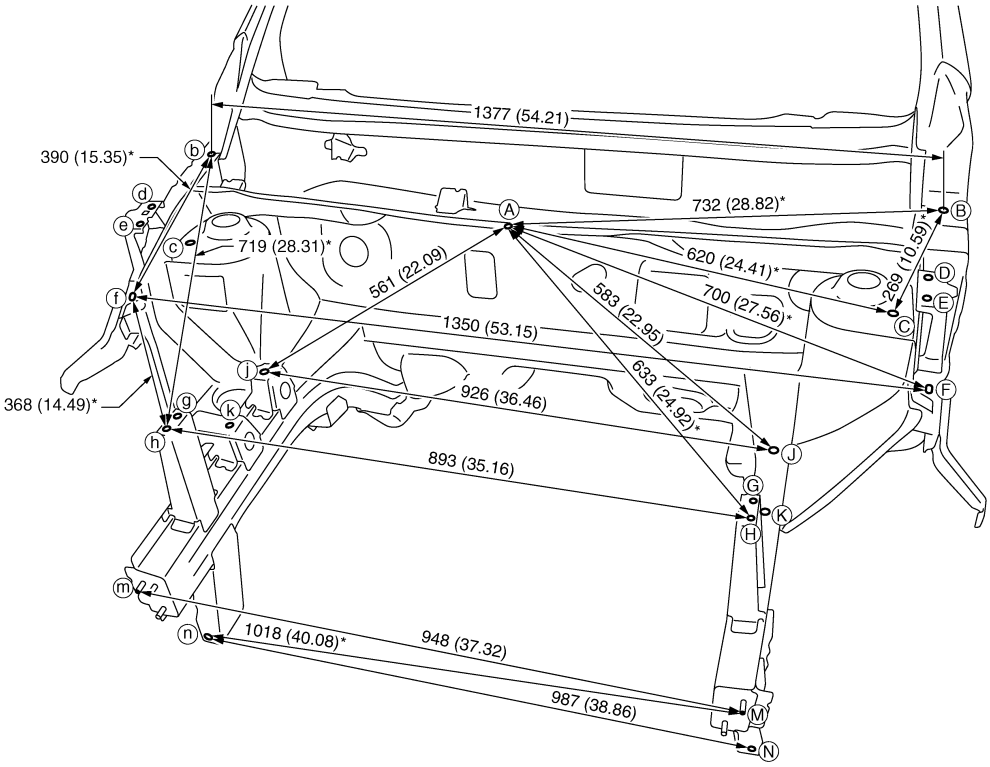

JSKIA1906GB

Unit: mm (in)

«The others»

Unit: mm (in)

Point	Dimension	Memo	Point	Dimension	Memo	Point	Dimension	Memo	Point	Dimension	Memo
A - D	656 (25.83)*		B - f	1418 (55.83)*		D - d	1310 (51.57)		J - k	938 (36.93)	
A - E	657 (25.87)*		B - G	689 (27.13)*		E - e	1304 (51.34)		j - K	930 (36.61)	
A - G	612 (24.09)*		B - g	1305 (51.38)*		F - h	1158 (45.59)*		K - k	915 (36.02)	
A - K	613 (24.13)		B - h	1322 (52.05)*		G - g	893 (35.16)				
A - k	599 (23.58)		C - c	1228 (48.35)		G - h	894 (35.20)*				

Measurement Points

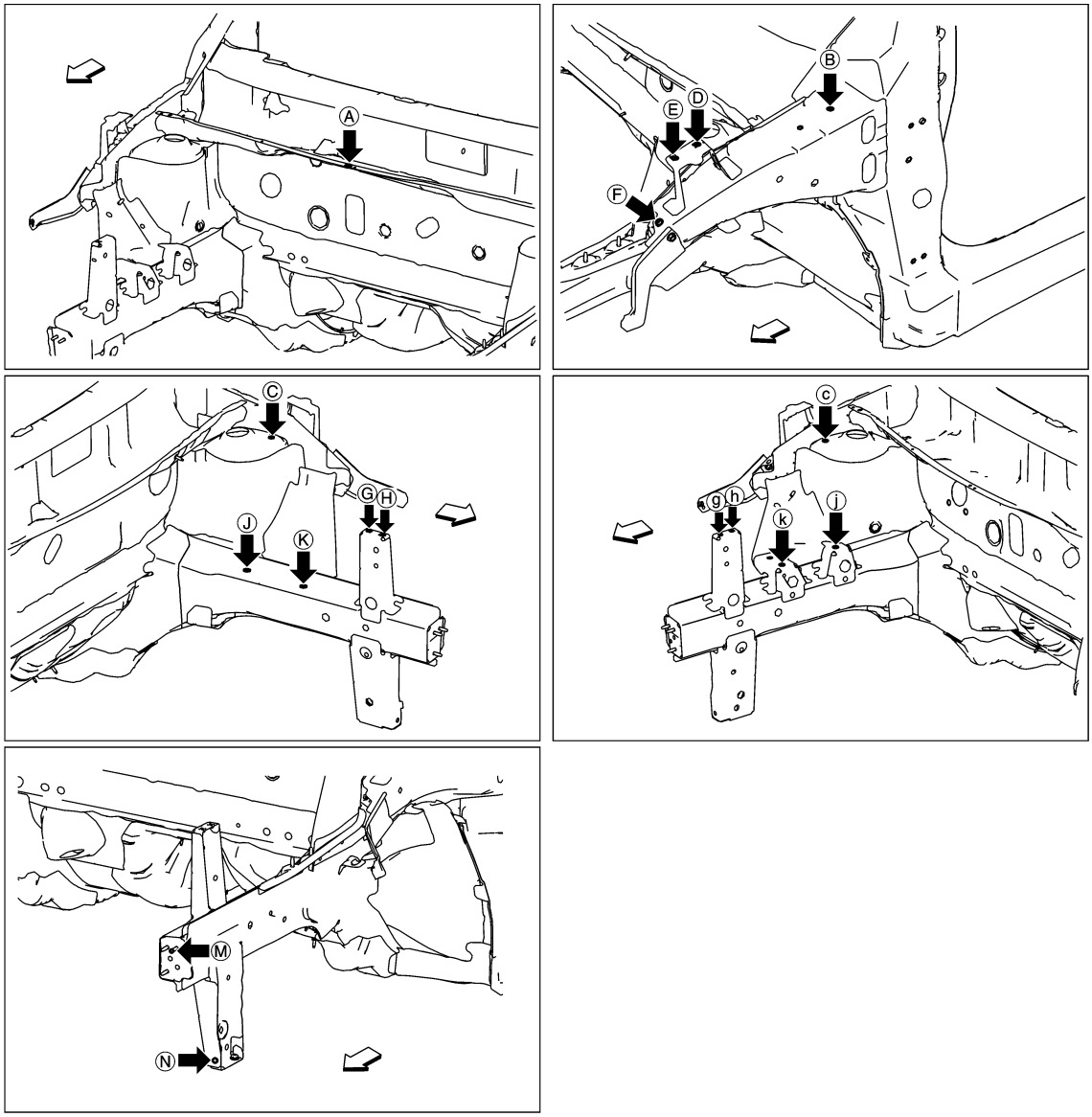

JSKIA1907ZZ

⇦: Vehicle front

Unit: mm (in)

Point	Material	Point	Material
A	Upper dash hole center of center positioning mark 8×6 (0.31×0.24)	G, g, H, h	Radiator core support side hole center ϕ7 (0.28)
B, b	Hood hinge installing hole center ϕ11 (0.43)	J, K	Front side member hole center ϕ14 (0.55)
C, c	Front strut installing hole center ϕ12 (0.47)	j, k	Engine mounting bracket hole center ϕ11 (0.43)
D, d, E, e	Front fender installing hole center ϕ7 (0.28)	M, m	Front bumper reinforcement installing bolt head
F, f	Hoodledge reinforcement hole center 13×10 (0.51×0.39)	N, n	Lower radiator core mounting bracket hole center ϕ11 (0.43)

Underbody

INFOID:0000000006024212

Measurement

Dimensions marked with ″*″ indicate symmetrically identical dimensions on both the right and left hand of the vehicle.

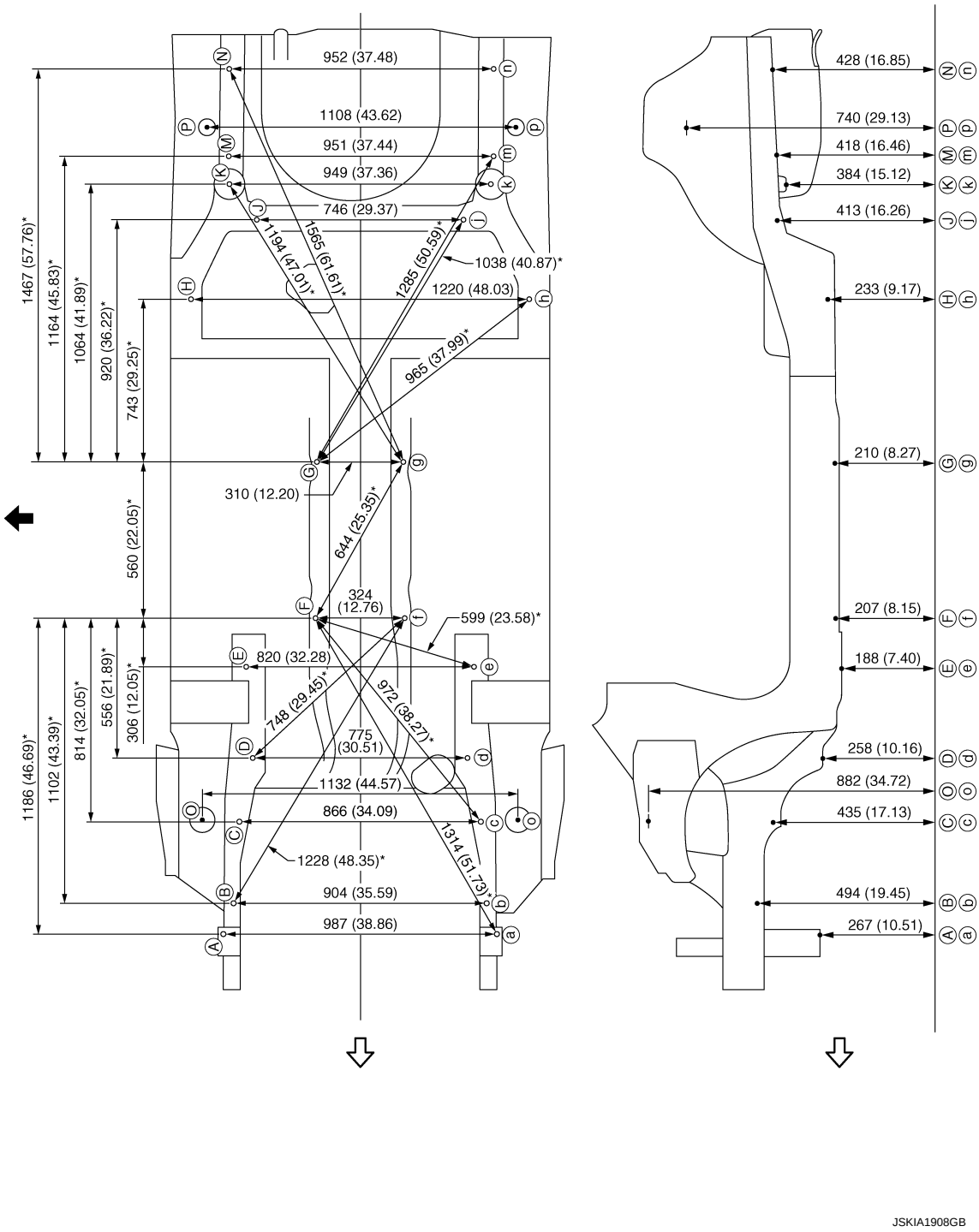

Unit: mm (in)

⇦: Vehicle front

⬅: Vehicle left side

Measurement Points

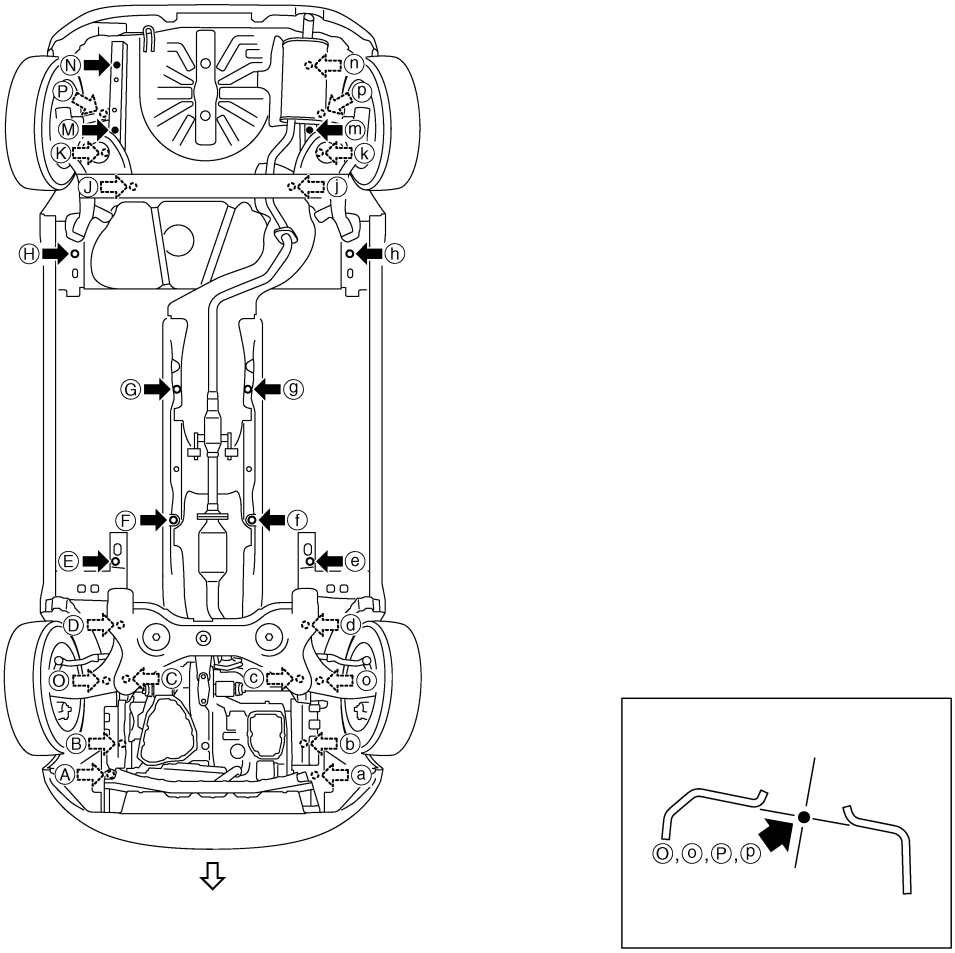

JSKIA1909ZZ

⇦: Vehicle front

Unit: mm (in)

Points	Coordinates			Remarks	Points	Coordinates			Remarks
	X	Y	Z			X	Y	Z	
A, a	±493.6 (±19.433)	–412.0 (–16.220)	267.3 (10.524)	Hole ϕ11 (0.43)	H, h	±610.0 (±24.016)	1872.5 (73.720)	232.8 (9.165)	Hole ϕ16 (0.63)
B, b	±452.0 (±17.795)	–299.0 (–11.772)	493.6 (19.433)	Hole ϕ16 (0.63)	J, j	±373.0 (±14.685)	2155.0 (84.842)	413.0 (16.260)	J: Hole ϕ16 (0.63) j: Hole 18×16 (0.71×0.63)
C, c	±432.9 (±17.043)	–8.5 (–0.335)	435.0 (17.126)	Hole ϕ13 (0.51)	K, k	±474.3 (±18.673)	2285.1 (89.964)	384.4 (15.134)	Hole ϕ20 (0.79)
D, d	±387.5 (±15.256)	219.5 (8.642)	258.2 (10.165)	Hole ϕ13 (0.51)	M, m	±475.5 (±18.720)	2385.0 (93.897)	417.5 (16.437)	Hole 18×16 (0.71×0.63)
E, e	±410.0 (±16.142)	547.0 (21.535)	188.0 (7.402)	Hole ϕ16 (0.63)	N, n	±476.0 (±18.740)	2700.0 (106.299)	427.5 (16.831)	Hole 18×16 (0.71×0.63)
F, f	±162.0 (±6.378)	725.0 (28.543)	207.2 (8.157)	Hole ϕ12 (0.47)	O, o	±565.8 (±22.276)	–2.2 (–0.087)	881.9 (34.720)	Hole ϕ52 (2.05)
G, g	±155.0 (±6.102)	1285.0 (50.590)	210.0 (8.268)	Hole ϕ20 (0.79)	P, p	±553.9 (±21.807)	2489.3 (98.004)	740.2 (29.142)	Hole ϕ20 (0.79)

Passenger Compartment

INFOID:0000000006024214

Measurement

Dimensions marked with "*" indicate symmetrically identical dimensions on both the right and left hand of the vehicle.

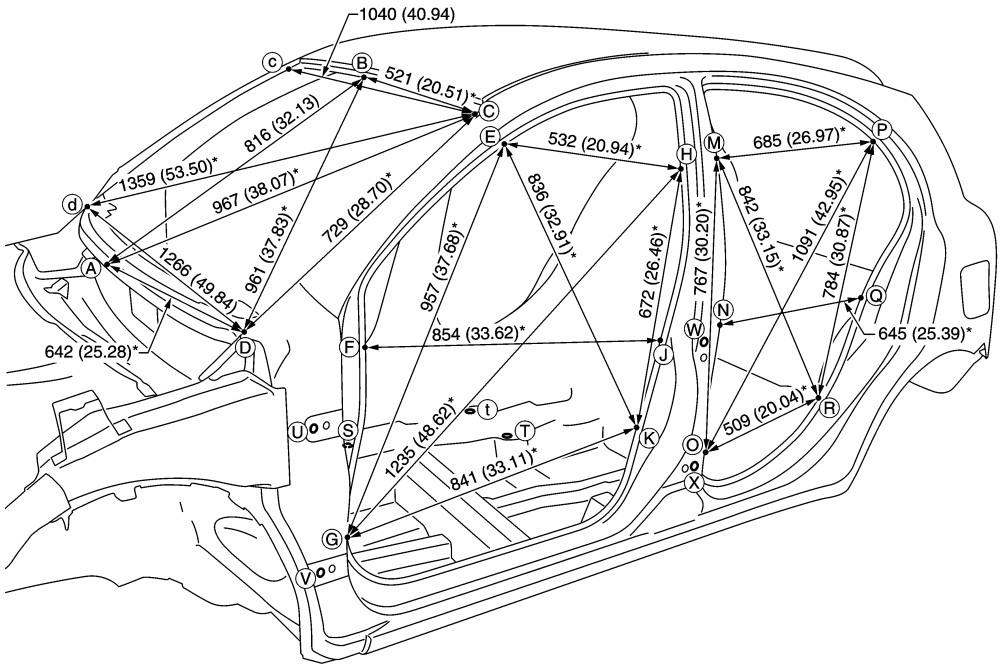

JSKIA1910GB

Unit: mm (in)

«The others»

< SERVICE DATA AND SPECIFICATIONS (SDS)

Unit: mm (in)

Point	Dimension	Memo	Point	Dimension	Memo	Point	Dimension	Memo	Point	Dimension	Memo
E - e	1133 (44.61)		J - j	1337 (52.64)		P - p	1137 (44.76)		T - N	771 (30.35)*	
E - g	1568 (61.73)*		K - k	1354 (53.31)		P - r	1472 (57.95)*		T - O	630 (24.80)*	
E - h	1282 (50.47)*		M - m	1196 (47.09)		Q - q	1337 (52.64)		T - P	1415 (55.71)*	
E - k	1495 (58.86)*		M - o	1489 (58.62)*		R - r	1367 (53.82)		T - Q	1149 (45.24)*	
F - f	1339 (52.72)		M - p	1352 (53.23)*		S - E	1124 (44.25)*		T - R	946 (37.24)*	
F - j	1587 (62.48)*		M - r	1530 (60.24)*		S - F	919 (36.18)*		U - W	1082 (42.60)*	
G - g	1362 (53.62)		N - n	1337 (52.64)		S - G	764 (30.08)*		U - X	1115 (43.90)*	
G - h	1778 (70.00)*		N - q	1484 (58.43)*		S - H	1248 (49.13)*		V - W	1133 (44.61)*	
G - k	1597 (62.87)*		O - o	1363 (53.66)		S - J	989 (38.94)*		V - X	1064 (41.89)*	
H - h	1200 (47.24)		O - p	1655 (65.16)*		S - K	878 (34.57)*				
H - k	1441 (56.73)*		O - r	1457 (57.36)*		T - M	1061 (41.77)*				

Measurement Points

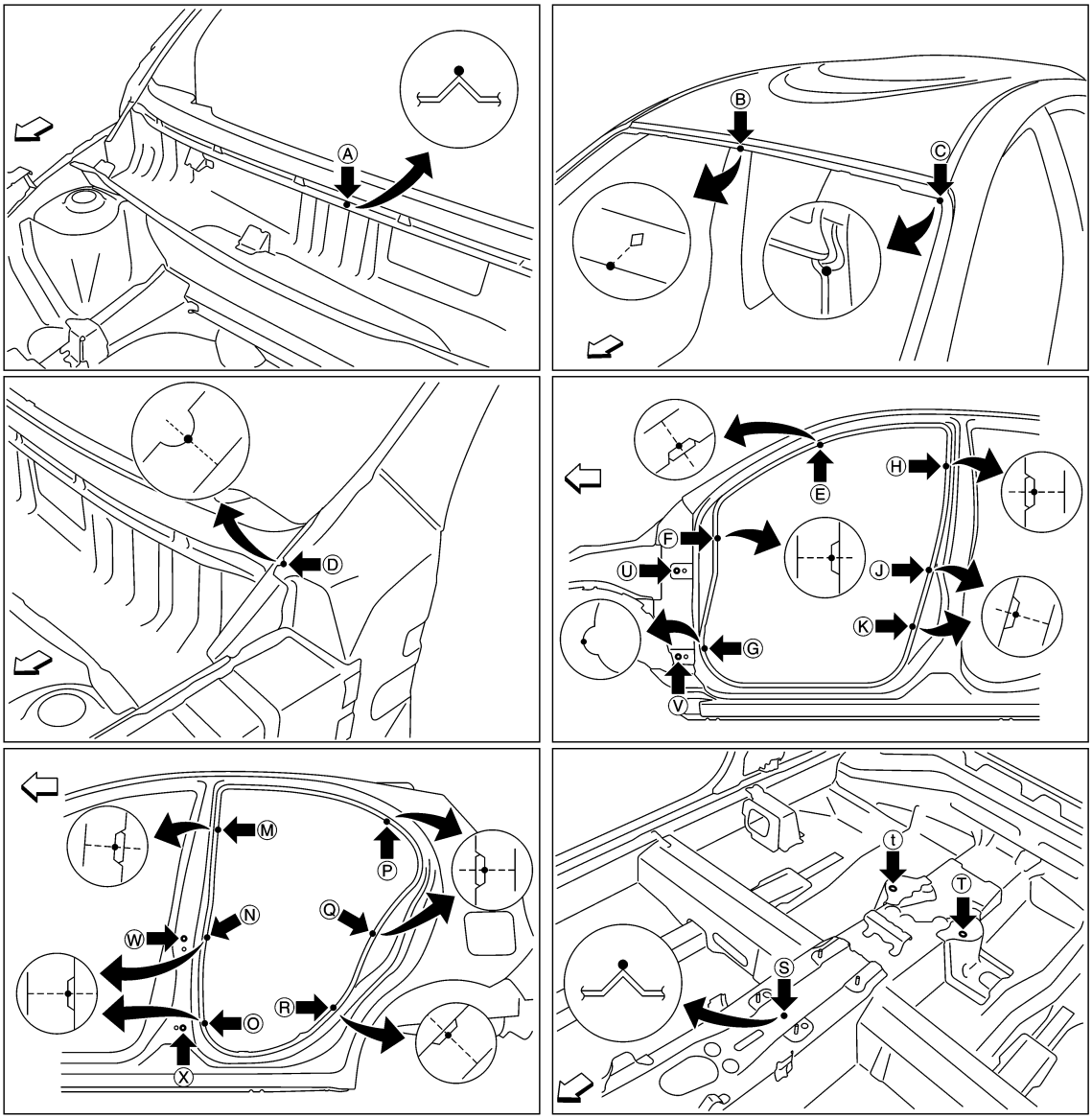

JSKIA1911ZZ

⇦: Vehicle front

Unit: mm (in)

Point	Material	Point	Material
A	Cowl top positioning mark of center positioning mark	H, h, J, j, K, k, M, m, N, n, O, o	Center pillar indent
B	Roof flange end of center positioning mark	P, p, Q, q, R, r	Rear fender indent
C, c	Outer side body joggle	S	Trans control reinforcement positioning mark of center positioning mark
D, d	Outer side body indent	T, t	Front seat mounting bracket hole center ϕ12 (0.47)
E, e, F, f, G, g	Front pillar indent	U, u, V, v, W, w, X, x	Door hinge installing hole center U, u, V, v, X, x: ϕ12 (0.47) W, w: ϕ9 (0.35)

Rear Body

INFOID:0000000006024215

Measurement

Dimensions marked with ″*″ indicate symmetrically identical dimensions on both the right and left hand of the vehicle.

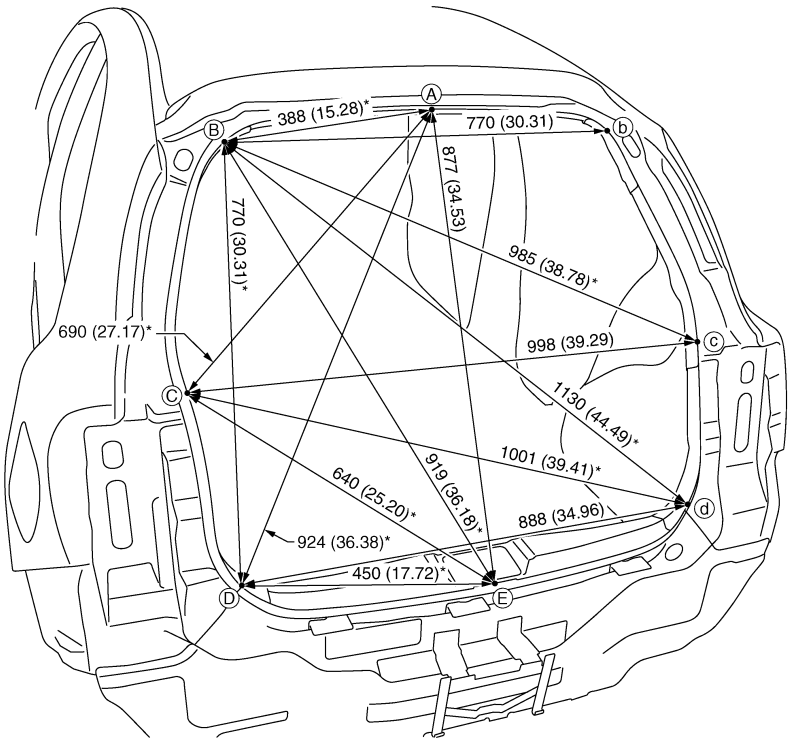

JSKIA1912GB

Unit: mm (in)

Measurement Points

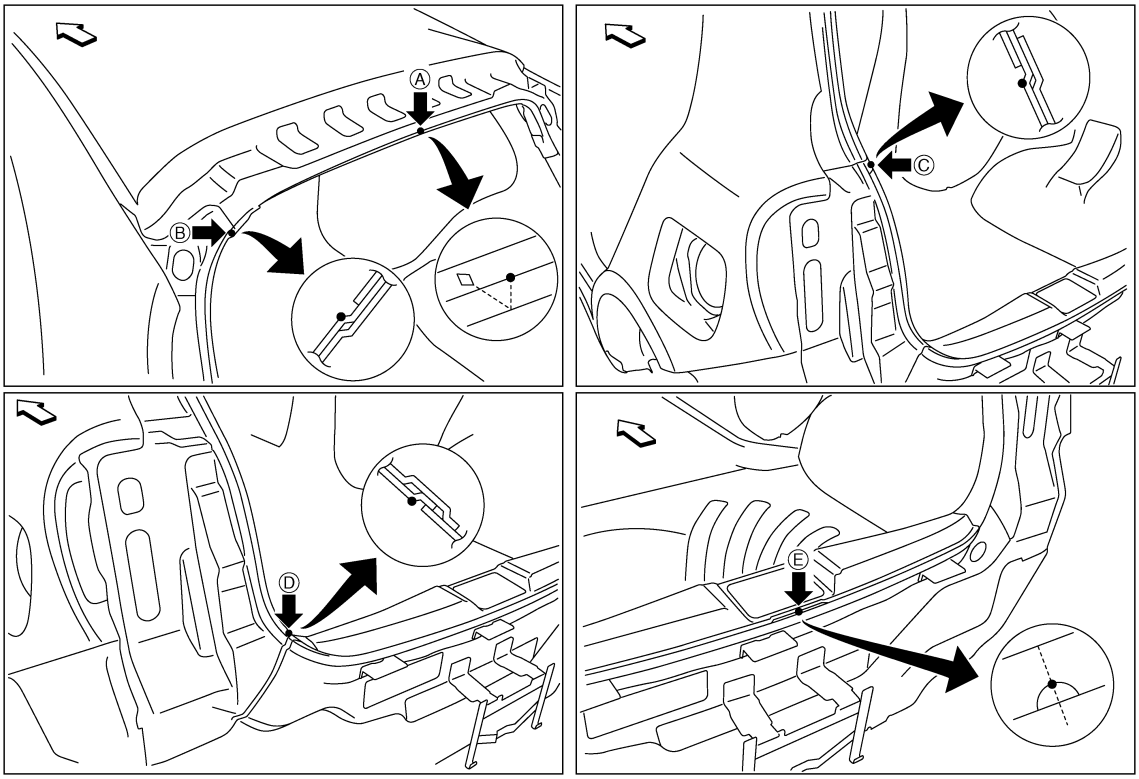

JSKIA1913ZZ

⇦: Vehicle front

Point	Material	Point	Material
A	Roof flange end of center positioning mark	C, c, D, d	Rear combination lamp base joggle
B, b	Rear fender extension joggle	E	Upper rear panel reinforcement indent of center positioning mark

SECTION CHG
CHARGING SYSTEM

CONTENTS

PRECAUTION 3

PRECAUTIONS 3
Precaution for Supplemental Restraint System (SRS) "AIR BAG" and "SEAT BELT PRE-TENSIONER" 3
Precaution Necessary for Steering Wheel Rotation after Battery Disconnect 3
Precaution for Power Generation Voltage Variable Control System 4

PREPARATION 5

PREPARATION 5
Commercial Service Tools 5

SYSTEM DESCRIPTION 6

COMPONENT PARTS 6

CHARGING SYSTEM 6
CHARGING SYSTEM : Component Parts Location 6
CHARGING SYSTEM : Component Description 6

POWER GENERATION VOLTAGE VARIABLE CONTROL SYSTEM 6
POWER GENERATION VOLTAGE VARIABLE CONTROL SYSTEM : Component Parts Location 6
POWER GENERATION VOLTAGE VARIABLE CONTROL SYSTEM : Component Description 7

SYSTEM 8

CHARGING SYSTEM 8
CHARGING SYSTEM : System Diagram 8
CHARGING SYSTEM : System Description 8

POWER GENERATION VOLTAGE VARIABLE CONTROL SYSTEM 8
POWER GENERATION VOLTAGE VARIABLE CONTROL SYSTEM : System Diagram 8
POWER GENERATION VOLTAGE VARIABLE CONTROL SYSTEM : System Description 8

WIRING DIAGRAM 10

CHARGING SYSTEM 10
Wiring Diagram 10

BASIC INSPECTION 11

DIAGNOSIS AND REPAIR WORKFLOW 11
Work Flow 11

CHARGING SYSTEM PRELIMINARY INSPECTION 16
Inspection Procedure 16

POWER GENERATION VOLTAGE VARIABLE CONTROL SYSTEM OPERATION INSPECTION 17
Inspection Procedure 17

DTC/CIRCUIT DIAGNOSIS 19

B TERMINAL CIRCUIT 19
Description 19
Diagnosis Procedure 19

L TERMINAL CIRCUIT (OPEN) 20
Description 20
Diagnosis Procedure 20

L TERMINAL CIRCUIT (SHORT) 22
Description 22
Diagnosis Procedure 22

S TERMINAL CIRCUIT 23
Description 23
Diagnosis Procedure 23

SYMPTOM DIAGNOSIS 24

CHARGING SYSTEM 24

Symptom Table 24

REMOVAL AND INSTALLATION 25

ALTERNATOR 25
Exploded View 25
Removal and Installation 27
Disassembly and Assembly 28
Inspection 28

SERVICE DATA AND SPECIFICATIONS (SDS) 30

SERVICE DATA AND SPECIFICATIONS (SDS) 30
Alternator 30

PRECAUTION

PRECAUTIONS

Precaution for Supplemental Restraint System (SRS) "AIR BAG" and "SEAT BELT PRE-TENSIONER"

INFOID:0000000006057597

The Supplemental Restraint System such as “AIR BAG” and “SEAT BELT PRE-TENSIONER”, used along with a front seat belt, helps to reduce the risk or severity of injury to the driver and front passenger for certain types of collision. Information necessary to service the system safely is included in the “SRS AIR BAG” and “SEAT BELT” of this Service Manual.

WARNING:

- **To avoid rendering the SRS inoperative, which could increase the risk of personal injury or death in the event of a collision which would result in air bag inflation, all maintenance must be performed by an authorized NISSAN/INFINITI dealer.**
- **Improper maintenance, including incorrect removal and installation of the SRS, can lead to personal injury caused by unintentional activation of the system. For removal of Spiral Cable and Air Bag Module, see the “SRS AIR BAG”.**
- **Do not use electrical test equipment on any circuit related to the SRS unless instructed to in this Service Manual. SRS wiring harnesses can be identified by yellow and/or orange harnesses or harness connectors.**

PRECAUTIONS WHEN USING POWER TOOLS (AIR OR ELECTRIC) AND HAMMERS

WARNING:

- **When working near the Air Bag Diagnosis Sensor Unit or other Air Bag System sensors with the ignition ON or engine running, DO NOT use air or electric power tools or strike near the sensor(s) with a hammer. Heavy vibration could activate the sensor(s) and deploy the air bag(s), possibly causing serious injury.**
- **When using air or electric power tools or hammers, always switch the ignition OFF, disconnect the battery, and wait at least 3 minutes before performing any service.**

Precaution Necessary for Steering Wheel Rotation after Battery Disconnect

INFOID:0000000006057598

NOTE:

- Before removing and installing any control units, first turn the push-button ignition switch to the LOCK position, then disconnect both battery cables.
- After finishing work, confirm that all control unit connectors are connected properly, then re-connect both battery cables.
- Always use CONSULT-III to perform self-diagnosis as a part of each function inspection after finishing work. If a DTC is detected, perform trouble diagnosis according to self-diagnosis results.

For vehicle with steering lock unit, if the battery is disconnected or discharged, the steering wheel will lock and cannot be turned.

If turning the steering wheel is required with the battery disconnected or discharged, follow the operation procedure below before starting the repair operation.

OPERATION PROCEDURE

1. Connect both battery cables.
   NOTE:
   Supply power using jumper cables if battery is discharged.
2. Turn the push-button ignition switch to ACC position.
   (At this time, the steering lock will be released.)
3. Disconnect both battery cables. The steering lock will remain released with both battery cables disconnected and the steering wheel can be turned.
4. Perform the necessary repair operation.
5. When the repair work is completed, re-connect both battery cables. With the brake pedal released, turn the push-button ignition switch from ACC position to ON position, then to LOCK position. (The steering wheel will lock when the push-button ignition switch is turned to LOCK position.)
6. Perform self-diagnosis check of all control units using CONSULT-III.

Precaution for Power Generation Voltage Variable Control System

INFOID:0000000006067207

CAUTION:

For thailand model, the battery current sensor that is installed to the battery cable at the negative terminal measures the charging/discharging current of the battery, and performs various controls. If the electrical component or the ground wire is connected directly to the battery terminal, the current other than that being measured with the battery current sensor is charging to or discharging from the battery. This condition causes the malfunction of the control, and then the battery discharge may occur. Do not connect the electrical component or the ground wire directly to the battery terminal.

PREPARATION

PREPARATION

Commercial Service Tools

INFOID:0000000006057227

Tool name	Description
Power tool 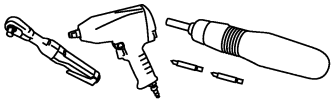 PIIB1407E	Loosening bolts, nuts and screws

SYSTEM DESCRIPTION

COMPONENT PARTS

CHARGING SYSTEM

CHARGING SYSTEM : Component Parts Location

INFOID:0000000006057230

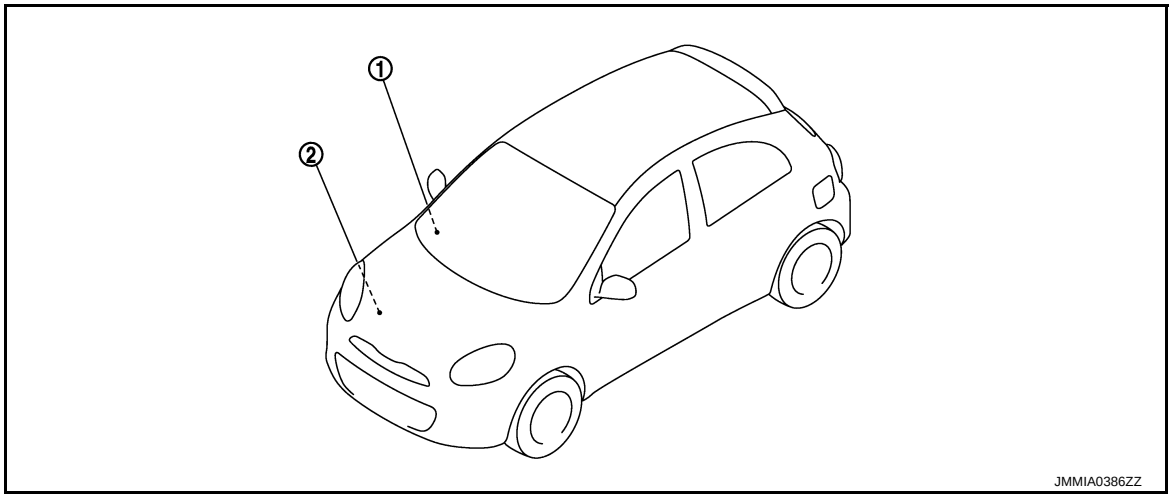

1. Charge warning lamp (On the combination meter)
2. Alternator

CHARGING SYSTEM : Component Description

INFOID:0000000006057231

Component part		Description
Alternator	“B” terminal	Refer to CHG-19, "Description".
	“S” terminal	Refer to CHG-23, "Description".
	“L” terminal	Refer to CHG-20, "Description".
Combination meter (Charge warning lamp)		The IC voltage regulator warning function activates to illuminate the charge warning lamp, if any of the following symptoms occur while alternator is operating: • Excessive voltage is produced. • No voltage is produced.

POWER GENERATION VOLTAGE VARIABLE CONTROL SYSTEM

POWER GENERATION VOLTAGE VARIABLE CONTROL SYSTEM : Component

Parts Location

INFOID:0000000006067201

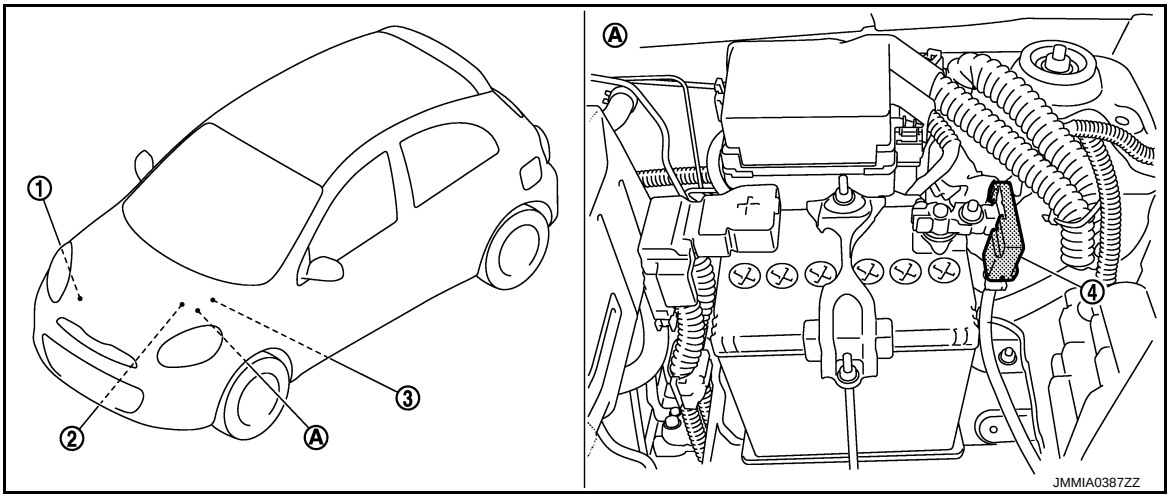

1. Alternator
2. IPDM E/R
   Refer to BCS-60, "BODY CONTROL SYSTEM : Component Parts Location".
3. ECM
   Refer to EC-16, "Component Parts Location".
4. Battery current sensor

A. Battely

POWER GENERATION VOLTAGE VARIABLE CONTROL SYSTEM : Component Description

INFOID:0000000006067202

Component part	Description
Alternator (IC voltage regulator)	IC voltage regulator controls the power generation voltage by the target power generation voltage based on the received power generation command signal. When there is no power generation command signal, the alternator performs the normal power generation according to the characteristic of the IC voltage regulator.
Battery current sensor	Battery current sensor is installed to the battery cable at the negative terminal, and it detects the charging/discharging current of the battery and sends the voltage signal to ECM according to the current value.
ECM	Battery current sensor detects the charging/discharging current of the battery. ECM judges the battery condition based on this signal. ECM judges whether to perform the power generation voltage variable control according to the battery condition. When performing the power generation voltage variable control, ECM calculates the target power generation voltage according to the battery condition and sends the calculated value as the power generation command value to IPDM E/R.
IPDM E/R	IPDM E/R converts the received power generation command value into the power generation command signal (PWM signal) and sends it to the IC voltage regulator.

SYSTEM

CHARGING SYSTEM

CHARGING SYSTEM : System Diagram

INFOID:0000000006057228

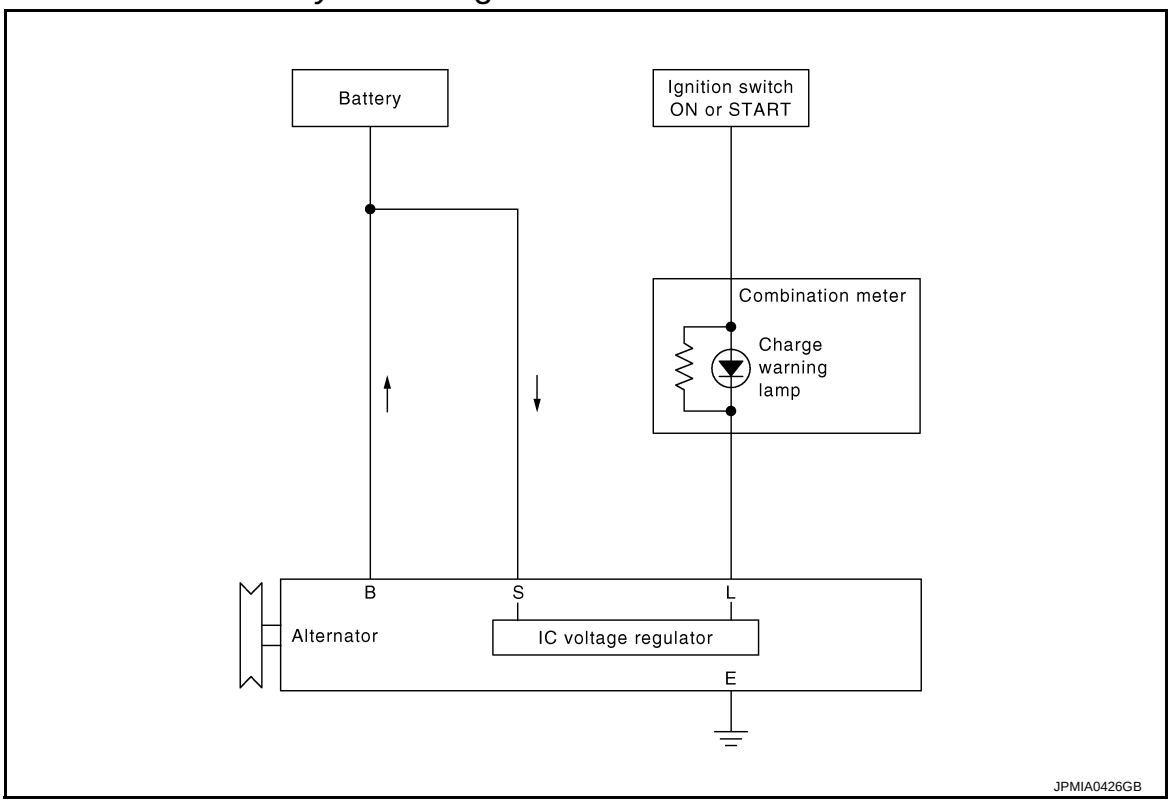

CHARGING SYSTEM : System Description

INFOID:0000000006057229

The alternator provides DC voltage to operate the vehicle's electrical system and to keep the battery charged. The voltage output is controlled by the IC voltage regulator.

POWER GENERATION VOLTAGE VARIABLE CONTROL SYSTEM

POWER GENERATION VOLTAGE VARIABLE CONTROL SYSTEM : System Diagram

INFOID:0000000006067199

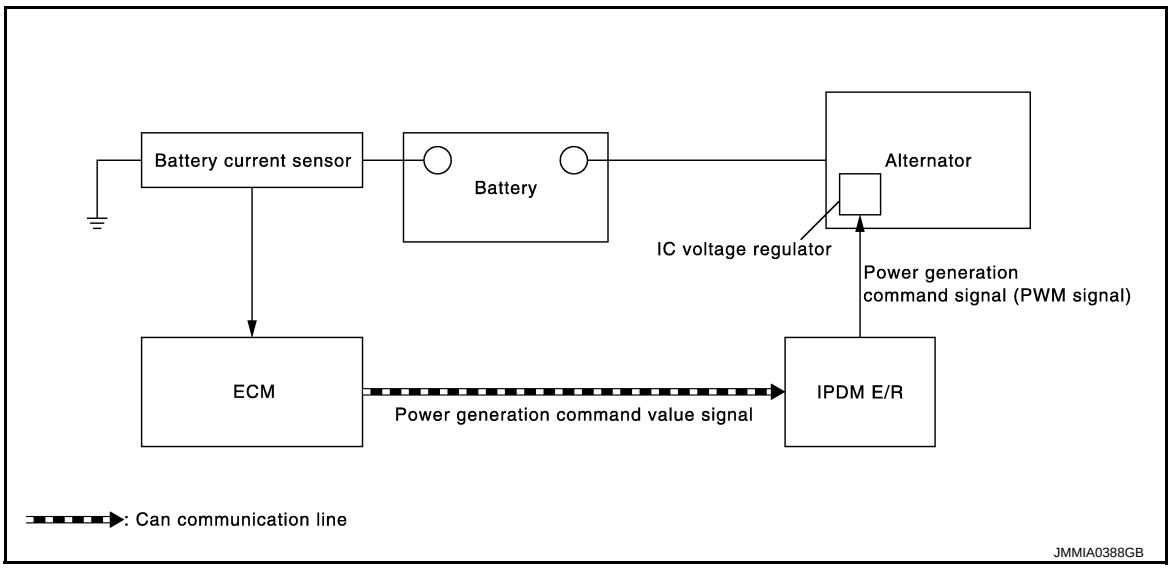

POWER GENERATION VOLTAGE VARIABLE CONTROL SYSTEM : System De-

scription

INFOID:0000000006067200

By performing the power generation voltage variable control, the engine load due to the power generation of the alternator is reduced and fuel consumption is decreased.

NOTE:

When any malfunction is detected in the power generation voltage variable control system, the power generation is performed according to the characteristic of the IC voltage regulator of the alternator.

WIRING DIAGRAM

CHARGING SYSTEM

Wiring Diagram

INFOID:0000000006057236

For connector terminal arrangements, harness layouts, and alphabets in a ⬡ (option abbreviation; if not described in wiring diagram), refer to GI-12, "Connector Information".

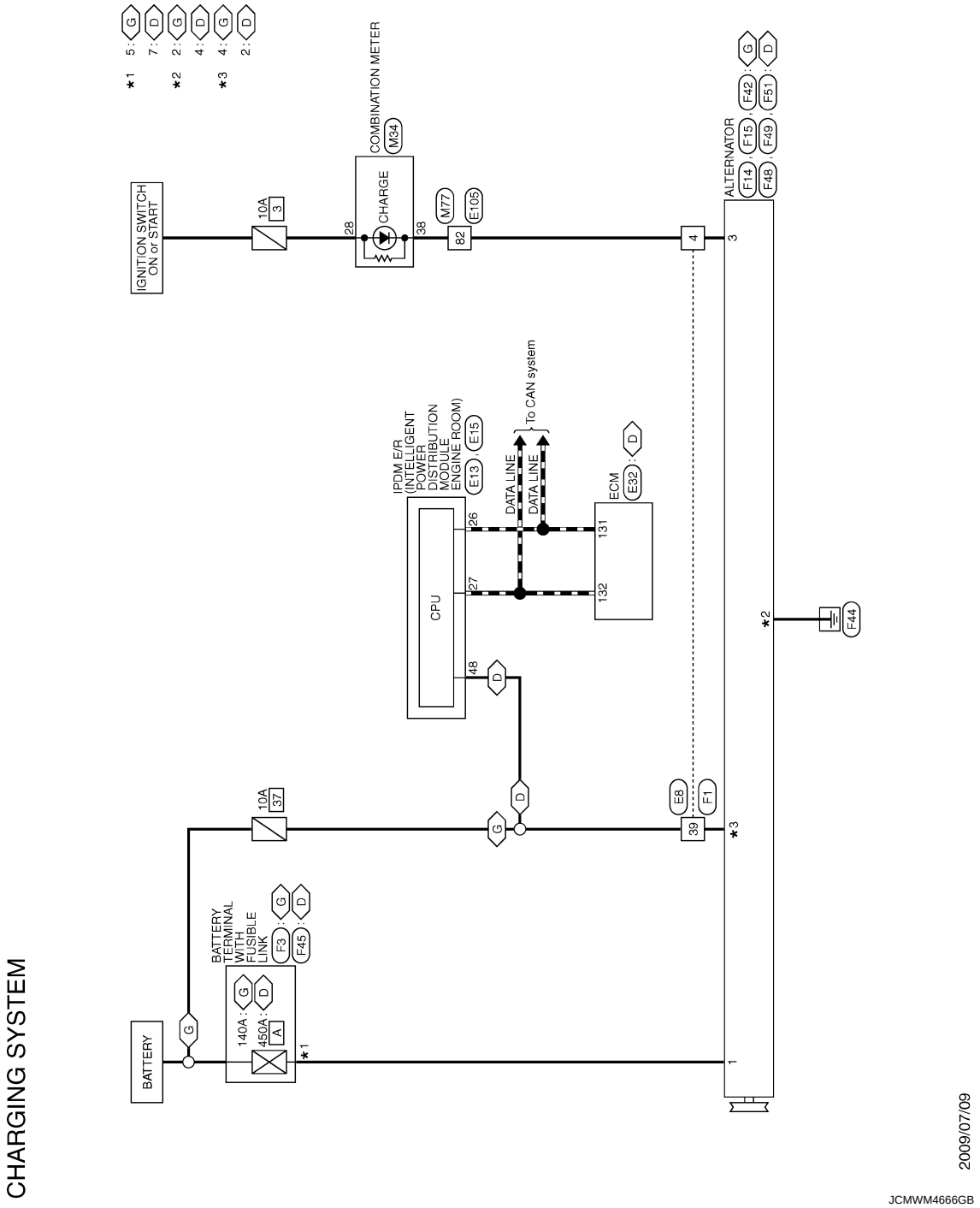

BASIC INSPECTION

DIAGNOSIS AND REPAIR WORKFLOW

Work Flow

INFOID:0000000006057237

OVERALL SEQUENCE

For Thailand

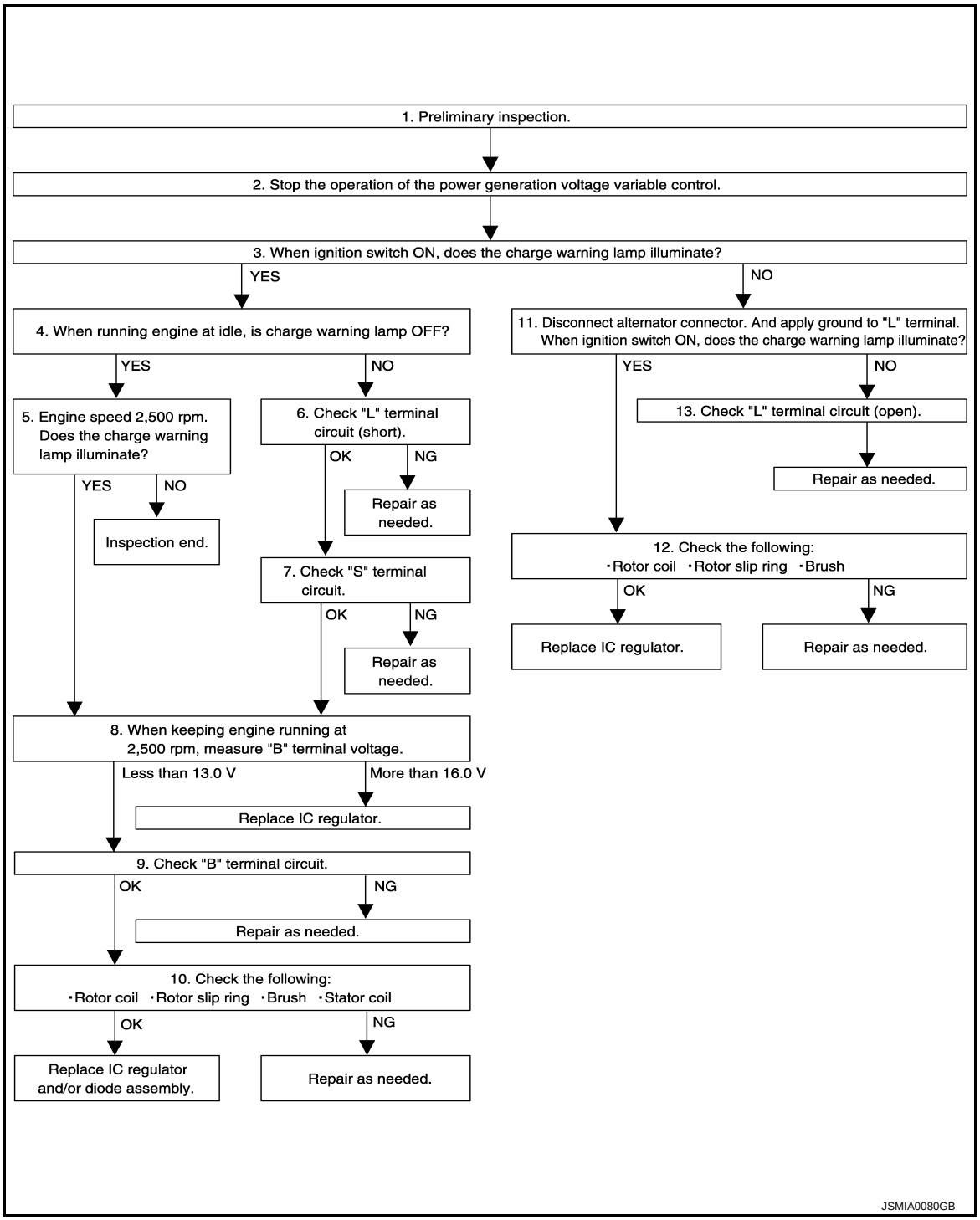

Except For Thailand

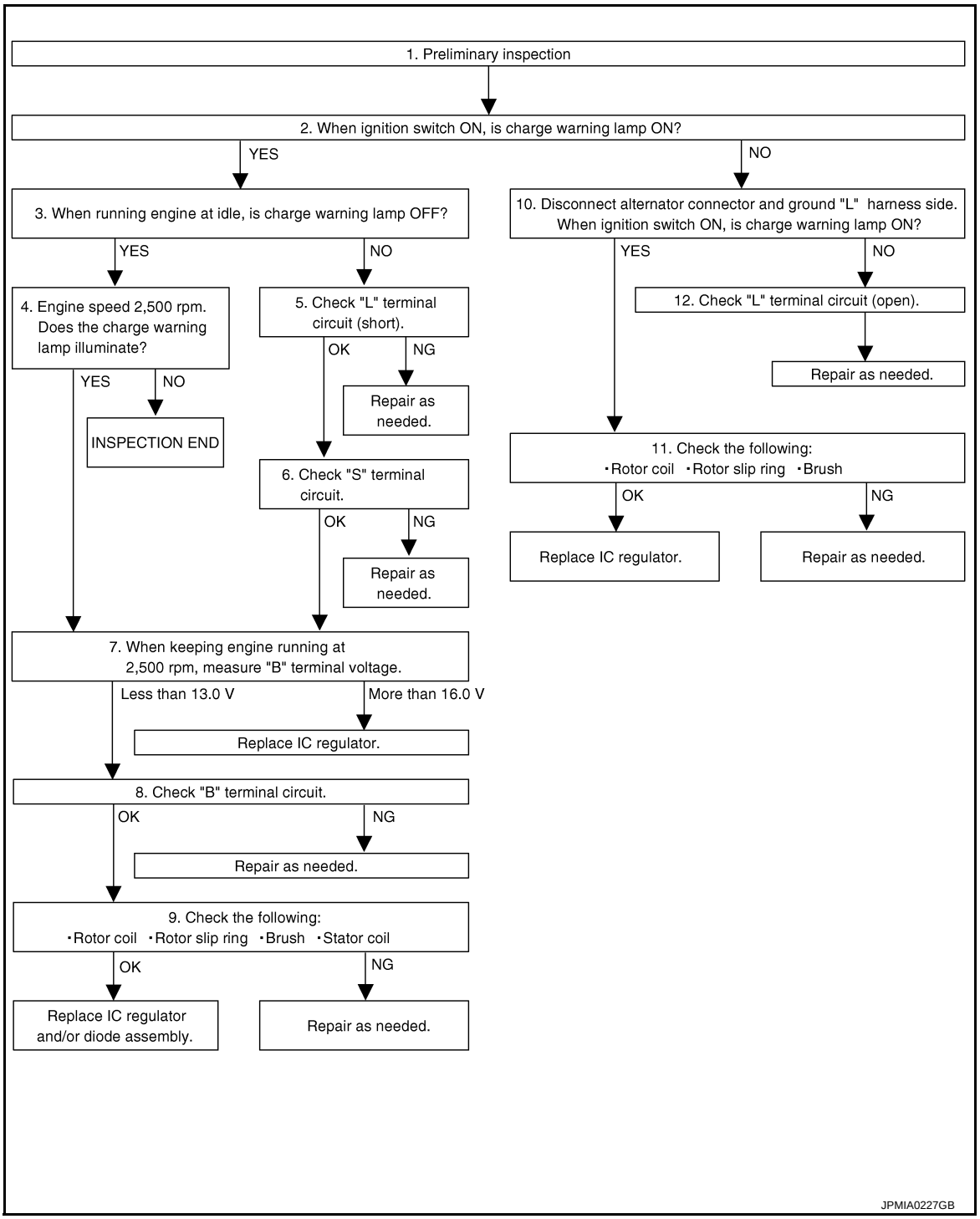

DETAILED FLOW

For Thailand

1.PRELIMINARY INSPECTION

Perform the preliminary inspection. Refer to CHG-16, "Inspection Procedure".

>> GO TO 2.

2.STOP POWER GENERATION VOLTAGE VARIABLE CONTROL SYSTEM

Stop the operation of the power generation voltage variable control in either of the following procedures.

- After selecting “ENGINE” of “SELECT SYSTEM” using CONSULT-III, set the DUTY value of “ALTERNATOR DUTY” to 0 % by selecting “ALTERNATOR DUTY” of “Active Test”. Continue “Active Test” until the end of inspection. (When the DUTY value is 0 or 100 %, the normal power generation is performed according to the characteristic of the IC regulator of the alternator.)
- Turn the ignition switch OFF, and disconnect the battery current sensor connector. [However, DTC (P1550 - P1554) of the engine might remain. After finishing the inspection, connect the battery current sensor connector and erase the self-diagnostic results history of the engine using CONSULT-III.]

>> GO TO 3.

3. INSPECTION WITH CHARGE WARNING LAMP (IGNITION SWITCH IS ON)

Turn the ignition switch ON.

Does the charge warning lamp illuminate?

YES >> GO TO 4.
NO >> GO TO 11.

4. INSPECTION WITH CHARGE WARNING LAMP (IDLING)

Start the engine and run it at idle.

Does the charge warning lamp turn OFF?

YES >> GO TO 5.
NO >> GO TO 6.

5. INSPECTION WITH CHARGE WARNING LAMP (ENGINE AT 2,500 RPM)

Increase and maintain the engine speed at 2,500 rpm.

Does the charge warning lamp illuminate?

YES >> GO TO 8.
NO >> INSPECTION END

6. “L” TERMINAL CIRCUIT (SHORT) INSPECTION

Check “L” terminal circuit (short). Refer to CHG-22, "Diagnosis Procedure".

Is the inspection result normal?

YES >> GO TO 7.
NO >> Repair as needed.

7. “S” TERMINAL CIRCUIT INSPECTION

Check “S” terminal circuit. Refer to CHG-23, "Diagnosis Procedure".

Is the inspection result normal?

YES >> GO TO 8.
NO >> Repair as needed.

8. MEASURE “B” TERMINAL VOLTAGE

Start engine. When keeping engine running at 2,500 rpm, measure “B” terminal voltage.

What voltage does the measurement result show?

Less than 13.0 V>>GO TO 9.
More than 16.0 V>>Replace IC voltage regulator.

9. “B” TERMINAL CIRCUIT INSPECTION

Check “B” terminal circuit. Refer to CHG-19, "Diagnosis Procedure".

Is the inspection result normal?

YES >> GO TO 10.
NO >> Repair as needed.

10. DISASSEMBLE AND CHECK ALTERNATOR

Check the following conditions.

- Rotor coil
- Rotor slip ring
- Brush

- Stator coil

Refer to CHG-28, "Inspection".

Are these normal?

YES >> Replace IC voltage regulator and/or diode assembly.
NO >> Repair as needed.

11. INSPECTION WITH CHARGE WARNING LAMP (IGNITION SWITCH IS ON)

1. Disconnect alternator connector and ground “L” harness side.
2. Turn the ignition switch ON.

Does the charge warning lamp illuminate?

YES >> GO TO 12.
NO >> GO TO 13.

12. DISASSEMBLE AND CHECK ALTERNATOR

Check the following conditions.

- Rotor coil
- Rotor slip ring
- Brush

Refer to CHG-28, "Inspection".

Are these normal?

YES >> Replace IC voltage regulator.
NO >> Repair as needed.

13. CHECK “L” TERMINAL CIRCUIT (OPEN)

Check “L” terminal circuit (open). Refer to CHG-20, "Diagnosis Procedure".

>> Repair as needed.

Except For Thailand

1. PRELIMINARY INSPECTION

Perform the preliminary inspection. Refer to CHG-16, "Inspection Procedure".

>> GO TO 2.

2. INSPECTION WITH CHARGE WARNING LAMP (IGNITION SWITCH IS ON)

Turn the ignition switch ON.

Does the charge warning lamp illuminate?

YES >> GO TO 3.
NO >> GO TO 10.

3. INSPECTION WITH CHARGE WARNING LAMP (IDLING)

Start the engine and run it at idle.

Does the charge warning lamp turn OFF?

YES >> GO TO 4.
NO >> GO TO 5.

4. INSPECTION WITH CHARGE WARNING LAMP (ENGINE AT 2,500 RPM)

Increase and maintain the engine speed at 2,500 rpm.

Does the charge warning lamp illuminate?

YES >> GO TO 7.
NO >> INSPECTION END

5. “L” TERMINAL CIRCUIT (SHORT) INSPECTION

Check “L” terminal circuit (short). Refer to CHG-22, "Diagnosis Procedure".

Is the inspection result normal?

YES >> GO TO 6.

NO >> Repair as needed.

6. "S" TERMINAL CIRCUIT INSPECTION

Check "S" terminal circuit. Refer to CHG-23, "Diagnosis Procedure".

Is the inspection result normal?

YES >> GO TO 7.
NO >> Repair as needed.

7. MEASURE "B" TERMINAL VOLTAGE

Start engine. When keeping engine running at 2,500 rpm, measure "B" terminal voltage.

What voltage does the measurement result show?

Less than 13.0 V>>GO TO 8.
More than 16.0 V>>Replace IC voltage regulator.

8. "B" TERMINAL CIRCUIT INSPECTION

Check "B" terminal circuit. Refer to CHG-19, "Diagnosis Procedure".

Is the inspection result normal?

YES >> GO TO 9.
NO >> Repair as needed.

9. DISASSEMBLE AND CHECK ALTERNATOR

Check the following conditions.
- Rotor coil
- Rotor slip ring
- Brush
- Stator coil

Refer to CHG-28, "Inspection".

Are these normal?

YES >> Replace IC voltage regulator and/or diode assembly.
NO >> Repair as needed.

10. INSPECTION WITH CHARGE WARNING LAMP (IGNITION SWITCH IS ON)

1. Disconnect alternator connector and ground "L" harness side.
2. Turn the ignition switch ON.

Does the charge warning lamp illuminate?

YES >> GO TO 11.
NO >> GO TO 12.

11. DISASSEMBLE AND CHECK ALTERNATOR

Check the following conditions.
- Rotor coil
- Rotor slip ring
- Brush

Refer to CHG-28, "Inspection".

Are these normal?

YES >> Replace IC voltage regulator.
NO >> Repair as needed.

12. CHECK "L" TERMINAL CIRCUIT (OPEN)

Check "L" terminal circuit (open). Refer to CHG-20, "Diagnosis Procedure".

>> Repair as needed.

CHARGING SYSTEM PRELIMINARY INSPECTION

Inspection Procedure

INFOID:0000000006057239

1.CHECK BATTERY TERMINALS CONNECTION

Check if battery terminals are clean and tight.

Is the inspection result normal?

YES >> GO TO 2.
NO >> Repair battery terminals connection.

2.CHECK FUSE

Check for blown fuse and fusible link.

Unit	Power source (Power supply terminals)	Fuse No.
Alternator	Battery (“S” terminal)	32
Combination meter	Ignition switch ON (“L” terminal)	5

Is the inspection result normal?

YES >> GO TO 3.
NO >> Be sure to eliminate the cause of malfunction before installing new fuse.

3.CHECK “E” TERMINAL CONNECTION(ALTERNATOR GROUND)

Check if “E” terminal (alternator ground) is clean and tight.

Is the inspection result normal?

YES >> GO TO 4.
NO >> Repair “E” terminal (alternator ground) connection.

4.CHECK DRIVE BELT TENSION

Check drive belt tension. Refer to EM-18, "Checking".

Is the inspection result normal?

YES >> INSPECTION END
NO >> Repair as needed.

POWER GENERATION VOLTAGE VARIABLE CONTROL SYSTEM OPERATION INSPECTION

Inspection Procedure

INFOID:0000000006069245

CAUTION:
When performing this inspection, always use a charged battery that has completed the battery inspection. (When the charging rate of the battery is low, the response speed of the voltage change will become slow. This can cause an incorrect inspection.)

1. CHECK ECM (CONSULT-III)

Perform ECM self-diagnosis with CONSULT-III. Refer to EC-57, "CONSULT-III Function".

Self-diagnostic results content

No malfunction detected>> GO TO 2.
Malfunction detected>> Check applicable parts, and repair or replace corresponding parts.

2. CHECK OPERATION OF POWER GENERATION VOLTAGE VARIABLE CONTROL SYSTEM

1. Connect CONSULT-III and start the engine.
2. The selector lever is in “P” or “N” position and all of the electric loads and A/C, etc. are turned OFF.
3. Select “ALTERNATOR DUTY” at “Active Test” of “ENGINE”, and then check the value of “BATTERY VOLT” monitor when DUTY value of “ALTERNATOR DUTY” is set to 40.0 %.

“BATTERY VOLT”	
2 seconds after setting the DUTY value of “ALTERNATOR DUTY” to 40.0 %	**: 12 - 13.6 V**

4. Check the value of “BATTERY VOLT” monitor when DUTY value of “ALTERNATOR DUTY” is set to 80.0%.

“BATTERY VOLT”	
20 seconds after setting the DUTY value of “ALTERNATOR DUTY” to 80.0 %	**: +0.5 V or more against the value of “BATTERY VOLT” monitor when DUTY value is 40.0 %**

Is the measurement value within the specification?

YES >> INSPECTION END
NO >> GO TO 3.

3. CHECK IPDM E/R (CONSULT-III)

Perform IPDM E/R self-diagnosis with CONSULT-III. Refer to PCS-38, "CONSULT-III Function (IPDM E/R)".

Self-diagnostic results content

No malfunction detected>> GO TO 4.
Malfunction detected>> Check applicable parts, and repair or replace corresponding parts.

4. CHECK HARNESS BETWEEN ALTERNATOR AND IPDM E/R

1. Turn ignition switch OFF.
2. Disconnect alternator connector and IPDM E/R connector.
3. Check continuity between alternator harness connector and IPDM E/R harness connector.

Alternator harness connector		IPDM E/R harness connector		Continuity
Connector	Terminal	Connector	Terminal	
F15	5	F113	48	Existed

4. Check continuity between alternator harness connector and ground.

Alternator harness connector		Ground	Continuity
Connector	Terminal		
F15	5		Not existed

Is the inspection result normal?

YES >> Replace IPDM E/R.
NO >> Repair harness or connector between IPDM E/R and alternator.

DTC/CIRCUIT DIAGNOSIS

B TERMINAL CIRCUIT

Description

INFOID:0000000006057240

"B" terminal circuit supplies power to charge the battery and to operate the vehicle's electrical system.

Diagnosis Procedure

INFOID:0000000006057241

1. CHECK "B" TERMINAL CONNECTION

1. Turn ignition switch OFF.
2. Check if "B" terminal is clean and tight.

Is the inspection result normal?

YES >> GO TO 2.
NO >> Repair "B" terminal connection.

2. CHECK "B" TERMINAL CIRCUIT

Check voltage between alternator "B" terminal and ground.

Terminals			Voltage (Approx.)
(+)		(–)	
Alternator "B" terminal	Terminal		
F14	1	Ground	Battery voltage

Is the inspection result normal?

YES >> GO TO 3.
NO >> Check harness for open between alternator and fusible link.

3. CHECK "B" TERMINAL CONNECTION (VOLTAGE DROP TEST)

1. Start engine, then engine running at idle and warm.
2. Check voltage between battery positive terminal and alternator "B" terminal.

Terminals			Voltage (Approx.)
(+)	(–)		
	Alternator "B" terminal	Terminal	
Battery positive terminal	F14	1	Less than 0.2 V

Is the inspection result normal?

YES >> "B" terminal circuit is normal. Refer to CHG-11, "Work Flow".
NO >> Check harness between battery and alternator for poor continuity.

L TERMINAL CIRCUIT (OPEN)

Description

INFOID:0000000006057242

The “L” terminal circuit controls the charge warning lamp. The charge warning lamp illuminates when the ignition switch is set to ON or START. When the alternator is providing sufficient voltage with the engine running, the charge warning lamp will go off. If the charge warning lamp illuminates with the engine running, a malfunction is indicated.

Diagnosis Procedure

INFOID:0000000006057243

1.CHECK “L” TERMINAL CONNECTION

1. Turn ignition switch OFF.
2. Check if “L” terminal is clean and tight.

Is the inspection result normal?

YES >> GO TO 2.
NO >> Repair “L” terminal connection.

2.CHECK “L” TERMINAL CIRCUIT (OPEN)

1. Disconnect alternator connector.
2. Apply ground to alternator harness connector terminal.
3. Check condition of the charge warning lamp with the ignition switch in the ON position.

Alternator harness connector	Terminal	Ground	Condition	
			Ignition switch position	Charge warning lamp
F15	3		ON	Illuminate

Does it illuminate?

YES >> “L” terminal circuit is normal. Refer to CHG-11, "Work Flow".
NO >> GO TO 3.

3.CHECK HARNESS CONTINUITY (OPEN CIRCUIT)

1. Disconnect the battery cable from the negative terminal.
2. Disconnect the combination meter connector.
3. Check continuity between alternator harness connector and combination meter harness connector.

Alternator harness connector		Combination meter harness connector		Continuity
Connector No.	Terminal No.	Connector No.	Terminal No.	
F15	3	M34	35	Existed

Is the inspection result normal?

YES >> GO TO 4.
NO >> Repair the harness or connector.

4.CHECK HARNESS CONTINUITY (OPEN CIRCUIT)

Check continuity between combination meter harness connector M34 terminal 3 and 10A fuse [No.5, located in the fuse block(J/B)].

Does continuity exist?

YES >> GO TO 5.
NO >> Repair the harness.

5.CHECK POWER SUPPLY CIRCUIT

1. Connect the battery cable to the negative terminal.
2. Check voltage between combination meter harness connector and ground.

Terminals			Condition	Voltage (Approx.)
(+)		(–)		
Combination meter harness connector	Terminal			
M34	3	Ground	When the ignition switch is in ON position	Battery voltage

Is the inspection result normal?

YES >> Replace combination meter.
NO >> Inspect the power supply circuit. Refer to PG-19, "Wiring Diagram - IGNITION POWER SUPPLY - ".

L TERMINAL CIRCUIT (SHORT)

Description

INFOID:0000000006057244

The “L” terminal circuit controls the charge warning lamp. The charge warning lamp illuminates when the ignition switch is set to ON or START. When the alternator is providing sufficient voltage with the engine running, the charge warning lamp will go off. If the charge warning lamp illuminates with the engine running, a malfunction is indicated.

Diagnosis Procedure

INFOID:0000000006057245

1.CHECK “L” TERMINAL CIRCUIT (SHORT)

1. Turn ignition switch OFF.
2. Disconnect alternator connector.
3. Turn ignition switch ON.

Does charge warning lamp illuminate?

YES >> GO TO 2.
NO >> Refer to CHG-11, "Work Flow".

2.CHECK HARNESS CONTINUITY (SHORT CIRCUIT)

1. Turn the ignition switch OFF.
2. Disconnect the battery cable from the negative terminal.
3. Disconnect combination meter connector.
4. Check continuity between combination meter harness connector and ground.

Combination meter harness connector		Ground	Continuity
Connector No.	Terminal No.		
M34	35		Not existed

Is the inspection result normal?

YES >> Replace combination meter.
NO >> Repair the harness.

S TERMINAL CIRCUIT

Description

INFOID:0000000006057246

The output voltage of the alternator is controlled by the IC voltage regulator at the “S” terminal detecting the input voltage.
The “S” terminal circuit detects the battery voltage to adjust the alternator output voltage with the IC voltage regulator.

Diagnosis Procedure

INFOID:0000000006057247

1. CHECK “S” TERMINAL CONNECTION

1. Turn ignition switch OFF.
2. Check if “S” terminal is clean and tight.

Is the inspection result normal?

YES >> GO TO 2.
NO >> Repair “S” terminal connection.

2. CHECK “S” TERMINAL CIRCUIT

Check voltage between alternator harness connector and ground.

Terminals			Voltage (Approx.)
(+)		(–)	
Alternator harness connector	Terminal		
F15	4	Ground	Battery voltage

Is the inspection result normal?

YES >> Refer to CHG-11, "Work Flow".
NO >> Check harness for open between alternator and fuse.

SYMPTOM DIAGNOSIS

CHARGING SYSTEM

Symptom Table

INFOID:0000000006057248

Symptom	Reference
Discharged battery	Refer to CHG-11, "Work Flow".
The charge warning lamp does not illuminate when the ignition switch is set to ON.	
The charge warning lamp does not turn OFF after the engine starts.	
The charging warning lamp turns ON when increasing the engine speed.	

REMOVAL AND INSTALLATION

ALTERNATOR

Exploded View

INFOID:0000000006057264

REMOVAL

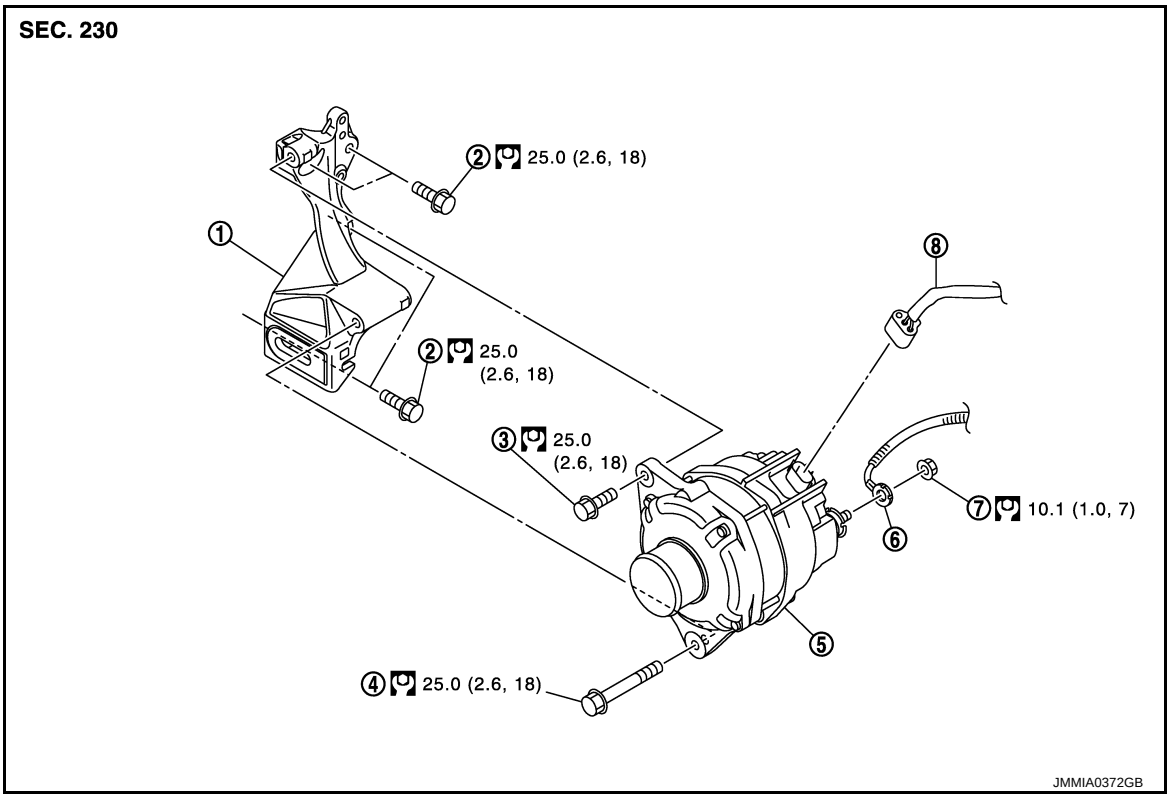

1. Alternator bracket
2. Alternator bracket mounting bolt
3. Alternator mounting bolt upper
4. Alternator mounting bolt lower
5. Alternator
6. Terminal B harness
7. Terminal B nut
8. Alternator connector

Refer to GI-4, "Components" for symbols in the figure.

DISASSEMBLY

Type: 2607689

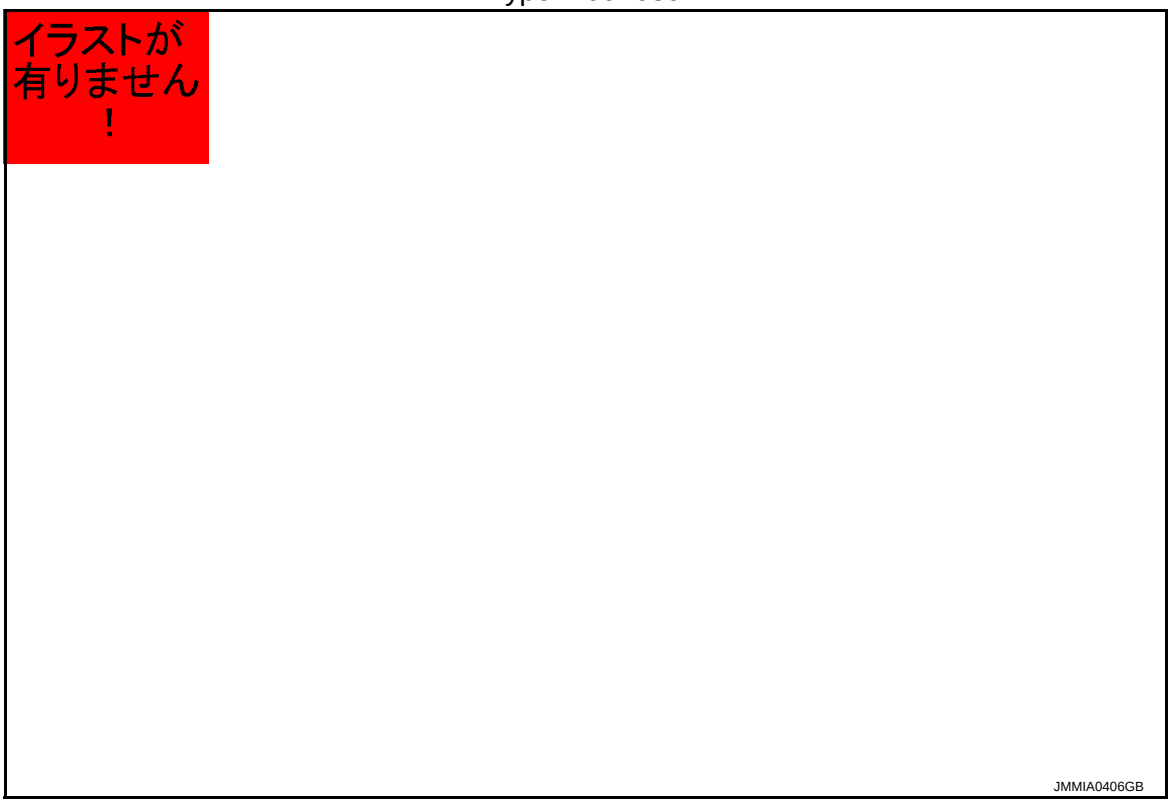

1. Rotor assembly
2. Retainer
3. Front bearing
4. Front bracket assembly
5. Pulley
6. Pulley nut
7. Stator assembly
8. Rear bearing
9. Rear bracket assembly
10. Circuit board assembly
11. Regulator assembly
12. Stud bolt
13. Cover

Refer to GI-4, "Components" for symbols in the figure.

Type: A005TL0191

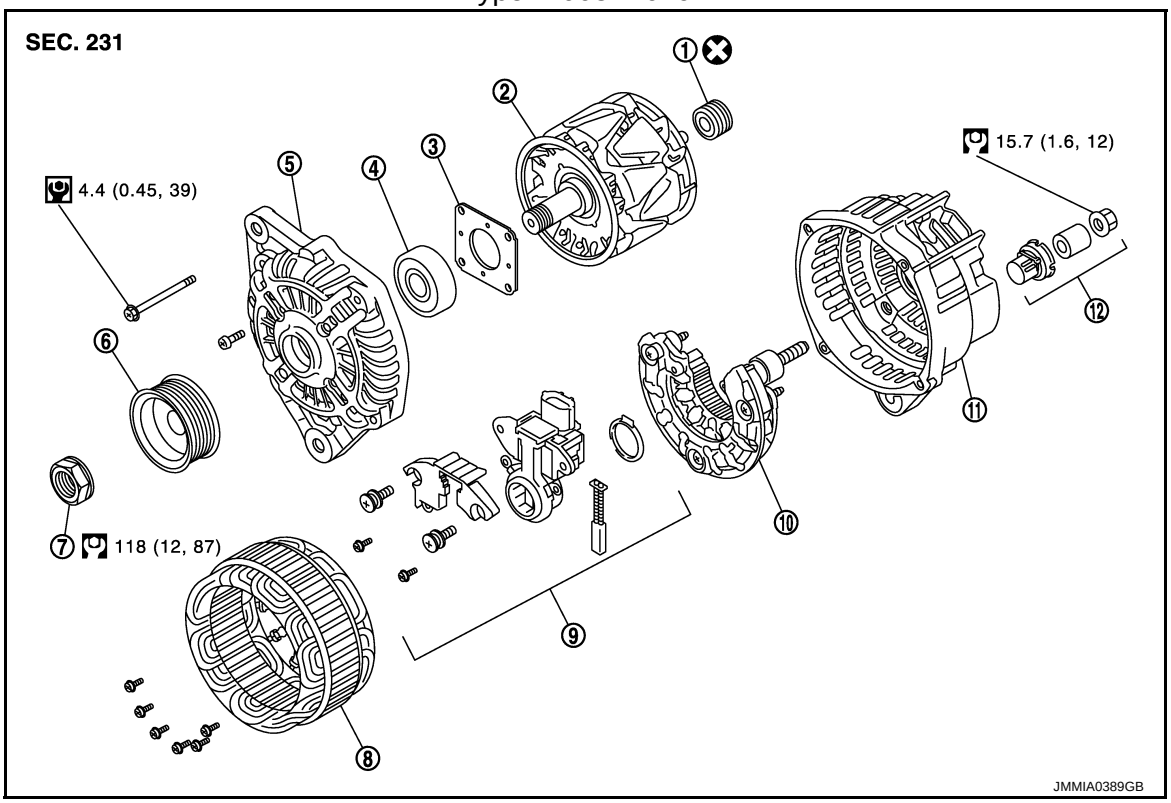

1.	Rear bearing	2.	Rotor assembly	3.	Retainer
4.	Front bearing	5.	Front bracket assembly	6.	Pulley
7.	Pulley nut	8.	Stator assembly	9.	IC voltage regulator assembly
10.	Diode assembly	11.	Rear bracket assembly	12.	Terminal set

Refer to GI-4, "Components" for symbols in the figure.

Removal and Installation

INFOID:0000000006057265

REMOVAL

1. Disconnect the battery cable from the negative terminal. Refer to PG-143, "Removal and Installation".
2. Remove drive belt. Refer to EM-19, "Removal and Installation".
3. Remove condenser side seal. Refer to DLK-114, "Exploded View".
4. Remove A/C compressor mounting bolts, and then A/C compressorをradiator core suppurt lowerの上に仮置きする (with A/C models)。Refer to HA-30, "Exploded View".
5. Disconnect alternator connector.
6. Remove terminal B nut and disconnect terminal B harness.
7. Remove alternator mounting bolt upper.
8. Remove alternator mounting bolt lower.
9. Alternator を車両横側から取り外す。

INSTALLATION

Install in the reverse order of removal.

CAUTION:

- **Temporarily tighten the alternator bolts in order from the lower to the upper, and then tighten them in order from the upper to the lower.**
- **For the alternator, the front side (pulley side) surface is the reference surface. Fit the reference surface to the alternator mounting part, and then tighten the bolts.**
- **Be careful to tighten terminal B nut carefully.**
- **Install alternator, and check tension of belt. Refer to EM-18, "Checking".**

Disassembly and Assembly

INFOID:0000000006057266

DISASSEMBLY

Rear Cover

NOTE:

Rear cover may be hard to remove because a ring is used to lock outer race of rear bearing. To facilitate removal of rear cover, heat only the bearing box section until the temperature increases to approximately 30°C (86°F) with a soldering iron (200W capacity).

CAUTION:

Never use a heat gun, as if can damage diode assembly.

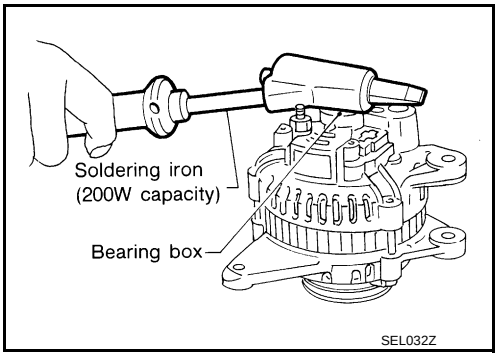

ASSEMBLY

Rear Bearing

CAUTION:

- **Never reuse rear bearing. Replace with a new one.**
- **Never lubricate rear bearing outer race.**

Rear Cover Installation

1. Fit brush assembly, diode assembly, regulator assembly and stator.

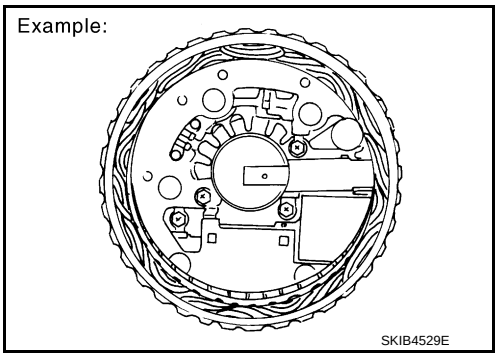

2. Push brushed up with fingers and install them to rotor.
   NOTE:
   Take care not damage slip ring sliding surface.

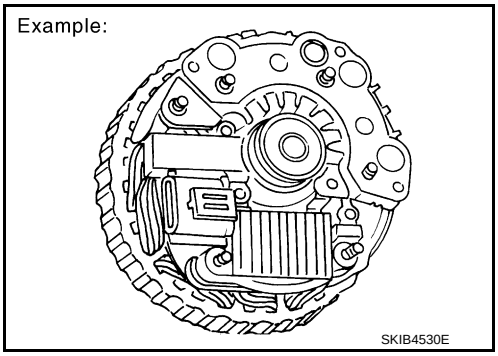

Inspection

INFOID:0000000006057267

INSPECTION

Rotor Check

1. Resistance test

Resistance : Refer to SDS CHG-30, "Alternator".

- Replace the rotor if the measurement value is outside of the specified range.

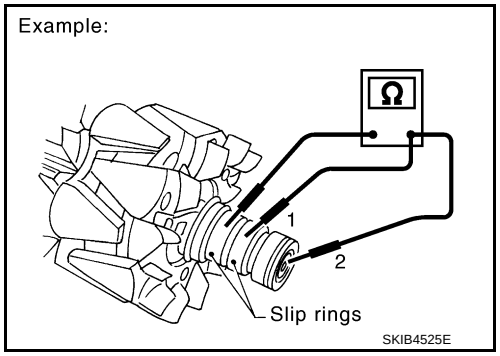

2. Insulator test
   - Replace the rotor if continuity exists.
3. Check slip ring for wear.

Slip ring minimum outer diameter : Refer to SDS CHG-30, "Alternator".

- Replace the rotor if the measurement value is outside of the specified range.

Brush Check

1. Check smooth movement of brush.
   - Check brush holder and clean if it is not smooth.
2. Check brush for wear.
   - Replace brush if it is worn down to the limit line.

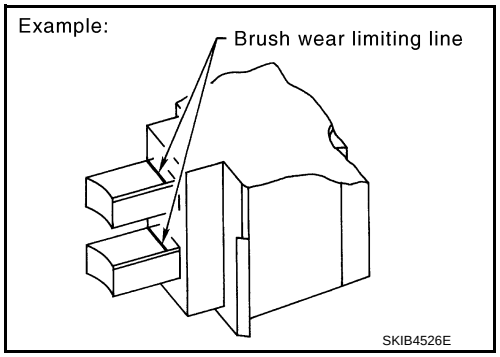

Stator Check

1. Continuity test
   - Replace the stator if continuity does not exist.

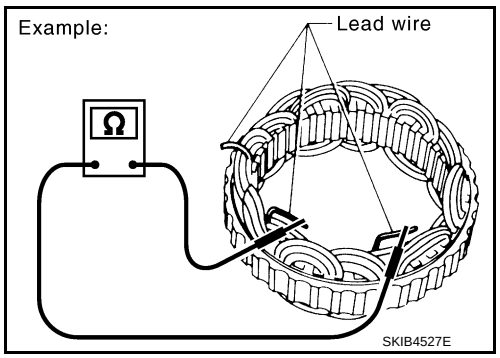

2. Ground test
   - Replace the stator if continuity exists.

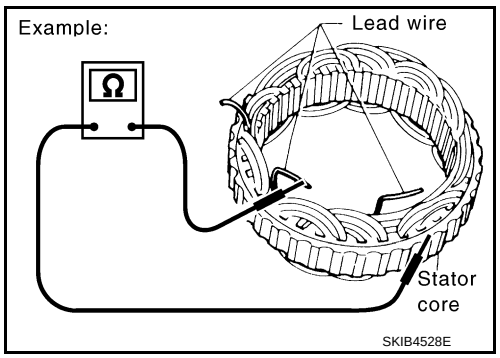

SERVICE DATA AND SPECIFICATIONS (SDS)

SERVICE DATA AND SPECIFICATIONS (SDS)

Alternator

INFOID:0000000006057255

Applied model		For Thailand	Except for Thailand
Type		A005TL0191	TG9S076
		MITSUBISHI make	VALEO make
Nominal rating	[V - A]	12 -100	12 - 90
Ground polarity		Negative	
Minimum revolution under no-load (When 13.5 V is applied)	[rpm]	Less than 1,300	Less than 1,300
Hot output current (When 13.5 V is applied)	[A/rpm]	More than 21/1,300 More than 79/2,500 More than 95/5,000	More than 8/1,300 More than 745/2,500 More than 93/5,000
Regulated output voltage	[V]	14.1 - 14.7*	14.1 - 14.7
Minimum length of brush	[mm (in)]	More than 5.00 (0.1969)	13.85 - 14.55 (0.54 - 0.57)
Brush spring pressure	[N (g, oz)]	4.1 - 5.3 (439 - 520, 15.5 - 18.4)	1.76 - 3.1 (179 - 316, 6.31 - 11.15)
Slip ring minimum outer diameter	[mm (in)]	More than 22.1 (0.870)	More than 14.6 (0.563)
Rotor (Field coil) resistance	[Ω]	2.0 - 2.3	2.04 - 2.26

*: Adjustment range of power generation voltage variable control is 11.4 – 15.6 V.

SECTION CL
CLUTCH

CONTENTS

PRECAUTION 2

PRECAUTIONS 2
Precaution for Supplemental Restraint System (SRS) "AIR BAG" and "SEAT BELT PRE-TENSIONER" 2
Precaution Necessary for Steering Wheel Rotation after Battery Disconnect 2
General Precautions 3

PREPARATION 4

PREPARATION 4
Special Service Tools 4
Commercial Service Tools 4

SYMPTOM DIAGNOSIS 5

NOISE, VIBRATION AND HARSHNESS (NVH) TROUBLESHOOTING 5
NVH Troubleshooting Chart 5

PERIODIC MAINTENANCE 6

CLUTCH PEDAL 6
Inspection 6

CLUTCH FLUID 7
Inspection 7
Draining 7
Refilling 8
Air Bleeding Procedure 9

REMOVAL AND INSTALLATION 10

CLUTCH PEDAL 10
Exploded View 10
Removal and Installation 10
Inspection 10

CLUTCH MASTER CYLINDER 12
Exploded View 12
Removal and Installation 12
Inspection and Adjustment 13

CLUTCH PIPING 14
Exploded View 14
Hydraulic Layout 14
Removal and Installation 14
Inspection and Adjustment 15

UNIT REMOVAL AND INSTALLATION 16

CSC (CONCENTRIC SLAVE CYLINDER) 16
Exploded View 16
Removal and Installation 16
Inspection and Adjustment 16

CLUTCH DISC AND CLUTCH COVER 17
Exploded View 17
Removal and Installation 17
Inspection 18

SERVICE DATA AND SPECIFICATIONS (SDS) 20

SERVICE DATA AND SPECIFICATIONS (SDS) 20
General Specification 20
Clutch Pedal 20
Clutch Disc 20
Clutch Cover 20

PRECAUTION

PRECAUTIONS

Precaution for Supplemental Restraint System (SRS) "AIR BAG" and "SEAT BELT PRE-TENSIONER"

INFOID:0000000006056625

The Supplemental Restraint System such as “AIR BAG” and “SEAT BELT PRE-TENSIONER”, used along with a front seat belt, helps to reduce the risk or severity of injury to the driver and front passenger for certain types of collision. Information necessary to service the system safely is included in the “SRS AIR BAG” and “SEAT BELT” of this Service Manual.

WARNING:

- **To avoid rendering the SRS inoperative, which could increase the risk of personal injury or death in the event of a collision which would result in air bag inflation, all maintenance must be performed by an authorized NISSAN/INFINITI dealer.**
- **Improper maintenance, including incorrect removal and installation of the SRS, can lead to personal injury caused by unintentional activation of the system. For removal of Spiral Cable and Air Bag Module, see the “SRS AIR BAG”.**
- **Do not use electrical test equipment on any circuit related to the SRS unless instructed to in this Service Manual. SRS wiring harnesses can be identified by yellow and/or orange harnesses or harness connectors.**

PRECAUTIONS WHEN USING POWER TOOLS (AIR OR ELECTRIC) AND HAMMERS

WARNING:

- **When working near the Air Bag Diagnosis Sensor Unit or other Air Bag System sensors with the ignition ON or engine running, DO NOT use air or electric power tools or strike near the sensor(s) with a hammer. Heavy vibration could activate the sensor(s) and deploy the air bag(s), possibly causing serious injury.**
- **When using air or electric power tools or hammers, always switch the ignition OFF, disconnect the battery, and wait at least 3 minutes before performing any service.**

Precaution Necessary for Steering Wheel Rotation after Battery Disconnect

INFOID:0000000006056626

NOTE:

- Before removing and installing any control units, first turn the push-button ignition switch to the LOCK position, then disconnect both battery cables.
- After finishing work, confirm that all control unit connectors are connected properly, then re-connect both battery cables.
- Always use CONSULT-III to perform self-diagnosis as a part of each function inspection after finishing work. If a DTC is detected, perform trouble diagnosis according to self-diagnosis results.

For vehicle with steering lock unit, if the battery is disconnected or discharged, the steering wheel will lock and cannot be turned.

If turning the steering wheel is required with the battery disconnected or discharged, follow the operation procedure below before starting the repair operation.

OPERATION PROCEDURE

1. Connect both battery cables.
   NOTE:
   Supply power using jumper cables if battery is discharged.
2. Turn the push-button ignition switch to ACC position.
   (At this time, the steering lock will be released.)
3. Disconnect both battery cables. The steering lock will remain released with both battery cables disconnected and the steering wheel can be turned.
4. Perform the necessary repair operation.
5. When the repair work is completed, re-connect both battery cables. With the brake pedal released, turn the push-button ignition switch from ACC position to ON position, then to LOCK position. (The steering wheel will lock when the push-button ignition switch is turned to LOCK position.)
6. Perform self-diagnosis check of all control units using CONSULT-III.

General Precautions

INFOID:0000000006056596

WARNING:
After cleaning clutch disc, wipe it with a dust collector. Never use compressed air.
CAUTION:
- **Clutch fluid use refer to MA-8, "Fluids and Lubricants".**
- **Never reuse drained clutch fluid.**
- **Keep painted surface on the body or other parts free of clutch fluid. If it spills, wipe up immediately and wash the affected area with water.**
- **Never use mineral oils such as gasoline or kerosene. It will ruin the rubber parts of the hydraulic system.**
- **Never reuse CSC (Concentric Slave Cylinder). Because CSC slides back to the original position every time when removing transaxle assembly. At this timing, dust on the sliding parts may damage a seal of CSC and may cause clutch fluid leakage. Refer to CL-16, "Removal and Installation".**
- **Never disassemble clutch master cylinder and CSC.**

PREPARATION

PREPARATION

Special Service Tools

INFOID:0000000006056597

Tool number Tool name	Description
ST20050240 Diaphragm adjusting wrench ZZA0508D	Adjusting unevenness of diaphragm spring lever

Commercial Service Tools

INFOID:0000000006056598

Tool name	Description
Clutch aligner 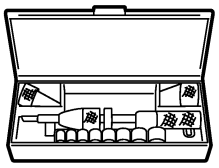 MCIB0404E	Installing clutch disc

SYMPTOM DIAGNOSIS

NOISE, VIBRATION AND HARSHNESS (NVH) TROUBLESHOOTING

NVH Troubleshooting Chart

INFOID:0000000006056599

Use the chart below to find the cause of the symptom. The numbers indicate the order of the inspection. If necessary, repair or replace these parts.

SUSPECTED PARTS (Possible cause)		CLUTCH PEDAL (Inspection and adjustment)	CLUTCH LINE (Air in line)	ENGINE MOUNTING (Loose)	CSC (Concentric Slave Cylinder) (Worn, dirty or damaged)	CLUTCH DISC (Out of true)	CLUTCH DISC (Runout is excessive)	CLUTCH DISC (Lining broken)	CLUTCH DISC (Dirty or burned)	CLUTCH DISC (Oily)	CLUTCH DISC (Worn out)	CLUTCH DISC (Hardened)	CLUTCH DISC (Lack of spline grease)	DIAPHRAGM SPRING (Damaged)	DIAPHRAGM SPRING (Out of tip alignment)	PRESSURE PLATE (Distortion)	FLYWHEEL (Distortion)
Reference		CL-6	CL-9	EM-79	CL-16	CL-17											Refer to EM.
Symptom	Clutch grabs/chatters			1			2			2	2	2			2		
	Clutch pedal spongy		1		2												
	Clutch noisy				1												
	Clutch slips	1								2	2			3		4	5
	Clutch does not disengage	1	2		3	3	3	3	3	3			3	4	4	5	

PERIODIC MAINTENANCE

CLUTCH PEDAL

Inspection

INFOID:0000000006056600

INSPECTION

The Height of Clutch Pedal

1. Turn the floor carpet.
2. Check that the clutch pedal height “H_1” from the dash lower panel (1) is within the reference value.

   Clutch pedal height “H_1” **: Refer to CL-20, "Clutch Pedal".**

3. Replace clutch pedal if the height is outside the reference value.

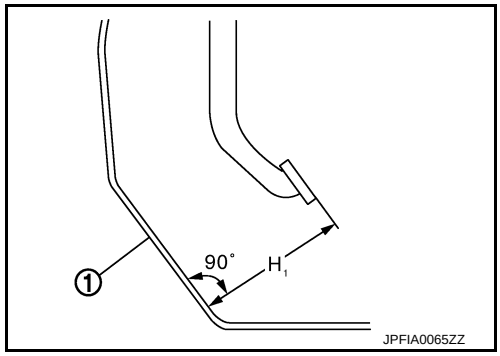

Clutch Pedal Height When Disengaging The Clutch

1. Securely engage the parking brake.
2. Turn the floor carpet.
3. Start the engine and run at idle.
4. Fully depress clutch pedal and shift to the 1st gear.
   CAUTION:
   Securely depress the brake pedal with shifter lever in 1st gear.
5. Gradually release the clutch pedal and check that the clutch pedal height “H_2” from the dash lower panel (1) is within the reference value with a scale immediately before the clutch is engaged.

   Clutch pedal height at clutch disengagement “H_2” **: Refer to CL-20, "Clutch Pedal".**

   NOTE:
   Although the clutch pedal height differs according to whether the clutch gets disengaged or engaged, clutch-engaged case is regarded as clutch-disengaged case for easier inspection.
6. Replace clutch pedal if the height is outside the reference value.

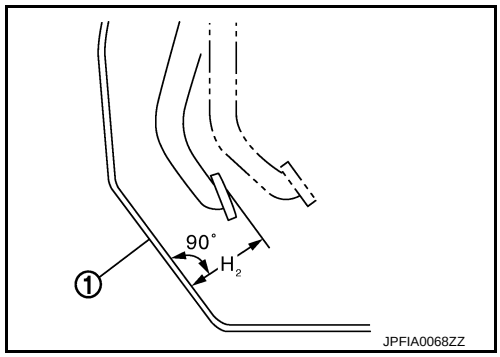

Clutch Pedal Play

1. Push the pedal pad by hand until a resistance can be felt and check that the play “A” on the upper surface of the pedal pad is within the reference value.

   Clutch pedal play “A” **: Refer to CL-20, "Clutch Pedal".**

2. Replace clutch pedal if the play is outside the reference value.

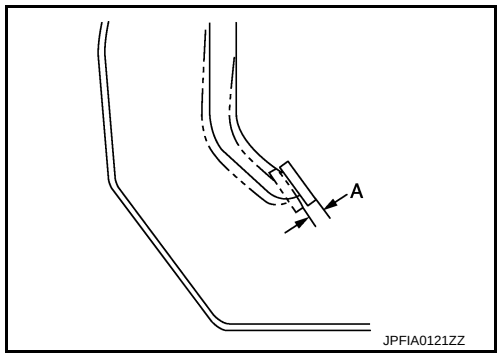

CLUTCH FLUID

Inspection

INFOID:0000000006056601

FLUID LEAKAGE

- Check clutch line for cracks, deterioration or other damage. Replace any damaged parts.
- Check for fluid leakage by fully depressing clutch pedal while engine is running.

CAUTION:
If leakage occurs around joints, reinstall the joints or, if necessary, replace damaged parts.

FLUID LEVEL

- Check that the fluid level in the reservoir tank is within the specified range (MAX – MIN lines).
- Visually check for any clutch fluid leakage around the reservoir tank.
- Check the clutch system for any leakage if the fluid level is extremely low (lower than MIN).

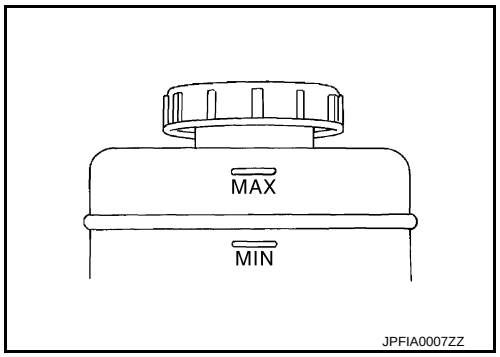

Draining

INFOID:0000000006056602

CAUTION:
Keep painted surface on the body or other parts free of clutch fluid. If it spills, wipe up immediately and wash the affected area with water.

1. Connect a transparent vinyl hose to air bleeder of bleeding connector (1).

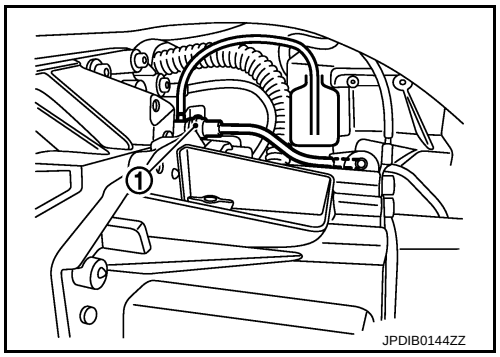

2. Press the lock pin (1) into the bleeding connector (2), and maintain the position.

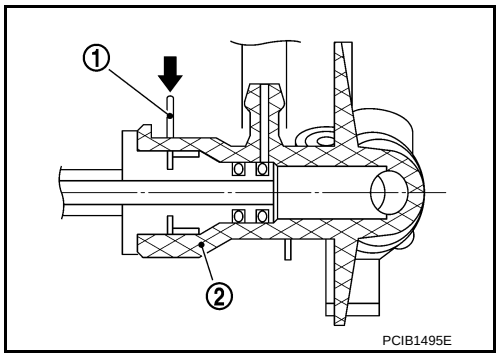

3. Slide clutch tube (1) in the direction of the arrow as shown in the figure.

   2 : Bleeding connector

   Dimension "A" : 5 mm (0.20 in)

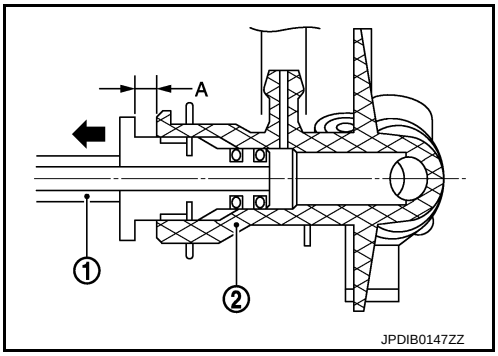

4. Depress clutch pedal to gradually discharge clutch fluid.
   CAUTION:
   Since the inside of clutch tube is under hydraulic pressure, hold the tube to prevent it from getting disconnected.

Refilling

INFOID:0000000006056603

CAUTION:
Keep painted surface on the body or other parts free of clutch fluid. If it spills, wipe up immediately and wash the affected area with water.

1. Check that there is no foreign material in reservoir tank and then fill with new clutch fluid.
   CAUTION:
   Never reuse drained clutch fluid.
2. Connect a transparent vinyl hose to air bleeder of bleeding connector (1).

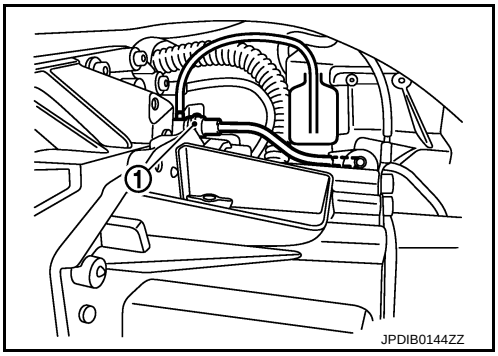

3. Press the lock pin (1) into the bleeding connector (2), and maintain the position.

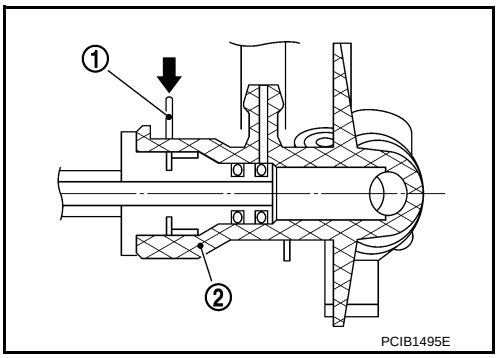

4. Slide clutch tube (1) in the direction of the arrow as shown in the figure.

   2 : Bleeding connector

   Dimension "A" : 5 mm (0.20 in)

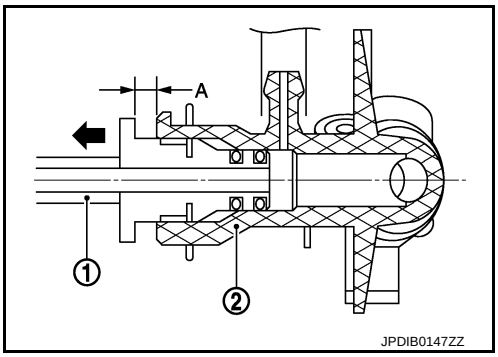

5. Slowly depress clutch pedal to the full stroke position and then release the pedal.
   CAUTION:
   Since the inside of clutch tube is under hydraulic pressure, hold the tube to prevent it from getting disconnected.
6. Repeat step 5 at intervals of 2 or 3 seconds until new clutch fluid is discharged.
   CAUTION:
   Monitor clutch fluid level in reservoir tank so as not to empty the tank.

7. Return clutch tube and lock pin in their original positions while clutch pedal is depressed.
8. Perform the air bleeding. Refer to CL-9, "Air Bleeding Procedure".

Air Bleeding Procedure

INFOID:0000000006056604

CAUTION:
- **Monitor clutch fluid level in reservoir tank so as not to empty the tank.**
- **Keep painted surface on the body or other parts free of clutch fluid. If it spills, wipe up immediately and wash the affected area with water.**

NOTE:
Do not use a vacuum assist or any other type of power bleeder on this system. Use of a vacuum assist or power bleeder will not purge all the air from the system.

- Bleed the air of bleeding connector (1).

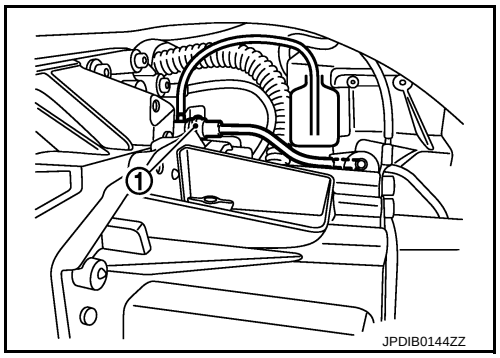

1. Fill reservoir tank with new clutch fluid.
   CAUTION:
   Never reuse drained clutch fluid.
2. Connect a transparent vinyl hose to air bleeder of bleeding connector.
3. “Depress” and “release” the clutch pedal slowly and fully 15 times at an interval of 2 to 3 seconds and release the clutch pedal.

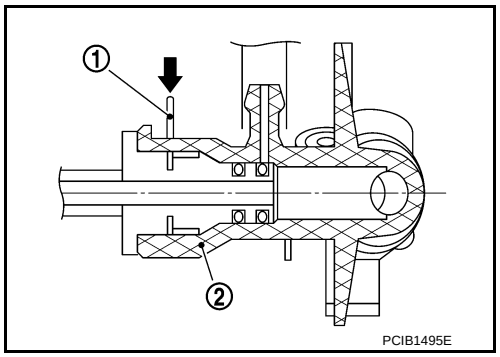

4. Press the lock pin (1) into the bleeding connector (2), and maintain the position.
   CAUTION:
   Since the inside of clutch tube is under hydraulic pressure, hold the tube to prevent it from getting disconnected.

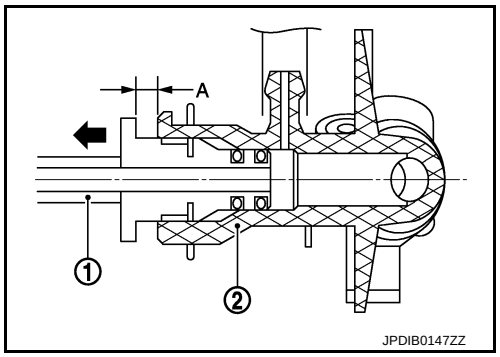

5. Slide clutch tube (1) in the direction of the arrow as shown in the figure.

   2 : Bleeding connector

   Dimension “A” : 5 mm (0.20 in)

6. Depress the clutch pedal soon and hold it, and then bleed the air from the piping.
   CAUTION:
   Since the inside of clutch tube is under hydraulic pressure, hold the tube to prevent it from getting disconnected.
7. Return clutch tube and lock pin in their original positions.
8. Release clutch pedal and wait for 5 seconds.
9. Repeat steps 3 to 8 until no bubbles are observed in the clutch fluid.
10. Check that the fluid level in the reservoir tank is within the specified range after air bleeding. Refer to CL-7, "Inspection".

REMOVAL AND INSTALLATION

CLUTCH PEDAL

Exploded View

INFOID:0000000006056605

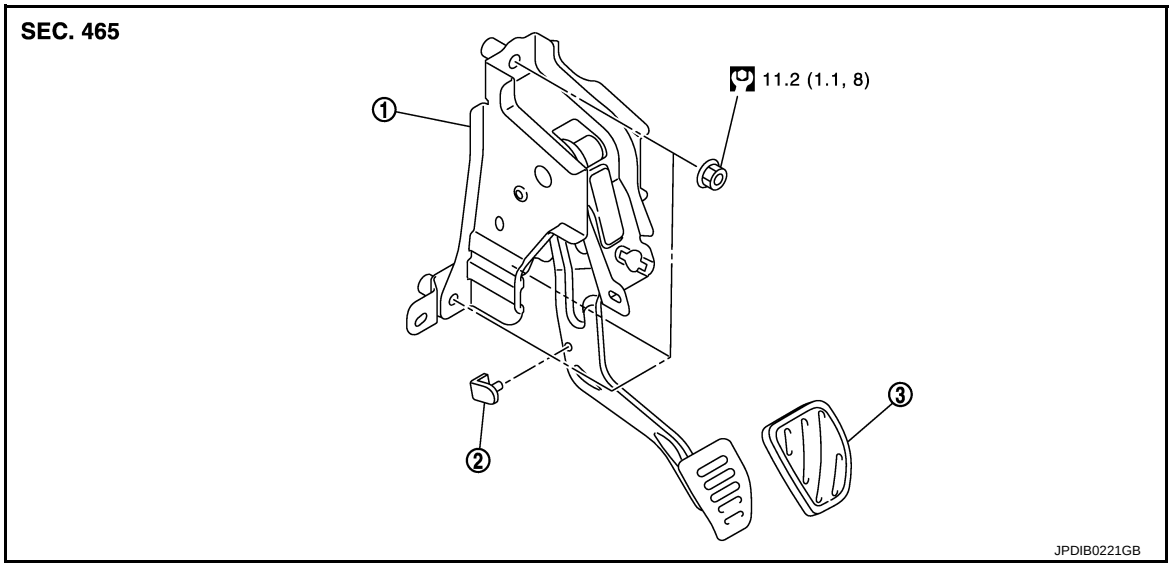

1. Clutch pedal
2. Pedal stopper rubber
3. Pedal pad

Refer to GI-4, "Components" for the symbols in the figure.

Removal and Installation

INFOID:0000000006056606

REMOVAL

1. Remove instrument lower panel RH. Refer to IP-13, "Removal and Installation".
2. Remove master cylinder rod end from clutch pedal.
3. Remove harness clips from clutch pedal.
4. Remove clutch pedal from the vehicle.
5. Remove pedal pad from clutch pedal.
6. Remove stopper rubber and pedal stopper rubber from clutch pedal, using a suitable remover.

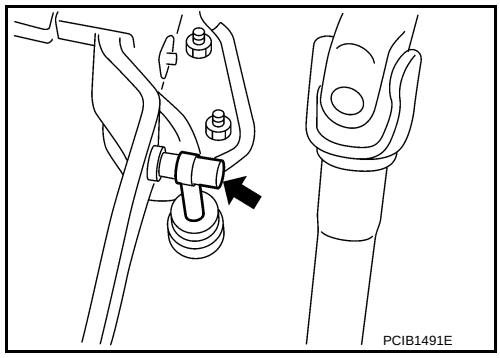

INSTALLATION

Note the following, and install in the reverse order of removal.

CAUTION:

Press master cylinder rod end into clutch pedal until it stops.

Inspection

INFOID:0000000006056607

INSPECTION AFTER REMOVAL

- Check clutch pedal for bend, damage, or a cracked weld. If bend, damage, or a cracked weld is found, replace clutch pedal.
- Check pedal stopper rubber. If damage or deformation is found, replace pedal stopper rubber.
- Check pedal pad. If wear or damage is found, replace pedal pad.

INSPECTION AFTER INSTALLATION

Check the clutch pedal height, clutch pedal height at clutch disengagement, and clutch pedal play. Refer to CL-6, "Inspection".

CLUTCH MASTER CYLINDER

Exploded View

INFOID:0000000006056608

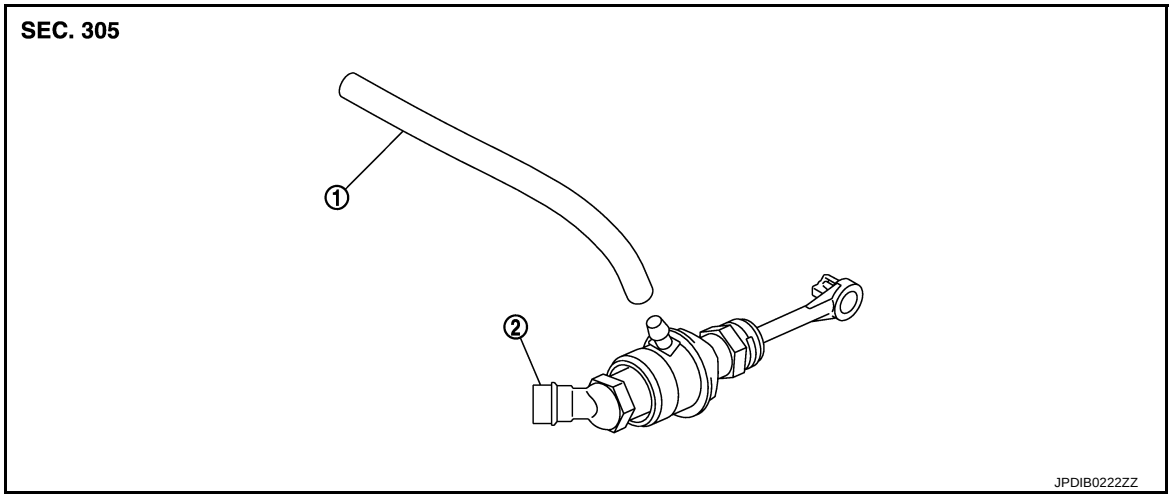

1. Reservoir hose
2. Master cylinder

Removal and Installation

INFOID:0000000006056609

REMOVAL

CAUTION:

- **Keep painted surface on the body or other parts free of clutch fluid. If it spills, wipe up immediately and wash the affected area with water.**
- **Never disassemble clutch master cylinder.**

1. Remove master cylinder rod end (⬅) from clutch pedal.
2. Drain clutch fluid. Refer to CL-7, "Draining".
3. Remove reservoir hose from reservoir tank and master cylinder.

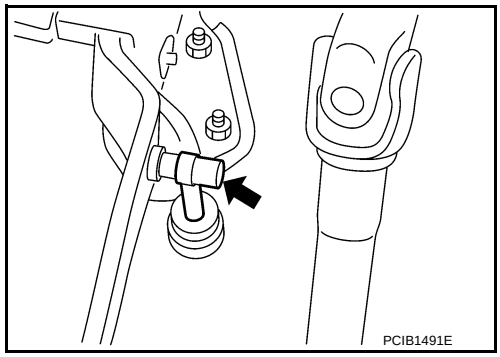

4. Remove clips (A) for cooler pipe (low-pressure pipe).

⇦ : Vehicle front

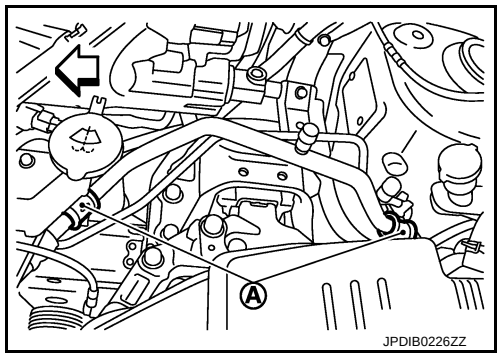

5. Pull up the lock pin (1) from connector of master cylinder (2) and separate clutch tube (3).
6. Rotate master cylinder clockwise by 45 degrees and then remove master cylinder from the vehicle.

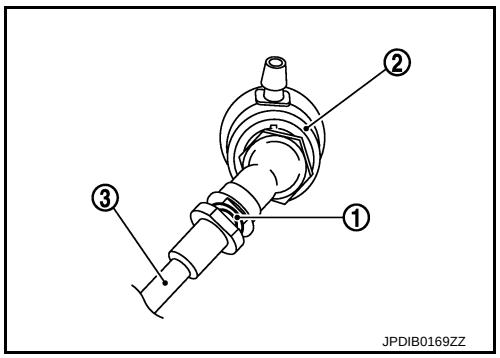

INSTALLATION

CAUTION:

Keep painted surface on the body or other parts free of clutch fluid. If it spills, wipe up immediately and wash the affected area with water.

1. Tilt master cylinder clockwise by 45 degrees (A) and insert it to the mounting hole. Rotate counterclockwise and secure it. At this time, nipple (1) is upward of the vehicle.

   B : Mounting condition

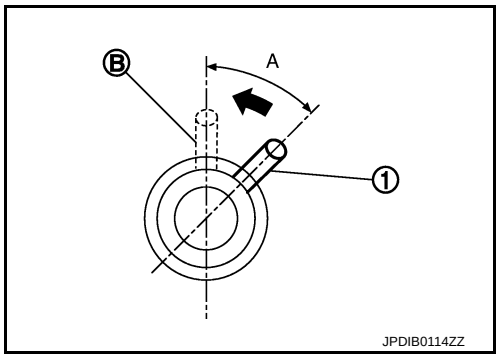

2. Install master cylinder rod end to clutch pedal.
   CAUTION:
   Press master cylinder rod end into clutch pedal until it stops.
3. Install reservoir hose to reservoir tank and master cylinder.
4. Press down the lock pin into connector of master cylinder until it stops.
5. Install clutch tube into connector of master cylinder until it stops.
6. Install clips (A) for cooler pipe (low-pressure pipe).

   ⇦ : Vehicle front

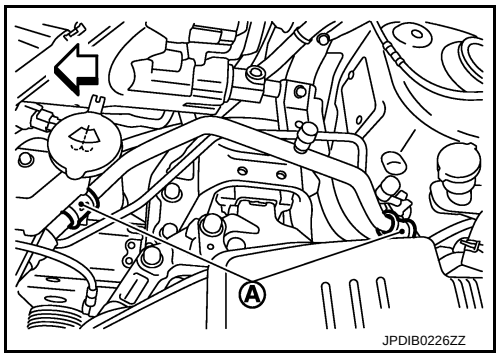

7. Fill with clutch fluid. Refer to CL-8, "Refilling".

Inspection and Adjustment

INFOID:0000000006056610

INSPECTION AFTER INSTALLATION

- Check the fluid leakage and the fluid level. Refer to CL-7, "Inspection".
- Check the clutch pedal height, clutch pedal height at clutch disengagement, and clutch pedal play. Refer to CL-6, "Inspection".

ADJUSTMENT AFTER INSTALLATION

Perform the air bleeding. Refer to CL-9, "Air Bleeding Procedure".

CLUTCH PIPING

Exploded View

INFOID:0000000006056611

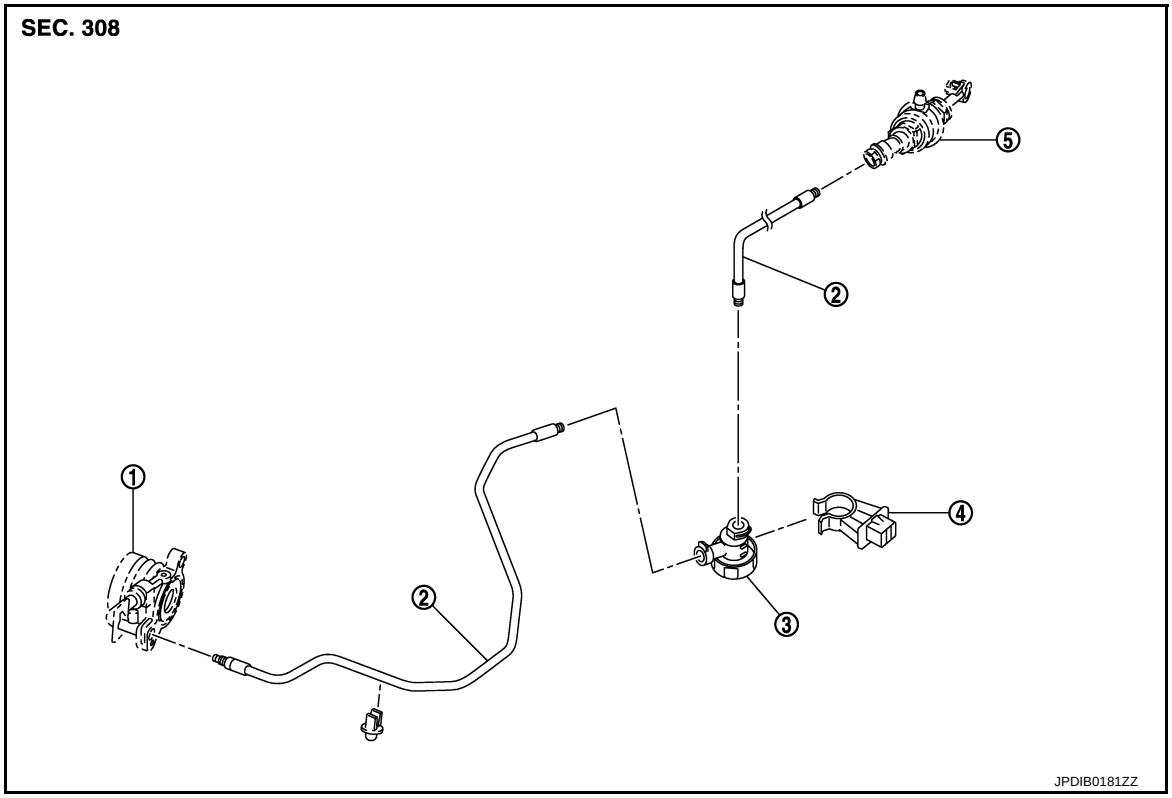

1. CSC (Concentric Slave Cylinder)
2. Clutch tube
3. Clutch damper
4. Bracket
5. Master cylinder

Hydraulic Layout

INFOID:0000000006056612

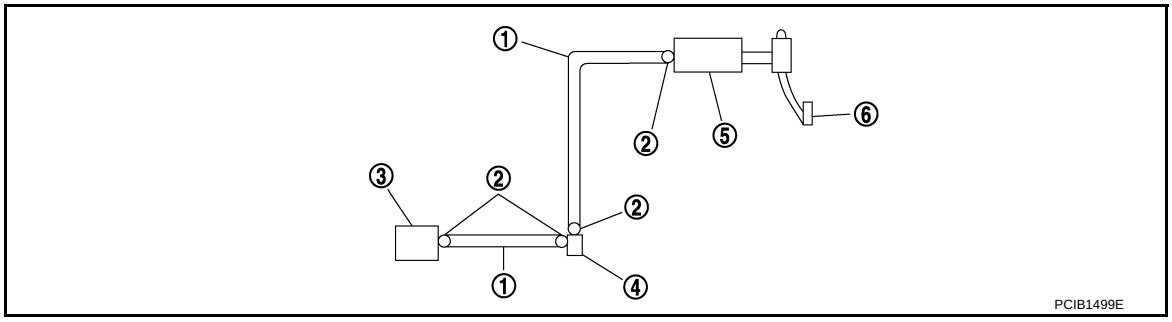

1. Clutch tube
2. Lock pin
3. CSC (Concentric Slave Cylinder)
4. Clutch damper
5. Master cylinder
6. Clutch pedal

Removal and Installation

INFOID:0000000006056613

CAUTION:
Keep painted surface on the body or other parts free of clutch fluid. If it spills, wipe up immediately and wash the affected area with water.

REMOVAL

Note the following, and refer to CL-14, "Exploded View" for removal procedure.

- Drain clutch fluid. Refer to CL-7, "Draining".

- Press the lock pin into the bleeding connector of the CSC and then remove clutch tube from CSC.
- Pull the lock pins from the connectors of the clutch damper until the pins stop and then remove clutch tubes from clutch damper.
- Pull the lock pin from the connector of the clutch master cylinder until the pin stop and then remove clutch tube from clutch master cylinder.

INSTALLATION

Note the following, and refer to CL-14, "Exploded View" for installation procedure.

CAUTION:

Never damage clutch tube.

- Insert each clutch tube into the CSC bleeding connector, the clutch damper connector, and the clutch master cylinder connector until it contacts the end of each connector.
- Install each lock pin into the clutch damper connector and the clutch master cylinder connector until it contacts the end of each connector.

Inspection and Adjustment

INFOID:0000000006056614

INSPECTION AFTER REMOVAL

- Check the clutch tube for cracks and damage. If the clutch tube has cracks or damage, replace it with a new one.
- Check the O-ring of the clutch tube for cracks and damage. If the O-ring of the clutch tube has cracks or damage, replace clutch tube with a new one.
- Check the clutch damper for cracks and damage. If the clutch damper has cracks or damage, replace it with a new one.

INSPECTION AFTER INSTALLATION

- Check the fluid leakage and the fluid level. Refer to CL-7, "Inspection".
- Check the clutch pedal height, clutch pedal height at clutch disengagement, and clutch pedal play. Refer to CL-6, "Inspection".

ADJUSTMENT AFTER INSTALLATION

Perform the air bleeding. Refer to CL-9, "Air Bleeding Procedure".

UNIT REMOVAL AND INSTALLATION

CSC (CONCENTRIC SLAVE CYLINDER)

Exploded View

INFOID:0000000006056615

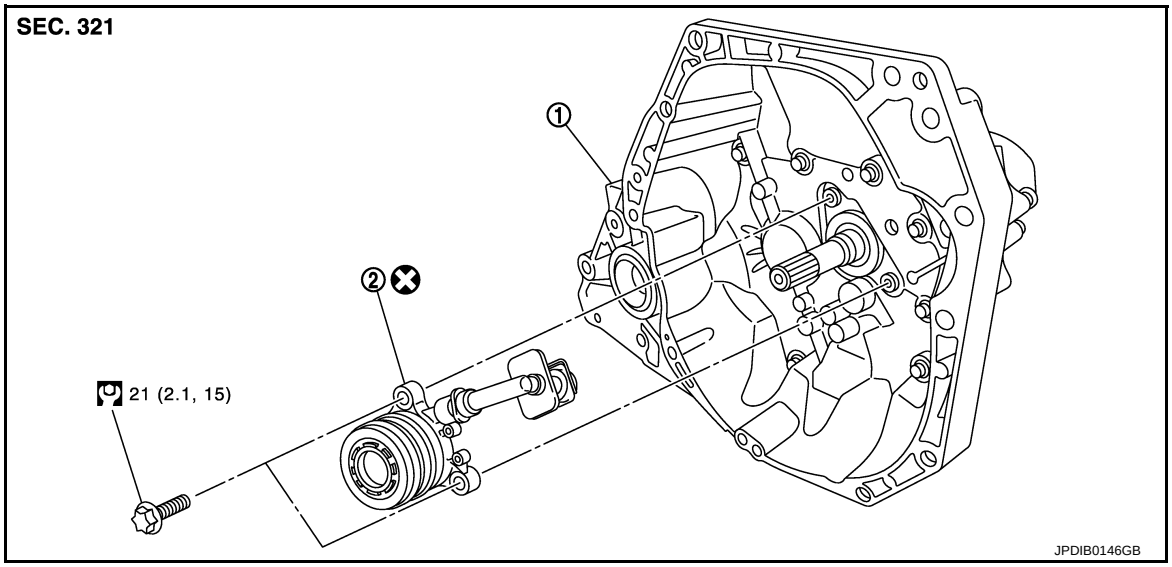

1. Transaxle assembly
2. CSC (Concentric Slave Cylinder)

Refer to GI-4, "Components" for the symbols in the figure.

Removal and Installation

INFOID:0000000006056616

CAUTION:

- **Never reuse CSC (Concentric Slave Cylinder). Because CSC slides back to the original position every time when removing transaxle assembly. At this timing, dust on the sliding parts may damage a seal of CSC and may cause clutch fluid leakage.**
- **Never disassemble CSC.**
- **Keep painted surface on the body or other parts free of clutch fluid. If it spills, wipe up immediately and wash the affected area with water.**

REMOVAL

1. Remove transaxle assembly. Refer to TM-19, "Removal and Installation".
2. Remove CSC from clutch housing.

INSTALLATION

1. Install CSC to clutch housing and then tighten CSC mounting bolts to the specified torque.
   CAUTION:
   - **Never reuse CSC.**
   - **Never insert and operate CSC because piston and stopper of CSC components may fall off.**
2. Install transaxle assembly. Refer to TM-19, "Removal and Installation".

Inspection and Adjustment

INFOID:0000000006056617

INSPECTION AFTER INSTALLATION

Check the fluid leakage and the fluid level. Refer to CL-7, "Inspection".

ADJUSTMENT AFTER INSTALLATION

Perform the air bleeding. Refer to CL-9, "Air Bleeding Procedure".

CLUTCH DISC AND CLUTCH COVER

Exploded View

INFOID:0000000006056618

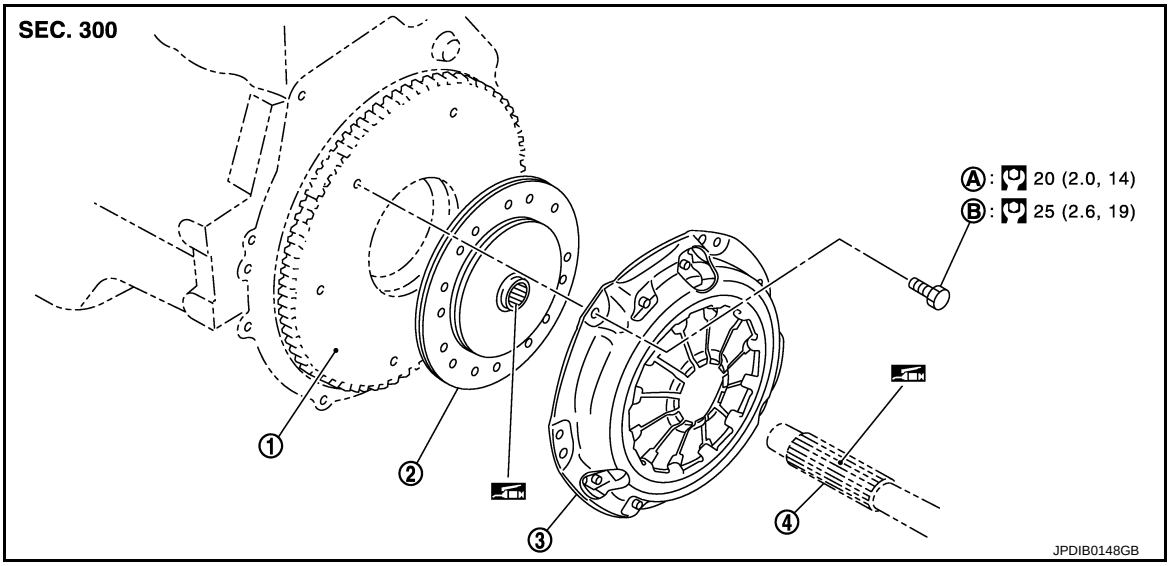

1.	Flywheel	2.	Clutch disc	3.	Clutch cover
4.	Input shaft				
A.	First step	B.	Final step		

: Apply lithium-based grease including molybdenum disulphide.

Refer to GI-4, "Components" for symbols not described on the above.

Removal and Installation

INFOID:0000000006056619

CAUTION:

- **Never reuse CSC (Concentric Slave Cylinder). Because CSC slides back to the original position every time when removing transaxle assembly. At this timing, dust on the sliding parts may damage a seal of CSC and may cause clutch fluid leakage. Refer to CL-16, "Removal and Installation".**
- **Never bring any grease to the clutch disc facing, pressure plate surface and flywheel surface.**
- **When installing, be careful that grease applied to input shaft does not adhere to clutch disc.**
- **Never clean clutch disc using solvent.**

REMOVAL

1. Remove transaxle assembly. Refer to TM-19, "Removal and Installation".
2. Remove clutch cover mounting bolts while holding clutch cover.
   CAUTION:
   Never drop clutch disc.
3. Remove clutch cover and clutch disc.
   CAUTION:
   Never drop clutch disc.

INSTALLATION

1. Clean clutch disc and input shaft splines to remove grease and powder arisen from abrasion.
2. Apply recommended grease to clutch disc and input shaft splines.
   CAUTION:
   Be sure to apply grease to the points specified. Otherwise, noise, poor disengagement, or damage to the clutch may result. Excessive grease may cause slip or judder. And if it adheres to seal of CSC, it cause clutch fluid leakage. Wipe out excess grease. Wipe out any grease oozing from the parts.

3. Install clutch disc, using a clutch aligner (A) [Commercial service tool].
4. Install clutch cover and then temporarily tighten clutch cover mounting bolts.
5. Tighten clutch cover mounting bolts to the specified torque evenly in two steps in the numerical order as shown in the figure.
6. Install transaxle assembly. Refer to TM-19, "Removal and Installation".

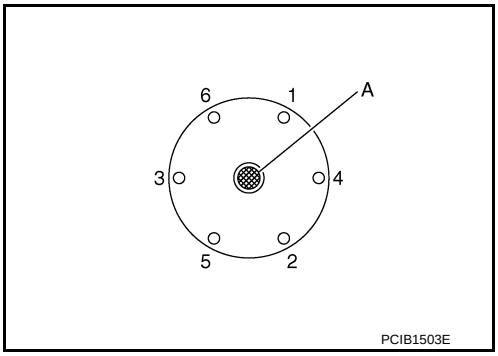

Inspection

INFOID:0000000006056620

INSPECTION AFTER REMOVAL

CLUTCH DISC

- Measure circumferential runout relative to clutch disc center spline. If it is outside the specification, replace clutch disc.

Runout limit/diameter of the area to be measured	**: Refer to CL-20, "Clutch Disc".**

- Measure backlash to clutch disc spline and main drive gear spline at the circumference of clutch disc. If it is outside the specification, replace clutch disc.

Maximum allowable spline backlash (at outer edge of disc)	**: Refer to CL-20, "Clutch Disc".**

- Measure the depth “A” to clutch disc facing rivet heads, using a calipers. If it exceeds the allowable wear limit, replace clutch disc.

Facing wear limit (depth to the rivet head) “A”	**: Refer to CL-20, "Clutch Disc".**

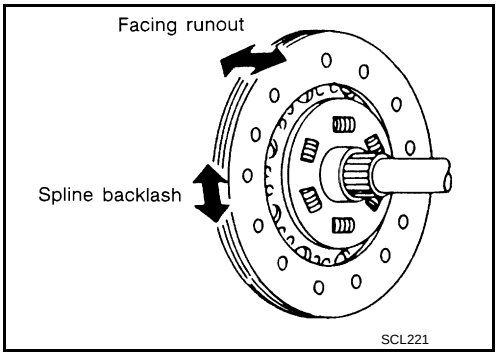

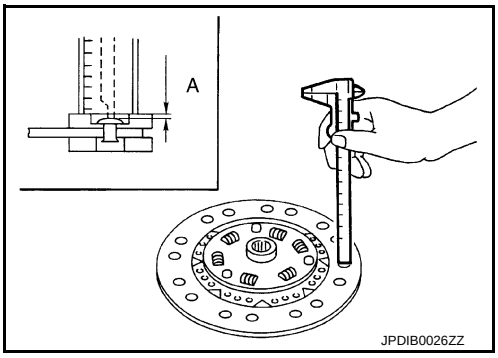

CLUTCH COVER

- Check clutch cover thrust ring for wear or breakage. If wear or breakage is found, replace clutch cover.
  NOTE:
  - Worn thrust ring will generate a beating noise when tapped at the rivet with a hammer.
  - Broken thrust ring will make a clinking sound when cover is shaken up and down.
- If a trace of burn or discoloration is found on the clutch cover pressure plate to clutch disc contact surface, repair the surface with sandpaper. If surface is damaged or distorted, replace clutch cover.

INSPECTION AFTER INSTALLATION

CLUTCH COVER

Check diaphragm spring lever claws for unevenness with the lever still on the vehicle. If they exceed the tolerance, adjust lever height, using the diaphragm adjusting wrench (A) [SST: ST20050240].

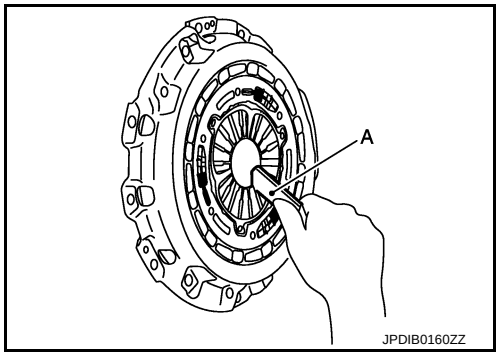

Tolerance for diaphragm spring lever unevenness	**: Refer to CL-20, "Clutch Cover".**

SERVICE DATA AND SPECIFICATIONS (SDS)

SERVICE DATA AND SPECIFICATIONS (SDS)

General Specification

INFOID:0000000006056621

Unit: mm (in)

Type of clutch control		Hydraulic
Clutch disc	Facing size (Outer dia. × Inner dia. × Thickness)	190 × 134 × 2.9 (7.48 × 5.28 × 0.114)
Recommended clutch fluid		Refer to MA-8, "Fluids and Lubricants".

Clutch Pedal

INFOID:0000000006056622

Unit: mm (in)

Clutch pedal height	172.4 – 182.4 (6.79 – 7.18)
Clutch pedal height at clutch disengagement	81 (3.19) or more
Clutch pedal play [Looseness at clutch pedal pin]	2 – 8 (0.08 – 0.31) [0 – 1.3 (0 – 0.051)]

Clutch Disc

INFOID:0000000006056623

Unit: mm (in)

Runout limit/diameter of the area to be measured	1.0 (0.039) / 180 (7.09) dia.
Maximum allowable spline backlash (at outer edge of disc)	0.8 (0.031)
Facing wear limit (depth to the rivet head)	0.3 (0.012)

Clutch Cover

INFOID:0000000006056624

Unit: mm (in)

Tolerance for diaphragm spring lever unevenness	0.7 (0.028) or less

SECTION CO
ENGINE COOLING SYSTEM

CONTENTS

HR12DE

PRECAUTION 2

PRECAUTIONS 2
Precaution for Supplemental Restraint System (SRS) "AIR BAG" and "SEAT BELT PRE-TENSIONER" 2
Precaution Necessary for Steering Wheel Rotation after Battery Disconnect 2

PREPARATION 4

PREPARATION 4
Commercial Service Tools 4

SYSTEM DESCRIPTION 5

DESCRIPTION 5
Engine Cooling System 5
Engine Cooling System Schematic 6

SYMPTOM DIAGNOSIS 7

OVERHEATING CAUSE ANALYSIS 7
Troubleshooting Chart 7

PERIODIC MAINTENANCE 9

ENGINE COOLANT 9
Inspection 9
Draining 9
Refilling 10
Flushing 11

RADIATOR 12

RADIATOR CAP 12
RADIATOR CAP : Inspection 12

RADIATOR 12
RADIATOR : Inspection 12

REMOVAL AND INSTALLATION 14

RADIATOR 14
Exploded View 14
Removal and Installation 14
Inspection 16

COOLING FAN 17
Exploded View 17
Removal and Installation 17
Disassembly and Assembly 17
Inspection 18

WATER PUMP 19
Exploded View 19
Removal and Installation 19
Inspection 19

THERMOSTAT 21
Exploded View 21
Removal and Installation 21
Inspection 22

WATER OUTLET 23
Exploded View 23
Removal and Installation 24
Inspection 25

SERVICE DATA AND SPECIFICATIONS (SDS) 26

SERVICE DATA AND SPECIFICATIONS (SDS) 26
Periodical Maintenance Specification 26
Radiator 26
Thermostat 26
Water Control Valve 26

PRECAUTION

PRECAUTIONS

Precaution for Supplemental Restraint System (SRS) "AIR BAG" and "SEAT BELT PRE-TENSIONER"

INFOID:0000000005988450

The Supplemental Restraint System such as “AIR BAG” and “SEAT BELT PRE-TENSIONER”, used along with a front seat belt, helps to reduce the risk or severity of injury to the driver and front passenger for certain types of collision. This system includes seat belt switch inputs and dual stage front air bag modules. The SRS system uses the seat belt switches to determine the front air bag deployment, and may only deploy one front air bag, depending on the severity of a collision and whether the front occupants are belted or unbelted.
Information necessary to service the system safely is included in the “SRS AIR BAG” and “SEAT BELT” of this Service Manual.

WARNING:

- **To avoid rendering the SRS inoperative, which could increase the risk of personal injury or death in the event of a collision that would result in air bag inflation, all maintenance must be performed by an authorized NISSAN/INFINITI dealer.**
- **Improper maintenance, including incorrect removal and installation of the SRS, can lead to personal injury caused by unintentional activation of the system. For removal of Spiral Cable and Air Bag Module, see the “SRS AIR BAG”.**
- **Do not use electrical test equipment on any circuit related to the SRS unless instructed to in this Service Manual. SRS wiring harnesses can be identified by yellow and/or orange harnesses or harness connectors.**

PRECAUTIONS WHEN USING POWER TOOLS (AIR OR ELECTRIC) AND HAMMERS

WARNING:

- **When working near the Air Bag Diagnosis Sensor Unit or other Air Bag System sensors with the ignition ON or engine running, DO NOT use air or electric power tools or strike near the sensor(s) with a hammer. Heavy vibration could activate the sensor(s) and deploy the air bag(s), possibly causing serious injury.**
- **When using air or electric power tools or hammers, always switch the ignition OFF, disconnect the battery, and wait at least 3 minutes before performing any service.**

Precaution Necessary for Steering Wheel Rotation after Battery Disconnect

INFOID:0000000005988451

NOTE:

- Before removing and installing any control units, first turn the push-button ignition switch to the LOCK position, then disconnect both battery cables.
- After finishing work, confirm that all control unit connectors are connected properly, then re-connect both battery cables.
- Always use CONSULT-III to perform self-diagnosis as a part of each function inspection after finishing work. If a DTC is detected, perform trouble diagnosis according to self-diagnosis results.

For vehicle with steering lock unit, if the battery is disconnected or discharged, the steering wheel will lock and cannot be turned.
If turning the steering wheel is required with the battery disconnected or discharged, follow the operation procedure below before starting the repair operation.

OPERATION PROCEDURE

1. Connect both battery cables.
   NOTE:
   Supply power using jumper cables if battery is discharged.
2. Turn the push-button ignition switch to ACC position.
   (At this time, the steering lock will be released.)
3. Disconnect both battery cables. The steering lock will remain released with both battery cables disconnected and the steering wheel can be turned.
4. Perform the necessary repair operation.

5. When the repair work is completed, re-connect both battery cables. With the brake pedal released, turn the push-button ignition switch from ACC position to ON position, then to LOCK position. (The steering wheel will lock when the push-button ignition switch is turned to LOCK position.)
6. Perform self-diagnosis check of all control units using CONSULT-III.

PREPARATION

PREPARATION

Commercial Service Tools

INFOID:0000000005988452

Tool name	Description
Radiator cap tester 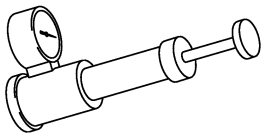 PBIC1982E	Checking radiator and radiator cap
Radiator cap tester adapter 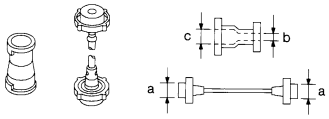 S-NT564	Adapting radiator cap tester to radiator cap and radiator filler neck **a: 28 (1.10) dia.** **b: 31.4 (1.236) dia.** **c: 41.3 (1.626) dia.** Unit: mm (in)

SYSTEM DESCRIPTION

DESCRIPTION

Engine Cooling System

INFOID:0000000005988453

WITH EGR CONTROL VALVE

イラストが有りません！

JPBIA3438GB

WITHOUT EGR CONTROL VALVE

イラストが有りません！

JPBIA3439GB

Engine Cooling System Schematic

INFOID:0000000005988454

WITH EGR CONTROL VALVE

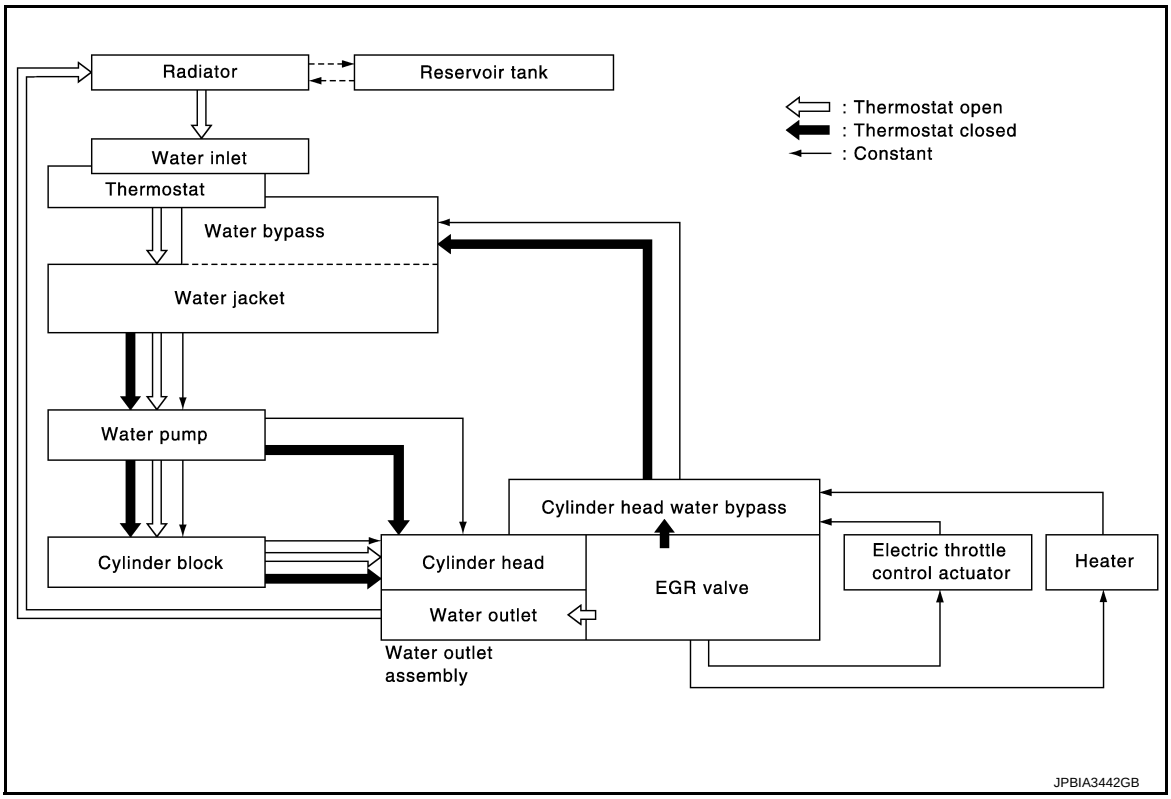

WITHOUT EGR CONTROL VALVE

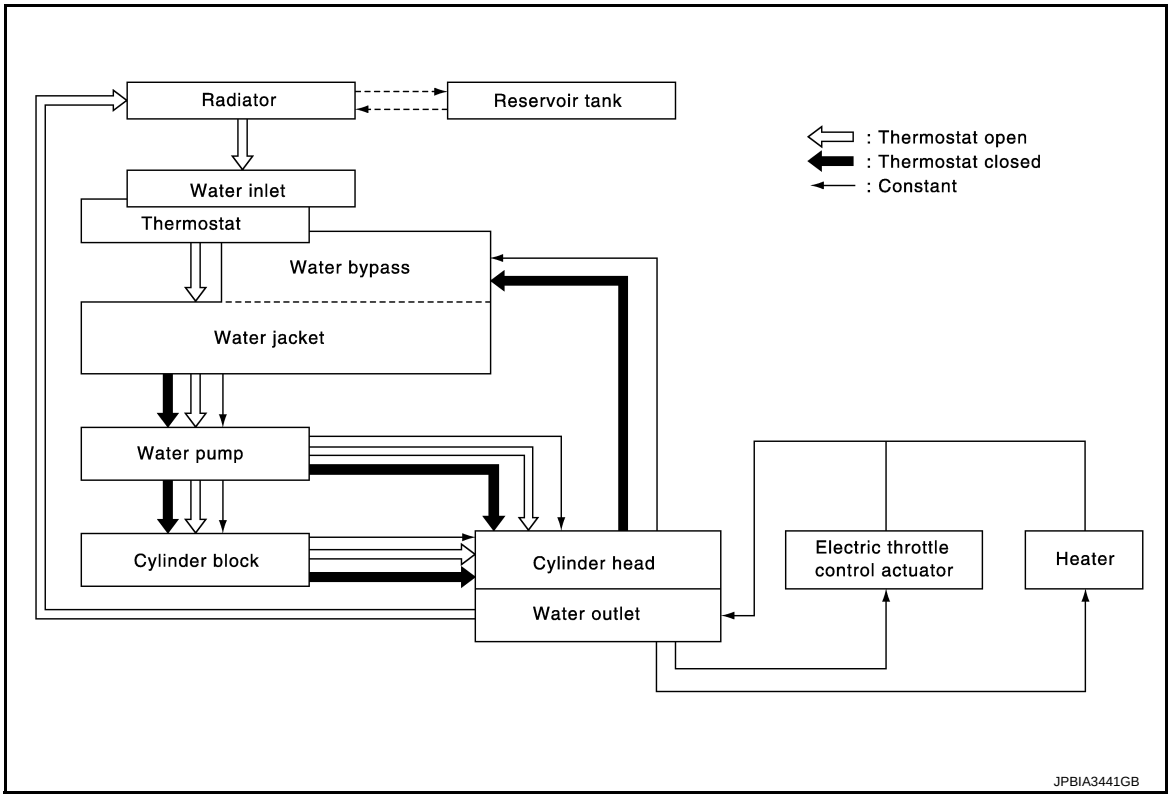

SYMPTOM DIAGNOSIS

OVERHEATING CAUSE ANALYSIS

Troubleshooting Chart

INFOID:0000000005988455

	Symptom		Check items	
Cooling system parts malfunction	Poor heat transfer	Water pump malfunction	Worn or loose drive belt	—
		Thermostat and water control valve stuck closed	—	
		Damaged fins	Dust contamination or paper clogging	
			Physical damage	
		Clogged radiator cooling tube	Excess foreign material (rust, dirt, sand, etc.)	
	Reduced air flow	Cooling fan does not operate	Fan assembly	—
		High resistance to fan rotation		
		Damaged fan blades		
	Damaged radiator shroud	—	—	—
	Improper engine coolant mixture ratio	—	—	—
	Poor engine coolant quality	—	Engine coolant viscosity	—
	Insufficient engine coolant	Engine coolant leakage	Cooling hose	Loose clamp
				Cracked hose
			Water pump	Poor sealing
			Radiator cap	Loose
				Poor sealing
			Radiator	O-ring for damage, deterioration or improper fitting
				Cracked radiator tank
				Cracked radiator core
			Reservoir tank	Cracked reservoir tank
		Overflowing reservoir tank	Exhaust gas leakage into cooling system	Cylinder head deterioration
				Cylinder head gasket deterioration

	Symptom		Check items	
Except cooling system parts malfunction	—	Overload on engine	Abusive driving	High engine rpm under no load
				Driving in low gear for extended time
				Driving at extremely high speed
			Power train system malfunction	—
			Installed improper size wheels and tires	
			Dragging brakes	
			Improper ignition timing	
	Blocked or restricted air flow	Blocked bumper	—	—
		Blocked radiator grille	Installed car brassiere	
			Mud contamination or paper clogging	
		Blocked radiator	—	
		Blocked condenser	Blocked air flow	
		Installed large fog lamp		

PERIODIC MAINTENANCE

ENGINE COOLANT

Inspection

INFOID:0000000005988456

LEVEL

- Check that the reservoir tank engine coolant level is within the “MIN” to “MAX” when the engine is cool.

A : MAX
B : MIN

- Adjust the engine coolant level if necessary.

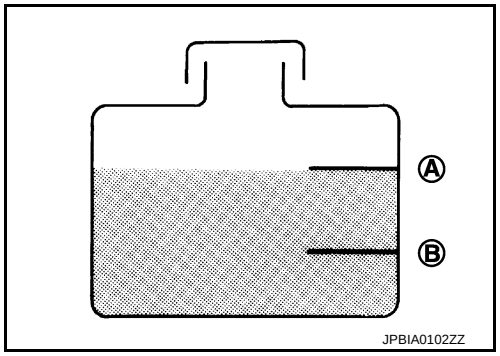

LEAKAGE

- To check for leakage, apply pressure to the cooling system with the radiator cap tester (commercial service tool) (A) and the radiator cap tester adapter (commercial service tool) (B).

Testing pressure: Refer to CO-26, "Radiator".

WARNING:
Never remove radiator cap when engine is hot. Serious burns may occur from high-pressure engine coolant escaping from radiator.
CAUTION:
Higher test pressure than specified may cause radiator damage.
NOTE:
In a case that engine coolant decreases, replenish radiator with engine coolant.

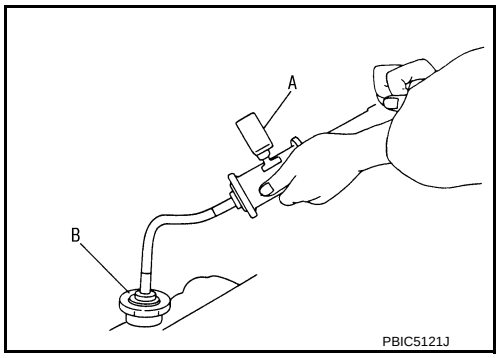

- If anything is found, repair or replace damaged parts.

Draining

INFOID:0000000005988457

WARNING:
- **Never remove radiator cap when engine is hot. Serious burns may occur from high-pressure engine coolant escaping from radiator.**
- **Wrap a thick cloth around the radiator cap. Slowly turn it a quarter of a turn to release built-up pressure. Then turn it all the way.**

1. Open radiator drain plug (A) at the bottom of radiator, and then remove radiator cap.

⇦ : Vehicle front

CAUTION:
Perform this step when engine is cold.
- When draining all of engine coolant in the system, open water drain plugs on cylinder block. Refer to EM.

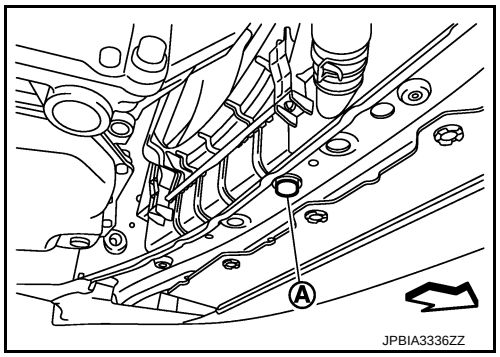

2. Remove reservoir tank if necessary, and drain engine coolant and clean reservoir tank before installing. Refer to CO-14, "Exploded View".
3. Check drained engine coolant for contaminants such as rust, corrosion or discoloration. If contaminated, flush the engine cooling system. Refer to CO-11, "Flushing".

Refilling

INFOID:0000000005988458

1. Install reservoir tank if removed and radiator drain plug.
   CAUTION:
   Be sure to clean drain plug and install with new O-ring.

   Radiator drain plug : Refer to CO-14, "Exploded View".

   - If water drain plugs on cylinder block are removed, close and tighten them. Refer to EM.
2. Check that each hose clamp has been firmly tightened.
3. Remove air duct inlet and air cleaner assembly. Refer to EM-24, "Removal and Installation".
4. Disconnect heater hose (1) at position (⬅) in the figure.

   ⇦ : Vehicle front

   - Enhance heater hose as high as possible.

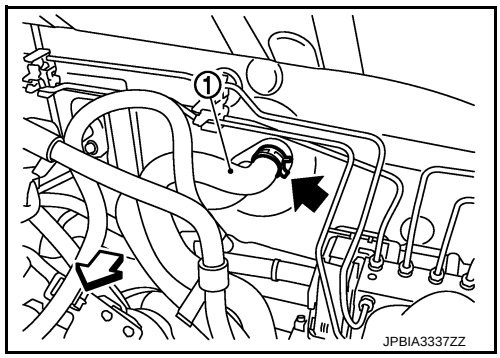

5. Fill radiator (1) to specified level.
   CAUTION:
   Never adhere the engine coolant to electronic equipments (alternator etc.).
   - **Pour coolant slowly of less than 2 ℓ (2-1/8 US qt, 1-3/4 Imp qt) a minute to allow air in system to escape.**
   - **When engine coolant overflows disconnected heater hose, connect heater hose, and continue filling the engine coolant.**
   - **Use Genuine NISSAN Engine Coolant or equivalent in its quality mixed with water (distilled or demineralized). Refer to MA-8, "Fluids and Lubricants".**

   Engine coolant capacity
   (With reservoir tank at "MAX" level)

   Refer to CO-26, "Periodical Maintenance Specification".

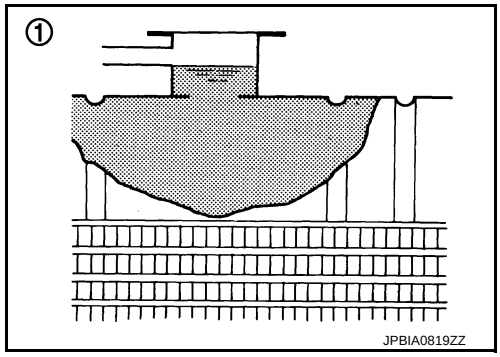

6. Refill reservoir tank to "MAX" level line with engine coolant.

   A : MAX
   B : MIN

   Reservoir tank engine coolant capacity
   (At "MAX" level)

   Refer to CO-26, "Periodical Maintenance Specification".

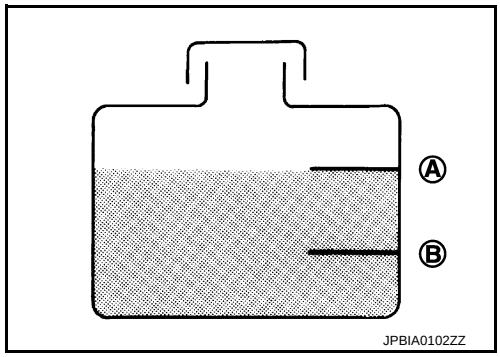

7. Install air duct (between air cleaner case and electric throttle control actuator). Refer to EM-24, "Removal and Installation".
8. Install radiator cap.
9. Warm up engine until opening thermostat. Standard for warming-up time is approximately 10 minutes at 3,000 rpm.
   - Check thermostat opening condition by touching radiator hose (lower) to see a flow of warm water.

CAUTION:
Watch water temperature gauge so as not to overheat engine.

10. Stop the engine and cool down to less than approximately 50°C (122°F).
    - Cool down using fan to reduce the time.
    - If necessary, refill radiator up to filler neck with engine coolant.
    CAUTION:
    Never adhere the engine coolant to electronic equipments (alternator etc.).
11. Refill reservoir tank to “MAX” level line with engine coolant.
12. Repeat steps 5 through 10 two or more times with radiator cap installed until engine coolant level no longer drops.
13. Check cooling system for leakage with engine running.
14. Warm up the engine, and check for sound of engine coolant flow while running engine from idle up to 3,000 rpm with heater temperature controller set at several position between “COOL” and “WARM”.
    - Sound may be noticeable at heater unit.
15. Repeat step 14 three times.
16. If sound is heard, bleed air from cooling system by repeating step 5 through 10 until reservoir tank level no longer drops.

Flushing

INFOID:0000000005988459

1. Install reservoir tank if removed and radiator drain plug.
   CAUTION:
   Be sure to clean drain plug and install with new O-ring.

   Radiator drain plug : Refer to CO-14, "Exploded View".

   - If water drain plugs on cylinder block are removed, close and tighten them. Refer to EM.
2. Remove air duct inlet and air cleaner case assembly. Refer to EM-24, "Removal and Installation".
3. Disconnect heater hose (1) at position (⬅) in the figure.

   ⇦ : Vehicle front

   - Enhance heater as high as possible.

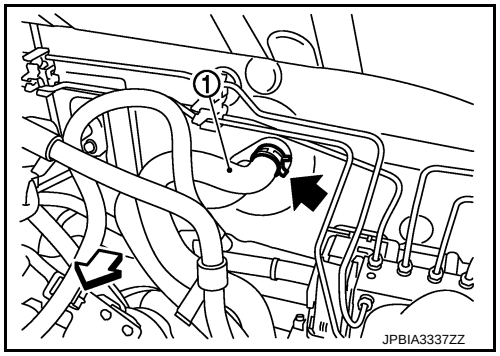

4. Fill radiator and reservoir tank with water and reinstall radiator cap.
   - When engine coolant over flows disconnected heater hose, connect heater hose, and continue filling the engine coolant.
5. Install air duct (between air cleaner case and electric throttle control actuator). Refer to EM-24, "Removal and Installation".
6. Run the engine and warm it up to normal operating temperature.
7. Rev the engine two or three times under no-load.
8. Stop the engine and wait until it cools down.
9. Drain water from the system. Refer to CO-9, "Draining".
10. Repeat steps 1 through 9 until clear water begins to drain from radiator.

RADIATOR

RADIATOR CAP

RADIATOR CAP : Inspection

INFOID:0000000005988460

- Check valve seat (A) of radiator cap.

B : Metal plunger

- Check that valve seat is swollen to the extent that the edge of the plunger cannot be seen when watching it vertically from the top.
- Check that valve seat has no soil and damage.

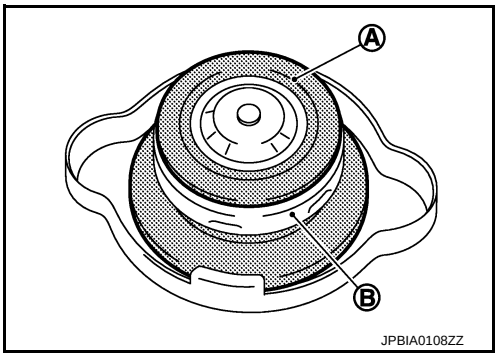

- Pull negative-pressure valve to open it, and that it close completely when released.
- Check that there is no dirt or damage on the valve seat of radiator cap negative-pressure valve.
- Check that there are no unusualness in the opening and closing conditions of negative-pressure valve.

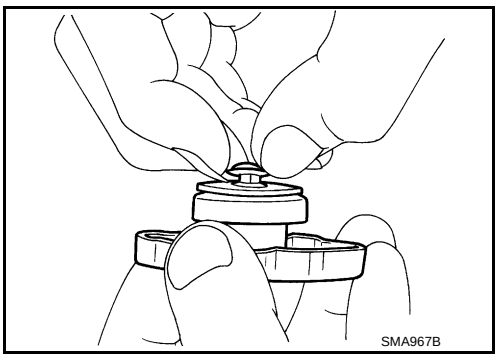

- Check radiator cap relief pressure.

Standard and Limit : Refer to CO-26, "Radiator".

- When connecting radiator cap to the radiator cap tester (commercial service tool) (A) and the radiator cap tester adapter (commercial service tool) (B), apply engine coolant to the cap seal surface.

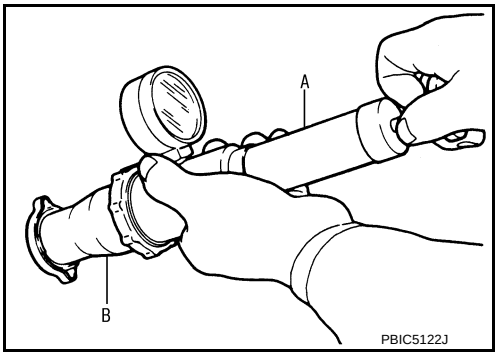

- Replace radiator cap if there is an unusualness related to the above three.

CAUTION:

When installing radiator cap, thoroughly wipe out the radiator filler neck to remove any waxy residue or foreign material.

RADIATOR

RADIATOR : Inspection

INFOID:0000000005988461

Check radiator for mud or clogging. If necessary, clean radiator as follows.

CAUTION:

- **Be careful not to bend or damage radiator fins.**
- **When radiator is cleaned without removal, remove all surrounding parts such as radiator cooling fan assembly and horns. Then tape harness and harness connectors to prevent water from entering.**

1. Apply water by hose to the back side of the radiator core vertically downward.
2. Apply water again to all radiator core surfaces once per minute.
3. Stop washing if any stains no longer flow out from radiator.

4. Blow air into the back side of radiator core vertically downward.
   - Use compressed air lower than 490 kPa (4.9 bar, 5 kg/cm^2, 71 psi) and keep distance more than 30 cm (11.81 in).
5. Blow air again into all the radiator core surfaces once per minute until no water sprays out.

REMOVAL AND INSTALLATION

RADIATOR

Exploded View

INFOID:0000000005988462

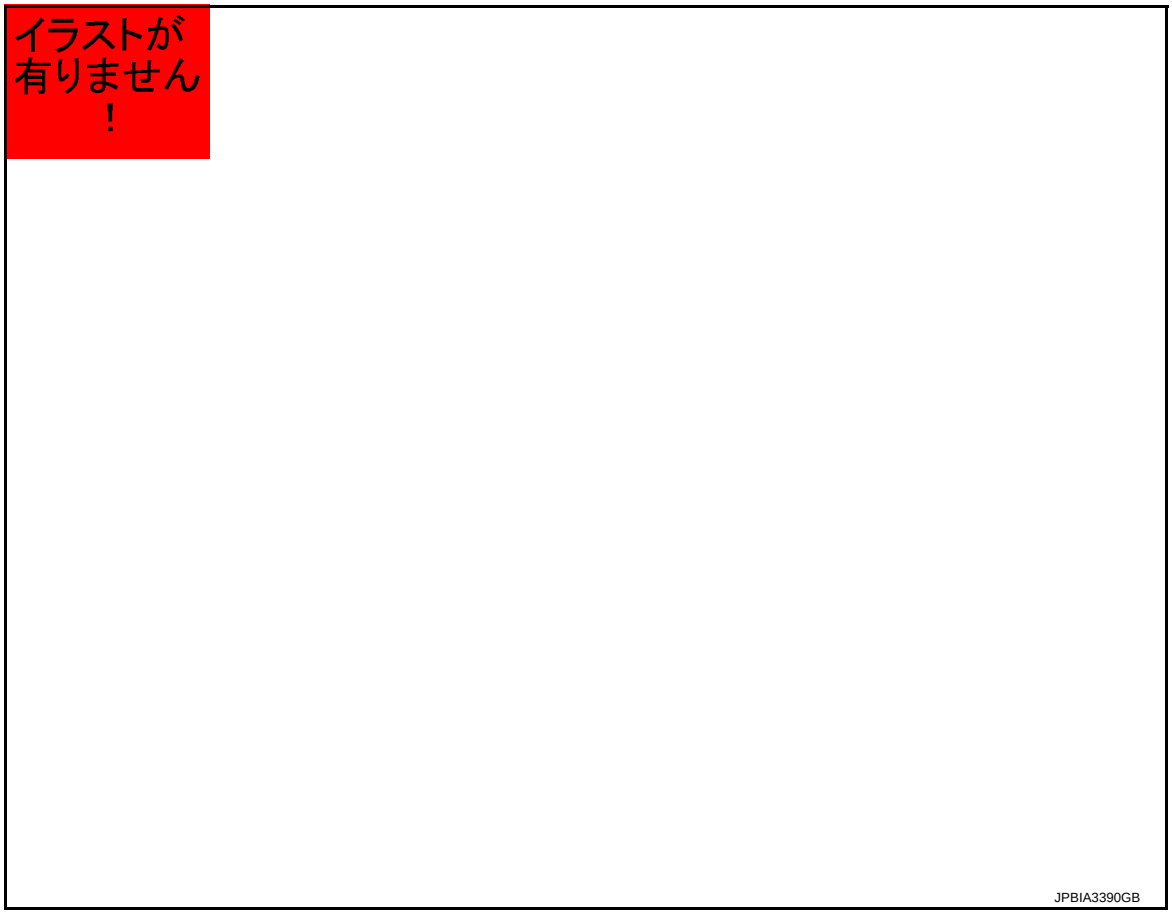

1. Reservoir tank cap	2. Reservoir tank	3. Reservoir tank hose
4. Radiator cap	5. Mounting rubber (upper)	6. Radiator
7. Mounting rubber (lower)	8. Clamp	9. A/T fluid hose
10. Clamp	11. Radiator hose (upper)	12. Radiator hose (lower)
13. Fan shroud assembly		
A. To water outlet	B. To water inlet	C. M/T models

Refer to GI-4, "Components" for symbols in the figure.

Removal and Installation

INFOID:0000000005988463

REMOVAL

WARNING:
- **Never remove radiator cap when engine is hot. Serious burns may occur from high-pressure engine coolant escaping from radiator.**
- **Wrap a thick cloth around the radiator cap. Slowly turn it a quarter of a turn to release built-up pressure. Then turn it all the way.**

1. Drain engine coolant from radiator. Refer to CO-9, "Draining".
   CAUTION:
   - **Perform this step when the engine is cold.**
   - **Never spill engine coolant on drive belt.**
2. Remove air duct (inlet). Refer to EM-24, "Removal and Installation".

3. Disconnect reservoir tank hose, and remove reservoir tank.
4. Disconnect harness connector from fan motor, and move harness aside.
5. Remove radiator hose (upper and lower).
6. Remove cooling fan assembly.
   CAUTION:
   Be careful not to damage or scratch the radiator core.
7. Remove front bumper fasica assembly. Refer to EXT-11, "Removal and Installation".
8. Remove radiator core support (upper). Refer to DLK-114, "Removal and Installation" (With Intelligent Key) or DLK-219, "Removal and Installation" (Without Intelligent Key).
9. Remove the radiator (1) from bottom of the vehicle.

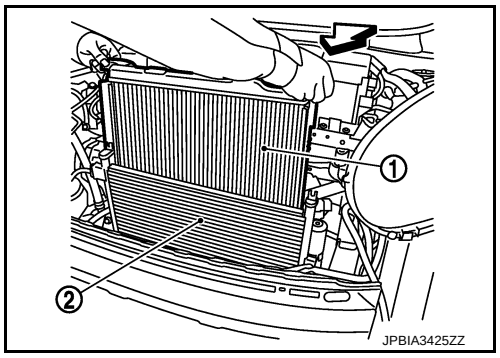

2 : Condenser assembly

⇦ : Vehicle front

CAUTION:
Be careful not to damage radiator core and condenser assembly core.

INSTALLATION

Note the following, and install in the reverse order of removal.

CAUTION:
- **Replace water hose clamp if it is removed.**
- **Use genuine mounting bolts for the cooling fan assembly and strictly observe the tightening torque. (Breakage prevention for radiator)**

NOTE:
- Insert the radiator hose (1) all the way to the stopper (2) or by 33 mm (1.30in) (hose without a stopper)

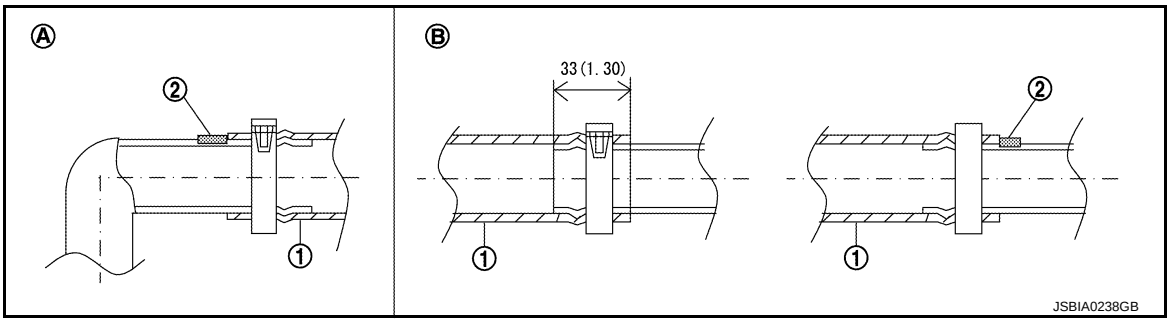

Unit mm (in)

A. Radiator side B. Engine side

- For the orientation of the hose clamp pawl, refer to the figure.

Radiator hose	Hose end	Paint mark	Position of hose clamp*
Radiator hose (upper)	Radiator side	Upper	A
	Engine side	Upper	B
Radiator hose (lower)	Radiator side	Lower	C
	Engine side	Upper	D

*Refer to the illustrations for the specific position each hose clamp tab.

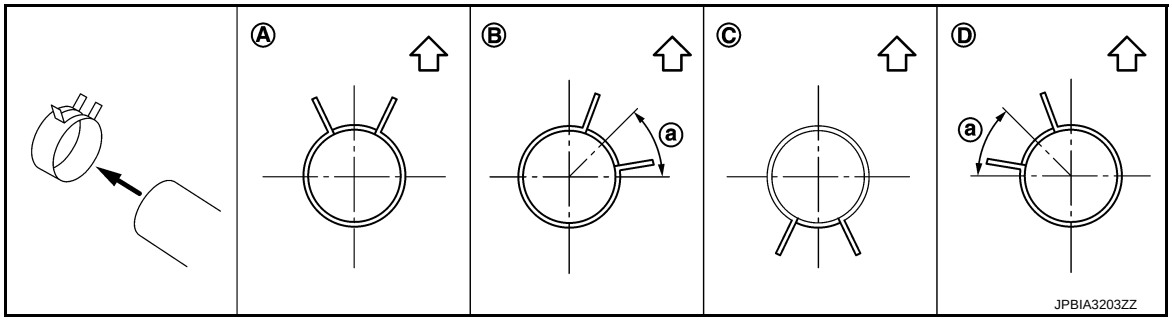

a. 45°

⇦ Vehicle upper

- The angle (a) created by the hose clamp pawl and the specified line (A) must be within ±30° as shown in the figure.

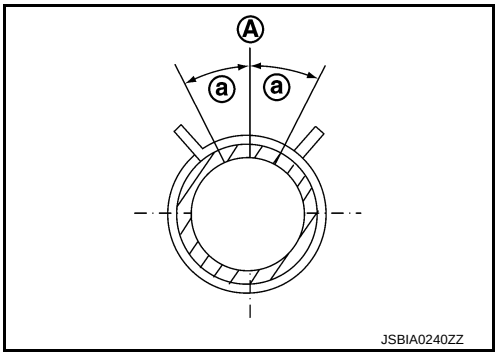

- To install hose clamps (1), check that the dimension (A) from the end of the hose clamp (1) on the radiator hose to the hose clamp is within the reference value.

Dimension "A" (+3) – (+7)mm

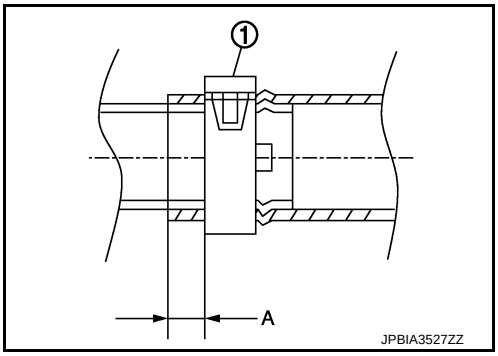

Inspection

INFOID:0000000005988464

INSPECTION AFTER INSTALLATION

- Check for leakage of engine coolant using the radiator cap tester adapter (commercial service tool) and the radiator cap tester (commercial service tool). Refer to CO-9, "Inspection".
- Start and warm up the engine. Check visually that there is no leakage of engine coolant.

COOLING FAN

Exploded View

INFOID:0000000005988465

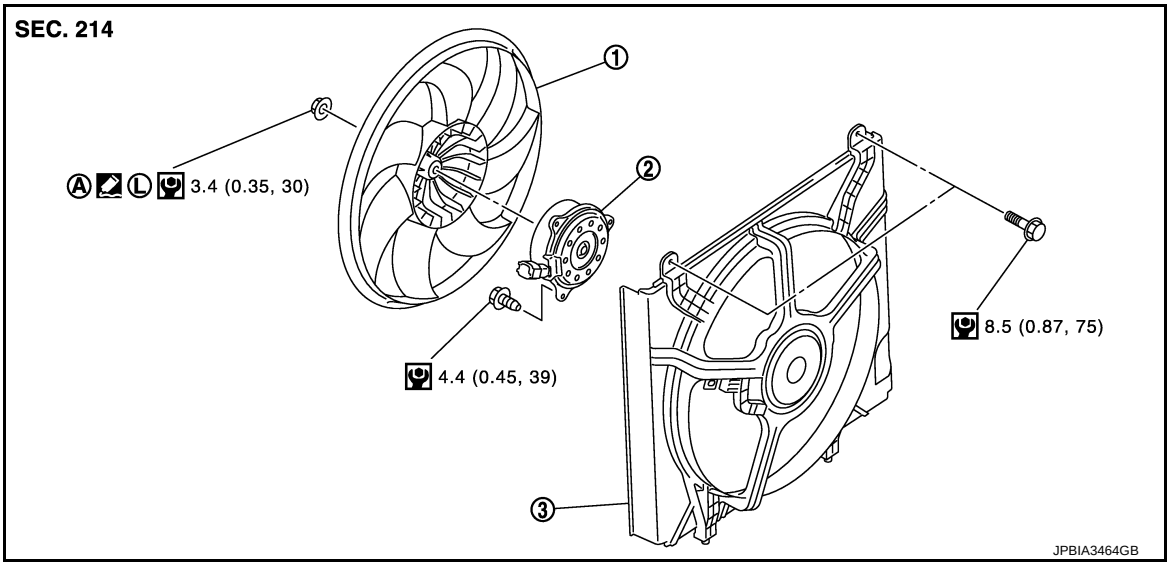

1.	Cooling fan	2.	Fan motor	3.	Fan shroud
A.	Apply on fan motor shaft				

: Apply genuine high strength thread locking sealant or equivalent.

Refer to GI-4, "Components" for symbols not described on the above.

Removal and Installation

INFOID:0000000005988466

REMOVAL

1. Drain engine coolant from radiator. Refer to CO-9, "Draining".
   CAUTION:
   - **Perform this step engine is cold.**
   - **Never spill engine coolant on drive belt.**
2. Remove air duct (inlet). Refer to EM-24, "Removal and Installation".
3. Disconnect reservoir tank hose radiator side, and remove reservoir tank.
4. Remove radiator hose (upper). Refer to CO-14, "Exploded View".
5. Disconnect harness connector from fan motor, and move harness to aside.
6. Remove cooling fan assembly.
   CAUTION:
   Be careful not to damage or scratch on radiator core when removing.

INSTALLATION

Note the following, and install in the reverse order of removal.

CAUTION:

Only use genuine parts for fan shroud mounting bolt and observe the specified torque (to prevent radiator from being damaged).

NOTE:

Cooling fan is controlled by ECM. For details, Refer to following.

- HR12DE (TYPE 1): EC-38, "COOLING FAN CONTROL : System Description"
- HR12DE (TYPE 2): EC-343, "COOLING FAN CONTROL : System Description"

Disassembly and Assembly

INFOID:0000000005988467

DISASSEMBLY

1. Remove cooling fan mounting nut, and then remove the cooling fan.

2. Remove fan motor.

ASSEMBLY

Note the following, and assemble in the reverse order of disassembly.

- Apply genuine high strength thread locking sealant on fan motor shaft.

Inspection

INFOID:0000000005988468

INSPECTION AFTER DISASSEMBLY

Cooling Fan

Inspect cooling fan for crack or unusual bend.

- If anything is found, replace cooling fan.

WATER PUMP

Exploded View

INFOID:0000000005988469

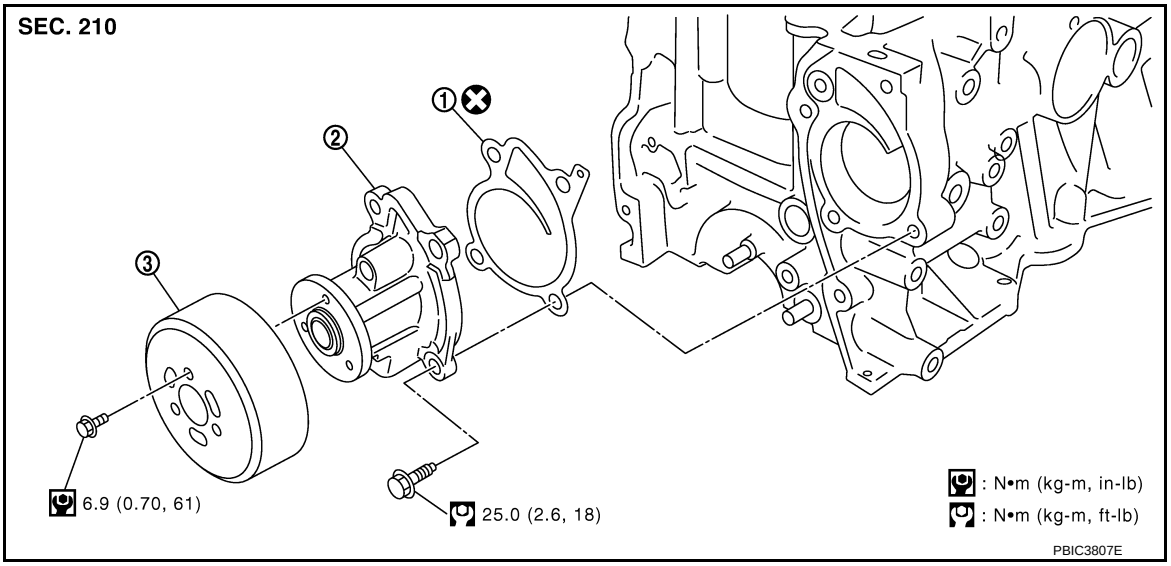

1. Gasket
2. Water pump
3. Water pump pulley

Refer to GI-4, "Components" for symbols in the figure.

Removal and Installation

INFOID:0000000005988470

REMOVAL

1. Drain engine coolant from radiator. Refer to CO-9, "Draining".
   CAUTION:
   - **Perform this step when the engine is cold.**
   - **Never spill engine coolant on drive belt.**
2. Steer front wheel to the right.
3. Remove front fender protector (RH). Refer to DLK-221, "Removal and Installation".
4. Loosen mounting bolts of water pump pulley before loosening belt tension of drive belt.
5. Remove drive belt. Refer to EM-19, "Removal and Installation".
6. Remove water pump pulley.
7. Remove water pump.
   - Loosen mounting bolts in reverse order as shown in the figure.
   - Engine coolant will leak from cylinder block, so have a receptacle ready below.

   CAUTION:
   - **Handle water pump vane so that it does not contact any other parts.**
   - **Water pump cannot be disassembled and should be replaced as a unit.**

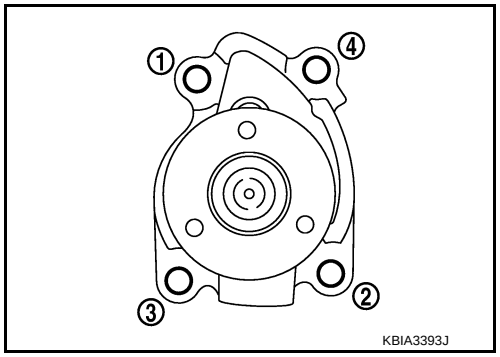

INSTALLATION

Install in the reverse order of removal.

Inspection

INFOID:0000000005988471

INSPECTION AFTER REMOVAL

- Check visually that there is no significant dirt or rusting on water pump body and vane (A).
- Check that there is no looseness in vane shaft, and that it turns smoothly when rotated by hand.
- Replace water pump, if necessary.

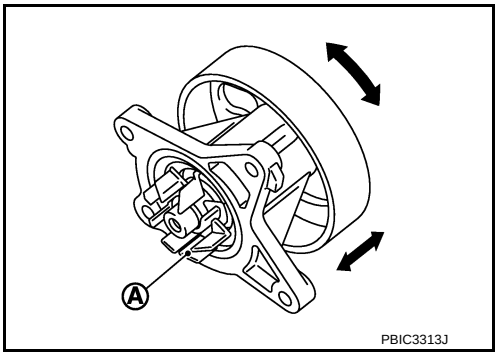

INSPECTION AFTER INSTALLATION

- Check for leakage of engine coolant using the radiator cap tester adapter (commercial service tool) and the radiator cap tester (commercial service tool). Refer to CO-9, "Inspection".
- Start and warm up the engine. Check visually that there is no leakage of engine coolant.

THERMOSTAT

Exploded View

INFOID:0000000005988472

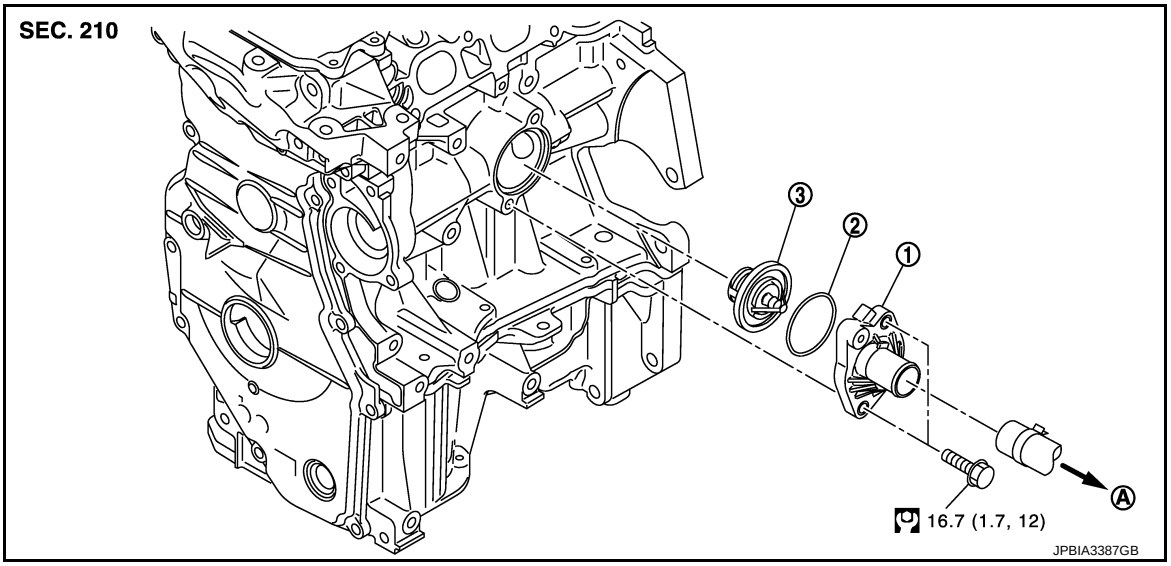

1. Water inlet
2. Rubber ring
3. Thermostat

A. To radiator

Refer to GI-4, "Components" for symbols in the figure.

Removal and Installation

INFOID:0000000005988473

REMOVAL

1. Drain engine coolant from radiator. Refer to CO-9, "Draining".
   CAUTION:
   Perform this step when engine is cold.
2. Remove air duct (inlet). Refer to EM-24, "Removal and Installation".
3. Disconnect radiator hose (lower) from water inlet. Refer to CO-14, "Removal and Installation".
4. Remove water inlet and thermostat.
   - Engine coolant leakage from cylinder block, so have a receptacle ready below.

INSTALLATION

Note the following, and install in the reverse order of removal.

Thermostat

- Install thermostat with making rubber ring (1) groove fit to thermostat flange (A) with the whole circumference.

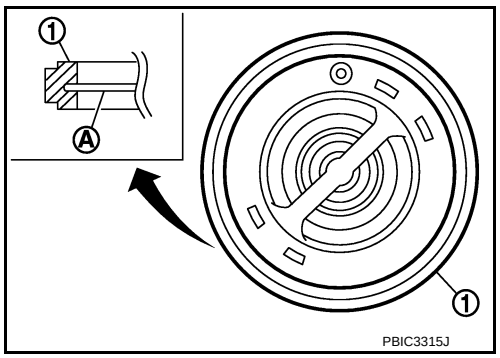

- Install thermostat (2) with jiggle valve (A) facing upwards.

1 : Cylinder block

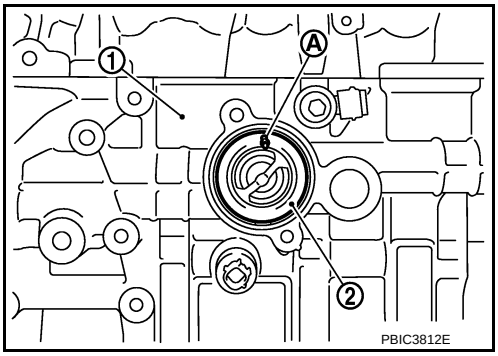

Water Inlet
After installation, install oil level gauge guide (1) as shown in the figure.

2 : Water inlet

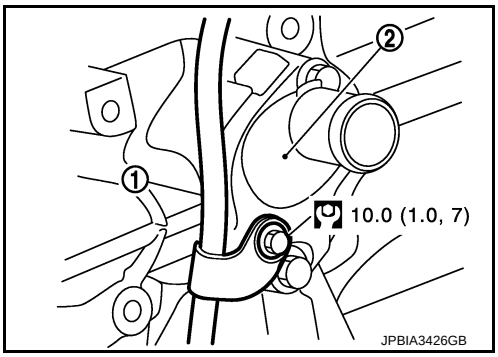

Inspection

INFOID:0000000005988474

INSPECTION AFTER REMOVAL

Thermostat
- Place a thread (A) so that it is caught in the valves of thermostat (1). Immerse fully in a container (B) filled with water. Heat while stirring.
- The valve opening temperature is the temperature at which the valve opens and falls from the thread.
- Continue heating. Check the full open valve lift amount.
- After checking the maximum valve lift amount, lower the water temperature and check the valve closing temperature.

Standard: Refer to CO-26, "Thermostat".

- If out of the standard, replace thermostat.

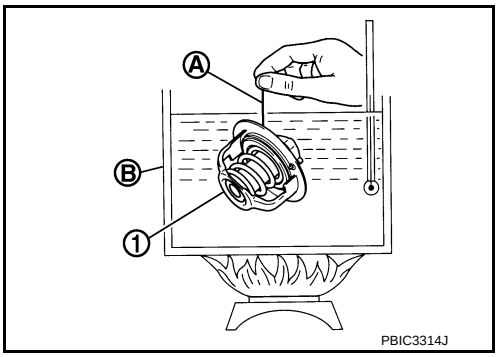

INSPECTION AFTER INSTALLATION
- Check for leakage of engine coolant using the radiator cap tester adapter (commercial service tool) and the radiator cap tester (commercial service tool). Refer to CO-9, "Inspection".
- Start and warm up the engine. Check visually that there is no leakage of engine coolant.

WATER OUTLET

Exploded View

INFOID:0000000005988475

WITHOUT EGR CONTROL VALVE

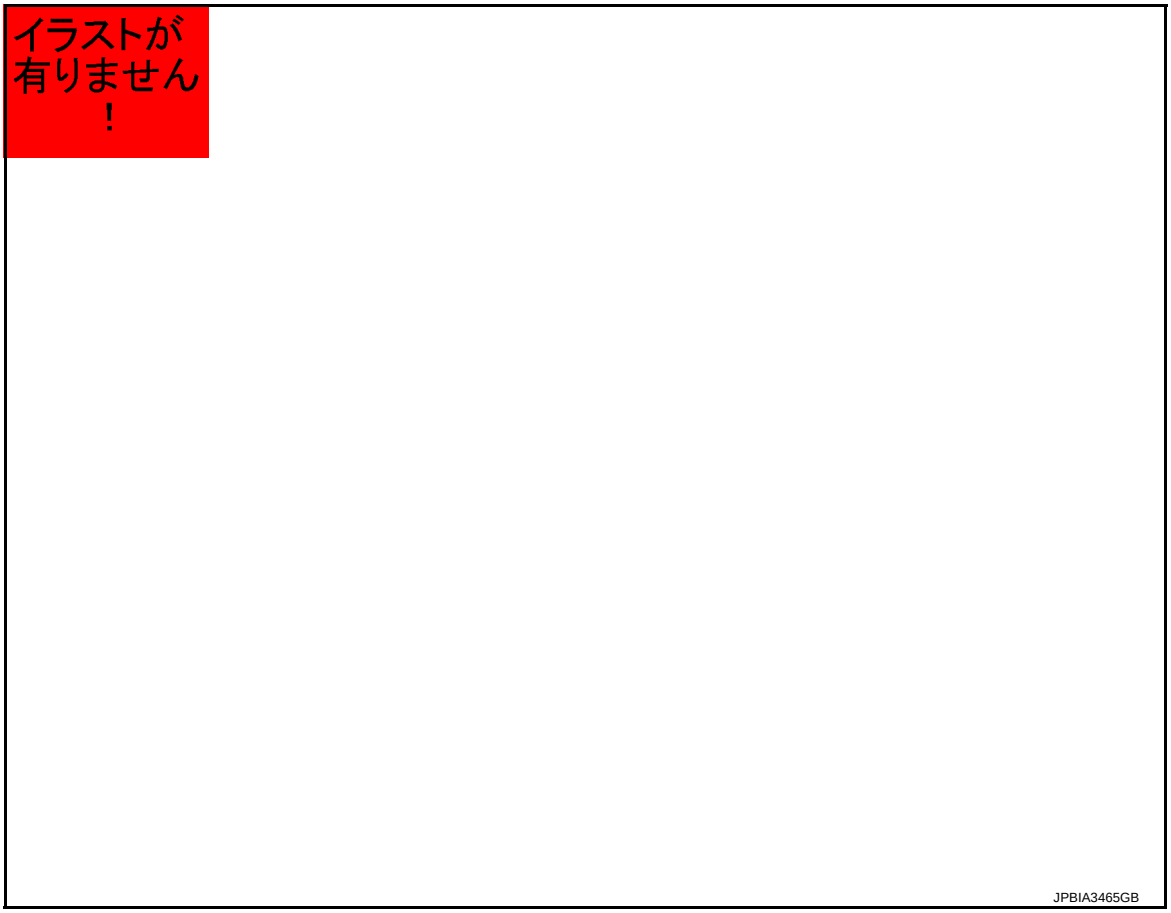

1.	Gasket	2.	Engine coolant temperature sensor	3.	O-ring
4.	EGR control valve	5.	EGR temp sensor	6.	Water outlet

A. To heater B. To radiator

⇦ : Engine front

Refer to GI-4, "Components" for symbols in the figure.

WITH EGR CONTROL VALVE

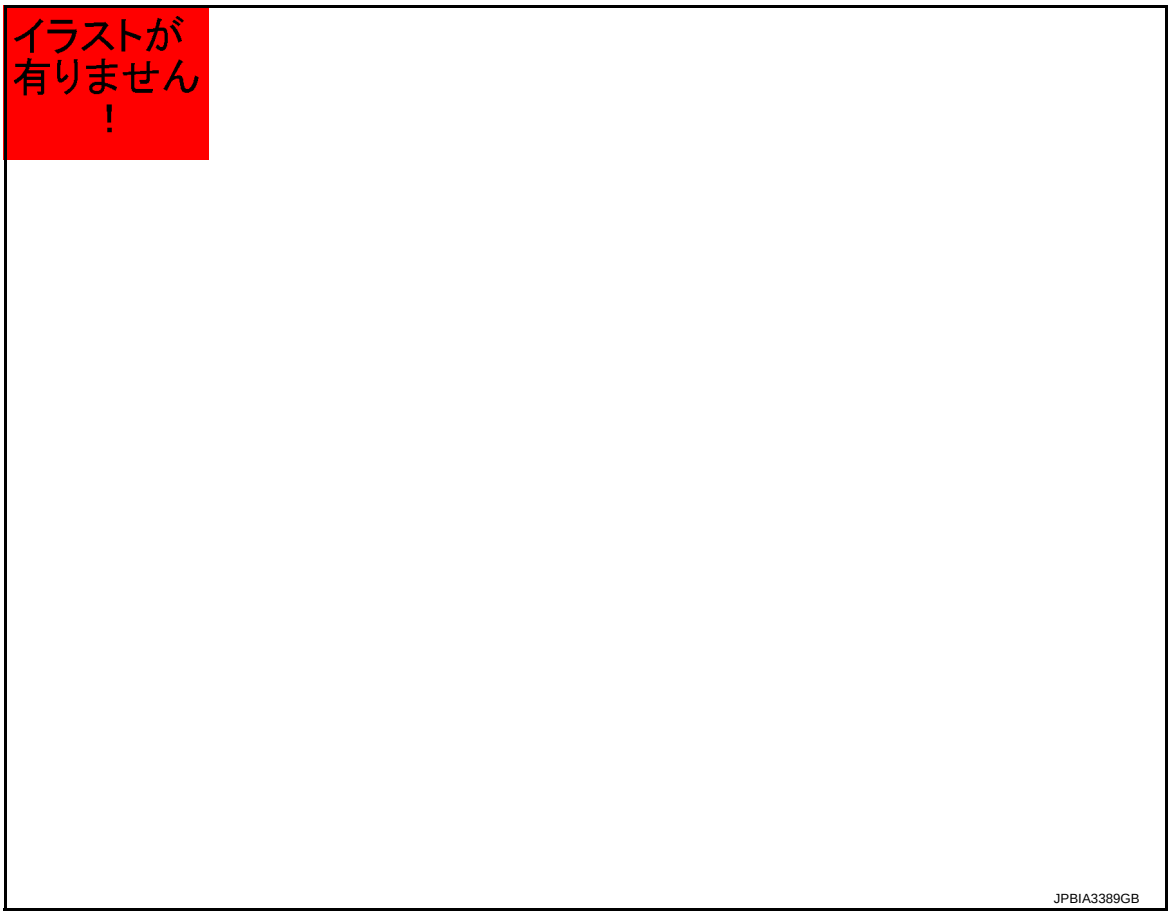

1.	Engine coolant temperature sensor	2.	Washer	3.	Gasket
4.	Radiator hose (upper)	5.	Water outlet	6.	Heater hose
7.	Heater hose				
A.	To heater	B.	To radiator		

⇦ : Engine front

Refer to GI-4, "Components" for symbols in the figure.

Removal and Installation

INFOID:0000000005988476

REMOVAL

1. Drain engine coolant from radiator. Refer to CO-9, "Draining".
   CAUTION:
   - **Perform this step when engine is cold.**
2. Remove air duct (inlet) and air cleaner assembly. Refer to EM-24, "Removal and Installation".
3. Disconnect radiator hose (upper). Refer to CO-14, "Removal and Installation".
4. Disconnect harness connector from engine coolant temperature sensor.
5. Disconnect harness connector from EGR control valve and EGR temp sensor. (With EGR control valve)
6. Remove water hoses and heater hoses.
7. Remove water outlet.
8. Remove engine coolant temperature sensor from water outlet, if necessary.

INSTALLATION

Installation is the reverse order of removal.

Inspection

INFOID:0000000005988477

INSPECTION AFTER REMOVAL

Water Control Valve

- Place a thread (A) so that it is caught in the valves of water control valve (1). Immerse fully in a container (B) filled with water. Heat while stirring.
- The valve opening temperature is the temperature at which the valve opens and falls from the thread.
- Continue heating. Check the continuous valve lifting toward maximum valve lift.
  NOTE:
  The maximum valve lift amount standard temperature for water control valve is the reference value.
- After checking the maximum valve lift amount, lower the water temperature and check the valve closing temperature.

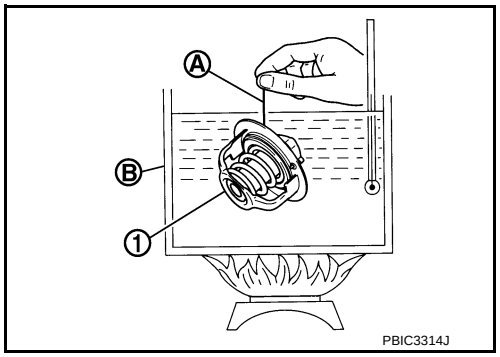

Standard: **Refer to CO-26, "Water Control Valve".**

- If out of the standard, replace water control valve.

INSPECTION AFTER INSTALLATION

- Check for leakage of engine coolant using the radiator cap tester adapter (commercial service tool) and the radiator cap tester (commercial service tool). Refer to CO-9, "Inspection".
- Start and warm up the engine. Check visually that there is no leakage of engine coolant.

SERVICE DATA AND SPECIFICATIONS (SDS)

SERVICE DATA AND SPECIFICATIONS (SDS)

Periodical Maintenance Specification

INFOID:0000000005988478

ENGINE COOLANT CAPACITY (APPROXIMATE)

Unit: ℓ (US qt, Imp qt)

Engine coolant capacity (With reservoir tank at “MAX” level)	A/T models	5.5 (5-6/8, 4-7/8)
	M/T models (without EGR control valve)	
	M/T models (with EGR control valve)	5.7 (6, 5)
Reservoir tank engine coolant capacity (At “MAX” level)		0.7 (3/4, 5/8)

Radiator

INFOID:0000000005988479

Unit: kPa (kg/cm^2, psi)

Cap relief pressure	Standard	78 - 98 (0.8 - 1.0, 11 - 14)
	Limit	59 (0.6, 9)
Leakage testing pressure		98 (1.0, 14)

Thermostat

INFOID:0000000005988480

Standard

Valve opening temperature	80.5 - 83.5°C (177 - 182°F)
Maximum valve lift	8.0 mm/95°C (0.315 in/203°F)
Valve closing temperature	77°C (171°F)

Water Control Valve

INFOID:0000000005988481

Standard

Valve opening temperature	93.5 - 96.5°C (200 - 206°F)
Maximum valve lift	8.0 mm/108°C (0.315 in/226°F)
Valve closing temperature	90°C (194°F)

SECTION DEF
DEFOGGER

A B C D E F G H I J K DEF M N O P

CONTENTS

PRECAUTION 3

PRECAUTIONS 3
Precaution for Supplemental Restraint System (SRS) "AIR BAG" and "SEAT BELT PRE-TENSIONER" 3

SYSTEM DESCRIPTION 4

COMPONENT PARTS 4
Component Parts Location 4
Component Description 4
BCM 4
IPDM E/R 4
A/C AUTO AMP. / A/C CONTROL 5
REAR WINDOW DEFOGGER SWITCH 5
REAR WINDOW DEFOGGER RELAY 5
RERA WINDOW DEFOGGER 5
DOOR MIROOR DEFOGGER 5

SYSTEM 6

REAR WINDOW DEFOGGER 6
REAR WINDOW DEFOGGER : System Diagram 6
REAR WINDOW DEFOGGER : System Description 6

DIAGNOSIS SYSTEM (BCM) (WITH INTELLIGENT KEY SYSTEM) 7

COMMON ITEM 7
COMMON ITEM : CONSULT-III Function (BCM - COMMON ITEM) 7

REAR WINDOW DEFOGGER 8
REAR WINDOW DEFOGGER : CONSULT-III Function (BCM - REAR DEFOGGER) 8

DIAGNOSIS SYSTEM (BCM) (WITHOUT INTELLIGENT KEY SYSTEM) 10

COMMON ITEM 10
COMMON ITEM : CONSULT-III Function (BCM - COMMON ITEM) 10

REAR WINDOW DEFOGGER 10
REAR WINDOW DEFOGGER : CONSULT-III Function (BCM - REAR DEFOGGER) 11

ECU DIAGNOSIS INFORMATION 12

BCM 12
List of ECU Reference 12

WIRING DIAGRAM 13

REAR WINDOW DEFOGGER SYSTEM 13
Wiring Diagram 13

BASIC INSPECTION 14

DIAGNOSIS AND REPAIR WORK FLOW 14
Work Flow 14

DTC/CIRCUIT DIAGNOSIS 15

REAR WINDOW DEFOGGER SWITCH 15

WITH AUTO A/C 15
WITH AUTO A/C : Component Function Check 15
WITH AUTO A/C : Diagnosis Procedure 15

WITHOUT AUTO A/C 16
WITHOUT AUTO A/C : Description 16
WITHOUT AUTO A/C : Component Function Check 16
WITHOUT AUTO A/C : Diagnosis Procedure 16
WITHOUT AUTO A/C : Component Inspection 17

REAR WINDOW DEFOGGER RELAY 18
Component Function Check 18
Diagnosis Procedure 18
Component Inspection 19

REAR WINDOW DEFOGGER 20
Component Function Check 20

Diagnosis Procedure 20

REAR WINDOW DEFOGGER ON SIGNAL 22

WITH AUTO A/C 22
WITH AUTO A/C : Description 22
WITH AUTO A/C : Component Function Check 22
WITH AUTO A/C : Diagnosis Procedure 22

WITHOUT AUTO A/C 22
WITHOUT AUTO A/C : Description 22
WITHOUT AUTO A/C : Component Function Check 23
WITHOUT AUTO A/C : Diagnosis Procedure 23

SYMPTOM DIAGNOSIS 24

REAR WINDOW DEFOGGER DOES NOT OPERATE 24
Diagnosis Procedure 24

ON IS NOT DISPLAYED WHEN PRESSING REAR WINDOW DEFOGGER SWITCH BUT IT IS OPERATED 25
Diagnosis Procedure 25

REMOVAL AND INSTALLATION 26

FILAMENT 26
Inspection and Repair 26

PRECAUTION

PRECAUTIONS

Precaution for Supplemental Restraint System (SRS) "AIR BAG" and "SEAT BELT PRE-TENSIONER"

INFOID:0000000006067661

The Supplemental Restraint System such as “AIR BAG” and “SEAT BELT PRE-TENSIONER”, used along with a front seat belt, helps to reduce the risk or severity of injury to the driver and front passenger for certain types of collision. Information necessary to service the system safely is included in the “SRS AIR BAG” and “SEAT BELT” of this Service Manual.

WARNING:

- **To avoid rendering the SRS inoperative, which could increase the risk of personal injury or death in the event of a collision which would result in air bag inflation, all maintenance must be performed by an authorized NISSAN/INFINITI dealer.**
- **Improper maintenance, including incorrect removal and installation of the SRS, can lead to personal injury caused by unintentional activation of the system. For removal of Spiral Cable and Air Bag Module, see the “SRS AIR BAG”.**
- **Do not use electrical test equipment on any circuit related to the SRS unless instructed to in this Service Manual. SRS wiring harnesses can be identified by yellow and/or orange harnesses or harness connectors.**

PRECAUTIONS WHEN USING POWER TOOLS (AIR OR ELECTRIC) AND HAMMERS

WARNING:

- **When working near the Air Bag Diagnosis Sensor Unit or other Air Bag System sensors with the ignition ON or engine running, DO NOT use air or electric power tools or strike near the sensor(s) with a hammer. Heavy vibration could activate the sensor(s) and deploy the air bag(s), possibly causing serious injury.**
- **When using air or electric power tools or hammers, always switch the ignition OFF, disconnect the battery, and wait at least 3 minutes before performing any service.**

SYSTEM DESCRIPTION

COMPONENT PARTS

Component Parts Location

INFOID:0000000006067597

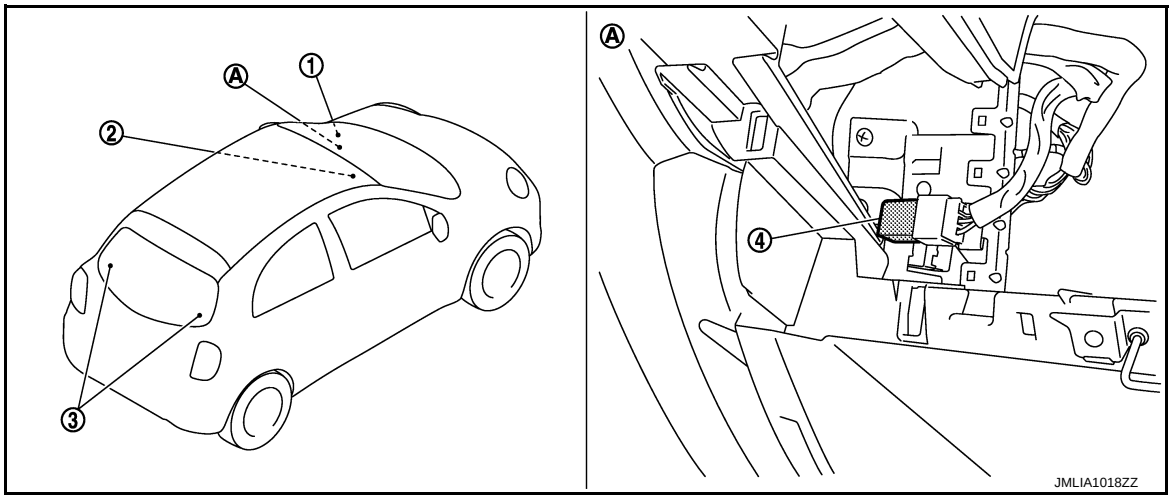

1. BCM
   - With intelligent key: Refer to BCS-5, "BODY CONTROL SYSTEM : Component Parts Location".
   - Without intelligent key: Refer to BCS-60, "BODY CONTROL SYSTEM : Component Parts Location".
2. - A/C auto amp.
     With auto A/C: Refer to HAC-7, "AUTOMATIC AIR CONDITIONING SYSTEM : Component Parts Location".
   - A/C control
     With manual A/C: Refer to HAC-86, "MANUAL AIR CONDITIONING SYSTEM : Component Part Location".
3. Rear window defogger connector
4. Rear window defogger relay

A. Glove box removed condition

Component Description

INFOID:0000000006067598

Component parts	Description
A/C auto amp. (with auto A/C) A/C control (with manual A/C)	• The rear window defogger switch is installed • The rear window defogger is operated by turning the rear window defogger switch ON. • Turns the indicator lamp ON when detecting the operation of rear window defogger
BCM	• Operates the rear window defogger relay with the operation of rear window defogger switch. • Performs the timer control of rear window defogger.
Rear window defogger relay	Operates the rear window defogger with the control signal from BCM.
Rear window defogger	Heats the heating wire with the power supply from the rear window defogger relay to prevent the rear window from fogging up.

BCM

INFOID:0000000006067599

- Rear window defogger switch operation is transmitted to IPDM E/R via CAN communication
- Performs the timer control of rear window defogger

IPDM E/R

INFOID:0000000006067600

BCM controls rear window defogger relay via CAN communication, and then operates rear window defogger

A/C AUTO AMP. / A/C CONTROL

INFOID:0000000006067601

- The rear window defogger switch is installed
- Turns the indicator lamp ON when detecting the operation of rear window defogger

REAR WINDOW DEFOGGER SWITCH

INFOID:0000000006067602

- The rear window defogger is operated by turning the rear window defogger switch ON.
- The indicator lamp in the rear window defogger illuminates when the rear window defogger is operating.

REAR WINDOW DEFOGGER RELAY

INFOID:0000000006067603

Operates the rear window defogger with the control signal from IPDM E/R

RERA WINDOW DEFOGGER

INFOID:0000000006067604

Heats the heating wire with the power supply from the rear window defogger relay to prevent the rear window from fogging up.

DOOR MIROOR DEFOGGER

INFOID:0000000006067605

Heats the heating wire with the power supply from the rear window defogger relay to prevent the door mirror from fogging up.

SYSTEM

REAR WINDOW DEFOGGER

REAR WINDOW DEFOGGER : System Diagram

INFOID:0000000006067606

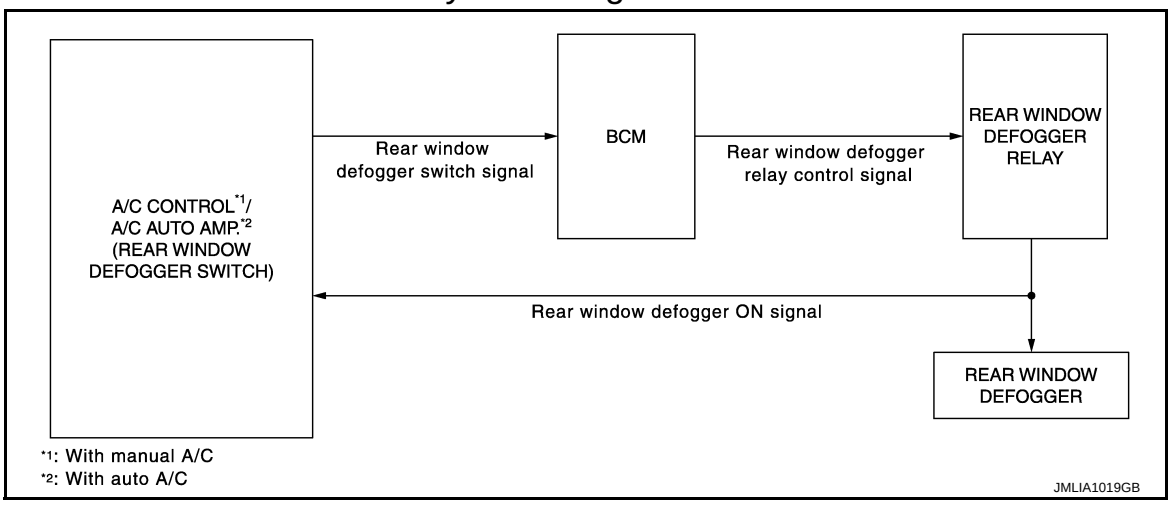

REAR WINDOW DEFOGGER : System Description

INFOID:0000000006067607

OPERATION DESCRIPTION

- Turn rear window defogger switch ON when the ignition switch is turned ON. Then A/C auto amp. (with auto A/C) or A/C control (with manual A/C) transmits rear window defogger switch signal to BCM.
- BCM turns rear window defogger relay ON when rear window defogger switch signal is received.
- Rear window defogger are supplied with power and operate when rear window defogger relay turns ON.
- When rear window defogger is activated, indicator lamp on rear window defogger switch turns ON.

TIMER FUNCTION

- BCM turns rear window defogger relay ON for approximately 15 minutes when rear window defogger switch is turned ON while ignition switch is ON. It makes rear window defogger operate.
- The timer is cancelled if the rear window defogger switch is pressed again during timer operation. BCM stops the output of rear window defogger switch signal. The same action occurs during timer operation if the ignition switch is OFF.

DIAGNOSIS SYSTEM (BCM) (WITH INTELLIGENT KEY SYSTEM) COMMON ITEM

COMMON ITEM : CONSULT-III Function (BCM - COMMON ITEM)

INFOID:0000000006067664

APPLICATION ITEM

CONSULT-III performs the following functions via CAN communication with BCM.

Diagnosis mode	Function Description
Work Support	Changes the setting for each system function.
Self Diagnostic Result	Displays the diagnosis results judged by BCM.
CAN Diag Support Monitor	Monitors the reception status of CAN communication viewed from BCM. Refer to CONSULT-III operation manual.
Data Monitor	The BCM input/output signals are displayed.
Active Test	The signals used to activate each device are forcibly supplied from BCM.
Ecu Identification	The BCM part number is displayed.
Configuration	• Read and save the vehicle specification. • Write the vehicle specification when replacing BCM.

SYSTEM APPLICATION

BCM can perform the following functions for each system.

NOTE:

It can perform the diagnosis modes except the following for all sub system selection items.

×: Applicable item

System	Sub system selection item	Diagnosis mode		
		Work Support	Data Monitor	Active Test
Door lock	DOOR LOCK	×	×	×
Rear window defogger	REAR DEFOGGER		×	×
Warning chime	BUZZER		×	×
Interior room lamp timer	INT LAMP	×	×	×
Exterior lamp	HEAD LAMP	×	×	×
Wiper and washer	WIPER	×	×	×
Turn signal and hazard warning lamps	FLASHER	×	×	×
Automatic air conditioner	AIR CONDITONER		×	×
• Intelligent Key system • Engine start system	INTELLIGENT KEY	×	×	×
Combination switch	COMB SW		×	
Body control system	BCM	×		
NATS	IMMU	×	×	×
Interior room lamp battery saver	BATTERY SAVER	×	×	×
Back door	TRUNK		×	
—	THEFT ALM*	×	×	×
—	RETAINED PWR*		×	
Signal buffer system	SIGNAL BUFFER		×	×

*: This item is displayed, but is not used.

FREEZE FRAME DATA (FFD)

The BCM records the following vehicle condition at the time a particular DTC is detected, and displays on CONSULT-III.

CONSULT screen item	Indication/Unit	Description	
Vehicle Speed	km/h	Vehicle speed of the moment a particular DTC is detected	
Odo/Trip Meter	km	Total mileage (Odometer value) of the moment a particular DTC is detected	
Vehicle Condition	SLEEP>LOCK	Power position status of the moment a particular DTC is detected	While turning BCM status from low power consumption mode to normal mode (Power supply position is “LOCK”)
	SLEEP>OFF		While turning BCM status from low power consumption mode to normal mode (Power supply position is “OFF”.)
	LOCK>ACC		While turning power supply position from “LOCK” to “ACC”
	ACC>ON		While turning power supply position from “ACC” to “IGN”
	RUN>ACC		While turning power supply position from “RUN” to “ACC” (Vehicle is stopping and selector lever is except P position.)
	CRANK>RUN		While turning power supply position from “CRANKING” to “RUN” (From cranking up the engine to run it)
	RUN>URGENT		While turning power supply position from “RUN“ to “ACC” (Emergency stop operation)
	ACC>OFF		While turning power supply position from “ACC” to “OFF”
	OFF>LOCK		While turning power supply position from “OFF” to “LOCK”
	OFF>ACC		While turning power supply position from “OFF” to “ACC”
	ON>CRANK		While turning power supply position from “IGN” to “CRANKING”
	OFF>SLEEP		While turning BCM status from normal mode (Power supply position is “OFF”.) to low power consumption mode
	LOCK>SLEEP		While turning BCM status from normal mode (Power supply position is “LOCK”.) to low power consumption mode
	LOCK		Power supply position is “LOCK” (Ignition switch OFF with steering is locked.)
	OFF		Power supply position is “OFF” (Ignition switch OFF with steering is unlocked.)
	ACC		Power supply position is “ACC” (Ignition switch ACC)
	ON		Power supply position is “IGN” (Ignition switch ON with engine stopped)
	ENGINE RUN		Power supply position is “RUN” (Ignition switch ON with engine running)
	CRANKING		Power supply position is “CRANKING” (At engine cranking)
IGN Counter	0 - 39	The number of times that ignition switch is turned ON after DTC is detected • The number is 0 when a malfunction is detected now. • The number increases like 1 → 2 → 3...38 → 39 after returning to the normal condition whenever ignition switch OFF → ON. • The number is fixed to 39 until the self-diagnosis results are erased if it is over 39.	

REAR WINDOW DEFOGGER

REAR WINDOW DEFOGGER : CONSULT-III Function (BCM - REAR DEFOGGER)

INFOID:0000000006067609

Data monitor

Monitor Item	Description
REAR DEF SW	Displays “Press (ON)/other (OFF)” status determined with the rear window defogger switch.
PUSH SW	Indicates [ON/OFF] condition of push switch.

ACTIVE TEST

Test Item	Description
REAR DEFOGGER	Give a drive signal to the rear window defogger relay to activate it.

DIAGNOSIS SYSTEM (BCM) (WITHOUT INTELLIGENT KEY SYSTEM) COMMON ITEM

COMMON ITEM : CONSULT-III Function (BCM - COMMON ITEM)

INFOID:0000000006067665

APPLICATION ITEM

CONSULT-III performs the following functions via CAN communication with BCM.

Diagnosis mode	Function Description
Work Support	Changes the setting for each system function.
Self Diagnostic Result	Displays the diagnosis results judged by BCM.
CAN Diag Support Monitor	Monitors the reception status of CAN communication viewed from BCM. Refer to CONSULT-III operation manual.
Data Monitor	The BCM input/output signals are displayed.
Active Test	The signals used to activate each device are forcibly supplied from BCM.
Ecu Identification	The BCM part number is displayed.
Configuration	• Read and save the vehicle specification. • Write the vehicle specification when replacing BCM.

SYSTEM APPLICATION

BCM can perform the following functions for each system.

NOTE:

It can perform the diagnosis modes except the following for all sub system selection items.

×: Applicable item

System	Sub system selection item	Diagnosis mode		
		Work Support	Data Monitor	Active Test
Door lock	DOOR LOCK		×	×
Rear window defogger	REAR DEFOGGER		×	×
Warning chime	BUZZER		×	×
Interior room lamp control	INT LAMP	×	×	×
Remote keyless entry system	MULTI REMOTE ENT	×	×	×
Exterior lamp	HEAD LAMP	×	×	×
Wiper and washer	WIPER	×	×	×
Turn signal and hazard warning lamps	FLASHER		×	×
• Automatic air conditioner • Manual air conditioner	AIR CONDITONER		×	
Combination switch	COMB SW		×	
Body control system	BCM	×		
NATS	IMMU	×*1		×
Interior room lamp battery saver	BATTERY SAVER	×	×	×
Back door	TRUNK		×	
—	THEFT ALM*2		×	×
—	RETAINED PWR*2			
Signal buffer system	SIGNAL BUFFER		×	×
Panic alarm	PANIC ALARM			×

- *1: For models without NATS this mode is not used.
- *2: This item is displayed, but is not used.

REAR WINDOW DEFOGGER

REAR WINDOW DEFOGGER : CONSULT-III Function (BCM - REAR DEFOGGER)

INFOID:0000000006067611

Data monitor

Monitor Item	Description
REAR DEF SW	Displays “Press (ON)/other (OFF)” status determined with the rear window defogger switch.
IGN ON SW	Indicates [ON/OFF] condition of ignition switch in ON position.
ACC ON SW	Indicates [ON/OFF] condition of ignition switch ACC position.

ACTIVE TEST

Test Item	Description
REAR DEFOGGER	Give a drive signal to the rear window defogger relay to activate it.

ECU DIAGNOSIS INFORMATION

BCM

List of ECU Reference

INFOID:0000000006067616

ECU		Reference
BCM	(With Intelligent Key system)	BCS-18, "Reference Value"
		BCS-37, "Fail-safe"
		BCS-39, "DTC Inspection Priority Chart"
		BCS-40, "DTC Index"
	(Without Intelligent Key system)	BCS-72, "Reference Value"
		BCS-85, "Fail-safe"
		BCS-85, "DTC Inspection Priority Chart"
		BCS-86, "DTC Index"

WIRING DIAGRAM

REAR WINDOW DEFOGGER SYSTEM

Wiring Diagram

INFOID:0000000006067617

For connector terminal arrangements, harness layouts, and alphabets in a ⬡ (option abbreviation; if not described in wiring diagram), refer to GI-12, "Connector Information".

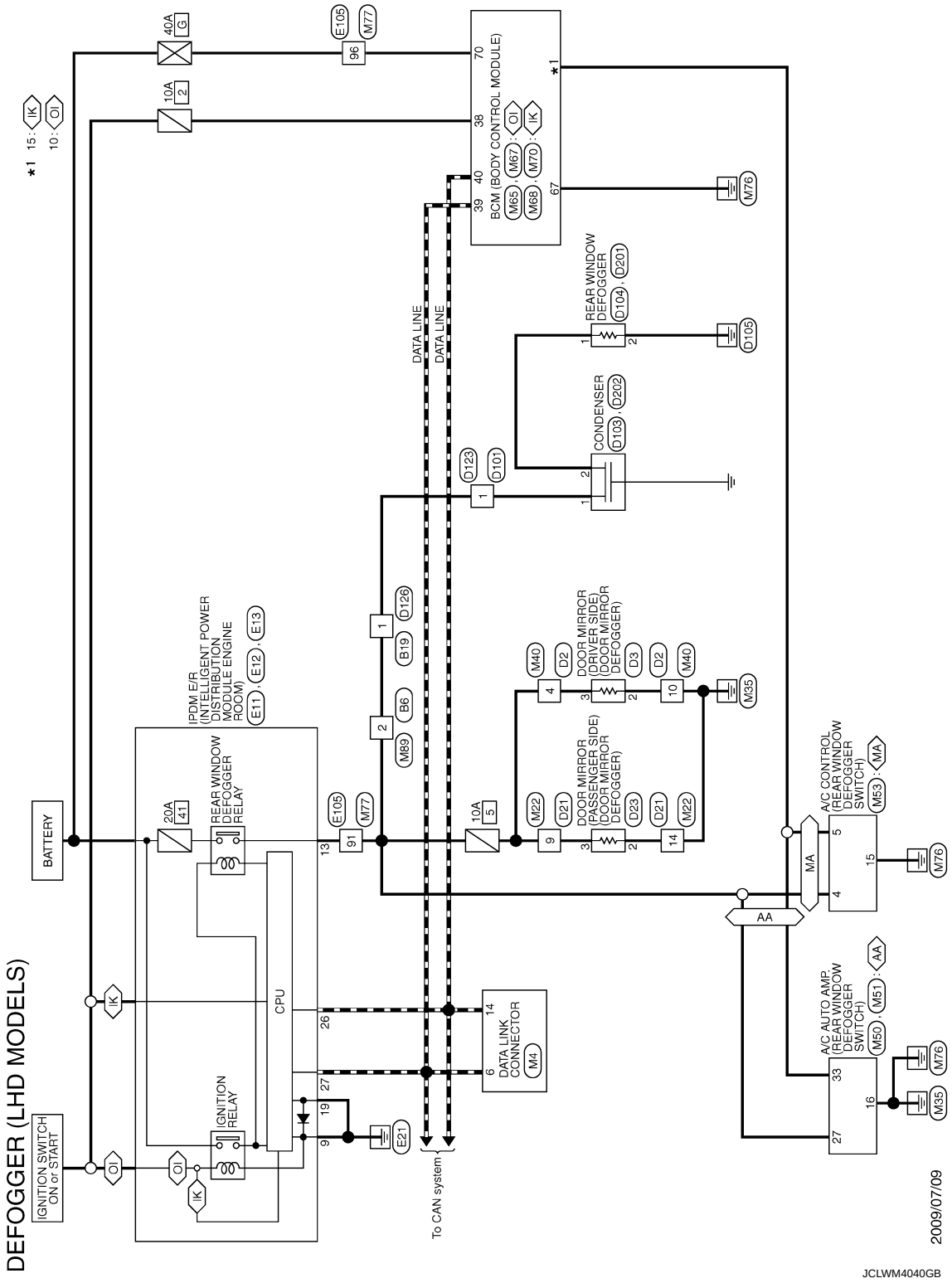

BASIC INSPECTION

DIAGNOSIS AND REPAIR WORK FLOW

Work Flow

INFOID:0000000006067619

DETAILED FLOW

1.OBTAIN INFORMATION ABOUT SYMPTOM

Interview the customer to obtain the malfunction information (conditions and environment when the malfunction occurred) as much as possible when the customer brings the vehicle in.

>> GO TO 2.

2.CHECK FOR DTC

Perform self diagnosis with CONSULT-III

Is any DTC detected?

YES >> BCM: Refer to BCS-40, "DTC Index" (With Intelligent Key system) or BCS-86, "DTC Index" (Without Intelligent Key system).

NO >> GO TO 3.

3.REPRODUCE THE MALFUNCTION INFORMATION

Check the malfunction on the vehicle that the customer describes.
Inspect the relation of the symptoms and the condition when the symptoms occur.

>> GO TO 4.

4.IDENTIFY THE MALFUNCTIONING SYSTEM WITH “SYMPTOM DIAGNOSIS”

Use “Symptom diagnosis” from the symptom inspection result in step 3. Then identify where to start performing the diagnosis based on possible causes and symptoms.

>> GO TO 5.

5.IDENTIFY MALFUNCTIONING PARTS WITH “COMPONENT DIAGNOSIS”

Perform the diagnosis with “Component diagnosis” of the applicable system.

>> GO TO 6.

6.REPAIR OR REPLACE THE MALFUNCTIONING PARTS

Repair or replace the specified malfunctioning parts.

>> GO TO 7.

7.FINAL CHECK

Check that malfunctions are not reproduced when obtaining the malfunction information from the customer, referring to the symptom inspection result in step 3.

Are all malfunctions corrected?

YES >> INSPECTION END

NO >> GO TO 4.

DTC/CIRCUIT DIAGNOSIS

REAR WINDOW DEFOGGER SWITCH WITH AUTO A/C

WITH AUTO A/C : Component Function Check

INFOID:0000000006067621

1. CHECK FUNCTION

Check (REAR DEF SW) in BCM “DATA MONITOR” mode using CONSULT-III when rear window defogger switch is ON.

Is the inspection result normal?

YES >> Rear window defogger switch function is OK.
NO >> Refer to DEF-15, "WITH AUTO A/C : Diagnosis Procedure"

WITH AUTO A/C : Diagnosis Procedure

INFOID:0000000006067622

1. CHECK BCM OUTPUT SIGNAL

1. Turn ignition switch OFF.
2. Disconnect A/C auto amp. connector.
3. Check signal between A/C auto amp. harness connector and ground using oscilloscope.

(+)		(–)	Voltage (V) (Approx.)
A/C auto amp.			
Connector	Terminal		
M50	27	Ground	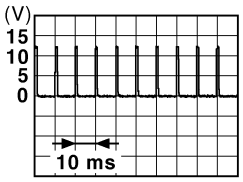 JPMIA0012GB

Is the inspection result normal?

YES >> GO TO 3.
NO >> GO TO 2.

2. CHECK REAR WINDOW DEFOGGER SWITCH CIRCUIT

1. Disconnect BCM connector.
2. Check continuity between BCM harness connector and A/C auto amp. harness connector.

BCM		A/C auto amp.		Continuity
Connector	Terminal	Connector	Terminal	
M68*1 M65*2	15*1 10*2	M50	27	Existed

3. Check continuity between BCM harness connector and ground.

BCM		Ground	Continuity
Connector	Terminal		
M68*1 M65*2	15*1 10*2		Not existed

*1:With intelligent key
*2:Without intelligent key

Is the inspection result normal?

YES >> Replace BCM. Refer to BCS-57, "Removal and Installation" (with intelligent key) or BCS-99, "Removal and Installation" (without intelligent key).
NO >> Repair or replace harness.

3. CHECK GROUND CIRCUIT

Check continuity between A/C auto amp. harness connector and ground.

A/C auto amp.		Ground	Continuity
Connector	Terminal		
M50	21		Existed
	23		

Is the inspection result normal?

YES >> GO TO 4.
NO >> Replace A/C auto amp. Refer to HAC-75, "Removal and Installation".

4. CHECK INTERMITTENT INCIDENT

Refer to GI-33, "Intermittent Incident".

>> INSPECTION END

WITHOUT AUTO A/C

WITHOUT AUTO A/C : Description

INFOID:0000000006067624

- The rear window defogger is operated by turning the rear window defogger switch ON.
- The indicator lamp in the rear window defogger illuminates when the rear window defogger is operating.

WITHOUT AUTO A/C : Component Function Check

INFOID:0000000006067625

1. CHECK FUNCTION

Check (REAR DEF SW) in BCM “DATA MONITOR”mode using CONSULT-III when rear window defogger switch is ON.

Is the inspection result normal?

YES >> Rear window defogger switch function is OK.
NO >> Refer to DEF-16, "WITHOUT AUTO A/C : Diagnosis Procedure"

WITHOUT AUTO A/C : Diagnosis Procedure

INFOID:0000000006067626

1. CHECK BCM OUTPUT SIGNAL

1. Turn ignition switch OFF.
2. Disconnect A/C control connector.
3. Check voltage between A/C control harness connector and ground.

(+)		(–)	Voltage (V) (Approx.)
A/C control			
Connector	Terminal		
M53	10	Ground	12

Is the inspection result normal?

YES >> GO TO 3.
NO >> GO TO 2.

2. CHECK REAR WINDOW DEFOGGER SWITCH CIRCUIT

1. Disconnect BCM connector.
2. Check continuity between BCM harness connector and A/C control harness connector.

BCM		A/C control		Continuity
Connector	Terminal	Connector	Terminal	
M68*1 M65*2	15*1 10*2	M53	10	Existed

3. Check continuity between BCM harness connector and ground.

BCM		Ground	Continuity
Connector	Terminal		
M68*1 M65*2	15*1 10*2		Not existed

*1:With intelligent key
*2:Without intelligent key

Is the inspection result normal?

YES >> Replace BCM. Refer to BCS-57, "Removal and Installation" (with intelligent key) or BCS-99, "Removal and Installation" (without intelligent key).
NO >> Repair or replace harness.

3. CHECK GROUND CIRCUIT

Check continuity between A/C control harness connector and ground.

A/C control		Ground	Continuity
Connector	Terminal		
M53	8		Existed

Is the inspection result normal?

YES >> GO TO 4.
NO >> Repair or replace harness.

4. CHECK REAR WINDOW DEFOGGER SWITCH

Refer to DEF-17, "WITHOUT AUTO A/C : Component Inspection".

Is the inspection result normal?

YES >> GO TO 5.
NO >> Replace A/C control. Refer to HAC-115, "Removal and Installation".

5. CHECK INTERMITTENT INCIDENT

Refer to GI-33, "Intermittent Incident".

>> INSPECTION END

WITHOUT AUTO A/C : Component Inspection

INFOID:0000000006067627

1. CHECK REAR WINDOW DEFOGGER SWITCH

1. Turn ignition switch OFF.
2. Disconnect A/C control connector.
3. Check continuity between A/C control terminals.

A/C control		Condition		Continuity
Terminal				
10	8	Rear window defogger switch	Pressed	Existed
			Released	Not existed

Is the inspection result normal?

YES >> INSPECTION END
NO >> Replace A/C control. Refer to HAC-115, "Removal and Installation".

REAR WINDOW DEFOGGER RELAY

Component Function Check

INFOID:0000000006067629

1. CHECK FUNCTION

1. Turn ignition switch ON.
2. Check that an operation noise of rear window defogger relay can be heard when turning the rear window defogger switch ON.

Is the inspection result normal?

YES >> Rear window defogger relay function is OK.
NO >> Refer to DEF-18, "Diagnosis Procedure"

Diagnosis Procedure

INFOID:0000000006067630

1. CHECK REAR WINDOW DEFOGGER RELAY POWER SUPPLY CIRCUIT

1. Turn ignition switch OFF and disconnect rear window defogger relay connector.
2. Turn ignition switch ON.
3. Check voltage between rear window defogger relay harness connector and ground.

(+)		(–)	Voltage
Rear window defogger relay			
Connector	Terminal		
M91	1	Ground	Battery voltage

Is the inspection result normal?

YES >> GO TO 3.
NO >> GO TO 2.

2. CHECK FUSE

1. Turn ignition switch OFF.
2. Check 10A fuse (No.3).

Is the inspection result normal?

YES >> Check ignition power supply circuit. Refer to PG-19, "Wiring Diagram - IGNITION POWER SUPPLY -".
NO >> Replace the blown fuse after repairing the affected circuit if a fuse is blown.

3. CHECK REAR WINDOW DEFOGGER RELAY CONTROL CIRCUIT

1. Turn ignition switch OFF.
2. Disconnect BCM connector.
3. Check continuity between BCM harness connector and rear window defogger relay harness connector.

BCM		Rear window defogger relay		Continuity
Connector	Terminal	Connector	Terminal	
M68*1 M67*2	1*1 64*2	M91	2	Existed

4. Check continuity between BCM harness connector and ground.

BCM		Ground	Continuity
Connector	Terminal		
M68*1 M67*2	1*1 64*2		Not existed

*1:With intelligent key
*2:Without intelligent key

Is the inspection result normal?

YES >> GO TO 4.
NO >> Repair or replace harness.

4. CHECK REAR WINDOW DEFOGGER RELAY

Refer to DEF-19, "Component Inspection".

Is the inspection result normal?

YES >> Replace BCM. Refer to BCS-57, "Removal and Installation" (with intelligent key) or BCS-99, "Removal and Installation" (without intelligent key).
NO >> Replace rear window defogger relay.

Component Inspection

INFOID:0000000006069111

Check continuity between terminal 3 and 5.

Terminal	Condition	Continuity
3 and 5	12 V direct current supply between terminal 1 and 2	Existed
	No current supply	Not existed

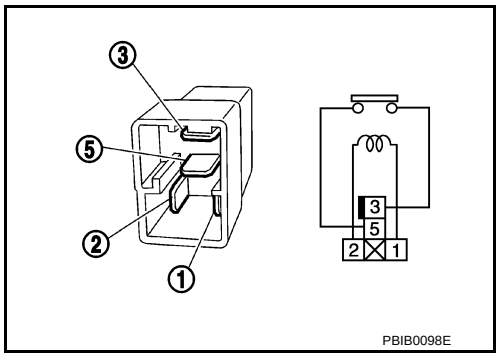

REAR WINDOW DEFOGGER

Component Function Check

INFOID:0000000006067632

1.CHECK FUNCTION

1. Perform BCM Active Test (“REAR DEFOGGER”) using CONSULT-III.
2. Touch “ON”.
3. Check that the rear window heating wire is getting warmer.

Is the inspection result normal?

YES >> Rear window defogger function is OK.
NO >> Refer to DEF-18, "Diagnosis Procedure"

Diagnosis Procedure

INFOID:0000000006067633

1.CHECK REAR WINDOW DEFOGGER POWER SUPPLY CIRCUIT-I

1. Turn ignition switch OFF.
2. Disconnect rear window defogger connector.
3. Turn ignition switch ON.
4. Check voltage between rear window defogger harness connector and ground.

(+)		(–)	Condition		Voltage (V) (Approx.)
Rear window defogger					
Connector	Terminal				
B103	1	Ground	Rear window defogger switch	ON	Battery voltage
				OFF	0

Is the inspection result normal?

YES >> GO TO 5.
NO >> GO TO 2.

2.CHECK REAR WINDOW DEFOGGER RELAY POWER SUPPLY CIRCUIT

1. Turn ignition switch OFF and disconnect rear window defogger relay connector.
2. Check voltage between rear window defogger relay harness connector and ground.

(+)		(–)	Voltage
Rear window defogger relay			
Connector	Terminal		
M91	3	Ground	Battery voltage

Is the inspection result normal?

YES >> GO TO 4.
NO >> GO TO 3.

3.CHECK FUSE

Check 20A fuse (No.10).

Is the inspection result normal?

YES >> Check battery power supply circuit. Refer to PG-10, "Wiring Diagram - BATTERY POWER SUPPLY -".
NO >> Replace the blown fuse after repairing the affected circuit if a fuse is blown.

4.CHECK REAR WINDOW DEFOGGER POWER SUPPLY CIRCUIT-II

1. Check continuity between rear window defogger relay harness connector and rear window defogger harness connector.

Rear window deffoger relay		Rear window deffoger		Continuity
Connector	Terminal	Connector	Terminal	
M91	5	B103	1	Existed

2. Disconnect A/C auto amp. (with auto A/C) or A/C control (with manual A/C) connector.
3. Check continuity between rear window defogger relay harness connector and ground.

Rear window deffoger relay		Ground	Continuity
Connector	Terminal		
M91	5		Not existed

Is the inspection result normal?

YES >> GO TO 7.
NO >> Repair or replace harness.

5. CHECK REAR WINDOW DEFOGGER GROUND CIRCUIT

1. Turn ignition switch OFF.
2. Check continuity between rear window defogger harness connector and ground.

Rear window defogger		Ground	Continuity
Connector	Terminal		
B104	2		Existed

Is the inspection result normal?

YES >> GO TO 6.
NO >> Repair or replace harness.

6. CHECK FILAMENT

Refer to DEF-26, "Inspection and Repair".

Is the inspection result normal?

YES >> GO TO 7.
NO >> Repair filament.

7. CHECK INTERMITTENT INCIDENT

Refer to GI-33, "Intermittent Incident"

>> INSPECTION END

REAR WINDOW DEFOGGER ON SIGNAL

WITH AUTO A/C

WITH AUTO A/C : Description

INFOID:0000000006067644

Turns the indicator lamp in the rear window defogger switch ON when operating the rear window defogger.

WITH AUTO A/C : Component Function Check

INFOID:0000000006067645

1. CHECK REAR WINDOW DEFOGGER ON SIGNAL

Check that the indicator lamps of rear window defogger switch are illuminated when turning the rear window defogger switch ON.

Is the inspection result normal?

OK >> Rear window defogger ON signal is OK.
NG >> Refer to DEF-22, "WITH AUTO A/C : Diagnosis Procedure".

WITH AUTO A/C : Diagnosis Procedure

INFOID:0000000006067646

1. CHECK REAR WINDOW DEFOGGER INDICATOR LAMPS ON SIGNAL

1. Turn ignition switch ON.
2. Check voltage between A/C auto amp. connector ground.

A/C auto amp.		Ground	Condition		Voltage (V) (Approx.)
Connector	Terminal				
M50	7		Rear window defogger switch	ON	Battery voltage
				OFF	0

Is the inspection result normal?

YES >> Replace A/C auto amp. Refer to HAC-75, "Removal and Installation".
NO >> GO TO 2.

2. CHECK REAR WINDOW DEFOGGER INDICATOR LAMPS ON SIGNAL CIRCUIT

1. Turn ignition switch OFF.
2. Disconnect A/C auto amp. connector and rear window defogger relay connector.
3. Check continuity between A/C auto amp. harness connector and rear window defogger relay harness connector.

A/C auto amp.		Rear window defogger relay		Continuity
Connector	Terminal	Connector	Terminal	
M50	7	M91	5	Existed

Is the inspection result normal?

YES >> GO TO 3.
NO >> Repair or replace harness.

3. CHECK INTERMITTENT INCIDENT

Refer to GI-33, "Intermittent Incident".

>> INSPECTION END

WITHOUT AUTO A/C

WITHOUT AUTO A/C : Description

INFOID:0000000006067647

Turns the indicator lamp in the rear window defogger switch ON when operating the rear window defogger.

WITHOUT AUTO A/C : Component Function Check

INFOID:0000000006067648

1. CHECK REAR WINDOW DEFOGGER ON SIGNAL

Check that the indicator lamps of rear window defogger switch are illuminated when turning the rear window defogger switch ON.

Is the inspection result normal?

OK >> Rear window defogger ON signal is OK.
NG >> Refer to DEF-23, "WITHOUT AUTO A/C : Diagnosis Procedure".

WITHOUT AUTO A/C : Diagnosis Procedure

INFOID:0000000006067649

1. CHECK REAR WINDOW DEFOGGER INDICATOR LAMPS ON SIGNAL

1. Turn ignition switch ON.
2. Check voltage between A/C control connector ground.

A/C control		Ground	Condition		Voltage (V) (Approx.)
Connector	Terminal				
M53	7		Rear window defogger switch	ON	Battery voltage
				OFF	0

Is the inspection result normal?

YES >> Replace A/C control Refer to HAC-115, "Removal and Installation".
NO >> GO TO 2.

2. CHECK REAR WINDOW DEFOGGER INDICATOR LAMPS ON SIGNAL CIRCUIT

1. Turn ignition switch OFF.
2. Disconnect A/C control connector and rear window defogger relay connector.
3. Check continuity between A/C control harness connector and rear window defogger relay harness connector.

A/C control		Rear window defogger relay		Continuity
Connector	Terminal	Connector	Terminal	
M53	7	M91	5	Existed

Is the inspection result normal?

YES >> GO TO 3.
NO >> Repair or replace harness.

3. CHECK INTERMITTENT INCIDENT

Refer to GI-33, "Intermittent Incident".

>> INSPECTION END

SYMPTOM DIAGNOSIS

REAR WINDOW DEFOGGER DOES NOT OPERATE

Diagnosis Procedure

INFOID:0000000006067650

1. CHECK REAR WINDOW DEFOGGER SWITCH

Check rear window defogger switch.
- With auto A/C: Refer to DEF-15, "WITH AUTO A/C : Component Function Check".
- Without auto A/C: Refer to DEF-16, "WITHOUT AUTO A/C : Component Function Check".

Is the inspection result normal?

YES >> GO TO 2.
NO >> Repair or replace the malfunctioning parts.

2. CHECK REAR WINDOW DEFOGGER RELAY

Check rear window defogger relay.
Refer to DEF-18, "Component Function Check".

Is the inspection result normal?

YES >> GO TO 3.
NO >> Repair or replace the malfunctioning parts.

3. CHECK REAR WINDOW DEFOGGER

Check rear window defogger.
Refer to DEF-20, "Component Function Check".

Is the inspection result normal?

YES >> GO TO 4.
NO >> Repair or replace the malfunctioning parts.

4. CONFIRM THE OPERATION

Confirm the operation again.

Is the inspection result normal?

YES >> Check intermittent incident. Refer to GI-33, "Intermittent Incident".
NO >> GO TO 1.

ON IS NOT DISPLAYED WHEN PRESSING REAR WINDOW DEFOGGER SWITCH BUT IT IS OPERATED

Diagnosis Procedure

INFOID:0000000006067659

1. CHECK REAR WINDOW DEFOGGER ON SIGNAL

Check rear window defogger ON signal.
- With auto A/C: Refer to DEF-22, "WITH AUTO A/C : Component Function Check".
- Without auto A/C: Refer to DEF-23, "WITHOUT AUTO A/C : Component Function Check".

Is the inspection result normal?

YES >> GO TO 2.
NO >> Repair or replace the malfunctioning parts.

2. CONFIRM THE OPERATION

Confirm the operation again.

Is the inspection result normal?

YES >> Check intermittent incident. Refer to GI-33, "Intermittent Incident".
NO >> GO TO 1.

REMOVAL AND INSTALLATION

FILAMENT

Inspection and Repair

INFOID:0000000006067660

INSPECTION

1. When measuring voltage, wrap tin foil around the top of the negative probe. Then press the foil against the wire with your finger.

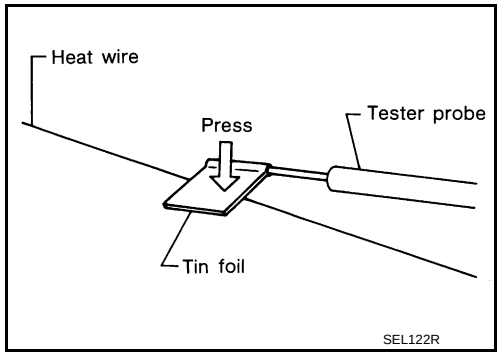

2. Attach probe circuit tester (in Volt range) to middle portion of each filament.

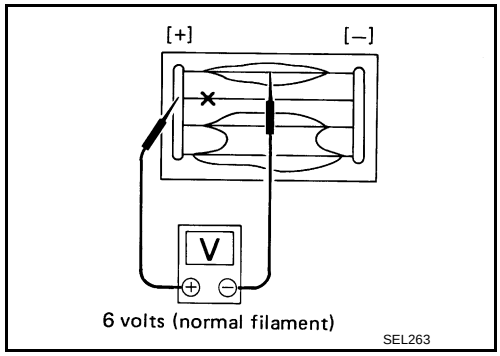

3. If a filament is burned out, circuit tester registers 0 or battery voltage.
4. To locate burned out point, move probe to left and right along filament. Test needle will swing abruptly when probe passes the point.

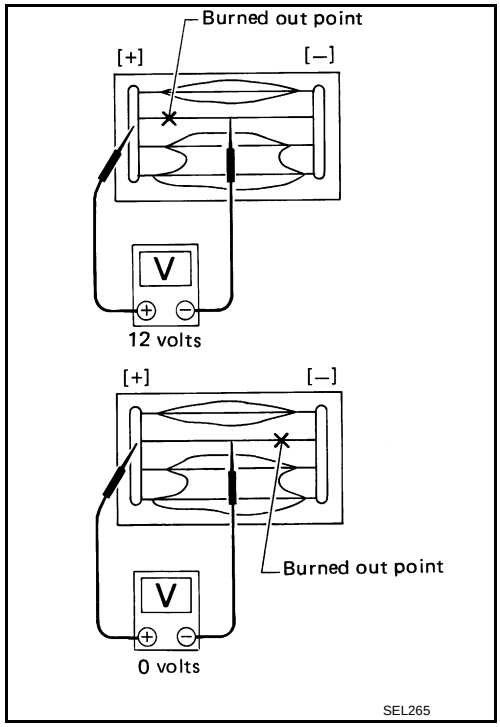

REPAIR

REPAIR EQUIPMENT

- Conductive silver composition (Dupont No. 4817 or equivalent)

- Ruler 30 cm (11.8 in) long
- Drawing pen
- Heat gun
- Alcohol
- Cloth

REPAIRING PROCEDURE

1. Wipe broken heat wire and its surrounding area clean with a cloth dampened in alcohol.
2. Apply a small amount of conductive silver composition to tip of drawing pen.
   Shake silver composition container before use.
3. Place ruler on glass along broken line. Deposit conductive silver composition on break with drawing pen. Slightly overlap existing heat wire on both sides [preferably 5 mm (0.20 in)] of the break.

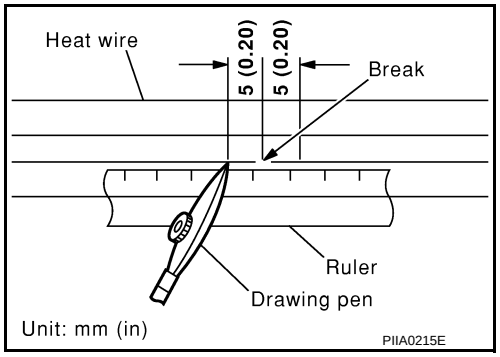

4. After repair has been completed, check repaired wire for continuity. This check should be conducted 10 minutes after silver composition is deposited.
   Do not touch repaired area while test is being conducted.

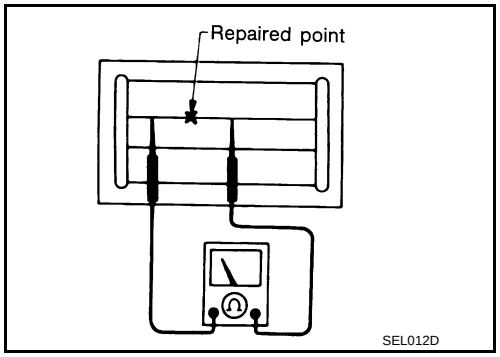

5. Apply a constant stream of hot air directly to the repaired area for approximately 20 minutes with a heat gun. A minimum distance of 3 cm (1.2 in) should be kept between repaired area and hot air outlet.
   If a heat gun is not available, let the repaired area dry for 24 hours.

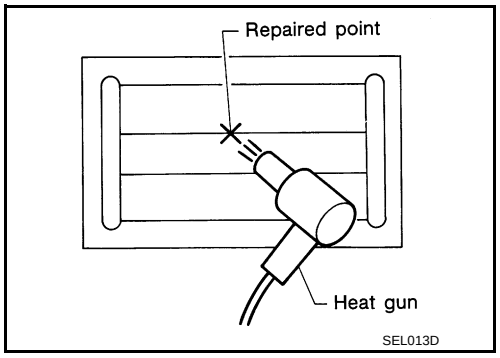

SECTION DLK
DOOR & LOCK

CONTENTS

WITH INTELLIGENT KEY SYSTEM

PRECAUTION 8

PRECAUTIONS 8
- Precaution for Supplemental Restraint System (SRS) "AIR BAG" and "SEAT BELT PRE-TENSIONER" 8
- Precaution Necessary for Steering Wheel Rotation after Battery Disconnect 8
- Work 9

PREPARATION 10

PREPARATION 10
- Commercial Service Tools 10

SYSTEM DESCRIPTION 11

COMPONENT PARTS 11

DOOR LOCK SYSTEM 11
- DOOR LOCK SYSTEM : Component Parts Location 11
- DOOR LOCK SYSTEM : Component Description 12

SYSTEM (POWER DOOR LOCK SYSTEM) 13
- System Diagram 13
- System Description 13

SYSTEM (INTELLIGENT KEY SYSTEM) 14

INTELLIGENT KEY SYSTEM 14
- INTELLIGENT KEY SYSTEM : System Diagram 14
- INTELLIGENT KEY SYSTEM : System Description 14

DOOR LOCK FUNCTION 15
- DOOR LOCK FUNCTION : System Diagram 15
- DOOR LOCK FUNCTION : System Description 15

REMOTE KEYLESS ENTRY FUNCTION 17
- REMOTE KEYLESS ENTRY FUNCTION : System Diagram 17
- REMOTE KEYLESS ENTRY FUNCTION : System Description 17

KEY REMINDER FUNCTION 18
- KEY REMINDER FUNCTION : System Diagram 19
- KEY REMINDER FUNCTION : System Description 19

WARNING FUNCTION 19
- WARNING FUNCTION : System Description 19

DIAGNOSIS SYSTEM (BCM) 22

COMMON ITEM 22
- COMMON ITEM : CONSULT-III Function (BCM - COMMON ITEM) 22

DOOR LOCK 23
- DOOR LOCK : CONSULT-III Function (BCM - DOOR LOCK) 23

INTELLIGENT KEY 24
- INTELLIGENT KEY : CONSULT-III Function (BCM - INTELLIGENT KEY) 24

TRUNK 27
- TRUNK : CONSULT-III Function (BCM - TRUNK) 27

ECU DIAGNOSIS INFORMATION 28

BCM, IPDM E/R 28
- List of ECU Reference 28

WIRING DIAGRAM 29

DOOR & LOCK SYSTEM 29
- Wiring Diagram - DOOR LOCK SYSTEM (WITH INTELLIGENT KEY) - 29

BASIC INSPECTION 42

DIAGNOSIS AND REPAIR WORK FLOW 42

Work Flow 42

INSPECTION AND ADJUSTMENT 45

ADDITIONAL SERVICE WHEN REPLACING CONTROL UNIT 45
ADDITIONAL SERVICE WHEN REPLACING CONTROL UNIT : Description 45
ADDITIONAL SERVICE WHEN REPLACING CONTROL UNIT : Special Repair Requirement 45

DTC/CIRCUIT DIAGNOSIS 46

B2621 INSIDE ANTENNA 46
DTC Logic 46
Diagnosis Procedure 46

B2622 INSIDE ANTENNA 48
DTC Logic 48
Diagnosis Procedure 48

B2623 INSIDE ANTENNA 50
DTC Logic 50
Diagnosis Procedure 50

B2626 OUTSIDE ANTENNA 52
DTC Logic 52
Diagnosis Procedure 52

B2627 OUTSIDE ANTENNA 54
DTC Logic 54
Diagnosis Procedure 54

B2628 OUTSIDE ANTENNA 56
DTC Logic 56
Diagnosis Procedure 56

DOOR SWITCH 58
Component Function Check 58
Diagnosis Procedure 58
Component Inspection 61

DOOR LOCK AND UNLOCK SWITCH 62
Component Function Check 62
Diagnosis Procedure 62
Component Inspection 63

DOOR REQUEST SWITCH 64
Component Function Check 64
Diagnosis Procedure 64
Component Inspection 65

BACK DOOR REQUEST SWITCH 66
Component Function Check 66
Diagnosis Procedure 66
Component Inspection 67

DOOR LOCK ACTUATOR 68

DRIVER SIDE 68
DRIVER SIDE : Component Function Check 68
DRIVER SIDE : Diagnosis Procedure 68

PASSENGER SIDE 69
PASSENGER SIDE : Component Function Check 69
PASSENGER SIDE : Diagnosis Procedure 69

REAR LH 70
REAR LH : Component Function Check 70
REAR LH : Diagnosis Procedure 70

REAR RH 71
REAR RH : Component Function Check 71
REAR RH : Diagnosis Procedure 71

BACK DOOR 72
BACK DOOR : Component Function Check 72
BACK DOOR : Diagnosis Procedure 72

REMOTE KEYLESS ENTRY RECEIVER 74
Component Function Check 74
Diagnosis Procedure 74

UNLOCK SENSOR 77
Component Function Check 77
Diagnosis Procedure 77
Component Inspection 78

INTELLIGENT KEY WARNING BUZZER 79
Component Function Check 79
Diagnosis Procedure 79
Component Inspection 80

INTELLIGENT KEY 81
Component Function Check 81
Diagnosis Procedure 81

COMBINATION METER BUZZER 82
Component Function Check 82
Diagnosis Procedure 82

KEY WARNING LAMP 83
Component Function Check 83
Diagnosis Procedure 83

HAZARD FUNCTION 84
Component Function Check 84
Diagnosis Procedure 84

SYMPTOM DIAGNOSIS 85

DOOR DOES NOT LOCK/UNLOCK WITH DOOR LOCK AND UNLOCK SWITCH 85

ALL DOOR 85
ALL DOOR : Description 85
ALL DOOR : Diagnosis Procedure 85

DRIVER SIDE 85
DRIVER SIDE : Description 85
DRIVER SIDE : Diagnosis Procedure 85

PASSENGER SIDE 85
PASSENGER SIDE : Description 86
PASSENGER SIDE : Diagnosis Procedure 86

REAR LH **86**
REAR LH : Description 86
REAR LH : Diagnosis Procedure 86

REAR RH **86**
REAR RH : Description 86
REAR RH : Diagnosis Procedure 86

BACK DOOR **87**
BACK DOOR : Description 87
BACK DOOR : Diagnosis Procedure 87

DOOR DOES NOT LOCK/UNLOCK WITH DRIVER SIDE DOOR LOCK KNOB OR DOOR KEY CYLINDER **88**
Diagnosis Procedure 88

DOOR DOES NOT LOCK/UNLOCK WITH DOOR REQUEST SWITCH **89**

ALL DOOR **89**
ALL DOOR : Description 89
ALL DOOR : Diagnosis Procedure 89

DRIVER SIDE **89**
DRIVER SIDE : Description 90
DRIVER SIDE : Diagnosis Procedure 90

PASSENGER SIDE **90**
PASSENGER SIDE : Description 90
PASSENGER SIDE : Diagnosis Procedure 90

BACK DOOR **90**
BACK DOOR : Description 91
BACK DOOR : Diagnosis Procedure 91

DOOR DOES NOT LOCK/UNLOCK WITH INTELLIGENT KEY **92**
Diagnosis Procedure 92

AUTO DOOR LOCK OPERATION DOES NOT OPERATE **93**
Diagnosis Procedure 93

HAZARD AND BUZZER REMINDER DOES NOT OPERATE **94**
Diagnosis Procedure 94

KEY REMINDER FUNCTION DOES NOT OPERATE **95**
Diagnosis Procedure 95

OFF POSITION WARNING DOES NOT OPERATE **96**
Diagnosis Procedure 96

P POSITION WARNING DOES NOT OPERATE **97**
Diagnosis Procedure 97

ACC WARNING DOES NOT OPERATE **98**
Diagnosis Procedure 98

TAKE AWAY WARNING DOES NOT OPERATE **99**
Diagnosis Procedure 99

INTELLIGENT KEY LOW BATTERY WARNING DOES NOT OPERATE **100**
Diagnosis Procedure 100

DOOR LOCK OPERATION WARNING DOES NOT OPERATE **101**
Diagnosis Procedure 101

KEY ID WARNING DOES NOT OPERATE **102**
Diagnosis Procedure 102

KEY WARNING LAMP DOES NOT ILLUMINATE **103**
Diagnosis Procedure 103

PANIC ALARM FUNCTION DOES NOT OPERATE **104**
Diagnosis Procedure 104

SQUEAK AND RATTLE TROUBLE DIAGNOSES **105**
Work Flow 105
Inspection Procedure 107
Diagnostic Worksheet 109

REMOVAL AND INSTALLATION **111**

HOOD **111**
Exploded View 111

HOOD ASSEMBLY **111**
HOOD ASSEMBLY : Removal and Installation 111
HOOD ASSEMBLY : Adjustment 112

HOOD HINGE **113**
HOOD HINGE : Removal and Installation 113

HOOD SUPPORT ROD **113**
HOOD SUPPORT ROD : Removal and Installation 113

RADIATOR CORE SUPPORT **114**
Exploded View 114
Removal and Installation 114

FRONT FENDER **116**
Exploded View 116
Removal and Installation 116

FRONT DOOR **117**
Exploded View 117

DOOR ASSEMBLY **117**
DOOR ASSEMBLY : Removal and Installation 117
DOOR ASSEMBLY : Adjustment 118

DOOR STRIKER **119**
DOOR STRIKER : Removal and Installation 119

DOOR HINGE **119**
DOOR HINGE : Removal and Installation 119

DOOR CHECK LINK **119**
DOOR CHECK LINK : Removal and Installation .. 119

REAR DOOR **121**
Exploded View 121

DOOR ASSEMBLY **121**
DOOR ASSEMBLY : Removal and Installation 121
DOOR ASSEMBLY : Adjustment 122

DOOR STRIKER **123**
DOOR STRIKER : Removal and Installation 123

DOOR HINGE **123**
DOOR HINGE : Removal and Installation 123

DOOR CHECK LINK **123**
DOOR CHECK LINK : Removal and Installation .. 123

BACK DOOR **125**
Exploded View 125

BACK DOOR ASSEMBLY **125**
BACK DOOR ASSEMBLY : Removal and Installation 125
BACK DOOR ASSEMBLY : Adjustment 127

BACK DOOR STRIKER **128**
BACK DOOR STRIKER : Removal and Installation 128

BACK DOOR HINGE **128**
BACK DOOR HINGE : Removal and Installation .. 128

BACK DOOR STAY **128**
BACK DOOR STAY : Removal and Installation ... 129
BACK DOOR STAY : Disposal 129

BACK DOOR WEATHER-STRIP **129**
BACK DOOR WEATHER-STRIP : Removal and Installation 129

HOOD LOCK **131**
Exploded View 131
Removal and Installation 131
Inspection 132

FRONT DOOR LOCK **133**
Exploded View 133

DOOR LOCK **133**
DOOR LOCK : Removal and Installation 133

INSIDE HANDLE **134**
INSIDE HANDLE : Removal and Installation 134

OUTSIDE HANDLE **134**
OUTSIDE HANDLE : Removal and Installation 134

REAR DOOR LOCK **136**
Exploded View 136

DOOR LOCK **136**
DOOR LOCK : Removal and Installation 136

INSIDE HANDLE **136**
INSIDE HANDLE : Removal and Installation 137

OUTSIDE HANDLE **137**
OUTSIDE HANDLE : Removal and Installation ... 137

BACK DOOR LOCK **139**
Exploded View 139

BACK DOOR STRIKER **139**
BACK DOOR STRIKER : Removal and Installation 139

DOOR LOCK **139**
DOOR LOCK : Removal and Installation 139

OUTSIDE HANDLE **140**
OUTSIDE HANDLE : Removal and Installation ... 140

EMERGENCY LEVER **140**
EMERGENCY LEVER : Unlock procedures 140

FUEL FILLER LID OPENER **141**
Exploded View 141
Removal and Installation 141

DOOR SWITCH **143**
Removal and Installation 143

INSIDE KEY ANTENNA **144**

INSTRUMENT CENTER **144**
INSTRUMENT CENTER : Removal and Installation 144

CONSOLE **144**
CONSOLE : Removal and Installation 144

LUGGAGE ROOM **144**
LUGGAGE ROOM : Removal and Installation 144

OUTSIDE KEY ANTENNA **145**

REAR BUMPER **145**
REAR BUMPER : Removal and Installation 145

INTELLIGENT KEY WARNING BUZZER **146**
Removal and Installation 146

REMOTE KEYLESS ENTRY RECEIVER **147**
Removal and Installation 147

INTELLIGENT KEY BATTERY **148**
Removal and Installation 148

WITHOUT INTELLIGENT KEY SYSTEM

PRECAUTION **149**

PRECAUTIONS **149**

Precaution for Supplemental Restraint System (SRS) "AIR BAG" and "SEAT BELT PRE-TENSIONER" 149
Precaution Necessary for Steering Wheel Rotation after Battery Disconnect 149
Work 150

PREPARATION 151

PREPARATION 151
Commercial Service Tools 151

SYSTEM DESCRIPTION 152

COMPONENT PARTS 152
Component Parts Location 152
Component Description 152

POWER DOOR LOCK SYSTEM 154
System Diagram 154
System Description 154

REMOTE KEYLESS ENTRY SYSTEM 155
System Diagram 155
System Description 155

DIAGNOSIS SYSTEM (BCM) 157

COMMON ITEM 157
COMMON ITEM : CONSULT-III Function (BCM - COMMON ITEM) 157

DOOR LOCK 157
DOOR LOCK : CONSULT-III Function (BCM - DOOR LOCK) 158

MULTI REMOTE ENT 158
MULTI REMOTE ENT : CONSULT-III Function (BCM - MULTI REMOTE ENT) 158

TRUNK 159
TRUNK : CONSULT-III Function (BCM - TRUNK). 159

PANIC ALARM 160
PANIC ALARM : CONSULT-III Function (BCM - PANIC ALARM) 160

ECU DIAGNOSIS INFORMATION 161

BCM, IPDM E/R 161
List of ECU Reference 161

WIRING DIAGRAM 162

DOOR & LOCK SYSTEM 162
Wiring Diagram - DOOR LOCK SYSTEM (WITHOUT INTELLIGENT KEY) - 162

BASIC INSPECTION 171

DIAGNOSIS AND REPAIR WORK FLOW 171
Work Flow 171

INSPECTION AND ADJUSTMENT 174

ADDITIONAL SERVICE WHEN REPLACING CONTROL UNIT 174
ADDITIONAL SERVICE WHEN REPLACING CONTROL UNIT : Description 174
ADDITIONAL SERVICE WHEN REPLACING CONTROL UNIT : Special Repair Requirement ... 174

KEYFOB ID REGISTRATION 175
Description 175
Work Procedure 175

DTC/CIRCUIT DIAGNOSIS 177

DOOR SWITCH 177
Component Function Check 177
Diagnosis Procedure 177
Component Inspection 180

DOOR LOCK AND UNLOCK SWITCH 181
Component Function Check 181
Diagnosis Procedure 181
Component Inspection 182

DOOR LOCK ACTUATOR 183

DRIVER SIDE 183
DRIVER SIDE : Component Function Check 183
DRIVER SIDE : Diagnosis Procedure 183

PASSENGER SIDE 184
PASSENGER SIDE : Component Function Check 184
PASSENGER SIDE : Diagnosis Procedure 184

REAR LH 185
REAR LH : Component Function Check 185
REAR LH : Diagnosis Procedure 185

REAR RH 186
REAR RH : Component Function Check 186
REAR RH : Diagnosis Procedure 186

BACK DOOR 187
BACK DOOR : Component Function Check 187
BACK DOOR : Diagnosis Procedure 187

DOOR KEY CYLINDER SWITCH 189
Component Function Check 189
Diagnosis Procedure 189
Component Inspection 190

UNLOCK SENSOR 191
Component Function Check 191
Diagnosis Procedure 191
Component Inspection 192

REMOTE KEYLESS ENTRY RECEIVER 193
Component Function Check 193
Diagnosis Procedure 193

KEY SWITCH 196

Component Function Check 196
Diagnosis Procedure 196
Component Inspection 197

HAZARD FUNCTION 198
Component Function Check 198
Diagnosis Procedure 198

KEYFOB BATTERY 199
Component Function Check 199
Diagnosis Procedure 199

SYMPTOM DIAGNOSIS 200

DOOR DOES NOT LOCK/UNLOCK WITH DOOR LOCK AND UNLOCK SWITCH 200

ALL DOOR 200
ALL DOOR : Description 200
ALL DOOR : Diagnosis Procedure 200

DRIVER SIDE 200
DRIVER SIDE : Description 200
DRIVER SIDE : Diagnosis Procedure 200

PASSENGER SIDE 200
PASSENGER SIDE : Description 201
PASSENGER SIDE : Diagnosis Procedure 201

REAR LH 201
REAR LH : Description 201
REAR LH : Diagnosis Procedure 201

REAR RH 201
REAR RH : Description 201
REAR RH : Diagnosis Procedure 201

BACK DOOR 202
BACK DOOR : Description 202
BACK DOOR : Diagnosis Procedure 202

DOOR DOES NOT LOCK/UNLOCK WITH DRIVER SIDE DOOR LOCK KNOB OR DOOR KEY CYLINDER 203
Description 203
Diagnosis Procedure 203

DOOR DOES NOT LOCK/UNLOCK WITH DOOR KEY CYLINDER OPERATION 204
Description 204
Diagnosis Procedure 204

DOOR DOES NOT LOCK/UNLOCK WITH KEYFOB 205
Diagnosis Procedure 205

AUTO DOOR LOCK OPERATION DOES NOT OPERATE 206
Diagnosis Procedure 206

KEY REMINDER FUNCTION DOES NOT OPERATE 207
Diagnosis Procedure 207

HAZARD REMINDER OPERATION DOES NOT OPERATE 208
Diagnosis Procedure 208

PANIC ALARM FUNCTION DOES NOT OPERATE 209
Diagnosis Procedure 209

SQUEAK AND RATTLE TROUBLE DIAGNOSES 210
Work Flow 210
Inspection Procedure 212
Diagnostic Worksheet 214

REMOVAL AND INSTALLATION 216

HOOD 216
Exploded View 216

HOOD ASSEMBLY 216
HOOD ASSEMBLY : Removal and Installation ... 216
HOOD ASSEMBLY : Adjustment 217

HOOD HINGE 218
HOOD HINGE : Removal and Installation 218

HOOD SUPPORT ROD 218
HOOD SUPPORT ROD : Removal and Installation 218

RADIATOR CORE SUPPORT 219
Exploded View 219
Removal and Installation 219

FRONT FENDER 221
Exploded View 221
Removal and Installation 221

FRONT DOOR 222
Exploded View 222

DOOR ASSEMBLY 222
DOOR ASSEMBLY : Removal and Installation ... 222
DOOR ASSEMBLY : Adjustment 223

DOOR STRIKER 224
DOOR STRIKER : Removal and Installation 224

DOOR HINGE 224
DOOR HINGE : Removal and Installation 224

DOOR CHECK LINK 224
DOOR CHECK LINK : Removal and Installation . 224

REAR DOOR 226
Exploded View 226

DOOR ASSEMBLY 226
DOOR ASSEMBLY : Removal and Installation ... 226
DOOR ASSEMBLY : Adjustment 227

DOOR STRIKER 228

DOOR STRIKER : Removal and Installation 228

DOOR HINGE 228
DOOR HINGE : Removal and Installation 228

DOOR CHECK LINK 228
DOOR CHECK LINK : Removal and Installation .. 228

BACK DOOR 125
Exploded View 230

BACK DOOR ASSEMBLY 230
BACK DOOR ASSEMBLY : Removal and Installation 230
BACK DOOR ASSEMBLY : Adjustment 232

BACK DOOR STRIKER 233
BACK DOOR STRIKER : Removal and Installation 233

BACK DOOR HINGE 233
BACK DOOR HINGE : Removal and Installation .. 233

BACK DOOR STAY 233
BACK DOOR STAY : Removal and Installation ... 234
BACK DOOR STAY : Disposal 234

BACK DOOR WEATHER-STRIP 234
BACK DOOR WEATHER-STRIP : Removal and Installation 234

HOOD LOCK 236
Exploded View 236
Removal and Installation 236
Inspection 237

FRONT DOOR LOCK 238
Exploded View 238

DOOR LOCK 238
DOOR LOCK : Removal and Installation 238

INSIDE HANDLE 239
INSIDE HANDLE : Removal and Installation 239

OUTSIDE HANDLE 239
OUTSIDE HANDLE : Removal and Installation 239

REAR DOOR LOCK 241
Exploded View 241

DOOR LOCK 241
DOOR LOCK : Removal and Installation 241

INSIDE HANDLE 241
INSIDE HANDLE : Removal and Installation 242

OUTSIDE HANDLE 242
OUTSIDE HANDLE : Removal and Installation 242

BACK DOOR LOCK 244
Exploded View 244

BACK DOOR STRIKER 244
BACK DOOR STRIKER : Removal and Installation 244

DOOR LOCK 244
DOOR LOCK : Removal and Installation 244

OUTSIDE HANDLE 245
OUTSIDE HANDLE : Removal and Installation 245

EMERGENCY LEVER 245
EMERGENCY LEVER : Unlock procedures 245

FUEL FILLER LID OPENER 246
Exploded View 246
Removal and Installation 246

DOOR SWITCH 248
Removal and Installation 248

REMOTE KEYLESS ENTRY RECEIVER 249
Removal and Installation 249

KEYFOB BATTERY 250
Exploded View 250
Removal and Installation 250

PRECAUTION

PRECAUTIONS

Precaution for Supplemental Restraint System (SRS) "AIR BAG" and "SEAT BELT PRE-TENSIONER"

INFOID:0000000006067020

The Supplemental Restraint System such as “AIR BAG” and “SEAT BELT PRE-TENSIONER”, used along with a front seat belt, helps to reduce the risk or severity of injury to the driver and front passenger for certain types of collision. Information necessary to service the system safely is included in the “SRS AIR BAG” and “SEAT BELT” of this Service Manual.

WARNING:

- **To avoid rendering the SRS inoperative, which could increase the risk of personal injury or death in the event of a collision which would result in air bag inflation, all maintenance must be performed by an authorized NISSAN/INFINITI dealer.**
- **Improper maintenance, including incorrect removal and installation of the SRS, can lead to personal injury caused by unintentional activation of the system. For removal of Spiral Cable and Air Bag Module, see the “SRS AIR BAG”.**
- **Do not use electrical test equipment on any circuit related to the SRS unless instructed to in this Service Manual. SRS wiring harnesses can be identified by yellow and/or orange harnesses or harness connectors.**

PRECAUTIONS WHEN USING POWER TOOLS (AIR OR ELECTRIC) AND HAMMERS

WARNING:

- **When working near the Air Bag Diagnosis Sensor Unit or other Air Bag System sensors with the ignition ON or engine running, DO NOT use air or electric power tools or strike near the sensor(s) with a hammer. Heavy vibration could activate the sensor(s) and deploy the air bag(s), possibly causing serious injury.**
- **When using air or electric power tools or hammers, always switch the ignition OFF, disconnect the battery, and wait at least 3 minutes before performing any service.**

Precaution Necessary for Steering Wheel Rotation after Battery Disconnect

INFOID:0000000006067021

NOTE:

- Before removing and installing any control units, first turn the push-button ignition switch to the LOCK position, then disconnect both battery cables.
- After finishing work, confirm that all control unit connectors are connected properly, then re-connect both battery cables.
- Always use CONSULT-III to perform self-diagnosis as a part of each function inspection after finishing work. If a DTC is detected, perform trouble diagnosis according to self-diagnosis results.

For vehicle with steering lock unit, if the battery is disconnected or discharged, the steering wheel will lock and cannot be turned.

If turning the steering wheel is required with the battery disconnected or discharged, follow the operation procedure below before starting the repair operation.

OPERATION PROCEDURE

1. Connect both battery cables.
   NOTE:
   Supply power using jumper cables if battery is discharged.
2. Turn the push-button ignition switch to ACC position.
   (At this time, the steering lock will be released.)
3. Disconnect both battery cables. The steering lock will remain released with both battery cables disconnected and the steering wheel can be turned.
4. Perform the necessary repair operation.
5. When the repair work is completed, re-connect both battery cables. With the brake pedal released, turn the push-button ignition switch from ACC position to ON position, then to LOCK position. (The steering wheel will lock when the push-button ignition switch is turned to LOCK position.)
6. Perform self-diagnosis check of all control units using CONSULT-III.

Work

INFOID:0000000005948961

- After removing and installing the opening/closing parts, be sure to carry out fitting adjustments to check their operational.
- Check the lubrication level, damage, and wear of each part. If necessary, grease or replace it.

PREPARATION

PREPARATION

Commercial Service Tools

INFOID:0000000005948963

Tool name		Description
Engine ear	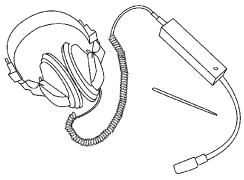 SIIA0995E	Locates the noise
Remover tool	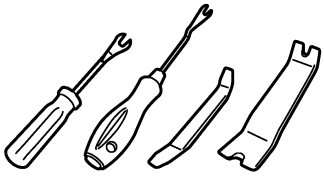 JMKIA3050ZZ	Removes the clips, pawls, and metal clips
Power tool	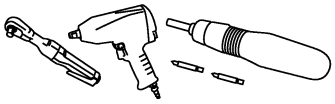 PIIB1407E	

SYSTEM DESCRIPTION

COMPONENT PARTS

DOOR LOCK SYSTEM

DOOR LOCK SYSTEM : Component Parts Location

INFOID:0000000005948805

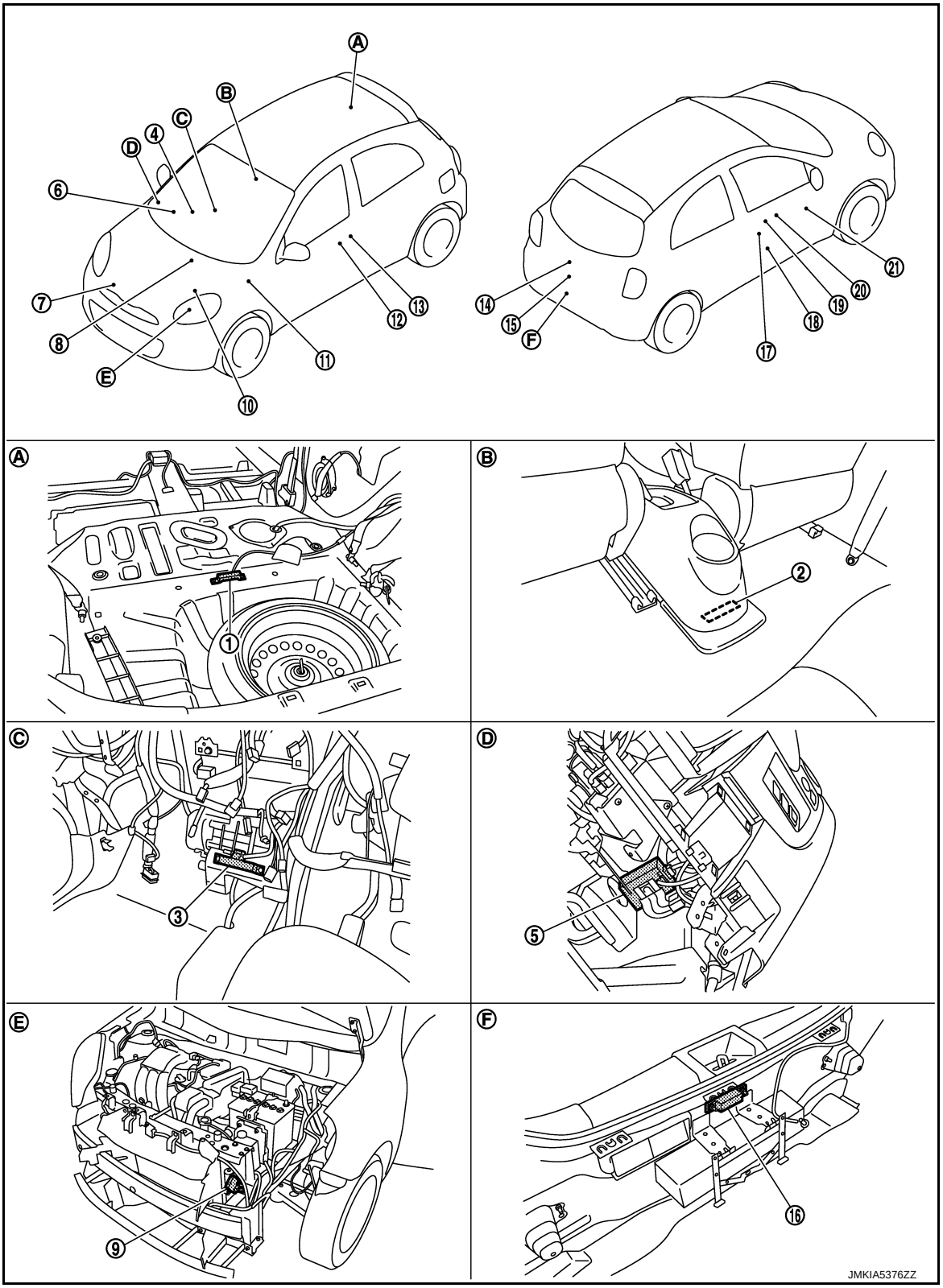

1. Inside key antenna (luggage room)	2. Inside key antenna (console)	3. Inside key antenna (instrument center)
4. Push-button ignition switch (push switch)	5. Remote keyless entry receiver	6. Combination meter
7. Horn	8. IPDM E/R Refer to PCS-5, "Component Parts Location"	9. Intelligent Key warning buzzer
10. TCM	11. BCM Refer to BCS-5, "BODY CONTROL SYSTEM : Component Parts Location"	12. Outside key antenna (passenger side)
13. Front door request switch (passenger side)	14. Back door request switch	15. Back door lock assembly
16. Outside key antenna (rear bumper)	17. Front door switch (driver side)	18. Front door lock assembly (driver side)
19. Front door request switch (driver side)	20. Outside key antenna (driver side)	21. Power window main switch (door lock and unlock switch)
A. View with rear seat removed	B. View with center console assembly removed	C. Behind the audio unit
D. View with instrument lower panel RH removed	E. View with head lamp RH removed	F. View with rear bumper removed

DOOR LOCK SYSTEM : Component Description

INFOID:0000000005948806

Item	Function
BCM	Controls the door lock function
TCM	Transmits shift position signal to BCM via CAN communication line
IPDM E/R	Sounds horn via CAN communication between BCM
Remote keyless entry receiver	Receives lock/unlock signal from the Intelligent Key, and then transmits to BCM
Combination meter	• Transmits vehicle speed signal to CAN communication line • Performs operation method guide and warning with buzzer
Door lock and unlock switch	Inputs lock or unlock signal to BCM
Door request switch	Inputs lock/unlock operation to BCM
Door switch	Inputs door open/close condition to BCM
Push-button ignition switch	Inputs push-button ignition switch ON/OFF condition to BCM
Unlock sensor	Built-in driver side door lock assembly • Detects door lock condition of driver door
Door lock actuator	Built-in door lock assembly • Inputs lock/unlock signal from BCM and locks/unlocks each door
Inside key antenna	Detects if Intelligent Key is inside the vehicle
Outside key antenna	Detects if Intelligent Key is outside the vehicle
Intelligent Key warning buzzer	Warns the user of the lock/unlock condition and inappropriate operations with the buzzer sound
Intelligent Key	The following function are available when having and carrying electronic ID • Door lock/unlock • Engine start • Remote control function is available when operating on button
Hazard warning lamp	Warns the user of the lock/unlock condition and inappropriate operations with the lamps blink

SYSTEM (POWER DOOR LOCK SYSTEM)

System Diagram

INFOID:0000000005948803

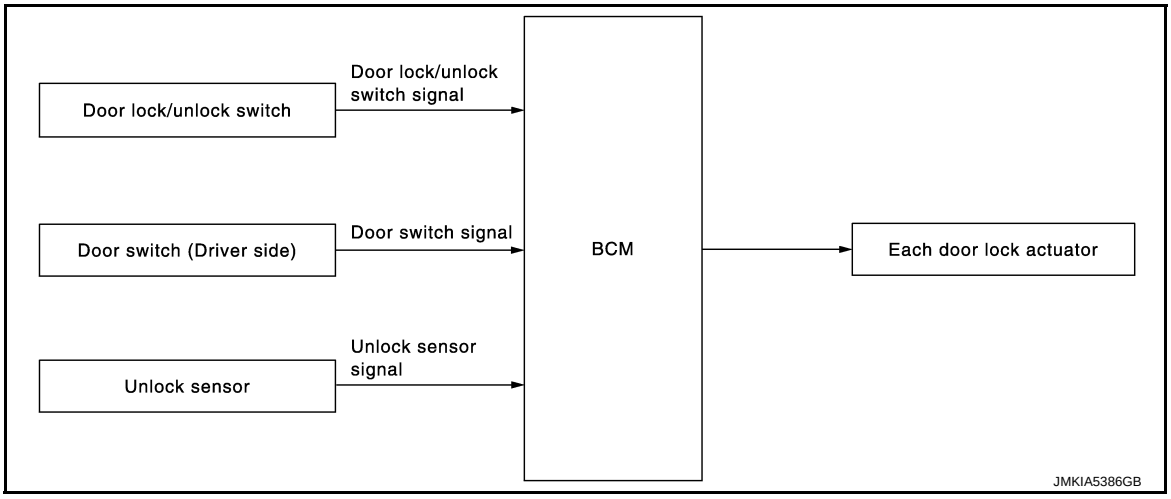

System Description

INFOID:0000000005948804

DOOR LOCK FUNCTION

Door Lock and Unlock Switch

- The door lock and unlock switch is build into power window main switch.
- BCM locks all doors or unlocks all doors, when door lock/unlock switch is operated.

Unlock Sensor

- BCM locks all doors or unlocks all doors, when driver door lock knob is operated.
- With the mechanical key inserted in the door key cylinder on driver side, turning it to lock position, locks door lock actuator of all doors.
- With the mechanical key inserted in the door key cylinder on driver side, turning it to unlock position, unlocks door lock actuator of all doors.

IGNITION POSITION WARNING FUNCTION

All doors are locked once, but BCM immediately unlocks all doors, according to driver door lock status detected by unlock sensor, when door lock operation is performed, driver door is open, and ignition position is ACC or ON.

INTERIOR ROOM LAMP CONTROL FUNCTION

Interior room lamp is controlled according to door lock /unlock state, refer to INL-7, "INTERIOR ROOM LAMP CONTROL SYSTEM (WITH INTELLIGENT KEY SYSTEM) : System Description".

SYSTEM (INTELLIGENT KEY SYSTEM)

INTELLIGENT KEY SYSTEM

INTELLIGENT KEY SYSTEM : System Diagram

INFOID:0000000005948807

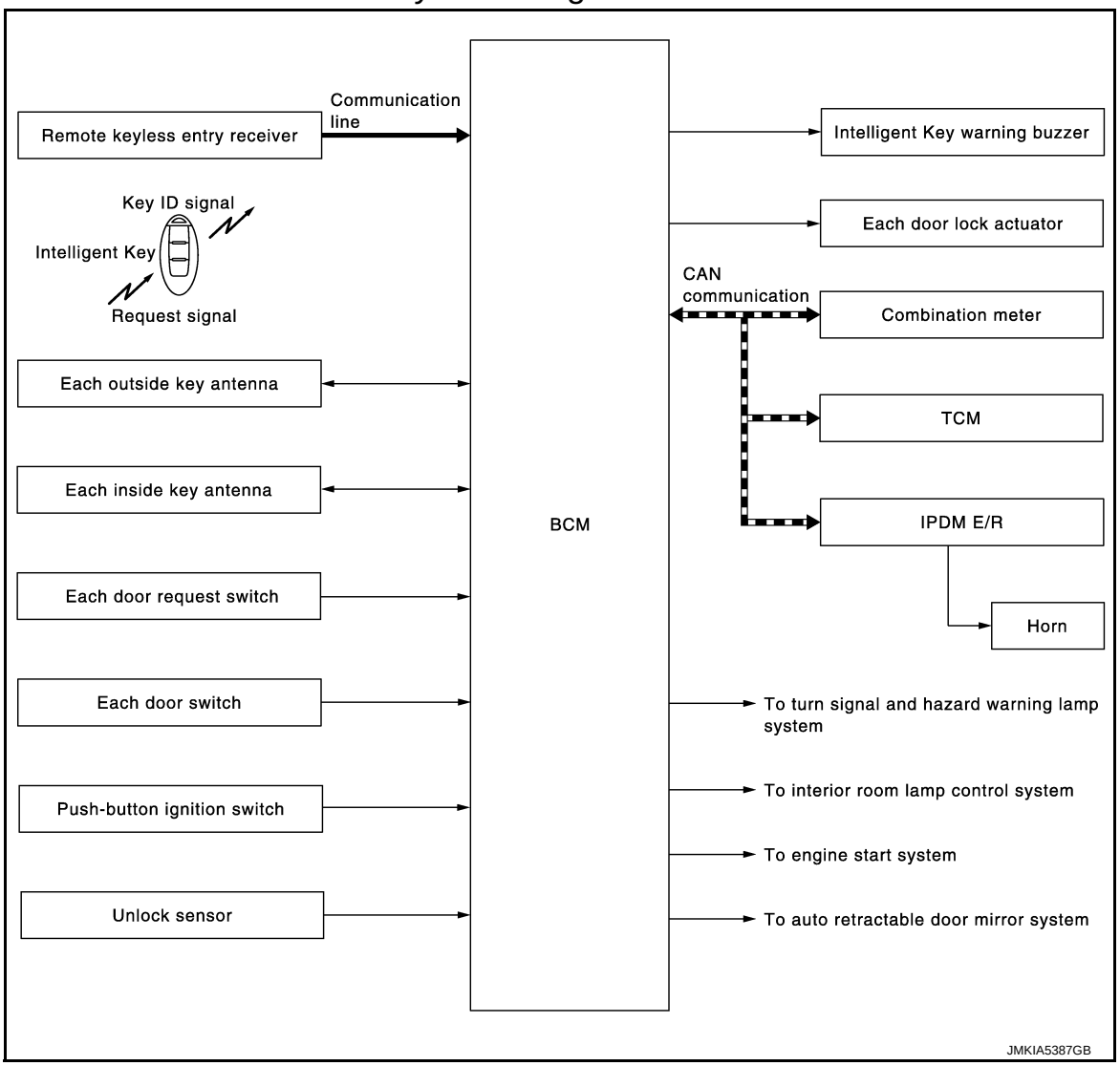

INTELLIGENT KEY SYSTEM : System Description

INFOID:0000000005948808

- The Intelligent Key system is a system that makes it possible to lock and unlock the door locks (door lock/unlock function) by carrying the Intelligent Key, which operates based on the results of electronic ID verification using two-way communication between the Intelligent Key and the vehicle (BCM).
  CAUTION:
  The driver should always carry the Intelligent Key
- The settings for each function can be changed with CONSULT-III.
- If an Intelligent Key is lost, a new Intelligent Key can be registered. A maximum of 4 Intelligent Keys can be registered.
- It is possible to perform a diagnosis on the system and register an Intelligent Key with CONSULT-III.

Function	Description	Refer
Door lock	Lock/unlock can be performed by pressing the request switch	DLK-15
Remote keyless entry	Lock/unlock can be performed by pressing the remote controller button of the Intelligent Key	DLK-17
Key reminder	The key reminder buzzer sounds a warning if the door is locked with the key left inside the vehicle	DLK-19

Function	Description	Refer
Warning	If an action that does not meet the operating condition of the Intelligent Key system is taken, the buzzer sounds to inform the driver	DLK-19
Auto retractable door mirror	Door mirror operates by operation of Intelligent Key	MIR-8
Engine start	The engine can be turned on while carrying the Intelligent Key	SEC-12
Interior room lamp control	Interior room lamp is controlled according to door lock/unlock state	INL-7

DOOR LOCK FUNCTION

DOOR LOCK FUNCTION : System Diagram

INFOID:0000000005948811

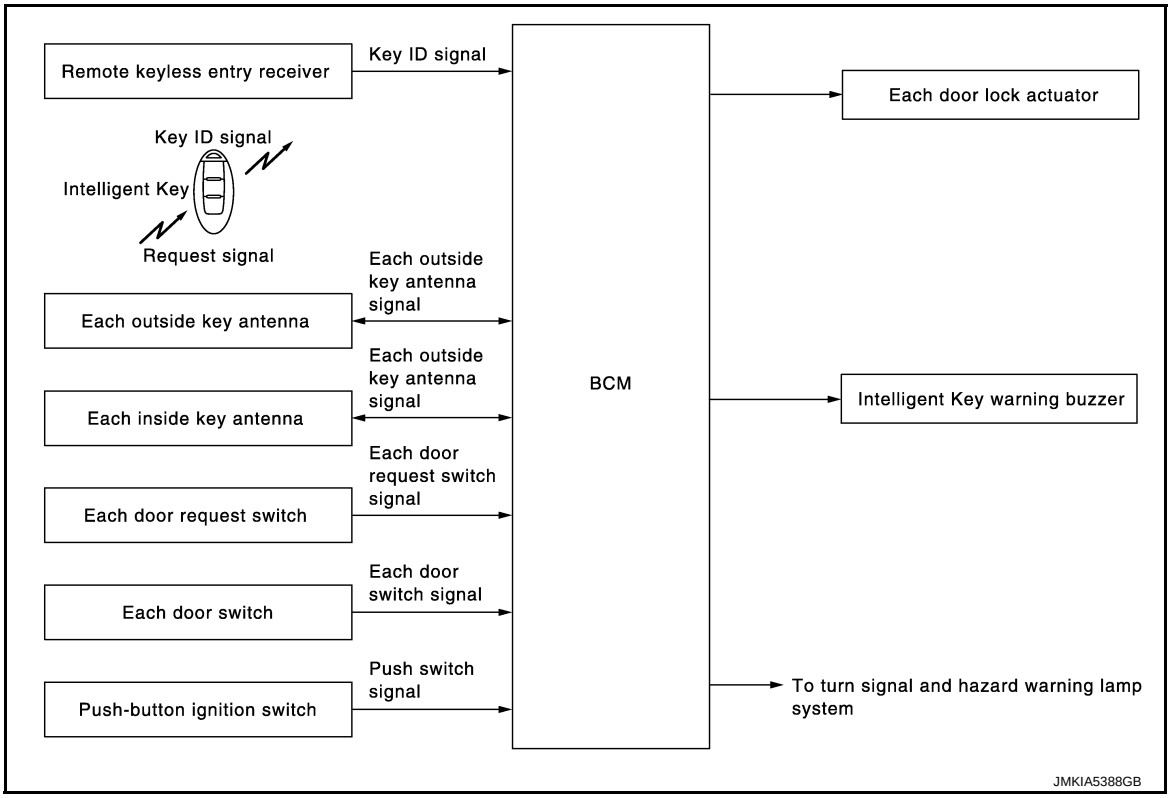

DOOR LOCK FUNCTION : System Description

INFOID:0000000005948812

Only when pressing the request switch, it is possible to lock and unlock the door by carrying the Intelligent Key.

OPERATION DESCRIPTION

- When the BCM detects that each door request switch is pressed, it starts the outside key antenna and inside key antenna corresponding to the pressed door request switch and transmits the request signal to the Intelligent Key. And then, check that the Intelligent Key is near the door.
- If the Intelligent Key is within the outside key antenna detection area, it receives the request signal and transmits the key ID signal to the BCM via remote keyless entry receiver.
- BCM receives the key ID signal and compares it with the registered key ID.
- BCM transmits door lock/unlock signal and operates each door lock actuator. At the same time, BCM blinks hazard warning lamp (lock: 1 time, unlock: 2 times) and sounds Intelligent Key buzzer (lock: 1 time, unlock: 2 times) as a reminder.

OPERATION CONDITION

If the following conditions are satisfied, door lock/unlock operation is performed if the door request switch is operated.

Each request switch operation	Operation condition
Lock	• All doors are closed • Ignition switch is in the OFF position • Intelligent Key is outside the vehicle • Intelligent Key is within outside key antenna detection area • Panic alarm is not activated • P position warning is not activated
Unlock	• All doors are closed • Ignition switch is in the OFF position • Intelligent Key is outside the vehicle • Intelligent Key is within outside key antenna detection area * • Panic alarm is not activated

*: Even with a registered Intelligent Key remaining inside the vehicle, door locks can be unlocked from outside of the vehicle with a spare Intelligent Key as long as key IDs are different.

Door lock function can be changed using “LOCK/UNLOCK BY I-KEY” mode in “WORK SUPPORT”. Refer to DLK-24, "INTELLIGENT KEY : CONSULT-III Function (BCM - INTELLIGENT KEY)".

OUTSIDE KEY ANTENNA DETECTION AREA

The outside key antenna detection area of door lock/unlock function is in the range of approximately 80 cm (31.50 in) surrounding the driver, passenger door handles (1) and rear bumper center (2). However, this operating range depends on the ambient conditions.

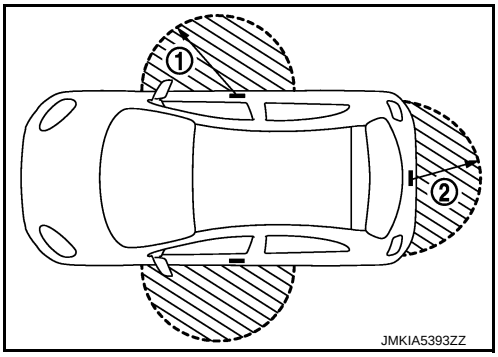

HAZARD AND BUZZER REMINDER FUNCTION

For the operation check, BCM blinks hazard warning lamps (lock: 1 time and unlock: 2 times) and sounds Intelligent Key warning buzzer (lock: 1 time and unlock 2 times) when door lock or unlock operates by operation of each door request switch.

How to Change Hazard and Buzzer Reminder Mode

Refer to DLK-24, "INTELLIGENT KEY : CONSULT-III Function (BCM - INTELLIGENT KEY)".

AUTO DOOR LOCK FUNCTION

After door is unlocked by door request switch operation and if 30 seconds or more passes without performing the following operation, all doors are automatically locked. However, operation check function does not activate.

Operating condition	• Door switch is ON (door is open) • BCM receives lock signal • Push switch is pressed

Auto door lock mode can be changed by the “AUTO LOCK SET” mode in “WORK SUPPORT”. Refer to DLK-24, "INTELLIGENT KEY : CONSULT-III Function (BCM - INTELLIGENT KEY)".

LIST OF OPERATION RELATED PARTS

Parts marked with × are the parts related to operation.

Door lock function	Intelligent Key	Remote keyless entry receiver	Door switch	Door request switch	Door lock actuator	Inside key antenna	Outside key antenna	Intelligent Key warning buzzer	CAN communication system	BCM	Hazard warning lamp	Push-button ignition switch	Combination meter
Door lock/unlock function	×	×	×	×	×	×	×			×			
Hazard and buzzer reminder function								×	×	×	×		×
Auto door lock function	×	×	×	×	×		×			×		×	

REMOTE KEYLESS ENTRY FUNCTION

REMOTE KEYLESS ENTRY FUNCTION : System Diagram

INFOID:0000000005948815

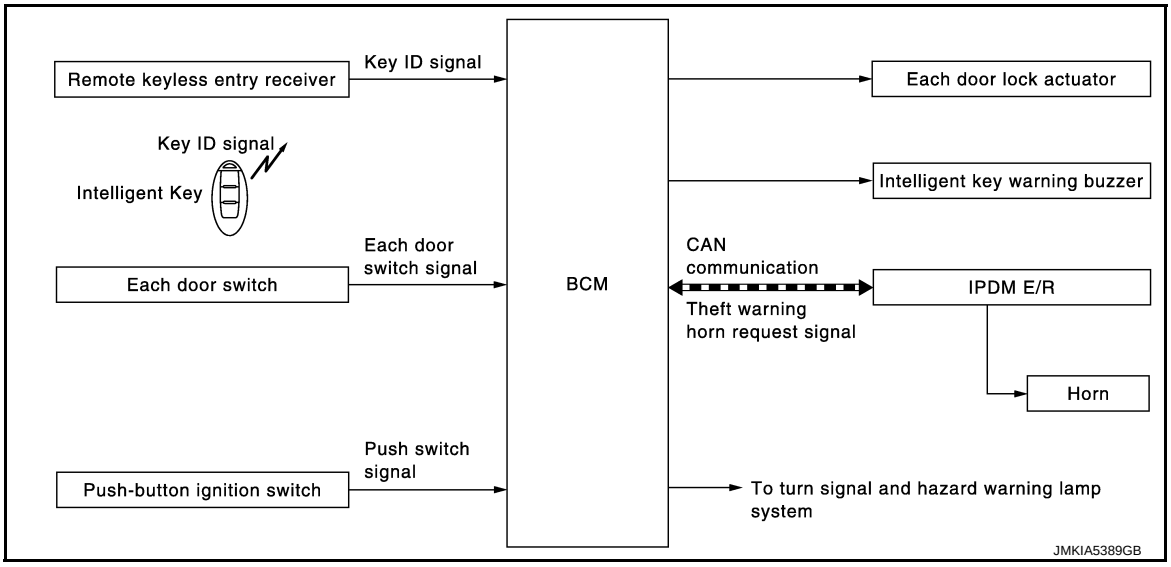

REMOTE KEYLESS ENTRY FUNCTION : System Description

INFOID:0000000005948816

The Intelligent Key has the same functions as the remote control entry system. Therefore, it can be used in the same manner as the remote controller by operating the door lock/unlock button.

OPERATION

Remote keyless entry system controls operation of the following items.
- Door lock/unlock
- Hazard and buzzer reminder
- Auto door lock
- Panic alarm

OPERATION AREA

To check that the Intelligent Key works normally, use within 1 m (3 ft) range of each doors, however the operable range may differ according to surroundings.

DOOR LOCK/UNLOCK FUNCTION

- When door lock/unlock button of the Intelligent Key is pressed, lock signal or unlock signal transmitted from Intelligent Key to BCM via remote keyless entry receiver.
- BCM receives the signal and compares it with the registered key ID to the vehicle.
- BCM transmits door lock/unlock signal to each door lock actuator and operates each door lock actuator, when key ID matches. At the same time, BCM blinks hazard warning lamp (lock: 1 time, unlock: 2 times) and sounds Intelligent Key buzzer (lock: 1 time, unlock: 2 times) as a reminder.

OPERATION CONDITION

Remote controller operation	Operation condition
Lock	• All door are closed • Ignition switch is in the OFF position • Panic alarm is not activated • P position warning is not activated
Unlock	• Ignition switch is in the OFF position • Intelligent Key is outside the vehicle • P position warning is not activated

HAZARD AND BUZZER REMINDER FUNCTION

For the operation check, BCM blinks hazard warning lamps (lock: 1 time and unlock: 2 times) and sounds Intelligent Key warning buzzer (lock: 1 time and unlock 2 times) when door lock or unlock operates by each remote controller button operation of Intelligent Key.

How to Change Hazard and Buzzer Reminder Mode

Refer to DLK-24, "INTELLIGENT KEY : CONSULT-III Function (BCM - INTELLIGENT KEY)".

AUTO DOOR LOCK FUNCTION

After door is unlocked by Intelligent Key button operation and if 30 seconds or more passes without performing the following operation, all doors are automatically locked. However, operation check function does not activate.

Operating condition	• Door switch is ON (door is open) • BCM receives lock signal • Push switch is pressed

Auto door lock mode can be changed by the “AUTO LOCK SET” mode in “WORK SUPPORT”. Refer to DLK-24, "INTELLIGENT KEY : CONSULT-III Function (BCM - INTELLIGENT KEY)".

PANIC ALARM FUNCTION

When ignition switch is OFF (ignition switch is not pressed), BCM transmits theft warning horn request signal to IPDM E/R. Then, IPDM E/R turns on and off horn intermittently.
The horn sounds intermittently.
The alarm automatically turns off.
- After 25 seconds
- When BCM receives any signal from Intelligent Key

How to Change Panic Alarm Operation Mode

Refer to DLK-24, "INTELLIGENT KEY : CONSULT-III Function (BCM - INTELLIGENT KEY)".

LIST OF OPERATION RELATED PARTS

Parts marked with × are the parts related to operation.

Remote keyless entry functions	Intelligent Key	Remote keyless entry receiver	Door switch	Door lock actuator	Intelligent Key warning buzzer	CAN communication system	BCM	Combination meter	Hazard warning lamp	IPDM E/R	Horn
Door lock/unlock function by remote control button	×	×	×	×			×				
Hazard and buzzer reminder function	×	×			×	×	×	×	×		
Auto door lock function	×	×	×	×			×				
Panic alarm function	×					×	×			×	×

KEY REMINDER FUNCTION

KEY REMINDER FUNCTION : System Diagram

INFOID:0000000005948819

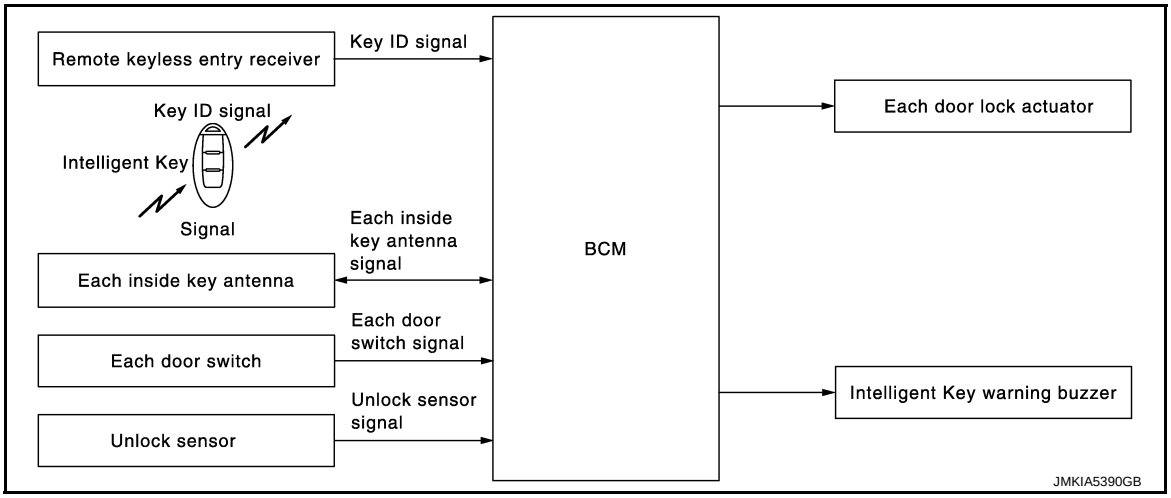

KEY REMINDER FUNCTION : System Description

INFOID:0000000005948820

Key reminder is the function that prevents the key from being left in the vehicle.
Key reminder has the following 3 functions.

Key remainder function	Operation condition	Operation
Driver side door opened	Right after door is locked by door lock/unlock switch or driver door lock knob operation under the following conditions • Ignition switch is in the OFF position • Intelligent Key is inside the vehicle • Driver side door is opened	All doors unlock
Driver side door closed*	Right after driver side door is closed under the following conditions • Intelligent Key is inside the vehicle • Driver side door is opened • Driver side door is in unlock state	All doors unlock
Door is open or closed	Right after all doors are closed under the following conditions • Intelligent Key is inside the vehicle • Any door is opened • All doors are locked.	• All doors unlock • Honk Intelligent Key warning buzzer

*:If the door closing impact shocks the door lock knob, or contacts against baggage with the door lock knob might activate the door locks accidentally but unlock operation is perform in these cases.

CAUTION:

- **The above function operates when the Intelligent Key is inside the vehicle. However, there may be times when the Intelligent Key cannot be detected, and this function does not operate when the Intelligent Key is on the instrument panel, rear parcel shelf, or in the glove box. Also, this system sometimes does not operate if the Intelligent Key is in the door pocket for the open door.**

WARNING FUNCTION

WARNING FUNCTION : System Description

INFOID:0000000005948822

OPERATION DESCRIPTION

The warning function are as per the following items and are given to the user as warning information and warnings using combinations of Intelligent Key warning buzzer, combination meter buzzer, KEY warning lamp, shift P warning lamp and engine start information.

- Intelligent Key system malfunction
- OFF position warning
- P position warning
- ACC warning
- Take away warning
- Door lock operation warning

- Engine start information
- Intelligent Key low battery warning
- Key ID warning

OPERATION CONDITION

Operation condition of warning and information is as per the following table.

Warning/Information functions		Operation procedure
Intelligent Key system malfunction		A malfunction is detected on BCM and key warning lamp turns ON
OFF position warning	For internal	• Ignition switch: ACC • Door switch (driver side): ON (Door is open)
	For external	OFF position warning (for internal) is active and driver side door is closed **NOTE:** OFF position warning (for external) operates only when driver door is closed after each of P position warning, ACC warning, and OFF position warning (internal) sounds.
P position warning	For internal	• Shift position: Other than P • Engine is stopped (Ignition switch is turned from ON to OFF)
	For external	• P position warning (For internal) operates • Door switch: ON to OFF (Door is open to close) • Intelligent Key cannot be detected inside the vehicle
ACC warning		• After P position warning operates, or when ignition switch is turned ON immediately after P position warning operates • Ignition switch: ACC
Take away warning	Door status changes from open to close	• Ignition switch: Other than LOCK • Door switch: ON to OFF (Door status changes from open to close) • Registered Intelligent Key is not detected inside the vehicle
	Door status is open	• Door switch: ON (Door is open) • Registered Intelligent Key is not detected inside the vehicle during Key ID verification for 5 seconds
	Push button-ignition switch operation	• Ignition switch: Other than LOCK position • Push-button ignition switch is pressed • Registered Intelligent Key is not detected inside the vehicle
Door lock operation warning		Door lock operation is requested while door lock operation condition of door request switch is not satisfied
Engine start information		• Shift position: P • Engine is stopped
Intelligent Key low battery warning		BCM detects that Intelligent Key is low battery, after ignition switch is turned ON
Key ID warning		• Push-button ignition switch is pressed • Registered Intelligent Key is not detected inside the vehicle

WARNING METHOD

The following table shows the alarm or warning methods with chime.

Warning/Information functions		"KEY" warning lamp	Shift P warning lamp	Warning chime		Engine start operation indicator lamp
				Combination meter buzzer	Intelligent Key warning buzzer	
Intelligent Key system malfunction		Indicate	—	—	—	—
OFF position warning	For internal	—	—	Activate	—	—
	For external	—	—	—	Activate	—
P position warning	For internal	Blink (yellow)	Indicate	Activate	—	—
	For external		—	—	Active	—
ACC warning		—	—	Activate	—	—

Warning/Information functions		"KEY" warning lamp	Shift P warning lamp	Warning chime		Engine start operation indicator lamp
				Combination meter buzzer	Intelligent Key warning buzzer	
Take away warning	Door is open to close	Blink (yellow)	—	Activate	Activate	—
	Door is open		—	—	—	—
	Push-ignition switch operation		—	Activate	—	—
Door lock operation warning		—	—	—	Activate	—
Engine start information		—	—	—	—	Indicate
Intelligent Key low battery warning		Blink (green)	—	—	—	—
Key ID warning		Blink (yellow)	—	—	—	—

LIST OF OPERATION RELATED PARTS

Parts marked with × are the parts related to operation.

Warning function		Intelligent Key	Ignition switch	Door switch	Door request switch	Inside key antenna	Outside key antenna	Intelligent Key warning buzzer	Combination meter warning buzzer	CAN communication system	BCM	Shift P warning lamp	Engine start operation indicator lamp	"KEY" warning lamp
Intelligent Key system malfunction										×	×			×
OFF position warning	For internal			×					×	×	×			
	For external			×				×			×			
P position warning			×					×	×	×	×	×		×
ACC warning			×						×	×	×			
Take away warning	Door is open or close	×		×		×		×	×	×	×			×
	Door is open	×		×		×				×	×			×
	Push-button ignition switch operation	×	×			×			×	×	×			×
Door lock operation warning		×		×	×	×	×	×			×			
Key ID warning			×			×				×	×			×
Engine start information		×	×			×				×	×		×	
Intelligent Key low battery warning		×				×				×	×			×

DIAGNOSIS SYSTEM (BCM)

COMMON ITEM

COMMON ITEM : CONSULT-III Function (BCM - COMMON ITEM)

INFOID:0000000006062296

APPLICATION ITEM

CONSULT-III performs the following functions via CAN communication with BCM.

Diagnosis mode	Function Description
Work Support	Changes the setting for each system function.
Self Diagnostic Result	Displays the diagnosis results judged by BCM.
CAN Diag Support Monitor	Monitors the reception status of CAN communication viewed from BCM. Refer to CONSULT-III operation manual.
Data Monitor	The BCM input/output signals are displayed.
Active Test	The signals used to activate each device are forcibly supplied from BCM.
Ecu Identification	The BCM part number is displayed.
Configuration	• Read and save the vehicle specification. • Write the vehicle specification when replacing BCM.

SYSTEM APPLICATION

BCM can perform the following functions for each system.

NOTE:

It can perform the diagnosis modes except the following for all sub system selection items.

×: Applicable item

System	Sub system selection item	Diagnosis mode		
		Work Support	Data Monitor	Active Test
Door lock	DOOR LOCK	×	×	×
Rear window defogger	REAR DEFOGGER		×	×
Warning chime	BUZZER		×	×
Interior room lamp timer	INT LAMP	×	×	×
Exterior lamp	HEAD LAMP	×	×	×
Wiper and washer	WIPER	×	×	×
Turn signal and hazard warning lamps	FLASHER	×	×	×
Automatic air conditioner	AIR CONDITONER		×	×
• Intelligent Key system • Engine start system	INTELLIGENT KEY	×	×	×
Combination switch	COMB SW		×	
Body control system	BCM	×		
NATS	IMMU	×	×	×
Interior room lamp battery saver	BATTERY SAVER	×	×	×
Back door	TRUNK		×	
—	THEFT ALM*	×	×	×
—	RETAINED PWR*		×	
Signal buffer system	SIGNAL BUFFER		×	×

*: This item is displayed, but is not used.

FREEZE FRAME DATA (FFD)

The BCM records the following vehicle condition at the time a particular DTC is detected, and displays on CONSULT-III.

CONSULT screen item	Indication/Unit	Description	
Vehicle Speed	km/h	Vehicle speed of the moment a particular DTC is detected	
Odo/Trip Meter	km	Total mileage (Odometer value) of the moment a particular DTC is detected	
Vehicle Condition	SLEEP>LOCK	Power position status of the moment a particular DTC is detected	While turning BCM status from low power consumption mode to normal mode (Power supply position is “LOCK”)
	SLEEP>OFF		While turning BCM status from low power consumption mode to normal mode (Power supply position is “OFF”.)
	LOCK>ACC		While turning power supply position from “LOCK” to “ACC”
	ACC>ON		While turning power supply position from “ACC” to “IGN”
	RUN>ACC		While turning power supply position from “RUN” to “ACC” (Vehicle is stopping and selector lever is except P position.)
	CRANK>RUN		While turning power supply position from “CRANKING” to “RUN” (From cranking up the engine to run it)
	RUN>URGENT		While turning power supply position from “RUN“ to “ACC” (Emergency stop operation)
	ACC>OFF		While turning power supply position from “ACC” to “OFF”
	OFF>LOCK		While turning power supply position from “OFF” to “LOCK”
	OFF>ACC		While turning power supply position from “OFF” to “ACC”
	ON>CRANK		While turning power supply position from “IGN” to “CRANKING”
	OFF>SLEEP		While turning BCM status from normal mode (Power supply position is “OFF”.) to low power consumption mode
	LOCK>SLEEP		While turning BCM status from normal mode (Power supply position is “LOCK”.) to low power consumption mode
	LOCK		Power supply position is “LOCK” (Ignition switch OFF with steering is locked.)
	OFF		Power supply position is “OFF” (Ignition switch OFF with steering is unlocked.)
	ACC		Power supply position is “ACC” (Ignition switch ACC)
	ON		Power supply position is “IGN” (Ignition switch ON with engine stopped)
	ENGINE RUN		Power supply position is “RUN” (Ignition switch ON with engine running)
	CRANKING		Power supply position is “CRANKING” (At engine cranking)
IGN Counter	0 - 39	The number of times that ignition switch is turned ON after DTC is detected • The number is 0 when a malfunction is detected now. • The number increases like 1 → 2 → 3...38 → 39 after returning to the normal condition whenever ignition switch OFF → ON. • The number is fixed to 39 until the self-diagnosis results are erased if it is over 39.	

DOOR LOCK

DOOR LOCK : CONSULT-III Function (BCM - DOOR LOCK)

INFOID:0000000005948825

DATA MONITOR

Monitor Item	Contents
REQ SW-DR	Indicated [On/Off] condition of door request switch (driver side)
REQ SW-AS	Indicated [On/Off] condition of door request switch (passenger side)
REQ SW-BD/TR	Indicated [On/Off] condition of back door request switch
DOOR SW-DR	Indicated [On/Off] condition of front door switch (driver side)
DOOR SW-AS	Indicated [On/Off] condition of front door switch (passenger side)
DOOR SW-RR	Indicated [On/Off] condition of rear door switch RH

Monitor Item	Contents
DOOR SW-RL	Indicated [On/Off] condition of rear door switch LH
DOOR SW-BK	Indicated [On/Off] condition of back door switch
CDL LOCK SW	Indicated [On/Off] condition of lock signal from door lock unlock switch
CDL UNLOCK SW	Indicated [On/Off] condition of unlock signal from door lock unlock switch
KEY CYL LK-SW	**NOTE:** The item is indicated, but not monitored
KEY CYL UN-SW	**NOTE:** The item is indicated, but not monitored

ACTIVE TEST

Test item	Description
DOOR LOCK	This test is able to check door lock/unlock operation • The all door lock actuators are locked when “ALL LOCK” on CONSULT-III screen is touched • The all door lock actuators are unlocked when “ALL UNLK” on CONSULT-III screen is touched

INTELLIGENT KEY

INTELLIGENT KEY : CONSULT-III Function (BCM - INTELLIGENT KEY)

INFOID:0000000006044328

WORK SUPPORT

Monitor item	Description
INSIDE ANT DIAGNOSIS	This function allows inside key antenna self-diagnosis
LOCK/UNLOCK BY I-KEY	Door lock/unlock function by door request switch mode can be changed to operation in this mode • On: Operate • Off: Non-operation
ENGINE START BY I-KEY	Engine start function mode can be changed to operation with this mode • On: Operate • Off: Non-operation
TRUNK/GLASS HATCH OPEN	**NOTE:** This item is indicated, but not used
PANIC ALARM SET	Panic alarm button pressing time on Intelligent Key remote control button can be selected from the following with this mode • MODE 1: 0.5 sec • MODE 2: Non-operation • MODE 3: 1.5 sec
TRUNK OPEN DELAY	**NOTE:** This item is indicated, but not used
LO- BATT OF KEY FOB WARN	Intelligent Key low battery warning mode can be changed to operation with this mode • On: Operate • Off: Non-operation
ANTI KEY LOCK IN FUNCTI	Key reminder function mode can be changed to operation with this mode • On: Operate • Off: Non-operation
HAZARD ANSWER BACK	Hazard reminder function mode by door request switch and Intelligent Key button can be selected from the following with this mode • Lock Only: Door lock operation only • Unlock Only: Door unlock operation only • Lock/Unlock: Lock and unlock operation • Off: Non-operation

Monitor item	Description
ANS BACK I-KEY LOCK	Buzzer reminder function (lock operation) mode by door request switch can be selected from the following with this mode • Horn Chirp: Sound horn • Buzzer: Sound Intelligent Key warning buzzer • Off: Non-operation
ANS BACK I-KEY UNLOCK	Buzzer reminder function (unlock operation) mode by door request switch can be changed to operation with this mode • On: Operate • Off: Non-operation
SHORT CRANKING OUTPUT	Starter motor can operate during the times below • 70 msec • 100 msec • 200 msec
CONFIRM KEY FOB ID	It can be checked whether Intelligent Key ID code is registered or not in this mode
AUTO LOCK SET	Auto door lock operation time can be changed in this mode • MODE 1: OFF • MODE 2: 30 sec. • MODE 3: 1 minute • MODE 4: 2 minutes • MODE 5: 3 minutes • MODE 6: 4 minutes • MODE 7: 5 minutes
ANSWER BACK FUNCTION	Buzzer reminder function mode by Intelligent Key button can be selected from the following with this mode • On: Operate • Off: Non-operation
TAKE OUT FROM WIN WARN SET	**NOTE:** This item is indicated, but not used
RETRACTABLE MIRROR SET	Auto retractable door mirror function mode can be changed to operation with this mode • On: Operate • Off: Non-operation

DATA MONITOR

Monitor Item	Condition
REQ SW -DR	Indicates [On/Off] condition of door request switch (driver side)
REQ SW -AS	Indicates [On/Off] condition of door request switch (passenger side)
REQ SW -BD/TR	Indicates [On/Off] condition of back door request switch
PUSH SW	Indicates [On/Off] condition of push-button ignition switch
CLUTCH SW	**NOTE:** This item is indicated, but not monitored
BRAKE SW 1	Indicates [On/Off] condition of stop lamp switch
BRAKE SW 2	Indicates [On/Off]* condition of stop lamp switch power supply
DETE/CANCL SW	Indicates [On/Off] condition of P position
SFT PN/N SW	Indicates [On/Off] condition of P or N position
S/L -LOCK	Indicates [On/Off] condition of steering lock unit (LOCK)
S/L -UNLOCK	Indicates [On/Off] condition of steering lock unit (UNLOCK)
S/L RELAY -F/B	Indicates [On/Off] condition of steering lock relay
UNLK SEN -DR	Indicates [On/Off] condition of driver door UNLOCK status
PUSH SW -IPDM	Indicates [On/Off] condition of push-button ignition switch
IGN RLY1 -F/B	Indicates [On/Off] condition of ignition relay 1
DETE SW -IPDM	Indicates [On/Off] condition of P position
SFT PN -IPDM	Indicates [On/Off] condition of P or N position

Monitor Item	Condition
SFT P -MET	Indicates [On/Off] condition of P position
SFT N -MET	Indicates [On/Off] condition of N position
ENGINE STATE	Indicates [Stop/Stall/Crank/Run] condition of engine states
S/L LOCK-IPDM	Indicates [On/Off] condition of steering lock unit (LOCK)
S/L UNLK-IPDM	Indicates [On/Off] condition of steering lock unit (UNLOCK)
S/L RELAY-REQ	Indicates [On/Off] condition of steering lock relay
VEH SPEED 1	Display the vehicle speed signal received from combination meter by numerical value [Km/h]
VEH SPEED 2	Display the vehicle speed signal received from ABS or VDC or TCM by numerical value [Km/h]
DOOR STAT-DR	Indicates [LOCK/READY/UNLK] condition of driver side door status
DOOR STAT-AS	Indicates [LOCK/READY/UNLK] condition of passenger side door status
ID OK FLAG	Indicates [Set/Reset] condition of key ID
PRMT ENG STRT	Indicates [Set/Reset] condition of engine start possibility
PRMT RKE STRT	**NOTE:** This item is indicated, but not monitored
TRNK/HAT MNTR	**NOTE:** This item is indicated, but not monitored
RKE OPE COUN1	When remote keyless entry receiver receives the signal transmitted while operating on Intelligent Key, the numerical value start changing
RKE OPE COUN2	**NOTE:** This item is indicated, but not monitored
RKE-LOCK	Indicates [On/Off] condition of LOCK signal from Intelligent Key
RKE-UNLOCK	Indicates [On/Off] condition of UNLOCK signal from Intelligent Key
RKE-TR/BD	**NOTE:** This item is indicated, but not monitored
RKE-PANIC	Indicates [On/Off] condition of PANIC button of Intelligent Key
RKE-MODE CHG	Indicates [On/Off] condition of MODE CHANGE signal from Intelligent Key

*: OFF is displayed when brake pedal is depressed while brake switch power supply is OFF.

ACTIVE TEST

Test item	Description
OUTSIDE BUZZER	This test is able to check Intelligent Key warning buzzer operation • On: Operate • Off: Non-operation
INSIDE BUZZER	This test is able to check warning chime in combination meter operation • Take Out: Take away warning chime sounds when CONSULT-III screen is touched • Key: Key warning chime sounds when CONSULT-III screen is touched • Knob: OFF position warning chime sounds when CONSULT-III screen is touched • Off: Non-operation
INDICATOR	This test is able to check warning lamp operation • KEY ON: “KEY” Warning lamp illuminates when CONSULT-III screen is touched • KEY IND: “KEY” Warning lamp blinks when CONSULT-III screen is touched • Off: Non-operation
INT LAMP	This test is able to check interior room lamp operation • On: Operate • Off: Non-operation

Test item	Description
LCD	This test is able to check meter display information • B&P N: Engine start information indicate when CONSULT-III screen is touched • B&P I: Engine start information indicate when CONSULT-III screen is touched • ID NG: This item is displayed, but cannot be monitored • ROTAT: This item is displayed, but cannot be monitored • SFT P: Shift P warning lamp indicate when CONSULT-III screen is touched • INSRT: This item is displayed, but cannot be monitored • BATT: Key warning lamp indicator when CONSULT-III screen is touched • NO KY: Key warning lamp indicator when CONSULT-III screen is touched • OUTKEY: Engine start information indicate when CONSULT-III screen is touched • LK WN: Engine start information indicate when CONSULT-III screen is touched
FLASHER	This test is able to check security hazard lamp operation The hazard lamps are activated after “LH/RH/Off” on CONSULT-III screen is touched
P RANGE	This test is able to check AT shift selector power supply • On: Operate • Off: Non-operation
ENGINE SW ILLUMI	This test is able to check push-ignition switch illumination operation Push-ignition switch illumination illuminates when “ON” on CONSULT-III screen is touched
PUSH SWITCH INDICATOR	This test is able to check LOCK indicator in push-ignition switch operation LOCK indicator in push-ignition switch illuminates when “ON” on CONSULT-III screen is touched
TRUNK/BACK DOOR	**NOTE:** This item is indicated, but not tested
RETRACTABLE MIRROR	This test is able to check auto retractable door mirror operation • On: Operate • Off: Non-operation

TRUNK

TRUNK : CONSULT-III Function (BCM - TRUNK)

INFOID:0000000005948827

DATA MONITOR

Monitor Item	Contents
PUSH SW	Indicates [On/Off] condition of push switch
UNLK SEN -DR	Indicates [On/Off] condition of unlock sensor
VEH SPEED 1	Indicates [Km/h] condition of vehicle speed signal from combination meter
TR/BD OPEN SW	**NOTE:** This item is displayed, but cannot be monitored
TRNK/HAT MNTR	**NOTE:** This item is displayed, but cannot be monitored
RKE-TR/BD	**NOTE:** This item is displayed, but cannot be monitored

ECU DIAGNOSIS INFORMATION

BCM, IPDM E/R

List of ECU Reference

INFOID:0000000006038727

ECU	Reference
BCM	BCS-18, "Reference Value"
	BCS-37, "Fail-safe"
	BCS-39, "DTC Inspection Priority Chart"
	BCS-40, "DTC Index"
IPDM	PCS-15, "Reference Value"
	PCS-20, "Fail-Safe"
	PCS-22, "DTC Index"

WIRING DIAGRAM

DOOR & LOCK SYSTEM

Wiring Diagram - DOOR LOCK SYSTEM (WITH INTELLIGENT KEY) -

INFOID:0000000005948911

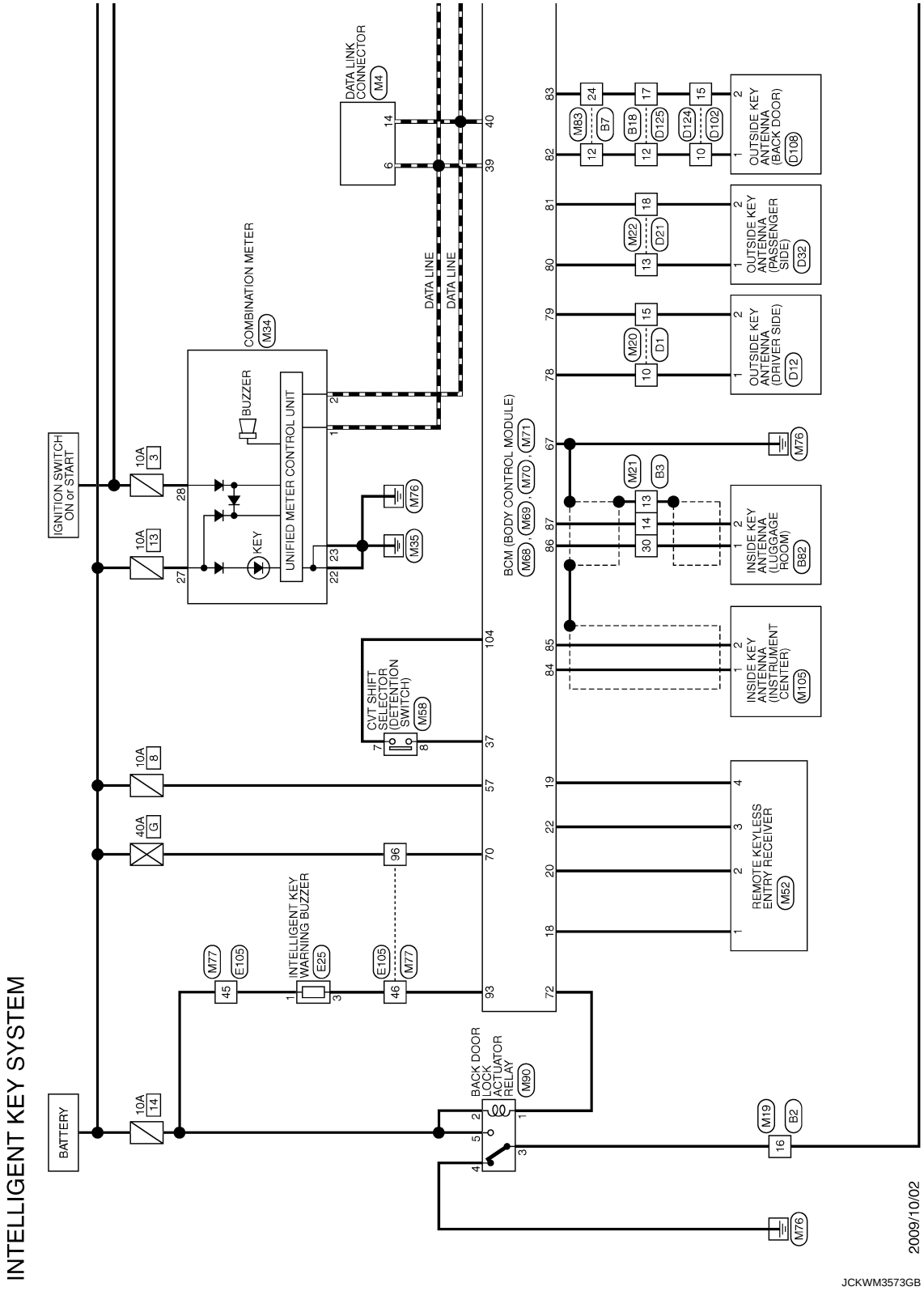

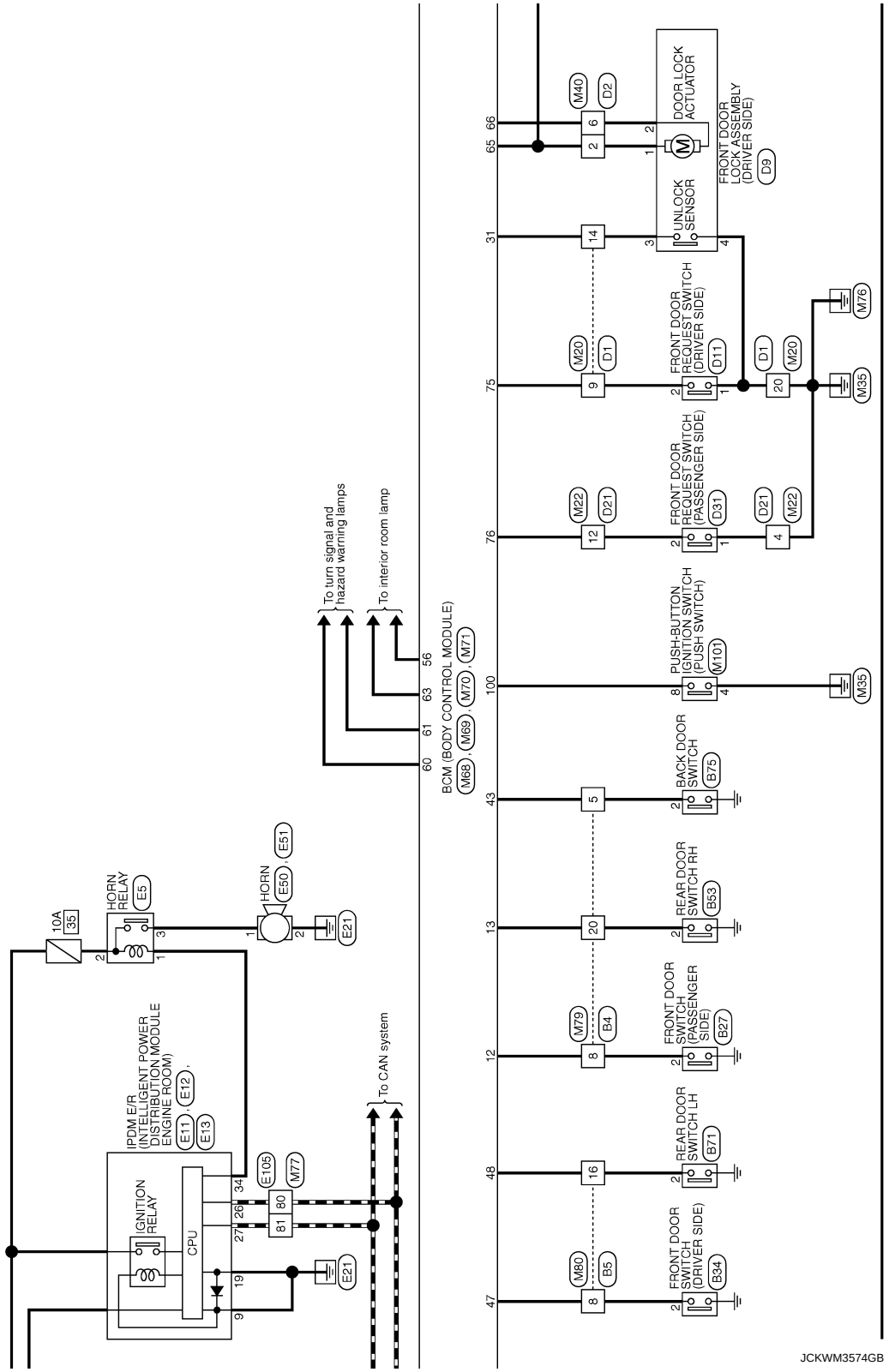
10A
35
HORN RELAY
E5
HORN
E50, E51
E21
IPDM E/R
(INTELLIGENT POWER DISTRIBUTION MODULE ENGINE ROOM)
E11, E12, E13
IGNITION RELAY
CPU
E105
M77
To CAN system
To turn signal and hazard warning lamps
To interior room lamp
BCM (BODY CONTROL MODULE)
M68, M69, M70, M71
FRONT DOOR SWITCH (DRIVER SIDE)
B34
REAR DOOR SWITCH LH
B71
FRONT DOOR SWITCH (PASSENGER SIDE)
B27
REAR DOOR SWITCH RH
B53
BACK DOOR SWITCH
B75
PUSH-BUTTON IGNITION SWITCH (PUSH SWITCH)
M101
FRONT DOOR REQUEST SWITCH (PASSENGER SIDE)
D31
FRONT DOOR REQUEST SWITCH (DRIVER SIDE)
D11
UNLOCK SENSOR
DOOR LOCK ACTUATOR
FRONT DOOR LOCK ASSEMBLY (DRIVER SIDE)
D9
M35
M76
JCKWM3574GB

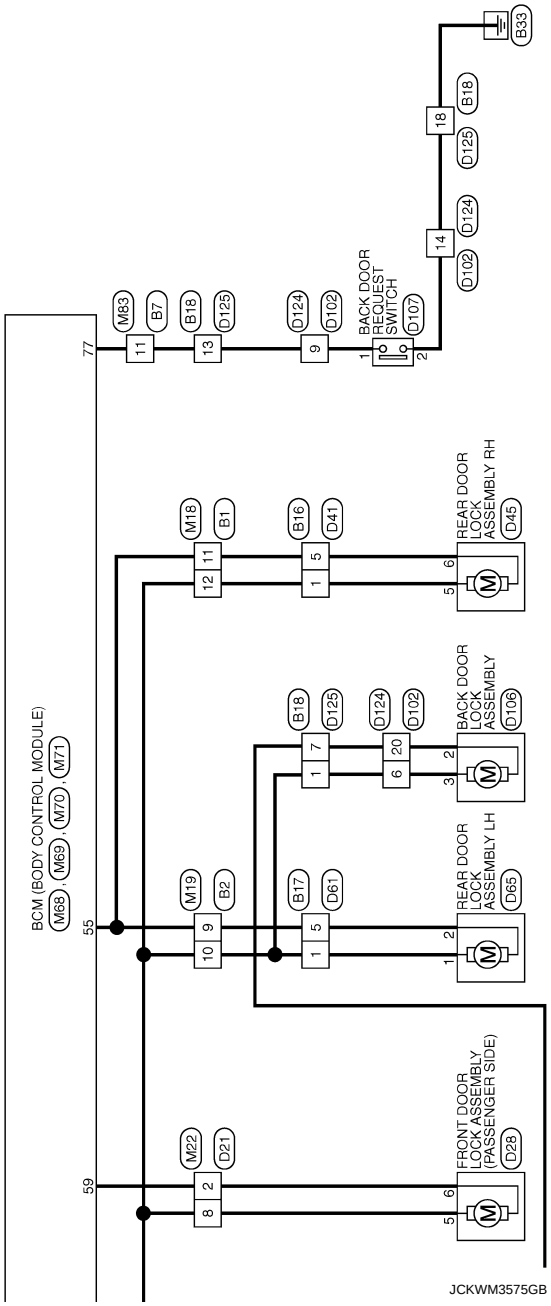
BCM (BODY CONTROL MODULE)
M68, M69, M70, M71
77
55
59
M83
B7
B18
D125
11
13
9
D124
D102
BACK DOOR REQUEST SWITCH
D107
14
18
D102
D124
D125
B18
B33
M18
B1
12
11
B16
D41
1
5
REAR DOOR LOCK ASSEMBLY RH
D45
B18
D125
D124
D102
7
20
BACK DOOR LOCK ASSEMBLY
D106
M19
B2
10
9
B17
D61
REAR DOOR LOCK ASSEMBLY LH
D65
M22
D21
8
2
FRONT DOOR LOCK ASSEMBLY (PASSENGER SIDE)
D28
JCKWM3575GB

INTELLIGENT KEY SYSTEM

Connector No.	B1
Connector Name	WIRE TO WIRE
Connector Type	NS16MW-CS

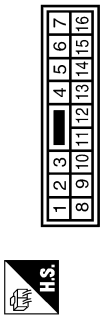

Terminal No.	Color of Wire	Signal Name [Specification]
1	G	–
3	V	–
4	L	–
5	Y	–
6	W	–
7	LG	–
8	GR	–
9	SB	–
10	W	–
11	G	–
12	V	–
13	BR	–
14	SB	–
15	R	–
16	GR	–

Connector No.	B2
Connector Name	WIRE TO WIRE
Connector Type	NS16MW-CS

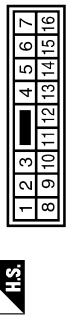

Terminal No.	Color of Wire	Signal Name [Specification]
1	V	–
5	O	–
6	R	–
7	L	–
8	L	–
9	G	–
10	V	–
11	P	–
12	LG	–
14	R	–
15	Y	–
16	B	–

Connector No.	B3
Connector Name	WIRE TO WIRE
Connector Type	TH32MW-NH

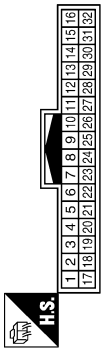

Terminal No.	Color of Wire	Signal Name [Specification]
1	SB	–
2	L	–
3	R	–
4	SHIELD	–
5	LG	–
6	SB	–
7	P	–
8	V	–
9	SHIELD	–
10	R	–
11	SHIELD	–
12	G	–
13	SHIELD	–
14	G	–
15	SB	–
16	SB	–
17	LG	–
18	SHIELD	–
19	BR	–
20	Y	–
21	L	–
22	O	–
23	GR	–
24	L	–
25	W	–
26	B	–
27	R	–
28	B	–
29	W	–
30	R	–
31	LG	–
32	LG	–

Connector No.	B4
Connector Name	WIRE TO WIRE
Connector Type	TH24MW-NH

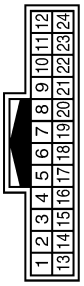

Terminal No.	Color of Wire	Signal Name [Specification]
1	W	–
2	V	–
3	O	–
4	P	–
5	W	–
6	W	–
7	P	–
8	SB	–
11	G	–
12	SB	–
13	L	–
15	R	–
16	GR	–
17	BR	–
18	L	–
19	Y	–
20	LG	–
22	Y	–
23	BR	–
24	O	–

Connector No.	B5
Connector Name	WIRE TO WIRE
Connector Type	TH16MW-NH

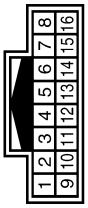

Terminal No.	Color of Wire	Signal Name [Specification]
1	R	–
2	GR	–
3	V	–
4	R	–
5	Y	–
6	G	–
7	L	–
11	O	–
12	W	–
16	BR	–
18	Y	–
19	SHIELD	–
24	R	–

Connector No.	B7
Connector Name	WIRE TO WIRE
Connector Type	TH24MW-NH

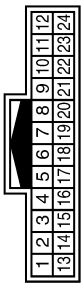

Terminal No.	Color of Wire	Signal Name [Specification]
1	V	–
2	GR	–
5	V	–
6	W	–
8	LG	–
9	R	–
11	O	–
13	GR	–
14	P	–
16	W	–

JCKWM3576GB

INTELLIGENT KEY SYSTEM

Connector No.	B16
Connector Name	WIRE TO WIRE
Connector Type	NS10FW-CS

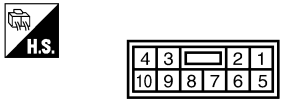

Terminal No.	Color of Wire	Signal Name [Specification]
1	V	–
4	L	–
5	G	–
7	GR	–
8	LG	–
9	W	–
10	Y	–

Connector No.	B17
Connector Name	WIRE TO WIRE
Connector Type	NS10FW-CS

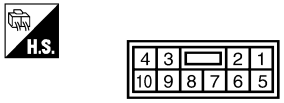

Terminal No.	Color of Wire	Signal Name [Specification]
1	V	–
4	L	–
5	G	–
7	L	–
8	V	–
9	R	–
10	O	–

Connector No.	B18
Connector Name	WIRE TO WIRE
Connector Type	NH10MW-CS10

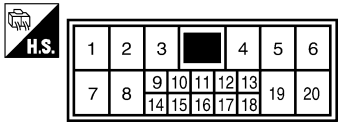

Terminal No.	Color of Wire	Signal Name [Specification]
1	V	–
3	BR	–
5	R	–
6	P	–
7	B	– [With Intelligent Key]
7	G	– [Without Intelligent Key]
8	SHIELD	–
9	R	–
10	Y	–
11	G	–
12	W	–
13	O	–
14	BR	–
15	Y	–
16	L	–
17	R	–
18	B	–
20	LG	–

Connector No.	B27
Connector Name	FRONT DOOR SWITCH (PASSENGER SIDE)
Connector Type	A03FW

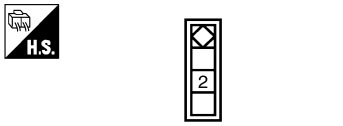

Terminal No.	Color of Wire	Signal Name [Specification]
2	SB	–

Connector No.	B34
Connector Name	FRONT DOOR SWITCH (DRIVER SIDE)
Connector Type	A03FW

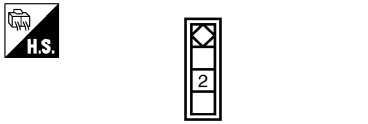

Terminal No.	Color of Wire	Signal Name [Specification]
2	LG	–

Connector No.	B53
Connector Name	REAR DOOR SWITCH RH
Connector Type	A03FW

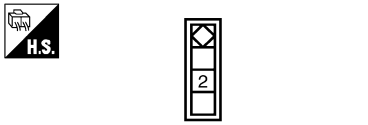

Terminal No.	Color of Wire	Signal Name [Specification]
2	LG	–

Connector No.	B71
Connector Name	REAR DOOR SWITCH LH
Connector Type	A03FW

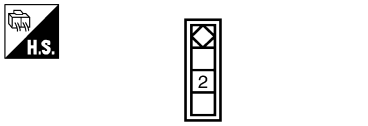

Terminal No.	Color of Wire	Signal Name [Specification]
2	W	–

Connector No.	B75
Connector Name	BACK DOOR SWITCH
Connector Type	A03FW

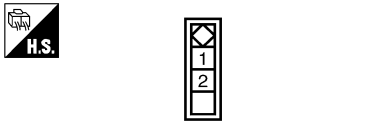

Terminal No.	Color of Wire	Signal Name [Specification]
1	L	–
2	W	–

Connector No.	B82
Connector Name	INSIDE KEY ANTENNA (LUGGAGE ROOM)
Connector Type	RK02FL

Terminal No.	Color of Wire	Signal Name [Specification]
1	Y/G	–
2	Y/L	–

JCKWM3577GB

INTELLIGENT KEY SYSTEM

Connector No.	D1
Connector Name	WIRE TO WIRE
Connector Type	NH10FW-CS10

H.S.

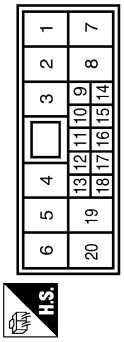

Terminal No.	Color of Wire	Signal Name [Specification]
1	P	–
2	SB	–
3	Y	–
5	LG	–
6	R	–
7	L	–
8	W	–
9	BR	–
10	P	–
12	GR	–
13	W	–
14	G	–
15	V	–
17	R	–
18	L	–
19	O	–
20	B	–

Connector No.	D2
Connector Name	WIRE TO WIRE
Connector Type	NS10FW-CS

H.S.

Terminal No.	Color of Wire	Signal Name [Specification]
1	W	–
2	V	–
3	R	–
4	G	–
5	P	–
6	SB	–
8	GR	–
9	BR	–

Connector No.	D9
Connector Name	FRONT DOOR LOCK ASSEMBLY (DRIVER SIDE)
Connector Type	E06FGY-RS

H.S.

Terminal No.	Color of Wire	Signal Name [Specification]
1	V	–
2	SB	–
3	G	–
4	B	–
5	L	–
6	W	–

Connector No.	D11
Connector Name	FRONT DOOR REQUEST SWITCH (DRIVER SIDE)
Connector Type	RK02FGY

H.S.

Terminal No.	Color of Wire	Signal Name [Specification]
1	B	–
2	BR	–

Connector No.	D12
Connector Name	OUTSIDE KEY ANTENNA (DRIVER SIDE)
Connector Type	RK02MGY

H.S.

Terminal No.	Color of Wire	Signal Name [Specification]
1	P	–
2	V	–

Connector No.	D21
Connector Name	WIRE TO WIRE
Connector Type	NH10FW-CS10

H.S.

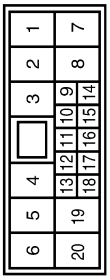

Terminal No.	Color of Wire	Signal Name [Specification]
1	G	–
2	Y	–
4	B	–
5	L	–
6	SB	–
7	R	–
8	V	–
9	R	–
10	W	–
11	L	–
12	LG	–
13	P	–
14	B	–
15	G	–
16	GR	–
17	BR	–
18	V	–
20	W	–

Connector No.	D26
Connector Name	FRONT DOOR LOCK ASSEMBLY (PASSENGER SIDE)
Connector Type	E06FGY-RS

H.S.

Terminal No.	Color of Wire	Signal Name [Specification]
5	V	–
6	Y	–

Connector No.	D31
Connector Name	FRONT DOOR REQUEST SWITCH (PASSENGER SIDE)
Connector Type	RK02FGY

H.S.

Terminal No.	Color of Wire	Signal Name [Specification]
1	B	–
2	LG	–

Connector No.	D32
Connector Name	OUTSIDE KEY ANTENNA (PASSENGER SIDE)
Connector Type	RK02MGY

H.S.

Terminal No.	Color of Wire	Signal Name [Specification]
1	P	–
2	V	–

JCKWM3578GB

INTELLIGENT KEY SYSTEM

Connector No.	D41
Connector Name	WIRE TO WIRE
Connector Type	NS10MW-CS

H.S.

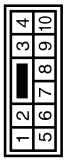

Terminal No.	Color of Wire	Signal Name [Specification]
1	W	–
4	L	–
5	P	–
7	GR	–
8	LG	–
9	BR	–
10	O	–

Connector No.	D45
Connector Name	REAR DOOR LOCK ASSEMBLY RH
Connector Type	E06FGY-RS

H.S.

Terminal No.	Color of Wire	Signal Name [Specification]
5	W	–
6	P	–

Connector No.	D61
Connector Name	WIRE TO WIRE
Connector Type	NS10MW-CS

H.S.

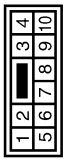

Terminal No.	Color of Wire	Signal Name [Specification]
1	V	–
4	L	–
5	G	–
7	GR	–
8	LG	–
9	BR	–
10	O	–

Connector No.	D65
Connector Name	REAR DOOR LOCK ASSEMBLY LH
Connector Type	E06FGY-RS

H.S.

Terminal No.	Color of Wire	Signal Name [Specification]
1	V	–
2	G	–

Connector No.	D102
Connector Name	WIRE TO WIRE
Connector Type	NH10MW-CS10

H.S.

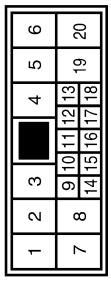

Terminal No.	Color of Wire	Signal Name [Specification]
4	Y	–
5	BR	–
6	W	–
9	LG	–
10	BR	–
14	P	–
15	B	–
19	R	–
20	GR	–

Connector No.	D106
Connector Name	BACK DOOR LOCK ASSEMBLY
Connector Type	FEA04FB-FHA2-LC

H.S.

Terminal No.	Color of Wire	Signal Name [Specification]
2	GR	–
3	Y	–

Connector No.	D107
Connector Name	BACK DOOR REQUEST SWITCH
Connector Type	RK02FGY

H.S.

Terminal No.	Color of Wire	Signal Name [Specification]
1	W	–
2	B	–

Connector No.	D108
Connector Name	OUTSIDE KEY ANTENNA (BACK DOOR)
Connector Type	RK02MGY

H.S.

Terminal No.	Color of Wire	Signal Name [Specification]
1	BR	–
2	R	–

JCKWM3579GB

INTELLIGENT KEY SYSTEM

Connector No.	D124
Connector Name	WIRE TO WIRE
Connector Type	NH10FW-CS10

H.S.

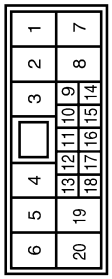

Terminal No.	Color of Wire	Signal Name [Specification]
4	Y	–
5	B	–
6	W	–
9	LG	–
10	BR	–
14	G	–
15	L	–
19	R	–
20	GR	–

Connector No.	D125
Connector Name	WIRE TO WIRE
Connector Type	NH10FW-CS10

H.S.

Terminal No.	Color of Wire	Signal Name [Specification]
1	Y	–
3	SB	–
5	GR	–
6	G	–
7	GR	–
8	SHIELD	–
9	R	–
10	Y	–
11	G	–
12	BR	–
13	W	–
14	BR	–
15	Y	–
16	L	–
17	R	–
18	L	–
20	LG	–

Connector No.	E5
Connector Name	HORN RELAY
Connector Type	–

H.S.

Terminal No.	Color of Wire	Signal Name [Specification]
1	R	–
2	G	–
3	V	–

Connector No.	E11
Connector Name	IPDM E/R (INTELLIGENT POWER DISTRIBUTION MODULE ENGINE ROOM)
Connector Type	M06FB-LC

H.S.

Terminal No.	Color of Wire	Signal Name [Specification]
9	B/W	–
10	L	–
13	W	–

Connector No.	E12
Connector Name	IPDM E/R (INTELLIGENT POWER DISTRIBUTION MODULE ENGINE ROOM)
Connector Type	NS08FBR-CS

H.S.

Terminal No.	Color of Wire	Signal Name [Specification]
18	Y	–
19	B/W	–
21	W	–
22	V	–

Connector No.	E13
Connector Name	IPDM E/R (INTELLIGENT POWER DISTRIBUTION MODULE ENGINE ROOM)
Connector Type	TH12FW-NH

H.S.

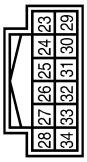

Terminal No.	Color of Wire	Signal Name [Specification]
24	LG	–
25	Y	–
26	P	–
27	L	–
28	P	–
30	SB	–
31	W	–
33	O	–
34	R	–

Connector No.	E25
Connector Name	INTELLIGENT KEY WARNING BUZZER
Connector Type	RK03FBR

H.S.

Terminal No.	Color of Wire	Signal Name [Specification]
1	V	–
3	P	–

Connector No.	E50
Connector Name	HORN
Connector Type	P01FB-A

H.S.

Terminal No.	Color of Wire	Signal Name [Specification]
1	V	–

Connector No.	E51
Connector Name	HORN
Connector Type	P01FB-A

H.S.

Terminal No.	Color of Wire	Signal Name [Specification]
2	B/W	–

JCKWM3580GB

INTELLIGENT KEY SYSTEM

Connector No.	E105
Connector Name	WIRE TO WIRE
Connector Type	TH80MW-CS16-TM4

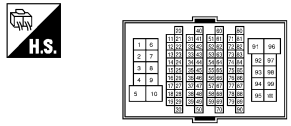

Terminal No.	Color of Wire	Signal Name [Specification]
1	V	–
2	W	–
3	SB	–
4	G	–
5	P	–
6	R	–
7	Y	–
8	O	–
9	W	–
10	SB	–
31	V	–
32	R	–
33	GR	–
34	P	–
35	Y	–
36	BR	–
39	SB	–
44	R	–
45	V	–
46	P	–
47	W	–
48	L	–
49	Y	–
50	W	–
51	BR	– [With CVT]
51	B	– [With M/T]
53	SB	–
54	W	– [With CVT]
54	O	– [With M/T]
57	LG	–
59	L	–
60	O	–
61	G	–
62	W	–
63	L	–
67	GR	– [With CVT]
67	V	– [With M/T]
69	P	–
70	SHIELD	–
71	GR	–
72	LG	–
73	P	–
74	V	–
76	Y	–
77	LG	–
78	O	–
79	G	–
80	P	–
81	L	–
82	W	–
83	BR	–
84	B	–
87	GR	–
91	W	–
92	Y	–
93	Y	–
94	R	–
95	V	–
96	LG	–
97	R	–
98	SB	–
99	G	–
100	P	–

Connector No.	M4
Connector Name	DATA LINK CONNECTOR
Connector Type	BD16FW

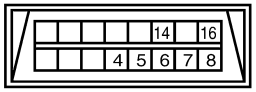

Terminal No.	Color of Wire	Signal Name [Specification]
4	B	–
5	B	–
6	L	–
7	GR/R	–
8	O	–
14	P	–
16	LG/R	–

Connector No.	M18
Connector Name	WIRE TO WIRE
Connector Type	NS16FW-CS

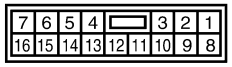

Terminal No.	Color of Wire	Signal Name [Specification]
1	G/R	–
3	L/W	–
4	L	–
5	Y	–
6	L/B	–
7	LG	–
8	L/G	–
9	GR/B	–
10	W/L	–
11	G	–
12	V	–
13	L	–
14	L	–
15	L	–
16	GR	–

Connector No.	M19
Connector Name	WIRE TO WIRE
Connector Type	NS16FW-CS

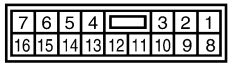

Terminal No.	Color of Wire	Signal Name [Specification]
1	V	–
5	L/R	–
6	R	–
7	L	–
8	R/B	–
9	G	–
10	V	–
11	L/W	–
12	LG	–
14	R	–
15	Y/R	–
16	B/R	–

Connector No.	M20
Connector Name	WIRE TO WIRE
Connector Type	NH10MW-CS10

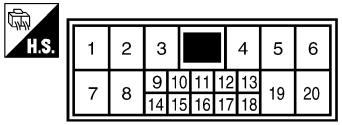

Terminal No.	Color of Wire	Signal Name [Specification]
1	L/W	–
2	W/R	–
3	Y	–
5	L/B	–
6	R	–
7	L	–
8	Y/R	–
9	SB	–
10	LG	–
12	GR	–
13	W/B	–
14	G/B	–
15	V	–
17	BR	–
18	W/R	–
19	L/R	–
20	B	–

JCKWM3581GB

INTELLIGENT KEY SYSTEM

Connector No.	M21
Connector Name	WIRE TO WIRE
Connector Type	TH32FW-NH

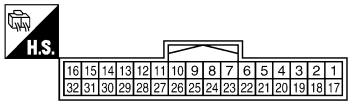

Terminal No.	Color of Wire	Signal Name [Specification]
1	SB	–
2	G	–
3	V	–
4	SHIELD	–
5	O	–
6	G/O	–
7	GR/R	–
8	L/Y	–
9	SHIELD	–
10	G/R	–
11	SHIELD	–
12	G	–
13	SHIELD	–
14	L	–
15	SB	–
16	SB	–
17	LG	–
18	SHIELD	–
19	BR	–
20	Y	–
21	L/Y	–
22	V	–
23	W/G	–
24	L/B	–
25	G/Y	–
26	G/O	–
27	R	–
28	B	–
29	W	–
30	P	–
31	LG	–
32	LG	–

Connector No.	M22
Connector Name	WIRE TO WIRE
Connector Type	NH10MW-CS10

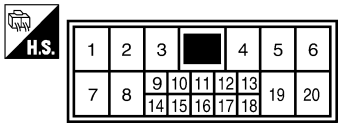

Terminal No.	Color of Wire	Signal Name [Specification]
1	G	–
2	G	–
4	B	–
5	L	–
6	W/R	–
7	R	–
8	V	–
9	G/R	–
10	LG	–
11	R	–
12	G	–
13	BR/Y	–
14	B	–
15	G/B	–
16	GR	–
17	BR	–
18	L/Y	–
20	Y/R	–

Connector No.	M34
Connector Name	COMBINATION METER
Connector Type	TH40FW-NH

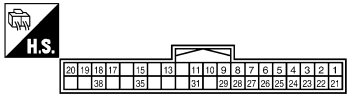

Terminal No.	Color of Wire	Signal Name [Specification]
1	L	CAN-H
2	P	CAN-L
3	V	VEHICLE SPEED SIGNAL (2-PULSE)
4	L	VEHICLE SPEED SIGNAL (8-PULSE)
6	BR/Y	FUEL LEVEL SENSOR SIGNAL
7	R/G	AIR BAG SIGNAL
8	P	OVERDRIVE CONTROL SWITCH SIGNAL
9	O	SEAT BELT BUCKLE SWITCH SIGNAL (DRIVER SIDE)
10	SB	PARKING BRAKE SWITCH SIGNAL
11	G/R	BRAKE FLUID LEVEL SWITCH SIGNAL
13	B/R	ILLUMINATION CONTROL SIGNAL
15	L/Y	ACC POWER SUPPLY
17	G	WASHER LEVEL SWITCH SIGNAL
18	R/Y	SECURITY SIGNAL
19	V/W	AMBIENT SENSOR SIGNAL
20	R/W	AMBIENT SENSOR GROUND
21	B	GROUND
22	B	GROUND
23	B	GROUND
24	V	FUEL LEVEL SENSOR GROUND
25	B	VDC GROUND
27	LG	BATTERY POWER SUPPLY
28	GR	IGNITION SIGNAL
29	BR	PASSENGER SEAT BELT WARNING SIGNAL
31	R	A/C AUTO AMP. CONNECTION RECOGNITION SIGNAL
35	BR	ENGINE COOLANT TEMPERATURE SIGNAL
38	GR	ALTERNATOR SIGNAL

Connector No.	M40
Connector Name	WIRE TO WIRE
Connector Type	NS10MW-CS

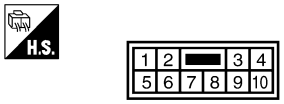

Terminal No.	Color of Wire	Signal Name [Specification]
1	W	–
2	V	–
3	V	–
4	G/R	–
5	P	–
6	L/B	–
8	GR	–
9	BR	–
10	B	–

Connector No.	M52
Connector Name	REMOTE KEYLESS ENTRY RECEIVER
Connector Type	JAB04FB

Terminal No.	Color of Wire	Signal Name [Specification]
1	V	GND
2	G/Y	SIGNAL
3	W/G	RSSI
4	BR	POWER

Connector No.	M58
Connector Name	CVT SHIFT SELECTOR
Connector Type	TK08FW

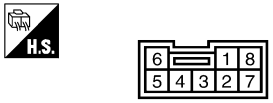

Terminal No.	Color of Wire	Signal Name [Specification]
1	P	–
2	B	–
3	W	–
4	B/R	–
5	LG	–
6	B	–
7	Y/R	–
8	G/O	–

JCKWM3582GB

INTELLIGENT KEY SYSTEM

Connector No.	M68
Connector Name	BCM (BODY CONTROL MODULE)
Connector Type	TH40FB-NH

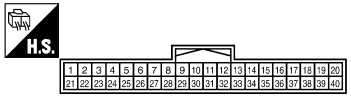

Terminal No.	Color of Wire	Signal Name [Specification]
2	BR/W	COMBI SW INPUT 5
3	GR	COMBI SW INPUT 4
4	L/Y	COMBI SW INPUT 3
5	G	COMBI SW INPUT 2
6	L/R	COMBI SW INPUT 1
7	W/R	KEY CYL UNLOCK SW
8	W/B	KEY CYL LOCK SW
9	R	STOP LAMP SW 1
10	V/W	TIRE PRESS WARNING CHECK SW
11	L/Y	ACC F/B
12	SB	PASSENGER DOOR SW
13	GR/L	REAR RH DOOR SW
14	L/B	OPTICAL SENSOR
15	W/L	REAR WINDOW DEFOGGER SW
17	R/G	OPTICAL SENSOR POWER SUPPLY
18	V	RECEIVER / SENSOR GND
19	BR	KEYLESS ENTRY RECEIVER POWER SUPPLY
20	G/Y	KEYLESS ENTRY RECEIVER COMM
21	P/L	NATS ANTENNA AMP.
22	W/G	KEYLESS ENTRY RECEIVER RSSI
23	R/Y	SECURITY INDICATOR LAMP
24	GR/R	DONGLE LINK
25	LG	NATS ANTENNA AMP.
27	Y/R	A/C SW
28	G/W	BLOWER FAN SW
29	L/W	HAZARD SW
31	G/B	DR DOOR UNLOCK SENSOR
32	LG	COMBI SW OUTPUT 5
33	Y/L	COMBI SW OUTPUT 4
34	W	COMBI SW OUTPUT 3
35	R/L	COMBI SW OUTPUT 2
36	L/O	COMBI SW OUTPUT 1
37	G/O	SHIFT P
38	O	IGN F/B
39	L	CAN-H
40	P	CAN-L

Connector No.	M69
Connector Name	BCM (BODY CONTROL MODULE)
Connector Type	FEA09FW-FHA6-SA

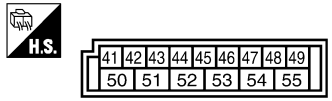

Terminal No.	Color of Wire	Signal Name [Specification]
43	W	BACK DOOR SW
44	LG	REAR WIPER STOP POSITION
45	GR	CENTRAL DOOR LOCK SW
46	BR	CENTRAL DOOR UNLOCK SW
47	BR/Y	DRIVER DOOR SW
48	W/G	REAR LH DOOR SW
54	L/W	REAR WIPER OUTPUT
55	G	REAR DOOR UNLOCK OUTPUT

Connector No.	M70
Connector Name	BCM (BODY CONTROL MODULE)
Connector Type	FEA09FB-FHA6-SA

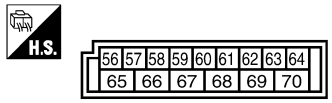

Terminal No.	Color of Wire	Signal Name [Specification]
56	L	INTERIOR ROOM LAMP POWER SUPPLY
57	Y	BAT (FUSE)
59	G	PASSENGER DOOR UNLOCK OUTPUT
60	W/B	TURN SIGNAL LH OUTPUT
61	W/L	TURN SIGNAL RH OUTPUT
63	BR	ROOM LAMP TIMER CONTROL
65	V	ALL DOOR LOCK OUTPUT
66	L/B	DRIVER DOOR UNLOCK OUTPUT
67	B	GND
68	L	POWER WINDOW POWER SUPPLY (IGN)
69	L/W	POWER WINDOW POWER SUPPLY (BAT)
70	Y	BAT (F/L)

Connector No.	M71
Connector Name	BCM (BODY CONTROL MODULE)
Connector Type	TH40FW-NH

Terminal No.	Color of Wire	Signal Name [Specification]
71	R	TIRE PRESS RECEIVER COMM
72	R/W	BK DR LOCK ACT RELAY CONT
75	SB	DRIVER DOOR REQUEST SW
76	G	PASSENGER DOOR REQUEST SW
77	W	BACK DOOR REQUEST SW
78	LG	DRIVER DOOR ANT+
79	V	DRIVER DOOR ANT-
80	BR/Y	PASSENGER DOOR ANT+
81	L/Y	PASSENGER DOOR ANT-
82	W/B	BACK DOOR ANT+
83	B/W	BACK DOOR ANT-
84	Y/G	ROOM ANT+
85	Y/L	ROOM ANT-
86	P	LUGGAGE ROOM ANT+
87	L	LUGGAGE ROOM ANT-
90	W/L	PUSH-BUTTON IGNITION SW ILL POWER
91	Y	ACC/ON IND
92	BR/R	PUSH-BUTTON IGNITION SW ILL GND
93	GR/W	I-KEY WARN BUZZER
94	Y/R	S/L UNIT COMM
95	W/G	S/L UNIT POWER SUPPLY
96	G	ACC RELAY CONT
97	L/R	STARTER RELAY CONT
98	BR	IGN RELAY (IPDM E/R) CONT
99	W/R	IGN RELAY CONT
100	L/O	PUSH SW
102	G	SHIFT N/P
104	Y/R	CVT SHIFT SELECTOR POWER SUPPLY
105	B/O	STOP LAMP SW 2
106	Y/B	BLOWER FAN MOTOR RELAY CONT
107	L/W	S/L CONDITION 1
108	P/L	S/L CONDITION 2
110	BR/W	TIRE PRESS POWER SUPPLY

JCKWM3583GB

INTELLIGENT KEY SYSTEM

Connector No.	M77
Connector Name	WIRE TO WIRE
Connector Type	TH80FW-CS16-TM4

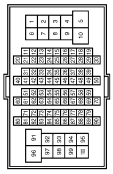

H.S.

Terminal No.	Color of Wire	Signal Name [Specification]
1	B/O	–
2	R	–
3	G/R	–
4	G/B	–
5	L	–
6	L	–
7	W/R	–
8	G/W	–
9	Y/L	–
10	W	–
31	GR/L	–
32	L/B	–
33	R/Y	–
34	SB	–
35	BR	–
36	G	–
39	L/R	–
44	G/O	–
45	LG/R	–
46	GR/W	–
47	BR/Y	–
48	L/O	–
49	L/W	–
50	P/L	–
51	B/W	–
53	R/L	–
54	O	–
57	GR	–
59	V	–
60	R/W	–
61	V/W	–
62	W/L	–
63	W/B	–
67	Y/R	–
69	LG	–
70	SHIELD	–
71	P/B	–
72	R/G	–
73	R	–
74	L/Y	–
76	W/G	–
77	GR/R	–
78	O	–
79	LG	–
80	P	–
81	L	–
82	GR	–
83	G/R	–
84	B	–
87	G	–
91	R	–
92	O	–
93	Y	–
94	R/B	–
95	L/W	–
96	Y	–
97	L	–
98	BR/W	–
99	W	–
100	G/R	–

Connector No.	M79
Connector Name	WIRE TO WIRE
Connector Type	TH24FW-NH

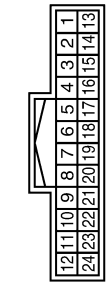

H.S.

Terminal No.	Color of Wire	Signal Name [Specification]
1	W/G	–
2	L/Y	–
3	R	–
4	P/B	–
5	W	–
6	W/G	–
7	R/B	–
8	SB	–
11	G/B	–
12	G/R	–
13	R/G	–
15	R/L	–
16	GR/R	–
17	BR/Y	–
18	V	–
19	Y	–
20	GR/L	–
22	L	–
23	Y/L	–
24	G/W	–

Connector No.	M80
Connector Name	WIRE TO WIRE
Connector Type	TH16FW-NH

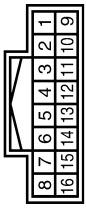

H.S.

Terminal No.	Color of Wire	Signal Name [Specification]
1	L/B	–
2	GR/L	–
5	W	–
6	W/L	–
8	BR/Y	–
9	R/Y	–
11	O	–
13	BR/W	–
14	W/B	–
16	W/G	–

Connector No.	M83
Connector Name	WIRE TO WIRE
Connector Type	TH24FW-NH

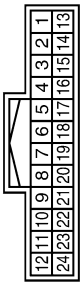

H.S.

Terminal No.	Color of Wire	Signal Name [Specification]
4	L	–
5	Y/B	–
6	G/O	–
7	G/R	–
11	W	–
12	W/B	–
16	P	–
18	G/Y	–
19	SHIELD	–
24	B/W	–

Connector No.	M90
Connector Name	BACK DOOR LOCK ACTUATOR RELAY
Connector Type	MS03FB-M2-LC

H.S.

Terminal No.	Color of Wire	Signal Name [Specification]
1	R/W	–
2	LG/R	–
3	B/R	–
4	B	–
5	LG/R	–

Connector No.	M101
Connector Name	PUSH-BUTTON IGNITION SWITCH
Connector Type	TK08FBR

H.S.

Terminal No.	Color of Wire	Signal Name [Specification]
3	P	–
4	B	–
5	W/L	–
6	BR/R	–
7	Y	–
8	L/O	–

JCKWM3584GB

INTELLIGENT KEY SYSTEM

Connector No.	M105
Connector Name	INSIDE KEY ANTENNA (INSTRUMENT CENTER)
Connector Type	RK02FL

Terminal No.	Color of Wire	Signal Name [Specification]
1	P	–
2	L	–

JCKWM3585GB

BASIC INSPECTION

DIAGNOSIS AND REPAIR WORK FLOW

Work Flow

INFOID:0000000005948800

OVERALL SEQUENCE

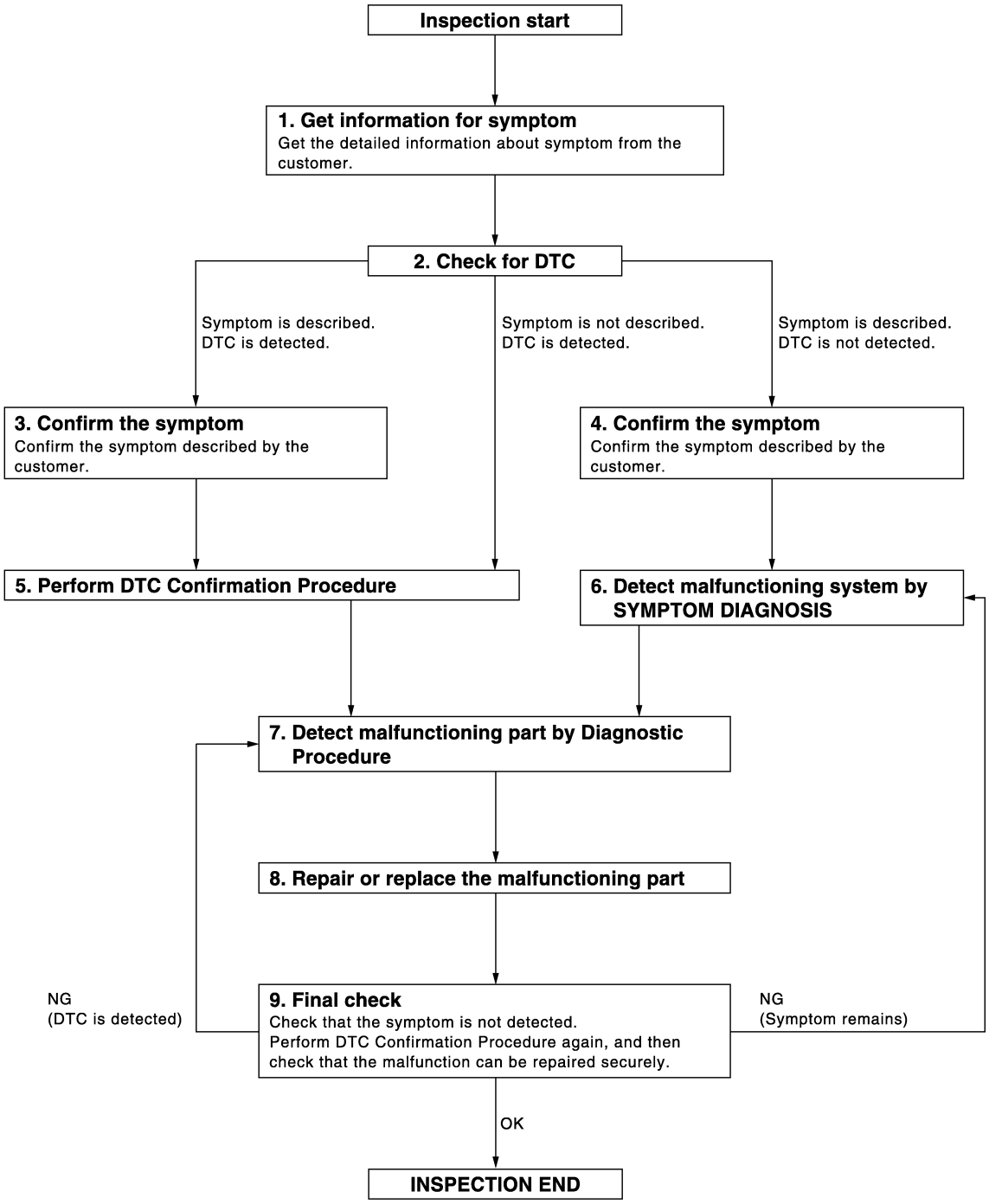

JMKIA3620GB

DETAILED FLOW

1. GET INFORMATION FOR SYMPTOM

1. Get detailed information from the customer about the symptom (the condition and the environment when the incident/malfunction occurred).
2. Check operation condition of the function that is malfunctioning.

>> GO TO 2.

2. CHECK FOR DTC

1. Check BCM for DTC.
2. Perform the following procedure if DTC is displayed.
- Record DTC and freeze frame data (print them out with CONSULT-III).
- Erase DTC.
- Study the relationship between the cause detected by DTC and the symptom described by the customer.
3. Check related service bulletins for information.

Are any symptoms described or any DTC detected?

Symptom is described, DTC is displayed>>GO TO 3.
Symptom is described, DTC is not displayed>>GO TO 4.
Symptom is not described, DTC is displayed>>GO TO 5.

3. CONFIRM THE SYMPTOM

Confirm the symptom described by the customer.
Connect CONSULT-III to the vehicle in the “DATA MONITOR” mode and check real time diagnosis results.
Verify relation between the symptom and the condition when the symptom is detected.

>> GO TO 5.

4. CONFIRM THE SYMPTOM

Confirm the symptom described by the customer.
Connect CONSULT-III to the vehicle in the “DATA MONITOR” mode and check real time diagnosis results.
Verify relation between the symptom and the condition when the symptom is detected.

>> GO TO 6.

5. PERFORM DTC CONFIRMATION PROCEDURE

Perform DTC Confirmation Procedure for the displayed DTC, and then check that DTC is detected again.
At this time, always connect CONSULT-III to the vehicle, and check diagnostic results in real time.
If two or more DTCs are detected, refer to XX-XX, "*****" (BCM) determine trouble diagnosis order.

NOTE:
Perform Component Function Check if DTC Confirmation Procedure is not included in Service Manual. This simplified check procedure is an effective alternative though DTC cannot be detected during this check.
If the result of Component Function Check is NG, it is the same as the detection of DTC by DTC Confirmation Procedure.

Is DTC detected?

YES >> GO TO 7.
NO >> Refer to XX-XX, "*****".

6. DETECT MALFUNCTIONING SYSTEM BY SYMPTOM DIAGNOSIS

Detect malfunctioning system according to SYMPTOM DIAGNOSIS based on the confirmed symptom in step 4, and determine the trouble diagnosis order based on possible causes and symptoms.

>> GO TO 7.

7. DETECT MALFUNCTIONING PART BY DIAGNOSTIC PROCEDURE

Inspect according to Diagnostic Procedure of the system.

NOTE:
The Diagnostic Procedure described is based on open circuit inspection. A short circuit inspection is also required for the circuit check in the Diagnostic Procedure.

Is malfunctioning part detected?

YES >> GO TO 8.
NO >> Check voltage of related BCM terminals using CONSULT-III.

8. REPAIR OR REPLACE THE MALFUNCTIONING PART

1. Repair or replace the malfunctioning part.
2. Reconnect parts or connectors disconnected during Diagnostic Procedure again after repair and replacement.
3. Check for DTC. If DTC is displayed, erase it.

>> GO TO 9.

9. FINAL CHECK

When DTC is detected in step 2, perform DTC Confirmation Procedure or Component Function Check again, and then check that the malfunction is completely repaired.
When symptom is described by the customer, refer to confirmed symptom in step 3 or 4, and check that the symptom is not detected.

Does the symptom reappear?

YES (DTC is detected)>>GO TO 7.
YES (Symptom remains)>>GO TO 6.
NO >> INSPECTION END

INSPECTION AND ADJUSTMENT

ADDITIONAL SERVICE WHEN REPLACING CONTROL UNIT

ADDITIONAL SERVICE WHEN REPLACING CONTROL UNIT : Description

INFOID:0000000005948801

Perform the system initialization when replacing BCM, replacing Intelligent Key or registering an additional Intelligent Key.

ADDITIONAL SERVICE WHEN REPLACING CONTROL UNIT : Special Repair Requirement

INFOID:0000000005948802

Refer to CONSULT-III operation manual for the NATS-IVIS/NVIS.

DTC/CIRCUIT DIAGNOSIS

B2621 INSIDE ANTENNA

DTC Logic

INFOID:0000000005948829

DTC DETECTION LOGIC

DTC	CONSULT-III display description	DTC detecting condition	Possible cause
B2621	INSIDE ANTENNA	An excessive high or low voltage from inside antenna (instrument center) is sent to BCM	• Inside key antenna (instrument center) • Between BCM ～ Inside key antenna (instrument center)

DTC CONFIRMATION PROCEDURE

1. PERFORM DTC CONFIRMATION PROCEDURE

1. Select “INTELLIGENT KEY” of “BCM” using CONSULT-III.
2. Select “INSIDE ANT DIAGNOSIS” in “WORK SUPPORT” mode.
3. Perform inside key antenna (“INSIDE ANT DIAGNOSIS”) on “WORK SUPPORT” of “INTELLIGENT KEY”.
4. Check BCM for DTC.

Is inside key antenna DTC detected?

YES >> Refer to DLK-46, "Diagnosis Procedure".
NO >> Inside key antenna (instrument center) is OK.

Diagnosis Procedure

INFOID:0000000005948830

1. CHECK INSIDE KEY ANTENNA INPUT SIGNAL 1

1. Turn ignition switch OFF.
2. Check signal between BCM harness connector and ground using oscilloscope.

(+) BCM Connector		(+) BCM Terminal	(–)	Condition	Signal (Reference value)
Instrument center	M71	84, 85	Ground	When Intelligent Key is in the antenna detection area	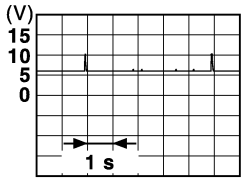 JMKIA3839GB
				When Intelligent Key is not in the antenna detection area	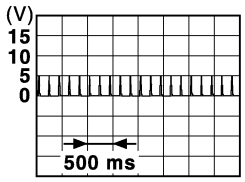 JMKIA3838GB

Is the inspection result normal?

YES >> Replace BCM. Refer to BCS-57, "Removal and Installation".
NO >> GO TO 2.

2. CHECK INSIDE KEY ANTENNA CIRCUIT

1. Disconnect BCM connector and inside key antenna (instrument center) connector.
2. Check continuity between BCM harness connector and inside key antenna (instrument center) harness connector.

BCM		Inside key antenna (instrument center)		Continuity
Connector	Terminal	Connector	Terminal	
M71	84	M105	1	Existed
	85		2	

3. Check continuity between BCM harness connector and ground.

BCM		Ground	Continuity
Connector	Terminal		
M71	84		Not existed
	85		

Is the inspection result normal?

YES >> GO TO 3.
NO >> Repair or replace harness.

3. CHECK INSIDE KEY ANTENNA INPUT SIGNAL 2

1. Replace inside key antenna (instrument center). (New antenna or other antenna)
2. Connect BCM connector and inside key antenna (instrument center) connector.
3. Check signal between BCM harness connector and ground using oscilloscope.

(+)			(–)	Condition	Signal (Reference value)
BCM					
Connector		Terminal			
Instrument center	M71	84, 85	Ground	When Intelligent Key is in the antenna detection area.	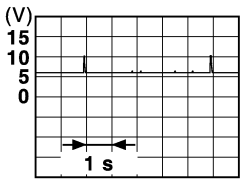 JMKIA3839GB
				When Intelligent Key is not in the antenna detection area.	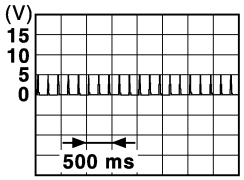 JMKIA3838GB

Is the inspection result normal?

YES >> Replace inside key antenna (instrument center).
NO >> Replace BCM. Refer to BCS-57, "Removal and Installation".

B2622 INSIDE ANTENNA

DTC Logic

INFOID:0000000006064401

DTC DETECTION LOGIC

DTC	CONSULT-III display description	DTC detecting condition	Possible cause
B2622	INSIDE ANTENNA	An excessive high or low voltage from inside antenna (console) is sent to BCM	• Inside key antenna (console) • Between BCM ～ Inside key antenna (console)

DTC CONFIRMATION PROCEDURE

1. PERFORM DTC CONFIRMATION PROCEDURE

1. Select “INTELLIGENT KEY” of “BCM” using CONSULT-III.
2. Select “INSIDE ANT DIAGNOSIS” in “WORK SUPPORT” mode.
3. Perform inside key antenna (“INSIDE ANT DIAGNOSIS”) on “WORK SUPPORT” of “INTELLIGENT KEY”.
4. Check BCM for DTC.

Is inside key antenna DTC detected?

YES >> Refer to DLK-48, "Diagnosis Procedure".
NO >> Inside key antenna (console) is OK.

Diagnosis Procedure

INFOID:0000000006064402

1. CHECK INSIDE KEY ANTENNA INPUT SIGNAL 1

1. Turn ignition switch OFF.
2. Check signal between BCM harness connector and ground using oscilloscope.

(+) BCM Connector	(+) BCM Terminal	(–)	Condition	Signal (Reference value)
Console	M71	86, 87	Ground	When Intelligent Key is in the antenna detection area	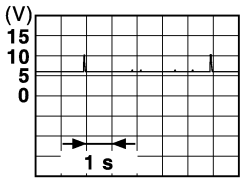 JMKIA3839GB
			When Intelligent Key is not in the antenna detection area	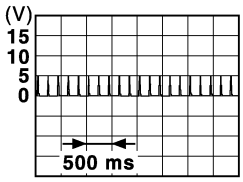 JMKIA3838GB

Is the inspection result normal?

YES >> Replace BCM. Refer to BCS-57, "Removal and Installation".
NO >> GO TO 2.

2. CHECK INSIDE KEY ANTENNA CIRCUIT

1. Disconnect BCM connector and inside key antenna (console) connector.
2. Check continuity between BCM harness connector and inside key antenna (console) harness connector.

BCM		Inside key antenna (console)		Continuity
Connector	Terminal	Connector	Terminal	
M71	86	M106	1	Existed
	87		2	

3. Check continuity between BCM harness connector and ground.

BCM		Ground	Continuity
Connector	Terminal		
M71	86		Not existed
	87		

Is the inspection result normal?

YES >> GO TO 3.
NO >> Repair or replace harness.

3. CHECK INSIDE KEY ANTENNA INPUT SIGNAL 2

1. Replace inside key antenna (console). (New antenna or other antenna)
2. Connect BCM connector and inside key antenna (console) connector.
3. Check signal between BCM harness connector and ground using oscilloscope.

(+)			(–)	Condition	Signal (Reference value)
BCM					
Connector		Terminal			
Console	M71	86, 87	Ground	When Intelligent Key is in the antenna detection area	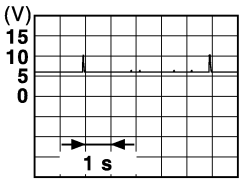 JMKIA3839GB
				When Intelligent Key is not in the antenna detection area	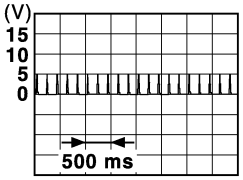 JMKIA3838GB

Is the inspection result normal?

YES >> Replace inside key antenna (console).
NO >> Replace BCM. Refer to BCS-57, "Removal and Installation".

B2623 INSIDE ANTENNA

DTC Logic

INFOID:0000000005948832

DTC DETECTION LOGIC

DTC	CONSULT-III display description	DTC detecting condition	Possible cause
B2623	INSIDE ANTENNA	An excessive high or low voltage from inside antenna (luggage room) is sent to BCM	• Inside key antenna (luggage room) • Between BCM ～ Inside key antenna (luggage room)

DTC CONFIRMATION PROCEDURE

1. PERFORM DTC CONFIRMATION PROCEDURE

1. Select “INTELLIGENT KEY” of “BCM” using CONSULT-III.
2. Select “INSIDE ANT DIAGNOSIS” in “WORK SUPPORT” mode.
3. Perform inside key antenna (“INSIDE ANT DIAGNOSIS”) on “WORK SUPPORT” of “INTELLIGENT KEY”.
4. Check BCM for DTC.

Is inside key antenna DTC detected?

YES >> Refer to DLK-50, "Diagnosis Procedure".
NO >> Inside key antenna (luggage room) is OK.

Diagnosis Procedure

INFOID:0000000005948833

1. CHECK INSIDE KEY ANTENNA INPUT SIGNAL 1

1. Turn ignition switch OFF.
2. Check signal between BCM harness connector and ground using oscilloscope.

(+)			(–)	Condition	Signal (Reference value)
BCM					
Connector		Terminal			
Luggage room	M71	88, 89	Ground	When Intelligent Key is in the antenna detection area	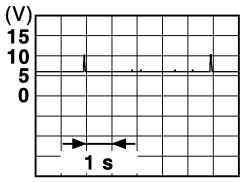 JMKIA3839GB
				When Intelligent Key is not in the antenna detection area	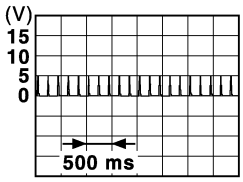 JMKIA3838GB

Is the inspection result normal?

YES >> Replace BCM. Refer to BCS-57, "Removal and Installation".
NO >> GO TO 2.

2. CHECK INSIDE KEY ANTENNA CIRCUIT

1. Disconnect BCM connector and inside key antenna (luggage room) connector.
2. Check continuity between BCM harness connector and inside key antenna (luggage room) harness connector.

BCM		Inside key antenna (luggage room)		Continuity
Connector	Terminal	Connector	Terminal	
M71	88	B82	1	Existed
	89		2	

3. Check continuity between BCM harness connector and ground.

BCM		Ground	Continuity
Connector	Terminal		
M71	88		Not existed
	89		

Is the inspection result normal?

YES >> GO TO 3.
NO >> Repair or replace harness.

3. CHECK INSIDE KEY ANTENNA INPUT SIGNAL 2

1. Replace inside key antenna (luggage room). (New antenna or other antenna)
2. Connect BCM connector and inside key antenna (luggage room) connector.
3. Check signal between BCM harness connector and ground using oscilloscope.

(+)			(–)	Condition	Signal (Reference value)
BCM					
Connector		Terminal			
Luggage room	M71	88, 89	Ground	When Intelligent Key is in the antenna detection area	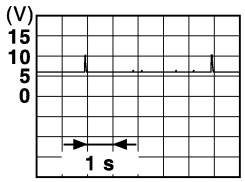 JMKIA3839GB
				When Intelligent Key is not in the antenna detection area	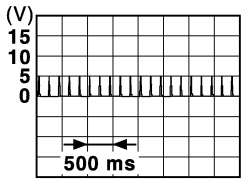 JMKIA3838GB

Is the inspection result normal?

YES >> Replace inside key antenna (luggage room).
NO >> Replace BCM. Refer to BCS-57, "Removal and Installation".

B2626 OUTSIDE ANTENNA

DTC Logic

INFOID:0000000005948835

DTC DETECTION LOGIC

DTC	CONSULT-III display description	DTC detecting condition	Possible cause
B2626	OUTSIDE ANTENNA	An excessive high or low voltage from outside key antenna (driver side) is sent to BCM	• Outside key antenna (driver side) • Between BCM ～ Outside key antenna (driver side)

DTC CONFIRMATION PROCEDURE

1. PERFORM DTC CONFIRMATION PROCEDURE

1. Turn ignition switch ON.
2. Check “Self Diagnostic Result” mode of “BCM” using CONSULT-III.

Is DTC detected?

YES >> Refer to DLK-52, "Diagnosis Procedure".
NO >> Outside key antenna (driver side) is OK.

Diagnosis Procedure

INFOID:0000000005948836

1. CHECK OUTSIDE KEY ANTENNA INPUT SIGNAL 1

1. Turn ignition switch OFF.
2. Check signal between BCM harness connector and ground using oscilloscope.

(+) BCM Connector		Terminal	(–)	Condition	Signal (Reference value)
Driver side	M71	78, 79	Ground	When Intelligent Key is in the antenna detection area	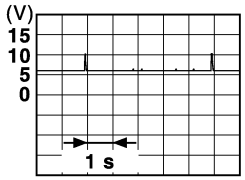 JMKIA3839GB
				When Intelligent Key is not in the antenna detection area	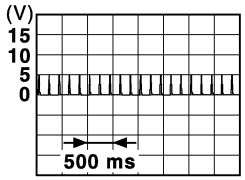 JMKIA3838GB

Is the inspection result normal?

YES >> Replace BCM. Refer to BCS-57, "Removal and Installation".
NO >> GO TO 2.

2. CHECK OUTSIDE KEY ANTENNA CIRCUIT

1. Disconnect BCM connector and outside key antenna (driver side) connector.
2. Check continuity between BCM harness connector and outside key antenna (driver side) harness connector.

BCM		Outside key antenna (driver side)		Continuity
Connector	Terminal	Connector	Terminal	
M71	78	D32	1	Existed
	79		2	

3. Check continuity between BCM harness connector and ground.

BCM		Ground	Continuity
Connector	Terminal		
M71	78		Not existed
	79		

Is the inspection result normal?

YES >> GO TO 3.
NO >> Repair or replace harness.

3. CHECK OUTSIDE KEY ANTENNA INPUT SIGNAL 2

1. Replace outside key antenna (driver side). (New antenna or other antenna)
2. Connect BCM connector and outside key antenna (driver side) connector.
3. Check signal between BCM harness connector and ground using oscilloscope.

(+)			(–)	Condition	Signal (Reference value)
BCM					
Connector		Terminal			
Driver side	M71	78, 79	Ground	When Intelligent Key is in the antenna detection area	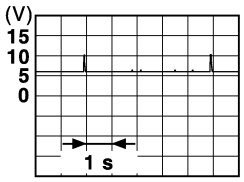 JMKIA3839GB
				When Intelligent Key is not in the antenna detection area	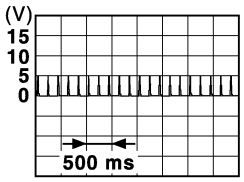 JMKIA3838GB

Is the inspection result normal?

YES >> Replace outside key antenna (driver side).
NO >> Replace BCM. Refer to BCS-57, "Removal and Installation".

B2627 OUTSIDE ANTENNA

DTC Logic

INFOID:0000000005948838

DTC DETECTION LOGIC

DTC	CONSULT-III display description	DTC detecting condition	Possible cause
B2627	OUTSIDE ANTENNA	An excessive high or low voltage from outside key antenna (passenger side) is sent to BCM	• Outside key antenna (passenger side) • Between BCM ～ Outside key antenna (passenger side)

DTC CONFIRMATION PROCEDURE

1. PERFORM DTC CONFIRMATION PROCEDURE

1. Turn ignition switch ON.
2. Check “Self Diagnostic Result” mode of “BCM” using CONSULT-III.

Is outside key antenna DTC detected?

YES >> Refer to DLK-54, "Diagnosis Procedure".
NO >> Outside key antenna (passenger side) is OK.

Diagnosis Procedure

INFOID:0000000005948839

1. CHECK OUTSIDE KEY ANTENNA INPUT SIGNAL 1

1. Turn ignition switch OFF.
2. Check signal between BCM harness connector and ground using oscilloscope.

(+) BCM Connector	(+) BCM Terminal	(–)	Condition	Signal (Reference value)
Passenger side	M71	80, 81	Ground	When Intelligent Key is in the antenna detection area	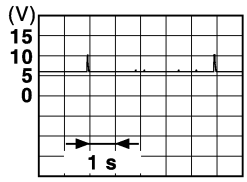 JMKIA3839GB
			When Intelligent Key is not in the antenna detection area	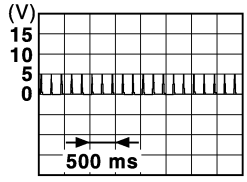 JMKIA3838GB

Is the inspection result normal?

YES >> Replace BCM. Refer to BCS-57, "Removal and Installation".
NO >> GO TO 2.

2. CHECK OUTSIDE KEY ANTENNA CIRCUIT

1. Disconnect BCM connector and outside key antenna (passenger side) connector.
2. Check continuity between BCM harness connector and outside key antenna (passenger side) harness connector.

BCM		Outside key antenna (passenger side)		Continuity
Connector	Terminal	Connector	Terminal	
M71	80	D12	1	Existed
	81		2	

3. Check continuity between BCM harness connector and ground.

BCM		Ground	Continuity
Connector	Terminal		
M71	80		Not existed
	81		

Is the inspection result normal?

YES >> GO TO 3.
NO >> Repair or replace harness.

3. CHECK OUTSIDE KEY ANTENNA INPUT SIGNAL 2

1. Replace outside key antenna (passenger side). (New antenna or other antenna)
2. Connect BCM connector and outside key antenna (passenger side) connector.
3. Check signal between BCM harness connector and ground using oscilloscope.

(+)			(–)	Condition	Signal (Reference value)
BCM					
Connector		Terminal			
Passenger side	M71	80, 81	Ground	When Intelligent Key is in the antenna detection area	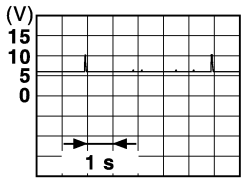 JMKIA3839GB
				When Intelligent Key is not in the antenna detection area	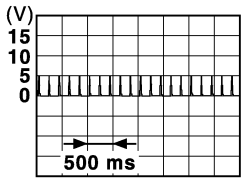 JMKIA3838GB

Is the inspection result normal?

YES >> Replace outside key antenna (passenger side).
NO >> Replace BCM. Refer to BCS-57, "Removal and Installation".

B2628 OUTSIDE ANTENNA

DTC Logic

INFOID:0000000005948841

DTC DETECTION LOGIC

DTC	CONSULT-III display description	DTC detecting condition	Possible cause
B2623	OUTSIDE ANTENNA	An excessive high or low voltage from outside key antenna (rear bumper) is sent to BCM	• Outside key antenna (rear bumper) • Between BCM – Outside key antenna (rear bumper)

DTC CONFIRMATION PROCEDURE

1. PERFORM DTC CONFIRMATION PROCEDURE

1. Turn ignition switch ON.
2. Check “Self Diagnostic Result” mode of “BCM” using CONSULT-III.

Is outside key antenna DTC detected?

YES >> Refer to DLK-56, "Diagnosis Procedure".
NO >> Outside key antenna (rear bumper) is OK.

Diagnosis Procedure

INFOID:0000000005948842

1. CHECK OUTSIDE KEY ANTENNA INPUT SIGNAL 1

1. Turn ignition switch OFF.
2. Check signal between BCM harness connector and ground using oscilloscope.

(+) BCM Connector		(+) BCM Terminal	(–)	Condition	Signal (Reference value)
Rear bumper	M71	82, 83	Ground	When Intelligent Key is in the antenna detection area	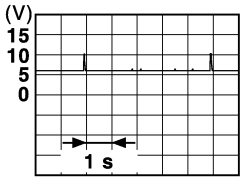 JMKIA3839GB
				When Intelligent Key is not in the antenna detection area	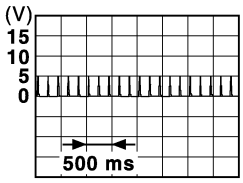 JMKIA3838GB

Is the inspection result normal?

YES >> Replace BCM. Refer to BCS-57, "Removal and Installation".
NO >> GO TO 2.

2. CHECK OUTSIDE KEY ANTENNA CIRCUIT

1. Disconnect BCM connector and outside key antenna (rear bumper) connector.
2. Check continuity between BCM harness connector and outside key antenna (rear bumper) harness connector.

BCM		Outside key antenna (rear bumper)		Continuity
Connector	Terminal	Connector	Terminal	
M71	82	B108	1	Existed
	83		2	

3. Check continuity between BCM harness connector and ground.

BCM		Ground	Continuity
Connector	Terminal		
M71	82		Not existed
	83		

Is the inspection result normal?

YES >> GO TO 3.
NO >> Repair or replace harness.

3. CHECK OUTSIDE KEY ANTENNA INPUT SIGNAL 2

1. Replace outside key antenna (rear bumper). (New antenna or other antenna)
2. Connect BCM and outside key antenna (rear bumper) connector.
3. Check signal between BCM harness connector and ground using oscilloscope.

(+) BCM			(–)	Condition	Signal (Reference value)
Connector		Terminal			
Rear bumper	M71	82, 83	Ground	When Intelligent Key is in the antenna detection area	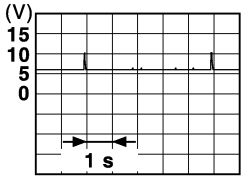 JMKIA3839GB
				When Intelligent Key is not in the antenna detection area	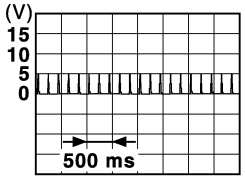 JMKIA3838GB

Is the inspection result normal?

YES >> Replace outside key antenna (rear bumper)..
NO >> Replace BCM. Refer to BCS-57, "Removal and Installation".

DOOR SWITCH

Component Function Check

INFOID:0000000005948845

1.CHECK FUNCTION

1. Select “DOOR LOCK” of “BCM” using CONSULT-III.
2. Select “DOOR SW-DR”, “DOOR SW-AS”, “DOOR SW-RL”, “DOOR SW-RR” and “DOOR SW-BK” in “DATA MONITOR” mode.
3. Check that the function operates normally according to the following conditions.

Monitor item	Condition		Status
DOOR SW-DR	Driver side door	Open	ON
		Closed	OFF
DOOR SW-AS	Passenger side door	Open	ON
		Closed	OFF
DOOR SW-RL	Rear door LH	Open	ON
		Closed	OFF
DOOR SW-RR	Rear door RH	Open	ON
		Closed	OFF
DOOR SW-BK	Back door	Open	ON
		Closed	OFF

Is the inspection result normal?

YES >> Door switch is OK.
NO >> Refer to DLK-58, "Diagnosis Procedure".

Diagnosis Procedure

INFOID:0000000005948846

1.CHECK DOOR SWITCH INPUT SIGNAL

1. Turn ignition switch OFF.
2. Disconnect malfunctioning door switch connector.
3. Check signal between malfunctioning door switch harness connector and ground using oscilloscope.

(+)			(–)	Condition		Signal (Reference value)
Door switch						
Connector		Terminal				
Driver side	B35	3	Ground	Driver door switch	OFF (When driver door closed)	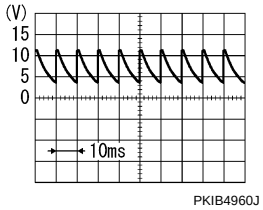 7.0 - 8.0 V
					ON (When driver door opened)	0 V
Passenger side	B28	3		Passenger door switch	OFF (When passenger door closed)	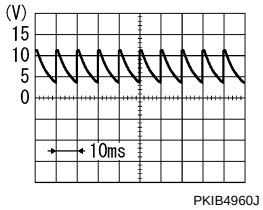 7.0 - 8.0 V
					ON (When passenger door opened)	0 V
Rear LH	B71	3		Rear LH door switch	OFF (When rear LH door closed)	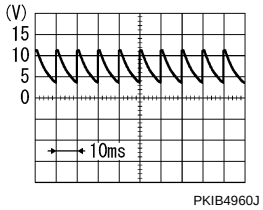 7.0 - 8.0 V
					ON (When rear door LH opened)	0 V
Rear RH	B53	3		Rear RH door switch	OFF (When rear RH door closed)	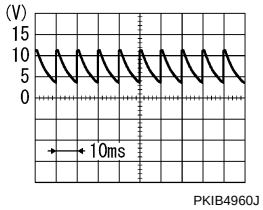 7.0 - 8.0 V
					ON (When rear RH door opened)	0 V

(+)			(–)	Condition		Signal (Reference value)
Door switch						
Connector		Terminal				
Back door	D70	1	Ground	Back door switch	OFF (When back door closed)	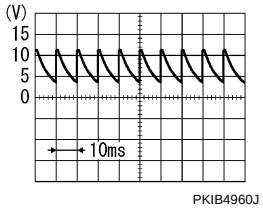 9.5 - 10.0 V
					ON (When back door opened)	0 V

Is the inspection result normal?

YES-1 >> Back door: GO TO 3.
YES-1 >> Other doors: GO TO 4.
NO >> GO TO 2.

2. CHECK DOOR SWITCH CIRCUIT

1. Disconnect BCM connector.
2. Check continuity between door switch harness connector and BCM harness connector.

Door switch			BCM		Continuity
Connector		Terminal	Connector	Terminal	
Driver side	B35	3	M69	47	Existed
Passenger side	B28		M68	12	
Rear LH	B71		M69	48	
Rear RH	B53		M68	13	
Back door	D70	1	M69	43	

3. Check continuity between door switch harness connector and ground.

Door switch			Ground	Continuity
Connector		Terminal		
Driver side	B35	3		Not existed
Passenger side	B28			
Rear LH	B71			
Rear RH	B53			
Back door	D70	1		

Is the inspection result normal?

YES >> Replace BCM. Refer to BCS-57, "Removal and Installation".
NO >> Repair or replace harness.

3. CHECK BACK DOOR SWITCH GROUND CIRCUIT

Check continuity between back door switch harness connector and ground.

Back door switch		Ground	Continuity
Connector	Terminal		
D70	3		Existed

Is the inspection result normal?

YES >> GO TO 4.

NO >> Replace back door switch.

4. CHECK DOOR SWITCH

Refer to DLK-61, "Component Inspection".

Is the inspection result normal?

YES >> GO TO 5.
NO-1 >> Replace back door lock assembly. (back door)
NO-2 >> Replace malfunctioning door switch. (other door)

5. CHECK INTERMITTENT INCIDENT

Refer to GI-33, "Intermittent Incident".

>> INSPECTION END

Component Inspection

INFOID:0000000005948847

1. CHECK DOOR SWITCH

1. Turn ignition switch OFF.
2. Disconnect malfunctioning door switch connector.
3. Check continuity between door switch terminals.

Door switch			Condition		Continuity
Terminal					
Driver side	3	Ground part of door switch	Door switch	Pressed	Not existed
				Released	Existed
Passenger side				Pressed	Not existed
				Released	Existed
Rear LH				Pressed	Not existed
				Released	Existed
Rear RH				Pressed	Not existed
				Released	Existed
Back door	1	3		Pressed	Not existed
				Released	Existed

Is the inspection result normal?

YES >> INSPECTION END
NO-1 >> Replace back door lock assembly. (back door)
NO-1 >> Replace malfunction door switch. (other door)

DOOR LOCK AND UNLOCK SWITCH

Component Function Check

INFOID:0000000005948849

1. CHECK FUNCTION

1. Select “DOOR LOCK” of “BCM” using CONSULT-III.
2. Select “CDL LOCK SW”, “CDL UNLOCK SW” in “DATA MONITOR” mode.
3. Check that the function operates normally according to the following conditions.

Monitor item	Condition		Status
CDL LOCK SW	Door lock and unlock switch	LOCK	ON
		UNLOCK	OFF
CDL UNLOCK SW		LOCK	OFF
		UNLOCK	ON

Is the inspection result normal?

YES >> Door lock and unlock switch is OK.
NO >> Refer to DLK-62, "Diagnosis Procedure".

Diagnosis Procedure

INFOID:0000000005948850

1. CHECK DOOR LOCK AND UNLOCK SWITCH INPUT SIGNAL

1. Turn ignition switch OFF.
2. Disconnect power window main switch connector.
3. Check signal between power window main switch harness connector and ground using oscilloscope.

(+)		(–)	Signal (Reference value)
Power window main switch			
Connector	Terminal		
D5	6	Ground	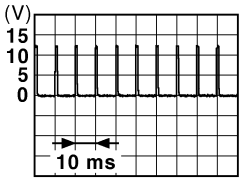 JPMIA0012GB 1.0 - 1.5 V
D6	18		

Is the inspection result normal?

YES >> GO TO 3.
NO >> GO TO 2.

2. CHECK DOOR LOCK AND UNLOCK SWITCH CIRCUIT

1. Check continuity between BCM harness connector and power window main switch harness connector.

BCM		Power window main switch		Continuity
Connector	Terminal	Connector	Terminal	
M69	45	D6	18	Existed
	46	D5	6	

2. Check continuity between BCM harness connector and ground.

BCM		Ground	Continuity
Connector	Terminal		
M69	45		Not existed
	46		

Is the inspection result normal?

YES >> Replace BCM. Refer to BCS-57, "Removal and Installation".
NO >> Repair or replace harness.

3. CHECK DOOR LOCK AND UNLOCK SWITCH GROUND

Check continuity between power window main switch harness connector and ground.

Power window main switch		Ground	Continuity
Connector	Terminal		
D6	17		Existed

Is the inspection result normal?

YES >> GO TO 4.
NO >> Repair or replace harness.

4. CHECK DOOR LOCK AND UNLOCK SWITCH

Refer to DLK-63, "Component Inspection".

Is the inspection result normal?

YES >> GO TO 5.
NO >> Replace power window main switch. Refer to PWC-44, "Removal and Installation".

5. CHECK INTERMITTENT INCIDENT

Refer to GI-33, "Intermittent Incident".

>> INSPECTION END

Component Inspection

INFOID:0000000005948851

1. CHECK DOOR LOCK AND UNLOCK SWITCH

1. Turn ignition switch OFF.
2. Disconnect power window main switch (door lock and unlock switch) connector.
3. Check continuity between power window main switch (door lock and unlock switch) terminals.

Power window main switch		Condition		Continuity
Terminal				
6	17	Door lock and unlock switch	LOCK	Not existed
			UNLOCK	Existed
18			LOCK	Existed
			UNLOCK	Not existed

Is the inspection result normal?

YES >> INSPECTION END
NO >> Replace power window main switch. Refer to PWC-44, "Removal and Installation".

DOOR REQUEST SWITCH

Component Function Check

INFOID:0000000005948887

1. CHECK FUNCTION

1. Select “INTELLIGENT KEY” of “BCM” using CONSULT-III.
2. Select “REQ SW-DR”, “REQ SW-AS” in “DATA MONITOR” mode.
3. Check that the function operates normally according to the following conditions.

Monitor item	Condition		Status
REQ SW -DR	Driver side door request switch	Pressed	ON
		Released	OFF
REQ SW -AS	Passenger side door request switch	Pressed	ON
		Released	OFF

Is the inspection result normal?

YES >> Front door request switch is OK.
NO >> Refer to DLK-64, "Diagnosis Procedure".

Diagnosis Procedure

INFOID:0000000005948888

1. CHECK DOOR REQUEST SWITCH INPUT SIGNAL

1. Turn ignition switch OFF.
2. Disconnect malfunctioning front door request switch connector.
3. Check voltage between malfunctioning front door request switch harness connector and ground.

(+)			(–)	Voltage (Approx.)
Front door request switch				
Connector		Terminal		
Driver side	D31	2	Ground	Battery voltage
Passenger side	D11			

Is the inspection result normal?

YES >> GO TO 3.
NO >> GO TO 2.

2. CHECK DOOR REQUEST SWITCH CIRCUIT

1. Disconnect BCM connector.
2. Check continuity between malfunctioning front door request switch harness connector and BCM harness connector.

Front door request switch			BCM		Continuity
Connector		Terminal	Connector	Terminal	
Driver side	D31	2	M70	75	Existed
Passenger side	D11			76	

3. Check continuity between malfunctioning front door request switch harness connector and ground.

Front door request switch			Ground	Continuity
Connector		Terminal		
Driver side	D31	2		Not existed
Passenger side	D11			

Is the inspection result normal?

YES >> Replace BCM. Refer to BCS-57, "Removal and Installation".
NO >> Repair or replace harness.

3. CHECK DOOR REQUEST SWITCH GROUND CIRCUIT

Check continuity between malfunctioning front door request switch harness connector and ground.

Front door request switch			Ground	Continuity
Connector		Terminal		
Driver side	D31	1		Existed
Passenger side	D11			

Is the inspection result normal?

YES >> GO TO 4.
NO >> Repair or replace harness.

4. CHECK DOOR REQUEST SWITCH

Refer to DLK-65, "Component Inspection".

Is the inspection result normal?

YES >> GO TO 5.
NO >> Replace malfunctioning front door request switch.

5. CHECK INTERMITTENT INCIDENT

Refer to GI-33, "Intermittent Incident".

>> INSPECTION END

Component Inspection

INFOID:0000000005948889

1. CHECK DOOR REQUEST SWITCH

1. Turn ignition switch OFF.
2. Disconnect malfunctioning front door request switch connector.
3. Check continuity between malfunctioning front door request switch terminals.

Front door request switch		Condition		Continuity
Terminal				
1	2	Door request switch	Pressed	Existed
			Released	Not existed

Is the inspection result normal?

YES >> INSPECTION END
NO >> Replace malfunctioning front door request switch.

BACK DOOR REQUEST SWITCH

Component Function Check

INFOID:0000000005948883

1.CHECK FUNCTION

1. Select “INTELLIGENT KEY” of “BCM” using CONSULT-III.
2. Select “REQ SW-BD/TR” in “DATA MONITOR” mode.
3. Check that the function operates normally according to the following conditions.

Monitor item	Condition		Status
REQ SW-BD/TR	Back door request switch	Pressed	ON
		Released	OFF

Is the inspection result normal?

YES >> Back door request switch is OK.
NO >> Refer to DLK-66, "Diagnosis Procedure".

Diagnosis Procedure

INFOID:0000000005948884

1.CHECK BACK DOOR REQUEST SWITCH INPUT SIGNAL

1. Turn ignition switch OFF.
2. Disconnect back door request switch connector.
3. Check voltage between back door request switch harness connector and ground.

(+)		(–)	Voltage (Approx.)
Back door request switch			
Connector	Terminal		
D107	1	Ground	Battery voltage

Is the inspection result normal?

YES >> GO TO 3.
NO >> GO TO 2.

2.CHECK BACK DOOR REQUEST SWITCH CIRCUIT

1. Disconnect BCM connector.
2. Check continuity between BCM harness connector and back door request switch harness connector.

BCM		Back door request switch		Continuity
Connector	Terminal	Connector	Terminal	
M70	77	D107	1	Existed

3. Check continuity between BCM harness connector and ground.

BCM		Ground	Continuity
Connector	Terminal		
M70	77		Not existed

Is the inspection result normal?

YES >> Replace BCM. Refer to BCS-57, "Removal and Installation".
NO >> Repair harness or connector.

3.CHECK BACK DOOR REQUEST SWITCH GROUND CIRCUIT

Check continuity between back door request switch harness connector and ground.

Back door request switch		Ground	Continuity
Connector	Terminal		
D107	2		Existed

Is the inspection result normal?

YES >> GO TO 4.
NO >> Repair or replace harness.

4. CHECK BACK DOOR REQUEST SWITCH

Refer to DLK-67, "Component Inspection".

Is the inspection result normal?

YES >> GO TO 5.
NO >> Replace back door request switch.

5. CHECK INTERMITTENT INCIDENT

Refer to GI-33, "Intermittent Incident".

>> INSPECTION END

Component Inspection

INFOID:0000000005948885

1. CHECK BACK DOOR REQUEST SWITCH

1. Turn ignition switch OFF.
2. Disconnect back door request switch connector.
3. Check continuity between back door request switch terminals.

Back door request switch		Condition		Continuity
Terminal				
1	2	Back door request switch	Pressed	Existed
			Released	Not existed

Is the inspection result normal?

YES >> INSPECTION END
NO >> Replace back door request switch.

DOOR LOCK ACTUATOR
DRIVER SIDE

DRIVER SIDE : Component Function Check

INFOID:0000000005948857

1.CHECK FUNCTION

1. Select “DOOR LOCK” of “BCM” using CONSULT-III.
2. Select “DOOR LOCK” in “ACTIVE TEST” mode.
3. Touch “ALL LOCK” or “ALL UNLK” to check that it works normally.

Is the inspection result normal?

YES >> Door lock actuator is OK.
NO >> Refer to DLK-68, "DRIVER SIDE : Diagnosis Procedure".

DRIVER SIDE : Diagnosis Procedure

INFOID:0000000005948858

1.CHECK DOOR LOCK ACTUATOR INPUT SIGNAL

1. Turn ignition switch OFF.
2. Disconnect front door lock assembly (driver side) connector.
3. Check voltage between front door lock assembly (driver side) harness connector and ground.

(+)		(–)	Condition		Voltage (Approx.)
Front door lock assembly (driver side)					
Connector	Terminal				
D28	5	Ground	Door lock and unlock switch	Lock	12 V
	6			Unlock	

Is the inspection result normal?

YES >> Replace front door lock assembly (driver side).
NO >> GO TO 2.

2.CHECK DOOR LOCK ACTUATOR CIRCUIT

1. Disconnect BCM connector and all door lock actuator connector.
2. Check continuity between BCM harness connector and front door lock assembly (driver side) harness connector.

BCM		Front door lock assembly (driver side)		Continuity
Connector	Terminal	Connector	Terminal	
M70	65	D28	5	Existed
	66		6	

3. Check continuity between BCM harness connector and ground.

BCM		Ground	Continuity
Connector	Terminal		
M70	65	Ground	Not existed
	66		

Is the inspection result normal?

YES >> GO TO 3.
NO >> Repair or replace harness.

3.CHECK BCM OUTPUT SIGNAL

1. Connect BCM connector.
2. Check voltage between front door lock assembly (driver side) harness connector and ground.

(+)		(–)	Condition		Voltage (Approx.)
Front door lock assembly (driver side)					
Connector	Terminal				
M70	65	Ground	Door lock and unlock switch	Lock	12 V
	66			Unlock	

Is the inspection result normal?

YES >> Check for internal short of each door lock actuator.
NO >> Replace BCM. Refer to BCS-57, "Removal and Installation".

PASSENGER SIDE

PASSENGER SIDE : Component Function Check

INFOID:0000000005948860

1. CHECK FUNCTION

1. Select “DOOR LOCK” of “BCM” using CONSULT-III.
2. Select “DOOR LOCK” in “ACTIVE TEST” mode.
3. Touch “ALL LOCK” or “ALL UNLK” to check that it works normally.

Is the inspection result normal?

YES >> Door lock actuator is OK.
NO >> Refer to DLK-69, "PASSENGER SIDE : Diagnosis Procedure".

PASSENGER SIDE : Diagnosis Procedure

INFOID:0000000005948861

1. CHECK DOOR LOCK ACTUATOR INPUT SIGNAL

1. Turn ignition switch OFF.
2. Disconnect front door lock assembly (passenger side) connector.
3. Check voltage between front door lock assembly (passenger side) harness connector and ground.

(+)		(–)	Condition		Voltage (Approx.)
Front door lock assembly (passenger side)					
Connector	Terminal				
D9	1	Ground	Door lock and unlock switch	Lock	12 V
	2			Unlock	

Is the inspection result normal?

YES >> Replace front door lock assembly (passenger side).
NO >> GO TO 2.

2. CHECK DOOR LOCK ACTUATOR CIRCUIT

1. Disconnect BCM connector and all door lock actuator.
2. Check continuity between BCM harness connector and front door lock assembly (passenger side) harness connector.

BCM		Front door lock assembly (passenger side)		Continuity
Connector	Terminal	Connector	Terminal	
M70	65	D9	1	Existed
	66		2	

3. Check continuity between BCM harness connector and ground.

BCM		Ground	Continuity
Connector	Terminal		
M70	65		Not existed
	66		

Is the inspection result normal?

YES >> GO TO 3.
NO >> Repair or replace harness.

3. CHECK BCM OUTPUT SIGNAL

1. Connect BCM connector.
2. Check voltage between front door lock assembly (driver side) harness connector and ground.

(+)		(–)	Condition		Voltage (Approx.)
Front door lock assembly (driver side)					
Connector	Terminal				
M70	65	Ground	Door lock and unlock switch	Lock	12 V
	66			Unlock	

Is the inspection result normal?

YES >> Check for internal short of each door lock actuator.
NO >> Replace BCM. Refer to BCS-57, "Removal and Installation".

REAR LH

REAR LH : Component Function Check

INFOID:0000000005948863

1. CHECK FUNCTION

1. Select “DOOR LOCK” of “BCM” using CONSULT-III.
2. Select “DOOR LOCK” in “ACTIVE TEST” mode.
3. Touch “ALL LOCK” or “ALL UNLK” to check that it works normally.

Is the inspection result normal?

YES >> Door lock actuator is OK.
NO >> Refer to DLK-71, "REAR RH : Diagnosis Procedure".

REAR LH : Diagnosis Procedure

INFOID:0000000005948864

1. CHECK DOOR LOCK ACTUATOR INPUT SIGNAL

1. Turn ignition switch OFF.
2. Disconnect rear door lock assembly LH connector.
3. Check voltage between rear door lock assembly LH harness connector and ground.

(+)		(–)	Condition		Voltage (Approx.)
Rear door lock assembly LH					
Connector	Terminal				
D65	1	Ground	Door lock and unlock switch	Lock	Battery voltage
	2			Unlock	

Is the inspection result normal?

YES >> Replace rear door lock assembly LH.
NO >> GO TO 2.

2. CHECK DOOR LOCK ACTUATOR CIRCUIT

1. Disconnect BCM connector and all door lock actuator connector.
2. Check continuity between BCM harness connector and rear door lock assembly LH harness connector.

BCM		Rear door lock assembly LH		Continuity
Connector	Terminal	Connector	Terminal	
M70	65	D65	1	Existed
	66		2	

3. Check continuity between BCM harness connector and ground.

BCM		Ground	Continuity
Connector	Terminal		
M70	65		Not existed
	66		

Is the inspection result normal?

YES >> GO TO 3.
NO >> Repair or replace harness.

3. CHECK BCM OUTPUT SIGNAL

1. Connect BCM connector.
2. Check voltage between front door lock assembly (driver side) harness connector and ground.

(+)		(–)	Condition		Voltage (Approx.)
Front door lock assembly (driver side)					
Connector	Terminal				
M70	65	Ground	Door lock and unlock switch	Lock	12 V
	66			Unlock	

Is the inspection result normal?

YES >> Check for internal short of each door lock actuator.
NO >> Replace BCM. Refer to BCS-57, "Removal and Installation".

REAR RH

REAR RH : Component Function Check

INFOID:0000000005948866

1. CHECK FUNCTION

1. Select “DOOR LOCK” of “BCM” using CONSULT-III.
2. Select “DOOR LOCK” in “ACTIVE TEST” mode.
3. Touch “ALL LOCK” or “ALL UNLK” to check that it works normally.

Is the inspection result normal?

YES >> Door lock actuator is OK.
NO >> Refer to DLK-71, "REAR RH : Diagnosis Procedure".

REAR RH : Diagnosis Procedure

INFOID:0000000005948867

1. CHECK DOOR LOCK ACTUATOR INPUT SIGNAL

1. Turn ignition switch OFF.
2. Disconnect rear door lock assembly RH connector.
3. Check voltage between rear door lock assembly RH harness connector and ground.

(+)		(–)	Condition		Voltage (Approx.)
Rear door lock assembly RH					
Connector	Terminal				
D45	5	Ground	Door lock and unlock switch	Lock	12 V
	6			Unlock	

Is the inspection result normal?

YES >> Replace rear door lock assembly RH.
NO >> GO TO 2.

2. CHECK DOOR LOCK ACTUATOR CIRCUIT

1. Disconnect BCM connector and all door lock actuator connector.
2. Check continuity between BCM harness connector and rear door lock assembly RH harness connector.

BCM		Rear door lock assembly RH		Continuity
Connector	Terminal	Connector	Terminal	
M70	65	D45	5	Existed
	66		6	

3. Check continuity between BCM harness connector and ground.

BCM		Ground	Continuity
Connector	Terminal		
M70	65		Not existed
	66		

Is the inspection result normal?

YES >> GO TO 3.
NO >> Repair or replace harness.

3. CHECK BCM OUTPUT SIGNAL

1. Connect BCM connector.
2. Check voltage between front door lock assembly (driver side) harness connector and ground.

(+)		(–)	Condition		Voltage (Approx.)
Front door lock assembly (driver side)					
Connector	Terminal				
M70	65	Ground	Door lock and unlock switch	Lock	12 V
	66			Unlock	

Is the inspection result normal?

YES >> Check for internal short of each door lock actuator.
NO >> Replace BCM. Refer to BCS-57, "Removal and Installation".

BACK DOOR

BACK DOOR : Component Function Check

INFOID:0000000005948869

1. CHECK FUNCTION

1. Select “DOOR LOCK” of “BCM” using CONSULT-III.
2. Select “DOOR LOCK” in “ACTIVE TEST” mode.
3. Touch “ALL LOCK” or “ALL UNLK” to check that it works normally.

Is the inspection result normal?

YES >> Back door lock actuator is OK.
NO >> Refer to DLK-72, "BACK DOOR : Diagnosis Procedure".

BACK DOOR : Diagnosis Procedure

INFOID:0000000005948870

1. CHECK BACK DOOR LOCK ACTUATOR INPUT SIGNAL

1. Turn ignition switch OFF.
2. Disconnect back door lock assembly connector.
3. Check voltage between back door lock assembly harness connector and ground.

(+)		(–)	Condition		Voltage (Approx.)
Back door lock assembly					
Connector	Terminal				
D106	2	Ground	Door lock and unlock switch	Lock	Battery voltage
	4			Unlock	

Is the inspection result normal?

YES >> Replace back door lock assembly.
NO >> GO TO 2.

2. CHECK BACK DOOR LOCK ACTUATOR LOCK CIRCUIT

1. Disconnect BCM connector and all door lock actuator connector.
2. Check continuity between BCM harness connector and back door lock assembly harness connector.

BCM		Back door lock assembly		Continuity
Connector	Terminal	Connector	Terminal	
M70	65	D106	2	Existed
	66		4	

3. Check continuity between BCM harness connector and ground.

BCM		Ground	Continuity
Connector	Terminal		
M70	65	Ground	Not existed
	66		

Is the inspection result normal?

YES >> GO TO 3.
NO >> Repair or replace harness.

3. CHECK BCM OUTPUT SIGNAL

1. Connect BCM connector.
2. Check voltage between front door lock assembly (driver side) harness connector and ground.

(+)		(–)	Condition		Voltage (Approx.)
Front door lock assembly (driver side)					
Connector	Terminal				
M70	65	Ground	Door lock and unlock switch	Lock	12 V
	66			Unlock	

Is the inspection result normal?

YES >> Check for internal short of each door lock actuator.
NO >> Replace BCM. Refer to BCS-57, "Removal and Installation".

REMOTE KEYLESS ENTRY RECEIVER

Component Function Check

INFOID:0000000006064445

1.CHECK FUNCTION

1. Select “INTELLIGENT KEY” of “BCM” using CONSULT-III.
2. Select “RKE OPE COUN1” in “DATA MONITOR” mode.
3. Check that the function operates normally according to the following conditions.

Monitor item	Condition
RKE OPE COUN1	Checks whether value changes when operating Intelligent Key

Is the inspection result normal?

YES >> Remote keyless entry receiver is OK.
NO >> Refer to DLK-74, "Diagnosis Procedure".

Diagnosis Procedure

INFOID:0000000006064446

1.CHECK REMOTE KEYLESS ENTRY RECEIVER OUTPUT SIGNAL

1. Turn ignition switch OFF.
2. Check signal between remote keyless entry receiver harness connector and ground using oscilloscope.

(+) Remote keyless entry receiver		(–)	Condition	Signal (Reference value)
Connector	Terminal			
M52	2	Ground	Waiting	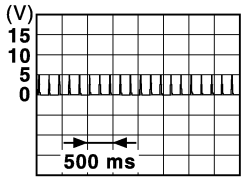 JMKIA3838GB
			Signal receiving	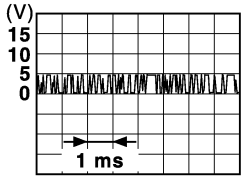 JMKIA3841GB

Is the inspection result normal?

YES >> GO TO 2.
NO >> GO TO 3.

2.CHECK REMOTE KEYLESS ENTRY RECEIVER CIRCUIT 1

1. Disconnect BCM and remote keyless entry receiver connector
2. Check continuity between BCM harness connector and remote keyless entry receiver harness connector.

BCM		Remote keyless entry receiver		Continuity
Connector	Terminal	Connector	Terminal	
M68	20	M52	2	Existed

Is the inspection result normal?

YES >> GO TO 8.
NO >> Repair or replace harness.

3. CHECK REMOTE KEYLESS ENTRY RECEIVER CIRCUIT 2

1. Disconnect BCM connector.
2. Check continuity between BCM harness connector and ground.

BCM		Ground	Continuity
Connector	Terminal		
M68	20		Not existed

Is the inspection result normal?

YES >> GO TO 4.
NO >> Repair or replace harness.

4. CHECK REMOTE KEYLESS ENTRY RECEIVER POWER SUPPLY

1. Disconnect remote keyless entry receiver.
2. Check signal between remote keyless entry receiver harness connector and ground using oscilloscope.

(+)		(–)	Signal (Reference value)
Remote keyless entry receiver			
Connector	Terminal		
M52	4	Ground	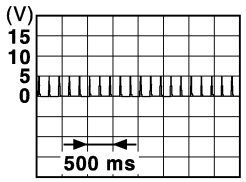 JMKIA3838GB

Is the inspection result normal?

YES >> GO TO 6.
NO >> GO TO 5.

5. CHECK REMOTE KEYLESS ENTRY RECEIVER CIRCUIT 3

1. Disconnect BCM connector.
2. Check continuity between BCM harness connector and remote keyless entry receiver harness connector.

BCM		Remote keyless entry receiver		Continuity
Connector	Terminal	Connector	Terminal	
M68	19	M52	4	Existed

3. Check continuity between BCM harness connector and ground.

BCM		Ground	Continuity
Connector	Terminal		
M68	19		Not existed

Is the inspection result normal?

YES >> Replace BCM. Refer to BCS-57, "Removal and Installation".
NO >> Repair or replace harness.

6. CHECK REMOTE KEYLESS ENTRY RECEIVER GROUND CIRCUIT 1

1. Disconnect BCM connector.
2. Check continuity between BCM harness connector and remote keyless entry receiver harness connector.

BCM		Remote keyless entry receiver		Continuity
Connector	Terminal	Connector	Terminal	
M68	18	M52	1	Existed

3. Check continuity between BCM harness connector and ground.

BCM		Ground	Continuity
Connector	Terminal		
M68	18		Existed

Is the inspection result normal?

YES >> GO TO 7.
NO >> Repair or replace harness.

7. CHECK REMOTE KEYLESS ENTRY RECEIVER GROUND CIRCUIT 2

1. Connect BCM connector.
2. Check continuity between BCM harness connector and ground.

BCM		Ground	Continuity
Connector	Terminal		
M68	18		Existed

Is the inspection result normal?

YES >> Replace remote keyless entry receiver.
NO >> Replace BCM. Refer to BCS-57, "Removal and Installation".

8. CHECK REMOTE KEYLESS ENTRY RECEIVER RSSI OUTPUT SIGNAL

1. Connect BCM and remote keyless entry receiver connector.
2. Check signal between remote keyless entry receiver harness connector and ground using oscilloscope.

(+)		(–)	Condition	Signal (Reference value)
Remote keyless entry receiver				
Connector	Terminal			
M52	3	Ground	Waiting	0 V
			Signal receiving	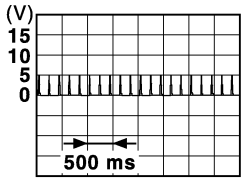 JMKIA3838GB

Is the inspection result normal?

YES >> GO TO 9.
NO >> Replace remote keyless entry receiver.

9. CHECK REMOTE KEYLESS ENTRY RECEIVER RSSI CIRCUIT

1. Disconnect BCM and remote keyless entry receiver connector.
2. Check continuity between BCM harness connector and remote keyless entry receiver harness connector.

BCM		Remote keyless entry receiver		Continuity
Connector	Terminal	Connector	Terminal	
M68	22	M52	3	Existed

Is the inspection result normal?

YES >> Replace BCM. Refer to BCS-57, "Removal and Installation".
NO >> Repair or replace harness.

UNLOCK SENSOR

Component Function Check

INFOID:0000000005948891

1. CHECK FUNCTION

1. Select “INTELLIGENT KEY” of “BCM” using CONSULT-III.
2. Select “UNLK SEN-DR” in “DATA MONITOR” mode.
3. Check that the function operates normally according to the following conditions.

Monitor item	Condition		Status
UNLK SEN -DR	Driver side door	Lock	OFF
		Unlock	ON

Is the inspection result normal?

YES >> Unlock sensor is OK.
NO >> Refer to DLK-77, "Diagnosis Procedure".

Diagnosis Procedure

INFOID:0000000005948892

1. CHECK UNLOCK SENSOR INPUT SIGNAL

1. Turn ignition switch OFF.
2. Disconnect front door lock assembly (driver side) connector.
3. Check signal between front door lock assembly (driver side) harness connector and ground with oscilloscope.

(+)		(–)	Signal (Reference value)
Front door lock assembly (driver side)			
Connector	Terminal		
D28	4	Ground	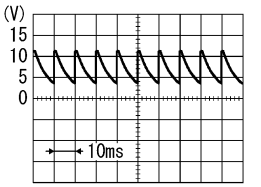

PKIB4960J

Is the inspection result normal?

YES >> GO TO 3.
NO >> GO TO 2.

2. CHECK UNLOCK SENSOR CIRCUIT

1. Disconnect BCM connector.
2. Check continuity between BCM harness connector and front door lock assembly (driver side) harness connector.

BCM		Front door lock assembly (driver side)		Continuity
Connector	Terminal	Connector	Terminal	
M68	31	D28	4	Existed

3. Check continuity between BCM harness connector and ground.

BCM		Ground	Continuity
Connector	Terminal		
M68	31		Not existed

Is the inspection result normal?

YES >> Replace BCM. Refer to BCS-57, "Removal and Installation".

NO >> Repair or replace harness.

3. CHECK UNLOCK SENSOR GROUND CIRCUIT

Check continuity between front door lock assembly (driver side) harness connector and ground.

Front door lock assembly (driver side)		Ground	Continuity
Connector	Terminal		
D28	3		Existed

Is the inspection result normal?

YES >> GO TO 4.
NO >> Repair or replace harness.

4. CHECK UNLOCK SENSOR

Refer to DLK-78, "Component Inspection".

Is the inspection result normal?

YES >> GO TO 5.
NO >> Replace front door lock assembly (driver side).

5. CHECK INTERMITTENT INCIDENT

Refer to GI-33, "Intermittent Incident".

>> INSPECTION END

Component Inspection

INFOID:0000000005948893

1. CHECK UNLOCK SENSOR

1. Turn ignition switch OFF.
2. Disconnect front door lock assembly (driver side) connector.
3. Check continuity between front door lock assembly (driver side) terminals.

Front door lock assembly (driver side)		Condition		Continuity
Terminal				
3	4	Driver side door	Unlock	Existed
			Lock	Not existed

Is the inspection result normal?

YES >> INSPECTION END
NO >> Replace front door lock assembly (driver side).

INTELLIGENT KEY WARNING BUZZER

Component Function Check

INFOID:0000000005948895

1. CHECK FUNCTION

1. Select “INTELLIGENT KEY” of “BCM” using CONSULT-III.
2. Select “OUTSIDE BUZZER” in “ACTIVE TEST” mode.
3. Touch “On” or “Off” to check that it works normally.

Is the inspection result normal?

YES >> Intelligent Key warning buzzer is OK.
NO >> Refer to DLK-79, "Diagnosis Procedure".

Diagnosis Procedure

INFOID:0000000005948896

1. CHECK FUSE

1. Turn ignition switch OFF.
2. Check 10 A fuse, [No. 13, located in fuse block (J/B)].

Is the inspection result normal?

YES >> GO TO 2.
NO >> Replace the blown fuse after repairing the affected circuit if a fuse is blown.

2. CHECK INTELLIGENT KEY WARNING BUZZER POWER SUPPLY CIRCUIT

1. Disconnect Intelligent Key warning buzzer connector.
2. Check voltage between Intelligent Key warning buzzer harness connector and ground.

(+)		(–)	Voltage (Approx.)
Intelligent Key warning buzzer			
Connector	Terminal		
E25	1	Ground	Battery voltage

Is the inspection result normal?

YES >> GO TO 3.
NO >> Repair or replace harness.

3. CHECK INTELLIGENT KEY WARNING BUZZER CIRCUIT

1. Disconnect BCM connector.
2. Check continuity between BCM harness connector and Intelligent Key warning buzzer harness connector.

BCM		Intelligent Key warning buzzer		Continuity
Connector	Terminal	Connector	Terminal	
M70	93	E25	3	Existed

3. Check continuity between BCM harness connector and ground.

BCM		Ground	Continuity
Connector	Terminal		
M70	93		Not existed

Is the inspection result normal?

YES >> GO TO 4.
NO >> Repair or replace harness.

4. CHECK INTELLIGENT KEY WARNING BUZZER

Refer to DLK-80, "Component Inspection".

Is the inspection result normal?

YES >> Replace BCM. Refer to BCS-57, "Removal and Installation".
NO >> Replace Intelligent Key warning buzzer.

Component Inspection

INFOID:0000000005948897

1. CHECK INTELLIGENT KEY WARNING BUZZER

1. Turn ignition switch OFF.
2. Disconnect Intelligent Key warning buzzer connector.
3. Connect battery power supply directly to Intelligent Key warning buzzer terminals and check the operation.

Intelligent Key warning buzzer		Operation
Terminal		
(+)	(–)	
1	3	Buzzer sounds

Is the inspection result normal?

YES >> INSPECTION END
NO >> Replace Intelligent Key warning buzzer.

INTELLIGENT KEY

Component Function Check

INFOID:0000000005948899

1.CHECK FUNCTION

1. Select “INTELLIGENT KEY” of “BCM” using CONSULT-III.
2. Select “RKE OPE COUN1” in “DATA MONITOR” mode.
3. Check that the function operates normally according to the following conditions.

Monitor item	Condition
RKE OPE COUN1	Checks whether value changes when operating Intelligent Key

Is the inspection result normal?

YES >> Intelligent Key is OK.
NO >> Refer to DLK-81, "Diagnosis Procedure".

Diagnosis Procedure

INFOID:0000000005948900

1.CHECK INTELLIGENT KEY BATTERY

Check by connecting a resistance (approximately 300Ω) so that the current value becomes about 10 mA. Refer to DLK-148, "Removal and Installation".

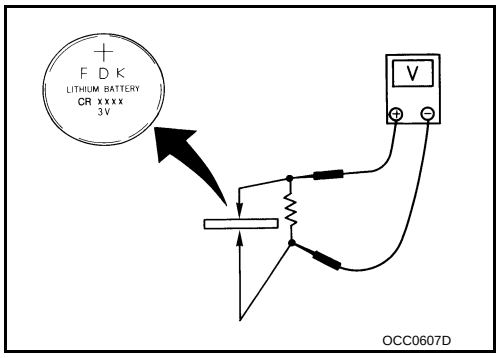

Standard : Approx. 2.5 - 3.0V

Is the measurement value within the specification?

YES >> Replace Intelligent Key.
NO >> Replace Intelligent Key battery.

COMBINATION METER BUZZER

Component Function Check

INFOID:0000000005948902

1.CHECK FUNCTION

1. Select “INTELLIGENT KEY” of “BCM” using CONSULT-III.
2. Select “INSIDE BUZZER” in “ACTIVE TEST” mode.
3. Touch “Key”, “Knob” or “Take Out” to check that it works normally.

Is the inspection result normal?

Yes >> Combination meter buzzer is OK.
No >> Refer to DLK-82, "Diagnosis Procedure".

Diagnosis Procedure

INFOID:0000000005948903

1.CHECK METER BUZZER CIRCUIT

Refer to WCS-34, "Component Function Check".

Is the inspection result normal?

Yes >> GO TO 2.
No >> Repair or replace harness.

2.CHECK INTERMITTENT INCIDENT

Refer to GI-33, "Intermittent Incident".

>> INSPECTION END

KEY WARNING LAMP

Component Function Check

INFOID:0000000005948905

1.CHECK FUNCTION

1. Select “INTELLIGENT KEY” of “BCM” using CONSULT-III.
2. Select “INDICATOR” in “ACTIVE TEST” mode.
3. Touch “KEY IND” or “KEY ON” to check that it works normally.

Is the inspection result normal?

YES >> Key warning lamp is OK.
NO >> Refer to DLK-83, "Diagnosis Procedure".

Diagnosis Procedure

INFOID:0000000005948906

1.CHECK KEY WARNING LAMP

Refer to MWI-17, "On Board Diagnosis Function".

Is the inspection result normal?

YES >> GO TO 2.
NO >> Repair or replace harness.

2.CHECK INTERMITTENT INCIDENT

Refer to GI-33, "Intermittent Incident".

>> INSPECTION END

HAZARD FUNCTION

Component Function Check

INFOID:0000000005948908

1.CHECK FUNCTION

1. Select “INTELLIGENT KEY” of “BCM” using CONSULT-III.
2. Select “FLASHER” in “ACTIVE TEST” mode.
3. Touch “LH” or “RH” to check that it works normally.

Is the inspection result normal?

YES >> Hazard warning lamp circuit is OK.
NO >> Refer to DLK-84, "Diagnosis Procedure".

Diagnosis Procedure

INFOID:0000000005948909

1.CHECK HAZARD SWITCH CIRCUIT

Refer to EXL-72, "Component Function Check".

Is the inspection result normal?

YES >> GO TO 2.
NO >> Repair or replace harness.

2.CHECK INTERMITTENT INCIDENT

Refer to GI-33, "Intermittent Incident".

>> INSPECTION END

SYMPTOM DIAGNOSIS

DOOR DOES NOT LOCK/UNLOCK WITH DOOR LOCK AND UNLOCK SWITCH

ALL DOOR

ALL DOOR : Description

INFOID:0000000005948917

All doors do not lock/unlock using door lock and unlock switch.

ALL DOOR : Diagnosis Procedure

INFOID:0000000005948918

1. CHECK DOOR LOCK AND UNLOCK SWITCH

Check door lock and unlock switch.
Refer to DLK-62, "Component Function Check".

Is the inspection result normal?

YES >> GO TO 2.
NO >> Repair or replace the malfunctioning parts.

2. CHECK DOOR LOCK ACTUATOR

Check front door lock assembly (driver side).
Refer to DLK-133, "DOOR LOCK : Removal and Installation".

Is the inspection result normal?

YES >> GO TO 3.
NO >> Repair or replace the malfunctioning parts.

3. REPLACE BCM

- Replace BCM. Refer to BCS-57, "Removal and Installation".
- Confirm the operation after replacement.

Is the result normal?

YES >> INSPECTION END
NO >> Check intermittent incident. Refer to GI-33, "Intermittent Incident".

DRIVER SIDE

DRIVER SIDE : Description

INFOID:0000000005948919

Driver side door does not lock/unlock using door lock and unlock switch.

DRIVER SIDE : Diagnosis Procedure

INFOID:0000000005948920

1. CHECK DOOR LOCK ACTUATOR

Check front door lock assembly (driver side).
Refer to DLK-68, "DRIVER SIDE : Component Function Check".

Is the inspection result normal?

YES >> GO TO 2.
NO >> Repair or replace the malfunctioning parts.

2. REPLACE BCM

- Replace BCM. Refer to BCS-57, "Removal and Installation".
- Confirm the operation after replacement.

Is the result normal?

YES >> INSPECTION END
NO >> Check intermittent incident. Refer to GI-33, "Intermittent Incident".

PASSENGER SIDE

PASSENGER SIDE : Description

INFOID:0000000005948921

Passenger side door does not lock/unlock using door lock and unlock switch.

PASSENGER SIDE : Diagnosis Procedure

INFOID:0000000005948922

1. CHECK DOOR LOCK ACTUATOR

Check front door lock assembly (passenger side).
Refer to DLK-69, "PASSENGER SIDE : Component Function Check".

Is the inspection result normal?

YES >> GO TO 2.
NO >> Repair or replace the malfunctioning parts.

2. REPLACE BCM

- Replace BCM. Refer to BCS-57, "Removal and Installation".
- Confirm the operation after replacement.

Is the result normal?

YES >> INSPECTION END
NO >> Check intermittent incident. Refer to GI-33, "Intermittent Incident".

REAR LH

REAR LH : Description

INFOID:0000000005948923

Rear LH side door does not lock/unlock using door lock and unlock switch.

REAR LH : Diagnosis Procedure

INFOID:0000000005948924

1. CHECK DOOR LOCK ACTUATOR

Check rear door lock assembly LH.
Refer to DLK-70, "REAR LH : Component Function Check".

Is the inspection result normal?

YES >> GO TO 2.
NO >> Repair or replace the malfunctioning parts.

2. REPLACE BCM

- Replace BCM. Refer to BCS-57, "Removal and Installation".
- Confirm the operation after replacement.

Is the result normal?

YES >> INSPECTION END
NO >> Check intermittent incident. Refer to GI-33, "Intermittent Incident".

REAR RH

REAR RH : Description

INFOID:0000000005948925

Rear RH side door does not lock/unlock using door lock and unlock switch.

REAR RH : Diagnosis Procedure

INFOID:0000000005948926

1. CHECK DOOR LOCK ACTUATOR

Check rear door lock assembly RH.
Refer to DLK-71, "REAR RH : Component Function Check".

Is the inspection result normal?

YES >> GO TO 2.
NO >> Repair or replace the malfunctioning parts.

2. REPLACE BCM

- Replace BCM. Refer to BCS-57, "Removal and Installation".

- Confirm the operation after replacement.

Is the result normal?

YES >> INSPECTION END
NO >> Check intermittent incident. Refer to GI-33, "Intermittent Incident".

BACK DOOR

BACK DOOR : Description

INFOID:0000000005948927

Back door does not lock/unlock using door lock and unlock switch.

BACK DOOR : Diagnosis Procedure

INFOID:0000000005948928

1. CHECK DOOR LOCK ACTUATOR

Check back door lock assembly.
Refer to DLK-72, "BACK DOOR : Component Function Check".

Is the inspection result normal?

YES >> GO TO 2.
NO >> Repair or replace the malfunctioning parts.

2. REPLACE BCM

- Replace BCM. Refer to BCS-57, "Removal and Installation".
- Confirm the operation after replacement.

Is the result normal?

YES >> INSPECTION END
NO >> Check intermittent incident. Refer to GI-33, "Intermittent Incident".

DOOR DOES NOT LOCK/UNLOCK WITH DRIVER SIDE DOOR LOCK KNOB OR DOOR KEY CYLINDER

Diagnosis Procedure

INFOID:0000000006068632

1. CHECK POWER DOOR LOCK OPERATION

Check power door lock operation.

Does door lock/unlock with door lock and unlock switch?

YES >> GO TO 2.
NO >> Refer to DLK-85, "ALL DOOR : Diagnosis Procedure".

2. CHECK UNLOCK SENSOR

Check unlock sensor.
Refer to DLK-77, "Component_Function_Check".

Is the inspection result normal?

YES >> GO TO 3.
NO >> Repair or replace the malfunctioning parts.

3. REPLACE BCM

- Replace BCM. Refer to BCS-57, "Removal and Installation".
- Confirm the operation after replacement.

Is the result normal?

YES >> INSPECTION END
NO >> Check intermittent incident. Refer to GI-33, "Intermittent Incident".

DOOR DOES NOT LOCK/UNLOCK WITH DOOR REQUEST SWITCH

ALL DOOR

ALL DOOR : Description

INFOID:0000000005948930

All doors do not lock/unlock using all door request switches.

ALL DOOR : Diagnosis Procedure

INFOID:0000000005948931

1. CHECK REMOTE KEYLESS ENTRY FUNCTION

Check remote keyless entry function.

Does door lock/unlock with Intelligent Key button?

YES >> GO TO 2.
NO >> Refer to DLK-17, "REMOTE KEYLESS ENTRY FUNCTION : System Description".

2. CHECK “LOCK/UNLOCK BY I-KEY” SETTING IN “WORK SUPPORT”

1. Select “INTELLIGENT KEY” of “BCM” using CONSULT-III.
2. Select “LOCK/UNLOCK BY I-KEY” in “WORK SUPPORT” mode.
3. Check “LOCK/UNLOCK BY I-KEY” setting in “WORK SUPPORT”.
   Refer to DLK-24, "INTELLIGENT KEY : CONSULT-III Function (BCM - INTELLIGENT KEY)".

Is the inspection result normal?

YES >> GO TO 3.
NO >> Set “ON” in “LOCK/UNLOCK BY I-KEY”.

3. CHECK DOOR SWITCH

Check door switch.
Refer to DLK-58, "Component Function Check".

Is the inspection result normal?

YES >> GO TO 4.
NO >> Repair or replace the malfunctioning parts.

4. CHECK INSIDE KEY ANTENNA

Check inside key antenna.
- Instrument center: Refer to DLK-46, "DTC Logic".
- Console: Refer to DLK-48, "DTC Logic".
- Luggage room: Refer to DLK-50, "DTC Logic".

Is the inspection result normal?

YES >> GO TO 5.
NO >> Repair or replace the malfunctioning parts.

5. CHECK OUTSIDE KEY ANTENNA

Check outside key antenna.
- Driver side: Refer to DLK-52, "DTC Logic".
- Passenger side: Refer to DLK-54, "DTC Logic".
- Rear bumper: Refer to DLK-56, "DTC Logic".

Is the inspection result normal?

YES >> GO TO 6.
NO >> Repair or replace the malfunctioning parts.

6. REPLACE BCM

- Replace BCM. Refer to BCS-57, "Removal and Installation".
- Confirm the operation after replacement.

Is the result normal?

YES >> INSPECTION END
NO >> Check intermittent incident. Refer to GI-33, "Intermittent Incident".

DRIVER SIDE

DRIVER SIDE : Description

INFOID:0000000005948932

All doors do not lock/unlock using driver side door request switch.

DRIVER SIDE : Diagnosis Procedure

INFOID:0000000005948933

1. CHECK DRIVER SIDE DOOR REQUEST SWITCH

Check driver side door request switch.
Refer to DLK-64, "Component Function Check".

Is the inspection result normal?

YES >> GO TO 2.
NO >> Repair or replace the malfunctioning parts.

2. CHECK OUTSIDE KEY ANTENNA

Check outside key antenna (driver side).
Refer to DLK-52, "DTC Logic".

Is the inspection result normal?

YES >> GO TO 3.
NO >> Repair or replace the malfunctioning parts.

3. REPLACE BCM

- Replace BCM. Refer to BCS-57, "Removal and Installation".
- Confirm the operation after replacement.

Is the result normal?

YES >> INSPECTION END
NO >> Check intermittent incident. Refer to GI-33, "Intermittent Incident".

PASSENGER SIDE

PASSENGER SIDE : Description

INFOID:0000000005948934

All doors do not lock/unlock using passenger side door request switch.

PASSENGER SIDE : Diagnosis Procedure

INFOID:0000000005948935

1. CHECK PASSENGER SIDE DOOR REQUEST SWITCH

Check passenger side door request switch.
Refer to DLK-64, "Component Function Check".

Is the inspection result normal?

YES >> GO TO 2.
NO >> Repair or replace the malfunctioning parts.

2. CHECK OUTSIDE KEY ANTENNA

Check outside key antenna (passenger side).
Refer to DLK-54, "DTC Logic".

Is the inspection result normal?

YES >> GO TO 3.
NO >> Repair or replace the malfunctioning parts.

3. REPLACE BCM

- Replace BCM. Refer to BCS-57, "Removal and Installation".
- Confirm the operation after replacement.

Is the result normal?

YES >> INSPECTION END
NO >> Check intermittent incident. Refer to GI-33, "Intermittent Incident".

BACK DOOR

BACK DOOR : Description

INFOID:0000000005948936

All doors do not lock/unlock using back door request switch.

BACK DOOR : Diagnosis Procedure

INFOID:0000000005948937

1. CHECK BACK DOOR REQUEST SWITCH

Check back door request switch.
Refer to DLK-66, "Component Function Check".

Is the inspection result normal?

YES >> GO TO 2.
NO >> Repair or replace the malfunctioning parts.

2. CHECK OUTSIDE KEY ANTENNA

Check outside key antenna (rear bumper).
Refer to DLK-56, "DTC Logic".

Is the inspection result normal?

YES >> GO TO 3.
NO >> Repair or replace the malfunctioning parts.

3. REPLACE BCM

- Replace BCM. Refer to BCS-57, "Removal and Installation".
- Confirm the operation after replacement.

Is the result normal?

YES >> INSPECTION END
NO >> Check intermittent incident. Refer to GI-33, "Intermittent Incident".

DOOR DOES NOT LOCK/UNLOCK WITH INTELLIGENT KEY

Diagnosis Procedure

INFOID:0000000005948938

1.CHECK POWER DOOR LOCK OPERATION

Check power door lock operation.

Does door lock/unlock with door lock and unlock switch?

YES >> GO TO 2.
NO >> Refer to DLK-85, "ALL DOOR : Diagnosis Procedure".

2.CHECK REMOTE KEYLESS ENTRY RECEIVER

Check remote keyless entry receiver.
Refer to DLK-74, "Component_Function_Check".

Is the inspection result normal?

YES >> GO TO 3.
NO >> Repair or replace the malfunctioning parts.

3.CHECK INTELLIGENT KEY

Check Intelligent Key.
Refer to DLK-81, "Component_Function_Check".

Is the inspection result normal?

YES >> GO TO 4.
NO >> Repair or replace the malfunctioning parts.

4.CHECK DOOR SWITCH

Check door switch.
Refer to DLK-58, "Component_Function_Check".

Is the inspection result normal?

YES >> GO TO 5.
NO >> Repair or replace the malfunctioning parts.

5.REPLACE BCM

- Replace BCM. Refer to BCS-57, "Removal and Installation".
- Confirm the operation after replacement.

Is the result normal?

YES >> INSPECTION END
NO >> Check intermittent incident. Refer to GI-33, "Intermittent Incident".

AUTO DOOR LOCK OPERATION DOES NOT OPERATE

Diagnosis Procedure

INFOID:0000000005948943

1. CHECK “AUTO LOCK SET” SETTING IN “WORK SUPPORT”

1. Select “INTELLIGENT KEY” of “BCM” using CONSULT-III.
2. Select “AUTO LOCK SET” in “WORK SUPPORT” mode.
3. Check “AUTO LOCK SET” setting in “WORK SUPPORT”.
   Refer to DLK-24, "INTELLIGENT KEY : CONSULT-III Function (BCM - INTELLIGENT KEY)".

Is the inspection result normal?

YES >> GO TO 2.
NO >> Set “MODE 2”, “MODE 3”, “MODE 4”, “MODE 5”, “MODE 6” or “MODE 7” in “AUTO LOCK SET”.

2. REPLACE BCM

- Replace BCM. Refer to BCS-57, "Removal and Installation".
- Confirm the operation after replacement.

Is the result normal?

YES >> INSPECTION END
NO >> Check intermittent incident. Refer to GI-33, "Intermittent Incident".

HAZARD AND BUZZER REMINDER DOES NOT OPERATE

Diagnosis Procedure

INFOID:0000000005948945

1. CHECK “HAZARD ANSWER BACK” SETTING IN “WORK SUPPORT”

1. Select “INTELLIGENT KEY” of “BCM” using CONSULT-III.
2. Select “HAZARD ANSWER BACK” in “WORK SUPPORT” mode.
3. Check the “HAZARD ANSWER BACK” setting in “WORK SUPPORT”.
   Refer to DLK-24, "INTELLIGENT KEY : CONSULT-III Function (BCM - INTELLIGENT KEY)".

Is the inspection result normal?

YES >> GO TO 2.
NO >> Set the “Lock Only”, “Unlock Only” or “Lock/Unlock” in “HAZARD ANSWER BACK”.

2. CHECK “ANS BACK I-KEY LOCK” SETTING IN “WORK SUPPORT”

1. Select “INTELLIGENT KEY” of “BCM” using CONSULT-III.
2. Select “ANS BACK I-KEY LOCK” in “WORK SUPPORT” mode.
3. Check the “ANS BACK I-KEY LOCK”setting in “WORK SUPPORT”.
   Refer to DLK-24, "INTELLIGENT KEY : CONSULT-III Function (BCM - INTELLIGENT KEY)".

Is the inspection result normal?

YES >> GO TO 3.
NO >> Set the “Horn Chirp” or “Buzzer” in “ANS BACK I-KEY LOCK”.

3. CHECK “ANS BACK I-KEY UNLOCK” SETTING IN “WORK SUPPORT”

1. Select “INTELLIGENT KEY” of “BCM” using CONSULT-III.
2. Select “ANS BACK I-KEY UNLOCK” in “WORK SUPPORT” mode.
3. Check the “ANS BACK I-KEY UNLOCK” setting in “WORK SUPPORT”.
   Refer to DLK-24, "INTELLIGENT KEY : CONSULT-III Function (BCM - INTELLIGENT KEY)".

Is the inspection result normal?

YES >> GO TO 4.
NO >> Set the “On” in “ANS BACK I-KEY UNLOCK”.

4. CHECK HAZARD FUNCTION

Check hazard function.
Refer to DLK-84, "Component_Function_Check".

Is the inspection result normal?

YES >> GO TO 5.
NO >> Repair or replace the malfunctioning parts.

5. CHECK INTELLIGENT KEY WARNING BUZZER

Check Intelligent Key warning buzzer.
Refer to DLK-79, "Component_Function_Check".

Is the inspection result normal?

YES >> GO TO 6.
NO >> Repair or replace the malfunctioning parts.

6. REPLACE BCM

- Replace BCM. Refer to BCS-57, "Removal and Installation".
- Confirm the operation after replacement.

Is the result normal?

YES >> INSPECTION END
NO >> Check intermittent incident. Refer to GI-33, "Intermittent Incident".

KEY REMINDER FUNCTION DOES NOT OPERATE

Diagnosis Procedure

INFOID:0000000005948946

1. CHECK “ANTI KEY LOCK IN FUNCTI” SETTING IN “WORK SUPPORT”

1. Select “INTELLIGENT KEY” of “BCM” using CONSULT-III.
2. Select “ANTI KEY LOCK IN FUNCTI” in “WORK SUPPORT” mode.
3. Check “ANTI KEY LOCK IN FUNCTI” setting in “WORK SUPPORT”.
   Refer to DLK-24, "INTELLIGENT KEY : CONSULT-III Function (BCM - INTELLIGENT KEY)".

Is the inspection result normal?

YES >> GO TO 2.
NO >> Set “On” in “ANTI KEY LOCK IN FUNCTI”.

2. CHECK DOOR SWITCH

Check door switch.
Refer to DLK-58, "Component Function Check".

Is the inspection result normal?

YES >> GO TO 3.
NO >> Repair or replace the malfunctioning parts.

3. CHECK INSIDE KEY ANTENNA

Check inside key antenna.
- Instrument center: Refer to DLK-46, "DTC Logic".
- Console: Refer to DLK-48, "DTC Logic".
- Luggage room: Refer to DLK-50, "DTC Logic".

Is the inspection result normal?

YES >> GO TO 4.
NO >> Repair or replace the malfunctioning parts.

4. CHECK UNLOCK SENSOR

Check unlock sensor.
Refer to DLK-77, "Component Function Check".

Is the inspection result normal?

YES >> GO TO 5.
NO >> Repair or replace the malfunctioning parts.

5. REPLACE BCM

- Replace BCM. Refer to BCS-57, "Removal and Installation".
- Confirm the operation after replacement.

Is the result normal?

YES >> INSPECTION END
NO >> Check intermittent incident. Refer to GI-33, "Intermittent Incident".

OFF POSITION WARNING DOES NOT OPERATE

Diagnosis Procedure

INFOID:0000000005948947

1. CHECK COMBINATION METER BUZZER

Check combination meter buzzer.
Refer to DLK-82, "Component Function Check".

Is the inspection result normal?

YES >> GO TO 2.
NO >> Repair or replace the malfunctioning parts.

2. CHECK INTELLIGENT KEY WARNING BUZZER

Check Intelligent Key warning buzzer.
Refer to DLK-79, "Component Function Check".

Is the inspection result normal?

YES >> GO TO 4.
NO >> Repair or replace the malfunctioning parts.

3. CHECK DOOR SWITCH

Check door switch (driver side).
Refer to DLK-58, "Component Function Check".

Is the inspection result normal?

YES >> GO TO 5.
NO >> Repair or replace the malfunctioning parts.

4. REPLACE BCM

- Replace BCM. Refer to BCS-57, "Removal and Installation".
- Confirm the operation after replacement.

Is the result normal?

YES >> INSPECTION END
NO >> Check intermittent incident. Refer to GI-33, "Intermittent Incident".

P POSITION WARNING DOES NOT OPERATE

Diagnosis Procedure

INFOID:0000000005948948

1. CHECK INTELLIGENT KEY WARNING BUZZER

Check Intelligent Key warning buzzer.
Refer to DLK-79, "Component Function Check".

Is the inspection result normal?

YES >> GO TO 2.
NO >> Repair or replace the malfunctioning parts.

2. CHECK COMBINATION METER BUZZER

Check combination meter buzzer.
Refer to DLK-82, "Component Function Check".

Is the inspection result normal?

YES >> GO TO 3.
NO >> Repair or replace the malfunctioning parts.

3. CHECK DOOR SWITCH

Check door switch (driver side).
Refer to DLK-58, "Component Function Check".

Is the inspection result normal?

YES >> GO TO 4.
NO >> Repair or replace the malfunctioning parts.

4. CHECK INSIDE KEY ANTENNA

Check inside key antenna.
- Instrument center: Refer to DLK-46, "DTC Logic".
- Console: Refer to DLK-48, "DTC Logic".
- Luggage room: Refer to DLK-50, "DTC Logic".

Is the inspection result normal?

YES >> GO TO 5.
NO >> Repair or replace the malfunctioning parts.

5. CHECK KEY WARNING LAMP

Check key warning lamp.
Refer to DLK-83, "Component Function Check".

Is the inspection result normal?

YES >> GO TO 6.
NO >> Repair or replace the malfunctioning parts.

6. CHECK SHIFT P WARNING LAMP

Check shift P warning lamp.
Refer to MWI-17, "On Board Diagnosis Function".

Is the inspection result normal?

YES >> GO TO 7.
NO >> Repair or replace the malfunctioning parts.

7. REPLACE BCM

- Replace BCM. Refer to BCS-57, "Removal and Installation".
- Confirm the operation after replacement.

Is the result normal?

YES >> INSPECTION END
NO >> Check intermittent incident. Refer to GI-33, "Intermittent Incident".

ACC WARNING DOES NOT OPERATE

Diagnosis Procedure

INFOID:0000000005948949

1. CHECK COMBINATION METER BUZZER

Check combination meter buzzer.
Refer to DLK-82, "Component Function Check".

Is the inspection result normal?

YES >> GO TO 2.
NO >> Repair or replace the malfunctioning parts.

2. REPLACE BCM

- Replace BCM. Refer to BCS-57, "Removal and Installation".
- Confirm the operation after replacement.

Is the result normal?

YES >> INSPECTION END
NO >> Check intermittent incident. Refer to GI-33, "Intermittent Incident".

TAKE AWAY WARNING DOES NOT OPERATE

Diagnosis Procedure

INFOID:0000000005948950

1. CHECK DOOR SWITCH

Check door switch.
Refer to DLK-58, "Component Function Check".

Is the inspection result normal?

YES >> GO TO 2.
NO >> Repair or replace the malfunctioning parts.

2. CHECK INSIDE KEY ANTENNA

Check inside key antenna.
- Instrument center: Refer to DLK-46, "DTC Logic".
- Console: Refer to DLK-48, "DTC Logic".
- Luggage room: Refer to DLK-50, "DTC Logic".

Is the inspection result normal?

YES >> GO TO 3.
NO >> Repair or replace the malfunctioning parts.

3. CHECK COMBINATION METER BUZZER

Check combination meter buzzer.
Refer to DLK-82, "Component Function Check".

Is the inspection result normal?

YES >> GO TO 4.
NO >> Repair or replace the malfunctioning parts.

4. CHECK INTELLIGENT KEY WARNING BUZZER

Check Intelligent Key warning buzzer.
Refer to DLK-79, "Component Function Check".

Is the inspection result normal?

YES >> GO TO 5.
NO >> Repair or replace the malfunctioning parts.

5. CHECK KEY WARNING LAMP

Check key warning lamp.
Refer to DLK-83, "Component Function Check".

Is the inspection result normal?

YES >> GO TO 6.
NO >> Repair or replace the malfunctioning parts.

6. REPLACE BCM

- Replace BCM. Refer to BCS-57, "Removal and Installation".
- Confirm the operation after replacement.

Is the result normal?

YES >> INSPECTION END
NO >> Check intermittent incident. Refer to GI-33, "Intermittent Incident".

INTELLIGENT KEY LOW BATTERY WARNING DOES NOT OPERATE

Diagnosis Procedure

INFOID:0000000005948951

1. CHECK “LO- BATT OF KEY FOB WARN” SETTING IN “WORK SUPPORT”

1. Select “INTELLIGENT KEY” of “BCM”.
2. Select “LO- BATT OF KEY FOB WARN” in “WORK SUPPORT” mode.
3. Check “LO- BATT OF KEY FOB WARN” setting in “WORK SUPPORT”.
   Refer to DLK-24, "INTELLIGENT KEY : CONSULT-III Function (BCM - INTELLIGENT KEY)".

Is the inspection result normal?

YES >> GO TO 2.
NO >> Set “ON” in “LO- BATT OF KEY FOB WARN”.

2. CHECK INTELLIGENT KEY

Check Intelligent key.
Refer to DLK-81, "Component Function Check".

Is the inspection result normal?

YES >> GO TO 3.
NO >> Repair or replace the malfunctioning parts.

3. CHECK KEY WARNING LAMP

Check key warning lamp.
Refer to DLK-83, "Component Function Check".

Is the inspection result normal?

YES >> GO TO 4.
NO >> Repair or replace the malfunctioning parts.

4. CHECK INSIDE KEY ANTENNA

Check inside key antenna.
- Instrument center: Refer to DLK-46, "DTC Logic".
- Console: Refer to DLK-48, "DTC Logic".
- Luggage room: Refer to DLK-50, "DTC Logic".

Is the inspection result normal?

YES >> GO TO 5.
NO >> Repair or replace the malfunctioning parts.

5. REPLACE BCM

- Replace BCM. Refer to BCS-57, "Removal and Installation".
- Confirm the operation after replacement.

Is the result normal?

YES >> INSPECTION END
NO >> Check intermittent incident. Refer to GI-33, "Intermittent Incident".

DOOR LOCK OPERATION WARNING DOES NOT OPERATE

Diagnosis Procedure

INFOID:0000000005948952

1. CHECK DOOR LOCK FUNCTION

Check door lock function.

Does door lock/unlock using door request switch?

YES >> GO TO 2.
NO >> Refer to DLK-90, "DRIVER SIDE : Diagnosis Procedure".

2. CHECK INTELLIGENT KEY WARNING BUZZER

Check Intelligent Key warning buzzer.
Refer to DLK-79, "Component Function Check".

Is the inspection result normal?

YES >> GO TO 3.
NO >> Repair or replace the malfunctioning parts.

3. REPLACE BCM

- Replace BCM. Refer to BCS-57, "Removal and Installation".
- Confirm the operation after replacement.

Is the result normal?

YES >> INSPECTION END
NO >> Check intermittent incident. Refer to GI-33, "Intermittent Incident".

KEY ID WARNING DOES NOT OPERATE

Diagnosis Procedure

INFOID:0000000005948953

1. CHECK INTELLIGENT KEY

Check Intelligent Key.
Refer to DLK-81, "Component Function Check".

Is the inspection result normal?

YES >> GO TO 2.
NO >> Repair or replace the malfunctioning parts.

2. CHECK KEY WARNING LAMP

Check key warning lamp.
Refer to DLK-83, "Component Function Check".

Is the inspection result normal?

YES >> GO TO 3.
NO >> Repair or replace the malfunctioning parts.

3. REPLACE BCM

- Replace BCM. Refer to BCS-57, "Removal and Installation".
- Confirm the operation after replacement.

Is the result normal?

YES >> INSPECTION END
NO >> Check intermittent incident. Refer to GI-33, "Intermittent Incident".

KEY WARNING LAMP DOES NOT ILLUMINATE

Diagnosis Procedure

INFOID:0000000005948954

1. CHECK KEY WARNING LAMP

Check key warning lamp.
Refer to DLK-83, "Component Function Check".

Is the inspection result normal?

YES >> GO TO 2.
NO >> Repair or replace the malfunctioning parts.

2. REPLACE BCM

- Replace BCM. Refer to BCS-57, "Removal and Installation".
- Confirm the operation after replacement.

Is the result normal?

YES >> INSPECTION END
NO >> Check intermittent incident. Refer to GI-33, "Intermittent Incident".

PANIC ALARM FUNCTION DOES NOT OPERATE

Diagnosis Procedure

INFOID:0000000006046542

1. CHECK REMOTE KEYLESS ENTRY FUNCTION

Check remote keyless entry function.

Does door lock/unlock with Intelligent Key button?

YES >> GO TO 2.
NO >> Refer to DLK-92, "Diagnosis Procedure".

2. CHECK HORN OPERATION

1. Select “IPDM E/R” using CONSULT-III.
2. Select “HORN” in “ACTIVE TEST” mode.
3. Touch “On” to check that it works normally.

Is the inspection result normal?

YES >> GO TO 3.
NO >> Repair or replace the malfunctioning parts.

3. CHECK “PANIC ALARM SET” SETTING IN “WORK SUPPORT”

1. Select “INTELLIGENT KEY” of “BCM”.
2. Select “PANIC ALARM SET” in “WORK SUPPORT” mode.
3. Check “PANIC ALARM SET” setting in “WORK SUPPORT”.
   Refer to DLK-24, "INTELLIGENT KEY : CONSULT-III Function (BCM - INTELLIGENT KEY)".

Is the inspection result normal?

YES >> GO TO 4.
NO >> Set “MODE 1” or “MODE 3” in “PANIC ALARM SET”

4. REPLACE BCM

- Replace BCM. Refer to BCS-57, "Removal and Installation".
- Confirm the operation after replacement.

Is the result normal?

YES >> INSPECTION END
NO >> Check intermittent incident. Refer to GI-33, "Intermittent Incident".

SQUEAK AND RATTLE TROUBLE DIAGNOSES

Work Flow

INFOID:0000000006067074

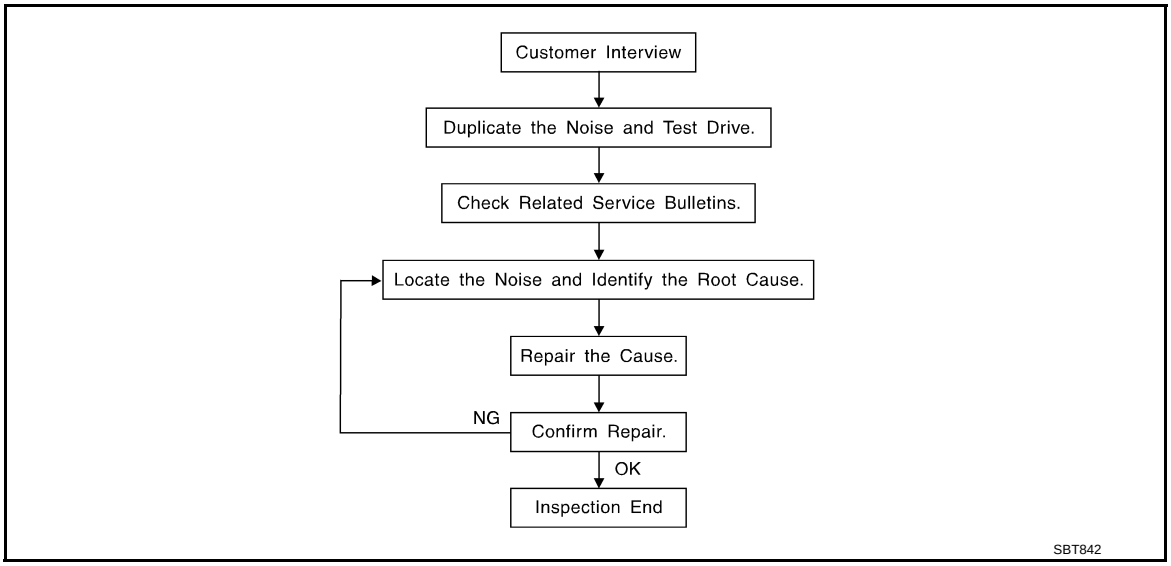

CUSTOMER INTERVIEW

Interview the customer if possible, to determine the conditions that exist when the noise occurs. Use the Diagnostic Worksheet during the interview to document the facts and conditions when the noise occurs and any of the customer's comments; refer to DLK-109, "Diagnostic Worksheet". This information is necessary to duplicate the conditions that exist when the noise occurs.

- The customer may not be able to provide a detailed description or the location of the noise. Attempt to obtain all the facts and conditions that exist when the noise occurs (or does not occur).
- If there is more than one noise in the vehicle, be sure to diagnose and repair the noise that the customer is concerned about. This can be accomplished by a test drive with the customer.
- After identifying the type of noise, isolate the noise in terms of its characteristics. The noise characteristics are provided so the customer, service adviser and technician are all speaking the same language when defining the noise.
- Squeak – (Like tennis shoes on a clean floor)
  Squeak characteristics include the light contact/fast movement/brought on by road conditions/hard surfaces = higher pitch noise/softer surfaces = lower pitch noises/edge to surface = chirping
- Creak – (Like walking on an old wooden floor)
  Creak characteristics include firm contact/slow movement/twisting with a rotational movement/pitch dependent on materials/often brought on by activity.
- Rattle – (Like shaking a baby rattle)
  Rattle characteristics include the fast repeated contact/vibration or similar movement/loose parts/missing clip or fastener/incorrect clearance.
- Knock – (Like a knock on a door)
  Knock characteristics include hollow sounding/sometimes repeating/often brought on by driver action.
- Tick – (Like a clock second hand)
  Tick characteristics include gentle contacting of light materials/loose components/can be caused by driver action or road conditions.
- Thump – (Heavy, muffled knock noise)
  Thump characteristics include softer knock/dead sound often brought on by activity.
- Buzz – (Like a bumble bee)
  Buzz characteristics include high frequency rattle/firm contact.
- Often the degree of acceptable noise level will vary depending upon the person. A noise that you may judge as acceptable may be very irritating to the customer.
- Weather conditions, especially humidity and temperature, may have a great effect on noise level.

DUPLICATE THE NOISE AND TEST DRIVE

If possible, drive the vehicle with the customer until the noise is duplicated. Note any additional information on the Diagnostic Worksheet regarding the conditions or location of the noise. This information can be used to duplicate the same conditions when you confirm the repair.

If the noise can be duplicated easily during the test drive, to help identify the source of the noise, try to duplicate the noise with the vehicle stopped by doing one or all of the following:

1) Close a door.
2) Tap or push/pull around the area where the noise appears to be coming from.
3) Rev the engine.
4) Use a floor jack to recreate vehicle “twist”.
5) At idle, apply engine load (electrical load, half-clutch on M/T model, drive position on A/T model).
6) Raise the vehicle on a hoist and hit a tire with a rubber hammer.

- Drive the vehicle and attempt to duplicate the conditions the customer states exist when the noise occurs.
- If it is difficult to duplicate the noise, drive the vehicle slowly on an undulating or rough road to stress the vehicle body.

LOCATE THE NOISE AND IDENTIFY THE ROOT CAUSE

1. Narrow down the noise to a general area. To help pinpoint the source of the noise, use a listening tool (Engine Ear or mechanics stethoscope).
2. Narrow down the noise to a more specific area and identify the cause of the noise by:

- removing the components in the area that you suspect the noise is coming from.
  Do not use too much force when removing clips and fasteners, otherwise clips and fastener can be broken or lost during the repair, resulting in the creation of new noise.
- tapping or pushing/pulling the component that you suspect is causing the noise.
  Do not tap or push/pull the component with excessive force, otherwise the noise will be eliminated only temporarily.
- feeling for a vibration with your hand by touching the component(s) that you suspect is (are) causing the noise.
- placing a piece of paper between components that you suspect are causing the noise.
- looking for loose components and contact marks.
  Refer to DLK-107, "Inspection Procedure".

REPAIR THE CAUSE

- If the cause is a loose component, tighten the component securely.
- If the cause is insufficient clearance between components:
- separate components by repositioning or loosening and retightening the component, if possible.
- insulate components with a suitable insulator such as urethane pads, foam blocks, felt cloth tape or urethane tape are available through your authorized Nissan Parts Department.

CAUTION:
Do not use excessive force as many components are constructed of plastic and may be damaged.
NOTE:

- URETHANE PADS
  Insulates connectors, harness, etc.
- INSULATOR (Foam blocks)
  Insulates components from contact. Can be used to fill space behind a panel.
- INSULATOR (Light foam block)
- FELT CLOTHTAPE
  Used to insulate where movement does not occur. Ideal for instrument panel applications.
  The following materials, not available through NISSAN Parts Department, can also be used to repair squeaks and rattles.
- UHMW(TEFLON) TAPE
  Insulates where slight movement is present. Ideal for instrument panel applications.
- SILICONE GREASE
  Used in place of UHMW tape that will be visible or not fit.
  Note: Will only last a few months.
- SILICONE SPRAY
  Use when grease cannot be applied.
- DUCT TAPE
  Use to eliminate movement.

CONFIRM THE REPAIR

Confirm that the cause of a noise is repaired by test driving the vehicle. Operate the vehicle under the same conditions as when the noise originally occurred. Refer to the notes on the Diagnostic Worksheet.

Inspection Procedure

INFOID:0000000006067075

Refer to Table of Contents for specific component removal and installation information.

INSTRUMENT PANEL

Most incidents are caused by contact and movement between:

1. Cluster lid A and instrument panel
2. Acrylic lens and combination meter housing
3. Instrument panel to front pillar garnish
4. Instrument panel to windshield
5. Instrument panel mounting pins
6. Wiring harnesses behind the combination meter
7. A/C defroster duct and duct joint

These incidents can usually be located by tapping or moving the components to duplicate the noise or by pressing on the components while driving to stop the noise. Most of these incidents can be repaired by applying felt cloth tape or silicon spray (in hard to reach areas). Urethane pads can be used to insulate wiring harness.

CAUTION:

Do not use silicone spray to isolate a squeak or rattle. If you saturate the area with silicone, you will not be able to recheck the repair.

CENTER CONSOLE

Components to pay attention to include:

1. Shifter assembly cover to finisher
2. A/C control unit and cluster lid C
3. Wiring harnesses behind audio and A/C control unit

The instrument panel repair and isolation procedures also apply to the center console.

DOORS

Pay attention to the:

1. Finisher and inner panel making a slapping noise
2. Inside handle escutcheon to door finisher
3. Wiring harnesses tapping
4. Door striker out of alignment causing a popping noise on starts and stops

Tapping or moving the components or pressing on them while driving to duplicate the conditions can isolate many of these incidents. You can usually insulate the areas with felt cloth tape or insulator foam blocks to repair the noise.

TRUNK

Trunk noises are often caused by a loose jack or loose items put into the trunk by the owner.
In addition look for:

1. Trunk lid dumpers out of adjustment
2. Trunk lid striker out of adjustment
3. Trunk lid torsion bars knocking together
4. A loose license plate or bracket

Most of these incidents can be repaired by adjusting, securing or insulating the item(s) or component(s) causing the noise.

SUNROOF/HEADLINING

Noises in the sunroof/headlining area can often be traced to one of the following:

1. Sunroof lid, rail, linkage or seals making a rattle or light knocking noise
2. Sunvisor shaft shaking in the holder
3. Front or rear windshield touching headlining and squeaking

Again, pressing on the components to stop the noise while duplicating the conditions can isolate most of these incidents. Repairs usually consist of insulating with felt cloth tape.

SEATS

When isolating seat noise it is important to note the position the seat is in and the load placed on the seat when the noise is present. These conditions should be duplicated when verifying and isolating the cause of the noise.

Cause of seat noise include:

1. Headrest rods and holder
2. A squeak between the seat pad cushion and frame
3. Rear seatback lock and bracket

These noises can be isolated by moving or pressing on the suspected components while duplicating the conditions under which the noise occurs. Most of these incidents can be repaired by repositioning the component or applying urethane tape to the contact area.

UNDERHOOD

Some interior noise may be caused by components under the hood or on the engine wall. The noise is then transmitted into the passenger compartment.

Causes of transmitted underhood noise include:

1. Any component mounted to the engine wall
2. Components that pass through the engine wall
3. Engine wall mounts and connectors
4. Loose radiator mounting pins
5. Hood bumpers out of adjustment
6. Hood striker out of adjustment

These noises can be difficult to isolate since they cannot be reached from the interior of the vehicle. The best method is to secure, move or insulate one component at a time and test drive the vehicle. Also, engine RPM or load can be changed to isolate the noise. Repairs can usually be made by moving, adjusting, securing, or insulating the component causing the noise.

Diagnostic Worksheet

INFOID:0000000006067076

SQUEAK & RATTLE DIAGNOSTIC WORKSHEET

Dear Nissan Customer:
We are concerned about your satisfaction with your Nissan vehicle. Repairing a squeak or rattle sometimes can be very difficult. To help us fix your Nissan right the first time, please take a moment to note the area of the vehicle where the squeak or rattle occurs and under what conditions. You may be asked to take a test drive with a service advisor or technician to ensure we confirm the noise you are hearing.

I. WHERE DOES THE NOISE COME FROM? (circle the area of the vehicle)
The illustrations are for reference only, and may not reflect the actual configuration of your vehicle.

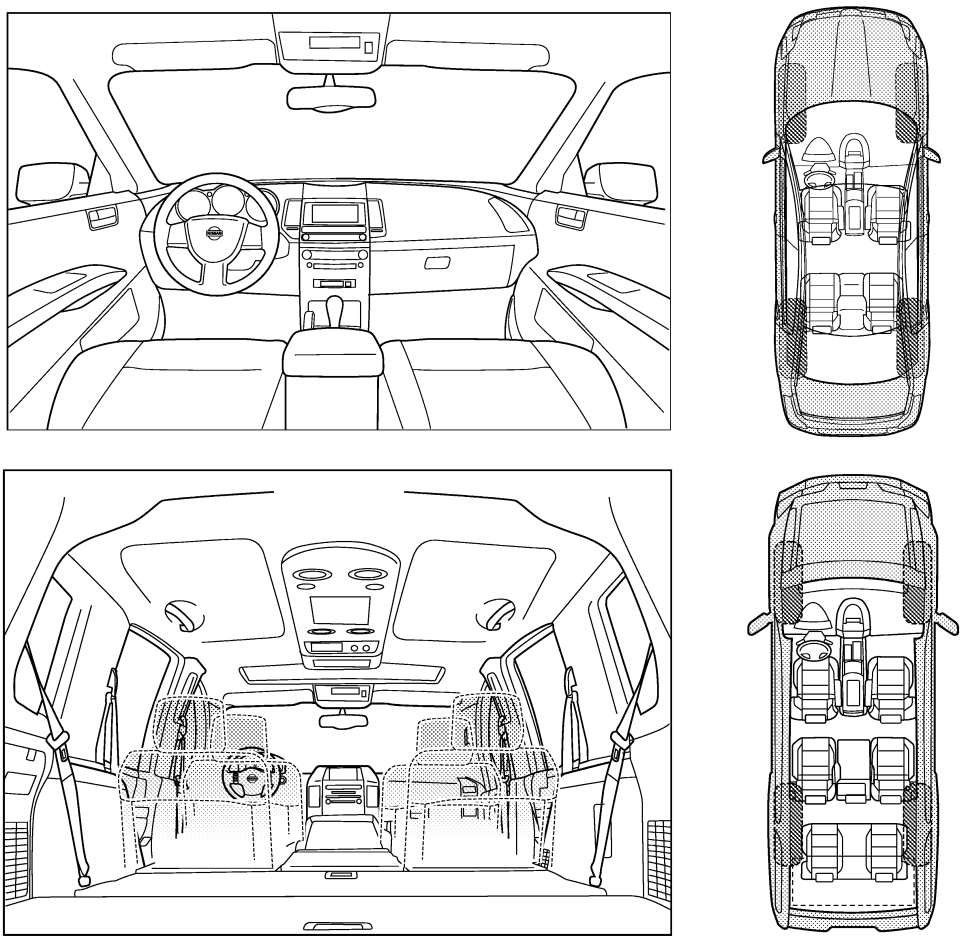

Continue to page 2 of the worksheet and briefly describe the location of the noise or rattle. In addition, please indicate the conditions which are present when the noise occurs.

PIIB8740E

SQUEAK & RATTLE DIAGNOSTIC WORKSHEET - page 2

Briefly describe the location where the noise occurs:

_____

_____

II. WHEN DOES IT OCCUR? (please check the boxes that apply)

- ☐ anytime
- ☐ 1st time in the morning
- ☐ only when it is cold outside
- ☐ only when it is hot outside
- ☐ after sitting out in the rain
- ☐ when it is raining or wet
- ☐ dry or dusty conditions
- ☐ other:

III. WHEN DRIVING:

- ☐ through driveways
- ☐ over rough roads
- ☐ over speed bumps
- ☐ only about ____ mph
- ☐ on acceleration
- ☐ coming to a stop
- ☐ on turns: left, right or either (circle)
- ☐ with passengers or cargo
- ☐ other: _____
- ☐ after driving _____ miles or _____ minutes

IV. WHAT TYPE OF NOISE

- ☐ squeak (like tennis shoes on a clean floor)
- ☐ creak (like walking on an old wooden floor)
- ☐ rattle (like shaking a baby rattle)
- ☐ knock (like a knock at the door)
- ☐ tick (like a clock second hand)
- ☐ thump (heavy, muffled knock noise)
- ☐ buzz (like a bumble bee)

TO BE COMPLETED BY DEALERSHIP PERSONNEL

Test Drive Notes:

_____

_____

_____

	YES	NO	Initials of person performing
Vehicle test driven with customer	☐	☐	_____
- Noise verified on test drive	☐	☐	_____
- Noise source located and repaired	☐	☐	_____
- Follow up test drive performed to confirm repair	☐	☐	_____

VIN: _____ Customer Name: _____

W.O.# _____ Date: _____

This form must be attached to Work Order

PIIB8742E

REMOVAL AND INSTALLATION

HOOD

Exploded View

INFOID:0000000005948964

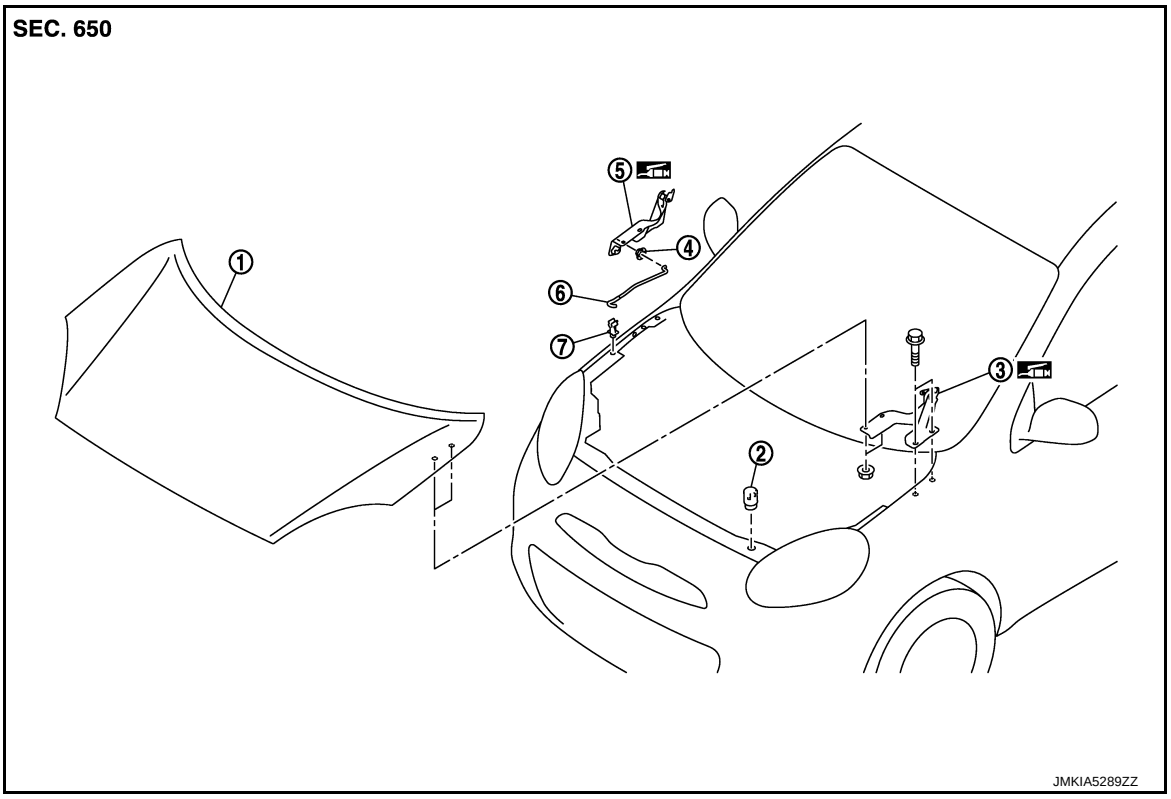

1. Hood assembly
2. Hood bumper rubber
3. Hood hinge (LH)
4. Grommet
5. Hood hinge (RH)
6. Hood support rod
7. Clamp

Refer to GI-4, "Components" for symbols in the figure.

HOOD ASSEMBLY

HOOD ASSEMBLY : Removal and Installation

INFOID:0000000005948965

CAUTION:
- **Operate with two workers, because of its heavy weight.**
- **Use protective tape or shop cloth to protect from damage during removal and installation.**

REMOVAL

1. Support hood assembly with the proper material to prevent it from falling.

   WARNING:
   Injury may occur if hood assembly is not supported by the proper material when removing hood assembly.
2. Remove hood hinge mounting nuts on the hood to remove the hood assembly.

INSTALLATION

Install in the reverse order of removal.

CAUTION:
- **Check hood hinge rotating part for poor lubrication. If necessary, apply body grease.**
- **After installation, apply touch-up paint (the body color) onto the heads of hood hinge mounting bolts and nuts.**

- **After installing, perform hood fitting adjustment. Refer to DLK-112, "HOOD ASSEMBLY : Adjustment".**

HOOD ASSEMBLY : Adjustment

INFOID:0000000005948966

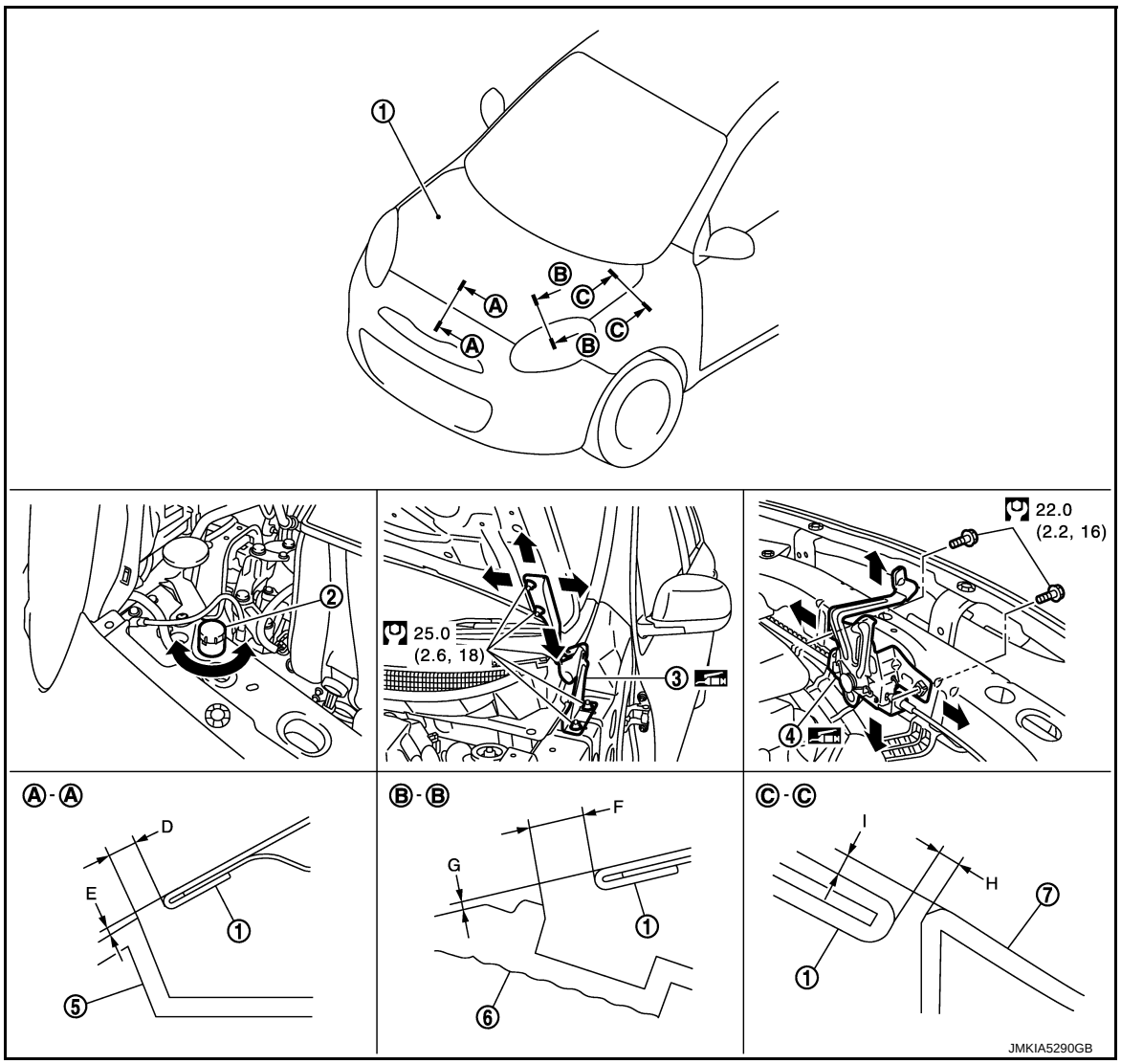

1. Hood assembly
2. Hood bumper rubber
3. Hood hinge
4. Hood lock assembly
5. Front bumper fascia
6. Front combination lamp
7. Front fender

Refer to GI-4, "Components" for symbols in the figure.

Check the clearance and the surface height between hood and each part by visually and touching.
If the clearance and the surface height are out of specification, adjust them according to the procedures shown below.

Unit: mm (in)

Portion				Standard	Difference (RH/LH, MAX)
Hood – Front bumper fascia	A – A	D	Clearance	2.4 – 6.4 (0.094 – 0.252)	—
		E	Surface height	(-2.5) – (+1.5) [(-0.098) – (+0.059)]	—
Hood – Front combination lamp	B – B	F	Clearance	1.9 – 6.1 (0.075 – 0.240)	< 2.0 (0.079)
		G	Surface height	(-2.6) – (+2.6) [(-0.102) – (+0.102)]	< 2.0 (0.079)

Portion				Standard	Difference (RH/LH, MAX)
Hood – Front fender	C – C	H	Clearance	2.5 – 4.5 (0.098 – 0.177)	< 1.0 (0.039)
		I	Surface height	(-1.5) – (+0.5) [(0.059) – (+0.020)]	< 1.5 (0.059)

1. Remove hood lock and adjust the surface height of hood, front bumper fascia, front combination lamp and front fender according to the fitting standard dimension, by rotating hood bumper rubber.
2. Loosen hood hinge mounting nuts on the hood.
3. Adjust the clearance of hood, front bumper fascia, front combination lamp and front fender according to the fitting standard dimension, for the hood.
4. Temporarily tighten hood lock.
5. Check that hood lock secondary latch is securely engaged with striker by dropping hood from approximately 200 mm (7.874 in) height or by pressing lightly on the hood.
   CAUTION:
   Never drop hood from a height of 300 mm (11.811 in) or more
6. Install as static closing face of hood is 94– 490 N (9.6 – 50.0 kg, 21.1 – 110 lb).
7. After adjustment tighten lock bolts to the specified torque.

CAUTION:
- **Check hood hinge rotating part for poor lubrication. If necessary, apply body grease.**
- **After installation, apply touch-up paint (the body color) onto the heads of hood hinge mounting bolts and nuts.**

HOOD HINGE

HOOD HINGE : Removal and Installation

INFOID:0000000005948968

REMOVAL

1. Remove hood assembly. Refer to DLK-111, "HOOD ASSEMBLY : Removal and Installation".
2. Remove front fender. Refer to DLK-116, "Removal and Installation".
3. Remove hood hinge mounting bolts, and then remove hood hinge.

INSTALLATION

Install in the reverse order of removal.

CAUTION:
- **Check hood hinge rotating part for poor lubrication. If necessary, apply grease.**
- **After installation, apply touch-up paint (the body color) onto the head of the hinge mounting bolts and nuts.**
- **After installation, perform hood fitting adjustment. Refer to DLK-112, "HOOD ASSEMBLY : Adjustment".**

HOOD SUPPORT ROD

HOOD SUPPORT ROD : Removal and Installation

INFOID:0000000005948970

REMOVAL

1. Support hood assembly with a suitable material to prevent it from falling.
   WARNING:
   Injury may occur if hood assembly is not supported by the proper material when removing hood assembly.
2. Pull hood support rod from grommet and remove.

INSTALLATION

Install in the reverse order of removal.

RADIATOR CORE SUPPORT

Exploded View

INFOID:0000000005948971

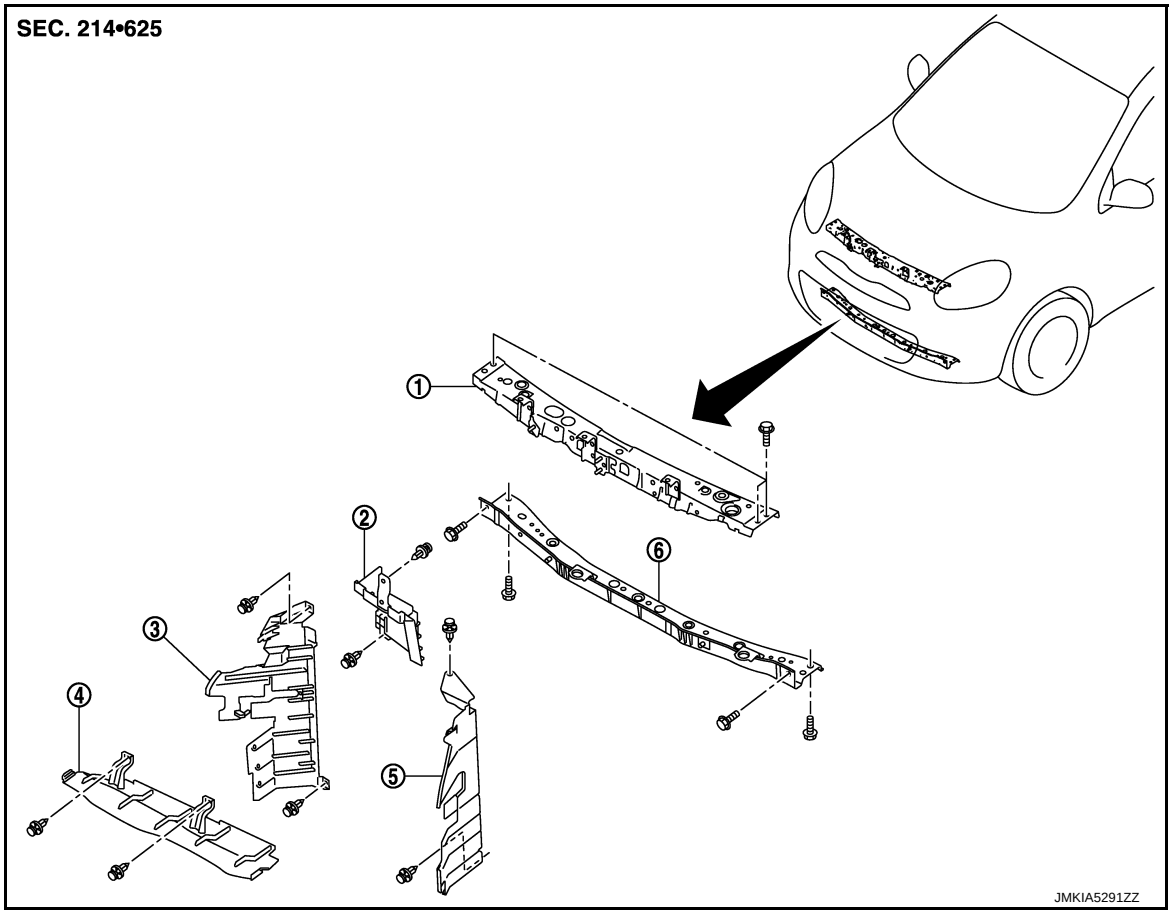

1. Radiator core support upper
2. Condenser side seal
3. Radiator side seal (RH)
4. Radiator upper seal
5. Radiator side seal (LH)
6. Radiator core support lower

Removal and Installation

INFOID:0000000005948972

RADIATOR CORE SUPPORT UPPER

Removal

1. Remove washer tank inlet. Rwfer to WW-47, "Removal and Installation".
2. Remove ground harness (1) mounting bolt (A).

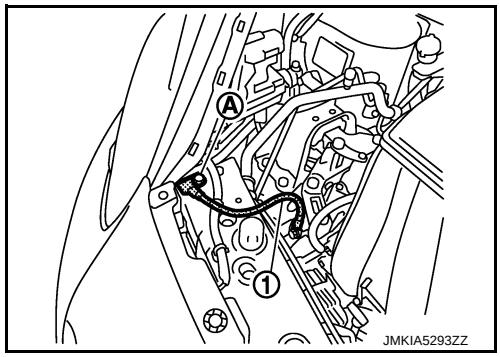

3. Disconnect horn connector.
4. Remove horn mounting nut, and remove horn.
5. Remove hood lock and hood lock cable fixing clip. Refer to DLK-131, "Removal and Installation".

6. Remove radiator upper seal fixing clips.
7. Remove fixing clips of radiator side seal (LH and RH) upper side.
8. Remove crash zone sensor. Refer to SR-25, "Removal and Installation".
9. Disconnect all harness.
10. Remove radiator reservoir tank mounting bolt.
11. Remove front bumper fascia upper side fixing clips.
12. Remove radiator core support upper mounting bolts.
13. Lift up upper part of front bumper fascia.
14. Lift up right side of radiator core support upper and remove radiator core support upper by pulling it out toward the vehicle right side.

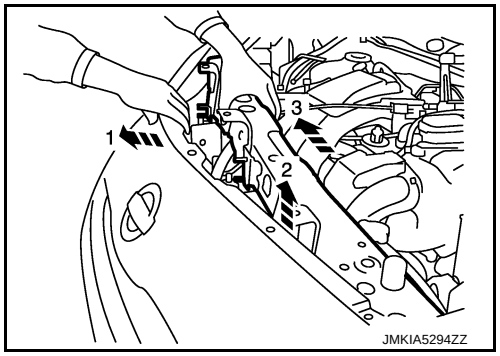

Installation
Install in the reverse order of removal.

RADIATOR CORE SUPPORT LOWER

Removal

1. Remove front bumper fascia. Refer to EXT-11, "Removal and Installation".
2. Remove radiator upper seal fixing clips, and then radiator upper seal from radiator core support upper.
3. Remove fixing clips of radiator side seal (LH and RH) under side.
4. Remove clips of fender protector.
5. Use a belts (A) to suspend it to prevent it from falling.
   CAUTION:
   Never damage radiator and condenser.

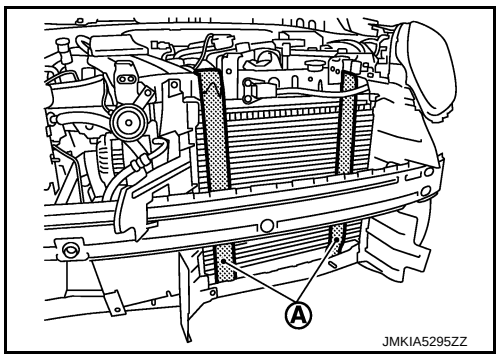

6. Remove mounting bolts, and then remove radiator core support lower.

Installation
Install in the reverse order of removal.

FRONT FENDER

Exploded View

INFOID:0000000005948973

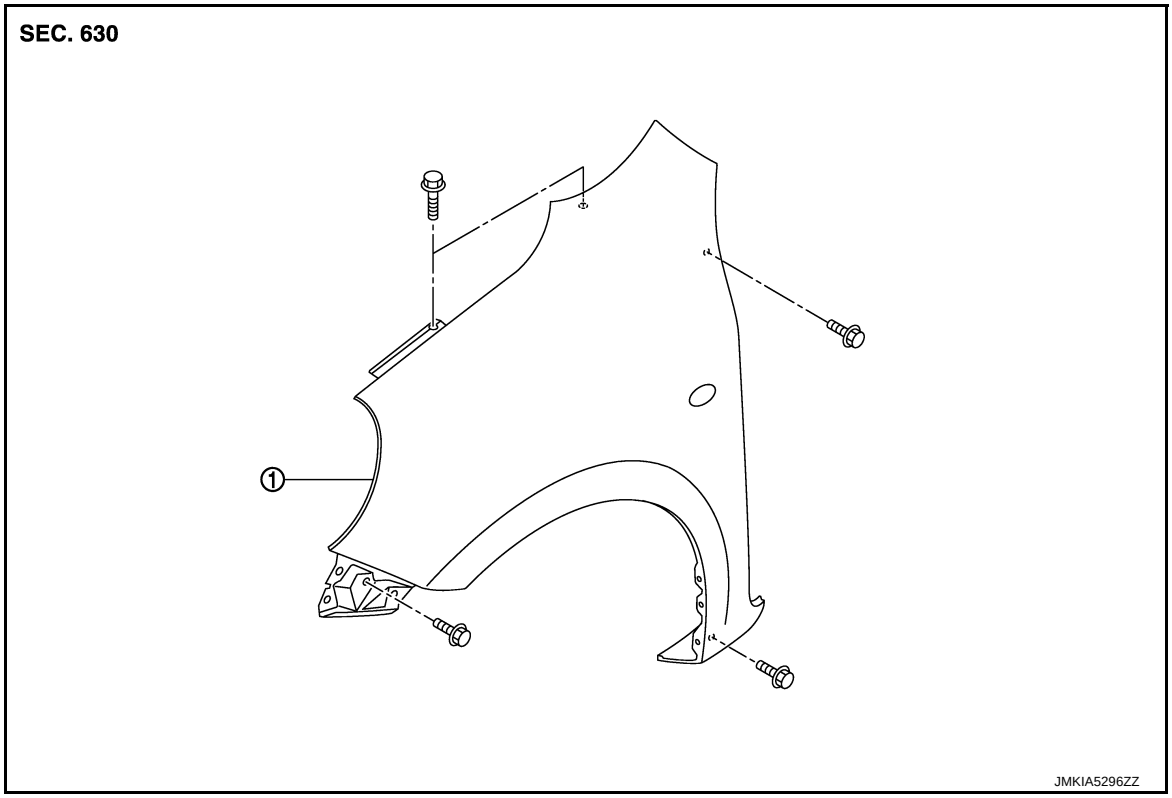

1. Front fender assembly

Removal and Installation

INFOID:0000000005948974

CAUTION:
Use a shop cloth to protect the body from being damaged during removal and installation.

REMOVAL

1. Remove front combination lamp. Refer toEXL-90, "Removal and Installation".
2. Remove fender protector. Refer to EXT-17, "FENDER PROTECTOR : Removal and Installation".
3. Remove side turn signal lamp. Refer to EXL-95, "Removal and Installation".
4. Remove front fender cover. EXT-15, "Exploded View".
5. Remove mounting bolts, and then remove front fender.
   CAUTION:
   An viscous urethane foam is installed on the back surface of front fender. When removing the front fender, be careful to not deform the front fender while performing the procedure and removing the viscous urethane foam a little at a time.

INSTALLATION

Note the following items, and install in the reverse order of removal.

CAUTION:

- **After installation, apply the touch-up paint (the body color) onto the head of front fender mounting bolts.**
- **After installation, adjust the following part.**

- Hood assembly: Refer to DLK-112, "HOOD ASSEMBLY : Adjustment".
- Front door: Refer to DLK-118, "DOOR ASSEMBLY : Adjustment".

FRONT DOOR

Exploded View

INFOID:0000000005948975

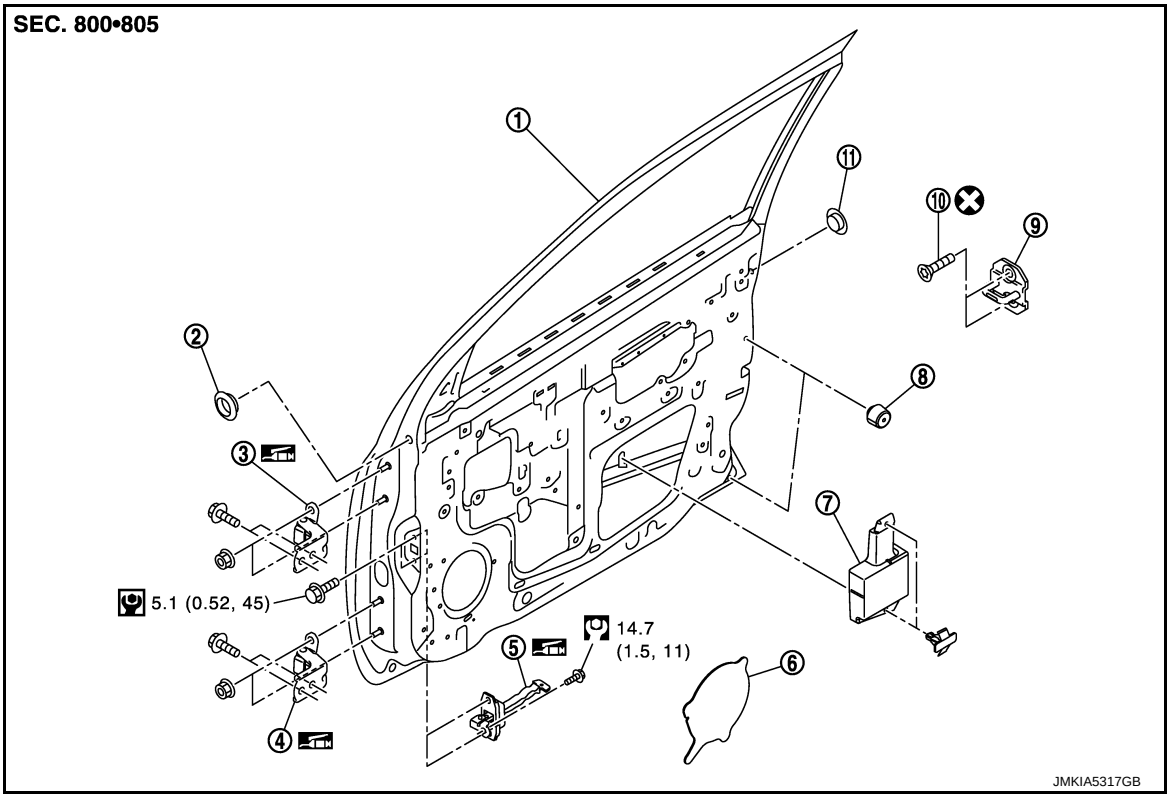

1. Front door panel
2. Grommet (driver side only)
3. Door hinge (upper)
4. Door hinge (lower)
5. Door check link
6. Sealing screen (lower)
7. Door pad
8. Bumper rubber
9. Door striker
10. TORX bolt
11. Grommet

Refer to GI-4, "Components" for symbols in the figure.

DOOR ASSEMBLY

DOOR ASSEMBLY : Removal and Installation

INFOID:0000000005948976

CAUTION:
- **Perform work with 2 workers, because of its heavy weight.**
- **When removing and installing front door assembly, support door with a jack and shop cloth to protect door and body.**

REMOVAL

1. Remove mounting bolts of door check link on the vehicle.
2. Remove front door harness grommet, and then pull out the harness from the vehicle.
3. Disconnect front door harness connector.
4. Remove door hinge mounting nuts (door side), and then remove door assembly.

INSTALLATION

Note the following items, and install in the reverse order of removal.

CAUTION:
- **Apply anticorrosive agent onto the mounting surface.**
- **Check front door open/close, lock/unlock operation after installation.**
- **Check door hinge rotating part for poor lubrication. If necessary, apply body grease.**

- **After installation, perform the fitting adjustment. Refer to DLK-118, "DOOR ASSEMBLY : Adjustment".**
- **After installation, apply touch-up paint (the body color) onto the head of door hinge mounting nuts.**

DOOR ASSEMBLY : Adjustment

INFOID:0000000005948977

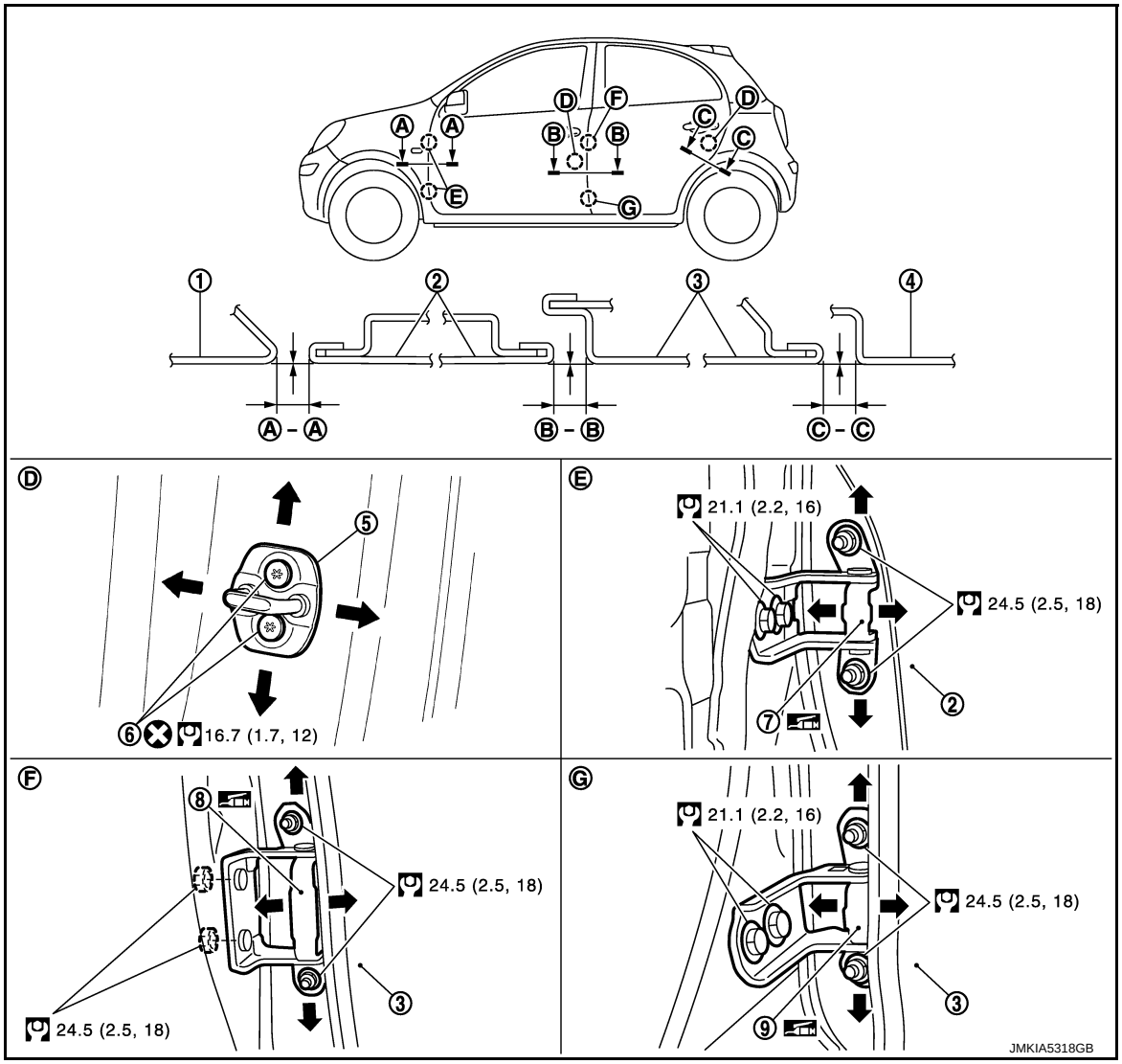

1. Front fender	2. Front door	3. Rear door
4. Body side outer	5. Door striker	6. TORX bolt
7. Front door hinge	8. Rear door hinge (upper)	9. Rear door hinge (lower)

Refer to GI-4, "Components" for symbols in the figure.

Check the clearance and surface height between front door and each part by visually and touching.
If the clearance and the surface height are out of specification, adjust them according to the procedures shown below.

Unit: mm (in)

Portion		Clearance	Surface height
Front fender – Front door	A – A	3.7 – 5.7 (0.146 – 0.224)	- 1.0 – 1.0 (- 0.039 – 0.039)
Front door – Rear door	B – B	3.7 – 5.7 (0.146 – 0.224)	- 1.0 – 1.0 (- 0.039 – 0.039)

1. Remove fender protector. Refer to EXT-17, "FENDER PROTECTOR : Removal and Installation".
2. Loosen door hinge mounting nuts on door side.

3. Adjust the surface height of front door according to the fitting standard dimension.
4. Temporarily tighten door hinge mounting nuts on door side.
5. Loosen door hinge mounting bolts on body side.
6. Raise front door at rear end to adjust clearance of the front door according to the fitting standard dimension.
7. After adjustment tighten bolts and nuts to the specified torque.
   CAUTION:
   - **After installation, apply touch-up paint (the body color) onto the head of hinge mounting bolts and nuts.**
   - **Check door hinge rotating part for poor lubrication. If necessary, apply body grease.**
8. Install front fender protector. Refer to refer to EXT-17, "FENDER PROTECTOR : Removal and Installation".

DOOR STRIKER ADJUSTMENT

Adjust door striker so that it becomes parallel with door lock insertion direction.

DOOR STRIKER

DOOR STRIKER : Removal and Installation

INFOID:0000000005948979

REMOVAL

Remove TORX bolts, and then remove door striker.

INSTALLATION

Note the following items, and install in the reverse order of removal.

CAUTION:
- **Check front door open/close, lock/unlock operation after installation.**
- **After installation, be sure to perform the fitting adjustment. Refer to DLK-118, "DOOR ASSEMBLY : Adjustment".**

DOOR HINGE

DOOR HINGE : Removal and Installation

INFOID:0000000005948981

REMOVAL

CAUTION:
- **Perform work with 2 workers, because of its heavy weight.**
- **When removing and installing front door assembly, support door with a jack and shop cloth to protect door and body.**

1. Remove fender protector. Refer to EXT-17, "FENDER PROTECTOR : Removal and Installation".
2. Remove front door assembly. Refer to DLK-117, "DOOR ASSEMBLY : Removal and Installation".
3. Remove front door hinge mounting bolts (body side), and then remove front door hinge.

INSTALLATION

Note the following items, and install in the reverse order of removal.

CAUTION:
- **Apply anticorrosive agent onto the mounting surface.**
- **Check front door open/close, lock/unlock operation after installation.**
- **Check door hinge rotating part for poor lubrication. If necessary, apply body grease.**
- **After installation, perform the fitting adjustment. Refer to DLK-118, "DOOR ASSEMBLY : Adjustment".**
- **After installation, apply touch-up paint (the body color) onto the head of door hinge mounting nuts.**

DOOR CHECK LINK

DOOR CHECK LINK : Removal and Installation

INFOID:0000000005948983

REMOVAL

1. Fully close the front door window.
2. Remove front door finisher. Refer to INT-14, "Removal and Installation".
3. Remove sealing screen (lower). (Without door speaker)

4. Remove front door speaker mounting bolts.
5. Disconnect connector and remove front door speaker.
6. Remove mounting bolts of door check link on the vehicle.
7. Remove mounting bolts of door check link on door panel.
8. Take door check link out from the hole of door panel.

INSTALLATION

Note the following item, and install in the reverse order of removal.

CAUTION:

Check front door open/close operation after installation.

REAR DOOR

Exploded View

INFOID:0000000005948984

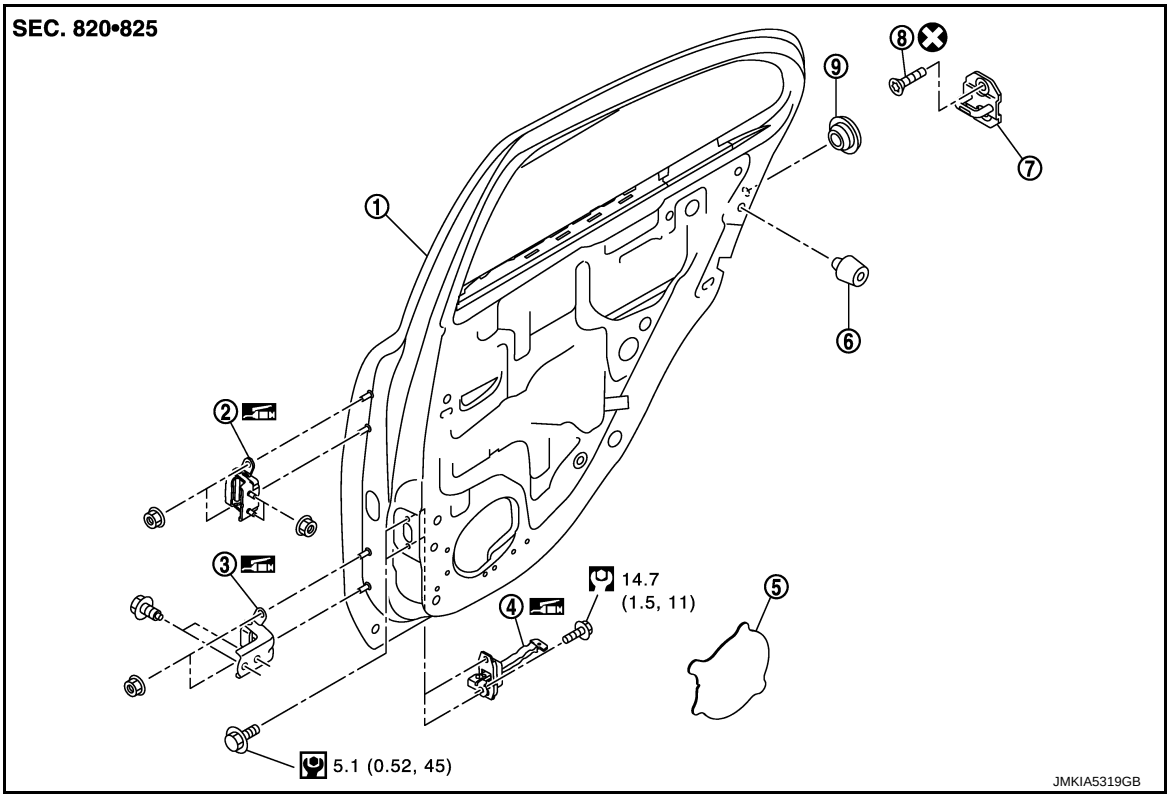

1.	Rear door panel	2.	Door hinge (upper)	3.	Door hinge (lower)
4.	Door check link	5.	Sealing screen (lower)	6.	Bumper rubber
7.	Door striker	8.	TORX bolt	9.	Grommet

Refer to GI-4, "Components" for symbols in the figure.

DOOR ASSEMBLY

DOOR ASSEMBLY : Removal and Installation

INFOID:0000000005948985

CAUTION:
- **Perform work with 2 workers, because of it's heavy weight.**
- **When removing and installing rear door assembly, support door with a jack and shop cloth to protect door and body.**

REMOVAL

1. Remove rear door harness grommet, and then pull out door harness from the vehicle.
2. Disconnect rear door harness connector.
3. Remove mounting bolts of door check link on the vehicle.
4. Remove door hinge mounting nuts (door side), and then remove rear door assembly.

INSTALLATION

Note the following items, and install in the reverse order of removal.

CAUTION:
- **Apply anticorrosive agent onto the mounting surface.**
- **Check rear door open/close, lock/unlock operation after installation.**
- **Check door hinge rotating part for poor lubrication. If necessary, apply body grease.**
- **After installation, perform the fitting adjustment. Refer to DLK-122, "DOOR ASSEMBLY : Adjustment".**
- **After installation, apply touch-up paint (the body color) onto the head of door hinge mounting nuts.**

DOOR ASSEMBLY : Adjustment

INFOID:0000000005948986

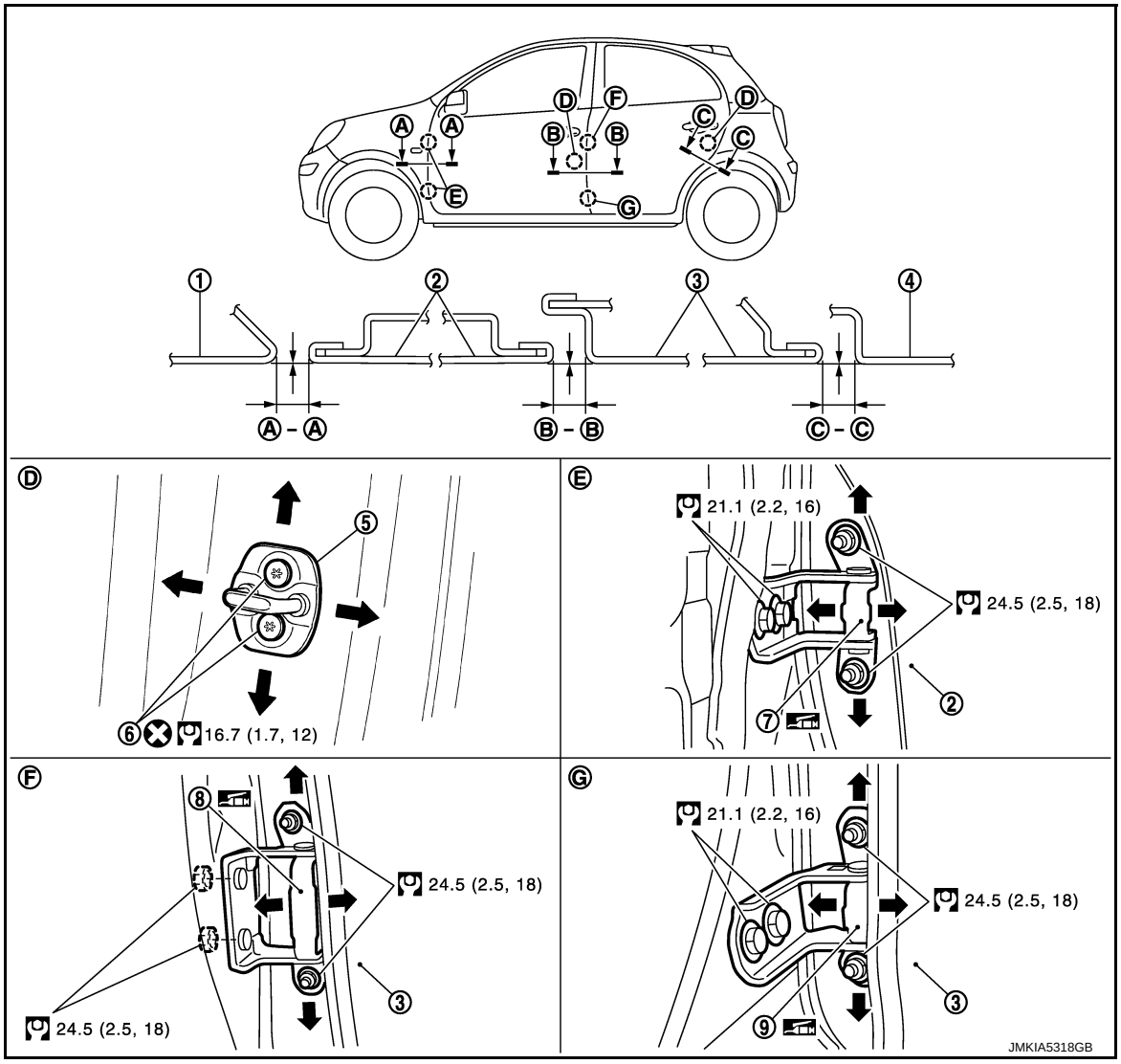

1. Front fender
2. Front door
3. Rear door
4. Body side outer
5. Door striker
6. TORX bolt
7. Front door hinge
8. Rear door hinge (upper)
9. Rear door hinge (lower)

Refer to GI-4, "Components" for symbols in the figure.

Check the clearance and surface height between rear door and each part by visually and touching.
If the clearance and the surface height are out of specification, adjust them according to the procedures shown below.

Unit: mm (in)

Portion		Clearance	Surface height
Front door – Rear door	B – B	3.7 – 5.7 (0.146 – 0.224)	-1.0 – 1.0 (-0.039 – 0.039)
Rear door – Body side outer	C – C	3.3 – 5.3 (0.130 – 0.209)	-1.0 – 1.0 (-0.039 – 0.039)

1. Remove center pillar garnish (lower). Refer to INT-23, "CENTER PILLAR LOWER GARNISH : Removal and Installation".
2. Loosen door hinge mounting nuts on door side.
3. Adjust the surface height of rear door according to the fitting standard dimension.
4. Temporarily tighten door hinge mounting nuts on door side.
5. Loosen door hinge mounting nuts and bolts on body side.

6. Raise rear door at rear end to adjust clearance of rear door according to the fitting standard dimension.
7. After adjustment tighten bolts and nuts to the specified torque.
   CAUTION:
   - **After installation, apply touch-up paint (the body color) onto the head of hinge mounting bolts and nuts.**
   - **Check door hinge rotating part for poor lubrication. If necessary, apply body grease.**
8. Install center pillar garnish (lower). Refer to INT-23, "CENTER PILLAR LOWER GARNISH : Removal and Installation".

DOOR STRIKER ADJUSTMENT

Adjust door striker so that it becomes parallel with door lock insertion direction.

DOOR STRIKER

DOOR STRIKER : Removal and Installation

INFOID:0000000005948988

REMOVAL

Remove TORX bolts, and then remove door striker.

INSTALLATION

Note the following items, and install in the reverse order of removal.

CAUTION:
- **Check rear door open/close, lock/unlock operation after installation.**
- **After installation, be sure to perform the fitting adjustment. Refer to DLK-122, "DOOR ASSEMBLY : Adjustment".**

DOOR HINGE

DOOR HINGE : Removal and Installation

INFOID:0000000005948990

CAUTION:
- **Perform work with 2 workers, because of it's heavy weight.**
- **When removing and installing rear door assembly, support door with a jack and shop cloth to protect door and body.**

REMOVAL

1. Remove rear door assembly. Refer to DLK-121, "DOOR ASSEMBLY : Removal and Installation".
2. Remove center pillar lower garnish. Refer to INT-23, "CENTER PILLAR LOWER GARNISH : Removal and Installation".
3. Remove rear door hinge mounting bolts and nuts (body side), and then remove door hinge.

INSTALLATION

Note the following items, and install in the reverse order of removal.

CAUTION:
- **Apply anticorrosive agent onto the mounting surface.**
- **Check rear door open/close operation after installation.**
- **Check door hinge rotating part for poor lubrication. If necessary, apply body grease.**
- **When removing and installing rear door assembly, perform the fitting adjustment. Refer to DLK-122, "DOOR ASSEMBLY : Adjustment".**
- **After installing, apply the touch-up paint (the body color) onto the head of door hinge mounting nuts.**

DOOR CHECK LINK

DOOR CHECK LINK : Removal and Installation

INFOID:0000000005948992

REMOVAL

1. Fully close the rear door window.
2. Remove rear door finisher. Refer to INT-18, "Removal and Installation".
3. Remove sealing screen (lower). (Without door speaker)
4. Remove rear door speaker mounting bolts.
5. Disconnect connector and remove rear door speaker.

6. Remove mounting bolts of the check link on the vehicle.
7. Remove mounting bolts of the check link on door panel.
8. Take door check link out from the hole of door panel.

INSTALLATION

Note the following item, and install in the reverse order of removal.

CAUTION:

Check rear door open/close operation after installation.

BACK DOOR

Exploded View

INFOID:0000000006054230

REMOVAL

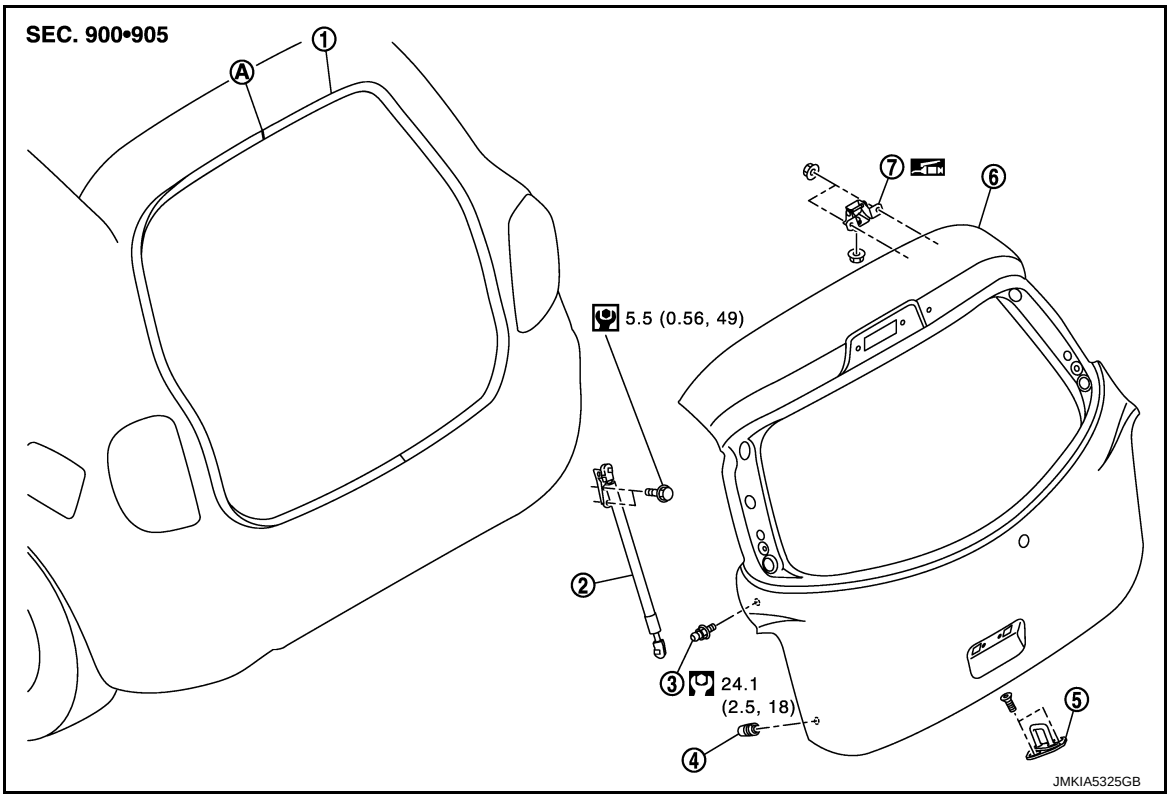

1. Back door weather-strip
2. Back door stay
3. Stud ball
4. Bumper rubber
5. Back door striker
6. Back door assembly
7. Back door hinge

A : Center mark

Refer to GI-4, "Components" for symbols in the figure.

BACK DOOR ASSEMBLY

BACK DOOR ASSEMBLY : Removal and Installation

INFOID:0000000006054231

CAUTION:
- **Operate with two workers, because of its heavy weight.**
- **Use protective tape or shop cloth to protect from damage during removal and installation.**

REMOVAL

1. Remove high-mounted stop lamp. Refer to EXL-101, "Removal and Installation".
2. Remove grommet (2), and then disconnect washer tube (A).
3. Remove grommet (3), and then pull out washer tube from back door assembly (1).

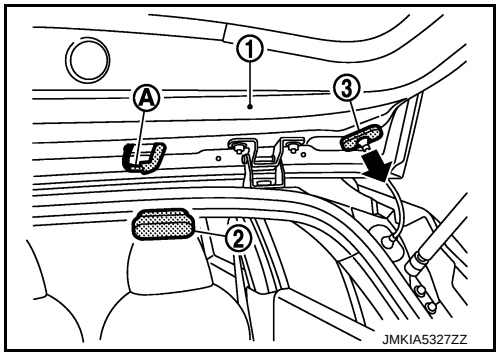

4. Disconnect rear window defogger connector (LH), and then remove terminal from connector.
5. Remove back door finisher. Refer to INT-33, "Removal and Installation".
6. Remove ground mounting bolt (A).

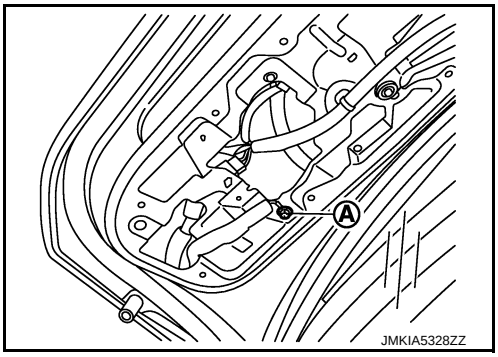

7. Disconnect connectors of back door harness.
8. Remove harness grommet (1), and then pull out harness from back door assembly (2).

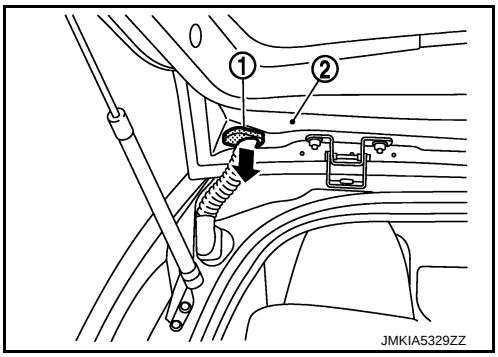

9. Support back door lock with the proper material to prevent it from falling.

   WARNING:
   Bodily injury may occur if no supporting rod is holding the back door open when removing the back door stay.
10. Remove back door stay (back door side). Refer to DLK-129, "BACK DOOR STAY : Removal and Installation".
11. Remove back door hinge mounting bolts on back door and remove back door assembly.

INSTALLATION

Note the following items, and install in the reverse order of removal.

CAUTION:

- **Check back door hinge rotating part for poor lubrication. If necessary, apply body grease.**
- **After installation, check back door open/close, lock/unlock operation.**
- **After installation, perform the fitting adjustment. Refer to DLK-127, "BACK DOOR ASSEMBLY : Adjustment".**

BACK DOOR ASSEMBLY : Adjustment

INFOID:0000000006054232

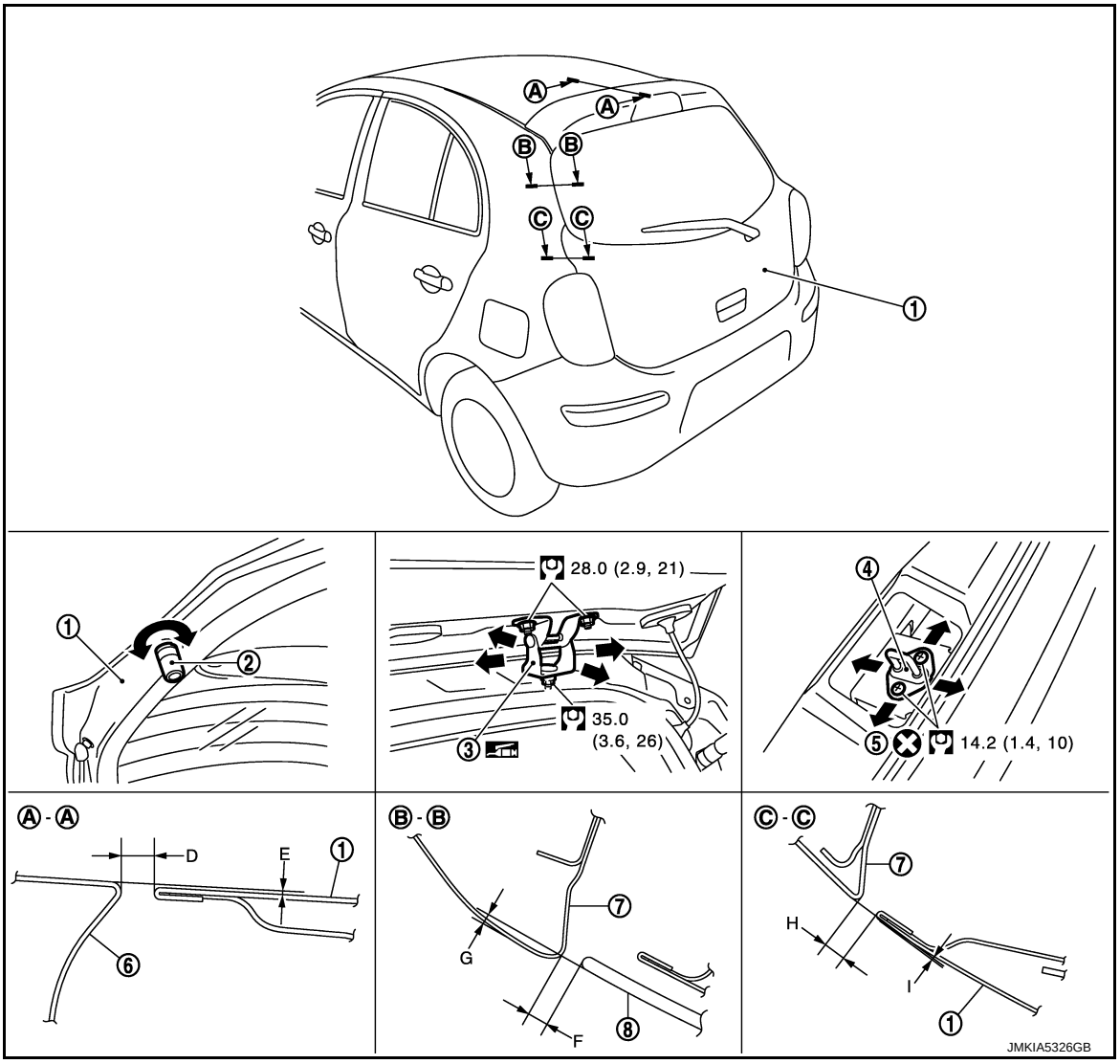

1. Back door assembly
2. Bumper rubber
3. Back door hinge
4. Back door striker
5. TORX bolt
6. Roof
7. Body side outer panel
8. Back door glass

Refer to GI-4, "Components" for symbols in the figure.

Check the clearance and the surface height between back door and each part by seeing and touching.
If the clearance and the surface height are out of specification, adjust them according to the procedures shown below.

Unit: mm (in)

Portion				Standard	Difference (LH/RH, MAX)
Roof – Back door	A – A	D	Clearance	5.0 – 7.0 (0.197 – 0.276)	—
		E	Surface height	(-1.5) – (+0.5) [(-0.059) – (+0.020)]	—
Body side outer panel – Back door glass	B – B	F	Clearance	2.4 – 7.0 (0.094 – 0.276)	<3.0 (0.118)
		G	Surface height	(-0.5) – (-0.4) [(-0.197) – (-0.016)]	—

Portion				Standard	Difference (LH/RH, MAX)
Body side outer panel – Back door	C – C	H	Clearance	3.6 – 6.0 (0.142 – 0.236)	<1.5 (0.059)
		I	Surface height	(-1.5) – (+0.5) [(0.059) – (+0.059)]	—

1. Remove back door weather-strip. Refer to DLK-129, "BACK DOOR WEATHER-STRIP : Removal and Installation".
2. Remove the luggage side upper finisher. Refer to INT-31, "LUGGAGE SIDE UPPER FINISHER : Removal and Installation".
3. Using remover tool, remove the headlining clip at the rear side of the headlining.
4. Remove the rear side of the headlining.
5. Install back door weather-strip. Refer to DLK-129, "BACK DOOR WEATHER-STRIP : Removal and Installation".
6. Loosen the back door striker mounting bolts, back door hinge mounting nuts and bumper rubber.
7. Adjust back door using back door striker, back door hinge, and bumper rubber to the specified value, as shown in the following table.
8. After adjustment tighten back door striker and back door hinge to the specified torque.

BACK DOOR STRIKER ADJUSTMENT

Adjust back door striker so that it becomes parallel with back door lock insertion direction.

BACK DOOR STRIKER

BACK DOOR STRIKER : Removal and Installation

INFOID:0000000006054234

REMOVAL

1. Remove luggage rear plate. Refer to INT-30, "LUGGAGE REAR PLATE : Removal and Installation".
2. Remove mounting bolts, and then remove back door striker.

INSTALLATION

Note the following items, and install in the reverse order of removal.

CAUTION:

- **After installation, check back door open/close, lock/unlock operation.**
- **After installation, perform the fitting adjustment. Refer to DLK-127, "BACK DOOR ASSEMBLY : Adjustment".**

BACK DOOR HINGE

BACK DOOR HINGE : Removal and Installation

INFOID:0000000006054236

REMOVAL

1. Remove back door assembly. Refer to DLK-125, "BACK DOOR ASSEMBLY : Removal and Installation".
2. Remove back door weather-strip. Refer to DLK-129, "BACK DOOR WEATHER-STRIP : Removal and Installation".
3. Remove luggage side upper finisher. Refer to INT-31, "LUGGAGE SIDE UPPER FINISHER : Removal and Installation".
4. Using a remover tool, remove headlining clip at the rear side of headlining, and then remove rear side of headlining. Refer to INT-28, "Exploded View".
5. Remove back door hinge mounting nuts (body side), and then remove back door hinge.

INSTALLATION

Note the following items, and install in the reverse order of removal.

CAUTION:

- **Check back door hinge rotating part for poor lubrication. If necessary, apply body grease.**
- **After installation, check back door open/close, lock/unlock operation.**
- **After installation, perform the fitting adjustment. Refer to DLK-127, "BACK DOOR ASSEMBLY : Adjustment".**

BACK DOOR STAY

BACK DOOR STAY : Removal and Installation

INFOID:0000000006056528

REMOVAL

1. Support the back door with the suitable material to prevent it from falling.
   WARNING:
   Bodily injury may occur if no supporting rod is holding the back door open when removing the back door stay.
2. Remove the back door stay mounting bolt (body side).
3. Remove the metal clip (3) located on the connection between the back door stay (1) and the stud ball (2) (back door side) by using a flat-bladed screwdriver (A).
   CAUTION:
   Be careful not to damage painted surface.

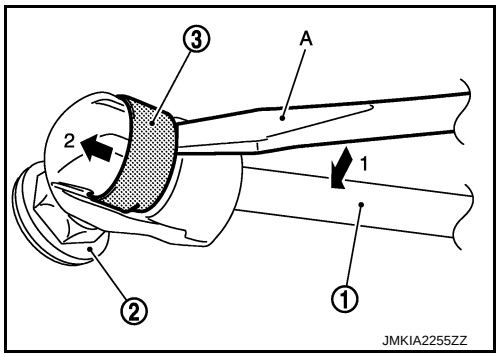

INSTALLATION

Note the following items, and install in the reverse order of removal.

CAUTION:

- **Apply anticorrosive agent onto the mounting surface.**
- **After installation, check back door open/close, lock/unlock operation.**

BACK DOOR STAY : Disposal

INFOID:0000000006056529

1. Fix back door stay (1) using a vise (C).
2. Using hacksaw (A) slowly make 2 holes in the back door stay, in numerical order as shown in the figure.
   CAUTION:
   - **When cutting a hole on back door stay, always cover a hacksaw using a shop cloth (B) to avoid scattering metal fragments or oil.**
   - **Wear eye protection (safety glasses).**
   - **Wear gloves.**

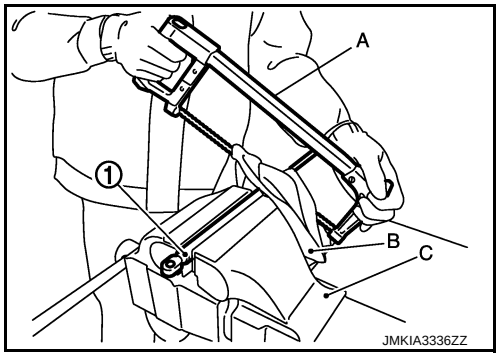

A: 20 mm (0.787 in)
B: Cut at the groove

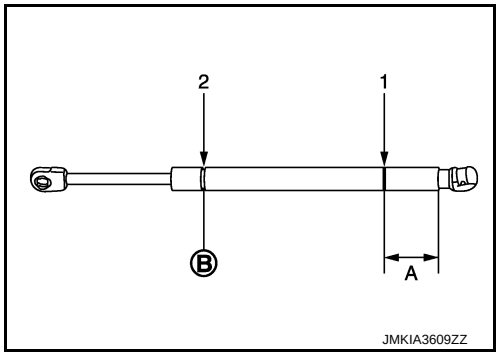

BACK DOOR WEATHER-STRIP

BACK DOOR WEATHER-STRIP : Removal and Installation

INFOID:0000000006054240

REMOVAL

Pull up and remove engagement with body from weather-strip joint.

CAUTION:

Never pull strongly on weather-strip.

INSTALLATION

1. Working from the upper section, align weather-strip center mark with vehicle center position mark and install weather-strip onto the vehicle.
2. Pull weather-strip gently to ensure that there is no loose section.
   NOTE:
   Check that weather-strip fits tightly in each corner and luggage rear plate.

HOOD LOCK

Exploded View

INFOID:0000000005949006

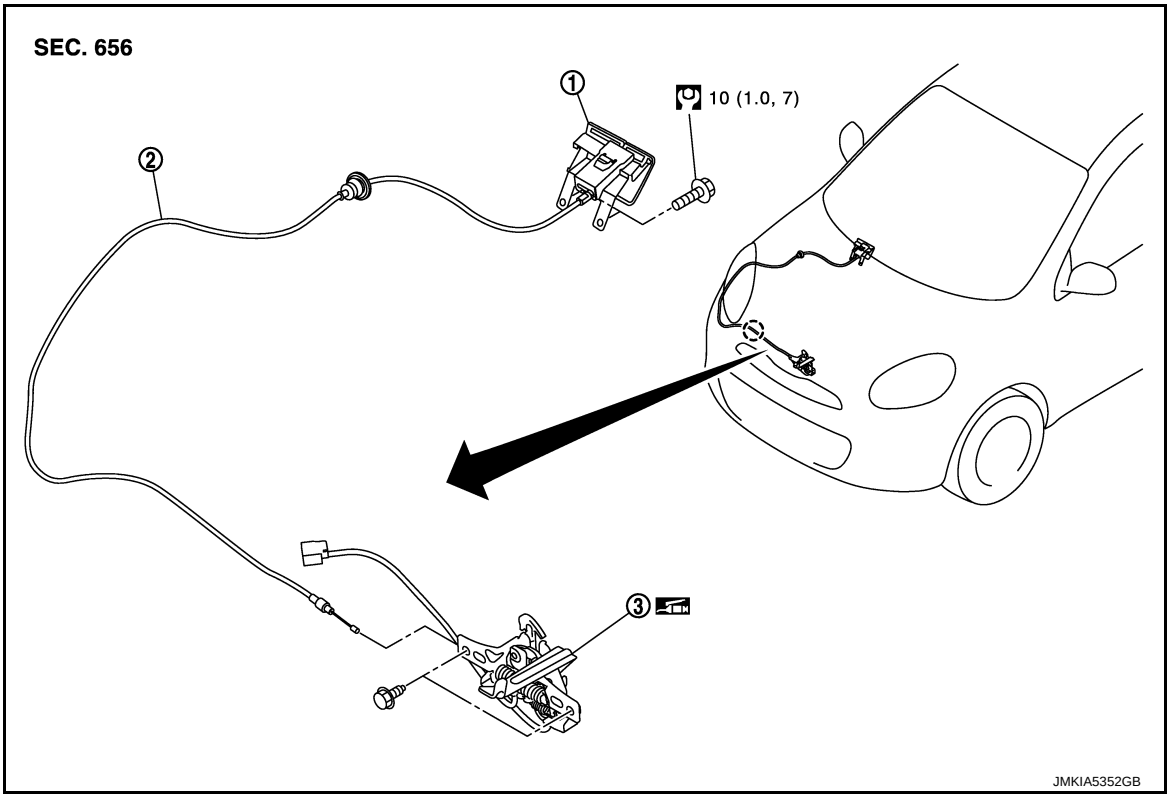

1. Hood lock opener lever
2. Hood lock control cable
3. Hood lock assembly

: Clip

Refer to GI-4, "Components" for symbols in the figure.

Removal and Installation

INFOID:0000000005949007

REMOVAL

1. Remove remove hood lock assembly mounting bolts, and then remove hood lock assembly.
2. Disconnect hood lock cable from hood lock assembly.
3. Remove hood lock cable clip.
4. Remove fender protector (RH). Refer to EXT-17, "FENDER PROTECTOR : Removal and Installation".
5. Remove hood lock opener lever.
6. Disconnect hood lock cable from hood lock opener lever.
7. Remove grommet on the lower dash, and pull the hood lock control cable toward the passenger compartment.
   CAUTION:
   While pulling, never to damage (peeling) the outside of hood lock control cable.

INSTALLATION

Note the following items, and install in the reverse order of removal.

CAUTION:

- **Never to bend cable too much, keeping the radius 100 mm (3.937 in) or more.**

- **Check that cable is not offset from the positioning grommet, and apply the sealant to the grommet (at * mark) properly.**

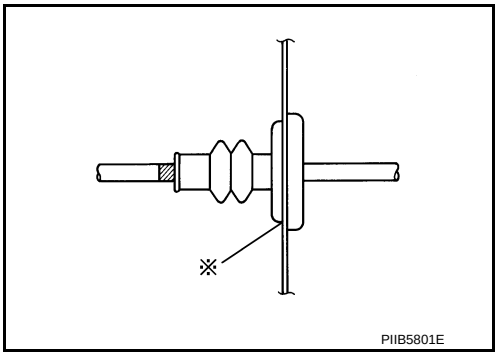

- **Check that hood lock control cable is properly engaged with hood lock.**
- **After installation, perform hood fitting adjustment. Refer to DLK-112, "HOOD ASSEMBLY : Adjustment".**
- **After installation, perform hood lock control inspection. Refer to DLK-132, "Inspection".**

Inspection

INFOID:0000000005949008

NOTE:
If the hood lock cable is bent or deformed, replace it.

1. Check that secondary latch is properly engaged with secondary striker [6.8 mm (0.268 in)] by hood weight.
2. While operating hood opener, carefully check that the front end of hood is raised by approximately 20.0 mm (0.787 in). Also check that hood opener returns to the original position.
3. Check that hood opener operating is condition 49 N (5.0 kg, 11.0 lb) or below.
4. Install so that static closing face of hood is 94 – 490 N·m (9.6 – 50.0 kg-m, 69 – 361 ft – lb).
   NOTE:
   - Exert vertical force on right side and left side of hood lock.
   - Never press simultaneously both sides.
5. Check the hood lock lubrication condition. If necessary, apply body grease to hood lock.

FRONT DOOR LOCK

Exploded View

INFOID:0000000005949009

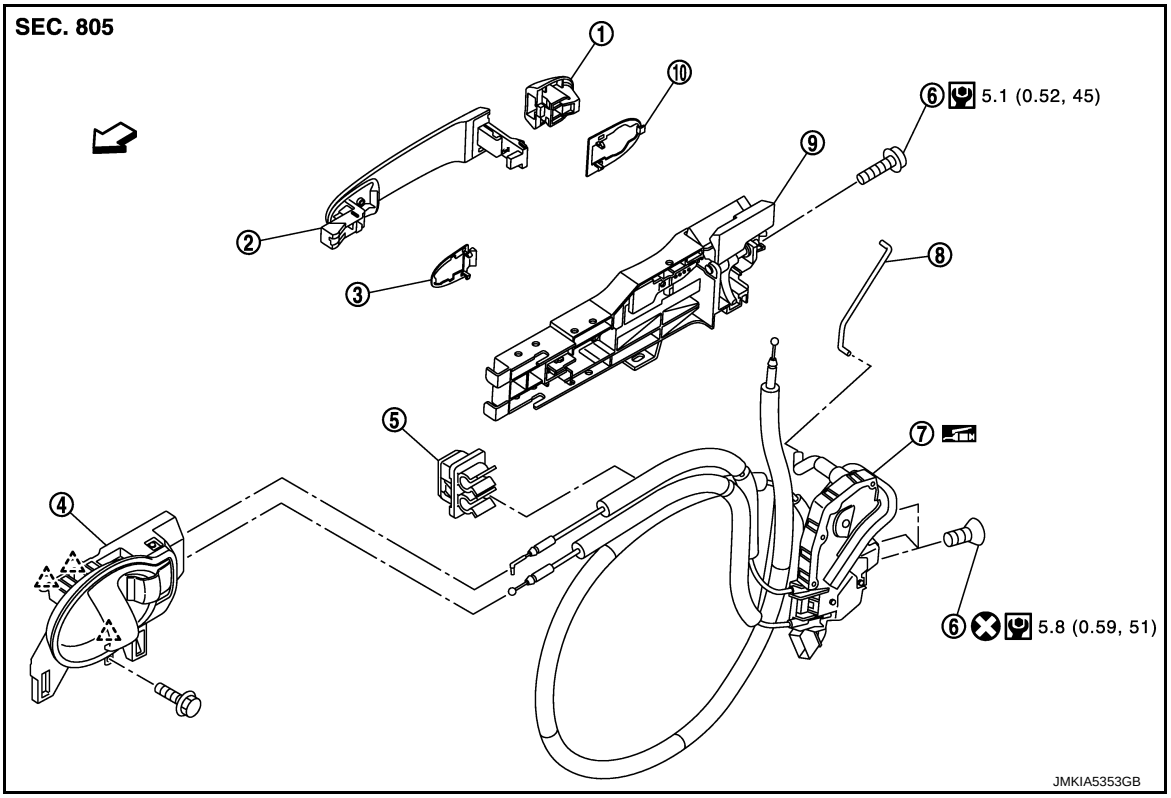

1.	Door key cylinder assembly (driver side) Outside handle escutcheon (passenger side)	2.	Outside handle	3.	Front gasket
4.	Inside handle	5.	Clip	6.	TORX bolt
7.	Door lock assembly	8.	Key rod (driver side)	9.	Outside handle bracket
10.	Rear gasket				

: Pawl

: Vehicle front

Refer to GI-4, "Components" for symbols in the figure.

DOOR LOCK

DOOR LOCK : Removal and Installation

INFOID:0000000005949010

REMOVAL

1. Remove outside handle. Refer to DLK-134, "OUTSIDE HANDLE : Removal and Installation".
2. Remove inside handle. Refer to DLK-134, "INSIDE HANDLE : Removal and Installation".
3. Disconnect door lock actuator connector.
4. Remove front door lower sash (rear). Refer to GW-18, "Exploded View".
5. Remove door lock assembly TORX bolts, and then remove door lock assembly.

INSTALLATION

Install in the reverse order of removal.

CAUTION:

- **Check door open/close, lock/unlock operation after installation.**
- **Check door lock cable is properly engaged with outside handle bracket.**

INSIDE HANDLE

INSIDE HANDLE : Removal and Installation

INFOID:0000000005949012

REMOVAL

1. Remove front door finisher. Refer to INT-14, "Removal and Installation".
2. Remove upper side of sealing screen.
   NOTE:
   Cut the butyl tape so that some parts of the butyl tape do not remain on the sealing screen, if the sealing screen is reused.
3. Remove inside handle mounting bolts, slide handle toward rear of vehicle, disengage handle from door panel, and remove inside handle.
4. Remove the lock and inside handle cable from inside handle.

INSTALLATION

Install in the reverse order of removal.

CAUTION:

Check door open/close, lock/unlock operation after installation.

OUTSIDE HANDLE

OUTSIDE HANDLE : Removal and Installation

INFOID:0000000005949014

REMOVAL

1. Fully close the front door glass.
2. Remove front door finisher. Refer to INT-14, "Removal and Installation".
3. Remove sealing screen.
   NOTE:
   Cut the butyl-tape so that some parts of the butyl-tape do not remain on the sealing screen, if the sealing screen is reused.
4. Disconnect key rod (driver side).
5. Disconnect door antenna and door request switch connector and remove harness clamp (with Intelligent Key system) on outside handle bracket.
6. Remove door side grommet, and loosen TORX bolt from grommet hole.

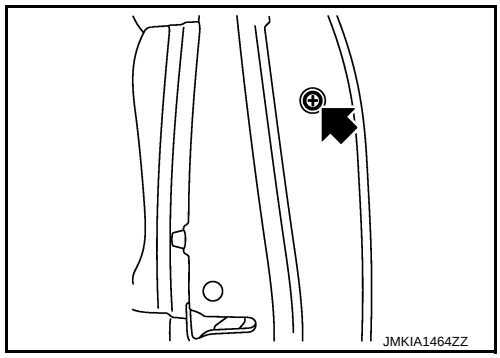

7. While pulling outside handle (1), remove door key cylinder assembly (diver side) (2) or outside handle escutcheon (passenger side) (2).

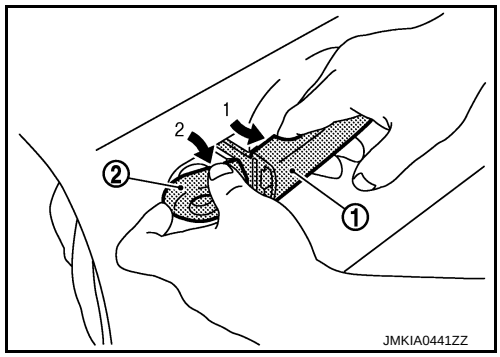

8. While pulling outside handle (1), slide toward rear of vehicle to remove outside handle.

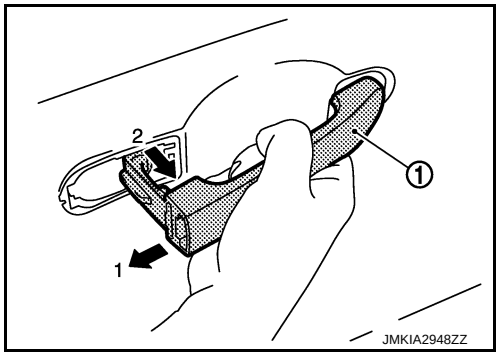

9. Remove front gasket and rear gasket.
10. While pulling outside handle bracket, slide toward rear of vehicle to remove outside handle bracket.
11. Reach in to separate outside handle cable connection on outside handle bracket.

INSTALLATION

Note the following items, and install in the reverse order of removal.

CAUTION:

- **When installing key rod, rotate key rod holder until a click is felt.**
- **Check that door lock cables are normally engaged with inside handle and outside handle.**
- **After installation, check door open/close, and lock/unlock operation.**

REAR DOOR LOCK

Exploded View

INFOID:0000000005949015

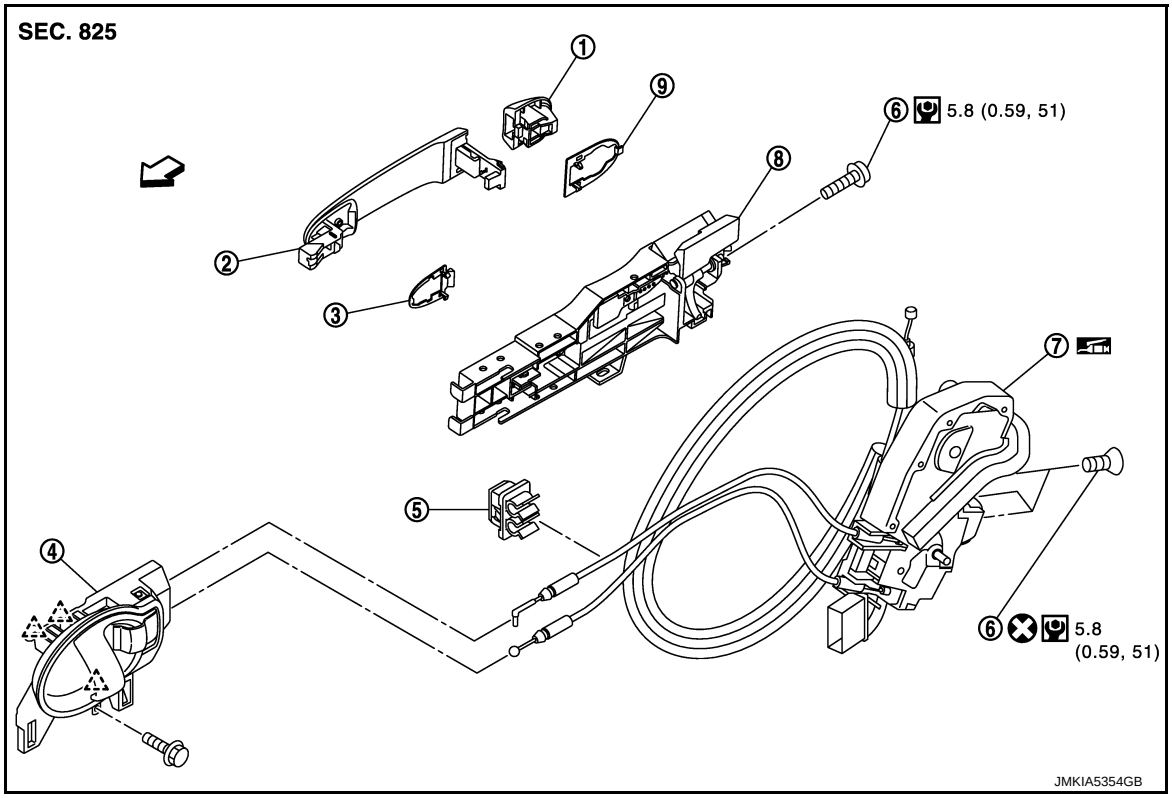

1.	Outside handle escutcheon	2.	Outside handle	3.	Front gasket
4.	Inside handle	5.	Clip	6.	TORX bolt
7.	Door lock assembly	8.	Outside handle bracket	9.	Rear gasket

: Pawl

: Vehicle front

Refer to GI-4, "Components" for symbols in the figure.

DOOR LOCK

DOOR LOCK : Removal and Installation

INFOID:0000000005949016

REMOVAL

1. Remove outside handle. Refer to DLK-137, "OUTSIDE HANDLE : Removal and Installation".
2. Remove inside handle. Refer to DLK-137, "INSIDE HANDLE : Removal and Installation".
3. Remove door lock assembly TORX bolts.
4. Disconnect door lock actuator connector, and then remove door lock assembly.

INSTALLATION

Note the following items, and install in the reverse order of removal.

CAUTION:

- **Check door open/close, lock/unlock operation after installation.**
- **Check door lock cable is properly engaged with outside handle bracket.**

INSIDE HANDLE

INSIDE HANDLE : Removal and Installation

INFOID:0000000005949018

REMOVAL

1. Remove rear door finisher. Refer to INT-18, "Removal and Installation".
2. Remove upper side of sealing screen.
   NOTE:
   Cut the butyl tape so that some parts of the butyl tape do not remain on the sealing screen, if the sealing screen is reused.
3. Remove inside handle mounting bolts, slide handle toward rear of vehicle, disengage handle from door panel, and remove inside handle.
4. Remove the lock and inside handle cable from inside handle.

INSTALLATION

Note the following item, and install in the reverse order of removal.

CAUTION:

Check door open/close, lock/unlock operation after installation.

OUTSIDE HANDLE

OUTSIDE HANDLE : Removal and Installation

INFOID:0000000005949020

REMOVAL

1. Fully close rear door glass.
2. Remove rear door finisher. Refer to INT-18, "Removal and Installation".
3. Remove sealing screen.
   NOTE:
   Cut the butyl-tape so that some parts of the butyl-tape do not remain on the sealing screen, if the sealing screen is reused.
4. Remove door side grommet, and loosen TORX bolt from grommet hole.

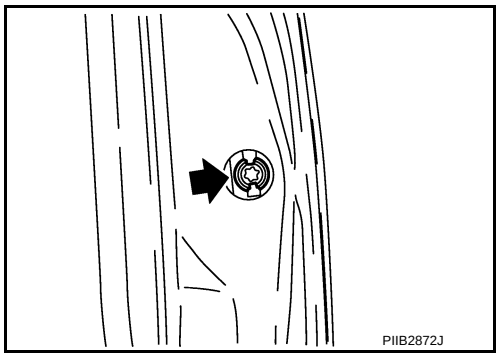

5. While pulling outside handle (1), remove outside handle escutcheon (2).

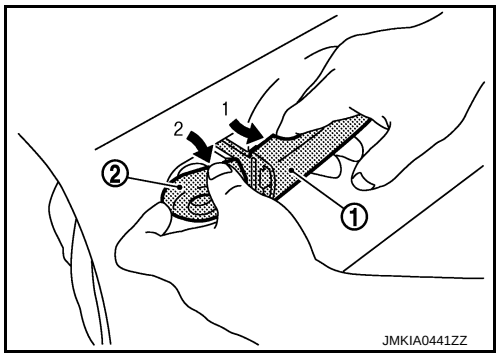

6. While pulling outside handle (1), slide toward rear of vehicle to remove outside handle.

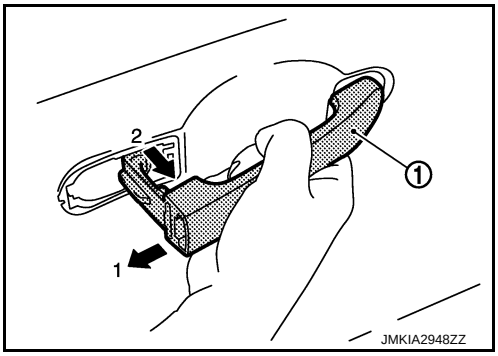

7. Remove front gasket and rear gasket.
8. While pulling outside handle bracket, slide toward rear of vehicle to remove outside handle bracket.
9. Reach in to separate outside handle cable connection on outside handle bracket.

INSTALLATION

Note the following items, and install in the reverse order of removal.

CAUTION:

- **Check door open/close, lock/unlock operation after installation.**
- **Check door lock cable is properly engaged with outside handle bracket.**

BACK DOOR LOCK

Exploded View

INFOID:0000000006054241

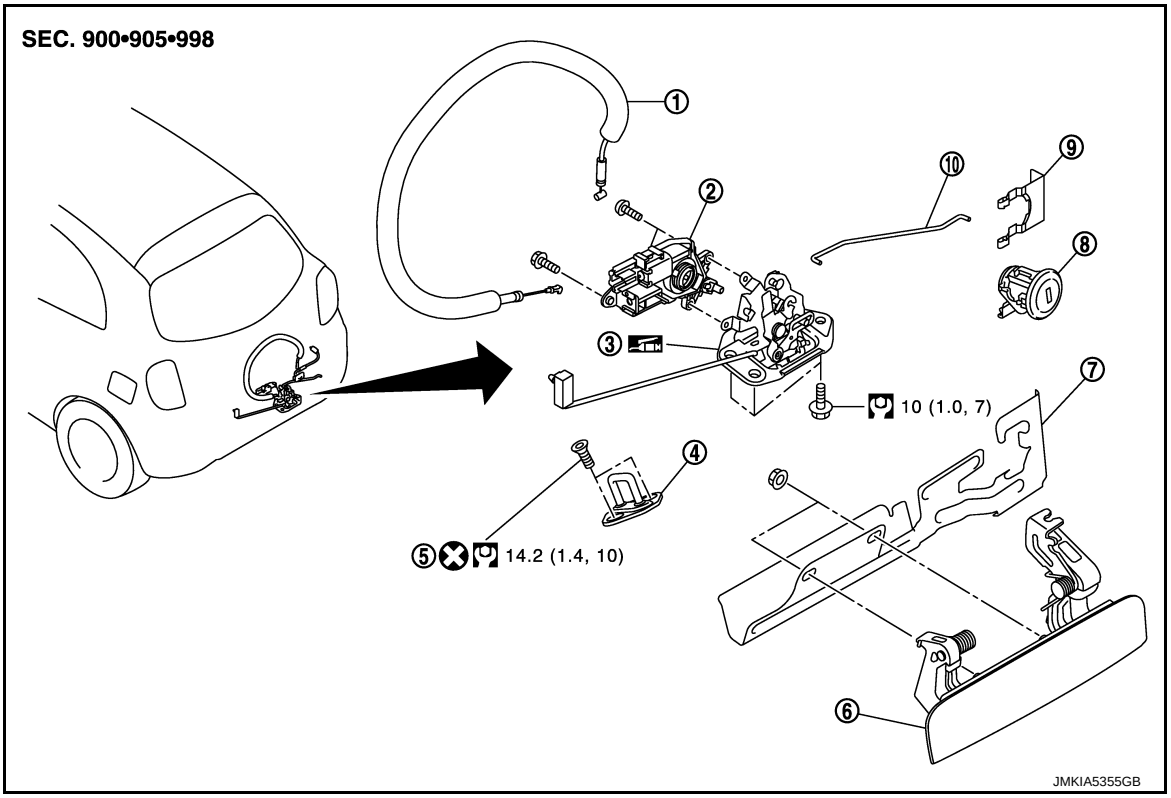

1. Back door opener cable
2. Back door lock actuator
3. Back door lock assembly
4. Back door striker
5. TORX bolt
6. Outside handle
7. Back door handle bracket
8. Back door lock cylinder
9. Retainer clip
10. Key rod

Refer to GI-4, "Components" for symbols in the figure.

BACK DOOR STRIKER

BACK DOOR STRIKER : Removal and Installation

INFOID:0000000006054242

REMOVAL

1. Remove the luggage rear plate. Refer to INT-30, "LUGGAGE REAR PLATE : Removal and Installation".
2. Remove the back door striker.

INSTALLATION

Note the following items, and install in the reverse order of removal.

CAUTION:

- **After installation, perform the back door fitting adjustment. Refer to DLK-127, "BACK DOOR ASSEMBLY : Adjustment".**
- **After installation, check back door open/close, and lock/unlock operation.**

DOOR LOCK

DOOR LOCK : Removal and Installation

INFOID:0000000006054244

REMOVAL

1. Remove the back door finisher. Refer to INT-33, "Removal and Installation".

2. Remove back door lock switch harness connector clip from back door panel, and then disconnect back door lock switch harness connector.
3. Disconnect back door lock actuator connector.
4. Disconnect key rod.
5. Remove back door lock assembly mounting bolts.
6. Disconnect back door opener cable, and remove back door lock assembly.
   CAUTION:
   Never damage the outside handle cable.

INSTALLATION

Note the following item, and install in the reverse order of removal.

CAUTION:

After installation, check back door open/close, and lock/unlock operation.

OUTSIDE HANDLE

OUTSIDE HANDLE : Removal and Installation

INFOID:0000000006054246

REMOVAL

1. Remove the back door finisher. INT-33, "Removal and Installation".
2. Remove back door opener cable from outside handle.
   CAUTION:
   Never damage the outside handle cable.
3. Remove the mounting nuts, and then remove the outside handle assembly.

INSTALLATION

Note the following items, and install in the reverse order of removal.

CAUTION:

- **Check that back door lock cables are normally engaged with outside handle.**
- **After installation, check back door open/close, and lock/unlock operation.**

EMERGENCY LEVER

EMERGENCY LEVER : Unlock procedures

INFOID:0000000006054247

UNLOCK PROCEDURES

NOTE:

If back door lock cannot be unlocked due to a malfunction or battery discharge, follow the procedures to unlock back door.

1. Remove the back door finisher. Refer to INT-33, "Removal and Installation".
2. From inside the vehicle, rotate emergency lever toward lower direction and unlock.

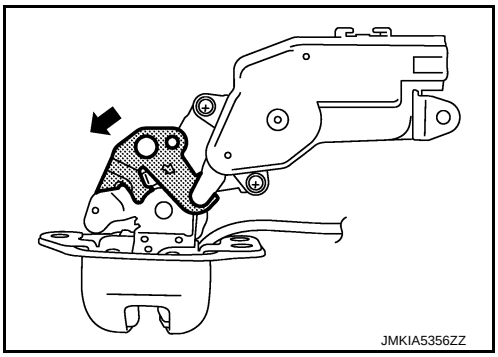

FUEL FILLER LID OPENER

Exploded View

INFOID:0000000005949026

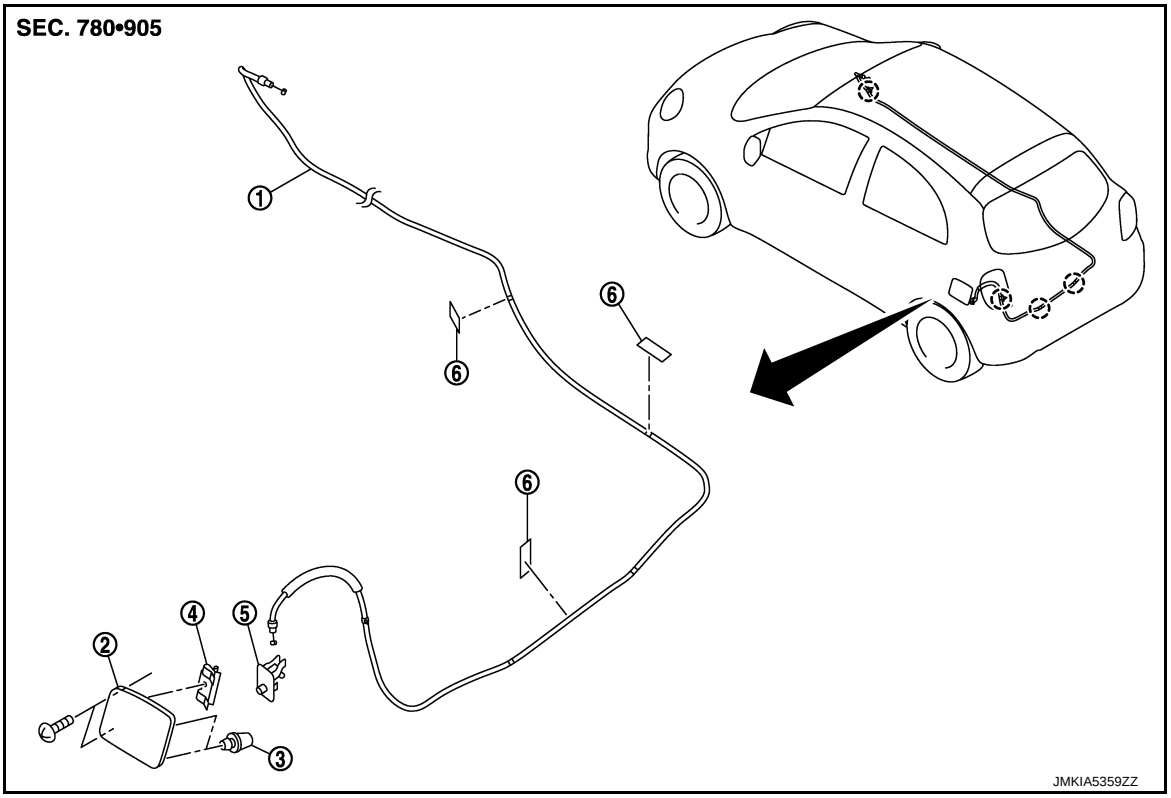

1. Fuel filler lid opener cable
2. Fuel filler lid assembly
3. Bumper rubber
4. Spring
5. Fuel filler lid lock assembly
6. Cable protector

: Clip

Removal and Installation

INFOID:0000000005949027

REMOVAL

Fuel Filler Lid

1. Fully open fuel filler lid.
2. Remove mounting screws, and then remove fuel filler lid.

Fuel Filler Lid Opener Cable

1. Fully open fuel filler lid.
2. Remove front kicking plate inner (RH) and rear kicking plate inner (RH). INT-22, "KICKING PLATE INNER : Removal and Installation".
3. Remove dash side finisher (RH). Refer to INT-21, "DASH SIDE FINISHER : Removal and Installation".
4. Remove center pillar lower garnish (RH). Refer to INT-23, "CENTER PILLAR LOWER GARNISH : Removal and Installation".
5. Remove luggage side lower front finisher (RH). Refer to INT-31, "LUGGAGE SIDE LOWER FRONT FINISHER : Removal and Installation".
6. Remove luggage side lower finisher (LH and RH). Refer to INT-32, "LUGGAGE SIDE LOWER FINISHER : Removal and Installation".
7. Remove mounting bolts, and then remove fuel filler lid opener handle.
8. Remove fuel filler lid opener cable from fuel filler lid opener handle.

9. Disengage pawls (A) of fuel filler lid lock assembly (1) and push out fuel filler lid lock assembly toward the vehicle outside.
   CAUTION:
   Be careful not to damage packing (2) when removing.
10. Remove fuel filler lid opener cable (3) from fuel filler lid lock assembly.

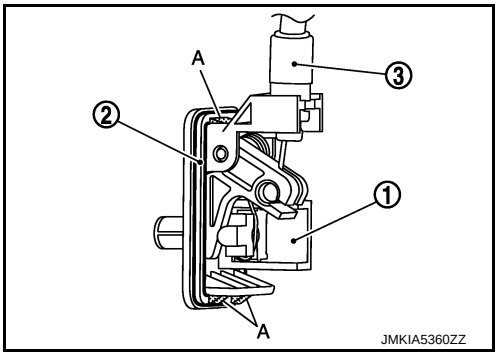

11. Pull up floor trim. Refer to INT-32, "LUGGAGE SIDE LOWER FINISHER : Removal and Installation".
12. Remove fuel filler lid opener cable mounting clips.
13. Remove fuel filler lid opener cable.

INSTALLATION

Note the following items, and install in the reverse order of removal.

CAUTION:

After installation, check fuel filler lid assembly open/close, lock/unlock operation.

DOOR SWITCH

Removal and Installation

INFOID:0000000005949029

REMOVAL

Remove the door switch mounting bolt, and then remove door switch.

INSTALLATION

Install in the reverse order of removal.

INSIDE KEY ANTENNA

INSTRUMENT CENTER

INSTRUMENT CENTER : Removal and Installation

INFOID:0000000005949031

REMOVAL

1. Remove the instrument lower center panel. Refer to IP-13, "Removal and Installation".
2. Remove the inside key antenna (instrument center) mounting screw, and then remove inside key antenna (instrument center).

INSTALLATION

Install in the reverse order of removal.

CONSOLE

CONSOLE : Removal and Installation

INFOID:0000000006057539

REMOVAL

1. Remove the center console assembly. Refer to IP-21, "Removal and Installation".
2. Remove the inside key antenna (console) mounting clip, and then remove inside key antenna (console).

INSTALLATION

Install in the reverse order of removal.

LUGGAGE ROOM

LUGGAGE ROOM : Removal and Installation

INFOID:0000000005949033

REMOVAL

1. Remove the luggage floor spacer front. Refer to INT-26, "Removal and Installation".
2. Remove the inside key antenna (luggage room) mounting clip, and then remove inside key antenna (luggage room).

INSTALLATION

Install in the reverse order of removal.

OUTSIDE KEY ANTENNA

REAR BUMPER

REAR BUMPER : Removal and Installation

INFOID:0000000006057540

REMOVAL

1. Remove the rear bumper. Refer to Dummy cross-reference("XX-XX").
2. Remove the outside key antenna (rear bumper) mounting clips, and then remove outside key antenna (rear bumper).

INSTALLATION

Install in the reverse order of removal.

INTELLIGENT KEY WARNING BUZZER

Removal and Installation

INFOID:0000000005949035

REMOVAL

1. Remove the front bumper. Refer to XX-XX, "*****".
2. Remove the Intelligent Key warning buzzer mounting bolt, and then remove the Intelligent Key warning buzzer.

INSTALLATION

Install in the reverse order of removal.

REMOTE KEYLESS ENTRY RECEIVER

Removal and Installation

INFOID:0000000005949037

REMOVAL

Remove the remote keyless entry receiver mounting bolt, and then remove remote keyless entry receiver.

INSTALLATION

Install in the reverse order of removal.

INTELLIGENT KEY BATTERY

Removal and Installation

INFOID:0000000005949038

1. Release the lock knob at the back of the Intelligent Key and remove the mechanical key.

2. Insert a flat-blade screwdriver (A) wrapped with a cloth into the slit of the corner and twist it to separate the upper part from the lower part.
   CAUTION:
   - **Do not touch the circuit board or battery terminal.**
   - **The key fob is water-resistant. However, if it does get wet, immediately wipe it dry.**

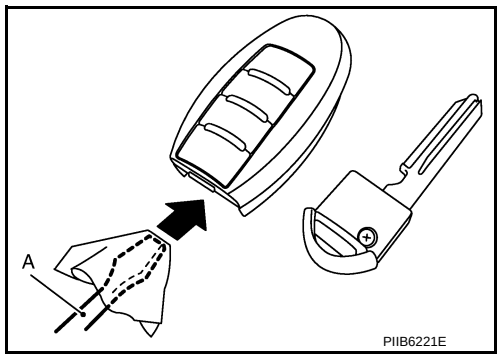

3. Replace the battery with new one.

Battery replacement	**:Coin-type lithium battery (CR2025)**

4. Align the tips of the upper and lower parts, and then push them together until it is securely closed.
   CAUTION:
   - **When replacing battery, keep dirt, grease, and other foreign materials off the electrode contact area.**
   - **After replacing the battery, check that all Intelligent Key functions work normally.**

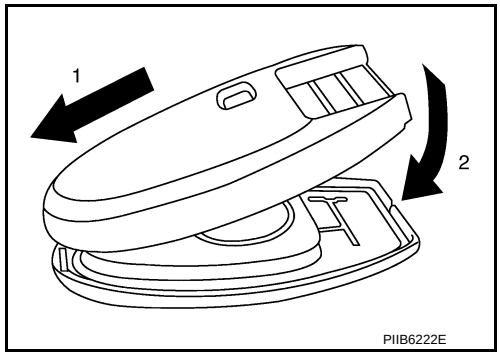

PRECAUTION

PRECAUTIONS

Precaution for Supplemental Restraint System (SRS) "AIR BAG" and "SEAT BELT PRE-TENSIONER"

INFOID:0000000006067022

The Supplemental Restraint System such as “AIR BAG” and “SEAT BELT PRE-TENSIONER”, used along with a front seat belt, helps to reduce the risk or severity of injury to the driver and front passenger for certain types of collision. Information necessary to service the system safely is included in the “SRS AIR BAG” and “SEAT BELT” of this Service Manual.

WARNING:

- **To avoid rendering the SRS inoperative, which could increase the risk of personal injury or death in the event of a collision which would result in air bag inflation, all maintenance must be performed by an authorized NISSAN/INFINITI dealer.**
- **Improper maintenance, including incorrect removal and installation of the SRS, can lead to personal injury caused by unintentional activation of the system. For removal of Spiral Cable and Air Bag Module, see the “SRS AIR BAG”.**
- **Do not use electrical test equipment on any circuit related to the SRS unless instructed to in this Service Manual. SRS wiring harnesses can be identified by yellow and/or orange harnesses or harness connectors.**

PRECAUTIONS WHEN USING POWER TOOLS (AIR OR ELECTRIC) AND HAMMERS

WARNING:

- **When working near the Air Bag Diagnosis Sensor Unit or other Air Bag System sensors with the ignition ON or engine running, DO NOT use air or electric power tools or strike near the sensor(s) with a hammer. Heavy vibration could activate the sensor(s) and deploy the air bag(s), possibly causing serious injury.**
- **When using air or electric power tools or hammers, always switch the ignition OFF, disconnect the battery, and wait at least 3 minutes before performing any service.**

Precaution Necessary for Steering Wheel Rotation after Battery Disconnect

INFOID:0000000006067023

NOTE:

- Before removing and installing any control units, first turn the push-button ignition switch to the LOCK position, then disconnect both battery cables.
- After finishing work, confirm that all control unit connectors are connected properly, then re-connect both battery cables.
- Always use CONSULT-III to perform self-diagnosis as a part of each function inspection after finishing work. If a DTC is detected, perform trouble diagnosis according to self-diagnosis results.

For vehicle with steering lock unit, if the battery is disconnected or discharged, the steering wheel will lock and cannot be turned.

If turning the steering wheel is required with the battery disconnected or discharged, follow the operation procedure below before starting the repair operation.

OPERATION PROCEDURE

1. Connect both battery cables.
   NOTE:
   Supply power using jumper cables if battery is discharged.
2. Turn the push-button ignition switch to ACC position.
   (At this time, the steering lock will be released.)
3. Disconnect both battery cables. The steering lock will remain released with both battery cables disconnected and the steering wheel can be turned.
4. Perform the necessary repair operation.
5. When the repair work is completed, re-connect both battery cables. With the brake pedal released, turn the push-button ignition switch from ACC position to ON position, then to LOCK position. (The steering wheel will lock when the push-button ignition switch is turned to LOCK position.)
6. Perform self-diagnosis check of all control units using CONSULT-III.

Work

INFOID:0000000005949136

- After removing and installing the opening/closing parts, be sure to carry out fitting adjustments to check their operational.
- Check the lubrication level, damage, and wear of each part. If necessary, grease or replace it.

PREPARATION

PREPARATION

Commercial Service Tools

INFOID:0000000005949138

Tool name		Description
Engine ear	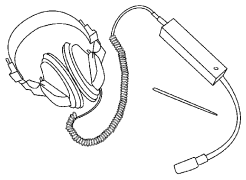 SIIA0995E	Locating the noise
Remover tool	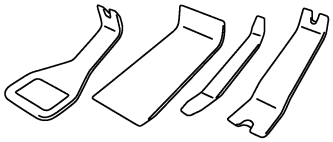 PIIB7923J	Remove the clips, pawls, and metal clips
Power tool	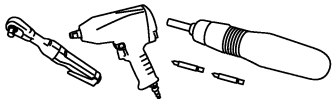 PIIB1407E	

SYSTEM DESCRIPTION

COMPONENT PARTS

Component Parts Location

INFOID:0000000005949044

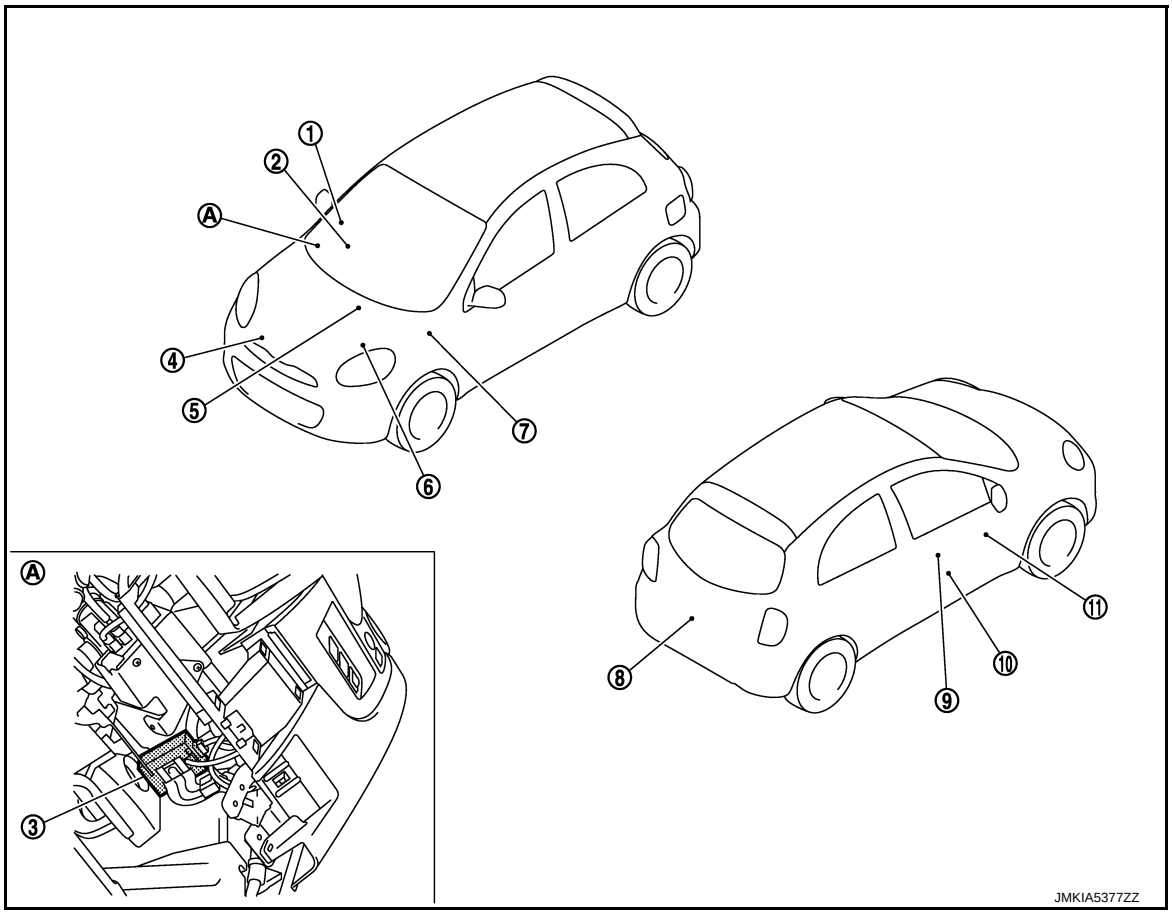

1. Key switch
2. Combination meter
3. Remote keyless entry receiver*1
4. Horn
5. IPDM E/R
   Refer to PCS-30, "Component Parts Location"
6. BCM
   Refer to BCS-60, "BODY CONTROL SYSTEM : Component Parts Location"
7. Back door lock assembly
8. Front door lock assembly
9. Front door switch (driver side)
10. Door lock and unlcok switch*2

A. View with instrument lower panel RH removed

*1: With remote keyless entry system models
*2: With power window system

Component Description

INFOID:0000000005949045

Item	Function
BCM	Controls the door lock function and room lamp function
IPDM E/R	Sounds horn via CAN communication between BCM
Remote keyless entry receiver	Receives lock/unlock signal from the key fob, and then transmits to BCM

Item	Function
Door key cylinder switch	Built-in driver side door lock assembly • Input lock or unlock signal to BCM
Door lock and unlock switch	Input lock or unlock signal to BCM
Door switch	Input door open/close condition to BCM
Key switch	Input ignition switch ON/OFF condition to BCM
Unlock sensor	Built-in driver side door lock assembly • Detects door lock condition of driver door
Door lock actuator	Built-in door lock assembly • Input lock/unlock signal from BCM and locks/unlocks each door

POWER DOOR LOCK SYSTEM

System Diagram

INFOID:0000000005949042

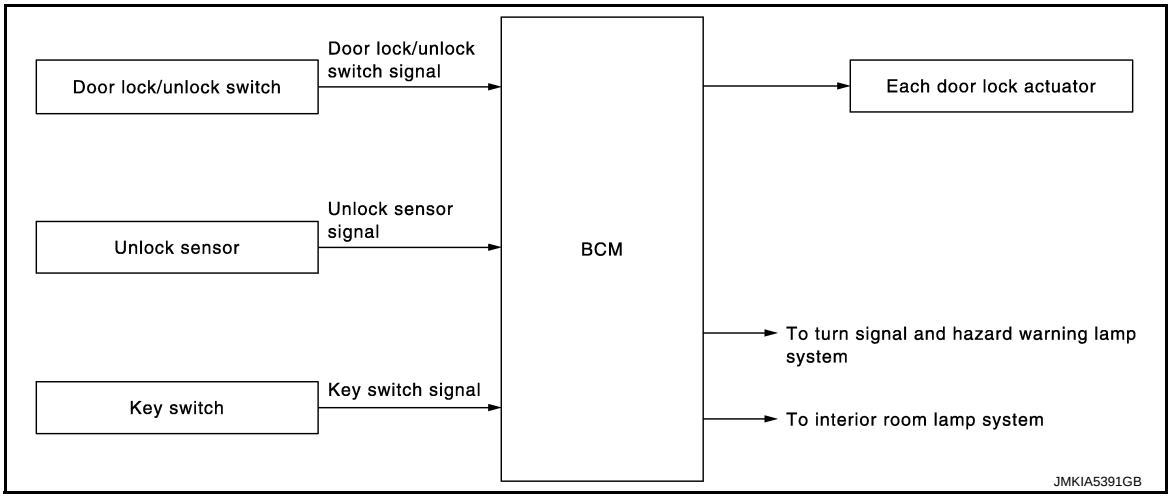

System Description

INFOID:0000000005949043

DOOR LOCK FUNCTION (EXCEPT FOR THAILAND)

Door lock/unlock switch (with power window system)
- The door lock and unlock switch is build into power window main switch.
- BCM locks all doors or unlocks all doors, when door lock/unlock switch is operated.

Unlock sensor
- BCM locks all doors or unlocks all doors, when driver door lock knob is operated.
- With the ignition key inserted in the door key cylinder on driver side, turning it to lock position, locks door lock actuator of all doors.
- With the ignition key inserted in the door key cylinder on driver side, turning it to unlock position, unlocks door lock actuator of all doors.

DOOR LOCK FUNCTION (FOR THAILAND)

Door lock/unlock switch
- The door lock and unlock switch is build into power window main switch.
- BCM locks all doors or unlocks all doors, when door lock/unlock switch is operated.

Door key cylinder switch
- With the ignition key inserted in the door key cylinder on driver side, turning it to lock position, locks door lock actuator of all doors.
- With the ignition key inserted in the door key cylinder on driver side, turning it to unlock position, unlocks door lock actuator of all doors.

KEY REMINDER FUNCTION (EXCEPT FOR THAILAND)

When door lock and unlock switch and driver door lock knob are operated while key is inserted into key switch and driver side door is open, door locks once but immediately unlocks. This operation prevents keyfob from being left in the vehicle.

KEY REMINDER FUNCTION (FOR THAILAND)

When door lock and unlock switch and are operated while key is inserted into key switch and driver side door is open, door locks once but immediately unlocks. This operation prevents keyfob from being left in the vehicle.

INTERIOR ROOM LAMP CONTROL FUNCTION

Interior room lamp is controlled according to door lock/unlock state, refer to INL-7, "INTERIOR ROOM LAMP CONTROL SYSTEM (WITH INTELLIGENT KEY SYSTEM) : System Description"

REMOTE KEYLESS ENTRY SYSTEM

System Diagram

INFOID:0000000005949046

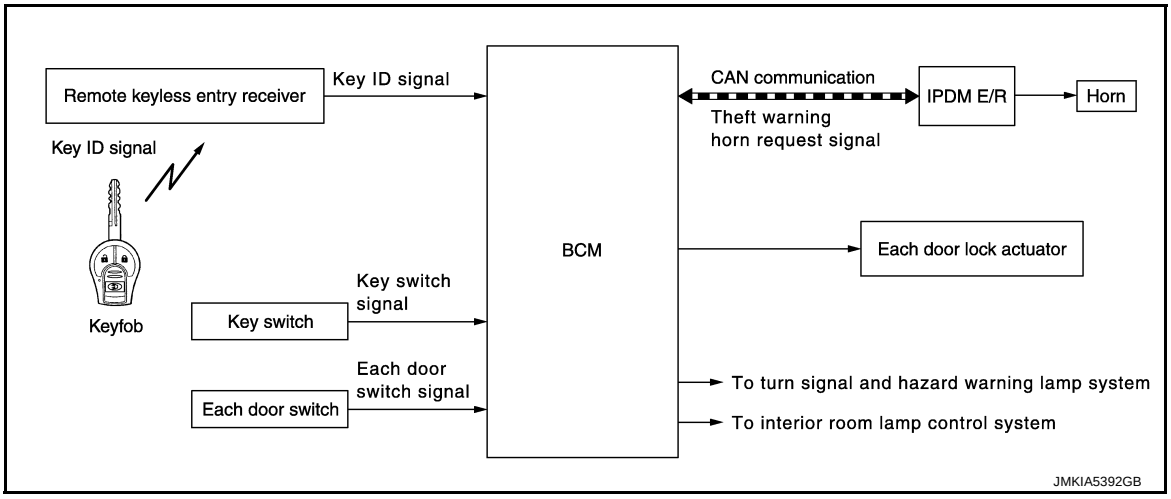

System Description

INFOID:0000000005949047

DOOR LOCK AND UNLOCK OPERATION

- When door lock and unlock button of keyfob is pressed, door lock and unlock signal transmits from keyfob to BCM via remote keyless entry receiver.
- When BCM receives the door lock and unlock signal, it operates door lock actuator, brinks the hazard lamp at the same time as a reminder.

OPERATION CONDITION

If the following conditions are satisfied, door lock/unlock operation is performed if the keyfob is operated.

Remote controller operation	Operation condition
Lock	• Key switch is off • All doors are closed
Unlock	Key switch is off

OPERATION AREA

To ensure that the keyfob works effectively, use within 100 cm (3 ft) range of each door, however the operable range may differ according to surroundings.

HAZARD REMINDER OPERATION

When door is locked or unlocked by keyfob, then BCM blinks hazard warning lamp as a reminder.

Remote controller operation	Hazard lamp
Lock	Blinks 1 time
Unlock	Blinks 2 times

How to Change Hazard Reminder Mode

Refer to DLK-158, "MULTI REMOTE ENT : CONSULT-III Function (BCM - MULTI REMOTE ENT)".

AUTO DOOR LOCK FUNCTION

After door is unlocked by keyfob button operation and if 30 seconds or more passes without performing the following operation, all doors are automatically locked. However, operation check function does not activate.

Operating condition	• Door switch is ON (door is open) • Ignition key is inserted in key cylinder • Door lock/unlock switch is operated • Keyfob is operated • Door lock knob is operated

Auto door lock mode can be changed by the “AUTO LOCK SET” mode in “WORK SUPPORT”. Refer to DLK-158, "MULTI REMOTE ENT : CONSULT-III Function (BCM - MULTI REMOTE ENT)".

PANIC ALARM FUNCTION

When key switch in the OFF position, BCM transmits horn reminder signal to IPDM E/R. Then, IPDM E/R turns on and off horn intermittently.
The horn sounds intermittently.
The alarm automatically turns off.

- After 25 seconds
- When BCM receives any signal from Intelligent Key

How to Change Panic Alarm Operation Mode

Refer to DLK-158, "MULTI REMOTE ENT : CONSULT-III Function (BCM - MULTI REMOTE ENT)".

INTERIOR ROOM LAMP CONTROL FUNCTION

Interior room lamp is controlled according to door lock/unlock state, refer to INL-9, "INTERIOR ROOM LAMP CONTROL SYSTEM (WITHOUT INTELLIGENT KEY SYSTEM) : System Description".

DIAGNOSIS SYSTEM (BCM)

COMMON ITEM

COMMON ITEM : CONSULT-III Function (BCM - COMMON ITEM)

INFOID:0000000006062297

APPLICATION ITEM

CONSULT-III performs the following functions via CAN communication with BCM.

Diagnosis mode	Function Description
Work Support	Changes the setting for each system function.
Self Diagnostic Result	Displays the diagnosis results judged by BCM.
CAN Diag Support Monitor	Monitors the reception status of CAN communication viewed from BCM. Refer to CONSULT-III operation manual.
Data Monitor	The BCM input/output signals are displayed.
Active Test	The signals used to activate each device are forcibly supplied from BCM.
Ecu Identification	The BCM part number is displayed.
Configuration	• Read and save the vehicle specification. • Write the vehicle specification when replacing BCM.

SYSTEM APPLICATION

BCM can perform the following functions for each system.

NOTE:

It can perform the diagnosis modes except the following for all sub system selection items.

×: Applicable item

System	Sub system selection item	Diagnosis mode		
		Work Support	Data Monitor	Active Test
Door lock	DOOR LOCK		×	×
Rear window defogger	REAR DEFOGGER		×	×
Warning chime	BUZZER		×	×
Interior room lamp control	INT LAMP	×	×	×
Remote keyless entry system	MULTI REMOTE ENT	×	×	×
Exterior lamp	HEAD LAMP	×	×	×
Wiper and washer	WIPER	×	×	×
Turn signal and hazard warning lamps	FLASHER		×	×
• Automatic air conditioner • Manual air conditioner	AIR CONDITONER		×	
Combination switch	COMB SW		×	
Body control system	BCM	×		
NATS	IMMU	×*1		×
Interior room lamp battery saver	BATTERY SAVER	×	×	×
Back door	TRUNK		×	
—	THEFT ALM*2		×	×
—	RETAINED PWR*2			
Signal buffer system	SIGNAL BUFFER		×	×
Panic alarm	PANIC ALARM			×

- *1: For models without NATS this mode is not used.
- *2: This item is displayed, but is not used.

DOOR LOCK

DOOR LOCK : CONSULT-III Function (BCM - DOOR LOCK)

INFOID:0000000005949051

NOTE:
This function is not displayed for models without power door lock system.

DATA MONITOR

Monitor Item	Contents
IGN ON SW	Indicated [On/Off] condition of ignition switch in ON position
KEY ON SW	Indicated [On/Off] condition of key switch
CDL LOCK SW	Indicated [On/Off] condition of lock signal from door lock unlock switch
CDL UNLOCK SW	Indicated [On/Off] condition of unlock signal from door lock unlock switch
DOOR SW-DR	Indicated [On/Off] condition of front door switch (driver side)
DOOR SW-AS	Indicated [On/Off] condition of front door switch (passenger side)
DOOR SW-RR	Indicated [On/Off] condition of rear door switch RH
DOOR SW-RL	Indicated [On/Off] condition of rear door switch LH
BACK DOOR SW	Indicated [On/Off] condition of back door switch
LOCK STATUS	Indicated [On/Off] condition of driver side door
ACC ON SW	Indicated [On/Off] condition of ignition switch in ACC position
KEYLESS LOCK	Indicated [On/Off] condition of lock signal from key fob
KEYLESS UNLOCK	Indicated [On/Off] condition of unlock signal from key fob
SHOCK SENSOR	**NOTE:** This item is indicated, but not monitored
KEY CYL LK-SW	Indicated [On/Off] condition of lock signal from door key cylinder
KEY CYL UN-SW	Indicated [On/Off] condition of unlock signal from door key cylinder
VEHICLE SPEED	Display the vehicle speed signal received from combination meter by numerical value [Km/h]

ACTIVE TEST

Test item	Description
DOOR LOCK	This test is able to check door lock/unlock operation • The all door lock actuators are locked when “ALL LOCK” on CONSULT-III screen is touched • The all door lock actuators are unlocked when “ALL UNLK” on CONSULT-III screen is touched

MULTI REMOTE ENT

MULTI REMOTE ENT : CONSULT-III Function (BCM - MULTI REMOTE ENT)

INFOID:0000000005949052

NOTE:
This function is not displayed for models without remote keyless entry system.

WORK SUPPORT

Test item	Description
REMO CONT ID REGIST	Keyfob ID code can be registered
REMO CONT ID ERASUR	Keyfob ID code can be erased
REMO CONT ID CONFIR	It can be checked whether Intelligent Key ID code is registered or not in this mode
HAZARD LAMP SET	Hazard reminder function (hazard operation) mode can be changed in this mode • MODE1: Non-operation • MODE2: Unlock operation only • MODE3: Lock operation only • MODE4: Lock and unlock operation

Test item	Description
AUTO LOCK SET	Auto door lock time can be changed in this mode • MODE 1: Non-operation • MODE 2: 30 sec. • MODE 3: 1 minute • MODE 4: 2 minute • MODE 5: 3 minute • MODE 6: 4 minute • MODE 7: 5 minute
PANIC ALARM SET	Panic alarm button pressing time on keyfob remote control button can be selected from the following with this mode • MODE1: 0.5 sec. • MODE2: Non-operation • MODE3: 1.5 sec.
TRUNK OPEN SET	**NOTE:** This item is indicated, but not operated

DATA MONITOR

Monitor Item	Condition
IGN ON SW	Indicates [On/Off] condition of ignition switch in ON position
KEY ON SW	Indicates [On/Off] condition of key switch
ACC ON SW	Indicates [On/Off] condition of ignition switch in ACC position
KEYLESS LOCK	Indicates [On/Off] condition of lock signal from keyfob
KEYLESS UNLOCK	Indicates [On/Off] condition of unlock signal from keyfob
KYLS TRNK/HAT	**NOTE:** This item is indicated, but not monitored
DOOR SW-DR	Indicates [On/Off] condition of front door switch (driver side)
DOOR SW-AS	Indicates [On/Off] condition of front door switch (passenger side)
DOOR SW-RR	Indicates [On/Off] condition of rear door switch RH
DOOR SW-RL	Indicates [On/Off] condition of rear door switch LH
BACK DOOR SW	Indicates [On/Off] condition of back door switch
TRNK/HAT MNTR	**NOTE:** This item is indicated, but not monitored
CDL LOCK SW	Indicates [On/Off] condition of door lock and unlock switch
CDL UNLOCK SW	Indicates [On/Off] condition of door lock and unlock switch
KEYLESS PANIC	Indicates [On/Off] condition of PANIC button of keyfob

ACTIVE TEST

Test item	Description
DOOR LOCK	This test is able to check door lock/unlock operation • The all door lock actuators are locked when “ALL LOCK” on CONSULT-III screen is touched • The all door lock actuators are unlocked when “ALL UNLK” on CONSULT-III screen is touched
INT LAMP	This test is able to check interior room lamp operation • On: Operate • Off: Non-operation
FLASHER	This test is able to check flasher operation [LH/RH/Off]

TRUNK

TRUNK : CONSULT-III Function (BCM - TRUNK)

INFOID:0000000005949053

DATA MONITOR

Monitor Item	Contents
KEY ON SW	Indicates [On/Off] condition of key switch.
KYLS TRNK/HAT	**NOTE:** This item is indicated, but not monitored.
TRNK OPNR SW	**NOTE:** This item is indicated, but not monitored.
LOCK STATUS	**NOTE:** This item is indicated, but not monitored.
IGN ON SW	Indicates [On/Off] condition of ignition switch.
VEHICLE SPEED	Indicates [Km/h] condition of vehicle speed signal from combination meter.

PANIC ALARM

PANIC ALARM : CONSULT-III Function (BCM - PANIC ALARM)

INFOID:0000000006044846

ACTIVE TEST

Test item	Description
VEHICLE SECURITY HORN	This test is able to check horn operation. Horn is activated for 0.5 seconds after “ON” on CONSULT-III screen touched.
HEAD LAMP (HI)	**NOTE:** This item is indicated, but not tested

ECU DIAGNOSIS INFORMATION

BCM, IPDM E/R

List of ECU Reference

INFOID:0000000006038732

ECU	Reference
BCM	BCS-72, "Reference Value"
	BCS-85, "Fail-safe"
	BCS-85, "DTC Inspection Priority Chart"
	BCS-86, "DTC Index"
IPDM	PCS-40, "Reference Value"
	PCS-44, "Fail-Safe"
	PCS-45, "DTC Index"

WIRING DIAGRAM

DOOR & LOCK SYSTEM

Wiring Diagram - DOOR LOCK SYSTEM (WITHOUT INTELLIGENT KEY) -

INFOID:0000000005949103

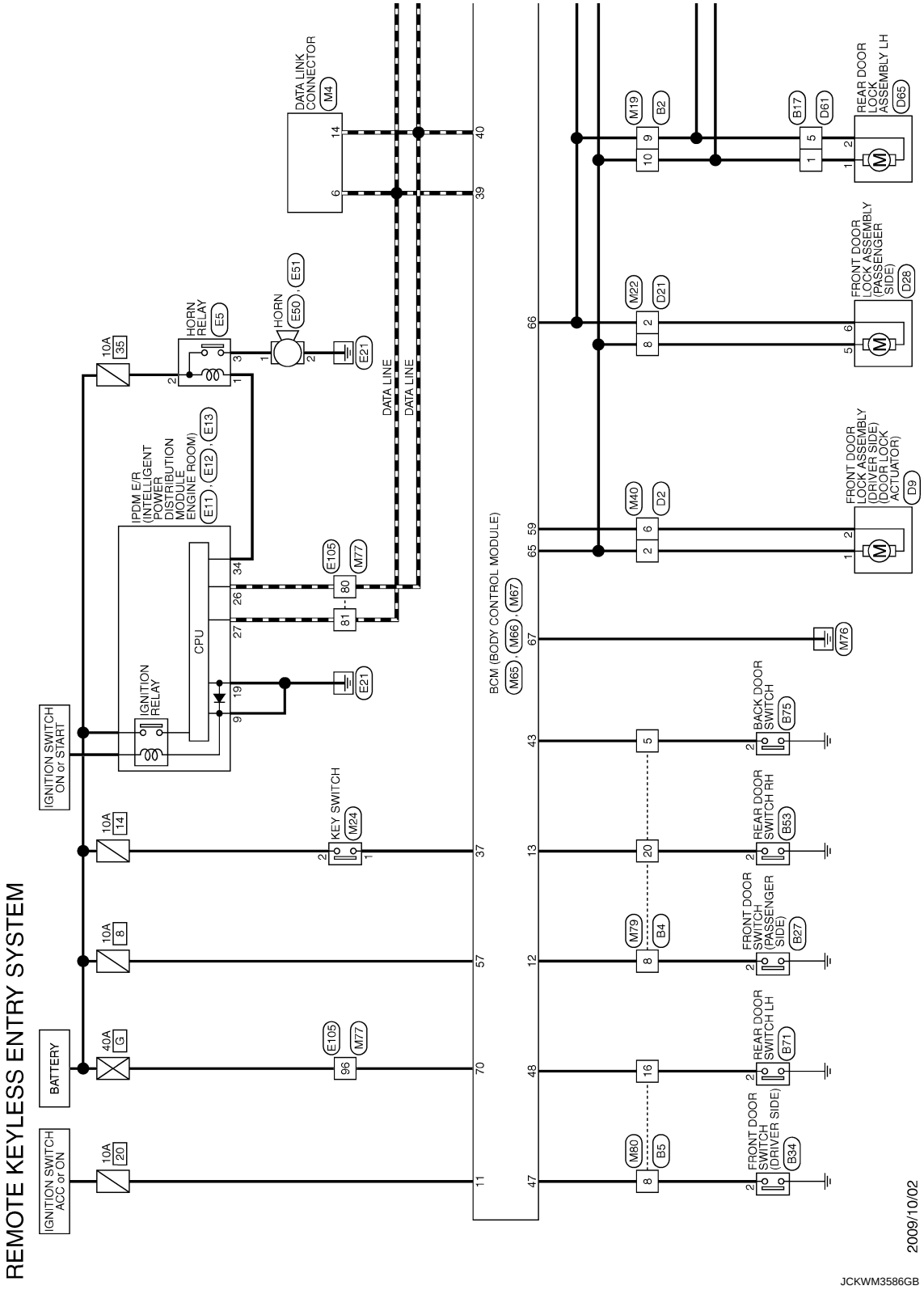

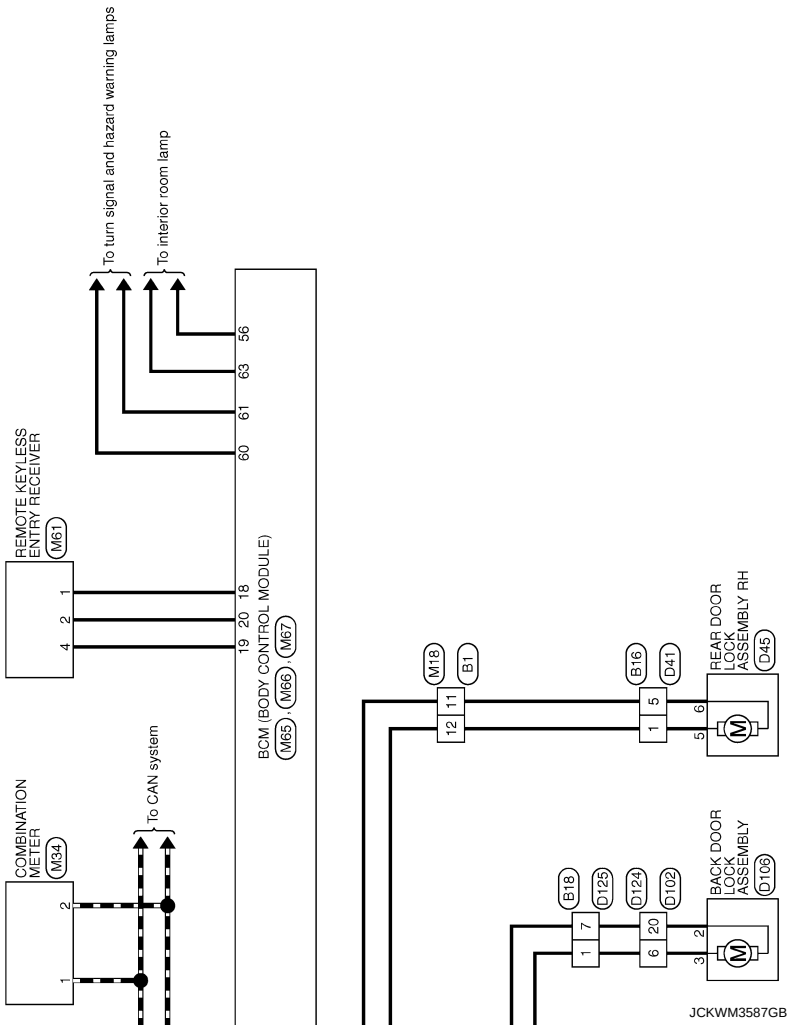
COMBINATION METER
M34
1
2
To CAN system
REMOTE KEYLESS ENTRY RECEIVER
M61
1
2
4
To turn signal and hazard warning lamps
To interior room lamp
BCM (BODY CONTROL MODULE)
M65, M66, M67
18
20
19
60
61
63
56
M18
B1
11
12
B16
D41
5
1
REAR DOOR LOCK ASSEMBLY RH
D45
6
5
B18
D125
7
1
D124
D102
20
6
BACK DOOR LOCK ASSEMBLY
D106
2
3
JCKWM3587GB

REMOTE KEYLESS ENTRY SYSTEM

Connector No.	B1
Connector Name	WIRE TO WIRE
Connector Type	NS16MW-CS

H.S.

Terminal No.	Color of Wire	Signal Name [Specification]
1	G	–
3	V	–
4	L	–
5	Y	–
6	W	–
7	LG	–
8	GR	–
9	SB	–
10	W	–
11	G	–
12	V	–
13	BR	–
14	SB	–
15	R	–
16	GR	–

Connector No.	B2
Connector Name	WIRE TO WIRE
Connector Type	NS16MW-CS

H.S.

Terminal No.	Color of Wire	Signal Name [Specification]
1	V	–
5	O	–
6	R	–
7	L	–
8	L	–
9	G	–
10	V	–
11	P	–
12	LG	–
13	L	–
14	R	–
15	P	–
16	B	–

Connector No.	B4
Connector Name	WIRE TO WIRE
Connector Type	TH24MW-NH

H.S.

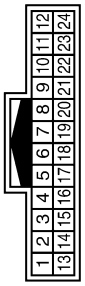

Terminal No.	Color of Wire	Signal Name [Specification]
1	W	–
2	V	–
3	O	–
4	P	–
5	W	–
6	W	–
7	P	–
8	SB	–
11	G	–
12	SB	–
13	L	–
15	R	–
16	GR	–
17	BR	–
18	L	–
19	Y	–
20	LG	–
22	Y	–
23	BR	–
24	O	–

Connector No.	B5
Connector Name	WIRE TO WIRE
Connector Type	TH16MW-NH

H.S.

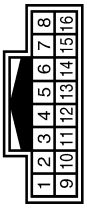

Terminal No.	Color of Wire	Signal Name [Specification]
1	V	–
2	GR	–
5	V	–
6	W	–
8	LG	–
9	R	–
11	O	–
13	GR	–
14	P	–
16	W	–

Connector No.	B16
Connector Name	WIRE TO WIRE
Connector Type	NS10FW-CS

H.S.

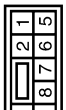

Terminal No.	Color of Wire	Signal Name [Specification]
1	V	–
4	L	–
5	G	–
7	GR	–
8	LG	–
9	W	–
10	Y	–

Connector No.	B17
Connector Name	WIRE TO WIRE
Connector Type	NS10FW-CS

H.S.

Terminal No.	Color of Wire	Signal Name [Specification]
1	V	–
4	L	–
5	G	–
7	L	–
8	V	–
9	R	–
10	O	–

JCKWM3588GB

REMOTE KEYLESS ENTRY SYSTEM

Connector No.	B18
Connector Name	WIRE TO WIRE
Connector Type	NH10MW-CS10

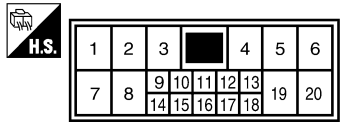

Terminal No.	Color of Wire	Signal Name [Specification]
1	V	–
3	BR	–
5	R	–
6	P	–
7	B	– [With Intelligent Key]
7	G	– [Without Intelligent Key]
8	SHIELD	–
9	R	–
10	Y	–
11	G	–
12	W	–
13	O	–
14	BR	–
15	Y	–
16	L	–
17	R	–
18	B	–
20	LG	–

Connector No.	B27
Connector Name	FRONT DOOR SWITCH (PASSENGER SIDE)
Connector Type	A03FW

Terminal No.	Color of Wire	Signal Name [Specification]
2	SB	–

Connector No.	B34
Connector Name	FRONT DOOR SWITCH (DRIVER SIDE)
Connector Type	A03FW

Terminal No.	Color of Wire	Signal Name [Specification]
2	LG	–

Connector No.	B53
Connector Name	REAR DOOR SWITCH RH
Connector Type	A03FW

Terminal No.	Color of Wire	Signal Name [Specification]
2	LG	–

Connector No.	B71
Connector Name	REAR DOOR SWITCH LH
Connector Type	A03FW

Terminal No.	Color of Wire	Signal Name [Specification]
2	W	–

Connector No.	B75
Connector Name	BACK DOOR SWITCH
Connector Type	A03FW

Terminal No.	Color of Wire	Signal Name [Specification]
1	L	–
2	W	–

Connector No.	D2
Connector Name	WIRE TO WIRE
Connector Type	NS10FW-CS

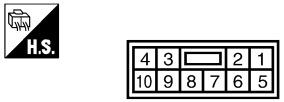

Terminal No.	Color of Wire	Signal Name [Specification]
1	W	–
2	V	–
3	R	–
4	G	–
5	P	–
6	SB	–
8	GR	–
9	BR	–
10	B	–

Connector No.	D9
Connector Name	FRONT DOOR LOCK ASSEMBLY (DRIVER SIDE)
Connector Type	E06FGY-RS

Terminal No.	Color of Wire	Signal Name [Specification]
1	V	–
2	SB	–
3	G	–
4	B	–
5	L	–
6	W	–

JCKWM3589GB

REMOTE KEYLESS ENTRY SYSTEM

Connector No.	D21
Connector Name	WIRE TO WIRE
Connector Type	NH10FW-CS10

H.S.

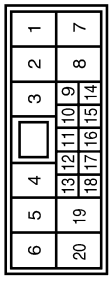

Terminal No.	Color of Wire	Signal Name [Specification]
1	G	–
2	Y	–
4	B	–
5	L	–
6	SB	–
7	R	–
8	V	–
9	R	–
10	W	–
11	L	–
12	LG	–
13	P	–
14	B	–
15	G	–
16	GR	–
17	BR	–
18	V	–
20	W	–

Connector No.	D28
Connector Name	FRONT DOOR LOCK ASSEMBLY (PASSENGER SIDE)
Connector Type	E06FGY-RS

H.S.

Terminal No.	Color of Wire	Signal Name [Specification]
5	V	–
6	Y	–

Connector No.	D41
Connector Name	WIRE TO WIRE
Connector Type	NS10MW-CS

H.S.

Terminal No.	Color of Wire	Signal Name [Specification]
1	W	–
4	L	–
5	P	–
7	GR	–
8	LG	–
9	BR	–
10	O	–

Connector No.	D45
Connector Name	REAR DOOR LOCK ASSEMBLY RH
Connector Type	E06FGY-RS

H.S.

Terminal No.	Color of Wire	Signal Name [Specification]
5	W	–
6	P	–

Connector No.	D61
Connector Name	WIRE TO WIRE
Connector Type	NS10MW-CS

H.S.

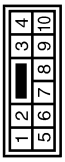

Terminal No.	Color of Wire	Signal Name [Specification]
1	V	–
4	L	–
5	G	–
7	GR	–
8	LG	–
9	BR	–
10	O	–

Connector No.	D65
Connector Name	REAR DOOR LOCK ASSEMBLY LH
Connector Type	E06FGY-RS

H.S.

Terminal No.	Color of Wire	Signal Name [Specification]
1	V	–
2	G	–

Connector No.	D102
Connector Name	WIRE TO WIRE
Connector Type	NH10MW-CS10

H.S.

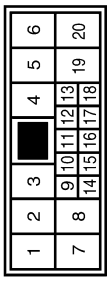

Terminal No.	Color of Wire	Signal Name [Specification]
4	Y	–
5	BR	–
6	W	–
9	LG	–
10	BR	–
14	P	–
15	B	–
19	R	–
20	GR	–

Connector No.	D106
Connector Name	BACK DOOR LOCK ASSEMBLY
Connector Type	FEA04FB-FHA2-LC

H.S.

Terminal No.	Color of Wire	Signal Name [Specification]
2	GR	–
3	Y	–

JCKWM3590GB

REMOTE KEYLESS ENTRY SYSTEM

Connector No.	D124
Connector Name	WIRE TO WIRE
Connector Type	NH10FW-CS10

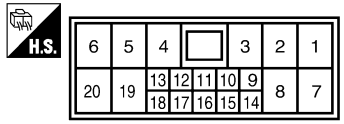

Terminal No.	Color of Wire	Signal Name [Specification]
4	Y	–
5	B	–
6	W	–
9	LG	–
10	BR	–
14	G	–
15	L	–
19	R	–
20	GR	–

Connector No.	D125
Connector Name	WIRE TO WIRE
Connector Type	NH10FW-CS10

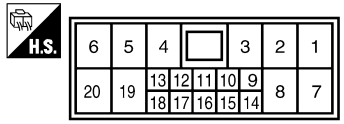

Terminal No.	Color of Wire	Signal Name [Specification]
1	Y	–
3	SB	–
5	GR	–
6	G	–
7	GR	–
8	SHIELD	–
9	R	–
10	Y	–
11	G	–
12	BR	–
13	W	–
14	BR	–
15	Y	–
16	L	–
17	R	–
18	L	–
20	LG	–

Connector No.	E5
Connector Name	HORN RELAY
Connector Type	–

Terminal No.	Color of Wire	Signal Name [Specification]
1	R	–
2	G	–
3	V	–

Connector No.	E11
Connector Name	IPDM E/R (INTELLIGENT POWER DISTRIBUTION MODULE ENGINE ROOM)
Connector Type	M06FB-LC

Terminal No.	Color of Wire	Signal Name [Specification]
9	B/W	–
10	L	–
13	W	–

Connector No.	E12
Connector Name	IPDM E/R (INTELLIGENT POWER DISTRIBUTION MODULE ENGINE ROOM)
Connector Type	NS08FBR-CS

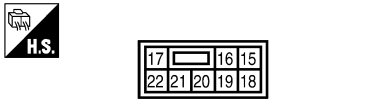

Terminal No.	Color of Wire	Signal Name [Specification]
18	Y	–
19	B/W	–
21	W	–
22	V	–

Connector No.	E13
Connector Name	IPDM E/R (INTELLIGENT POWER DISTRIBUTION MODULE ENGINE ROOM)
Connector Type	TH12FW-NH

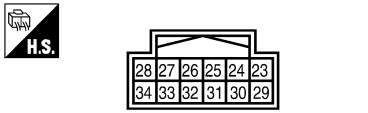

Terminal No.	Color of Wire	Signal Name [Specification]
24	LG	–
25	Y	–
26	P	–
27	L	–
28	P	–
30	SB	–
31	W	–
33	O	–
34	R	–

Connector No.	E50
Connector Name	HORN
Connector Type	P01FB-A

Terminal No.	Color of Wire	Signal Name [Specification]
1	V	–

Connector No.	E51
Connector Name	HORN
Connector Type	P01FB-A

Terminal No.	Color of Wire	Signal Name [Specification]
2	B/W	–

JCKWM3591GB

REMOTE KEYLESS ENTRY SYSTEM

Connector No.	E105
Connector Name	WIRE TO WIRE
Connector Type	TH80MW-CS16-TM4

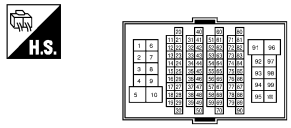

Terminal No.	Color of Wire	Signal Name [Specification]
1	V	–
2	W	–
3	SB	–
4	G	–
5	P	–
6	R	–
7	Y	–
8	O	–
9	W	–
10	SB	–
31	V	–
32	R	–
33	GR	–
34	P	–
35	Y	–
36	BR	–
39	SB	–
44	R	–
45	V	–
46	P	–
47	W	–
48	L	–
49	Y	–
50	W	–
51	BR	– [With CVT]
51	B	– [With M/T]
53	SB	–
54	W	– [With CVT]
54	O	– [With M/T]
57	LG	–
59	L	–
60	O	–
61	G	–
62	W	–
63	L	–
67	GR	– [With CVT]
67	V	– [With M/T]
69	P	–
70	SHIELD	–
71	GR	–
72	LG	–
73	P	–
74	V	–
76	Y	–
77	LG	–
78	O	–
79	G	–
80	P	–
81	L	–
82	W	–
83	BR	–
84	B	–
87	GR	–
91	W	–
92	Y	–
93	Y	–
94	R	–
95	V	–
96	LG	–
97	R	–
98	SB	–
99	G	–
100	P	–

Connector No.	M4
Connector Name	DATA LINK CONNECTOR
Connector Type	BD16FW

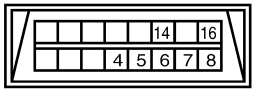

Terminal No.	Color of Wire	Signal Name [Specification]
4	B	–
5	B	–
6	L	–
7	GR/R	–
8	O	–
14	P	–
16	LG/R	–

Connector No.	M18
Connector Name	WIRE TO WIRE
Connector Type	NS16FW-CS

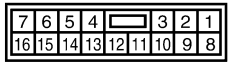

Terminal No.	Color of Wire	Signal Name [Specification]
1	G/R	–
3	L/W	–
4	L	–
5	Y	–
6	L/B	–
7	LG	–
8	L/G	–
9	GR/B	–
10	W/L	–
11	G	–
12	V	–
13	L	–
14	L	–
15	L	–
16	GR	–

Connector No.	M19
Connector Name	WIRE TO WIRE
Connector Type	NS16FW-CS

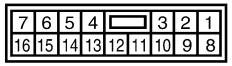

Terminal No.	Color of Wire	Signal Name [Specification]
1	V	–
5	L/R	–
6	R	–
7	L	–
8	R/B	–
9	G	–
10	V	–
11	L/W	–
12	LG	–
14	R	–
15	Y/R	–
16	B/R	–

Connector No.	M22
Connector Name	WIRE TO WIRE
Connector Type	NH10MW-CS10

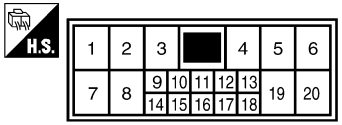

Terminal No.	Color of Wire	Signal Name [Specification]
1	G	–
2	G	–
4	B	–
5	L	–
6	W/R	–
7	R	–
8	V	–
9	G/R	–
10	LG	–
11	R	–
12	G	–
13	BR/Y	–
14	B	–
15	G/B	–
16	GR	–
17	BR	–
18	L/Y	–
20	Y/R	–

REMOTE KEYLESS ENTRY SYSTEM

Connector No.	M24
Connector Name	KEY SWITCH
Connector Type	TK06MGY

H.S.

Terminal No.	Color of Wire	Signal Name [Specification]
1	R/W	–
2	LG/R	–

Connector No.	M34
Connector Name	COMBINATION METER
Connector Type	TH40FW-NH

H.S.

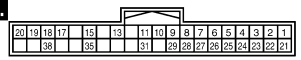

Terminal No.	Color of Wire	Signal Name [Specification]
1	L	CAN-H
2	P	CAN-L
3	V	VEHICLE SPEED SIGNAL (2-PULSE)
4	L	VEHICLE SPEED SIGNAL (8-PULSE)
6	BR/Y	FUEL LEVEL SENSOR SIGNAL
7	R/G	AIR BAG SIGNAL
8	P	OVERDRIVE CONTROL SWITCH SIGNAL
9	O	SEAT BELT BUCKLE SWITCH SIGNAL (DRIVER SIDE)
10	SB	PARKING BRAKE SWITCH SIGNAL
11	G/R	BRAKE FLUID LEVEL SWITCH SIGNAL
13	B/R	ILLUMINATION CONTROL SIGNAL
15	L/Y	ACC POWER SUPPLY
17	G	WASHER LEVEL SWITCH SIGNAL
18	R/Y	SECURITY SIGNAL
19	V/W	AMBIENT SENSOR SIGNAL
20	R/W	AMBIENT SENSOR GROUND
21	B	GROUND
22	B	GROUND
23	B	GROUND
24	V	FUEL LEVEL SENSOR GROUND
25	B	VDC GROUND
27	LG	BATTERY POWER SUPPLY
28	GR	IGNITION SIGNAL
29	BR	PASSENGER SEAT BELT WARNING SIGNAL
31	R	A/C AUTO AMP. CONNECTION RECOGNITION SIGNAL
35	BR	ENGINE COOLANT TEMPERATURE SIGNAL
38	GR	ALTERNATOR SIGNAL

Connector No.	M40
Connector Name	WIRE TO WIRE
Connector Type	NS10MW-CS

H.S.

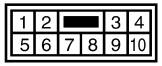

Terminal No.	Color of Wire	Signal Name [Specification]
1	W	–
2	V	–
3	V	–
4	G/R	–
5	P	–
6	L/B	–
8	GR	–
9	BR	–
10	B	–

Connector No.	M61
Connector Name	REMOTE KEYLESS ENTRY RECEIVER
Connector Type	TK04FW

H.S.

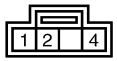

Terminal No.	Color of Wire	Signal Name [Specification]
1	V	–
2	G/Y	–
4	BR	–

Connector No.	M65
Connector Name	BCM (BODY CONTROL MODULE)
Connector Type	TH40FW-NH

H.S.

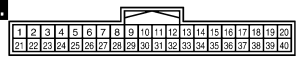

Terminal No.	Color of Wire	Signal Name [Specification]
2	BR/W	COMBI SW INPUT 5
3	GR	COMBI SW INPUT 4
4	L/Y	COMBI SW INPUT 3
5	G	COMBI SW INPUT 2
6	L/R	COMBI SW INPUT 1
7	W/R	KEY CYL UNLOCK SW
8	W/B	KEY CYL LOCK SW
9	R	STOP LAMP SW
10	W/L	REAR WINDOW DEFOGGER SW
11	L/Y	ACC
12	SB	PASSENGER DOOR SW
13	GR/L	REAR RH DOOR SW
14	L/B	OPTICAL SENSOR
15	V/W	TIRE PRESS WARNING CHECK SW
17	R/G	OPTICAL SENSOR POWER SUPPLY
18	V	RECEIVER/SENSOR GND
19	BR	KEYLESS ENTRY RECEIVER POWER SUPPLY
20	G/Y	KEYLESS ENTRY RECEIVER COMM
21	P/L	NATS ANTENNA AMP.
23	R/Y	SECURITY INDICATOR LAMP
24	GR/R	DONGLE LINK
25	LG	NATS ANTENNA AMP.
26	GR	THERMO CONTROL AMP.
27	Y/G	A/C SW [With auto A/C]
27	Y/R	A/C SW [With manual A/C]
28	G/W	BLOWER FAN SW
29	L/W	HAZARD SW
31	G/Y	FR DEFROSTER SW
32	LG	COMBI SW OUTPUT 5
33	Y/L	COMBI SW OUTPUT 4
34	W	COMBI SW OUTPUT 3
35	R/L	COMBI SW OUTPUT 2
36	L/O	COMBI SW OUTPUT 1
37	R/W	KEY SWITCH
38	O	IGN
39	L	CAN-H
40	P	CAN-L

Connector No.	M66
Connector Name	BCM (BODY CONTROL MODULE)
Connector Type	FEA09FW-FHA6-SA

H.S.

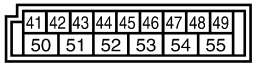

Terminal No.	Color of Wire	Signal Name [Specification]
43	W	BACK DOOR SW
44	LG	REAR WIPER STOP POSITION
45	GR	CENTRAL DOOR LOCK SW
46	BR	CENTRAL DOOR UNLOCK SW
47	BR/Y	DRIVER DOOR SW
48	W/G	REAR LH DOOR SW
50	SB	A/C INDICATOR OUTPUT
54	L/W	REAR WIPER OUTPUT

Connector No.	M67
Connector Name	BCM (BODY CONTROL MODULE)
Connector Type	FEA09FB-FHA6-SA

H.S.

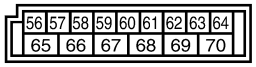

Terminal No.	Color of Wire	Signal Name [Specification]
56	L	INTERIOR ROOM LAMP POWER SUPPLY
57	Y	BAT (FUSE)
59	L/B	DRIVER DOOR UNLOCK OUTPUT
60	W/B	TURN SIGNAL LH OUTPUT
61	W/L	TURN SIGNAL RH OUTPUT
63	BR	ROOM LAMP TIMER CONTROL
65	V	ALL DOOR LOCK OUTPUT
66	G	PASSENGER DOOR, REAR DOOR UNLOCK OUTPUT
67	B	GND
68	L	POWER WINDOW POWER SUPPLY (IGN)
69	L/W	POWER WINDOW POWER SUPPLY (BAT)
70	Y	BAT (F/L)

JCKWM3593GB

REMOTE KEYLESS ENTRY SYSTEM

Connector No.	M77
Connector Name	WIRE TO WIRE
Connector Type	TH80FW-CS16-TM4

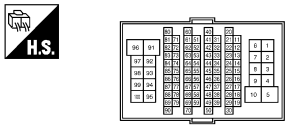

Terminal No.	Color of Wire	Signal Name [Specification]
1	B/O	–
2	R	–
3	G/R	–
4	G/B	–
5	L	–
6	L	–
7	W/R	–
8	G/W	–
9	Y/L	–
10	W	–
31	GR/L	–
32	L/B	–
33	R/Y	–
34	SB	–
35	BR	–
36	G	–
39	L/R	–
44	G/O	–
45	LG/R	–
46	GR/W	–
47	BR/Y	–
48	L/O	–
49	L/W	–
50	P/L	–
51	B/W	–
53	R/L	–
54	O	–
57	GR	–
59	V	–
60	R/W	–
61	V/W	–
62	W/L	–
63	W/B	–
67	Y/R	–
69	LG	–
70	SHIELD	–
71	P/B	–
72	R/G	–
73	R	–
74	L/Y	–
76	W/G	–
77	GR/R	–
78	O	–
79	LG	–
80	P	–
81	L	–
82	GR	–
83	G/R	–
84	B	–
87	G	–
91	R	–
92	O	–
93	Y	–
94	R/B	–
95	L/W	–
96	Y	–
97	L	–
98	BR/W	–
99	W	–
100	G/R	–

Connector No.	M79
Connector Name	WIRE TO WIRE
Connector Type	TH24FW-NH

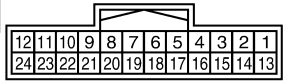

Terminal No.	Color of Wire	Signal Name [Specification]
1	W/G	–
2	L/Y	–
3	R	–
4	P/B	–
5	W	–
6	W/G	–
7	R/B	–
8	SB	–
11	G/B	–
12	G/R	–
13	R/G	–
15	R/L	–
16	GR/R	–
17	BR/Y	–
18	V	–
19	Y	–
20	GR/L	–
22	L	–
23	Y/L	–
24	G/W	–

Connector No.	M80
Connector Name	WIRE TO WIRE
Connector Type	TH16FW-NH

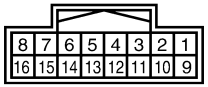

Terminal No.	Color of Wire	Signal Name [Specification]
1	L/B	–
2	GR/L	–
5	W	–
6	W/L	–
8	BR/Y	–
9	R/Y	–
11	O	–
13	BR/W	–
14	W/B	–
16	W/G	–

JCKWM3594GB

BASIC INSPECTION

DIAGNOSIS AND REPAIR WORK FLOW

Work Flow

INFOID:0000000005949039

OVERALL SEQUENCE

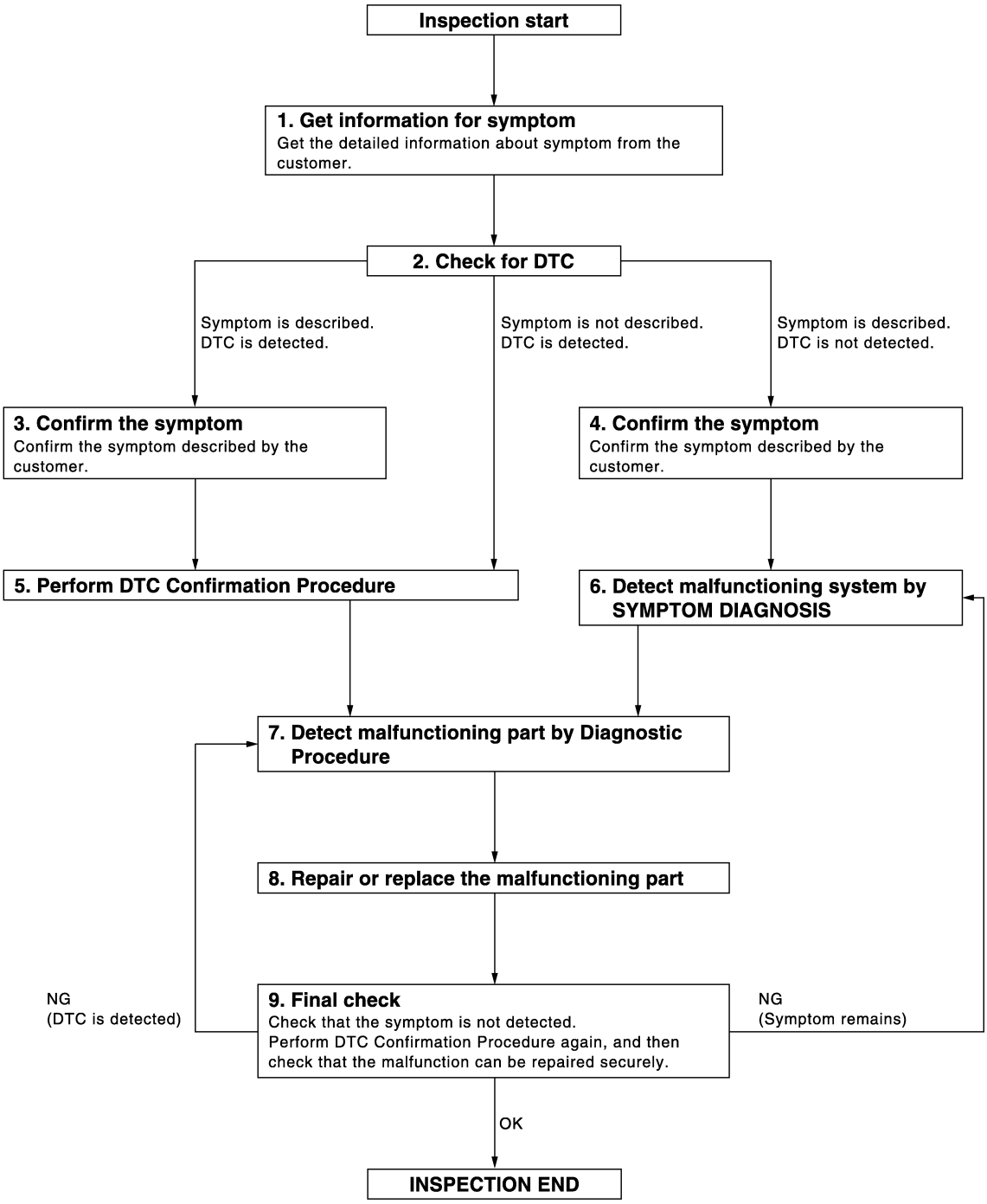

JMKIA3620GB

DETAILED FLOW

1. GET INFORMATION FOR SYMPTOM

1. Get the detailed information from the customer about the symptom (the condition and the environment when the incident/malfunction occurred).
2. Check operation condition of the function that is malfunctioning.

>> GO TO 2.

2. CHECK FOR DTC

1. Check DTC for BCM.
2. Perform the following procedure if DTC is displayed.
- Erase DTC.
- Study the relationship between the cause detected by DTC and the symptom described by the customer.
3. Check related service bulletins for information.

Is any symptom described and any DTC detected?

Symptom is described, DTC is displayed>>GO TO 3.
Symptom is described, DTC is not displayed>>GO TO 4.
Symptom is not described, DTC is displayed>>GO TO 5.

3. CONFIRM THE SYMPTOM

Confirm the symptom described by the customer.
Connect CONSULT-III to the vehicle in “DATA MONITOR” mode and check real-time diagnosis results.
Verify relation between the symptom and the condition when the symptom is detected.

>> GO TO 5.

4. CONFIRM THE SYMPTOM

Confirm the symptom described by the customer.
Connect CONSULT-III to the vehicle in “DATA MONITOR ” mode and check real-time diagnosis results.
Verify relation between the symptom and the condition when the symptom is detected.

>> GO TO 6.

5. PERFORM DTC CONFIRMATION PROCEDURE

Perform DTC Confirmation Procedure for the displayed DTC, and then check that DTC is detected again.
If two or more DTCs are detected, refer to XX-XX, "*****" (BCM) and determine trouble diagnosis order.

Is DTC detected?

YES >> GO TO 7.
NO >> Refer to XX-XX, "*****".

6. DETECT MALFUNCTIONING SYSTEM BY SYMPTOM DIAGNOSIS

Detect malfunctioning system according to Symptom Diagnosis based on the confirmed symptom in step 4.

>> GO TO 7.

7. DETECT MALFUNCTIONING PART BY DIAGNOSTIC PROCEDURE

Inspect according to Diagnostic Procedure of the system.

NOTE:

The Diagnostic Procedure is described based on open circuit inspection. A short circuit inspection is also required for the circuit check in the Diagnostic Procedure.

>> GO TO 8.

8. REPAIR OR REPLACE THE MALFUNCTIONING PART

1. Repair or replace the malfunctioning part.
2. Reconnect parts or connectors disconnected during Diagnostic Procedure again after repair and replacement.
3. Check DTC. If DTC is displayed, erase it.

>> GO TO 9.

9. FINAL CHECK

When DTC was detected in step 9, perform DTC Confirmation Procedure or Component Function Check again, and then check that the malfunctions have been fully repaired.
When symptom was described by the customer, refer to the confirmed symptom in step 3 or 4, and check that the symptom is not detected.

Are all malfunctions corrected?

NO (DTC is detected)>>GO TO 7.
NO (Symptom remains)>>GO TO 6.
YES >> INSPECTION END

INSPECTION AND ADJUSTMENT

ADDITIONAL SERVICE WHEN REPLACING CONTROL UNIT

ADDITIONAL SERVICE WHEN REPLACING CONTROL UNIT : Description

INFOID:0000000005949040

Perform the system initialization when replacing or registering keyfob and ignition key.

ADDITIONAL SERVICE WHEN REPLACING CONTROL UNIT : Special Repair Requirement

INFOID:0000000005949041

Refer to the CONSULT-III Operation Manual-NATS.

KEYFOB ID REGISTRATION

Description

INFOID:0000000006038733

Perform the following procedure after BCM is replaced or when new keyfob ID is registered

NOTE:

When registering the keyfob ID, perform only one procedure to simultaneously register both ID (IMMOBILIZER ID and keyfob ID).

Work Procedure

INFOID:0000000006038734

1. STEP 1

Close all doors.

>> GO TO 2.

2. STEP 2

Perform lock operation by door lock/unlock switch or driver door lock knob.

>> GO TO 3.

3. STEP 3

1. Remove and insert the key into the ignition key 6 times within 10seconds (turning the key switch from OFF to ON counts as 1 time).
2. All doors unlock automatically.

NOTE:

On the sixth key insertion, keep the key in the cylinder with the key switch ON.

Do all doors unlock automatically?

YES >> GO TO 4.
NO >> GO TO 1.

4. STEP 4

Turn ignition switch to ACC within 3 seconds after all doors unlock and perform lock operation by door lock/unlock switch or driver door lock knob.

>> GO TO 5.

5. STEP 5

1. Press the lock or unlock button of the keyfob to be added.
2. All doors unlock simultaneously.
3. Key ID is registered.

Is key ID registered?

YES-1 >> When adding a keyfob: GO TO 6.
YES-2 >> When ending registration: GO TO 8.
NO >> GO TO 1.

6. STEP 6

Perform lock operation by door lock/unlock switch or driver door lock knob.

>> GO TO 5.

7. STEP 7

1. Press the lock or unlock button of the keyfob to be added.
2. All doors unlock simultaneously.
3. Key ID is registered.

Is key ID registered?

YES-1 >> When adding a keyfob: GO TO 6.

YES-2 >> When ending registration: GO TO 8.
NO >> GO TO 6.

8. STEP 8

Open any door.

>> REGISTRATION END

DTC/CIRCUIT DIAGNOSIS

DOOR SWITCH

Component Function Check

INFOID:0000000006068636

1.CHECK FUNCTION

1. Select “DOOR LOCK” of “BCM” using CONSULT-III.
2. Select “DOOR SW-DR”, “DOOR SW-AS”, “DOOR SW-RL”, “DOOR SW-RR” and “BACK DOOR SW” in “DATA MONITOR” mode.
3. Check that the function operates normally according to the following conditions.

Monitor item	Condition		Status
DOOR SW-DR	Driver side door	Open	ON
		Closed	OFF
DOOR SW-AS	Passenger side door	Open	ON
		Closed	OFF
DOOR SW-RL	Rear door LH	Open	ON
		Closed	OFF
DOOR SW-RR	Rear door RH	Open	ON
		Closed	OFF
BACK DOOR SW	Back door	Open	ON
		Closed	OFF

Is the inspection result normal?

YES >> Door switch is OK.
NO >> Refer to DLK-177, "Diagnosis Procedure".

Diagnosis Procedure

INFOID:0000000006068637

1.CHECK DOOR SWITCH INPUT SIGNAL

1. Turn ignition switch OFF.
2. Disconnect malfunctioning door switch connector.
3. Check signal between malfunctioning door switch harness connector and ground using oscilloscope.

(+)			(–)	Condition		Signal (Reference value)
Door switch						
Connector		Terminal				
Driver side	B35	3	Ground	Driver door switch	OFF (When driver door closed)	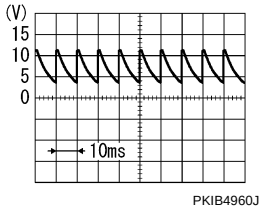 7.0 - 8.0 V
					ON (When driver door opened)	0 V
Passenger side	B28	3		Passenger door switch	OFF (When passenger door closed)	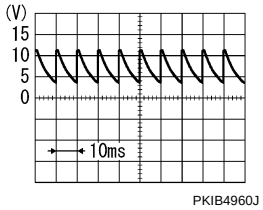 7.0 - 8.0 V
					ON (When passenger door opened)	0 V
Rear LH	B71	3		Rear LH door switch	OFF (When rear LH door closed)	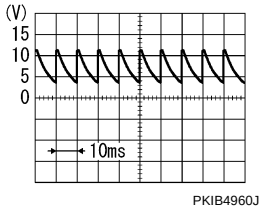 7.0 - 8.0 V
					ON (When rear door LH opened)	0 V
Rear RH	B53	3		Rear RH door switch	OFF (When rear RH door closed)	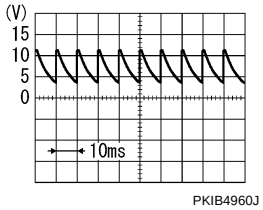 7.0 - 8.0 V
					ON (When rear RH door opened)	0 V

(+)			(–)	Condition		Signal (Reference value)
Door switch						
Connector		Terminal				
Back door	D70	1	Ground	Back door switch	OFF (When back door closed)	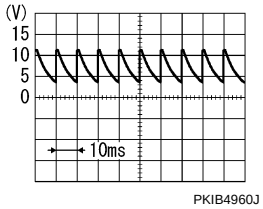 9.5 - 10.0 V
					ON (When back door opened)	0 V

Is the inspection result normal?

YES-1 >> Back door: GO TO 3.
YES-1 >> Other doors: GO TO 4.
NO >> GO TO 2.

2. CHECK DOOR SWITCH CIRCUIT

1. Disconnect BCM connector.
2. Check continuity between door switch harness connector and BCM harness connector.

Door switch			BCM		Continuity
Connector		Terminal	Connector	Terminal	
Driver side	B35	3	M66	47	Existed
Passenger side	B28		M65	12	
Rear LH	B71		M66	48	
Rear RH	B53		M65	13	
Back door	D70	1	M66	43	

3. Check continuity between door switch harness connector and ground.

Door switch			Ground	Continuity
Connector		Terminal		
Driver side	B35	3		Not existed
Passenger side	B28			
Rear LH	B71			
Rear RH	B53			
Back door	D70	1		

Is the inspection result normal?

YES >> Replace BCM. Refer to BCS-99, "Removal and Installation".
NO >> Repair or replace harness.

3. CHECK BACK DOOR SWITCH GROUND CIRCUIT

Check continuity between back door switch harness connector and ground.

Back door switch		Ground	Continuity
Connector	Terminal		
D70	3		Existed

Is the inspection result normal?

YES >> GO TO 4.

NO >> Replace back door switch.

4. CHECK DOOR SWITCH

Refer to DLK-180, "Component Inspection".

Is the inspection result normal?

YES >> GO TO 5.
NO-1 >> Replace back door lock assembly. (back door)
NO-2 >> Replace malfunctioning door switch. (other door)

5. CHECK INTERMITTENT INCIDENT

Refer to GI-33, "Intermittent Incident".

>> INSPECTION END

Component Inspection

INFOID:0000000006068638

1. CHECK DOOR SWITCH

1. Turn ignition switch OFF.
2. Disconnect malfunctioning door switch connector.
3. Check continuity between door switch terminals.

Door switch			Condition		Continuity
Terminal					
Driver side	3	Ground part of door switch	Door switch	Pressed	Not existed
				Released	Existed
Passenger side				Pressed	Not existed
				Released	Existed
Rear LH				Pressed	Not existed
				Released	Existed
Rear RH				Pressed	Not existed
				Released	Existed
Back door	1	3		Pressed	Not existed
				Released	Existed

Is the inspection result normal?

YES >> INSPECTION END
NO-1 >> Replace back door lock assembly. (back door)
NO-1 >> Replace malfunction door switch. (other door)

DOOR LOCK AND UNLOCK SWITCH

Component Function Check

INFOID:0000000005949060

1. CHECK FUNCTION

1. Select “DOOR LOCK” of “BCM” using CONSULT-III.
2. Select “CDL LOCK SW”, “CDL UNLOCK SW” in “DATA MONITOR” mode.
3. Check that the function operates normally according to the following conditions.

Monitor item	Condition		Status
CDL LOCK SW	Door lock and unlock switch	LOCK	ON
		UNLOCK	OFF
CDL UNLOCK SW		LOCK	OFF
		UNLOCK	ON

Is the inspection result normal?

YES >> Door lock and unlock switch is OK.
NO >> Refer to DLK-181, "Diagnosis Procedure".

Diagnosis Procedure

INFOID:0000000005949061

1. CHECK DOOR LOCK AND UNLOCK SWITCH INPUT SIGNAL

1. Turn ignition switch OFF.
2. Disconnect power window main switch connector.
3. Check signal between power window main switch harness connector and ground using oscilloscope.

(+)		(–)	Signal (Reference value)
Power window main switch			
Connector	Terminal		
D5	6	Ground	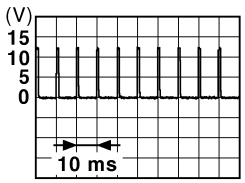 JPMIA0012GB 1.0 - 1.5 V
D6	18		

Is the inspection result normal?

YES >> GO TO 4.
NO >> GO TO 2.

2. CHECK DOOR LOCK AND UNLOCK SWITCH CIRCUIT

1. Disconnect BCM connector and front power window switch (passenger side) connector.
2. Check continuity between BCM harness connector and power window main switch harness connector.

BCM		Power window main switch		Continuity
Connector	Terminal	Connector	Terminal	
M69	45	D6	18	Existed
	46	D5	6	

3. Check continuity between BCM harness connector and ground.

BCM		Ground	Continuity
Connector	Terminal		
M69	45		Not existed
	46		

Is the inspection result normal?

YES >> Replace BCM. Refer to BCS-99, "Removal and Installation".
NO >> Repair or replace harness.

3. CHECK DOOR LOCK AND UNLOCK SWITCH GROUND

Check continuity between power window main switch harness connector and ground.

Power window main switch		Ground	Continuity
Connector	Terminal		
D6	17		Existed

Is the inspection result normal?

YES >> GO TO 4.
NO >> Repair or replace harness.

4. CHECK DOOR LOCK AND UNLOCK SWITCH

Refer to DLK-182, "Component Inspection".

Is the inspection result normal?

YES >> GO TO 5.
NO >> Replace power window main switch. Refer to XX-XX, "*****".

5. CHECK INTERMITTENT INCIDENT

Refer to XX-XX, "*****".

>> INSPECTION END

Component Inspection

INFOID:0000000005949062

1. CHECK DOOR LOCK AND UNLOCK SWITCH

1. Turn ignition switch OFF.
2. Disconnect power window main switch (door lock and unlock switch) connector.
3. Check continuity between power window main switch (door lock and unlock switch) terminals.

Power window main switch		Condition		Continuity
Terminal				
6	17	Door lock and unlock switch	LOCK	Not existed
			UNLOCK	Existed
18			LOCK	Existed
			UNLOCK	Not existed

Is the inspection result normal?

YES >> INSPECTION END
NO >> Replace power window main switch. Refer to XX-XX, "*****".

DOOR LOCK ACTUATOR
DRIVER SIDE

DRIVER SIDE : Component Function Check

INFOID:0000000005949068

1.CHECK FUNCTION

1. Select “DOOR LOCK” of “BCM” using CONSULT-III.
2. Select “DOOR LOCK” in “ACTIVE TEST” mode.
3. Touch “ALL LOCK” or “ALL UNLK” to check that it works normally.

Is the inspection result normal?

YES >> Door lock actuator is OK.
NO >> Refer to DLK-183, "DRIVER SIDE : Diagnosis Procedure".

DRIVER SIDE : Diagnosis Procedure

INFOID:0000000005949069

1.CHECK DOOR LOCK ACTUATOR INPUT SIGNAL

1. Turn ignition switch OFF.
2. Disconnect front door lock assembly (driver side) connector.
3. Check voltage between front door lock assembly (driver side) harness connector and ground.

(+)		(–)	Condition		Voltage (Approx.)
Front door lock assembly (driver side)					
Connector	Terminal				
D28	5	Ground	Door lock and unlock switch	Lock	12 V
	6			Unlock	

Is the inspection result normal?

YES >> Replace front door lock assembly (driver side).
NO >> GO TO 2.

2.CHECK DOOR LOCK ACTUATOR CIRCUIT

1. Disconnect BCM connector and all door lock actuator connector.
2. Check continuity between BCM harness connector and front door lock assembly (driver side) harness connector.

BCM		Front door lock assembly (driver side)		Continuity
Connector	Terminal	Connector	Terminal	
M67	66	D28	6	Existed
	65		5	

3. Check continuity between BCM harness connector and ground.

BCM		Ground	Continuity
Connector	Terminal		
M70	66	Ground	Not existed
	65		

Is the inspection result normal?

YES >> GO TO 3.
NO >> Repair or replace harness.

3.CHECK BCM OUTPUT SIGNAL

1. Connect BCM connector.
2. Check voltage between BCM harness connector and ground.

(+)		(–)	Condition		Voltage (Approx.)
BCM					
Connector	Terminal				
M67	65	Ground	Door lock and unlock switch	Lock	12 V
	66			Unlock	

Is the inspection result normal?

YES >> Check for internal short of each door lock actuator.
NO >> Replace BCM. Refer to BCS-99, "Removal and Installation".

PASSENGER SIDE

PASSENGER SIDE : Component Function Check

INFOID:0000000005949071

1. CHECK FUNCTION

1. Select “DOOR LOCK” of “BCM” using CONSULT-III.
2. Select “DOOR LOCK” in “ACTIVE TEST” mode.
3. Touch “ALL LOCK” or “ALL UNLK” to check that it works normally.

Is the inspection result normal?

YES >> Door lock actuator is OK.
NO >> Refer to DLK-184, "PASSENGER SIDE : Diagnosis Procedure".

PASSENGER SIDE : Diagnosis Procedure

INFOID:0000000005949072

1. CHECK DOOR LOCK ACTUATOR INPUT SIGNAL

1. Turn ignition switch OFF.
2. Disconnect front door lock assembly (passenger side) connector.
3. Check voltage between front door lock assembly (passenger side) harness connector and ground.

(+)		(–)	Condition		Voltage (Approx.)
Front door lock assembly (passenger side)					
Connector	Terminal				
D9	1	Ground	Door lock and unlock switch	Lock	12 V
	2			Unlock	

Is the inspection result normal?

YES >> Replace front door lock assembly (passenger side).
NO >> GO TO 2.

2. CHECK DOOR LOCK ACTUATOR CIRCUIT

1. Disconnect BCM connector and all door lock actuator connector.
2. Check continuity between BCM harness connector and front door lock assembly (passenger side) harness connector.

BCM		Front door lock assembly (passenger side)		Continuity
Connector	Terminal	Connector	Terminal	
M67	65	D9	1	Existed
	66		2	

3. Check continuity between BCM harness connector and ground.

BCM		Ground	Continuity
Connector	Terminal		
M67	65		Not existed
	66		

Is the inspection result normal?

YES >> GO TO 3.
NO >> Repair or replace harness.

3. CHECK BCM OUTPUT SIGNAL

1. Connect BCM connector.
2. Check voltage between BCM harness connector and ground.

(+)		(–)	Condition		Voltage (Approx.)
BCM					
Connector	Terminal				
M67	65	Ground	Door lock and unlock switch	Lock	12 V
	66			Unlock	

Is the inspection result normal?

YES >> Check for internal short of each door lock actuator.
NO >> Replace BCM. Refer to BCS-99, "Removal and Installation".

REAR LH

REAR LH : Component Function Check

INFOID:0000000005949074

1. CHECK FUNCTION

1. Select “DOOR LOCK” of “BCM” using CONSULT-III.
2. Select “DOOR LOCK” in “ACTIVE TEST” mode.
3. Touch “ALL LOCK” or “ALL UNLK” to check that it works normally.

Is the inspection result normal?

YES >> Door lock actuator is OK.
NO >> Refer to DLK-186, "REAR RH : Diagnosis Procedure".

REAR LH : Diagnosis Procedure

INFOID:0000000005949075

1. CHECK DOOR LOCK ACTUATOR INPUT SIGNAL

1. Turn ignition switch OFF.
2. Disconnect rear door lock assembly LH connector.
3. Check voltage between rear door lock assembly LH harness connector and ground.

(+)		(–)	Condition		Voltage (Approx.)
Rear door lock assembly LH					
Connector	Terminal				
D65	1	Ground	Door lock and unlock switch	Lock	12 V
	2			Unlock	

Is the inspection result normal?

YES >> Replace rear door lock assembly LH.
NO >> GO TO 2.

2. CHECK DOOR LOCK ACTUATOR CIRCUIT

1. Disconnect BCM connector and all door lock actuator.
2. Check continuity between BCM harness connector and rear door lock assembly LH harness connector.

BCM		Rear door lock assembly LH		Continuity
Connector	Terminal	Connector	Terminal	
M67	65	D65	1	Existed
	66		2	

3. Check continuity between BCM harness connector and ground.

BCM		Ground	Continuity
Connector	Terminal		
M67	65		Not existed
	66		

Is the inspection result normal?

YES >> GO TO 3.
NO >> Repair or replace harness.

3. CHECK BCM OUTPUT SIGNAL

1. Connect BCM connector.
2. Check voltage between BCM harness connector and ground.

(+)		(–)	Condition		Voltage (Approx.)
BCM					
Connector	Terminal				
M67	65	Ground	Door lock and unlock switch	Lock	12 V
	66			Unlock	

Is the inspection result normal?

YES >> Check for internal short of each door lock actuator.
NO >> Replace BCM. Refer to BCS-99, "Removal and Installation".

REAR RH

REAR RH : Component Function Check

INFOID:0000000005949077

1. CHECK FUNCTION

1. Select “DOOR LOCK” of “BCM” using CONSULT-III.
2. Select “DOOR LOCK” in “ACTIVE TEST” mode.
3. Touch “ALL LOCK” or “ALL UNLK” to check that it works normally.

Is the inspection result normal?

YES >> Door lock actuator is OK.
NO >> Refer to DLK-186, "REAR RH : Diagnosis Procedure".

REAR RH : Diagnosis Procedure

INFOID:0000000005949078

1. CHECK DOOR LOCK ACTUATOR INPUT SIGNAL

1. Turn ignition switch OFF.
2. Disconnect rear door lock assembly RH connector.
3. Check voltage between rear door lock assembly RH harness connector and ground.

(+)		(–)	Condition		Voltage (Approx.)
Rear door lock assembly RH					
Connector	Terminal				
D45	5	Ground	Door lock and unlock switch	Lock	12 V
	6			Unlock	

Is the inspection result normal?

YES >> Replace rear door lock assembly RH.
NO >> GO TO 2.

2. CHECK DOOR LOCK ACTUATOR CIRCUIT

1. Disconnect BCM connector and all door lock actuator.
2. Check continuity between BCM harness connector and rear door lock assembly RH harness connector.

BCM		Rear door lock assembly RH		Continuity
Connector	Terminal	Connector	Terminal	
M67	65	D45	5	Existed
	66		6	

3. Check continuity between BCM harness connector and ground.

BCM		Ground	Continuity
Connector	Terminal		
M67	65	Ground	Not existed
	66		

Is the inspection result normal?

YES >> GO TO 3.
NO >> Repair or replace harness.

3. CHECK BCM OUTPUT SIGNAL

1. Connect BCM connector.
2. Check voltage between BCM harness connector and ground.

(+)		(–)	Condition		Voltage (Approx.)
BCM					
Connector	Terminal				
M67	65	Ground	Door lock and unlock switch	Lock	12 V
	66			Unlock	

Is the inspection result normal?

YES >> Check for internal short of each door lock actuator.
NO >> Replace BCM. Refer to BCS-99, "Removal and Installation".

BACK DOOR

BACK DOOR : Component Function Check

INFOID:0000000005949080

1. CHECK FUNCTION

1. Select “DOOR LOCK” of “BCM” using CONSULT-III.
2. Select “DOOR LOCK” in “ACTIVE TEST” mode.
3. Touch “ALL LOCK” or “ALL UNLK” to check that it works normally.

Is the inspection result normal?

YES >> Back door lock actuator is OK.
NO >> Refer to DLK-187, "BACK DOOR : Diagnosis Procedure".

BACK DOOR : Diagnosis Procedure

INFOID:0000000005949081

1. CHECK BACK DOOR LOCK ACTUATOR INPUT SIGNAL

1. Turn ignition switch OFF.
2. Disconnect back door lock assembly connector.
3. Check voltage between back door lock assembly harness connector and ground.

(+)		(–)	Condition		Voltage (Approx.)
Back door lock assembly					
Connector	Terminal				
D106	4	Ground	Door lock and unlock switch	Unlock	12 V
	2			Lock	

Is the inspection result normal?

YES >> Replace back door lock assembly.
NO >> GO TO 2

2. CHECK BACK DOOR LOCK ACTUATOR CIRCUIT

1. Disconnect BCM connector and all door lock actuator.
2. Check continuity between BCM harness connector and back door lock assembly harness connector.

BCM		Back door lock assembly		Continuity
Connector	Terminal	Connector	Terminal	
M67	65	D106	2	Existed
	66		4	

3. Check continuity between BCM harness connector and ground.

BCM		Ground	Continuity
Connector	Terminal		
M67	65		Not existed
	66		

Is the inspection result normal?

YES >> GO TO 3.
NO >> Repair or replace harness.

3. CHECK BCM OUTPUT SIGNAL

1. Connect BCM connector.
2. Check voltage between BCM harness connector and ground.

(+)		(–)	Condition		Voltage (Approx.)
BCM					
Connector	Terminal				
M67	65	Ground	Door lock and unlock switch	Lock	12 V
	66			Unlock	

Is the inspection result normal?

YES >> Check for internal short of each door lock actuator.
NO >> Replace BCM. Refer to BCS-99, "Removal and Installation".

DOOR KEY CYLINDER SWITCH

Component Function Check

INFOID:0000000006059492

1. CHECK DOOR KEY CYLINDER SWITCH INPUT SIGNAL

1. Select “DOOR LOCK” of “BCM” using CONSULT-III.
2. Select “KEY CYL LK-SW”, “KEY CYL UN-SW” in “DATA MONITOR” mode.
3. Check that the function operates normally according to the following conditions.

Monitor item	Condition		Status
KEY CYL LK-SW	Driver side door key cylinder	Lock	ON
		Neutral / Unlock	OFF
KEY CYL UN-SW		Unlock	ON
		Neutral / Lock	OFF

Is the inspection result normal?

YES >> Door key cylinder switch is OK.
NO >> Refer to DLK-189, "Diagnosis Procedure".

Diagnosis Procedure

INFOID:0000000006059493

1. CHECK DOOR KEY CYLINDER SWITCH INPUT SIGNAL

1. Turn ignition switch OFF.
2. Disconnect front door lock assembly (driver side) connector.
3. Check voltage between front door lock assembly (driver side) harness connector and ground.

(+)		(–)	Voltage (V) (Approx.)
Front door lock assembly (driver side)			
Connector	Terminal		
D28	5	Ground	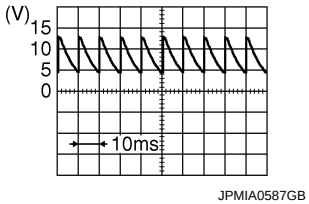 8.0 - 8.5 V
	6		Battery voltage

Is the inspection result normal?

YES >> GO TO 3.
NO >> GO TO 2.

2. CHECK DOOR KEY CYLINDER SWITCH SIGNAL CIRCUIT

1. Disconnect BCM connector.
2. Check continuity between BCM harness connector and front door lock assembly (driver side) harness connector.

BCM		Front door lock assembly (driver side)		Continuity
Connector	Terminal	Connector	Terminal	
M65	7	D28	5	Existed
	8		6	

3. Check continuity between BCM harness connector and ground.

BCM		Ground	Continuity
Connector	Terminal		
M65	7		Not existed
	8		

Is the inspection result normal?

YES >> Replace BCM. Refer to BCS-99, "Removal and Installation".
NO >> Repair or replace harness.

3. CHECK DOOR KEY CYLINDER SWITCH GROUND CIRCUIT

Check continuity between front door lock assembly (driver side) harness connector and ground.

Front door lock assembly (driver side)		Ground	Continuity
Connector	Terminal		
D28	3		Existed

Is the inspection result normal?

YES >> GO TO 4.
NO >> Repair or replace harness.

4. CHECK DOOR KEY CYLINDER SWITCH

Refer to DLK-190, "Component Inspection".

Is the inspection result normal?

YES >> GO TO 5.
NO >> Replace front door lock assembly (driver side). Refer to XX-XX, "*****".

5. CHECK INTERMITTENT INCIDENT

Refer to GI-33, "Intermittent Incident".

>> INSPECTION END

Component Inspection

INFOID:0000000006059494

1. CHECK DOOR KEY CYLINDER SWITCH

1. Turn ignition switch OFF.
2. Disconnect front door lock assembly (driver side) terminal.
3. Check continuity between front door lock assembly (driver side) terminals.

Front door lock assembly (driver side) Terminal		Condition		Continuity
5	3	Driver side door key cylinder	Unlock	Existed
			Neutral / Lock	Not existed
6			Lock	Existed
			Neutral / Unlock	Not existed

Is the inspection result normal?

YES >> INSPECTION END
NO >> Replace front door lock assembly (driver side). Refer to XX-XX, "*****".

UNLOCK SENSOR

Component Function Check

INFOID:0000000006068639

1. CHECK FUNCTION

1. Select “INTELLIGENT KEY” of “BCM” using CONSULT-III.
2. Select “UNLK SEN-DR” in “DATA MONITOR” mode.
3. Check that the function operates normally according to the following conditions.

Monitor item	Condition		Status
UNLK SEN -DR	Driver side door	Lock	OFF
		Unlock	ON

Is the inspection result normal?

YES >> Unlock sensor is OK.
NO >> Refer to DLK-191, "Diagnosis Procedure".

Diagnosis Procedure

INFOID:0000000006068640

1. CHECK UNLOCK SENSOR INPUT SIGNAL

1. Turn ignition switch OFF.
2. Disconnect front door lock assembly (driver side) connector.
3. Check signal between front door lock assembly (driver side) harness connector and ground with oscilloscope.

(+)		(–)	Signal (Reference value)
Front door lock assembly (driver side)			
Connector	Terminal		
D28	4	Ground	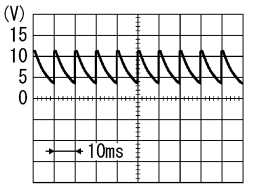

PKIB4960J

Is the inspection result normal?

YES >> GO TO 3.
NO >> GO TO 2.

2. CHECK UNLOCK SENSOR CIRCUIT

1. Disconnect BCM connector.
2. Check continuity between BCM harness connector and front door lock assembly (driver side) harness connector.

BCM		Front door lock assembly (driver side)		Continuity
Connector	Terminal	Connector	Terminal	
M65	7	D28	4	Existed

3. Check continuity between BCM harness connector and ground.

BCM		Ground	Continuity
Connector	Terminal		
M65	7		Not existed

Is the inspection result normal?

YES >> Replace BCM. Refer to BCS-99, "Removal and Installation".

NO >> Repair or replace harness.

3. CHECK UNLOCK SENSOR GROUND CIRCUIT

Check continuity between front door lock assembly (driver side) harness connector and ground.

Front door lock assembly (driver side)		Ground	Continuity
Connector	Terminal		
D28	3		Existed

Is the inspection result normal?

YES >> GO TO 4.
NO >> Repair or replace harness.

4. CHECK UNLOCK SENSOR

Refer to DLK-192, "Component Inspection".

Is the inspection result normal?

YES >> GO TO 5.
NO >> Replace front door lock assembly (driver side).

5. CHECK INTERMITTENT INCIDENT

Refer to GI-33, "Intermittent Incident".

>> INSPECTION END

Component Inspection

INFOID:0000000006068641

1. CHECK UNLOCK SENSOR

1. Turn ignition switch OFF.
2. Disconnect front door lock assembly (driver side) connector.
3. Check continuity between front door lock assembly (driver side) terminals.

Front door lock assembly (driver side)		Condition		Continuity
Terminal				
3	4	Driver side door	Unlock	Existed
			Lock	Not existed

Is the inspection result normal?

YES >> INSPECTION END
NO >> Replace front door lock assembly (driver side).

REMOTE KEYLESS ENTRY RECEIVER

Component Function Check

INFOID:0000000005949087

1. CHECK FUNCTION

1. Select “MULTI REMOTE ENT” of “BCM” using CONSULT-III.
2. Select “KEYLESS LOCK” or “KEYLESS UNLOCK” in “DATA MONITOR” mode.
3. Check that the function operates normally according to the following conditions.

Monitor item	Condition		Status
KEYLESS LOCK	Keyfob button	LOCK	On
		UNLOCK	Off
KEYLESS UN-LOCK		LOCK	Off
		UNLOCK	On

Is the inspection result normal?

YES >> Remote keyless entry receiver is OK.
NO >> Refer to DLK-193, "Diagnosis Procedure".

Diagnosis Procedure

INFOID:0000000005949088

1. CHECK REMOTE KEYLESS ENTRY RECEIVER OUTPUT SIGNAL

1. Turn ignition switch OFF.
2. Check signal between remote keyless entry receiver harness connector and ground using oscilloscope.

(+) Remote keyless entry receiver Connector	(+) Remote keyless entry receiver Terminal	(–)	Condition	Signal (Reference value)
M61	2	Ground	Waiting	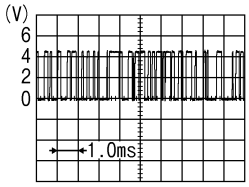 PIIB7728J
			Signal receiving	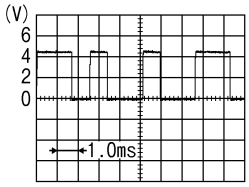 PIIB7729J

Is the inspection result normal?

YES >> GO TO 2.
NO >> GO TO 3.

2. CHECK REMOTE KEYLESS ENTRY RECEIVER CIRCUIT 1

1. Disconnect BCM connector and remote keyless entry receiver connector
2. Check continuity between BCM harness connector and remote keyless entry receiver harness connector.

BCM Connector	BCM Terminal	Remote keyless entry receiver Connector	Remote keyless entry receiver Terminal	Continuity
M65	20	M61	2	Existed

3. Check continuity between BCM harness connector and ground.

BCM		Ground	Continuity
Connector	Terminal		
M65	20		Not existed

Is the inspection result normal?

YES >> Replace BCM. Refer to XX-XX, "*****".
NO >> Repair or replace harness between BCM and remote keyless entry receiver.

3. CHECK REMOTE KEYLESS ENTRY RECEIVER POWER SUPPLY

1. Disconnect remote keyless entry receiver.
2. Check signal between remote keyless entry receiver harness connector and ground using oscilloscope.

(+)		(–)	Signal (Reference value)	
Remote keyless entry receiver				
Connector	Terminal			
M61	4	Ground	Insert mechanical key into ignition key cylinder	0 V
			Remove mechanical key from ignition key cylinder (Any door opened)	5 V
			Remove mechanical key from ignition key cylinder (Any door closed)	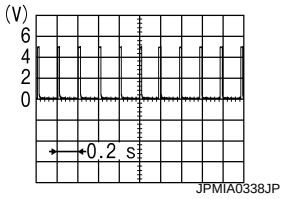

Is the inspection result normal?

YES >> GO TO 5.
NO >> GO TO 4.

4. CHECK REMOTE KEYLESS ENTRY RECEIVER CIRCUIT 2

1. Disconnect BCM connector.
2. Check continuity between BCM harness connector and remote keyless entry receiver harness connector.

BCM		Remote keyless entry receiver		Continuity
Connector	Terminal	Connector	Terminal	
M61	19	M61	4	Existed

3. Check continuity between BCM connector and ground.

BCM		Ground	Continuity
Connector	Terminal		
M61	19		Not existed

Is the inspection result normal?

YES >> Replace BCM. Refer to XX-XX, "*****".
NO >> Repair or replace harness between BCM and remote keyless entry receiver.

5. CHECK REMOTE KEYLESS ENTRY RECEIVER CIRCUIT 3

1. Disconnect BCM connector.
2. Check continuity between BCM harness connector and remote keyless entry receiver harness connector.

BCM		Remote keyless entry receiver		Continuity
Connector	Terminal	Connector	Terminal	
M65	18	M61	1	Existed

3. Check continuity between BCM harness connector and ground.

BCM		Ground	Continuity
Connector	Terminal		
M65	18		Existed

Is the inspection result normal?

YES >> GO TO 6.
NO >> Repair or replace harness.

6. CHECK REMOTE KEYLESS ENTRY RECEIVER GROUND CIRCUIT

1. Connect BCM connector.
2. Check continuity between BCM harness connector and ground.

BCM		Ground	Continuity
Connector	Terminal		
M65	18		Existed

Is the inspection result normal?

YES >> Replace remote keyless entry receiver. Refer to DLK-249, "Removal and Installation".
NO >> Replace BCM. Refer to XX-XX, "*****".

KEY SWITCH

Component Function Check

INFOID:0000000005949090

1.CHECK FUNCTION

1. Select “MULTI REMOTE ENT” of “BCM” using CONSULT-III.
2. Select “KEY ON SW” in “DATA MONITOR” mode.
3. Check that the function operates normally according to the following conditions.

Monitor item	Condition		Status
KEY ON SW	Keyfob	Inserted in key cylinder	ON
		Removed from key cylinder	OFF

Is the inspection result normal?

YES >> Key switch is OK.
NO >> Refer to DLK-196, "Diagnosis Procedure".

Diagnosis Procedure

INFOID:0000000005949091

1.CHECK FUSE

1. Turn ignition switch OFF.
2. Check 10 A fuse, [No.11, located in fuse block (J/B)].

Is fuse fusing?

YES >> Replace the blown fuse after repairing the affected circuit if a fuse is blown.
NO >> GO TO 2.

2.CHECK KEY SWITCH POWER SUPPLY CIRCUIT

1. Disconnect key switch connector.
2. Check voltage between key switch harness connector and ground.

Key switch		Ground	Voltage (Approx.)
Connector	Terminal		
M24	2		Battery voltage

Is the inspection result normal?

YES >> GO TO 3.
NO >> Repair or replace harness.

3.CHECK KEY SWITCH CIRCUIT

1. Disconnect BCM connector.
2. Check continuity between key switch harness connector and BCM harness connector.

Key switch		BCM		Continuity
Connector	Terminal	Connector	Terminal	
M24	1	M65	37	Existed

3. Check continuity between key switch connector and ground.

Key switch		Ground	Continuity
Connector	Terminal		
M24	1		Not existed

Is the inspection result normal?

YES >> GO TO 4
NO >> Repair or replace harness.

4. CHECK KEY SWITCH

Refer to DLK-197, "Component Inspection".

Is the inspection result normal?

YES >> GO TO 5.
NO >> Replace key switch.

5. CHECK INTERMITTENT INCIDENT

Refer to XX-XX, "*****".

>> INSPECTION END

Component Inspection

INFOID:0000000005949092

COMPONENT INSPECTION

1. CHECK KEY SWITCH

1. Turn ignition switch OFF.
2. Disconnect key switch connector.
3. Check continuity between key switch terminals.

Key switch		Condition		Continuity
Terminal				
1	2	Keyfob	Inserted in key cylinder	Existed
			Removed from key cylinder	Not existed

Is the inspection result normal?

YES >> INSPECTION END
NO >> Replace key switch.

HAZARD FUNCTION

Component Function Check

INFOID:0000000005949097

1.CHECK FUNCTION

1. Select “MULTI REMOTE ENT” of “BCM” using CONSULT-III.
2. Select “FLASHER” in “ACTIVE TEST” mode.
3. Touch “LH” or “RH” to check that it works normally.

Is the inspection result normal?

YES >> Hazard warning lamp circuit is OK.
NO >> Refer to DLK-198, "Diagnosis Procedure".

Diagnosis Procedure

INFOID:0000000005949098

1.CHECK HAZARD SWITCH CIRCUIT

Refer to XX-XX, "*****".

Is the inspection result normal?

YES >> GO TO 2.
NO >> Repair or replace hazard warning switch circuit. Refer to XX-XX, "*****".

2.CHECK INTERMITTENT INCIDENT

Refer to XX-XX, "*****".

>> INSPECTION END

KEYFOB BATTERY

Component Function Check

INFOID:0000000005949100

1. CHECK FUNCTION

Check door lock and unlock operation with keyfob button.

Is the inspection result normal?

YES >> Keyfob is OK.
NO >> Refer to DLK-199, "Diagnosis Procedure".

Diagnosis Procedure

INFOID:0000000005949101

1. CHECK KEYFOB BATTERY

Check by connecting a resistance (approximately 300Ω) so that the current value becomes about 10 mA.

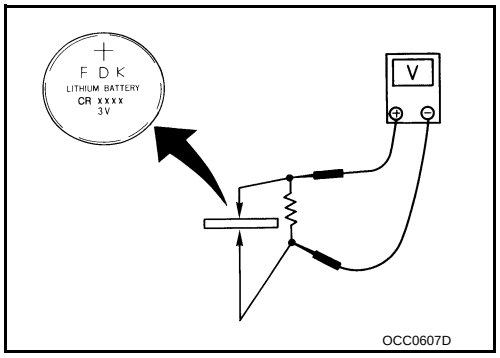

Standard : Approx. 2.5 - 3.0V

Is the measurement value within the specification?

YES >> Replace keyfob.
NO >> Replace keyfob battery. Refer to DLK-250, "Removal and Installation".

SYMPTOM DIAGNOSIS

DOOR DOES NOT LOCK/UNLOCK WITH DOOR LOCK AND UNLOCK SWITCH

ALL DOOR

ALL DOOR : Description

INFOID:0000000005949109

All doors do not lock/unlock using door lock and unlock switch.

ALL DOOR : Diagnosis Procedure

INFOID:0000000005949110

1. CHECK DOOR LOCK AND UNLOCK SWITCH

Check door lock and unlock switch.
Refer to DLK-181, "Component Function Check".

Is the inspection result normal?

YES >> GO TO 2.
NO >> Repair or replace the malfunctioning parts.

2. CHECK DOOR LOCK ACTUATOR

Check front door lock assembly (driver side).
Refer to DLK-183, "DRIVER SIDE : Component Function Check".

Is the inspection result normal?

YES >> GO TO 3.
NO >> Repair or replace the malfunctioning parts.

3. REPLACE BCM

- Replace BCM. Refer to BCS-99, "Removal and Installation".
- Confirm the operation after replacement.

Is the result normal?

YES >> INSPECTION END
NO >> Check intermittent incident. Refer to GI-33, "Intermittent Incident".

DRIVER SIDE

DRIVER SIDE : Description

INFOID:0000000005949111

Driver side door does not lock/unlock using door lock and unlock switch.

DRIVER SIDE : Diagnosis Procedure

INFOID:0000000005949112

1. CHECK DOOR LOCK ACTUATOR

Check front door lock assembly (driver side).
Refer to DLK-183, "DRIVER SIDE : Component Function Check".

Is the inspection result normal?

YES >> GO TO 2.
NO >> Repair or replace the malfunctioning parts.

2. REPLACE BCM

- Replace BCM. Refer to BCS-99, "Removal and Installation".
- Confirm the operation after replacement.

Is the result normal?

YES >> INSPECTION END
NO >> Check intermittent incident. Refer to GI-33, "Intermittent Incident".

PASSENGER SIDE

PASSENGER SIDE : Description

INFOID:0000000005949113

Passenger side door does not lock/unlock using door lock and unlock switch.

PASSENGER SIDE : Diagnosis Procedure

INFOID:0000000005949114

1. CHECK DOOR LOCK ACTUATOR

Check front door lock assembly (passenger side).
Refer to DLK-184, "PASSENGER SIDE : Component Function Check".

Is the inspection result normal?

YES >> GO TO 2.
NO >> Repair or replace the malfunctioning parts.

2. REPLACE BCM

- Replace BCM. Refer to BCS-99, "Removal and Installation".
- Confirm the operation after replacement.

Is the result normal?

YES >> INSPECTION END
NO >> Check intermittent incident. Refer to GI-33, "Intermittent Incident".

REAR LH

REAR LH : Description

INFOID:0000000005949115

Rear LH side door does not lock/unlock using door lock and unlock switch.

REAR LH : Diagnosis Procedure

INFOID:0000000005949116

1. CHECK DOOR LOCK ACTUATOR

Check rear door lock assembly LH.
Refer to DLK-185, "REAR LH : Component Function Check".

Is the inspection result normal?

YES >> GO TO 2.
NO >> Repair or replace the malfunctioning parts.

2. REPLACE BCM

- Replace BCM. Refer to BCS-99, "Removal and Installation".
- Confirm the operation after replacement.

Is the result normal?

YES >> INSPECTION END
NO >> Check intermittent incident. Refer to GI-33, "Intermittent Incident".

REAR RH

REAR RH : Description

INFOID:0000000005949117

Rear RH side door does not lock/unlock using door lock and unlock switch.

REAR RH : Diagnosis Procedure

INFOID:0000000005949118

1. CHECK DOOR LOCK ACTUATOR

Check rear door lock assembly RH
Refer to DLK-186, "REAR RH : Component Function Check".

Is the inspection result normal?

YES >> GO TO 2.
NO >> Repair or replace the malfunctioning parts.

2. REPLACE BCM

- Replace BCM. Refer to BCS-99, "Removal and Installation".

- Confirm the operation after replacement.

Is the result normal?

YES >> INSPECTION END
NO >> Check intermittent incident. Refer to GI-33, "Intermittent Incident".

BACK DOOR

BACK DOOR : Description

INFOID:0000000005949119

Back door does not lock/unlock using door lock and unlock switch.

BACK DOOR : Diagnosis Procedure

INFOID:0000000005949120

1. CHECK DOOR LOCK ACTUATOR

Check back door lock assembly.
Refer to DLK-187, "BACK DOOR : Component Function Check".

Is the inspection result normal?

YES >> GO TO 2.
NO >> Repair or replace the malfunctioning parts.

2. REPLACE BCM

- Replace BCM. Refer to BCS-57, "Removal and Installation".
- Confirm the operation after replacement.

Is the result normal?

YES >> INSPECTION END
NO >> Check intermittent incident. Refer to GI-33, "Intermittent Incident".

DOOR DOES NOT LOCK/UNLOCK WITH DRIVER SIDE DOOR LOCK KNOB OR DOOR KEY CYLINDER

Description

INFOID:0000000006068635

All doors do not lock/unlock using driver side door lock knob or door key cylinder (except for Thailand).

Diagnosis Procedure

INFOID:0000000006068634

1. CHECK POWER DOOR LOCK OPERATION

Check power door lock operation.

Does door lock/unlock with door lock and unlock switch?

YES >> GO TO 2.
NO >> Refer to DLK-200, "ALL DOOR : Diagnosis Procedure".

2. CHECK UNLOCK SENSOR

Check unlock sensor.
Refer to DLK-191, "Component Function Check".

Is the inspection result normal?

YES >> GO TO 3.
NO >> Repair or replace the malfunctioning parts.

3. REPLACE BCM

- Replace BCM. Refer to BCS-57, "Removal and Installation".
- Confirm the operation after replacement.

Is the result normal?

YES >> INSPECTION END
NO >> Check intermittent incident. Refer to GI-33, "Intermittent Incident".

DOOR DOES NOT LOCK/UNLOCK WITH DOOR KEY CYLINDER OPERATION

Description

INFOID:0000000006068633

All doors do not lock/unlock using door key cylinder (for Thailand).

Diagnosis Procedure

INFOID:0000000006059495

1. CHECK POWER DOOR LOCK OPERATION

Check power door lock operation.

Does door lock/unlock with door lock and unlock switch?

YES >> GO TO 2.
NO >> Go to DLK-200, "ALL DOOR : Diagnosis Procedure".

2. CHECK DOOR KEY CYLINDER SWITCH

Check door key cylinder switch.
Refer to DLK-189, "Component Function Check".

Is the inspection result normal?

YES >> GO TO 3.
NO >> Repair or replace the malfunctioning parts.

3. REPLACE BCM

- Replace BCM. Refer to BCS-57, "Removal and Installation".
- Confirm the operation after replacement.

Is the result normal?

YES >> INSPECTION END
NO >> Check intermittent incident. Refer to GI-33, "Intermittent Incident".

DOOR DOES NOT LOCK/UNLOCK WITH KEYFOB

Diagnosis Procedure

INFOID:0000000005949122

1. CHECK POWER DOOR LOCK OPERATION

Check power door lock operation.

Does door lock/unlock with door lock and unlock switch?

YES >> GO TO 2.
NO >> Go to DLK-200, "ALL DOOR : Diagnosis Procedure".

2. CHECK REMOTE KEYLESS ENTRY RECEIVER

Check remote keyless entry receiver.
Refer to DLK-193, "Component Function Check".

Is the inspection result normal?

YES >> GO TO 3.
NO >> Repair or replace the malfunctioning parts.

3. CHECK DOOR SWITCH

Check door switch.
Refer to DLK-177, "Component Function Check".

Is the inspection result normal?

YES >> GO TO 4.
NO >> Repair or replace the malfunctioning parts.

4. CHECK KEYFOB BATTERY

Check keyfob battery.
Refer to DLK-199, "Component Function Check".

Is the inspection result normal?

YES >> GO TO 5.
NO >> Repair or replace the malfunctioning parts.

5. REPLACE BCM

- Replace BCM. Refer to BCS-57, "Removal and Installation".
- Confirm the operation after replacement.

Is the result normal?

YES >> INSPECTION END
NO >> Check intermittent incident. Refer to GI-33, "Intermittent Incident".

AUTO DOOR LOCK OPERATION DOES NOT OPERATE

Diagnosis Procedure

INFOID:0000000005949123

1. CHECK “AUTO LOCK SET” SETTING WITH CONSULT-III

1. Select “MULTI REMOTE ENT” of “BCM” using CONSULT-III.
2. Select “AUTO LOCK SET” in “WORK SUPPORT” mode.
3. Check “AUTO LOCK SET” setting in “WORK SUPPORT”.
   Refer to DLK-158, "MULTI REMOTE ENT : CONSULT-III Function (BCM - MULTI REMOTE ENT)".

Is the inspection result normal?

YES >> GO TO 2.
NO >> Set “MODE 2”, “MODE 3”, “MODE 4”, “MODE 5”, “MODE 6” or “MODE 7” in “AUTO LOCK SET”.

2. REPLACE BCM

- Replace BCM. Refer to BCS-57, "Removal and Installation".
- Confirm the operation after replacement.

Is the result normal?

YES >> INSPECTION END
NO >> Check intermittent incident. Refer to GI-33, "Intermittent Incident".

KEY REMINDER FUNCTION DOES NOT OPERATE

Diagnosis Procedure

INFOID:0000000006069115

1. CHECK KEY SWITCH

Check key switch.
Refer to DLK-196, "Component Function Check".

Is the inspection result normal?

YES >> GO TO 2.
NO >> Repair or replace the malfunctioning parts.

2. CHECK DRIVER SIDE DOOR SWITCH

Check driver side door switch.
Refer to DLK-177, "Component Function Check".

Is the inspection result normal?

YES >> GO TO 3.
NO >> Repair or replace the malfunctioning parts.

3. REPLACE BCM

- Replace BCM. Refer to BCS-57, "Removal and Installation".
- Confirm the operation after replacement.

Is the result normal?

YES >> INSPECTION END
NO >> Check intermittent incident. Refer to GI-33, "Intermittent Incident".

HAZARD REMINDER OPERATION DOES NOT OPERATE

Diagnosis Procedure

INFOID:0000000005949129

1. CHECK “HAZARD LAMP SET” SETTING IN “WORK SUPPORT”

1. Select “MULTI REMOTE ENT” of “BCM” using CONSULT-III.
2. Select “HAZARD LAMP SET” in “WORK SUPPORT” mode.
3. Check “HAZARD LAMP SET” setting in “WORK SUPPORT”.
   Refer to DLK-158, "MULTI REMOTE ENT : CONSULT-III Function (BCM - MULTI REMOTE ENT)".

Is the inspection result normal?

YES >> GO TO 2.
NO >> Set “MODE 2”, “MODE 3” or “MODE 4” in “HAZARD LAMP SET”.

2. CHECK HAZARD WARNING LAMP

Check hazard warning lamp.
Refer to DLK-198, "Component Function Check".

Is the inspection result normal?

YES >> GO TO 3.
NO >> Repair or replace the malfunctioning parts.

3. REPLACE BCM

- Replace BCM. Refer to BCS-57, "Removal and Installation".
- Confirm the operation after replacement.

Is the result normal?

YES >> INSPECTION END
NO >> Check intermittent incident. Refer to GI-33, "Intermittent Incident".

PANIC ALARM FUNCTION DOES NOT OPERATE

Diagnosis Procedure

INFOID:0000000006046543

1. CHECK REMOTE KEYLESS ENTRY FUNCTION

Check remote keyless entry function.

Does door lock/unlock with keyfob button?

YES >> GO TO 2.
NO >> Refer to DLK-205, "Diagnosis Procedure".

2. CHECK HORN OPERATION

1. Select “IPDM E/R” using CONSULT-III.
2. Select “HORN” in “ACTIVE TEST” mode.
3. Touch “On” to check that it works normally.

Is the inspection result normal?

YES >> GO TO 3.
NO >> Repair or replace the malfunctioning parts.

3. CHECK “PANIC ALARM SET” SETTING IN “WORK SUPPORT”

1. Select “MULTI REMOTE ENT” of “BCM”.
2. Select “PANIC ALARM SET” in “WORK SUPPORT” mode.
3. Check “PANIC ALARM SET” setting in “WORK SUPPORT”.
   Refer to DLK-158, "MULTI REMOTE ENT : CONSULT-III Function (BCM - MULTI REMOTE ENT)".

Is the inspection result normal?

YES >> GO TO 4.
NO >> Set “MODE 1” or “MODE 3” in “PANIC ALARM SET”

4. REPLACE BCM

- Replace BCM. Refer to BCS-57, "Removal and Installation".
- Confirm the operation after replacement.

Is the result normal?

YES >> INSPECTION END
NO >> Check intermittent incident. Refer to GI-33, "Intermittent Incident".

SQUEAK AND RATTLE TROUBLE DIAGNOSES

Work Flow

INFOID:0000000006067077

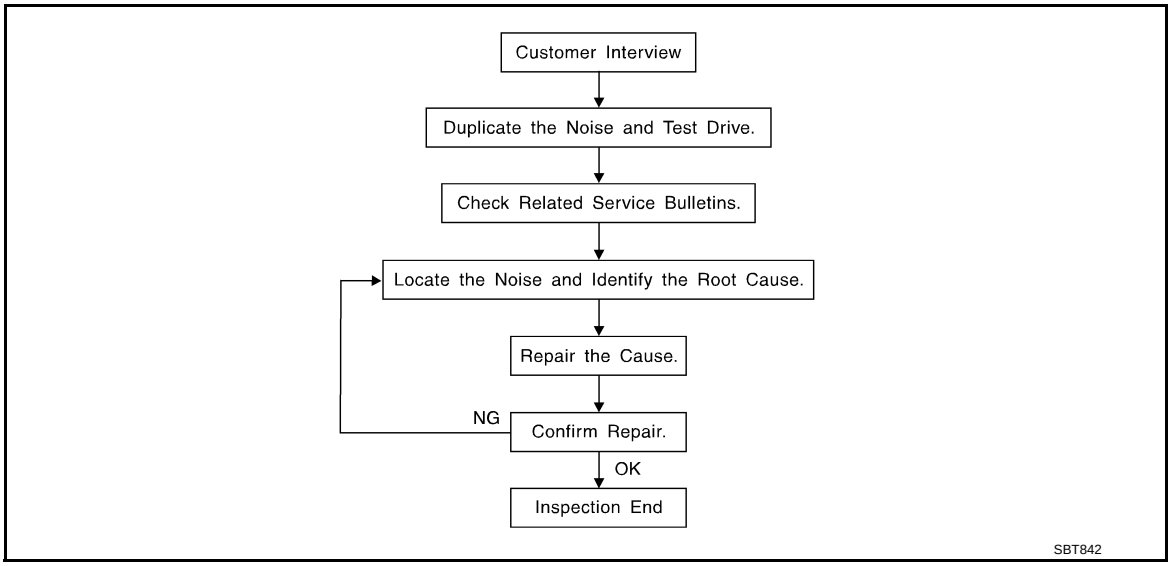

CUSTOMER INTERVIEW

Interview the customer if possible, to determine the conditions that exist when the noise occurs. Use the Diagnostic Worksheet during the interview to document the facts and conditions when the noise occurs and any of the customer's comments; refer to DLK-214, "Diagnostic Worksheet". This information is necessary to duplicate the conditions that exist when the noise occurs.

- The customer may not be able to provide a detailed description or the location of the noise. Attempt to obtain all the facts and conditions that exist when the noise occurs (or does not occur).
- If there is more than one noise in the vehicle, be sure to diagnose and repair the noise that the customer is concerned about. This can be accomplished by a test drive with the customer.
- After identifying the type of noise, isolate the noise in terms of its characteristics. The noise characteristics are provided so the customer, service adviser and technician are all speaking the same language when defining the noise.
- Squeak – (Like tennis shoes on a clean floor)
  Squeak characteristics include the light contact/fast movement/brought on by road conditions/hard surfaces = higher pitch noise/softer surfaces = lower pitch noises/edge to surface = chirping
- Creak – (Like walking on an old wooden floor)
  Creak characteristics include firm contact/slow movement/twisting with a rotational movement/pitch dependent on materials/often brought on by activity.
- Rattle – (Like shaking a baby rattle)
  Rattle characteristics include the fast repeated contact/vibration or similar movement/loose parts/missing clip or fastener/incorrect clearance.
- Knock – (Like a knock on a door)
  Knock characteristics include hollow sounding/sometimes repeating/often brought on by driver action.
- Tick – (Like a clock second hand)
  Tick characteristics include gentle contacting of light materials/loose components/can be caused by driver action or road conditions.
- Thump – (Heavy, muffled knock noise)
  Thump characteristics include softer knock/dead sound often brought on by activity.
- Buzz – (Like a bumble bee)
  Buzz characteristics include high frequency rattle/firm contact.
- Often the degree of acceptable noise level will vary depending upon the person. A noise that you may judge as acceptable may be very irritating to the customer.
- Weather conditions, especially humidity and temperature, may have a great effect on noise level.

DUPLICATE THE NOISE AND TEST DRIVE

If possible, drive the vehicle with the customer until the noise is duplicated. Note any additional information on the Diagnostic Worksheet regarding the conditions or location of the noise. This information can be used to duplicate the same conditions when you confirm the repair.

If the noise can be duplicated easily during the test drive, to help identify the source of the noise, try to duplicate the noise with the vehicle stopped by doing one or all of the following:

1) Close a door.
2) Tap or push/pull around the area where the noise appears to be coming from.
3) Rev the engine.
4) Use a floor jack to recreate vehicle “twist”.
5) At idle, apply engine load (electrical load, half-clutch on M/T model, drive position on A/T model).
6) Raise the vehicle on a hoist and hit a tire with a rubber hammer.

- Drive the vehicle and attempt to duplicate the conditions the customer states exist when the noise occurs.
- If it is difficult to duplicate the noise, drive the vehicle slowly on an undulating or rough road to stress the vehicle body.

LOCATE THE NOISE AND IDENTIFY THE ROOT CAUSE

1. Narrow down the noise to a general area. To help pinpoint the source of the noise, use a listening tool (Engine Ear or mechanics stethoscope).
2. Narrow down the noise to a more specific area and identify the cause of the noise by:

- removing the components in the area that you suspect the noise is coming from.
  Do not use too much force when removing clips and fasteners, otherwise clips and fastener can be broken or lost during the repair, resulting in the creation of new noise.
- tapping or pushing/pulling the component that you suspect is causing the noise.
  Do not tap or push/pull the component with excessive force, otherwise the noise will be eliminated only temporarily.
- feeling for a vibration with your hand by touching the component(s) that you suspect is (are) causing the noise.
- placing a piece of paper between components that you suspect are causing the noise.
- looking for loose components and contact marks.
  Refer to DLK-212, "Inspection Procedure".

REPAIR THE CAUSE

- If the cause is a loose component, tighten the component securely.
- If the cause is insufficient clearance between components:
- separate components by repositioning or loosening and retightening the component, if possible.
- insulate components with a suitable insulator such as urethane pads, foam blocks, felt cloth tape or urethane tape are available through your authorized Nissan Parts Department.

CAUTION:
Do not use excessive force as many components are constructed of plastic and may be damaged.
NOTE:

- URETHANE PADS
  Insulates connectors, harness, etc.
- INSULATOR (Foam blocks)
  Insulates components from contact. Can be used to fill space behind a panel.
- INSULATOR (Light foam block)
- FELT CLOTHTAPE
  Used to insulate where movement does not occur. Ideal for instrument panel applications.
  The following materials, not available through NISSAN Parts Department, can also be used to repair squeaks and rattles.
- UHMW(TEFLON) TAPE
  Insulates where slight movement is present. Ideal for instrument panel applications.
- SILICONE GREASE
  Used in place of UHMW tape that will be visible or not fit.
  Note: Will only last a few months.
- SILICONE SPRAY
  Use when grease cannot be applied.
- DUCT TAPE
  Use to eliminate movement.

CONFIRM THE REPAIR

Confirm that the cause of a noise is repaired by test driving the vehicle. Operate the vehicle under the same conditions as when the noise originally occurred. Refer to the notes on the Diagnostic Worksheet.

Inspection Procedure

INFOID:0000000006067078

Refer to Table of Contents for specific component removal and installation information.

INSTRUMENT PANEL

Most incidents are caused by contact and movement between:

1. Cluster lid A and instrument panel
2. Acrylic lens and combination meter housing
3. Instrument panel to front pillar garnish
4. Instrument panel to windshield
5. Instrument panel mounting pins
6. Wiring harnesses behind the combination meter
7. A/C defroster duct and duct joint

These incidents can usually be located by tapping or moving the components to duplicate the noise or by pressing on the components while driving to stop the noise. Most of these incidents can be repaired by applying felt cloth tape or silicon spray (in hard to reach areas). Urethane pads can be used to insulate wiring harness.

CAUTION:

Do not use silicone spray to isolate a squeak or rattle. If you saturate the area with silicone, you will not be able to recheck the repair.

CENTER CONSOLE

Components to pay attention to include:

1. Shifter assembly cover to finisher
2. A/C control unit and cluster lid C
3. Wiring harnesses behind audio and A/C control unit

The instrument panel repair and isolation procedures also apply to the center console.

DOORS

Pay attention to the:

1. Finisher and inner panel making a slapping noise
2. Inside handle escutcheon to door finisher
3. Wiring harnesses tapping
4. Door striker out of alignment causing a popping noise on starts and stops

Tapping or moving the components or pressing on them while driving to duplicate the conditions can isolate many of these incidents. You can usually insulate the areas with felt cloth tape or insulator foam blocks to repair the noise.

TRUNK

Trunk noises are often caused by a loose jack or loose items put into the trunk by the owner.
In addition look for:

1. Trunk lid dumpers out of adjustment
2. Trunk lid striker out of adjustment
3. Trunk lid torsion bars knocking together
4. A loose license plate or bracket

Most of these incidents can be repaired by adjusting, securing or insulating the item(s) or component(s) causing the noise.

SUNROOF/HEADLINING

Noises in the sunroof/headlining area can often be traced to one of the following:

1. Sunroof lid, rail, linkage or seals making a rattle or light knocking noise
2. Sunvisor shaft shaking in the holder
3. Front or rear windshield touching headlining and squeaking

Again, pressing on the components to stop the noise while duplicating the conditions can isolate most of these incidents. Repairs usually consist of insulating with felt cloth tape.

SEATS

When isolating seat noise it is important to note the position the seat is in and the load placed on the seat when the noise is present. These conditions should be duplicated when verifying and isolating the cause of the noise.

Cause of seat noise include:

1. Headrest rods and holder
2. A squeak between the seat pad cushion and frame
3. Rear seatback lock and bracket

These noises can be isolated by moving or pressing on the suspected components while duplicating the conditions under which the noise occurs. Most of these incidents can be repaired by repositioning the component or applying urethane tape to the contact area.

UNDERHOOD

Some interior noise may be caused by components under the hood or on the engine wall. The noise is then transmitted into the passenger compartment.

Causes of transmitted underhood noise include:

1. Any component mounted to the engine wall
2. Components that pass through the engine wall
3. Engine wall mounts and connectors
4. Loose radiator mounting pins
5. Hood bumpers out of adjustment
6. Hood striker out of adjustment

These noises can be difficult to isolate since they cannot be reached from the interior of the vehicle. The best method is to secure, move or insulate one component at a time and test drive the vehicle. Also, engine RPM or load can be changed to isolate the noise. Repairs can usually be made by moving, adjusting, securing, or insulating the component causing the noise.

Diagnostic Worksheet

INFOID:0000000006067079

SQUEAK & RATTLE DIAGNOSTIC WORKSHEET

Dear Nissan Customer:
We are concerned about your satisfaction with your Nissan vehicle. Repairing a squeak or rattle sometimes can be very difficult. To help us fix your Nissan right the first time, please take a moment to note the area of the vehicle where the squeak or rattle occurs and under what conditions. You may be asked to take a test drive with a service advisor or technician to ensure we confirm the noise you are hearing.

I. WHERE DOES THE NOISE COME FROM? (circle the area of the vehicle)
The illustrations are for reference only, and may not reflect the actual configuration of your vehicle.

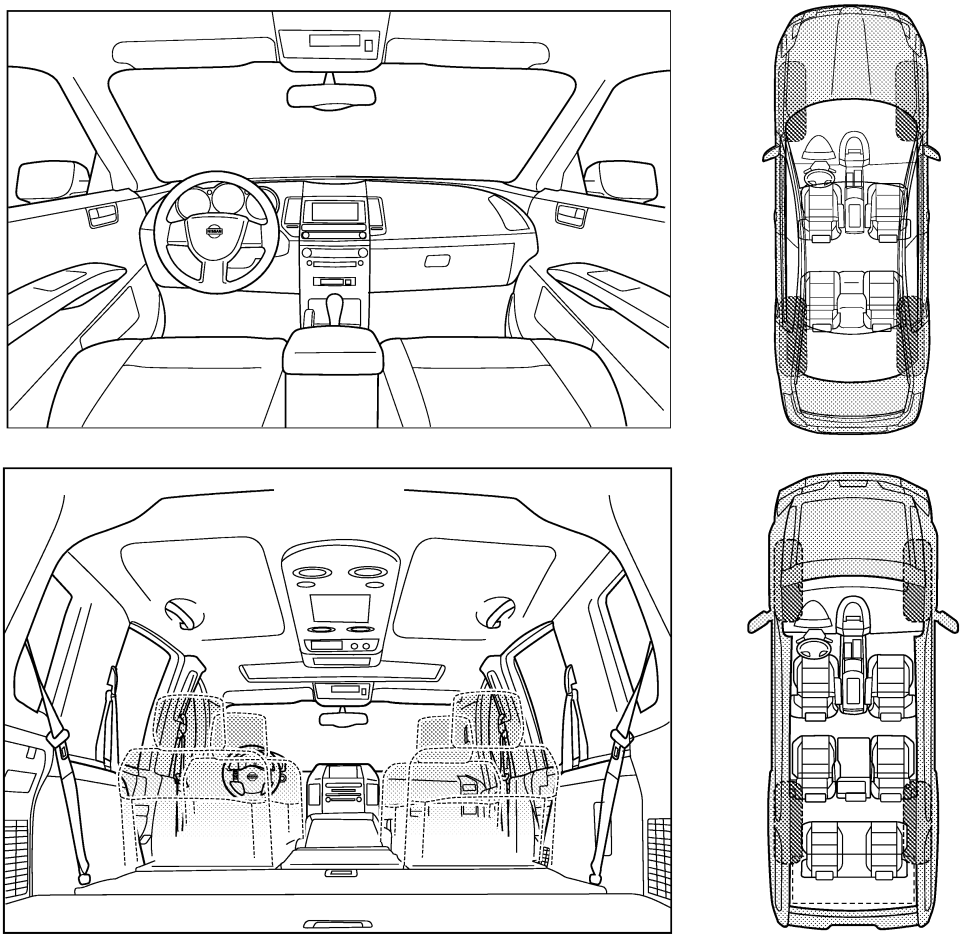

Continue to page 2 of the worksheet and briefly describe the location of the noise or rattle. In addition, please indicate the conditions which are present when the noise occurs.

PIIB8740E

SQUEAK & RATTLE DIAGNOSTIC WORKSHEET - page 2

Briefly describe the location where the noise occurs:

_____

_____

II. WHEN DOES IT OCCUR? (please check the boxes that apply)

- ☐ anytime
- ☐ 1st time in the morning
- ☐ only when it is cold outside
- ☐ only when it is hot outside
- ☐ after sitting out in the rain
- ☐ when it is raining or wet
- ☐ dry or dusty conditions
- ☐ other:

III. WHEN DRIVING:

- ☐ through driveways
- ☐ over rough roads
- ☐ over speed bumps
- ☐ only about ____ mph
- ☐ on acceleration
- ☐ coming to a stop
- ☐ on turns: left, right or either (circle)
- ☐ with passengers or cargo
- ☐ other: _____
- ☐ after driving _____ miles or _____ minutes

IV. WHAT TYPE OF NOISE

- ☐ squeak (like tennis shoes on a clean floor)
- ☐ creak (like walking on an old wooden floor)
- ☐ rattle (like shaking a baby rattle)
- ☐ knock (like a knock at the door)
- ☐ tick (like a clock second hand)
- ☐ thump (heavy, muffled knock noise)
- ☐ buzz (like a bumble bee)

TO BE COMPLETED BY DEALERSHIP PERSONNEL

Test Drive Notes:

_____

_____

_____

	YES	NO	Initials of person performing
Vehicle test driven with customer	☐	☐	_____
- Noise verified on test drive	☐	☐	_____
- Noise source located and repaired	☐	☐	_____
- Follow up test drive performed to confirm repair	☐	☐	_____

VIN: _____ Customer Name: _____

W.O.# _____ Date: _____

This form must be attached to Work Order

PIIB8742E

REMOVAL AND INSTALLATION

HOOD

Exploded View

INFOID:0000000006067024

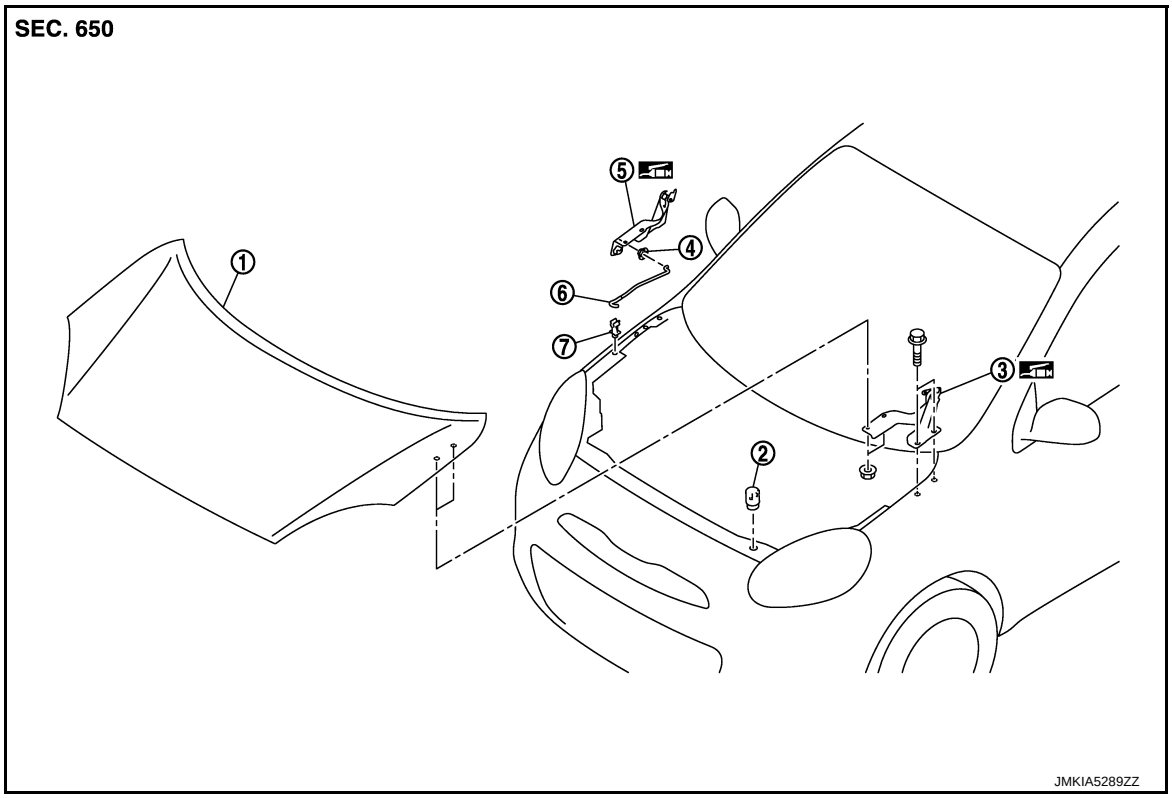

1. Hood assembly
2. Hood bumper rubber
3. Hood hinge (LH)
4. Grommet
5. Hood hinge (RH)
6. Hood support rod
7. Clamp

Refer to GI-4, "Components" for symbols in the figure.

HOOD ASSEMBLY

HOOD ASSEMBLY : Removal and Installation

INFOID:0000000006067025

CAUTION:
- **Operate with two workers, because of its heavy weight.**
- **Use protective tape or shop cloth to protect from damage during removal and installation.**

REMOVAL

1. Support hood assembly with the proper material to prevent it from falling.

   WARNING:
   Injury may occur if hood assembly is not supported by the proper material when removing hood assembly.
2. Remove hood hinge mounting nuts on the hood to remove the hood assembly.

INSTALLATION

Install in the reverse order of removal.

CAUTION:
- **Check hood hinge rotating part for poor lubrication. If necessary, apply body grease.**
- **After installation, apply touch-up paint (the body color) onto the heads of hood hinge mounting bolts and nuts.**

- **After installing, perform hood fitting adjustment. Refer to DLK-217, "HOOD ASSEMBLY : Adjustment".**

HOOD ASSEMBLY : Adjustment

INFOID:0000000006067026

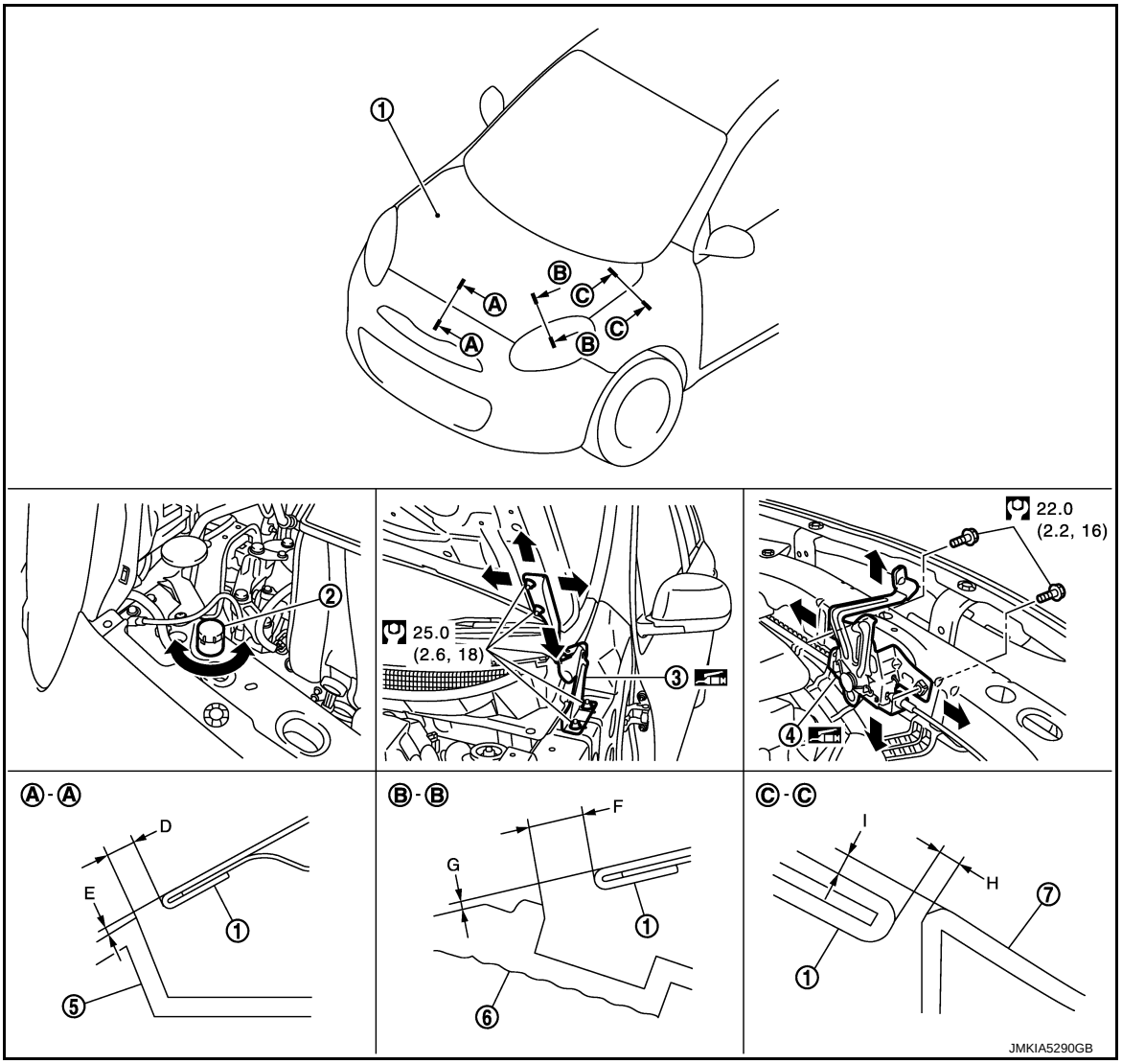

1. Hood assembly
2. Hood bumper rubber
3. Hood hinge
4. Hood lock assembly
5. Front bumper fascia
6. Front combination lamp
7. Front fender

Refer to GI-4, "Components" for symbols in the figure.

Check the clearance and the surface height between hood and each part by visually and touching.
If the clearance and the surface height are out of specification, adjust them according to the procedures shown below.

Unit: mm (in)

Portion				Standard	Difference (RH/LH, MAX)
Hood – Front bumper fascia	A – A	D	Clearance	2.4 – 6.4 (0.094 – 0.252)	—
		E	Surface height	(-2.5) – (+1.5) [(-0.098) – (+0.059)]	—
Hood – Front combination lamp	B – B	F	Clearance	1.9 – 6.1 (0.075 – 0.240)	< 2.0 (0.079)
		G	Surface height	(-2.6) – (+2.6) [(-0.102) – (+0.102)]	< 2.0 (0.079)

Portion				Standard	Difference (RH/LH, MAX)
Hood – Front fender	C – C	H	Clearance	2.5 – 4.5 (0.098 – 0.177)	< 1.0 (0.039)
		I	Surface height	(-1.5) – (+0.5) [(0.059) – (+0.020)]	< 1.5 (0.059)

1. Remove hood lock and adjust the surface height of hood, front bumper fascia, front combination lamp and front fender according to the fitting standard dimension, by rotating hood bumper rubber.
2. Loosen hood hinge mounting nuts on the hood.
3. Adjust the clearance of hood, front bumper fascia, front combination lamp and front fender according to the fitting standard dimension, for the hood.
4. Temporarily tighten hood lock.
5. Check that hood lock secondary latch is securely engaged with striker by dropping hood from approximately 200 mm (7.874 in) height or by pressing lightly on the hood.
   CAUTION:
   Never drop hood from a height of 300 mm (11.811 in) or more
6. Install as static closing face of hood is 94– 490 N (9.6 – 50.0 kg, 21.1 – 110 lb).
7. After adjustment tighten lock bolts to the specified torque.

CAUTION:
- **Check hood hinge rotating part for poor lubrication. If necessary, apply body grease.**
- **After installation, apply touch-up paint (the body color) onto the heads of hood hinge mounting bolts and nuts.**

HOOD HINGE

HOOD HINGE : Removal and Installation

INFOID:0000000006067027

REMOVAL

1. Remove hood assembly. Refer to DLK-216, "HOOD ASSEMBLY : Removal and Installation".
2. Remove front fender. Refer to DLK-221, "Removal and Installation".
3. Remove hood hinge mounting bolts, and then remove hood hinge.

INSTALLATION

Install in the reverse order of removal.

CAUTION:
- **Check hood hinge rotating part for poor lubrication. If necessary, apply grease.**
- **After installation, apply touch-up paint (the body color) onto the head of the hinge mounting bolts and nuts.**
- **After installation, perform hood fitting adjustment. Refer to DLK-217, "HOOD ASSEMBLY : Adjustment".**

HOOD SUPPORT ROD

HOOD SUPPORT ROD : Removal and Installation

INFOID:0000000006067028

REMOVAL

1. Support hood assembly with a suitable material to prevent it from falling.
   WARNING:
   Injury may occur if hood assembly is not supported by the proper material when removing hood assembly.
2. Pull hood support rod from grommet and remove.

INSTALLATION

Install in the reverse order of removal.

RADIATOR CORE SUPPORT

Exploded View

INFOID:0000000006067029

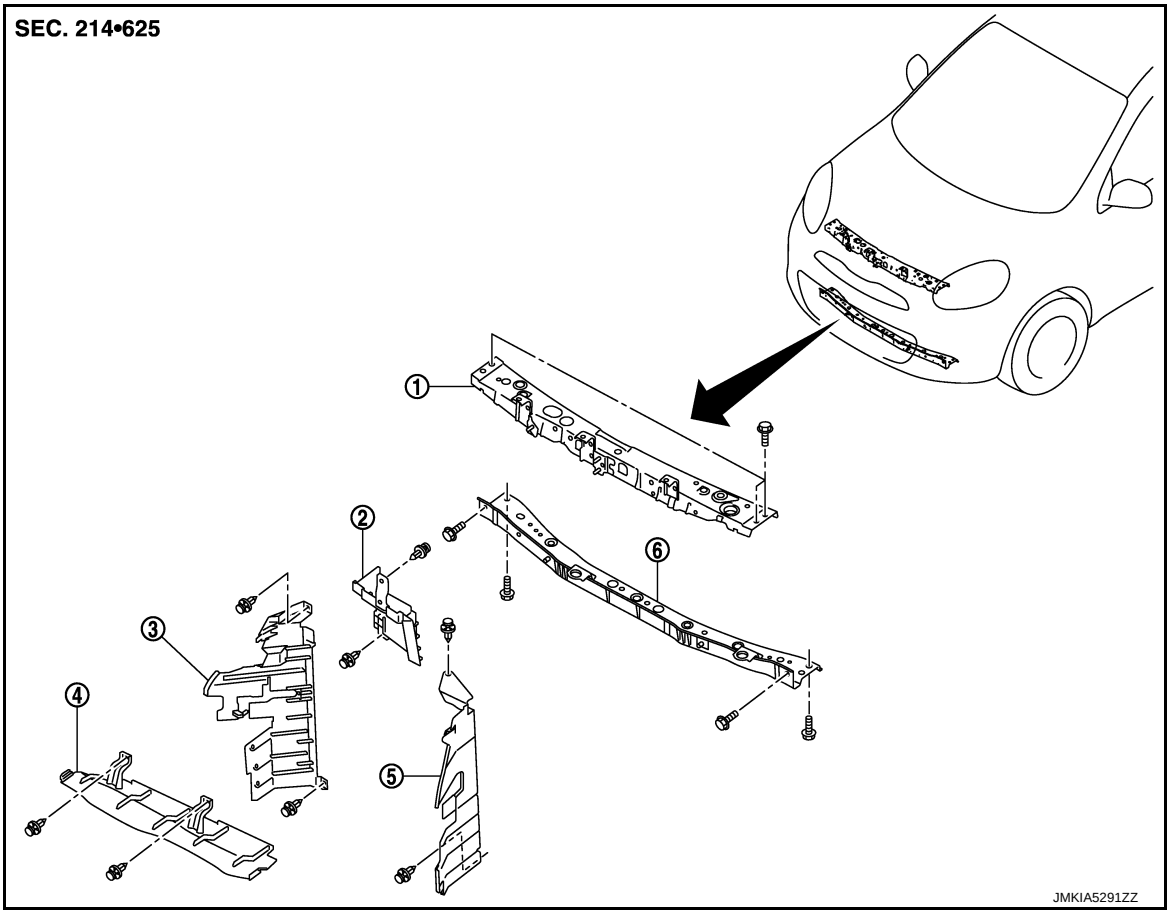

1. Radiator core support upper
2. Condenser side seal
3. Radiator side seal (RH)
4. Radiator upper seal
5. Radiator side seal (LH)
6. Radiator core support lower

Removal and Installation

INFOID:0000000006067030

RADIATOR CORE SUPPORT UPPER

Removal

1. Remove washer tank inlet. Rwfer to WW-47, "Removal and Installation".
2. Remove ground harness (1) mounting bolt (A).

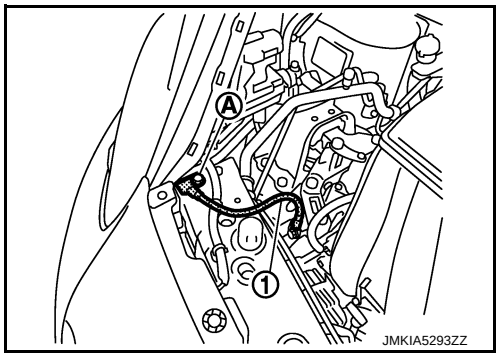

3. Disconnect horn connector.
4. Remove horn mounting nut, and remove horn.
5. Remove hood lock and hood lock cable fixing clip. Refer to DLK-236, "Removal and Installation".

6. Remove radiator upper seal fixing clips.
7. Remove fixing clips of radiator side seal (LH and RH) upper side.
8. Remove crash zone sensor. Refer to SR-25, "Removal and Installation".
9. Disconnect all harness.
10. Remove radiator reservoir tank mounting bolt.
11. Remove front bumper fascia upper side fixing clips.
12. Remove radiator core support upper mounting bolts.
13. Lift up upper part of front bumper fascia.
14. Lift up right side of radiator core support upper and remove radiator core support upper by pulling it out toward the vehicle right side.

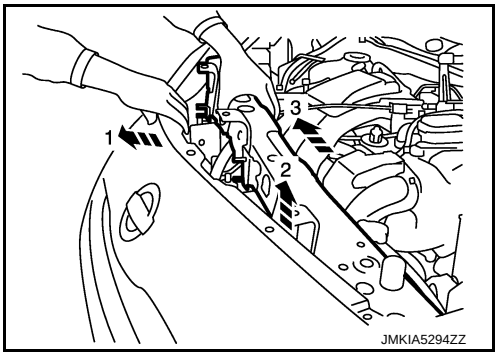

Installation
Install in the reverse order of removal.

RADIATOR CORE SUPPORT LOWER

Removal

1. Remove front bumper fascia. Refer to EXT-11, "Removal and Installation".
2. Remove radiator upper seal fixing clips, and then radiator upper seal from radiator core support upper.
3. Remove fixing clips of radiator side seal (LH and RH) under side.
4. Remove clips of fender protector.
5. Use a belts (A) to suspend it to prevent it from falling.
   CAUTION:
   Never damage radiator and condenser.

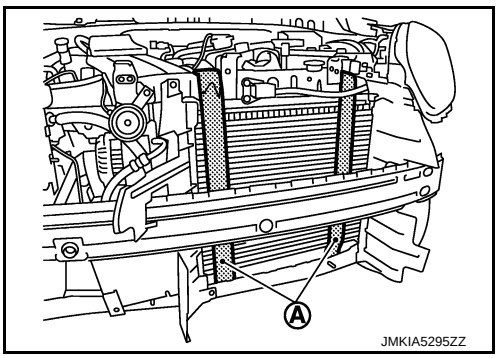

6. Remove mounting bolts, and then remove radiator core support lower.

Installation
Install in the reverse order of removal.

FRONT FENDER

Exploded View

INFOID:0000000006067031

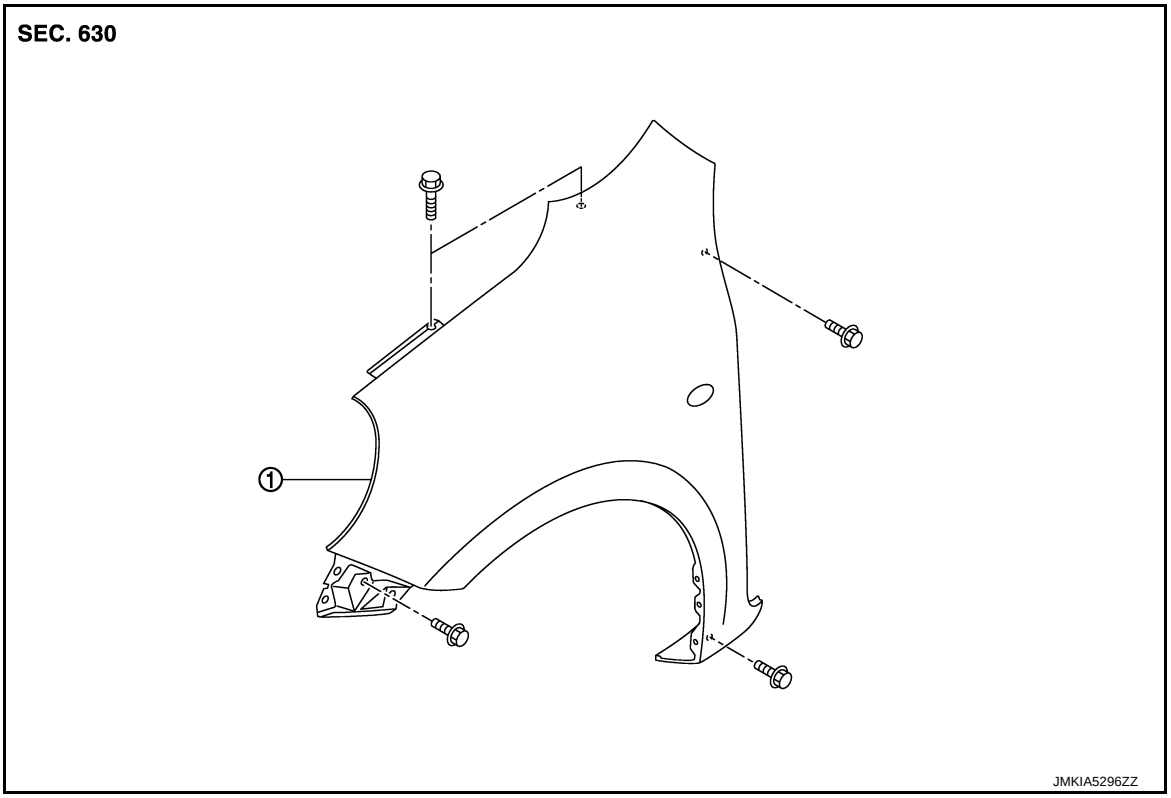

1. Front fender assembly

Removal and Installation

INFOID:0000000006067032

CAUTION:
Use a shop cloth to protect the body from being damaged during removal and installation.

REMOVAL

1. Remove front combination lamp. Refer to EXL-90, "Removal and Installation".
2. Remove fender protector. Refer to EXT-17, "FENDER PROTECTOR : Removal and Installation".
3. Remove side turn signal lamp. Refer to EXL-95, "Removal and Installation".
4. Remove front fender cover. EXT-15, "Exploded View".
5. Remove mounting bolts, and then remove front fender.
   CAUTION:
   An viscous urethane foam is installed on the back surface of front fender. When removing the front fender, be careful to not deform the front fender while performing the procedure and removing the viscous urethane foam a little at a time.

INSTALLATION

Note the following items, and install in the reverse order of removal.

CAUTION:
- **After installation, apply the touch-up paint (the body color) onto the head of front fender mounting bolts.**
- **After installation, adjust the following part.**
- **Hood assembly: Refer to DLK-217, "HOOD ASSEMBLY : Adjustment".**
- **Front door: Refer to DLK-223, "DOOR ASSEMBLY : Adjustment".**

FRONT DOOR

Exploded View

INFOID:0000000006067033

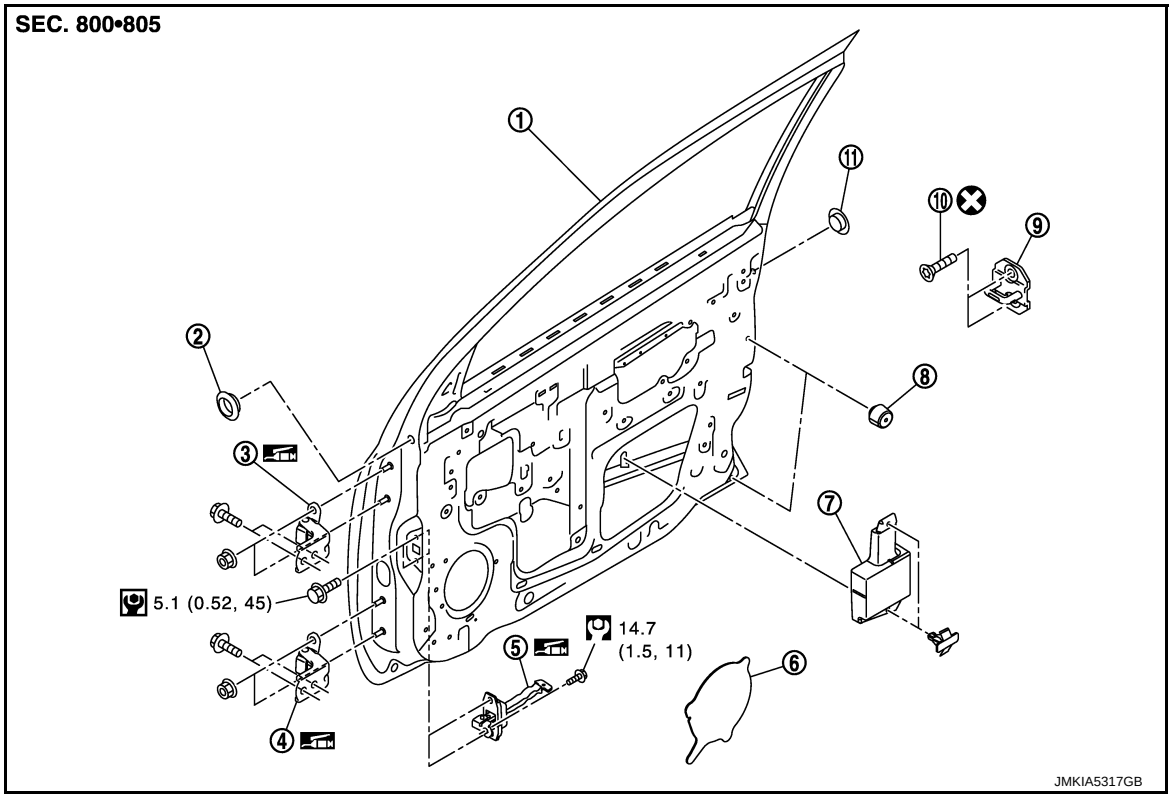

1. Front door panel
2. Grommet (driver side only)
3. Door hinge (upper)
4. Door hinge (lower)
5. Door check link
6. Sealing screen (lower)
7. Door pad
8. Bumper rubber
9. Door striker
10. TORX bolt
11. Grommet

Refer to GI-4, "Components" for symbols in the figure.

DOOR ASSEMBLY

DOOR ASSEMBLY : Removal and Installation

INFOID:0000000006067034

CAUTION:
- **Perform work with 2 workers, because of its heavy weight.**
- **When removing and installing front door assembly, support door with a jack and shop cloth to protect door and body.**

REMOVAL

1. Remove mounting bolts of door check link on the vehicle.
2. Remove front door harness grommet, and then pull out the harness from the vehicle.
3. Disconnect front door harness connector.
4. Remove door hinge mounting nuts (door side), and then remove door assembly.

INSTALLATION

Note the following items, and install in the reverse order of removal.

CAUTION:
- **Apply anticorrosive agent onto the mounting surface.**
- **Check front door open/close, lock/unlock operation after installation.**
- **Check door hinge rotating part for poor lubrication. If necessary, apply body grease.**

- **After installation, perform the fitting adjustment. Refer to DLK-223, "DOOR ASSEMBLY : Adjustment".**
- **After installation, apply touch-up paint (the body color) onto the head of door hinge mounting nuts.**

DOOR ASSEMBLY : Adjustment

INFOID:0000000006067035

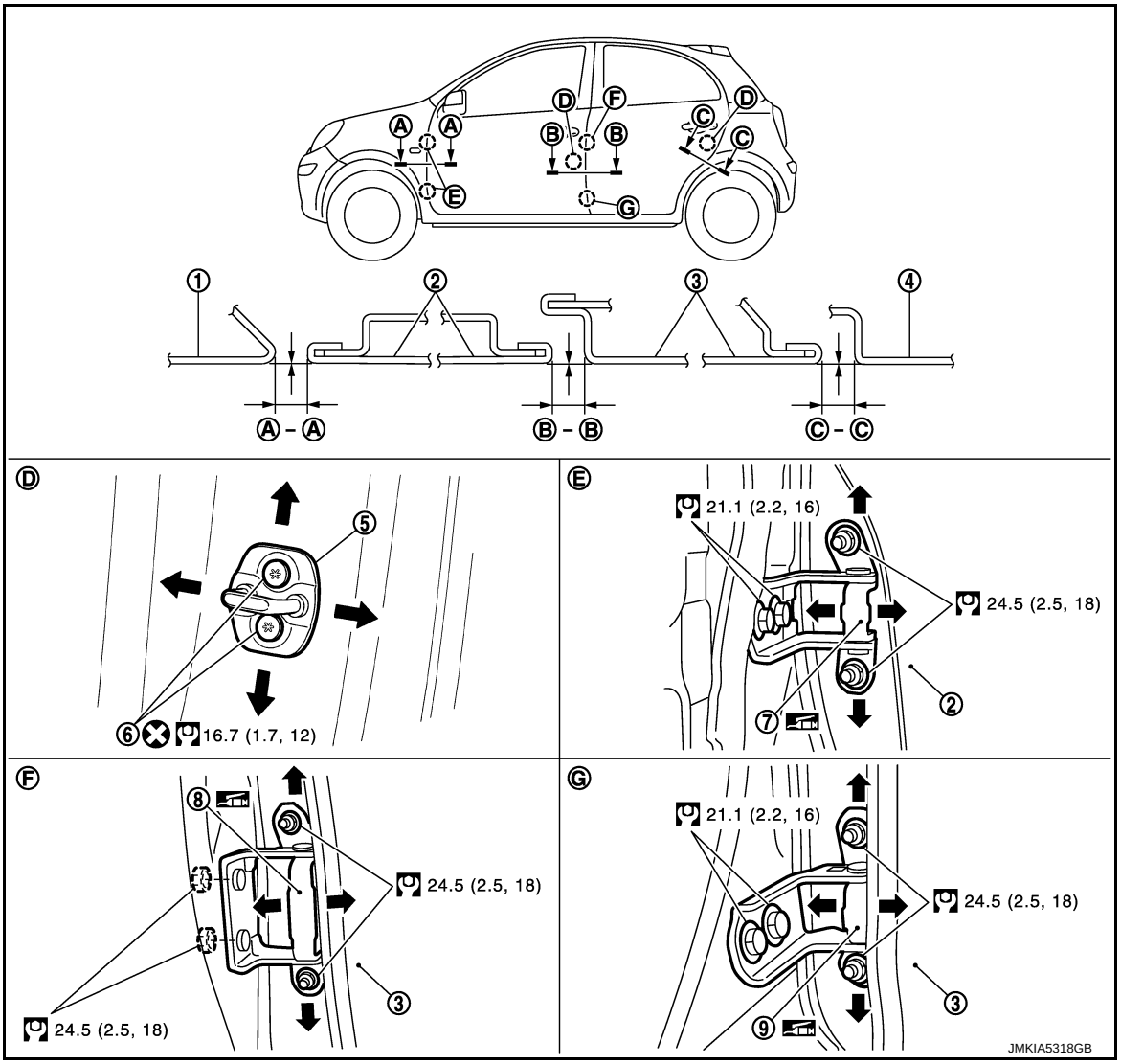

1.	Front fender	2.	Front door	3.	Rear door
4.	Body side outer	5.	Door striker	6.	TORX bolt
7.	Front door hinge	8.	Rear door hinge (upper)	9.	Rear door hinge (lower)

Refer to GI-4, "Components" for symbols in the figure.

Check the clearance and surface height between front door and each part by visually and touching.
If the clearance and the surface height are out of specification, adjust them according to the procedures shown below.

Unit: mm (in)

Portion		Clearance	Surface height
Front fender – Front door	A – A	3.7 – 5.7 (0.146 – 0.224)	- 1.0 – 1.0 (- 0.039 – 0.039)
Front door – Rear door	B – B	3.7 – 5.7 (0.146 – 0.224)	- 1.0 – 1.0 (- 0.039 – 0.039)

1. Remove fender protector. Refer to EXT-17, "FENDER PROTECTOR : Removal and Installation".
2. Loosen door hinge mounting nuts on door side.

3. Adjust the surface height of front door according to the fitting standard dimension.
4. Temporarily tighten door hinge mounting nuts on door side.
5. Loosen door hinge mounting bolts on body side.
6. Raise front door at rear end to adjust clearance of the front door according to the fitting standard dimension.
7. After adjustment tighten bolts and nuts to the specified torque.
   CAUTION:
   - **After installation, apply touch-up paint (the body color) onto the head of hinge mounting bolts and nuts.**
   - **Check door hinge rotating part for poor lubrication. If necessary, apply body grease.**
8. Install front fender protector. Refer to refer to EXT-17, "FENDER PROTECTOR : Removal and Installation".

DOOR STRIKER ADJUSTMENT

Adjust door striker so that it becomes parallel with door lock insertion direction.

DOOR STRIKER

DOOR STRIKER : Removal and Installation

INFOID:0000000006067036

REMOVAL

Remove TORX bolts, and then remove door striker.

INSTALLATION

Note the following items, and install in the reverse order of removal.

CAUTION:
- **Check front door open/close, lock/unlock operation after installation.**
- **After installation, be sure to perform the fitting adjustment. Refer to DLK-223, "DOOR ASSEMBLY : Adjustment".**

DOOR HINGE

DOOR HINGE : Removal and Installation

INFOID:0000000006067037

REMOVAL

CAUTION:
- **Perform work with 2 workers, because of its heavy weight.**
- **When removing and installing front door assembly, support door with a jack and shop cloth to protect door and body.**

1. Remove fender protector. Refer to EXT-17, "FENDER PROTECTOR : Removal and Installation".
2. Remove front door assembly. Refer to DLK-222, "DOOR ASSEMBLY : Removal and Installation".
3. Remove front door hinge mounting bolts (body side), and then remove front door hinge.

INSTALLATION

Note the following items, and install in the reverse order of removal.

CAUTION:
- **Apply anticorrosive agent onto the mounting surface.**
- **Check front door open/close, lock/unlock operation after installation.**
- **Check door hinge rotating part for poor lubrication. If necessary, apply body grease.**
- **After installation, perform the fitting adjustment. Refer to DLK-223, "DOOR ASSEMBLY : Adjustment".**
- **After installation, apply touch-up paint (the body color) onto the head of door hinge mounting nuts.**

DOOR CHECK LINK

DOOR CHECK LINK : Removal and Installation

INFOID:0000000006067038

REMOVAL

1. Fully close the front door window.
2. Remove front door finisher. Refer to INT-14, "Removal and Installation".
3. Remove sealing screen (lower). (Without door speaker)

4. Remove front door speaker mounting bolts.
5. Disconnect connector and remove front door speaker.
6. Remove mounting bolts of door check link on the vehicle.
7. Remove mounting bolts of door check link on door panel.
8. Take door check link out from the hole of door panel.

INSTALLATION

Note the following item, and install in the reverse order of removal.

CAUTION:

Check front door open/close operation after installation.

REAR DOOR

Exploded View

INFOID:0000000006067039

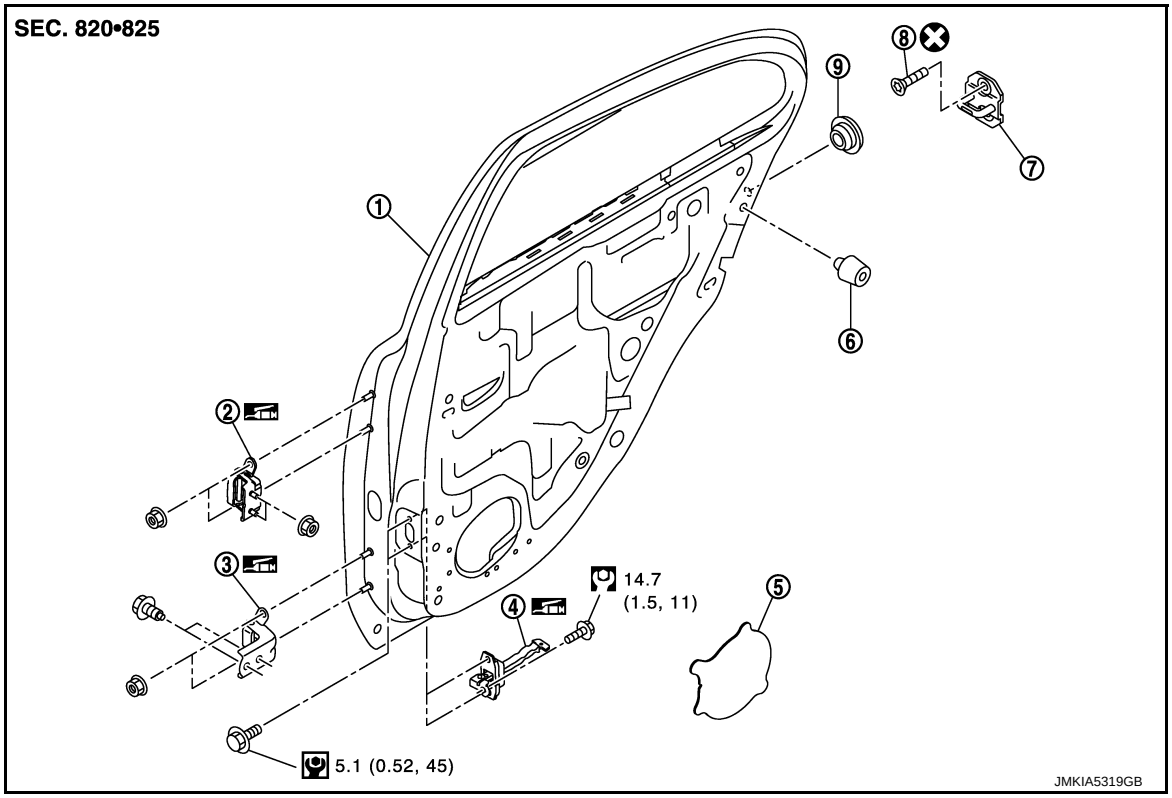

1. Rear door panel	2. Door hinge (upper)	3. Door hinge (lower)
4. Door check link	5. Sealing screen (lower)	6. Bumper rubber
7. Door striker	8. TORX bolt	9. Grommet

Refer to GI-4, "Components" for symbols in the figure.

DOOR ASSEMBLY

DOOR ASSEMBLY : Removal and Installation

INFOID:0000000006067040

CAUTION:
- **Perform work with 2 workers, because of it's heavy weight.**
- **When removing and installing rear door assembly, support door with a jack and shop cloth to protect door and body.**

REMOVAL

1. Remove rear door harness grommet, and then pull out door harness from the vehicle.
2. Disconnect rear door harness connector.
3. Remove mounting bolts of door check link on the vehicle.
4. Remove door hinge mounting nuts (door side), and then remove rear door assembly.

INSTALLATION

Note the following items, and install in the reverse order of removal.

CAUTION:
- **Apply anticorrosive agent onto the mounting surface.**
- **Check rear door open/close, lock/unlock operation after installation.**
- **Check door hinge rotating part for poor lubrication. If necessary, apply body grease.**
- **After installation, perform the fitting adjustment. Refer to DLK-227, "DOOR ASSEMBLY : Adjustment".**
- **After installation, apply touch-up paint (the body color) onto the head of door hinge mounting nuts.**

DOOR ASSEMBLY : Adjustment

INFOID:0000000006067041

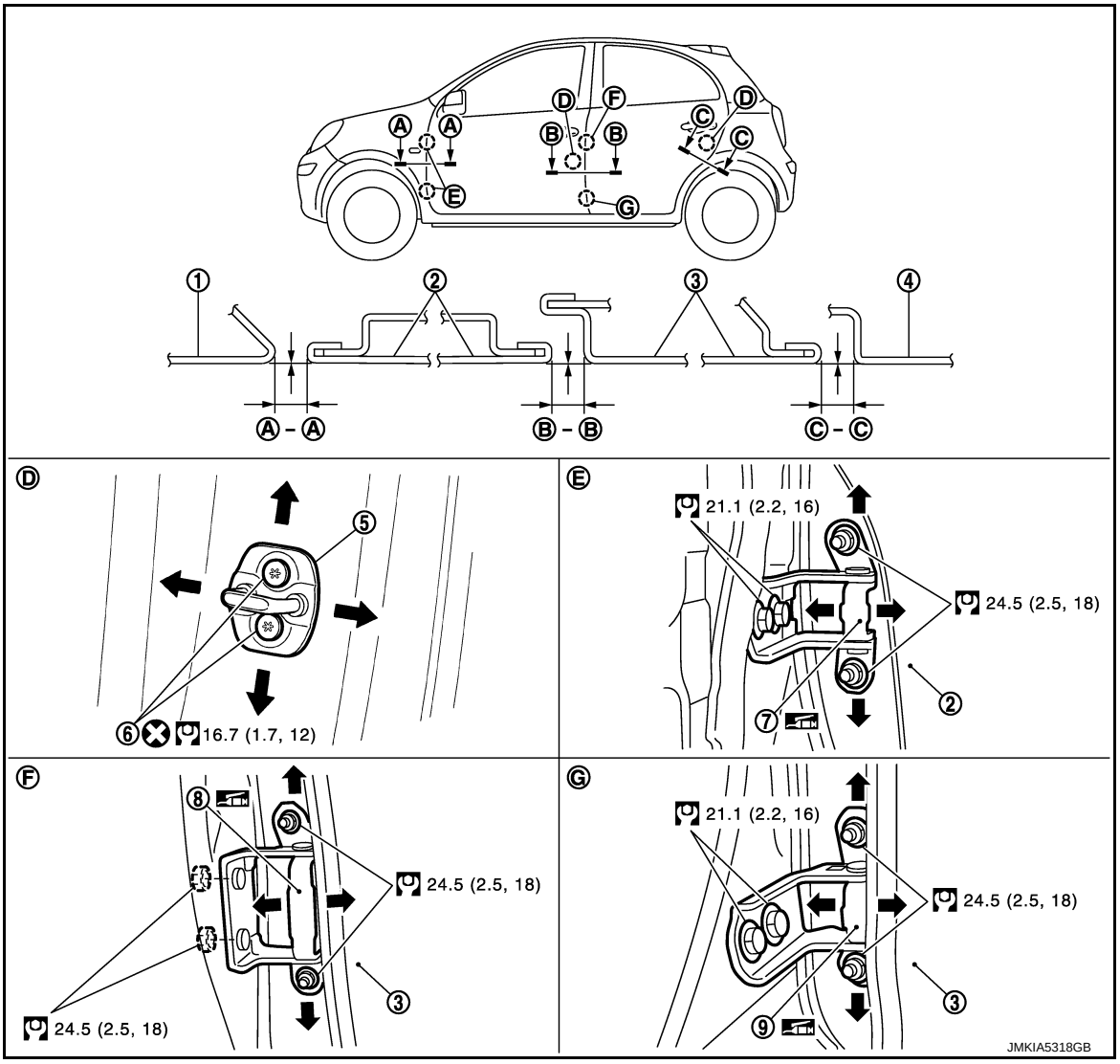

1. Front fender
2. Front door
3. Rear door
4. Body side outer
5. Door striker
6. TORX bolt
7. Front door hinge
8. Rear door hinge (upper)
9. Rear door hinge (lower)

Refer to GI-4, "Components" for symbols in the figure.

Check the clearance and surface height between rear door and each part by visually and touching.
If the clearance and the surface height are out of specification, adjust them according to the procedures shown below.

Unit: mm (in)

Portion		Clearance	Surface height
Front door – Rear door	B – B	3.7 – 5.7 (0.146 – 0.224)	-1.0 – 1.0 (-0.039 – 0.039)
Rear door – Body side outer	C – C	3.3 – 5.3 (0.130 – 0.209)	-1.0 – 1.0 (-0.039 – 0.039)

1. Remove center pillar garnish (lower). Refer to INT-23, "CENTER PILLAR LOWER GARNISH : Removal and Installation".
2. Loosen door hinge mounting nuts on door side.
3. Adjust the surface height of rear door according to the fitting standard dimension.
4. Temporarily tighten door hinge mounting nuts on door side.
5. Loosen door hinge mounting nuts and bolts on body side.

6. Raise rear door at rear end to adjust clearance of rear door according to the fitting standard dimension.
7. After adjustment tighten bolts and nuts to the specified torque.
   CAUTION:
   - **After installation, apply touch-up paint (the body color) onto the head of hinge mounting bolts and nuts.**
   - **Check door hinge rotating part for poor lubrication. If necessary, apply body grease.**
8. Install center pillar garnish (lower). Refer to INT-23, "CENTER PILLAR LOWER GARNISH : Removal and Installation".

DOOR STRIKER ADJUSTMENT

Adjust door striker so that it becomes parallel with door lock insertion direction.

DOOR STRIKER

DOOR STRIKER : Removal and Installation

INFOID:0000000006067042

REMOVAL

Remove TORX bolts, and then remove door striker.

INSTALLATION

Note the following items, and install in the reverse order of removal.

CAUTION:
- **Check rear door open/close, lock/unlock operation after installation.**
- **After installation, be sure to perform the fitting adjustment. Refer to DLK-227, "DOOR ASSEMBLY : Adjustment".**

DOOR HINGE

DOOR HINGE : Removal and Installation

INFOID:0000000006067043

CAUTION:
- **Perform work with 2 workers, because of it's heavy weight.**
- **When removing and installing rear door assembly, support door with a jack and shop cloth to protect door and body.**

REMOVAL

1. Remove rear door assembly. Refer to DLK-226, "DOOR ASSEMBLY : Removal and Installation".
2. Remove center pillar lower garnish. Refer to INT-23, "CENTER PILLAR LOWER GARNISH : Removal and Installation".
3. Remove rear door hinge mounting bolts and nuts (body side), and then remove door hinge.

INSTALLATION

Note the following items, and install in the reverse order of removal.

CAUTION:
- **Apply anticorrosive agent onto the mounting surface.**
- **Check rear door open/close operation after installation.**
- **Check door hinge rotating part for poor lubrication. If necessary, apply body grease.**
- **When removing and installing rear door assembly, perform the fitting adjustment. Refer to DLK-227, "DOOR ASSEMBLY : Adjustment".**
- **After installing, apply the touch-up paint (the body color) onto the head of door hinge mounting nuts.**

DOOR CHECK LINK

DOOR CHECK LINK : Removal and Installation

INFOID:0000000006067044

REMOVAL

1. Fully close the rear door window.
2. Remove rear door finisher. Refer to INT-18, "Removal and Installation".
3. Remove sealing screen (lower). (Without door speaker)
4. Remove rear door speaker mounting bolts.
5. Disconnect connector and remove rear door speaker.

6. Remove mounting bolts of the check link on the vehicle.
7. Remove mounting bolts of the check link on door panel.
8. Take door check link out from the hole of door panel.

INSTALLATION

Note the following item, and install in the reverse order of removal.

CAUTION:

Check rear door open/close operation after installation.

BACK DOOR

Exploded View

INFOID:0000000006067045

REMOVAL

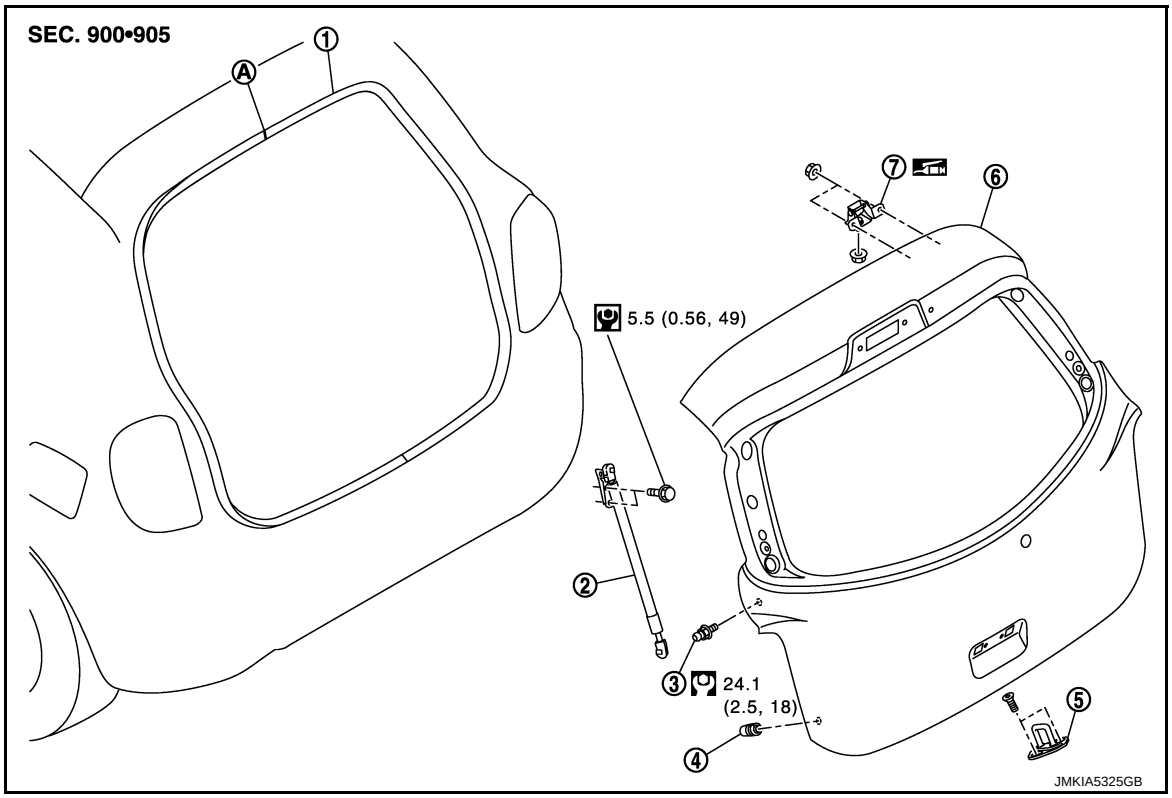

1. Back door weather-strip
2. Back door stay
3. Stud ball
4. Bumper rubber
5. Back door striker
6. Back door assembly
7. Back door hinge

A : Center mark

Refer to GI-4, "Components" for symbols in the figure.

BACK DOOR ASSEMBLY

BACK DOOR ASSEMBLY : Removal and Installation

INFOID:0000000006067046

CAUTION:
- **Operate with two workers, because of its heavy weight.**
- **Use protective tape or shop cloth to protect from damage during removal and installation.**

REMOVAL

1. Remove high-mounted stop lamp. Refer to EXL-101, "Removal and Installation".
2. Remove grommet (2), and then disconnect washer tube (A).
3. Remove grommet (3), and then pull out washer tube from back door assembly (1).

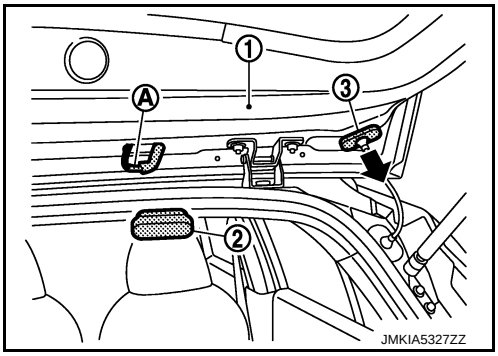

4. Disconnect rear window defogger connector (LH), and then remove terminal from connector.
5. Remove back door finisher. Refer to INT-33, "Removal and Installation".
6. Remove ground mounting bolt (A).

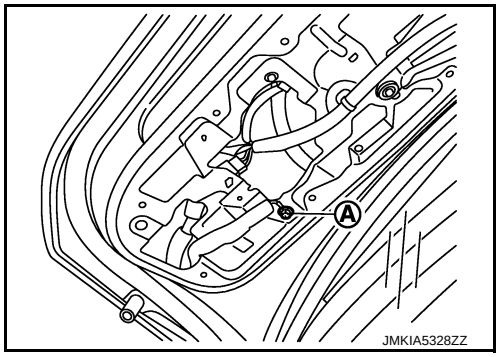

7. Disconnect connectors of back door harness.
8. Remove harness grommet (1), and then pull out harness from back door assembly (2).

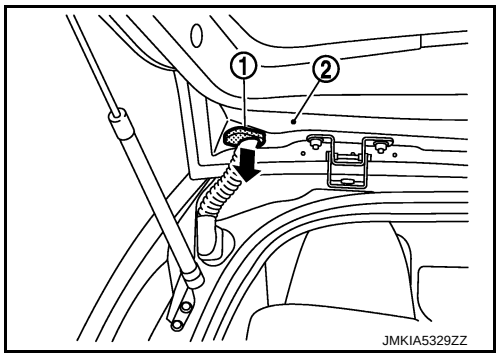

9. Support back door lock with the proper material to prevent it from falling.

   WARNING:
   Bodily injury may occur if no supporting rod is holding the back door open when removing the back door stay.
10. Remove back door stay (back door side). Refer to DLK-234, "BACK DOOR STAY : Removal and Installation".
11. Remove back door hinge mounting bolts on back door and remove back door assembly.

INSTALLATION

Note the following items, and install in the reverse order of removal.

CAUTION:

- **Check back door hinge rotating part for poor lubrication. If necessary, apply body grease.**
- **After installation, check back door open/close, lock/unlock operation.**
- **After installation, perform the fitting adjustment. Refer to DLK-232, "BACK DOOR ASSEMBLY : Adjustment".**

BACK DOOR ASSEMBLY : Adjustment

INFOID:0000000006067047

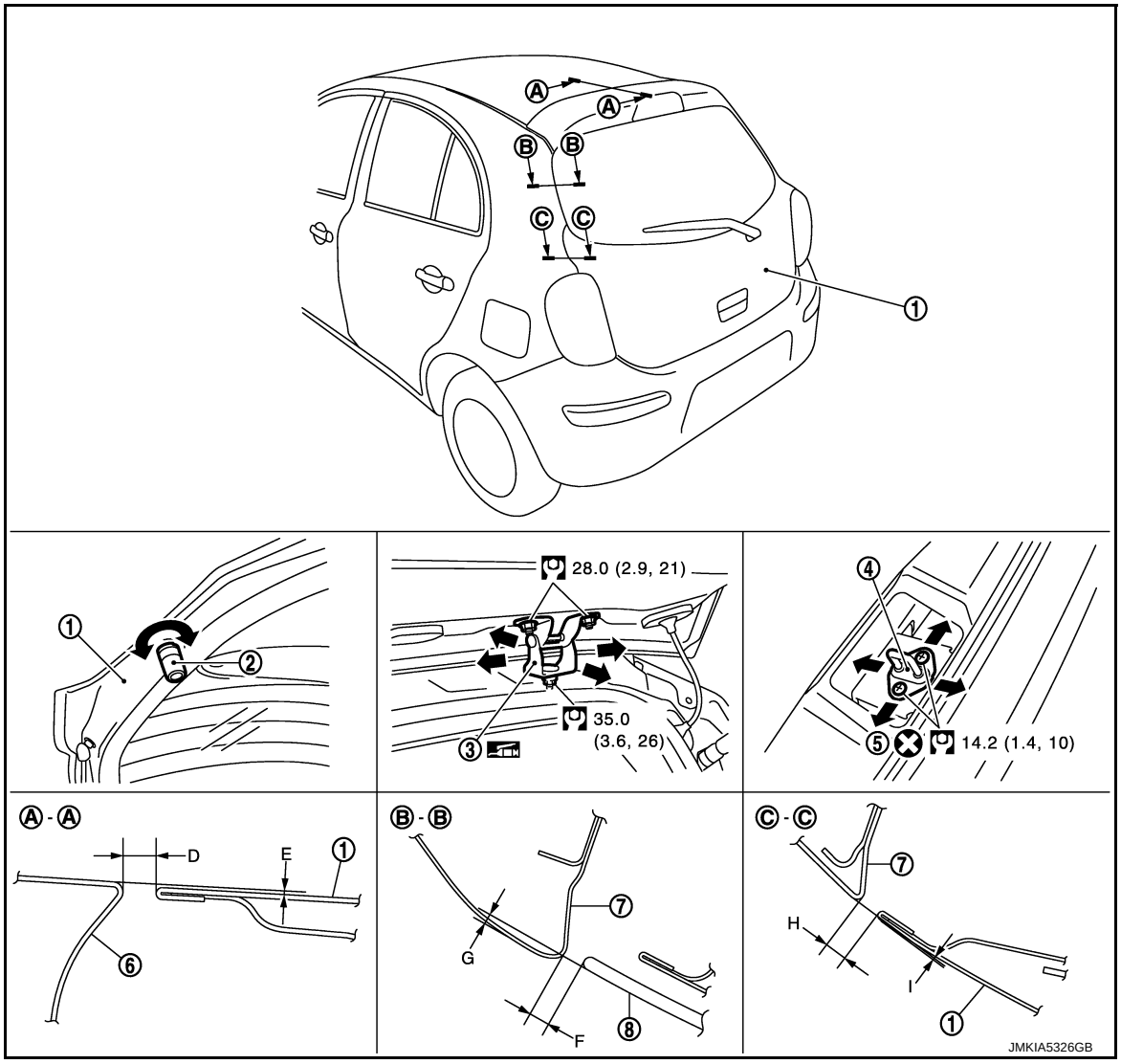

1. Back door assembly
2. Bumper rubber
3. Back door hinge
4. Back door striker
5. TORX bolt
6. Roof
7. Body side outer panel
8. Back door glass

Refer to GI-4, "Components" for symbols in the figure.

Check the clearance and the surface height between back door and each part by seeing and touching.
If the clearance and the surface height are out of specification, adjust them according to the procedures shown below.

Unit: mm (in)

Portion				Standard	Difference (LH/RH, MAX)
Roof – Back door	A – A	D	Clearance	5.0 – 7.0 (0.197 – 0.276)	—
		E	Surface height	(-1.5) – (+0.5) [(-0.059) – (+0.020)]	—
Body side outer panel – Back door glass	B – B	F	Clearance	2.4 – 7.0 (0.094 – 0.276)	<3.0 (0.118)
		G	Surface height	(-0.5) – (-0.4) [(-0.197) – (-0.016)]	—

Portion				Standard	Difference (LH/RH, MAX)
Body side outer panel – Back door	C – C	H	Clearance	3.6 – 6.0 (0.142 – 0.236)	<1.5 (0.059)
		I	Surface height	(-1.5) – (+0.5) [(0.059) – (+0.059)]	—

1. Remove back door weather-strip. Refer to DLK-234, "BACK DOOR WEATHER-STRIP : Removal and Installation".
2. Remove the luggage side upper finisher. Refer to INT-31, "LUGGAGE SIDE UPPER FINISHER : Removal and Installation".
3. Using remover tool, remove the headlining clip at the rear side of the headlining.
4. Remove the rear side of the headlining.
5. Install back door weather-strip. Refer to DLK-234, "BACK DOOR WEATHER-STRIP : Removal and Installation".
6. Loosen the back door striker mounting bolts, back door hinge mounting nuts and bumper rubber.
7. Adjust back door using back door striker, back door hinge, and bumper rubber to the specified value, as shown in the following table.
8. After adjustment tighten back door striker and back door hinge to the specified torque.

BACK DOOR STRIKER ADJUSTMENT

Adjust back door striker so that it becomes parallel with back door lock insertion direction.

BACK DOOR STRIKER

BACK DOOR STRIKER : Removal and Installation

INFOID:0000000006067048

REMOVAL

1. Remove luggage rear plate. Refer to INT-30, "LUGGAGE REAR PLATE : Removal and Installation".
2. Remove mounting bolts, and then remove back door striker.

INSTALLATION

Note the following items, and install in the reverse order of removal.

CAUTION:

- **After installation, check back door open/close, lock/unlock operation.**
- **After installation, perform the fitting adjustment. Refer to DLK-232, "BACK DOOR ASSEMBLY : Adjustment".**

BACK DOOR HINGE

BACK DOOR HINGE : Removal and Installation

INFOID:0000000006067049

REMOVAL

1. Remove back door assembly. Refer to DLK-230, "BACK DOOR ASSEMBLY : Removal and Installation".
2. Remove back door weather-strip. Refer to DLK-234, "BACK DOOR WEATHER-STRIP : Removal and Installation".
3. Remove luggage side upper finisher. Refer to INT-31, "LUGGAGE SIDE UPPER FINISHER : Removal and Installation".
4. Using a remover tool, remove headlining clip at the rear side of headlining, and then remove rear side of headlining. Refer to INT-28, "Exploded View".
5. Remove back door hinge mounting nuts (body side), and then remove back door hinge.

INSTALLATION

Note the following items, and install in the reverse order of removal.

CAUTION:

- **Check back door hinge rotating part for poor lubrication. If necessary, apply body grease.**
- **After installation, check back door open/close, lock/unlock operation.**
- **After installation, perform the fitting adjustment. Refer to DLK-232, "BACK DOOR ASSEMBLY : Adjustment".**

BACK DOOR STAY

BACK DOOR STAY : Removal and Installation

INFOID:0000000006067050

REMOVAL

1. Support the back door with the suitable material to prevent it from falling.
   WARNING:
   Bodily injury may occur if no supporting rod is holding the back door open when removing the back door stay.
2. Remove the back door stay mounting bolt (body side).
3. Remove the metal clip (3) located on the connection between the back door stay (1) and the stud ball (2) (back door side) by using a flat-bladed screwdriver (A).
   CAUTION:
   Be careful not to damage painted surface.

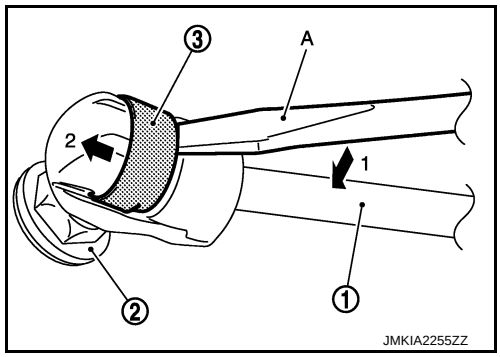

INSTALLATION

Note the following items, and install in the reverse order of removal.

CAUTION:

- **Apply anticorrosive agent onto the mounting surface.**
- **After installation, check back door open/close, lock/unlock operation.**

BACK DOOR STAY : Disposal

INFOID:0000000006067051

1. Fix back door stay (1) using a vise (C).
2. Using hacksaw (A) slowly make 2 holes in the back door stay, in numerical order as shown in the figure.
   CAUTION:
   - **When cutting a hole on back door stay, always cover a hacksaw using a shop cloth (B) to avoid scattering metal fragments or oil.**
   - **Wear eye protection (safety glasses).**
   - **Wear gloves.**

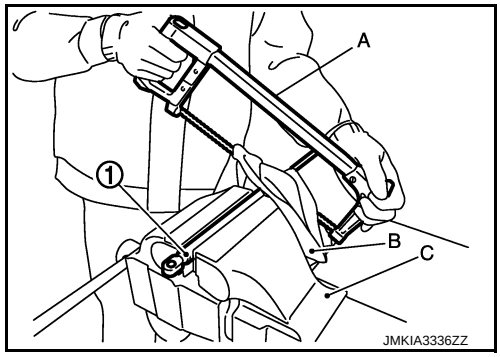

A: 20 mm (0.787 in)

B: Cut at the groove

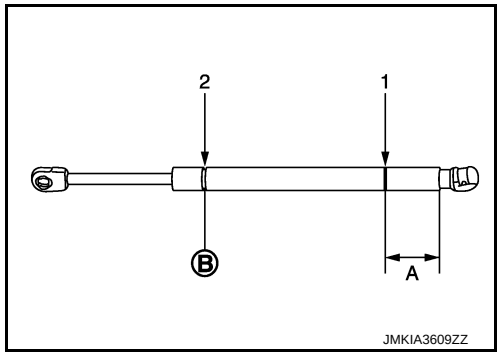

BACK DOOR WEATHER-STRIP

BACK DOOR WEATHER-STRIP : Removal and Installation

INFOID:0000000006067052

REMOVAL

Pull up and remove engagement with body from weather-strip joint.

CAUTION:

Never pull strongly on weather-strip.

INSTALLATION

1. Working from the upper section, align weather-strip center mark with vehicle center position mark and install weather-strip onto the vehicle.
2. Pull weather-strip gently to ensure that there is no loose section.
   NOTE:
   Check that weather-strip fits tightly in each corner and luggage rear plate.

HOOD LOCK

Exploded View

INFOID:0000000006067053

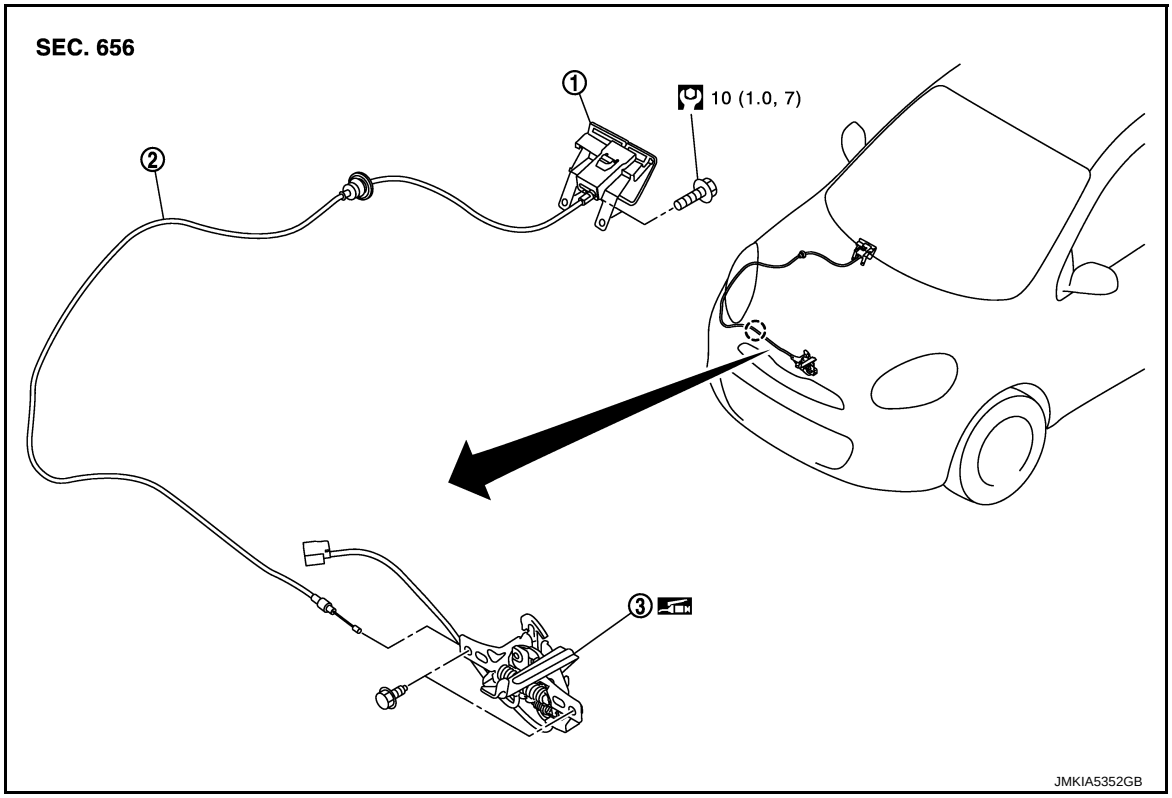

1. Hood lock opener lever
2. Hood lock control cable
3. Hood lock assembly

: Clip

Refer to GI-4, "Components" for symbols in the figure.

Removal and Installation

INFOID:0000000006067054

REMOVAL

1. Remove remove hood lock assembly mounting bolts, and then remove hood lock assembly.
2. Disconnect hood lock cable from hood lock assembly.
3. Remove hood lock cable clip.
4. Remove fender protector (RH). Refer to EXT-17, "FENDER PROTECTOR : Removal and Installation".
5. Remove hood lock opener lever.
6. Disconnect hood lock cable from hood lock opener lever.
7. Remove grommet on the lower dash, and pull the hood lock control cable toward the passenger compartment.
   CAUTION:
   While pulling, never to damage (peeling) the outside of hood lock control cable.

INSTALLATION

Note the following items, and install in the reverse order of removal.

CAUTION:

- **Never to bend cable too much, keeping the radius 100 mm (3.937 in) or more.**

- **Check that cable is not offset from the positioning grommet, and apply the sealant to the grommet (at * mark) properly.**

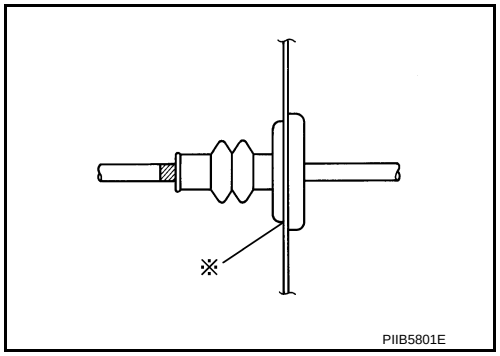

- **Check that hood lock control cable is properly engaged with hood lock.**
- **After installation, perform hood fitting adjustment. Refer to DLK-217, "HOOD ASSEMBLY : Adjustment".**
- **After installation, perform hood lock control inspection. Refer to DLK-237, "Inspection".**

Inspection

INFOID:0000000006067055

NOTE:
If the hood lock cable is bent or deformed, replace it.

1. Check that secondary latch is properly engaged with secondary striker [6.8 mm (0.268 in)] by hood weight.
2. While operating hood opener, carefully check that the front end of hood is raised by approximately 20.0 mm (0.787 in). Also check that hood opener returns to the original position.
3. Check that hood opener operating is condition 49 N (5.0 kg, 11.0 lb) or below.
4. Install so that static closing face of hood is 94 – 490 N·m (9.6 – 50.0 kg-m, 69 – 361 ft – lb).
   NOTE:
   - Exert vertical force on right side and left side of hood lock.
   - Never press simultaneously both sides.
5. Check the hood lock lubrication condition. If necessary, apply body grease to hood lock.

FRONT DOOR LOCK

Exploded View

INFOID:0000000006067056

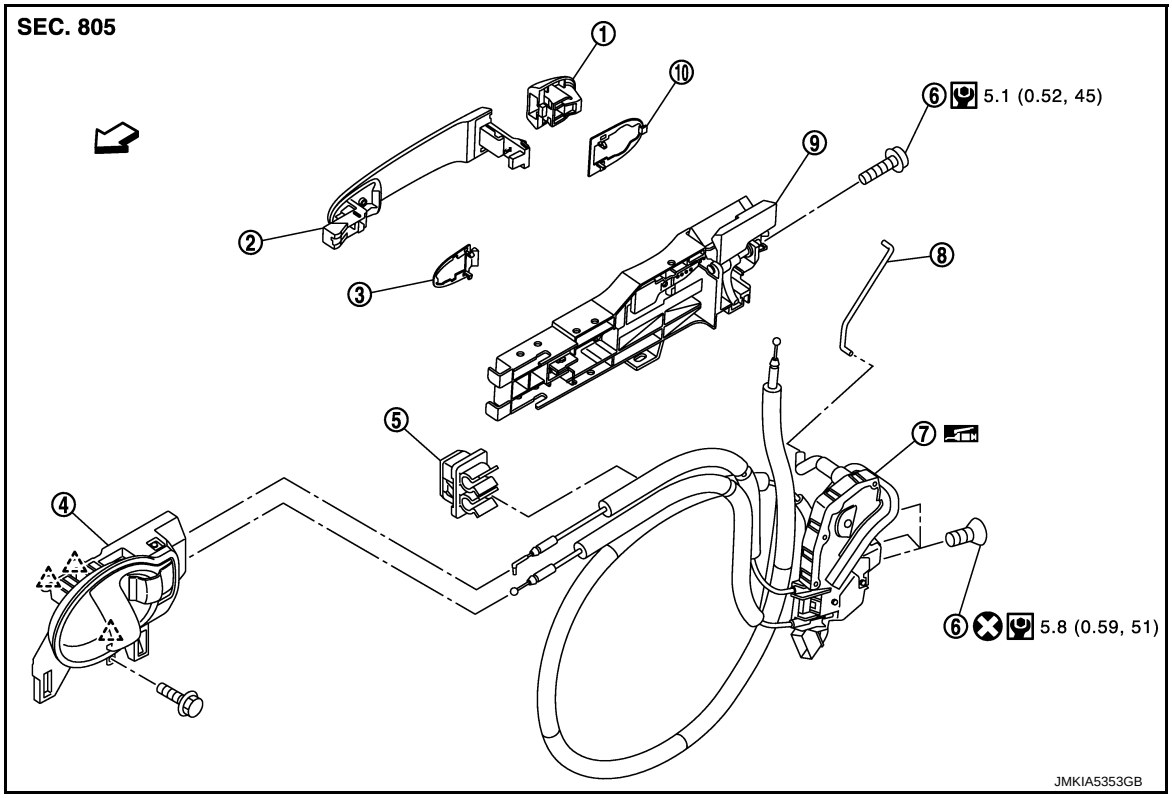

1.	Door key cylinder assembly (driver side) Outside handle escutcheon (passenger side)	2.	Outside handle	3.	Front gasket
4.	Inside handle	5.	Clip	6.	TORX bolt
7.	Door lock assembly	8.	Key rod (driver side)	9.	Outside handle bracket
10.	Rear gasket				

: Pawl

: Vehicle front

Refer to GI-4, "Components" for symbols in the figure.

DOOR LOCK

DOOR LOCK : Removal and Installation

INFOID:0000000006067057

REMOVAL

1. Remove outside handle. Refer to DLK-239, "OUTSIDE HANDLE : Removal and Installation".
2. Remove inside handle. Refer to DLK-239, "INSIDE HANDLE : Removal and Installation".
3. Disconnect door lock actuator connector.
4. Remove front door lower sash (rear). Refer to GW-18, "Exploded View".
5. Remove door lock assembly TORX bolts, and then remove door lock assembly.

INSTALLATION

Install in the reverse order of removal.

CAUTION:

- **Check door open/close, lock/unlock operation after installation.**
- **Check door lock cable is properly engaged with outside handle bracket.**

INSIDE HANDLE

INSIDE HANDLE : Removal and Installation

INFOID:0000000006067058

REMOVAL

1. Remove front door finisher. Refer to INT-14, "Removal and Installation".
2. Remove upper side of sealing screen.
   NOTE:
   Cut the butyl tape so that some parts of the butyl tape do not remain on the sealing screen, if the sealing screen is reused.
3. Remove inside handle mounting bolts, slide handle toward rear of vehicle, disengage handle from door panel, and remove inside handle.
4. Remove the lock and inside handle cable from inside handle.

INSTALLATION

Install in the reverse order of removal.

CAUTION:

Check door open/close, lock/unlock operation after installation.

OUTSIDE HANDLE

OUTSIDE HANDLE : Removal and Installation

INFOID:0000000006067059

REMOVAL

1. Fully close the front door glass.
2. Remove front door finisher. Refer to INT-14, "Removal and Installation".
3. Remove sealing screen.
   NOTE:
   Cut the butyl-tape so that some parts of the butyl-tape do not remain on the sealing screen, if the sealing screen is reused.
4. Disconnect key rod (driver side).
5. Disconnect door antenna and door request switch connector and remove harness clamp (with Intelligent Key system) on outside handle bracket.
6. Remove door side grommet, and loosen TORX bolt from grommet hole.

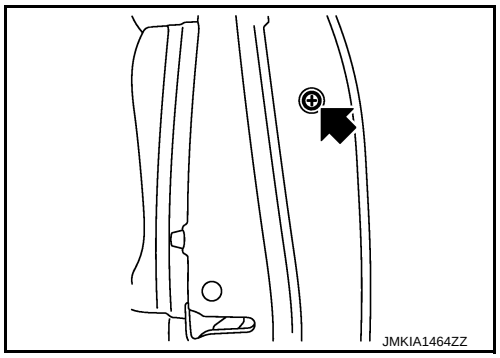

7. While pulling outside handle (1), remove door key cylinder assembly (diver side) (2) or outside handle escutcheon (passenger side) (2).

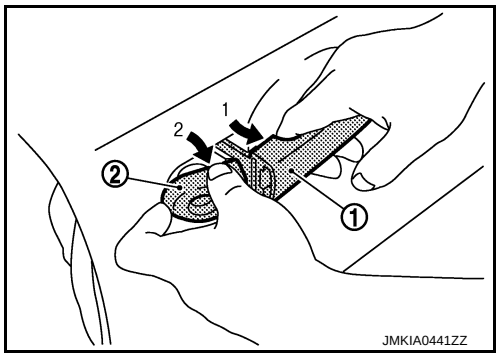

8. While pulling outside handle (1), slide toward rear of vehicle to remove outside handle.

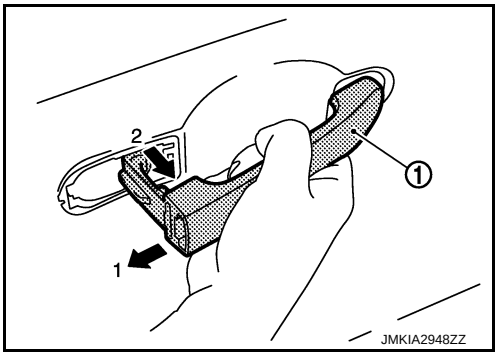

9. Remove front gasket and rear gasket.
10. While pulling outside handle bracket, slide toward rear of vehicle to remove outside handle bracket.
11. Reach in to separate outside handle cable connection on outside handle bracket.

INSTALLATION

Note the following items, and install in the reverse order of removal.

CAUTION:

- **When installing key rod, rotate key rod holder until a click is felt.**
- **Check that door lock cables are normally engaged with inside handle and outside handle.**
- **After installation, check door open/close, and lock/unlock operation.**

REAR DOOR LOCK

Exploded View

INFOID:0000000006067060

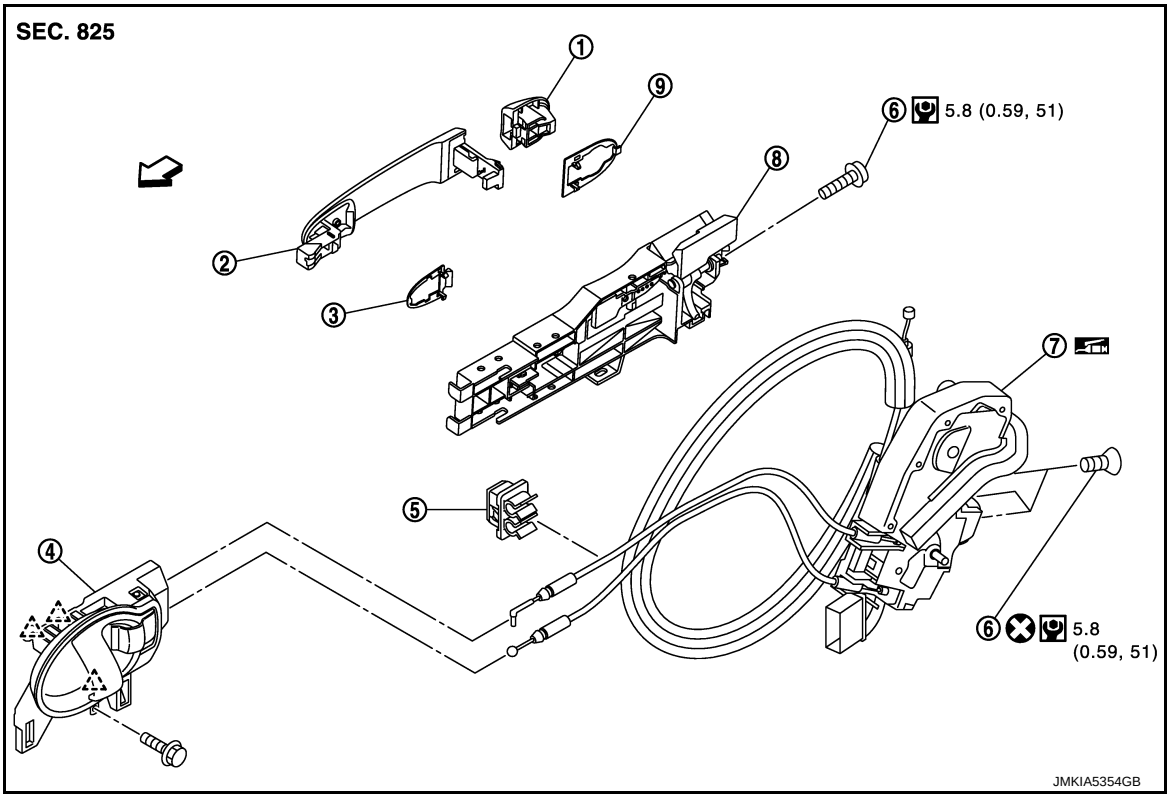

1.	Outside handle escutcheon	2.	Outside handle	3.	Front gasket
4.	Inside handle	5.	Clip	6.	TORX bolt
7.	Door lock assembly	8.	Outside handle bracket	9.	Rear gasket

: Pawl

: Vehicle front

Refer to GI-4, "Components" for symbols in the figure.

DOOR LOCK

DOOR LOCK : Removal and Installation

INFOID:0000000006067061

REMOVAL

1. Remove outside handle. Refer to DLK-242, "OUTSIDE HANDLE : Removal and Installation".
2. Remove inside handle. Refer to DLK-242, "INSIDE HANDLE : Removal and Installation".
3. Remove door lock assembly TORX bolts.
4. Disconnect door lock actuator connector, and then remove door lock assembly.

INSTALLATION

Note the following items, and install in the reverse order of removal.

CAUTION:

- **Check door open/close, lock/unlock operation after installation.**
- **Check door lock cable is properly engaged with outside handle bracket.**

INSIDE HANDLE

INSIDE HANDLE : Removal and Installation

INFOID:0000000006067062

REMOVAL

1. Remove rear door finisher. Refer to INT-18, "Removal and Installation".
2. Remove upper side of sealing screen.
   NOTE:
   Cut the butyl tape so that some parts of the butyl tape do not remain on the sealing screen, if the sealing screen is reused.
3. Remove inside handle mounting bolts, slide handle toward rear of vehicle, disengage handle from door panel, and remove inside handle.
4. Remove the lock and inside handle cable from inside handle.

INSTALLATION

Note the following item, and install in the reverse order of removal.

CAUTION:

Check door open/close, lock/unlock operation after installation.

OUTSIDE HANDLE

OUTSIDE HANDLE : Removal and Installation

INFOID:0000000006067063

REMOVAL

1. Fully close rear door glass.
2. Remove rear door finisher. Refer to INT-18, "Removal and Installation".
3. Remove sealing screen.
   NOTE:
   Cut the butyl-tape so that some parts of the butyl-tape do not remain on the sealing screen, if the sealing screen is reused.
4. Remove door side grommet, and loosen TORX bolt from grommet hole.

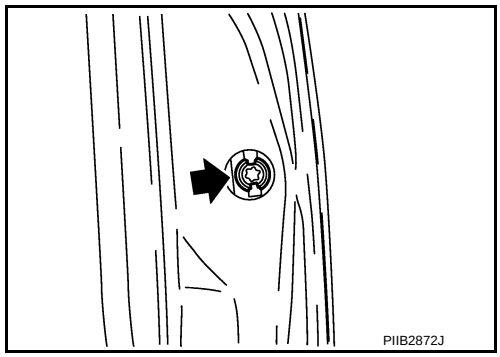

5. While pulling outside handle (1), remove outside handle escutcheon (2).

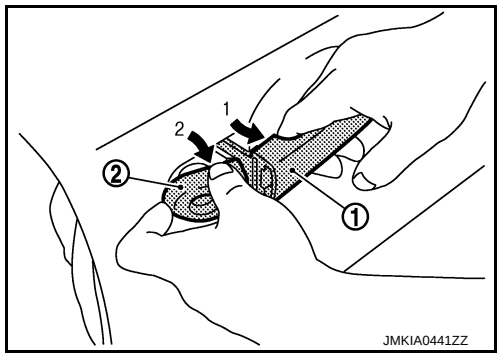

6. While pulling outside handle (1), slide toward rear of vehicle to remove outside handle.

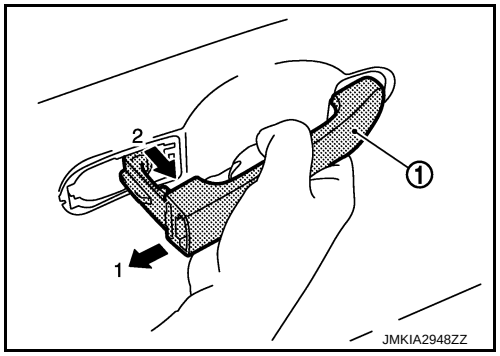

7. Remove front gasket and rear gasket.
8. While pulling outside handle bracket, slide toward rear of vehicle to remove outside handle bracket.
9. Reach in to separate outside handle cable connection on outside handle bracket.

INSTALLATION

Note the following items, and install in the reverse order of removal.

CAUTION:

- **Check door open/close, lock/unlock operation after installation.**
- **Check door lock cable is properly engaged with outside handle bracket.**

BACK DOOR LOCK

Exploded View

INFOID:0000000006067064

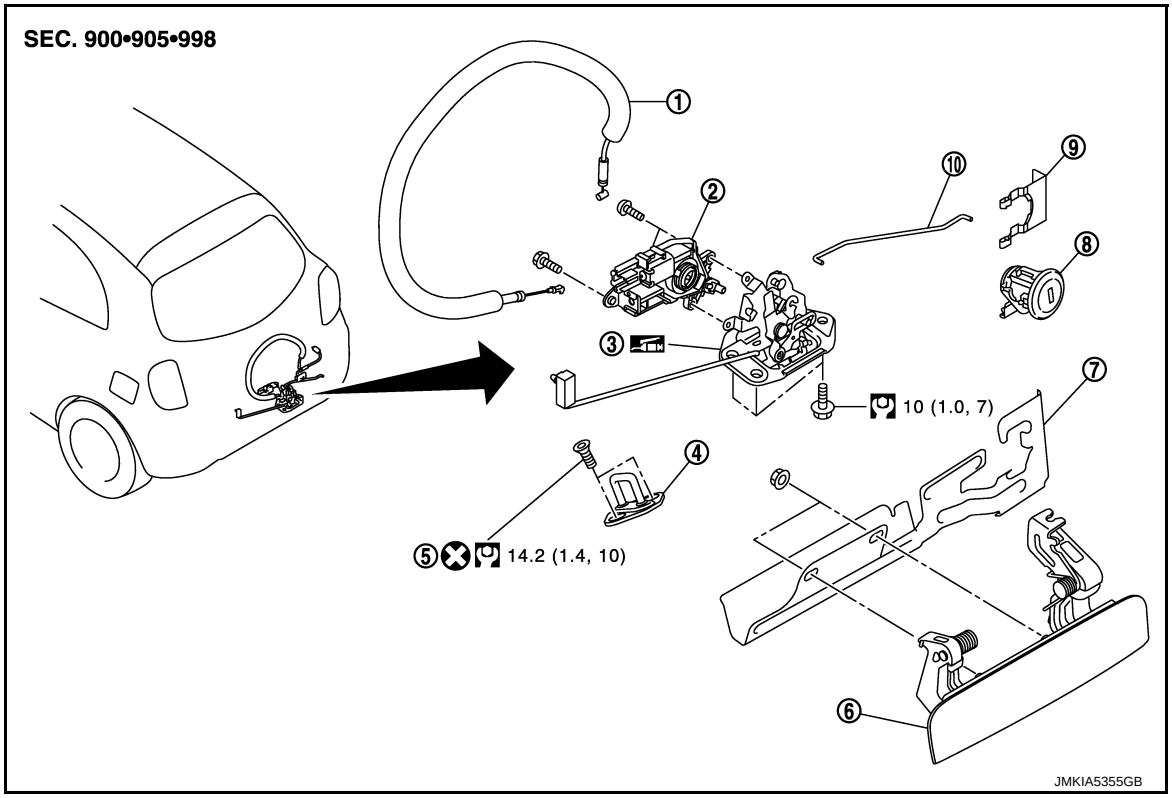

1. Back door opener cable
2. Back door lock actuator
3. Back door lock assembly
4. Back door striker
5. TORX bolt
6. Outside handle
7. Back door handle bracket
8. Back door lock cylinder
9. Retainer clip
10. Key rod

Refer to GI-4, "Components" for symbols in the figure.

BACK DOOR STRIKER

BACK DOOR STRIKER : Removal and Installation

INFOID:0000000006067065

REMOVAL

1. Remove the luggage rear plate. Refer to INT-30, "LUGGAGE REAR PLATE : Removal and Installation".
2. Remove the back door striker.

INSTALLATION

Note the following items, and install in the reverse order of removal.

CAUTION:

- **After installation, perform the back door fitting adjustment. Refer to DLK-232, "BACK DOOR ASSEMBLY : Adjustment".**
- **After installation, check back door open/close, and lock/unlock operation.**

DOOR LOCK

DOOR LOCK : Removal and Installation

INFOID:0000000006067066

REMOVAL

1. Remove the back door finisher. Refer to INT-33, "Removal and Installation".

2. Remove back door lock switch harness connector clip from back door panel, and then disconnect back door lock switch harness connector.
3. Disconnect back door lock actuator connector.
4. Disconnect key rod.
5. Remove back door lock assembly mounting bolts.
6. Disconnect back door opener cable, and remove back door lock assembly.
   CAUTION:
   Never damage the outside handle cable.

INSTALLATION

Note the following item, and install in the reverse order of removal.

CAUTION:

After installation, check back door open/close, and lock/unlock operation.

OUTSIDE HANDLE

OUTSIDE HANDLE : Removal and Installation

INFOID:0000000006067067

REMOVAL

1. Remove the back door finisher. INT-33, "Removal and Installation".
2. Remove back door opener cable from outside handle.
   CAUTION:
   Never damage the outside handle cable.
3. Remove the mounting nuts, and then remove the outside handle assembly.

INSTALLATION

Note the following items, and install in the reverse order of removal.

CAUTION:

- **Check that back door lock cables are normally engaged with outside handle.**
- **After installation, check back door open/close, and lock/unlock operation.**

EMERGENCY LEVER

EMERGENCY LEVER : Unlock procedures

INFOID:0000000006067068

UNLOCK PROCEDURES

NOTE:

If back door lock cannot be unlocked due to a malfunction or battery discharge, follow the procedures to unlock back door.

1. Remove the back door finisher. Refer to INT-33, "Removal and Installation".
2. From inside the vehicle, rotate emergency lever toward lower direction and unlock.

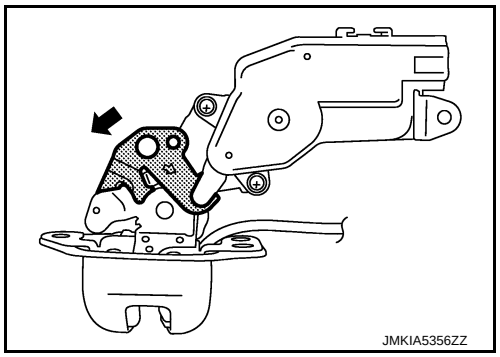

FUEL FILLER LID OPENER

Exploded View

INFOID:0000000006067069

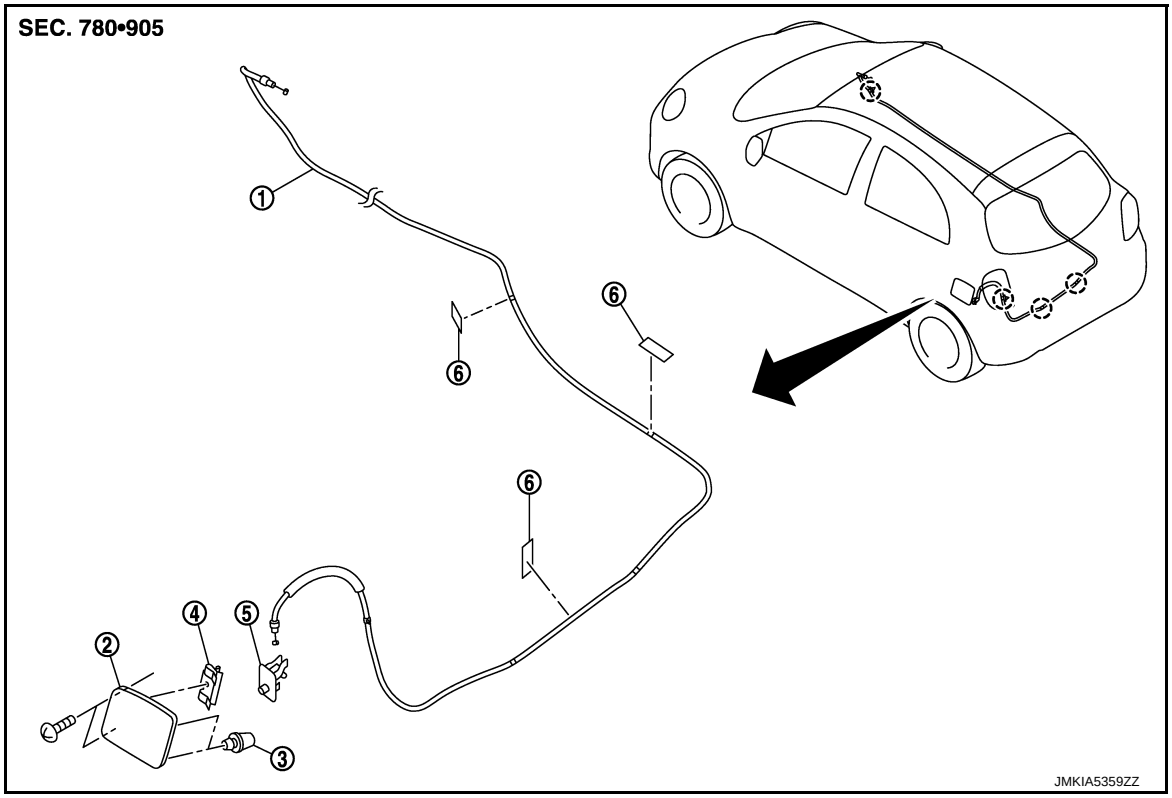

1. Fuel filler lid opener cable
2. Fuel filler lid assembly
3. Bumper rubber
4. Spring
5. Fuel filler lid lock assembly
6. Cable protector

: Clip

Removal and Installation

INFOID:0000000006067070

REMOVAL

Fuel Filler Lid

1. Fully open fuel filler lid.
2. Remove mounting screws, and then remove fuel filler lid.

Fuel Filler Lid Opener Cable

1. Fully open fuel filler lid.
2. Remove front kicking plate inner (RH) and rear kicking plate inner (RH). INT-22, "KICKING PLATE INNER : Removal and Installation".
3. Remove dash side finisher (RH). Refer to INT-21, "DASH SIDE FINISHER : Removal and Installation".
4. Remove center pillar lower garnish (RH). Refer to INT-23, "CENTER PILLAR LOWER GARNISH : Removal and Installation".
5. Remove luggage side lower front finisher (RH). Refer to INT-31, "LUGGAGE SIDE LOWER FRONT FINISHER : Removal and Installation".
6. Remove luggage side lower finisher (LH and RH). Refer to INT-32, "LUGGAGE SIDE LOWER FINISHER : Removal and Installation".
7. Remove mounting bolts, and then remove fuel filler lid opener handle.
8. Remove fuel filler lid opener cable from fuel filler lid opener handle.

9. Disengage pawls (A) of fuel filler lid lock assembly (1) and push out fuel filler lid lock assembly toward the vehicle outside.
   CAUTION:
   Be careful not to damage packing (2) when removing.
10. Remove fuel filler lid opener cable (3) from fuel filler lid lock assembly.

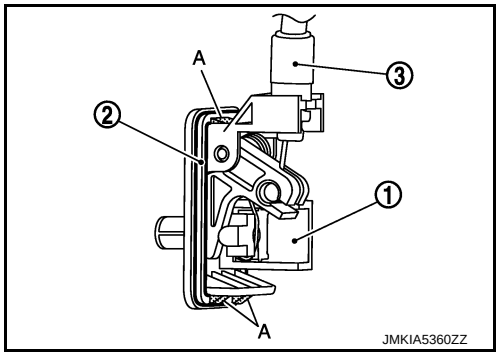

11. Pull up floor trim. Refer to INT-32, "LUGGAGE SIDE LOWER FINISHER : Removal and Installation".
12. Remove fuel filler lid opener cable mounting clips.
13. Remove fuel filler lid opener cable.

INSTALLATION

Note the following items, and install in the reverse order of removal.

CAUTION:

After installation, check fuel filler lid assembly open/close, lock/unlock operation.

DOOR SWITCH

Removal and Installation

INFOID:0000000005949204

REMOVAL

Remove the door switch mounting bolt, and then remove door switch.

INSTALLATION

Install in the reverse order of removal.

REMOTE KEYLESS ENTRY RECEIVER

Removal and Installation

INFOID:0000000005949206

REMOVAL

Remove the remote keyless entry receiver mounting bolt, and then remove remote keyless entry receiver.

INSTALLATION

Install in the reverse order of removal.

KEYFOB BATTERY

Exploded View

INFOID:0000000005949207

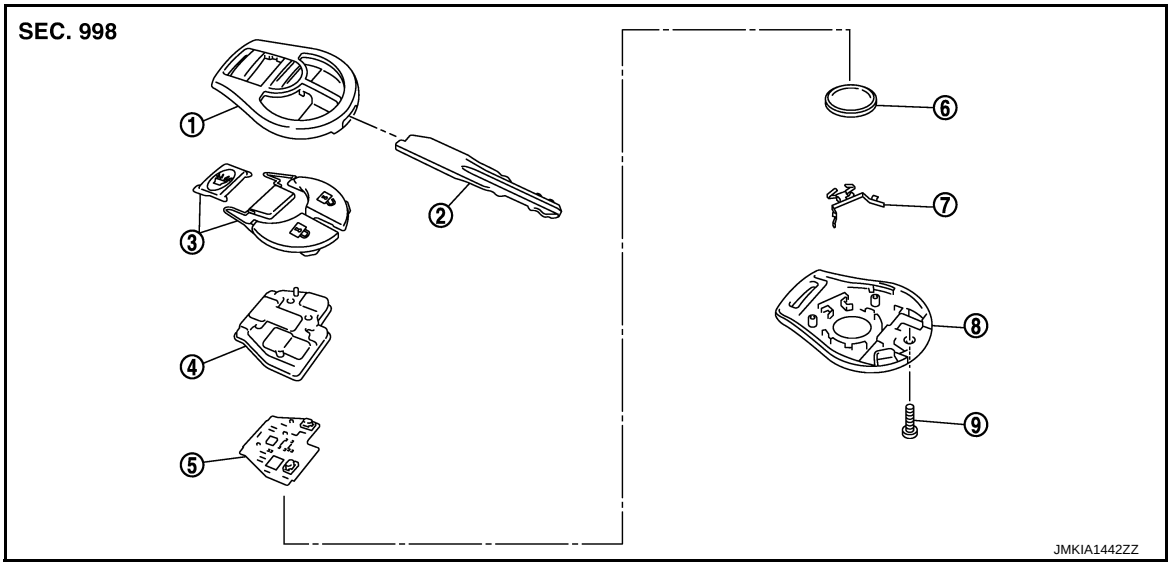

1. Upper case
2. Key
3. Switch cover
4. Switch rubber
5. Board surface
6. Battery
7. plate
8. Lower case
9. Screw

Removal and Installation

INFOID:0000000005949208

REMOVAL

1. Remove screw (9) on the rear of keyfob.
2. Place the key with the lower case (8) facing up. Set a screw-driver wrapped with tape between upper case (1) and lower case (8) and then separate the lower case (8) from the upper case (1).
   CAUTION:
   - **Do not touch the circuit board or battery terminal.**
   - **The keyfob is water-resistant. However, if it does get wet, immediately wipe it dry.**
3. When replacing the circuit board assembly, remove circuit board assembly from the upper case (1).
   [Circuit board assembly: Switch rubber (4) + Board surface (5)]
   CAUTION:
   Do not touch the printed circuits directly.
4. Remove the battery (6) from the lower case (8) and replace it.

   Battery replacement : Coin-type lithium battery (CR1620)

   CAUTION:
   When replacing battery, keep dirt, grease, and other foreign materials off the electrode contact area.
5. After replacement, fit the lower and upper cases together, part (4), (7) and tighten with the screw.
   CAUTION:
   After replacing the battery, Be sure to check that door locking operates normally using the keyfob.
   Refer to DLK-199, "Component Function Check".

INSTALLATION

Install in the reverse order of removal.

SECTION EC
ENGINE CONTROL SYSTEM

CONTENTS

HR12DE (TYPE 1)

HOW TO USE THIS MANUAL 9

APPLICATION NOTICE 9
How to Check Vehicle Type 9

PRECAUTION 10

PRECAUTIONS 10
Precaution for Supplemental Restraint System (SRS) "AIR BAG" and "SEAT BELT PRE-TENSIONER" 10
Precaution for Procedure without Cowl Top Cover...10
On Board Diagnostic (OBD) System of Engine 10
General Precautions 11

PREPARATION 14

PREPARATION 14
Special Service Tools 14
Commercial Service Tools 14

SYSTEM DESCRIPTION 15

STRUCTURE AND OPERATION 15
Positive Crankcase Ventilation 15

COMPONENT PARTS 16
Component Parts Location 16
Component Description 19
ECM 20
Malfunction Indicator Lamp (MIL) 20
Ignition Coil With Power Transistor 21
Accelerator Pedal Position Sensor 21
Mass Air Flow Sensor 21
Electric Throttle Control Actuator 22
Crankshaft Position Sensor (POS) 22
Camshaft Position Sensor (PHASE) 23
Engine Coolant Temperature Sensor 23
Fuel Injector 24
Fuel Pump 24
Fuel Pump Control Module (FPCM) 25
Air Fuel Ratio (A/F) Sensor 1 25
Heated Oxygen Sensor 2 25
EGR Volume Control Valve 26
EGR Temperature Sensor 26
Knock Sensor 27
Cooling Fan 27
Intake Valve Timing Control Solenoid Valve 28
EVAP Canister Purge Volume Control Solenoid Valve 28
Battery Current Sensor (With Battery Temperature Sensor) 28
Refrigerant Pressure Sensor 29
Stop Lamp Switch 29

SYSTEM 30

ENGINE CONTROL SYSTEM 30
ENGINE CONTROL SYSTEM : System Diagram...30
ENGINE CONTROL SYSTEM : System Description 31
ENGINE CONTROL SYSTEM : Fail Safe 31

MULTIPORT FUEL INJECTION SYSTEM 32
MULTIPORT FUEL INJECTION SYSTEM : System Diagram 32
MULTIPORT FUEL INJECTION SYSTEM : System Description 33

ELECTRIC IGNITION SYSTEM 35
ELECTRIC IGNITION SYSTEM : System Diagram 35
ELECTRIC IGNITION SYSTEM : System Description 35

AIR CONDITIONING CUT CONTROL 36
AIR CONDITIONING CUT CONTROL : System Diagram 37
AIR CONDITIONING CUT CONTROL : System Description 37

CAN COMMUNICATION 38

CAN COMMUNICATION : System Description 38

COOLING FAN CONTROL 38
COOLING FAN CONTROL : System Diagram 38
COOLING FAN CONTROL : System Description... 38

EGR SYSTEM 39
EGR SYSTEM : System Diagram 39
EGR SYSTEM : System Description 40

EVAPORATIVE EMISSION SYSTEM 40
EVAPORATIVE EMISSION SYSTEM : System Diagram 41
EVAPORATIVE EMISSION SYSTEM : System Description 41

FUEL PUMP CONTROL MODULE (FPCM) 42
FUEL PUMP CONTROL MODULE (FPCM) : System Diagram 42
FUEL PUMP CONTROL MODULE (FPCM) : System Description 42

INTAKE VALVE TIMING CONTROL 43
INTAKE VALVE TIMING CONTROL : System Diagram 43
INTAKE VALVE TIMING CONTROL : System Description 43

ON BOARD DIAGNOSTIC (OBD) SYSTEM 45
Diagnosis Description 45
CONSULT-III Function 57
Diagnosis Tool Function 63

ECU DIAGNOSIS INFORMATION 65

ECM 65
Reference Value 65
Fail Safe 75
DTC Inspection Priority Chart 77
DTC Index 78
How to Set SRT Code 80
Test Value and Test Limit 82

WIRING DIAGRAM 89

ENGINE CONTROL SYSTEM 89

LHD MODELS 89
LHD MODELS : Wiring Diagram 89

RHD MODELS 93
RHD MODELS : Wiring Diagram 94

BASIC INSPECTION 99

DIAGNOSIS AND REPAIR WORKFLOW 99
Work Flow 99
Diagnostic Work Sheet 102

ADDITIONAL SERVICE WHEN REPLACING ECM 103
Description 103
Work Procedure 103

ACCELERATOR PEDAL RELEASED POSITION LEARNING 104
Description 104
Work Procedure 104

THROTTLE VALVE CLOSED POSITION LEARNING 105
Description 105
Work Procedure 105

IDLE AIR VOLUME LEARNING 106
Description 106
Work Procedure 106

MIXTURE RATIO SELF-LEARNING VALUE CLEAR 108
Description 108
Work Procedure 108

BASIC INSPECTION 109
Work Procedure 109

FUEL PRESSURE CHECK 113
Work Procedure 113

DTC/CIRCUIT DIAGNOSIS 115

TROUBLE DIAGNOSIS - SPECIFICATION VALUE 115
Description 115
Component Function Check 115
Diagnosis Procedure 116

POWER SUPPLY AND GROUND CIRCUIT ...123
Diagnosis Procedure 123

U1001 CAN COMM CIRCUIT 126
Description 126
DTC Logic 126
Diagnosis Procedure 126

P0011 IVT CONTROL 127
DTC Logic 127
Diagnosis Procedure 128
Component Inspection 129

P0031, P0032 A/F SENSOR 1 HEATER 131
DTC Logic 131
Diagnosis Procedure 131
Component Inspection 132

P0037, P0038 HO2S2 HEATER 133
DTC Logic 133
Diagnosis Procedure 133
Component Inspection 134

P0075 IVT CONTROL SOLENOID VALVE 135
DTC Logic 135
Diagnosis Procedure 135
Component Inspection 136

P0102, P0103 MAF SENSOR 137

DTC Logic 137
Diagnosis Procedure 137
Component Inspection 139

P0112, P0113 IAT SENSOR 141
DTC Logic 141
Diagnosis Procedure 141
Component Inspection 142

P0117, P0118 ECT SENSOR 143
DTC Logic 143
Diagnosis Procedure 143
Component Inspection 144

P0122, P0123 TP SENSOR 145
DTC Logic 145
Diagnosis Procedure 145
Component Inspection 146

P0130 A/F SENSOR 1 147
DTC Logic 147
Component Function Check 148
Diagnosis Procedure 148

P0131 A/F SENSOR 1 150
DTC Logic 150
Diagnosis Procedure 150

P0132 A/F SENSOR 1 152
DTC Logic 152
Diagnosis Procedure 152

P0133 A/F SENSOR 1 154
DTC Logic 154
Diagnosis Procedure 155

P0137 HO2S2 158
DTC Logic 158
Component Function Check 160
Diagnosis Procedure 161
Component Inspection 162

P0138 HO2S2 164
DTC Logic 164
Component Function Check 166
Diagnosis Procedure 167
Component Inspection 169

P0139 HO2S2 172
DTC Logic 172
Component Function Check 174
Diagnosis Procedure 174
Component Inspection 175

P0171 FUEL INJECTION SYSTEM FUNCTION 178
DTC Logic 178
Diagnosis Procedure 179

P0172 FUEL INJECTION SYSTEM FUNCTION 182
DTC Logic 182
Diagnosis Procedure 183

P0222, P0223 TP SENSOR 186
DTC Logic 186
Diagnosis Procedure 186
Component Inspection 187

P0300, P0301, P0302, P0303 MISFIRE 189
DTC Logic 189
Diagnosis Procedure 190

P0327, P0328 KS 195
DTC Logic 195
Diagnosis Procedure 195
Component Inspection 196

P0335 CKP SENSOR (POS) 197
DTC Logic 197
Diagnosis Procedure 197
Component Inspection 199

P0340 CMP SENSOR (PHASE) 200
DTC Logic 200
Diagnosis Procedure 200
Component Inspection 202

P0400 EGR FUNCTION 203
DTC Logic 203
Diagnosis Procedure 204

P0403 EGR VOLUME CONTROL VALVE 206
DTC Logic 206
Diagnosis Procedure 206
Component Inspection 207

P0405, P0406 EGRT SENSOR 209
DTC Logic 209
Diagnosis Procedure 210
Component Inspection 211

P0420 THREE WAY CATALYST FUNCTION . 213
DTC Logic 213
Component Function Check 214
Diagnosis Procedure 215

P0444 EVAP CANISTER PURGE VOLUME CONTROL SOLENOID VALVE 218
DTC Logic 218
Diagnosis Procedure 218
Component Inspection 219

P0500 VSS 221
Description 221
DTC Logic 221
Component Function Check 222
Diagnosis Procedure 222

P0603 ECM 223
Description 223
DTC Logic 223
Diagnosis Procedure 223

P0605 ECM **225**
DTC Logic 225
Diagnosis Procedure 225

P0607 ECM **227**
DTC Logic 227
Diagnosis Procedure 227

P0643 SENSOR POWER SUPPLY **228**
DTC Logic 228
Diagnosis Procedure 228

P0850 PNP SWITCH **230**
Description 230
DTC Logic 230
Component Function Check 231
Diagnosis Procedure 231

P1217 ENGINE OVER TEMPERATURE **233**
DTC Logic 233
Component Function Check 233
Diagnosis Procedure 234

P1225 TP SENSOR **237**
DTC Logic 237
Diagnosis Procedure 237

P1226 TP SENSOR **238**
DTC Logic 238
Diagnosis Procedure 238

P1402 EGR FUNCTION **239**
DTC Logic 239
Diagnosis Procedure 240

P1550 BATTERY CURRENT SENSOR **242**
DTC Logic 242
Diagnosis Procedure 242
Component Inspection 244

P1551, P1552 BATTERY CURRENT SENSOR **245**
DTC Logic 245
Diagnosis Procedure 245
Component Inspection 247

P1553 BATTERY CURRENT SENSOR **248**
DTC Logic 248
Diagnosis Procedure 248
Component Inspection 250

P1554 BATTERY CURRENT SENSOR **251**
DTC Logic 251
Component Function Check 251
Diagnosis Procedure 252
Component Inspection 253

P1805 BRAKE SWITCH **255**
DTC Logic 255
Diagnosis Procedure 255
Component Inspection 256

P2100, P2103 THROTTLE CONTROL MOTOR RELAY **257**
DTC Logic 257
Diagnosis Procedure 257

P2101 ELECTRIC THROTTLE CONTROL FUNCTION **260**
DTC Logic 260
Diagnosis Procedure 260
Component Inspection 263

P2118 THROTTLE CONTROL MOTOR **264**
DTC Logic 264
Diagnosis Procedure 264
Component Inspection 265

P2119 ELECTRIC THROTTLE CONTROL ACTUATOR **266**
DTC Logic 266
Diagnosis Procedure 266

P2122, P2123 APP SENSOR **268**
DTC Logic 268
Diagnosis Procedure 268
Component Inspection 269

P2127, P2128 APP SENSOR **270**
DTC Logic 270
Diagnosis Procedure 270
Component Inspection 272

P2135 TP SENSOR **273**
DTC Logic 273
Diagnosis Procedure 273
Component Inspection 274

P2138 APP SENSOR **275**
DTC Logic 275
Diagnosis Procedure 275
Component Inspection 277

P2A00 A/F SENSOR 1 ..... **278**
DTC Logic 278
Diagnosis Procedure 278

COOLING FAN **281**
Component Function Check 281
Diagnosis Procedure 281
Component Inspection 282

ELECTRICAL LOAD SIGNAL **283**
Description 283
Component Function Check 283
Diagnosis Procedure 283

FUEL INJECTOR **285**
Component Function Check 285
Diagnosis Procedure 285
Component Inspection 286

FUEL PUMP **287**

Component Function Check 287
Diagnosis Procedure 287
Component Inspection (Fuel pump) 289
Component Inspection (FPCM) 290

IGNITION SIGNAL 291
Component Function Check 291
Diagnosis Procedure 291
Component Inspection (Ignition Coil with Power Transistor) 294
Component Inspection (Condenser) 295

MALFUNCTION INDICATOR LAMP 296
Component Function Check 296
Diagnosis Procedure 296

REFRIGERANT PRESSURE SENSOR 297
Component Function Check 297
Diagnosis Procedure 297

SYMPTOM DIAGNOSIS 299

ENGINE CONTROL SYSTEM SYMPTOMS ... 299
Symptom Table 299

NORMAL OPERATING CONDITION 307
Description 307

PERIODIC MAINTENANCE 308

IDLE SPEED 308
Inspection 308

IGNITION TIMING 309
Inspection 309

EVAPORATIVE EMISSION SYSTEM 310
Inspection 310

POSITIVE CRANKCASE VENTILATION 311
Inspection 311

REMOVAL AND INSTALLATION 312

ECM 312
Exploded View 312
Removal and Installation 312

EVAP CANISTER 313
Hydraulic Layout 313

FUEL PUMP CONTROL MODULE 314
Removal and Installation 314

SERVICE DATA AND SPECIFICATIONS (SDS) 315

SERVICE DATA AND SPECIFICATIONS (SDS) 315
Idle Speed 315
Ignition Timing 315
Calculated Load Value 315
Mass Air Flow Sensor 315

HR12DE (TYPE 2)

HOW TO USE THIS MANUAL 316

APPLICATION NOTICE 316
How to Check Vehicle Type 316

PRECAUTION 317

PRECAUTIONS 317
Precaution for Supplemental Restraint System (SRS) "AIR BAG" and "SEAT BELT PRE-TENSIONER" 317
Precaution for Procedure without Cowl Top Cover. 317
On Board Diagnostic (OBD) System of Engine and A/T 317
General Precautions 318

PREPARATION 321

PREPARATION 321
Special Service Tools 321
Commercial Service Tools 321

SYSTEM DESCRIPTION 322

STRUCTURE AND OPERATION 322
Positive Crankcase Ventilation 322

COMPONENT PARTS 323
Component Parts Location 323
Component Description 326
ECM 327
Malfunction Indicator Lamp (MIL) 327
Ignition Coil With Power Transistor 328
Accelerator Pedal Position Sensor 328
Manifold Absolute Pressure (MAP) Sensor 328
Electric Throttle Control Actuator 329
Crankshaft Position Sensor (POS) 329
Camshaft Position Sensor (PHASE) 330
Engine Coolant Temperature Sensor 330
Fuel Injector 331
Fuel Pump 331
Heated Oxygen Sensor 1 331
Heated Oxygen Sensor 2 332
Knock Sensor 333
Cooling Fan 333
EVAP Canister Purge Volume Control Solenoid Valve 333
Refrigerant Pressure Sensor 333
Stop Lamp Switch 334

SYSTEM 335

ENGINE CONTROL SYSTEM 335
ENGINE CONTROL SYSTEM : System Diagram. 335
ENGINE CONTROL SYSTEM : System Description 336
ENGINE CONTROL SYSTEM : Fail Safe 336

MULTIPORT FUEL INJECTION SYSTEM 337
MULTIPORT FUEL INJECTION SYSTEM : System Diagram 337
MULTIPORT FUEL INJECTION SYSTEM : System Description 337

ELECTRIC IGNITION SYSTEM 340
ELECTRIC IGNITION SYSTEM : System Diagram 340
ELECTRIC IGNITION SYSTEM : System Description 340

AIR CONDITIONING CUT CONTROL 341
AIR CONDITIONING CUT CONTROL : System Diagram 342
AIR CONDITIONING CUT CONTROL : System Description 342

CAN COMMUNICATION 343
CAN COMMUNICATION : System Description 343

COOLING FAN CONTROL 343
COOLING FAN CONTROL : System Diagram 343
COOLING FAN CONTROL : System Description..343

EVAPORATIVE EMISSION SYSTEM 344
EVAPORATIVE EMISSION SYSTEM : System Diagram 344
EVAPORATIVE EMISSION SYSTEM : System Description 344

DIAGNOSIS SYSTEM (ECM) 346
Diagnosis Description 346
CONSULT-III Function 350

ECU DIAGNOSIS INFORMATION 355

ECM 355
Reference Value 355
Fail Safe 363
DTC Inspection Priority Chart 365
DTC Index 365

WIRING DIAGRAM 368

ENGINE CONTROL SYSTEM 368
Wiring Diagram 368

BASIC INSPECTION 372

DIAGNOSIS AND REPAIR WORKFLOW 372
Work Flow 372
Diagnostic Work Sheet 374

ADDITIONAL SERVICE WHEN REPLACING ECM 376
Description 376
Work Procedure 376

ACCELERATOR PEDAL RELEASED POSITION LEARNING 377
Description 377
Work Procedure 377

THROTTLE VALVE CLOSED POSITION LEARNING 378
Description 378
Work Procedure 378

IDLE AIR VOLUME LEARNING 379
Description 379
Work Procedure 379

MIXTURE RATIO SELF-LEARNING VALUE CLEAR 381
Description 381
Work Procedure 381

BASIC INSPECTION 382
Work Procedure 382

FUEL PRESSURE CHECK 386
Work Procedure 386

DTC/CIRCUIT DIAGNOSIS 388

TROUBLE DIAGNOSIS - SPECIFICATION VALUE 388
Description 388
Component Function Check 388
Diagnosis Procedure 389

POWER SUPPLY AND GROUND CIRCUIT ...396
Diagnosis Procedure 396

U1000, U1001 CAN COMM CIRCUIT 399
Description 399
DTC Logic 399
Diagnosis Procedure 399

U1010 CONTROL UNIT (CAN) 400
Description 400
DTC Logic 400
Diagnosis Procedure 400

P0107, P0108 MAP SENSOR 401
DTC Logic 401
Diagnosis Procedure 401
Component Inspection 402

P0117, P0118 ECT SENSOR 404
DTC Logic 404
Diagnosis Procedure 404
Component Inspection 405

P0122, P0123 TP SENSOR 406
DTC Logic 406
Diagnosis Procedure 406
Component Inspection 407
Special Repair Requirement 408

P0132 HO2S1 409
DTC Logic 409
Diagnosis Procedure 409

Component Inspection 410

P0134 HO2S1 413
DTC Logic 413
Component Function Check 414
Diagnosis Procedure 414
Component Inspection 415

P0138 HO2S2 417
DTC Logic 417
Diagnosis Procedure 417
Component Inspection 418

P0222, P0223 TP SENSOR 421
DTC Logic 421
Diagnosis Procedure 421
Component Inspection 422
Special Repair Requirement 423

P0327, P0328 KS 424
DTC Logic 424
Diagnosis Procedure 424
Component Inspection 425

P0335 CKP SENSOR (POS) 426
DTC Logic 426
Diagnosis Procedure 426
Component Inspection 428

P0340 CMP SENSOR (PHASE) 430
DTC Logic 430
Diagnosis Procedure 430
Component Inspection 432

P0605 ECM 433
DTC Logic 433
Diagnosis Procedure 433

P1065 ECM 435
DTC Logic 435
Diagnosis Procedure 435

P1121 ELECTRIC THROTTLE CONTROL ACTUATOR 436
DTC Logic 436
Diagnosis Procedure 436
Special Repair Requirement 437

P1122 ELECTRIC THROTTLE CONTROL FUNCTION 438
DTC Logic 438
Diagnosis Procedure 438
Component Inspection 441
Special Repair Requirement 441

P1124, P1126 THROTTLE CONTROL MOTOR RELAY 442
DTC Logic 442
Diagnosis Procedure 442

P1128 THROTTLE CONTROL MOTOR 445
DTC Logic 445
Diagnosis Procedure 445
Component Inspection 446
Special Repair Requirement 446

P1171 INTAKE ERROR 447
DTC Logic 447
Diagnosis Procedure 447

P1217 ENGINE OVER TEMPERATURE 449
DTC Logic 449
Component Function Check 449
Diagnosis Procedure 450

P1225 TP SENSOR 453
DTC Logic 453
Diagnosis Procedure 453
Special Repair Requirement 453

P1226 TP SENSOR 454
DTC Logic 454
Diagnosis Procedure 454
Special Repair Requirement 454

P1229 SENSOR POWER SUPPLY 456
DTC Logic 456
Diagnosis Procedure 456

P1706 PNP SWITCH 458
Description 458
DTC Logic 458
Component Function Check 459
Diagnosis Procedure 459

P1805 BRAKE SWITCH 461
DTC Logic 461
Diagnosis Procedure 461
Component Inspection 462

P2122, P2123 APP SENSOR 463
DTC Logic 463
Diagnosis Procedure 463
Component Inspection 464
Special Repair Requirement 465

P2127, P2128 APP SENSOR 466
DTC Logic 466
Diagnosis Procedure 466
Component Inspection 468
Special Repair Requirement 468

P2135 TP SENSOR 469
DTC Logic 469
Diagnosis Procedure 469
Component Inspection 470
Special Repair Requirement 471

P2138 APP SENSOR 472
DTC Logic 472
Diagnosis Procedure 472
Component Inspection 474

Special Repair Requirement 475

COOLING FAN 476
Component Function Check 476
Diagnosis Procedure 476
Component Inspection 477

ELECTRICAL LOAD SIGNAL 478
Description 478
Component Function Check 478
Diagnosis Procedure 478

EVAP CANISTER PURGE VOLUME CONTROL SOLENOID VALVE 480
Component Function Check 480
Diagnosis Procedure 480
Component Inspection 481

FUEL INJECTOR 483
Component Function Check 483
Diagnosis Procedure 483
Component Inspection 484

FUEL PUMP 485
Component Function Check 485
Diagnosis Procedure 485
Component Inspection (Fuel pump) 487

HO2S1 488
Component Function Check 488
Diagnosis Procedure 488
Component Inspection 490

HO2S1 HEATER 492
Component Function Check 492
Diagnosis Procedure 492
Component Inspection 493

HO2S2 495
Component Function Check 495
Diagnosis Procedure 495
Component Inspection 497

HO2S2 HEATER 499
Component Function Check 499
Diagnosis Procedure 499
Component Inspection 500

IAT SENSOR 502
Component Function Check 502
Diagnosis Procedure 502
Component Inspection 503

IGNITION SIGNAL 504
Component Function Check 504
Diagnosis Procedure 504
Component Inspection (Ignition Coil with Power Transistor) 507
Component Inspection (Condenser) 508

MALFUNCTION INDICATOR LAMP 509
Component Function Check 509
Diagnosis Procedure 509

REFRIGERANT PRESSURE SENSOR 510
Component Function Check 510
Diagnosis Procedure 510

VSS 512
Description 512
Component Function Check 512
Diagnosis Procedure 512

SYMPTOM DIAGNOSIS 513

ENGINE CONTROL SYSTEM SYMPTOMS ...513
Symptom Table 513

NORMAL OPERATING CONDITION 519
Description 519

PERIODIC MAINTENANCE 520

IDLE SPEED 520
Inspection 520

IGNITION TIMING 521
Inspection 521

EVAPORATIVE EMISSION SYSTEM 522
Inspection 522

POSITIVE CRANKCASE VENTILATION 523
Inspection 523

REMOVAL AND INSTALLATION 524

ECM 524
Exploded View 524
Removal and Installation 524

EVAP CANISTER 525
Hydraulic Layout 525

FUEL PUMP CONTROL MODULE 526
Removal and Installation 526

SERVICE DATA AND SPECIFICATIONS (SDS) 527

SERVICE DATA AND SPECIFICATIONS (SDS) 527
Idle Speed 527
Ignition Timing 527

HOW TO USE THIS MANUAL

APPLICATION NOTICE

How to Check Vehicle Type

INFOID:0000000006022900

Check the vehicle type to confirm the service information in EC section.

Vehicle type			Service information
Destination	Transmission	Engine control	
For Thailand	M/T	L-jetronic	HR12DE (TYPE 1)
Except for Thailand	A/T, M/T	D-jetronic	HR12DE (TYPE 2)

NOTE:
- L-jetronic is a fuel injection control method that the mass air flow sensor mounted on the air cleaner case directly measures air volume taken into the engine (cylinder) and determines the fundamental fuel injection amount.
- D-jetronic is a fuel injection control method to calculate air volume taken into the engine (cylinder) and determine the fundamental fuel injection amount, based on a throttle angle and an intake air pressure calculated by the manifold absolute pressure sensor mounted on the intake manifold.

PRECAUTION

PRECAUTIONS

Precaution for Supplemental Restraint System (SRS) "AIR BAG" and "SEAT BELT PRE-TENSIONER"

INFOID:0000000005989135

The Supplemental Restraint System such as “AIR BAG” and “SEAT BELT PRE-TENSIONER”, used along with a front seat belt, helps to reduce the risk or severity of injury to the driver and front passenger for certain types of collision. This system includes seat belt switch inputs and dual stage front air bag modules. The SRS system uses the seat belt switches to determine the front air bag deployment, and may only deploy one front air bag, depending on the severity of a collision and whether the front occupants are belted or unbelted.
Information necessary to service the system safely is included in the “SRS AIR BAG” and “SEAT BELT” of this Service Manual.

WARNING:

- **To avoid rendering the SRS inoperative, which could increase the risk of personal injury or death in the event of a collision that would result in air bag inflation, all maintenance must be performed by an authorized NISSAN/INFINITI dealer.**
- **Improper maintenance, including incorrect removal and installation of the SRS, can lead to personal injury caused by unintentional activation of the system. For removal of Spiral Cable and Air Bag Module, see the “SRS AIR BAG”.**
- **Do not use electrical test equipment on any circuit related to the SRS unless instructed to in this Service Manual. SRS wiring harnesses can be identified by yellow and/or orange harnesses or harness connectors.**

PRECAUTIONS WHEN USING POWER TOOLS (AIR OR ELECTRIC) AND HAMMERS

WARNING:

- **When working near the Air Bag Diagnosis Sensor Unit or other Air Bag System sensors with the ignition ON or engine running, DO NOT use air or electric power tools or strike near the sensor(s) with a hammer. Heavy vibration could activate the sensor(s) and deploy the air bag(s), possibly causing serious injury.**
- **When using air or electric power tools or hammers, always switch the ignition OFF, disconnect the battery, and wait at least 3 minutes before performing any service.**

Precaution for Procedure without Cowl Top Cover

INFOID:0000000005989136

When performing the procedure after removing cowl top cover, cover the lower end of windshield with urethane, etc.

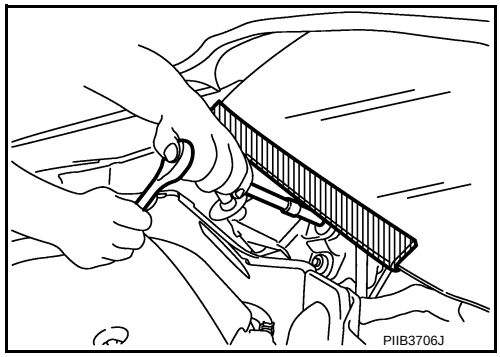

On Board Diagnostic (OBD) System of Engine

INFOID:0000000005989137

The ECM has an on board diagnostic system. It will light up the malfunction indicator lamp (MIL) to warn the driver of a malfunction causing emission deterioration.

CAUTION:

- **Be sure to turn the ignition switch OFF and disconnect the negative battery cable before any repair or inspection work. The open/short circuit of related switches, sensors, solenoid valves, etc. will cause the MIL to light up.**
- **Be sure to connect and lock the connectors securely after work. A loose (unlocked) connector will cause the MIL to light up due to the open circuit. (Be sure the connector is free from water, grease, dirt, bent terminals, etc.)**

- **Certain systems and components, especially those related to OBD, may use a new style slide-locking type harness connector. For description and how to disconnect, refer to PG-4, "Harness Connector".**
- **Be sure to route and secure the harnesses properly after work. The interference of the harness with a bracket, etc. may cause the MIL to light up due to the short circuit.**
- **Be sure to connect rubber tubes properly after work. A misconnected or disconnected rubber tube may cause the MIL to light up due to the malfunction of the fuel injection system, etc.**
- **Be sure to erase the unnecessary malfunction information (repairs completed) from the ECM and TCM (Transmission control module) before returning the vehicle to the customer.**

General Precautions

INFOID:0000000005989138

- **Always use a 12 volt battery as power source.**
- **Do not attempt to disconnect battery cables while engine is running.**
- **Before connecting or disconnecting the ECM harness connector, turn ignition switch OFF and disconnect negative battery cable. Failure to do so may damage the ECM because battery voltage is applied to ECM even if ignition switch is turned OFF.**
- **Before removing parts, turn ignition switch OFF and then disconnect battery ground cable.**

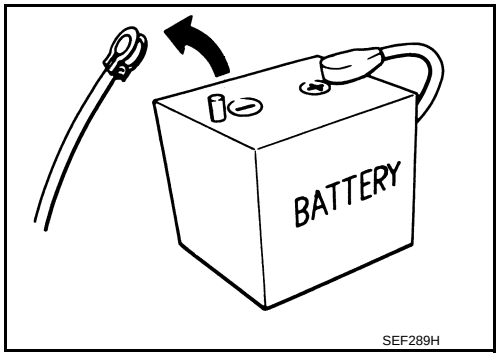

- **Do not disassemble ECM.**
- **If a battery cable is disconnected, the memory will return to the ECM value.**
  The ECM will now start to self-control at its initial value. So, engine operation can vary slightly in this case. However, this is not an indication of a malfunction. Do not replace parts because of a slight variation.
- **If the battery is disconnected, the following emission-related diagnostic information will be lost within 24 hours.**
- **Diagnostic trouble codes**
- **1st trip diagnostic trouble codes**
- **Freeze frame data**
- **1st trip freeze frame data**
- **System readiness test (SRT) codes**
- **Test values**

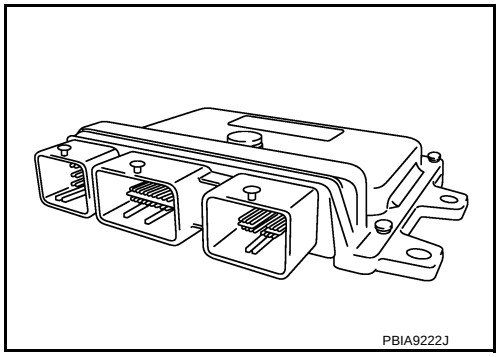

- **When connecting ECM harness connector (A), fasten (B) it securely with a lever as far as it will go as shown in the figure.**

1. ECM

C. Loosen

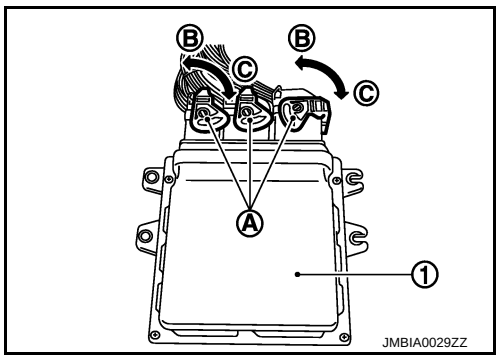

- **When connecting or disconnecting pin connectors into or from ECM, take care not to damage pin terminals (bend or break).**
  Make sure that there are not any bends or breaks on ECM pin terminal, when connecting pin connectors.
- **Securely connect ECM harness connectors.**
  A poor connection can cause an extremely high (surge) voltage to develop in coil and condenser, thus resulting in damage to ICs.
- **Keep engine control system harness at least 10 cm (4 in) away from adjacent harness, to prevent engine control system malfunctions due to receiving external noise, degraded operation of ICs, etc.**
- **Keep engine control system parts and harness dry.**
- **Before replacing ECM, perform ECM Terminals and Reference Value inspection and make sure ECM functions properly. Refer to EC-65, "Reference Value".**
- **Handle mass air flow sensor carefully to avoid damage.**
- **Do not clean mass air flow sensor with any type of detergent.**
- **Do not disassemble electric throttle control actuator.**
- **Even a slight leak in the air intake system can cause serious incidents.**
- **Do not shock or jar the camshaft position sensor (PHASE), crankshaft position sensor (POS).**

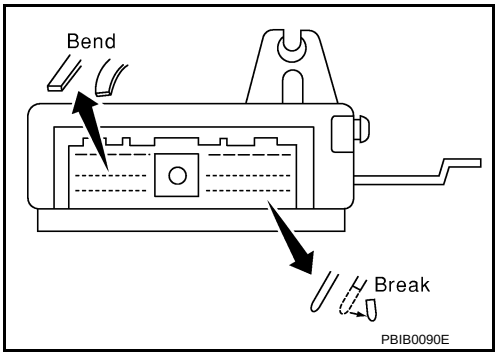

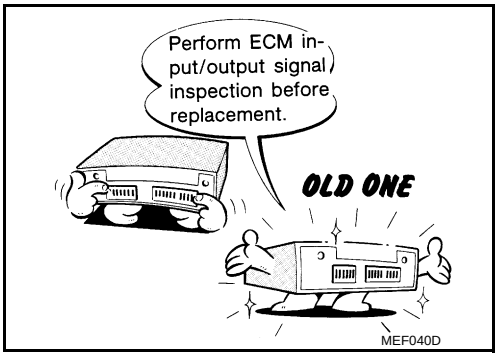

- **After performing each TROUBLE DIAGNOSIS, perform DTC CONFIRMATION PROCEDURE or Component Function Check.** The DTC should not be displayed in the DTC CONFIRMATION PROCEDURE if the repair is completed. The Component Function Check should be a good result if the repair is completed.

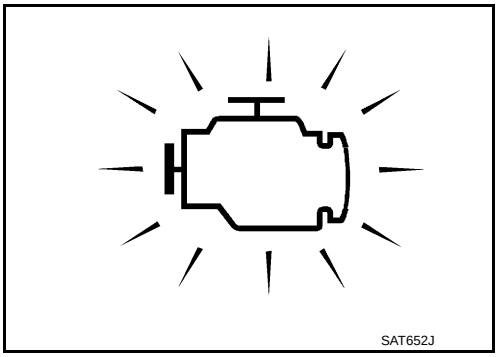

- **When measuring ECM signals with a circuit tester, never allow the two tester probes to contact.**
  Accidental contact of probes will cause a short circuit and damage the ECM power transistor.

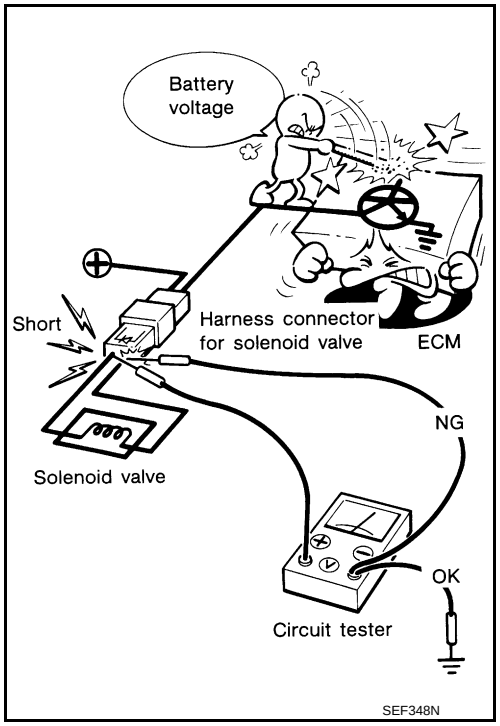

- **Do not operate fuel pump when there is no fuel in lines.**
- **Tighten fuel hose clamps to the specified torque.**

- **Do not depress accelerator pedal when starting.**
- **Immediately after starting, do not rev up engine unnecessarily.**
- **Do not rev up engine just prior to shutdown.**

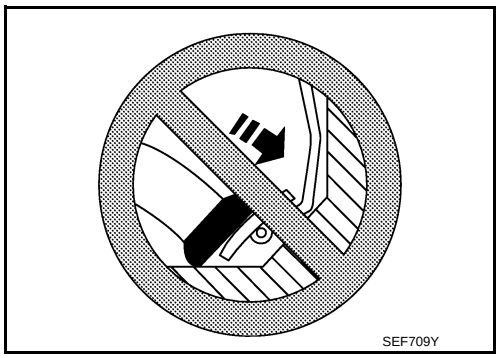

- **When installing C.B. ham radio or a mobile phone, be sure to observe the following as it may adversely affect electronic control systems depending on installation location.**
  - **Keep the antenna as far as possible from the electronic control units.**
  - **Keep the antenna feeder line more than 20 cm (8 in) away from the harness of electronic controls.**
    Do not let them run parallel for a long distance.
  - **Adjust the antenna and feeder line so that the standing-wave ratio can be kept smaller.**
  - **Be sure to ground the radio to vehicle body.**

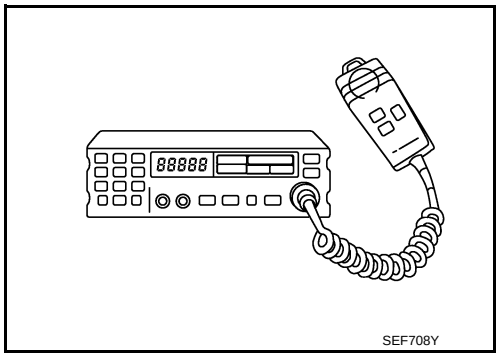

PREPARATION

PREPARATION

Special Service Tools

INFOID:0000000005989139

Tool number Tool name	Description
KV10120000 Fuel tube adapter 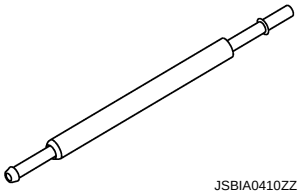 JSBIA0410ZZ	Measuring fuel pressure

Commercial Service Tools

INFOID:0000000005989140

Tool name	Description
Oxygen sensor thread cleaner 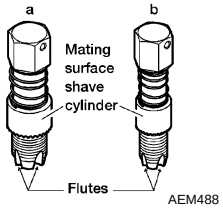 AEM488	Reconditioning the exhaust system threads before installing a new oxygen sensor. Use with anti-seize lubricant shown below. **a: 18 mm diameter with pitch 1.5 mm for Zirconia Oxygen Sensor** **b: 12 mm diameter with pitch 1.25 mm for Titania Oxygen Sensor**
Anti-seize lubricant i.e.: (Permatex™ 133AR or equivalent meeting MIL specification MIL-A-907) 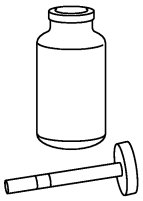 S-NT779	Lubricating oxygen sensor thread cleaning tool when reconditioning exhaust system threads.

SYSTEM DESCRIPTION

STRUCTURE AND OPERATION

Positive Crankcase Ventilation

INFOID:0000000005989167

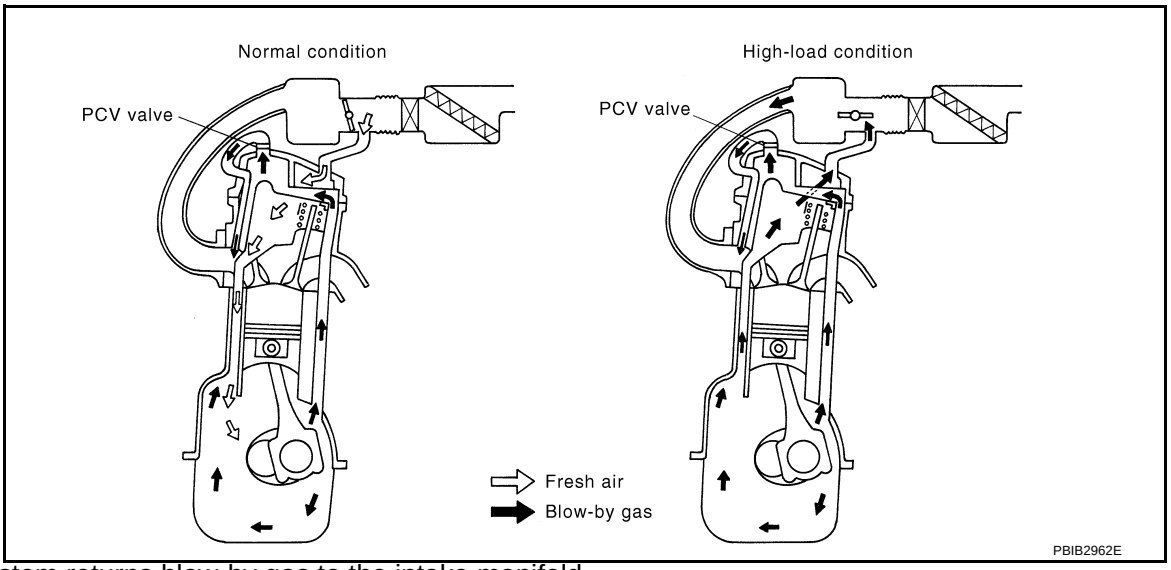

This system returns blow-by gas to the intake manifold.
The positive crankcase ventilation (PCV) valve is provided to conduct crankcase blow-by gas to the intake manifold.
During partial throttle operation of the engine, the intake manifold sucks the blow-by gas through the PCV valve.
Normally, the capacity of the valve is sufficient to handle any blow-by and a small amount of ventilating air.
The ventilating air is then drawn from the air inlet tubes into the crankcase. In this process the air passes through the hose connecting air inlet tubes to rocker cover.
Under full-throttle condition, the manifold vacuum is insufficient to draw the blow-by flow through the valve. The flow goes through the hose connection in the reverse direction.
On vehicles with an excessively high blow-by, the valve does not meet the requirement. This is because some of the flow will go through the hose connection to the air inlet tubes under all conditions.

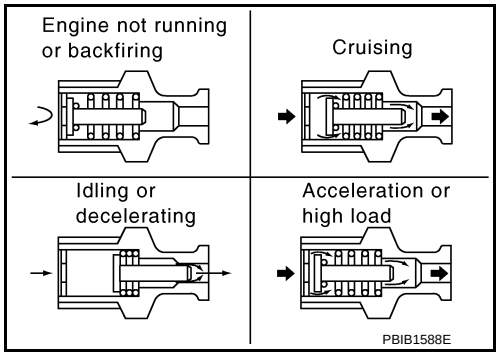

COMPONENT PARTS

Component Parts Location

INFOID:0000000005989141

ENGINE ROOM COMPARTMENT

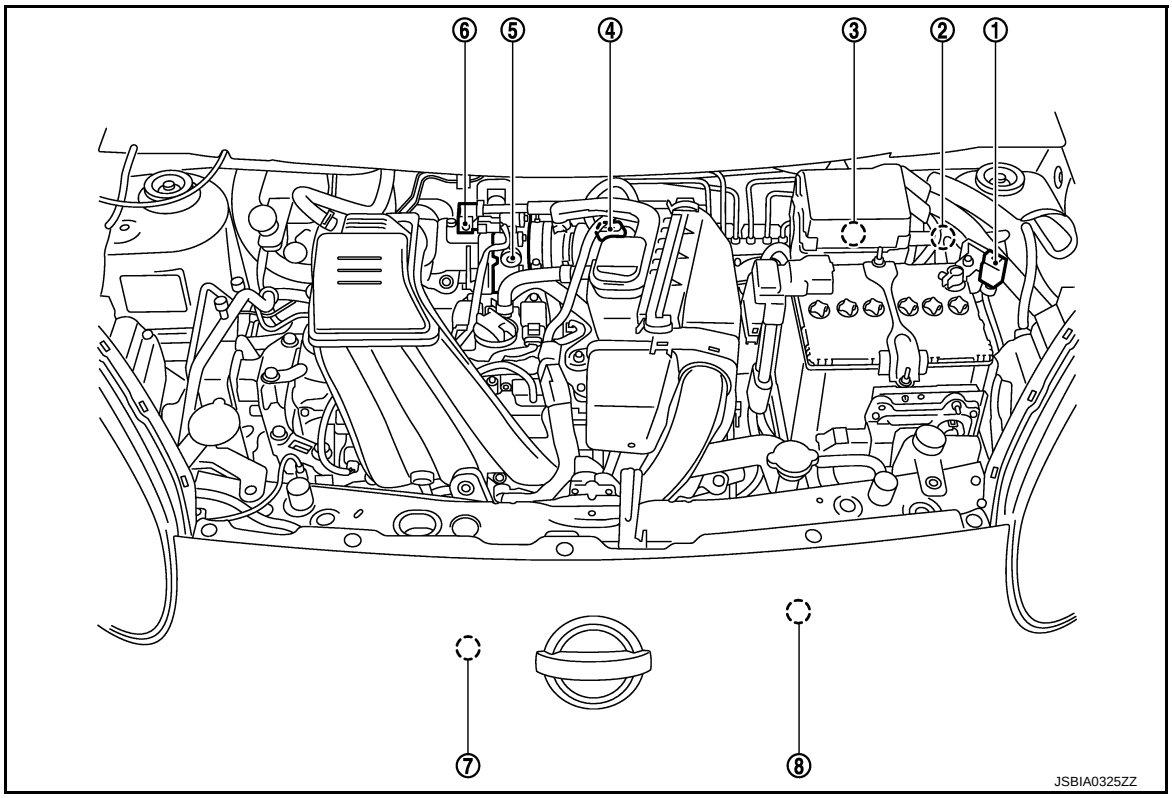

1. Battery current sensor (with battery temperature sensor*)
   Refer to Dummy cross-reference("XX-XX")
2. ECM
3. IPDM E/R
   Refer to Dummy cross-reference("XX-XX")
4. Mass air flow sensor (with intake air-temperature sensor)
5. Electric throttle control actuator (with built in throttle position sensor and throttle control motor)
6. EVAP canister purge volume control solenoid valve
7. Refrigerant pressure sensor
   Refer to Dummy cross-reference("XX-XX")
8. Cooling fan motor
   Refer to Dummy cross-reference("XX-XX")

*: Not used for engine control system.

ENGINE COMPARTMENT

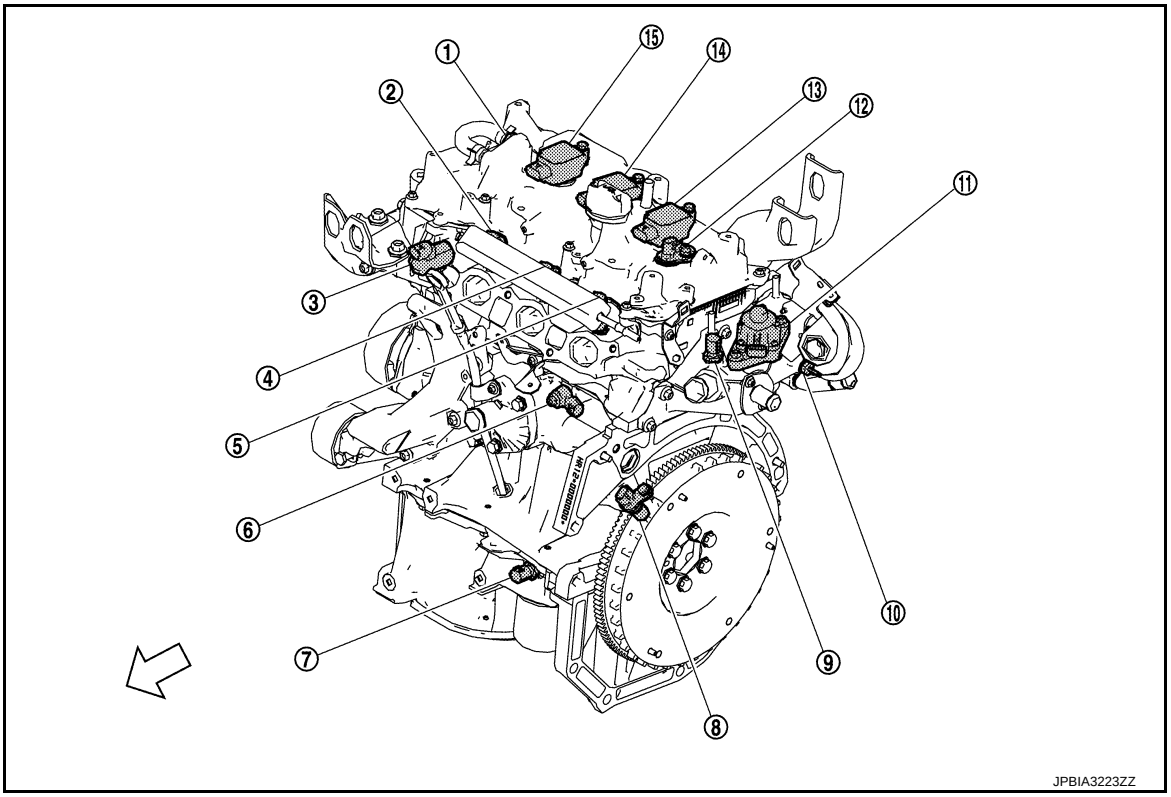

1.	PCV valve	2.	Fuel injector No.1	3.	Intake valve timing control solenoid-valve
4.	Fuel injector No.2	5.	Fuel injector No.3	6.	Knock sensor
7.	Engine oil temperature sensor*	8.	Crankshaft position sensor (POS)	9.	Engine coolant temperature sensor
10.	EGR temperature sensor	11.	EGR volume control valve	12.	Camshaftposition sensor (PHASE)
13.	Ignition coil No.3 (with power transistor)	14.	Ignition coil No.2 (with power transistor)	15.	Ignition coil No.1 (with power transistor)
⇦	:Vehicle front				

*: Not used for engine control system.

EXHAUST COMPARTMENT

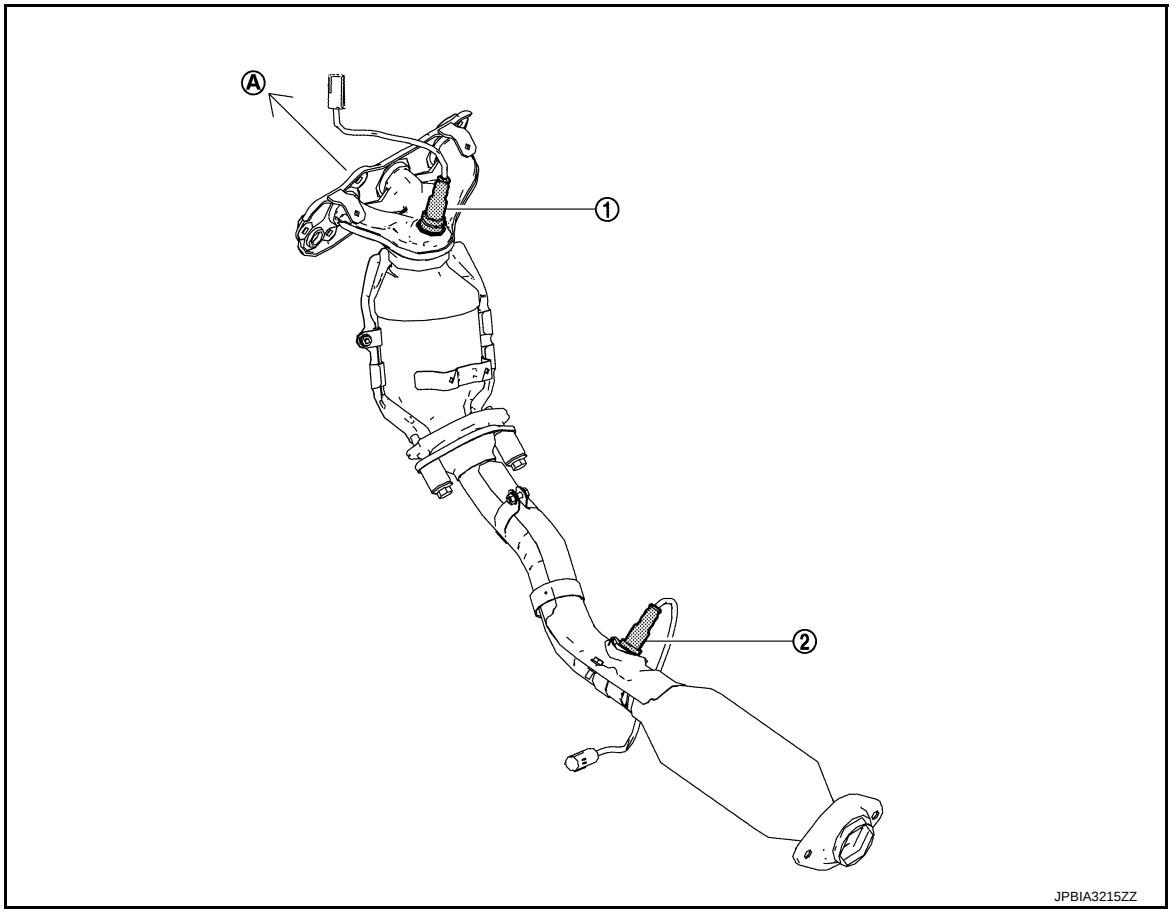

1. A/F sensor 1
2. Heated oxygen sensor 2

A. To engine assembly

BODY COMPARTMENT

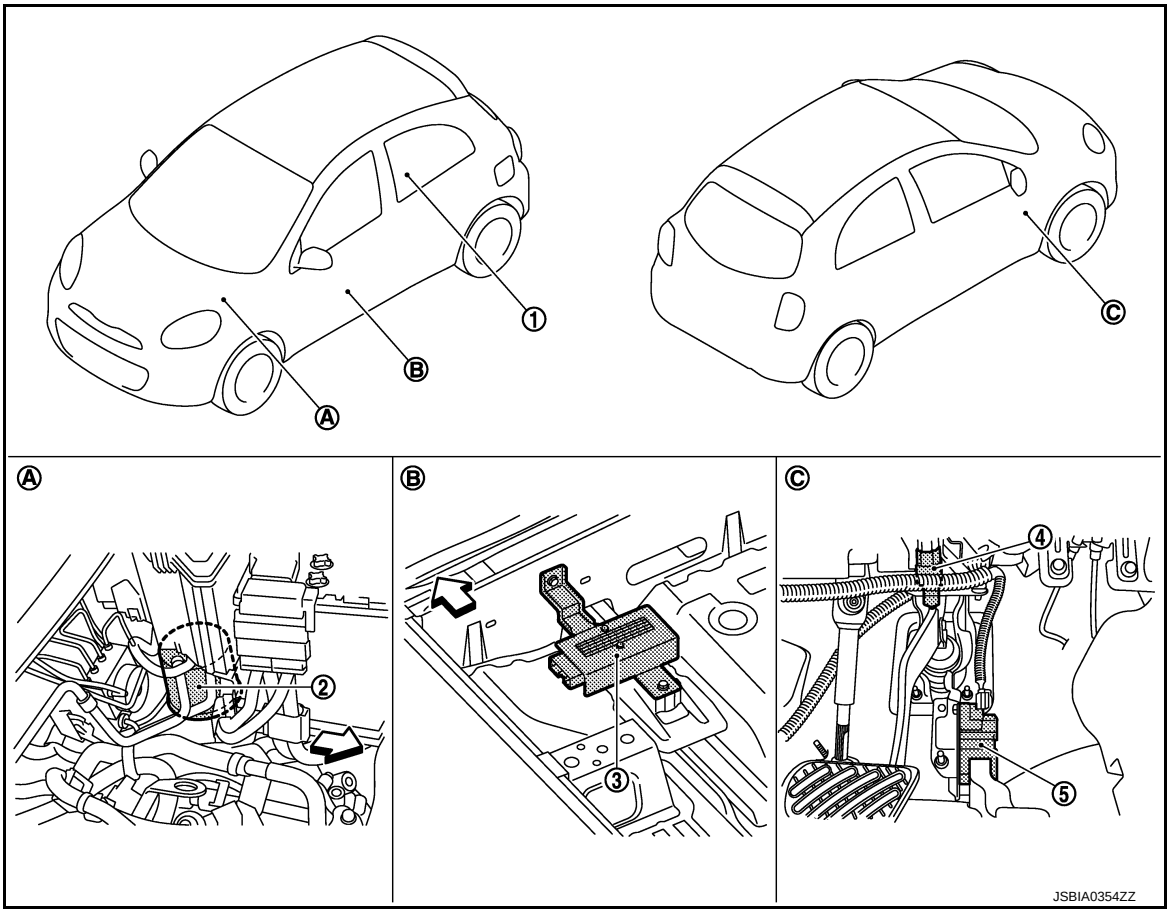

1. Fuel pump (with fuel level sensor unit and fuel pressure regulator) Refer to MWI-4, "Component Parts Location"
2. EVAP canister
3. Fuel pump control module (FPCM)
4. Stop lamp switch
5. Accelerator pedal position sensor

A. Left side of engine room
B. Under front seat (passenger side)
C. Periphery of pedals

⇦ : Vehicle front

Component Description

INFOID:0000000005989668

Component	Reference
ECM	EC-20, "ECM"
Malfunction indicator lamp	EC-20, "Malfunction Indicator Lamp (MIL)"
Ignition coil with power transistor	EC-21, "Ignition Coil With Power Transistor"
Accelerator pedal position sensor	EC-21, "Accelerator Pedal Position Sensor"
Mass air flow sensor	EC-21, "Mass Air Flow Sensor"
Intake air temperature sensor	
Electric throttle control actuator	EC-22, "Electric Throttle Control Actuator"
Throttle control motor relay	
Throttle control motor	
Throttle position sensor	
Crankshaft position sensor (POS)	EC-22, "Crankshaft Position Sensor (POS)"
Camshaft position sensor (PHASE)	EC-23, "Camshaft Position Sensor (PHASE)"

Component	Reference
Engine coolant temperature sensor	EC-23, "Engine Coolant Temperature Sensor"
Fuel injector	EC-24, "Fuel Injector"
Fuel pump	EC-24, "Fuel Pump"
Fuel pump control module (FPCM)	EC-25, "Fuel Pump Control Module (FPCM)"
A/F sensor 1	EC-25, "Air Fuel Ratio (A/F) Sensor 1"
A/F sensor 1 heater	
Heated oxygen sensor 2	EC-25, "Heated Oxygen Sensor 2"
Heated oxygen sensor 2 heater	
EGR volume control valve	EC-26, "EGR Volume Control Valve"
EGR temperature sensor	EC-26, "EGR Temperature Sensor"
Knock sensor	EC-27, "Knock Sensor"
Cooling fan control module	EC-27, "Cooling Fan"
Cooling fan motor	
Intake valve timing control solenoid valve	EC-28, "Intake Valve Timing Control Solenoid Valve"
EVAP canister purge volume control solenoid valve	EC-28, "EVAP Canister Purge Volume Control Solenoid Valve"
PCV valve	EC-15, "Positive Crankcase Ventilation"
Battery current sensor (with battery temperature sensor*)	EC-28, "Battery Current Sensor (With Battery Temperature Sensor)"
Refrigerant pressure sensor	EC-29, "Refrigerant Pressure Sensor"
Stop lamp switch	EC-29, "Stop Lamp Switch"
Park/neutral position switch	EC-230, "Description"

*: Not used for engine control system.

ECM

INFOID:0000000005991040

- ECM (Engine Control Module) controls the engine.
- ECM consists of a microcomputer and connectors for signal input and output and for power supply.
- Battery voltage is supplied to the ECM even when the ignition switch is turned OFF for the ECM memory function of the DTC memory, the air-fuel ratio feedback compensation value memory, the idle air volume learning value memory, etc.

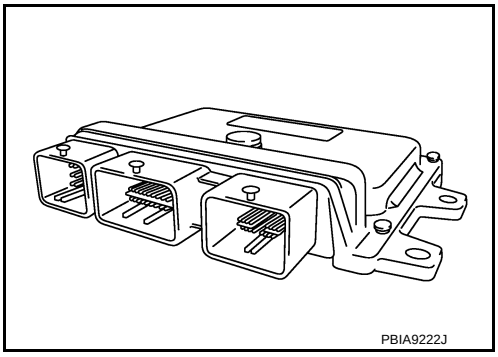

Malfunction Indicator Lamp (MIL)

INFOID:0000000005991041

The Malfunction Indicator Lamp (MIL) is located on the combination meter.
The MIL will illuminate when the ignition switch is turned ON without the engine running. This is a bulb check.
When the engine is started, the MIL should turn off. If the MIL remains illuminated, the on board diagnostic system has detected an engine system malfunction.
For details, refer to EC-45, "Diagnosis Description".

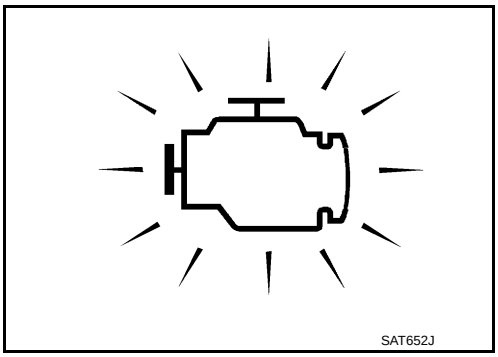

Ignition Coil With Power Transistor

INFOID:0000000005991042

The ignition signal from the ECM is sent to and amplified by the power transistor. The power transistor turns ON and OFF the ignition coil primary circuit. This ON/OFF operation induces the proper high voltage in the coil secondary circuit.

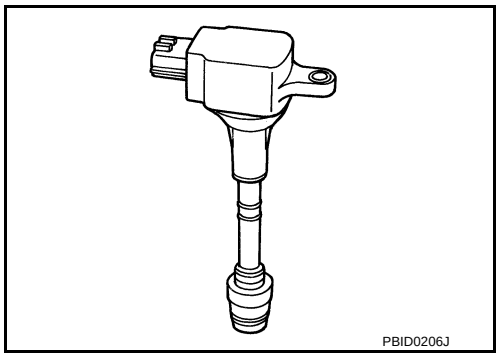

Accelerator Pedal Position Sensor

INFOID:0000000005991043

The accelerator pedal position sensor is installed on the accelerator pedal assembly. The sensor detects the accelerator position and sends a signal to the ECM.
Accelerator pedal position sensor has two sensors. These sensors are a kind of potentiometer which transform the accelerator pedal position into output voltage, and emit the voltage signals to the ECM. The ECM judges the current opening angle of the accelerator pedal from these signals and controls the throttle control motor based on these signals.
Idle position of the accelerator pedal is determined by the ECM receiving the signal from the accelerator pedal position sensor. The ECM uses this signal for engine operations such as fuel cut.

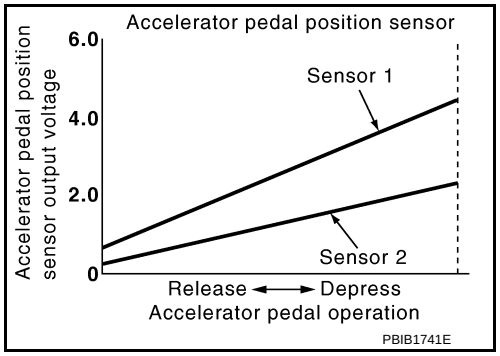

Mass Air Flow Sensor

INFOID:0000000005991044

MASS AIR FLOW SENSOR

The mass air flow sensor (1) is placed in the stream of intake air. It measures the intake flow rate by measuring a part of the entire intake flow. The mass air flow sensor controls the temperature of the hot wire to a certain amount. The heat generated by the hot wire is reduced as the intake air flows around it. The greater air flow, the greater the heat loss.
Therefore, the electric current supplied to hot wire is changed to maintain the temperature of the hot wire as air flow increases. The ECM detects the air flow by means of this current change.

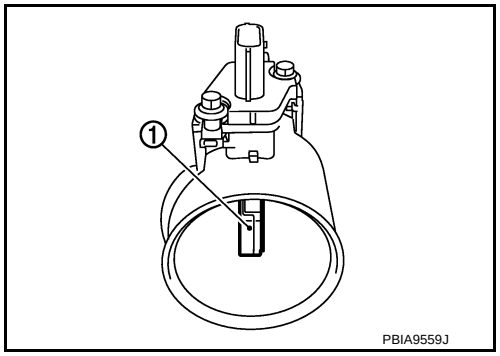

INTAKE AIR TEMPERATURE SENSOR

The intake air temperature sensor is built-into the mass air flow sensor. The sensor detects intake air temperature and transmits a signal to the ECM.
The temperature sensing unit uses a thermistor which is sensitive to the change in temperature. Electrical resistance of the thermistor decreases in response to the rise in temperature.

<Reference data>

Intake air temperature [°C (°F)]	Voltage* (V)	Resistance (kΩ)
25 (77)	3.3	1.800 - 2.200
80 (176)	1.2	0.283 - 0.359

*: These data are reference values and are measured between ECM terminals 46 (Intake air temperature sensor) and 55 (Sensor ground).

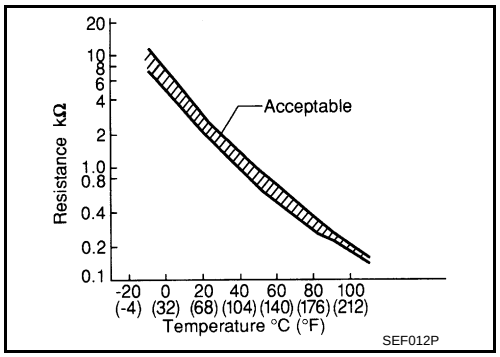

Electric Throttle Control Actuator

INFOID:0000000005991045

OUTLINE

Electric throttle control actuator consists of throttle body, throttle valve, throttle control motor and throttle position sensor.

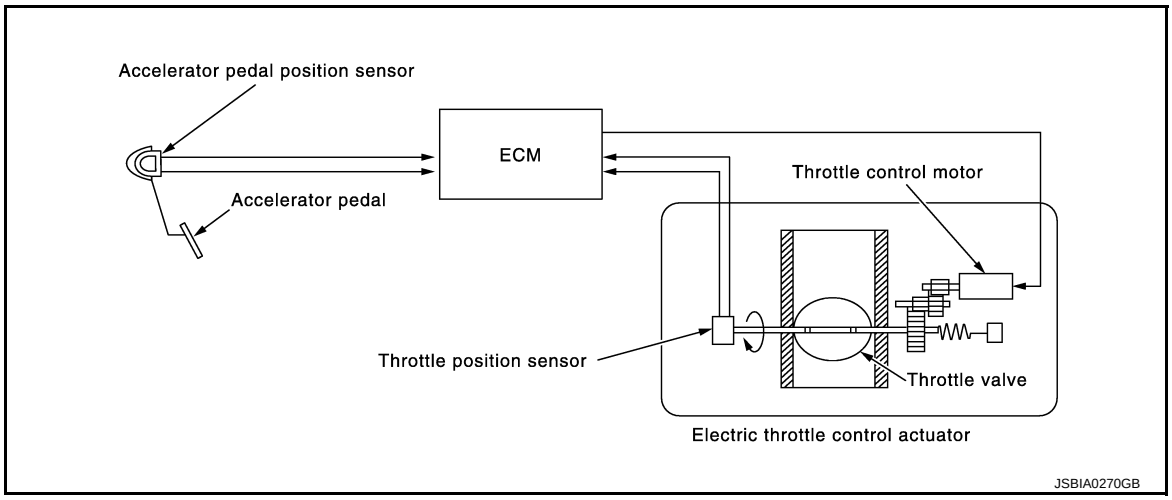

THROTTLE CONTROL MOTOR

The throttle control motor is operated by the ECM and it opens and closes the throttle valve.
The current opening angle of the throttle valve is detected by the throttle position sensor. The throttle position sensor provides feedback to the ECM, when opens/closes the throttle valve in response to driving conditions via the throttle control motor.
ECM inhibits THROTTLE VALVE CLOSED POSITION LEARNING under clogging-prone conditions to reduce the clogging in the throttle valve closed position. When detecting a clogging in the throttle valve closed position, ECM maximizes the motor driving torque of the electronic throttle to eliminate the clogging.

THROTTLE POSITION SENSOR

The throttle position sensor responds to the throttle valve movement.
The throttle position sensor has two sensors. These sensors are a kind of potentiometer which transform the throttle valve position into output voltage, and emit the voltage signal to the ECM. The ECM judges the current opening angle of the throttle valve from these signals and controls the throttle valve opening angle in response to driving conditions via the throttle control motor.

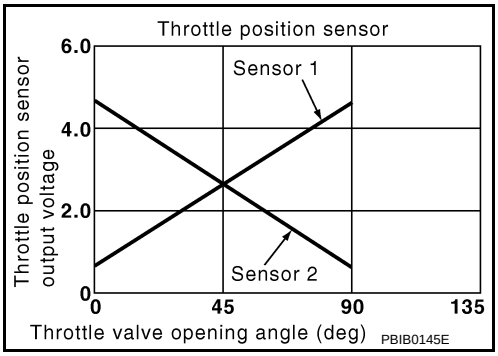

Crankshaft Position Sensor (POS)

INFOID:0000000005991046

The crankshaft position sensor (POS) is located on the transmission housing facing the gear teeth (cogs) of the signal plate. It detects the fluctuation of the engine revolution.
The sensor consists of a permanent magnet and Hall IC.
When the engine is running, the high and low parts of the teeth cause the gap with the sensor to change.
The changing gap causes the magnetic field near the sensor to change.
Due to the changing magnetic field, the voltage from the sensor changes.
The ECM receives the voltage signal and detects the fluctuation of the engine revolution.

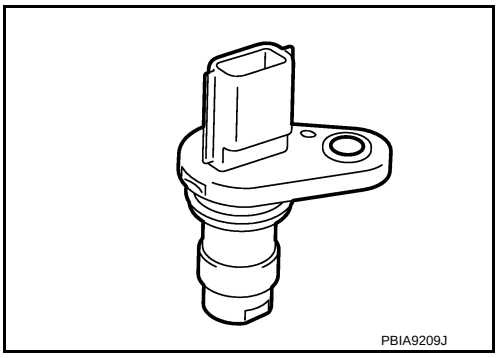

ECM receives the signals as shown in the figure.

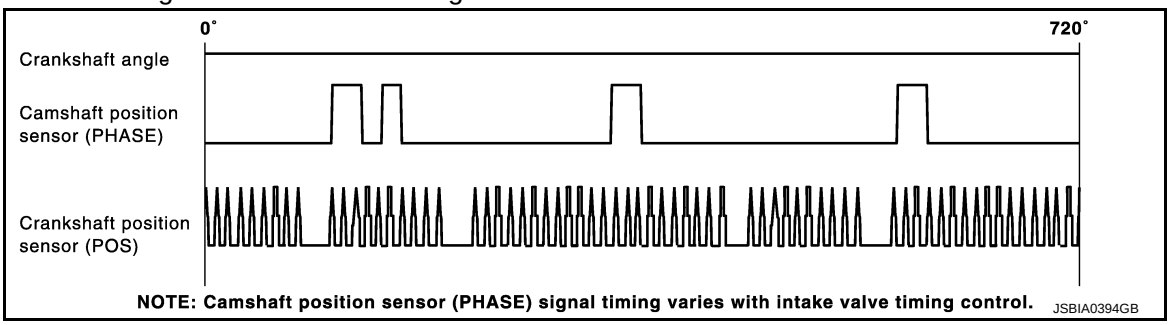

Camshaft Position Sensor (PHASE)

INFOID:0000000005991047

The camshaft position sensor (PHASE) senses the protrution of the signal plate installed to the camshaft (INT) rear end to identify a particular cylinder. The camshaft position sensor (PHASE) senses the piston position.
When the crankshaft position sensor (POS) system becomes inoperative, the camshaft position sensor (PHASE) provides various controls of engine parts instead, utilizing timing of cylinder identification signals.
The sensor consists of a permanent magnet and Hall IC.
When engine is running, the high and low parts of the teeth cause the gap with the sensor to change.
The changing gap causes the magnetic field near the sensor to change.
Due to the changing magnetic field, the voltage from the sensor changes.

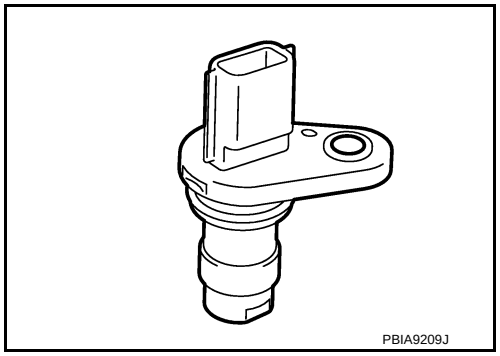

ECM receives the signals as shown in the figure.

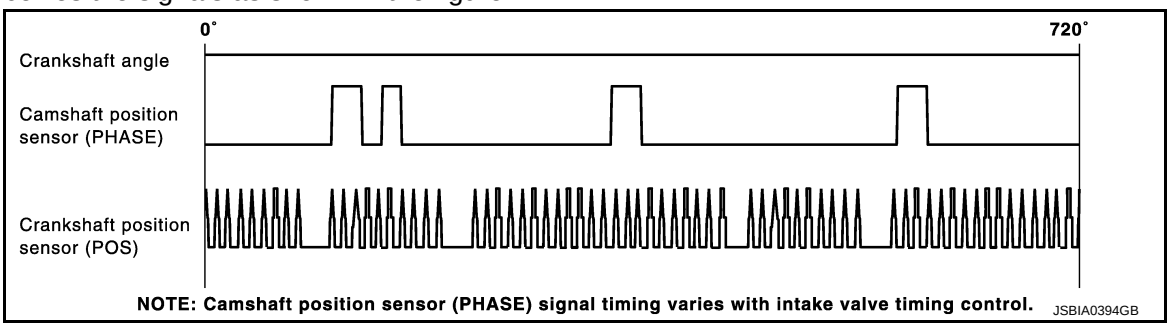

Engine Coolant Temperature Sensor

INFOID:0000000005991048

The engine coolant temperature sensor is used to detect the engine coolant temperature. The sensor modifies a voltage signal from the ECM. The modified signal returns to the ECM as the engine coolant temperature input. The sensor uses a thermistor which is sensitive to the change in temperature. The electrical resistance of the thermistor decreases as temperature increases.

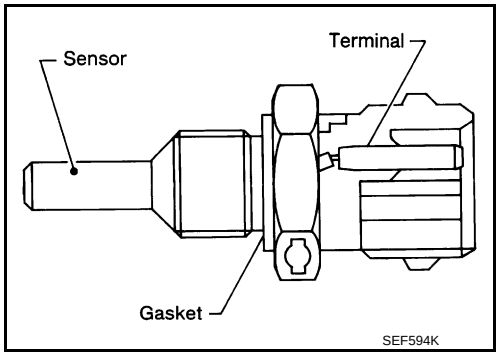

<Reference data>

Engine coolant temperature [°C (°F)]	Voltage* (V)	Resistance (kΩ)
–10 (14)	4.4	7.0 - 11.4
20 (68)	3.5	2.35 - 2.73
50 (122)	2.2	0.68 - 1.00
90 (194)	0.9	0.236 - 0.260

*: These data are reference values and are measured between ECM terminals 38 (Engine coolant temperature sensor) and 44 (Sensor ground).

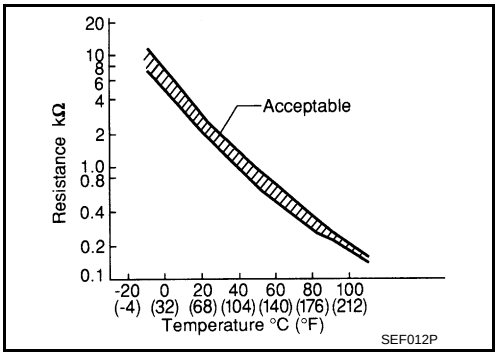

Fuel Injector

INFOID:0000000005991049

The fuel injector is a small, precise solenoid valve. When the ECM supplies a ground to the fuel injector circuit, the coil in the fuel injector is energized. The energized coil pulls the ball valve back and allows fuel to flow through the fuel injector into the intake manifold. The amount of fuel injected depends upon the injection pulse duration. Pulse duration is the length of time the fuel injector remains open. The ECM controls the injection pulse duration based on engine fuel needs.

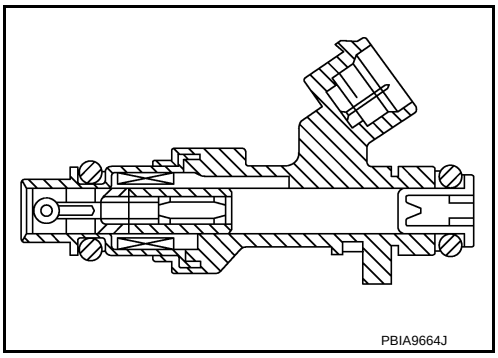

Fuel Pump

INFOID:0000000005991050

The ECM activates the fuel pump for 1 second after the ignition switch is turned ON to improve engine startability. If the ECM receives a engine speed signal from the camshaft position sensor (PHASE), it knows that the engine is rotating, and causes the pump to operate. If the engine speed signal is not received when the ignition switch is ON, the engine stalls. The ECM stops pump operation and prevents battery discharging, thereby improving safety. The ECM does not directly drive the fuel pump. It sends the control signal to the fuel pump control module, which in turn controls the fuel pump.

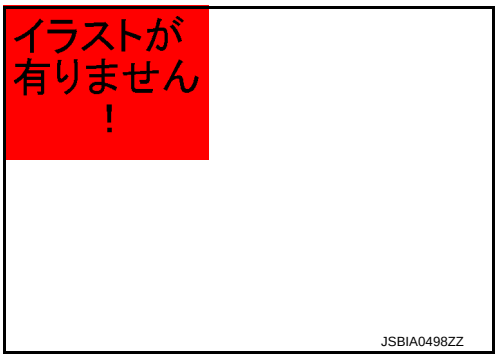

Condition	Fuel pump operation
Ignition switch is turned to ON.	Operates for 1 second.
Engine running and cranking	Operates.
When engine is stopped	Stops in 1.5 seconds.
Except as shown above	Stops.

Fuel Pump Control Module (FPCM)

INFOID:0000000005991051

When driving conditions demand a decrease in fuel supply, the fuel pump control module (FPCM) reduces the supply voltage to the fuel pump. When driving conditions demand an increase in fuel supply (during engine start, low engine coolant temperature or high load), the supply voltage to the fuel pump is increased.

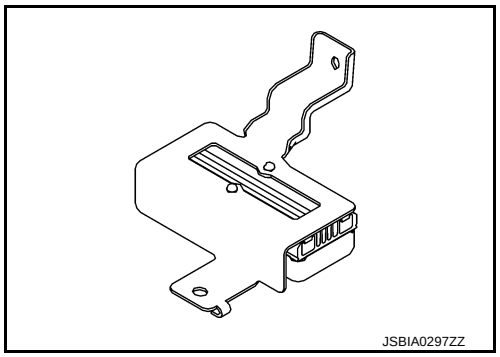

Air Fuel Ratio (A/F) Sensor 1

INFOID:0000000005991052

DESCRIPTION

The air fuel ratio (A/F) sensor 1 is a planar one-cell limit current sensor. The sensor element of the A/F sensor 1 is composed an electrode layer, which transports ions. It has a heater in the element.

The sensor is capable of precise measurement λ = 1, but also in the lean and rich range. Together with its control electronics, the sensor outputs a clear, continuous signal throughout a wide λ range.

The exhaust gas components diffuse through the diffusion layer at the sensor cell. An electrode layer is applied voltage, and this current relative oxygen density in lean. Also this current relative hydrocarbon density in rich.

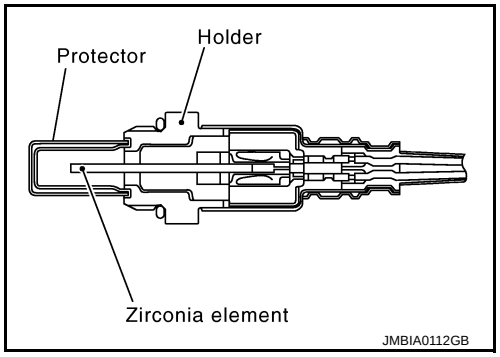

Therefore, the A/F sensor 1 is able to indicate air fuel ratio by this electrode layer of current. In addition, a heater is integrated in the sensor to ensure the required operating temperature of approximately 800°C (1,472°F).

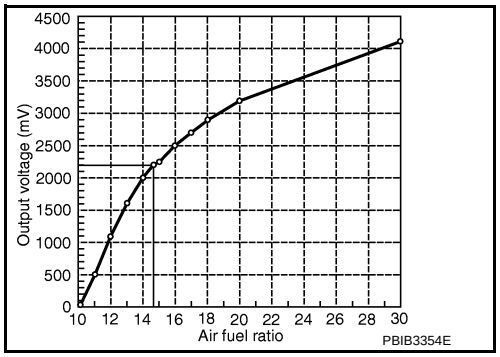

A/F SENSOR 1 HEATER

A/F sensor 1 heater is integrated in the sensor.

The ECM performs ON/OFF duty control of the A/F sensor 1 heater corresponding to the engine operating condition to keep the temperature of A/F sensor 1 element within the specified range.

Heated Oxygen Sensor 2

INFOID:0000000005991053

DESCRIPTION

The heated oxygen sensor 2, after three way catalyst (manifold), monitors the oxygen level in the exhaust gas on each bank.
Even if switching characteristics of the air fuel ratio (A/F) sensor 1 are shifted, the air fuel ratio is controlled to stoichiometric, by the signal from the heated oxygen sensor 2.
This sensor is made of ceramic zirconia. The zirconia generates voltage from approximately 1 V in richer conditions to 0 V in leaner conditions.
Under normal conditions the heated oxygen sensor 2 is not used for engine control operation.

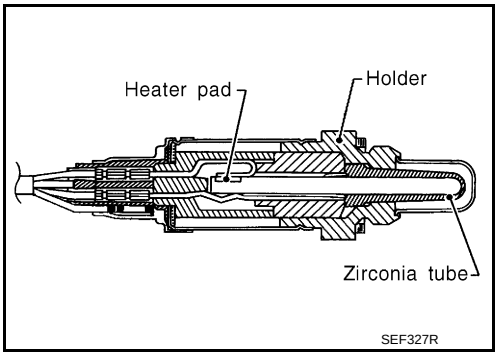

HEATED OXYGEN SENSOR 2 HEATER

Heated oxygen sensor 2 heater is integrated in the sensor.
The ECM performs ON/OFF control of the heated oxygen sensor 2 heater corresponding to the engine speed, amount of intake air and engine coolant temperature.

Engine speed	Heated oxygen sensor 2 heater
Above 3,600 rpm	OFF
Below 3,600 rpm after the following conditions are met. • Engine: After warming up • Keeping the engine speed between 3,500 and 4,000 rpm for 1 minute and at idle for 1 minute under no load	ON

EGR Volume Control Valve

INFOID:0000000005991054

The EGR volume control valve uses a step motor to control the flow rate of EGR from exhaust manifold. This motor has four winding phases. It operates according to the output pulse signal of the ECM. Two windings are turned ON and OFF in sequence. Each time an ON pulse is issued, the valve opens or closes, changing the flow rate. When no change in the flow rate is needed, the ECM does not issue the pulse signal. A certain voltage signal is issued so that the valve remains at that particular opening.

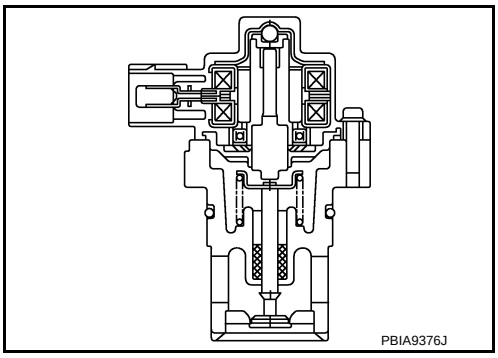

EGR Temperature Sensor

INFOID:0000000005991055

The EGR temperature sensor detects temperature changes in the EGR passageway. When the EGR volume control valve opens, hot exhaust gases flow, and the temperature in the passageway changes. The EGR temperature sensor is a thermistor that modifies a voltage signal sent from the ECM. This modified signal then returns to the ECM as an input signal. As the temperature increases, EGR temperature sensor resistance decreases.
This sensor is not directly used to control the engine system. It is used only for the on board diagnosis.

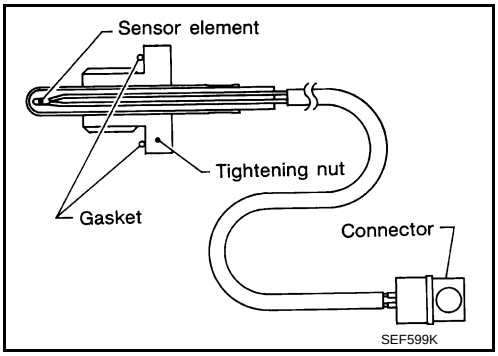

<Reference data>

EGR temperature [°C (°F)]	Voltage* (V)	Resistance (MΩ)
0 (32)	4.59	0.66 - 1.00
50 (122)	2.32	0.068 - 0.089
100 (212)	0.62	0.012 - 0.014

*: This data is reference value and is measured between ECM terminal 42 (EGR temperature sensor) and 51 (Sensor ground).

CAUTION:

Never use ECM ground terminals when measuring input/output voltage. Doing so may damage the ECM's transistor. Use a ground other than ECM terminals, such as the ground.

When EGR system is operating.

Voltage: 0 - 1.5 V

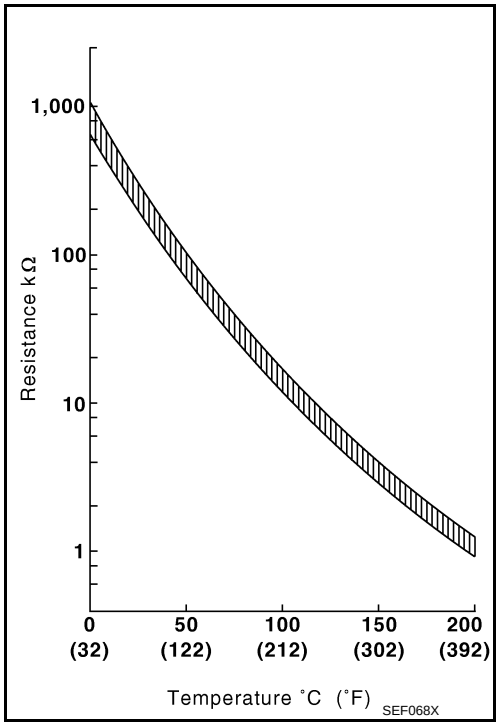

Knock Sensor

INFOID:0000000005991056

The knock sensor is attached to the cylinder block. It senses engine knocking using a piezoelectric element. A knocking vibration from the cylinder block is sensed as vibrational pressure. This pressure is converted into a voltage signal and sent to the ECM.

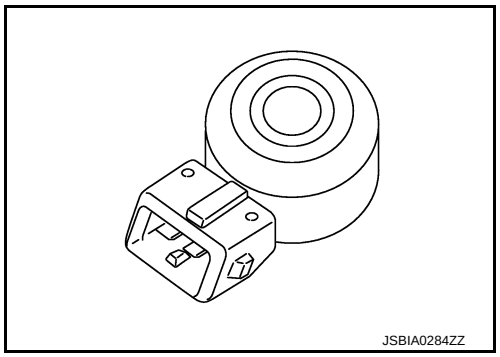

Cooling Fan

INFOID:0000000005991058

COOLING FAN CONTROL MODULE

Cooling fan control module receives ON/OFF pulse duty signal from IPDM E/R. Corresponding to this ON/OFF pulse duty signal, cooling fan control module sends cooling fan motor operating voltage to cooling fan motor. The revolution speed of cooling fan motor is controlled by duty cycle of the voltage.

COOLING FAN MOTOR

Cooling fan motor receives cooling fan motor operating voltage from cooling fan control module. The revolution speed of cooling fan motor is controlled by duty cycle of the voltage.

Intake Valve Timing Control Solenoid Valve

INFOID:0000000005991059

Intake valve timing control solenoid valve is activated by ON/OFF pulse duty (ratio) signals from the ECM.
The intake valve timing control solenoid valve changes the oil amount and direction of flow through intake valve timing control unit or stops oil flow.
The longer pulse width advances valve angle.
The shorter pulse width retards valve angle.
When ON and OFF pulse widths become equal, the solenoid valve stops oil pressure flow to fix the intake valve angle at the control position.

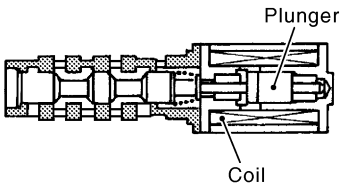

PBIB1842E

EVAP Canister Purge Volume Control Solenoid Valve

INFOID:0000000005991060

The EVAP canister purge volume control solenoid valve is used to control the flow rate of fuel vapor from the EVAP canister. The EVAP canister purge volume control solenoid valve is moved by ON/OFF pulses from the ECM. The longer the ON pulse, the greater the amount of fuel vapor that will flow through the valve.

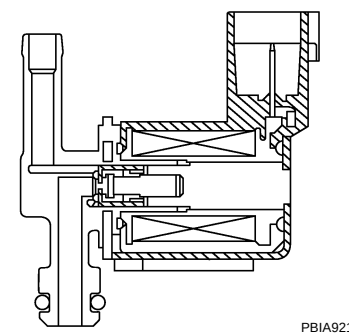
PBIA9215J

Battery Current Sensor (With Battery Temperature Sensor)

INFOID:0000000005991061

OUTLINE

The power generation voltage variable control enables fuel consumption to be decreased by reducing the engine load which is caused by the power generation of the generator.
Based on sensor signals, ECM judges whether or not the power generation voltage variable control is performed. When performing the power generation voltage variable control, ECM calculates the target power generation voltage based on the sensor signal. And ECM sends the calculated value as the power generation command value to IPDM E/R. For the details of the power generation voltage variable control, refer to XX-XX, "*****".

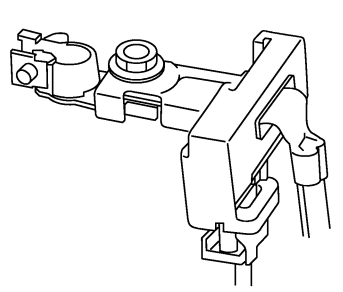
JPBIA3262ZZ

CAUTION:
Never connect the electrical component or the ground wire directly to the battery terminal. The connection causes the malfunction of the power generation voltage variable control, and then the battery discharge may occur.
NOTE:
Battery temperature sensor is not used for engine control system.

BATTERY CURRENT SENSOR

The battery current sensor is installed to the battery cable at the negative terminal. The sensor measures the charging/discharging current of the battery.

Refrigerant Pressure Sensor

INFOID:0000000005991062

The refrigerant pressure sensor is installed at the condenser of the air conditioner system. The sensor uses an electrostatic volume pressure transducer to convert refrigerant pressure to voltage. The voltage signal is sent to ECM, and ECM controls cooling fan system.

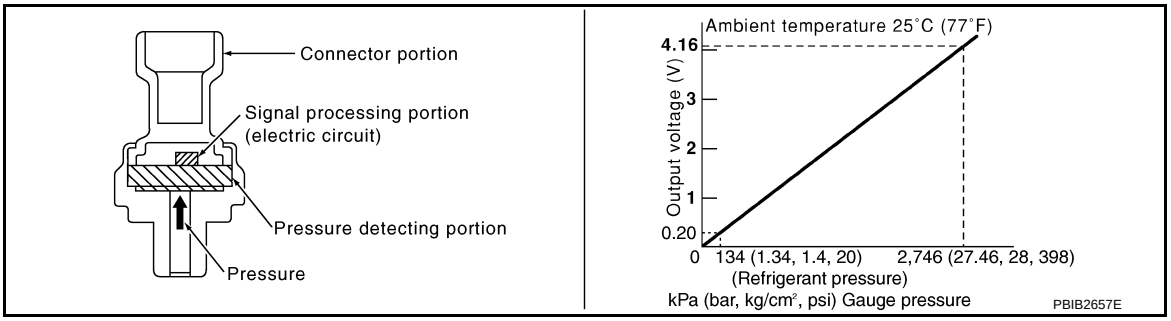

Stop Lamp Switch

INFOID:0000000005991063

Brake switch signal is applied to the ECM through the stop lamp switch when the brake pedal is depressed. This signal is used mainly to decrease the engine speed when the vehicle is being driven.

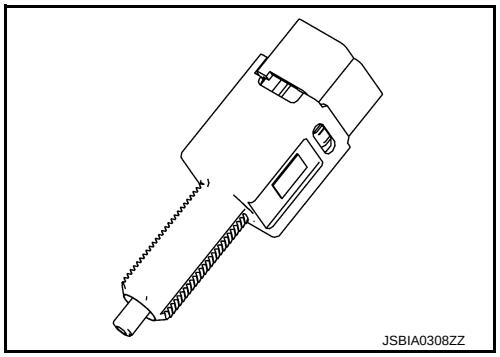

SYSTEM

ENGINE CONTROL SYSTEM

ENGINE CONTROL SYSTEM : System Diagram

INFOID:0000000005995397

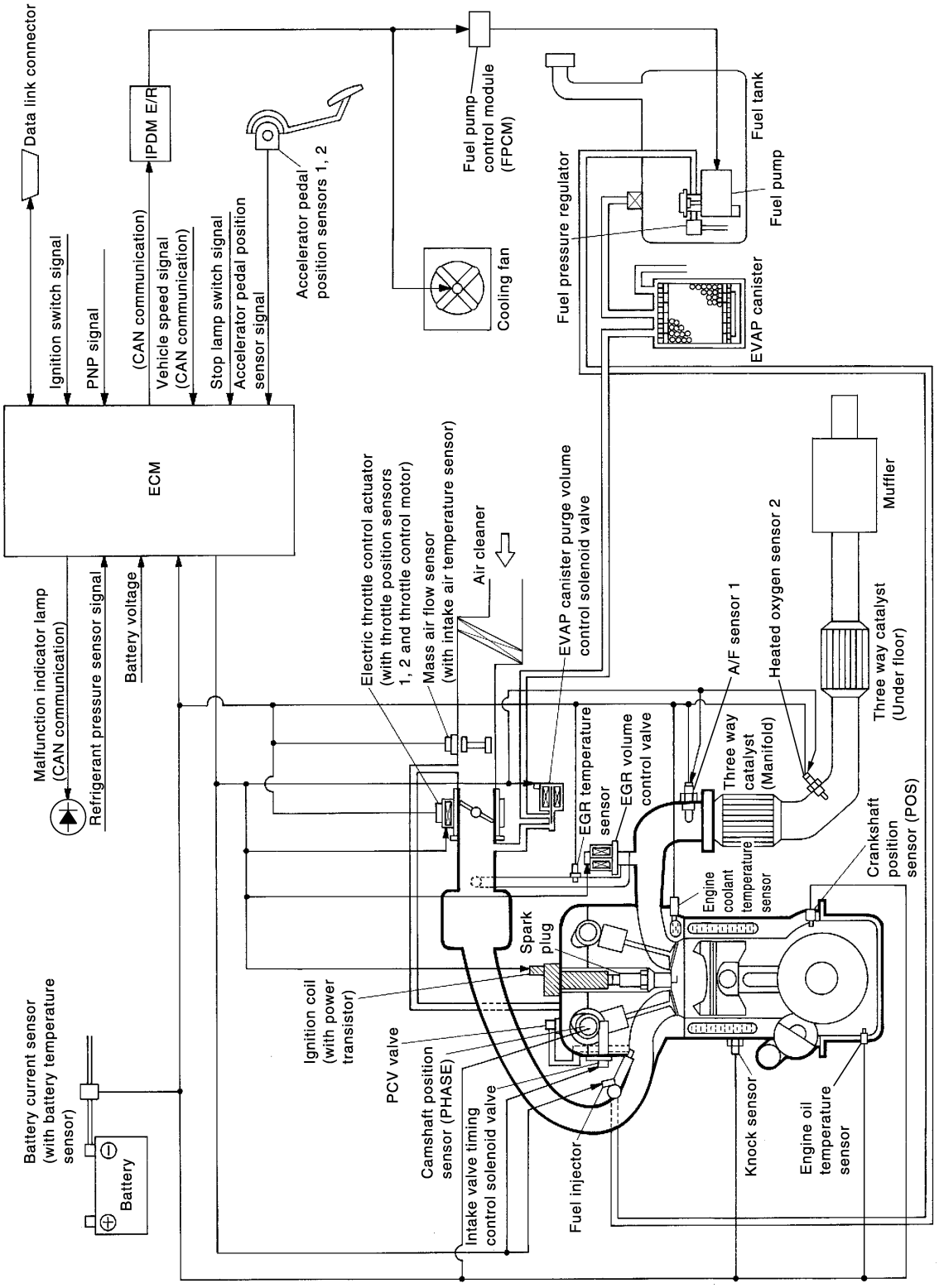

JPBIA3237GB

NOTE:

- Engine oil temperature sensor is not used for engine control system.
- Battery temperature sensor is not used for engine control system.

ENGINE CONTROL SYSTEM : System Description

INFOID:0000000005995398

ECM performs various controls such as fuel injection control and ignition timing control.

ENGINE CONTROL SYSTEM : Fail Safe

INFOID:0000000005995478

NON DTC RELATED ITEM

Detected items	Engine operating condition in fail-safe mode	Remarks	Reference page
Malfunction indicator lamp circuit	Engine speed will not rise more than 2,500 rpm due to the fuel cut	When there is an open circuit on MIL circuit, the ECM cannot warn the driver by lighting up MIL when there is malfunction on engine control system. Therefore, when electrical controlled throttle and part of ECM related diagnoses are continuously detected as NG for 5 trips, ECM warns the driver that engine control system malfunctions and MIL circuit is open by means of operating fail safe function. The fail safe function also operates when above diagnoses except MIL circuit are detected and demands the driver to repair the malfunction.	EC-296, "Component Function Check"

DTC RELATED ITEM

DTC No.	Detected items	Engine operating condition in fail safe mode	
P0011	Intake valve timing control	The signal is not energized to the intake valve timing control solenoid valve and the valve control does not function.	
P0102 P0103	Mass air flow sensor circuit	Engine speed will not rise more than 2,400 rpm due to the fuel cut.	
P0117 P0118	Engine coolant temperature sensor circuit	Engine coolant temperature will be determined by ECM based on the following conditions. CONSULT-III displays the engine coolant temperature decided by ECM.	
		Condition	Engine coolant temperature decided (CONSULT-III display)
		Just as ignition switch is turned ON or START	40°C (104°F)
		Approx. 4 minutes or more after engine starting	80°C (176°F)
		Except as shown above	40 - 80°C (104 - 176°F) (Depends on the time)
		When the fail safe system for engine coolant temperature sensor is activated, the cooling fan operates while engine is running.	
P0122 P0123 P0222 P0223 P2135	Throttle position sensor	The ECM controls the electric throttle control actuator in regulating the throttle opening in order for the idle position to be within +10 degrees. The ECM regulates the opening speed of the throttle valve to be slower than the normal condition. So, the acceleration will be poor.	
P0403	EGR volume control valve	Engine speed will not rise more than 2,400 rpm due to the fuel cut.	
P0605	ECM	(When ECM calculation function is malfunctioning:) ECM stops the electric throttle control actuator control, throttle valve is maintained at a fixed opening (approx. 5 degrees) by the return spring.	
P0643	Sensor power supply	ECM stops the electric throttle control actuator control, throttle valve is maintained at a fixed opening (approx. 5 degrees) by the return spring.	
P1805	Brake switch	ECM controls the electric throttle control actuator by regulating the throttle opening to a small range. Therefore, acceleration will be poor.	
		Vehicle condition	Driving condition
		When engine is idling	Normal
		When accelerating	Poor acceleration

DTC No.	Detected items	Engine operating condition in fail safe mode
P2100 P2103	Throttle control motor relay	ECM stops the electric throttle control actuator control, throttle valve is maintained at a fixed opening (approx. 5 degrees) by the return spring.
P2101	Electric throttle control function	ECM stops the electric throttle control actuator control, throttle valve is maintained at a fixed opening (approx. 5 degrees) by the return spring.
P2118	Throttle control motor	ECM stops the electric throttle control actuator control, throttle valve is maintained at a fixed opening (approx. 5 degrees) by the return spring.
P2119	Electric throttle control actuator	(When electric throttle control actuator does not function properly due to the return spring malfunction:) ECM controls the electric throttle actuator by regulating the throttle opening around the idle position. The engine speed will not rise more than 2,000 rpm.
		(When throttle valve opening angle in fail safe mode is not in specified range:) ECM controls the electric throttle control actuator by regulating the throttle opening to 20 degrees or less.
		(When ECM detects the throttle valve is stuck open:) While the vehicle is driving, it slows down gradually by fuel cut. After the vehicle stops, the engine stalls. The engine can restart in the Neutral position, and engine speed will not exceed 1,000 rpm or more.
P2122 P2123 P2127 P2128 P2138	Accelerator pedal position sensor	The ECM controls the electric throttle control actuator in regulating the throttle opening in order for the idle position to be within +10 degrees. The ECM regulates the opening speed of the throttle valve to be slower than the normal condition. So, the acceleration will be poor.

MULTIPORT FUEL INJECTION SYSTEM

MULTIPORT FUEL INJECTION SYSTEM : System Diagram

INFOID:0000000005995400

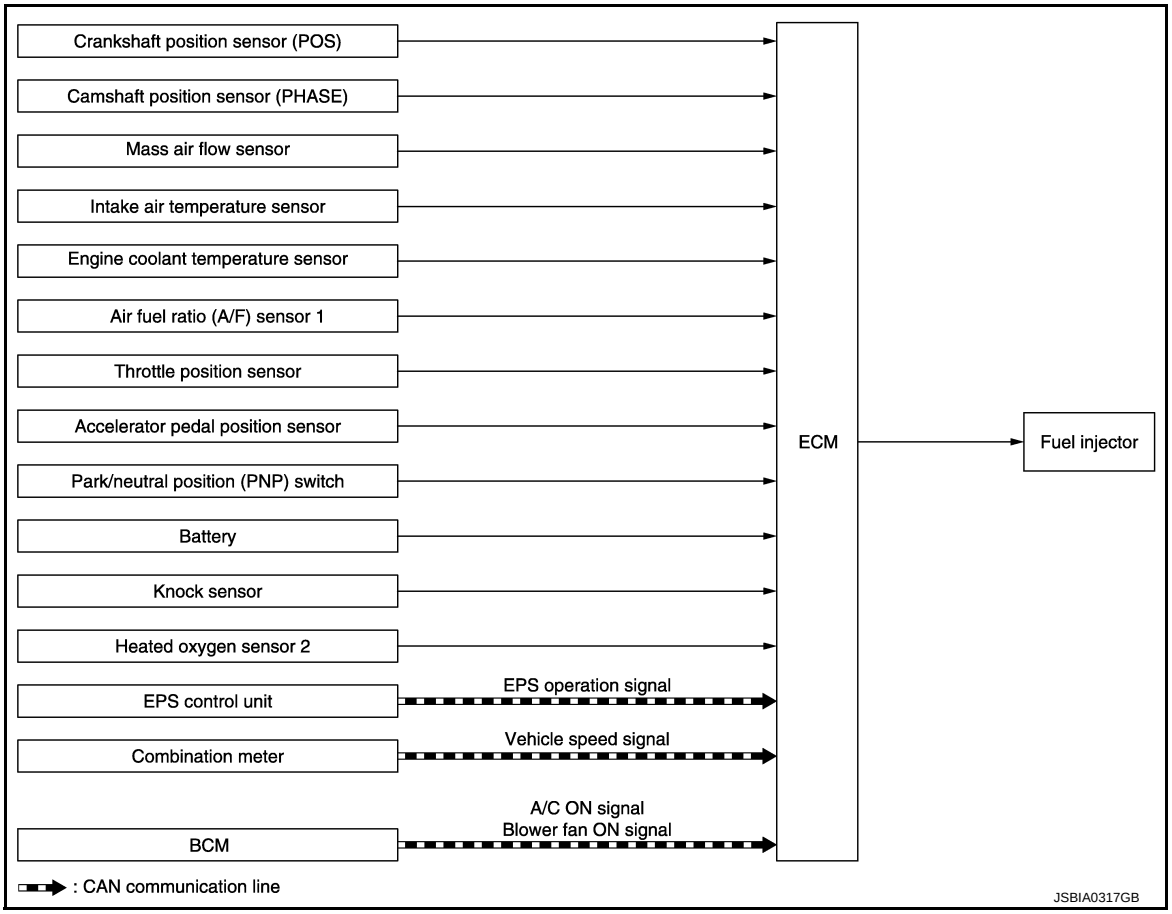

MULTIPORT FUEL INJECTION SYSTEM : System Description

INFOID:0000000005995401

INPUT/OUTPUT SIGNAL CHART

Sensor	Input signal to ECM	ECM function	Actuator
Crankshaft position sensor (POS)	Engine speed*2 Piston position	Fuel injection & mixture ratio control	Fuel injector
Camshaft position sensor (PHASE)			
Mass air flow sensor	Amount of intake air		
Intake air temperature sensor	Intake air temperature		
Engine coolant temperature sensor	Engine coolant temperature		
Air fuel ratio (A/F) sensor 1	Density of oxygen in exhaust gas		
Throttle position sensor	Throttle position		
Accelerator pedal position sensor	Accelerator pedal position		
Park/neutral position (PNP) switch	PNP signal		
Battery	Battery voltage*2		
Knock sensor	Engine knocking condition		
Heated oxygen sensor 2*1	Density of oxygen in exhaust gas		
EPS control unit	EPS operation signal*3		
Combination meter	Vehicle speed signal*3		
BCM	A/C ON signal*3 Blower fan ON signal*3		

*1: This sensor is not used to control the engine system under normal conditions.
*2: ECM determines the start signal status by the signals of engine speed and battery voltage.
*3: This signal is sent to the ECM through CAN communication line.

SYSTEM DESCRIPTION

The amount of fuel injected from the fuel injector is determined by the ECM. The ECM controls the length of time the valve remains open (injection pulse duration). The amount of fuel injected is a program value in the ECM memory. The program value is preset by engine operating conditions. These conditions are determined by input signals (for engine speed and intake air) from the crankshaft position sensor (POS), camshaft position sensor (PHASE) and the mass air flow sensor.

VARIOUS FUEL INJECTION INCREASE/DECREASE COMPENSATION

In addition, the amount of fuel injected is compensated to improve engine performance under various operating conditions as listed below.

<Fuel increase>
- During warm-up
- When starting the engine
- During acceleration
- Hot-engine operation
- High-load, high-speed operation

<Fuel decrease>
- During deceleration
- During high engine speed operation

MIXTURE RATIO FEEDBACK CONTROL (CLOSED LOOP CONTROL)

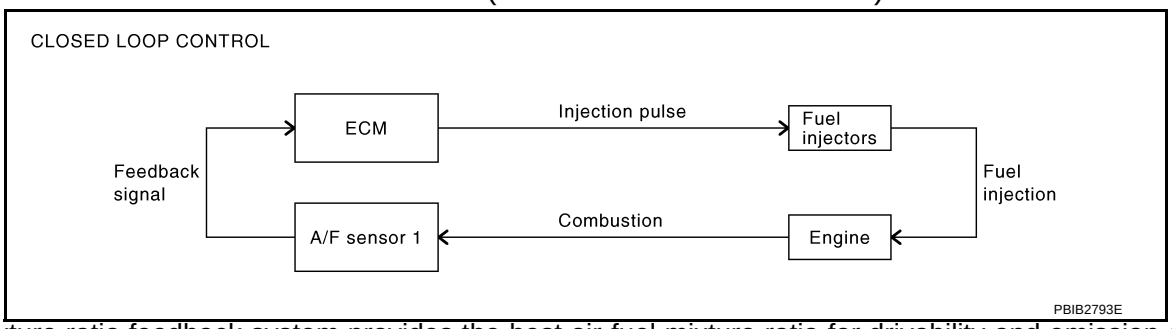

The mixture ratio feedback system provides the best air-fuel mixture ratio for drivability and emission control. The three way catalyst (manifold) can better reduce CO, HC and NOx emissions. This system uses Air fuel ratio (A/F) sensor 1 in the exhaust manifold to monitor whether the engine operation is rich or lean. The ECM adjusts the injection pulse width according to the sensor voltage signal. For more information about Air fuel ratio (A/F) sensor 1, refer to EC-25, "Air Fuel Ratio (A/F) Sensor 1". This maintains the mixture ratio within the range of stoichiometric (ideal air-fuel mixture).
This stage is referred to as the closed loop control condition.
Heated oxygen sensor 2 is located downstream of the three way catalyst (manifold). Even if the switching characteristics of Air fuel ratio (A/F) sensor 1 shift, the air-fuel ratio is controlled to stoichiometric by the signal from heated oxygen sensor 2.

- Open Loop Control
  The open loop system condition refers to when the ECM detects any of the following conditions. Feedback control stops in order to maintain stabilized fuel combustion.

- Deceleration and acceleration
- High-load, high-speed operation
- Malfunction of Air fuel ratio (A/F) sensor 1 or its circuit
- Insufficient activation of heated sensor 1 at low engine coolant temperature
- High engine coolant temperature
- During warm-up
- When starting the engine

MIXTURE RATIO SELF-LEARNING CONTROL

The mixture ratio feedback control system monitors the mixture ratio signal transmitted from Air fuel ratio (A/F) sensor 1. This feedback signal is then sent to the ECM. The ECM controls the basic mixture ratio as close to the theoretical mixture ratio as possible. However, the basic mixture ratio is not necessarily controlled as originally designed. Both manufacturing differences (i.e., mass air flow sensor hot wire) and characteristic changes during operation (i.e., fuel injector clogging) directly affect mixture ratio.
Accordingly, the difference between the basic and theoretical mixture ratios is monitored in this system. This is then computed in terms of “injection pulse duration” to automatically compensate for the difference between the two ratios.
“Fuel trim” refers to the feedback compensation value compared against the basic injection duration. Fuel trim includes “short-term fuel trim” and “long-term fuel trim”.
“Short-term fuel trim” is the short-term fuel compensation used to maintain the mixture ratio at its theoretical value. The signal from Air fuel ratio (A/F) sensor 1 indicates whether the mixture ratio is RICH or LEAN compared to the theoretical value. The signal then triggers a reduction in fuel volume if the mixture ratio is rich, and an increase in fuel volume if it is lean.
“Long-term fuel trim” is overall fuel compensation carried out long-term to compensate for continual deviation of the “short-term fuel trim” from the central value. Such deviation will occur due to individual engine differences, wear over time and changes in the usage environment.

FUEL INJECTION TIMING

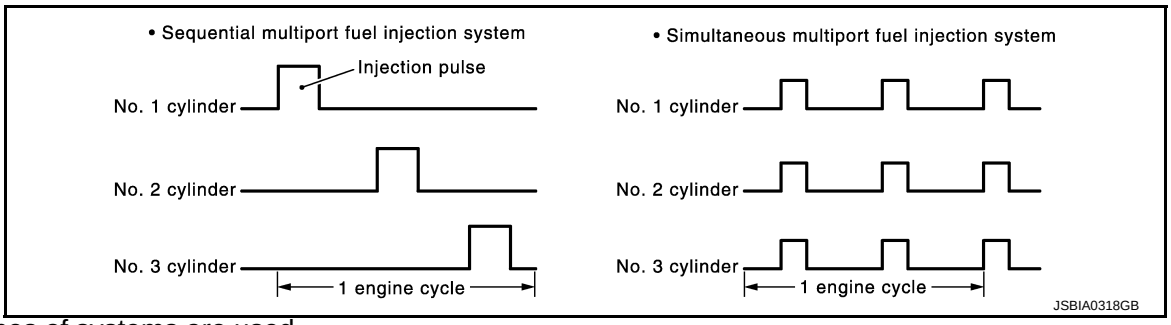

Two types of systems are used.

- Sequential Multiport Fuel Injection System
  Fuel is injected into each cylinder during each engine cycle according to the firing order. This system is used when the engine is running.
- Simultaneous Multiport Fuel Injection System
  Fuel is injected simultaneously into all three cylinders twice each engine cycle. In other words, pulse signals of the same width are simultaneously transmitted from the ECM.
  The three injectors will then receive the signals two times for each engine cycle.
  This system is used when the engine is being started and/or if the fail safe system (CPU) is operating.

FUEL SHUT-OFF

Fuel to each cylinder is cut off during deceleration, operation of the engine at excessively high speeds or operation of the vehicle at excessively high speeds.

ELECTRIC IGNITION SYSTEM

ELECTRIC IGNITION SYSTEM : System Diagram

INFOID:0000000005995402

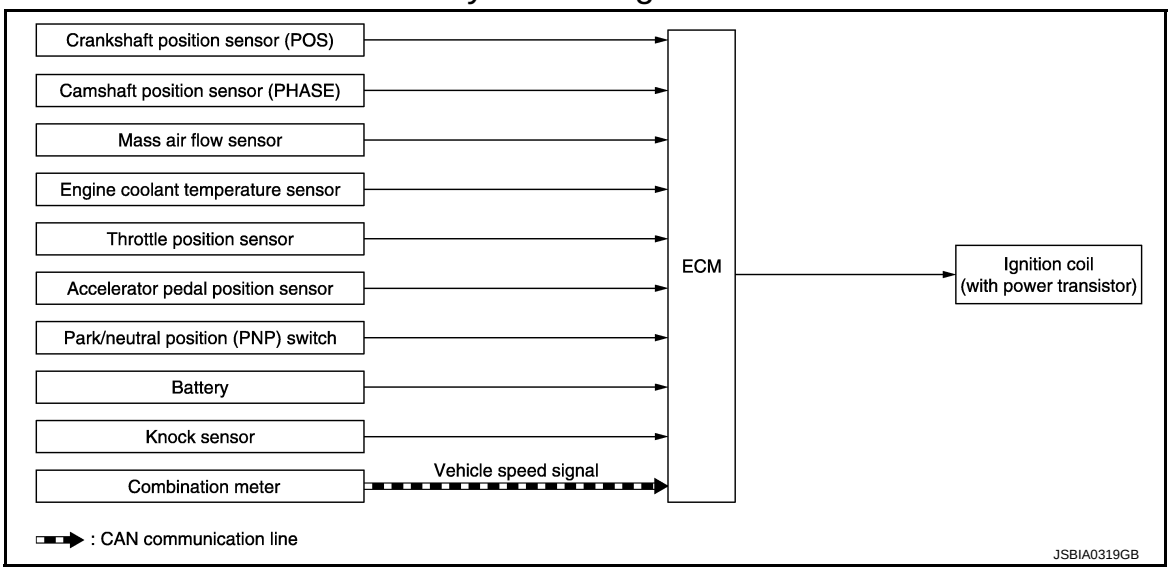

ELECTRIC IGNITION SYSTEM : System Description

INFOID:0000000005995403

INPUT/OUTPUT SIGNAL CHART

Sensor	Input signal to ECM	ECM function	Actuator
Crankshaft position sensor (POS)	Engine speed*1 Piston position	Ignition timing control	Ignition coil (with power transistor)
Camshaft position sensor (PHASE)			
Mass air flow sensor	Amount of intake air		
Engine coolant temperature sensor	Engine coolant temperature		
Throttle position sensor	Throttle position		
Accelerator pedal position sensor	Accelerator pedal position		
Park/neutral position (PNP) switch	PNP signal		
Battery	Battery voltage*1		
Knock sensor	Engine knocking		
Combination meter	Vehicle speed signal*2		

*1: ECM determines the start signal status by the signals of engine speed and battery voltage.
*2: This signal is sent to the ECM through CAN communication line.

SYSTEM DESCRIPTION

Firing order: 1 - 2 - 3

The ignition timing is controlled by the ECM to maintain the best air-fuel ratio for every running condition of the engine. The ignition timing data is stored in the ECM.

The ECM receives information such as the injection pulse width and camshaft position sensor (PHASE) signal. Computing this information, ignition signals are transmitted to the power transistor.

During the following conditions, the ignition timing is revised by the ECM according to the other data stored in the ECM.

- At starting
- During warm-up
- At idle
- At low battery voltage
- During acceleration

The knock sensor retard system is designed only for emergencies. The basic ignition timing is programmed within the anti-knocking zone, if recommended fuel is used under dry conditions. The retard system does not operate under normal driving conditions. If engine knocking occurs, the knock sensor monitors the condition. The signal is transmitted to the ECM. The ECM retards the ignition timing to eliminate the knocking condition.

AIR CONDITIONING CUT CONTROL

AIR CONDITIONING CUT CONTROL : System Diagram

INFOID:0000000005995404

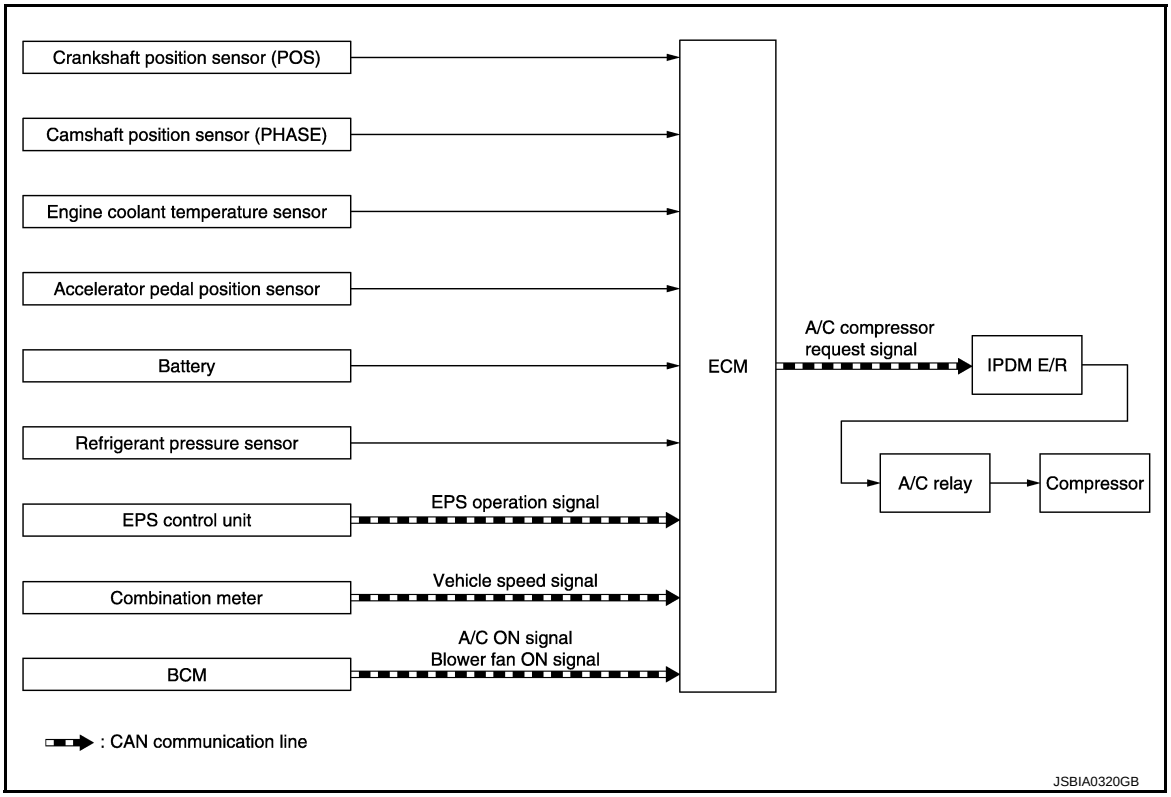

AIR CONDITIONING CUT CONTROL : System Description

INFOID:0000000005995405

INPUT/OUTPUT SIGNAL CHART

Sensor	Input signal to ECM	ECM function	Actuator
Crankshaft position sensor (POS) Camshaft position sensor (PHASE)	Engine speed*1	A/C compressor repuest signal	IPDM E/R ↓ Air conditioner relay ↓ Compressor
Engine coolant temperature sensor	Engine coolant temperature		
Accelerator pedal position sensor	Accelerator pedal position		
Battery	Battery voltage*1		
Refrigerant pressure sensor	Refrigerant pressure		
EPS control unit	EPS operation signal*2		
Combination meter	Vehicle speed signal*2		
BCM	A/C ON signal*2 Blower fan ON signal		

*1: ECM determines the start signal status by the signals of engine speed and battery voltage.
*2: This signal is sent to the ECM through CAN communication line.

SYSTEM DESCRIPTION

This system improves engine operation when the air conditioner is used.
Under the following conditions, the air conditioner is turned off.

- When the accelerator pedal is fully depressed.
- When cranking the engine.
- At high engine speeds.
- When the engine coolant temperature becomes excessively high.
- When operating power steering during low engine speed or low vehicle speed.
- When engine speed is excessively low.
- When refrigerant pressure is excessively low or high.

CAN COMMUNICATION

CAN COMMUNICATION : System Description

INFOID:0000000005995406

CAN (Controller Area Network) is a serial communication line for real time application. It is an on-vehicle multiplex communication line with high data communication speed and excellent error detection ability. Many electronic control units are equipped onto a vehicle, and each control unit shares information and links with other control units during operation (not independent). In CAN communication, control units are connected with 2 communication lines (CAN H line, CAN L line) allowing a high rate of information transmission with less wiring. Each control unit transmits/receives data but selectively reads required data only.
Refer to LAN-23, "CAN COMMUNICATION SYSTEM : CAN Communication Signal Chart", about CAN communication for detail.

COOLING FAN CONTROL

COOLING FAN CONTROL : System Diagram

INFOID:0000000005995407

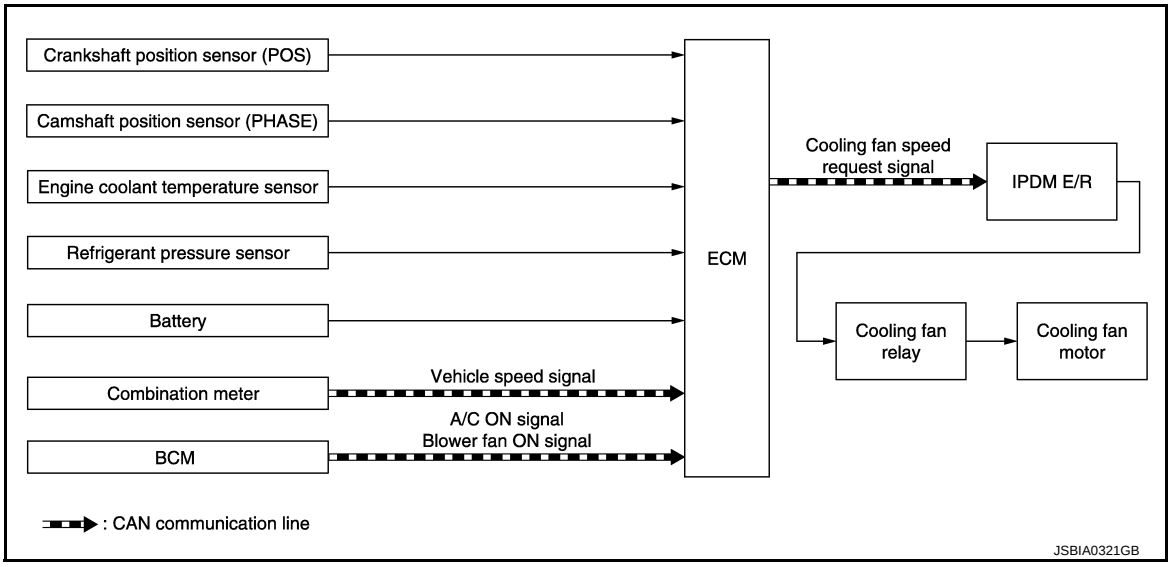

COOLING FAN CONTROL : System Description

INFOID:0000000005995408

INPUT/OUTPUT SIGNAL CHART

Sensor	Input signal to ECM	ECM function	Actuator
Crankshaft position sensor (POS) Camshaft position sensor (PHASE)	Engine speed*1	Cooling fan speed request signal	IPDM E/R ↓ Cooling fan relay ↓ Cooling fan motor
Engine coolant temperature sensor	Engine coolant temperature		
Refrigerant pressure sensor	Refrigerant pressure		
Battery	Battery voltage*1		
Combination meter	Vehicle speed signal*2		
BCM	A/C ON signal*2 Blower fan ON signal		

*1: ECM determines the start signal status by the signals of engine speed and battery voltage.
*2: This signal is sent to ECM through CAN communication line.

SYSTEM DESCRIPTION

ECM controls cooling fan speed corresponding to vehicle speed, engine coolant temperature, refrigerant pressure, air conditioner ON signal. Then control system has 2-step control [HIGH/OFF].

Cooling Fan Operation

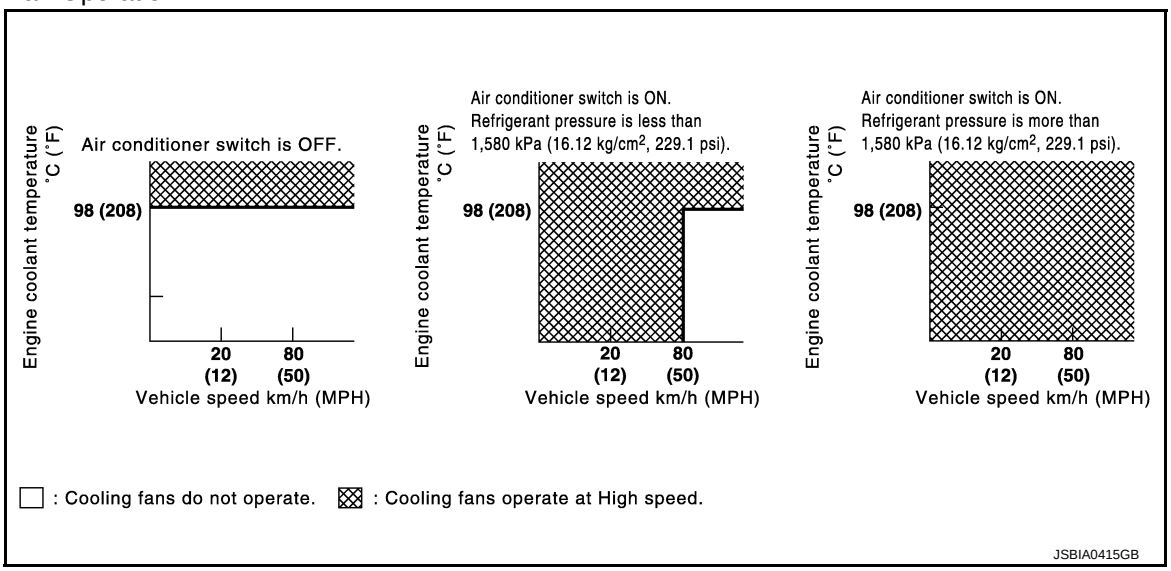

Cooling Fan Relay Operation

The ECM controls cooling fan relays through CAN communication line.

Cooling fan speed	Cooling fan relay
Stop (OFF)	OFF
High (HI)	ON

EGR SYSTEM

EGR SYSTEM : System Diagram

INFOID:0000000005995409

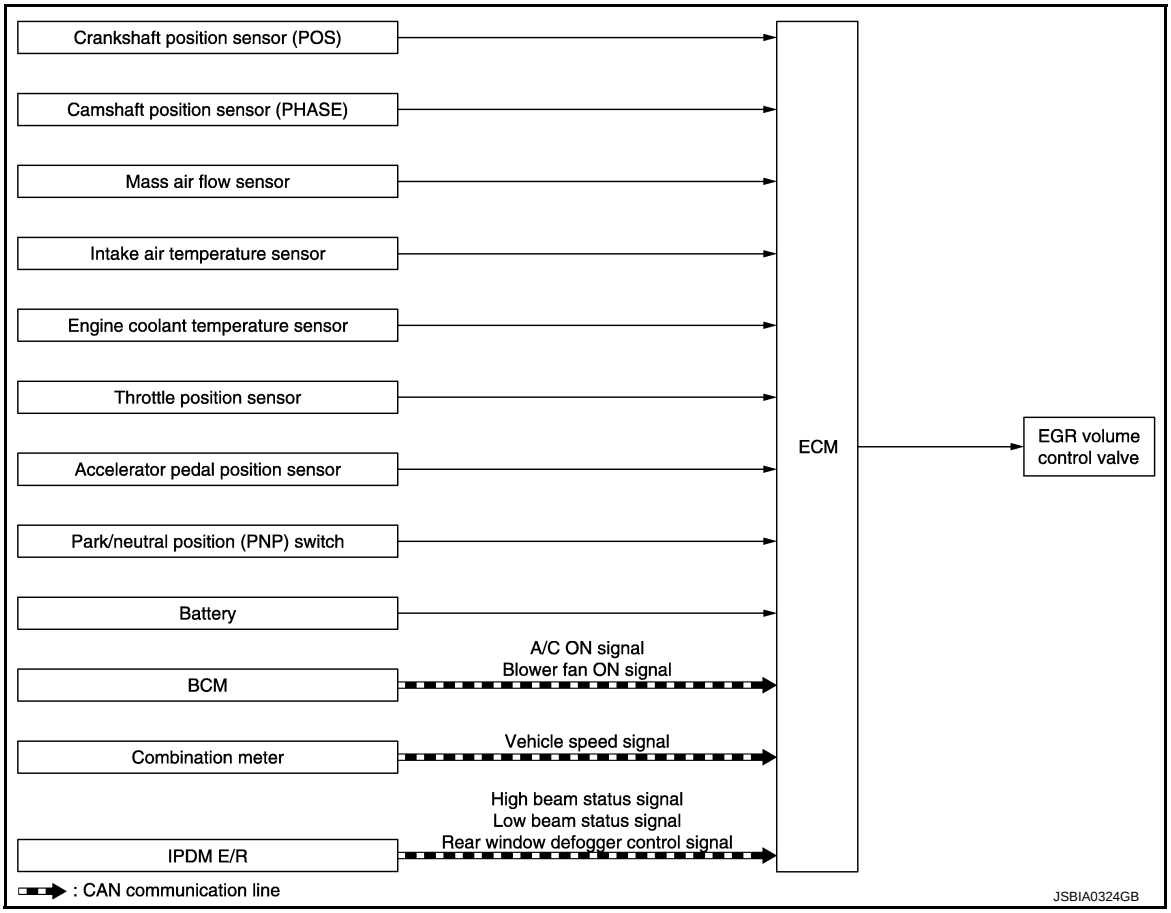

EGR SYSTEM : System Description

INFOID:0000000005995410

INPUT/OUTPUT SIGNAL CHART

Sensor	Input signal to ECM	ECM function	Actuator
Crankshaft position sensor (POS)	Engine speed*1 Piston position	EGR volume control	EGR volume control valve
Camshaft position sensor (PHASE)			
Mass air flow sensor	Amount of intake air		
Intake air temperature sensor	Intake air temperature		
Engine coolant temperature sensor	Engine coolant temperature		
Throttle position sensor	Throttle position		
Accelerator pedal position sensor	Accelerator pedal position		
Park/neutral position (PNP) switch	PNP signal		
Battery	Battery voltage*1		
BCM	A/C ON signal*2 Blower fan ON signal*2		
Combination meter	Vehicle speed signal*2		
IPDM E/R	High beam status signal*2 Low beam status signal*2 Rear window deffoger cotrol signal*2		

*1: ECM determines the start signal status by the signals of engine speed and battery voltage.
*2: This signal is sent to the ECM through CAN communication line.

SYSTEM DESCRIPTION

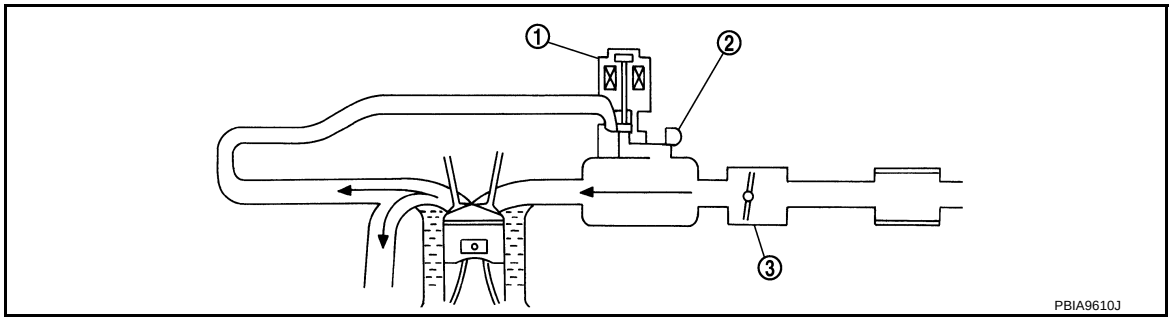

1. EGR volume control valve
2. EGR temperature sensor
3. Electric throttle control actuator

This system controls the volume of EGR flowing from the exhaust manifold to the intake manifold. The EGR volume control valve adjusts EGR volume by opening and closing the EGR passage. The step motor built in the EGR volume control valve activates the valve, according to a signal transmitted from ECM. ECM determines a valve angle, according to driving conditions, such as an engine speed, load, combustion state and precisely controls EGR volume. EGR is deactivated under the following conditions to enhance drivability:

- Engine starting
- Engine at idle
- Low engine coolant temperature
- high engine coolant temperature
- High engine speed
- Low intake air temperature
- Low battery voltage

EVAPORATIVE EMISSION SYSTEM

EVAPORATIVE EMISSION SYSTEM : System Diagram

INFOID:0000000005995411

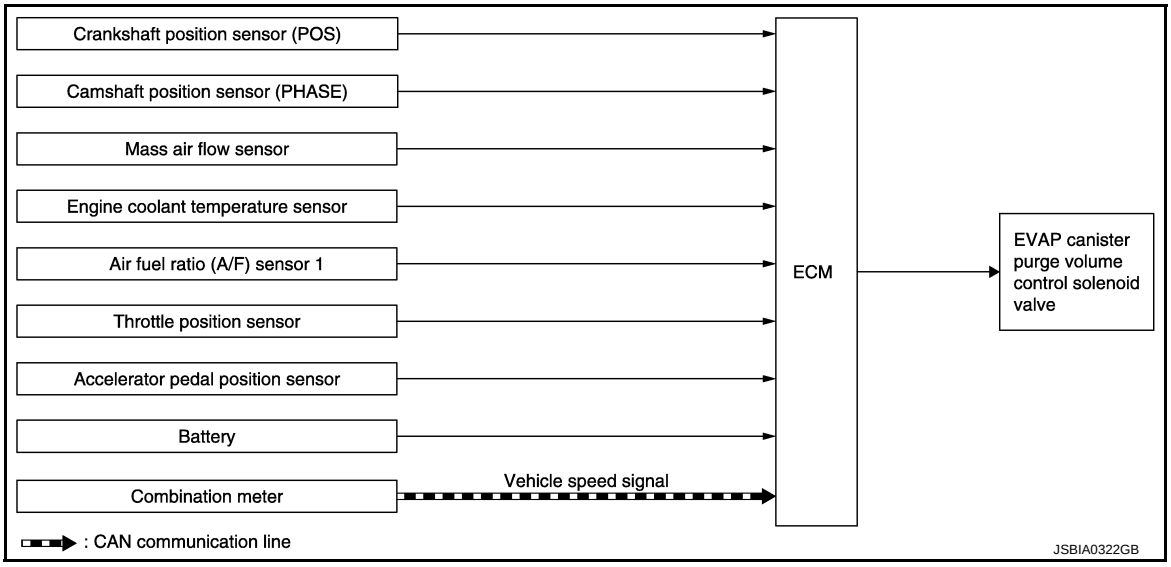

EVAPORATIVE EMISSION SYSTEM : System Description

INFOID:0000000005995412

INPUT/OUTPUT SIGNAL CHART

Sensor	Input signal to ECM	ECM function	Actuator
Crankshaft position sensor (POS) Camshaft position sensor (PHASE)	Engine speed*1	EVAP canister purge flow control	EVAP canister purge volume control solenoid valve
Mass air flow sensor	Amount of intake air		
Engine coolant temperature sensor	Engine coolant temperature		
Air fuel ratio (A/F) sensor 1	Density of oxygen in exhaust gas (Mixture ratio feedback signal)		
Throttle position sensor	Throttle position		
Accelerator pedal position sensor	Accelerator pedal position		
Battery	Battery voltage*1		
Combination meter	Vehicle speed signal*2		

*1: ECM determines the start signal status by the signals of engine speed and battery voltage.
*2: This signal is sent to the ECM through CAN communication line.

SYSTEM DESCRIPTION

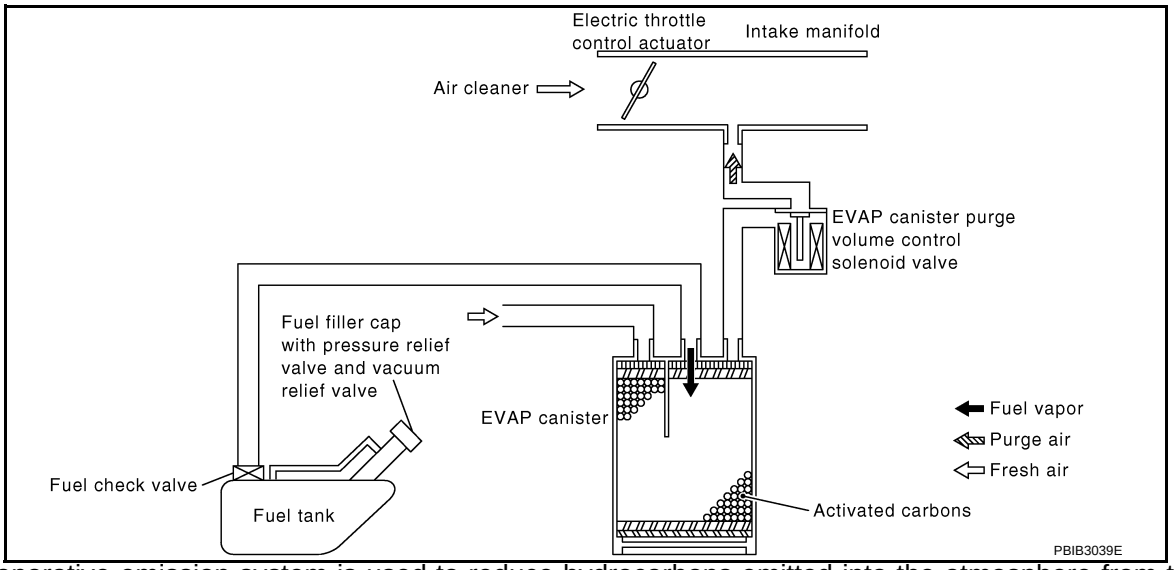

The evaporative emission system is used to reduce hydrocarbons emitted into the atmosphere from the fuel system. This reduction of hydrocarbons is accomplished by activated charcoals in the EVAP canister.
The fuel vapor in the sealed fuel tank is led into the EVAP canister which contains activated carbon and the vapor is stored there when the engine is not operating or when refueling to the fuel tank.
The vapor in the EVAP canister is purged by the air through the purge line to the intake manifold when the engine is operating. EVAP canister purge volume control solenoid valve is controlled by ECM. When the engine operates, the flow rate of vapor controlled by EVAP canister purge volume control solenoid valve is proportionally regulated as the air flow increases.
EVAP canister purge volume control solenoid valve also shuts off the vapor purge line during decelerating.

FUEL PUMP CONTROL MODULE (FPCM)

FUEL PUMP CONTROL MODULE (FPCM) : System Diagram

INFOID:0000000005995413

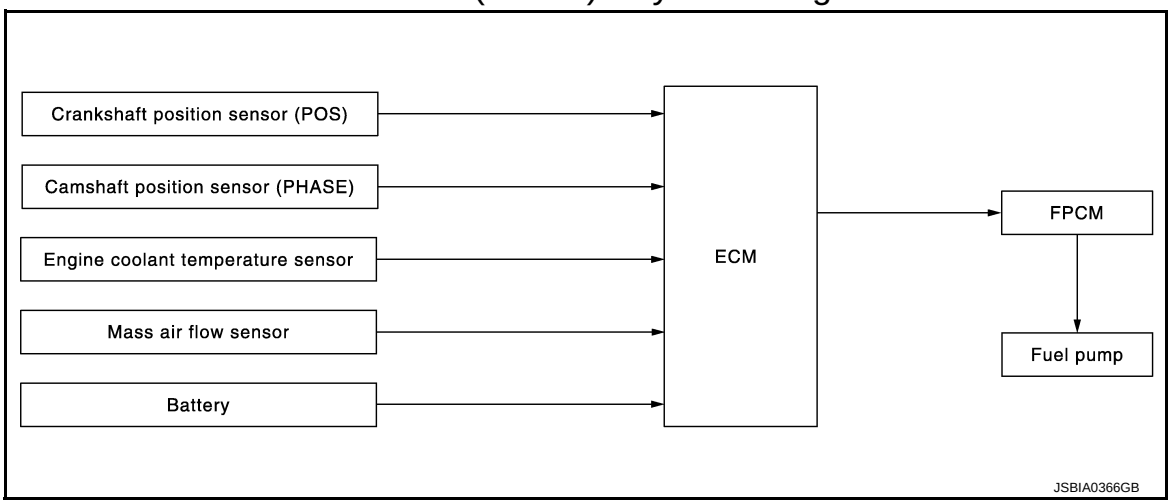

FUEL PUMP CONTROL MODULE (FPCM) : System Description

INFOID:0000000005995414

INPUT/OUTPUT SIGNAL CHART

Sensor	Input signal to ECM	ECM function	Actuator
Crankshaft position sensor (POS)	Engine speed*	Fuel pump control	FPCM ↓ Fuel pump
Camshaft position sensor (PHASE)			
Engine coolant temperature sensor	Engine coolant temperature		
Mass air flow sensor	Amount of intake air		
Battery	Battery voltage*		

*: ECM determines the start signal status by the signals of engine speed and battery voltage.

SYSTEM DESCRIPTION

The fuel pump control module (FPCM) controls the discharging volume of the fuel pump by the FPCM control signals (Low/Mid/High) depending on driving conditions.

Conditions	Amount of fuel flow	Supplied voltage
For 1 second after turning ignition switch ON	Low	Approximately 8.5 V
• Engine cranking • Engine coolant temperature is below 10°C (50°F) • Engine is running under high load and high speed conditions	High	Battery voltage (11 - 14 V)
Except the above	Mid	Approximately 10 V

INTAKE VALVE TIMING CONTROL

INTAKE VALVE TIMING CONTROL : System Diagram

INFOID:0000000005995415

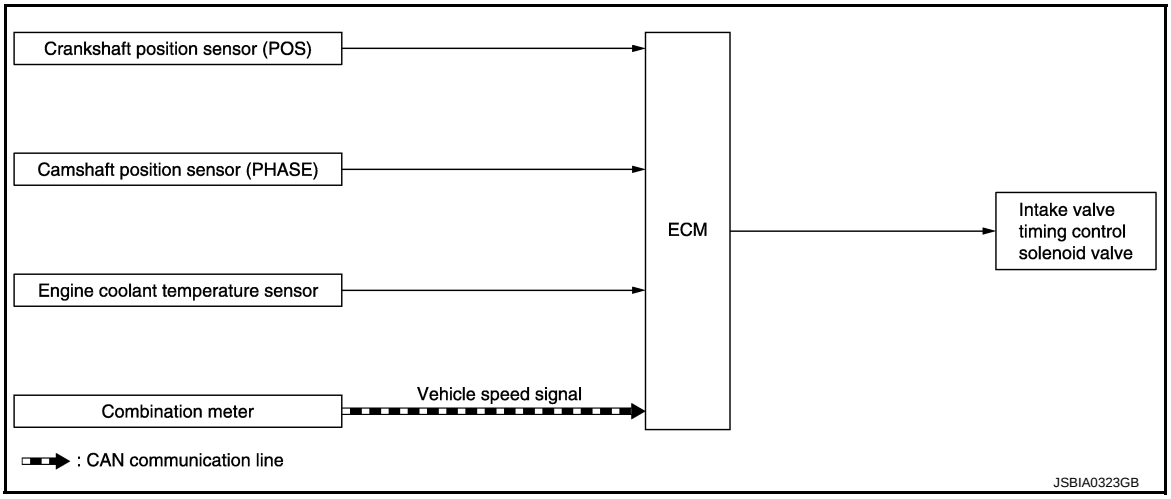

INTAKE VALVE TIMING CONTROL : System Description

INFOID:0000000005995416

INPUT/OUTPUT SIGNAL CHART

Sensor	Input signal to ECM	ECM function	Actuator
Crankshaft position sensor (POS)	Engine speed and piston position	Intake valve timing control	Intake valve timing control solenoid valve
Camshaft position sensor (PHASE)			
Engine coolant temperature sensor	Engine coolant temperature		
Combination meter	Vehicle speed signal*		

*: This signal is sent to the ECM through CAN communication line.

SYSTEM DESCRIPTION

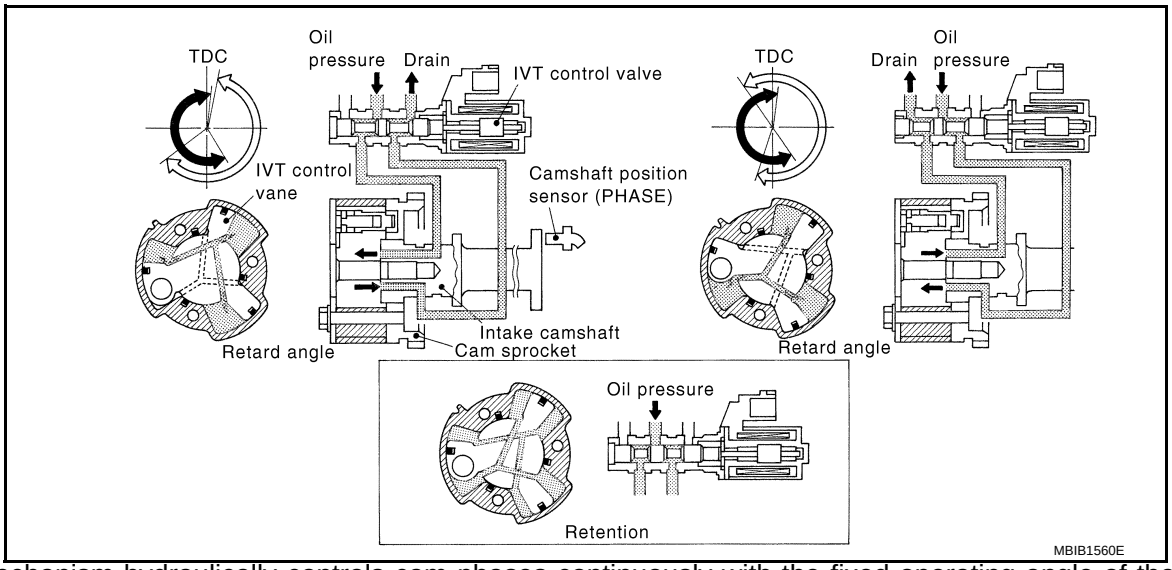

This mechanism hydraulically controls cam phases continuously with the fixed operating angle of the intake valve.

The ECM receives signals such as crankshaft position, camshaft position, engine speed, and engine coolant temperature. Then, the ECM sends ON/OFF pulse duty signals to the intake valve timing (IVT) control solenoid valve depending on driving status. This makes it possible to control the shut/open timing of the intake valve to increase engine torque in low/mid speed range and output in high-speed range.

ON BOARD DIAGNOSTIC (OBD) SYSTEM

Diagnosis Description

INFOID:0000000005989197

INTRODUCTION

The ECM has an on board diagnostic system, which detects malfunctions related to engine sensors or actuators. The ECM also records various emission-related diagnostic information including:

Emission-related diagnostic information	Diagnostic service
Diagnostic Trouble Code (DTC)	Service $03 of SAE J1979/ISO 15031-5
Freeze Frame data	Service $02 of SAE J1979/IISO 15031-5
System Readiness Test (SRT) code	Service $01 of SAE J1979/IISO 15031-5
1st Trip Diagnostic Trouble Code (1st Trip DTC)	Service $07 of SAE J1979/IISO 15031-5
1st Trip Freeze Frame data	—
Test values and Test limits	Service $06 of SAE J1979/IISO 15031-5
Calibration ID	Service $06 of SAE J1979/IISO 15031-5

The above information can be checked using procedures listed in the table below.

×: Applicable —: Not applicable

	DTC	1st trip DTC	Freeze Frame data	1st trip Freeze Frame data	SRT code	Test value
CONSULT-III	×	×	×	×	×	—
GST	×	×	×	—	×	×
ECM	×	×*	—	—	—	—

*: When DTC and 1st trip DTC simultaneously appear on the display, they cannot be clearly distinguished from each other.

The malfunction indicator lamp (MIL) on the instrument panel lights up when the same malfunction is detected in two consecutive trips (Two trip detection logic), or when the ECM enters fail safe mode. (Refer to EC-75, "Fail Safe".)

TWO TRIP DETECTION LOGIC

When a malfunction is detected for the first time, 1st trip DTC and 1st trip Freeze Frame data are stored in the ECM memory. The MIL will not light up at this stage. <1st trip>

If the same malfunction is detected again during the next drive, the DTC and Freeze Frame data are stored in the ECM memory, and the MIL lights up. The MIL lights up at the same time when the DTC is stored. <2nd trip> The “trip” in the “Two Trip Detection Logic” means a driving mode in which self-diagnosis is performed during vehicle operation. Specific on board diagnostic items will cause the ECM to light up or blink the MIL, and store DTC and Freeze Frame data, even in the 1st trip, as shown below.

×: Applicable —: Not applicable

Items	MIL				DTC		1st trip DTC	
	1st trip		2nd trip		1st trip displaying	2nd trip displaying	1st trip displaying	2nd trip displaying
	Blinking	Lighting up	Blinking	Lighting up				
Misfire (Possible three way catalyst damage) — DTC: P0300 - P0303 is being detected.	×	—	—	—	—	—	×	—
Misfire (Possible three way catalyst damage) — DTC: P0300 - P0303 is being detected.	—	—	×	—	—	×	—	—
One trip detection diagnoses (Refer to EC-78, "DTC Index".)	—	×	—	—	×	—	—	—
Except above	—	—	—	×	—	×	×	—

DTC AND FREEZE FRAME DATA

DTC and 1st Trip DTC

The 1st trip DTC (whose number is the same as the DTC number) is displayed for the latest self-diagnostic result obtained. If the ECM memory was cleared previously, and the 1st trip DTC did not recur, the 1st trip DTC will not be displayed.
If a malfunction is detected during the 1st trip, the 1st trip DTC is stored in the ECM memory. The MIL will not light up (two trip detection logic). If the same malfunction is not detected in the 2nd trip (meeting the required driving pattern), the 1st trip DTC is cleared from the ECM memory. If the same malfunction is detected in the 2nd trip, both the 1st trip DTC and DTC are stored in the ECM memory and the MIL lights up. In other words, the DTC is stored in the ECM memory and the MIL lights up when the same malfunction occurs in two consecutive trips. If a 1st trip DTC is stored and a non-diagnostic operation is performed between the 1st and 2nd trips, only the 1st trip DTC will continue to be stored. For malfunctions that blink or light up the MIL during the 1st trip, the DTC and 1st trip DTC are stored in the ECM memory.
Procedures for clearing the DTC and the 1st trip DTC from the ECM memory are described in “How to Erase DTC and 1st Trip DTC” below.
For malfunctions in which 1st trip DTCs are displayed, refer to EC-78, "DTC Index". These items are required by legal regulations to continuously monitor the system/component. In addition, the items monitored non-continuously are also displayed on CONSULT-III.
1st trip DTC is specified in Service $07 of SAE J1979/ISO 15031-5. 1st trip DTC detection occurs without lighting up the MIL and therefore does not warn the driver of a malfunction. However, 1st trip DTC detection will not prevent the vehicle from being tested, for example during Inspection/Maintenance (I/M) tests.
When a 1st trip DTC is detected, check, print out or write down and erase (1st trip) DTC and Freeze Frame data as specified in Work Flow procedure Step 2, refer to EC-99, "Work Flow". Then perform DTC CONFIRMATION PROCEDURE or Component Function Check to try to duplicate the malfunction. If the malfunction is duplicated, the item requires repair.

Freeze Frame Data and 1st Trip Freeze Frame Data

The ECM records the driving conditions such as fuel system status, calculated load value, engine coolant temperature, short-term fuel trim, long-term fuel trim, engine speed, vehicle speed, absolute throttle position, base fuel schedule and intake air temperature at the moment a malfunction is detected.
Data which are stored in the ECM memory, along with the 1st trip DTC, are called 1st trip freeze frame data. The data, stored together with the DTC data, are called freeze frame data and displayed on CONSULT-III or GST. The 1st trip freeze frame data can only be displayed on the CONSULT-III screen, not on the GST.
Only one set of freeze frame data (either 1st trip freeze frame data or freeze frame data) can be stored in the ECM. 1st trip freeze frame data is stored in the ECM memory along with the 1st trip DTC. There is no priority for 1st trip freeze frame data and it is updated each time a different 1st trip DTC is detected. However, once freeze frame data (2nd trip detection/MIL ON) is stored in the ECM memory, 1st trip freeze frame data is no longer stored. Remember, only one set of freeze frame data can be stored in the ECM. The ECM has the following priorities to update the data.

Priority	Items	
1	Freeze frame data	Misfire — DTC: P0300 - P0303 Fuel Injection System Function — DTC: P0171, P0172
2		Except the above items
3	1st trip freeze frame data	

For example, the EGR malfunction (Priority: 2) was detected and the freeze frame data was stored in the 2nd trip. After that when the misfire (Priority: 1) is detected in another trip, the freeze frame data will be updated from the EGR malfunction to the misfire. The 1st trip freeze frame data is updated each time a different malfunction is detected. There is no priority for 1st trip freeze frame data. However, once freeze frame data is stored in the ECM memory, 1st trip freeze data is no longer stored (because only one freeze frame data or 1st trip freeze frame data can be stored in the ECM). If freeze frame data is stored in the ECM memory and freeze frame data with the same priority occurs later, the first (original) freeze frame data remains unchanged in the ECM memory.
Both 1st trip freeze frame data and freeze frame data (along with the DTCs) are cleared when the ECM memory is erased. Procedures for clearing the ECM memory are described in “How to Erase DTC and 1st trip DTC”.

How to Read DTC and 1st Trip DTC

With CONSULT-III

CONSULT-III displays the DTC in “SELF DIAGNOSTIC RESULT” mode.
Examples: P0340, P0850, etc.
These DTCs are prescribed by SAE J1979/ISO 15031-5.

(CONSULT-III also displays the malfunctioning component or system.)
"Time data" on CONSULT-III screen indicates how many times the vehicle was driven after the last detection of a DTC.
If the DTC is being detected currently, the time data will be [0].
If a 1st trip DTC is stored in the ECM, the time data will be [1t].

With GST
GST (Generic Scan Tool) displays the DTC in Diagnostic Service $03.
Examples: P0340, P0850, etc.
These DTCs are prescribed by SAE J1979/ISO 15031-5.

No Tools
The number of blinks of the MIL in the Diagnostic Test Mode II (Self-Diagnostic Results) indicates the DTC.
Example: 0340, 0850, etc.
These DTCs are controlled by NISSAN.

NOTE:
- **1st trip DTC No. is the same as DTC No.**
- **Output of a DTC indicates a malfunction. However, GST or the Diagnostic Test Mode II do not indicate whether the malfunction is still occurring or has occurred in the past and has returned to normal. CONSULT-III can identify malfunction status as shown below. Therefore, using CONSULT-III (if available) is recommended.**

How to Erase DTC and 1st Trip DTC

With CONSULT-III
NOTE:
- **If the ignition switch stays ON after repair work, be sure to turn ignition switch OFF once. Wait at least 10 seconds and then turn it ON (engine stopped) again.**

1. Select "ENGINE" with CONSULT-III.
2. Select "SELF DIAGNOSTIC RESULT".
3. Touch "ERASE". (DTC in ECM will be erased.)

With GST
NOTE:
- **If the ignition switch stays ON after repair work, be sure to turn ignition switch OFF once. Wait at least 10 seconds and then turn it ON (engine stopped) again.**

1. Select Service $04 with GST (Generic Scan Tool).

No Tools
NOTE:
- **If the ignition switch stays ON after repair work, be sure to turn ignition switch OFF once. Wait at least 10 seconds and then turn it ON (engine stopped) again.**

1. Erase DTC in ECM. Refer to "How to Erase Diagnostic Test Mode II (Self-diagnostic Results)" below.

- **If the battery is disconnected, the emission-related diagnostic information will be lost within 24 hours.**
- **The following data are cleared when the ECM memory is erased.**

- Diagnostic trouble codes
- 1st trip diagnostic trouble codes
- Freeze frame data
- 1st trip freeze frame data
- System readiness test (SRT) codes
- Test values

Actual work procedures are explained using a DTC as an example. Be careful so that not only the DTC, but all of the data listed above, are cleared from the ECM memory during work procedures.

SYSTEM READINESS TEST (SRT) CODE

System Readiness Test (SRT) code is specified in Service $01 of SAE J1979/ISO 15031-5.
As part of an enhanced emissions test for Inspection & Maintenance (I/M), certain states require the status of SRT be used to indicate whether the ECM has completed self-diagnoses of major emission systems and components. Completion must be verified in order for the emissions inspection to proceed.
If a vehicle is rejected for a State emissions inspection due to one or more SRT items indicating "INCMP", use the information in this Service Manual to set the SRT to "CMPLT".
In most cases the ECM will automatically complete its self-diagnoses cycle during normal usage, and the SRT status will indicate "CMPLT" for each application system. Once set as "CMPLT", the SRT status remains "CMPLT" until the self-diagnosis memory is erased.

Occasionally, certain portions of the self-diagnostic test may not be completed as a result of the customer's normal driving pattern; the SRT will indicate “INCMP” for these items.

NOTE:

The SRT will also indicate “INCMP” if the self-diagnosis memory is erased for any reason or if the ECM memory power supply is interrupted for several hours.

If, during the state emissions inspection, the SRT indicates “CMPLT” for all test items, the inspector will continue with the emissions test. However, if the SRT indicates “INCMP” for one or more of the SRT items the vehicle is returned to the customer untested.

NOTE:

If MIL is ON during the state emissions inspection, the vehicle is also returned to the customer untested even though the SRT indicates “CMPLT” for all test items. Therefore, it is important to check SRT (“CMPLT”) and DTC (No DTCs) before the inspection.

SRT Item

The table below shows required self-diagnostic items to set the SRT to “CMPLT”.

SRT item (CONSULT-III indication)	Performance Priority*	Required self-diagnostic items to set the SRT to “CMPLT”	Corresponding DTC No.
CATALYST	2	Three way catalyst function	P0420
HO2S	1	Air fuel ratio (A/F) sensor 1	P0133
		Heated oxygen sensor 2	P0137
		Heated oxygen sensor 2	P0138
		Heated oxygen sensor 2	P0139
EGR SYSTEM	3	EGR function	P0400
	1	EGR function	P1402

*: If completion of several SRTs is required, perform driving patterns (DTC CONFIRMATION PROCEDURE), one by one based on the priority for models with CONSULT-III.

SRT Set Timing

SRT is set as “CMPLT” after self-diagnosis has been performed one or more times. Completion of SRT is done regardless of whether the result is OK or NG. The set timing is different between OK and NG results and is shown in the table below.

Self-diagnosis result		Example				
		Diagnosis	Ignition cycle ← ON → OFF	← ON → OFF	← ON → OFF	← ON →
All OK	Case 1	P0400	OK (1)	— (1)	OK (2)	— (2)
		P0402	OK (1)	— (1)	— (1)	OK (2)
		P1402	OK (1)	OK (2)	— (2)	— (2)
		SRT of EGR	“CMPLT”	“CMPLT”	“CMPLT”	“CMPLT”
	Case 2	P0400	OK (1)	— (1)	— (1)	— (1)
		P0402	— (0)	— (0)	OK (1)	— (1)
		P1402	OK (1)	OK (2)	— (2)	— (2)
		SRT of EGR	“INCMP”	“INCMP”	“CMPLT”	“CMPLT”
NG exists	Case 3	P0400	OK	OK	—	—
		P0402	—	—	—	—
		P1402	NG	—	NG	NG (Consecutive NG)
		(1st trip) DTC	1st trip DTC	—	1st trip DTC	DTC (= MIL ON)
		SRT of EGR	“INCMP”	“INCMP”	“INCMP”	“CMPLT”

OK: Self-diagnosis is carried out and the result is OK.

NG: Self-diagnosis is carried out and the result is NG.

—: Self-diagnosis is not carried out.

When all SRT related self-diagnoses showed OK results in a single cycle (Ignition OFF-ON-OFF), the SRT will indicate “CMPLT”. → Case 1 above

When all SRT related self-diagnoses showed OK results through several different cycles, the SRT will indicate “CMPLT” at the time the respective self-diagnoses have at least one OK result. → Case 2 above

If one or more SRT related self-diagnoses showed NG results in 2 consecutive cycles, the SRT will also indicate “CMPLT”. → Case 3 above

The table above shows that the minimum number of cycles for setting SRT as “INCMP” is one (1) for each self-diagnosis (Case 1 & 2) or two (2) for one of self-diagnoses (Case 3). However, in preparation for the state emissions inspection, it is unnecessary for each self-diagnosis to be executed twice (Case 3) for the following reasons:

- The SRT will indicate “CMPLT” at the time the respective self-diagnoses have one (1) OK result.
- The emissions inspection requires “CMPLT” of the SRT only with OK self-diagnosis results.
- When, during SRT driving pattern, 1st trip DTC (NG) is detected prior to “CMPLT” of SRT, the self-diagnosis memory must be erased from ECM after repair.
- If the 1st trip DTC is erased, all the SRT will indicate “INCMP”.

  NOTE:

  SRT can be set as “CMPLT” together with the DTC(s). Therefore, DTC check must always be carried out prior to the state emission inspection even though the SRT indicates “CMPLT”.

SRT Service Procedure

If a vehicle has failed the state emissions inspection due to one or more SRT items indicating “INCMP”, review the flowchart diagnostic sequence on the next figure.

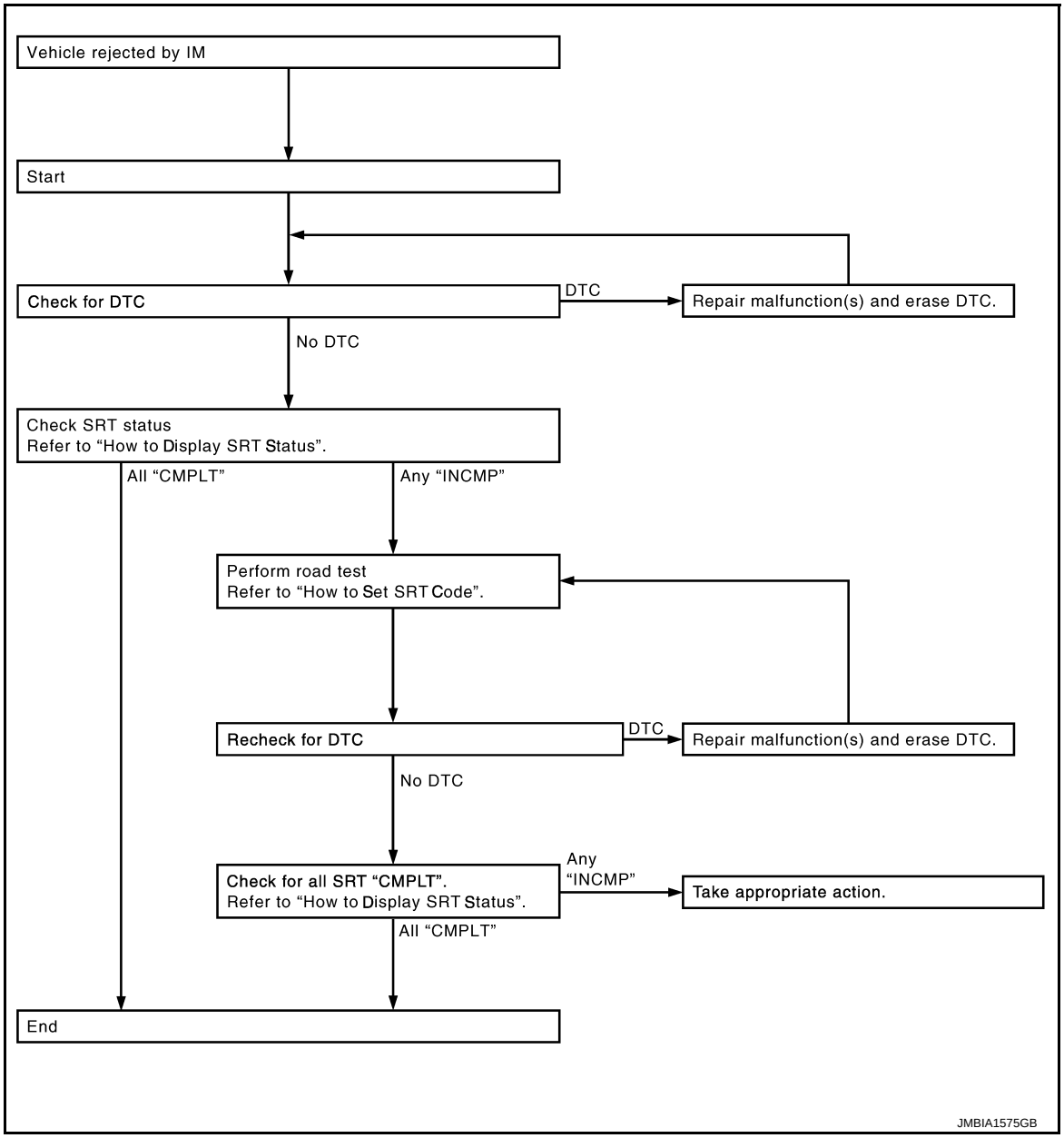

How to Display SRT Code

WITH CONSULT-III

Selecting “SRT STATUS” in “DTC CONFIRMATION” mode with CONSULT-III.

For items whose SRT codes are set, a “CMPLT” is displayed on the CONSULT-III screen; for items whose SRT codes are not set, “INCMP” is displayed.

NOTE:

Though displayed on the CONSULT-III screen, “HO2S HTR” is not SRT item.

WITH GST

Selecting Service $01 with GST (Generic Scan Tool)

MALFUNCTION INDICATOR LAMP (MIL)

Description

The MIL is located on the instrument panel.

1. The MIL will light up when the ignition switch is turned ON without the engine running. This is a bulb check.
   If the MIL does not light up, check MIL circuit. Refer to EC-296, "Component Function Check".
2. When the engine is started, the MIL should go off.
   If the MIL remains on, the on board diagnostic system has detected an engine system malfunction.

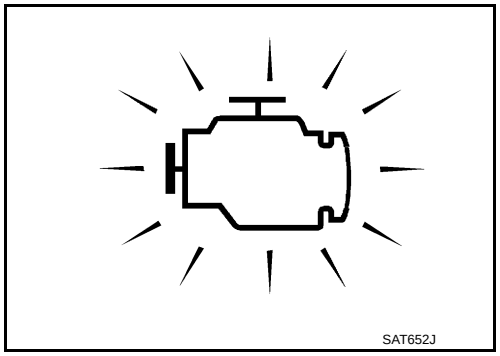

On Board Diagnostic System Function

The on board diagnostic system has the following three functions.

Diagnostic Test Mode	KEY and ENG. Status	Function	Explanation of Function
Mode I	Ignition switch in ON position Engine stopped	BULB CHECK	This function checks the MIL bulb for damage (blown, open circuit, etc.). If the MIL does not come on, check MIL circuit.
	Engine running	MALFUNCTION WARNING	When a malfunction is detected twice in two consecutive driving cycles (two trip detection logic), the MIL will light up to inform the driver that a malfunction has been detected. The following malfunctions will light up or blink the MIL in the 1st trip. • Misfire (Possible three way catalyst damage) • One trip detection diagnoses
Mode II	Ignition switch in ON position Engine stopped	SELF-DIAGNOSTIC RESULTS	This function allows DTCs and 1st trip DTCs to be read.

MIL Flashing Without DTC

If the ECM is in Diagnostic Test Mode II, MIL may flash when engine is running. In this case, check ECM diagnostic test mode. How to switch the diagnostic test function modes, and details of the above functions are described later.

The following emission-related diagnostic information is cleared when the ECM memory is erased.

- Diagnostic trouble code
- 1st trip diagnostic trouble code
- Freeze frame data
- 1st trip freeze frame data
- System readiness test (SRT) codes
- Test values

Diagnostic Test Mode I — Bulb Check

In this mode, the MIL on the instrument panel should stay ON. If it remains OFF, check MIL circuit. Refer to EC-296, "Component Function Check".

Diagnostic Test Mode I — Malfunction Warning

MIL	Condition
ON	When the malfunction is detected.
OFF	No malfunction.

This DTC number is clarified in Diagnostic Test Mode II (SELF-DIAGNOSTIC RESULTS)

Diagnostic Test Mode II — Self-diagnostic Results

In this mode, the DTC and 1st trip DTC are indicated by the number of blinks of the MIL as shown below.
The DTC and 1st trip DTC are displayed at the same time. If the MIL does not illuminate in diagnostic test mode I (Malfunction warning), all displayed items are 1st trip DTCs. If only one code is displayed when the MIL illuminates in diagnostic test mode II (SELF-DIAGNOSTIC RESULTS), it is a DTC; if two or more codes are displayed, they may be either DTCs or 1st trip DTCs. DTC No. is same as that of 1st trip DTC. These unidentified codes can be identified by using the CONSULT-III or GST. A DTC will be used as an example for how to read a code.

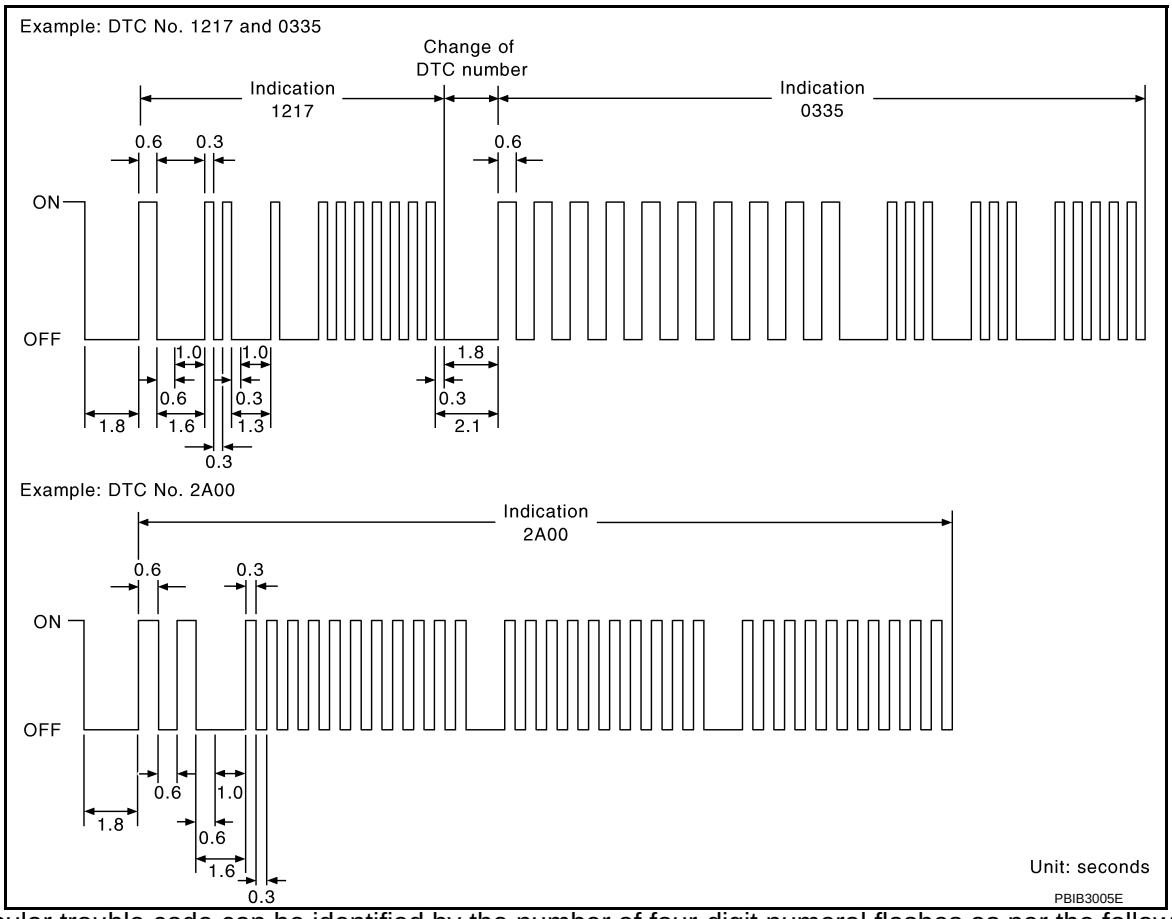

A particular trouble code can be identified by the number of four-digit numeral flashes as per the following.

Number	0	1	2	3	4	5	6	7	8	9	A	B	C	D	E	F
Flashes	10	1	2	3	4	5	6	7	8	9	11	12	13	14	15	16

The length of time the 1,000th-digit numeral flashes on and off is 1.2 seconds consisting of an ON (0.6-second) - OFF (0.6-second) cycle.
The 100th-digit numeral and lower digit numerals consist of a 0.3-seconds ON and 0.3-seconds OFF cycle.
A change from one digit numeral to another occurs at an interval of 1.0-second OFF. In other words, the later numeral appears on the display 1.3 seconds after the former numeral has disappeared.
A change from one trouble code to another occurs at an interval of 1.8-seconds OFF.
In this way, all the detected malfunctions are classified by their DTC numbers. The DTC 0000 refers to no malfunction. (See EC-78, "DTC Index")

How to Switch Diagnostic Test Mode

NOTE:

- **It is better to count the time accurately with a clock.**

- **It is impossible to switch the diagnostic mode when an accelerator pedal position sensor circuit has a malfunction.**
- **Always ECM returns to Diagnostic Test Mode I after ignition switch is turned OFF.**

HOW TO SET DIAGNOSTIC TEST MODE II (SELF-DIAGNOSTIC RESULTS)

1. Confirm that accelerator pedal is fully released, turn ignition switch ON and wait 3 seconds.
2. Repeat the following procedure quickly five times within 5 seconds.
- Fully depress the accelerator pedal.
- Fully release the accelerator pedal.
3. Wait 7 seconds, fully depress the accelerator pedal and keep it for approx. 10 seconds until the MIL starts blinking.
4. Fully release the accelerator pedal.
   ECM has entered to Diagnostic Test Mode II (Self-diagnostic results).
   NOTE:
   Wait until the same DTC (or 1st trip DTC) appears to confirm all DTCs certainly.

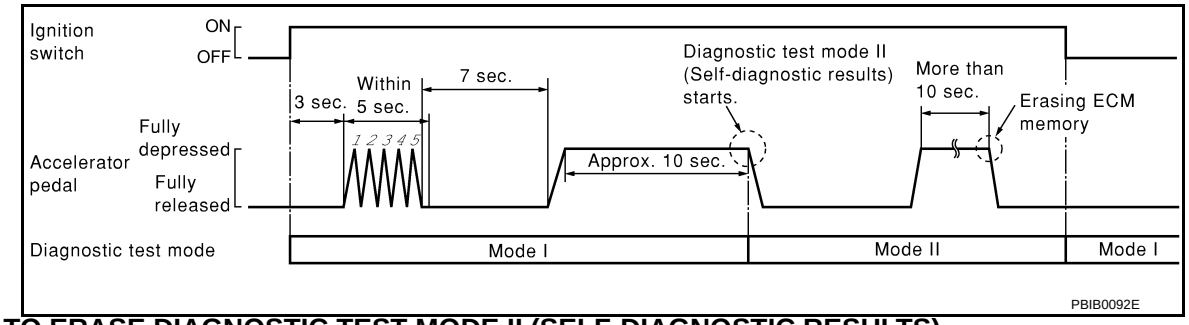

HOW TO ERASE DIAGNOSTIC TEST MODE II (SELF-DIAGNOSTIC RESULTS)

1. Set ECM in Diagnostic Test Mode II (Self-diagnostic results). Refer to “How to Set Diagnostic Test Mode II (Self-diagnostic Results)”.
2. Fully depress the accelerator pedal and keep it for more than 10 seconds.
   The emission-related diagnostic information has been erased from the backup memory in the ECM.
3. Fully release the accelerator pedal, and confirm the DTC 0000 is displayed.

How to Erase Diagnostic Test Mode II (Self-diagnostic Results)

The DTC can be erased from the back up memory in the ECM by depressing accelerator pedal. Refer to “How to Erase Diagnostic Test Mode II (Self-diagnostic Results)”.

- **If the battery is disconnected, the DTC will be lost from the backup memory within 24 hours.**
- **Be careful not to erase the stored memory before starting trouble diagnoses.**

OBD System Operation Chart

Relationship Between MIL, 1st Trip DTC, DTC and Detectable Items

- When a malfunction is detected for the first time, the 1st trip DTC and the 1st trip freeze frame data are stored in the ECM memory.
- When the same malfunction is detected in two consecutive trips, the DTC and the freeze frame data are stored in the ECM memory, and the MIL will come on.
- The MIL will go off after the vehicle is driven 3 times (pattern B) with no malfunction. The drive is counted only when the recorded driving pattern is met (as stored in the ECM). If another malfunction occurs while counting, the counter will reset.
- The DTC and the freeze frame data will be stored until the vehicle is driven 40 times (pattern A) without the same malfunction recurring (except for Misfire and Fuel Injection System). For Misfire and Fuel Injection System, the DTC and freeze frame data will be stored until the vehicle is driven 80 times (pattern C) without the same malfunction recurring. The “TIME” in “SELF-DIAGNOSTIC RESULTS” mode of CONSULT-III will count the number of times the vehicle is driven.
- The 1st trip DTC is not displayed when the self-diagnosis results in OK for the 2nd trip.

Summary Chart

Items	Fuel Injection System	Misfire	Other
MIL (goes off)	3 (pattern B)	3 (pattern B)	3 (pattern B)
DTC, Freeze Frame Data (no display)	80 (pattern C)	80 (pattern C)	40 (pattern A)

Items	Fuel Injection System	Misfire	Other
1st Trip DTC (clear)	1 (pattern C), *1	1 (pattern C), *1	1 (pattern B)
1st Trip Freeze Frame Data (clear)	*1, *2	*1, *2	1 (pattern B)

For details about patterns B and C under “Fuel Injection System” and “Misfire”, see “EXPLANATION FOR DRIVING PATTERNS FOR “MISFIRE <EXHAUST QUALITY DETERIORATION>”, “FUEL INJECTION SYSTEM”.

For details about patterns A and B under Other, see “EXPLANATION FOR DRIVING PATTERNS FOR “MISFIRE <EXHAUST QUALITY DETERIORATION>”, “FUEL INJECTION SYSTEM”.

*1: Clear timing is at the moment OK is detected.

*2: Clear timing is when the same malfunction is detected in the 2nd trip.

Relationship Between MIL, DTC, 1st Trip DTC and Driving Patterns for “Misfire <Exhaust Quality Deterioration>”, “Fuel Injection System”

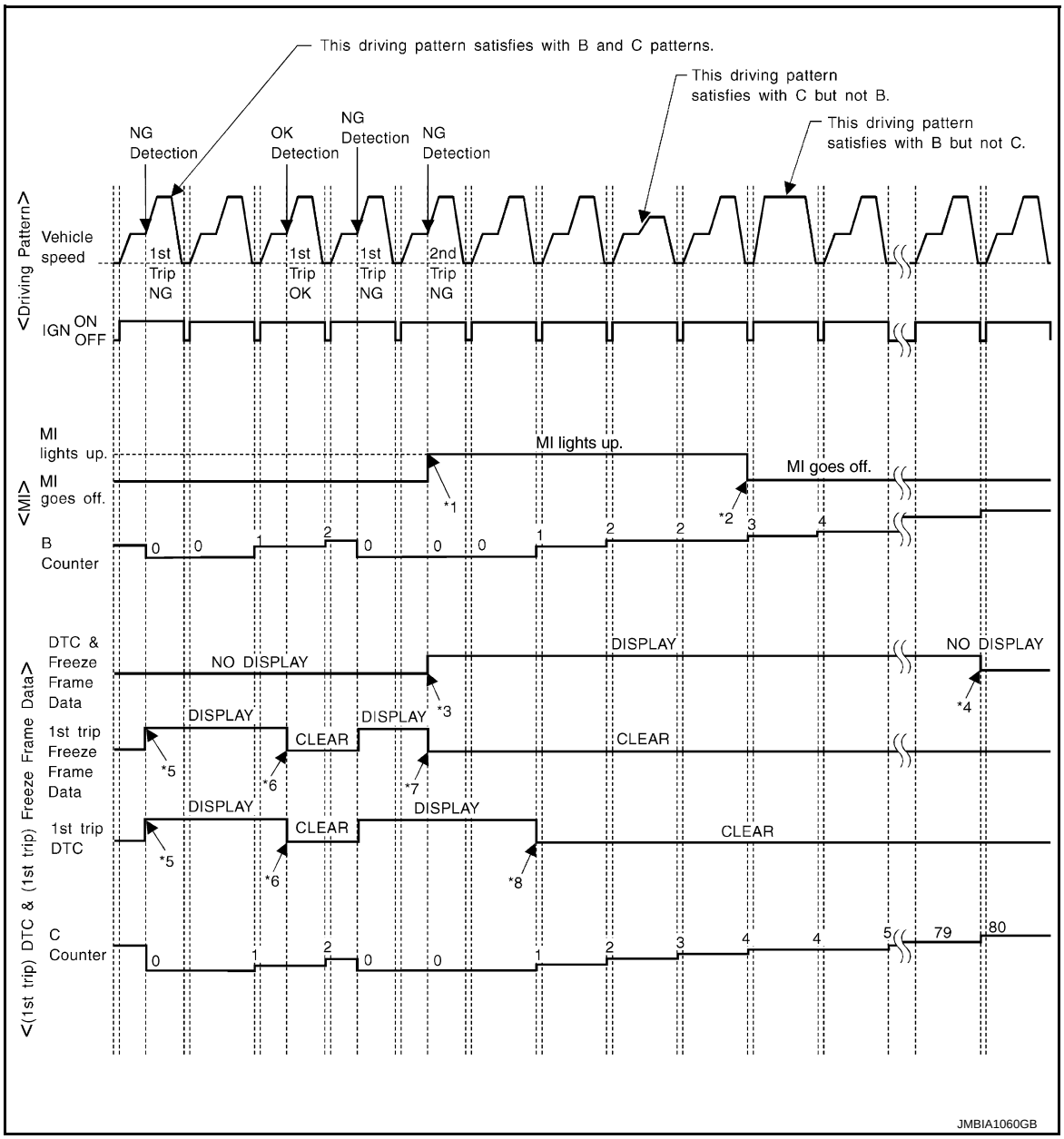

*1: When the same malfunction is detected in two consecutive trips, MIL will light up.

*2: MIL will go off after vehicle is driven 3 times (pattern B) without any malfunctions.

*3: When the same malfunction is detected in two consecutive trips, the DTC and the freeze frame data will be stored in ECM.

*4: The DTC and the freeze frame data will not be displayed any longer after vehicle is driven 80 times (pattern C) without the same malfunction. (The DTC and the freeze frame data still remain in ECM.)

*5: When a malfunction is detected for the first time, the 1st trip DTC and the 1st trip freeze frame data will be stored in ECM.

*6: The 1st trip DTC and the 1st trip freeze frame data will be cleared at the moment OK is detected.

*7: When the same malfunction is detected in the 2nd trip, the 1st trip freeze frame data will be cleared.

*8: 1st trip DTC will be cleared when vehicle is driven once (pattern C) without the same malfunction after DTC is stored in ECM.

Explanation for Driving Patterns for “Misfire <Exhaust Quality Deterioration>”, “Fuel Injection System”

<Driving Pattern B>

Driving pattern B means the vehicle operation as follows:

All components and systems should be monitored at least once by the OBD system.

- The B counter will be cleared when the malfunction is detected once regardless of the driving pattern.
- The B counter will be counted up when driving pattern B is satisfied without any malfunction.
- The MIL will go off when the B counter reaches 3. (*2 in “OBD SYSTEM OPERATION CHART”)

<Driving Pattern C>

Driving pattern C means the vehicle operation as follows:

The following conditions should be satisfied at the same time:

Engine speed: (Engine speed in the freeze frame data) ± 375 rpm

Calculated load value: (Calculated load value in the freeze frame data) x (1 ± 0.1) [%]

Engine coolant temperature (T) condition:

- When the freeze frame data shows lower than 70°C (158°F), T should be lower than 70°C (158°F).
- When the freeze frame data shows higher than or equal to 70°C (158°F), T should be higher than or equal to 70°C (158°F).

Example:

If the stored freeze frame data is as follows:

Engine speed: 850 rpm, Calculated load value: 30%, Engine coolant temperature: 80°C (176°F)

To be satisfied with driving pattern C, the vehicle should run under the following conditions:

Engine speed: 475 - 1,225 rpm, Calculated load value: 27 - 33%, Engine coolant temperature: more than 70°C (158°F)

- The C counter will be cleared when the malfunction is detected regardless of vehicle conditions above.
- The C counter will be counted up when vehicle conditions above is satisfied without the same malfunction.
- The DTC will not be displayed after C counter reaches 80.
- The 1st trip DTC will be cleared when C counter is counted once without the same malfunction after DTC is stored in ECM.

Relationship Between MIL, DTC, 1st Trip DTC and Driving Patterns Except For “Misfire <Exhaust Quality Deterioration>”, “Fuel Injection System”

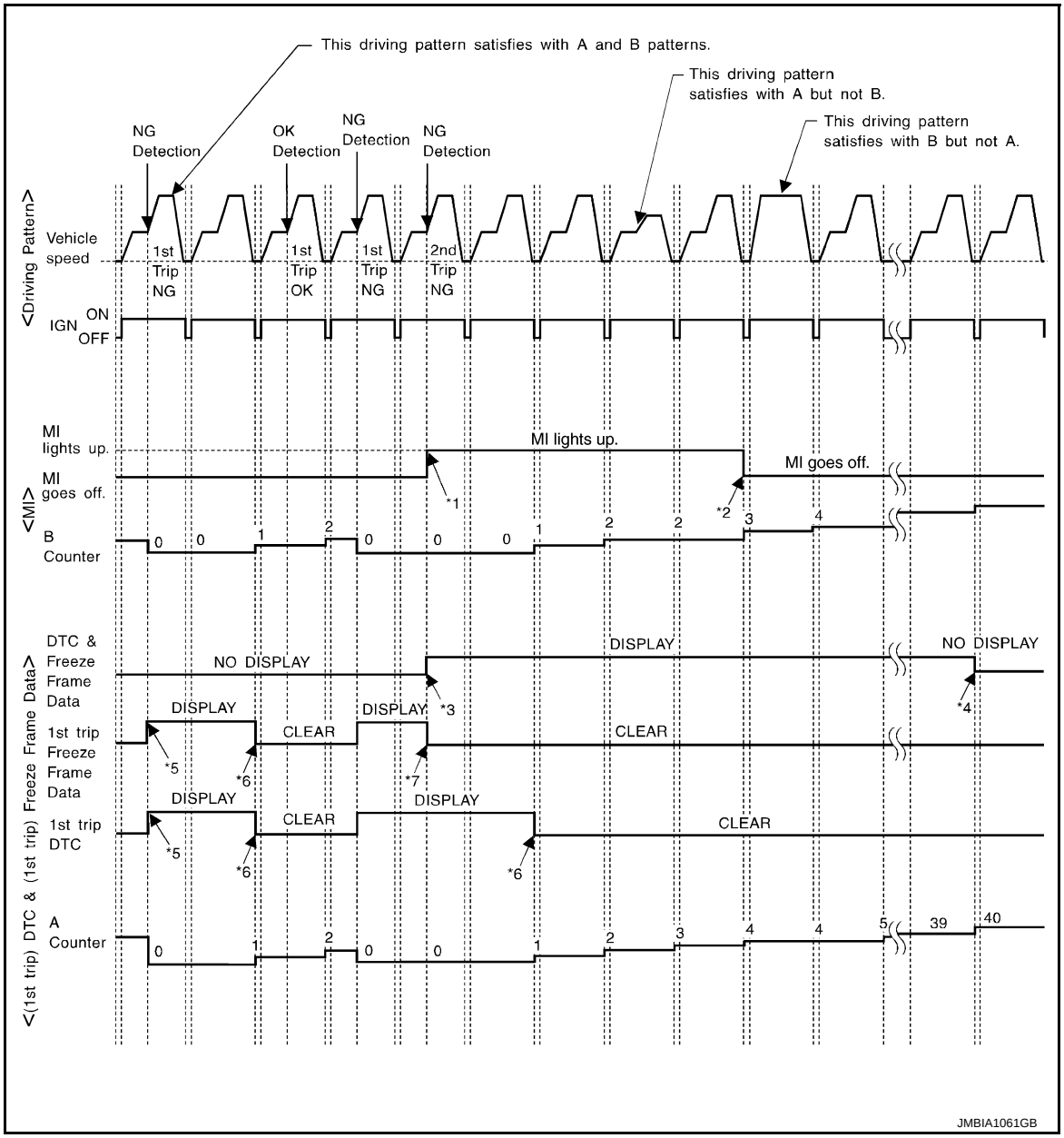

*1: When the same malfunction is detected in two consecutive trips, MIL will light up.

*2: MIL will go off after vehicle is driven 3 times (pattern B) without any malfunctions.

*3: When the same malfunction is detected in two consecutive trips, the DTC and the freeze frame data will be stored in ECM.

*4: The DTC and the freeze frame data will not be displayed any longer after vehicle is driven 40 times (pattern A) without the same malfunction. (The DTC and the freeze frame data still remain in ECM.)

*5: When a malfunction is detected for the first time, the 1st trip DTC and the 1st trip freeze frame data will be stored in ECM.

*6: 1st trip DTC will be cleared after vehicle is driven once (pattern B) without the same malfunction.

*7: When the same malfunction is detected in the 2nd trip, the 1st trip freeze frame data will be cleared.

Explanation for Driving Patterns Except for “Misfire <Exhaust Quality Deterioration>”, “Fuel Injection System”

<Driving Pattern A>

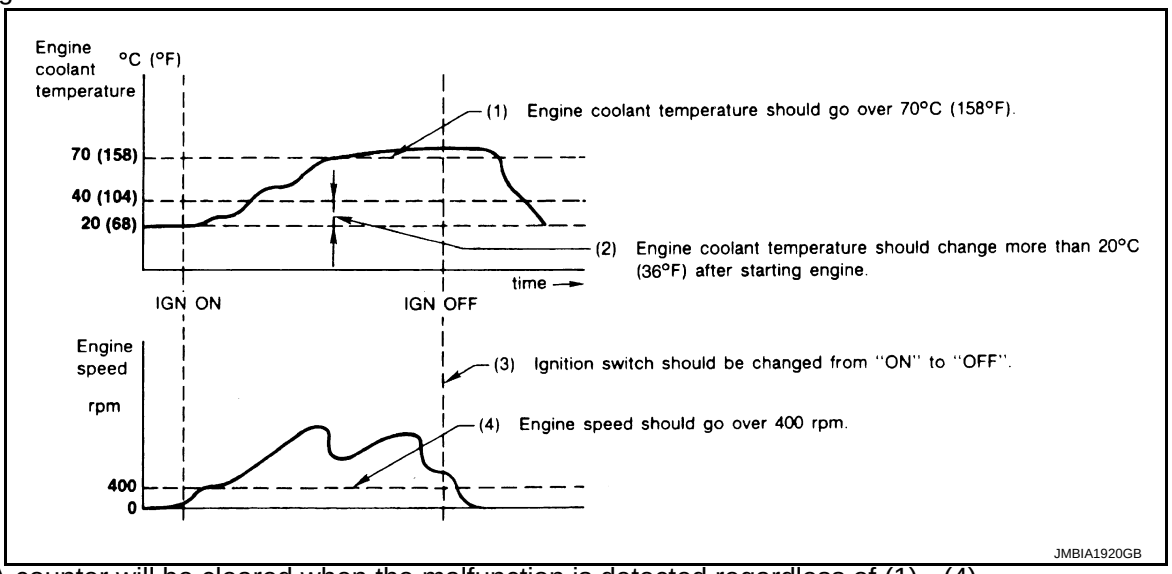

- The A counter will be cleared when the malfunction is detected regardless of (1) - (4).
- The A counter will be counted up when (1) - (4) are satisfied without the same malfunction.
- The DTC will not be displayed after the A counter reaches 40.

<Driving Pattern B>

Driving pattern B means the vehicle operation as follows:

All components and systems should be monitored at least once by the OBD system.

- The B counter will be cleared when the malfunction is detected once regardless of the driving pattern.
- The B counter will be counted up when driving pattern B is satisfied without any malfunctions.
- The MIL will go off when the B counter reaches 3 (*2 in OBD SYSTEM OPERATION CHART).

CONSULT-III Function

INFOID:0000000005989198

FUNCTION

Diagnostic test mode	Function
Ecu Identification	ECM part number can be read.
Self Diagnostic Result	Self-diagnostic results such as 1st trip DTC, DTCs and 1st trip freeze frame data or freeze frame data can be read and erased quickly.*
Data Monitor	Input/Output data in the ECM can be read.
Active Test	Diagnostic Test Mode in which CONSULT-III drives some actuators apart from the ECMs and also shifts some parameters in a specified range.
Function Test	This mode is used to inform customers when their vehicle condition requires periodic maintenance.
Work support	This mode enables a technician to adjust some devices faster and more accurately by following the indications on the CONSULT-III unit.
DTC & SRT Confirmation	The status of system monitoring tests and the self-diagnosis status/result can be confirmed.

*: The following emission-related diagnostic information is cleared when the ECM memory is erased.

- Diagnostic trouble codes
- 1st trip diagnostic trouble codes
- Freeze frame data
- 1st trip freeze frame data
- System readiness test (SRT) codes
- Test values

SELF DIAGNOSTIC RESULT MODE

Self Diagnostic Item

Regarding items of DTC and 1st trip DTC, refer to EC-78, "DTC Index".)

Freeze Frame Data and 1st Trip Freeze Frame Data

Freeze frame data item*	Description
DTC RESULTS	• The engine control component part/control system has a trouble code, it is displayed as PXXXX. (Refer to EC-78, "DTC Index".)
CAL/LD VALUE [%]	• The calculated load value at the moment a malfunction is detected is displayed.
COOLANT TEMP [°C] or [°F]	• The engine coolant temperature at the moment a malfunction is detected is displayed.
L-FUEL TRM-B1 [%]	• "Long-term fuel trim" at the moment a malfunction is detected is displayed. • The long-term fuel trim indicates much more gradual feedback compensation to the base fuel schedule than short-term fuel trim.
S-FUEL TRM-B1 [%]	• "Short-term fuel trim" at the moment a malfunction is detected is displayed. • The short-term fuel trim indicates dynamic or instantaneous feedback compensation to the base fuel schedule.
ENGINE SPEED [rpm]	• The engine speed at the moment a malfunction is detected is displayed.
VEHICL SPEED [km/h] or [mph]	• The vehicle speed at the moment a malfunction is detected is displayed.
INT MANI PRES [kPa]	• These items are displayed but are not applicable to this model.
ABSOL TH-P/S [%]	• The throttle valve opening angle at the moment a malfunction is detected is displayed.
B/FUEL SCHDL [msec]	• The base fuel schedule at the moment a malfunction is detected is displayed.
INT/A TEMP SE [°C] or [°F]	• The intake air temperature at the moment a malfunction is detected is displayed.
FUEL SYS-B1	• "Fuel injection system status" at the moment a malfunction is detected is displayed. • One mode in the following is displayed. Mode2: Open loop due to detected system malfunction Mode3: Open loop due to driving conditions (power enrichment, deceleration enleanment) Mode4: Closed loop - using oxygen sensor(s) as feedback for fuel control Mode5: Open loop - has not yet satisfied condition to go to closed loop
COMBUST CONDITION	• These items are displayed but are not applicable to this model.

*: The items are the same as those of 1st trip freeze frame data.

DATA MONITOR MODE

Monitored Item

Monitored item	Unit	Description	Remarks
ENG SPEED	rpm	• Indicates the engine speed computed from the signal of the crankshaft position sensor (POS) and camshaft position sensor (PHASE).	• Accuracy becomes poor if engine speed drops below the idle rpm. • If the signal is interrupted while the engine is running, an abnormal value may be indicated.
MAS A/F SE-B1	V	• The signal voltage of the mass air flow sensor is displayed.	• When the engine is stopped, a certain value is indicated. • When engine is running, specification range is indicated in "SPEC".
B/FUEL SCHDL	msec	• "Base fuel schedule" indicates the fuel injection pulse width programmed into ECM, prior to any learned on board correction.	• When engine is running, specification range is indicated in "SPEC".
A/F ALPHA-B1	%	• The mean value of the air-fuel ratio feedback correction factor per cycle is indicated.	• When the engine is stopped, a certain value is indicated. • When engine is running, specification range is indicated in "SPEC". • This data also includes the data for the air-fuel ratio learning control.

Monitored item	Unit	Description	Remarks
COOLAN TEMP/S	°C or °F	• The engine coolant temperature (determined by the signal voltage of the engine coolant temperature sensor) is displayed.	• When the engine coolant temperature sensor is open or short-circuited, ECM enters fail-safe mode. The engine coolant temperature determined by the ECM is displayed.
A/F SEN1 (B1)	V	• The A/F signal computed from the input signal of the air fuel ratio (A/F) sensor 1 is displayed.	
HO2S2 (B1)	V	• The signal voltage of the heated oxygen sensor 2 is displayed.	
HO2S2 MNTR(B1)	RICH/LEAN	• Display of heated oxygen sensor 2 signal: RICH: means the amount of oxygen after three way catalyst is relatively small. LEAN: means the amount of oxygen after three way catalyst is relatively large.	• When the engine is stopped, a certain value is indicated.
VHCL SPEED SE	km/h or mph	• The vehicle speed computed from the vehicle speed signal sent from combination meter is displayed.	
BATTERY VOLT	V	• The power supply voltage of ECM is displayed.	
ACCEL SEN 1 ACCEL SEN 2	V	• The accelerator pedal position sensor signal voltage is displayed.	• ACCEL SEN 2 signal is converted by ECM internally. Thus, it differs from ECM terminal voltage signal.
TP SEN 1-B1 TP SEN 2-B1	V	• The throttle position sensor signal voltage is displayed.	• TP SEN 2-B1 signal is converted by ECM internally. Thus, it differs from ECM terminal voltage signal.
START SIGNAL	ON/OFF	• Indicates start signal status [ON/OFF] computed by the ECM according to the signals of engine speed and battery voltage.	• After starting the engine, [OFF] is displayed regardless of the starter signal.
CLSD THL POS	ON/OFF	• Indicates idle position [ON/OFF] computed by ECM according to the accelerator pedal position sensor signal.	
AIR COND SIG	ON/OFF	• Indicates [ON/OFF] condition of the air conditioner switch as determined by the air conditioner signal.	
PW/ST SIGNAL	ON/OFF	• [ON/OFF] condition of the power steering system (determined by the signal sent from EPS control unit) is indicated.	
LOAD SIGNAL	ON/OFF	• Indicates [ON/OFF] condition from the electrical load signal. ON: Rear window defogger switch is ON and/or lighting switch is in 2nd position. OFF: Both rear window defogger switch and lighting switch are OFF.	
IGNITION SW	ON/OFF	• Indicates [ON/OFF] condition from ignition switch signal.	
HEATER FAN SW	ON/OFF	• Indicates [ON/OFF] condition from the heater fan switch signal.	
BRAKE SW	ON/OFF	• Indicates [ON/OFF] condition from the stop lamp switch signal.	
INJ PULSE-B1	msec	• Indicates the actual fuel injection pulse width compensated by ECM according to the input signals.	• When the engine is stopped, a certain computed value is indicated.
IGN TIMING	BTDC	• Indicates the ignition timing computed by ECM according to the input signals.	• When the engine is stopped, a certain value is indicated.
CAL/LD VALUE	%	• “Calculated load value” indicates the value of the current air flow divided by peak air flow.	

Monitored item	Unit	Description	Remarks
MASS AIRFLOW	g·m/s	• Indicates the mass air flow computed by ECM according to the signal voltage of the mass air flow sensor.	
PURG VOL C/V	%	• Indicates the EVAP canister purge volume control solenoid valve control value computed by the ECM according to the input signals. • The opening becomes larger as the value increases.	
EGR VOL CON/V	step	• Indicates the EGR volume control value computed by the ECM according to the input signals. • The opening becomes larger as the value increases.	
INT/V TIM(B1)	°CA	• Indicates [°CA] of intake camshaft advance angle.	
INT/V SOL(B1)	%	• The control value of the intake valve timing control solenoid valve (determined by ECM according to the input signals) is indicated. • The advance angle becomes larger as the value increases.	
AIR COND RLY	ON/OFF	• The air conditioner relay control condition (determined by ECM according to the input signals) is indicated.	
FUEL PUMP RLY	ON/OFF	• Indicates the fuel pump relay control condition determined by ECM according to the input signals.	
THRTL RELAY	ON/OFF	• Indicates the throttle control motor relay control condition determined by the ECM according to the input signals.	
COOLING FAN	HI/LOW/OFF	• Indicates the condition of the cooling fan (determined by ECM according to the input signals). HI: High speed operation LOW: High speed operation* OFF: Stop	
HO2S2 HTR (B1)	ON/OFF	• Indicates [ON/OFF] condition of heated oxygen sensor 2 heater determined by ECM according to the input signals.	
ALT DUTY SIG	ON/OFF	• The control condition of the power generation voltage variable control (determined by ECM according to the input signals) is indicated. ON: Power generation voltage variable control is active. OFF: Power generation voltage variable control is inactive.	
VEHICLE SPEED	km/h or mph	• The vehicle speed computed from the vehicle speed signal sent from TCM is displayed.	
IDL A/V LEARN	YET/CMPLT	• Displays the condition of Idle Air Volume Learning YET: Idle air volume learning has not been performed yet. CMPLT: Idle air volume learning has already been performed successfully.	
TRVL AFTER MIL	km or mile	• Distance traveled while MIL is activated.	
A/F S1 HTR(B1)	%	• Air fuel ratio (A/F) sensor 1 heater control value computed by ECM according to the input signals. • The current flow to the heater becomes larger as the value increases.	

Monitored item	Unit	Description	Remarks
ALT DUTY	%	• Indicates the duty ratio of the power generation command value. The ratio is calculated by ECM based on the battery current sensor signal.	
BAT CUR SEN	mV	• The signal voltage of battery current sensor is displayed.	
A/F ADJ-B1	—	• Indicates the correction of factor stored in ECM. The factor is calculated from the difference between the target air-fuel ratio stored in ECM and the air-fuel ratio calculated from A/F sensor 1 signal.	
P/N POSI SW	ON/OFF	• Indicates [ON/OFF] condition from the park/neutral position (PNP) switch signal.	
INT/A TEMP SE	°C or °F	• The intake air temperature (determined by the signal voltage of the intake air temperature sensor) is indicated.	
AC PRESS SEN	V	• The signal voltage from the refrigerant pressure sensor is displayed.	
EGR TEMP SEN	V	• The signal voltage of EGR temperature sensor is displayed.	
FPCM	Hi/Mid/Low/Off	• The control condition of the fuel pump control module (FPCM) (determined by ECM according to the input signals) is indicated.	
THRTL STK CNT B1	—	• The number of cloggings in the throttle valve closed position is displayed. **NOTE:** This is cleared after repeating non-clogging condition several times.	
HO2 S2 DIAG2 (B1)	—	**NOTE:** The item is indicated, but not used.	
A/F SEN1 DIAG2 (B1)	—	**NOTE:** The item is indicated, but not used.	

*: Although the state is indicated as “LOW” the cooling fan operates at high speeds.

NOTE:

Any monitored item that does not match the vehicle being diagnosed is deleted from the display automatically.

ACTIVE TEST MODE

Test Item

TEST ITEM	CONDITION	JUDGMENT	CHECK ITEM (REMEDY)
ENG COOLANT TEMP	• Engine: Return to the original trouble condition • Change the engine coolant temperature using CONSULT-III.	If trouble symptom disappears, see CHECK ITEM.	• Harness and connectors • Engine coolant temperature sensor • Fuel injector
FUEL INJECTION	• Engine: Return to the original trouble condition • Change the amount of fuel injection using CONSULT-III.	If trouble symptom disappears, see CHECK ITEM.	• Harness and connectors • Fuel injector • Air fuel ratio (A/F) sensor 1
PURG VOL CONT/V	• Engine: After warming up, run engine at 1,500 rpm. • Change the EVAP canister purge volume control solenoid valve opening percent using CONSULT-III.	Engine speed changes according to the opening percent.	• Harness and connectors • Solenoid valve

TEST ITEM	CONDITION	JUDGMENT	CHECK ITEM (REMEDY)
FUEL PUMP RELAY	• Ignition switch: ON (Engine stopped) • Turn the fuel pump relay “ON” and “OFF” using CONSULT-III and listen to operating sound.	Fuel pump relay makes the operating sound.	• Harness and connectors • Fuel pump relay
IGNITION TIMING	• Engine: Return to the original trouble condition • Timing light: Set • Retard the ignition timing using CONSULT-III.	If trouble symptom disappears, see CHECK ITEM.	• Perform Idle Air Volume Learning.
ALTERNATOR DUTY	• Engine: idle. • Change duty ratio using CONSULT-III.	Battery voltage cangees.	• Harness and connectors • IPDM E/R • Alternator
COOLING FAN*	• Ignition switch: ON • Turn the cooling fan “LOW”, “HI” and “OFF” CONSULT-III. **NOTE:** The cooling fan operates at high speeds even when “LOW” is selected.	Cooling fan moves and stops.	• Harness and connectors • IPDM E/R (Cooling fan relay) • Cooling fan motor
V/T ASSIGN ANGLE	• Engine: Return to the original trouble condition • Change intake valve timing using CONSULT-III.	If trouble symptom disappears, see CHECK ITEM.	• Harness and connectors • Intake valve timing control solenoid valve
EGR VOL CONT/V	• Ignition switch: ON (Engine stopped) • Change the EGR volume control valve opening step using CONSULT-III.	EGR volume control valve makes an operating sound.	• Harness and connectors • EGR volume control valve
POWER BALANCE	• Engine: After warming up, idle the engine. • A/C switch OFF • Shift lever: Neutral • Cut off each fuel injector signal one at a time using CONSULT-III.	Engine runs rough or dies.	• Harness and connectors • Compression • Fuel injector • Power transistor • Spark plug • Ignition coil

*: Leaving cooling fan OFF with CONSULT-III while engine is running may cause the engine to overheat.

WORK SUPPORT MODE

Work Item

WORK ITEM	CONDITION	USAGE
FUEL PRESSURE RELEASE	• FUEL PUMP WILL STOP BY TOUCHING “START” DURING IDLING. CRANK A FEW TIMES AFTER ENGINE STALLS.	When releasing fuel pressure from fuel line
IDLE AIR VOL LEARN	• THE IDLE AIR VOLUME THAT KEEPS THE ENGINE WITHIN THE SPECIFIED RANGE IS MEMORIZED IN ECM.	When learning the idle air volume
SELF-LEARNING CONT	• THE COEFFICIENT OF SELF-LEARNING CONTROL MIXTURE RATIO RETURNS TO THE ORIGINAL COEFFICIENT.	When clearing mixture ratio self-learning value
TARGET IDLE RPM ADJ*	• IDLE CONDITION	When setting target idle speed
TARGET IGN TIM ADJ*	• IDLE CONDITION	When adjusting target ignition timing

*: This function is not necessary in the usual service procedure.

DTC & SRT CONFIRMATION MODE

SRT STATUS Mode

For details, refer to “How to Display SRT Code” in EC-45, "Diagnosis Description".

SRT WORK SUPPORT Mode

This mode enables a technician to drive a vehicle to set the SRT while monitoring the SRT status.

DTC WORK SUPPORT Mode

Test mode	Test item	Corresponding DTC No.	Reference page
EGR SYSTEM	EGR SYSTEM P0400	P0400	EC-203, "DTC Logic"
	EGR SYSTEM P1402	P1402	EC-239, "DTC Logic"
HO2S2	HO2S2 (B1) P1146	P0138	EC-164, "DTC Logic"
	HO2S2 (B1) P1147	P0137	EC-158, "DTC Logic"
	HO2S2 (B1) P0139	P0139	EC-172, "DTC Logic"
A/F SEN1	A/F SEN1 (B1) P1278/P1279	P0133	EC-154, "DTC Logic"
	A/F SEN1 (B1) P1276	P0130	EC-147, "DTC Logic"

Diagnosis Tool Function

INFOID:0000000005989199

DESCRIPTION

Generic Scan Tool (OBD II scan tool) complying with SAE J1978/ ISO 15031-4 has several functions explained below.
ISO15765-4 is used as the protocol.
The name “GST” or “Generic Scan Tool” is used in this service manual.

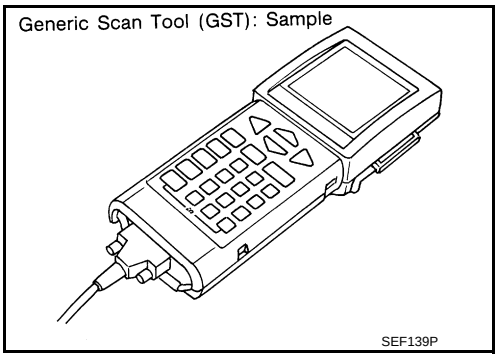

FUNCTION

Diagnostic Service		Function
Service $01	READINESS TESTS	This diagnostic service gains access to current emission-related data values, including analog inputs and outputs, digital inputs and outputs, and system status information.
Service $02	(FREEZE DATA)	This diagnostic service gains access to emission-related data value which were stored by ECM during the freeze frame. For details, refer to EC-45, "Diagnosis Description".
Service $03	DTCs	This diagnostic service gains access to emission-related power train trouble codes which were stored by ECM.
Service $04	CLEAR DIAG INFO	This diagnostic service can clear all emission-related diagnostic information. This includes: • Clear number of diagnostic trouble codes (Service $01) • Clear diagnostic trouble codes (Service $03) • Clear trouble code for freeze frame data (Service $01) • Clear freeze frame data (Service $02) • Reset status of system monitoring test (Service $01) • Clear on board monitoring test results (Service $06 and $07)
Service $06	(ON BOARD TESTS)	This diagnostic service accesses the results of on board diagnostic monitoring tests of specific components/systems that are not continuously monitored.
Service $07	(ON BOARD TESTS)	This diagnostic service enables the off board test drive to obtain test results for emission-related powertrain components/systems that are continuously monitored during normal driving conditions.
Service $08	—	This diagnostic service is not applicable on this vehicle.
Service $09	(CALIBRATION ID)	This diagnostic service enables the off-board test device to request specific vehicle information such as Vehicle Identification Number (VIN) and Calibration IDs.

INSPECTION PROCEDURE

1. Turn ignition switch OFF.

2. Connect “GST” to data link connector, which is located under dash panel near the hood opener handle.
3. Turn ignition switch ON.
4. Enter the program according to instruction on the screen or in the operation manual.
   (*: Regarding GST screens in this section, sample screens are shown.)

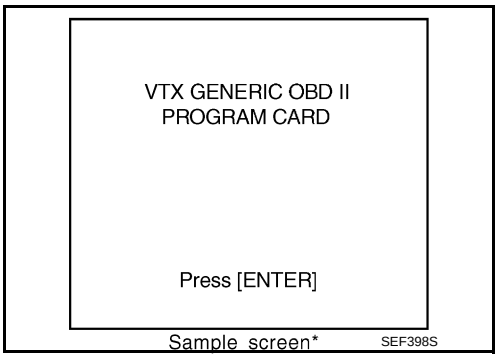

5. Perform each diagnostic mode according to each service procedure.
   For further information, see the GST Operation Manual of the tool maker.

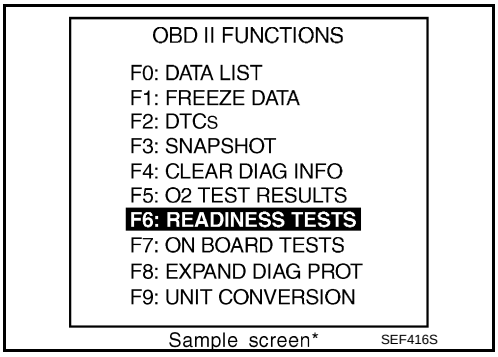

ECU DIAGNOSIS INFORMATION

ECM

Reference Value

INFOID:0000000005995470

VALUES ON THE DIAGNOSIS TOOL

Remarks:
- Specification data are reference values.
- Specification data are output/input values which are detected or supplied by the ECM at the connector.

*1 Specification data may not be directly related to their components signals/values/operations.
I.e. Adjust ignition timing with a timing light before monitoring IGN TIMING, because the monitor may show the specification data in spite of the ignition timing not being adjusted to the specification data. this IGN TIMING monitors the data calculated by the ECM according to the signals input from the camshaft position sensor and other ignition timing related sensors.

Monitor Item	Condition		Values/Status
ENG SPEED	• Run engine and compare CONSULT-III value with the tachometer indication.		Almost the same speed as the tachometer indication.
MAS A/F SE-B1	See EC-116, "Diagnosis Procedure".		
B/FUEL SCHDL	See EC-116, "Diagnosis Procedure".		
A/F ALPHA-B1	See EC-116, "Diagnosis Procedure".		
COOLAN TEMP/S	• Engine: After warming up		More than 70°C (158°F)
A/F SEN1 (B1)	• Engine: After warming up	Maintaining engine speed at 2,000 rpm	Fluctuates around 2.2 V
HO2S2 (B1)	• Revving engine from idle up to 3,000 rpm quickly after the following conditions are met. - Engine: After warming up - After keeping engine speed between 3,500 and 4,000 rpm for 1 minute and at idle for 1 minute under no load		0 - 0.3 V ←→ Approx. 0.6 - 1.0 V
HO2S2 MNTR (B1)	• Revving engine from idle up to 3,000 rpm quickly after the following conditions are met. - Engine: After warming up - After keeping engine speed between 3,500 and 4,000 rpm for 1 minute and at idle for 1 minute under no load		LEAN ←→ RICH
VHCL SPEED SE	• Turn drive wheels and compare CONSULT-III value with the speedometer indication.		Almost the same speed as speedometer indication
BATTERY VOLT	• Ignition switch: ON (Engine stopped)		11 - 14 V
ACCEL SEN 1	• Ignition switch: ON (Engine stopped)	Accelerator pedal: Fully released	0.6 - 0.9 V
		Accelerator pedal: Fully depressed	4.0 - 4.8 V
ACCEL SEN 2	• Ignition switch: ON (Engine stopped)	Accelerator pedal: Fully released	0.6 - 0.9 V
		Accelerator pedal: Fully depressed	3.9 - 4.8 V
TP SEN 1-B1	• Ignition switch: ON (Engine stopped) • Shift lever: 1st	Accelerator pedal: Fully released	More than 0.36 V
		Accelerator pedal: Fully depressed	Less than 4.75 V
TP SEN 2-B1	• Ignition switch: ON (Engine stopped) • Shift lever:1st	Accelerator pedal: Fully released	More than 0.36 V
		Accelerator pedal: Fully depressed	Less than 4.75 V
START SIGNAL	• Ignition switch: ON → START → ON		Off → On → Off
CLSD THL POS	• Ignition switch: ON (Engine stopped)	Accelerator pedal: Fully released	On
		Accelerator pedal: Slightly depressed	Off
AIR COND SIG	• Engine: After warming up, idle the engine	Air conditioner switch: OFF	Off
		Air conditioner switch: ON (Compressor operates.)	On

Monitor Item	Condition		Values/Status
PW/ST SIGNAL	• Engine: After warming up, idle the engine	Steering wheel: Not being turned	Off
		Steering wheel: Being turned	On
LOAD SIGNAL	• Ignition switch: ON	Rear window defogger switch: ON and/or Lighting switch: 2nd position	On
		Rear window defogger switch and lighting switch: OFF	Off
IGNITION SW	• Ignition switch: ON → OFF → ON		On → Off → On
HEATER FAN SW	• Engine: After warming up, idle the engine	Heater fan switch: ON	On
		Heater fan switch: OFF	Off
BRAKE SW	• Ignition switch: ON	Brake pedal: Fully released	Off
		Brake pedal: Slightly depressed	On
INJ PULSE-B1	• Engine: After warming up • Shift lever: Neutral • Air conditioner switch: OFF • No load	Idle	2.0 - 3.0 msec
		2,000 rpm	1.9 - 2.9 msec
IGN TIMING	• Engine: After warming up • Shift lever: Neutral • Air conditioner switch: OFF • No load	Idle	12°BTDC
		2,000 rpm	25° - 45°BTDC
CAL/LD VALUE	• Engine: After warming up • Selector lever position: Neutral • Air conditioner switch: OFF • No load	Idle	10% - 35%
		2,500 rpm	10% - 35%
MASS AIRFLOW	• Engine: After warming up • Selector lever position: Neutral • Air conditioner switch: OFF • No load	Idle	1.0 - 4.0 g·m/s
		2,500 rpm	2.0 - 10.0 g·m/s
PURG VOL C/V	• Engine: After warming up • Shift lever: Neutral • Air conditioner switch: OFF • No load	Idle (Accelerator pedal is not depressed even slightly, after engine starting)	0%
		2,000 rpm	0% - 50%
EGR VOL CON/V	• Engine: After warming up • Shift lever: P or N • Air conditioner switch: OFF • No load	Idle	0 - 1 step
		Revving engine from idle up to 3,000 rpm quickly	0 - 33 step
INT/V TIM(B1)	• Engine: After warming up • Shift lever: Neutral • Air conditioner switch: OFF • No load	Idle	–5° - 5°CA
		When revving engine up to 2,000rpm Quickly	Approx. 0° - 40°CA
INT/V SOL(B1)	• Engine: After warming up • Shift lever: Neutral • Air conditioner switch: OFF • No load	Idle	0% - 2%
		When revving engine up to 2,000rpm Quickly	Approx. 0% - 90%
AIR COND RLY	• Engine: After warming up, idle the engine	Air conditioner switch: OFF	Off
		Air conditioner switch: ON (Compressor operates)	On
FUEL PUMP RLY	• For 1 seconds after turning ignition switch: ON • Engine running or cranking		On
	• Except above		Off
THRTL RELAY	• Ignition switch: ON		On

Monitor Item	Condition		Values/Status
COOLING FAN	• Engine: After warning up, idle the engine • Air conditioner switch: OFF	Engine coolant temperature is 98°C (208°F) or less	Off
		Engine coolant temperature is between 98°C (208°F) and 99°C (210°F)	LOW*2
		Engine coolant temperature is 100°C (212°F) or more	HIGH
HO2S2 HTR (B1)	• Engine speed: Below 3,900 rpm after the following conditions are met. - Engine: After warming up - Keeping the engine speed between 3,500 and 4,000 rpm for 1 minute and at idle for 1 minute under no load		On
	• Engine speed: Above 3,900 rpm		OFF
ALT DUTY SIG	• Power generation voltage variable control: Operating		ON
	• Power generation voltage variable control: Not operating		OFF
VEHICLE SPEED	• Turn drive wheels and compare CONSULT-III value with the speedometer indication.		Almost the same speed as speedometer indication
IDL A/V LEARN	• Engine: running	Idle air volume learning has not been performed yet.	YET
		Idle air volume learning has already been performed successfully.	CMPLT
TRVL AFTER MIL	• Ignition switch: ON	Vehicle has traveled after MIL has turned ON.	0 - 65,535 km (0 - 40,723 miles)
A/F S1 HTR(B1)	• Engine: After warming up, idle the engine (More than 140 seconds after starting engine)		4 - 100%
ALT DUTY	• Engine: Idle		0 - 80%
BAT CUR SEN	• Engine speed: Idle • Battery: Fuel charged*3 • Selector lever: Neutral • Air conditioner switch: OFF • No load		Approx 2,500 - 3,500 mV
A/F ADJ-B1	• Engine: Running		-0.330 - 0.330
P/N POSI SW	• Ignition switch: ON	Selector lever: Neutral	ON
		Selector lever: Except above	OFF
INT/A TEMP SE	• Ignition switch: ON		Indicates intake air temperature.
AC PRESS SEN	• Engine: Idle • Both A/C switch and blower fan switch: ON (Compressor operates)		1.0 - 4.0 V
EGR TEMP SEN	• Engine: After warming up		Less than 4.8 V
FPCM	• Ignition switch: OFF		Off
	• For 1 seconds after turning ignition switch: ON		Low
	• Engine: Idle • Engine coolant temperature: More than 10°C (50°F)		Mid
	• Engine: Cranking		Hi
THRTL STK CNT B1	• Ignition switch: ON		A value corresponding to the number of cloggings in the throttle valve closed position
HO2 S2 DIAG2(B1)	**NOTE:** The item is indicated, but not used.		—
A/F SEN1 DIAG2 (B1)	**NOTE:** The item is indicated, but not used.		—

*1: Accelerator pedal position sensor 2 signal and throttle position sensor 2 signal are converted by ECM internally. Thus, they differ from ECM terminals voltage signal.
*2: Although the state is indicated as "LOW," the cooling fan operates at high speeds.

*3: Before measuring the terminal voltage, confirm that the battery is fully charged. Refer to PG-130, "How to Handle Battery"

TERMINAL LAYOUT

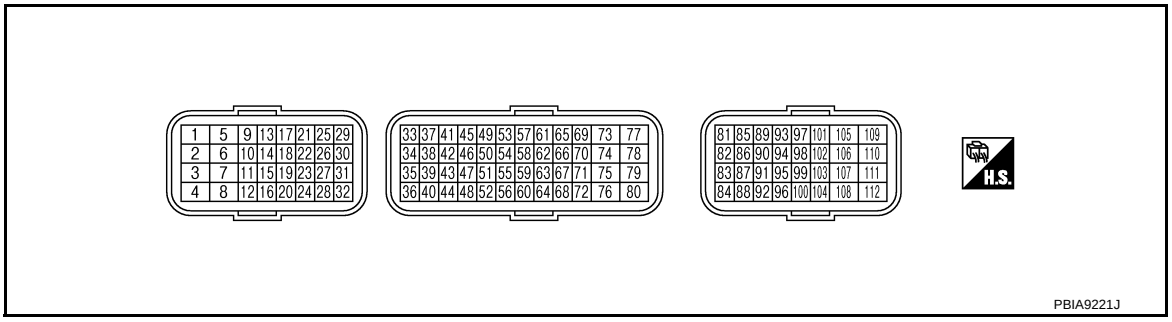

PHYSICAL VALUES

NOTE:
- ECM is located in the engine room left side near battery.
- When disconnecting ECM harness connector (A), loosen (C) it with levers as far as they will go as shown in the figure.
  - ECM (1)
  - Fasten (B)
- Connect a break-out box and harness adapter between the ECM and ECM harness connector.
  - Use extreme care not to touch 2 pins at one time.
  - Data is for comparison and may not be exact.
- Specification data are reference values and are measured between each terminals.
- Pulse signal is measured by CONSULT-III.

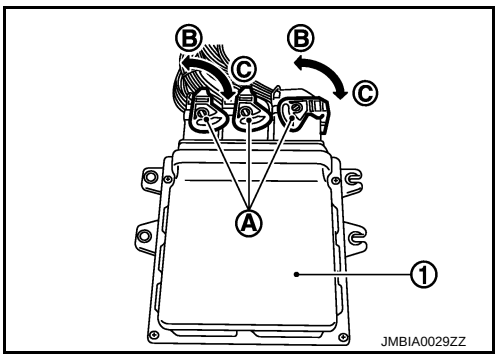

Terminal No.		Description		Condition	Value (Approx.)
+	–	Signal name	Input/ Output		
1 (L)	107 (B)	Throttle control motor (Open)	Output	[Ignition switch: ON] • Engine stopped • Shift lever: 1st position • Accelerator pedal: Fully depressed	2 V★ 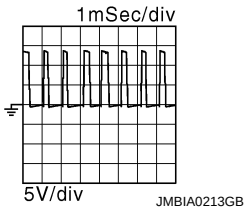
2 (SB)	107 (B)	Throttle control motor power supply	Input	[Ignition switch: ON]	BATTERY VOLTAGE (11 - 14 V)
3 (G)	107 (B)	A/F sensor 1 heater	Output	[Engine is running] • Warm-up condition • Idle speed (More than 140 seconds after starting engine)	2.9 - 8.8 V★ 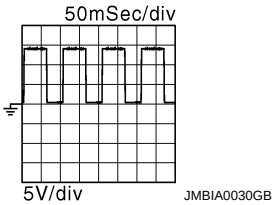

Terminal No.		Description		Condition	Value (Approx.)
+	–	Signal name	Input/ Output		
4 (P)	107 (B)	Throttle control motor (Close)	Output	[Ignition switch: ON] • Engine stopped • Shift lever: 1st position • Accelerator pedal: Fully released	2 V★ 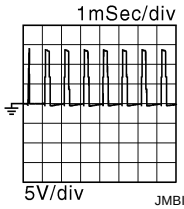
5 (G)	107 (B)	Heated oxygen sensor 2 heater	Output	[Engine is running] • Engine speed: Below 3,900 rpm after the following conditions are met - Engine: after warming up - Keeping the engine speed between 3,500 and 4,000 rpm for 1 minute and at idle for 1 minute under no load	10 V★ 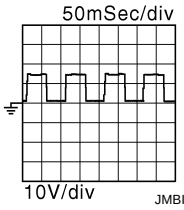
				[Ignition switch: ON] • Engine stopped [Engine is running] • Engine speed: Above 3,900 rpm	BATTERY VOLTAGE (11 - 14 V)
9 (P)	107 (B)	EVAP canister purge volume control solenoid valve	Output	[Engine is running] • Idle speed • Accelerator pedal is not depressed even slightly, after engine starting	BATTERY VOLTAGE (11 - 14 V)★ 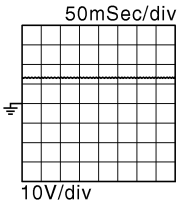
				[Engine is running] • Engine speed: About 2,000 rpm (More than 100 seconds after starting engine.)	BATTERY VOLTAGE (11 - 14 V)★ 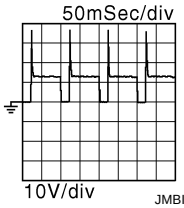
10 (B)	—	ECM ground	—	—	—
11 (B)	—	ECM ground	—	—	—
12 (R) 16 (LG) 20 (G) 24 (SB)	107 (B)	EGR volume control valve (step 1) EGR volume control valve (step 3) EGR volume control valve (step 2) EGR volume control valve (step 4)	Output	[Engine is running] • Idle speed	0.5 V or BATTERY VOLTAGE (11 - 14 V) Output voltage varies with EGR volume control valve opening angle (step).

Terminal No.		Description		Condition	Value (Approx.)
+	–	Signal name	Input/ Output		
15 (Y)	107 (B)	Throttle control motor relay	Output	[Ignition switch: ON → OFF]	0 - 1.0 V ↓ BATTERY VOLTAGE (11 - 14 V) ↓ 0 V
				[Ignition switch: ON]	0 - 1.0 V
17 (R) 18 (LG) 22 (SB)	107 (B)	Ignition signal No. 1 Ignition signal No. 2 Ignition signal No. 3	Output	[Engine is running] • Warm-up condition • Idle speed **NOTE:** The pulse cycle changes depending on rpm at idle	0 - 0.3 V★ 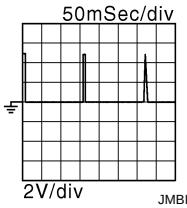 JMBIA0219GB
				[Engine is running] • Warm-up condition • Engine speed: 2,500 rpm	0.2 - 0.5 V★ 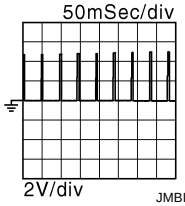 JMBIA0220GB
23 (GR)	107 (B)	Fuel pump relay	Output	[Ignition switch: ON] • For 1 second after turning ignition switch ON [Engine is running]	0 - 1.0 V
				[Ignition switch: ON] • More than 1 second after turning ignition switch ON	BATTERY VOLTAGE (11 - 14 V)
29 (Y) 30 (O) 31 (L)	107 (B)	Fuel injector No. 3 Fuel injector No. 2 Fuel injector No. 1	Output	[Engine is running] • Warm-up condition • Idle speed **NOTE:** The pulse cycle changes depending on rpm at idle	BATTERY VOLTAGE (11 - 14 V)★ 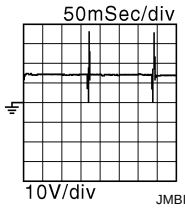 JMBIA0221GB
				[Engine is running] • Warm-up condition • Engine speed: 2,000 rpm	BATTERY VOLTAGE (11 - 14 V)★ 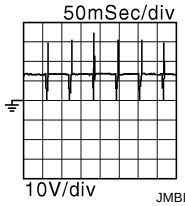 JMBIA0222GB
27 (LG)	107 (B)	Fuel pump control module (FPCM) check	Input	[Ignition switch: ON] • For 1 second after turning ignition switch ON	10 V
				[When cranking engine]	8 V
				[Engine is running] • Warm-up condition • Idle speed	10.5 - 11.5 V

Terminal No.		Description		Condition	Value (Approx.)
+	–	Signal name	Input/ Output		
28 (R)	107 (B)	Fuel pump control module (FPCM)	Output	[When cranking engine]	0 V
				[Engine is running] • Warm-up condition • Idle speed	4 - 6 V
32 (P)	107 (B)	ECM relay (Self shut-off)	Output	[Engine is running] [Ignition switch: OFF] • A few seconds after turning ignition switch OFF	0 - 1.0 V
				[Ignition switch: OFF] • More than a few seconds after turning ignition switch OFF	BATTERY VOLTAGE (11 - 14 V)
33 (LG)	36 (Y)	Throttle position sensor 1	Input	[Ignition switch: ON] • Engine stopped • Shift lever: 1st position • Accelerator pedal: Fully released	More than 0.36 V
				[Ignition switch: ON] • Engine stopped • Shift lever: 1st position • Accelerator pedal: Fully depressed	Less than 4.75 V
34 (O)	36 (Y)	Throttle position sensor 2	Input	[Ignition switch: ON] • Engine stopped • Shift lever: 1st position • Accelerator pedal: Fully released	Less than 4.75 V
				[Ignition switch: ON] • Engine stopped • Shift lever: 1st position • Accelerator pedal: Fully depressed	More than 0.36 V
36 (Y)	—	Sensor ground (Throttle position sensor)	—	—	—
37 (W)	40 —	Knock sensor	Input	[Engine is running] • Idle speed	2.5 V
38 (P)	44 (B)	Engine coolant temperature sensor	Input	[Engine is running]	0 - 4.8 V Output voltage varies with engine coolant temperature.
39*1 (P)	—	—	—	—	—
40 —	—	Sensor ground (Knock sensor shield circuit)	—	—	—
42 (O)	51 (Y)	EGR temperature sensor	Input	[Engine is running] • Warm-up condition	Less than 4.8 V
				[Engine is running] • Warm-up condition • EGR system: Operating	0 - 1.5 V
44 (B)	—	Sensor ground (Engine coolant temperature sensor)	—	—	—

Terminal No.		Description		Condition	Value (Approx.)
+	–	Signal name	Input/ Output		
45 (G)	52 (LG)	Mass air flow sensor	Input	[Ignition switch ON] • Engine stopped	0.4 V
				[Engine is running] • Warm-up condition • Idle speed	0.9 - 1.3 V
				[Engine is running] • Warm-up condition • Engine is revving from idle to about 4,000 rpm	0.9 - 1.3 to 2.4 V (Check for linear voltage rise in response to engine being increased to about 4,000 rpm.)
46 (V)	55 (O)	Intake air temperature sensor	Input	[Engine is running]	0 - 4.8 V Output voltage varies with intake air temperature.
49 (L)	107 (B)	A/F sensor 1	Input	[Ignition switch: ON]	2.2 V
50 (W)	59 (B)	Heated oxygen sensor 2	Input	[Engine is running] • Revving engine from idle to 3,000 rpm quickly after the following conditions are met - Engine: after warming up - Keeping the engine speed between 3,500 and 4,000 rpm for 1 minute and at idle for 1 minute under no load	0 - 1.0 V
51 (LG)	—	Sensor ground (EGR temperature sensor)	—	—	—
52 (LG)	—	Sensor ground (Mass air flow sensor)	—	—	—
53 (R)	107 (B)	A/F sensor 1	Input	[Engine is running] • Warm-up condition • Engine speed: 2,000 rpm	1.8 V Output voltage varies with air fuel ratio.
54*1 (V)	—	—	—	—	—
55 (O)	—	Sensor ground (Intake air temperature sensor)	—	—	—
56 (P)	—	Sensor ground (Heated oxygen sensor 1)	—	—	—
57*1 (R)	—	—	—	—	—
58 (R)	68 (V)	Battery current sensor	Input	[Engine is running] • Battery: Fully charged*2 • Idle speed	2.5 - 3.5 V
59 (B)	—	Sensor ground (Heated oxygen sensor 2)	—	—	—

Terminal No.		Description		Condition	Value (Approx.)
+	–	Signal name	Input/ Output		
61 (W)	62 (R)	Crankshaft position sensor (POS)	Input	[Engine is running] • Warm-up condition • Idle speed **NOTE:** The pulse cycle changes depending on rpm at idle	4.0 V★ 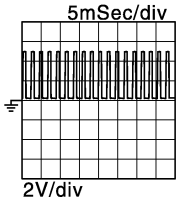 JSBIA0395GB
				[Engine is running] • Engine speed: 2,000 rpm	4.0 V★ 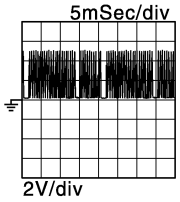 JSBIA0396GB
62 (R)	—	Sensor ground [Crankshaft position sensor (POS)]	—	—	—
63 (BR)	—	Sensor ground [Camshaft position sensor (PHASE)]	—	—	—
65 (G)	63 (BR)	Camshaft position sensor (PHASE)	Input	[Engine is running] • Warm-up condition • Idle speed **NOTE:** The pulse cycle changes depending on rpm at idle	0.8 V★ 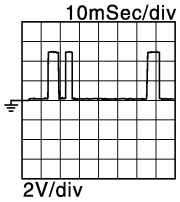 JSBIA0397GB
				[Engine is running] • Engine speed is 2,000 rpm	0.8 V★ 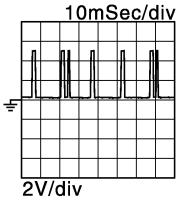 JSBIA0398GB
68 (BR)	—	Sensor ground (Battery current sensor)	—	—	—
69 (W)	107 (B)	PNP signal	Input	[Ignition switch: ON] • Shift lever: Neutral position	BATTERY VOLTAGE (11 - 14 V)
				[Ignition switch: ON] • Shift lever: Except above position	0 V
71 (V)	68 (Y)	Sensor power supply (Battery current sensor)	—	[Ignition switch: ON]	5 V
72 (V)	36 (Y)	Sensor power supply (Throttle position sensor)	—	[Ignition switch: ON]	5 V

Terminal No.		Description		Condition	Value (Approx.)
+	–	Signal name	Input/ Output		
73 (P)	107 (B)	Intake valve timing control solenoid valve	Output	[Engine is running] • Warm-up condition • Idle speed	BATTERY VOLTAGE (11 - 14 V)
				[Engine is running] • Warm-up condition • When revving engine up to 2,000rpm quickly	7 - 10 V★ 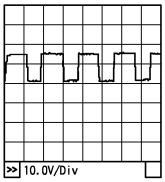 PBIA4937J
75 (BR)	62 (R)	Sensor power supply [Crankshaft position sensor (POS)]	—	[Ignition switch: ON]	5 V
78 (O)	63 (BR)	Sensor power supply [Camshaft position sensor (PHASE)]	—	[Ignition switch: ON]	5 V
81 (P)	107 (B)	Power supply for ECM (Back-up)	Input	[Ignition switch: OFF]	BATTERY VOLTAGE (11 - 14 V)
83 (P)	—	CAN communication line	Input/ Output	—	—
84 (L)	—	CAN communication line	Input/ Output	—	—
85 (GR)	98 (BR)	Refrigerant pressure sensor	Input	[Engine is running] • Warm-up condition • Both A/C switch and blower fan switch: ON (Compressor operates)	1.0 - 4.0 V
88 (SB)	—	Data link connector	Input/ Output	—	—
93 (O)	107 (B)	Ignition switch	Input	[Ignition switch: OFF]	0 V
				[Ignition switch: ON]	BATTERY VOLTAGE (11 - 14 V)
98 (BR)	—	Sensor ground (Refrigerant pressure sensor)	—	—	—
99 (R)	107 (B)	Stop lamp switch	Input	[Ignition switch: OFF] • Brake pedal: Fully released	0 V
				[Ignition switch: OFF] • Brake pedal: Slightly depressed	BATTERY VOLTAGE (11 - 14 V)
101 (W)	98 (BR)	Sensor power supply (Refrigerant pressure sensor)	—	[Ignition switch: ON]	5 V
102 (BR)	104 (R)	Sensor power supply (Accelerator pedal position sensor 2)	—	[Ignition switch: ON]	5 V
103 (W)	104 (R)	Accelerator pedal position sensor 2	Input	[Ignition switch: ON] • Engine stopped • Accelerator pedal: Fully released	0.3 - 0.6 V
				[Ignition switch: ON] • Engine stopped • Accelerator pedal: Fully depressed	1.95 - 2.4 V

Terminal No.		Description		Condition	Value (Approx.)
+	–	Signal name	Input/ Output		
104 (R)	—	Sensor ground (Accelerator pedal position sensor 2)	—	—	—
105 (G)	107 (B)	Power supply for ECM	Input	[Ignition switch: ON]	BATTERY VOLTAGE (11 - 14 V)
106 (V)	111 (GR)	Sensor power supply (Accelerator pedal position sensor 1)	—	[Ignition switch: ON]	5 V
107 (B)	—	ECM ground	—	—	—
110 (SB)	111 (GR)	Accelerator pedal position sensor 1	Input	[Ignition switch: ON] • Engine stopped • Accelerator pedal: Fully released	0.6 - 0.9 V
				[Ignition switch: ON] • Engine stopped • Accelerator pedal: Fully depressed	3.9 - 4.7 V
111 (GR)	—	Sensor ground (Accelerator pedal position sensor 1)	—	—	—

★: Average voltage for pulse signal (Actual pulse signal can be confirmed by oscilloscope.)
*1: Not used for engine control system.
*2: Before measuring the terminal voltage, confirm that the battery is fully charged. Refer to PG-130, "How to Handle Battery".

Fail Safe

INFOID:0000000005995471

NON DTC RELATED ITEM

Detected items	Engine operating condition in fail-safe mode	Remarks	Reference page
Malfunction indicator lamp circuit	Engine speed will not rise more than 2,500 rpm due to the fuel cut	When there is an open circuit on MIL circuit, the ECM cannot warn the driver by lighting up MIL when there is malfunction on engine control system. Therefore, when electrical controlled throttle and part of ECM related diagnoses are continuously detected as NG for 5 trips, ECM warns the driver that engine control system malfunctions and MIL circuit is open by means of operating fail safe function. The fail safe function also operates when above diagnoses except MIL circuit are detected and demands the driver to repair the malfunction.	EC-296, "Component Function Check"

DTC RELATED ITEM

DTC No.	Detected items	Engine operating condition in fail safe mode
P0011	Intake valve timing control	The signal is not energized to the intake valve timing control solenoid valve and the valve control does not function.
P0102 P0103	Mass air flow sensor circuit	Engine speed will not rise more than 2,400 rpm due to the fuel cut.

DTC No.	Detected items	Engine operating condition in fail safe mode	
P0117 P0118	Engine coolant temperature sensor circuit	Engine coolant temperature will be determined by ECM based on the following conditions. CONSULT-III displays the engine coolant temperature decided by ECM.	
		Condition	Engine coolant temperature decided (CONSULT-III display)
		Just as ignition switch is turned ON or START	40°C (104°F)
		Approx. 4 minutes or more after engine starting	80°C (176°F)
		Except as shown above	40 - 80°C (104 - 176°F) (Depends on the time)
		When the fail safe system for engine coolant temperature sensor is activated, the cooling fan operates while engine is running.	
P0122 P0123 P0222 P0223 P2135	Throttle position sensor	The ECM controls the electric throttle control actuator in regulating the throttle opening in order for the idle position to be within +10 degrees. The ECM regulates the opening speed of the throttle valve to be slower than the normal condition. So, the acceleration will be poor.	
P0403	EGR volume control valve	Engine speed will not rise more than 2,400 rpm due to the fuel cut.	
P0605	ECM	(When ECM calculation function is malfunctioning:) ECM stops the electric throttle control actuator control, throttle valve is maintained at a fixed opening (approx. 5 degrees) by the return spring.	
P0643	Sensor power supply	ECM stops the electric throttle control actuator control, throttle valve is maintained at a fixed opening (approx. 5 degrees) by the return spring.	
P1805	Brake switch	ECM controls the electric throttle control actuator by regulating the throttle opening to a small range. Therefore, acceleration will be poor.	
		Vehicle condition	Driving condition
		When engine is idling	Normal
		When accelerating	Poor acceleration
P2100 P2103	Throttle control motor relay	ECM stops the electric throttle control actuator control, throttle valve is maintained at a fixed opening (approx. 5 degrees) by the return spring.	
P2101	Electric throttle control function	ECM stops the electric throttle control actuator control, throttle valve is maintained at a fixed opening (approx. 5 degrees) by the return spring.	
P2118	Throttle control motor	ECM stops the electric throttle control actuator control, throttle valve is maintained at a fixed opening (approx. 5 degrees) by the return spring.	
P2119	Electric throttle control actuator	(When electric throttle control actuator does not function properly due to the return spring malfunction:) ECM controls the electric throttle actuator by regulating the throttle opening around the idle position. The engine speed will not rise more than 2,000 rpm.	
		(When throttle valve opening angle in fail safe mode is not in specified range:) ECM controls the electric throttle control actuator by regulating the throttle opening to 20 degrees or less.	
		(When ECM detects the throttle valve is stuck open:) While the vehicle is driving, it slows down gradually by fuel cut. After the vehicle stops, the engine stalls. The engine can restart in the Neutral position, and engine speed will not exceed 1,000 rpm or more.	
P2122 P2123 P2127 P2128 P2138	Accelerator pedal position sensor	The ECM controls the electric throttle control actuator in regulating the throttle opening in order for the idle position to be within +10 degrees. The ECM regulates the opening speed of the throttle valve to be slower than the normal condition. So, the acceleration will be poor.	

DTC Inspection Priority Chart

INFOID:0000000005995472

If some DTCs are displayed at the same time, perform inspections one by one based on the following priority chart.

Priority	DTC	Detected items
1	U1001	CAN communication line
	P0102, P0103	Mass air flow sensor
	P0112, P0113	Intake air temperature sensor
	P0117, P0118	Engine coolant temperature sensor
	P0122, P0123, P0222, P0223, P1225, P1226, P2135	Throttle position sensor
	P0327, P0328	Knock sensor
	P0335	Crankshaft position sensor (POS)
	P0340	Camshaft position sensor (PHASE)
	P0403	EGR volume control valve
	P0500	Vehicle speed sensor
	P0605, P0607	ECM
	P0643	Sensor power supply
	P0850	Park/neutral position (PNP) switch
	P1550, P1551, P1552, P1553, P1554	Battery current sensor
	P1610 - P1615	NATS
	P2122, P2123, P2127, P2128, P2138	Accelerator pedal position sensor
2	P0031, P0032	Air fuel ratio (A/F) sensor 1 heater
	P0037, P0038	Heated oxygen sensor 2 heater
	P0075	Intake valve timing control solenoid valve
	P0130, P0131, P0132, P0133, P2A00	Air fuel ratio (A/F) sensor 1
	P0137, P0138, P0139	Heated oxygen sensor 2
	P0405, P0406	EGR temperature sensor
	P0444	EVAP canister purge volume control solenoid valve
	P0603	ECM power supply
	P1217	Engine over temperature (OVERHEAT)
	P1805	Brake switch
	P2100, P2103	Throttle control motor relay
	P2101	Electric throttle control function
	P2118	Throttle control motor
3	P0011	Intake valve timing control
	P0171, P0172	Fuel injection system function
	P0300 - P0303	Misfire
	P0400, P1402	EGR system
	P0420	Three way catalyst function
	P2119	Electric throttle control actuator

DTC Index

INFOID:0000000005995473

×:Applicable —: Not applicable

DTC*1		Items (CONSULT-III screen terms)	SRT code	Trip	MIL	Reference page
CONSULT-III*2	ECM*3					
U1001	1001*4	CAN COMM CIRCUIT	—	2	—	EC-126
P0000	**0000**	**NO DTC IS DETECTED. FURTHER TESTING MAY BE REQUIRED.**	—	—	**Flashing**	**—**
P0011	0011	INT/V TIM CONT-B1	×	2	—	EC-127
P0031	0031	A/F SEN1 HTR (B1)	—	2	×	EC-131
P0032	0032	A/F SEN1 HTR (B1)	—	2	×	EC-131
P0037	0037	HO2S2 HTR (B1)	—	2	×	EC-133
P0038	0038	HO2S2 HTR (B1)	—	2	×	EC-133
P0075	0075	INT/V TIM V/CIR-B1	—	2	×	EC-135
P0102	0102	MAF SEN/CIRCUIT-B1	—	1	×	EC-137
P0103	0103	MAF SEN/CIRCUIT-B1	—	1	×	EC-137
P0112	0112	IAT SEN/CIRCUIT-B1	—	2	×	EC-141
P0113	0113	IAT SEN/CIRCUIT-B1	—	2	×	EC-141
P0117	0117	ECT SEN/CIRC	—	2	×	EC-143
P0118	0118	ECT SEN/CIRC	—	2	×	EC-143
P0122	0122	TP SEN 2/CIRC-B1	—	1	×	EC-145
P0123	0123	TP SEN 2/CIRC-B1	—	1	×	EC-145
P0130	0130	A/F SENSOR1 (B1)	—	2	×	EC-147
P0131	0131	A/F SENSOR1 (B1)	—	2	×	EC-150
P0132	0132	A/F SENSOR1 (B1)	—	2	×	EC-152
P0133	0133	A/F SENSOR1 (B1)	×	2	×	EC-154
P0137	0137	HO2S2 (B1)	×	2	×	EC-158
P0138	0138	HO2S2 (B1)	×	2	×	EC-164
P0139	0139	HO2S2 (B1)	×	2	×	EC-172
P0171	0171	FUEL SYS-LEAN-B1	—	2	×	EC-178
P0172	0172	FUEL SYS-RICH-B1	—	2	×	EC-182
P0222	0222	TP SEN 1/CIRC-B1	—	1	×	EC-186
P0223	0223	TP SEN 1/CIRC-B1	—	1	×	EC-186
P0300	0300	MULTI CYL MISFIRE	—	1 or 2	× or —	EC-189
P0301	0301	CYL 1 MISFIRE	—	1 or 2	× or —	EC-189
P0302	0302	CYL 2 MISFIRE	—	1 or 2	× or —	EC-189
P0303	0303	CYL 3 MISFIRE	—	1 or 2	× or —	EC-189
P0327	0327	KNOCK SEN/CIRC-B1	—	2	—	EC-195
P0328	0328	KNOCK SEN/CIRC-B1	—	2	—	EC-195
P0335	0335	CKP SEN/CIRCUIT	—	2	×	EC-197
P0340	0340	CMP SEN/CIRC-B1	—	2	×	EC-200
P0400	0400	EGR SYSTEM	×	2	×	EC-203
P0403	0403	EGR VOL CON/V CIR	—	1	×	EC-206
P0405	0405	EGR TEMP SEN/CIRC	—	2	×	EC-209
P0406	0406	EGR TEMP SEN/CIRC	—	2	×	EC-209

DTC*1		Items (CONSULT-III screen terms)	SRT code	Trip	MIL	Reference page
CONSULT-III*2	ECM*3					
P0420	0420	TW CATALYST SYS-B1	×	2	×	EC-213
P0444	0444	PURG VOLUME CONT/V	—	2	×	EC-218
P0500	0500	VEH SPEED SEN/CIRC*5	—	2	×	EC-221
P0603	0603	ECM BACK UP/CIRCUIT*6	—	2	×	EC-223
P0605	0605	ECM	—	1 or 2	× or —	EC-225
P0607	0607	ECM	—	2	—	EC-227
P0643	0643	SENSOR POWER/CIRC	—	1	×	EC-228
P0850	0850	P-N POS SW/CIRCUIT	—	2	×	EC-230
P1217	1217	ENG OVER TEMP	—	1	×	EC-233
P1225	1225	CTP LEARNING-B1	—	2	—	EC-237
P1226	1226	CTP LEARNING-B1	—	2	—	EC-238
P1402	1402	EGR SYSTEM	×	2	×	EC-239
P1550	1550	BAT CURRENT SENSOR	—	2	—	EC-242
P1551	1551	BAT CURRENT SENSOR	—	2	—	EC-245
P1552	1552	BAT CURRENT SENSOR	—	2	—	EC-245
P1553	1553	BAT CURRENT SENSOR	—	2	—	EC-248
P1554	1554	BAT CURRENT SENSOR	—	2	—	EC-251
P1610	1610	LOCK MODE	—	2	—	SEC-38 SEC-144
P1611	1611	ID DISCORD, IMMU-ECM	—	2	—	SEC-39 SEC-145
P1612	1612	CHAIN OF ECM-IMMU	—	2	—	SEC-41 SEC-146
P1614	1614	CHAIN OF IMMU-KEY	—	2	—	SEC-42 SEC-147
P1615	1615	DIFFERENCE OF KEY	—	2	—	XX-XX, "*****" SEC-150
P1805	1805	BRAKE SW/CIRCUIT	—	1	—	EC-255
P2100	2100	ETC MOT PWR-B1	—	1	×	EC-257
P2101	2101	ETC FUNCTION/CIRC-B1	—	1	×	EC-260
P2103	2103	ETC MOT PWR-B1	—	1	×	EC-257
P2118	2118	ETC MOT-B1	—	1	×	EC-264
P2119	2119	ETC ACTR-B1	—	1	×	EC-266
P2122	2122	APP SEN 1/CIRC	—	1	×	EC-268
P2123	2123	APP SEN 1/CIRC	—	1	×	EC-268
P2127	2127	APP SEN 2/CIRC	—	1	×	EC-270
P2128	2128	APP SEN 2/CIRC	—	1	×	EC-270
P2135	2135	TP SENSOR-B1	—	1	×	EC-273
P2138	2138	APP SENSOR	—	1	×	EC-275
P2A00	2A00	A/F SENSOR1 (B1)	—	2	×	EC-278

*1: 1st trip DTC No. is the same as DTC No.
*2: This number is prescribed by SAE J2012/ISO 15031-6.
*3: In Diagnostic Test Mode II (Self-diagnostic results), this number is controlled by NISSAN.
*4: The troubleshooting for this DTC needs CONSULT-III.
*5: When the fail-safe operations for both self-diagnoses occur, the MIL illuminates.

*6: This self-diagnosis is not for ECM power supply circuit, even though “ECM BACK UP/CIRCUIT” is displayed on CONSULT-III screen.

How to Set SRT Code

INFOID:0000000005989204

To set all SRT codes, self-diagnosis for the items indicated on “SYSTEM READINESS TEST (SRT) CODE” in EC-45, "Diagnosis Description", must be performed one or more times. Each diagnosis may require a long period of actual driving under various conditions.

WITH CONSULT-III

Perform corresponding DTC CONFIRMATION PROCEDURE one by one based on Performance Priority in the table on “SRT Item” in EC-45, "Diagnosis Description".

WITHOUT CONSULT-III

The most efficient driving pattern in which SRT codes can be properly set is explained below. The driving pattern should be performed one or more times to set all SRT codes.

DRIVING PATTERN

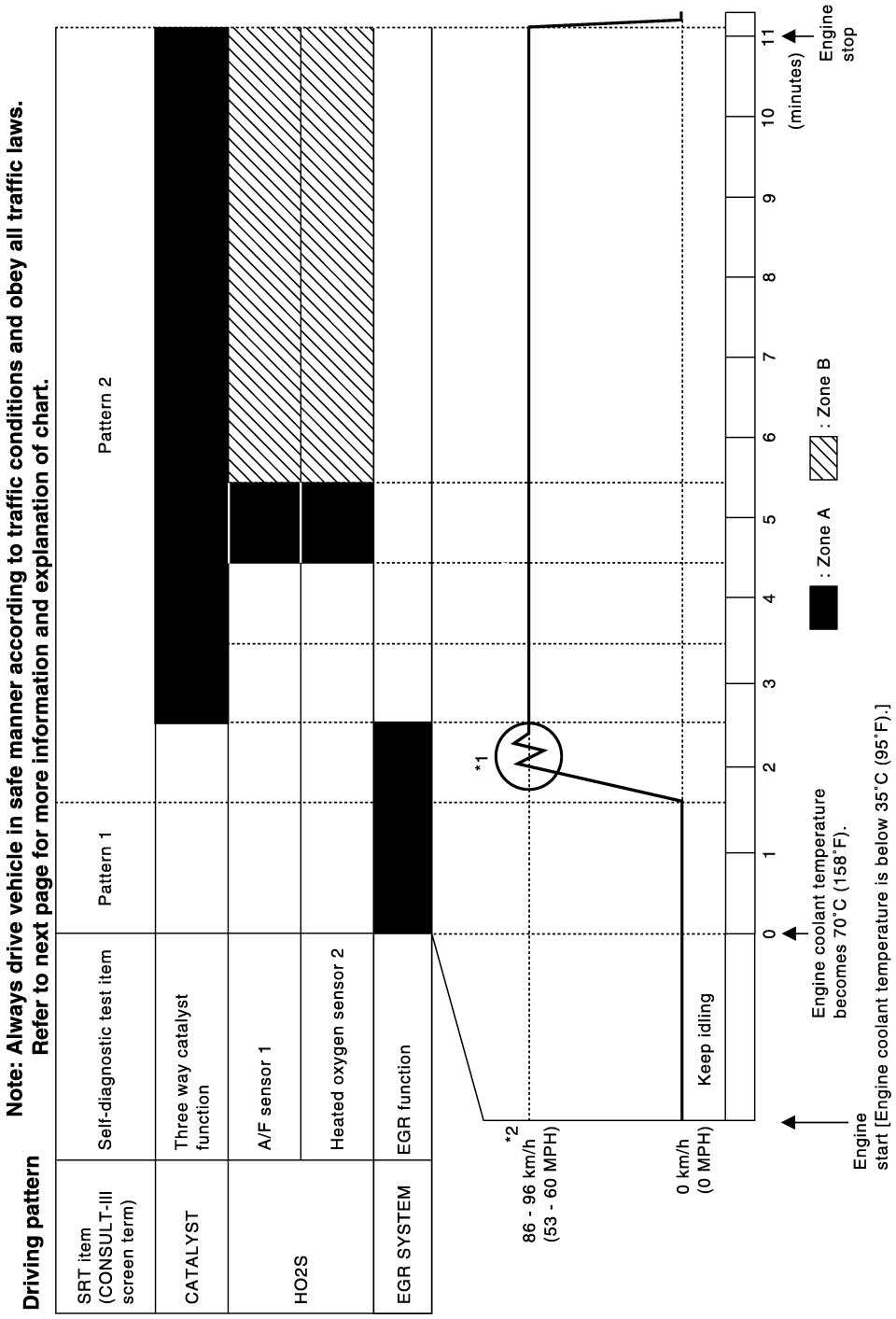

- The time required for each diagnosis varies with road surface conditions, weather, altitude, individual driving habits, etc.
  Zone A refers to the range where the time, required for the diagnosis under normal conditions*, is the shortest.
  Zone B refers to the range where the diagnosis can still be performed if the diagnosis is not completed within zone A.

*: Normal conditions refer to the following:

- Sea level
- Flat road
- Ambient air temperature: 20 - 30°C (68 - 86°F)
- Diagnosis is performed as quickly as possible under normal conditions.
  Under different conditions [For example: ambient air temperature other than 20 - 30°C (68 - 86°F)], diagnosis may also be performed.

Pattern 1:

- **The engine is started at the engine coolant temperature of –10 to 35°C (14 to 95°F) (where the voltage between the ECM terminal 38 and 44 is 3.0 - 4.3 V).**
- **The engine must be operated at idle speed until the engine coolant temperature is greater than 70°C (158°F) (where the voltage between the ECM terminal 38 and 44 is lower than 1.4 V).**

Pattern 2:

- When steady-state driving is performed again even after it is interrupted, each diagnosis can be conducted. In this case, the time required for diagnosis may be extended.

*1: Depress the accelerator pedal until vehicle speed is 90 km/h (56 MPH), then release the accelerator pedal and keep it released for more than 10 seconds. Depress the accelerator pedal until vehicle speed is 90 km/h (56 MPH) again.
*2: Checking the vehicle speed with GST is advised.

Test Value and Test Limit

INFOID:0000000006053863

The following is the information specified in Service $06 of SAE J1979/ISO 15031-5.
The test value is a parameter used to determine whether a system/circuit diagnostic test is OK or NG while being monitored by the ECM during self-diagnosis. The test limit is a reference value which is specified as the maximum or minimum value and is compared with the test value being monitored.
These data (test value and test limit) are specified by On Board Monitor ID (OBDMID), Test ID (TID), Unit and Scaling ID and can be displayed on the GST screen.
The items of the test value and test limit will be displayed with GST screen which items are provided by the ECM. (eg., if bank 2 is not applied on this vehicle, only the items of bank 1 are displayed)

Item	OBD-MID	Self-diagnostic test item	DTC	Test value and Test limit (GST display)		Description
				TID	Unit and Scaling ID	
HO2S	01H	Air fuel ratio (A/F) sensor 1 (Bank 1)	P0131	83H	0BH	Minimum sensor output voltage for test cycle
			P0131	84H	0BH	Maximum sensor output voltage for test cycle
			P0130	85H	0BH	Minimum sensor output voltage for test cycle
			P0130	86H	0BH	Maximum sensor output voltage for test cycle
			P0133	87H	04H	Response rate: Response ratio (Lean to Rich)
			P0133	88H	04H	Response rate: Response ratio (Rich to Lean)
			P2A00	89H	84H	The amount of shift in air fuel ratio
			P2A00	8AH	84H	The amount of shift in air fuel ratio
			P0130	8BH	0BH	Difference in sensor output voltage
			P0133	8CH	83H	Response gain at the limited frequency
			P014C	8DH	04H	O2 Sensor Slow Response - Rich to Lean Bank 1 Sensor 1
			P014C	8EH	04H	O2 Sensor Slow Response - Rich to Lean Bank 1 Sensor 1
			P014D	8FH	84H	O2 Sensor Slow Response - Lean to Rich Bank 1 Sensor 1
			P014D	90H	84H	O2 Sensor Slow Response - Lean to Rich Bank 1 Sensor 1
			P015A	91H	01H	O2 Sensor Delayed Response - Rich to Lean Bank 1 Sensor 1
			P015A	92H	01H	O2 Sensor Delayed Response - Rich to Lean Bank 1 Sensor 1
			P015B	93H	01H	O2 Sensor Delayed Response - Lean to Rich Bank 1 Sensor 1
			P015B	94H	01H	O2 Sensor Delayed Response - Lean to Rich Bank 1 Sensor 1
	02H	Heated oxygen sensor 2 (Bank 1)	P0138	07H	0CH	Minimum sensor output voltage for test cycle
			P0137	08H	0CH	Maximum sensor output voltage for test cycle
			P0138	80H	0CH	Sensor output voltage
			P0139	81H	0CH	Difference in sensor output voltage
	03H	Heated oxygen sensor 3 (Bank 1)	P0143	07H	0CH	Minimum sensor output voltage for test cycle
			P0144	08H	0CH	Maximum sensor output voltage for test cycle
			P0146	80H	0CH	Sensor output voltage
			P0145	81H	0CH	Difference in sensor output voltage

Item	OBD-MID	Self-diagnostic test item	DTC	Test value and Test limit (GST display)		Description
				TID	Unit and Scaling ID	
HO2S	05H	Air fuel ratio (A/F) sensor 1 (Bank 2)	P0151	83H	0BH	Minimum sensor output voltage for test cycle
			P0151	84H	0BH	Maximum sensor output voltage for test cycle
			P0150	85H	0BH	Minimum sensor output voltage for test cycle
			P0150	86H	0BH	Maximum sensor output voltage for test cycle
			P0153	87H	04H	Response rate: Response ratio (Lean to Rich)
			P0153	88H	04H	Response rate: Response ratio (Rich to Lean)
			P2A03	89H	84H	The amount of shift in air fuel ratio
			P2A03	8AH	84H	The amount of shift in air fuel ratio
			P0150	8BH	0BH	Difference in sensor output voltage
			P0153	8CH	83H	Response gain at the limited frequency
			P014E	8DH	04H	O2 Sensor Slow Response - Rich to Lean Bank 2 Sensor 1
			P014E	8EH	04H	O2 Sensor Slow Response - Rich to Lean Bank 2 Sensor 1
			P014F	8FH	84H	O2 Sensor Slow Response - Lean to Rich Bank 2 Sensor 1
			P014F	90H	84H	O2 Sensor Slow Response - Lean to Rich Bank 2 Sensor 1
			P015C	91H	01H	O2 Sensor Delayed Response - Rich to Lean Bank 2 Sensor 1
			P015C	92H	01H	O2 Sensor Delayed Response - Rich to Lean Bank 2 Sensor 1
			P015D	93H	01H	O2 Sensor Delayed Response - Lean to Rich Bank 2 Sensor 1
			P015D	94H	01H	O2 Sensor Delayed Response - Lean to Rich Bank 2 Sensor 1
	06H	Heated oxygen sensor 2 (Bank 2)	P0158	07H	0CH	Minimum sensor output voltage for test cycle
			P0157	08H	0CH	Maximum sensor output voltage for test cycle
			P0158	80H	0CH	Sensor output voltage
			P0159	81H	0CH	Difference in sensor output voltage
	07H	Heated oxygen sensor 3 (Bank2)	P0163	07H	0CH	Minimum sensor output voltage for test cycle
			P0164	08H	0CH	Maximum sensor output voltage for test cycle
			P0166	80H	0CH	Sensor output voltage
			P0165	81H	0CH	Difference in sensor output voltage

Item	OBD-MID	Self-diagnostic test item	DTC	Test value and Test limit (GST display)		Description
				TID	Unit and Scaling ID	
CATA-LYST	21H	Three way catalyst function (Bank1)	P0420	80H	01H	O2 storage index
			P0420	82H	01H	Switching time lag engine exhaust index value
			P2423	83H	0CH	Difference in 3rd O2 sensor output voltage
			P2423	84H	84H	O2 storage index in HC trap catalyst
	22H	Three way catalyst function (Bank2)	P0430	80H	01H	O2 storage index
			P0430	82H	01H	Switching time lag engine exhaust index value
			P2424	83H	0CH	Difference in 3rd O2 sensor output voltage
			P2424	84H	84H	O2 storage index in HC trap catalyst
EGR SYSTEM	31H	EGR function	P0400	80H	96H	Low Flow Faults: EGR temp change rate (short term)
			P0400	81H	96H	Low Flow Faults: EGR temp change rate (long term)
			P0400	82H	96H	Low Flow Faults: Difference between max EGR temp and EGR temp under idling condition
			P0400	83H	96H	Low Flow Faults: Max EGR temp
			P1402	84H	96H	High Flow Faults: EGR temp increase rate
VVT SYSTEM	35H	VVT Monitor (Bank1)	P0011	80H	9DH	VTC intake function diagnosis (VTC alignment check diagnosis)
			P0014	81H	9DH	VTC exhaust function diagnosis (VTC alignment check diagnosis)
			P0011	82H	9DH	VTC intake function diagnosis (VTC drive failure diagnosis)
			P0014	83H	9DH	VTC exhaust function diagnosis (VTC drive failure diagnosis)
	36H	VVT Monitor (Bank2)	P0021	80H	9DH	VTC intake function diagnosis (VTC alignment check diagnosis)
			P0024	81H	9DH	VTC exhaust function diagnosis (VTC alignment check diagnosis)
			P0021	82H	9DH	VTC intake function diagnosis (VTC drive failure diagnosis)
			P0024	83H	9DH	VTC exhaust function diagnosis (VTC drive failure diagnosis)

Item	OBD-MID	Self-diagnostic test item	DTC	Test value and Test limit (GST display)		Description
				TID	Unit and Scaling ID	
EVAP SYSTEM	39H	EVAP control system leak (Cap Off)	P0455	80H	0CH	Difference in pressure sensor output voltage before and after pull down
	3BH	EVAP control system leak (Small leak)	P0442	80H	05H	Leak area index (for more than 0.04 inch)
	3CH	EVAP control system leak (Very small leak)	P0456	80H	05H	Leak area index (for more than 0.02 inch)
			P0456	81H	FDH	Maximum internal pressure of EVAP system during monitoring
			P0456	82H	FDH	Internal pressure of EVAP system at the end of monitoring
	3DH	Purge flow system	P0441	83H	0CH	Difference in pressure sensor output voltage before and after vent control valve close
O2 SENSOR HEATER	41H	A/F sensor 1 heater (Bank 1)	Low Input:P0031 High Input:P0032	81H	0BH	Converted value of Heater electric current to voltage
	42H	Heated oxygen sensor 2 heater (Bank 1)	Low Input:P0037 High Input:P0038	80H	0CH	Converted value of Heater electric current to voltage
	43H	Heated oxygen sensor 3 heater (Bank 1)	P0043	80H	0CH	Converted value of Heater electric current to voltage
	45H	A/F sensor 1 heater (Bank 2)	Low Input:P0051 High Input:P0052	81H	0BH	Converted value of Heater electric current to voltage
	46H	Heated oxygen sensor 2 heater (Bank 2)	Low Input:P0057 High Input:P0058	80H	0CH	Converted value of Heater electric current to voltage
	47H	Heated oxygen sensor 3 heater (Bank 2)	P0063	80H	0CH	Converted value of Heater electric current to voltage
Secondary Air	71H	Secondary Air system	P0411	80H	01H	Secondary Air Injection System Incorrect Flow Detected
			Bank1: P0491 Bank2: P0492	81H	01H	Secondary Air Injection System Insufficient Flow
			P2445	82H	01H	Secondary Air Injection System Pump Stuck Off
			P2448	83H	01H	Secondary Air Injection System High Airflow
			Bank1: P2440 Bank2: P2442	84H	01H	Secondary Air Injection System Switching Valve Stuck Open
			P2440	85H	01H	Secondary Air Injection System Switching Valve Stuck Open
			P2444	86H	01H	Secondary Air Injection System Pump Stuck On
FUEL SYSTEM	81H	Fuel injection system function (Bank 1)	P0171 or P0172	80H	2FH	Long term fuel trim
			P0171 or P0172	81H	24H	The number of lambda control clamped
	82H	Fuel injection system function (Bank 2)	P0174 or P0175	80H	2FH	Long term fuel trim
			P0174 or P0175	81H	24H	The number of lambda control clamped

Item	OBD-MID	Self-diagnostic test item	DTC	Test value and Test limit (GST display)		Description
				TID	Unit and Scaling ID	
MISFIRE	A1H	Multiple Cylinder Misfires	P0301	80H	24H	Misfiring counter at 1000 revolution of the first cylinder
			P0302	81H	24H	Misfiring counter at 1000 revolution of the second cylinder
			P0303	82H	24H	Misfiring counter at 1000 revolution of the third cylinder
			P0304	83H	24H	Misfiring counter at 1000 revolution of the fourth cylinder
			P0305	84H	24H	Misfiring counter at 1000 revolution of the fifth cylinder
			P0306	85H	24H	Misfiring counter at 1000 revolution of the sixth cylinder
			P0307	86H	24H	Misfiring counter at 1000 revolution of the seventh cylinder
			P0308	87H	24H	Misfiring counter at 1000 revolution of the eighth cylinder
			P0300	88H	24H	Misfiring counter at 1000 revolution of the multiple cylinders
			P0301	89H	24H	Misfiring counter at 200 revolution of the first cylinder
			P0302	8AH	24H	Misfiring counter at 200 revolution of the second cylinder
			P0303	8BH	24H	Misfiring counter at 200 revolution of the third cylinder
			P0304	8CH	24H	Misfiring counter at 200 revolution of the fourth cylinder
			P0305	8DH	24H	Misfiring counter at 200 revolution of the fifth cylinder
			P0306	8EH	24H	Misfiring counter at 200 revolution of the sixth cylinder
			P0307	8FH	24H	Misfiring counter at 200 revolution of the seventh cylinder
			P0308	90H	24H	Misfiring counter at 200 revolution of the eighth cylinder
			P0300	91H	24H	Misfiring counter at 1000 revolution of the single cylinder
			P0300	92H	24H	Misfiring counter at 200 revolution of the single cylinder
			P0300	93H	24H	Misfiring counter at 200 revolution of the multiple cylinders

Item	OBD-MID	Self-diagnostic test item	DTC	Test value and Test limit (GST display)		Description
				TID	Unit and Scaling ID	
MISFIRE	A2H	No. 1 Cylinder Misfire	P0301	0BH	24H	EWMA (Exponential Weighted Moving Average) misfire counts for last 10 driving cycles
			P0301	0CH	24H	Misfire counts for last/current driving cycles
	A3H	No. 2 Cylinder Misfire	P0302	0BH	24H	EWMA (Exponential Weighted Moving Average) misfire counts for last 10 driving cycles
			P0302	0CH	24H	Misfire counts for last/current driving cycles
	A4H	No. 3 Cylinder Misfire	P0303	0BH	24H	EWMA (Exponential Weighted Moving Average) misfire counts for last 10 driving cycles
			P0303	0CH	24H	Misfire counts for last/current driving cycles
	A5H	No. 4 Cylinder Misfire	P0304	0BH	24H	EWMA (Exponential Weighted Moving Average) misfire counts for last 10 driving cycles
			P0304	0CH	24H	Misfire counts for last/current driving cycles
	A6H	No. 5 Cylinder Misfire	P0305	0BH	24H	EWMA (Exponential Weighted Moving Average) misfire counts for last 10 driving cycles
			P0305	0CH	24H	Misfire counts for last/current driving cycles
	A7H	No. 6 Cylinder Misfire	P0306	0BH	24H	EWMA (Exponential Weighted Moving Average) misfire counts for last 10 driving cycles
			P0306	0CH	24H	Misfire counts for last/current driving cycles
	A8H	No. 7 Cylinder Misfire	P0307	0BH	24H	EWMA (Exponential Weighted Moving Average) misfire counts for last 10 driving cycles
			P0307	0CH	24H	Misfire counts for last/current driving cycles
	A9H	No. 8 Cylinder Misfire	P0308	0BH	24H	EWMA (Exponential Weighted Moving Average) misfire counts for last 10 driving cycles
			P0308	0CH	24H	Misfire counts for last/current driving cycles

WIRING DIAGRAM

ENGINE CONTROL SYSTEM

LHD MODELS

LHD MODELS : Wiring Diagram

INFOID:0000000005989206

For connector terminal arrangements, harness layouts, and alphabets in a ⬡ (option abbreviation; if not described in wiring diagram), refer to GI-12, "Connector Information".

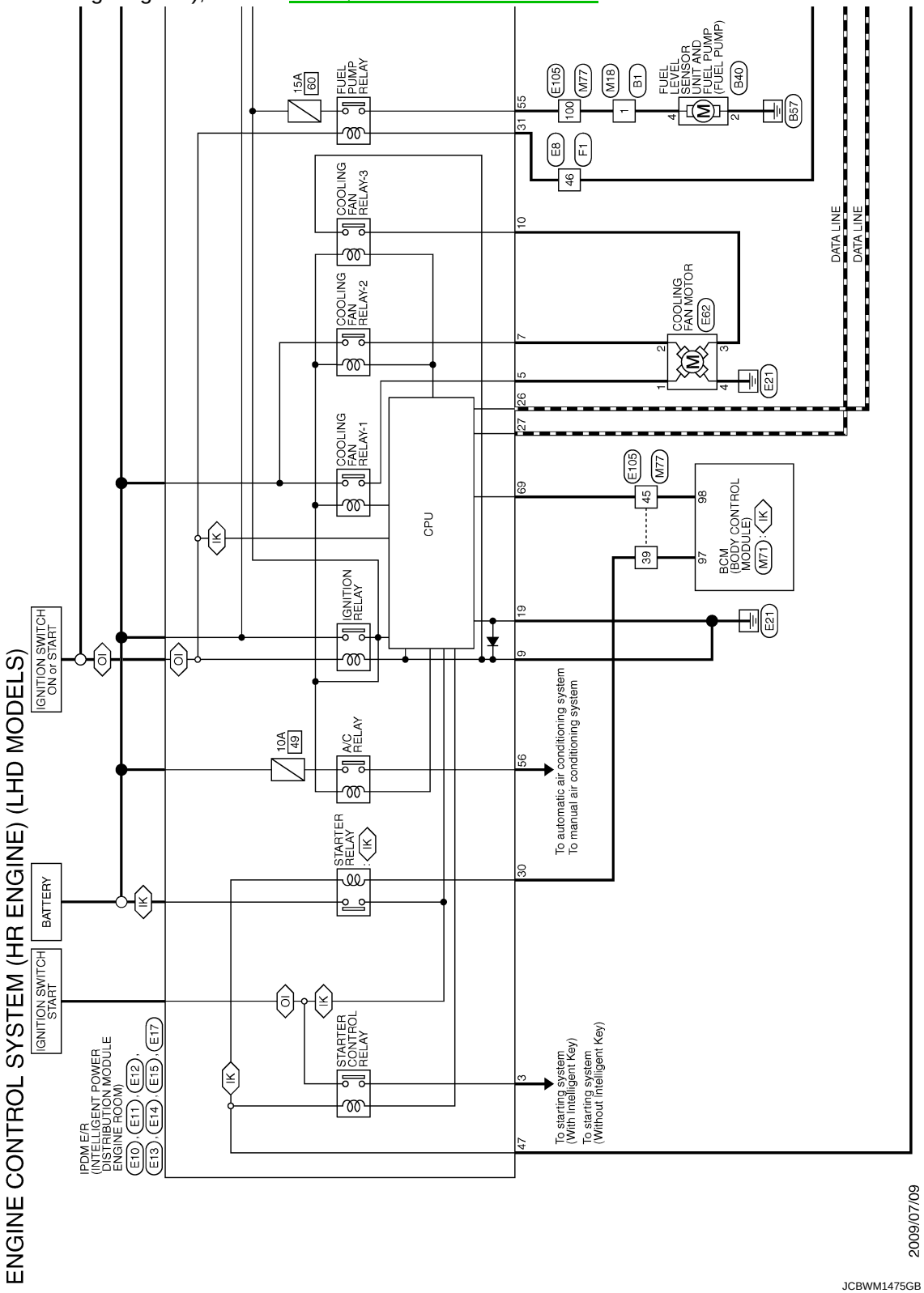

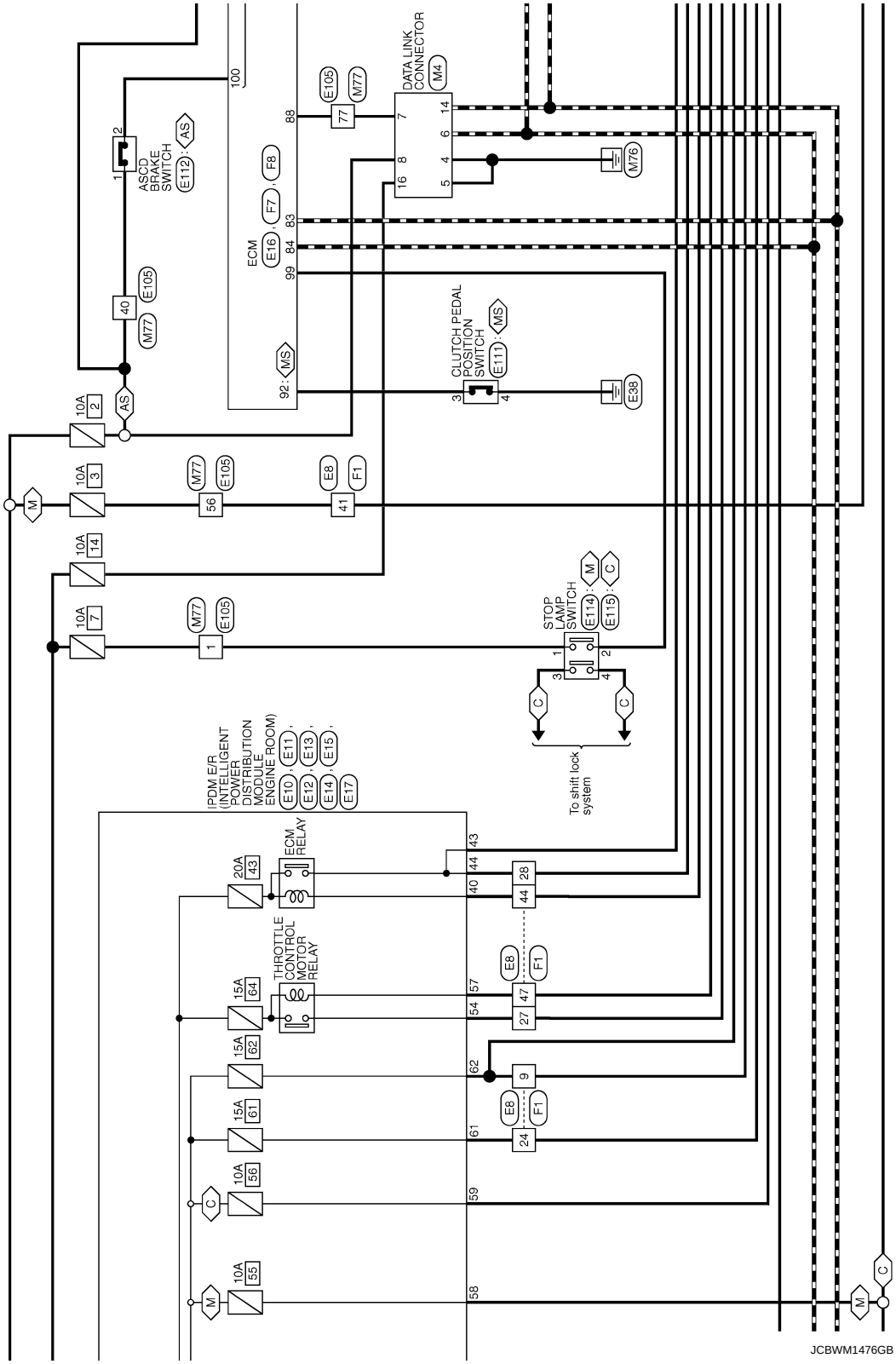
ASCD BRAKE SWITCH
E112 : AS
DATA LINK CONNECTOR
M4
ECM
E16 : F7 : F8
CLUTCH PEDAL POSITION SWITCH
E111 : MS
STOP LAMP SWITCH
E114 : M
E115 : C
To shift lock system
IPDM E/R (INTELLIGENT POWER DISTRIBUTION MODULE ENGINE ROOM)
E10 : E11 : E12 : E13 : E14 : E15 : E17
ECM RELAY
THROTTLE CONTROL MOTOR RELAY
JCBWM1476GB

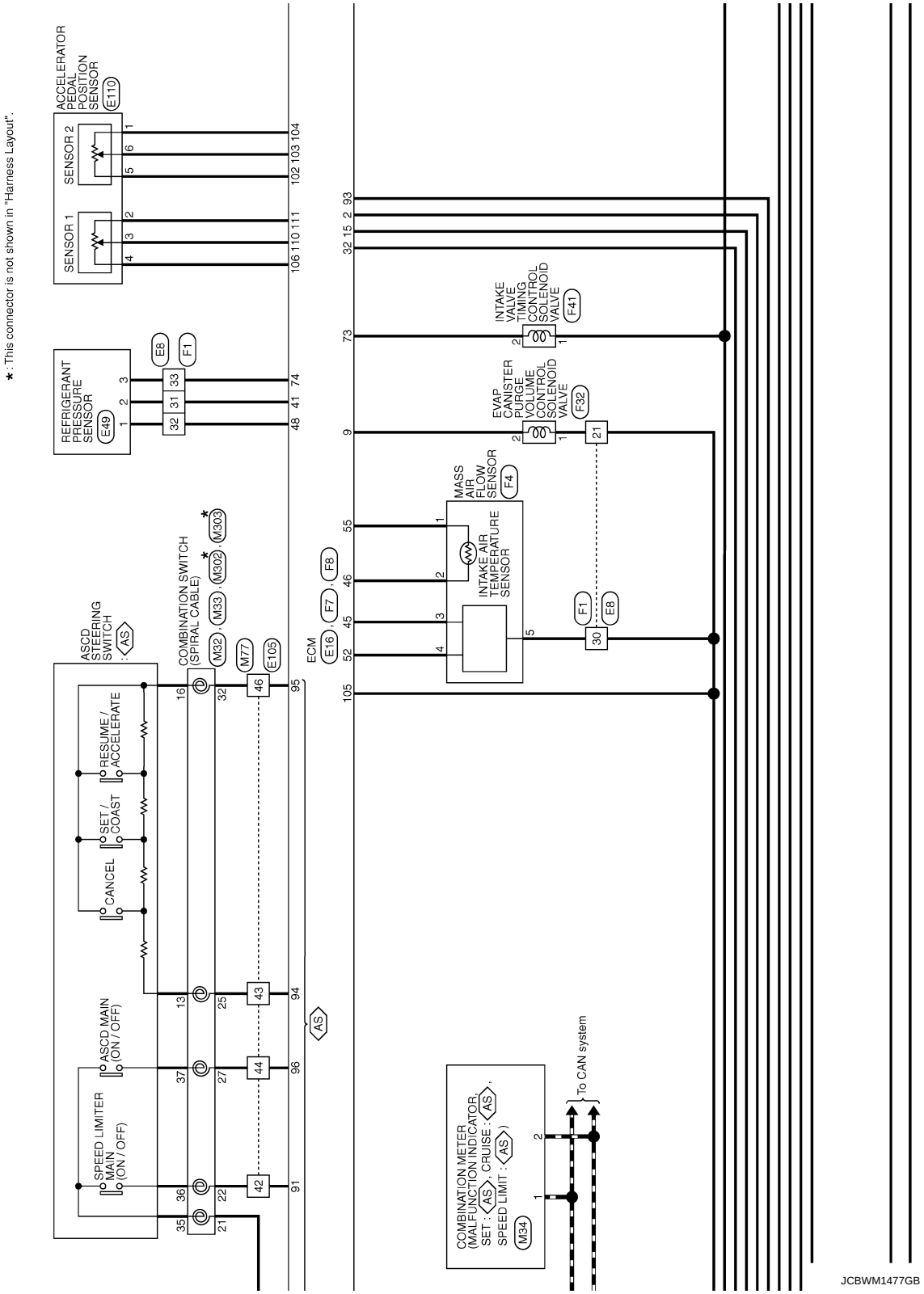
*: This connector is not shown in "Harness Layout".
ACCELERATOR PEDAL POSITION SENSOR
E110
SENSOR 1
SENSOR 2
REFRIGERANT PRESSURE SENSOR
E49
E8
F1
ASCD STEERING SWITCH
AS
COMBINATION SWITCH (SPIRAL CABLE)
M32
M33
M302
M303
M77
E105
SPEED LIMITER MAIN (ON / OFF)
ASCD MAIN (ON / OFF)
CANCEL
SET / COAST
RESUME / ACCELERATE
ECM
E16
F7
F8
MASS AIR FLOW SENSOR
F4
INTAKE AIR TEMPERATURE SENSOR
EVAP CANISTER PURGE VOLUME CONTROL SOLENOID VALVE
F32
INTAKE VALVE TIMING CONTROL SOLENOID VALVE
F41
COMBINATION METER (MALFUNCTION INDICATOR, SET : AS, CRUISE : AS, SPEED LIMIT : AS)
M34
To CAN system
JCBWM1477GB

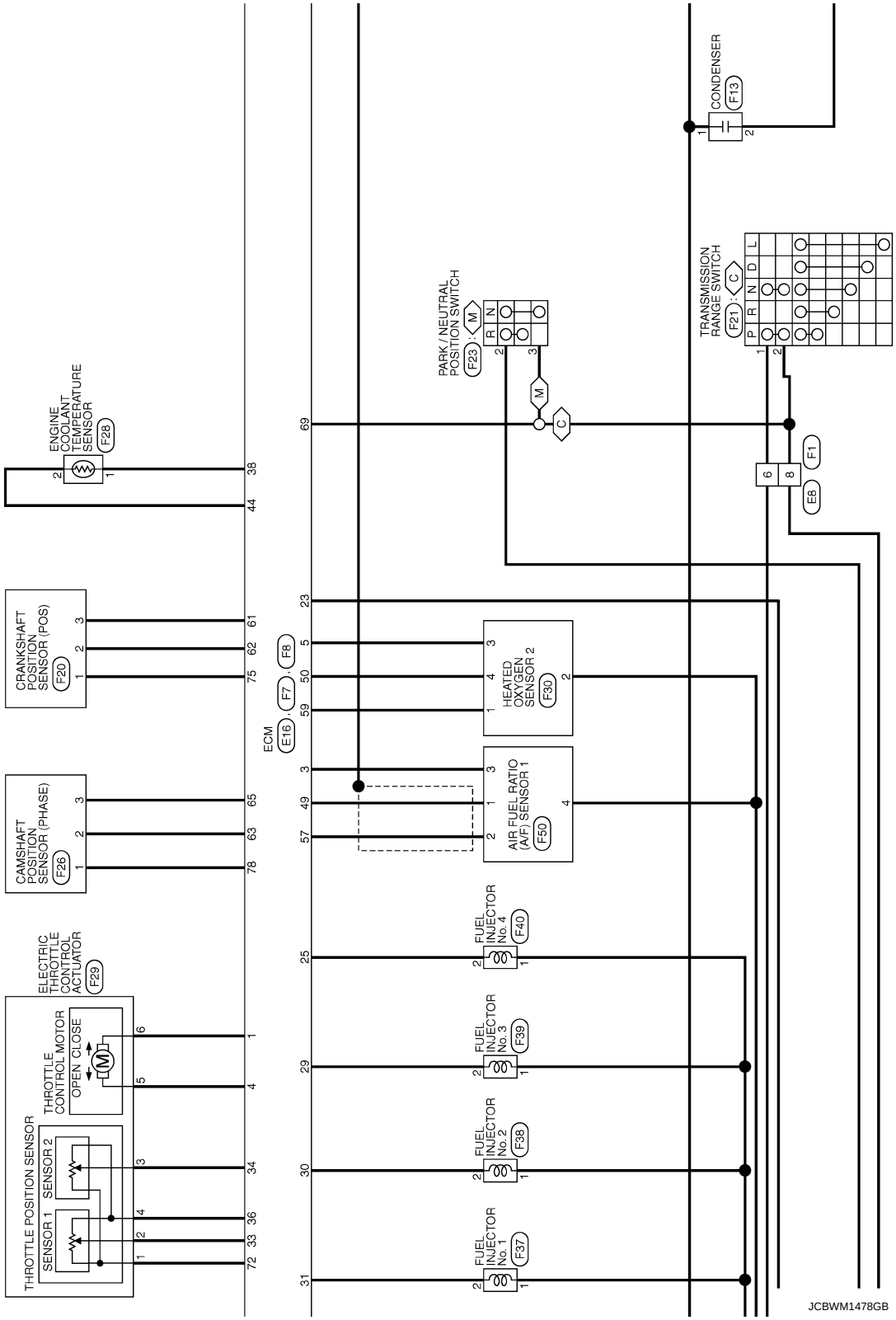
ENGINE COOLANT TEMPERATURE SENSOR
F28
CRANKSHAFT POSITION SENSOR (POS)
F20
CAMSHAFT POSITION SENSOR (PHASE)
F26
ELECTRIC THROTTLE CONTROL ACTUATOR
F29
THROTTLE POSITION SENSOR
SENSOR 1
SENSOR 2
THROTTLE CONTROL MOTOR
OPEN CLOSE
ECM
E16, F7, F8
PARK / NEUTRAL POSITION SWITCH
F23
R N
TRANSMISSION RANGE SWITCH
F21
P R N D L
CONDENSER
F13
HEATED OXYGEN SENSOR 2
F30
AIR FUEL RATIO (A/F) SENSOR 1
F50
FUEL INJECTOR No. 4
F40
FUEL INJECTOR No. 3
F39
FUEL INJECTOR No. 2
F38
FUEL INJECTOR No. 1
F37
E8
F1
JCBWM1478GB

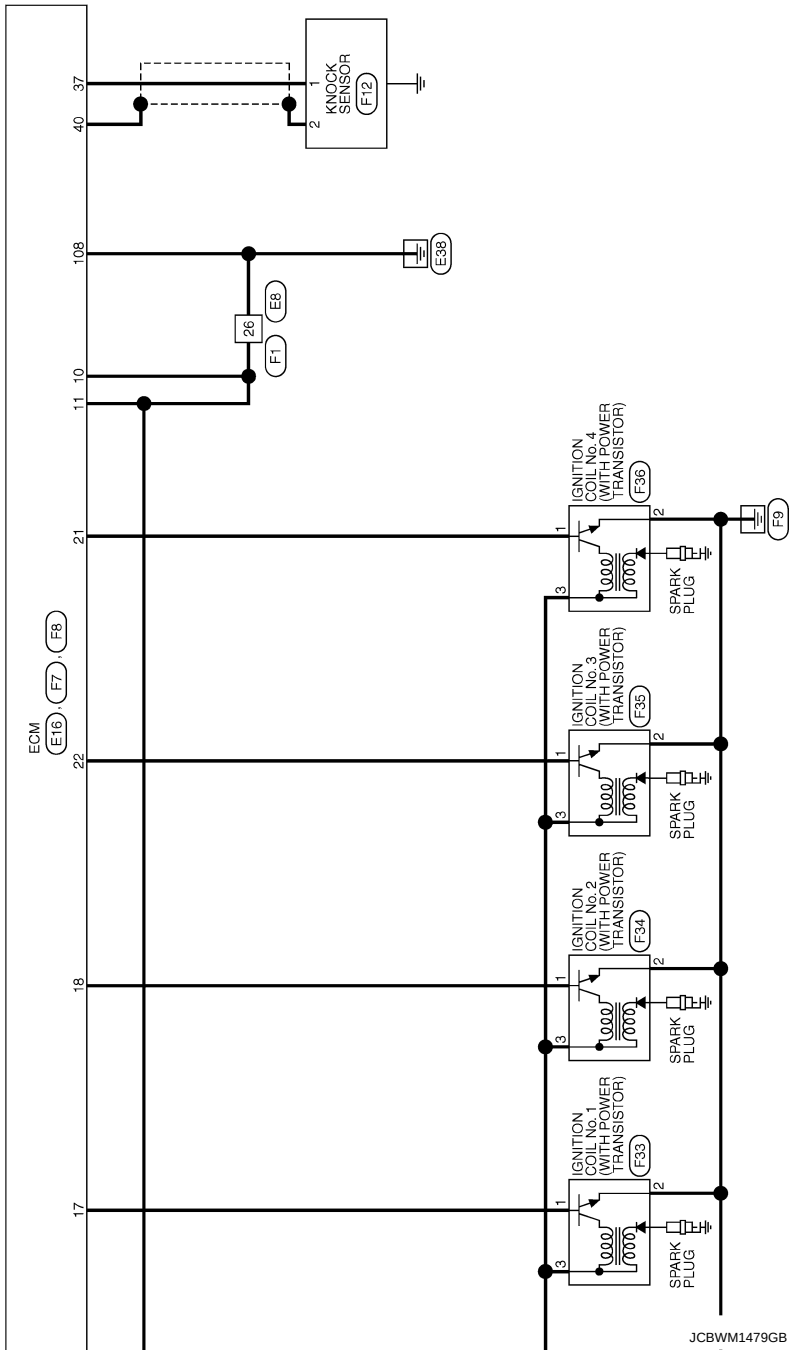
ECM
E16
F7
F8
37
40
108
10
11
21
22
18
17
KNOCK SENSOR
F12
E38
26
E8
F1
IGNITION COIL No.4 (WITH POWER TRANSISTOR)
F36
IGNITION COIL No.3 (WITH POWER TRANSISTOR)
F35
IGNITION COIL No.2 (WITH POWER TRANSISTOR)
F34
IGNITION COIL No.1 (WITH POWER TRANSISTOR)
F33
SPARK PLUG
F9
JCBWM1479GB

RHD MODELS

RHD MODELS : Wiring Diagram

INFOID:0000000005989207

For connector terminal arrangements, harness layouts, and alphabets in a ⬡ (option abbreviation; if not described in wiring diagram), refer to GI-12, "Connector Information".

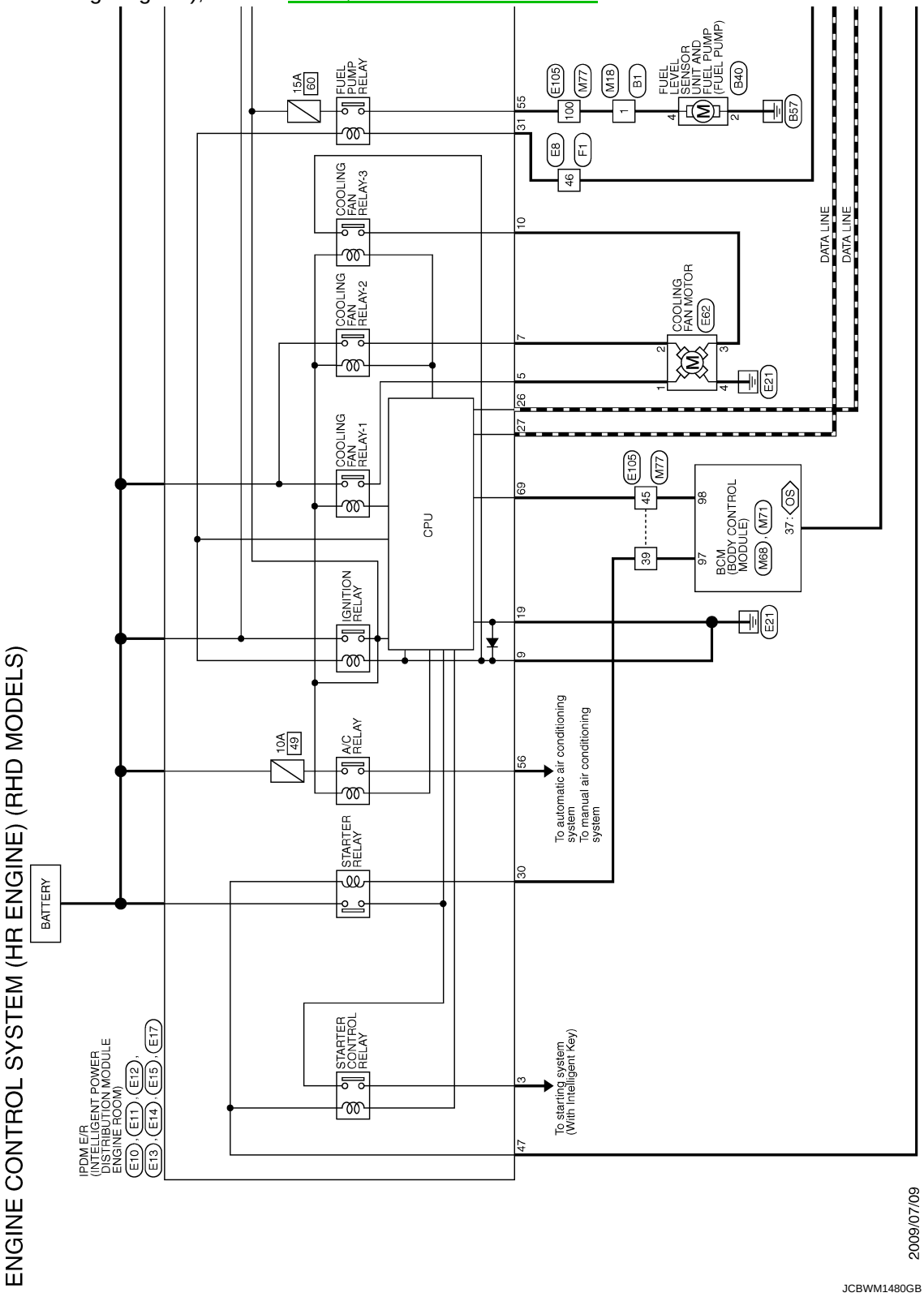

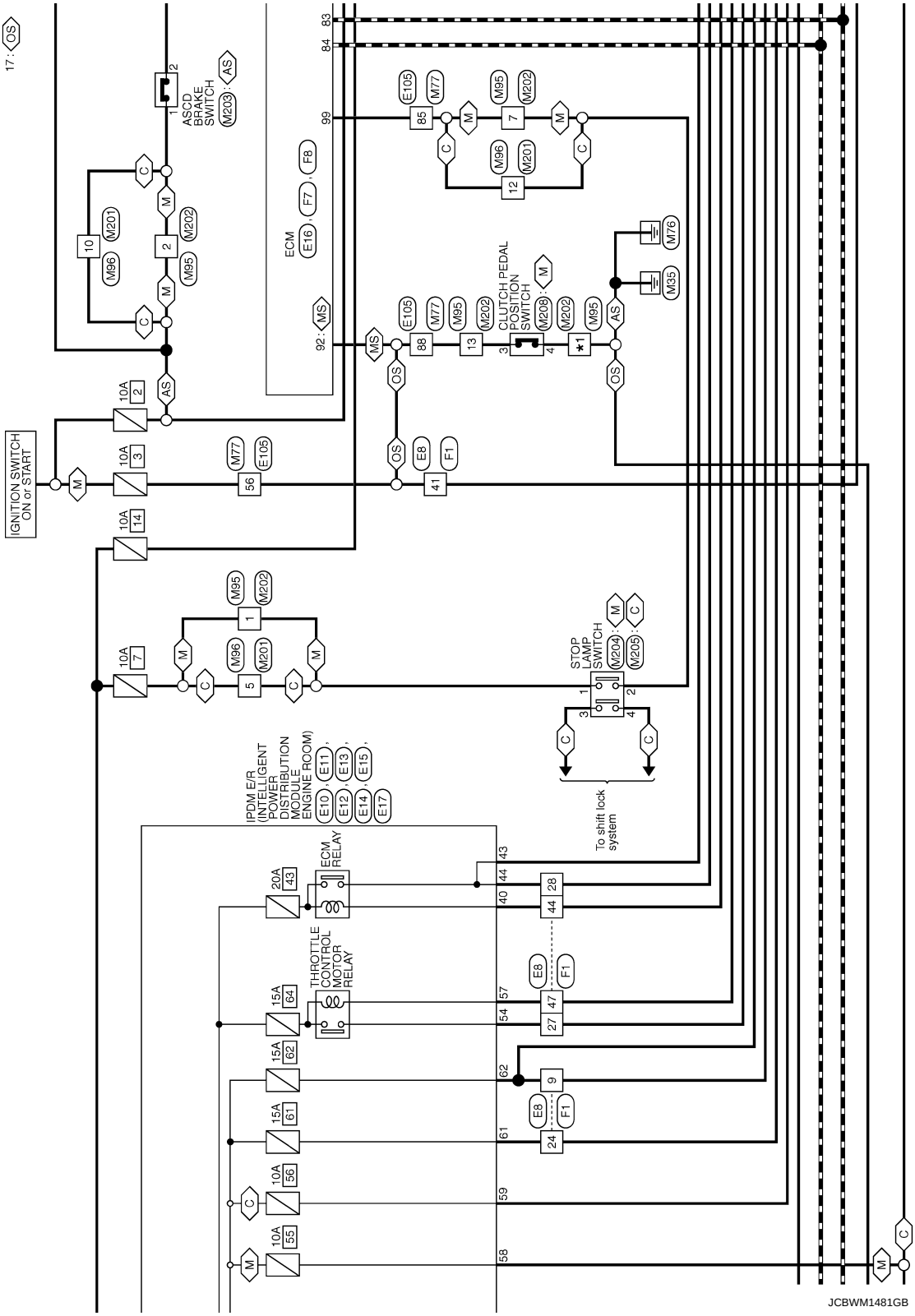
IGNITION SWITCH ON or START
10A 2
10A 3
10A 14
10A 7
ASCD BRAKE SWITCH
ECM
CLUTCH PEDAL POSITION SWITCH
STOP LAMP SWITCH
To shift lock system
IPDM E/R (INTELLIGENT POWER DISTRIBUTION MODULE ENGINE ROOM)
ECM RELAY
THROTTLE CONTROL MOTOR RELAY
20A 43
15A 64
15A 62
15A 61
10A 56
10A 55
JCBWM1481GB

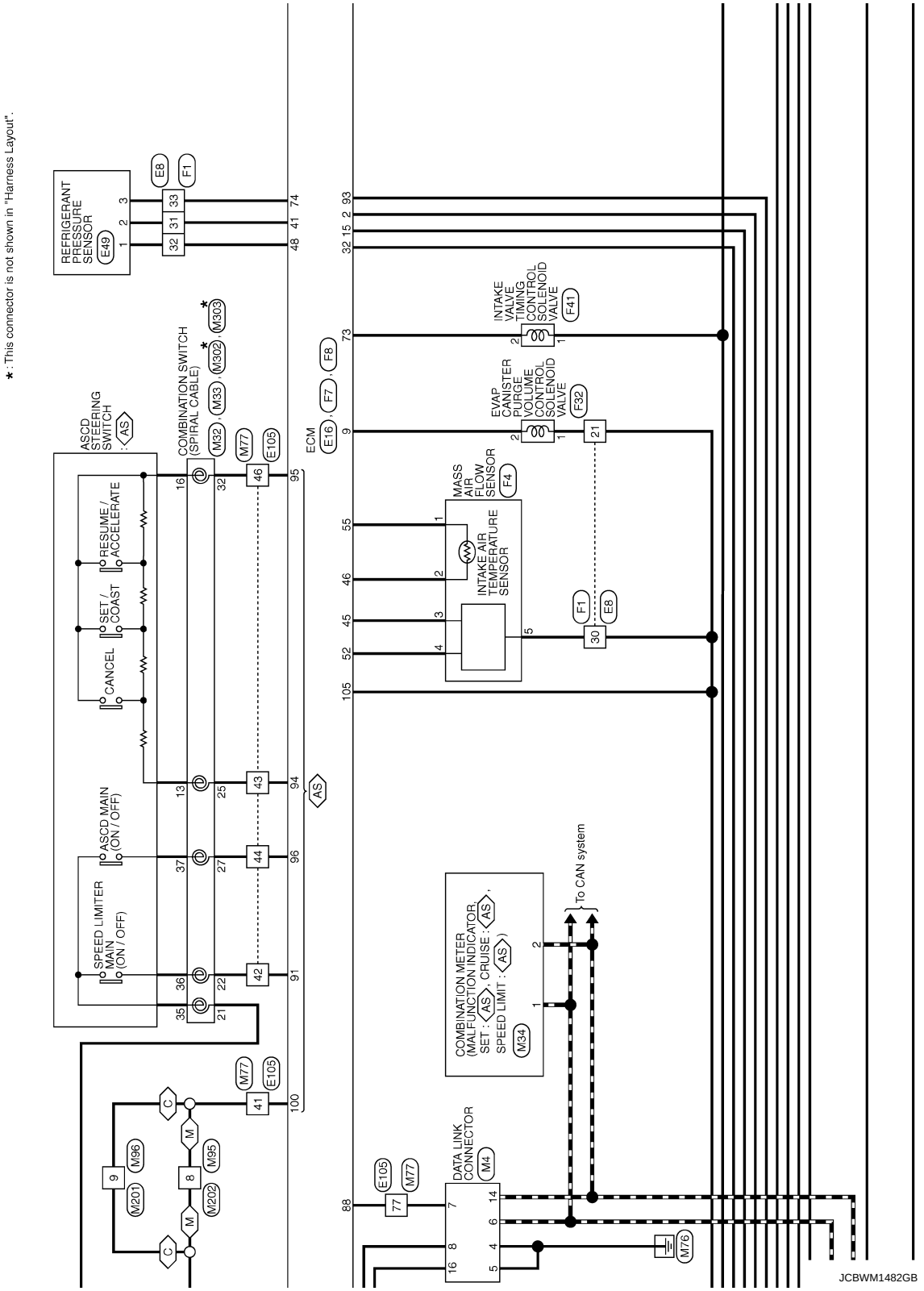
* : This connector is not shown in "Harness Layout".
REFRIGERANT PRESSURE SENSOR
E49
E8
F1
ASCD STEERING SWITCH
AS
RESUME / ACCELERATE
SET / COAST
CANCEL
ASCD MAIN (ON / OFF)
SPEED LIMITER MAIN (ON / OFF)
COMBINATION SWITCH (SPIRAL CABLE)
M32
M33
M302
M303
M77
E105
ECM
E16
F7
F8
INTAKE VALVE TIMING CONTROL SOLENOID VALVE
F41
EVAP CANISTER PURGE VOLUME CONTROL SOLENOID VALVE
F32
MASS AIR FLOW SENSOR
F4
INTAKE AIR TEMPERATURE SENSOR
COMBINATION METER (MALFUNCTION INDICATOR, SET : AS, CRUISE : AS, SPEED LIMIT : AS)
M34
To CAN system
DATA LINK CONNECTOR
M4
M76
M96
M95
M201
M202
JCBWM1482GB

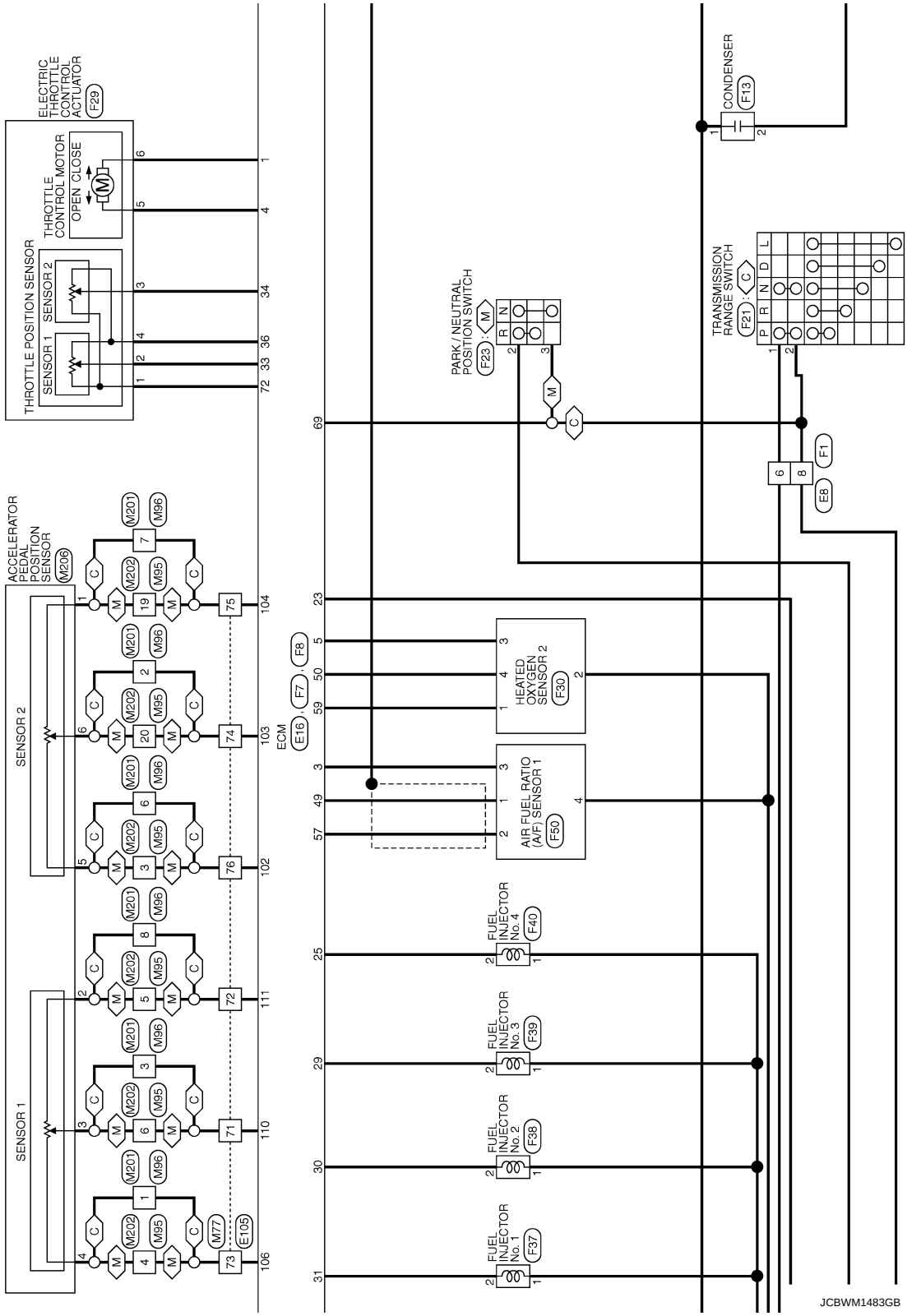
ELECTRIC THROTTLE CONTROL ACTUATOR
F29
THROTTLE CONTROL MOTOR
OPEN CLOSE
THROTTLE POSITION SENSOR
SENSOR 1
SENSOR 2
ACCELERATOR PEDAL POSITION SENSOR
M206
SENSOR 1
SENSOR 2
M201
M96
M202
M95
M77
E105
ECM
E16, F7, F8
PARK / NEUTRAL POSITION SWITCH
F23
CONDENSER
F13
TRANSMISSION RANGE SWITCH
F21
P R N D L
HEATED OXYGEN SENSOR 2
F30
AIR FUEL RATIO (A/F) SENSOR 1
F50
FUEL INJECTOR No. 4
F40
FUEL INJECTOR No. 3
F39
FUEL INJECTOR No. 2
F38
FUEL INJECTOR No. 1
F37
F1
E8
JCBWM1483GB

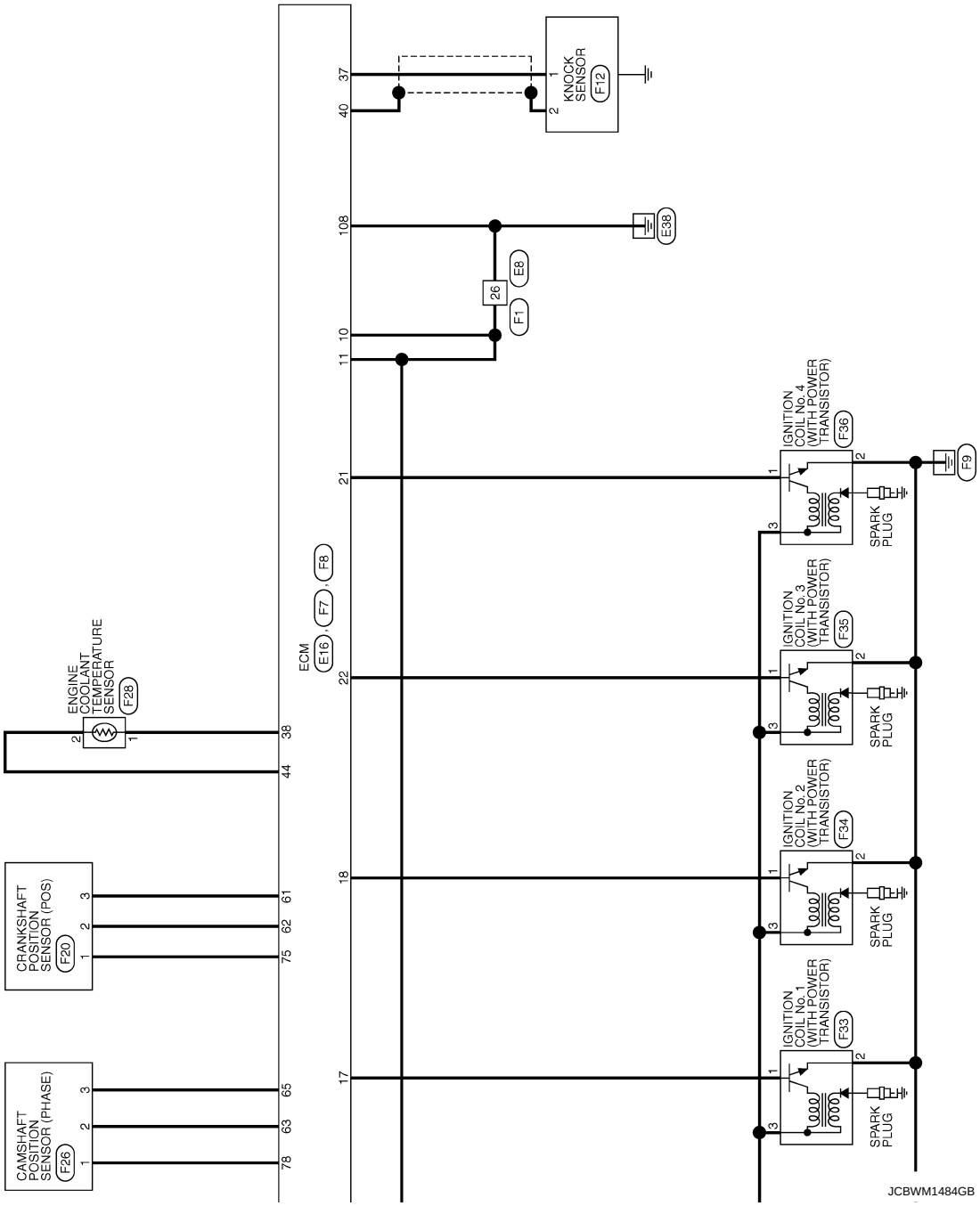
CAMSHAFT POSITION SENSOR (PHASE)
F26
CRANKSHAFT POSITION SENSOR (POS)
F20
ENGINE COOLANT TEMPERATURE SENSOR
F28
ECM
E16
F7
F8
KNOCK SENSOR
F12
E38
E8
F1
26
IGNITION COIL No.1 (WITH POWER TRANSISTOR)
F33
IGNITION COIL No.2 (WITH POWER TRANSISTOR)
F34
IGNITION COIL No.3 (WITH POWER TRANSISTOR)
F35
IGNITION COIL No.4 (WITH POWER TRANSISTOR)
F36
SPARK PLUG
F9
JCBWM1484GB

BASIC INSPECTION

DIAGNOSIS AND REPAIR WORKFLOW

Work Flow

INFOID:0000000005989208

OVERALL SEQUENCE

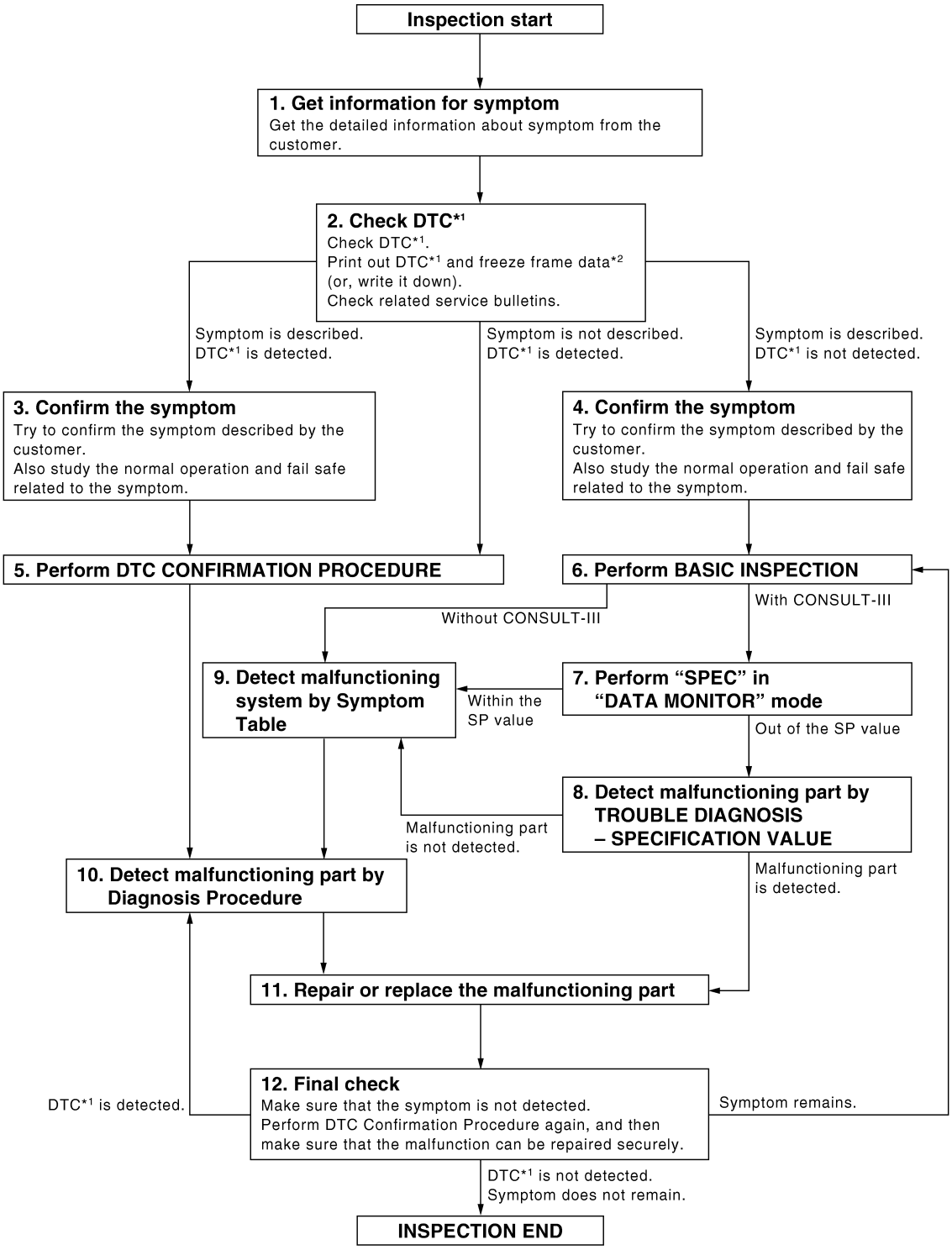

*1: Include 1st trip DTC.
*2: Include 1st trip freeze frame data.

JMBIA0078GB

DETAILED FLOW

1. GET INFORMATION FOR SYMPTOM

Get the detailed information from the customer about the symptom (the condition and the environment when the incident/malfunction occurred) using the “Diagnostic Work Sheet”. (Refer to EC-102, "Diagnostic Work Sheet".)

>> GO TO 2.

2. CHECK DTC

1. Check DTC.
2. Perform the following procedure if DTC is displayed.
- Record DTC and freeze frame data. (Print them out with CONSULT-III or GST.)
- Erase DTC. (Refer to “How to Erase DTC and 1st trip DTC” in EC-45, "Diagnosis Description".)
- Study the relationship between the cause detected by DTC and the symptom described by the customer. (Symptom Table is useful. Refer to EC-299, "Symptom Table".)
3. Check related service bulletins for information.

Is any symptom described and is any DTC detected?

Symptom is described, DTC is detected>>GO TO 3.
Symptom is described, DTC is not detected>>GO TO 4.
Symptom is not described, DTC is detected>>GO TO 5.

3. CONFIRM THE SYMPTOM

Try to confirm the symptom described by the customer (except MIL ON).
Also study the normal operation and fail safe related to the symptom. Refer to EC-307, "Description" and EC-75, "Fail Safe".
Diagnostic Work Sheet is useful to verify the incident.
Verify relation between the symptom and the condition when the symptom is detected.

>> GO TO 5.

4. CONFIRM THE SYMPTOM

Try to confirm the symptom described by the customer.
Also study the normal operation and fail safe related to the symptom. Refer to EC-307, "Description" and EC-75, "Fail Safe".
Diagnostic Work Sheet is useful to verify the incident.
Verify relation between the symptom and the condition when the symptom is detected.

>> GO TO 6.

5. PERFORM DTC CONFIRMATION PROCEDURE

Perform DTC CONFIRMATION PROCEDURE for the displayed DTC, and then make sure that DTC is detected again.
If two or more DTCs are detected, refer to EC-77, "DTC Inspection Priority Chart" and determine trouble diagnosis order.

NOTE:

- Freeze frame data is useful if the DTC is not detected.
- Perform Component Function Check if DTC CONFIRMATION PROCEDURE is not included on Service Manual. This simplified check procedure is an effective alternative though DTC cannot be detected during this check.
  If the result of Component Function Check is NG, it is the same as the detection of DTC by DTC CONFIRMATION PROCEDURE.

Is DTC detected?

YES >> GO TO 10.
NO >> Check according to GI-33, "Intermittent Incident".

6. PERFORM BASIC INSPECTION

Perform EC-109, "Work Procedure".

Do you have CONSULT-III?

YES >> GO TO 7.
NO >> GO TO 9.

7. PERFORM "SPEC" IN DATA MONITOR MODE

With CONSULT-III

Make sure that "MAS A/F SE-B1", "B/FUEL SCHDL" and "A/F ALPHA-B1" are within the SP value in "SPEC" of "DATA MONITOR" mode with CONSULT-III. Refer to EC-115, "Component Function Check".

Is the measurement value within the SP value?

YES >> GO TO 9.
NO >> GO TO 8.

8. DETECT MALFUNCTIONING PART BY TROUBLE DIAGNOSIS - SPECIFICATION VALUE

Detect malfunctioning part according to EC-116, "Diagnosis Procedure".

Is malfunctioning part detected?

YES >> GO TO 11.
NO >> GO TO 9.

9. DETECT MALFUNCTIONING SYSTEM BY SYMPTOM TABLE

Detect malfunctioning system according to EC-299, "Symptom Table" based on the confirmed symptom in step 4, and determine the trouble diagnosis order based on possible causes and symptom.

>> GO TO 10.

10. DETECT MALFUNCTIONING PART BY DIAGNOSIS PROCEDURE

Inspect according to Diagnosis Procedure of the system.

NOTE:

The Diagnosis Procedure in EC section described based on open circuit inspection. A short circuit inspection is also required for the circuit check in the Diagnosis Procedure. For details, refer to GI-35, "Circuit Inspection".

Is malfunctioning part detected?

YES >> GO TO 11.
NO >> Monitor input data from related sensors or check the voltage of related ECM terminals using CONSULT-III. Refer to EC-65, "Reference Value".

11. REPAIR OR REPLACE THE MALFUNCTIONING PART

1. Repair or replace the malfunctioning part.
2. Reconnect parts or connectors disconnected during Diagnosis Procedure again after repair and replacement.
3. Check DTC. If DTC is displayed, erase it. Refer to "How to Erase DTC and 1st trip DTC" in EC-45, "Diagnosis Description".

>> GO TO 12.

12. FINAL CHECK

When DTC was detected in step 2, perform DTC CONFIRMATION PROCEDURE or Component Function Check again, and then make sure that the malfunction have been repaired securely.

When symptom was described from the customer, refer to confirmed symptom in step 3 or 4, and make sure that the symptom is not detected.

Is DTC detected and does symptom remain?

YES-1 >> DTC is detected: GO TO 10.
YES-2 >> Symptom remains: GO TO 6.
NO >> Before returning the vehicle to the customer, make sure to erase unnecessary DTC in ECM. (Refer to "How to Erase DTC and 1st trip DTC" in EC-45, "Diagnosis Description".) If the completion of SRT is needed, drive vehicle under the specific "DRIVING PATTERN" in EC-80, "How to Set SRT Code".

Diagnostic Work Sheet

INFOID:0000000005989209

DESCRIPTION

There are many operating conditions that lead to the malfunction of engine components. A good grasp of such conditions can make troubleshooting faster and more accurate.
In general, each customer feels differently about an incident. It is important to fully understand the symptoms or conditions for a customer complaint.
Utilize a diagnostic worksheet like the WORKSHEET SAMPLE below in order to organize all the information for troubleshooting.
Some conditions may cause the MIL to come on steady or blink and DTC to be detected. Examples:
Vehicle ran out of fuel, which caused the engine to misfire.

KEY POINTS

WHAT ..... Vehicle & engine model
WHEN ..... Date, Frequencies
WHERE..... Road conditions
HOW ..... Operating conditions, Weather conditions, Symptoms

SEF907L

WORKSHEET SAMPLE

Customer name MR/MS		Model & Year	VIN
Engine #		Trans.	Mileage
Incident Date		Manuf. Date	In Service Date
Fuel and fuel filler cap		☐ Vehicle ran out of fuel causing misfire ☐ Fuel filler cap was left off or incorrectly screwed on.	
Symptoms	☐ Startability	☐ Impossible to start ☐ No combustion ☐ Partial combustion ☐ Partial combustion affected by throttle position ☐ Partial combustion NOT affected by throttle position ☐ Possible but hard to start ☐ Others [ ]	
	☐ Idling	☐ No fast idle ☐ Unstable ☐ High idle ☐ Low idle ☐ Others [ ]	
	☐ Driveability	☐ Stumble ☐ Surge ☐ Knock ☐ Lack of power ☐ Intake backfire ☐ Exhaust backfire ☐ Others [ ]	
	☐ Engine stall	☐ At the time of start ☐ While idling ☐ While accelerating ☐ While decelerating ☐ Just after stopping ☐ While loading	
Incident occurrence		☐ Just after delivery ☐ Recently ☐ In the morning ☐ At night ☐ In the daytime	
Frequency		☐ All the time ☐ Under certain conditions ☐ Sometimes	
Weather conditions		☐ Not affected	
	Weather	☐ Fine ☐ Raining ☐ Snowing ☐ Others [ ]	
	Temperature	☐ Hot ☐ Warm ☐ Cool ☐ Cold ☐ Humid °F	
Engine conditions		☐ Cold ☐ During warm-up ☐ After warm-up Engine speed 0 2,000 4,000 6,000 8,000 rpm	
Road conditions		☐ In town ☐ In suburbs ☐ Highway ☐ Off road (up/down)	
Driving conditions		☐ Not affected ☐ At starting ☐ While idling ☐ At racing ☐ While accelerating ☐ While cruising ☐ While decelerating ☐ While turning (RH/LH) Vehicle speed 0 10 20 30 40 50 60 MPH	
Malfunction indicator lamp		☐ Turned on ☐ Not turned on	

MTBL0017

ADDITIONAL SERVICE WHEN REPLACING ECM

Description

INFOID:0000000005989210

When replacing ECM, this procedure must be performed.

Work Procedure

INFOID:0000000005989211

1. PERFORM INITIALIZATION OF NATS SYSTEM AND REGISTRATION OF ALL NATS IGNITION KEY IDS

Refer to SEC-36, "ECM : Work Procedure" (With intelligent key system), SEC-142, "ECM : Work Procedure" (Without intelligent key system).

>> GO TO 2.

2. PERFORM ACCELERATOR PEDAL RELEASED POSITION LEARNING

Refer to EC-104, "Work Procedure".

>> GO TO 3.

3. PERFORM THROTTLE VALVE CLOSED POSITION LEARNING

Refer to EC-105, "Work Procedure".

>> GO TO 4.

4. PERFORM IDLE AIR VOLUME LEARNING

Refer to EC-106, "Work Procedure".

>> END

ACCELERATOR PEDAL RELEASED POSITION LEARNING

Description

INFOID:0000000005989212

Accelerator Pedal Released Position Learning is a function of ECM to learn the fully released position of the accelerator pedal by monitoring the accelerator pedal position sensor output signal. It must be performed each time harness connector of accelerator pedal position sensor or ECM is disconnected.

Work Procedure

INFOID:0000000005989213

1.START

1. Make sure that accelerator pedal is fully released.
2. Turn ignition switch ON and wait at least 2 seconds.
3. Turn ignition switch OFF and wait at least 10 seconds.
4. Turn ignition switch ON and wait at least 2 seconds.
5. Turn ignition switch OFF and wait at least 10 seconds.

>> END

THROTTLE VALVE CLOSED POSITION LEARNING

Description

INFOID:0000000005989214

Throttle Valve Closed Position Learning is a function of ECM to learn the fully closed position of the throttle valve by monitoring the throttle position sensor output signal. It must be performed each time harness connector of electric throttle control actuator or ECM is disconnected.

Work Procedure

INFOID:0000000005989215

1.START

1. Make sure that accelerator pedal is fully released.
2. Turn ignition switch ON.
3. Turn ignition switch OFF and wait at least 10 seconds.
   Make sure that throttle valve moves during above 10 seconds by confirming the operating sound.

>> END

IDLE AIR VOLUME LEARNING

Description

INFOID:0000000005989216

Idle Air Volume Learning is a function of ECM to learn the idle air volume that keeps each engine idle speed within the specific range. It must be performed under any of the following conditions:
- Each time electric throttle control actuator or ECM is replaced.
- Idle speed or ignition timing is out of specification.

Work Procedure

INFOID:0000000005989217

1. PRECONDITIONING

Make sure that all of the following conditions are satisfied.
Learning will be cancelled if any of the following conditions are missed for even a moment.
- Battery voltage: More than 12.9 V (At idle)
- Engine coolant temperature: 70 - 100°C (158 - 212°F)
- Shift lever: Neutral position
- Electric load switch: OFF
  (Air conditioner, headlamp, rear window defogger)
- Steering wheel: Neutral (Straight-ahead position) position
- Vehicle speed: Stopped
- Transmission: Warmed-up
- Drive vehicle for 10 minutes.

Do you have CONSULT-III?

YES >> GO TO 2.
NO >> GO TO 3.

2. IDLE AIR VOLUME LEARNING

With CONSULT-III

1. Perform ACCELERATOR PEDAL RELEASED POSITION LEARNING. Refer to EC-104, "Work Procedure".
2. Perform THROTTLE VALVE CLOSED POSITION LEARNING. Refer to EC-105, "Work Procedure".
3. Start engine and warm it up to normal operating temperature.
4. Select “IDLE AIR VOL LEARN” in “WORK SUPPORT” mode with CONSULT-III.
5. Touch “START” and wait 20 seconds.

Is “CMPLT” displayed on CONSULT-III screen?

YES >> GO TO 4.
NO >> GO TO 5.

3. IDLE AIR VOLUME LEARNING

Without CONSULT-III

NOTE:
- **It is better to count the time accurately with a clock.**
- **It is impossible to switch the diagnostic mode when an accelerator pedal position sensor circuit has a malfunction.**

1. Perform ACCELERATOR PEDAL RELEASED POSITION LEARNING. Refer to EC-104, "Work Procedure".
2. Perform THROTTLE VALVE CLOSED POSITION LEARNING. Refer to EC-105, "Work Procedure".
3. Start engine and warm it up to normal operating temperature.
4. Turn ignition switch OFF and wait at least 10 seconds.
5. Confirm that accelerator pedal is fully released, turn ignition switch ON and wait 3 seconds.
6. Repeat the following procedure quickly five times within 5 seconds.
- Fully depress the accelerator pedal.
- Fully release the accelerator pedal.
7. Wait 7 seconds, fully depress the accelerator pedal and keep it for approx. 20 seconds until the MIL stops blinking and turned ON.
8. Fully release the accelerator pedal within 3 seconds after the MIL turned ON.
9. Start engine and let it idle.

10. Wait 20 seconds.

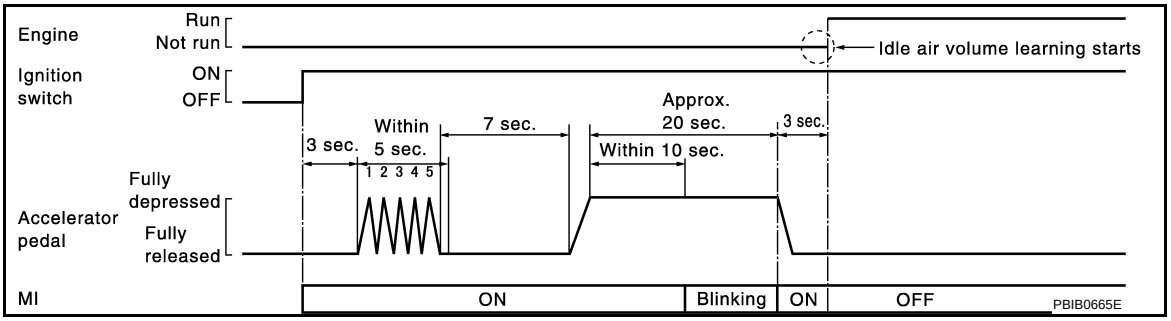

>> GO TO 4.

4. CHECK IDLE SPEED AND IGNITION TIMING

Rev up the engine two or three times and make sure that idle speed and ignition timing are within the specifications.
For specification, refer to EC-315, "Idle Speed" and EC-315, "Ignition Timing".

Is the inspection result normal?

YES >> INSPECTION END
NO >> GO TO 5.

5. DETECT MALFUNCTIONING PART

Check the following
- Check that throttle valve is fully closed.
- Check PCV valve operation.
- Check that downstream of throttle valve is free from air leakage.

Is the inspection result normal?

YES >> GO TO 6.
NO >> Repair or replace malfunctioning part.

6. DETECT MALFUNCTIONING PART

Engine component parts and their installation condition are questionable. Check and eliminate the cause of the incident.
It is useful to perform “TROUBLE DIAGNOSIS - SPECIFICATION VALUE”. Refer to EC-115, "Description".
If any of the following conditions occur after the engine has started, eliminate the cause of the incident and perform Idle Air Volume Learning all over again:
- Engine stalls.
- Erroneous idle.

>> INSPECTION END

MIXTURE RATIO SELF-LEARNING VALUE CLEAR

Description

INFOID:0000000005989218

This describes how to erase the mixture ratio self-learning value. For the actual procedure, follow the instructions in “Diagnosis Procedure”.

Work Procedure

INFOID:0000000005989219

1.START

With CONSULT-III

1. Start engine and warm it up to normal operating temperature.
2. Select “SELF-LEARNING CONT” in “WORK SUPPORT” mode with CONSULT-III.
3. Clear mixture ratio self-learning value by touching “CLEAR”.

With GST

1. Start engine and warm it up to normal operating temperature.
2. Turn ignition switch OFF.
3. Disconnect mass air flow sensor harness connector.
4. Restart engine and let it idle for at least 5 seconds.
5. Stop engine and reconnect mass air flow sensor harness connector.
6. Select Service $03 with GST. Make sure DTC P0102 is detected.
7. Select Service $04 with GST to erase the DTC P0102.

>> END

BASIC INSPECTION

Work Procedure

INFOID:0000000005989220

1. INSPECTION START

1. Check service records for any recent repairs that may indicate a related malfunction, or a current need for scheduled maintenance.
2. Open engine hood and check the following:
- Harness connectors for improper connections
- Wiring harness for improper connections, pinches and cut
- Vacuum hoses for splits, kinks and improper connections
- Hoses and ducts for leaks
- Air cleaner clogging
- Gasket
3. Confirm that electrical or mechanical loads are not applied.
- Headlamp switch is OFF.
- Air conditioner switch is OFF.
- Rear window defogger switch is OFF.
- Steering wheel is in the straight-ahead position, etc.
4. Start engine and warm it up until engine coolant temperature indicator points to the middle of gauge.
   Ensure engine stays below 1,000 rpm.

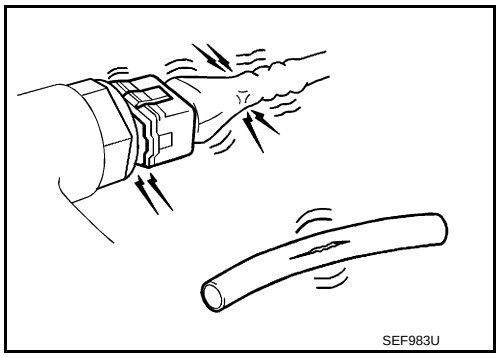
SEF983U

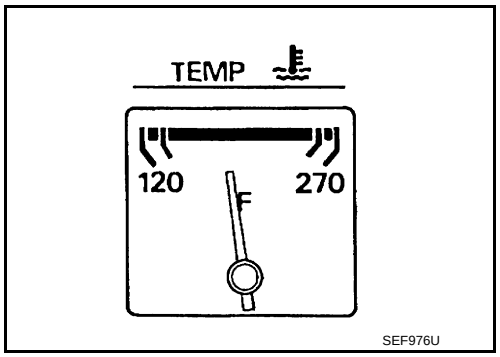

SEF976U

5. Run engine at about 2,000 rpm for about 2 minutes under no load.
6. Make sure that no DTC is displayed with CONSULT-III or GST.

Is any DTC detected?

YES >> GO TO 2.
NO >> GO TO 3.

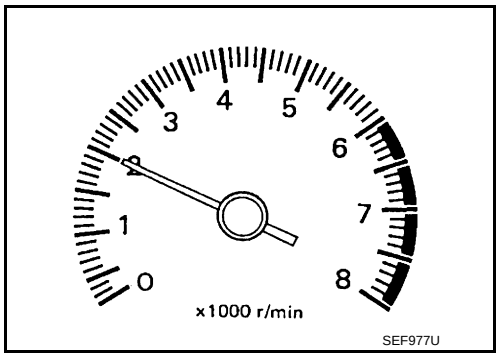

SEF977U

2. REPAIR OR REPLACE

Repair or replace components as necessary according to corresponding Diagnostic Procedure.

>> GO TO 3

3. CHECK TARGET IDLE SPEED

1. Run engine at about 2,000 rpm for about 2 minutes under no load.

2. Rev engine (2,000 to 3,000 rpm) two or three times under no load, then run engine at idle speed for about 1 minute.
3. Check idle speed.
   For procedure, refer to EC-308, "Inspection".
   For specification, refer to EC-315, "Idle Speed".

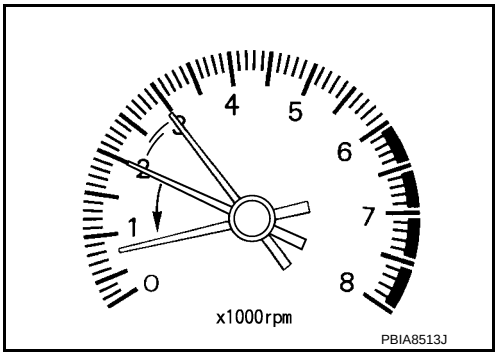

Is the inspection result normal?

YES >> GO TO 10.
NO >> GO TO 4.

4. PERFORM ACCELERATOR PEDAL RELEASED POSITION LEARNING

1. Stop engine.
2. Perform EC-104, "Work Procedure".

>> GO TO 5.

5. PERFORM THROTTLE VALVE CLOSED POSITION LEARNING

Perform EC-105, "Work Procedure".

>> GO TO 6.

6. PERFORM IDLE AIR VOLUME LEARNING

Perform EC-106, "Work Procedure".

Is Idle Air Volume Learning carried out successfully?

YES >> GO TO 7.
NO >> Follow the instruction of IDLE AIR VOLUME LEARNING. Then GO TO 4.

7. CHECK TARGET IDLE SPEED AGAIN

1. Start engine and warm it up to normal operating temperature.
2. Check idle speed.
   For procedure, refer to EC-308, "Inspection".
   For specification, refer to EC-315, "Idle Speed".

Is the inspection result normal?

YES >> GO TO 10.
NO >> GO TO 8.

8. DETECT MALFUNCTIONING PART

Check the Following.
- Check camshaft position sensor (PHASE) and circuit. Refer to EC-200, "DTC Logic".
- Check crankshaft position sensor (POS) and circuit. Refer to EC-197, "DTC Logic".

Is the inspection result normal?

YES >> GO TO 9.
NO >> Repair or replace. Then GO TO 4.

9. CHECK ECM FUNCTION

1. Substitute another known-good ECM to check ECM function. (ECM may be the cause of an incident, but this is a rare case.)
2. Perform initialization and registration of all NATS ignition key IDs. Refer to SEC-36, "ECM : Work Procedure" (With intelligent key system), SEC-142, "ECM : Work Procedure" (Without intelligent key system).

>> GO TO 4.

10. CHECK IGNITION TIMING

1. Run engine at idle.

2. Check ignition timing with a timing light.
   For procedure, refer to EC-309, "Inspection".
   For specification, refer to EC-315, "Ignition Timing".
- Timing indicator (1)

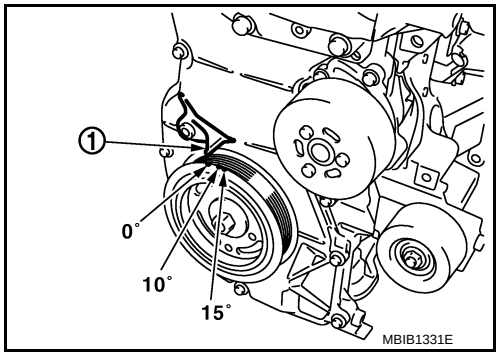

Is the inspection result normal?

YES >> GO TO 19.
NO >> GO TO 11.

11. PERFORM ACCELERATOR PEDAL RELEASED POSITION LEARNING

1. Stop engine.
2. Perform EC-104, "Work Procedure".

>> GO TO 12.

12. PERFORM THROTTLE VALVE CLOSED POSITION LEARNING

Perform EC-105, "Work Procedure".

>> GO TO 13.

13. PERFORM IDLE AIR VOLUME LEARNING

Perform EC-106, "Work Procedure".

Is idle air volume learning carried out successfully?

YES >> GO TO 14.
NO >> Follow the instruction of IDLE AIR VOLUME LEARNING. Then GO TO 4.

14. CHECK TARGET IDLE SPEED AGAIN

1. Start engine and warm it up to normal operating temperature.
2. Check idle speed.
   For procedure, refer to EC-308, "Inspection".
   For specification, refer to EC-315, "Idle Speed".

Is the inspection result normal?

YES >> GO TO 15.
NO >> GO TO 17.

15. CHECK IGNITION TIMING AGAIN

1. Run engine at idle.
2. Check ignition timing with a timing light.
   For procedure, refer to EC-309, "Inspection".
   For specification, refer to EC-315, "Ignition Timing".
- Timing indicator (1)

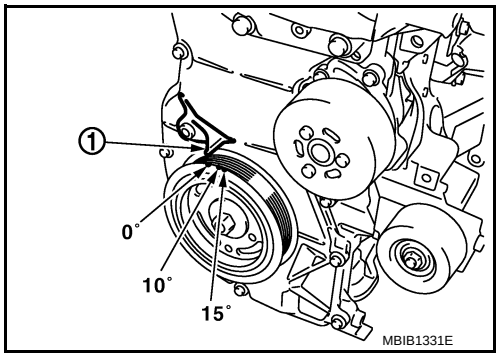

Is the inspection result normal?

YES >> GO TO 19.
NO >> GO TO 16.

16. CHECK TIMING CHAIN INSTALLATION

Check timing chain installation. Refer to EM-43, "Exploded View".

Is the inspection result normal?

YES >> GO TO 17.
NO >> Repair the timing chain installation. Then GO TO 4.

17. DETECT MALFUNCTIONING PART

Check the following.
- Check camshaft position sensor (PHASE) and circuit. Refer to EC-200, "DTC Logic".
- Check crankshaft position sensor (POS) and circuit. Refer to EC-197, "DTC Logic".

Is the inspection result normal?

YES >> GO TO 18.
NO >> Repair or replace. Then GO TO 4.

18. CHECK ECM FUNCTION

1. Substitute another known-good ECM to check ECM function. (ECM may be the cause of an incident, but this is a rare case.)
2. Perform initialization of NATS system and registration of all NATS ignition key IDs. Refer to SEC-36, "ECM : Work Procedure" (With intelligent key system), SEC-142, "ECM : Work Procedure" (Without intelligent key system).

>> GO TO 4.

19. INSPECTION END

If ECM is replaced during this BASIC INSPECTION procedure, perform EC-103, "Work Procedure".

>> INSPECTION END

FUEL PRESSURE CHECK

Work Procedure

INFOID:0000000005995488

FUEL PRESSURE RELEASE

1.FUEL PRESSURE RELEASE

With CONSULT-III

1. Turn ignition switch ON.
2. Perform “FUEL PRESSURE RELEASE” in “WORK SUPPORT” mode with CONSULT-III.
3. Start engine.
4. After engine stalls, crank it two or three times to release all fuel pressure.
5. Turn ignition switch OFF.

Without CONSULT-III

1. Remove fuel pump fuse located in IPDM E/R.
2. Start engine.
3. After engine stalls, crank it two or three times to release all fuel pressure.
4. Turn ignition switch OFF.
5. Reinstall fuel pump fuse after servicing fuel system.

>> INSPECTION END

FUEL PRESSURE CHECK

1.FUEL PRESSURE CHECK

CAUTION:

- **Before disconnecting fuel line, release fuel pressure from fuel line to eliminate danger.**
- **The fuel hose connection method used when taking fuel pressure check must not be used for other purposes.**
- **Be careful not to scratch or put debris around connection area when servicing, so that the quick connector maintains seal ability with O-rings inside.**
- **Do not perform fuel pressure check with electrical systems operating (i.e. lights, rear defogger, A/C, etc.) Fuel pressure gauge may indicate false readings due to varying engine load and changes in manifold vacuum.**

NOTE:

Prepare pans or saucers under the disconnected fuel line because the fuel may spill out. The fuel pressure cannot be completely released because this models do not have fuel return system.

1. Release fuel pressure to zero.
2. Prepare fuel hose for fuel pressure check (B) and fuel tube adapter [SST (KV10120000)] (D), then connect fuel pressure gauge (A).

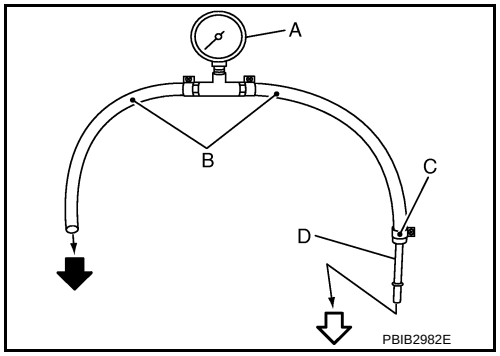

⇦ **To quick connector**

⬅ **To fuel tube (engine side)**

C **: Hose clamp**

CAUTION:

- **Use suitable fuel hose for fuel pressure check (genuine NISSAN fuel hose without quick connector).**
- **To avoid unnecessary force or tension to hose, use moderately long fuel hose for fuel pressure check.**
- **Do not use the fuel hose for checking fuel pressure with damage or cracks on it.**
- **Use Pressure Gauge to check fuel pressure.**

3. Disconnect fuel feed hose from fuel tube. Refer to EM-37, "Exploded View".

CAUTION:

Do not twist or kink fuel hose because it is plastic hose.

4. Connect fuel hose for fuel pressure check (1) to fuel tube (engine side) with clamp (2) as shown in the figure.

   5 : No.2 spool

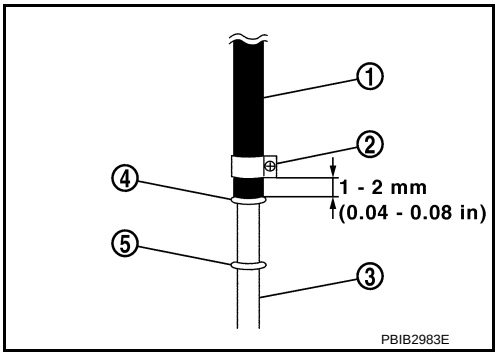

   CAUTION:
   - **Wipe off oil or dirt from hose insertion part using cloth moistened with gasoline.**
   - **Apply proper amount of gasoline between top of the fuel tube (3) and No.1 spool (4).**
   - **Insert fuel hose for fuel pressure check until it touches the No.1 spool on fuel tube.**
   - **Use NISSAN genuine hose clamp (part number: 16439 N4710 or 16439 40U00).**
   - **When reconnecting fuel line, always use new clamps.**
   - **Use a torque driver to tighten clamps.**
   - **Install hose clamp to the position within 1 - 2 mm (0.04 - 0.08 in).**

   Tightening torque : 1 - 1.5 N·m (0.1 - 0.15 kg-m, 9 - 13 in-lb)

   - **Make sure that clamp screw does not contact adjacent parts.**

5. Connect fuel tube adapter (C) to quick connector (1).

   A : Fuel pressure gauge
   B : Fuel hose for fuel pressure check

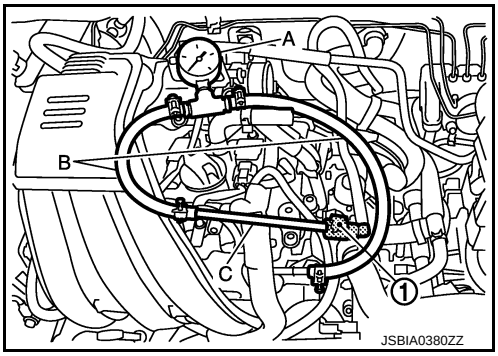

6. After connecting fuel hose for fuel pressure check, pull the hose with a force of approximately 98 N (10 kg, 22 lb) to confirm fuel tube does not come off.
7. Reinstall the part removed at Step 3.
   NOTE:
   Install the part to allow smooth engine starts.
8. Turn ignition switch ON and check for fuel leakage.
9. Start engine and check for fuel leakage.
10. Read the indication of fuel pressure gauge.
    CAUTION:
    - **Do not perform fuel pressure check with system operating. Fuel pressure gauge may indicate false readings.**
    - **During fuel pressure check, confirm for fuel leakage from fuel connection every 3 minutes.**

    At idling: Approximately 350 kPa (3.5 bar, 3.57 kg/cm^2, 51 psi)

Is the inspection result normal?

YES >> INSPECTION END
NO >> GO TO 2.

2. CHECK FUEL HOSE AND FUEL TUBE

If result is unsatisfactory, check fuel hoses and fuel tubes for clogging.

Is the inspection result normal?

YES >> Replace fuel level sensor unit, fuel filter and fuel pump assembly. Refer to FL-5, "Exploded View".
NO >> Repair or replace.

DTC/CIRCUIT DIAGNOSIS

TROUBLE DIAGNOSIS - SPECIFICATION VALUE

Description

INFOID:0000000005989223

The specification (SP) value indicates the tolerance of the value that is displayed in “SPEC” of “DATA MONITOR” mode of CONSULT-III during normal operation of the Engine Control System. When the value in “SPEC” of “DATA MONITOR” mode is within the SP value, the Engine Control System is confirmed OK. When the value in “SPEC” of “DATA MONITOR” mode is NOT within the SP value, the Engine Control System may have one or more malfunctions.
The SP value is used to detect malfunctions that may affect the Engine Control System, but will not light the MIL.
The SP value will be displayed for the following three items:
- B/FUEL SCHDL (The fuel injection pulse width programmed into ECM prior to any learned on board correction)
- A/F ALPHA-B1 (The mean value of air-fuel ratio feedback correction factor per cycle)
- MAS A/F SE-B1 (The signal voltage of the mass air flow sensor)

Component Function Check

INFOID:0000000005989224

1. START

Make sure that all of the following conditions are satisfied.
- Vehicle driven distance: More than 5,000 km (3,107 miles)
- Barometric pressure: 98.3 - 104.3 kPa (0.983 - 1.043 bar, 1.003 - 1.064 kg/cm^2, 14.25 - 15.12 psi)
- Atmospheric temperature: 20 - 30°C (68 - 86°F)
- Engine coolant temperature: 75 - 95°C (167 - 203°F)
- Transmission: Warmed-up
  - After the engine is warmed up to normal operating temperature, drive vehicle for 5 minutes.
- Electrical load: Not applied
  - Rear window defogger switch, air conditioner switch, lighting switch are OFF. Steering wheel is straight ahead.
- Engine speed: Idle

>> GO TO 2.

2. PERFORM “SPEC” OF “DATA MONITOR” MODE

With CONSULT-III
NOTE:
Perform “SPEC” in “DATA MONITOR” mode in maximum scale display.
1. Perform EC-109, "Work Procedure".
2. Select “B/FUEL SCHDL”, “A/F ALPHA-B1” and “MAS A/F SE-B1” in “SPEC” of “DATA MONITOR” mode with CONSULT-III.
3. Make sure that monitor items are within the SP value.

Is the inspection result normal?

YES >> END
NO >> Go to EC-116, "Diagnosis Procedure".

Diagnosis Procedure

INFOID:0000000005989225

OVERALL SEQUENCE

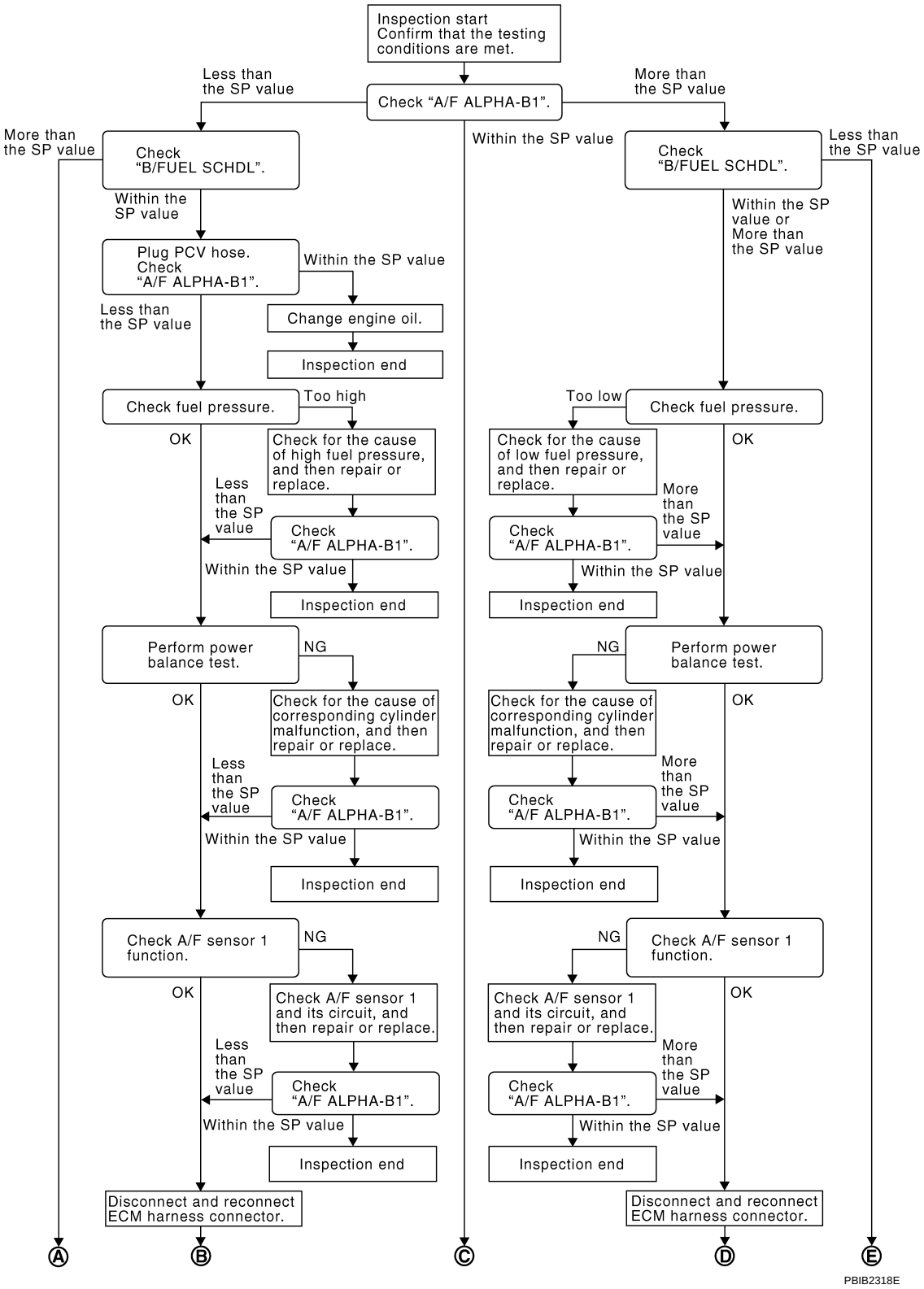

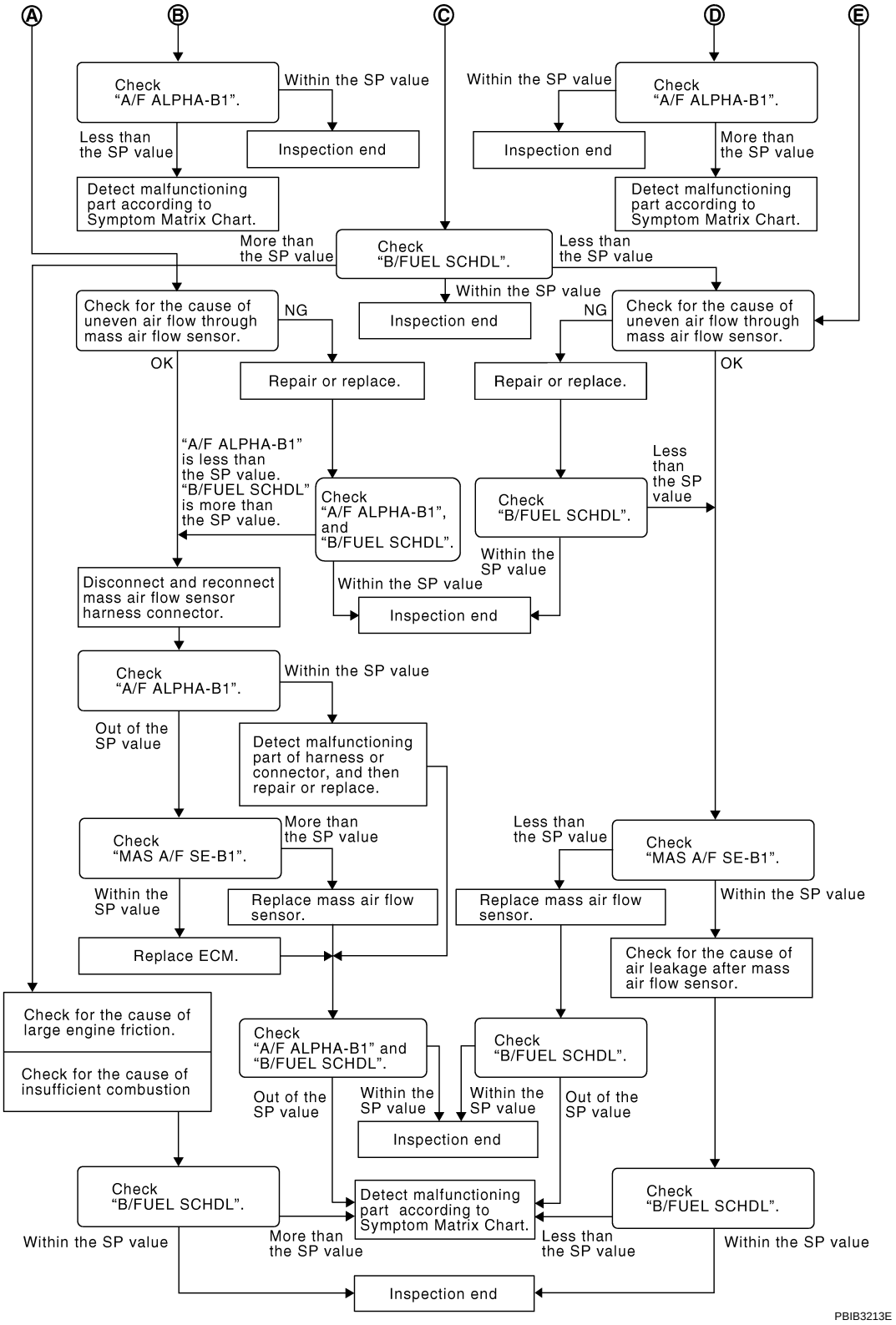

DETAILED PROCEDURE

1. CHECK "A/F ALPHA-B1"

With CONSULT-III

1. Start engine.
2. Confirm that the testing conditions are met. Refer to EC-115, "Component Function Check".
3. Select "A/F ALPHA-B1" in "SPEC" of "DATA MONITOR" mode, and make sure that the indication is within the SP value.

NOTE:
Check “A/F ALPHA-B1” for approximately 1 minute because it may fluctuate. It is NG if the indication is out of the SP value even a little.

Is the measurement value within the SP value?

YES >> GO TO 17.
NO-1 >> Less than the SP value: GO TO 2.
NO-2 >> More than the SP value: GO TO 3.

2. CHECK “B/FUEL SCHDL”

Select “B/FUEL SCHDL” in “SPEC” of “DATA MONITOR” mode, and make sure that the indication is within the SP value.

Is the measurement value within the SP value?

YES >> GO TO 4.
NO >> More than the SP value: GO TO 19.

3. CHECK “B/FUEL SCHDL”

Select “B/FUEL SCHDL” in “SPEC” of “DATA MONITOR” mode, and make sure that the indication is within the SP value.

Is the measurement value within the SP value?

YES >> GO TO 6.
NO-1 >> More than the SP value: GO TO 6.
NO-2 >> Less than the SP value: GO TO 25.

4. CHECK “A/F ALPHA-B1”

1. Stop the engine.
2. Disconnect PCV hose, and then plug it.
3. Start engine.
4. Select “A/F ALPHA-B1” in “SPEC” of “DATA MONITOR” mode, and make sure that the indication is within the SP value.

Is the measurement value within the SP value?

YES >> GO TO 5.
NO >> GO TO 6.

5. CHANGE ENGINE OIL

1. Stop the engine.
2. Change engine oil.

NOTE:
This symptom may occur when a large amount of gasoline is mixed with engine oil because of driving conditions (such as when engine oil temperature does not rise enough since a journey distance is too short during winter). The symptom will not be detected after changing engine oil or changing driving condition.

>> **INSPECTION END**

6. CHECK FUEL PRESSURE

Check fuel pressure. Refer to EC-113, "Work Procedure".

Is the inspection result normal?

YES >> GO TO 9.
NO-1 >> Fuel pressure is too high: Replace fuel level sensor unit, fuel filter and fuel pump assembly (refer to FL-5, "Exploded View"), and then GO TO 8.
NO-2 >> Fuel pressure is too low: GO TO 7.

7. DETECT MALFUNCTIONING PART

Check fuel hoses and fuel tubes for clogging

Is the inspection result normal?

YES >> Replace Replace fuel level sensor unit, fuel filter and fuel pump assembly (refer to FL-5, "Exploded View"), and then GO TO 8.
NO >> Repair or replace, and then GO TO 8.

8. CHECK “A/F ALPHA-B1”

1. Start engine.
2. Select “A/F ALPHA-B1” in “SPEC” of “DATA MONITOR” mode, and make sure that the indication is within the SP value.

Is the measurement value within the SP value?

YES >> INSPECTION END
NO >> GO TO 9.

9. PERFORM POWER BALANCE TEST

1. Perform “POWER BALANCE” in “ACTIVE TEST” mode.
2. Make sure that the each cylinder produces a momentary engine speed drop.

Is the inspection result normal?

YES >> GO TO 12.
NO >> GO TO 10.

10. DETECT MALFUNCTIONING PART

Check the following.
1. Ignition coil and its circuit (Refer to EC-294, "Component Inspection (Ignition Coil with Power Transistor)".)
2. Fuel injector and its circuit (Refer to EC-286, "Component Inspection".)
3. Intake air leakage
4. Low compression pressure (Refer to EM-14, "Inspection".)

Is the inspection result normal?

YES >> Replace fuel injector (refer to EM-37, "Exploded View"), and then GO TO 11.
NO >> Repair or replace malfunctioning part, and then GO TO 11.

11. CHECK “A/F ALPHA-B1”

1. Start engine.
2. Select “A/F ALPHA-B1” in “SPEC” of “DATA MONITOR” mode, and make sure that the indication is within the SP value.

Is the measurement value within the SP value?

YES >> INSPECTION END
NO >> GO TO 12.

12. CHECK A/F SENSOR 1 FUNCTION

Perform all DTC CONFIRMATION PROCEDURE related with A/F sensor 1.
- For DTC P0130, refer to EC-147, "DTC Logic".
- For DTC P0131, refer to EC-150, "DTC Logic".
- For DTC P0132, refer to EC-152, "DTC Logic".
- For DTC P0133, refer to EC-154, "DTC Logic".
- For DTC P2A00, refer to EC-278, "DTC Logic".

Is any DTC detected?

YES >> GO TO 15.
NO >> GO TO 13.

13. CHECK A/F SENSOR 1 CIRCUIT

Perform DIAGNOSTIC PROCEDURE according to corresponding DTC.

>> GO TO 14.

14. CHECK “A/F ALPHA-B1”

1. Start engine.
2. Select “A/F ALPHA-B1” in “SPEC” of “DATA MONITOR” mode, and make sure that the indication is within the SP value.

Is the measurement value within the SP value?

YES >> INSPECTION END
NO >> GO TO 15.

15. DISCONNECT AND RECONNECT ECM HARNESS CONNECTOR

1. Stop the engine.
2. Disconnect ECM harness connector.
3. Check pin terminal and connector for damage, and then reconnect it.

>> GO TO 16.

16. CHECK “A/F ALPHA-B1”

1. Start engine.
2. Select “A/F ALPHA-B1” in “SPEC” of “DATA MONITOR” mode, and make sure that the indication is within the SP value.

Is the measurement value within the SP value?

YES >> INSPECTION END
NO >> Detect malfunctioning part according to EC-299, "Symptom Table".

17. CHECK “B/FUEL SCHDL”

Select “B/FUEL SCHDL” in “SPEC” of “DATA MONITOR” mode, and make sure that the indication is within the SP value.

Is the measurement value within the SP value?

YES >> INSPECTION END
NO-1 >> More than the SP value: GO TO 18.
NO-2 >> Less than the SP value: GO TO 25.

18. DETECT MALFUNCTIONING PART

1. Check for the cause of large engine friction. Refer to the following.
- Engine oil level is too high
- Engine oil viscosity
- Belt tension of power steering, alternator, A/C compressor, etc. is excessive
- Noise from engine
- Noise from transmission, etc.
2. Check for the cause of insufficient combustion. Refer to the following.
- Valve clearance malfunction
- Intake valve timing control function malfunction
- Camshaft sprocket installation malfunction, etc.

>> Repair or replace malfunctioning part, and then GO TO 30.

19. CHECK INTAKE SYSTEM

Check for the cause of uneven air flow through mass air flow sensor. Refer to the following.
- Crushed air ducts
- Malfunctioning seal of air cleaner element
- Uneven dirt of air cleaner element
- Improper specification of intake air system

Is the inspection result normal?

YES >> GO TO 21.
NO >> Repair or replace malfunctioning part, and then GO TO 20.

20. CHECK “A/F ALPHA-B1”, AND “B/FUEL SCHDL”

Select “A/F ALPHA-B1” and “B/FUEL SCHDL” in “SPEC” of “DATA MONITOR” mode, and make sure that each indication is within the SP value.

Is the measurement value within the SP value?

YES >> **INSPECTION END**
NO >> “B/FUEL SCHDL” is more, “A/F ALPHA-B1” is less than the SP value: GO TO 21.

21. DISCONNECT AND RECONNECT MASS AIR FLOW SENSOR HARNESS CONNECTOR

1. Stop the engine.
2. Disconnect mass air flow sensor harness connector.

3. Check pin terminal and connector for damage, and then reconnect it again.

>> GO TO 22.

22. CHECK “A/F ALPHA-B1”

1. Start engine.
2. Select “A/F ALPHA-B1” in “SPEC” of “DATA MONITOR” mode, and make sure that the indication is within the SP value.

Is the measurement value within the SP value?

YES >> Detect malfunctioning part of mass air flow sensor circuit and repair it. Refer to EC-137, "DTC Logic". Then GO TO 29.
NO >> GO TO 23.

23. CHECK “MAS A/F SE-B1”

Select “MAS A/F SE-B1” in “SPEC” of “DATA MONITOR” mode, and make sure that the indication is within the SP value.

Is the measurement value within the SP value?

YES >> GO TO 24.
NO >> More than the SP value: Replace mass air flow sensor (refer to EM-24, "Exploded View"), and then GO TO 29.

24. REPLACE ECM

1. Replace ECM. Refer to EC-312, "Exploded View".
2. Perform EC-103, "Work Procedure".

>> GO TO 29.

25. CHECK INTAKE SYSTEM

Check for the cause of uneven air flow through mass air flow sensor. Refer to the following.
- Crushed air ducts
- Malfunctioning seal of air cleaner element
- Uneven dirt of air cleaner element
- Improper specification of intake air system

Is the inspection result normal?

YES >> GO TO 27.
NO >> Repair or replace malfunctioning part, and then GO TO 26.

26. CHECK “B/FUEL SCHDL”

Select “B/FUEL SCHDL” in “SPEC” of “DATA MONITOR” mode, and make sure that the indication is within the SP value.

Is the measurement value within the SP value?

YES >> INSPECTION END
NO >> Less than the SP value: GO TO 27.

27. CHECK “MAS A/F SE-B1”

Select “MAS A/F SE-B1” in “SPEC” of “DATA MONITOR” mode, and make sure that the indication is within the SP value.

Is the measurement value within the SP value?

YES >> GO TO 28.
NO >> Less than the SP value: Replace mass air flow sensor (refer to EM-24, "Exploded View"), and then GO TO 30.

28. CHECK INTAKE SYSTEM

Check for the cause of air leak after the mass air flow sensor. Refer to the following.
- Disconnection, looseness, and cracks in air duct
- Looseness of oil filler cap
- Disconnection of oil level gauge
- Open stuck, breakage, hose disconnection, or cracks of PCV valve

- Disconnection or cracks of EVAP purge hose, open stuck of EVAP canister purge volume control solenoid valve
- Malfunctioning seal of rocker cover gasket
- Disconnection, looseness, or cracks of hoses, such as vacuum hose, connecting to intake air system parts
- Malfunctioning seal of intake air system, etc.

>> GO TO 30.

29. CHECK “A/F ALPHA-B1” AND “B/FUEL SCHDL”

Select “A/F ALPHA-B1” and “B/FUEL SCHDL” in “SPEC” of “DATA MONITOR” mode, and make sure that each indication is within the SP value.

Is the measurement value within the SP value?

YES >> INSPECTION END
NO >> Detect malfunctioning part according to EC-299, "Symptom Table".

30. CHECK “B/FUEL SCHDL”

Select “B/FUEL SCHDL” in “SPEC” of “DATA MONITOR” mode, and then make sure that the indication is within the SP value.

Is the measurement value within the SP value?

YES >> INSPECTION END
NO >> Detect malfunctioning part according to EC-299, "Symptom Table".

POWER SUPPLY AND GROUND CIRCUIT

Diagnosis Procedure

INFOID:0000000005989226

1. CHECK GROUND CONNECTION

1. Turn ignition switch OFF.
2. Check ground connection E38. Refer to Ground Inspection in GI-35, "Circuit Inspection".

Is the inspection result normal?

YES >> GO TO 2.
NO >> Repair or replace ground connection.

2. CHECK ECM GROUND CIRCUIT FOR OPEN AND SHORT

1. Disconnect ECM harness connectors.
2. Check the continuity between ECM harness connector and ground.

ECM		Ground	Continuity
Connector	Terminal		
F7	10	Ground	Existed
	11		
E18	107		

3. Also check harness for short to power.

Is the inspection result normal?

YES >> GO TO 4.
NO >> GO TO 3.

3. DETECT MALFUNCTIONING PART

Check harness for open or short between ECM and ground.

>> Repair open circuit or short to power in harness or connectors.

4. CHECK ECM POWER SUPPLY CIRCUIT-I

1. Reconnect ECM harness connectors.
2. Turn ignition switch ON.
3. Check the voltage between ECM harness connector and ground.

ECM		Ground	Voltage
Connector	Terminal		
E18	93	Ground	Battery voltage

Is the inspection result normal?

YES >> GO TO 6.
NO >> GO TO 5.

5. DETECT MALFUNCTIONING PART

Check harness for open or short between ECM and fuse.

>> Repair open circuit or short to ground or short to power in harness or connectors.

6. CHECK ECM POWER SUPPLY CIRCUIT-II

1. Turn ignition switch OFF and wait at least 10 seconds.
2. Turn ignition switch ON and then OFF.
   Check the voltage between ECM harness connector and ground.

ECM		Ground	Voltage
Connector	Terminal		
E18	105	Ground	After turning ignition switch OFF, battery voltage will exist for a few seconds, then drop to approximately 0 V.

Is the inspection result normal?

YES >> GO TO 7.
NO >> GO TO 9.

7. CHECK ECM POWER SUPPLY CIRCUIT-III

1. Turn ignition switch ON.
2. Check the voltage between IPDM E/R harness connector and ground.

IPDM E/R		Ground	Voltage
Connector	Terminal		
F115	75	Ground	Battery voltage

Is the inspection result normal?

YES >> GO TO 8.
NO >> Replace IPDM E/R. Refer to PCS-52, "Exploded View".

8. CHECK INTERMITTENT INCIDENT

Check intermittent incident. Refer to GI-33, "Intermittent Incident".

>> Repair or replace malfunctioning part.

9. CHECK ECM POWER SUPPLY CIRCUIT-IV

1. Turn ignition switch OFF and wait at least 10 seconds.
2. Check the voltage between ECM harness connector and ground.

ECM		Ground	Voltage
Connector	Terminal		
F7	32	Ground	Battery voltage

Is the inspection result normal?

YES >> GO TO 13.
NO >> GO TO 10.

10. CHECK ECM POWER SUPPLY CIRCUIT-V

1. Disconnect ECM harness connector.
2. Disconnect IPDM E/R harness connector F113.
3. Check the continuity between ECM harness connector and IPDM E/R harness connector.

ECM		IPDM E/R		Continuity
Connector	Terminal	Connector	Terminal	
F7	32	F113	50	Existed

4. Also check harness for short to ground and short to power.

Is the inspection result normal?

YES >> GO TO 12.
NO >> GO TO 11.

11. DETECT MALFUNCTIONING PART

Check harness for open or short between ECM and IPDM E/R.

>> Repair open circuit or short to ground or short to power in harness or connectors.

12. CHECK 20 A FUSE

1. Disconnect 20 A fuse (No. 49) from IPDM E/R.
2. Check 20 A fuse.

Is the inspection result normal?

YES >> GO TO 14.
NO >> Replace 20 A fuse.

13. CHECK ECM POWER SUPPLY CIRCUIT-VI

1. Disconnect ECM harness connector.
2. Disconnect IPDM E/R harness connector E14.
3. Check the continuity between ECM harness connector and IPDM E/R harness connector.

ECM		IPDM E/R		Continuity
Connector	Terminal	Connector	Terminal	
E18	105	E12	35	Existed

4. Also check harness for short to ground and short to power.

Is the inspection result normal?

YES >> GO TO 14.
NO >> Repair open circuit or short to ground or short power in harness or connectors.

14. CHECK INTERMITTENT INCIDENT

Check intermittent incident. Refer to GI-33, "Intermittent Incident".

Is the inspection result normal?

YES >> Replace IPDM E/R. Refer to PCS-52, "Exploded View".
NO >> Repair or replace harness or connectors.

U1001 CAN COMM CIRCUIT

Description

INFOID:0000000005989227

CAN (Controller Area Network) is a serial communication line for real time application. It is an on-vehicle multiplex communication line with high data communication speed and excellent error detection ability. Many electronic control units are equipped onto a vehicle, and each control unit shares information and links with other control units during operation (not independent). In CAN communication, control units are connected with 2 communication lines (CAN H line, CAN L line) allowing a high rate of information transmission with less wiring. Each control unit transmits/receives data but selectively reads required data only.

DTC Logic

INFOID:0000000005989228

DTC DETECTION LOGIC

DTC No.	Trouble diagnosis name	DTC detecting condition	Possible cause
U1001	CAN communication line	When ECM is not transmitting or receiving CAN communication signal other than OBD (emission related diagnosis) for 2 seconds or more.	• Harness or connectors (CAN communication line is open or shorted)

DTC CONFIRMATION PROCEDURE

1. PERFORM DTC CONFIRMATION PROCEDURE

1. Turn ignition switch ON and wait at least 3 seconds.
2. Check DTC.

Is DTC detected?

YES >> EC-126, "Diagnosis Procedure".
NO >> INSPECTION END

Diagnosis Procedure

INFOID:0000000005989229

Perform the trouble diagnosis for CAN communication system. Refer to LAN-14, "Trouble Diagnosis Flow Chart".

P0011 IVT CONTROL

DTC Logic

INFOID:0000000005989233

DTC DETECTION LOGIC

NOTE:
If DTC P0011 is displayed with DTC P0075, first perform the trouble diagnosis for DTC P0075. Refer to EC-135, "DTC Logic".

DTC No.	Trouble diagnosis name	Detecting condition	Possible cause
P0011	Intake valve timing control performance	There is a gap between angle of target and phase-control angle degree.	• Crankshaft position sensor (POS) • Camshaft position sensor (PHASE) • Intake valve control solenoid valve • Accumulation of debris to the signal pick-up portion of the camshaft • Timing chain installation • Foreign matter caught in the oil groove for intake valve timing control

DTC CONFIRMATION PROCEDURE

1. PRECONDITIONING

If DTC Confirmation Procedure has been previously conducted, always turn ignition switch OFF and wait at least 10 seconds before conducting the next test.
TESTING CONDITION:
Before performing the following procedure, confirm that battery voltage is between 10 V and 16 V at idle.

>> GO TO 2.

2. PERFORM DTC CONFIRMATION PROCEDURE-I

With CONSULT-III
1. Turn ignition switch ON and select “DATA MONITOR” mode with CONSULT-III.
2. Start engine and warm it up to the normal operating temperature.
3. Maintain the following conditions for at least 6 consecutive seconds. Hold the accelerator pedal as steady as possible.

VHCL SPEED SE	Approx. 100 km/h (Approx. 63 mph)
ENG SPEED	1,200 - 2,000 rpm
COOLAN TEMP/S	More than 60°C (140°F)
Shift lever	5th position

NOTE:
Always drive at a safe speed.
4. Stop vehicle with engine running and let engine idle for 10 seconds.
5. Check 1st trip DTC.

With GST
Follow the procedure “With CONSULT-III” above.

Is 1st trip DTC detected?

YES >> Go to EC-128, "Diagnosis Procedure"
NO >> GO TO 3.

3. PERFORM DTC CONFIRMATION PROCEDURE-II

With CONSULT-III
1. Maintain the following conditions for at least 20 consecutive seconds.

ENG SPEED	1,700 - 3,175 rpm (A constant rotation is maintained.)
COOLAN TEMP/S	More than 70°C (158°F)
Shift lever	1st or 2nd position
Driving location	Driving vehicle uphill (Increased engine load will help maintain the driving conditions required for this test.)

CAUTION:
Always drive at a safe speed.

2. Check 1st trip DTC.

With GST

Follow the procedure “With CONSULT-III” above.

Is 1st trip DTC detected?

YES >> Go to EC-128, "Diagnosis Procedure"
NO >> INSPECTION END

Diagnosis Procedure

INFOID:0000000005989234

1. CHECK OIL PRESSURE WARNING LAMP

1. Start engine.
2. Check oil pressure warning lamp and confirm it is not illuminated.

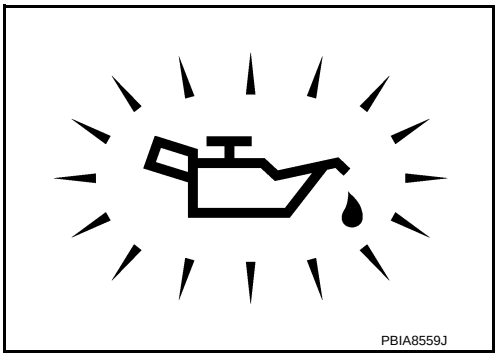

Is oil pressure warning lamp illuminated?

YES >> Go to LU-12, "Inspection".
NO >> GO TO 2.

2. CHECK INTAKE VALVE TIMING CONTROL SOLENOID VALVE

Refer to EC-129, "Component Inspection".

Is the inspection result normal?

YES >> GO TO 3.
NO >> Replace intake valve timing control solenoid valve. Refer to EM-53, "Exploded View".

3. CHECK CRANKSHAFT POSITION SENSOR (POS)

Check crankshaft position sensor (pos). Refer to EC-199, "Component Inspection".

Is the inspection result normal?

YES >> GO TO 4.
NO >> Replace crankshaft position sensor (POS).

4. CHECK CAMSHAFT POSITION SENSOR (PHASE)

Check camshaft position sensor (phase). Refer to EC-202, "Component Inspection".

Is the inspection result normal?

YES >> GO TO 5.
NO >> Replace camshaft position sensor (PHASE). Refer to EM-53, "Exploded View".

5. CHECK CAMSHAFT (INTAKE)

Check the following.

- Accumulation of debris to the signal plate of camshaft (1) rear end
- Chipping signal plate of camshaft rear end

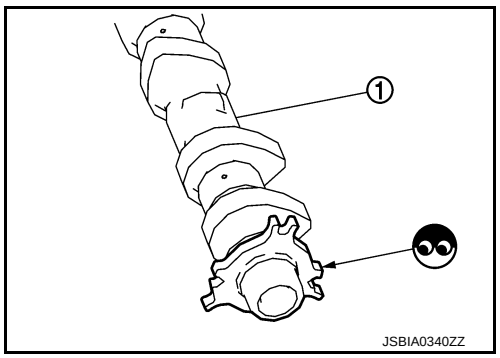

Is the inspection result normal?

YES >> GO TO 6.
NO >> Remove debris and clean the signal plate of camshaft rear end or replace camshaft. Refer to EM-53, "Exploded View".

6. CHECK TIMING CHAIN INSTALLATION

Check service records for any recent repairs that may cause timing chain misaligned.

Are there any service records that may cause timing chain misaligned?

YES >> Check timing chain installation. Refer to EM-43, "Exploded View".
NO >> GO TO 7.

7. CHECK LUBRICATION CIRCUIT

Perform “Inspection of Camshaft Sprocket (INT) Oil Groove”. Refer to LU-7, "Inspection".

Is the inspection result normal?

YES >> GO TO 8.
NO >> Clean lubrication line.

8. CHECK INTERMITTENT INCIDENT

Check intermittent incident. Refer to GI-33, "Intermittent Incident".

>> Repair or replace malfunctioning part.

Component Inspection

INFOID:0000000005989235

1. CHECK INTAKE VALVE TIMING CONTROL SOLENOID VALVE-I

1. Turn ignition switch OFF.
2. Disconnect intake valve timing control solenoid valve harness connector.
3. Check resistance between intake valve timing control solenoid valve terminals as follows.

Terminals	Resistance [at 20°C (68°F)]
1 and 2	7.0 - 7.7 Ω
1 or 2 and ground	∞ Ω (Continuity should not exist)

Is the inspection result normal?

YES >> GO TO 2.
NO >> Replace intake valve timing control solenoid valve. Refer to EM-53, "Exploded View".

2. CHECK INTAKE VALVE TIMING CONTROL SOLENOID VALVE-II

1. Remove intake valve timing control solenoid valve.
2. Apply 12 V between intake valve timing control solenoid valve terminals 1 and 2, and then interrupt it. Make sure that the plunger moves as shown in the figure.

   CAUTION:
   Do not apply 12 V continuously for 5 seconds or more. Doing so may result in damage to the coil in intake valve timing control solenoid valve.
   NOTE:
   Always replace O-ring when intake valve timing control solenoid valve is removed.

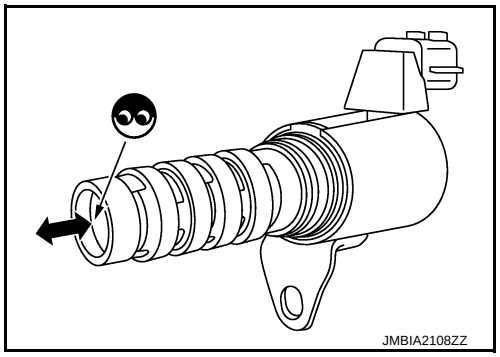

Is the inspection result normal?

YES >> INSPECTION END
NO >> Replace intake valve timing control solenoid valve. Refer to EM-53, "Exploded View".

P0031, P0032 A/F SENSOR 1 HEATER

DTC Logic

INFOID:0000000005989236

DTC DETECTION LOGIC

DTC No.	Trouble diagnosis name	DTC detecting condition	Possible cause
P0031	Air fuel ratio (A/F) sensor 1 heater control circuit low	The current amperage in the A/F sensor 1 heater circuit is out of the normal range. (An excessively low voltage signal is sent to ECM through the A/F sensor 1 heater.)	• Harness or connectors (The A/F sensor 1 heater circuit is open or shorted.) • A/F sensor 1 heater
P0032	Air fuel ratio (A/F) sensor 1 heater control circuit high	The current amperage in the A/F sensor 1 heater circuit is out of the normal range. (An excessively high voltage signal is sent to ECM through the A/F sensor 1 heater.)	• Harness or connectors (The A/F sensor 1 heater circuit is shorted.) • A/F sensor 1 heater

DTC CONFIRMATION PROCEDURE

1. PRECONDITIONING

If DTC Confirmation Procedure has been previously conducted, always turn ignition switch OFF and wait wait at least 10 seconds before conducting the next test.

TESTING CONDITION:

Before performing the following procedure, confirm that battery voltage is between 10.5 V and 16 V at idle.

>> GO TO 2.

2. PERFORM DTC CONFIRMATION PROCEDURE

1. Start engine and let it idle for at least 10 seconds.
2. Check 1st trip DTC.

Is 1st trip DTC detected?

YES >> Go to EC-131, "Diagnosis Procedure".
NG >> INSPECTION END

Diagnosis Procedure

INFOID:0000000005989237

1. CHECK AIR FUEL RATIO (A/F) SENSOR 1 POWER SUPPLY CIRCUIT

1. Disconnect air fuel ratio (A/F) sensor 1 harness connector.
2. Turn ignition switch ON.
3. Check the voltage between A/F sensor 1 harness connector and ground.

A/F sensor 1		Ground	Voltage
Connector	Terminal		
F50	4	Ground	Battery voltage

Is the inspection result normal?

YES >> GO TO 3.
NO >> GO TO 2.

2. DETECT MALFUNCTIONING PART

Check harness for open or short between A/F sensor 1 and fuse.

>> Repair or replace malfunctioning part.

3. CHECK A/F SENSOR 1 HEATER OUTPUT SIGNAL CIRCUIT

1. Turn ignition switch OFF.
2. Disconnect ECM harness connector.
3. Check the continuity between A/F sensor 1 harness connector and ECM harness connector.

A/F sensor 1		ECM		Continuity
Connector	Terminal	Connector	Terminal	
F50	3	F7	3	Existed

4. Also check harness for short to ground and short to power.

Is the inspection result normal?

YES >> GO TO 4.
NO >> Repair open circuit, short to ground or short to power in harness or connectors.

4. CHECK A/F SENSOR 1 HEATER

Check A/F sensor 1 heater. Refer to EC-132, "Component Inspection".

Is the inspection result normal?

YES >> GO TO 5.
NO >> Replace air fuel ratio (A/F) sensor 1. Refer to EM-32, "Exploded View".

5. CHECK INTERMITTENT INCIDENT

Check intermittent incident. Refer to GI-33, "Intermittent Incident".

>> Repair or replace malfunctioning part.

Component Inspection

INFOID:0000000005989238

1. CHECK AIR FUEL RATIO (A/F) SENSOR 1

1. Turn ignition switch OFF.
2. Disconnect A/F sensor 1 harness connector.
3. Check resistance between A/F sensor 1 terminals as follows.

Terminal	Resistance
3 and 4	1.98 - 2.42 Ω [at 25°C (77°F)]
3 and 1, 2	∞ Ω (Continuity should not exist)
4 and 1, 2	

Is the inspection result normal?

YES >> INSPECTION END
NO >> Replace air fuel ratio (A/F) sensor 1. Refer to EM-32, "Exploded View".

P0037, P0038 HO2S2 HEATER

DTC Logic

INFOID:0000000006014753

DTC DETECTION LOGIC

DTC No.	Trouble diagnosis name	DTC detecting condition	Possible cause
P0037	Heated oxygen sensor 2 heater control circuit low	The current amperage in the heated oxygen sensor 2 heater circuit is out of the normal range. (An excessively low voltage signal is sent to ECM through the heated oxygen sensor 2 heater.)	• Harness or connectors (The heated oxygen sensor 2 heater circuit is open or shorted.) • Heated oxygen sensor 2 heater
P0038	Heated oxygen sensor 2 heater control circuit high	The current amperage in the heated oxygen sensor 2 heater circuit is out of the normal range. (An excessively high voltage signal is sent to ECM through the heated oxygen sensor 2 heater.)	• Harness or connectors (The heated oxygen sensor 2 heater circuit is shorted.) • Heated oxygen sensor 2 heater

DTC CONFIRMATION PROCEDURE

1. PRECONDITIONING

If DTC Confirmation Procedure has been previously conducted, always turn ignition switch OFF and wait at least 10 seconds before conducting the next test.

TESTING CONDITION:

Before performing the following procedure, confirm that battery voltage is between 11 V and 16 V at idle.

>> GO TO 2.

2. PERFORM DTC CONFIRMATION PROCEDURE

1. Turn ignition switch ON and select “DATA MONITOR” mode with CONSULT-III.
2. Start engine and warm it up to the normal operating temperature.
3. Turn ignition switch OFF and wait at least 10 seconds.
4. Turn ignition switch ON.
5. Turn ignition switch OFF and wait at least 10 seconds.
6. Start engine and keep the engine speed between 3,500 and 4,000 rpm for at least 1 minute under no load.
7. Let engine idle for 1 minute.
8. Check 1st trip DTC.

Is 1st trip DTC detected?

YES >> Go to EC-133, "Diagnosis Procedure".
NO >> INSPECTION END

Diagnosis Procedure

INFOID:0000000006014754

1. CHECK HO2S2 POWER SUPPLY CIRCUIT

1. Disconnect heated oxygen sensor 2 harness connector.
2. Turn ignition switch ON.
3. Check the voltage between HO2S2 harness connector and ground.

HO2S2		Ground	Voltage
Connector	Terminal		
E31	2	Ground	Battery voltage

Is the inspection result normal?

YES >> GO TO 3.
NO >> GO TO 2.

2. DETECT MALFUNCTIONING PART

Check harness for open or short between heated oxygen sensor 2 and IPDM E/R.

>> Repair open circuit, short to ground or short to power in harness or connectors.

3. CHECK HO2S2 OUTPUT SIGNAL CIRCUIT FOR OPEN AND SHORT

1. Turn ignition switch OFF.
2. Disconnect ECM harness connector.
3. Check the continuity between HO2S2 harness connector and ECM harness connector.

HO2S2		ECM		Continuity
Connector	Terminal	Connector	Terminal	
E31	3	F7	5	Existed

4. Also check harness for short to ground and short to power.

Is the inspection result normal?

YES >> GO TO 4.
NO >> Repair open circuit, short to ground or short to power in harness or connectors.

4. CHECK HEATED OXYGEN SENSOR 2 HEATER

Check heated oxygen sensor 2 heater. Refer to EC-134, "Component Inspection".

Is the inspection result normal?

YES >> GO TO 5.
NO >> Replace malfunctioning heated oxygen sensor 2. Refer to EX-5, "Exploded View".

5. CHECK INTERMITTENT INCIDENT

Check intermittent incident. Refer to GI-33, "Intermittent Incident".

>> Repair or replace malfunctioning part.

Component Inspection

INFOID:0000000006014755

1. CHECK HEATED OXYGEN SENSOR 2 HEATER

1. Turn ignition switch OFF.
2. Disconnect heated oxygen sensor 2 harness connector.
3. Check resistance between HO2S2 terminals as follows.

Terminal	Resistance (Ω)
2 and 3	3.4 - 4.4 [at 25°C (77°F)]
1 and 2, 3, 4	∞ (Continuity should not exist)
4 and 1, 2, 3	

Is the inspection result normal?

YES >> INSPECTION END
NO >> Replace heated oxygen sensor 2. Refer to EX-5, "Exploded View".

P0075 IVT CONTROL SOLENOID VALVE

DTC Logic

INFOID:0000000005989239

DTC DETECTION LOGIC

DTC No.	Trouble diagnosis name	DTC detecting condition	Possible cause
P0075	Intake valve timing control solenoid valve circuit	An improper voltage is sent to the ECM through intake valve timing control solenoid valve.	• Harness or connectors (Intake valve timing control solenoid valve circuit is open or shorted.) • Intake valve timing control solenoid valve

DTC CONFIRMATION PROCEDURE

1.PRECONDITIONING

If DTC Confirmation Procedure has been previously conducted, always turn ignition switch OFF and wait at least 10 seconds before conducting the next test.

>> GO TO2.

2.PERFORM DTC CONFIRMATION PROCEDURE

1. Start engine and let it idle for 5 seconds.
2. Check 1st trip DTC.

Is 1st trip DTC detected?

YES >> Go to EC-135, "Diagnosis Procedure".
NO >> INSPECTION END

Diagnosis Procedure

INFOID:0000000005989240

1.CHECK INTAKE VALVE TIMING CONTROL SOLENOID VALVE POWER SUPPLY CIRCUIT

1. Turn ignition switch OFF.
2. Disconnect intake valve timing (IVT) control solenoid valve harness connector.
3. Turn ignition switch ON.
4. Check the voltage between intake valve timing control solenoid valve harness connector and ground.

IVT control solenoid valve		Ground	Voltage
Connector	Terminal		
F41	1	Ground	Battery voltage

Is the inspection result normal?

YES >> GO TO 3.
NO >> GO TO 2.

2.DETECT MALFUNCTIONING PART

Check harness for open or short between intake valve timing control solenoid valve and IPDM E/R.

>> Repair open circuit or short to ground or short to power in harness or connectors.

3.CHECK INTAKE VALVE TIMING CONTROL SOLENOID VALVE OUTPUT SIGNAL CIRCUIT FOR OPEN AND SHORT

1. Turn ignition switch OFF.
2. Disconnect ECM harness connector.
3. Check the continuity between intake valve timing control solenoid valve harness connector and ECM harness connector.

IVT control solenoid valve		ECM		Continuity
Connector	Terminal	Connector	Terminal	
F41	2	F16	73	Existed

4. Also check harness for short to ground and short to power.

Is the inspection result normal?

YES >> GO TO 4.
NO >> Repair open circuit or short to ground or short to power in harness or connectors.

4. CHECK INTAKE VALVE TIMING CONTROL SOLENOID VALVE

Check intake valve timing control solenoid valve. Refer to EC-136, "Component Inspection".

Is the inspection result normal?

YES >> GO TO 5.
NO >> Replace intake valve timing control solenoid valve. Refer to EM-53, "Exploded View".

5. CHECK INTERMITTENT INCIDENT

Check intermittent incident. Refer to GI-33, "Intermittent Incident".

>> Repair or replace malfunctioning part.

Component Inspection

INFOID:0000000006059201

1. CHECK INTAKE VALVE TIMING CONTROL SOLENOID VALVE-I

1. Turn ignition switch OFF.
2. Disconnect intake valve timing control solenoid valve harness connector.
3. Check resistance between intake valve timing control solenoid valve terminals as follows.

Terminals	Resistance [at 20°C (68°F)]
1 and 2	7.0 - 7.7 Ω
1 or 2 and ground	∞ Ω (Continuity should not exist)

Is the inspection result normal?

YES >> GO TO 2.
NO >> Replace intake valve timing control solenoid valve. Refer to EM-53, "Exploded View".

2. CHECK INTAKE VALVE TIMING CONTROL SOLENOID VALVE-II

1. Remove intake valve timing control solenoid valve.
2. Apply 12 V between intake valve timing control solenoid valve terminals 1 and 2, and then interrupt it. Make sure that the plunger moves as shown in the figure.

   CAUTION:
   Do not apply 12 V continuously for 5 seconds or more. Doing so may result in damage to the coil in intake valve timing control solenoid valve.
   NOTE:
   Always replace O-ring when intake valve timing control solenoid valve is removed.

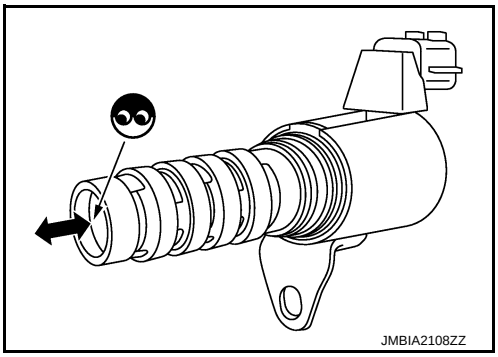

Is the inspection result normal?

YES >> INSPECTION END
NO >> Replace intake valve timing control solenoid valve. Refer to EM-53, "Exploded View".

P0102, P0103 MAF SENSOR

DTC Logic

INFOID:0000000005989242

DTC DETECTION LOGIC

DTC No.	Trouble diagnosis name	DTC detecting condition	Possible cause
P0102	Mass air flow sensor circuit low input	An excessively low voltage from the sensor is sent to ECM.	• Harness or connectors (The sensor circuit is open or shorted.) • Intake air leakage • Mass air flow sensor
P0103	Mass air flow sensor circuit high input	An excessively high voltage from the sensor is sent to ECM.	• Harness or connectors (The sensor circuit is open or shorted.) • Mass air flow sensor

DTC CONFIRMATION PROCEDURE

1. PRECONDITIONING

If DTC Confirmation Procedure has been previously conducted, always turn ignition switch OFF and wait at least 10 seconds before conducting the next test.

Which DTC is detected?

P0102 >> GO TO 2.
P0103 >> GO TO 3.

2. PERFORM DTC CONFIRMATION PROCEDURE FOR DTC P0102

1. Start engine and wait at least 5 seconds.
2. Check DTC.

Is DTC detected?

YES >> Go to EC-137, "Diagnosis Procedure".
NO >> INSPECTION END

3. PERFORM DTC CONFIRMATION PROCEDURE FOR DTC P0103-I

1. Turn ignition switch ON and wait at least 5 seconds.
2. Check DTC.

Is DTC detected?

YES >> Go to EC-137, "Diagnosis Procedure".
NO >> GO TO 4.

4. PERFORM DTC CONFIRMATION PROCEDURE FOR DTC P0103-II

1. Start engine and wait at least 5 seconds.
2. Check DTC.

Is DTC detected?

YES >> Go to EC-137, "Diagnosis Procedure".
NO >> INSPECTION END

Diagnosis Procedure

INFOID:0000000005989243

1. INSPECTION START

Confirm the detected DTC.

Which DTC is detected?

P0102 >> GO TO 2.
P0103 >> GO TO 3.

2. CHECK INTAKE SYSTEM

Check the following for connection.
- Air duct
- Vacuum hoses

- Intake air passage between air duct to intake manifold

Is the inspection result normal?

YES >> GO TO 3.
NO >> Reconnect the parts.

3. CHECK MAF SENSOR POWER SUPPLY CIRCUIT

1. Disconnect mass air flow (MAF) sensor harness connector.
2. Turn ignition switch ON.
3. Check the voltage between MAF sensor harness connector and ground.

MAF sensor		Ground	Voltage
Connector	Terminal		
F4	5	Ground	Battery voltage

Is the inspection result normal?

YES >> GO TO 4.
NO >> Repair open circuit or short to ground or short to power in harness or connectors.

4. CHECK MAF SENSOR GROUND CIRCUIT FOR OPEN AND SHORT

1. Turn ignition switch OFF.
2. Disconnect ECM harness connector.
3. Check the continuity between MAF sensor harness connector and ECM harness connector.

MAF sensor		ECM		Continuity
Connector	Terminal	Connector	Terminal	
F4	4	F16	52	Existed

4. Also check harness for short to ground and short to power.

Is the inspection result normal?

YES >> GO TO 5.
NO >> Repair open circuit or short to ground or short to power in harness or connectors.

5. CHECK MAF SENSOR INPUT SIGNAL CIRCUIT FOR OPEN AND SHORT

1. Check the continuity between MAF sensor harness connector and ECM harness connector.

MAF sensor		ECM		Continuity
Connector	Terminal	Connector	Terminal	
F4	3	F16	45	Existed

2. Also check harness for short to ground and short to power.

Is the inspection result normal?

YES >> GO TO 6.
NO >> Repair open circuit or short to ground or short to power in harness or connectors.

6. CHECK MASS AIR FLOW SENSOR

Check mass air flow sensor. Refer to EC-139, "Component Inspection".

Is the inspection result normal?

YES >> GO TO 7.
NO >> Replace mass air flow sensor. Refer to EM-24, "Exploded View".

7. CHECK INTERMITTENT INCIDENT

Check intermittent incident. Refer to GI-33, "Intermittent Incident".

>> Repair or replace malfunctioning part.

Component Inspection

INFOID:0000000005989244

1. CHECK MASS AIR FLOW SENSOR-I

With CONSULT-III

1. Turn ignition switch OFF.
2. Reconnect all harness connectors disconnected.
3. Start engine and warm it up to normal operating temperature.
4. Connect CONSULT-III and select “DATA MONITOR” mode.
5. Select “MAS A/F SE-B1” and check indication.

Monitor item	Condition	MAS A/F SE-B1
MAS A/F SE-B1	Ignition switch ON (Engine stopped.)	Approx. 0.4 V
	Idle (Engine is warmed-up to normal operating temperature.)	0.9 - 1.3 V
	Idle to about 4,000 rpm	0.9 - 1.3 V to Approx. 2.4 V*

*: Check for linear voltage rise in response to engine being increased to about 4,000 rpm.

Without CONSULT-III

1. Turn ignition switch OFF.
2. Reconnect all harness connectors disconnected.
3. Start engine and warm it up to normal operating temperature.
4. Check the voltage between ECM harness connector and ground.

ECM			Condition	Voltage
Connector	+	–		
	Terminal	Terminal		
F16	45 (MAF sensor signal)	52	Ignition switch ON (Engine stopped.)	Approx. 0.4 V
			Idle (Engine is warmed-up to normal operating temperature.)	0.9 - 1.3 V
			Idle to about 4,000 rpm	0.9 - 1.3 V to Approx. 2.4 V*

*: Check for linear voltage rise in response to engine being increased to about 4,000 rpm.

Is the inspection result normal?

YES >> INSPECTION END
NO >> GO TO 2.

2. CHECK FOR THE CAUSE OF UNEVEN AIR FLOW THROUGH MASS AIR FLOW SENSOR

1. Turn ignition switch OFF.
2. Check for the cause of uneven air flow through mass air flow sensor. Refer to the following.

- Crushed air ducts
- Malfunctioning seal of air cleaner element
- Uneven dirt of air cleaner element
- Improper specification of intake air system parts

Is the inspection result normal?

YES >> GO TO 4.
NO >> GO TO 3.

3. CHECK MASS AIR FLOW SENSOR-II

With CONSULT-III

1. Repair or replace malfunctioning part.
2. Start engine and warm it up to normal operating temperature.
3. Connect CONSULT-III and select “DATA MONITOR” mode.
4. Select “MAS A/F SE-B1” and check indication.

Monitor item	Condition	MAS A/F SE-B1
MAS A/F SE-B1	Ignition switch ON (Engine stopped.)	Approx. 0.4 V
	Idle (Engine is warmed-up to normal operating temperature.)	0.9 - 1.3 V
	Idle to about 4,000 rpm	0.9 - 1.3 V to Approx. 2.4 V*

*: Check for linear voltage rise in response to engine being increased to about 4,000 rpm.

Without CONSULT-III

1. Repair or replace malfunctioning part.
2. Start engine and warm it up to normal operating temperature.
3. Check the voltage between ECM harness connector and ground.

ECM			Condition	Voltage
Connector	+	–		
	Terminal	Terminal		
F16	45 (MAF sensor signal)	52	Ignition switch ON (Engine stopped.)	Approx. 0.4 V
			Idle (Engine is warmed-up to normal operating temperature.)	0.9 - 1.3 V
			Idle to about 4,000 rpm	0.9 - 1.3 V to Approx. 2.4 V*

*: Check for linear voltage rise in response to engine being increased to about 4,000 rpm.

Is the inspection result normal?

YES >> INSPECTION END
NO >> GO TO 4.

4. CHECK MASS AIR FLOW SENSOR-III

With CONSULT-III

1. Turn ignition switch OFF.
2. Disconnect mass air flow sensor harness connector and reconnect it again.
3. Start engine and warm it up to normal operating temperature.
4. Connect CONSULT-III and select “DATA MONITOR” mode.
5. Select “MAS A/F SE-B1” and check indication.

Monitor item	Condition	MAS A/F SE-B1
MAS A/F SE-B1	Ignition switch ON (Engine stopped.)	Approx. 0.4 V
	Idle (Engine is warmed-up to normal operating temperature.)	0.9 - 1.3 V
	Idle to about 4,000 rpm	0.9 - 1.3 V to Approx. 2.4 V*

*: Check for linear voltage rise in response to engine being increased to about 4,000 rpm.

Without CONSULT-III

1. Turn ignition switch OFF.
2. Disconnect mass air flow sensor harness connector and reconnect it again.
3. Start engine and warm it up to normal operating temperature.
4. Check the voltage between ECM harness connector and ground.

ECM			Condition	Voltage
Connector	+	–		
	Terminal	Terminal		
F16	45 (MAF sensor signal)	52	Ignition switch ON (Engine stopped.)	Approx. 0.4 V
			Idle (Engine is warmed-up to normal operating temperature.)	0.9 - 1.3 V
			Idle to about 4,000 rpm	0.9 - 1.3 V to Approx. 2.4 V*

*: Check for linear voltage rise in response to engine being increased to about 4,000 rpm.

Is the inspection result normal?

YES >> INSPECTION END
NO >> Clean or replace mass air flow sensor. Refer to EM-24, "Exploded View".

P0112, P0113 IAT SENSOR

DTC Logic

INFOID:0000000005989245

DTC DETECTION LOGIC

DTC No.	Trouble diagnosis name	DTC detecting condition	Possible cause
P0112	Intake air temperature sensor circuit low input	An excessively low voltage from the sensor is sent to ECM.	• Harness or connectors (The sensor circuit is open or shorted.) • Intake air temperature sensor
P0113	Intake air temperature sensor circuit high input	An excessively high voltage from the sensor is sent to ECM.	

DTC CONFIRMATION PROCEDURE

1. PRECONDITIONING

If DTC Confirmation Procedure has been previously conducted, always turn ignition switch OFF and wait at least 10 seconds before conducting the next test.

>> GO TO 2.

2. PERFORM DTC CONFIRMATION PROCEDURE

1. Turn ignition switch ON and wait at least 5 seconds.
2. Check 1st trip DTC.

Is 1st trip DTC detected?

YES >> Go to EC-141, "Diagnosis Procedure".
NO >> INSPECTION END

Diagnosis Procedure

INFOID:0000000005989246

1. CHECK INTAKE AIR TEMPERATURE SENSOR POWER SUPPLY CIRCUIT

1. Disconnect mass air flow (MAF) sensor (with intake air temperature sensor) harness connector.
2. Turn ignition switch ON.
3. Check the voltage between mass air flow sensor harness connector and ground.

MAF sensor		Ground	Voltage
Connector	Terminal		
F4	2	Ground	Approx. 5 V

Is the inspection result normal?

YES >> GO TO 2.
NO >> Repair open circuit or short to ground or short to power in harness or connectors.

2. CHECK INTAKE AIR TEMPERATURE SENSOR GROUND CIRCUIT FOR OPEN AND SHORT

1. Turn ignition switch OFF.
2. Disconnect ECM harness connector.
3. Check the continuity between mass air flow sensor harness connector and ECM harness connector.

MAF sensor		ECM		Continuity
Connector	Terminal	Connector	Terminal	
F4	1	F16	55	Existed

4. Also check harness for short to ground and short to power.

Is the inspection result normal?

YES >> GO TO 3.
NO >> Repair open circuit or short to ground or short to power in harness or connectors.

3. CHECK INTAKE AIR TEMPERATURE SENSOR

Check intake air temperature sensor. Refer to EC-142, "Component Inspection".

Is the inspection result normal?

YES >> GO TO 4.
NO >> Replace mass air flow sensor (with intake air temperature sensor). Refer to EM-24, "Exploded View".

4. CHECK INTERMITTENT INCIDENT

Check intermittent incident. Refer to GI-33, "Intermittent Incident".

>> Repair or replace malfunctioning part.

Component Inspection

INFOID:0000000005989247

1. CHECK INTAKE AIR TEMPERATURE SENSOR

1. Turn ignition switch OFF.
2. Disconnect mass air flow sensor harness connector.
3. Check resistance between mass air flow sensor terminals as follows.

Terminals	Condition		Resistance
1 and 2	Temperature [°C (°F)]	25 (77)	1.800 - 2.200 kΩ

Is the inspection result normal?

YES >> INSPECTION END
NO >> Replace mass air flow sensor (with intake air temperature sensor). Refer to EM-24, "Exploded View".

P0117, P0118 ECT SENSOR

DTC Logic

INFOID:0000000005989248

DTC DETECTION LOGIC

DTC No.	Trouble diagnosis name	DTC detecting condition	Possible cause
P0117	Engine coolant temperature sensor circuit low input	An excessively low voltage from the sensor is sent to ECM.	• Harness or connectors (The sensor circuit is open or shorted.) • Engine coolant temperature sensor
P0118	Engine coolant temperature sensor circuit high input	An excessively high voltage from the sensor is sent to ECM.	

DTC CONFIRMATION PROCEDURE

1. PRECONDITIONING

If DTC Confirmation Procedure has been previously conducted, always turn ignition switch OFF and wait at least 10 seconds before conducting the next test.

>> GO TO 2.

2. PERFORM DTC CONFIRMATION PROCEDURE

1. Turn ignition switch ON and wait at least 5 seconds.
2. Check DTC.

Is DTC detected?

YES >> Go to EC-143, "Diagnosis Procedure".
NO >> INSPECTION END

Diagnosis Procedure

INFOID:0000000005989249

1. CHECK ECT SENSOR POWER SUPPLY CIRCUIT

1. Disconnect engine coolant temperature (ECT) sensor harness connector.
2. Turn ignition switch ON.
3. Check the voltage between ECT sensor harness connector and ground.

ECT sensor		Ground	Voltage
Connector	Terminal		
F28	1	Ground	Approx. 5 V

Is the inspection result normal?

YES >> GO TO 2.
NO >> Repair open circuit or short to ground or short to power in harness or connectors.

2. CHECK ECT SENSOR GROUND CIRCUIT FOR OPEN AND SHORT

1. Turn ignition switch OFF.
2. Disconnect ECM harness connector.
3. Check the continuity between ECT sensor harness connector and ECM harness connector.

ECT sensor		ECM		Continuity
Connector	Terminal	Connector	Terminal	
F28	2	F16	44	Existed

4. Also check harness for short to ground and short to power.

Is the inspection result normal?

YES >> GO TO 3.
NO >> Repair open circuit or short to ground or short to power in harness or connectors.

3. CHECK ENGINE COOLANT TEMPERATURE SENSOR

Check engine coolant temperature sensor. Refer to EC-144, "Component Inspection".

Is the inspection result normal?

YES >> GO TO 4.
NO >> Replace engine coolant temperature sensor. Refer to CO-23, "Exploded View".

4. CHECK INTERMITTENT INCIDENT

Check intermittent incident. Refer to GI-33, "Intermittent Incident".

>> Repair or replace malfunctioning part.

Component Inspection

INFOID:0000000005989250

1. CHECK ENGINE COOLANT TEMPERATURE SENSOR

1. Turn ignition switch OFF.
2. Disconnect engine coolant temperature sensor harness connector.
3. Remove engine coolant temperature sensor.
4. Check resistance between engine coolant temperature sensor terminals by heating with hot water as shown in the figure.

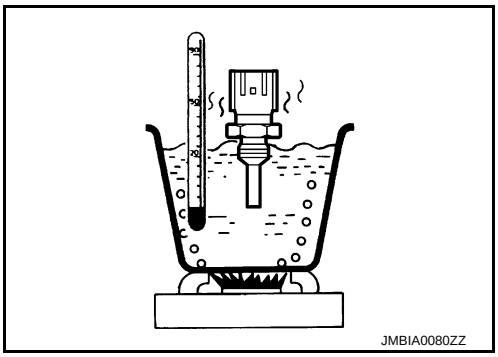

Terminals	Condition		Resistance
1 and 2	Temperature [°C (°F)]	20 (68)	2.35 - 2.73 kΩ
		50 (122)	0.68 - 1.00 kΩ
		90 (194)	0.236 - 0.260 kΩ

Is the inspection result normal?

YES >> INSPECTION END
NO >> Replace engine coolant temperature sensor. Refer to CO-23, "Exploded View".

P0122, P0123 TP SENSOR

DTC Logic

INFOID:0000000005989251

DTC DETECTION LOGIC

NOTE:
If DTC P0122 or P0123 is displayed with DTC P0643, first perform the trouble diagnosis for DTC P0643. Refer to EC-228, "DTC Logic".

DTC No.	Trouble diagnosis name	DTC detecting condition	Possible cause
P0122	Throttle position sensor 2 circuit low input	An excessively low voltage from the TP sensor 2 is sent to ECM.	• Harness or connectors (TP sensor 2 circuit is open or shorted.) • Electric throttle control actuator (TP sensor 2)
P0123	Throttle position sensor 2 circuit high input	An excessively high voltage from the TP sensor 2 is sent to ECM.	

DTC CONFIRMATION PROCEDURE

1. PRECONDITIONING

If DTC Confirmation Procedure has been previously conducted, always turn ignition switch OFF and wait at least 10 seconds before conducting the next test.
TESTING CONDITION:
Before performing the following procedure, confirm that battery voltage is more than 10 V at idle.

>> GO TO 2.

2. PERFORM DTC CONFIRMATION PROCEDURE

1. Start engine and let it idle for 1 second.
2. Check DTC.

Is DTC detected?

YES >> Go to EC-145, "Diagnosis Procedure".
NO >> INSPECTION END

Diagnosis Procedure

INFOID:0000000005989252

1. CHECK THROTTLE POSITION SENSOR 2 POWER SUPPLY CIRCUIT

1. Disconnect electric throttle control actuator harness connector.
2. Turn ignition switch ON.
3. Check the voltage between electric throttle control actuator harness connector and ground.

Electric throttle control actuator		Ground	Voltage
Connector	Terminal		
F29	1	Ground	Approx. 5 V

Is the inspection result normal?

YES >> GO TO 2.
NO >> Repair open circuit or short to ground or short to power in harness or connectors.

2. CHECK THROTTLE POSITION SENSOR 2 GROUND CIRCUIT FOR OPEN AND SHORT

1. Turn ignition switch OFF.
2. Disconnect ECM harness connector.
3. Check the continuity between electric throttle control actuator harness connector and ECM harness connector.

Electric throttle control actuator		ECM		Continuity
Connector	Terminal	Connector	Terminal	
F29	4	F16	36	Existed

4. Also check harness for short to ground and short to power.

Is the inspection result normal?

YES >> GO TO 3.
NO >> Repair open circuit or short to ground or short to power in harness or connectors.

3. CHECK THROTTLE POSITION SENSOR 2 INPUT SIGNAL CIRCUIT FOR OPEN AND SHORT

1. Check the continuity between electric throttle control actuator harness connector and ECM harness connector.

Electric throttle control actuator		ECM		Continuity
Connector	Terminal	Connector	Terminal	
F29	3	F16	34	Existed

2. Also check harness for short to ground and short to power.

Is the inspection result normal?

YES >> GO TO 4.
NO >> Repair open circuit or short to ground or short to power in harness or connectors.

4. CHECK THROTTLE POSITION SENSOR

Check throttle position sensor. Refer to EC-146, "Component Inspection".

Is the inspection result normal?

YES >> GO TO 5.
NO >> Replace electric throttle control actuator. Refer to EM-29, "WITH EGR CONTROL VALVE : Exploded View".

5. CHECK INTERMITTENT INCIDENT

Check intermittent incident. Refer to GI-33, "Intermittent Incident".

>> Repair or replace malfunctioning part.

Component Inspection

INFOID:0000000005989253

1. CHECK THROTTLE POSITION SENSOR

1. Turn ignition switch OFF.
2. Reconnect all harness connectors disconnected.
3. Perform EC-105, "Work Procedure".
4. Turn ignition switch ON.
5. Set selector lever to 1st position.
6. Check the voltage between ECM harness connector and ground.

ECM			Condition		Voltage
Connector	+	–			
	Terminal	Terminal			
F16	33 (TP sensor 1 signal)	36	Accelerator pedal	Fully released	More than 0.36 V
				Fully depressed	Less than 4.75 V
	34 (TP sensor 2 signal)			Fully released	Less than 4.75 V
				Fully depressed	More than 0.36 V

Is the inspection result normal?

YES >> INSPECTION END
NO >> Replace electric throttle control actuator. Refer to EM-29, "WITH EGR CONTROL VALVE : Exploded View".

P0130 A/F SENSOR 1

DTC Logic

INFOID:0000000005989255

DTC DETECTION LOGIC

To judge malfunctions, the diagnosis checks that the A/F signal computed by ECM from the A/F sensor 1 signal fluctuates according to fuel feedback control.

DTC No.	Trouble diagnosis name	DTC detecting condition	Possible Cause
P0130	Air fuel ratio (A/F) sensor 1 circuit	The A/F signal computed by ECM from the A/F sensor 1 signal is constantly approx. 2.2 V.	• Harness or connectors (The A/F sensor 1 circuit is open or shorted.) • A/F sensor 1

DTC CONFIRMATION PROCEDURE

1. PRECONDITIONING

If DTC Confirmation Procedure has been previously conducted, always turn ignition switch OFF and wait at least 10 seconds before conducting the next test.

TESTING CONDITION:

Before performing the following procedure, confirm that battery voltage is more than 11 V at idle.

Do you have CONSULT-III?

YES >> GO TO 2.
NO >> GO TO 6.

2. CHECK AIR FUEL RATIO (A/F) SENSOR 1 FUNCTION

1. Start engine and warm it up to normal operating temperature.
2. Select “ENGINE” using CONSULT-III.
3. Select “A/F SEN1 (B1)” in “DATA MONITOR” mode.
4. Check “A/F SEN1 (B1)” indication.

Does the indication fluctuate around 2.2 V?

YES >> GO TO 3.
NO >> Go to EC-148, "Diagnosis Procedure".

3. PERFORM DTC CONFIRMATION PROCEDURE FOR MALFUNCTION -I

1. Select “ENGINE” using CONSULT-III.
2. Select “A/F SEN1 (B1) P1276” (for DTC P0130) of “A/F SEN1” in “DTC WORK SUPPORT” mode.
3. Touch “START”.
4. When the following conditions are met, “TESTING” will be displayed on the CONSULT-III screen.

ENG SPEED	1,000 - 3,200 rpm
VHCL SPEED SE	More than 64 km/h (40 mph)
B/FUEL SCHDL	1.0 - 8.0 msec
Selector lever	4th position

If “TESTING” is not displayed after 20 seconds, retry from step 2.

CAUTION:

Always drive vehicle at a safe speed.

Is “TESTING” displayed on CONSULT-III screen?

YES >> GO TO 4.
NO >> Check A/F sensor 1 function again. GO TO 2.

4. PERFORM DTC CONFIRMATION PROCEDURE FOR MALFUNCTION -II

Release accelerator pedal fully.

NOTE:

Never apply brake when releasing the accelerator pedal.

Which does “TESTING” change to?

COMPLETED>>GO TO 5.
OUT OF CONDITION>>Retry DTC CONFIRMATION PROCEDURE. GO TO 3.

5. PERFORM DTC CONFIRMATION PROCEDURE FOR MALFUNCTION -III

Touch “SELF-DIAG RESULT”.

Which is displayed on CONSULT-III screen?

OK >> INSPECTION END
NG >> Go to EC-148, "Diagnosis Procedure".

6. PERFORM COMPONENT FUNCTION CHECK FOR MALFUNCTION

Perform component function check. Refer to EC-148, "Component Function Check".

NOTE:
Use component function check to check the overall function of the A/F sensor 1 circuit. During this check, a 1st trip DTC might not be confirmed.

Is the inspection result normal?

YES >> INSPECTION END
NO >> Go to EC-148, "Diagnosis Procedure".

Component Function Check

INFOID:0000000005989256

1. PERFORM COMPONENT FUNCTION CHECK

With GST

1. Start engine and warm it up to normal operating temperature.
2. Drive the vehicle at a speed of 80 km/h (50 MPH) for a few minutes in the suitable gear position.
3. Shift the selector lever to D position, then release the accelerator pedal fully until the vehicle speed decreases to 50 km/h (30 MPH).
   CAUTION:
   Always drive vehicle at a safe speed.
   NOTE:
   Never apply brake when releasing the accelerator pedal.
4. Repeat steps 2 and 3 for five times.
5. Stop the vehicle and turn ignition switch OFF.
6. Turn ignition switch ON.
7. Turn ignition switch OFF and wait at least 10 seconds.
8. Restart engine.
9. Repeat steps 2 and 3 for five times.
10. Stop the vehicle and connect GST to the vehicle.
11. Check 1st trip DTC.

Is 1st trip DTC detected?

YES >> Go to EC-148, "Diagnosis Procedure".
NO >> INSPECTION END

Diagnosis Procedure

INFOID:0000000005989257

1. CHECK AIR FUEL RATIO (A/F) SENSOR 1 POWER SUPPLY CIRCUIT

1. Disconnect A/F sensor 1 harness connector.
2. Turn ignition switch ON.
3. Check the voltage between A/F sensor 1 harness connector and ground.

A/F sensor 1		Ground	Voltage
Connector	Terminal		
F50	4	Ground	Battery voltage

Is the inspection result normal?

YES >> GO TO 3.
NO >> GO TO 2.

2. DETECT MALFUNCTIONING PART

Check harness for open or short between A/F sensor 1 and fuse.

>> Repair or replace harness or connectors.

3. CHECK A/F SENSOR 1 INPUT SIGNAL CIRCUIT FOR OPEN AND SHORT

1. Turn ignition switch OFF.
2. Disconnect ECM harness connector.
3. Check the continuity between A/F sensor 1 harness connector and ECM harness connector.

A/F sensor 1		ECM		Continuity
Connector	Terminal	Connector	Terminal	
F50	1	F16	49	Existed
	2		53	

4. Check the continuity between A/F sensor 1 harness connector and ground or ECM harness connector and ground.

A/F sensor 1		Ground	Continuity
Connector	Terminal		
F50	1	Ground	Not existed
	2		

ECM		Ground	Continuity
Connector	Terminal		
F16	49	Ground	Not existed
	53		

5. Also check harness for short to power.

Is the inspection result normal?

YES >> GO TO 4.
NO >> Repair open circuit, short to ground or short to power in harness or connectors.

4. CHECK INTERMITTENT INCIDENT

Check intermittent incident. Refer to GI-33, "Intermittent Incident".

Is the inspection result normal?

YES >> Replace air fuel ratio (A/F) sensor 1. Refer to EM-32, "Exploded View".
NO >> Repair or replace.

P0131 A/F SENSOR 1

DTC Logic

INFOID:0000000005989258

DTC DETECTION LOGIC

To judge the malfunction, the diagnosis checks that the A/F signal computed by ECM from the A/F sensor 1 signal is not inordinately low.

DTC No.	Trouble diagnosis name	DTC detecting condition	Possible Cause
P0131	Air fuel ratio (A/F) sensor 1 circuit low voltage	• The A/F signal computed by ECM from the A/F sensor 1 signal is constantly approx. 0 V.	• Harness or connectors (The A/F sensor 1 circuit is open or shorted.) • A/F sensor 1

DTC CONFIRMATION PROCEDURE

1. PRECONDITIONING

If DTC Confirmation Procedure has been previously conducted, always turn ignition switch OFF and wait at least 10 seconds before conducting the next test.

TESTING CONDITION:

Before performing the following procedure, confirm that battery voltage is more than 10.5 V at idle.

>> GO TO 2.

2. CHECK A/F SENSOR FUNCTION

1. Start engine and warm it up to normal operating temperature.
2. Select “ENGINE” using CONSULT-III.
3. Select “A/F SEN1 (B1)” in “DATA MONITOR” mode.
4. Check “A/F SEN1 (B1)” indication.

Is the indication constantly approx. 0 V?

YES >> Go to EC-150, "Diagnosis Procedure".
NO >> GO TO 3.

3. PERFORM DTC CONFIRMATION PROCEDURE

1. Turn ignition switch OFF and wait at least 10 seconds and then restart engine.
2. Drive and accelerate vehicle to more than 40 km/h (25 MPH) within 20 seconds after restarting engine.
   CAUTION:
   Always drive vehicle at a safe speed.
3. Maintain the following conditions for about 20 consecutive seconds.

ENG SPEED	1,000 - 3,200 rpm
VHCL SPEED SE	More than 40 km/h (25 mph)
B/FUEL SCHDL	1.5 - 9.0 msec
Selector lever	Suitable position

NOTE:
- **Keep the accelerator pedal as steady as possible during cruising.**
- **If this procedure is not completed within 1 minute after restarting engine at step 1, return to step 1.**

4. Check 1st trip DTC.

Is 1st trip DTC detected?

YES >> Go to EC-150, "Diagnosis Procedure".
NO >> INSPECTION END

Diagnosis Procedure

INFOID:0000000005989259

1. CHECK AIR FUEL RATIO (A/F) SENSOR 1 POWER SUPPLY CIRCUIT

1. Disconnect A/F sensor 1 harness connector.

2. Turn ignition switch ON.
3. Check the voltage between A/F sensor 1 harness connector and ground.

A/F sensor 1		Ground	Voltage
Connector	Terminal		
F50	4	Ground	Battery voltage

Is the inspection result normal?

YES >> GO TO 3.
NO >> GO TO 2.

2. DETECT MALFUNCTIONING PART

Check harness for open or short between A/F sensor 1 and fuse.

>> Repair or replace harness or connectors.

3. CHECK A/F SENSOR 1 INPUT SIGNAL CIRCUIT FOR OPEN AND SHORT

1. Turn ignition switch OFF.
2. Disconnect ECM harness connector.
3. Check the continuity between A/F sensor 1 harness connector and ECM harness connector.

A/F sensor 1		ECM		Continuity
Connector	Terminal	Connector	Terminal	
F50	1	F16	49	Existed
	2		53	

4. Check the continuity between A/F sensor 1 harness connector and ground or ECM harness connector and ground.

A/F sensor 1		Ground	Continuity
Connector	Terminal		
F50	1	Ground	Not existed
	2		

ECM		Ground	Continuity
Connector	Terminal		
F16	49	Ground	Not existed
	53		

5. Also check harness for short to power.

Is the inspection result normal?

YES >> GO TO 4.
NO >> Repair open circuit, short to ground or short to power in harness or connectors.

4. CHECK INTERMITTENT INCIDENT

Check intermittent incident. Refer to GI-33, "Intermittent Incident".

Is the inspection result normal?

YES >> Replace malfunctioning air fuel ratio (A/F) sensor 1. Refer to EM-32, "Exploded View".
NO >> Repair or replace.

P0132 A/F SENSOR 1

DTC Logic

INFOID:0000000005989260

DTC DETECTION LOGIC

To judge the malfunction, the diagnosis checks that the A/F signal computed by ECM from the A/F sensor 1 signal is not inordinately high.

DTC No.	Trouble diagnosis name	DTC detecting condition	Possible Cause
P0132	Air fuel ratio (A/F) sensor 1 circuit high voltage	• The A/F signal computed by ECM from the A/F sensor 1 signal is constantly approx. 5 V.	• Harness or connectors (The A/F sensor 1 circuit is open or shorted.) • A/F sensor 1

DTC CONFIRMATION PROCEDURE

1. PRECONDITIONING

If DTC Confirmation Procedure has been previously conducted, always turn ignition switch OFF and wait at least 10 seconds before conducting the next test.

TESTING CONDITION:

Before performing the following procedure, confirm that battery voltage is more than 10.5 V at idle.

>> GO TO 2.

2. CHECK A/F SENSOR FUNCTION

1. Start engine and warm it up to normal operating temperature.
2. Select “ENGINE” using CONSULT-III.
3. Select “A/F SEN1 (B1)” in “DATA MONITOR” mode.
4. Check “A/F SEN1 (B1)” indication.

Is the indication constantly approx. 5 V?

YES >> Go to EC-152, "Diagnosis Procedure".
NO >> GO TO 3.

3. PERFORM DTC CONFIRMATION PROCEDURE

1. Turn ignition switch OFF and wait at least 10 seconds and then restart engine.
2. Drive and accelerate vehicle to more than 40 km/h (25 MPH) within 20 seconds after restarting engine.
   CAUTION:
   Always drive vehicle at a safe speed.
3. Maintain the following conditions for about 20 consecutive seconds.

ENG SPEED	1,000 - 3,200 rpm
VHCL SPEED SE	More than 40 km/h (25 mph)
B/FUEL SCHDL	1.5 - 9.0 msec
Selector lever	Suitable position

NOTE:
- **Keep the accelerator pedal as steady as possible during the cruising.**
- **If this procedure is not completed within 1 minute after restarting engine at step 1, return to step 1.**

4. Check 1st trip DTC.

Is 1st trip DTC detected?

YES >> Go to EC-152, "Diagnosis Procedure".
NO >> INSPECTION END

Diagnosis Procedure

INFOID:0000000006059276

1. CHECK AIR FUEL RATIO (A/F) SENSOR 1 POWER SUPPLY CIRCUIT

1. Disconnect A/F sensor 1 harness connector.

2. Turn ignition switch ON.
3. Check the voltage between A/F sensor 1 harness connector and ground.

A/F sensor 1		Ground	Voltage
Connector	Terminal		
F50	4	Ground	Battery voltage

Is the inspection result normal?

YES >> GO TO 3.
NO >> GO TO 2.

2. DETECT MALFUNCTIONING PART

Check harness for open or short between A/F sensor 1 and fuse.

>> Repair or replace harness or connectors.

3. CHECK A/F SENSOR 1 INPUT SIGNAL CIRCUIT FOR OPEN AND SHORT

1. Turn ignition switch OFF.
2. Disconnect ECM harness connector.
3. Check the continuity between A/F sensor 1 harness connector and ECM harness connector.

A/F sensor 1		ECM		Continuity
Connector	Terminal	Connector	Terminal	
F50	1	F16	49	Existed
	2		53	

4. Check the continuity between A/F sensor 1 harness connector and ground or ECM harness connector and ground.

A/F sensor 1		Ground	Continuity
Connector	Terminal		
F50	1	Ground	Not existed
	2		

ECM		Ground	Continuity
Connector	Terminal		
F16	49	Ground	Not existed
	53		

5. Also check harness for short to power.

Is the inspection result normal?

YES >> GO TO 4.
NO >> Repair open circuit, short to ground or short to power in harness or connectors.

4. CHECK INTERMITTENT INCIDENT

Check intermittent incident. Refer to GI-33, "Intermittent Incident".

Is the inspection result normal?

YES >> Replace malfunctioning air fuel ratio (A/F) sensor 1. Refer to EM-32, "Exploded View".
NO >> Repair or replace.

P0133 A/F SENSOR 1

DTC Logic

INFOID:0000000005989262

DTC DETECTION LOGIC

To judge the malfunction of A/F sensor 1, this diagnosis measures response time of the A/F signal computed by ECM from the A/F sensor 1 signal. The time is compensated by engine operating (speed and load), fuel feedback control constant, and the A/F sensor 1 temperature index. Judgment is based on whether the compensated time (the A/F signal cycling time index) is inordinately long or not.

DTC No.	Trouble diagnosis name	DTC detecting condition	Possible Cause
P0133	Air fuel ratio (A/F) sensor 1 circuit slow response	• The response of the A/F signal computed by ECM from A/F sensor 1 signal takes more than the specified time.	• Harness or connectors (The A/F sensor 1 circuit is open or shorted.) • A/F sensor 1 • A/F sensor 1 heater • Fuel pressure • Fuel injector • Intake air leaks • Exhaust gas leaks • PCV • Mass air flow sensor

DTC CONFIRMATION PROCEDURE

1. PRECONDITIONING

If DTC Confirmation Procedure has been previously conducted, always turn ignition switch OFF and wait at least 10 seconds before conducting the next test.

TESTING CONDITION:

Before performing the following procedure, confirm that battery voltage is more than 11 V at idle.

Do you have CONSULT-III?

YES >> GO TO 2.
NO >> GO TO 5.

2. PERFORM DTC CONFIRMATION PROCEDURE-I

With CONSULT-III

1. Start engine and warm it up to normal operating temperature.
2. Turn ignition switch OFF and wait at least 10 seconds.
3. Restart engine and keep the engine speed between 3,500 and 4,000 rpm for at least 1minute under no load.
4. Let engine idle for 1 minute.
5. Select “ENGINE” using CONSULT-III.
6. Select “A/F SEN1(B1) P1278/P1279” (for DTC P0133) of “A/F SEN1” in “DTC WORK SUPPORT” mode.
7. Touch “START”.

Is “COMPLETED” displayed on CONSULT-III screen?

YES >> GO TO 3
NO >> GO TO 4.

3. PERFORM DTC CONFIRMATION PROCEDURE-II

Touch “SELF-DIAG RESULT”.

Which is displayed on CONSULT-III screen?

OK >> INSPECTION END
NG >> Go to EC-155, "Diagnosis Procedure".

4. PERFORM DTC CONFIRMATION PROCEDURE-II

1. After perform the following procedure, “TESTING” will be displayed on the CONSULT-III screen.

- Increase the engine speed up to between 4,000 and 5,000 rpm and maintain that speed for 10 seconds.
- Fully release accelerator pedal and then let engine idle for about 10 seconds.

If “TESTING” is not displayed after 10 seconds, refer to EC-115, "Component Function Check".

2. Wait for about 20 seconds at idle under the condition that “TESTING” is displayed on the CONSULT-III screen.
3. Make sure that “TESTING” changes to “COMPLETED”.
   If “TESTING” changed to “OUT OF CONDITION”, refer to EC-115, "Component Function Check".
4. Touch “SELF-DIAG RESULT”.

Which is displayed on CONSULT-III screen?

OK >> INSPECTION END
NG >> Go to EC-155, "Diagnosis Procedure".

5. CHECK AIR-FUEL RATIO SELF-LEARNING VALUE

With GST

1. Start engine and warm it up to normal operating temperature.
2. Select Service $01 with GST.
3. Calculate the total value of “Short term fuel trim” and “Long term fuel trim” indications.

Is the total percentage within ±15%?

YES >> GO TO 7.
NO >> GO TO 6.

6. DETECT MALFUNCTIONING PART

Check the following.
- Intake air leaks
- Exhaust gas leaks
- Incorrect fuel pressure
- Lack of fuel
- Fuel injector
- Incorrect PCV hose connection
- PCV valve
- Mass air flow sensor

>> Repair or replace malfunctioning part.

7. PERFORM DTC CONFIRMATION PROCEDURE

1. Turn ignition switch OFF and wait at least 10 seconds.
2. Restart engine and keep the engine speed between 3,500 and 4,000 rpm for at least 1minute under no load.
3. Let engine idle for 1 minute.
4. Increase the engine speed up to between 4,000 and 5,000 rpm and maintain that speed for 10 seconds.
5. Fully release accelerator pedal and then let engine idle for about 1 minute.
6. Check 1st trip DTC.

Is 1st trip DTC detected?

YES >> Go to EC-155, "Diagnosis Procedure".
NO >> INSPECTION END

Diagnosis Procedure

INFOID:0000000005989263

1. RETIGHTEN A/F SENSOR 1

Loosen and retighten the A/F sensor 1. Refer to EM-32, "Exploded View".

>> GO TO 2.

2. CHECK EXHAUST GAS LEAK

1. Start engine and run it at idle.

2. Listen for an exhaust gas leak before three way catalyst 1.

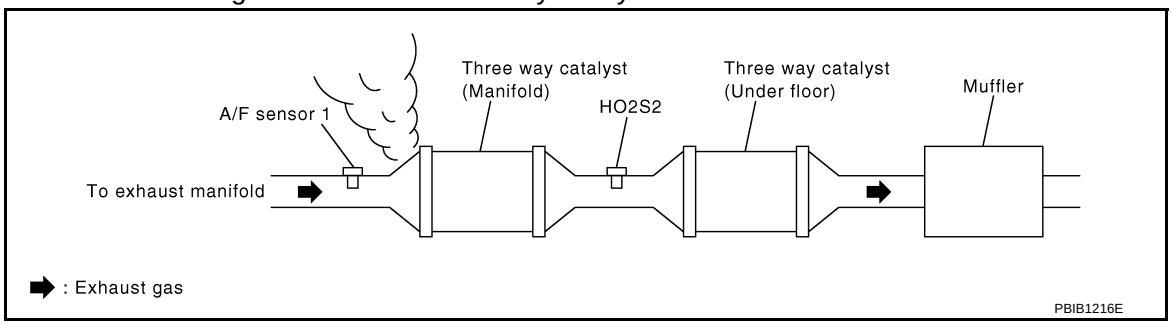

Is exhaust gas leak detected?

YES >> Repair or replace.
NO >> GO TO 3.

3. CHECK FOR INTAKE AIR LEAK

Listen for an intake air leak after the mass air flow sensor.

Is intake air leak detected?

YES >> Repair or replace.
NO >> GO TO 4.

4. CLEAR THE MIXTURE RATIO SELF-LEARNING VALUE

1. Clear the mixture ratio self-learning value. Refer to EC-108, "Work Procedure".
2. Run engine for at least 10 minutes at idle speed.

Is the 1st trip DTC P0171 or P0172 detected? Is it difficult to start engine?

YES >> Perform trouble diagnosis for DTC P0171 or P0172. Refer to EC-178, "DTC Logic" or EC-182, "DTC Logic".
NO >> GO TO 5.

5. CHECK AIR FUEL RATIO (A/F) SENSOR 1 POWER SUPPLY CIRCUIT

1. Disconnect A/F sensor 1 harness connector.
2. Turn ignition switch ON.
3. Check the voltage between A/F sensor 1 harness connector and ground.

A/F sensor 1		Ground	Voltage
Connector	Terminal		
F50	4	Ground	Battery voltage

Is the inspection result normal?

YES >> GO TO 7.
NO >> GO TO 6.

6. DETECT MALFUNCTIONING PART

Check harness for open or short between A/F sensor 1 and fuse.

>> Repair or replace harness or connectors.

7. CHECK A/F SENSOR 1 INPUT SIGNAL CIRCUIT FOR OPEN AND SHORT

1. Turn ignition switch OFF.
2. Disconnect ECM harness connector.
3. Check the continuity between A/F sensor 1 harness connector and ECM harness connector.

A/F sensor 1		ECM		Continuity
Connector	Terminal	Connector	Terminal	
F50	1	F16	49	Existed
	2		53	

4. Check the continuity between A/F sensor 1 harness connector and ground or ECM harness connector and ground.

A/F sensor 1		Ground	Continuity
Connector	Terminal		
F50	1	Ground	Not existed
	2		

ECM		Ground	Continuity
Connector	Terminal		
F16	49	Ground	Not existed
	53		

5. Also check harness for short to power.

Is the inspection result normal?

YES >> GO TO 8.
NO >> Repair open circuit, short to ground or short to power in harness or connectors.

8. CHECK AIR FUEL RATIO (A/F) SENSOR 1 HEATER

Check air fuel ratio (A/F) sensor 1 heater. Refer to EC-132, "Component Inspection".

Is the inspection result normal?

YES >> GO TO 9.
NO >> GO TO 12.

9. CHECK MASS AIR FLOW SENSOR

Check both mass air flow sensor.
Refer to EC-139, "Component Inspection".

Is the inspection result normal?

YES >> GO TO 10.
NO >> Replace mass air flow sensor. Refer to EM-24, "Exploded View".

10. CHECK PCV VALVE

Check pcv valve. Refer to EC-311, "Inspection".

Is the inspection result normal?

YES >> GO TO 11.
NO >> Repair or replace PCV valve. Refer to EM-41, "Exploded View".

11. CHECK INTERMITTENT INCIDENT

Check intermittent incident. Refer to GI-33, "Intermittent Incident".

Is the inspection result normal?

YES >> Replace air fuel ratio (A/F) sensor 1. Refer to EM-32, "Exploded View".
NO >> Repair or replace.

P0137 HO2S2

DTC Logic

INFOID:0000000005989264

DTC DETECTION LOGIC

The heated oxygen sensor 2 has a much longer switching time between rich and lean than the air fuel ratio (A/F) sensor 1. The oxygen storage capacity of the three way catalyst 1 causes the longer switching time. To judge the malfunctions of heated oxygen sensor 2, ECM monitors whether the maximum voltage of the sensor is sufficiently high during various driving conditions such as fuel-cut.

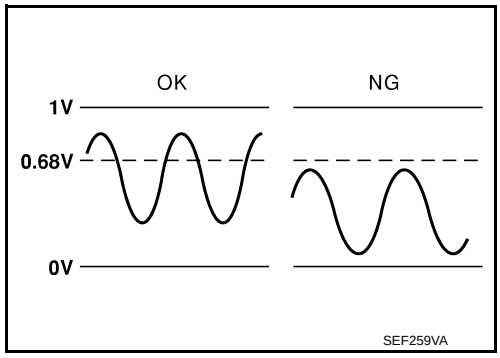

DTC No.	Trouble diagnosis name	DTC detecting condition	Possible cause
P0137	Heated oxygen sensor 2 circuit low voltage	The maximum voltage from the sensor does not reach the specified voltage.	• Harness or connectors (The sensor circuit is open or shorted) • Heated oxygen sensor 2 • Fuel pressure • Fuel injector • Intake air leaks

DTC CONFIRMATION PROCEDURE

1. INSPECTION START

Do you have CONSULT-III?

Do you have CONSULT-III?

YES >> GO TO 2.
NO >> GO TO 11.

2. PRECONDITIONING

- If DTC confirmation Procedure has been previously conducted, always turn ignition switch OFF and wait at least 10 seconds before conducting the next test.
- “COMPLETED” will appear on CONSULT-III screen when all tests “COND1”, “COND2” and “COND3” are completed.

TESTING CONDITION:

- **For the best results, perform “DTC WORK SUPPORT” at a temperature of 0 to 30 °C (32 to 86 °F).**
- **Never stop engine during this procedure. If the engine is stopped, retry procedure from PERFORM PROCEDURE FOR COND1-II.**

>> GO TO 3.

3. PERFORM PROCEDURE FOR COND1-I

Start engine and warm it up to the normal operating temperature.

>> GO TO 4.

4. PERFORM PROCEDURE FOR COND1-II

Turn ignition switch OFF and wait at least 10 seconds.

>> GO TO 5.

5. PERFORM PROCEDURE FOR COND1-III

1. Start engine and keep the engine speed between 3,500 and 4,000 rpm for at least 1 minute under no load.

2. Let engine idle for 1 minute.
3. Select “ENGINE” using CONSULT-III.
4. Select “HO2S2 (B1) P1147” (for DTC P0137) of “HO2S2” in “DTC WORK SUPPORT” mode.
5. Touch “START”.
6. Let engine idle for at least 30 seconds.
7. Rev engine up to 2,000 rpm two or three times quickly under no load.

Is “COMPLETED” appears on CONSULT-III screen?

YES >> GO TO 9.
NO >> GO TO 6.

6. PERFORM PROCEDURE FOR COND1-IV

When the following conditions are met, “TESTING” will be displayed at “COND1” on the CONSULT-III screen. Maintain the conditions continuously until “TESTING” changes to “COMPLETED”

ENG SPEED	More than 1,000 rpm
B/FUEL SCHDL	More than 1.0 msec
COOLAN TEMP/S	70 - 105°C
Selector lever	Suitable position

CAUTION:
Always drive vehicle at a safe speed.

Which displayed on CONSULT-III screen?

“COND1: OUT OF CONDITION”>>GO TO 4.
“COND1: COMPLETED”, “COND2: INCOMPLETE”>>GO TO 7.
“COND1: COMPLETED”, “COND2: COMPLETED”>>GO TO 8.

7. PERFORM PROCEDURE FOR COND2

While driving, release accelerator pedal completed from the above condition (PERFORM PROCEDURE FOR COND1-III) until “INCOMPLETE” at “COND2” on CONSULT-III screen has turned to “COMPLETED” (It will take approximately 4 seconds).

CAUTION:
Always drive vehicle at a safe speed.

Which displayed on CONSULT-III screen?

“COND2: COMPLETED”, “COND3: INCOMPLETE”>>GO TO 8.
“COND2: COMPLETED”, “COND3: COMPLETED”>>GO TO 9.

8. PERFORM PROCEDURE FOR COND3-I

Stop vehicle and let it idle until “INCOMPLETE” of “COND3” on CONSULT-III screen has turned to “COMPLETED”

>> GO TO 9.

9. PERFORM PROCEDURE FOR COND3-II

Touch SELF-DIAG RESULTS”.

Which displayed on CONSULT-III screen?

“OK” >> INSPECTION END.
“NG” >> Go to EC-161, "Diagnosis Procedure".
“CAN NOT BE DIAGNOSED”>>GO TO 10.

10. PERFORM PROCEDURE FOR COND3-III

1. Turn ignition switch OFF and leave the vehicle in a cool place (soak the vehicle).
2. Turn ignition switch ON and select “ENGINE” using CONSULT-III.
3. Select “COOLAN TEMP/S” in “DATA MONITOR” mode.
4. Start engine and warm it up while monitoring “COOLAN TEMP/S” indication on CONSULT-III.
5. When “COOLAN TEMP/S” indication reaches 70°C (158°F).

>> GO TO 5.

11. PERFORM COMPONENT FUNCTION CHECK

Perform component function check. Refer to EC-160, "Component Function Check".

NOTE:

Use component function check the overall function of the heated oxygen sensor 2 circuit. During this check, a 1st trip DTC might not be confirmed.

Is the inspection result normal?

YES >> INSPECTION END.
NO >> Go to EC-161, "Diagnosis Procedure".

Component Function Check

INFOID:0000000005989265

1. PERFORM COMPONENT FUNCTION CHECK-I

Without CONSULT-III

1. Start engine and warm it up to the normal operating temperature.
2. Turn ignition switch OFF and wait at least 10 seconds.
3. Restart engine and keep the engine speed between 3,500 and 4,000 rpm for at least 1 minute under no load.
4. Let engine idle for 1 minute.
5. Check the voltage between ECM harness connector terminals under the following condition.

ECM			Condition	Voltage
Connector	+	–		
	Terminal	Terminal		
F16	50 (HO2S2)	59	Revving up to 4,000 rpm under no load at least 10 times	The voltage should be above 0.68 V at least once during this procedure.

Is the inspection result normal?

YES >> INSPECTION END
NO >> GO TO 2.

2. PERFORM COMPONENT FUNCTION CHECK-II

Check the voltage between ECM harness connector terminals under the following condition.

ECM			Condition	Voltage
Connector	+	–		
	Terminal	Terminal		
F16	50 (HO2S2)	59	Keeping engine at idle for 10 minutes	The voltage should be above 0.68 V at least once during this procedure.

Is the inspection result normal?

YES >> INSPECTION END
NO >> GO TO 3.

3. PERFORM COMPONENT FUNCTION CHECK-III

Check the voltage between ECM harness connector terminals under the following condition.

ECM			Condition	Voltage
Connector	+	–		
	Terminal	Terminal		
F16	50 (HO2S2)	59	Coasting from 80 km/h (50 MPH) in 4th gear position	The voltage should be above 0.68 V at least once during this procedure.

Is the inspection result normal?

YES >> INSPECTION END
NO >> Refer to EC-161, "Diagnosis Procedure".

Diagnosis Procedure

INFOID:0000000005989266

1. CLEAR THE MIXTURE RATIO SELF-LEARNING VALUE

1. Clear the mixture ratio self-learning value. Refer to EC-108, "Work Procedure".
2. Run engine for at least 10 minutes at idle speed.

Is the 1st trip DTC P0171 detected? Is it difficult to start engine?

YES >> Perform trouble diagnosis for DTC P0171. Refer to EC-178, "DTC Logic".
NO >> GO TO 2.

2. CHECK HO2S2 GROUND CIRCUIT FOR OPEN AND SHORT

1. Turn ignition switch OFF.
2. Disconnect heated oxygen sensor 2 harness connector.
3. Disconnect ECM harness connector.
4. Check the continuity between HO2S2 harness connector and ECM harness connector.

HO2S2		ECM		Continuity
Connector	Terminal	Connector	Terminal	
E31	1	F16	59	Existed

5. Also check harness for short to ground and short to power.

Is the inspection result normal?

YES >> GO TO 3.
NO >> Repair open circuit, short to ground or short to power in harness or connectors.

3. CHECK HO2S2 INPUT SIGNAL CIRCUIT FOR OPEN AND SHORT

1. Check the continuity between HO2S2 harness connector and ECM harness connector.

HO2S2		ECM		Continuity
Connector	Terminal	Connector	Terminal	
E31	4	F16	50	Existed

2. Check the continuity between HO2S2 harness connector ground or ECM harness connector and ground.

HO2S2		Ground	Continuity
Connector	Terminal		
E31	4	Ground	Not existed

ECM		Ground	Continuity
Connector	Terminal		
F16	50	Ground	Not existed

3. Also check harness for short to power.

Is the inspection result normal?

YES >> GO TO 4.
NO >> Repair open circuit, short to ground or short to power in harness or connectors.

4. CHECK HEATED OXYGEN SENSOR 2

Check heated oxygen sensor 2. Refer to EC-162, "Component Inspection".

Is the inspection result normal?

YES >> GO TO 5.
NO >> Replace malfunctioning heated oxygen sensor 2.

5. CHECK INTERMITTENT INCIDENT

Check intermittent incident. Refer to GI-33, "Intermittent Incident".

>> Repair or replace malfunctioning part.

Component Inspection

INFOID:0000000005989267

1. INSPECTION START

Do you have CONSULT-III?

Do you have CONSULT-III?

YES >> GO TO 2.
NO >> GO TO 3.

2. CHECK HEATED OXYGEN SENSOR 2

With CONSULT-III

1. Turn ignition switch ON and select “ENGINE” using CONSULT-III.
2. Select “DATA MONITOR” mode.
3. Start engine and warm it up to the normal operating temperature.
4. Turn ignition switch OFF and wait at least 10 seconds.
5. Start engine and keep the engine speed between 3,500 and 4,000 rpm for at least 1 minute under no load.
6. Let engine idle for 1 minute.
7. Select “FUEL INJECTION” in “ACTIVE TEST” mode, and select “HO2S2 (B1)” as the monitor item with CONSULT-III.
8. Check “HO2S2 (B1)” at idle speed when adjusting “FUEL INJECTION” to ±25%.

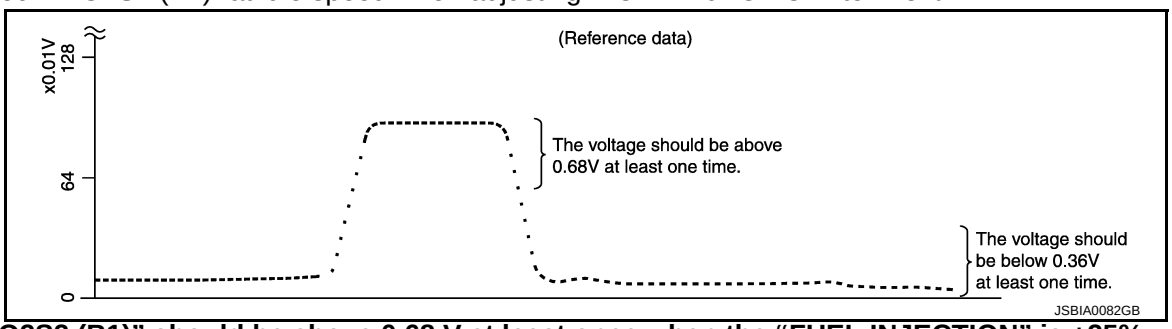

“HO2S2 (B1)” should be above 0.68 V at least once when the “FUEL INJECTION” is +25%.
“HO2S2 (B1)” should be below 0.36 V at least once when the “FUEL INJECTION” is –25%.

Is the inspection result normal?

YES >> INSPECTION END
NO >> GO TO 6.

3. CHECK HEATED OXYGEN SENSOR 2-I

Without CONSULT-III

1. Start engine and warm it up to the normal operating temperature.
2. Turn ignition switch OFF and wait at least 10 seconds.
3. Start engine and keep the engine speed between 3,500 and 4,000 rpm for at least 1 minute under no load.
4. Let engine idle for 1 minute.
5. Check the voltage between ECM harness connector terminals under the following condition.

ECM			Condition	Voltage
Connector	+	–		
	Terminal	Terminal		
F16	50 (HO2S2)	59	Revving up to 4,000 rpm under no load at least 10 times	The voltage should be above 0.68 V at least once during this procedure. The voltage should be below 0.36 V at least once during this procedure.

Is the inspection result normal?

YES >> INSPECTION END
NO >> GO TO 4.

4. CHECK HEATED OXYGEN SENSOR 2-II

Check the voltage between ECM harness connector terminals under the following condition.

ECM			Condition	Voltage
Connector	+	–		
	Terminal	Terminal		
F16	50 (HO2S2)	59	Keeping engine at idle for 10 minutes	The voltage should be above 0.68 V at least once during this procedure. The voltage should be below 0.36 V at least once during this procedure.

Is the inspection result normal?

YES >> INSPECTION END
NO >> GO TO 5.

5. CHECK HEATED OXYGEN SENSOR 2-III

Check the voltage between ECM harness connector terminals under the following condition.

ECM			Condition	Voltage
Connector	+	–		
	Terminal	Terminal		
F16	50 (HO2S2)	59	Coasting from 80 km/h (50 MPH) in 4th gear position	The voltage should be above 0.68 V at least once during this procedure. The voltage should be below 0.36 V at least once during this procedure.

Is the inspection result normal?

YES >> INSPECTION END
NO >> Replace malfunctioning heated oxygen sensor 2. Refer to EX-5, "Exploded View".

P0138 HO2S2

DTC Logic

INFOID:0000000005989268

DTC DETECTION LOGIC

The heated oxygen sensor 2 has a much longer switching time between rich and lean than the air fuel ratio (A/F) sensor 1. The oxygen storage capacity of the three way catalyst 1 causes the longer switching time.

MALFUNCTION A

To judge the malfunctions of heated oxygen sensor 2, ECM monitors whether the voltage is unusually high during various driving conditions such as fuel cut.

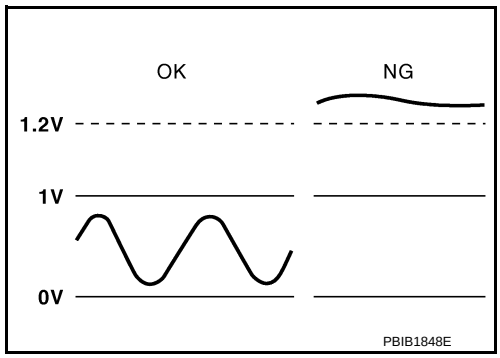

MALFUNCTION B

To judge the malfunctions of heated oxygen sensor 2, ECM monitors whether the minimum voltage of sensor is sufficiently low during various driving conditions such as fuel cut.

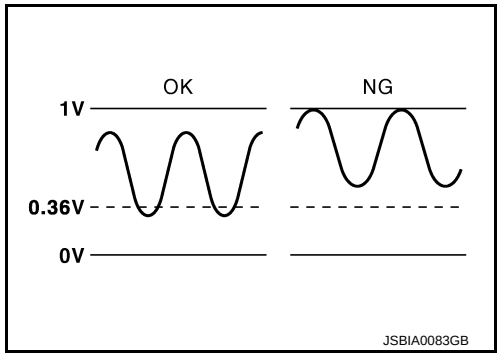

DTC No.	Trouble diagnosis name	DTC detecting condition		Possible cause
P0138	Heated oxygen sensor 2 circuit high voltage	A)	An excessively high voltage from the sensor is sent to ECM.	• Harness or connectors (The sensor circuit is open or shorted) • Heated oxygen sensor 2
		B)	The minimum voltage from the sensor is not reached to the specified voltage.	• Harness or connectors (The sensor circuit is open or shorted) • Heated oxygen sensor 2 • Fuel pressure • Fuel injector

DTC CONFIRMATION PROCEDURE

1. PRECONDITIONING OF DTC CONFIRMATION PROCEDURE FOR MALFUNCTION A

If DTC Confirmation Procedure has been previously conducted, always turn ignition switch OFF and wait at least 10 seconds before conducting the next test.

>> GO TO 2.

2. PERFORM DTC CONFIRMATION PROCEDURE FOR MALFUNCTION A

1. Start engine and warm it up to the normal operating temperature.
2. Turn ignition switch OFF and wait at least 10 seconds.
3. Restart engine and keep the engine speed between 3,500 and 4,000 rpm for at least 1 minute under no load.
4. Check 1st trip DTC.

Is 1st trip DTC detected?

YES >> Go to EC-167, "Diagnosis Procedure".
NO-1 >> With CONSULT-III: GO TO 3.
NO-2 >> Without CONSULT-III: GO TO 12.

3. PRECONDITIONING OF DTC CONFIRMATION PROCEDURE FOR MALFUNCTION B

"COMPLETED" will appear on CONSULT-III screen when all tests "COND1", "COND2" and "COND3" are completed.

TESTING CONDITION:

- **For the best results, perform "DTC WORK SUPPORT" at a temperature of 0 to 30 °C (32 to 86 °F).**
- **Never stop engine during this procedure. If the engine is stopped, retry procedure from PERFORM PROCEDURE FOR COND1-II.**

>> GO TO 4.

4. PERFORM PROCEDURE FOR COND1-I

Start engine and warm it up to the normal operating temperature.

>> GO TO 5.

5. PERFORM PROCEDURE FOR COND1-II

Turn ignition switch OFF and wait at least 10 seconds.

>> GO TO 6.

6. PERFORM PROCEDURE FOR COND1-III

1. Start engine and keep the engine speed between 3,500 and 4,000 rpm for at least 1 minute under no load.
2. Let engine idle for 1 minute.
3. Select "ENGINE" using CONSULT-III.
4. Select "HO2S2 (B1) P1146" of "HO2S2" in "DTC WORK SUPPORT" mode.
5. Touch "START".
6. Let engine idle for at least 30 seconds.
7. Rev engine up to 2,000 rpm two or three times quickly under no load.

Is "COMPLETED" appears on CONSULT-III screen?

YES >> GO TO 8.
NO >> GO TO 7.

7. PERFORM PROCEDURE FOR COND1-IV

When the following conditions are met, "TESTING" will be displayed at "COND1" on the CONSULT-III screen. Maintain the conditions continuously until "TESTING" changes to "COMPLETED"

ENG SPEED	More than 1,000 rpm
B/FUEL SCHDL	More than 1.0 msec
COOLAN TEMP/S	70 - 105°C
Selector lever	Suitable position

CAUTION:
Always drive vehicle at a safe speed.

Which displayed on CONSULT-III screen?

"COND1: OUT OF CONDITION">>GO TO 5.
"COND1: COMPLETED", "COND2: INCOMPLETE">>GO TO 8.
"COND1: COMPLETED", "COND2: COMPLETED">>GO TO 9.

8. PERFORM PROCEDURE FOR COND2

While driving, release accelerator pedal completed from the above condition (PERFORM PROCEDURE FOR COND1-III) until "INCOMPLETE" at "COND2" on CONSULT-III screen has turned to "COMPLETED" (It will take approximately 4 seconds).

CAUTION:
Always drive vehicle at a safe speed.

Which displayed on CONSULT-III screen?

"COND2: COMPLETED", "COND3: INCOMPLETE">>GO TO 9.
"COND2: COMPLETED", "COND3: COMPLETED">>GO TO 10.

9. PERFORM PROCEDURE FOR COND3-I

Stop vehicle and let it idle until "INCOMPLETE" of "COND3" on CONSULT-III screen has turned to "COMPLETED"

>> GO TO 10.

10. PERFORM PROCEDURE FOR COND3-II

Touch SELF-DIAG RESULTS".

Which displayed on CONSULT-III screen?

"OK" >> INSPECTION END.
"NG" >> Go to EC-167, "Diagnosis Procedure".
"CAN NOT BE DIAGNOSED">>GO TO 11.

11. PERFORM PROCEDURE FOR COND3-III

1. Turn ignition switch OFF and leave the vehicle in a cool place (soak the vehicle).
2. Turn ignition switch ON and select ENGINE using CONSULT-III.
3. Select "COOLAN TEMP/S" in "DATA MONITOR" mode with CONSULT-III
4. Start engine and warm it up while monitoring "COOLAN TEMP/S" indication on CONSULT-III.
5. When "COOLAN TEMP/S" indication reaches 70°C (158°F).

>> GO TO 6.

12. PERFORM COMPONENT FUNCTION CHECK

Perform component function check. Refer to EC-166, "Component Function Check".

NOTE:
Use component function check the overall function of the heated oxygen sensor 2 circuit. During this check, a 1st trip DTC might not be confirmed.

Is the inspection result normal?

YES >> INSPECTION END.
NO >> Go to EC-167, "Diagnosis Procedure".

Component Function Check

INFOID:0000000005989269

1. PERFORM COMPONENT FUNCTION CHECK-I

Without CONSULT-III

1. Start engine and warm it up to the normal operating temperature.
2. Turn ignition switch OFF and wait at least 10 seconds.
3. Turn ignition switch ON.
4. Turn ignition switch OFF and wait at least 10 seconds.
5. Start engine and keep the engine speed between 3,500 and 4,000 rpm for at least 1 minute under no load.
6. Let engine idle for 1 minute.
7. Check the voltage between ECM harness connector terminals under the following condition.

ECM			Condition	Voltage
Connector	+	–		
	Terminal	Terminal		
F16	50 (HO2S2 signal)	59	Revving up to 4,000 rpm under no load at least 10 times	The voltage should be below 0.36 V at least once during this procedure.

Is the inspection result normal?

YES >> INSPECTION END

NO >> GO TO 2.

2. PERFORM COMPONENT FUNCTION CHECK-II

Check the voltage between ECM harness connector terminals under the following condition.

ECM			Condition	Voltage
Connector	+	–		
	Terminal	Terminal		
F16	50 (HO2S2 signal)	59	Keeping engine at idle for 10 minutes	The voltage should be below 0.36 V at least once during this procedure.

Is the inspection result normal?

YES >> INSPECTION END
NO >> GO TO 3.

3. PERFORM COMPONENT FUNCTION CHECK-III

Check the voltage between ECM harness connector terminals under the following condition.

ECM			Condition	Voltage
Connector	+	–		
	Terminal	Terminal		
F16	50 (HO2S2 signal)	59	Coasting from 80 km/h (50 MPH) in 4th gear position	The voltage should be below 0.36 V at least once during this procedure.

Is the inspection result normal?

YES >> INSPECTION END
NO >> Refer to EC-167, "Diagnosis Procedure".

Diagnosis Procedure

INFOID:0000000005989270

1. INSPECTION START

Confirm the detected malfunction (A or B). Refer to EC-164, "DTC Logic".

Which malfunction is detected?

A >> GO TO 2.
B >> GO TO 7.

2. CHECK HO2S2 GROUND CIRCUIT FOR OPEN AND SHORT

1. Disconnect heated oxygen sensor 2 harness connector.
2. Disconnect ECM harness connector.
3. Check the continuity between HO2S2 harness connector and ECM harness connector.

HO2S2		ECM		Continuity
Connector	Terminal	Connector	Terminal	
E31	1	F16	59	Existed

4. Also check harness for short to ground and short to power.

Is the inspection result normal?

YES >> GO TO 3.
NO >> Repair open circuit, short to ground or short to power in harness or connectors.

3. CHECK HO2S2 INPUT SIGNAL CIRCUIT FOR OPEN AND SHORT

1. Check the continuity between HO2S2 harness connector and ECM harness connector.

HO2S2		ECM		Continuity
Connector	Terminal	Connector	Terminal	
E31	4	F16	50	Existed

2. Check the continuity between HO2S2 harness connector and ground or ECM harness connector and ground.

HO2S2		Ground	Continuity
Connector	Terminal		
E31	4	Ground	Not existed

ECM		Ground	Continuity
Connector	Terminal		
F16	50	Ground	Not existed

3. Also check harness for short to power.

Is the inspection result normal?

YES >> GO TO 4.
NO >> Repair open circuit, short to ground or short to power in harness or connectors.

4. CHECK HO2S2 CONNECTOR FOR WATER

Check connectors for water.

Water should not exist.

Is the inspection result normal?

YES >> GO TO 5.
NO >> Repair or replace harness or connectors.

5. CHECK HEATED OXYGEN SENSOR 2

Check heated oxygen sensor 2. Refer to EC-169, "Component Inspection".

Is the inspection result normal?

YES >> GO TO 6.
NO >> Replace heated oxygen sensor 2. Refer to EX-5, "Exploded View".

6. CHECK INTERMITTENT INCIDENT

Check intermittent incident. Refer to GI-33, "Intermittent Incident".

>> Repair or replace malfunctioning part.

7. CLEAR THE MIXTURE RATIO SELF-LEARNING VALUE

1. Clear the mixture ratio self-learning value. Refer to EC-108, "Work Procedure".
2. Run engine for at least 10 minutes at idle speed.

Is the 1st trip DTC P0172 detected? Is it difficult to start engine?

YES >> Perform trouble diagnosis for DTC P0172. Refer to EC-182, "DTC Logic".
NO >> GO TO 8.

8. CHECK HO2S2 GROUND CIRCUIT FOR OPEN AND SHORT

1. Turn ignition switch OFF.
2. Disconnect heated oxygen sensor 2 harness connector.
3. Disconnect ECM harness connector.
4. Check the continuity between HO2S2 harness connector and ECM harness connector.

HO2S2		ECM		Continuity
Connector	Terminal	Connector	Terminal	
E31	1	F16	59	Existed

5. Also check harness for short to ground and short to power.

Is the inspection result normal?

YES >> GO TO 9.

NO >> Repair open circuit or short to ground or short to power in harness or connectors.

9. CHECK HO2S2 INPUT SIGNAL CIRCUIT FOR OPEN AND SHORT

1. Check the continuity between HO2S2 harness connector and ECM harness connector.

HO2S2		ECM		Continuity
Connector	Terminal	Connector	Terminal	
E31	4	F16	50	Existed

2. Check the continuity between HO2S2 harness connector or ECM harness connector and ground.

HO2S2		ECM		Ground	Continuity
Connector	Terminal	Connector	Terminal		
E31	4	F16	50	Ground	Not existed

3. Also check harness for short to power.

Is the inspection result normal?

YES >> GO TO 10.
NO >> Repair open circuit, short to ground or short to power in harness or connectors.

10. CHECK HEATED OXYGEN SENSOR 2

Check heated oxygen sensor 2. Refer to EC-169, "Component Inspection".

Is the inspection result normal?

YES >> GO TO 11.
NO >> Replace heated oxygen sensor 2. Refer to EX-5, "Exploded View".

11. CHECK INTERMITTENT INCIDENT

Check intermittent incident. Refer to GI-33, "Intermittent Incident".

>> Repair or replace malfunctioning part.

Component Inspection

INFOID:0000000005989271

1. INSPECTION START

Do you have CONSULT-III?

Do you have CONSULT-III?

YES >> GO TO 2.
NO >> GO TO 3.

2. CHECK HEATED OXYGEN SENSOR 2

With CONSULT-III

1. Turn ignition switch ON and select “ENGINE” using CONSULT-III.
2. Select “DATA MONITOR” mode.
3. Start engine and warm it up to the normal operating temperature.
4. Turn ignition switch OFF and wait at least 10 seconds.
5. Start engine and keep the engine speed between 3,500 and 4,000 rpm for at least 1 minute under no load.
6. Let engine idle for 1 minute.
7. Select “FUEL INJECTION” in “ACTIVE TEST” mode, and select “HO2S2 (B1)” as the monitor item with CONSULT-III.

8. Check “HO2S2 (B1)” at idle speed when adjusting “FUEL INJECTION” to ±25%.

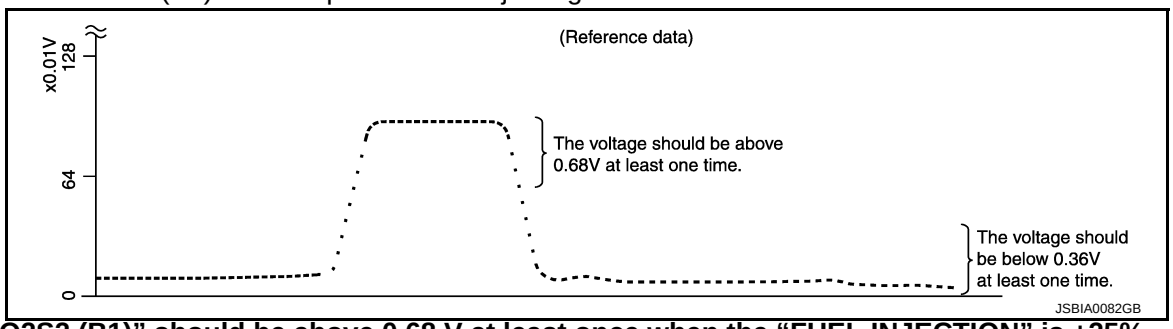

“HO2S2 (B1)” should be above 0.68 V at least once when the “FUEL INJECTION” is +25%.
“HO2S2 (B1)” should be below 0.36 V at least once when the “FUEL INJECTION” is –25%.

Is the inspection result normal?

YES >> INSPECTION END
NO >> GO TO 6.

3. CHECK HEATED OXYGEN SENSOR 2-I

Without CONSULT-III

1. Start engine and warm it up to the normal operating temperature.
2. Turn ignition switch OFF and wait at least 10 seconds.
3. Start engine and keep the engine speed between 3,500 and 4,000 rpm for at least 1 minute under no load.
4. Let engine idle for 1 minute.
5. Check the voltage between ECM harness connector terminals under the following condition.

ECM			Condition	Voltage
Connector	+	–		
	Terminal	Terminal		
F16	50 (HO2S2)	59	Revving up to 4,000 rpm under no load at least 10 times	The voltage should be above 0.68 V at least once during this procedure. The voltage should be below 0.36 V at least once during this procedure.

Is the inspection result normal?

YES >> INSPECTION END
NO >> GO TO 4.

4. CHECK HEATED OXYGEN SENSOR 2-II

Check the voltage between ECM harness connector terminals under the following condition.

ECM			Condition	Voltage
Connector	+	–		
	Terminal	Terminal		
F16	50 (HO2S2)	59	Keeping engine at idle for 10 minutes	The voltage should be above 0.68 V at least once during this procedure. The voltage should be below 0.36 V at least once during this procedure.

Is the inspection result normal?

YES >> INSPECTION END
NO >> GO TO 5.

5. CHECK HEATED OXYGEN SENSOR 2-III

Check the voltage between ECM harness connector terminals under the following condition.

ECM			Condition	Voltage
Connector	+	–		
	Terminal	Terminal		
F16	50 (HO2S2)	59	Coasting from 80 km/h (50 MPH) in 4th gear position	The voltage should be above 0.68 V at least once during this procedure. The voltage should be below 0.36 V at least once during this procedure.

Is the inspection result normal?

YES >> INSPECTION END
NO >> Replace malfunctioning heated oxygen sensor 2. Refer to EX-5, "Exploded View".

P0139 HO2S2

DTC Logic

INFOID:0000000005989272

DTC DETECTION LOGIC

The heated oxygen sensor 2 has a much longer switching time between rich and lean than the air fuel ratio (A/F) sensor 1. The oxygen storage capacity of the three way catalyst (manifold) causes the longer switching time. To judge the malfunctions of heated oxygen sensor 2, ECM monitors whether the switching response of the sensor's voltage is faster than specified during the various driving condition such as fuel cut.

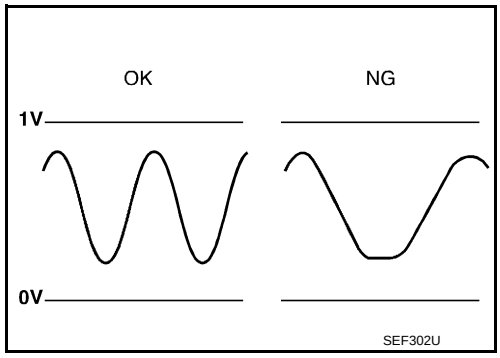

DTC No.	Trouble diagnosis name	DTC detecting condition	Possible cause
P0139	Heated oxygen sensor 2 circuit slow response	It takes more time for the sensor to respond between rich and lean than the specified time.	• Harness or connectors (The sensor circuit is open or shorted) • Heated oxygen sensor 2 • Fuel pressure • Fuel injector • Intake air leaks

DTC CONFIRMATION PROCEDURE

1. INSPECTION START

Do you have CONSULT-III?

Do you have CONSULT-III?

YES >> GO TO 2.
NO >> GO TO 11.

2. PRECONDITIONING

NOTE:
- If DTC Confirmation Procedure has been previously conducted, always turn ignition switch OFF and wait at least 10 seconds.
- **For the best results, perform DTC WORK SUPPORT at a temperature of 0 to 30°C (32 to 86°F)**
- **“COMPLETED” will appear on CONSULT-III screen when all tests “COND1”, “COND2” and “COND3” are completed.**

TESTING CONDITION:
Never stop engine during this procedure. If the engine is stopped, retry this procedure from PERFORM PROCEDURE FOR COND1-II.

>> GO TO 3.

3. PERFORM PROCEDURE FOR COND1-I

Start engine and warm it up to normal operating temperature.

>> GO TO 4.

4. PERFORM PROCEDURE FOR COND1-II

Turn ignition switch OFF and wait at least 10 seconds.

>> GO TO 5.

5. PERFORM PROCEDURE FOR COND1-III

1. Start engine and keep the engine speed between 3,500 and 4,000 rpm for at least 1 minute under no load.
2. Let engine idle for 1 minute.
3. Select “HO2S2 (B1) P0139” of “HO2S2” in “DTC WORK SUPPORT” mode with CONSULT-III.
4. Touch “START”.
5. Rev engine up to 2,000 rpm two or three times quickly under no load.

Is “COMPLETED” appears on CONSULT-III screen?

YES >> GO TO 9.
NO >> GO TO 6.

6. PERFORM PROCEDURE FOR COND1-IV

When the following conditions are met, “TESTING” will be displayed at “COND1” on the CONSULT-III screen. Maintain the condition continuously until “TESTING” changes to “COMPLETED”. (It will take approximately 60 seconds.)

ENG SPEED	More than 1,000 rpm
B/FUEL SCHDL	More than 1.0 msec
COOLAN TEMP/S	More than 70°C (158°F)
Shift lever	Suitable position

Which is displayed on CONSULT-III screen?

COND1: OUT OF CONDITION>>GO TO 4.
COND1: COMPLETED, COND2: INCOMPLETED>>GO TO 7.
COND1: COMPLETED, COND2: COMPLETED>>GO TO 8.

7. PERFORM PROCEDURE FOR COND2

While driving, release accelerator pedal completely from the above condition until “INCOMPLETED” at “COND2” on CONSULT-III screen has turned to “COMPLETED”. (It will take approximately 4 seconds.)

Which is displayed on CONSULT-III screen?

COND2: COMPLETED, COND3: INCOMPLETED>>GO TO 8.
COND2: COMPLETED, COND3: COMPLETED>>GO TO 9.

8. PERFORM PROCEDURE FOR COND3-I

Stop vehicle and let it idle until “INCOMPLETED” of “COND3” on CONSULT-III screen has turned to “COMPLETED”. (It will take a maximum of approximately 6 minutes.)

>> GO TO 9.

9. PERFORM PROCEDURE FOR COND3-II

Touch “SELF DIAGRESULTS”.

Which is displayed on CONSULT-III screen?

YES >> INSPECTION END
NO >> Go to EC-174, "Diagnosis Procedure".
CAN NOT BE DIAGNOSED>>GO TO 10.

10. PERFORM PROCEDURE FOR COND3-III

1. Turn ignition switch OFF and leave the vehicle in a cool place (soak the vehicle).
2. Turn ignition switch ON and select “COOLAN TEMP/S” in “DATA MONITOR” mode with CONSULT-III.
3. Start engine and warm it up until “COOLAN TEMP/S” indication reaches to 70°C (158°F).

>> GO TO 5.

11. PREFORM COMPONENT FUNCTION CHECK

Perform Component Function Check. Refer to EC-174, "Component Function Check".

NOTE:
Use Component Function Check to check the overall function of heated oxygen sensor 2 circuit. During this check, a 1st trip DTC might not be confirmed.

Is the inspection result normal?

YES >> INSPECTION END
NO >> Go to EC-174, "Diagnosis Procedure".

Component Function Check

INFOID:0000000005989273

1. PERFORM COMPONENT FUNCTION CHECK-I

Without CONSULT-III

1. Start engine and warm it up to normal operating temperature.
2. Turn ignition switch OFF and wait at least 10 seconds.
3. Start engine and keep the engine speed between 3,500 and 4,000 rpm for at least 1 minute under no load.
4. Let engine idle for 1 minute.
5. Check the voltage between ECM harness connector and ground under the following condition.

ECM			Condition	Voltage
Connector	+	–		
	Terminal	Terminal		
F16	50 (HO2S2 signal)	59	Revving up to 4,000 rpm under no load at least 10 times	A change of voltage should be more than 0.12 V for 1 second during this procedure.

Is the inspection result normal?

YES >> INSPECTION END
NO >> GO TO 2.

2. PERFORM COMPONENT FUNCTION CHECK-II

Check the voltage between ECM harness connector and ground under the following condition.

ECM			Condition	Voltage
Connector	+	–		
	Terminal	Terminal		
F16	50 (HO2S2 signal)	59	Keeping engine speed at idle for 10 minutes	A change of voltage should be more than 0.12 V for 1 second during this procedure.

Is the inspection result normal?

YES >> INSPECTION END
NO >> GO TO 3.

3. PERFORM COMPONENT FUNCTION CHECK-III

Check the voltage between ECM harness connector and ground under the following condition.

ECM			Condition	Voltage
Connector	+	–		
	Terminal	Terminal		
F16	50 (HO2S2 signal)	59	Coasting from 80 km/h (50 MPH) in 4th gear position	A change of voltage should be more than 0.12 V for 1 second during this procedure.

Is the inspection result normal?

YES >> INSPECTION END
NO >> Refer to EC-174, "Diagnosis Procedure".

Diagnosis Procedure

INFOID:0000000005989274

1. CLEAR THE MIXTURE RATIO SELF-LEARNING VALUE

1. Clear the mixture ratio self-learning value. Refer to EC-108, "Work Procedure".
2. Run engine for at least 10 minutes at idle speed.

Is the 1st trip DTC P0171 or P0172 detected? Is it difficult to start engine?

YES >> Perform trouble diagnosis for DTC P0171 or P0172. Refer to EC-178, "DTC Logic" or EC-182, "DTC Logic".
NO >> GO TO 2.

2. CHECK HO2S2 GROUND CIRCUIT FOR OPEN AND SHORT

1. Turn ignition switch OFF.
2. Disconnect heated oxygen sensor 2 (HO2S2) harness connector.
3. Disconnect ECM harness connector.
4. Check the continuity between HO2S2 harness connector and ECM harness connector.

HO2S2		ECM		Continuity
Connector	Terminal	Connector	Terminal	
E31	1	F16	59	Existed

5. Also check harness for short to ground and short to power.

Is the inspection result normal?

YES >> GO TO 3.
NO >> Repair open circuit or short to ground or short to power in harness or connectors.

3. CHECK HO2S2 INPUT SIGNAL CIRCUIT FOR OPEN AND SHORT

1. Check the continuity between HO2S2 harness connector and ECM harness connector.

HO2S2		ECM		Continuity
Connector	Terminal	Connector	Terminal	
E31	4	F16	50	Existed

2. Check the continuity between HO2S2 harness connector or ECM harness connector and ground.

HO2S2		ECM		Ground	Continuity
Connector	Terminal	Connector	Terminal		
E31	4	F16	50	Ground	Not existed

3. Also check harness for short to power.

Is the inspection result normal?

YES >> GO TO 4.
NO >> Repair open circuit or short to ground or short to power in harness or connectors.

4. CHECK HEATED OXYGEN SENSOR 2

Check heated oxygen sensor 2. Refer to EC-175, "Component Inspection".

Is the inspection result normal?

YES >> GO TO 5.
NO >> Replace heated oxygen sensor 2. Refer to EX-5, "Exploded View".

5. CHECK INTERMITTENT INCIDENT

Check intermittent incident. Refer to GI-33, "Intermittent Incident".

>> Repair or replace malfunctioning part.

Component Inspection

INFOID:0000000005989275

1. INSPECTION START

Do you have CONSULT-III?

Do you have CONSULT-III?

YES >> GO TO 2.
NO >> GO TO 3.

2. CHECK HEATED OXYGEN SENSOR 2

With CONSULT-III

1. Turn ignition switch ON and select “ENGINE” using CONSULT-III.
2. Select “DATA MONITOR” mode.
3. Start engine and warm it up to the normal operating temperature.
4. Turn ignition switch OFF and wait at least 10 seconds.
5. Start engine and keep the engine speed between 3,500 and 4,000 rpm for at least 1 minute under no load.
6. Let engine idle for 1 minute.
7. Select “FUEL INJECTION” in “ACTIVE TEST” mode, and select “HO2S2 (B1)” as the monitor item with CONSULT-III.
8. Check “HO2S2 (B1)” at idle speed when adjusting “FUEL INJECTION” to ±25%.

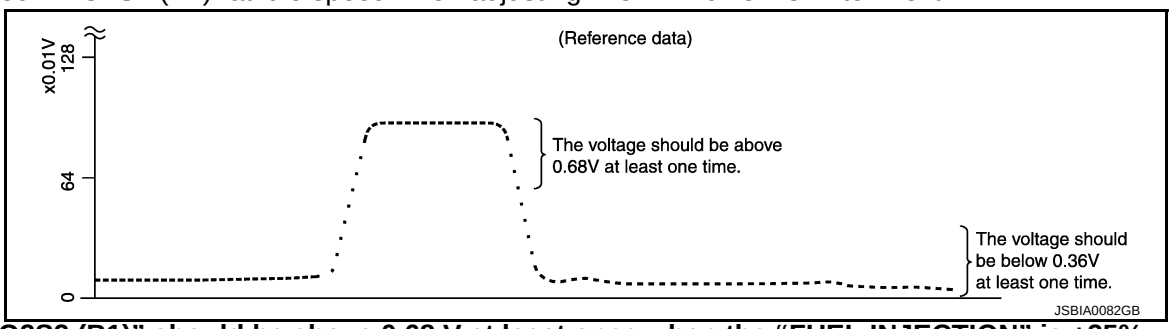

“HO2S2 (B1)” should be above 0.68 V at least once when the “FUEL INJECTION” is +25%.
“HO2S2 (B1)” should be below 0.36 V at least once when the “FUEL INJECTION” is –25%.

Is the inspection result normal?

YES >> INSPECTION END
NO >> GO TO 6.

3. CHECK HEATED OXYGEN SENSOR 2-I

Without CONSULT-III

1. Start engine and warm it up to the normal operating temperature.
2. Turn ignition switch OFF and wait at least 10 seconds.
3. Start engine and keep the engine speed between 3,500 and 4,000 rpm for at least 1 minute under no load.
4. Let engine idle for 1 minute.
5. Check the voltage between ECM harness connector terminals under the following condition.

ECM			Condition	Voltage
Connector	+	–		
	Terminal	Terminal		
F16	50 (HO2S2)	59	Revving up to 4,000 rpm under no load at least 10 times	The voltage should be above 0.68 V at least once during this procedure. The voltage should be below 0.36 V at least once during this procedure.

Is the inspection result normal?

YES >> INSPECTION END
NO >> GO TO 4.

4. CHECK HEATED OXYGEN SENSOR 2-II

Check the voltage between ECM harness connector terminals under the following condition.

ECM			Condition	Voltage
Connector	+	–		
	Terminal	Terminal		
F16	50 (HO2S2)	59	Keeping engine at idle for 10 minutes	The voltage should be above 0.68 V at least once during this procedure. The voltage should be below 0.36 V at least once during this procedure.

Is the inspection result normal?

YES >> INSPECTION END
NO >> GO TO 5.

5. CHECK HEATED OXYGEN SENSOR 2-III

Check the voltage between ECM harness connector terminals under the following condition.

ECM			Condition	Voltage
Connector	+	–		
	Terminal	Terminal		
F16	50 (HO2S2)	59	Coasting from 80 km/h (50 MPH) in 4th gear position	The voltage should be above 0.68 V at least once during this procedure. The voltage should be below 0.36 V at least once during this procedure.

Is the inspection result normal?

YES >> INSPECTION END
NO >> Replace malfunctioning heated oxygen sensor 2. Refer to EX-5, "Exploded View".

P0171 FUEL INJECTION SYSTEM FUNCTION

DTC Logic

INFOID:0000000005989279

DTC DETECTION LOGIC

With the Air/Fuel Mixture Ratio Self-Learning Control, the actual mixture ratio can be brought closely to the theoretical mixture ratio based on the mixture ratio feedback signal from the A/F sensor 1. The ECM calculates the necessary compensation to correct the offset between the actual and the theoretical ratios.
In case the amount of the compensation value is extremely large (The actual mixture ratio is too lean.), the ECM judges the condition as the fuel injection system malfunction and lights up the MIL (2 trip detection logic).

Sensor	Input signal to ECM	ECM function	Actuator
A/F sensor 1	Density of oxygen in exhaust gas (Mixture ratio feedback signal)	Fuel injection control	Fuel injector

DTC No.	Trouble diagnosis name	DTC detecting condition	Possible cause
P0171	Fuel injection system too lean	• Fuel injection system does not operate properly. • The amount of mixture ratio compensation is too large. (The mixture ratio is too lean.)	• Intake air leaks • A/F sensor 1 • Fuel injector • Exhaust gas leaks • Incorrect fuel pressure • Lack of fuel • Mass air flow sensor • Incorrect PCV hose connection

DTC CONFIRMATION PROCEDURE

1. PRECONDITIONING

If DTC Confirmation Procedure has been previously conducted, always turn ignition switch OFF and wait at least 10 seconds before conducting the next test.

>> GO TO 2.

2. PERFORM DTC CONFIRMATION PROCEDURE-I

1. Clear the mixture ratio self-learning value. Refer to EC-108, "Work Procedure".
2. Start engine.

Is it difficult to start engine?

YES >> GO TO 3.
NO >> GO TO 4.

3. RESTART ENGINE

If it is difficult to start engine, the fuel injection system has a malfunction, too.
Crank engine while depressing accelerator pedal.

NOTE:
When depressing accelerator pedal three-fourths (3/4) or more, the control system may not start the engine. Do not depress accelerator pedal too much.

Does engine start?

YES >> Go to EC-179, "Diagnosis Procedure".
NO >> Check exhaust and intake air leak visually.

4. PERFORM DTC CONFIRMATION PROCEDURE-II

1. Start engine and let it idle for at least 10 minutes.
2. Check 1st trip DTC.

Is 1st trip DTC detected?

YES >> Go to EC-179, "Diagnosis Procedure".
NO >> GO TO 5.

5. PERFORM DTC CONFIRMATION PROCEDURE-III

1. Turn ignition switch OFF and wait at least 10 seconds.
2. Start engine and drive the vehicle under the similar conditions to (1st trip) Freeze Frame Data for 10 minutes. Refer to the table below.
   Hold the accelerator pedal as steady as possible.
   The similar conditions to (1st trip) Freeze Frame Data means the vehicle operation that the following conditions should be satisfied at the same time.

Engine speed	Engine speed in the freeze frame data ± 400 rpm
Vehicle speed	Vehicle speed in the freeze frame data ± 10 km/h (6 MPH)
Engine coolant temperature (T) condition	When the freeze frame data shows lower than 70°C (158°F), T should be lower than 70°C (158°F).
	When the freeze frame data shows higher than or equal to 70°C (158°F), T should be higher than or equal to 70°C (158°F).

CAUTION:
Always drive at a safe speed.

3. Check 1st trip DTC.

Is 1st trip DTC detected?

YES >> Go to EC-179, "Diagnosis Procedure".
NO >> INSPECTION END

Diagnosis Procedure

INFOID:0000000005989280

1. CHECK EXHAUST GAS LEAK

1. Start engine and run it at idle.
2. Listen for an exhaust gas leak before three way catalyst (manifold).

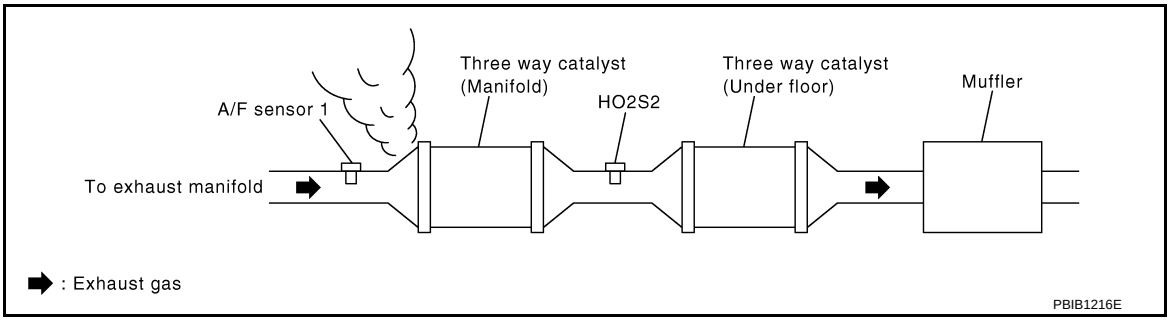

Is exhaust gas leak detected?

YES >> Repair or replace.
NO >> GO TO 2.

2. CHECK FOR INTAKE AIR LEAK AND PCV HOSE

1. Listen for an intake air leak after the mass air flow sensor.
2. Check PCV hose connection.

Intake air leak detected?

YES >> Repair or replace.
NO >> GO TO 3.

3. CHECK A/F SENSOR 1 INPUT SIGNAL CIRCUIT FOR OPEN AND SHORT

1. Turn ignition switch OFF.
2. Disconnect corresponding A/F sensor 1 harness connector.
3. Disconnect ECM harness connector.
4. Check the continuity between A/F sensor 1 harness connector and ECM harness connector.

A/F sensor 1		ECM		Continuity
Connector	Terminal	Connector	Terminal	
F50	1	F16	49	Existed

5. Check the continuity between A/F sensor 1 harness connector or ECM harness connector and ground.

A/F sensor 1		ECM		Ground	Continuity
Connector	Terminal	Connector	Terminal		
F50	1	F16	49	Ground	Not existed

6. Also check harness for short to power.

Is the inspection result normal?

YES >> GO TO 4.
NO >> Repair open circuit or short to ground or short to power in harness or connectors.

4. CHECK FUEL PRESSURE

1. Release fuel pressure to zero. Refer to EC-113, "Work Procedure".
2. Install fuel pressure gauge and check fuel pressure. Refer to EC-113, "Work Procedure".

At idling: Approximately 350 kPa (3.5 bar, 3.57 kg/cm^2, 51 psi)

Is the inspection result normal?

YES >> GO TO 6.
NO >> GO TO 5.

5. CHECK FUEL HOSES AND FUEL TUBES

Check fuel hoses and fuel tubes for clogging.

Is the inspection result normal?

YES >> Replace fuel level sensor unit, fuel filter and fuel pump assembly. Refer to FL-5, "Exploded View".
NO >> Repair or replace

6. CHECK MASS AIR FLOW SENSOR

With CONSULT-III

1. Install all removed parts.
2. Check “MASS AIRFLOW” in “DATA MONITOR” mode with CONSULT-III.

1.0 - 4.0 g·m/sec: at idling
2.0 - 10.0 g·m/sec: at 2,500 rpm

With GST

1. Install all removed parts.
2. Check mass air flow sensor signal in Service $01 with GST.

1.0 - 4.0 g·m/sec: at idling
2.0 - 10.0 g·m/sec: at 2,500 rpm

Is the measurement value within the specification?

YES >> GO TO 7.
NO >> Check connectors for rusted terminals or loose connections in the mass air flow sensor circuit or grounds. Refer to EC-137, "DTC Logic".

7. CHECK FUNCTION OF FUEL INJECTOR

With CONSULT-III

1. Start engine.
2. Perform “POWER BALANCE” in “ACTIVE TEST” mode with CONSULT-III.
3. Make sure that each circuit produces a momentary engine speed drop.

Without CONSULT-III

1. Let engine idle.

2. Listen to each fuel injector operating sound.

Clicking noise should be heard.

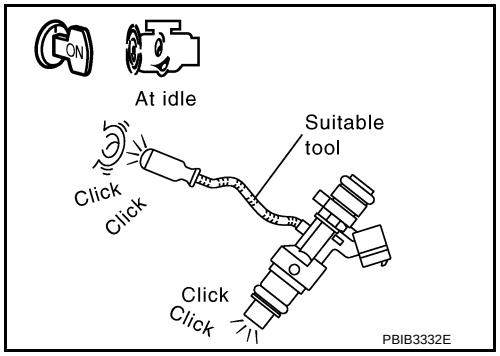

Is the inspection result normal?

YES >> GO TO 8.
NO >> Perform trouble diagnosis for FUEL INJECTOR. Refer to EC-285, "Component Function Check".

8. CHECK FUEL INJECTOR

1. Turn ignition switch OFF.
2. Confirm that the engine is cooled down and there are no fire hazards near the vehicle.
3. Disconnect all fuel injector harness connectors.
4. Remove fuel tube assembly. Refer to EM-37, "Exploded View".
   Keep fuel hose and all fuel injectors connected to fuel tube.
5. Disconnect all ignition coil harness connectors.
6. Prepare pans or saucers under each fuel injector.
7. Crank engine for about 3 seconds.

Fuel should be sprayed evenly for each fuel injector.

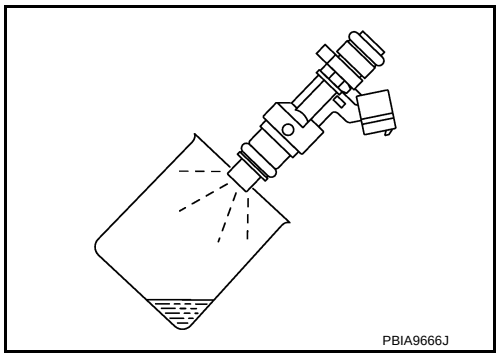

Is the inspection result normal?

YES >> GO TO 9.
NO >> Replace fuel injectors from which fuel does not spray out. Always replace O-ring with new ones. Refer to EM-37, "Exploded View".

9. CHECK INTERMITTENT INCIDENT

Check intermittent incident. Refer to GI-33, "Intermittent Incident".

>> Repair or replace malfunctioning part.

P0172 FUEL INJECTION SYSTEM FUNCTION

DTC Logic

INFOID:0000000005989281

DTC DETECTION LOGIC

With the Air/Fuel Mixture Ratio Self-Learning Control, the actual mixture ratio can be brought closely to the theoretical mixture ratio based on the mixture ratio feedback signal from the A/F sensor 1. The ECM calculates the necessary compensation to correct the offset between the actual and the theoretical ratios.
In case the amount of the compensation value is extremely large (The actual mixture ratio is too rich.), the ECM judges the condition as the fuel injection system malfunction and lights up the MIL (2 trip detection logic).

Sensor	Input signal to ECM	ECM function	Actuator
A/F sensor 1	Density of oxygen in exhaust gas (Mixture ratio feedback signal)	Fuel injection control	Fuel injector

DTC No.	Trouble diagnosis name	DTC detecting condition	Possible cause
P0172	Fuel injection system too rich	• Fuel injection system does not operate properly. • The amount of mixture ratio compensation is too large. (The mixture ratio is too rich.)	• A/F sensor 1 • Fuel injector • Exhaust gas leaks • Incorrect fuel pressure • Mass air flow sensor

DTC CONFIRMATION PROCEDURE

1. PRECONDITIONING

If DTC Confirmation Procedure has been previously conducted, always turn ignition switch OFF and wait at least 10 seconds before conducting the next test.

>> GO TO 2.

2. PERFORM DTC CONFIRMATION PROCEDURE-I

1. Clear the mixture ratio self-learning value. Refer to EC-108, "Work Procedure".
2. Start engine.

Is it difficult to start engine?

YES >> GO TO 3.
NO >> GO TO 4.

3. RESTART ENGINE

If it is difficult to start engine, the fuel injection system has a malfunction, too.
Crank engine while depressing accelerator pedal.
NOTE:
When depressing accelerator pedal three-fourths (3/4) or more, the control system may not start the engine. Do not depress accelerator pedal too much.

Does engine start?

YES >> Go to EC-183, "Diagnosis Procedure".
NO >> Remove spark plugs and check for fouling, etc.

4. PERFORM DTC CONFIRMATION PROCEDURE-II

1. Start engine and let it idle for at least 10 minutes.
2. Check 1st trip DTC.

Is 1st trip DTC detected?

YES >> Go to EC-183, "Diagnosis Procedure".
NO >> GO TO 5.

5. PERFORM DTC CONFIRMATION PROCEDURE-III

1. Turn ignition switch OFF and wait at least 10 seconds.
2. Start engine and drive the vehicle under the similar conditions to (1st trip) Freeze Frame Data for 10 minutes. Refer to the table below.

Hold the accelerator pedal as steady as possible.
The similar conditions to (1st trip) Freeze Frame Data means the vehicle operation that the following conditions should be satisfied at the same time.

Engine speed	Engine speed in the freeze frame data ± 400 rpm
Vehicle speed	Vehicle speed in the freeze frame data ± 10 km/h (6 MPH)
Engine coolant temperature (T) condition	When the freeze frame data shows lower than 70°C (158°F), T should be lower than 70°C (158°F).
	When the freeze frame data shows higher than or equal to 70°C (158°F), T should be higher than or equal to 70°C (158°F).

CAUTION:
Always drive at a safe speed.

3. Check 1st trip DTC.

Is 1st trip DTC detected?

YES >> Go to EC-183, "Diagnosis Procedure".
NO >> INSPECTION END

Diagnosis Procedure

INFOID:0000000005989282

1. CHECK EXHAUST GAS LEAK

1. Start engine and run it at idle.
2. Listen for an exhaust gas leak before three way catalyst (manifold).

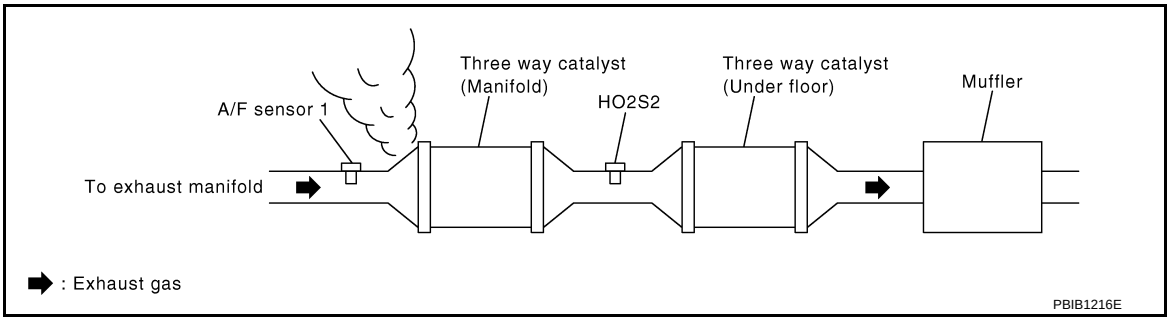

Is exhaust gas leak detected?

YES >> Repair or replace.
NO >> GO TO 2.

2. CHECK FOR INTAKE AIR LEAK

Listen for an intake air leak after the mass air flow sensor.

Is intake air leak detected?

YES >> Repair or replace.
NO >> GO TO 3.

3. CHECK A/F SENSOR 1 INPUT SIGNAL CIRCUIT FOR OPEN AND SHORT

1. Turn ignition switch OFF.
2. Disconnect corresponding A/F sensor 1 harness connector.
3. Disconnect ECM harness connector.
4. Check the continuity between A/F sensor 1 harness connector and ECM harness connector.

A/F sensor 1		ECM		Continuity
Connector	Terminal	Connector	Terminal	
F50	1	F16	49	Existed

5. Check the continuity between A/F sensor 1 harness connector or ECM harness connector and ground.

A/F sensor 1		ECM		Ground	Continuity
Connector	Terminal	Connector	Terminal		
F50	1	F16	49	Ground	Not existed

6. Also check harness for short to power.

Is the inspection result normal?

YES >> GO TO 4.
NO >> Repair open circuit or short to ground or short to power in harness or connectors.

4. CHECK FUEL PRESSURE

1. Release fuel pressure to zero. Refer to EC-113, "Work Procedure".
2. Install fuel pressure gauge and check fuel pressure. Refer to EC-113, "Work Procedure".

At idling: Approximately 350 kPa (3.5 bar, 3.57 kg/cm^2, 51 psi)

Is the inspection result normal?

YES >> GO TO 6.
NO >> GO TO 5.

5. CHECK FUEL HOSES AND FUEL TUBES

Check fuel hoses and fuel tubes for clogging.

Is the inspection result normal?

YES >> Replace fuel level sensor unit, fuel filter and fuel pump assembly. Refer to FL-5, "Exploded View".
NO >> Repair or replace

6. CHECK MASS AIR FLOW SENSOR

With CONSULT-III

1. Install all removed parts.
2. Check “MASS AIRFLOW” in “DATA MONITOR” mode with CONSULT-III.

1.0 - 4.0 g·m/sec: at idling
2.0 - 10.0 g·m/sec: at 2,500 rpm

With GST

1. Install all removed parts.
2. Check mass air flow sensor signal in “Service $01” with GST.

1.0 - 4.0 g·m/sec: at idling
2.0 - 10.0 g·m/sec: at 2,500 rpm

Is the measurement value within the specification?

YES >> GO TO 7.
NO >> Check connectors for rusted terminals or loose connections in the mass air flow sensor circuit or grounds. Refer to EC-137, "DTC Logic".

7. CHECK FUNCTION OF FUEL INJECTOR

With CONSULT-III

1. Start engine.
2. Perform “POWER BALANCE” in “ACTIVE TEST” mode with CONSULT-III.
3. Make sure that each circuit produces a momentary engine speed drop.

Without CONSULT-III

1. Let engine idle.

2. Listen to each fuel injector operating sound.

Clicking noise should be heard.

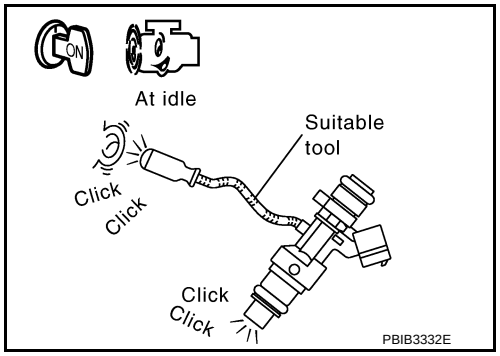

Is the inspection result normal?

YES >> GO TO 8.
NO >> Perform trouble diagnosis for FUEL INJECTOR. Refer to EC-285, "Component Function Check".

8. CHECK FUELINJECTOR

1. Remove fuel injector assembly. Refer to EM-37, "Exploded View".
   Keep fuel hose and all fuel injectors connected to fuel tube.
2. Confirm that the engine is cooled down and there are no fire hazards near the vehicle.
3. Disconnect all fuel injector harness connectors.
4. Disconnect all ignition coil harness connectors.
5. Prepare pans or saucers under each fuel injectors.
6. Crank engine for about 3 seconds.
   Make sure fuel does not drip from fuel injector.

Is the inspection result normal?

YES >> GO TO 9.
NO >> Replace the fuel injectors from which fuel is dripping. Always replace O-ring with new one. Refer to EM-37, "Exploded View".

9. CHECK INTERMITTENT INCIDENT

Check intermittent incident. Refer to GI-33, "Intermittent Incident".

>> Repair or replace malfunctioning part.

P0222, P0223 TP SENSOR

DTC Logic

INFOID:0000000005989283

DTC DETECTION LOGIC

NOTE:
If DTC P0222 or P0223 is displayed with DTC P0643, first perform the trouble diagnosis for DTC P0643. Refer to EC-228, "DTC Logic".

DTC No.	Trouble diagnosis name	DTC detecting condition	Possible cause
P0222	Throttle position sensor 1 circuit low input	An excessively low voltage from the TP sensor 1 is sent to ECM.	• Harness or connectors (TP sensor 1 circuit is open or shorted.) • Electric throttle control actuator (TP sensor 1)
P0223	Throttle position sensor 1 circuit high input	An excessively high voltage from the TP sensor 1 is sent to ECM.	

DTC CONFIRMATION PROCEDURE

1. PRECONDITIONING

If DTC Confirmation Procedure has been previously conducted, always turn ignition switch OFF and wait at least 10 seconds before conducting the next test.
TESTING CONDITION:
Before performing the following procedure, confirm that battery voltage is more than 10 V at idle.

>> GO TO 2.

2. PERFORM DTC CONFIRMATION PROCEDURE

1. Start engine and let it idle for 1 second.
2. Check DTC.

Is DTC detected?

YES >> Go to EC-186, "Diagnosis Procedure".
NO >> INSPECTION END

Diagnosis Procedure

INFOID:0000000005989284

1. CHECK GROUND CONNECTION

1. Turn ignition switch OFF.
2. Check ground connection E38. Refer to Ground Inspection in GI-35, "Circuit Inspection".

Is the inspection result normal?

YES >> GO TO 2.
NO >> Repair or replace ground connection.

2. CHECK THROTTLE POSITION SENSOR 1 POWER SUPPLY CIRCUIT

1. Disconnect electric throttle control actuator harness connector.
2. Turn ignition switch ON.
3. Check the voltage between electric throttle control actuator harness connector and ground.

Electric throttle control actuator		Ground	Voltage
Connector	Terminal		
F29	1	Ground	Approx. 5 V

Is the inspection result normal?

YES >> GO TO 3.
NO >> Repair open circuit or short to ground or short to power in harness or connectors.

3. CHECK THROTTLE POSITION SENSOR 1 GROUND CIRCUIT FOR OPEN AND SHORT

1. Turn ignition switch OFF.
2. Disconnect ECM harness connector.

3. Check the continuity between electric throttle control actuator harness connector and ECM harness connector.

Electric throttle control actuator		ECM		Continuity
Connector	Terminal	Connector	Terminal	
F29	4	F8	36	Existed

4. Also check harness for short to ground and short to power.

Is the inspection result normal?

YES >> GO TO 4.
NO >> Repair open circuit or short to ground or short to power in harness or connectors.

4. CHECK THROTTLE POSITION SENSOR 1 INPUT SIGNAL CIRCUIT FOR OPEN AND SHORT

1. Check the continuity between electric throttle control actuator harness connector and ECM harness connector.

Electric throttle control actuator		ECM		Continuity
Connector	Terminal	Connector	Terminal	
F29	2	F8	33	Existed

2. Also check harness for short to ground and short to power.

Is the inspection result normal?

YES >> GO TO 5.
NO >> Repair open circuit or short to ground or short to power in harness or connectors.

5. CHECK THROTTLE POSITION SENSOR

Check throttle position sensor. Refer to EC-187, "Component Inspection".

Is the inspection result normal?

YES >> GO TO 6.
NO >> Replace electric throttle control actuator. Refer to EM-29, "WITH EGR CONTROL VALVE : Exploded View".

6. CHECK INTERMITTENT INCIDENT

Check intermittent incident. Refer to GI-33, "Intermittent Incident".

>> Repair or replace malfunctioning part.

Component Inspection

INFOID:0000000005989285

1. CHECK THROTTLE POSITION SENSOR

1. Turn ignition switch OFF.
2. Reconnect all harness connectors disconnected.
3. Perform EC-105, "Work Procedure".
4. Turn ignition switch ON.
5. Set selector lever to 1st position.
6. Check the voltage between ECM harness connector and ground.

ECM			Condition		Voltage
Connector	+	–			
	Terminal	Terminal			
F16	33 (TP sensor 1 signal)	36	Accelerator pedal	Fully released	More than 0.36 V
				Fully depressed	Less than 4.75 V
	34 (TP sensor 2 signal)			Fully released	Less than 4.75 V
				Fully depressed	More than 0.36 V

Is the inspection result normal?

YES >> INSPECTION END
NO >> Replace electric throttle control actuator. Refer to EM-29, "WITH EGR CONTROL VALVE : Exploded View".

P0300, P0301, P0302, P0303 MISFIRE

DTC Logic

INFOID:0000000005989287

DTC DETECTION LOGIC

When a misfire occurs, engine speed will fluctuate. If the engine speed fluctuates enough to cause the crankshaft position (CKP) sensor (POS) signal to vary, ECM can determine that a misfire is occurring.

Sensor	Input signal to ECM	ECM function
Crankshaft position sensor (POS)	Engine speed	On board diagnosis of misfire

The misfire detection logic consists of the following two conditions.

1. One Trip Detection Logic (Three Way Catalyst Damage)
   On the 1st trip, when a misfire condition occurs that can damage the three way catalyst (TWC) due to overheating, the MIL will blink.
   When a misfire condition occurs, the ECM monitors the CKP sensor signal every 200 engine revolutions for a change.
   When the misfire condition decreases to a level that will not damage the TWC, the MIL will turn off.
   If another misfire condition occurs that can damage the TWC on a second trip, the MIL will blink.
   When the misfire condition decreases to a level that will not damage the TWC, the MIL will remain on.
   If another misfire condition occurs that can damage the TWC, the MIL will begin to blink again.
2. Two Trip Detection Logic (Exhaust quality deterioration)
   For misfire conditions that will not damage the TWC (but will affect vehicle emissions), the MIL will only light when the misfire is detected on a second trip. During this condition, the ECM monitors the CKP sensor signal every 1,000 engine revolutions.
   A misfire malfunction can be detected on any one cylinder or on multiple cylinders.

DTC No.	Trouble diagnosis name	DTC detecting condition	Possible cause
P0300	Multiple cylinder misfire detected	Multiple cylinder misfire.	• Improper spark plug • Insufficient compression • Incorrect fuel pressure • The fuel injector circuit is open or shorted • Fuel injector • Intake air leak • The ignition signal circuit is open or shorted • Lack of fuel • Signal plate • A/F sensor 1 • Incorrect PCV hose connection
P0301	No.1 cylinder misfire detected	No. 1 cylinder misfires.	
P0302	No. 2 cylinder misfire detected	No. 2 cylinder misfires.	
P0303	No. 3 cylinder misfire detected	No. 3 cylinder misfires.	

DTC CONFIRMATION PROCEDURE

1. PRECONDITIONING

If DTC Confirmation Procedure has been previously conducted, always turn ignition switch OFF and wait at least 10 seconds before conducting the next test.

>> GO TO 2.

2. PERFORM DTC CONFIRMATION PROCEDURE-I

1. Start engine and warm it up to normal operating temperature.
2. Turn ignition switch OFF and wait at least 10 seconds.
3. Restart engine and let it idle for about 15 minutes.
4. Check 1st trip DTC.

Is 1st trip DTC detected?

YES >> Go to EC-190, "Diagnosis Procedure".
NO >> GO TO 3.

3. PERFORM DTC CONFIRMATION PROCEDURE-II

1. Turn ignition switch OFF and wait at least 10 seconds.

2. Start engine and drive the vehicle under the similar conditions to (1st trip) Freeze Frame Data for a certain time. Refer to the table below.
   Hold the accelerator pedal as steady as possible.
   The similar conditions to (1st trip) Freeze Frame Data means the vehicle operation that the following conditions should be satisfied at the same time.
   CAUTION:
   Always drive vehicle in safe manner according to traffic conditions and obey all traffic laws when driving.

Engine speed	Engine speed in the freeze frame data ± 400 rpm
Vehicle speed	Vehicle speed in the freeze frame data ± 10 km/h (6 MPH)
Engine coolant temperature (T) condition	When the freeze frame data shows lower than 70°C (158°F), T should be lower than 70°C (158°F).
	When the freeze frame data shows higher than or equal to 70°C (158°F), T should be higher than or equal to 70°C (158°F).

The time to driving varies according to the engine speed in the freeze frame data.

Engine speed	Time
Around 1,000 rpm	Approximately 10 minutes
Around 2,000 rpm	Approximately 5 minutes
More than 3,000 rpm	Approximately 3.5 minutes

3. Check 1st trip DTC.

Is 1st trip DTC detected?

YES >> Go to EC-190, "Diagnosis Procedure".
NO >> INSPECTION END

Diagnosis Procedure

INFOID:0000000005989288

1. CHECK FOR INTAKE AIR LEAK AND PCV HOSE

1. Start engine and run it at idle speed.
2. Listen for the sound of the intake air leak.
3. Check PCV hose connection.

Is intake air leak detected?

YES >> Discover air leak location and repair.
NO >> GO TO 2.

2. CHECK FOR EXHAUST SYSTEM CLOGGING

Stop engine and visually check exhaust tube, three way catalyst and muffler for dents.

Is the inspection result normal?

YES-1 >> With CONSULT-III: GO TO 3.
YES-2 >> Without CONSULT-III: GO TO 4.
NO >> Repair or replace it. Refer to EX-5, "Exploded View".

3. PERFORM POWER BALANCE TEST

With CONSULT-III

1. Start engine.
2. Perform “POWER BALANCE” in “ACTIVE TEST” mode with CONSULT-III.
3. Make sure that each circuit produces a momentary engine speed drop.

Is the inspection result normal?

YES >> GO TO 9.
NO >> GO TO 4.

4. CHECK FUNCTION OF FUEL INJECTOR

1. Start engine and let engine idle.

2. Listen to each fuel injector operating sound.

Clicking noise should be heard.

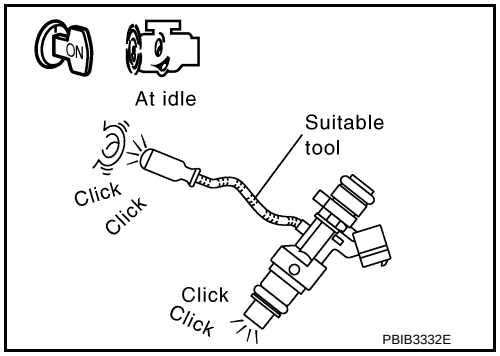

Is the inspection result normal?

YES >> GO TO 5.
NO >> Perform trouble diagnosis for FUEL INJECTOR. Refer to EC-285, "Component Function Check".

5. CHECK FUNCTION OF IGNITION COIL-I

CAUTION:
Do the following procedure in the place where ventilation is good without the combustible.

1. Turn ignition switch OFF.
2. Remove fuel pump fuse in IPDM E/R to release fuel pressure.
   NOTE:
   Do not use CONSULT-III to release fuel pressure, or fuel pressure applies again during the following procedure.
3. Start engine.
4. After engine stalls, crank it two or three times to release all fuel pressure.
5. Turn ignition switch OFF.
6. Remove all ignition coil harness connectors to avoid the electrical discharge from the ignition coils.
7. Remove ignition coil and spark plug of the cylinder to be checked.
8. Crank engine for 5 seconds or more to remove combustion gas in the cylinder.
9. Connect spark plug and harness connector to ignition coil.
10. Fix ignition coil using a rope etc. with gap of 13 - 17 mm (0.52 - 0.66 in) between the edge of the spark plug and grounded metal portion as shown in the figure.
11. Crank engine for about 3 seconds, and check whether spark is generated between the spark plug and the grounded metal portion.

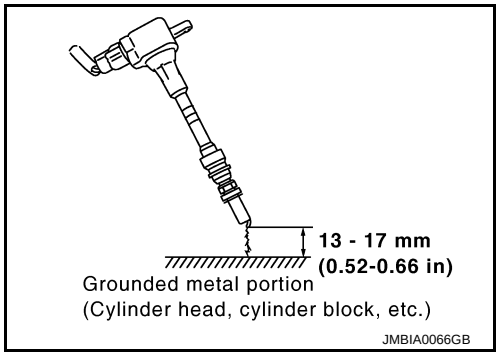

Spark should be generated.

CAUTION:
- **Do not approach to the spark plug and the ignition coil within 50 cm (19.7 in). Be careful not to get an electrical shock while checking, because the electrical discharge voltage becomes 20 kV or more.**
- **It might cause to damage the ignition coil if the gap of more than 17 mm (0.66 in) is taken.**

NOTE:
When the gap is less than 13 mm (0.52 in), the spark might be generated even if the coil is malfunctioning.

Is the inspection result normal?

YES >> GO TO 9.
NO >> GO TO 6.

6. CHECK FUNCTION OF IGNITION COIL-II

1. Turn ignition switch OFF.
2. Disconnect spark plug and connect a known-good spark plug.
3. Crank engine for about 3 seconds, and recheck whether spark is generated between the spark plug and the grounded metal portion.

Spark should be generated.

Is the inspection result normal?

YES >> GO TO 7.
NO >> Check ignition coil, power transistor and their circuits. Refer to EC-291, "Component Function Check".

7. CHECK SPARK PLUG

Check the initial spark plug for fouling, etc.

Is the inspection result normal?

YES >> Replace spark plug(s) with standard type one(s). Refer to EM-41, "Exploded View". For spark plug type, refer to EM-93, "Spark Plug".

NO >> Repair or clean spark plug. Then GO TO 8.

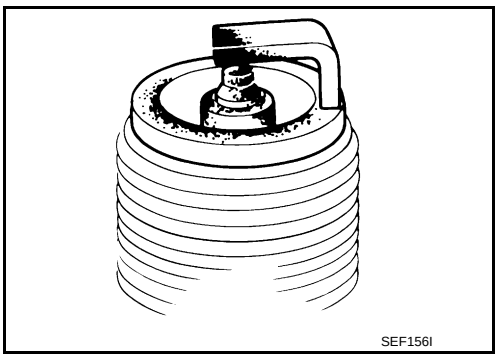

8. CHECK FUNCTION OF IGNITION COIL-III

1. Reconnect the initial spark plugs.
2. Crank engine for about 3 seconds, and recheck whether spark is generated between the spark plug and the grounded portion.

Spark should be generated.

Is the inspection result normal?

YES >> INSPECTION END

NO >> Replace spark plug(s) with standard type one(s). Refer to EM-41, "Exploded View". For spark plug type, refer to EM-93, "Spark Plug".

9. CHECK COMPRESSION PRESSURE

Check compression pressure. Refer to EM-14, "Inspection".

Is the inspection result normal?

YES >> GO TO 10.

NO >> Check pistons, piston rings, valves, valve seats and cylinder head gaskets.

10. CHECK FUEL PRESSURE

1. Install all removed parts.
2. Release fuel pressure to zero. Refer to EC-113, "Work Procedure".
3. Install fuel pressure gauge and check fuel pressure. Refer to EC-113, "Work Procedure".

At idling: Approximately 350 kPa (3.5 bar, 3.57 kg/cm^2, 51 psi)

Is the inspection result normal?

YES >> GO TO 12.

NO >> GO TO 11.

11. DETECT MALFUNCTIONING PART

Check fuel hoses and fuel tubes for clogging.

Is the inspection result normal?

YES >> Replace fuel level sensor unit, fuel filter and fuel pump assembly. Refer to FL-5, "Exploded View".

NO >> Repair or replace.

12. CHECK IGNITION TIMING

Check the following items.
For procedure, refer to EC-109, "Work Procedure".
For specification, refer to EC-315, "Ignition Timing".

Is the inspection result normal?

YES >> GO TO 13.

NO >> Follow the EC-109, "Work Procedure".

13. CHECK A/F SENSOR 1 INPUT SIGNAL CIRCUIT FOR OPEN AND SHORT

1. Turn ignition switch OFF.

2. Disconnect A/F sensor 1 harness connector.
3. Disconnect ECM harness connector.
4. Check the continuity between A/F sennsor 1 harness connector and ECM harness connector.

A/F sennsor 1		ECM		Continuity
Connector	Terminal	Connector	Terminal	
F50	1	F16	49	Existed

5. Check the continuity between A/F sennsor 1 harness connector or ECM harness connector and ground.

A/F sennsor 1		ECM		Ground	Continuity
Connector	Terminal	Connector	Terminal		
F50	1	F16	49	Ground	Not existed

6. Also check harness for short to power.

Is the inspection result normal?

YES >> GO TO 14.
NO >> Repair open circuit or short to ground or short to power in harness or connectors.

14. CHECK A/F SENSOR 1 HEATER

Check a/f sensor 1 heater. Refer to EC-132, "Component Inspection".

Is the inspection result normal?

YES >> GO TO 15.
NO >> Replace A/F sensor 1. Refer to EM-32, "Exploded View".

15. CHECK MASS AIR FLOW SENSOR

With CONSULT-III

Check “MASS AIRFLOW” in “DATA MONITOR” mode with CONSULT-III.

1.0 - 4.0 g·m/sec : at idling
2.0 - 10.0 g·m/sec : at 2,500 rpm

With GST

Check mass air flow sensor signal in Service $01 with GST.

1.0 - 4.0 g·m/sec : at idling
2.0 - 10.0 g·m/sec : at 2,500 rpm

Is the measurement value within the specification?

YES >> GO TO 16.
NO >> Check connectors for rusted terminals or loose connections in the mass air flow sensor circuit or ground. Refer to EC-137, "DTC Logic".

16. CHECK SYMPTOM TABLE

Check items on the rough idle symptom in EC-299, "Symptom Table".

Is the inspection result normal?

YES >> GO TO 17.
NO >> Repair or replace.

17. ERASE THE 1ST TRIP DTC

Some tests may cause a 1st trip DTC to be set.
Erase the 1st trip DTC from the ECM memory after performing the tests. Refer to “How to Erase DTC and 1st Trip DTC” in EC-45, "Diagnosis Description".

>> GO TO 18.

18. CHECK INTERMITTENT INCIDENT

Check intermittent incident. Refer to GI-33, "Intermittent Incident".

>> Repair or replace malfunctioning part.

P0327, P0328 KS

DTC Logic

INFOID:0000000005989289

DTC DETECTION LOGIC

DTC No.	Trouble diagnosis name	DTC detected condition	Possible cause
P0327	Knock sensor circuit low input	An excessively low voltage from the sensor is sent to ECM.	• Harness or connectors (The sensor circuit is open or shorted.) • Knock sensor
P0328	Knock sensor circuit high input	An excessively high voltage from the sensor is sent to ECM.	

DTC CONFIRMATION PROCEDURE

1. PRECONDITIONING

If DTC Confirmation Procedure has been previously conducted, always turn ignition switch OFF and wait at least 10 seconds before conducting the next test.

TESTING CONDITION:

Before performing the following procedure, confirm that battery voltage is more than 10 V at idle.

>> GO TO 2.

2. PERFORM DTC CONFIRMATION PROCEDURE

1. Start engine and let it idle for at least 5 seconds.
2. Check 1st trip DTC.

Is 1st trip DTC detected?

YES >> Go to EC-195, "Diagnosis Procedure".
NO >> INSPECTION END

Diagnosis Procedure

INFOID:0000000005989290

1. CHECK KNOCK SENSOR GROUND CIRCUIT FOR OPEN AND SHORT

1. Disconnect knock sensor harness connector.
2. Disconnect ECM harness connector.
3. Check the continuity between knock sensor harness connector and ECM harness connector.

Knock sensor		ECM		Continuity
Connector	Terminal	Connector	Terminal	
F12	2	F16	40	Existed

4. Also check harness for short to ground and short to power.

Is the inspection result normal?

YES >> GO TO 2.
NO >> Repair open circuit or short to ground or short to power in harness or connectors.

2. CHECK KNOCK SENSOR INPUT SIGNAL CIRCUIT FOR OPEN AND SHORT

1. Check the continuity between knock sensor harness connector and ECM harness connector.

Knock sensor		ECM		Continuity
Connector	Terminal	Connector	Terminal	
F12	1	F16	37	Existed

2. Also check harness for short to ground and short to power.

Is the inspection result normal?

YES >> GO TO 3.
NO >> Repair open circuit or short to ground or short to power in harness or connectors.

3. CHECK KNOCK SENSOR

Check knock sensor. Refer to EC-196, "Component Inspection".

Is the inspection result normal?

YES >> GO TO 4.
NO >> Replace knock sensor. Refer to EM-85, "Exploded View".

4. CHECK INTERMITTENT INCIDENT

Check intermittent incident. Refer to GI-33, "Intermittent Incident".

>> Repair or replace malfunctioning part.

Component Inspection

INFOID:0000000005989291

1. CHECK KNOCK SENSOR

1. Turn ignition switch OFF.
2. Disconnect knock sensor harness connector.
3. Check resistance between knock sensor terminals as follows.
   NOTE:
   It is necessary to use an ohmmeter which can measure more than 10 MΩ.

Terminals	Resistance [at 20°C (68°F)]
1 and 2	Approx. 532 - 588 kΩ

CAUTION:
Do not use any knock sensors that have been dropped or physically damaged. Use only new ones.

Is the inspection result normal?

YES >> INSPECTION END
NO >> Replace knock sensor. Refer to EM-85, "Exploded View".

P0335 CKP SENSOR (POS)

DTC Logic

INFOID:0000000005989292

DTC DETECTION LOGIC

DTC No.	Trouble diagnosis name	DTC detecting condition	Possible cause
P0335	Crankshaft position sensor (POS) circuit	• The crankshaft position sensor (POS) signal is not detected by the ECM during the first few seconds of engine cranking. • The proper pulse signal from the crankshaft position sensor (POS) is not sent to ECM while the engine is running. • The crankshaft position sensor (POS) signal is not in the normal pattern during engine running.	• Harness or connectors [Crankshaft position sensor (POS) circuit is open or shorted.] (Refrigerant pressure sensor circuit is shorted.) (Accelerator pedal position sensor circuit is shorted.) (Battery current sensor circuit is shorted.) • Crankshaft position sensor (POS) • Refrigerant pressure sensor • Accelerator pedal position sensor • Accelerator pedal position sensor • Signal plate • Battery current sensor

DTC CONFIRMATION PROCEDURE

1. PRECONDITIONING

If DTC Confirmation Procedure has been previously conducted, always turn ignition switch OFF and wait at least 10 seconds before conducting the next test.

TESTING CONDITION:

Before performing the following procedure, confirm that battery voltage is more than 10.5 V with ignition switch ON.

>> GO TO 2.

2. PERFORM DTC CONFIRMATION PROCEDURE

1. Start engine and let it idle for at least 5 seconds.
   If engine does not start, crank engine for at least 2 seconds.
2. Check 1st trip DTC.

Is 1st trip DTC detected?

YES >> Go to EC-197, "Diagnosis Procedure".
NO >> INSPECTION END

Diagnosis Procedure

INFOID:0000000005989293

1. CHECK CRANKSHAFT POSITION (CKP) SENSOR (POS) POWER SUPPLY CIRCUIT-I

1. Disconnect crankshaft position (CKP) sensor (POS) harness connector.
2. Turn ignition switch ON.
3. Check the voltage between CKP sensor (POS) harness connector and ground.

CKP sensor (POS)		Ground	Voltage
Connector	Terminal		
F20	1	Ground	Approx. 5 V

Is the inspection result normal?

YES >> GO TO 6.
NO >> GO TO 2.

2. CHECK CRANKSHAFT POSITION (CKP) SENSOR (POS) POWER SUPPLY CIRCUIT-II

1. Turn ignition switch OFF.
2. Disconnect ECM harness connector.

3. Check the continuity between CKP sensor (POS) harness connector and ECM harness connector.

CKP sensor (POS)		ECM		Continuity
Connector	Terminal	Connector	Terminal	
F20	1	F16	75	Existed

Is the inspection result normal?

YES >> GO TO 3.
NO >> Repair open circuit.

3. CHECK SENSOR POWER SUPPLY CIRCUIT

Check harness for short to power and short to ground, between the following terminals.

ECM		Sensor		
Connector	Terminal	Name	Connector	Terminal
F16	75	CKP sensor (POS)	F20	1
	71	Battery current sensor	F53	1
E18	101	Refrigerant pressure sensor	E49	3
	102	APP sensor	E110	5

Is the inspection result normal?

YES >> GO TO 4.
NO >> Repair short to ground or short to power in harness or connectors.

4. CHECK COMPONENTS

Check the following.
- Buttery current sensor (Refer to EC-244, "Component Inspection".)
- Refrigerant pressure sensor (Refer to EC-297, "Component Function Check".)

Is the inspection result normal?

YES >> GO TO 5.
NO >> Replace malfunctioning components.

5. CHECK APP SENSOR

Check app sensor. Refer to EC-269, "Component Inspection".

Is the inspection result normal?

YES >> GO TO 10.
NO >> Replace accelerator pedal assembly.

6. CHECK CKP SENSOR (POS) GROUND CIRCUIT FOR OPEN AND SHORT

1. Turn ignition switch OFF.
2. Check the continuity between CKP sensor (POS) harness connector and ECM harness connector.

CKP sensor (POS)		ECM		Continuity
Connector	Terminal	Connector	Terminal	
F20	2	F16	62	Existed

3. Also check harness for short to ground and short to power.

Is the inspection result normal?

YES >> GO TO 7.
NO >> Repair open circuit or short to ground or short to power in harness or connectors.

7. CHECK CKP SENSOR (POS) INPUT SIGNAL CIRCUIT FOR OPEN AND SHORT

1. Disconnect ECM harness connector.
2. Check the continuity between CKP sensor (POS) harness connector and ECM harness connector.

CKP sensor (POS)		ECM		Continuity
Connector	Terminal	Connector	Terminal	
F20	3	F16	61	Existed

3. Also check harness for short to ground and short to power.

Is the inspection result normal?

YES >> GO TO 8.
NO >> Repair open circuit or short to ground or short to power in harness or connectors.

8. CHECK CRANKSHAFT POSITION SENSOR (POS)

Check crankshaft position sensor (pos). Refer to EC-199, "Component Inspection".

Is the inspection result normal?

YES >> GO TO 9.
NO >> Replace crankshaft position sensor (POS).

9. CHECK GEAR TOOTH

Visually check for chipping signal plate gear tooth.

Is the inspection result normal?

YES >> GO TO 10.
NO >> Replace the signal plate. Refer to EM-85, "Exploded View".

10. CHECK INTERMITTENT INCIDENT

Check intermittent incident. Refer to GI-33, "Intermittent Incident".

>> Repair or replace malfunctioning part.

Component Inspection

INFOID:0000000005989294

1. CHECK CRANKSHAFT POSITION SENSOR (POS)-I

1. Turn ignition switch OFF.
2. Loosen the fixing bolt of the sensor.
3. Disconnect crankshaft position sensor (POS) harness connector.
4. Remove the sensor.
5. Visually check the sensor for chipping.

Is the inspection result normal?

YES >> GO TO 2.
NO >> Replace crankshaft position sensor (POS).

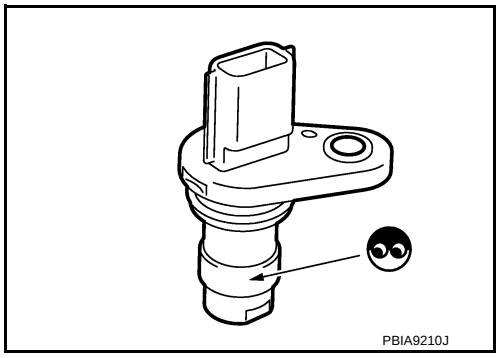

2. CHECK CRANKSHAFT POSITION SENSOR (POS)-II

Check resistance between crankshaft position sensor (POS) terminals as follows.

Terminals (Polarity)	Resistance [at 25°C (77°F)]
1 (+) - 2 (–)	Except 0 or ∞ Ω
1 (+) - 3 (–)	
2 (+) - 3 (–)	

Is the inspection result normal?

YES >> INSPECTION END
NO >> Replace crankshaft position sensor (POS).

P0340 CMP SENSOR (PHASE)

DTC Logic

INFOID:0000000005989295

DTC DETECTION LOGIC

NOTE:
If DTC P0340 is displayed with DTC P0643, first perform the trouble diagnosis for DTC P0643. Refer to EC-228, "DTC Logic".

DTC No.	Trouble diagnosis name	DTC detecting condition	Possible cause
P0340	Camshaft position sensor (PHASE) circuit	• The cylinder No. signal is not sent to ECM for the first few seconds during engine cranking. • The cylinder No. signal is not sent to ECM during engine running. • The cylinder No. signal is not in the normal pattern during engine running.	• Harness or connectors (The sensor circuit is open or shorted) • Camshaft position sensor (PHASE) • Camshaft (INT) • Starter motor • Starting system circuit • Dead (Weak) battery

DTC CONFIRMATION PROCEDURE

1. PRECONDITIONING

If DTC Confirmation Procedure has been previously conducted, always turn ignition switch OFF and wait at least 10 seconds before conducting the next test.
TESTING CONDITION:
Before performing the following procedure, confirm that battery voltage is more than 10.5 V with ignition switch ON.

>> GO TO 2.

2. PERFORM DTC CONFIRMATION PROCEDURE-I

1. Start engine and let it idle for at least 5 seconds.
   If engine does not start, crank engine for at least 2 seconds.
2. Check 1st trip DTC.

Is 1st trip DTC detected?

YES >> Go to EC-200, "Diagnosis Procedure".
NO >> GO TO 3.

3. PERFORM DTC CONFIRMATION PROCEDURE-II

1. Keep engine speed at more than 800 rpm for at least 5 seconds.
2. Check 1st trip DTC.

Is 1st trip DTC detected?

YES >> Go to EC-200, "Diagnosis Procedure".
NO >> INSPECTION END

Diagnosis Procedure

INFOID:0000000005989296

1. CHECK STARTING SYSTEM

Turn ignition switch to START position.

Does the engine turn over? Does the starter motor operate?

YES >> GO TO 2.
NO >> Check starting system.

2. CHECK CAMSHAFT POSITION (CMP) SENSOR (PHASE) POWER SUPPLY CIRCUIT

1. Disconnect camshaft position (CMP) sensor (PHASE) harness connector.
2. Turn ignition switch ON.
3. Check the voltage between CMP sensor (PHASE) harness connector and ground.

CMP sensor (PHASE)		Ground	Voltage
Connector	Terminal		
F26	1	Ground	Approx. 5 V

Is the inspection result normal?

YES >> GO TO 3.
NO >> Repair open circuit or short to ground or short to power in harness or connectors.

3. CHECK CMP SENSOR (PHASE) GROUND CIRCUIT FOR OPEN AND SHORT

1. Turn ignition switch OFF.
2. Disconnect ECM harness connectors.
3. Check the continuity between CMP sensor (PHASE) harness connector and ECM harness connector.

CMP sensor (PHASE)		ECM		Continuity
Connector	Terminal	Connector	Terminal	
F26	2	F16	63	Existed

4. Also check harness for short to ground and short to power.

Is the inspection result normal?

YES >> GO TO 4.
NO >> Repair open circuit or short to ground or short to power in harness or connectors.

4. CHECK CMP SENSOR (PHASE) INPUT SIGNAL CIRCUIT FOR OPEN AND SHORT

1. Check the continuity between CMP sensor (PHASE) harness connector and ECM harness connector.

CMP sensor (PHASE)		ECM		Continuity
Connector	Terminal	Connector	Terminal	
F26	3	F16	65	Existed

2. Also check harness for short to ground and short to power.

Is the inspection result normal?

YES >> GO TO 5.
NO >> Repair open circuit or short to ground or short to power in harness or connectors.

5. CHECK CAMSHAFT POSITION SENSOR (PHASE)

Check camshaft position sensor (phase). Refer to EC-202, "Component Inspection".

Is the inspection result normal?

YES >> GO TO 6.
NO >> Replace camshaft position sensor (PHASE). Refer to EM-53, "Exploded View".

6. CHECK CAMSHAFT (INT)

Check the following.

- Accumulation of debris to the signal plate of camshaft (1) rear end
- Chipping signal plate of camshaft rear end

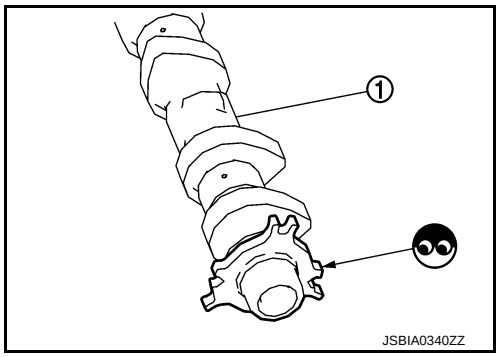

Is the inspection result normal?

YES >> GO TO 7.
NO >> Remove debris and clean the signal plate of camshaft rear end or replace camshaft. Refer to EM-53, "Exploded View".

7. CHECK INTERMITTENT INCIDENT

Check intermittent incident. Refer to GI-33, "Intermittent Incident".

>> Repair or replace malfunctioning part.

Component Inspection

INFOID:0000000005989297

1. CHECK CAMSHAFT POSITION SENSOR (PHASE)-I

1. Turn ignition switch OFF.
2. Loosen the fixing bolt of the sensor.
3. Disconnect camshaft position sensor (PHASE) harness connector.
4. Remove the sensor.
5. Visually check the sensor for chipping.

Is the inspection result normal?

YES >> GO TO 2.
NO >> Replace camshaft position sensor (PHASE). Refer to EM-53, "Exploded View".

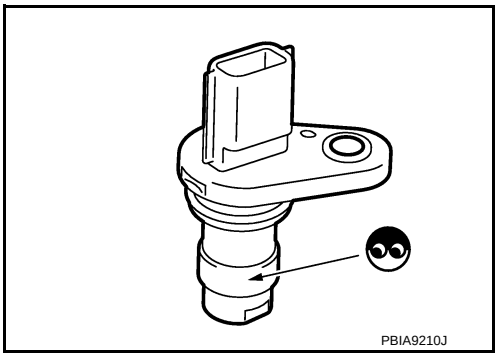

2. CHECK CAMSHAFT POSITION SENSOR (PHASE)-II

Check resistance camshaft position sensor (PHASE) terminals as follows.

Terminals (Polarity)	Resistance [at 25°C (77°F)]
1 (+) - 2 (–)	Except 0 or ∞ Ω
1 (+) - 3 (–)	
2 (+) - 3 (–)	

Is the inspection result normal?

YES >> INSPECTION END
NO >> Replace camshaft position sensor (PHASE). Refer to EM-53, "Exploded View".

P0400 EGR FUNCTION

DTC Logic

INFOID:0000000006015155

DTC DETECTION LOGIC

DTC No.	Trouble diagnosis name	DTC detecting condition	Possible cause
P0400	EGR function (Close)	No EGR flow is detected under the condition that calls for EGR.	• Harness or connectors (The EGR volume control valve circuit isopen or shorted.) • EGR volume control valve stuck closed • Dead (Weak) battery • EGR passage clogged • EGR temperature sensor • EGR temperature circuit • Exhaust gas leaks

DTC CONFIRMATION PROCEDURE

1. PRECONDITIONING

If DTC Confirmation Procedure has been previously conducted, always turn ignition switch OFF and wait atleast 10 seconds before conducting the next test.

TESTING CONDITION:

Before performing the following procedure, confirm that battery voltage is more than 10 V at idle.

>> GO TO 2.

2. PERFORM DTC CONFIRMATION PROCEDURE

With CONSULT-III

1. Turn ignition switch ON.
2. Check “COOLAN TEMP/S” in “DATA MONITOR” mode with CONSULT-III.
3. Confirm “COOLAN TEMP/S” value is within the range listed below.

COOLAN TEMP/S : Less than 40°C (104°F)

If the value is out of range, park the vehicle in a cool place and allow the engine temperature to stabilize.

CAUTION:

Do not attempt to lower the engine coolant temperature with a fan or means other than ambient air. Doing so may produce an inaccurate diagnostic result.

4. Start engine and let it idle monitoring “COOLAN TEMP/S” value. When the “COOLAN TEMP/S” value reaches 70°C (158°F), immediately go to the next step.
5. Drive the vehicle for at least 150 consecutive seconds under the following conditions.

ENG SPEED	1,000 - 3,200 rpm
VHCL SPEED SE	More than 10 km/h (6 MPH)
B/FUEL SCHDL	4.0 - 12.0 msec
Shift lever	Suitable position

CAUTION:

Always drive vehicle at a safe speed.

6. Stop the engine and let it idle for at least 20 seconds.
7. Check 1st trip DTC.

With GST

Follow the procedure “With CONSULT-III” above.

Is 1st trip DTC detected?

YES >> Go to EC-204, "Diagnosis Procedure".
NO >> INSPECTION END

Diagnosis Procedure

INFOID:0000000006015157

1. CHECK EXHAUST GAS LEAK

1. Start the engine and run it at idle.
2. Check exhaust pipes and muffler for leaks.

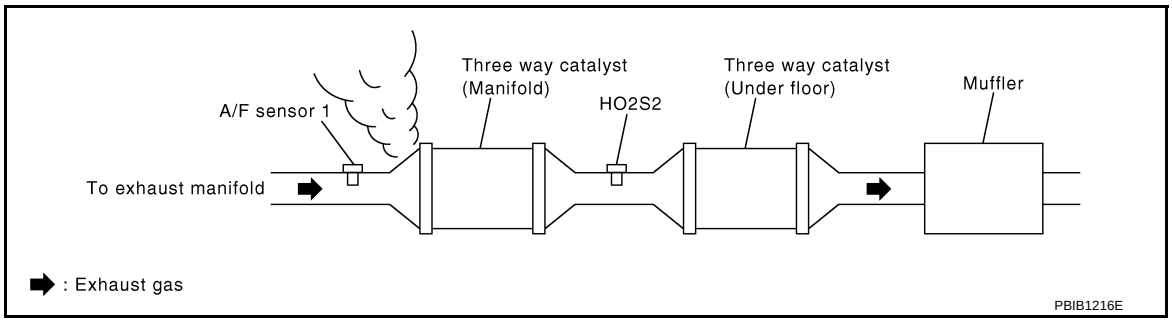

Is the inspection result normal?

YES >> GO TO 2.
NO >> Repair or replace exhaust system. Refer to EX-5, "Exploded View".

2. CHECK EGR VOLUME CONTROL VALVE POWER SUPPLY CIRCUIT

1. Turn ignition switch OFF.
2. Disconnect EGR volume control valve harness connector.
3. Turn ignition switch ON.
4. Check voltage between EGR volume control valve connector and ground.

EGR volume control valve		Ground	Voltage
Connector	Terminal		
F88	2	Ground	Battery voltage
	5		

Is the inspection result normal?

YES >> GO TO 4.
NO >> GO TO 3.

3. DETECT MALFUNCTIONING PART

Check harness for open or short between EGR volume control valve and IPDM E/R.

>> Repair or replace harness or connectors.

4. CHECK EGR VOLUME CONTROL VALVE OUTPUT SIGNAL CIRCUIT FOR OPEN AND SHORT

1. Turn ignition switch OFF.
2. Disconnect ECM harness connector.
3. Check the continuity between ECM harness connector and EGR volume control valve harness connector.

EGR volume control valve		ECM		Continuity
Connector	Terminal	Connector	Terminal	
F88	1	F7	12	Existed
	3		16	
	4		20	
	6		24	

4. Also check harness for short to ground and short to power.

Is the inspection result normal?

YES >> GO TO 5.
NO >> Repair open circuit or short to power in harness or connectors.

5. CHECK EGR PASSAGE

Check EGR passage for clogging and cracks.

Is the inspection result normal?

YES >> GO TO 6.
NO >> Repair or replace EGR passage.

6. CHECK EGR VOLUME CONTROL VALVE

Check EGR volume control valve. Refer to EC-207, "Component Inspection".

Is the inspection result normal?

YES >> GO TO 7.
NO >> Replace EGR volume control valve. Refer to EM-26, "Exploded View".

7. CHECK EGR TEMPERATURE SENSOR AND CIRCUIT

Perform DTC Confirmation Procedure for DTC P0405, P0406. Refer to EC-209, "DTC Logic".

Is the inspection result normal?

YES >> GO TO 8.
NO >> Repair or replace malfunctioning part.

8. CHECK INTERMITTENT INCIDENT

Check intermittent incident. Refer to GI-33, "Intermittent Incident".

>> Repair or replace malfunctioning part.

P0403 EGR VOLUME CONTROL VALVE

DTC Logic

INFOID:0000000005995493

DTC DETECTION LOGIC

DTC No.	Trouble diagnosis name	DTC detecting condition	Possible cause
P0403	EGR volume control valve circuit	An improper voltage signal is sent to ECM through the valve	• Harness or connectors (The EGR volume control valve circuit is open or shorted.) • EGR volume control valve

DTC CONFIRMATION PROCEDURE

1. PRECONDITIONING

If DTC Confirmation Procedure has been previously conducted, always turn ignition switch OFF and wait at least 10 seconds before conducting the next test.

TESTING CONDITION:

Before performing the following procedure, confirm that battery voltage is more than 10 V at idle.

>> GO TO 2.

2. PERFORM DTC CONFIRMATION PROCEDURE

1. Start engine and warm it up to normal operating temperature.
2. Rev engine from idle to 2,000 rpm.
3. Repeat step 2 for 10 times.
4. Check DTC.

Is DTC detected?

YES >> Go to EC-206, "Diagnosis Procedure".
NO >> INSPECTION END

Diagnosis Procedure

INFOID:0000000005995495

1. CHECK EGR VOLUME CONTROL VALVE POWER SUPPLY CIRCUIT

1. Turn ignition switch OFF.
2. Disconnect EGR volume control valve harness connector.
3. Turn ignition switch ON.
4. Check the voltage between EGR volume control valve harness connector and ground.

EGR volume control valve		Ground	Voltage
Connector	Terminal		
F88	2	Ground	Battery voltage
	5		

Is the inspection result normal?

YES >> GO TO 3.
NO >> GO TO 2.

2. DETECT MALFUNCTIONING PART

Check harness for open or short between EGR volume control valve and IPDM E/R.

>> Repair or replace harness or connectors.

3. CHECK EGR VOLUME CONTROL VALVE OUTPUT SIGNAL CIRCUIT FOR OPEN AND SHORT

1. Turn ignition switch OFF.
2. Disconnect ECM harness connector.
3. Check the continuity between EGR volume control valve harness connector and ECM harness connector.

EGR volume control valve		ECM		Continuity
Connector	Terminal	Connector	Terminal	
F88	1	F7	12	Existed
	3		16	
	4		20	
	6		24	

4. Also check harness for short to ground and short to power.

Is the inspection result normal?

YES >> GO TO 4.
NO >> Repair open circuit or short to ground or short to power in harness or connectors.

4. CHECK EGR VOLUME CONTROL VALVE

Check egr volume control valve. Refer to EC-207, "Component Inspection".

Is the inspection result normal?

YES >> GO TO 5.
NO >> Replace EGR volume control valve. Refer to EM-26, "Exploded View".

5. CHECK INTERMITTENT INCIDENT

Check intermittent incident. Refer to GI-33, "Intermittent Incident".

>> Repair or replace malfunctioning part.

Component Inspection

INFOID:0000000005995496

1. CHECK EGR VOLUME CONTROL VALVE

1. Turn ignition switch OFF.
2. Disconnect EGR volume control valve harness connector.
3. Check resistance between EGR volume control valve terminal as follows.

Terminals	Resistance [at 20°C (68°F)]
2 and 1, 3	20 – 24 Ω
5 and 4, 6	

Is the inspection result normal?

YES >> Replace EGR volume control valve. Refer to EM-26, "Exploded View".
NO-1 >> **With CONSULT-III**: GO TO 2.
NO-2 >> **Without CONSULT-III**: GO TO 3.

2. CHECK EGR VOLUME CONTROL VALVE OPERATION

1. Remove EGR volume control valve.
2. Reconnect ECM harness connector and EGR volume control valve harness connector.
3. Turn ignition switch ON.
4. Perform “EGR VOL CONT/V” in “ACTIVE TEST” mode with CONSULT-III.
5. Check that EGR volume control valve shaft moves smoothly forward and backward according to the valve opening steps.

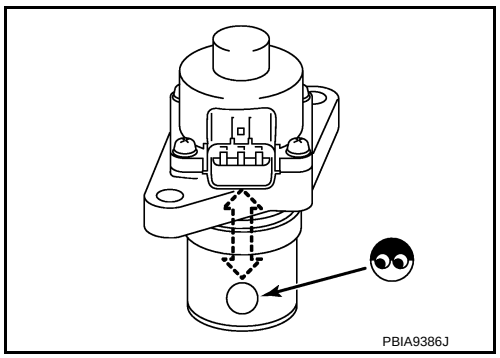

Is the inspection result normal?

YES >> INSPECTION END
NO >> Replace EGR volume control valve. Refer to EM-26, "Exploded View".

3. CHECK EGR VOLUME CONTROL VALVE CLOGGING

1. Remove EGR volume control valve.
2. Reconnect ECM harness connector and EGR volume control valve harness connector.
3. Turn ignition switch ON and OFF.
4. Check that EGR volume control valve shaft moves smoothly forward and backward according to the ignition switch position.

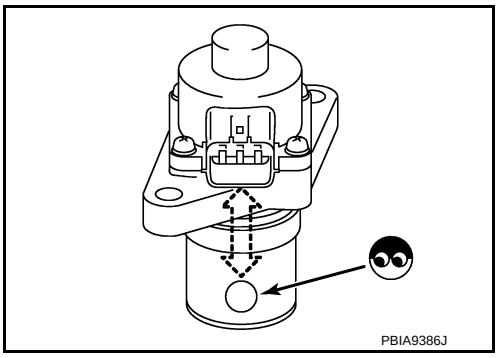

Is the inspection result normal?

YES >> INSPECTION END
NO >> Replace EGR volume control valve. Refer to EM-26, "Exploded View".

P0405, P0406 EGRT SENSOR

DTC Logic

INFOID:0000000006021959

DTC DETECTION LOGIC

DTC No.	Trouble diagnosis name	DTC detecting condition	Possible cause
P0405	EGR temperature sensor circuit low input	An excessively low voltage from the EGR temperature sensor is sent to ECM even when engine coolant temperature is low.	• Harness or connectors (The EGR temperature sensor circuit is shorted.) • EGR temperature sensor • Malfunction of EGR function
P0406	EGR temperature sensor circuit high input	An excessively high voltage from the EGR temperature sensor is sent to ECM even when engine coolant temperature is high.	• Harness or connectors (The EGR temperature sensor circuit is open.) • EGR temperature sensor • Malfunction of EGR function

DTC CONFIRMATION PROCEDURE

1. INSPECTION START

Confirm the detected DTC.

Which DTC is detected?

P0405 >> GO TO 2.
P0406 >> GO TO 4.

2. PRECONDITIONING

If DTC Confirmation Procedure has been previously conducted, always turn ignition switch OFF and wait at least 10 seconds before conducting the next test.

>> GO TO 3.

3. PERFORM DTC CONFIRMATION PROCEDURE FOR DTC P0405

With CONSULT-III

1. Turn ignition switch ON.
2. Select “DATA MONITOR” mode with CONSULT-III.
3. Verify that “COOLAN TEMP/S” indicates less than 50°C (122°F).
   If the engine coolant temperature is above the range, cool the engine down.
   CAUTION:
   Do not attempt to lower the engine coolant temperature with a fan or means other than ambient air. Doing so may produce an inaccurate diagnostic result.
4. Start engine and let it idle for at least 8 seconds.
5. Check 1st trip DTC.

With GST

Follow the procedure “With CONSULT-III” above.

Is 1st trip DTC detected?

YES >> Go to EC-210, "Diagnosis Procedure".
NO >> INSPECTION END

4. PRECONDITIONING

If DTC Confirmation Procedure has been previously conducted, always turn ignition switch OFF and wait at least 10 seconds before conducting the next test.

TESTING CONDITION:

Always perform the test at a temperature above -10°C (14°F).

Do you have CONSULT-III?

YES >> GO TO 5.
NO >> GO TO 7.

5. CHECK EGR VOLUME CONTROL VALVE FUNCTION

With CONSULT-III

1. Start the engine and warm it up to normal operating temperature.
2. Perform “POWER BALANCE” in “ACTIVE TEST” mode with CONSULT-III.
3. Keeping engine speed at 2,500 rpm.
4. Touch “Qu” and set the EGR volume control valve opening to 10 step.
5. Check “EGR TEMP SEN” indication should decrease to less than 1.0 V.

Is the inspection result normal?

YES >> GO TO 6.
NO >> Go to EC-210, "Diagnosis Procedure".

6. PERFORM DTC CONFIRMATION PROCEDURE FOR DTC P0406

With CONSULT-III

1. Turn ignition switch OFF and wait at least 10 seconds.
2. Start the engine and select “DATA MONITOR” mode with CONSULT-III.
3. Drive the vehicle for at least 5 consecutive seconds under the following conditions.

ENG SPEED	1,000 - 3,200 rpm
VHCL SPEED SE	More than 10 km/h (6 mph)
B/FUEL SCHDL	4.0 - 12.0 msec
Selector lever	Suitable position

CAUTION:
Always drive vehicle at a safe speed.

4. Check 1st trip DTC.

Is 1st trip DTC detected?

YES >> Go to EC-210, "Diagnosis Procedure".
NO >> INSPECTION END

7. PERFORM DTC CONFIRMATION PROCEDURE FOR DTC P0406

With GST

1. Start engine and warm it up to normal operating temperature.
2. Turn ignition switch OFF and wait at least 10 seconds.
3. Select Service $01 with GST and maintain the following conditions for at least 5 consecutive seconds.

Engine speed	1,000 - 3,200 rpm
Vehicle speed	10 km/h (6 MPH) or more
Shift lever	Suitable position

CAUTION:
Always drive vehicle at a safe speed.

4. Check 1st trip DTC.

Is 1st trip DTC detected?

YES >> Go to EC-210, "Diagnosis Procedure".
NO >> INSPECTION END

Diagnosis Procedure

INFOID:0000000006021960

1. CHECK EGR TEMPERATURE SENSOR POWER SUPPLY CIRCUIT

1. Turn ignition switch OFF.
2. Disconnect EGR temperature sensor harness connector.
3. Turn ignition switch ON.
4. Check the voltage between EGR temperature sensor harness connector and ground.

EGR temperature sensor		Ground	Voltage
Connector	Terminal		
F73	1	Ground	Battery voltage

Is the inspection result normal?

YES >> GO TO 2.
NO >> Repair open circuit or short to ground or short to power in harness or connector.

2. CHECK EGR TEMPERATURE SENSOR GROUND CIRCUIT FOR OPEN AND SHORT

1. Turn ignition switch OFF.
2. Disconnect ECM harness connector.
3. Check the continuity between EGR temperature sensor harness connector and ECM harness connector.

EGR temperature sensor		ECM		Continuity
Connector	Terminal	Connector	Terminal	
F73	2	F16	51	Existed

4. Also check harness for short to ground and short to power.

Is the inspection result normal?

YES >> GO TO 3.
NO >> Repair open circuit or short to ground or short to power in harness or connectors.

3. CHECK EGR TEMPERATURE SENSOR

Check EGR temperature sensor. Refer to EC-211, "Component Inspection".

Is the inspection result normal?

YES >> GO TO 4.
NO >> Replace EGR temperature sensor. Refer to EM-26, "Exploded View".

4. CHECK EGR VOLUME CONTROL VALVE

Check EGR volume control VALVE. Refer to EC-207, "Component Inspection".

Is the inspection result normal?

YES >> GO TO 5.
NO >> Replace EGR volume control valve. Refer to EM-26, "Exploded View".

5. CHECK INTERMITTENT INCIDENT

Check intermittent incident. Refer to GI-33, "Intermittent Incident".

>> Repair or replace malfunctioning part.

Component Inspection

INFOID:0000000006021961

1. CHECK EGR TEMPERATURE SENSOR

1. Turn ignition switch OFF.
2. Disconnect EGR temperature sensor harness connector.
3. Remove EGR temperature sensor.
4. Check resistance between EGR temperature sensor terminals by heating with hot water as shown in the figure.

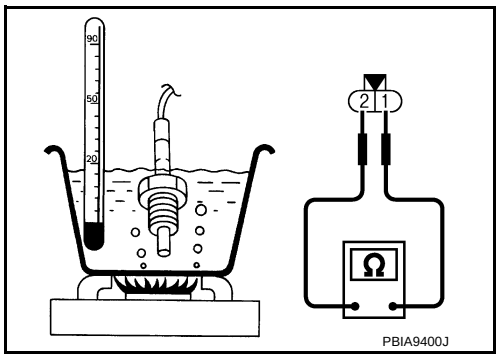

+	-	Condition		Resistance
Terminals				
1	2	Temperature(°C)	0	0.66 - 1.00 MΩ
			50	0.068 - 0.089 MΩ
			100	0.012 - 0.014 MΩ

Is the inspection result normal?

YES >> INSPECTION END
NO >> Replace EGR temperature sensor. Refer to EM-26, "Exploded View".

P0420 THREE WAY CATALYST FUNCTION

DTC Logic

INFOID:0000000005989298

DTC DETECTION LOGIC

The ECM monitors the switching frequency ratio of air fuel ratio (A/F) sensor 1 and heated oxygen sensor 2.
A three way catalyst (manifold) with high oxygen storage capacity will indicate a low switching frequency of heated oxygen sensor 2. As oxygen storage capacity decreases, the heated oxygen sensor 2 switching frequency will increase.
When the frequency ratio of air fuel ratio (A/F) sensor 1 and heated oxygen sensor 2 approaches a specified limit value, the three way catalyst (manifold) malfunction is diagnosed.

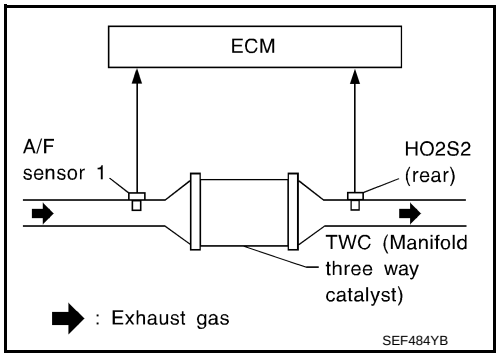

DTC No.	Trouble diagnosis name	DTC detecting condition	Possible cause
P0420	Catalyst system efficiency below threshold	• Three way catalyst (manifold) does not operate properly. • Three way catalyst (manifold) does not have enough oxygen storage capacity.	• Three way catalyst (manifold) • Exhaust tube • Intake air leaks • Fuel injector • Fuel injector leaks • Spark plug • Improper ignition timing

DTC CONFIRMATION PROCEDURE

1. INSPECTION START

Do you have CONSULT-III?

Do you have CONSULT-III?

YES >> GO TO 2.
NO >> GO TO 7.

2. PRECONDITIONING

If DTC Confirmation Procedure has been previously conducted, always turn ignition switch OFF and wait at least 10 seconds before conducting the next test.
TESTING CONDITION:
Do not hold engine speed for more than the specified minutes below.

>> GO TO 3.

3. PERFORM DTC CONFIRMATION PROCEDURE-I

With CONSULT-III

1. Start engine and warm it up to the normal operating temperature.
2. Turn ignition switch OFF and wait at least 10 seconds.
3. Start engine and keep the engine speed between 3,500 and 4,000 rpm for at least 1 minute under no load.
4. Let engine idle for 1 minute.
5. Select “COOLAN TEMP/S” in “DATA MONITOR” mode with CONSULT-III.
6. Make sure that “COOLAN TEMP/S” indicates more than 70°C (158°F).
   If not, warm up engine and go to next step when “COOLAN TEMP/S” indication reaches to 70°C (158°F).
7. Open engine hood.
8. Select “DTC & SRT CONFIRMATION” then “SRT WORK SUPPORT” mode with CONSULT-III.
9. Rev engine up to 2,000 to 3,000 rpm and hold it for 3 consecutive minutes then release the accelerator pedal completely.
10. Check the indication of “CATALYST”.

Which is displayed on CONSULT-III screen?

CMPLT >> GO TO 6.
INCMP >> GO TO 4.

4. PERFORM DTC CONFIRMATION PROCEDURE-II

1. Wait 5 seconds at idle.
2. Rev engine up to 2,000 to 3,000 rpm and maintain it until “INCMP” of “CATALYST” changes to “CMPLT” (It will take approximately 5 minutes).

Does the indication change to “CMPLT”?

YES >> GO TO 6.
NO >> GO TO 5.

5. PERFORM DTC CONFIRMATION PROCEDURE AGAIN

1. Stop engine and cool it down to less than 70°C (158°F).
2. Perform DTC CONFIRMATION PROCEDURE again.

>> GO TO 3.

6. PERFORM DTC CONFIRMATION PROCEDURE-III

Check 1st trip DTC.

Is 1st trip DTC detected?

YES >> Go to EC-215, "Diagnosis Procedure".
NO >> INSPECTION END

7. PERFORM COMPONENT FUNCTION CHECK

Perform component function check. Refer to EC-214, "Component Function Check".

NOTE:
Use component function check to check the overall function of the three way catalyst (manifold). During this check, a 1st trip DTC might not be confirmed.

Is the inspection result normal?

YES >> INSPECTION END
NO >> Go to EC-215, "Diagnosis Procedure".

Component Function Check

INFOID:0000000005989299

1. PERFORM COMPONENT FUNCTION CHECK

Without CONSULT-III

1. Start engine and warm it up to the normal operating temperature.
2. Turn ignition switch OFF and wait at least 10 seconds.
3. Restart engine and keep the engine speed between 3,500 and 4,000 rpm for at least 1 minute under no load.
4. Let engine idle for 1 minute.
5. Open engine hood.
6. Check the voltage between ECM harness connector terminals under the following condition.

ECM			Condition	Voltage (V)
Connector	+	–		
	Terminal	Terminal		
F16	50 (HO2S2)	59	Keeping engine speed at 2500 rpm constant under no load	The voltage fluctuation cycle takes more than 5 seconds. • 1 cycle: 0.6 - 1.0 → 0 - 0.3 → 0.6 - 1.0

Is the inspection result normal?

YES >> INSPECTION END
NO >> Go to EC-215, "Diagnosis Procedure".

Diagnosis Procedure

INFOID:0000000005989300

1. CHECK EXHAUST SYSTEM

Visually check exhaust tubes and muffler for dent.

Is the inspection result normal?

YES >> GO TO 2.
NO >> Repair or replace.

2. CHECK EXHAUST GAS LEAK

1. Start engine and run it at idle.
2. Listen for an exhaust gas leak before the three way catalyst (manifold).

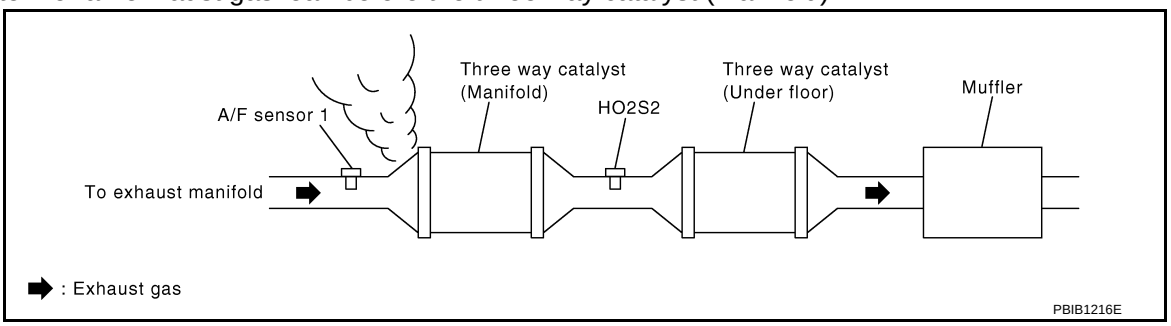

Is exhaust gas leak detected?

YES >> Repair or replace.
NO >> GO TO 3.

3. CHECK INTAKE AIR LEAK

Listen for an intake air leak after the mass air flow sensor.

Is intake air leak detected?

YES >> Repair or replace.
NO >> GO TO 4.

4. CHECK IGNITION TIMING AND IDLE SPEED

Check the following items. Refer to EC-109, "Work Procedure".
For specification, refer to EC-315, "Ignition Timing"
For specification, refer to EC-315, "Idle Speed".

Is the inspection result normal?

YES >> GO TO 5.
NO >> Follow the EC-109, "Work Procedure".

5. CHECK FUEL INJECTOR

1. Stop engine and then turn ignition switch ON.
2. Check the voltage between ECM harness connector and ground.

ECM			Voltage
Connector	Terminal		
	+	–	
F7	31	107	Battery voltage
	30		
	29		

Is the inspection result normal?

YES >> GO TO 6.
NO >> Perform EC-285, "Diagnosis Procedure".

6. CHECK FUNCTION OF IGNITION COIL-I

CAUTION:

Do the following procedure in the place where ventilation is good without the combustible.

1. Turn ignition switch OFF.
2. Remove fuel pump fuse in IPDM E/R to release fuel pressure.
   NOTE:
   Do not use CONSULT-III to release fuel pressure, or fuel pressure applies again during the following procedure.
3. Start engine.
4. After engine stalls, crank it two or three times to release all fuel pressure.
5. Turn ignition switch OFF.
6. Remove all ignition coil harness connectors to avoid the electrical discharge from the ignition coils.
7. Remove ignition coil and spark plug of the cylinder to be checked.
8. Crank engine for 5 seconds or more to remove combustion gas in the cylinder.
9. Connect spark plug and harness connector to ignition coil.
10. Fix ignition coil using a rope etc. with gap of 13 - 17 mm (0.52 - 0.66 in) between the edge of the spark plug and grounded metal portion as shown in the figure.
11. Crank engine for about 3 seconds, and check whether spark is generated between the spark plug and the grounded metal portion.

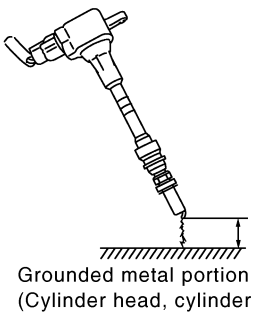

Spark should be generated.

CAUTION:
- **Do not approach to the spark plug and the ignition coil within 50 cm (19.7 in). Be careful not to get an electrical shock while checking, because the electrical discharge voltage becomes 20 kV or more.**
- **It might cause to damage the ignition coil if the gap of more than 17 mm (0.66 in) is taken.**

NOTE:
When the gap is less than 13 mm (0.52 in), the spark might be generated even if the coil is malfunctioning.

Is the inspection result normal?

YES >> GO TO 10.
NO >> GO TO 7.

7. CHECK FUNCTION OF IGNITION COIL-II

1. Turn ignition switch OFF.
2. Disconnect spark plug and connect a known-good spark plug.
3. Crank engine for about 3 seconds, and recheck whether spark is generated between the spark plug and the grounded metal portion.

Spark should be generated.

Is the inspection result normal?

YES >> GO TO 8.
NO >> Check ignition coil, power transistor and their circuits. Refer to EC-291, "Diagnosis Procedure".

8. CHECK SPARK PLUG

Check the initial spark plug for fouling, etc. Refer to EM-22, "Inspection".

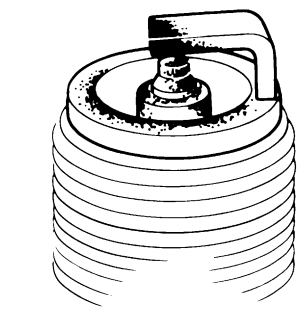

Is the inspection result normal?

YES >> Replace spark plug(s) with standard type one(s). Refer to EM-41, "Exploded View". For spark plug type, refer to EM-93, "Spark Plug".
NO >> Repair or clean spark plug. Then GO TO 9

9. CHECK FUNCTION OF IGNITION COIL-III

1. Reconnect the initial spark plugs.
2. Crank engine for about 3 seconds, and recheck whether spark is generated between the spark plug and the grounded portion.

Spark should be generated.

Is the inspection result normal?

YES >> INSPECTION END
NO >> Replace spark plug(s) with standard type one(s). Refer to EM-41, "Exploded View". For spark plug type, refer to EM-93, "Spark Plug".

10. CHECK FUEL INJECTOR

1. Turn ignition switch OFF.
2. Remove fuel injector assembly.
   Refer to EM-37, "Exploded View".
   Keep fuel hose and all fuel injectors connected to fuel tube.
3. Disconnect all ignition coil harness connectors.
4. Reconnect all fuel injector harness connectors disconnected.
5. Turn ignition switch ON.

Does fuel drip from fuel injector?

YES >> GO TO 11.
NO >> Replace the fuel injector(s) from which fuel is dripping. Refer to EM-37, "Exploded View".

11. CHECK INTERMITTENT INCIDENT

Check intermittent incident. Refer to GI-33, "Intermittent Incident".

Is the trouble fixed?

YES >> INSPECTION END
NO >> Replace three way catalyst assembly. Refer to EM-32, "Exploded View".

P0444 EVAP CANISTER PURGE VOLUME CONTROL SOLENOID VALVE

DTC Logic

INFOID:0000000005989301

DTC DETECTION LOGIC

DTC No.	Trouble diagnosis name	DTC detecting condition	Possible cause
P0444	EVAP canister purge volume control solenoid valve circuit open	An excessively low voltage signal is sent to ECM through the valve	• Harness or connectors (The solenoid valve circuit is open or shorted.) • EVAP canister purge volume control solenoid valve

DTC CONFIRMATION PROCEDURE

1. CONDITIONING

If DTC Confirmation Procedure has been previously conducted, always turn ignition switch OFF and wait at least 10 seconds before conducting the next test.

TESTING CONDITION:

Before performing the following procedure, confirm battery voltage is more than 11 V at idle.

>> GO TO 2.

2. PERFORM DTC CONFIRMATION PROCEDURE

1. Start engine and let it idle for at least 13 seconds.
2. Check 1st trip DTC.

Is 1st trip DTC detected?

YES >> Go to EC-218, "Diagnosis Procedure".
NO >> INSPECTION END

Diagnosis Procedure

INFOID:0000000005989302

1. CHECK EVAP CANISTER PURGE VOLUME CONTROL SOLENOID VALVE POWER SUPPLY CIRCUIT

1. Turn ignition switch OFF.
2. Disconnect EVAP canister purge volume control solenoid valve harness connector.
3. Turn ignition switch ON.
4. Check the voltage between EVAP canister purge volume control solenoid valve harness connector and ground.

EVAP canister purge volume control solenoid valve		Ground	Voltage
Connector	Terminal		
F32	1	Ground	Battery voltage

Is the inspection result normal?

YES >> GO TO 3.
NO >> GO TO 2.

2. DETECT MALFUNCTIONING PART

Check the following.

- Harness for open or short between EVAP canister purge volume control solenoid valve and IPDM E/R
- Harness for open or short between EVAP canister purge volume control solenoid valve and ECM

>> Repair open circuit or short to ground or short to power in harness or connectors.

3. CHECK EVAP CANISTER PURGE VOLUME CONTROL SOLENOID VALVE OUTPUT SIGNAL CIRCUIT FOR OPEN AND SHORT

1. Turn ignition switch OFF.
2. Disconnect ECM harness connector.

3. Check the continuity between EVAP canister purge volume control solenoid valve harness connector and ECM harness connector.

EVAP canister purge volume control solenoid valve		ECM		Continuity
Connector	Terminal	Connector	Terminal	
F32	2	F7	9	Existed

4. Also check harness for short to ground and short to power.

Is the inspection result normal?

YES-1 >> With CONSULT-III: GO TO 4.
YES-2 >> Without CONSULT-III: GO TO 5.
NO >> Repair open circuit or short to ground or short to power in harness or connectors.

4. CHECK EVAP CANISTER PURGE VOLUME CONTROL SOLENOID VALVE OPERATION

With CONSULT-III

1. Reconnect all harness connectors disconnected.
2. Start engine.
3. Perform “PURG VOL CONT/V” in “ACTIVE TEST” mode with CONSULT-III. Check that engine speed varies according to the valve opening.

Does engine speed vary according to the valve opening?

YES >> GO TO 6.
NO >> GO TO 5.

5. CHECK EVAP CANISTER PURGE VOLUME CONTROL SOLENOID VALVE

Check evap canister purge volume control solenoid valve. Refer to EC-219, "Component Inspection".

Is the inspection result normal?

YES >> GO TO 6.
NO >> Replace EVAP canister purge volume control solenoid valve. Refer to EM-29, "WITH EGR CONTROL VALVE : Exploded View".

6. CHECK INTERMITTENT INCIDENT

Check intermittent incident. Refer to GI-33, "Intermittent Incident".

>> Repair or replace malfunctioning part.

Component Inspection

INFOID:0000000005989303

1. CHECK EVAP CANISTER PURGE VOLUME CONTROL SOLENOID VALVE

With CONSULT-III

1. Turn ignition switch OFF.
2. Reconnect all harness connectors disconnected.
3. Disconnect EVAP purge hoses connected to EVAP canister purge volume control solenoid valve.
4. Turn ignition switch ON.
5. Select “PURG VOL CONT/V” in “ACTIVE TEST” mode with CONSULT-III.
6. Touch “Qd” and “Qu” on CONSULT-III screen to adjust “PURG VOL C/V” opening and check air passage continuity of EVAP canister purge volume control solenoid valve under the following conditions.

Condition (PURG VOL C/V value)	Air passage continuity between (A) and (B)
100%	Existed
0%	Not existed

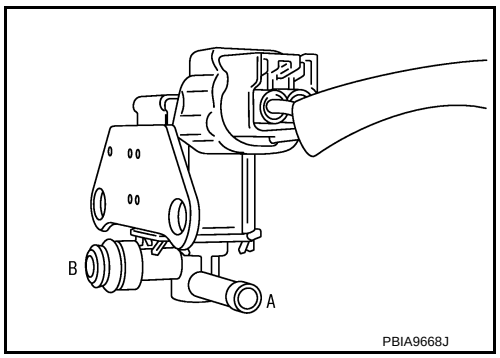

Without CONSULT-III

1. Turn ignition switch OFF.
2. Disconnect EVAP canister purge volume control solenoid valve harness connector.
3. Disconnect EVAP purge hoses connected to EVAP canister purge volume control solenoid valve.
4. Check air passage continuity of EVAP canister purge volume control solenoid valve under the following conditions.

Condition	Air passage continuity between (A) and (B)
12 V direct current supply between terminals 1 and 2	Existed
No supply	Not existed

Is the inspection result normal?

YES >> INSPECTION END
NO >> Replace EVAP canister purge volume control solenoid valve. Refer to EM-29, "WITH EGR CONTROL VALVE : Exploded View".

P0500 VSS

Description

INFOID:0000000005989304

The vehicle speed signal is sent to the combination meter from the “ABS actuator and electric unit (control unit)” by CAN communication line. The combination meter then sends a signal to the ECM by CAN communication line.

DTC Logic

INFOID:0000000005989305

DTC DETECTION LOGIC

NOTE:
- **If DTC P0500 is displayed with DTC U1001, first perform the trouble diagnosis for DTC U1001. Refer to EC-126, "DTC Logic".**
- **If DTC P0500 is displayed with DTC P0607, first perform the trouble diagnosis for DTC P0607. Refer to EC-227, "DTC Logic".**

DTC No.	Trouble diagnosis name	DTC detecting condition	Possible cause
P0500	Vehicle speed sensor	The almost 0 km/h (0 MPH) of vehicle speed signal is sent to ECM even when vehicle is being driven.	• Harness or connectors (The CAN communication line is open or shorted) • Harness or connectors (The vehicle speed signal circuit is open or shorted) • Combination meter • ABS actuator and electric unit (control unit)

DTC CONFIRMATION PROCEDURE

1. INSPECTION START

Do you have CONSULT-III?

Do you have CONSULT-III?

YES >> GO TO 2.
NO >> GO TO 5.

2. PRECONDITIONING

If DTC Confirmation Procedure has been previously conducted, always turn ignition switch OFF and wait at least 10 seconds before conducting the next test.

>> GO TO 3.

3. CHECK VEHICLE SPEED SENSOR FUNCTION

NOTE:
This procedure may be conducted with the drive wheels lifted in the shop or by driving the vehicle. If a road test is expected to be easier, it is unnecessary to lift the vehicle.

With CONSULT-III

1. Start engine.
2. Read “VHCL SPEED SE” in “DATA MONITOR” mode with CONSULT-III. The vehicle speed on CONSULT-III should exceed 10 km/h (6 mph) when rotating wheels with suitable gear position.

Is the inspection result normal?

YES >> GO TO 4.
NO >> Go to EC-222, "Diagnosis Procedure".

4. PERFORM DTC CONFIRMATION PROCEDURE

1. Select “DATA MONITOR” mode with CONSULT-III.
2. Warm engine up to normal operating temperature.
3. Maintain the following conditions for at least 60 consecutive seconds.
   CAUTION:
   Always drive vehicle at a safe speed.

ENG SPEED	2,000 - 6,000 rpm
COOLAN TEMP/S	More than 70°C (158°F)
B/FUEL SCHDL	4.3 - 31.8 msec
Shift lever	Except Neutral position
PW/ST SIGNAL	OFF

4. Check 1st trip DTC.

Is 1st trip DTC detected?

YES >> Go to EC-222, "Diagnosis Procedure".
NO >> INSPECTION END

5. PERFORM COMPONENT FUNCTION CHECK

Perform component function check. Refer to EC-222, "Component Function Check".
Use component function check to check the overall function of the vehicle speed signal circuit. During this check, a 1st trip DTC might not be confirmed.

Is the inspection result normal?

YES >> INSPECTION END
NO >> Go to EC-222, "Diagnosis Procedure".

Component Function Check

INFOID:0000000005989306

1. PERFORM COMPONENT FUNCTION CHECK

With GST

1. Lift up drive wheels.
2. Start engine.
3. Read vehicle speed signal in Service $01 with GST.
   The vehicle speed signal on GST should be able to exceed 10 km/h (6 MPH) when rotating wheels with suitable gear position.

Is the inspection result normal?

YES >> INSPECTION END
NO >> Go to EC-222, "Diagnosis Procedure".

Diagnosis Procedure

INFOID:0000000005989307

1. CHECK DTC WITH “ABS ACTUATOR AND ELECTRIC UNIT (CONTROL UNIT)”

Check DTC with “ABS ACTUATOR AND ELECTRIC UNIT (CONTROL UNIT)”. Refer to XX-XX, "*****".

Is the inspection result normal?

YES >> GO TO 2.
NO >> Repair or replace.

2. CHECK COMBINATION METER

Check combination meter. Refer to MWI-18, "CONSULT-III Function".

>> Repair or replace malfunctioning part.

P0603 ECM

Description

INFOID:0000000005989308

ECM has the memory function of the DTC memory, the air-fuel ratio feedback compensation value memory, the Idle Air Volume Learning value memory, etc. even when the ignition switch is turned OFF.

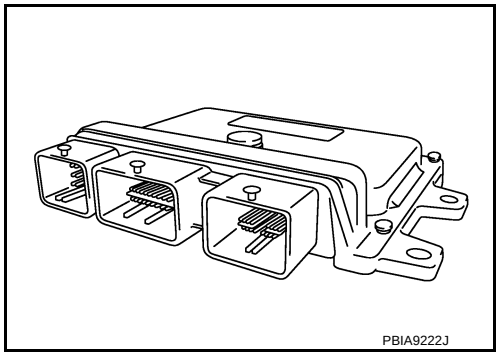

DTC Logic

INFOID:0000000005989309

DTC DETECTION LOGIC

DTC No.	Trouble diagnosis name	DTC detecting condition	Possible cause
P0603*	Engine control module	ECM back-up RAM system does not function properly.	• ECM

*: This self-diagnosis is not for ECM power supply circuit, even though “ECM BACK UP/CIRCUIT” is displayed on CONSULT-III screen.

DTC CONFIRMATION PROCEDURE

1. PRECONDITIONING

If DTC Confirmation Procedure has been previously conducted, always turn ignition switch OFF and wait at least 10 seconds before conducting the next test.

>> GO TO 2.

2. PERFORM DTC CONFIRMATION PROCEDURE

1. Turn ignition switch ON wait at least 10 seconds.
2. Turn ignition switch OFF and wait at least 5 minutes
3. Turn ignition switch ON, wait at least 10 seconds.
4. Repeat step 2 and 3 for five times.
5. Check 1st trip DTC.

Is 1st trip DTC detected?

YES >> Go to EC-223, "Diagnosis Procedure".
NO >> INSPECTION END

Diagnosis Procedure

INFOID:0000000005989310

1. INSPECTION START

1. Erase DTC.
2. Perform DTC CONFIRMATION PROCEDURE.
   See EC-223, "DTC Logic".

Is the 1st trip DTC P0603 displayed again?

YES >> GO TO 2.
NO >> INSPECTION END

2. REPLACE ECM

1. Replace ECM. Refer to EC-312, "Exploded View".
2. Perform EC-103, "Work Procedure".

>> INSPECTION END

P0605 ECM

DTC Logic

INFOID:0000000005989311

DTC DETECTION LOGIC

DTC No.	Trouble diagnosis name	DTC detecting condition		Possible cause
P0605	Engine control module	A)	ECM calculation function is malfunctioning.	• ECM
		B)	ECM EEP-ROM system is malfunctioning.	
		C)	ECM self shut-off function is malfunctioning.	

DTC CONFIRMATION PROCEDURE

1. PRECONDITIONING

If DTC Confirmation Procedure has been previously conducted, always turn ignition switch OFF and wait at least 10 seconds before conducting the next test.

>> GO TO 2.

2. PERFORM DTC CONFIRMATION PROCEDURE FOR MALFUNCTION A

1. Turn ignition switch ON.
2. Check 1st trip DTC.

Is 1st trip DTC detected?

YES >> Go to EC-225, "Diagnosis Procedure".
NO >> GO TO 3.

3. PERFORM DTC CONFIRMATION PROCEDURE FOR MALFUNCTION B

1. Turn ignition switch ON and wait at least 1 second.
2. Turn ignition switch OFF, wait at least 10 seconds, and then turn ON.
3. Check 1st trip DTC.

Is 1st trip DTC detected?

YES >> Go to EC-225, "Diagnosis Procedure".
NO >> GO TO 4.

4. PERFORM DTC CONFIRMATION PROCEDURE FOR MALFUNCTION C

1. Turn ignition switch ON and wait at least 1 second.
2. Turn ignition switch OFF, wait at least 10 seconds, and then turn ON.
3. Repeat step 2 for 32 times.
4. Check 1st trip DTC.

Is 1st trip DTC detected?

YES >> Go to EC-225, "Diagnosis Procedure".
NO >> INSPECTION END

Diagnosis Procedure

INFOID:0000000005989312

1. INSPECTION START

1. Erase DTC.
2. Perform DTC CONFIRMATION PROCEDURE.
   See EC-225, "DTC Logic".

Is the 1st trip DTC P0605 displayed again?

YES >> GO TO 2.
NO >> INSPECTION END

2. REPLACE ECM

1. Replace ECM. Refer to EC-312, "Exploded View".
2. Perform EC-103, "Work Procedure".

>> INSPECTION END

P0607 ECM

DTC Logic

INFOID:0000000006014758

DTC DETECTION LOGIC

DTC No.	Trouble diagnosis name	DTC detecting condition	Possible cause
P0607	CAN communication bus	When detecting error during the initial diagnosis of CAN controller of ECM.	• ECM

DTC CONFIRMATION PROCEDURE

1. PERFORM DTC CONFIRMATION PROCEDURE

1. Turn ignition switch ON.
2. Check DTC.

Is DTC detected?

YES >> Go to EC-227, "Diagnosis Procedure".
NO >> INSPECTION END

Diagnosis Procedure

INFOID:0000000006014759

1. INSPECTION START

1. Erase DTC.
2. Perform DTC CONFIRMATION PROCEDURE.
   See EC-227, "DTC Logic".
3. Check DTC.

Is the DTC P0607 displayed again?

YES >> GO TO 2.
NO >> INSPECTION END

2. REPLACE ECM

1. Replace ECM.
2. Perform EC-103, "Work Procedure".

>> INSPECTION END

P0643 SENSOR POWER SUPPLY

DTC Logic

INFOID:0000000005989313

DTC DETECTION LOGIC

DTC No.	Trouble diagnosis name	DTC detecting condition	Possible cause
P0643	Sensor power supply circuit short	ECM detects a voltage of power source for sensor is excessively low or high.	• Harness or connectors (APP sensor 1 circuit is shorted.) (TP sensor circuit is shorted.) [Camshaft position sensor (PHASE) circuit is shorted.] • Accelerator pedal position sensor • Throttle position sensor • Camshaft position sensor (PHASE)

DTC CONFIRMATION PROCEDURE

1.PRECONDITIONING

If DTC Confirmation Procedure has been previously conducted, always turn ignition switch OFF and wait at least 10 seconds before conducting the next test.

TESTING CONDITION:

Before performing the following procedure, confirm that battery voltage is more than 10 V at idle.

>> GO TO 2.

2.PERFORM DTC CONFIRMATION PROCEDURE

1. Start engine and let it idle for 1 second.
2. Check DTC.

Is DTC detected?

YES >> Go to EC-228, "Diagnosis Procedure".
NO >> INSPECTION END

Diagnosis Procedure

INFOID:0000000005989314

1.CHECK ACCELERATOR PEDAL POSITION SENSOR 1 POWER SUPPLY CIRCUIT

1. Disconnect accelerator pedal position (APP) sensor harness connector.
2. Turn ignition switch ON.
3. Check the voltage between APP sensor harness connector and ground.

APP sensor		Ground	Voltage
Connector	Terminal		
E110	4	Ground	Approx. 5 V

Is the inspection result normal?

YES >> GO TO 5.
NO >> GO TO 2.

2.CHECK SENSOR POWER SUPPLY CIRCUIT

Check harness for short to power and short to ground, between the following terminals.

ECM		Sensor		
Connector	Terminal	Item	Connector	Terminal
F16	72	Electric throttle control actuator	F29	1
	78	CMP sensor (PHASE)	F26	1
E18	106	APP sensor	E110	4

Is the inspection result normal?

YES >> GO TO 3.
NO >> Repair short to ground or short to power in harness or connectors.

3. CHECK CAMSHAFT POSITION SENSOR (PHASE)

Check camshaft position sensor (PHASE). Refer to EC-202, "Component Inspection".

Is the inspection result normal?

YES >> GO TO 4.
NO >> Replace camshaft position sensor (PHASE).

4. CHECK THROTTLE POSITION SENSOR

Check throttle position sensor. Refer to EC-187, "Component Inspection".

Is the inspection result normal?

YES >> GO TO 6.
NO >> Replace electric throttle control actuator.

5. CHECK APP SENSOR

Check app sensor. Refer to EC-269, "Component Inspection".

Is the inspection result normal?

YES >> GO TO 6.
NO >> Replace accelerator pedal assembly.

6. CHECK INTERMITTENT INCIDENT

Check intermittent incident. Refer to GI-33, "Intermittent Incident".

>> Repair or replace malfunctioning part.

P0850 PNP SWITCH

Description

INFOID:0000000005989315

When the selector lever position is Neutral position, park/neutral position (PNP) signal is ON.

DTC Logic

INFOID:0000000005989316

DTC DETECTION LOGIC

DTC No.	Trouble diagnosis name	DTC detecting condition	Possible cause
P0850	Park/neutral position signal	The park/neutral position (PNP) signal is not changed in the process of engine starting and driving.	• Harness or connectors [The park/neutral position (PNP) signal circuit is open or shorted.] • Park/neutral position (PNP) switch

DTC CONFIRMATION PROCEDURE

1. INSPECTION START

Do you have CONSULT-III?

Do you have CONSULT-III?

YES >> GO TO 2.
NO >> GO TO 5.

2. PRECONDITIONING

If DTC Confirmation Procedure has been previously conducted, always turn ignition switch OFF and wait at least 10 seconds before conducting the next test.

>> GO TO 3.

3. CHECK PNP SIGNAL FUNCTION

With CONSULT-III

1. Turn ignition switch ON.
2. Select “P/N POSI SW” in “DATA MONITOR” mode with CONSULT-III. Then check “P/N POSI SW” signal under the following conditions.

Shift lever position	Known-good signal
Neutral position	ON
Except above position	OFF

Is the inspection result normal?

YES >> GO TO 4.
NO >> Go to EC-231, "Diagnosis Procedure".

4. PERFORM DTC CONFIRMATION PROCEDURE

1. Select “DATA MONITOR” mode with CONSULT-III.
2. Start engine and warm it up to normal operating temperature.
3. Maintain the following conditions for at least 50 consecutive seconds.
   CAUTION:
   Always drive vehicle at a safe speed.

ENG SPEED	1,500 - 6,375 rpm
COOLAN TEMP/S	More than 70°C (158°F)
B/FUEL SCHDL	3.0 - 31.8 msec
VHCL SPEED SE	More than 64 km/h (40 mph)
Shift lever	Suitable position

4. Check 1st trip DTC.

Is 1st trip DTC detected?

YES >> Go to EC-231, "Diagnosis Procedure".
NO >> INSPECTION END

5. PERFORM COMPONENT FUNCTION CHECK

Perform component function check. Refer to EC-231, "Component Function Check".

NOTE:
Use component function check the overall function of the park/neutral position (PNP) signal circuit. During this check, a 1st trip DTC might not be confirmed.

Is the inspection result normal?

YES >> INSPECTION END
NO >> Go to EC-231, "Diagnosis Procedure".

Component Function Check

INFOID:0000000005989317

1. PERFORM COMPONENT FUNCTION CHECK

1. Turn ignition switch ON.
2. Check the voltage between ECM harness connector and ground.

ECM			Condition		Voltage
Connector	+	–			
	Terminal	Terminal			
F8	69 (PNP signal)	108	Shift lever	Neutral	Battery voltage
				Except above	Approx. 0 V

Is the inspection result normal?

YES >> INSPECTION END
NO >> Go to EC-231, "Diagnosis Procedure".

Diagnosis Procedure

INFOID:0000000005989318

1. CHECK PARK/NEUTRAL POSITION (PNP) SWITCH POWER SUPPLY CIRCUIT

1. Turn ignition switch OFF.
2. Disconnect PNP switch harness connector.
3. Turn ignition switch ON.
4. Check the voltage between PNP switch harness connector and ground.

PNP switch		Ground	Voltage
Connector	Terminal		
F22	2	Ground	Battery voltage

Is the inspection result normal?

YES >> GO TO 3.
NO >> GO TO 2.

2. DETECT MALFUNCTIONING PART

Check harness for open or short between PNP switch and fuse.

Is the inspection result normal?

>> Repair open circuit or short to ground or short to power in harness or connectors.

3. CHECK PNP SWITCH INPUT SIGNAL CIRCUIT FOR OPEN AND SHORT

1. Turn ignition switch OFF.
2. Disconnect ECM harness connector.
3. Check the continuity between PNP switch harness connector and ECM harness connector.

PNP switch		ECM		Continuity
Connector	Terminal	Connector	Terminal	
F22	3	F16	69	Existed

4. Also check harness for short to ground and short to power.

Is the inspection result normal?

YES >> GO TO 4.
NO >> Repair open circuit or short to ground or short to power in harness or connectors.

4. CHECK PNP SWITCH

Check pnp switch. Refer to TM-10, "PARK/NEUTRAL POSITION (PNP) SWITCH : Component Inspection".

Is the inspection result normal?

YES >> GO TO 5.
NO >> Replace PNP switch. Refer to TM-14, "Removal and Installation".

5. CHECK INTERMITTENT INCIDENT

Check intermittent incident. Refer to GI-33, "Intermittent Incident".

>> Repair or replace malfunctioning part.

P1217 ENGINE OVER TEMPERATURE

DTC Logic

INFOID:0000000005989322

DTC DETECTION LOGIC

NOTE:
- **If DTC P1217 is displayed with DTC U1001, first perform the trouble diagnosis for DTC U1001. Refer to EC-126, "DTC Logic".**
- **If DTC P1217 is displayed with DTC P0607, first perform the trouble diagnosis for DTC P0607. Refer to EC-227, "DTC Logic".**

If the cooling fan or another component in the cooling system malfunctions, engine coolant temperature will rise.
When the engine coolant temperature reaches an abnormally high temperature condition, a malfunction is indicated.

DTC No.	Trouble diagnosis name	DTC detecting condition	Possible cause
P1217	Engine over temperature (Overheat)	• Cooling fan does not operate properly (Overheat). • Cooling fan system does not operate properly (Overheat). • Engine coolant was not added to the system using the proper filling method. • Engine coolant is not within the specified range.	• Harness or connectors (The cooling fan circuit is open or shorted.) • IPDM E/R (Cooling fan relay) • Cooling fan motor • Radiator hose • Radiator • Radiator cap • Reservoir tank • Water pump • Thermostat

CAUTION:
When a malfunction is indicated, be sure to replace the coolant. Refer to CO-10, "Refilling". Also, replace the engine oil. Refer to LU-8, "Refilling".
1. **Fill radiator with coolant up to specified level with a filling speed of 2 liters per minute. Be sure to use coolant with the proper mixture ratio. Refer to MA-9, "Engine Coolant Mixture Ratio".**
2. **After refilling coolant, run engine to ensure that no water-flow noise is emitted.**

DTC CONFIRMATION PROCEDURE

1. PERFORM COMPONENT FUNCTION CHECK

Perform component function check. Refer to EC-233, "Component Function Check".
NOTE:
Use component function check to check the overall function of the cooling fan. During this check, a DTC might not be confirmed.

Is the inspection result normal?

YES >> INSPECTION END
NO >> Go to EC-234, "Diagnosis Procedure".

Component Function Check

INFOID:0000000005989323

1. PERFORM COMPONENT FUNCTION CHECK-I

WARNING:
Never remove the radiator cap when the engine is hot. Serious burns could be caused by high pressure fluid escaping from the radiator.
Wrap a thick cloth around cap. Carefully remove the cap by turning it a quarter turn to allow built-up pressure to escape. Then turn the cap all the way off.

Check the coolant level in the reservoir tank and radiator.
Allow engine to cool before checking coolant level.

Is the coolant level in the reservoir tank and/or radiator below the proper range?

YES >> Go to EC-234, "Diagnosis Procedure".
NO >> GO TO 2

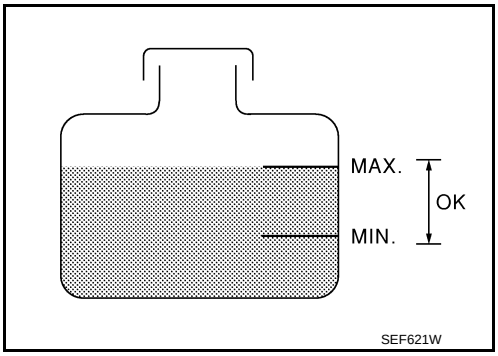

2. PERFORM COMPONENT FUNCTION CHECK-II

Confirm whether customer filled the coolant or not.

Did customer fill the coolant?

YES >> Go to EC-234, "Diagnosis Procedure".
NO >> GO TO 3.

3. PERFORM COMPONENT FUNCTION CHECK-III

With CONSULT-III

1. Turn ignition switch ON.
2. Perform “COOLING FAN” in “ACTIVE TEST” mode with CONSULT-III.
3. Touch “LOW” and “HI” on the CONSULT-III screen.
4. Check that cooling fan operates.

NOTE:
The cooling fan operates at high speeds even when “LOW” is selected in CONSULT-III “ACTIVE TEST”.

Without CONSULT-III

1. Perform IPDM E/R auto active test and check cooling fan motor operation. Refer to PCS-11, "Diagnosis Description" (WITH I-KEY) or PCS-36, "Diagnosis Description" (WITHOUT I-KEY).
2. Check that cooling fan operates.

Is the inspection result normal?

YES >> INSPECTION END
NO >> Refer to EC-234, "Diagnosis Procedure".

Diagnosis Procedure

INFOID:0000000005989324

1. CHECK COOLING FAN OPERATION

With CONSULT-III

1. Turn ignition switch ON.
2. Perform “COOLING FAN” in “ACTIVE TEST” mode with CONSULT-III.
3. Touch “LOW” and “HI” on the CONSULT-III screen.
4. Check that cooling fan operates.

NOTE:
The cooling fan operates at high speeds even when “LOW” is selected in CONSULT-III “ACTIVE TEST”.

Without CONSULT-III

1. Perform IPDM E/R auto active test and check cooling fan motor operation. Refer to PCS-11, "Diagnosis Description" (WITH I-KEY) or PCS-36, "Diagnosis Description" (WITHOUT I-KEY).
2. Check that cooling fan operates.

Is the inspection result normal?

YES >> GO TO 2.
NO >> Go to EC-281, "Diagnosis Procedure".

2. CHECK COOLING SYSTEM FOR LEAK-I

Check cooling system for leak. Refer to CO-9, "Inspection".

Is leakage detected?

YES >> GO TO 3.
NO >> GO TO 4.

3. CHECK COOLING SYSTEM FOR LEAK-II

Check the following for leak.
- Hose (Refer to CO-25, "Inspection".)
- Radiator (Refer to CO-16, "Inspection".)
- Water pump (Refer to CO-19, "Inspection".)

>> Repair or replace malfunctioning part.

4. CHECK RADIATOR CAP

Check radiator cap. Refer to CO-12, "RADIATOR CAP : Inspection".

Is the inspection result normal?

YES >> GO TO 5.
NO >> Replace radiator cap. Refer to CO-14, "Exploded View".

5. CHECK THERMOSTAT

Check thermostat. Refer to CO-22, "Inspection".

Is the inspection result normal?

YES >> GO TO 6.
NO >> Replace thermostat. Refer to CO-21, "Exploded View".

6. CHECK ENGINE COOLANT TEMPERATURE SENSOR

Check engine coolant temperature sensor. Refer to EC-144, "Component Inspection".

Is the inspection result normal?

YES >> GO TO 7.
NO >> Replace engine coolant temperature sensor. Refer to CO-23, "Exploded View".

7. CHECK MAIN 12 CAUSES

If the cause cannot be isolated, check the following.

Engine	Step	Inspection item	Equipment	Standard	Reference page
OFF	1	• Blocked radiator • Blocked condenser • Blocked radiator grille • Blocked bumper	• Visual	No blocking	—
	2	• Coolant mixture	• Coolant tester	MA-9, "Engine Coolant Mixture Ratio"	
	3	• Coolant level	• Visual	Coolant up to MAX level in reservoir tank and radiator filler neck	CO-9, "Inspection"
	4	• Radiator cap	• Pressure tester	CO-12, "RADIATOR CAP : Inspection"	
ON*2	5	• Coolant leaks	• Visual	No leaks	CO-9, "Inspection"
ON*2	6	• Thermostat	• Touch the upper and lower radiator hoses	Both hoses should be hot	CO-22, "Inspection"
ON*1	7	• Cooling fan motor	• CONSULT-III	Operating	EC-282, "Component Inspection"
OFF	8	• Combustion gas leak	• Color checker chemical tester 4 Gas analyzer	Negative	—
ON*3	9	• Coolant temperature gauge	• Visual	Gauge less than 3/4 when driving	—
		• Coolant overflow to reservoir tank	• Visual	No overflow during driving and idling	CO-9, "Inspection"
OFF*4	10	• Coolant return from reservoir tank to radiator	• Visual	Should be initial level in reservoir tank	CO-9, "Inspection"

Engine	Step	Inspection item	Equipment	Standard	Reference page
OFF	11	• Cylinder head	• Straight gauge feeler gauge	0.1 mm (0.004 in) Maximum distortion (warping)	EM-76, "Inspection"
	12	• Cylinder block and pistons	• Visual	No scuffing on cylinder walls or piston	XX-XX, "*****"

*1: Turn the ignition switch ON.

*2: Engine running at 3,000 rpm for 10 minutes.

*3: Drive at 90 km/h (56 MPH) for 30 minutes and then let idle for 10 minutes.

*4: After 60 minutes of cool down time.

For more information, refer to CO-7, "Troubleshooting Chart".

>> INSPECTION END

P1225 TP SENSOR

DTC Logic

INFOID:0000000005989325

DTC DETECTION LOGIC

DTC No.	Trouble diagnosis name	DTC detecting condition	Possible cause
P1225	Closed throttle position learning performance	Closed throttle position learning value is excessively low.	• Electric throttle control actuator (TP sensor 1 and 2)

DTC CONFIRMATION PROCEDURE

1.PRECONDITIONING

If DTC Confirmation Procedure has been previously conducted, always turn ignition switch OFF and wait at least 10 seconds before conducting the next test.

TESTING CONDITION:

Before performing the following procedure, confirm that battery voltage is more than 10 V at idle.

>> GO TO 2.

2.PERFORM DTC CONFIRMATION PROCEDURE

1. Turn ignition switch ON.
2. Turn ignition switch OFF and wait at least 10 seconds.
3. Turn ignition switch ON.
4. Check 1st trip DTC.

Is 1st trip DTC detected?

YES >> Go to EC-237, "Diagnosis Procedure".
NO >> INSPECTION END

Diagnosis Procedure

INFOID:0000000005989326

1.CHECK ELECTRIC THROTTLE CONTROL ACTUATOR VISUALLY

1. Turn ignition switch OFF.
2. Remove the intake air duct.
3. Check if foreign matter is caught between the throttle valve (1) and the housing.

- ⇦: Vehicle front

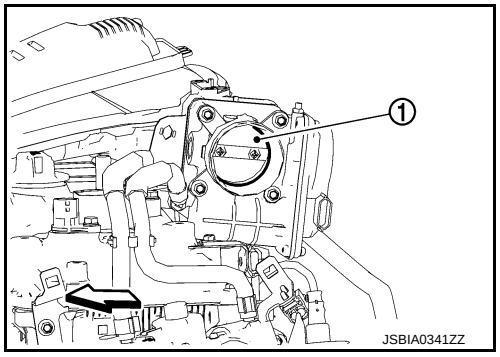

Is the inspection result normal?

YES >> Replace electric throttle control actuator. Refer to EM-29, "WITH EGR CONTROL VALVE : Exploded View".
NO >> Remove the foreign matter and clean the electric throttle control actuator inside.

P1226 TP SENSOR

DTC Logic

INFOID:0000000005989328

DTC DETECTION LOGIC

DTC No.	Trouble diagnosis name	DTC detecting condition	Possible cause
P1226	Closed throttle position learning performance	Closed throttle position learning is not performed successfully, repeatedly.	• Electric throttle control actuator (TP sensor 1 and 2)

DTC CONFIRMATION PROCEDURE

1. PRECONDITIONING

If DTC Confirmation Procedure has been previously conducted, always turn ignition switch OFF and wait at least 10 seconds before conducting the next test.

TESTING CONDITION:

Before performing the following procedure, confirm that battery voltage is more than 10 V at idle.

>> GO TO 2.

2. PERFORM DTC CONFIRMATION PROCEDURE

1. Turn ignition switch ON.
2. Turn ignition switch OFF and wait at least 10 seconds.
3. Turn ignition switch ON.
4. Repeat steps 2 and 3 for 32 times.
5. Check 1st trip DTC.

Is 1st trip DTC detected?

YES >> Go to EC-238, "Diagnosis Procedure".
NO >> INSPECTION END

Diagnosis Procedure

INFOID:0000000006059211

1. CHECK ELECTRIC THROTTLE CONTROL ACTUATOR VISUALLY

1. Turn ignition switch OFF.
2. Remove the intake air duct.
3. Check if foreign matter is caught between the throttle valve (1) and the housing.

- ⇦: Vehicle front

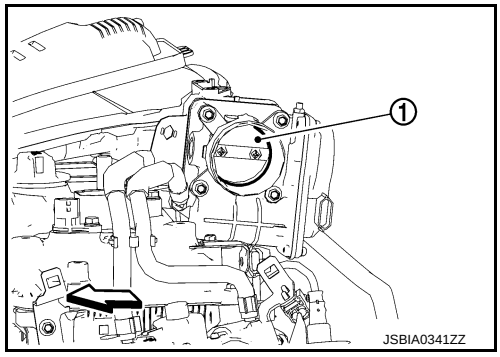

Is the inspection result normal?

YES >> Replace electric throttle control actuator. Refer to EM-29, "WITH EGR CONTROL VALVE : Exploded View".
NO >> Remove the foreign matter and clean the electric throttle control actuator inside.

P1402 EGR FUNCTION

DTC Logic

INFOID:0000000006022093

DTC DETECTION LOGIC

DTC No.	Trouble diagnosis name	DTC detecting condition	Possible cause
P1402	EGR function (Open)	EGR flow is detected under the condi-tionthat does not call for EGR.	• Harness or connectors (The EGR volume control valve circuit isopen or shorted.) • EGR volume control valve leaking orstuck open • EGR temperature sensor

DTC CONFIRMATION PROCEDURE

1. PRECONDITIONING

If DTC Confirmation Procedure has been previously conducted, always turn ignition switch OFF and wait atleast 10 seconds before conducting the next test.

TESTING CONDITION:

- **Diagnosis for this DTC will occur when engine coolant temperature is below 40 to 50°C (104 to 122°F). Therefore, it will be better to turn ignition switch ON (start engine) at the engine coolant temperature below 30°C (86°F) when starting DTC confirmation procedure.**
- **Always perform the test at a temperature above – 10°C (14°F).**

Do you have CONSULT-III?

YES >> GO TO 2.
NO >> GO TO 3.

2. PERFORM DTC CONFIRMATION PROCEDURE

With CONSULT-III

1. Turn ignition switch ON.
2. Select “COOLAN TEMP/S” and “EGR TEMP SEN” in “DATA MONITOR” mode.
3. Confirm “COOLAN TEMP/S” value is within the range listed below.

COOLAN TEMP/S : – 10° – 55°C (14 – 131°F)

If the values are out of the ranges indicated above, park the vehicle in a cool place and allow the engine temperature to stabilize.

CAUTION:

Do not attempt to reduce the engine coolant temperature with a fan or means other than ambient air. Doing so may produce an inaccurate diagnostic result.

4. Confirm “COOLAN TEMP/S” value is within the range listed below.

EGR TEMP SEN : Less than 4.8 V

5. Start engine and let it idle for at least 60 seconds.
6. Check 1st trip DTC.

Is 1st trip DTC detected?

YES >> Go to EC-240, "Diagnosis Procedure".
NO >> INSPECTION END

3. PERFORM DTC CONFIRMATION PROCEDURE

With GST

1. Turn ignition switch ON and select Service $01 with GST.
2. Check that engine coolant temperature is within the range of – 10 – 55°C (14 – 131°F).
   If the values are out of the ranges indicated above, park the vehicle in a cool place and allow the engine temperature to stabilize.
   CAUTION:
   Do not attempt to reduce the engine coolant temperature with a fan or means other than ambient air. Doing so may produce an inaccurate diagnostic result.

3. Check the voltage between ECM harness connector and ground.

ECM			Voltage
Connector	+	–	
	Terminal	Terminal	
F16	42	51	Less than 4.8 V

4. Start the engine and let it idle for at least 60 seconds.
5. Turn ignition switch OFF, wait at least 10 seconds and then turn ON.
6. Select Service $07 with GST.
7. Check 1st trip DTC.

Is 1st trip DTC detected?

YES >> Go to EC-240, "Diagnosis Procedure".
NO >> INSPECTION END

Diagnosis Procedure

INFOID:0000000006022094

1. CHECK EGR VOLUME CONTROL VALVE POWER SUPPLY CIRCUIT

1. Turn ignition switch OFF.
2. Disconnect EGR volume control valve harness connector.
3. Turn ignition switch ON.
4. Check the voltage between EGR volume control valve harness connector and ground.

EGR volume control valve		Ground	Voltage
Connector	Termina		
F88	2	Ground	Battery voltage
	5		

Is the inspection result normal?

YES >> GO TO 3.
NO >> GO TO 2.

2. DETECT MALFUNCTIONING PART

Check Harness for open or short between EGR volume control valve and IPDM E/R.

>> Repair harness or connectors.

3. CHECK EGR VOLUME CONTROL VALVE OUTPUT SIGNAL CIRCUIT FOR OPEN AND SHORT

1. Turn ignition switch OFF.
2. Disconnect ECM harness connector.
3. Check the continuity between EGR volume control valve harness connector and ECM harness connector.

EGR volume control valve		ECM		Continuity	
Connector	Termina	Connector	Termina		
F88	1	F7	12	Existed	
	3		16		
	4		20		
	6		24		

4. Also check harness for short to ground and short to power.

Is the inspection result normal?

YES >> GO TO 4.
NO >> Repair open circuit or short to ground or short to power in harness or connectors.

4. CHECK EGR VOLUME CONTROL VALVE

Check EGR volume control valve. Refer to EC-207, "Component Inspection".

Is the inspection result normal?

YES >> GO TO 5.
NO >> Replace EGR volume control valve. Refer to EM-26, "Exploded View".

5. CHECK EGR TEMPERATURE SENSOR

Check EGR temperature sensor. Refer to EC-211, "Component Inspection".

Is the inspection result normal?

YES >> GO TO 6.
NO >> Replace EGR temperature sensor. Refer to EM-26, "Exploded View".

6. CHECK INTERMITTENT INCIDENT

Check intermittent incident. Refer to GI-33, "Intermittent Incident".

>> Repair or replace malfunctioning part.

P1550 BATTERY CURRENT SENSOR

DTC Logic

INFOID:0000000005995503

DTC DETECTION LOGIC

DTC No.	Trouble diagnosis name	DTC detecting condition	Possible cause
P1550	Battery current sensor circuit range/performance	The output voltage of the battery current sensor remains within the specified range while engine is running.	• Harness or connectors (Battery current sensor circuit is open or shorted.) [Crankshaft position sensor (POS) circuit is shorted.] (Accelerator pedal position sensor circuit is shorted.) (Refrigerant pressure sensor circuit is shorted.) • Battery current sensor • Crankshaft position sensor (POS) • Accelerator pedal position sensor • Refrigerant pressure sensor

DTC CONFIRMATION PROCEDURE

1.PRECONDITIONING

If DTC Confirmation Procedure has been previously conducted, always turn ignition switch OFF and wait at least 10 seconds before conducting the next test.

TESTING CONDITION:

Before performing the following procedure, confirm that battery voltage is more than 8 V at idle.

>> GO TO 2.

2.PERFORM DTC CONFIRMATION PROCEDURE

1. Start engine and wait at least 10 seconds.
2. Check 1st trip DTC.

Is 1st trip DTC detected?

YES >> Go to EC-242, "Diagnosis Procedure".
NO >> INSPECTION END

Diagnosis Procedure

INFOID:0000000005995504

1.CHECK BATTERY CURRENT SENSOR POWER SUPPLY CIRCUIT-I

1. Disconnect battery current sensor harness connector.
2. Turn ignition switch ON.
3. Check the voltage between battery current sensor harness connector and ground.

Battery current sensor		Ground	Voltage
Connector	Terminal		
F53	1	Ground	Approx. 5 V

Is the inspection result normal?

YES >> GO TO 7.
NO >> GO TO 2.

2.CHECK BATTERY CURRENT SENSOR POWER SUPPLY CIRCUIT-II

1. Turn ignition switch OFF.
2. Disconnect ECM harness connector.
3. Check the continuity between battery current sensor harness connector and ECM harness connector.

Battery current sensor		ECM		Continuity
Connector	Terminal	Connector	Terminal	
F53	1	F16	71	Existed

Is the inspection result normal?

YES >> GO TO 3.
NO >> Repair open circuit.

3. CHECK SENSOR POWER SUPPLY CIRCUIT

Check harness for short to power and short to ground, between the following terminals.

ECM		Sensor		
Connector	Terminal	Name	Connector	Terminal
F16	71	Battery current sensor	F53	1
	75	CKP sensor (POS)	F20	
E18	101	Refrigerant pressure sensor	E49	3
	102	APP sensor	E110	5

Is the inspection result normal?

YES >> GO TO 4.
NO >> Repair short to ground or short to power in harness or connectors.

4. CHECK COMPONENTS

Check the following.
- Crankshaft position sensor (POS) (Refer to EC-199, "Component Inspection".)
- Refrigerant pressure sensor (Refer to EC-297, "Diagnosis Procedure".)

Is the inspection result normal?

YES >> GO TO 5.
NO >> Replace malfunctioning components.

5. CHECK APP SENSOR

Check app sensor. Refer to EC-277, "Component Inspection".

Is the inspection result normal?

YES >> GO TO 10.
NO >> GO TO 6.

6. REPLACE ACCELERATOR PEDAL ASSEMBLY

1. Replace accelerator pedal assembly.
2. Go to XX-XX, "*****".

>> INSPECTION END

7. CHECK BATTERY CURRENT SENSOR GROUND CIRCUIT FOR OPEN AND SHORT

1. Turn ignition switch OFF.
2. Disconnect ECM harness connector.
3. Check the continuity between battery current sensor harness connector and ECM harness connector.

Battery current sensor		ECM		Continuity
Connector	Terminal	Connector	Terminal	
F53	3	F16	68	Existed

4. Also check harness for short to ground and short to power.

Is the inspection result normal?

YES >> GO TO 8.
NO >> Repair open circuit, short to ground or short to power in harness or connectors.

8. CHECK BATTERY CURRENT SENSOR INPUT SIGNAL CIRCUIT FOR OPEN AND SHORT

1. Check the continuity between battery current sensor harness connector and ECM harness connector.

Battery current sensor		ECM		Continuity
Connector	Terminal	Connector	Terminal	
F53	4	F16	58	Existed

2. Also check harness for short to ground and short to power.

Is the inspection result normal?

YES >> GO TO 9.
NO >> Repair open circuit, short to ground or short to power in harness or connectors.

9. CHECK BATTERY CURRENT SENSOR

Check battery current sensor. Refer to EC-244, "Component Inspection".

Is the inspection result normal?

YES >> GO TO 10.
NO >> Replace battery negative cable assembly.

10. CHECK INTERMITTENT INCIDENT

Check intermittent incident. Refer to GI-33, "Intermittent Incident".

>> Repair or replace malfunctioning part.

Component Inspection

INFOID:0000000005995505

1. CHECK BATTERY CURRENT SENSOR

1. Turn ignition switch OFF.
2. Reconnect harness connectors disconnected.
3. Disconnect battery negative cable.
4. Install jumper cable between battery negative terminal and body ground.
5. Turn ignition switch ON.
6. Check the voltage between ECM harness connector terminals under the following conditions.

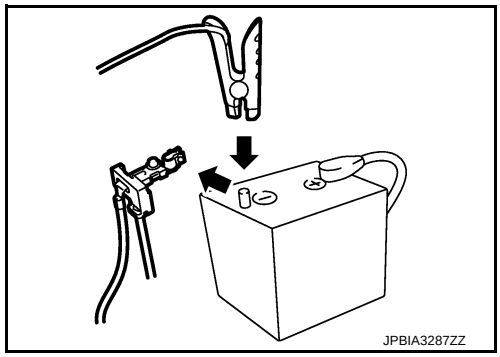

ECM			Voltage (V)
Connector	+	–	
	Terminal	Terminal	
F16	58 (Battery current sensor signal)	68	Approx. 2.5

Before measuring the terminal voltage, confirm that the battery is fully charged. Refer to PG-130, "How to Handle Battery".

Is the inspection result normal?

YES >> INSPECTION END
NO >> Replace battery negative cable assembly.

P1551, P1552 BATTERY CURRENT SENSOR

DTC Logic

INFOID:0000000005995506

DTC DETECTION LOGIC

DTC No.	Trouble diagnosis name	DTC detecting condition	Possible cause
P1551	Battery current sensor circuit low input	An excessively low voltage from the sensor is sent to ECM.	• Harness or connectors (Battery current sensor circuit is open or shorted.) [Crankshaft position sensor (POS) circuit is shorted.] (Accelerator pedal position sensor circuit is shorted.) (Refrigerant pressure sensor circuit is shorted.) • Battery current sensor • Crankshaft position sensor (POS) • Accelerator pedal position sensor • Refrigerant pressure sensor
P1552	Battery current sensor circuit high input	An excessively high voltage from the sensor is sent to ECM.	

DTC CONFIRMATION PROCEDURE

1. PRECONDITIONING

If DTC Confirmation Procedure has been previously conducted, always turn ignition switch OFF and wait at least 10 seconds before conducting the next test.

TESTING CONDITION:

Before performing the following procedure, confirm that battery voltage is more than 8 V with ignition switch ON

>> GO TO 2.

2. PERFORM DTC CONFIRMATION PROCEDURE

1. Turn ignition switch ON and wait at least 10 seconds.
2. Check 1st trip DTC.

Is 1st trip DTC detected?

YES >> Go to EC-245, "Diagnosis Procedure".
NO >> INSPECTION END

Diagnosis Procedure

INFOID:0000000006057768

1. CHECK BATTERY CURRENT SENSOR POWER SUPPLY CIRCUIT-I

1. Disconnect battery current sensor harness connector.
2. Turn ignition switch ON.
3. Check the voltage between battery current sensor harness connector and ground.

Battery current sensor		Ground	Voltage
Connector	Terminal		
F53	1	Ground	Approx. 5 V

Is the inspection result normal?

YES >> GO TO 7.
NO >> GO TO 2.

2. CHECK BATTERY CURRENT SENSOR POWER SUPPLY CIRCUIT-II

1. Turn ignition switch OFF.
2. Disconnect ECM harness connector.
3. Check the continuity between battery current sensor harness connector and ECM harness connector.

Battery current sensor		ECM		Continuity
Connector	Terminal	Connector	Terminal	
F53	1	F16	71	Existed

Is the inspection result normal?

YES >> GO TO 3.
NO >> Repair open circuit.

3. CHECK SENSOR POWER SUPPLY CIRCUIT

Check harness for short to power and short to ground, between the following terminals.

ECM		Sensor		
Connector	Terminal	Name	Connector	Terminal
F16	71	Battery current sensor	F53	1
	75	CKP sensor (POS)	F20	
E18	101	Refrigerant pressure sensor	E49	3
	102	APP sensor	E110	5

Is the inspection result normal?

YES >> GO TO 4.
NO >> Repair short to ground or short to power in harness or connectors.

4. CHECK COMPONENTS

Check the following.
- Crankshaft position sensor (POS) (Refer to EC-199, "Component Inspection".)
- Refrigerant pressure sensor (Refer to EC-297, "Diagnosis Procedure".)

Is the inspection result normal?

YES >> GO TO 5.
NO >> Replace malfunctioning components.

5. CHECK APP SENSOR

Check app sensor. Refer to EC-277, "Component Inspection".

Is the inspection result normal?

YES >> GO TO 10.
NO >> GO TO 6.

6. REPLACE ACCELERATOR PEDAL ASSEMBLY

1. Replace accelerator pedal assembly.
2. Go to XX-XX, "*****".

>> INSPECTION END

7. CHECK BATTERY CURRENT SENSOR GROUND CIRCUIT FOR OPEN AND SHORT

1. Turn ignition switch OFF.
2. Disconnect ECM harness connector.
3. Check the continuity between battery current sensor harness connector and ECM harness connector.

Battery current sensor		ECM		Continuity
Connector	Terminal	Connector	Terminal	
F53	3	F16	68	Existed

4. Also check harness for short to ground and short to power.

Is the inspection result normal?

YES >> GO TO 8.
NO >> Repair open circuit, short to ground or short to power in harness or connectors.

8. CHECK BATTERY CURRENT SENSOR INPUT SIGNAL CIRCUIT FOR OPEN AND SHORT

1. Check the continuity between battery current sensor harness connector and ECM harness connector.

Battery current sensor		ECM		Continuity
Connector	Terminal	Connector	Terminal	
F53	4	F16	58	Existed

2. Also check harness for short to ground and short to power.

Is the inspection result normal?

YES >> GO TO 9.
NO >> Repair open circuit, short to ground or short to power in harness or connectors.

9. CHECK BATTERY CURRENT SENSOR

Check battery current sensor. Refer to EC-247, "Component Inspection".

Is the inspection result normal?

YES >> GO TO 10.
NO >> Replace battery negative cable assembly.

10. CHECK INTERMITTENT INCIDENT

Check intermittent incident. Refer to GI-33, "Intermittent Incident".

>> Repair or replace malfunctioning part.

Component Inspection

INFOID:0000000006057769

1. CHECK BATTERY CURRENT SENSOR

1. Turn ignition switch OFF.
2. Reconnect harness connectors disconnected.
3. Disconnect battery negative cable.
4. Install jumper cable between battery negative terminal and body ground.
5. Turn ignition switch ON.
6. Check the voltage between ECM harness connector terminals under the following conditions.

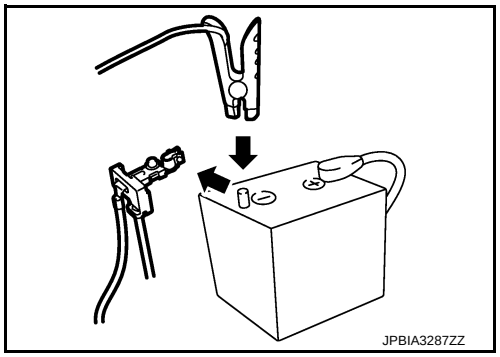

ECM			Voltage (V)
Connector	+	–	
	Terminal	Terminal	
F16	58 (Battery current sensor signal)	68	Approx. 2.5

Before measuring the terminal voltage, confirm that the battery is fully charged. Refer to PG-130, "How to Handle Battery".

Is the inspection result normal?

YES >> INSPECTION END
NO >> Replace battery negative cable assembly.

P1553 BATTERY CURRENT SENSOR

DTC Logic

INFOID:0000000005995509

DTC DETECTION LOGIC

DTC No.	Trouble diagnosis name	DTC detecting condition	Possible cause
P1553	Battery current sensor performance	The signal voltage transmitted from the sensor to ECM is higher than the amount of the maximum power generation.	• Harness or connectors (Battery current sensor circuit is open or shorted.) [Crankshaft position sensor (POS) circuit is shorted.] (Accelerator pedal position sensor circuit is shorted.) (Refrigerant pressure sensor circuit is shorted.) • Battery current sensor • Crankshaft position sensor (POS) • Accelerator pedal position sensor • Refrigerant pressure sensor

DTC CONFIRMATION PROCEDURE

1. PRECONDITIONING

If DTC Confirmation Procedure has been previously conducted, always turn ignition switch OFF and wait at least 10 seconds before conducting the next test.

TESTING CONDITION:

Before performing the following procedure, confirm that battery voltage is more than 8 V at idle.

>> GO TO 2.

2. PERFORM DTC CONFIRMATION PROCEDURE

1. Start engine and wait at least 10 seconds.
2. Check 1st trip DTC.

Is 1st trip DTC detected?

YES >> Go to EC-248, "Diagnosis Procedure".
NO >> INSPECTION END

Diagnosis Procedure

INFOID:0000000006057770

1. CHECK BATTERY CURRENT SENSOR POWER SUPPLY CIRCUIT-I

1. Disconnect battery current sensor harness connector.
2. Turn ignition switch ON.
3. Check the voltage between battery current sensor harness connector and ground.

Battery current sensor		Ground	Voltage
Connector	Terminal		
F53	1	Ground	Approx. 5 V

Is the inspection result normal?

YES >> GO TO 7.
NO >> GO TO 2.

2. CHECK BATTERY CURRENT SENSOR POWER SUPPLY CIRCUIT-II

1. Turn ignition switch OFF.
2. Disconnect ECM harness connector.
3. Check the continuity between battery current sensor harness connector and ECM harness connector.

Battery current sensor		ECM		Continuity
Connector	Terminal	Connector	Terminal	
F53	1	F16	71	Existed

Is the inspection result normal?

YES >> GO TO 3.
NO >> Repair open circuit.

3. CHECK SENSOR POWER SUPPLY CIRCUIT

Check harness for short to power and short to ground, between the following terminals.

ECM		Sensor		
Connector	Terminal	Name	Connector	Terminal
F16	71	Battery current sensor	F53	1
	75	CKP sensor (POS)	F20	
E18	101	Refrigerant pressure sensor	E49	3
	102	APP sensor	E110	5

Is the inspection result normal?

YES >> GO TO 4.
NO >> Repair short to ground or short to power in harness or connectors.

4. CHECK COMPONENTS

Check the following.
- Crankshaft position sensor (POS) (Refer to EC-199, "Component Inspection".)
- Refrigerant pressure sensor (Refer to EC-297, "Diagnosis Procedure".)

Is the inspection result normal?

YES >> GO TO 5.
NO >> Replace malfunctioning components.

5. CHECK APP SENSOR

Check app sensor. Refer to EC-277, "Component Inspection".

Is the inspection result normal?

YES >> GO TO 10.
NO >> GO TO 6.

6. REPLACE ACCELERATOR PEDAL ASSEMBLY

1. Replace accelerator pedal assembly.
2. Go to XX-XX, "*****".

>> INSPECTION END

7. CHECK BATTERY CURRENT SENSOR GROUND CIRCUIT FOR OPEN AND SHORT

1. Turn ignition switch OFF.
2. Disconnect ECM harness connector.
3. Check the continuity between battery current sensor harness connector and ECM harness connector.

Battery current sensor		ECM		Continuity
Connector	Terminal	Connector	Terminal	
F53	3	F16	68	Existed

4. Also check harness for short to ground and short to power.

Is the inspection result normal?

YES >> GO TO 8.
NO >> Repair open circuit, short to ground or short to power in harness or connectors.

8. CHECK BATTERY CURRENT SENSOR INPUT SIGNAL CIRCUIT FOR OPEN AND SHORT

1. Check the continuity between battery current sensor harness connector and ECM harness connector.

Battery current sensor		ECM		Continuity
Connector	Terminal	Connector	Terminal	
F53	4	F16	58	Existed

2. Also check harness for short to ground and short to power.

Is the inspection result normal?

YES >> GO TO 9.
NO >> Repair open circuit, short to ground or short to power in harness or connectors.

9. CHECK BATTERY CURRENT SENSOR

Check battery current sensor. Refer to EC-250, "Component Inspection".

Is the inspection result normal?

YES >> GO TO 10.
NO >> Replace battery negative cable assembly.

10. CHECK INTERMITTENT INCIDENT

Check intermittent incident. Refer to GI-33, "Intermittent Incident".

>> Repair or replace malfunctioning part.

Component Inspection

INFOID:0000000006057771

1. CHECK BATTERY CURRENT SENSOR

1. Turn ignition switch OFF.
2. Reconnect harness connectors disconnected.
3. Disconnect battery negative cable.
4. Install jumper cable between battery negative terminal and body ground.
5. Turn ignition switch ON.
6. Check the voltage between ECM harness connector terminals under the following conditions.

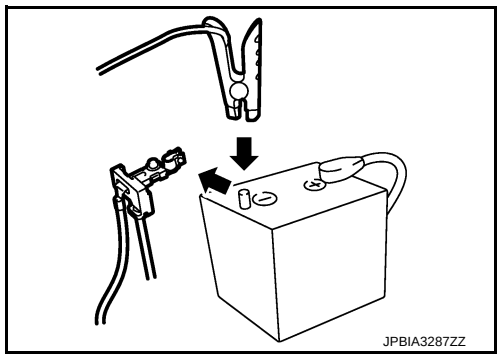

ECM			Voltage (V)
Connector	+	–	
	Terminal	Terminal	
F16	58 (Battery current sensor signal)	68	Approx. 2.5

Before measuring the terminal voltage, confirm that the battery is fully charged. Refer to PG-130, "How to Handle Battery".

Is the inspection result normal?

YES >> INSPECTION END
NO >> Replace battery negative cable assembly.

P1554 BATTERY CURRENT SENSOR

DTC Logic

INFOID:0000000005995512

DTC DETECTION LOGIC

DTC No.	Trouble diagnosis name	DTC detecting condition	Possible cause
P1554	Battery current sensor performance	The output voltage of the battery current sensor is lower than the specified value while the battery voltage is high enough.	• Harness or connectors (Battery current sensor circuit is open or shorted.) [Crankshaft position sensor (POS) circuit is shorted.] (Accelerator pedal position sensor circuit is shorted.) (Refrigerant pressure sensor circuit is shorted.) • Battery current sensor • Crankshaft position sensor (POS) • Accelerator pedal position sensor • Refrigerant pressure sensor

DTC CONFIRMATION PROCEDURE

1. PERFORM COMPONENT FUNCTION CHECK

Perform component function check. Refer to EC-251, "Component Function Check".

NOTE:
Use component function check to check the overall function of the battery current sensor circuit. During this check, a 1st trip DTC might not be confirmed.

Is the inspection result normal?

YES >> INSPECTION END
NO >> Go to EC-252, "Diagnosis Procedure".

Component Function Check

INFOID:0000000005995513

1. PRECONDITIONING

TESTING CONDITION:
- **Before performing the following procedure, confirm that battery voltage is more than 12.8 V at idle.**
- **Before performing the following procedure, confirm that all load switches and A/C switch are turned OFF.**

>> GO TO 2.

2. PERFORM COMPONENT FUNCTION CHECK

With CONSULT-III
1. Start engine and let it idle.
2. Select “ENGINE” using CONSULT-III.
3. Select “BAT CUR SEN” in “DATA MONITOR” mode.
4. Check “BAT CUR SEN” indication for 10 seconds.
   “BAT CUR SEN” should be above 2,300mV at least once.

Without CONSULT-III
1. Start engine and let it idle.
2. Check the voltage between ECM harness connector terminals under the following conditions.

ECM			Voltage (V)
Connector	+	–	
	Terminal	Terminal	
F16	58 (Battery current sensor signal)	68	Above 2.3 at least once

Is the inspection result normal?

YES >> INSPECTION END
NO >> Refer to EC-252, "Diagnosis Procedure"

Diagnosis Procedure

INFOID:0000000006057772

1. CHECK BATTERY CURRENT SENSOR POWER SUPPLY CIRCUIT-I

1. Disconnect battery current sensor harness connector.
2. Turn ignition switch ON.
3. Check the voltage between battery current sensor harness connector and ground.

Battery current sensor		Ground	Voltage
Connector	Terminal		
F53	1	Ground	Approx. 5 V

Is the inspection result normal?

YES >> GO TO 7.
NO >> GO TO 2.

2. CHECK BATTERY CURRENT SENSOR POWER SUPPLY CIRCUIT-II

1. Turn ignition switch OFF.
2. Disconnect ECM harness connector.
3. Check the continuity between battery current sensor harness connector and ECM harness connector.

Battery current sensor		ECM		Continuity
Connector	Terminal	Connector	Terminal	
F53	1	F16	71	Existed

Is the inspection result normal?

YES >> GO TO 3.
NO >> Repair open circuit.

3. CHECK SENSOR POWER SUPPLY CIRCUIT

Check harness for short to power and short to ground, between the following terminals.

ECM		Sensor		
Connector	Terminal	Name	Connector	Terminal
F16	71	Battery current sensor	F53	1
	75	CKP sensor (POS)	F20	
E18	101	Refrigerant pressure sensor	E49	3
	102	APP sensor	E110	5

Is the inspection result normal?

YES >> GO TO 4.
NO >> Repair short to ground or short to power in harness or connectors.

4. CHECK COMPONENTS

Check the following.
- Crankshaft position sensor (POS) (Refer to EC-199, "Component Inspection".)
- Refrigerant pressure sensor (Refer to EC-297, "Diagnosis Procedure".)

Is the inspection result normal?

YES >> GO TO 5.
NO >> Replace malfunctioning components.

5. CHECK APP SENSOR

Check app sensor. Refer to EC-277, "Component Inspection".

Is the inspection result normal?

YES >> GO TO 10.
NO >> GO TO 6.

6. REPLACE ACCELERATOR PEDAL ASSEMBLY

1. Replace accelerator pedal assembly.
2. Go to XX-XX, "*****".

>> INSPECTION END

7. CHECK BATTERY CURRENT SENSOR GROUND CIRCUIT FOR OPEN AND SHORT

1. Turn ignition switch OFF.
2. Disconnect ECM harness connector.
3. Check the continuity between battery current sensor harness connector and ECM harness connector.

Battery current sensor		ECM		Continuity
Connector	Terminal	Connector	Terminal	
F53	3	F16	68	Existed

4. Also check harness for short to ground and short to power.

Is the inspection result normal?

YES >> GO TO 8.
NO >> Repair open circuit, short to ground or short to power in harness or connectors.

8. CHECK BATTERY CURRENT SENSOR INPUT SIGNAL CIRCUIT FOR OPEN AND SHORT

1. Check the continuity between battery current sensor harness connector and ECM harness connector.

Battery current sensor		ECM		Continuity
Connector	Terminal	Connector	Terminal	
F53	4	F16	58	Existed

2. Also check harness for short to ground and short to power.

Is the inspection result normal?

YES >> GO TO 9.
NO >> Repair open circuit, short to ground or short to power in harness or connectors.

9. CHECK BATTERY CURRENT SENSOR

Check battery current sensor. Refer to EC-253, "Component Inspection".

Is the inspection result normal?

YES >> GO TO 10.
NO >> Replace battery negative cable assembly.

10. CHECK INTERMITTENT INCIDENT

Check intermittent incident. Refer to GI-33, "Intermittent Incident".

>> Repair or replace malfunctioning part.

Component Inspection

INFOID:0000000006057773

1. CHECK BATTERY CURRENT SENSOR

1. Turn ignition switch OFF.
2. Reconnect harness connectors disconnected.

3. Disconnect battery negative cable.
4. Install jumper cable between battery negative terminal and body ground.
5. Turn ignition switch ON.
6. Check the voltage between ECM harness connector terminals under the following conditions.

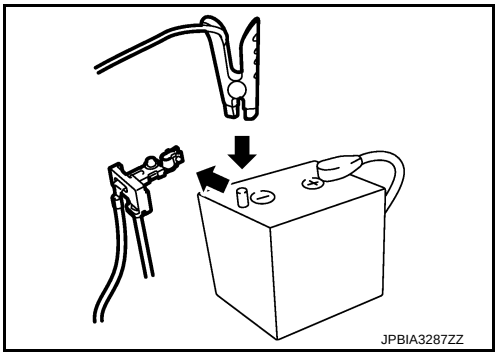

ECM			Voltage (V)
Connector	+	–	
	Terminal	Terminal	
F16	58 (Battery current sensor signal)	68	Approx. 2.5

Before measuring the terminal voltage, confirm that the battery is fully charged. Refer to PG-130, "How to Handle Battery".

Is the inspection result normal?

YES >> INSPECTION END
NO >> Replace battery negative cable assembly.

P1805 BRAKE SWITCH

DTC Logic

INFOID:0000000005989344

DTC DETECTION LOGIC

DTC No.	Trouble diagnosis name	DTC detecting condition	Possible cause
P1805	Brake switch	A brake switch signal is not sent to ECM for extremely long time while the vehicle is driving.	• Harness or connectors (Stop lamp switch circuit is open or shorted.) • Stop lamp switch

DTC CONFIRMATION PROCEDURE

1. PERFORM DTC CONFIRMATION PROCEDURE

1. Turn ignition switch ON.
2. Fully depress the brake pedal for at least 5 seconds.
3. Erase DTC.
4. Check 1st trip DTC.

Is 1st trip DTC detected?

YES >> Go to EC-255, "Diagnosis Procedure".
NO >> INSPECTION END

Diagnosis Procedure

INFOID:0000000005989345

1. CHECK STOP LAMP SWITCH CIRCUIT

1. Turn ignition switch OFF.
2. Check the stop lamp when depressing and releasing the brake pedal.

Brake pedal	Stop lamp
Fully released	Not illuminated
Slightly depressed	Illuminated

Is the inspection result normal?

YES >> GO TO 4.
NO >> GO TO 2.

2. CHECK STOP LAMP SWITCH POWER SUPPLY CIRCUIT

1. Turn ignition switch OFF.
2. Disconnect stop lamp switch harness connector.
3. Check the voltage between stop lamp switch harness connector and ground.

Stop lamp switch		Ground	Voltage
Connector	Terminal		
E114	1	Ground	Battery voltage

Is the inspection result normal?

YES >> GO TO 4.
NO >> GO TO 3.

3. DETECT MALFUNCTIONING PART

Check harness for open or short between stop lamp switch and battery.

>> Repair open circuit or short to ground or short to power in harness or connectors.

4. CHECK STOP LAMP SWITCH INPUT SIGNAL CIRCUIT FOR OPEN AND SHORT

1. Disconnect stop lamp switch harness connector.
2. Disconnect ECM harness connector.

3. Check the continuity between ECM harness connector and stop lamp switch harness connector.

ECM		Stop lamp switch		Continuity
Connector	Terminal	Connector	Terminal	
E18	99	E114	2	Existed

4. Also check harness for short to ground and short to power.

Is the inspection result normal?

YES >> GO TO 5.
NO >> Repair open circuit or short to ground or short to power in harness or connectors.

5. CHECK STOP LAMP SWITCH

Check stop lamp switch. Refer to EC-256, "Component Inspection".

Is the inspection result normal?

YES >> GO TO 6.
NO >> Replace brake pedal assembly. Refer to BR-16, "Exploded View".

6. CHECK INTERMITTENT INCIDENT

Check intermittent incident. Refer to GI-33, "Intermittent Incident".

>> Repair or replace malfunctioning part.

Component Inspection

INFOID:0000000005989346

1. CHECK STOP LAMP SWITCH-I

1. Turn ignition switch OFF.
2. Disconnect stop lamp switch harness connector.
3. Check the continuity between stop lamp switch terminals under the following conditions.

Terminals	Condition		Continuity
1 and 2	Brake pedal	Fully released	Not existed
		Slightly depressed	Existed

Is the inspection result normal?

YES >> INSPECTION END
NO >> GO TO 2.

2. CHECK STOP LAMP SWITCH-II

1. Adjust stop lamp switch installation. Refer to BR-7, "Inspection and Adjustment".
2. Check the continuity between stop lamp switch terminals under the following conditions.

Terminals	Condition		Continuity
1 and 2	Brake pedal	Fully released	Not existed
		Slightly depressed	Existed

Is the inspection result normal?

YES >> INSPECTION END
NO >> Replace brake pedal assembly. Refer to BR-16, "Exploded View".

P2100, P2103 THROTTLE CONTROL MOTOR RELAY

DTC Logic

INFOID:0000000005989347

DTC DETECTION LOGIC

DTC No.	Trouble diagnosis name	DTC detecting condition	Possible cause
P2100	Throttle control motor relay circuit open	ECM detects a voltage of power source for throttle control motor is excessively low.	• Harness or connectors (Throttle control motor relay circuit is open) • Throttle control motor relay
P2103	Throttle control motor relay circuit short	ECM detect the throttle control motor relay is stuck ON.	• Harness or connectors (Throttle control motor relay circuit is shorted) • Throttle control motor relay

DTC CONFIRMATION PROCEDURE

1.PRECONDITIONING

If DTC Confirmation Procedure has been previously conducted, always turn ignition switch OFF and wait at least 10 seconds before conducting the next test.

TESTING CONDITION:

Before performing the following procedure, confirm that battery voltage is more than 8 V.

Witch DTC is detected?

P2100 >> GO TO 2.
P2103 >> GO TO 3.

2.PERFORM DTC CONFIRMATION PROCEDURE FOR DTC P2100

1. Turn ignition switch ON and wait at least 2 seconds.
2. Start engine and let it idle for 5 seconds.
3. Check DTC.

Is DTC detected?

YES >> Go to EC-257, "Diagnosis Procedure".
NO >> INSPECTION END

3.PERFORM DTC CONFIRMATION PROCEDURE FOR DTC P2103

1. Turn ignition switch ON and wait at least 1 second.
2. Check DTC.

Is DTC detected?

YES >> Go to EC-257, "Diagnosis Procedure".
NO >> INSPECTION END

Diagnosis Procedure

INFOID:0000000005989348

1.CHECK THROTTLE CONTROL MOTOR RELAY POWER SUPPLY CIRCUIT-I

1. Turn ignition switch OFF.
2. Check voltage between ECM harness connector and ground.

ECM			Voltage
Connector	+	–	
	Terminal	Terminal	
F7	15	108	Battery voltage

Is the inspection result normal?

YES >> GO TO 5.
NO >> GO TO 2.

2. CHECK THROTTLE CONTROL MOTOR RELAY INPUT SIGNAL CIRCUIT-I

1. Disconnect ECM harness connector.
2. Disconnect IPDM E/R harness connector E15.
3. Check the continuity between ECM harness connector and IPDM E/R harness connector.

ECM		IPDM E/R		Continuity
Connector	Terminal	Connector	Terminal	
F7	15	E15	57	Existed

4. Also check harness for short to ground and short to power.

Is the inspection result normal?

YES >> GO TO 4.
NO >> GO TO 3.

3. DETECT MALFUNCTIONING PART

Check the following.
- Harness connectors E8, F1
- IPDM E/R connector E15
- Harness for open or short between IPDM E/R and ECM

>> Repair open circuit or short to ground or short to power in harness or connectors.

4. CHECK FUSE

1. Disconnect 15 A fuse (No. 64) from IPDM E/R.
2. Check 15 A fuse for blown.

Is the inspection result normal?

YES >> GO TO 8.
NO >> Replace 15 A fuse.

5. CHECK THROTTLE CONTROL MOTOR RELAY INPUT SIGNAL CIRCUIT-I

1. Check voltage between ECM harness connector and ground under the following conditions.

ECM			Conditions	Voltage
Connector	+	–		
	Terminal	Terminal		
F7	2	108	Ignition switch: OFF	Approx. 0 V
			Ignition switch: ON	Battery voltage

Is the inspection result normal?

YES >> GO TO 8.
NO >> GO TO 6.

6. CHECK THROTTLE CONTROL MOTOR RELAY INPUT SIGNAL CIRCUIT-II

1. Turn ignition switch OFF.
2. Disconnect ECM harness connector.
3. Disconnect IPDM E/R harness connector E15.
4. Check the continuity between ECM harness connector and IPDM E/R harness connector.

ECM		IPDM E/R		Continuity
Connector	Terminal	Connector	Terminal	
F7	2	E15	54	Existed

5. Also check harness for short to ground and short to power.

Is the inspection result normal?

YES >> GO TO 8.

NO >> GO TO 7.

7. DETECT MALFUNCTIONING PART

Check the following.
- Harness connectors E8, F1
- IPDM E/R connector E15
- Harness for open or short between IPDM E/R and ECM

>> Repair open circuit or short to ground or short to power in harness or connectors.

8. CHECK INTERMITTENT INCIDENT

Refer to GI-33, "Intermittent Incident".

Is the inspection result normal?

YES >> Replace IPDM E/R. Refer to PCS-52, "Exploded View".
NO >> Repair or replace harness or connectors.

P2101 ELECTRIC THROTTLE CONTROL FUNCTION

DTC Logic

INFOID:0000000005989349

DTC DETECTION LOGIC

NOTE:

- **If DTC P2101 is displayed with DTC P2100, first perform the trouble diagnosis for DTC P2100. Refer to EC-257, "DTC Logic".**
- **If DTC P2101 is displayed with DTC P2119, first perform the trouble diagnosis for DTC P2119. Refer to EC-266, "DTC Logic".**

DTC No.	Trouble diagnosis name	DTC detecting condition	Possible cause
P2101	Electric throttle control performance	Electric throttle control function does not operate properly.	• Harness or connectors (Throttle control motor circuit is open or shorted) • Electric throttle control actuator

DTC CONFIRMATION PROCEDURE

1. PRECONDITIONING

If DTC Confirmation Procedure has been previously conducted, always turn ignition switch OFF and wait at least 10 seconds before conducting the next test.

TESTING CONDITION:

Before performing the following procedure, confirm that battery voltage is more than 11 V when engine is running.

>> GO TO 2.

2. PERFORM DTC CONFIRMATION PROCEDURE

1. Turn ignition switch ON and wait at least 2 seconds.
2. Start engine and let it idle for 5 seconds.
3. Check DTC.

Is DTC detected?

YES >> Go to EC-260, "Diagnosis Procedure".
NO >> INSPECTION END

Diagnosis Procedure

INFOID:0000000005989350

1. CHECK GROUND CONNECTION

1. Turn ignition switch OFF.
2. Check ground connection E38. Refer to Ground Inspection in GI-35, "Circuit Inspection".

Is the inspection result normal?

YES >> GO TO 2.
NO >> Repair or replace ground connection.

2. CHECK THROTTLE CONTROL MOTOR RELAY INPUT SIGNAL CIRCUIT

1. Turn ignition switch ON.
2. Check the voltage between ECM harness connector and ground.

ECM			Condition	Voltage
Connector	+	–		
	Terminal	Terminal		
F7	2	108	Ignition switch OFF	Approx. 0 V
			Ignition switch ON	Battery voltage

Is the inspection result normal?

YES >> GO TO 10.

NO >> GO TO 3.

3. CHECK THROTTLE CONTROL MOTOR RELAY POWER SUPPLY CIRCUIT-I

1. Turn ignition switch OFF.
2. Check voltage between ECM harness connector and ground.

ECM			Voltage
Connector	+	–	
	Terminal	Terminal	
F7	15	108	Battery voltage

Is the inspection result normal?

YES >> GO TO 7.
NO >> GO TO 4.

4. CHECK THROTTLE CONTROL MOTOR RELAY POWER SUPPLY CIRCUIT-II

1. Disconnect ECM harness connector.
2. Disconnect IPDM E/R harness connector E15.
3. Check the continuity between ECM harness connector and IPDM E/R harness connector.

IPDM E/R		ECM		Continuity
Connector	Terminal	Connector	Terminal	
E15	57	F7	15	Existed

4. Also check harness for short to ground and short to power.

Is the inspection result normal?

YES >> GO TO 6.
NO >> GO TO 5.

5. DETECT MALFUNCTIONING PART

Check the following.
- Harness connectors E8, F1
- IPDM E/R connector E15
- Harness for open or short between IPDM E/R and ECM

>> Repair open circuit or short to ground or short to power in harness or connectors.

6. CHECK FUSE

1. Disconnect 15 A fuse (No. 64) from IPDM E/R.
2. Check 15 A fuse for blown.

Is the inspection result normal?

YES >> GO TO 9.
NO >> Replace 15 A fuse.

7. CHECK THROTTLE CONTROL MOTOR RELAY POWER SUPPLY CIRCUIT-III

1. Disconnect ECM harness connector.
2. Disconnect IPDM E/R harness connector E15.
3. Check the continuity between ECM harness connector and IPDM E/R harness connector.

IPDM E/R		ECM		Continuity
Connector	Terminal	Connector	Terminal	
E15	54	F7	2	Existed

4. Also check harness for short to ground and short to power.

Is the inspection result normal?

YES >> GO TO 9.
NO >> GO TO 8.

8. DETECT MALFUNCTIONING PART

Check the following.
- Harness connectors E8, F1
- IPDM E/R connector E15
- Harness for open or short between IPDM E/R and ECM

>> Repair open circuit or short to ground or short to power in harness or connectors.

9. CHECK INTERMITTENT INCIDENT

Refer to GI-33, "Intermittent Incident".

Is the inspection result normal?

YES >> Replace IPDM E/R. Refer to PCS-52, "Exploded View".
NO >> Repair or replace harness or connectors.

10. CHECK THROTTLE CONTROL MOTOR OUTPUT SIGNAL CIRCUIT FOR OPEN OR SHORT

1. Turn ignition switch OFF.
2. Disconnect electric throttle control actuator harness connector.
3. Disconnect ECM harness connector.
4. Check the continuity between electric throttle control actuator harness connector and ECM harness connector.

Electric throttle control actuator		ECM		Continuity
Connector	Terminal	Connector	Terminal	
F29	5	F7	1	Not existed
			4	Existed
F29	6	F7	1	Existed
			4	Not existed

5. Also check harness for short to ground and short to power.

Is the inspection result normal?

YES >> GO TO 11.
NO >> Repair or replace harness or connectors.

11. CHECK ELECTRIC THROTTLE CONTROL ACTUATOR VISUALLY

1. Remove the intake air duct.
2. Check if foreign matter is caught between the throttle valve (1) and the housing.

- ⇦: Vehicle front

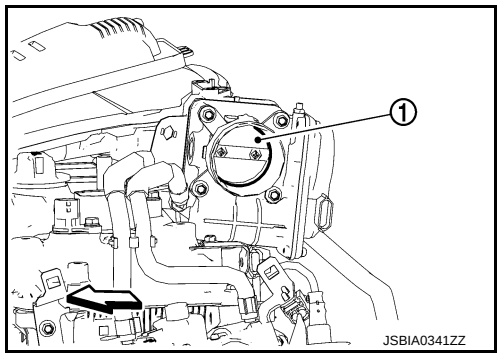

Is the inspection result normal?

YES >> GO TO 12.
NO >> Remove the foreign matter and clean the electric throttle control actuator inside.

12. CHECK THROTTLE CONTROL MOTOR

Refer to EC-263, "Component Inspection".

Is the inspection result normal?

YES >> GO TO 13.
NO >> GO TO 14.

13. CHECK INTERMITTENT INCIDENT

Refer to GI-33, "Intermittent Incident".

Is the inspection result normal?

YES >> Replace electric throttle control actuator. Refer to EM-29, "WITH EGR CONTROL VALVE : Exploded View".
NO >> Repair or replace harness or connectors.

Component Inspection

INFOID:0000000005989351

1. CHECK THROTTLE CONTROL MOTOR

1. Disconnect electric throttle control actuator harness connector.
2. Check resistance between electric throttle control actuator terminals as follows.

Terminals	Resistance [at 25°C (77°F)]
5 and 6	Approx. 1 - 15 Ω

Is the inspection result normal?

YES >> INSPECTION END
NO >> Replace electric throttle control actuator. Refer to EM-29, "WITH EGR CONTROL VALVE : Exploded View".

P2118 THROTTLE CONTROL MOTOR

DTC Logic

INFOID:0000000005989353

DTC DETECTION LOGIC

DTC No.	Trouble diagnosis name	DTC detecting condition	Possible cause
P2118	Throttle control motor circuit short	ECM detects short in both circuits between ECM and throttle control motor.	• Harness or connectors (Throttle control motor circuit is shorted.) • Electric throttle control actuator (Throttle control motor)

DTC CONFIRMATION PROCEDURE

1.PRECONDITIONING

If DTC Confirmation Procedure has been previously conducted, always turn ignition switch OFF and wait at least 10 seconds before conducting the next test.

>> GO TO 2.

2.PERFORM DTC CONFIRMATION PROCEDURE

1. Turn ignition switch ON and wait at least 2 seconds.
2. Start engine and let it idle for 5 seconds.
3. Check DTC.

Is DTC detected?

YES >> Go to EC-264, "Diagnosis Procedure".
NO >> INSPECTION END

Diagnosis Procedure

INFOID:0000000005989354

1.CHECK GROUND CONNECTION

1. Turn ignition switch OFF.
2. Check ground connection E38. Refer to Ground Inspection in GI-35, "Circuit Inspection".

Is the inspection result normal?

YES >> GO TO 2.
NO >> Repair or replace ground connection.

2.CHECK THROTTLE CONTROL MOTOR OUTPUT SIGNAL CIRCUIT FOR OPEN AND SHORT

1. Disconnect electric throttle control actuator harness connector.
2. Disconnect ECM harness connector.
3. Check the continuity between electric throttle control actuator harness connector and ECM harness connector.

Electric throttle control actuator		ECM		Continuity
Connector	Terminal	Connector	Terminal	
F29	5	F7	1	Not existed
			4	Existed
F29	6	F7	1	Existed
			4	Not existed

4. Also check harness for short to ground and short to power.

Is the inspection result normal?

YES >> GO TO 3.
NO >> Repair or replace harness or connectors.

3.CHECK THROTTLE CONTROL MOTOR

Refer to EC-265, "Component Inspection".

Is the inspection result normal?

YES >> GO TO 4.
NO >> GO TO 5.

4. CHECK INTERMITTENT INCIDENT

Refer to GI-33, "Intermittent Incident".

Is the inspection result normal?

YES >> Replace electric throttle control actuator. Refer to EM-29, "WITH EGR CONTROL VALVE : Exploded View".
NO >> Repair or replace harness or connectors.

Component Inspection

INFOID:0000000006059218

1. CHECK THROTTLE CONTROL MOTOR

1. Disconnect electric throttle control actuator harness connector.
2. Check resistance between electric throttle control actuator terminals as follows.

Terminals	Resistance [at 25°C (77°F)]
5 and 6	Approx. 1 - 15 Ω

Is the inspection result normal?

YES >> INSPECTION END
NO >> Replace electric throttle control actuator. Refer to EM-29, "WITH EGR CONTROL VALVE : Exploded View".

P2119 ELECTRIC THROTTLE CONTROL ACTUATOR

DTC Logic

INFOID:0000000005989357

DTC DETECTION LOGIC

DTC No.	Trouble diagnosis name	DTC detecting condition		Possible cause
P2119	Electric throttle control actuator	A)	Electric throttle control actuator does not function properly due to the return spring malfunction.	• Electric throttle control actuator
		B)	Throttle valve opening angle in fail-safe mode is not in specified range.	
		C)	ECM detect the throttle valve is stuck open.	

DTC CONFIRMATION PROCEDURE

1. PRECONDITIONING

If DTC Confirmation Procedure has been previously conducted, always turn ignition switch OFF and wait at least 10 seconds before conducting the next test.

>> GO TO 2.

2. PERFORM DTC CONFIRMATION PROCEDURE FOR MALFUNCTION A AND B

1. Turn ignition switch ON and wait at least 1 second.
2. Set selector lever to 1st position and wait at least 3 seconds.
3. Set selector lever to Neutral position.
4. Turn ignition switch OFF and wait at least 10 seconds.
5. Turn ignition switch ON and wait at least 1 second.
6. Set selector lever to 1st position and wait at least 3 seconds.
7. Set selector lever to Neutral position.
8. Turn ignition switch OFF, wait at least 10 seconds and then turn ON.
9. Check DTC.

Is DTC detected?

YES >> Go to EC-266, "Diagnosis Procedure".
NO >> GO TO 3.

3. PERFORM DTC CONFIRMATION PROCEDURE FOR MALFUNCTION C

1. Turn ignition switch ON and wait at least 1 second.
2. Set selector lever to 1st position and wait at least 3 seconds.
3. Set selector lever to Neutral position.
4. Start engine and let it idle for 3 seconds.
5. Check DTC.

Is DTC detected?

YES >> Go to EC-266, "Diagnosis Procedure".
NO >> INSPECTION END

Diagnosis Procedure

INFOID:0000000006059219

1. CHECK ELECTRIC THROTTLE CONTROL ACTUATOR VISUALLY

1. Turn ignition switch OFF.
2. Remove the intake air duct.

3. Check if foreign matter is caught between the throttle valve (1) and the housing.

- ⇦: Vehicle front

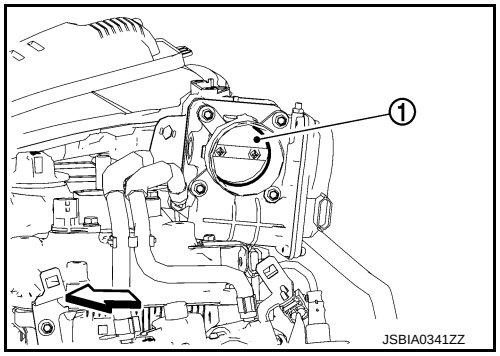

Is the inspection result normal?

YES >> Replace electric throttle control actuator. Refer to EM-29, "WITH EGR CONTROL VALVE : Exploded View".

NO >> Remove the foreign matter and clean the electric throttle control actuator inside.

P2122, P2123 APP SENSOR

DTC Logic

INFOID:0000000005989360

DTC DETECTION LOGIC

NOTE:
If DTC P2122 or P2123 is displayed with DTC P0643, first perform the trouble diagnosis for DTC P0643. Refer to EC-228, "DTC Logic".

DTC No.	Trouble diagnosis name	DTC detecting condition	Possible cause
P2122	Accelerator pedal position sensor 1 circuit low input	An excessively low voltage from the APP sensor 1 is sent to ECM.	• Harness or connectors (APP sensor 1 circuit is open or shorted.) • Accelerator pedal position sensor (APP sensor 1)
P2123	Accelerator pedal position sensor 1 circuit high input	An excessively high voltage from the APP sensor 1 is sent to ECM.	

DTC CONFIRMATION PROCEDURE

1. PRECONDITIONING

If DTC Confirmation Procedure has been previously conducted, always turn ignition switch OFF and wait at least 10 seconds before conducting the next test.
TESTING CONDITION:
Before performing the following procedure, confirm that battery voltage is more than 10 V at idle.

>> GO TO 2.

2. PERFORM DTC CONFIRMATION PROCEDURE

1. Start engine and let it idle for 1 second.
2. Check DTC.

Is DTC detected?

YES >> Go to EC-268, "Diagnosis Procedure".
NO >> INSPECTION END

Diagnosis Procedure

INFOID:0000000005989361

1. CHECK GROUND CONNECTION

1. Turn ignition switch OFF.
2. Check ground connection E38. Refer to Ground Inspection in GI-35, "Circuit Inspection".

Is the inspection result normal?

YES >> GO TO 2.
NO >> Repair or replace ground connection.

2. CHECK APP SENSOR 1 POWER SUPPLY CIRCUIT

1. Disconnect accelerator pedal position (APP) sensor harness connector.
2. Turn ignition switch ON.
3. Check the voltage between APP sensor harness connector and ground.

APP sensor		Ground	Voltage
Connector	Terminal		
M206	4	Ground	Approx. 5 V

Is the inspection result normal?

YES >> GO TO 3.
NO >> Repair open circuit or short to ground or short to power in harness or connectors.

3. CHECK APP SENSOR 1 GROUND CIRCUIT FOR OPEN AND SHORT

1. Turn ignition switch OFF.
2. Disconnect ECM harness connector.

3. Check the continuity between APP sensor harness connector and ECM harness connector.

APP sensor		ECM		Continuity
Connector	Terminal	Connector	Terminal	
M206	2	E16	111	Existed

4. Also check harness for short to ground and short to power.

Is the inspection result normal?

YES >> GO TO 4.
NO >> Repair open circuit or short to ground or short to power in harness or connectors.

4. CHECK APP SENSOR 1 INPUT SIGNAL CIRCUIT FOR OPEN AND SHORT

1. Check the continuity between APP sensor harness connector and ECM harness connector.

APP sensor		ECM		Continuity
Connector	Terminal	Connector	Terminal	
M206	3	E16	110	Existed

2. Also check harness for short to ground and short to power.

Is the inspection result normal?

YES >> GO TO 5.
NO >> Repair open circuit or short to ground or short to power in harness or connectors.

5. CHECK APP SENSOR

Refer to EC-269, "Component Inspection".

Is the inspection result normal?

YES >> GO TO 6.
NO >> Replace accelerator pedal assembly. Refer to ACC-3, "Exploded View".

6. CHECK INTERMITTENT INCIDENT

Refer to GI-33, "Intermittent Incident".

>> INSPECTION END

Component Inspection

INFOID:0000000005989362

1. CHECK ACCELERATOR PEDAL POSITION SENSOR

1. Reconnect all harness connectors disconnected.
2. Turn ignition switch ON.
3. Check the voltage between ECM harness connector and ground.

ECM			Condition		Voltage
Connector	+	–			
	Terminal	Terminal			
E16	110 (APP sensor 1 signal)	111	Accelerator pedal	Fully released	0.6 - 0.9 V
				Fully depressed	3.9 - 4.7 V
	103 (APP sensor 2 signal)	104		Fully released	0.3 - 0.6 V
				Fully depressed	1.95 - 2.4 V

Is the inspection result normal?

YES >> INSPECTION END
NO >> Replace accelerator pedal assembly. Refer to ACC-3, "Exploded View".

P2127, P2128 APP SENSOR

DTC Logic

INFOID:0000000005989364

DTC DETECTION LOGIC

DTC No.	Trouble diagnosis name	DTC detecting condition	Possible cause
P2127	Accelerator pedal position sensor 2 circuit low input	An excessively low voltage from the APP sensor 2 is sent to ECM.	• Harness or connectors (APP sensor 2 circuit is open or shorted.) [Crankshaft position sensor (POS) circuit is shorted.] (Refrigerant pressure sensor circuit is shorted.) (Battery current sensor circuit is shorted.) • Accelerator pedal position sensor (APP sensor 2) • Crankshaft position sensor (POS) • Refrigerant pressure sensor • Battery current sensor
P2128	Accelerator pedal position sensor 2 circuit high input	An excessively high voltage from the APP sensor 2 is sent to ECM.	

DTC CONFIRMATION PROCEDURE

1.PRECONDITIONING

If DTC Confirmation Procedure has been previously conducted, always turn ignition switch OFF and wait at least 10 seconds before conducting the next test.

TESTING CONDITION:

Before performing the following procedure, confirm that battery voltage is more than 10 V at idle.

>> GO TO 2.

2.PERFORM DTC CONFIRMATION PROCEDURE

1. Start engine and let it idle for 1 second.
2. Check DTC.

Is DTC detected?

YES >> Go to EC-270, "Diagnosis Procedure".
NO >> INSPECTION END

Diagnosis Procedure

INFOID:0000000005989365

1.CHECK APP SENSOR 2 POWER SUPPLY CIRCUIT-I

1. Disconnect accelerator pedal position (APP) sensor harness connector.
2. Turn ignition switch ON.
3. Check the voltage between APP sensor harness connector and ground.

APP sensor		Ground	Voltage
Connector	Terminal		
E110	5	Ground	Approx. 5 V

Is the inspection result normal?

YES >> GO TO 5.
NO >> GO TO 2.

2.CHECK APP SENSOR 2 POWER SUPPLY CIRCUIT-II

1. Turn ignition switch OFF.
2. Disconnect ECM harness connector.
3. Check the continuity between APP sensor harness connector and ECM harness connector.

APP sensor		ECM		Continuity
Connector	Terminal	Connector	Terminal	
E110	5	E18	102	Existed

Is the inspection result normal?

YES >> GO TO 3.
NO >> Repair open circuit or short to ground or short to power in harness or connectors.

3. CHECK SENSOR POWER SUPPLY CIRCUIT

Check harness for short to power and short to ground, between the following terminals.

ECM		Sensor		
Connector	Terminal	Item	Connector	Terminal
E16	71	Battery current sensor	E16	1
	75	CKP sensor (POS)	F20	1
E18	101	Refrigerant pressure sensor	E49	3
	102	APP sensor	E110	5

Is the inspection result normal?

YES >> GO TO 4.
NO >> Repair short to ground or short to power in harness or connectors.

4. CHECK COMPONENTS

Check the following.
- Battery current sensor (Refer to EC-244, "Component Inspection".)
- Crankshaft position sensor (POS) (Refer to EC-199, "Component Inspection".)
- Refrigerant pressure sensor (Refer to EC-297, "Diagnosis Procedure".)

Is the inspection result normal?

YES >> GO TO 8.
NO >> Replace malfunctioning component.

5. CHECK APP SENSOR 2 GROUND CIRCUIT FOR OPEN AND SHORT

1. Turn ignition switch OFF.
2. Disconnect ECM harness connector.
3. Check the continuity between APP sensor harness connector and ECM harness connector.

APP sensor		ECM		Continuity
Connector	Terminal	Connector	Terminal	
E110	1	E18	104	Existed

4. Also check harness for short to ground and short to power.

Is the inspection result normal?

YES >> GO TO 6.
NO >> Repair open circuit or short to ground or short to power in harness or connectors.

6. CHECK APP SENSOR 2 INPUT SIGNAL CIRCUIT FOR OPEN AND SHORT

1. Check the continuity between APP sensor harness connector and ECM harness connector.

APP sensor		ECM		Continuity
Connector	Terminal	Connector	Terminal	
E110	6	E18	103	Existed

2. Also check harness for short to ground and short to power.

Is the inspection result normal?

YES >> GO TO 7.

NO >> Repair open circuit or short to ground or short to power in harness or connectors.

7. CHECK APP SENSOR

Check APP sensor. Refer to EC-272, "Component Inspection".

Is the inspection result normal?

YES >> GO TO 8.
NO >> Replace accelerator pedal assembly. Refer to ACC-3, "Exploded View".

8. CHECK INTERMITTENT INCIDENT

Check intermittent incident. Refer to GI-33, "Intermittent Incident".

>> Repair or replace malfunctioning part.

Component Inspection

INFOID:0000000005989366

1. CHECK ACCELERATOR PEDAL POSITION SENSOR

1. Reconnect all harness connectors disconnected.
2. Turn ignition switch ON.
3. Check the voltage between ECM harness connector and ground.

ECM			Condition		Voltage
Connector	+	–			
	Terminal	Terminal			
E16	110 (APP sensor 1 signal)	111	Accelerator pedal	Fully released	0.6 - 0.9 V
				Fully depressed	3.9 - 4.7 V
	103 (APP sensor 2 signal)	104		Fully released	0.3 - 0.6 V
				Fully depressed	1.95 - 2.4 V

Is the inspection result normal?

YES >> INSPECTION END
NO >> Replace accelerator pedal assembly. Refer to ACC-3, "Exploded View".

P2135 TP SENSOR

DTC Logic

INFOID:0000000005989368

DTC DETECTION LOGIC

NOTE:
If DTC P2135 is displayed with DTC P0643, first perform the trouble diagnosis for DTC P0643. Refer to EC-228, "DTC Logic".

DTC No.	Trouble diagnosis name	DTC detecting condition	Possible cause
P2135	Throttle position sensor circuit range/performance	Rationally incorrect voltage is sent to ECM compared with the signals from TP sensor 1 and TP sensor 2.	• Harness or connector (TP sensor 1 and 2 circuit is open or shorted.) • Electric throttle control actuator (TP sensor 1 and 2)

DTC CONFIRMATION PROCEDURE

1. PRECONDITIONING

If DTC Confirmation Procedure has been previously conducted, always turn ignition switch OFF and wait at least 10 seconds before conducting the next test.
TESTING CONDITION:
Before performing the following procedure, confirm that battery voltage is more than 10 V at idle.

>> GO TO 2.

2. PERFORM DTC CONFIRMATION PROCEDURE

1. Start engine and let it idle for 1 second.
2. Check DTC.

Is DTC detected?

YES >> Go to EC-273, "Diagnosis Procedure".
NO >> INSPECTION END

Diagnosis Procedure

INFOID:0000000005989369

1. CHECK THROTTLE POSITION SENSOR POWER SUPPLY CIRCUIT

1. Disconnect electric throttle control actuator harness connector.
2. Turn ignition switch ON.
3. Check the voltage between electric throttle control actuator harness connector and ground.

Electric throttle control actuator		Ground	Voltage
Connector	Terminal		
F29	1	Ground	Approx. 5 V

Is the inspection result normal?

YES >> GO TO 2.
NO >> Repair open circuit or short to ground or short to power in harness or connectors.

2. CHECK THROTTLE POSITION SENSOR GROUND CIRCUIT FOR OPEN AND SHORT

1. Turn ignition switch OFF.
2. Disconnect ECM harness connector.
3. Check the continuity between electric throttle control actuator harness connector and ground.

Electric throttle control actuator		ECM		Continuity
Connector	Terminal	Connector	Terminal	
F29	4	F8	36	Existed

4. Also check harness for short to ground and short to power.

Is the inspection result normal?

YES >> GO TO 3.
NO >> Repair open circuit or short to ground or short to power in harness or connectors.

3. CHECK THROTTLE POSITION SENSOR INPUT SIGNAL CIRCUIT FOR OPEN AND SHORT

1. Check the continuity between electric throttle control actuator harness connector and ground.

Electric throttle control actuator		ECM		Continuity
Connector	Terminal	Connector	Terminal	
F29	2	F8	33	Existed
	3		34	

2. Also check harness for short to ground and short to power.

Is the inspection result normal?

YES >> GO TO 4.
NO >> Repair open circuit or short to ground or short to power in harness or connectors.

4. CHECK THROTTLE POSITION SENSOR

Check throttle position sensor. Refer to EC-274, "Component Inspection".

Is the inspection result normal?

YES >> GO TO 5.
NO >> Replace electric throttle control actuator. Refer to EM-29, "WITH EGR CONTROL VALVE : Exploded View".

5. CHECK INTERMITTENT INCIDENT

Check intermittent incident. Refer to GI-33, "Intermittent Incident".

>> Repair or replace malfunctioning part.

Component Inspection

INFOID:0000000005989370

1. CHECK THROTTLE POSITION SENSOR

1. Turn ignition switch OFF.
2. Reconnect all harness connectors disconnected.
3. Perform EC-105, "Work Procedure".
4. Turn ignition switch ON.
5. Set selector lever to 1st position.
6. Check the voltage between ECM harness connector and ground.

ECM			Condition		Voltage
Connector	+	–			
	Terminal	Terminal			
F16	33 (TP sensor 1 signal)	36	Accelerator pedal	Fully released	More than 0.36 V
				Fully depressed	Less than 4.75 V
	34 (TP sensor 2 signal)			Fully released	Less than 4.75 V
				Fully depressed	More than 0.36 V

Is the inspection result normal?

YES >> INSPECTION END
NO >> Replace electric throttle control actuator. Refer to EM-29, "WITH EGR CONTROL VALVE : Exploded View".

P2138 APP SENSOR

DTC Logic

INFOID:0000000005989372

DTC DETECTION LOGIC

NOTE:
If DTC P2138 is displayed with DTC P0643, first perform the trouble diagnosis for DTC P0643. Refer to EC-228, "DTC Logic".

DTC No.	Trouble diagnosis name	DTC detecting condition	Possible cause
P2138	Accelerator pedal position sensor circuit range/performance	Rationally incorrect voltage is sent to ECM compared with the signals from APP sensor 1 and APP sensor 2.	• Harness or connector (APP sensor 1 and 2 circuit is open or shorted.) [Crankshaft position sensor (POS) circuit is shorted.) (Refrigerant pressure sensor circuit is shorted.) • Accelerator pedal position sensor (APP sensor 1 and 2) • Crankshaft position sensor (POS) • Refrigerant pressure sensor

DTC CONFIRMATION PROCEDURE

1. PRECONDITIONING

If DTC Confirmation Procedure has been previously conducted, always turn ignition switch OFF and wait at least 10 seconds before conducting the next test.
TESTING CONDITION:
Before performing the following procedure, confirm that battery voltage is more than 10 V at idle.

>> GO TO 2.

2. PERFORM DTC CONFIRMATION PROCEDURE

1. Start engine and let it idle for 1 second.
2. Check DTC.

Is DTC detected?

YES >> Go to EC-275, "Diagnosis Procedure".
NO >> INSPECTION END

Diagnosis Procedure

INFOID:0000000005989373

1. CHECK APP SENSOR 1 POWER SUPPLY CIRCUIT

1. Disconnect accelerator pedal position (APP) sensor harness connector.
2. Turn ignition switch ON.
3. Check the voltage between APP sensor harness connector and ground.

APP sensor		Ground	Voltage
Connector	Terminal		
E110	4	Ground	Approx. 5 V

Is the inspection result normal?

YES >> GO TO 2.
NO >> Repair open circuit or short to ground or shot to power in harness or connectors.

2. CHECK APP SENSOR 2 POWER SUPPLY CIRCUIT-I

Check the voltage between APP sensor harness connector and ground.

APP sensor		Ground	Voltage
Connector	Terminal		
E110	5	Ground	Approx. 5 V

Is the inspection result normal?

YES >> GO TO 6.
NO >> GO TO 3.

3. CHECK APP SENSOR 2 POWER SUPPLY CIRCUIT-II

1. Turn ignition switch OFF.
2. Disconnect ECM harness connector.
3. Check the continuity between APP sensor harness connector and ECM harness connector.

APP sensor		ECM		Continuity
Connector	Terminal	Connector	Terminal	
E110	5	E18	102	Existed

Is the inspection result normal?

YES >> GO TO 4.
NO >> Repair open circuit or short to ground or shot to power in harness or connectors.

4. CHECK SENSOR POWER SUPPLY CIRCUIT

Check harness for short to power and short to ground, between the following terminals.

ECM		Sensor		
Connector	Terminal	Item	Connector	Terminal
E16	71	Battery current sensor	E16	1
	75	CKP sensor (POS)	F20	1
E18	101	Refrigerant pressure sensor	E49	3
	102	APP sensor	E110	5

Is the inspection result normal?

YES >> GO TO 5.
NO >> Repair short to ground or short to power in harness or connectors.

5. CHECK COMPONENTS

Check the following.
- Battery current sensor (Refer to EC-244, "Component Inspection".)
- Crankshaft position sensor (POS) (Refer to EC-199, "Component Inspection".)
- Refrigerant pressure sensor (Refer to EC-297, "Diagnosis Procedure".)

Is the inspection result normal?

YES >> GO TO 8.
NO >> Replace malfunctioning component.

6. CHECK APP SENSOR GROUND CIRCUIT FOR OPEN AND SHORT

1. Turn ignition switch OFF.
2. Disconnect ECM harness connector.
3. Check the continuity between APP sensor harness connector and ECM harness connector as follows.

APP sensor		ECM		Continuity
Connector	Terminal	Connector	Terminal	
E110	1	E18	104	Existed
	2		111	

4. Also check harness for short to ground and short to power.

Is the inspection result normal?

YES >> GO TO 7.
NO >> Repair open circuit or short to ground or shot to power in harness or connectors.

7. CHECK APP SENSOR INPUT SIGNAL CIRCUIT FOR OPEN AND SHORT

1. Check the continuity between APP sensor harness connector and ECM harness connector as follows.

APP sensor		ECM		Continuity
Connector	Terminal	Connector	Terminal	
E110	3	E18	110	Existed
	6		103	

2. Also check harness for short to ground and short to power.

Is the inspection result normal?

YES >> GO TO 8.
NO >> Repair open circuit or short to ground or shot to power in harness or connectors.

8. CHECK APP SENSOR

Check app sensor. Refer to EC-277, "Component Inspection".

Is the inspection result normal?

YES >> GO TO 9.
NO >> Replace accelerator pedal assembly. Refer to ACC-3, "Exploded View".

9. CHECK INTERMITTENT INCIDENT

Check intermittent incident. Refer to GI-33, "Intermittent Incident".

>> Repair or replace malfunctioning part.

Component Inspection

INFOID:0000000005989374

1. CHECK ACCELERATOR PEDAL POSITION SENSOR

1. Reconnect all harness connectors disconnected.
2. Turn ignition switch ON.
3. Check the voltage between ECM harness connector and ground.

ECM			Condition		Voltage
Connector	+	–			
	Terminal	Terminal			
E16	110 (APP sensor 1 signal)	111	Accelerator pedal	Fully released	0.6 - 0.9 V
				Fully depressed	3.9 - 4.7 V
	103 (APP sensor 2 signal)	104		Fully released	0.3 - 0.6 V
				Fully depressed	1.95 - 2.4 V

Is the inspection result normal?

YES >> INSPECTION END
NO >> Replace accelerator pedal assembly. Refer to ACC-3, "Exploded View".

P2A00 A/F SENSOR 1

DTC Logic

INFOID:0000000005989376

DTC DETECTION LOGIC

To judge the malfunction, the A/F signal computed by ECM from the A/F sensor 1 signal is monitored so it will not shift to LEAN side or RICH side.

DTC No.	Trouble diagnosis name	DTC detecting condition	Possible Cause
P2A00	Air fuel ratio (A/F) sensor 1 circuit range/performance	• The output voltage computed by ECM from the A/F sensor 1 signal shifts to the lean side for a specified period. • The A/F signal computed by ECM from the A/F sensor 1 signal shifts to the rich side for a specified period.	• A/F sensor 1 • A/F sensor 1 heater • Fuel pressure • Fuel injector • Intake air leaks

DTC CONFIRMATION PROCEDURE

1.PRECONDITIONING

If DTC Confirmation Procedure has been previously conducted, always turn ignition switch OFF and wait at least 10 seconds before conducting the next test.

TESTING CONDITION:

Before performing the following procedure, confirm that battery voltage is more than 11 V at idle.

>> GO TO 2.

2.PERFORM DTC CONFIRMATION PROCEDURE

1. Clear the mixture ratio self-learning value. Refer to EC-108, "Work Procedure".
2. Turn ignition switch OFF and wait at least 10 seconds.
3. Restart engine and keep the engine speed between 3,500 and 4,000 rpm for 1 minute under no load.
4. Let engine idle for 1 minute.
5. Keep engine speed between 2,500 and 3,000 rpm for 20 minutes.
6. Check 1st trip DTC.

Is 1st trip DTC detected?

YES >> Go to EC-278, "Diagnosis Procedure".
NO >> INSPECTION END

Diagnosis Procedure

INFOID:0000000005989377

1.CHECK GROUND CONNECTION

1. Turn ignition switch OFF.
2. Check ground connection E38. Refer to Ground Inspection in GI-35, "Circuit Inspection".

Is the inspection result normal?

YES >> GO TO 2.
NO >> Repair or replace ground connection.

2.RETIGHTEN A/F SENSOR 1

Loosen and retighten the A/F sensor 1. Refer to EM-32, "Exploded View".

>> GO TO 3.

3.CHECK FOR INTAKE AIR LEAK

1. Start engine and run it at idle.
2. Listen for an intake air leak after the mass air flow sensor.

Is intake air leak detected?

YES >> Repair or replace.
NO >> GO TO 4.

4.CLEAR THE MIXTURE RATIO SELF-LEARNING VALUE

1. Clear the mixture ratio self-learning value. Refer to EC-108, "Work Procedure".
2. Run engine for at least 10 minutes at idle speed.

Is the 1st trip DTC P0171 or P0172 detected? Is it difficult to start engine?

YES >> Perform trouble diagnosis for DTC P0171 or P0172. Refer to EC-179, "Diagnosis Procedure" or EC-183, "Diagnosis Procedure".
NO >> GO TO 5.

5. CHECK HARNESS CONNECTOR

1. Turn ignition switch OFF.
2. Disconnect A/F sensor 1 harness connector.
3. Check harness connector for water.

Water should not exit.

Is the inspection result normal?

YES >> GO TO 6.
NO >> Repair or replace harness connector.

6. CHECK A/F SENSOR 1 POWER SUPPLY CIRCUIT

1. Turn ignition switch ON.
2. Check the voltage between A/F sensor 1 harness connector and ground.

A/F sensor 1		Ground	Voltage
Connector	Terminal		
F50	4	Ground	Battery voltage

Is the inspection result normal?

YES >> GO TO 8.
NO >> GO TO 7.

7. DETECT MALFUNCTIONING PART

Check the following.
- Harness connectors E8, F1
- IPDM E/R harness connector E15
- 15A fuse (No. 61)
- Harness for open or short between A/F sensor 1 and fuse

>> Repair or replace harness or connectors.

8. CHECK A/F SENSOR 1 INPUT SIGNAL CIRCUIT FOR OPEN AND SHORT

1. Turn ignition switch OFF.
2. Disconnect ECM harness connector.
3. Check the continuity between A/F sensor 1 harness connector and ECM harness connector.

A/F sensor 1		ECM		Continuity
Connector	Terminal	Connector	Terminal	
F50	1	F102	49	Existed
	2		57	

4. Check the continuity between A/F sensor 1 harness connector and ground or ECM harness connector and ground.

A/F sensor 1		Ground	Continuity
Connector	Terminal		
F50	1	Ground	Not existed
	2		

ECM		Ground	Continuity
Connector	Terminal		
F8	49	Ground	Not existed
	57		

5. Also check harness for short to power.

Is the inspection result normal?

YES >> GO TO 9.
NO >> Repair open circuit, short to ground or short to power in harness or connectors.

9. CHECK A/F SENSOR 1 HEATER

Refer to EC-132, "Component Inspection".

Is the inspection result normal?

YES >> GO TO 10.
NO >> GO TO 11.

10. CHECK INTERMITTENT INCIDENT

Perform GI-33, "Intermittent Incident".

Is the inspection result normal?

YES >> GO TO 11.
NO >> Repair or replace.

11. REPLACE AIR FUEL RATIO (A/F) SENSOR 1

Replace air fuel ratio (A/F) sensor 1.

CAUTION:

- **Discard any A/F sensor which has been dropped from a height of more than 0.5 m (19.7 in) onto a hard surface such as a concrete floor; use a new one.**
- **Before installing new A/F sensor, clean exhaust system threads using Oxygen Sensor Thread Cleaner (commercial service tool) and approved anti-seize lubricant (commercial service tool).**

>> GO TO 12.

12. CLEAR THE MIXTURE RATIO SELF-LEARNING VALUE

Clear the mixture ratio self-learning value. Refer to EC-108, "Work Procedure".

>> INSPECTION END

COOLING FAN

Component Function Check

INFOID:0000000005989389

1. CHECK COOLING FAN FUNCTION

With CONSULT-III

1. Turn ignition switch ON.
2. Perform “COOLING FAN” in “ACTIVE TEST” mode with CONSULT-III.
3. Touch “LOW” and “HI” on the CONSULT-III screen.
4. Check that cooling fan operates.

NOTE:

The cooling fan operates at high speeds even when “LOW” is selected in CONSULT-III “ACTIVE TEST”.

Without CONSULT-III

1. Perform IPDM E/R auto active test and check cooling fan motor operation. Refer to PCS-11, "Diagnosis Description" (WITH I-KEY) or PCS-36, "Diagnosis Description" (WITHOUT I-KEY).
2. Check that cooling fan operates.

Is the inspection result normal?

YES >> INSPECTION END
NO >> Refer to EC-281, "Diagnosis Procedure".

Diagnosis Procedure

INFOID:0000000005989390

1. CHECK GROUND CONNECTION

1. Turn ignition switch OFF.
2. Check ground connection E38. Refer to Ground Inspection in GI-35, "Circuit Inspection".

Is the inspection result normal?

YES >> GO TO 2.
NO >> Repair or replace ground connection.

2. CHECK COOLING FAN MOTOR CIRCUIT

1. Disconnect cooling fan motor harness connector.
2. Check the continuity between IPDM E/R harness connector and cooling fan motor harness connector.

IPDM E/R		Cooling fan motor		Continuity
Connector	Terminal	Connector	Terminal	
E10	5	E62	1	Existed
	7		2	
E11	10		3	

3. Check the continuity between cooling fan motor harness connector and ground.

Cooling fan motor		Ground	Continuity
Connector	Terminal		
E62	4	Ground	Existed

4. Also check harness for short to ground and short to power.

YES or NO

YES >> GO TO 4.
NO >> GO TO 3.

3. DETECT MALFUNCTIONING PART

Check the following.

- Harness for open or short between cooling fan motor and IPDM E/R
- Harness for open or short between cooling fan motor and ground

>> Repair open circuit or short to ground or short to power in harness or connectors.

4. CHECK COOLING FAN MOTOR

Refer to EC-282, "Component Inspection".

YES or NO

YES >> GO TO 5.
NO >> Replace cooling fan motor.

5. CHECK INTERMITTENT INCIDENT

Perform GI-33, "Intermittent Incident".

YES or NO

YES >> Replace IPDM E/R. Refer to PCS-28, "Exploded View" (WITH I-KEY) or PCS-52, "Exploded View" (WITHOUT I-KEY).
NO >> Repair or replace harness or connector.

Component Inspection

INFOID:0000000005989391

1. CHECK COOLING FAN MOTOR

1. Turn ignition switch OFF.
2. Disconnect cooling fan motor harness connector.
3. Supply cooling fan motor terminals with battery voltage and check operation.

Cooling fan motor			Operation
Connector	terminals		
	(+)	(–)	
E62	1	4	Cooling fan operates.
	2	3	

Is the inspection result normal?

YES >> INSPECTION END
NO >> Replace cooling fan motor.

ELECTRICAL LOAD SIGNAL

Description

INFOID:0000000005989392

The electrical load signal (Headlamp switch signal, rear window defogger switch signal, etc.) is transferred to ECM through the CAN communication line.

Component Function Check

INFOID:0000000005989393

1. CHECK REAR WINDOW DEFOGGER SWITCH FUNCTION

1. Turn ignition switch ON.
2. Select “DATA MONITOR” mode with CONSULT-III.
3. Select “LOAD SIGNAL” and check indication under the following conditions.

Monitor item	Condition		Indication
LOAD SIGNAL	Rear window defogger switch	ON	ON
		OFF	OFF

Is the inspection result normal?

YES >> GO TO 2.
NO >> Go to EC-283, "Diagnosis Procedure".

2. CHECK LIGHTING SWITCH FUNCTION

Check “LOAD SIGNAL” indication under the following conditions.

Monitor item	Condition		Indication
LOAD SIGNAL	Lighting switch	ON at 2nd position	ON
		OFF	OFF

Is the inspection result normal?

YES >> GO TO 3.
NO >> Go to EC-283, "Diagnosis Procedure".

3. CHECK HEATER FAN CONTROL SWITCH FUNCTION

Select “HEATER FAN SW” and check indication under the following conditions.

Monitor item	Condition		Indication
HEATER FAN SW	Heater fan control switch	ON	ON
		OFF	OFF

Is the inspection result normal?

YES >> INSPECTION END
NO >> Go to EC-283, "Diagnosis Procedure".

Diagnosis Procedure

INFOID:0000000005989394

1. INSPECTION START

Confirm the malfunctioning circuit (rear window defogger, headlamp or heater fan). Refer to EC-283, "Component Function Check".

Which circuit is related to the incident?

Rear window defogger>>GO TO 2
Headlamp>>GO TO 3.
Heater fan>>GO TO 4.

2. CHECK REAR WINDOW DEFOGGER SYSTEM

Refer to DEF-14, "Work Flow".

>> INSPECTION END

3. CHECK HEADLAMP SYSTEM

Refer to EXL-59, "Work Flow".

>> INSPECTION END

4. CHECK HEATER FAN CONTROL SYSTEM

Refer to HAC-36, "Work Flow" (AUTOMATIC AIR CONDITIONING) or HAC-97, "Work Flow" (MANUAL AIR CONDITIONING).

>> INSPECTION END

FUEL INJECTOR

Component Function Check

INFOID:0000000005989395

1. INSPECTION START

Turn ignition switch to START.

Is any cylinder ignited?

YES >> GO TO 2.
NO >> Go to EC-285, "Diagnosis Procedure".

2. CHECK FUEL INJECTOR FUNCTION

With CONSULT-III

1. Start engine.
2. Perform “POWER BALANCE” in “ACTIVE TEST” mode with CONSULT-III.
3. Make sure that each circuit produces a momentary engine speed drop.

Without CONSULT-III

1. Let engine idle.
2. Listen to each fuel injector operating sound.

Clicking noise should be heard.

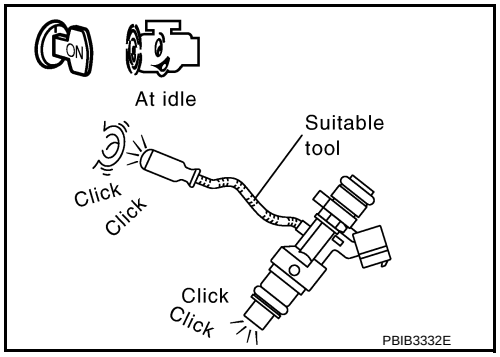

Is the inspection result normal?

YES >> INSPECTION END
NO >> Go to EC-285, "Diagnosis Procedure".

Diagnosis Procedure

INFOID:0000000005989396

1. CHECK FUEL INJECTOR POWER SUPPLY CIRCUIT

1. Turn ignition switch OFF.
2. Disconnect fuel injector harness connector.
3. Turn ignition switch ON.
4. Check the voltage between fuel injector harness connector and ground.

Fuel injector			Ground	Voltage
Cylinder	Connector	Terminal		
1	F37	1	Ground	Battery voltage
2	F38	1		
3	F39	1		
4	F40	1		

Is the inspection result normal?

YES >> GO TO 3.
NO >> GO TO 2.

2. DETECT MALFUNCTIONING PART

Check the following.

- Harness connectors E8, F1
- IPDM E/R connector E15
- 15 A fuse (No. 62)
- Harness for open or short between fuel injector and fuse

>> Repair open circuit or short to ground or short to power in harness or connectors.

3. CHECK FUEL INJECTOR OUTPUT SIGNAL CIRCUIT FOR OPEN AND SHORT

1. Turn ignition switch OFF.
2. Disconnect ECM harness connector.
3. Check the continuity between fuel injector harness connector and ECM harness connector.

Fuel injector			ECM		Continuity
Cylinder	Connector	Terminal	Connector	Terminal	
1	F37	2	F7	31	Existed
2	F38	2		30	
3	F39	2		29	
4	F40	2		25	

4. Also check harness for short to ground and short to power.

Is the inspection result normal?

YES >> GO TO 4.
NO >> Repair open circuit or short to ground or short to power in harness or connectors.

4. CHECK FUEL INJECTOR

Refer to EC-286, "Component Inspection".

Is the inspection result normal?

YES >> GO TO 5.
NO >> Replace malfunctioning fuel injector.

5. CHECK INTERMITTENT INCIDENT

Refer to GI-33, "Intermittent Incident".

Is the inspection result normal?

YES >> Replace IPDM E/R.
NO >> Repair or replace harness or connectors.

Component Inspection

INFOID:0000000005989397

1. CHECK FUEL INJECTOR

1. Turn ignition switch OFF.
2. Disconnect fuel injector harness connector.
3. Check resistance between fuel injector terminals as follows.

Terminals	Resistance
1 and 2	11.1 - 14.5 Ω [at 10 - 60°C (50 - 140°F)]

Is the inspection result normal?

YES >> INSPECTION END
NO >> Replace malfunctioning fuel injector.

FUEL PUMP

Component Function Check

INFOID:0000000005989398

1. CHECK FUEL PUMP FUNCTION

1. Turn ignition switch ON.
2. Pinch fuel feed hose (1) with two fingers.

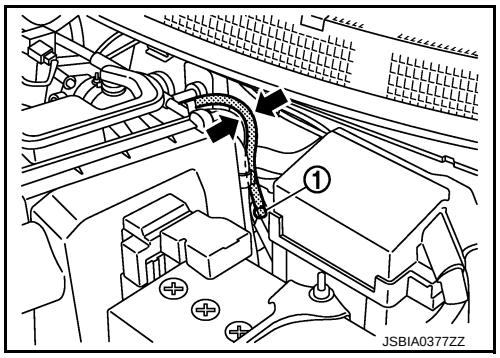

Fuel pressure pulsation should be felt on the fuel feed hose for 1 second after ignition switch is turned ON.

Is the inspection result normal?

YES >> INSPECTION END
NO >> EC-287, "Diagnosis Procedure".

Diagnosis Procedure

INFOID:0000000006066587

1. CHECK GROUND CONNECTION

1. Turn ignition switch OFF.
2. Check ground connection M95. Refer to Ground Inspection in GI-35, "Circuit Inspection".

Is the inspection result normal?

YES >> GO TO 2.
NO >> Repair or replace ground connection.

2. CHECK FPCM POWER SUPPLY CIRCUIT-I

1. Turn ignition switch OFF.
2. Disconnect FPCM harness connector.
3. Turn ignition switch ON.
4. Check the voltage between FPCM harness connector and ground.

FPCM		Ground	Voltage
Connector	Terminal		
B31	10	Ground	Battery voltage

Is the inspection result normal?

YES >> GO TO 8.
NO >> GO TO 3.

3. CHECK FPCM POWER SUPPLY CIRCUIT-II

1. Turn ignition switch OFF.
2. Disconnect IPDM E/R harness connector.
3. Check the continuity between IPDM E/R harness connector and FPCM harness connector.

IPDM E/R		FPCM		Voltage
Connector	Terminal	Connector	Terminal	
E5	13	B31	10	Battery voltage

4. Also check harness for short to ground and short to power.

Is the inspection result normal?

YES >> GO TO 5.
NO >> GO TO 4.

4. DETECT MALFUNCTIONING PART

Check the following.

- Harness connectors B3, E121 (LHD models)
- Harness connectors B1, M7 (RHD models)
- Harness connectors M6, E106 (RHD models)
- IPDM E/R harness connector E5
- Harness for open or short between FPCM and IPDM E/R

>> Repair open circuit, short to ground or short to power in harness or connectors.

5. CHECK FPCM POWER SUPPLY CIRCUIT-II

1. Disconnect IPDM E/R harness connector.
2. Check the continuity between IPDM E/R harness connector and ground.

IPDM E/R		Ground	Voltage
Connector	Terminal		
E7	77	Ground	Battery voltage

3. Also check harness for short to power.

Is the inspection result normal?

YES >> GO TO 6.
NO >> Repair open circuit or short to power in harness or connectors.

6. CHECK FUSE

1. Disconnect 15A fuse (No. 41) from IPDM E/R.
2. Check 15 A fuse.

Is the inspection result normal?

YES >> GO TO 7.
NO >> Replace 15 A fuse.

7. CHECK INTERMITTENT INCIDENT

Refer to GI-33, "Intermittent Incident".

Is the inspection result normal?

YES >> Replace IPDM E/R.
NO >> Repair open circuit, short to ground or short to power in harness or connectors.

8. CHECK FPCM GROUND CIRCUIT FOR OPEN AND SHORT

1. Turn ignition switch OFF.
2. Check the continuity between FPCM harness connector and ground.

FPCM		Ground	Continuity
Connector	Terminal		
B31	5	Ground	Existed

3. Also check harness for short to power.

Is the inspection result normal?

YES >> GO TO 5.
NO >> Repair open circuit or short to power in harness or connectors.

9. CHECK FPCM INPUT AND OUTPUT CIRCUITS FOR OPEN AND SHORT

1. Disconnect ECM harness connector.
2. Check the continuity between FPCM harness connector and ECM harness connector.

FPCM		ECM		Continuity
Connector	Terminal	Connector	Terminal	
B31	8	M160	125	Existed
	9		112	

3. Also check harness for short to ground and short to power.

Is the inspection result normal?

YES >> GO TO 11.
NO >> GO TO 10.

10. DETECT MALFUNCTIONING PART

Check the following.
- Harness connectors B1, M7
- Harness for open or short between FPCM and ECM

>> Repair open circuit, short to ground or short to power in harness or connectors.

11. CHECK FUEL PUMP CONTROL CIRCUIT FOR OPEN AND SHORT

1. Disconnect “fuel level sensor unit and fuel pump (main)” harness connector.
2. Check the continuity between FPCM harness connector and “fuel level sensor unit and fuel pump (main)” harness connector.

FPCM		Fuel level sensor unit and fuel pump (main)		Continuity
Connector	Terminal	Connector	Terminal	
B31	6	B22	3	Existed
	7		1	

3. Also check harness for short to ground and short to power.

Is the inspection result normal?

YES >> GO TO 12.
NO >> Repair open circuit, short to ground or short to power in harness or connectors.

12. CHECK FUEL PUMP

Refer to EC-289, "Component Inspection (Fuel pump)".

Is the inspection result normal?

YES >> GO TO 13.
NO >> Replace fuel pump.

13. CHECK FPCM

Refer to EC-290, "Component Inspection (FPCM)".

Is the inspection result normal?

YES >> GO TO 14.
NO >> Replace FPCM.

14. CHECK INTERMITTENT INCIDENT

Refer to GI-33, "Intermittent Incident".

>> INSPECTION END

Component Inspection (Fuel pump)

INFOID:0000000006066588

1. CHECK FUEL PUMP

1. Turn ignition switch OFF.
2. Disconnect “fuel level sensor unit and fuel pump (main)” harness connector.
3. Check resistance between “fuel level sensor unit and fuel pump (main)” terminals as follows.

Terminals	Resistance
1 and 3	0.2 - 5.0 Ω [at 25°C (77°F)]

Is the inspection result normal?

YES >> INSPECTION END
NO >> Replace “fuel level sensor unit and fuel pump (main)”

Component Inspection (FPCM)

INFOID:0000000006066589

1. CHECK FUEL PUMP CONTROL MODULE (FPCM)

1. Check the voltage between FPCM terminals under the following conditions.

FPCM			Condition	Voltage
Connector	+	–		
	Terminal	Terminal		
B31	7	6	For 1 second after turning ignition switch ON	Approx. 8.5 V
			More than 1 second after turning ignition switch ON	Approx. 0 V
			Idle speed	Approx. 8.5 V

Is the inspection result normal?

YES >> INSPECTION END
NO >> Replace FPCM.

IGNITION SIGNAL

Component Function Check

INFOID:0000000005989401

1. INSPECTION START

Turn ignition switch OFF, and restart engine.

Does the engine start?

YES-1 >> With CONSULT-III: GO TO 2.
YES-2 >> Without CONSULT-III: GO TO 3.
NO >> Go to EC-291, "Diagnosis Procedure".

2. IGNITION SIGNAL FUNCTION

With CONSULT-III

1. Perform “POWER BALANCE” in “ACTIVE TEST” mode with CONSULT-III.
2. Make sure that each circuit produces a momentary engine speed drop.

Is the inspection result normal?

YES >> INSPECTION END
NO >> Go to EC-291, "Diagnosis Procedure".

3. IGNITION SIGNAL FUNCTION

Without CONSULT-III

1. Let engine idle.
2. Check the voltage signal between ECM harness connector and ground with an oscilloscope.

ECM			Voltage signal
Connector	+	–	
	Terminal	Terminal	
F7	17	108	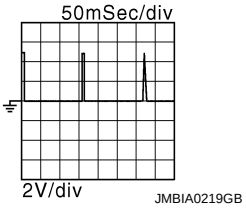
	18		
	21		
	22		

NOTE:
The pulse cycle changes depending on rpm at idle.

Is the inspection result normal?

YES >> INSPECTION END
NO >> Go to EC-291, "Diagnosis Procedure".

Diagnosis Procedure

INFOID:0000000005989402

1. CHECK IGNITION COIL POWER SUPPLY CIRCUIT-I

1. Turn ignition switch OFF, wait at least 10 seconds and then turn ON.
2. Check the voltage between ECM harness connector and ground.

ECM			Voltage
Connector	+	–	
	Terminal	Terminal	
E16	105	108	Battery voltage

Is the inspection result normal?

YES >> GO TO 2.
NO >> Go to EC-123, "Diagnosis Procedure".

2. CHECK IGNITION COIL POWER SUPPLY CIRCUIT-II

1. Turn ignition switch OFF.
2. Disconnect condenser harness connector.
3. Turn ignition switch ON.
4. Check the voltage between condenser harness connector and ground.

Condenser		Ground	Voltage
Connector	Terminal		
F13	1	Ground	Battery voltage

Is the inspection result normal?

YES >> GO TO 5.
NO >> GO TO 3.

3. CHECK IGNITION COIL POWER SUPPLY CIRCUIT-III

1. Turn ignition switch OFF.
2. Disconnect IPDM E/R harness connector E11.
3. Check the continuity between IPDM E/R harness connector and condenser harness connector.

IPDM E/R		Condenser		Continuity
Connector	Terminal	Connector	Terminal	
E14	44	F13	1	Existed

4. Also check harness for short to ground and short to power.

Is the inspection result normal?

YES >> GO TO 11.
NO >> GO TO 4.

4. DETECT MALFUNCTIONING PART

Check the following.
- Harness connectors E8, F1
- Harness for open or short between IPDM E/R and condenser

>> Repair open circuit or short to ground or short to power in harness or connectors.

5. CHECK CONDENSER GROUND CIRCUIT FOR OPEN AND SHORT

1. Turn ignition switch OFF.
2. Check the continuity between condenser harness connector and ground.

Condenser		Ground	Continuity
Connector	Terminal		
F13	2	Ground	Existed

3. Also check harness for short to power.

Is the inspection result normal?

YES >> GO TO 6.
NO >> Repair open circuit or short to ground or short to power in harness or connectors.

6. CHECK CONDENSER

Refer to EC-295, "Component Inspection (Condenser)"

Is the inspection result normal?

YES >> GO TO 7.
NO >> Replace condenser.

7. CHECK IGNITION COIL POWER SUPPLY CIRCUIT-V

1. Reconnect all harness connectors disconnected.

2. Disconnect ignition coil harness connector.
3. Turn ignition switch ON.
4. Check the voltage between ignition coil harness connector and ground.

Ignition coil			Ground	Voltage
Cylinder	Connector	Terminal		
1	F33	3	Ground	Battery voltage
2	F34	3		
3	F35	3		
4	F36	3		

Is the inspection result normal?

YES >> GO TO 8.
NO >> Repair open circuit or short to ground or short to power in harness or connectors.

8. CHECK IGNITION COIL GROUND CIRCUIT FOR OPEN AND SHORT

1. Turn ignition switch OFF.
2. Check the continuity between ignition coil harness connector and ground.

Ignition coil			Ground	Continuity
Cylinder	Connector	Terminal		
1	F33	2	Ground	Existed
2	F34	2		
3	F35	2		
4	F36	2		

3. Also check harness for short to power.

Is the inspection result normal?

YES >> GO TO 9.
NO >> Repair open circuit or short to power in harness or connectors.

9. CHECK IGNITION COIL OUTPUT SIGNAL CIRCUIT FOR OPEN AND SHORT

1. Disconnect ECM harness connector.
2. Check the continuity between ECM harness connector and ignition coil harness connector.

Ignition coil			ECM		Continuity
Cylinder	Connector	Terminal	Connector	Terminal	
1	F33	1	F7	17	Existed
2	F34	1		18	
3	F35	1		22	
4	F36	1		21	

3. Also check harness for short to ground and short to power.

Is the inspection result normal?

YES >> GO TO 10.
NO >> Repair open circuit or short to ground or short to power in harness or connectors.

10. CHECK IGNITION COIL WITH POWER TRANSISTOR

Refer to EC-294, "Component Inspection (Ignition Coil with Power Transistor)".

Is the inspection result normal?

YES >> GO TO 11.
NO >> Replace malfunctioning ignition coil with power transistor.

11. CHECK INTERMITTENT INCIDENT

Refer to GI-33, "Intermittent Incident".

>> INSPECTION END

Component Inspection (Ignition Coil with Power Transistor)

INFOID:0000000005989403

1. CHECK IGNITION COIL WITH POWER TRANSISTOR-I

1. Turn ignition switch OFF.
2. Disconnect ignition coil harness connector.
3. Check resistance between ignition coil terminals as follows.

Terminals	Resistance
1 and 2	Except 0 or ∞ Ω [at 25°C (77°F)]
1 and 3	Except 0 Ω [at 25°C (77°F)]
2 and 3	

Is the inspection result normal?

YES >> GO TO 2.
NO >> Replace malfunctioning ignition coil with power transistor.

2. CHECK IGNITION COIL WITH POWER TRANSISTOR-II

CAUTION:
Do the following procedure in the place where ventilation is good without the combustible.

1. Turn ignition switch OFF.
2. Reconnect all harness connectors disconnected.
3. Remove fuel pump fuse in IPDM E/R to release fuel pressure.
   NOTE:
   Do not use CONSULT-III to release fuel pressure, or fuel pressure applies again during the following procedure.
4. Start engine.
5. After engine stalls, crank it two or three times to release all fuel pressure.
6. Turn ignition switch OFF.
7. Remove all ignition coil harness connectors to avoid the electrical discharge from the ignition coils.
8. Remove ignition coil and spark plug of the cylinder to be checked.
9. Crank engine for 5 seconds or more to remove combustion gas in the cylinder.
10. Connect spark plug and harness connector to ignition coil.
11. Fix ignition coil using a rope etc. with gap of 13 - 17 mm (0.52 - 0.66 in) between the edge of the spark plug and grounded metal portion as shown in the figure.
12. Crank engine for about three seconds, and check whether spark is generated between the spark plug and the grounded metal portion.

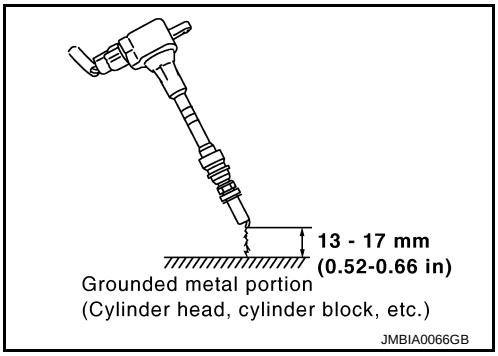

Spark should be generated.

CAUTION:
- **Do not approach to the spark plug and the ignition coil within 50 cm (19.7 in). Be careful not to get an electrical shock while checking, because the electrical discharge voltage becomes 20 kV or more.**
- **It might cause to damage the ignition coil if the gap of more than 17 mm (0.66 in) is taken.**

NOTE:
When the gap is less than 13 mm (0.52 in), the spark might be generated even if the coil is malfunctioning.

Is the inspection result normal?

YES >> INSPECTION END
NO >> Replace malfunctioning ignition coil with power transistor.

Component Inspection (Condenser)

INFOID:0000000005989404

1. CHECK CONDENSER

1. Turn ignition switch OFF.
2. Disconnect condenser harness connector.
3. Check resistance between condenser terminals as follows.

Terminals	Resistance [at 25°C (77°F)]
1 and 2	Above 1 MΩ

Is the inspection result normal?

YES >> INSPECTION END
NO >> Replace condenser.

MALFUNCTION INDICATOR LAMP

Component Function Check

INFOID:0000000005989407

1.CHECK MIL FUNCTION

1. Turn ignition switch ON.
2. Make sure that MIL lights up.

Is the inspection result normal?

YES >> INSPECTION END
NO >> Go to EC-296, "Diagnosis Procedure".

Diagnosis Procedure

INFOID:0000000005989408

1.CHECK DTC

Check that DTC U1001 is not displayed.

Is DTC detected?

YES >> Perform trouble diagnosis for DTC U1001. Refer to EC-126, "Diagnosis Procedure".
NO >> GO TO 2.

2.CHECK COMBINATION METER

Refer to MWI-18, "CONSULT-III Function".

Is DTC detected?

YES >> Perform troubleshooting relevant to DTC indicated.
NO >> GO TO 3.

3.CHECK INTERMITTENT INCIDENT

Refer to GI-33, "Intermittent Incident".

Is the inspection result normal?

YES >> Replace combination meter.
NO >> Repair or replace harness or connectors.

REFRIGERANT PRESSURE SENSOR

Component Function Check

INFOID:0000000005989409

1. CHECK REFRIGERANT PRESSURE SENSOR OVERALL FUNCTION

1. Start engine and warm it up to normal operating temperature.
2. Turn A/C switch and blower fan switch ON.
3. Check the voltage between ECM harness connector and ground.

ECM			Voltage
Connector	+	–	
	Terminal	Terminal	
F8	41 (Refrigerant pressure sensor signal)	48	1.0 - 4.0V

Is the inspection result normal?

YES >> INSPECTION END
NO >> Go to EC-297, "Diagnosis Procedure".

Diagnosis Procedure

INFOID:0000000005989410

1. CHECK GROUND CONNECTION

1. Turn A/C switch and blower fan switch OFF.
2. Stop engine.
3. Turn ignition switch OFF.
4. Check ground connection E38. Refer to Ground Inspection in GI-35, "Circuit Inspection".

Is the inspection result normal?

YES >> GO TO 2.
NO >> Repair or replace ground connection.

2. CHECK REFRIGERANT PRESSURE SENSOR POWER SUPPLY CIRCUIT

1. Disconnect refrigerant pressure sensor harness connector.
2. Turn ignition switch ON.
3. Check the voltage between refrigerant pressure sensor harness connector and ground.

Refrigerant pressure sensor		Ground	Voltage
Connector	Terminal		
E49	3	Ground	Approx. 5 V

Is the inspection result normal?

YES >> GO TO 4.
NO >> GO TO 3.

3. DETECT MALFUNCTIONING PART

Check the following.
- Harness connectors E8, F1
- Harness for open or short between ECM and refrigerant pressure sensor

>> Repair open circuit or short to ground or short to power in harness or connectors.

4. CHECK REFRIGERANT PRESSURE SENSOR GROUND CIRCUIT FOR OPEN AND SHORT

1. Turn ignition switch OFF.
2. Disconnect ECM harness connector.
3. Check the continuity between refrigerant pressure sensor harness connector and ECM harness connector.

Refrigerant pressure sensor		ECM		Continuity
Connector	Terminal	Connector	Terminal	
E49	1	F8	48	Existed

4. Also check harness for short to ground and short to power.

Is the inspection result normal?

YES >> GO TO 6.
NO >> GO TO 5.

5. DETECT MALFUNCTIONING PART

Check the following.
- Harness connectors E8, F1
- Harness for open or short between ECM and refrigerant pressure sensor

>> Repair open circuit or short to ground or short to power in harness or connectors.

6. CHECK REFRIGERANT PRESSURE SENSOR INPUT SIGNAL CIRCUIT FOR OPEN AND SHORT

1. Check the continuity between ECM harness connector and refrigerant pressure sensor harness connector.

Refrigerant pressure sensor		ECM		Continuity
Connector	Terminal	Connector	Terminal	
E49	2	F8	41	Existed

2. Also check harness for short to ground and short to power.

Is the inspection result normal?

YES >> GO TO 8.
NO >> GO TO 7.

7. DETECT MALFUNCTIONING PART

Check the following.
- Harness connectors E8, F1
- Harness for open or short between ECM and refrigerant pressure sensor

>> Repair open circuit or short to ground or short to power in harness or connectors.

8. CHECK INTERMITTENT INCIDENT

Refer to GI-33, "Intermittent Incident".

Is the inspection result normal?

YES >> Replace refrigerant pressure sensor.
NO >> Repair or replace.

SYMPTOM DIAGNOSIS

ENGINE CONTROL SYSTEM SYMPTOMS

Symptom Table

INFOID:0000000005989414

SYSTEM — BASIC ENGINE CONTROL SYSTEM

		SYMPTOM													Reference page
		HARD/NO START/RESTART (EXCP. HA)	ENGINE STALL	HESITATION/SURGING/FLAT SPOT	SPARK KNOCK/DETONATION	LACK OF POWER/POOR ACCELERATION	HIGH IDLE/LOW IDLE	ROUGH IDLE/HUNTING	IDLING VIBRATION	SLOW/NO RETURN TO IDLE	OVERHEATS/WATER TEMPERATURE HIGH	EXCESSIVE FUEL CONSUMPTION	EXCESSIVE OIL CONSUMPTION	BATTERY DEAD (UNDER CHARGE)	
Warranty symptom code		AA	AB	AC	AD	AE	AF	AG	AH	AJ	AK	AL	AM	HA	
Fuel	Fuel pump circuit	1	1	2	3	2		2	2			3		2	EC-287, "Component Function Check"
	Fuel pressure regulator system	3	3	4	4	4	4	4	4	4		4			EC-113, "Work Procedure"
	Fuel injector circuit	1	1	2	3	2		2	2			2			EC-285, "Component Function Check"
	Evaporative emission system	3	3	4	4	4	4	4	4	4		4			EC-41, "EVAPORATIVE EMISSION SYSTEM : System Description"

		SYMPTOM													Reference page
		HARD/NO START/RESTART (EXCP. HA)	ENGINE STALL	HESITATION/SURGING/FLAT SPOT	SPARK KNOCK/DETONATION	LACK OF POWER/POOR ACCELERATION	HIGH IDLE/LOW IDLE	ROUGH IDLE/HUNTING	IDLING VIBRATION	SLOW/NO RETURN TO IDLE	OVERHEATS/WATER TEMPERATURE HIGH	EXCESSIVE FUEL CONSUMPTION	EXCESSIVE OIL CONSUMPTION	BATTERY DEAD (UNDER CHARGE)	
Warranty symptom code		AA	AB	AC	AD	AE	AF	AG	AH	AJ	AK	AL	AM	HA	
Air	Positive crankcase ventilation system	3	3	4	4	4	4	4	4	4		4	1		EC-15, "Positive Crankcase Ventilation"
	Incorrect idle speed adjustment						1	1	1	1		1			EC-109, "Work Procedure"
	Electric throttle control actuator	1	1	2	3	3	2	2	2	2		2		2	EC-260, "DTC Logic" EC-264, "DTC Logic" EC-266, "DTC Logic"
Ignition	Incorrect ignition timing adjustment	3	3	1	1	1		1	1			1			EC-309, "Inspection"
	Ignition signal circuit	1	1	2	2	2		2	2			2			EC-291, "Diagnosis Procedure"
EGR	EGR volume control valve circuit		2	2	3	3	3	2	2	3		3			EC-206, "DTC Logic"
	EGR system	2	1												EC-203, "DTC Logic", EC-239, "DTC Logic"
Main power supply and ground circuit		2	2	3	3	3		3	3		2	3			EC-123, "Diagnosis Procedure"

	SYMPTOM													Reference page
	HARD/NO START/RESTART (EXCP. HA)	ENGINE STALL	HESITATION/SURGING/FLAT SPOT	SPARK KNOCK/DETONATION	LACK OF POWER/POOR ACCELERATION	HIGH IDLE/LOW IDLE	ROUGH IDLE/HUNTING	IDLING VIBRATION	SLOW/NO RETURN TO IDLE	OVERHEATS/WATER TEMPERATURE HIGH	EXCESSIVE FUEL CONSUMPTION	EXCESSIVE OIL CONSUMPTION	BATTERY DEAD (UNDER CHARGE)	
Warranty symptom code	AA	AB	AC	AD	AE	AF	AG	AH	AJ	AK	AL	AM	HA	
Mass air flow sensor circuit	1	1	1	2	2		2	2			2			EC-137, "DTC Logic"
Engine coolant temperature sensor circuit	1	1	1		2	3	2	2	3		2			EC-143, "DTC Logic"
Air fuel ratio (A/F) sensor 1 circuit		1	2	3	2		2	2			2			EC-147, "DTC Logic" EC-150, "DTC Logic" EC-152, "DTC Logic" EC-154, "DTC Logic" EC-278, "DTC Logic"
Throttle position sensor circuit		1	2		2	2	2	2	2		2			EC-145, "DTC Logic" EC-186, "DTC Logic" EC-237, "DTC Logic" EC-238, "DTC Logic" EC-273, "DTC Logic"
Accelerator pedal position sensor circuit		1	3	2	1	2	2	2	2		2			EC-268, "DTC Logic" EC-270, "DTC Logic" EC-275, "DTC Logic"

	SYMPTOM													Reference page
	HARD/NO START/RESTART (EXCP. HA)	ENGINE STALL	HESITATION/SURGING/FLAT SPOT	SPARK KNOCK/DETONATION	LACK OF POWER/POOR ACCELERATION	HIGH IDLE/LOW IDLE	ROUGH IDLE/HUNTING	IDLING VIBRATION	SLOW/NO RETURN TO IDLE	OVERHEATS/WATER TEMPERATURE HIGH	EXCESSIVE FUEL CONSUMPTION	EXCESSIVE OIL CONSUMPTION	BATTERY DEAD (UNDER CHARGE)	
Warranty symptom code	AA	AB	AC	AD	AE	AF	AG	AH	AJ	AK	AL	AM	HA	
Knock sensor circuit			2								3			EC-195, "DTC Logic"
Crankshaft position sensor (POS) circuit	2	2												EC-197, "DTC Logic"
Camshaft position sensor (PHASE) circuit	3	2												EC-200, "DTC Logic"
Vehicle speed signal circuit		2	3		3						3			EC-221, "DTC Logic"
ECM	2	2	3	3	3	3	3	3	3	3	3			EC-223, "DTC Logic" EC-225, "DTC Logic"
Intake valve timing control solenoid valve circuit		3	2		1	3	2	2	3		3			EC-127, "DTC Logic"
PNP signal circuit			3		3		3	3			3			EC-230, "DTC Logic"
Refrigerant pressure sensor circuit		2				3			3		4			EC-297, "Diagnosis Procedure"
Electrical load signal circuit							3							EC-283, "Diagnosis Procedure"
Air conditioner circuit	2	2	3	3	3	3	3	3	3		3		2	HAC-36, "Work Flow" HAC-97, "Work Flow"
ABS actuator and electric unit (control unit)			4											XX-XX, "*****"

1 - 6: The numbers refer to the order of inspection.

(continued on next table)

SYSTEM — ENGINE MECHANICAL & OTHER

		SYMPTOM													Reference page
		HARD/NO START/RESTART (EXCP. HA)	ENGINE STALL	HESITATION/SURGING/FLAT SPOT	SPARK KNOCK/DETONATION	LACK OF POWER/POOR ACCELERATION	HIGH IDLE/LOW IDLE	ROUGH IDLE/HUNTING	IDLING VIBRATION	SLOW/NO RETURN TO IDLE	OVERHEATS/WATER TEMPERATURE HIGH	EXCESSIVE FUEL CONSUMPTION	EXCESSIVE OIL CONSUMPTION	BATTERY DEAD (UNDER CHARGE)	
Warranty symptom code		AA	AB	AC	AD	AE	AF	AG	AH	AJ	AK	AL	AM	HA	
Fuel	Fuel tank	5	5												FL-11, "Inspection"
	Fuel piping			5	5	5		5	5			5			FL-4, "Inspection"
	Vapor lock														—
	Valve deposit	5		5	5	5		5	5			5			—
	Poor fuel (Heavy weight gasoline, Low octane)														—

		SYMPTOM													Reference page
		HARD/NO START/RESTART (EXCP. HA)	ENGINE STALL	HESITATION/SURGING/FLAT SPOT	SPARK KNOCK/DETONATION	LACK OF POWER/POOR ACCELERATION	HIGH IDLE/LOW IDLE	ROUGH IDLE/HUNTING	IDLING VIBRATION	SLOW/NO RETURN TO IDLE	OVERHEATS/WATER TEMPERATURE HIGH	EXCESSIVE FUEL CONSUMPTION	EXCESSIVE OIL CONSUMPTION	BATTERY DEAD (UNDER CHARGE)	
Warranty symptom code		AA	AB	AC	AD	AE	AF	AG	AH	AJ	AK	AL	AM	HA	
Air	Air duct														EM-25, "Inspection"
	Air cleaner														EM-25, "Inspection"
	Air leakage from air duct (Mass air flow sensor — electric throttle control actuator)														EM-25, "Inspection"
	Electric throttle control actuator	5	5	5	5	5	5	5	5	5		5			EM-29, "WITH EGR CONTROL VALVE : Exploded View" EM-28, "WITHOUT EGR CONTROL VALVE : Exploded View"
	Air leakage from intake manifold/ Collector/Gasket														EM-29, "WITH EGR CONTROL VALVE : Exploded View" EM-28, "WITHOUT EGR CONTROL VALVE : Exploded View"

		SYMPTOM													Reference page
		HARD/NO START/RESTART (EXCP. HA)	ENGINE STALL	HESITATION/SURGING/FLAT SPOT	SPARK KNOCK/DETONATION	LACK OF POWER/POOR ACCELERATION	HIGH IDLE/LOW IDLE	ROUGH IDLE/HUNTING	IDLING VIBRATION	SLOW/NO RETURN TO IDLE	OVERHEATS/WATER TEMPERATURE HIGH	EXCESSIVE FUEL CONSUMPTION	EXCESSIVE OIL CONSUMPTION	BATTERY DEAD (UNDER CHARGE)	
Warranty symptom code		AA	AB	AC	AD	AE	AF	AG	AH	AJ	AK	AL	AM	HA	
Cranking	Battery	1	1	1		1		1	1					1	PG-132, "Work Procedure"
	Generator circuit														CHG-11, "Work Flow"
	Starter circuit	3													STR-11, "Work Flow"
	Signal plate	6										1			EM-64, "Inspection"
	PNP signal circuit	4													TM-10, "PARK/NEUTRAL POSITION (PNP) SWITCH : Component Inspection"
Engine	Cylinder head	5	5	5	5	5		5	5			5			EM-76, "Inspection"
	Cylinder head gasket										4		3		
	Cylinder block	6	6	6	6	6		6	6			6	4		EM-11, "Inspection and Adjustment"
	Piston														
	Piston ring														
	Connecting rod														
	Bearing														
	Crankshaft														
Valve mechanism	Timing chain	5	5	5	5	5		5	5			5			EM-51, "Inspection"
	Camshaft														EM-64, "Inspection"
	Intake valve timing control														EM-51, "Inspection"
	Intake valve												3		EM-76, "Inspection"
	Exhaust valve														

		SYMPTOM													Reference page
		HARD/NO START/RESTART (EXCP. HA)	ENGINE STALL	HESITATION/SURGING/FLAT SPOT	SPARK KNOCK/DETONATION	LACK OF POWER/POOR ACCELERATION	HIGH IDLE/LOW IDLE	ROUGH IDLE/HUNTING	IDLING VIBRATION	SLOW/NO RETURN TO IDLE	OVERHEATS/WATER TEMPERATURE HIGH	EXCESSIVE FUEL CONSUMPTION	EXCESSIVE OIL CONSUMPTION	BATTERY DEAD (UNDER CHARGE)	
Warranty symptom code		AA	AB	AC	AD	AE	AF	AG	AH	AJ	AK	AL	AM	HA	
Exhaust	Exhaust manifold/Tube/Muffler/Gasket	5	5	5	5	5		5	5			5			EM-33, "Inspection" EX-4, "Inspection"
	Three way catalyst														
Lubrication	Oil pan/Oil strainer/Oil pump/Oil filter/Oil gallery/Oil cooler	5	5	5	5	5		5	5			5			LU-7, "Inspection"
	Oil level (Low)/Filthy oil														EM-36, "Inspection"
Cooling	Radiator/Hose/Radiator filler cap	5	5	5	5	5		5	5		4	5			CO-12, "RADIATOR CAP : Inspection" CO-12, "RADIATOR : Inspection"
	Thermostat									5					CO-22, "Inspection"
	Water pump														CO-19, "Inspection"
	Water gallery														CO-25, "Inspection"
	Cooling fan									5					CO-18, "Inspection"
	Coolant level (Low)/Contaminated coolant														CO-9, "Inspection"

1 - 6: The numbers refer to the order of inspection.

NORMAL OPERATING CONDITION

Description

INFOID:0000000005989421

FUEL CUT CONTROL (AT NO LOAD AND HIGH ENGINE SPEED)

If the engine speed is above 2,400 rpm under no load (for example, the shift lever position is neutral and engine speed is over 2,400 rpm) fuel will be cut off after some time. The exact time when the fuel is cut off varies based on engine speed.

Fuel cut will be operated until the engine speed reaches 2,000 rpm, then fuel cut will be cancelled.

NOTE:

This function is different from deceleration control listed under Multiport Fuel Injection (MFI) System, EC-33, "MULTIPORT FUEL INJECTION SYSTEM : System Description".

PERIODIC MAINTENANCE

IDLE SPEED

Inspection

INFOID:0000000005989422

1.CHECK IDLE SPEED

With CONSULT-III
Check idle speed in “DATA MONITOR” mode with CONSULT-III.
With GST
Check idle speed with Service $01 of GST.

>> INSPECTION END

IGNITION TIMING

Inspection

INFOID:0000000006001762

1. CHECK IGNITION TIMING

1. Attach timing light (A) to loop wire (1) as shown.

   ⇦ : Vehicle front

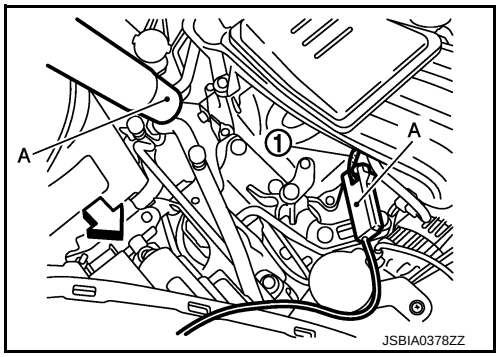

2. Check ignition timing.

   1 : Timing indicator

   >> INSPECTION END

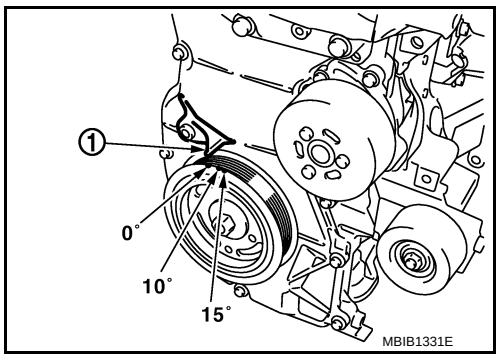

EVAPORATIVE EMISSION SYSTEM

Inspection

INFOID:0000000006001763

1. Visually inspect EVAP vapor lines for improper attachment and for cracks, damage, loose connections, chafing and deterioration.
2. Check EVAP canister as follows:

a. Block port (A). Orally blow air through port (B). Check that air flows freely through port (C).

b. Block port (B). Orally blow air through port (A). Check that air flows freely through port (C).

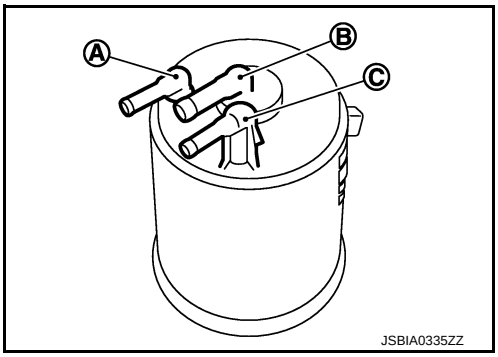

3. Inspect fuel tank filler cap vacuum relief valve for clogging, sticking, etc.

a. Wipe clean valve housing.

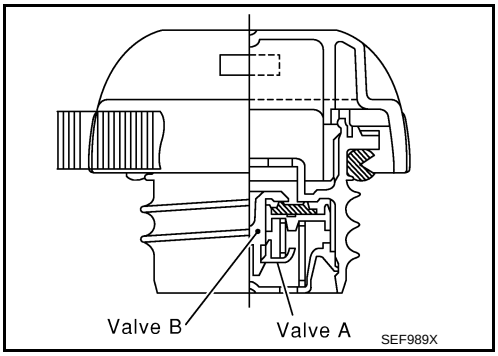

b. Check valve opening pressure and vacuum.

Pressure:	15.3 - 20.0 kPa (0.153 - 0.200 bar, 0.156 - 0.204 kg/cm^2, 2.22 - 2.90 psi)
Vacuum:	–6.0 to –3.4 kPa (–0.06 bar to –-0.034bar, –0.061 to –0.035 kg/cm^2, –0.87 to –0.49 psi)

c. If out of specification, replace fuel filler cap as an assembly.

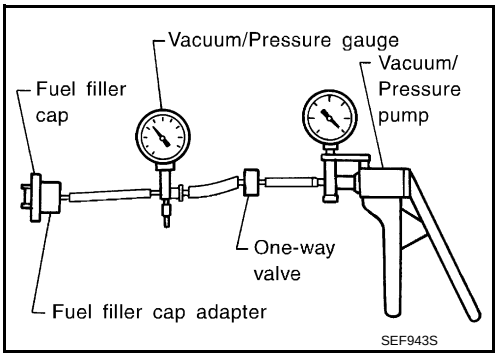

POSITIVE CRANKCASE VENTILATION

Inspection

INFOID:0000000005989425

1. CHECK PCV VALVE

With engine running at idle, remove PCV valve from rocker cover. A properly working valve makes a hissing noise as air passes through it. A strong vacuum should be felt immediately when a finger is placed over valve inlet.

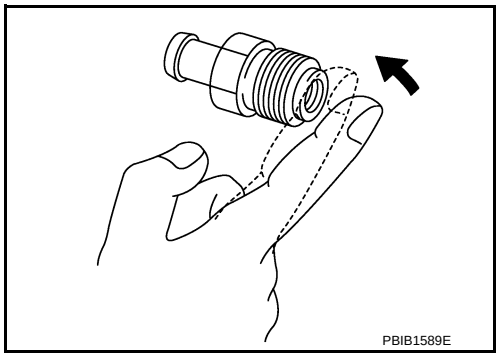

Is the inspection result normal?

YES >> INSPECTION END
NO >> Replace PCV valve.

REMOVAL AND INSTALLATION

ECM

Exploded View

INFOID:0000000006001764

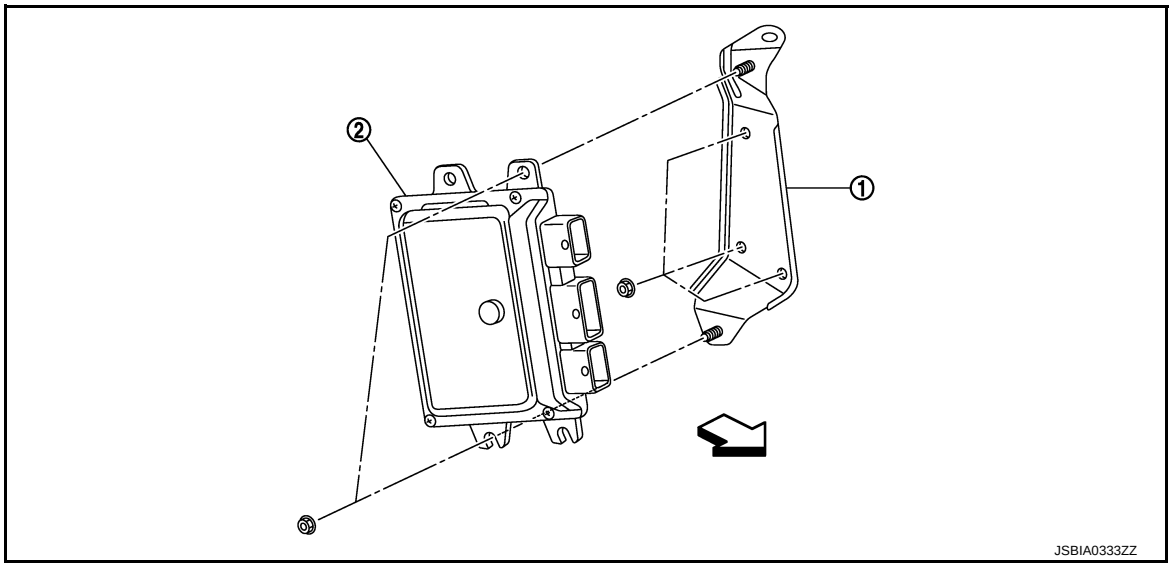

1. ECM bracket
2. ECM

⇦ : Vehicle front

Removal and Installation

INFOID:0000000006001765

REMOVAL

1. Remove battery. Refer to PG-143, "Exploded View".
2. Remove IPDM E/R. Refer to PCS-28, "Exploded View" (WITH I-KEY) or PCS-52, "Exploded View" (WITHOUT I-KEY).
3. Remove mounting nut (A) and bolts (B).
4. Disconnect harness connectors, and then remove IPDM E/R cover (1).

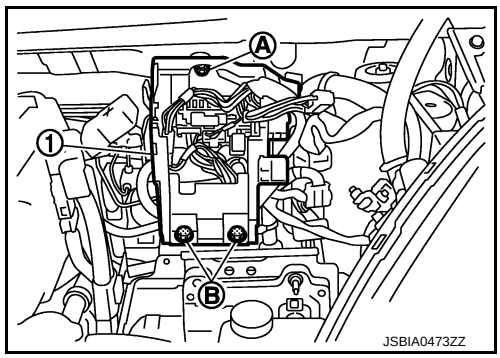

5. Disconnect ECM harness connectors.
6. Remove ECM mounting nuts.
7. Remove ECM from ECM bracket.

INSTALLATION

Install in the reverse order of removal.

CAUTION:

Must be perform additional service when replacing ECM. Refer to EC-103, "Work Procedure".

EVAP CANISTER

Hydraulic Layout

INFOID:0000000006001766

EVAPORATIVE EMISSION LINE DRAWING

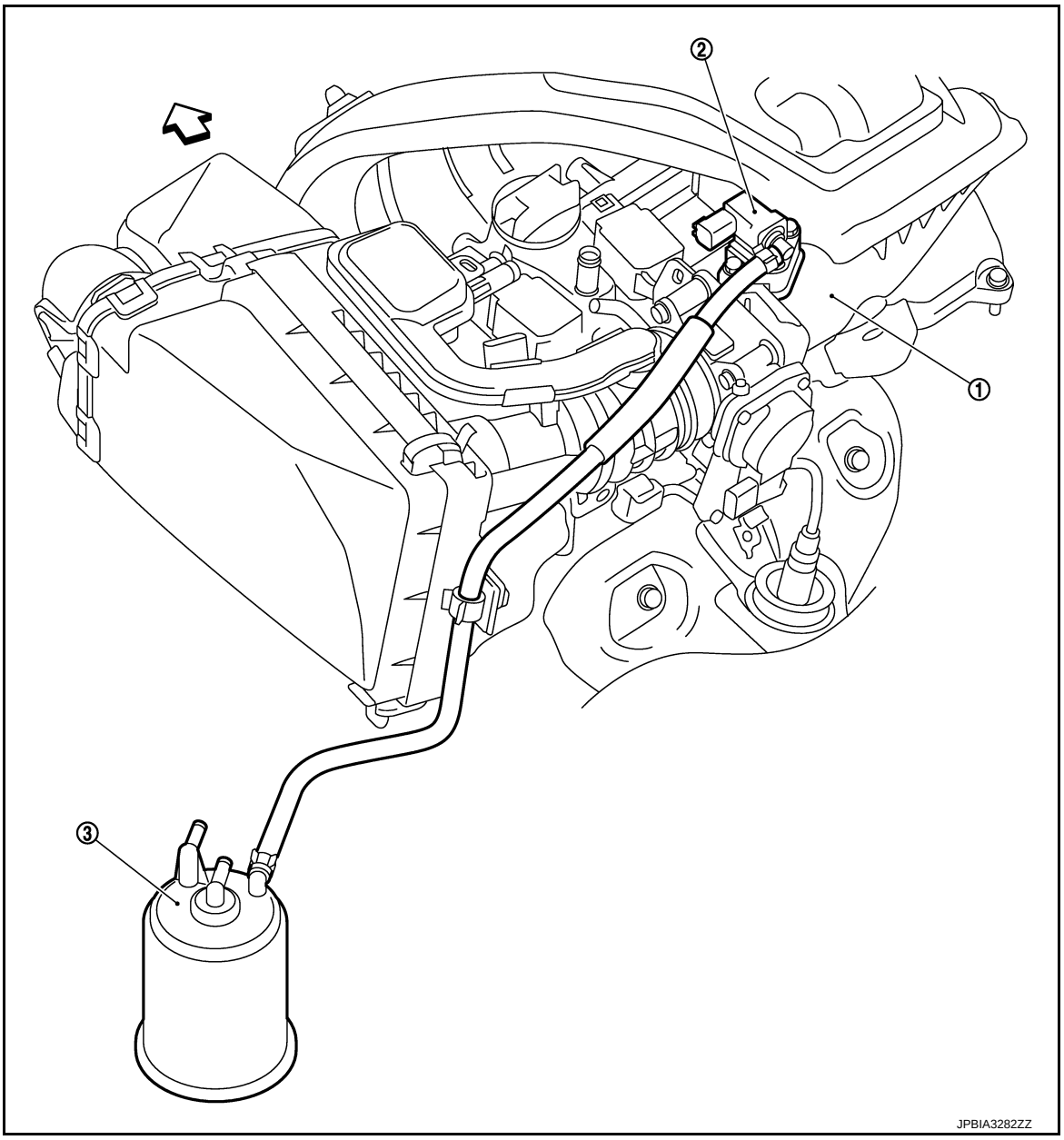

1. Intake manifold collector
2. EVAP canister purge volume control solenoid valve
3. EVAP canister

⇦ : Vehicle front

NOTE:
Do not use soapy water or any type of solvent while installing vacuum hose or purge hoses.

FUEL PUMP CONTROL MODULE

Removal and Installation

INFOID:0000000006001767

REMOVAL

1. Pull up passenger side floor carpet. Refer to INT-26, "Exploded View".
2. Disconnect fuel pump control module (FPCM) connector.
3. Remove fuel pump control module (FPCM) fixing bolts.
4. Remove fuel pump control module (FPCM).

INSTALLATION

Install in the reverse order of removal.

SERVICE DATA AND SPECIFICATIONS (SDS)

SERVICE DATA AND SPECIFICATIONS (SDS)

Idle Speed

INFOID:0000000005989426

Condition	Specification
No load* (in Neutral position)	750 ± 50 rpm

*: Under the following conditions
- A/C switch: OFF
- Electric load: OFF (Lights, heater fan & rear window defogger)
- Steering wheel: Kept in straight-ahead position

Ignition Timing

INFOID:0000000005989427

Condition	Specification
No load* (in Neutral position)	12 ±2°BTDC

*: Under the following conditions
- A/C switch: OFF
- Electric load: OFF (Lights, heater fan & rear window defogger)
- Steering wheel: Kept in straight-ahead position

Calculated Load Value

INFOID:0000000005989428

Condition	Specification (Using CONSULT-III or GST)
At idle	10 – 35%
At 2,500 rpm	10 – 35%

Mass Air Flow Sensor

INFOID:0000000005989429

Supply voltage	Battery voltage (11 – 14 V)
Output voltage at idle	0.9 – 1.3 V*
Mass air flow (Using CONSULT-III or GST)	1.0 – 4.0 g·m/sec at idle* 2.0 – 10.0 g·m/sec at 2,500 rpm*

*: Engine is warmed up to normal operating temperature and running under no load.

HOW TO USE THIS MANUAL

APPLICATION NOTICE

How to Check Vehicle Type

INFOID:0000000006036624

Check the vehicle type to confirm the service information in EC section.

Vehicle type			Service information
Destination	Transmission	Engine control	
For Thailand	M/T	L-jetronic	HR12DE (TYPE 1)
Except for Thailand	A/T, M/T	D-jetronic	HR12DE (TYPE 2)

NOTE:

- L-jetronic is a fuel injection control method that the mass air flow sensor mounted on the air cleaner case directly measures air volume taken into the engine (cylinder) and determines the fundamental fuel injection amount.
- D-jetronic is a fuel injection control method to calculate air volume taken into the engine (cylinder) and determine the fundamental fuel injection amount, based on a throttle angle and an intake air pressure calculated by the manifold absolute pressure sensor mounted on the intake manifold.

PRECAUTION

PRECAUTIONS

Precaution for Supplemental Restraint System (SRS) "AIR BAG" and "SEAT BELT PRE-TENSIONER"

INFOID:0000000006036677

The Supplemental Restraint System such as “AIR BAG” and “SEAT BELT PRE-TENSIONER”, used along with a front seat belt, helps to reduce the risk or severity of injury to the driver and front passenger for certain types of collision. This system includes seat belt switch inputs and dual stage front air bag modules. The SRS system uses the seat belt switches to determine the front air bag deployment, and may only deploy one front air bag, depending on the severity of a collision and whether the front occupants are belted or unbelted.
Information necessary to service the system safely is included in the “SRS AIR BAG” and “SEAT BELT” of this Service Manual.

WARNING:

- **To avoid rendering the SRS inoperative, which could increase the risk of personal injury or death in the event of a collision that would result in air bag inflation, all maintenance must be performed by an authorized NISSAN/INFINITI dealer.**
- **Improper maintenance, including incorrect removal and installation of the SRS, can lead to personal injury caused by unintentional activation of the system. For removal of Spiral Cable and Air Bag Module, see the “SRS AIR BAG”.**
- **Do not use electrical test equipment on any circuit related to the SRS unless instructed to in this Service Manual. SRS wiring harnesses can be identified by yellow and/or orange harnesses or harness connectors.**

PRECAUTIONS WHEN USING POWER TOOLS (AIR OR ELECTRIC) AND HAMMERS

WARNING:

- **When working near the Air Bag Diagnosis Sensor Unit or other Air Bag System sensors with the ignition ON or engine running, DO NOT use air or electric power tools or strike near the sensor(s) with a hammer. Heavy vibration could activate the sensor(s) and deploy the air bag(s), possibly causing serious injury.**
- **When using air or electric power tools or hammers, always switch the ignition OFF, disconnect the battery, and wait at least 3 minutes before performing any service.**

Precaution for Procedure without Cowl Top Cover

INFOID:0000000006036678

When performing the procedure after removing cowl top cover, cover the lower end of windshield with urethane, etc.

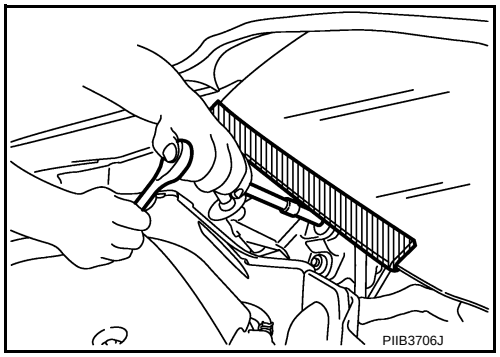

On Board Diagnostic (OBD) System of Engine and A/T

INFOID:0000000006036679

The ECM has an on board diagnostic system. It will light up the malfunction indicator lamp (MIL) to warn the driver of a malfunction causing emission deterioration.

CAUTION:

- **Be sure to turn the ignition switch OFF and disconnect the negative battery cable before any repair or inspection work. The open/short circuit of related switches, sensors, solenoid valves, etc. will cause the MIL to light up.**
- **Be sure to connect and lock the connectors securely after work. A loose (unlocked) connector will cause the MIL to light up due to the open circuit. (Be sure the connector is free from water, grease, dirt, bent terminals, etc.)**

- **Certain systems and components, especially those related to OBD, may use a new style slide-locking type harness connector. For description and how to disconnect, refer to PG-4, "Harness Connector".**
- **Be sure to route and secure the harnesses properly after work. The interference of the harness with a bracket, etc. may cause the MIL to light up due to the short circuit.**
- **Be sure to connect rubber tubes properly after work. A misconnected or disconnected rubber tube may cause the MIL to light up due to the malfunction of the fuel injection system, etc.**
- **Be sure to erase the unnecessary malfunction information (repairs completed) from the ECM and TCM (Transmission control module) before returning the vehicle to the customer.**

General Precautions

INFOID:0000000006036716

- **Always use a 12 volt battery as power source.**
- **Do not attempt to disconnect battery cables while engine is running.**
- **Before connecting or disconnecting the ECM harness connector, turn ignition switch OFF and disconnect negative battery cable. Failure to do so may damage the ECM because battery voltage is applied to ECM even if ignition switch is turned OFF.**
- **Before removing parts, turn ignition switch OFF and then disconnect battery ground cable.**

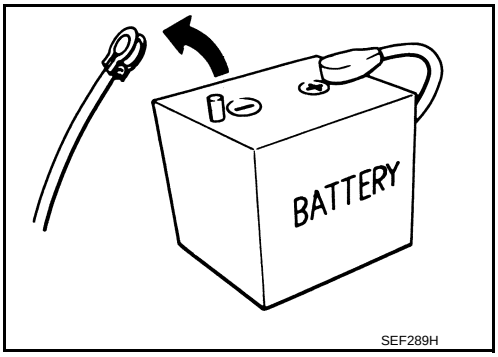

- **Do not disassemble ECM.**
- **If a battery cable is disconnected, the memory will return to the ECM value.**
  The ECM will now start to self-control at its initial value. So, engine operation can vary slightly in this case. However, this is not an indication of a malfunction. Do not replace parts because of a slight variation.
- **If the battery is disconnected, the following emission-related diagnostic information will be lost within 24 hours.**
- **Diagnostic trouble codes**
- **1st trip diagnostic trouble codes**
- **Freeze frame data**
- **1st trip freeze frame data**
- **System readiness test (SRT) codes**
- **Test values**

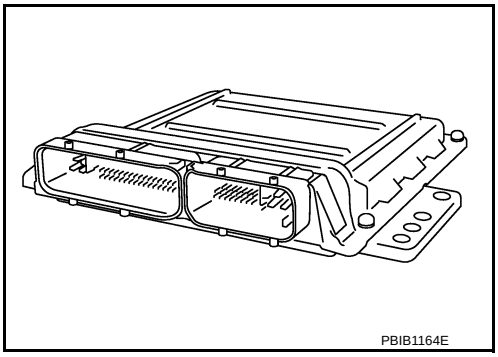

- **When connecting ECM harness connector (A), fasten (B) it securely with a lever as far as it will go as shown in the figure.**

1. ECM

C. Loosen

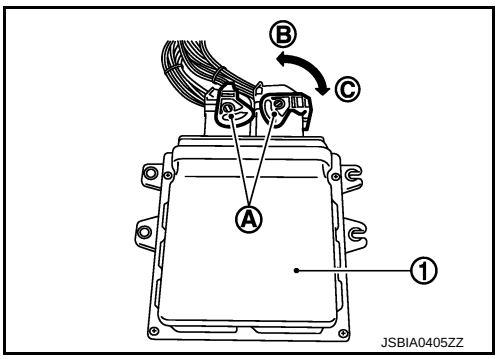

- **When connecting or disconnecting pin connectors into or from ECM, take care not to damage pin terminals (bend or break).**
  Make sure that there are not any bends or breaks on ECM pin terminal, when connecting pin connectors.
- **Securely connect ECM harness connectors.**
  A poor connection can cause an extremely high (surge) voltage to develop in coil and condenser, thus resulting in damage to ICs.
- **Keep engine control system harness at least 10 cm (4 in) away from adjacent harness, to prevent engine control system malfunctions due to receiving external noise, degraded operation of ICs, etc.**
- **Keep engine control system parts and harness dry.**
- **Before replacing ECM, perform ECM Terminals and Reference Value inspection and make sure ECM functions properly. Refer to EC-355, "Reference Value".**
- **Handle manifold absolute pressure (MAP) sensor carefully to avoid damage.**
- **Do not clean air clear element with any type of detergent.**
- **Do not disassemble electric throttle control actuator.**
- **Even a slight leak in the air intake system can cause serious incidents.**
- **Do not shock or jar the camshaft position sensor (PHASE), crankshaft position sensor (POS).**

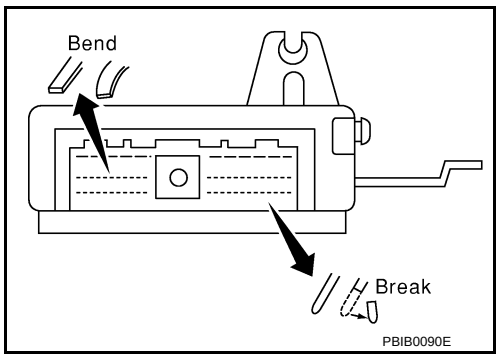

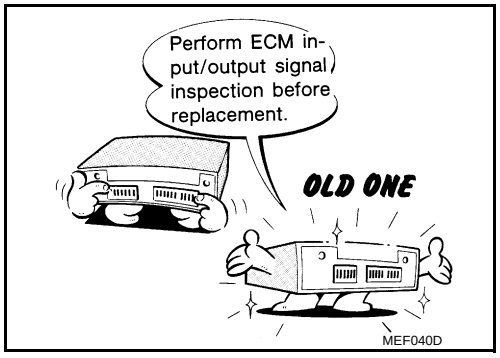

- **After performing each TROUBLE DIAGNOSIS, perform DTC CONFIRMATION PROCEDURE or Component Function Check.** The DTC should not be displayed in the DTC CONFIRMATION PROCEDURE if the repair is completed. The Component Function Check should be a good result if the repair is completed.

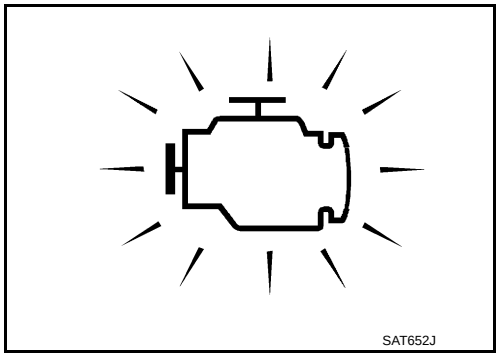

- **When measuring ECM signals with a circuit tester, never allow the two tester probes to contact.**
  Accidental contact of probes will cause a short circuit and damage the ECM power transistor.

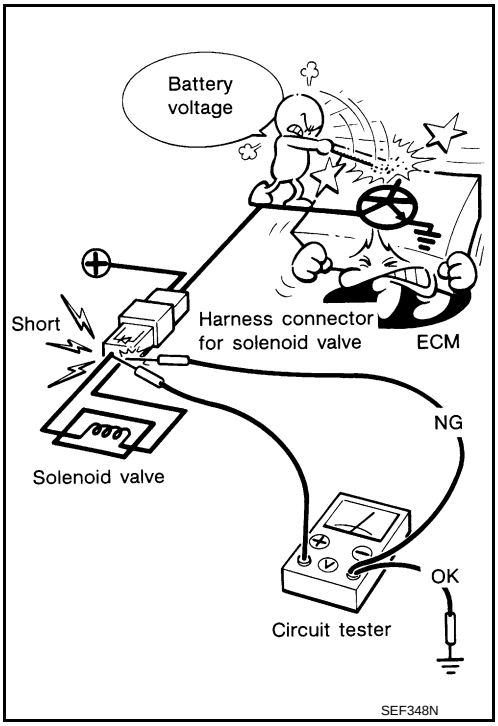

- **Do not operate fuel pump when there is no fuel in lines.**
- **Tighten fuel hose clamps to the specified torque.**

- **Do not depress accelerator pedal when starting.**
- **Immediately after starting, do not rev up engine unnecessarily.**
- **Do not rev up engine just prior to shutdown.**

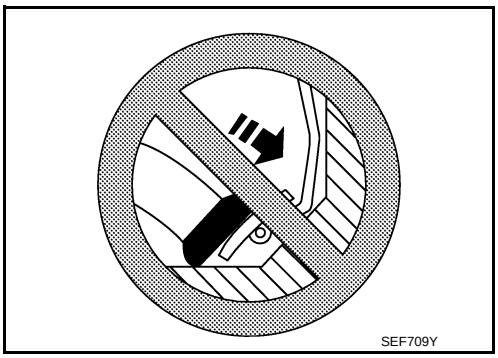

- **When installing C.B. ham radio or a mobile phone, be sure to observe the following as it may adversely affect electronic control systems depending on installation location.**
  - **Keep the antenna as far as possible from the electronic control units.**
  - **Keep the antenna feeder line more than 20 cm (8 in) away from the harness of electronic controls.**
    Do not let them run parallel for a long distance.
  - **Adjust the antenna and feeder line so that the standing-wave ratio can be kept smaller.**
  - **Be sure to ground the radio to vehicle body.**

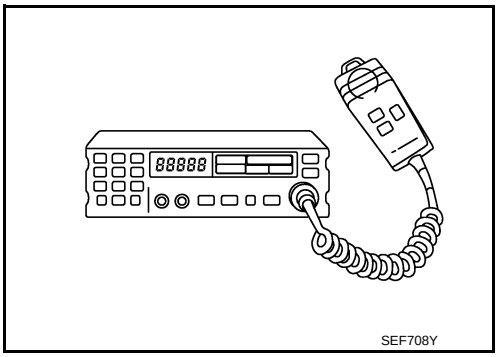

PREPARATION

PREPARATION

Special Service Tools

INFOID:0000000006036680

Tool number Tool name	Description
KV10120000 Fuel tube adapter 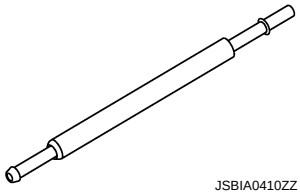 JSBIA0410ZZ	Measuring fuel pressure

Commercial Service Tools

INFOID:0000000006036681

Tool name	Description
Oxygen sensor thread cleaner 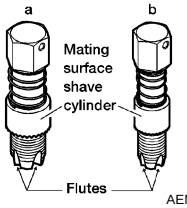 AEM488	Reconditioning the exhaust system threads before installing a new oxygen sensor. Use with anti-seize lubricant shown below. **a: 18 mm diameter with pitch 1.5 mm for Zirconia Oxygen Sensor** **b: 12 mm diameter with pitch 1.25 mm for Titania Oxygen Sensor**
Anti-seize lubricant i.e.: (Permatex™ 133AR or equivalent meeting MIL specification MIL-A-907) 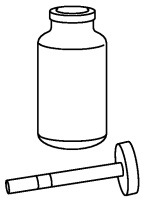 S-NT779	Lubricating oxygen sensor thread cleaning tool when reconditioning exhaust system threads.

SYSTEM DESCRIPTION

STRUCTURE AND OPERATION

Positive Crankcase Ventilation

INFOID:0000000006036688

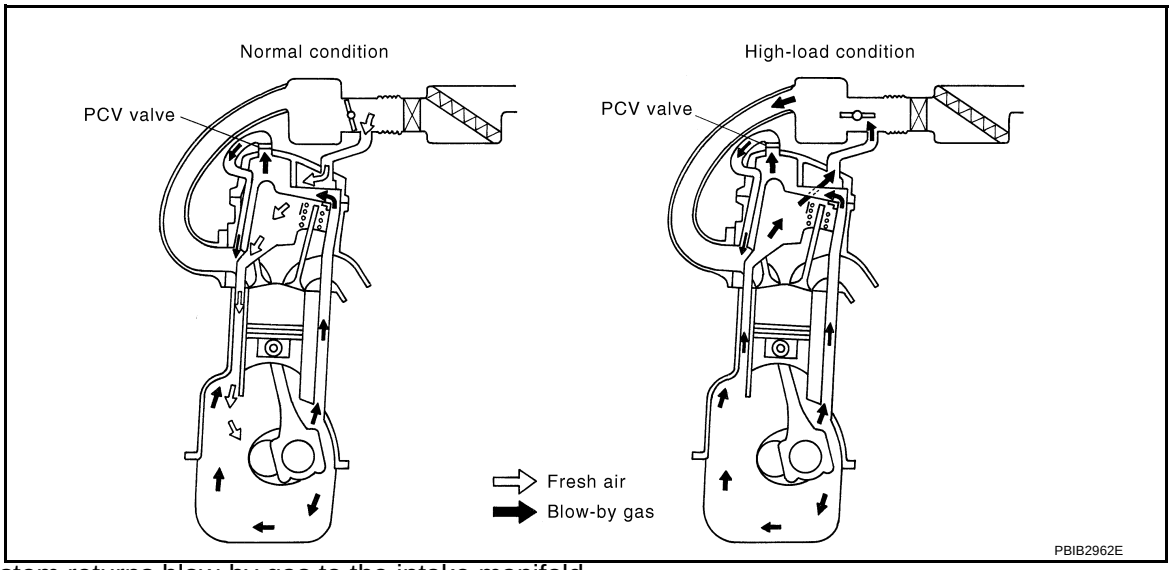

This system returns blow-by gas to the intake manifold.
The positive crankcase ventilation (PCV) valve is provided to conduct crankcase blow-by gas to the intake manifold.
During partial throttle operation of the engine, the intake manifold sucks the blow-by gas through the PCV valve.
Normally, the capacity of the valve is sufficient to handle any blow-by and a small amount of ventilating air.
The ventilating air is then drawn from the air inlet tubes into the crankcase. In this process the air passes through the hose connecting air inlet tubes to rocker cover.
Under full-throttle condition, the manifold vacuum is insufficient to draw the blow-by flow through the valve. The flow goes through the hose connection in the reverse direction.
On vehicles with an excessively high blow-by, the valve does not meet the requirement. This is because some of the flow will go through the hose connection to the air inlet tubes under all conditions.

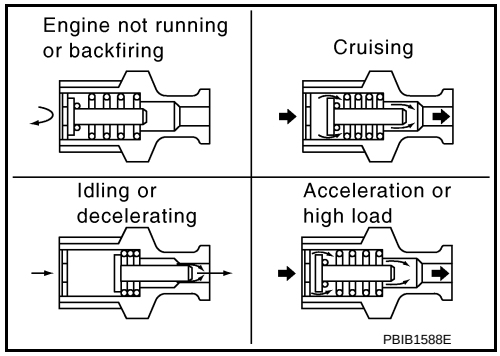

COMPONENT PARTS

Component Parts Location

INFOID:0000000006036717

ENGINE ROOM COMPARTMENT

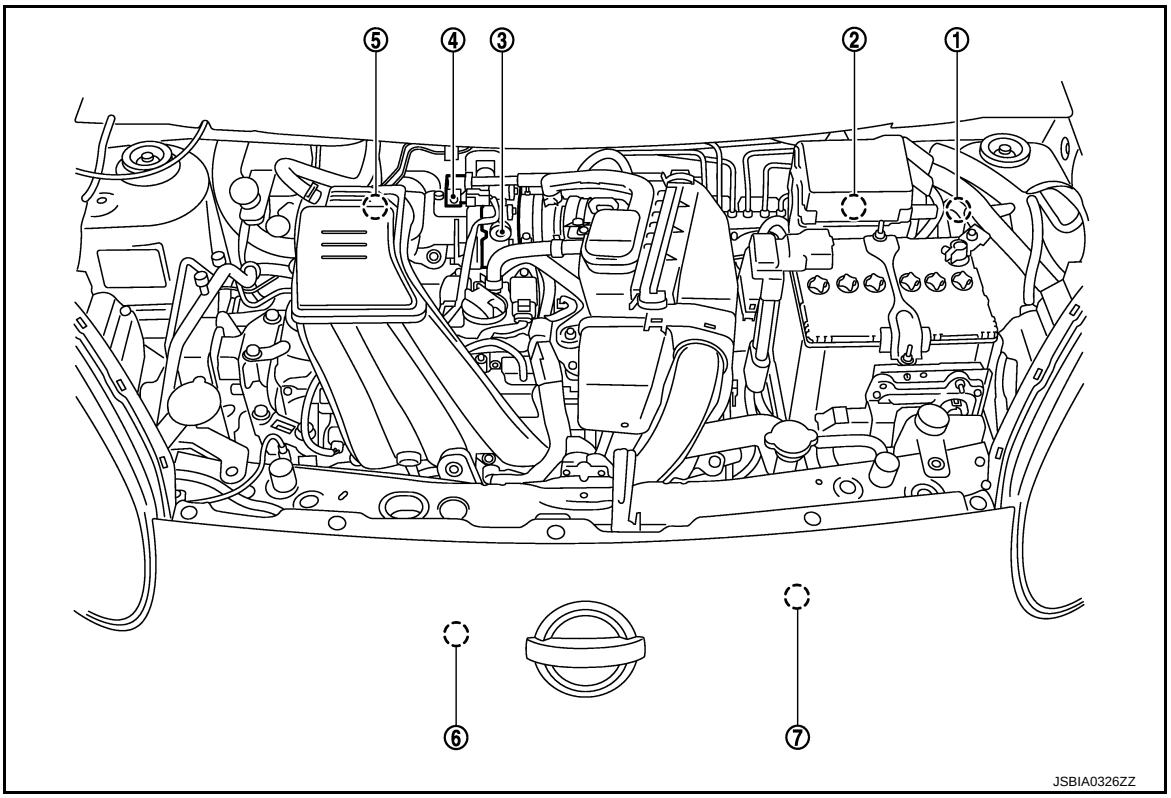

1. ECM
2. IPDM E/R
   Refer to Dummy cross-reference("XX-XX")
3. Electric throttle control actuator (with built in throttle position sensor and throttle control motor)
4. EVAP canister purge volume control solenoid valve
5. Manifold absolute pressure (MAP) sensor
   (with intake air temperature sensor)
6. Refrigerant pressure sensor
   Refer to Dummy cross-reference("XX-XX")
7. Cooling fan motor
   Refer to Dummy cross-reference("XX-XX")

ENGINE COMPARTMENT

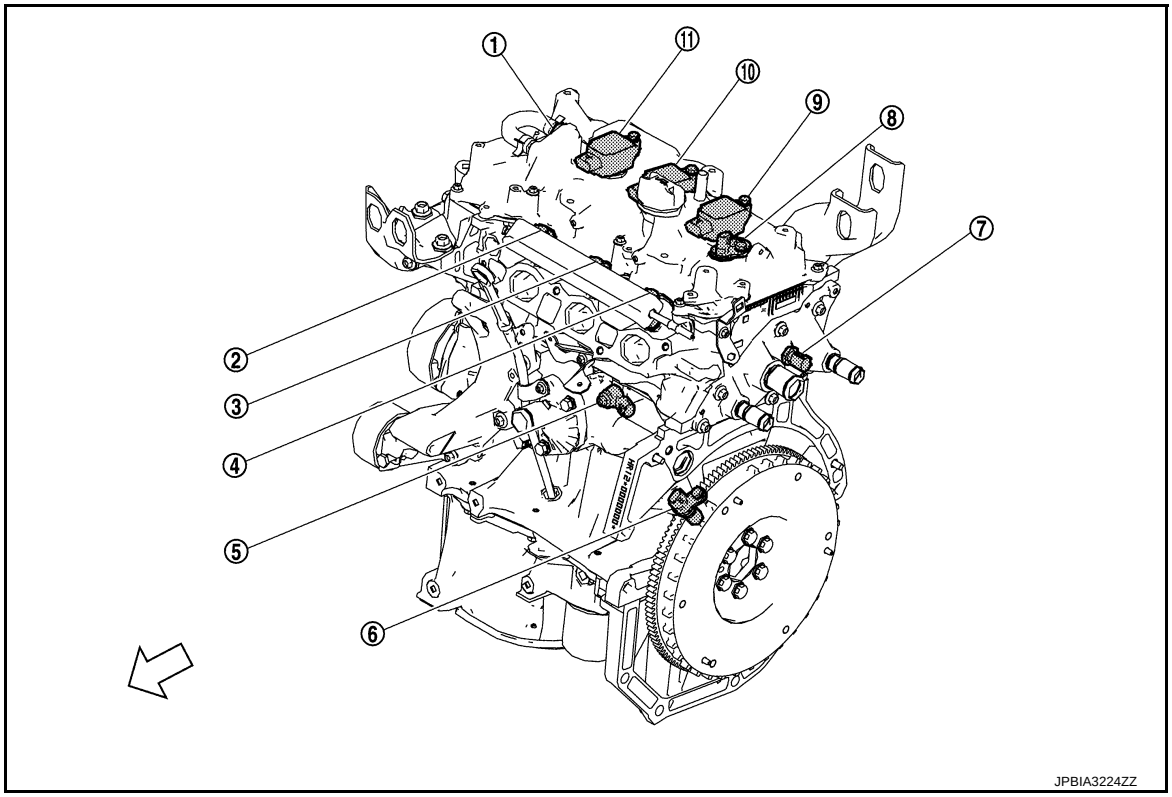

1. PCV valve
2. Fuel injector No.1
3. Fuel injector No.2
4. Fuel injector No.3
5. Knock sensor
6. Crankshaft position sensor (POS)
7. Engine coolant temperature sensor
8. Camshaftposition sensor (PHASE)
9. Ignition coil No.3 (with power transistor)
10. Ignition coil No.2 (with power transistor)
11. Ignition coil No.1 (with power transistor)

⇦ :Vehicle front

EXHAUST COMPARTMENT

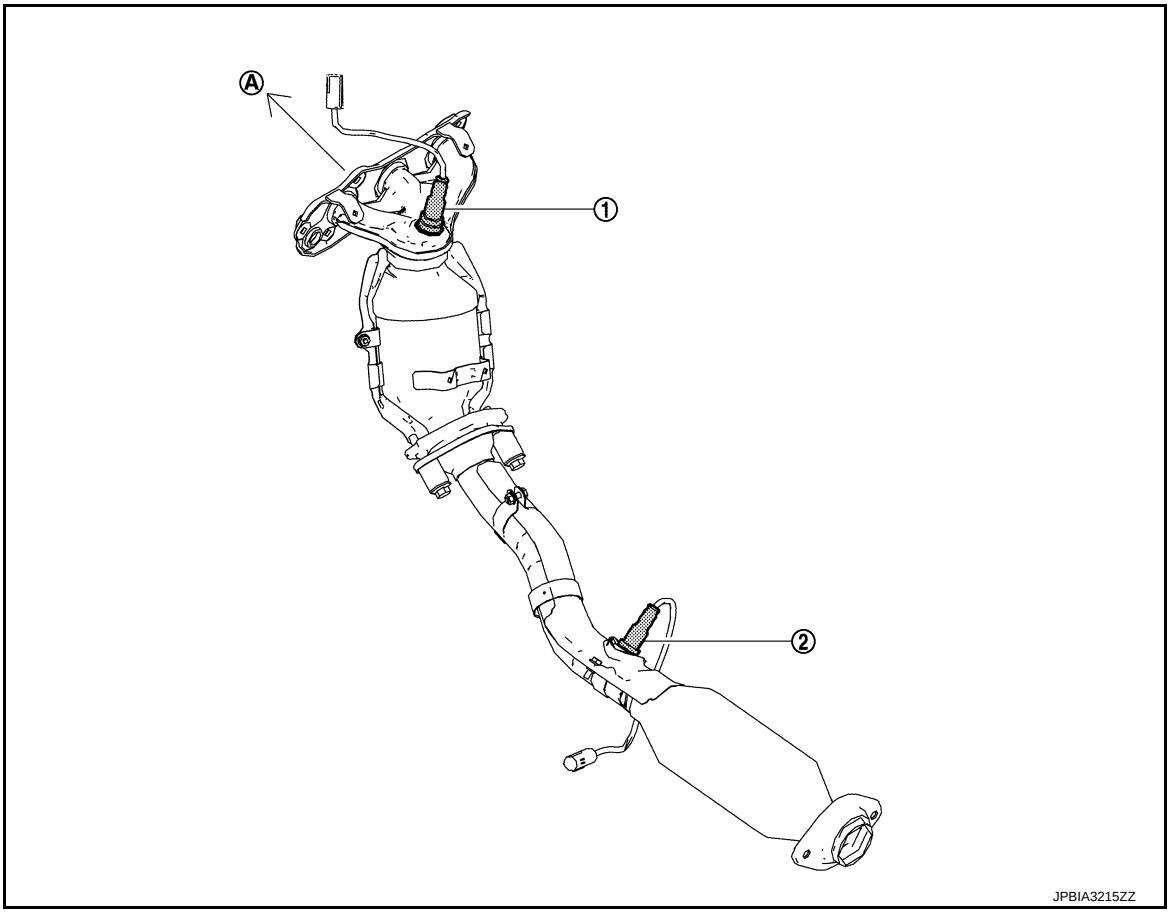

1. Heated oxygen sensor 1
2. Heated oxygen sensor 2

A. To engine assembly

BODY COMPARTMENT

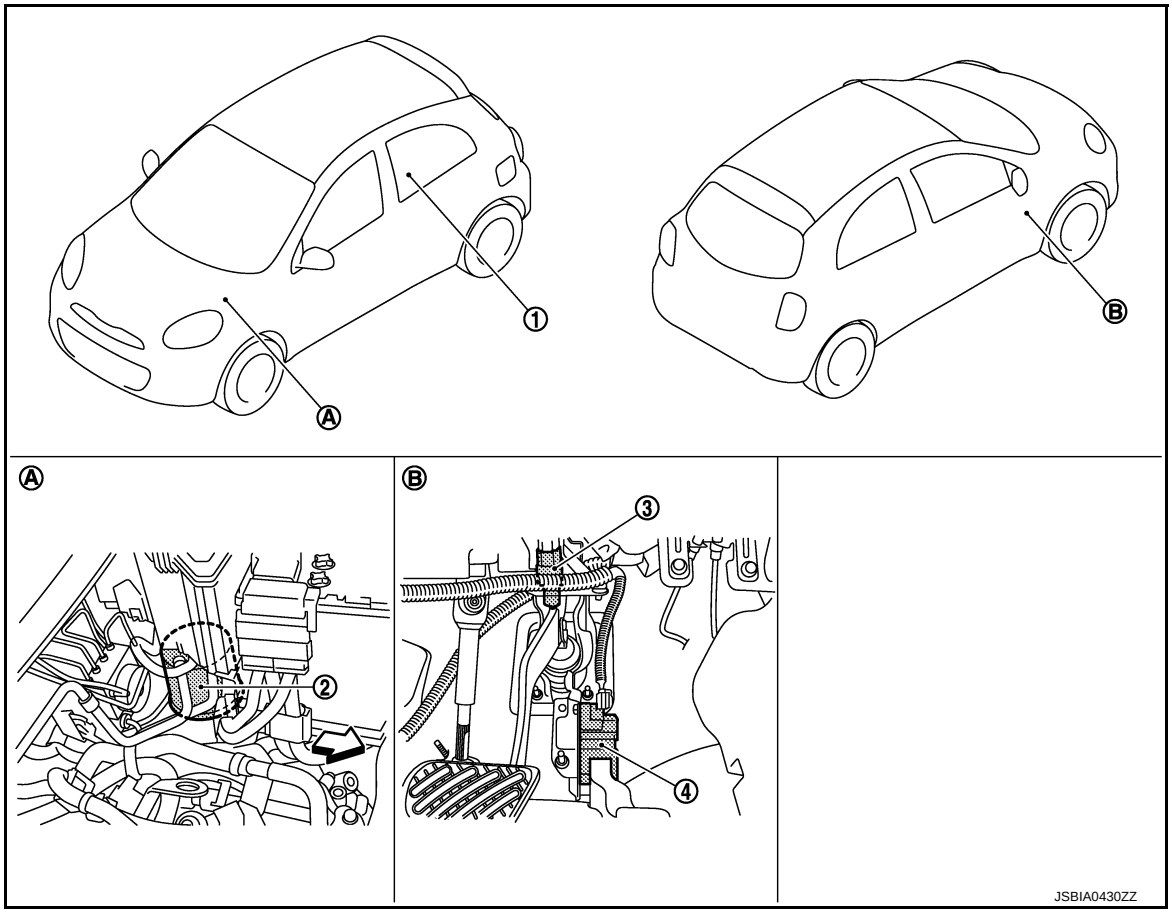

1. Fuel pump (with fuel level sensor unit and fuel pressure regulator)
   Refer to MWI-4, "Component Parts Location"
2. EVAP canister
3. Stop lamp switch
4. Accelerator pedal position sensor

A. Left side of engine room
B. Periphery of pedals

⇦ : Vehicle front

Component Description

INFOID:0000000006036718

Component	Reference
ECM	EC-327, "ECM"
Malfunction indicator lamp	EC-327, "Malfunction Indicator Lamp (MIL)"
Ignition coil with power transistor	EC-328, "Ignition Coil With Power Transistor"
Accelerator pedal position sensor	EC-328, "Accelerator Pedal Position Sensor"
Manifold absolute pressure (MAP) sensor	EC-328, "Manifold Absolute Pressure (MAP) Sensor"
Intake air temperature sensor	
Electric throttle control actuator	EC-329, "Electric Throttle Control Actuator"
Throttle control motor relay	
Throttle control motor	
Throttle position sensor	
Crankshaft position sensor (POS)	EC-329, "Crankshaft Position Sensor (POS)"
Camshaft position sensor (PHASE)	EC-330, "Camshaft Position Sensor (PHASE)"

Component	Reference
Engine coolant temperature sensor	EC-330, "Engine Coolant Temperature Sensor"
Fuel injector	EC-331, "Fuel Injector"
Fuel pump	EC-331, "Fuel Pump"
Heated oxygen sensor 1	EC-331, "Heated Oxygen Sensor 1"
Heated oxygen sensor 1 heater	
Heated oxygen sensor 2	EC-332, "Heated Oxygen Sensor 2"
Heated oxygen sensor 2 heater	
Knock sensor	EC-333, "Knock Sensor"
Cooling fan control module	EC-333, "Cooling Fan"
Cooling fan motor	
EVAP canister purge volume control solenoid valve	EC-333, "EVAP Canister Purge Volume Control Solenoid Valve"
PCV valve	EC-322, "Positive Crankcase Ventilation"
Refrigerant pressure sensor	EC-333, "Refrigerant Pressure Sensor"
Stop lamp switch	EC-334, "Stop Lamp Switch"
Park/neutral position (PNP) switch (M/T models)	EC-458, "Description"
Transmission range switch (A/T models)	

ECM

INFOID:0000000006036719

- ECM (Engine Control Module) controls the engine.
- ECM consists of a microcomputer and connectors for signal input and output and for power supply.
- Battery voltage is supplied to the ECM even when the ignition switch is turned OFF for the ECM memory function of the DTC memory, the air-fuel ratio feedback compensation value memory, the idle air volume learning value memory, etc.

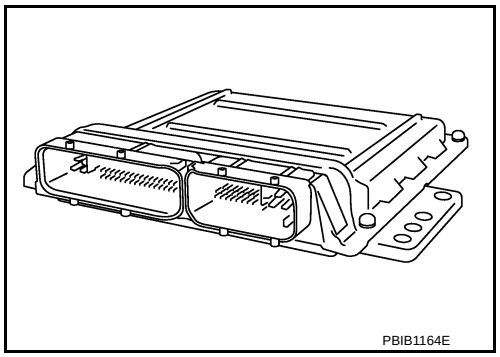

Malfunction Indicator Lamp (MIL)

INFOID:0000000006036720

The Malfunction Indicator Lamp (MIL) is located on the combination meter.
The MIL will illuminate when the ignition switch is turned ON without the engine running. This is a bulb check.
When the engine is started, the MIL should turn off. If the MIL remains illuminated, the on board diagnostic system has detected an engine system malfunction.
For details, refer to EC-346, "Diagnosis Description".

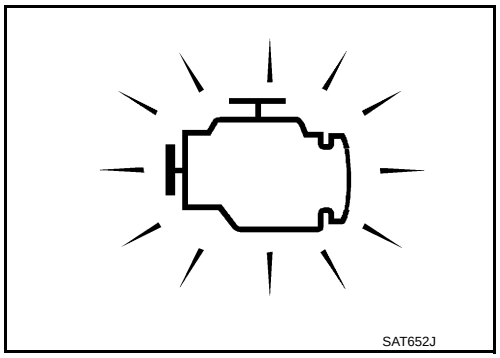

Ignition Coil With Power Transistor

INFOID:0000000006036721

The ignition signal from the ECM is sent to and amplified by the power transistor. The power transistor turns ON and OFF the ignition coil primary circuit. This ON/OFF operation induces the proper high voltage in the coil secondary circuit.

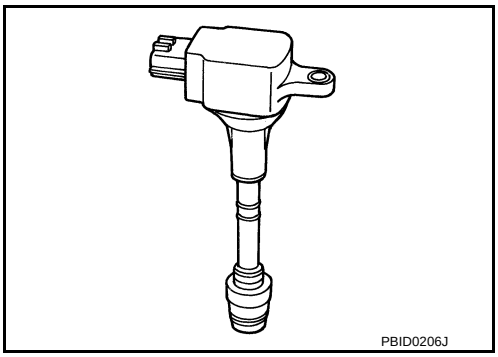

Accelerator Pedal Position Sensor

INFOID:0000000006036722

The accelerator pedal position sensor is installed on the accelerator pedal assembly. The sensor detects the accelerator position and sends a signal to the ECM.
Accelerator pedal position sensor has two sensors. These sensors are a kind of potentiometer which transform the accelerator pedal position into output voltage, and emit the voltage signals to the ECM. The ECM judges the current opening angle of the accelerator pedal from these signals and controls the throttle control motor based on these signals.
Idle position of the accelerator pedal is determined by the ECM receiving the signal from the accelerator pedal position sensor. The ECM uses this signal for engine operations such as fuel cut.

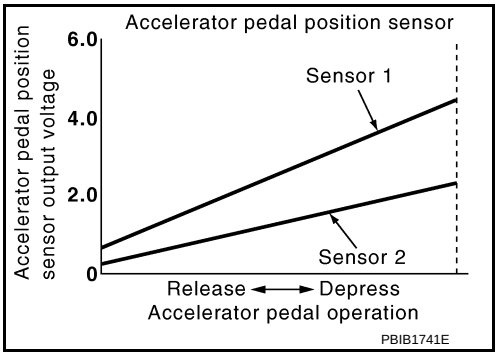

Manifold Absolute Pressure (MAP) Sensor

INFOID:0000000006036723

MANIFOLD ABSOLUTE PRESSURE (MAP) SENSOR

The manifold absolute pressure (MAP) sensor is placed intake manifold corrector. It detects intake manifold pressure and sends the voltage signal to the ECM, ECM uses the signal to compute intake air volume value.
The sensor uses a silicon diaphragm which is sensitive to the change in pressure. As the pressure increase, the voltage rises.

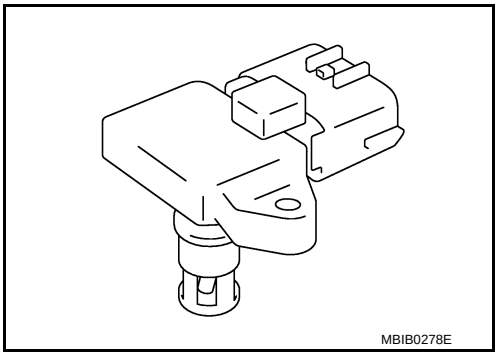

INTAKE AIR TEMPERATURE SENSOR

The intake air temperature sensor is built-into the manifold absolute pressure (MAP) sensor. The sensor detects intake air temperature and transmits a signal to the ECM.
The temperature sensing unit uses a thermistor which is sensitive to the change in temperature. Electrical resistance of the thermistor decreases in response to the rise in temperature.

<Reference data>

Intake air temperature [°C (°F)]	Voltage* (V)	Resistance (kΩ)
25 (77)	3.3	1.800 - 2.200
80 (176)	1.2	0.283 - 0.359

*: These data are reference values and are measured between ECM terminals 48 (Intake air temperature sensor) and 42 (Sensor ground).

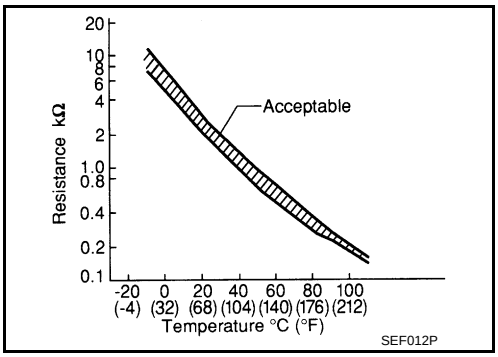

Electric Throttle Control Actuator

INFOID:0000000006036724

OUTLINE

Electric throttle control actuator consists of throttle body, throttle valve, throttle control motor and throttle position sensor.

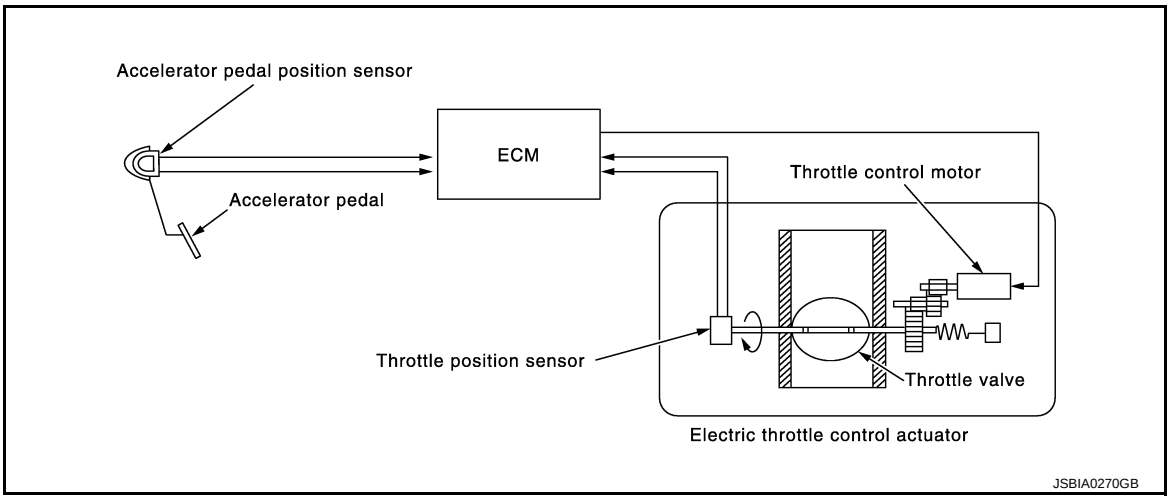

THROTTLE CONTROL MOTOR

The throttle control motor is operated by the ECM and it opens and closes the throttle valve.
The current opening angle of the throttle valve is detected by the throttle position sensor. The throttle position sensor provides feedback to the ECM, when opens/closes the throttle valve in response to driving conditions via the throttle control motor.
ECM inhibits THROTTLE VALVE CLOSED POSITION LEARNING under clogging-prone conditions to reduce the clogging in the throttle valve closed position. When detecting a clogging in the throttle valve closed position, ECM maximizes the motor driving torque of the electronic throttle to eliminate the clogging.

THROTTLE POSITION SENSOR

The throttle position sensor responds to the throttle valve movement.
The throttle position sensor has two sensors. These sensors are a kind of potentiometer which transform the throttle valve position into output voltage, and emit the voltage signal to the ECM. The ECM judges the current opening angle of the throttle valve from these signals and controls the throttle valve opening angle in response to driving conditions via the throttle control motor.

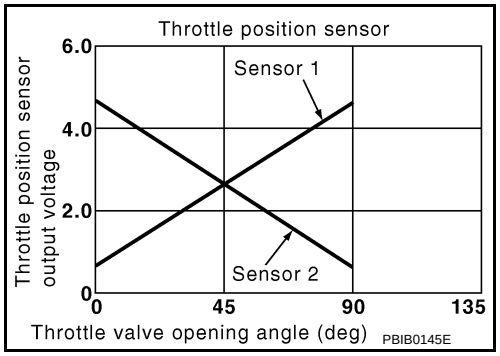

Crankshaft Position Sensor (POS)

INFOID:0000000006036725

The crankshaft position sensor (POS) is located on the transmission housing facing the gear teeth (cogs) of the signal plate. It detects the fluctuation of the engine revolution.
The sensor consists of a permanent magnet and Hall IC.
When the engine is running, the high and low parts of the teeth cause the gap with the sensor to change.
The changing gap causes the magnetic field near the sensor to change.
Due to the changing magnetic field, the voltage from the sensor changes.
The ECM receives the voltage signal and detects the fluctuation of the engine revolution.

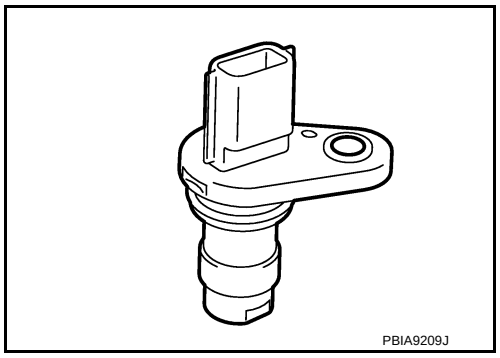

ECM receives the signals as shown in the figure.

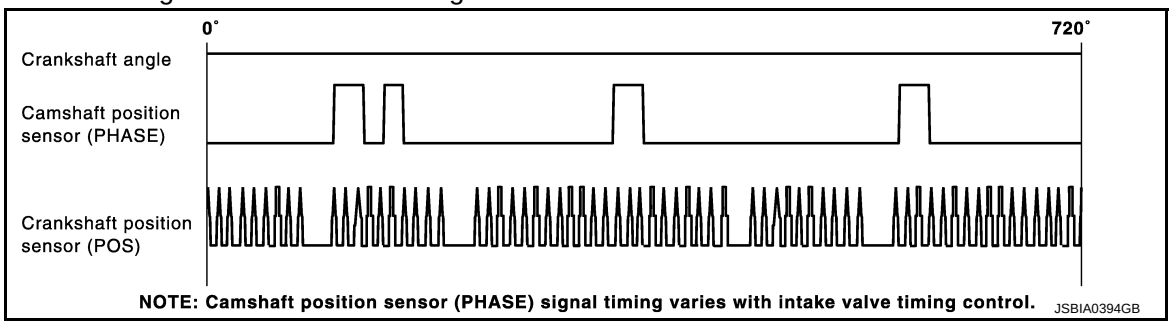

Camshaft Position Sensor (PHASE)

INFOID:0000000006036726

The camshaft position sensor (PHASE) senses the protrution of the signal plate installed to the camshaft (INT) rear end to identify a particular cylinder. The camshaft position sensor (PHASE) senses the piston position.
When the crankshaft position sensor (POS) system becomes inoperative, the camshaft position sensor (PHASE) provides various controls of engine parts instead, utilizing timing of cylinder identification signals.
The sensor consists of a permanent magnet and Hall IC.
When engine is running, the high and low parts of the teeth cause the gap with the sensor to change.
The changing gap causes the magnetic field near the sensor to change.
Due to the changing magnetic field, the voltage from the sensor changes.

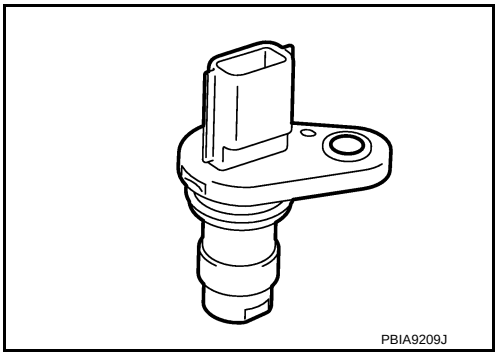

ECM receives the signals as shown in the figure.

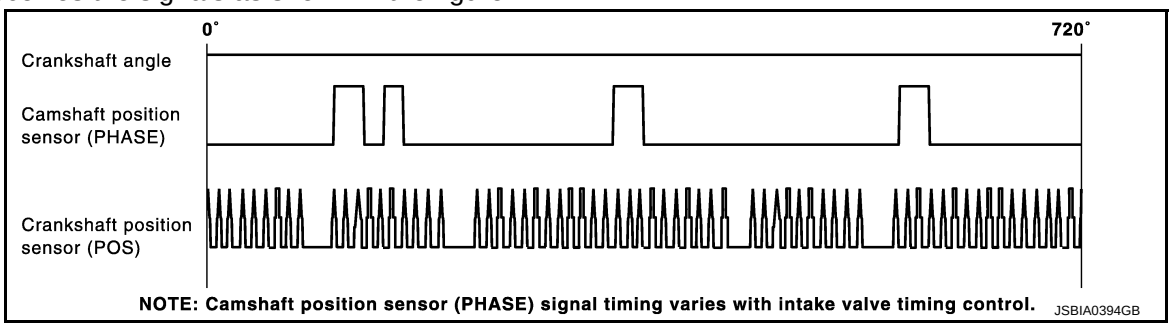

Engine Coolant Temperature Sensor

INFOID:0000000006036727

The engine coolant temperature sensor is used to detect the engine coolant temperature. The sensor modifies a voltage signal from the ECM. The modified signal returns to the ECM as the engine coolant temperature input. The sensor uses a thermistor which is sensitive to the change in temperature. The electrical resistance of the thermistor decreases as temperature increases.

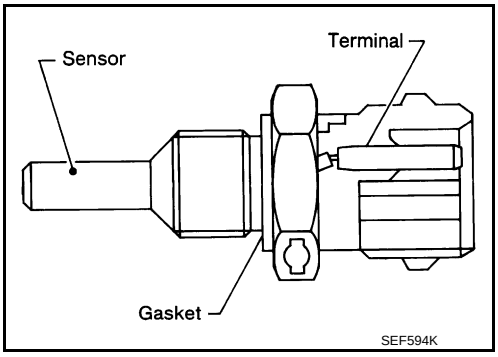

<Reference data>

Engine coolant temperature [°C (°F)]	Voltage* (V)	Resistance (kΩ)
–10 (14)	4.4	7.0 - 11.4
20 (68)	3.5	2.35 - 2.73
50 (122)	2.2	0.68 - 1.00
90 (194)	0.9	0.236 - 0.260

*: These data are reference values and are measured between ECM terminals 38 (Engine coolant temperature sensor) and 44 (Sensor ground).

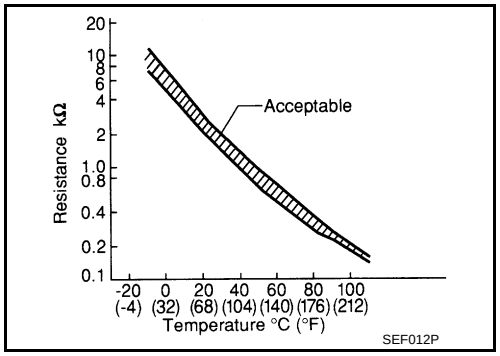

Fuel Injector

INFOID:0000000006036728

The fuel injector is a small, precise solenoid valve. When the ECM supplies a ground to the fuel injector circuit, the coil in the fuel injector is energized. The energized coil pulls the ball valve back and allows fuel to flow through the fuel injector into the intake manifold. The amount of fuel injected depends upon the injection pulse duration. Pulse duration is the length of time the fuel injector remains open. The ECM controls the injection pulse duration based on engine fuel needs.

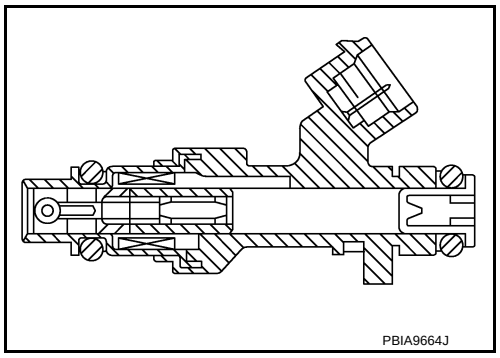

Fuel Pump

INFOID:0000000006036729

The ECM activates the fuel pump for 1 second after the ignition switch is turned ON to improve engine startability. If the ECM receives a engine speed signal from the camshaft position sensor (PHASE), it knows that the engine is rotating, and causes the pump to operate. If the engine speed signal is not received when the ignition switch is ON, the engine stalls. The ECM stops pump operation and prevents battery discharging, thereby improving safety. The ECM does not directly drive the fuel pump. It sends the control signal to the fuel pump control module, which in turn controls the fuel pump.

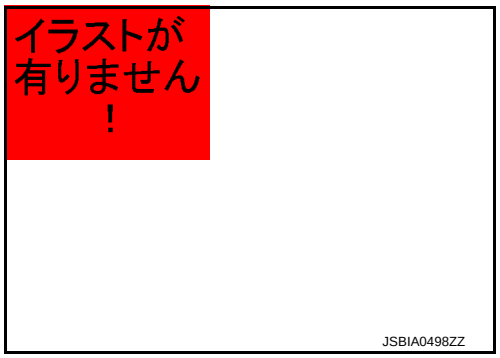

Condition	Fuel pump operation
Ignition switch is turned to ON.	Operates for 1 second.
Engine running and cranking	Operates.
When engine is stopped	Stops in 1.5 seconds.
Except as shown above	Stops.

Heated Oxygen Sensor 1

INFOID:0000000006036753

DESCRIPTION

The heated oxygen sensor 1 is placed into the exhaust manifold. It detects the amount of oxygen in the exhaust gas compared to the outside air. The heated oxygen sensor 1 has a closed-end tube made of ceramic zirconia. The zirconia generates voltage from approximately 1 V in richer conditions to 0 V in leaner conditions. The heated oxygen sensor 1 signal is sent to the ECM. The ECM adjusts the injection pulse duration to achieve the ideal air-fuel ratio. The ideal air-fuel ratio occurs near the radical change from 1 V to 0 V.

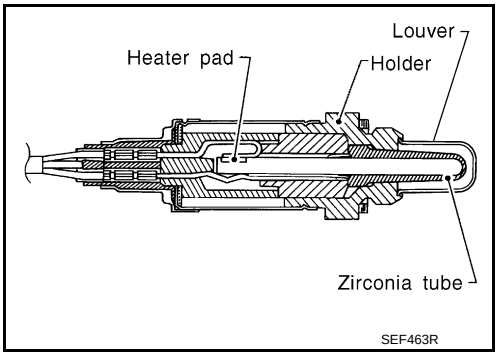

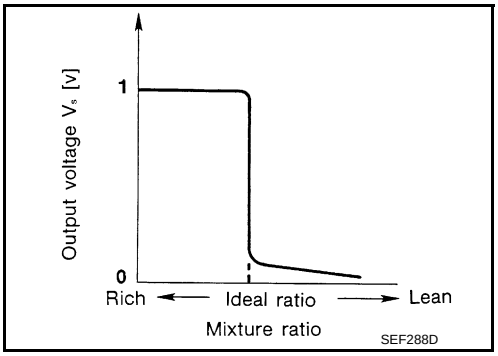

HEATED OXYGEN SENSOR 1

The ECM performs ON/OFF duty control of the heated oxygen sensor 1 heater corresponding to the engine operating condition to keep the temperature of heated oxygen sensor 1 element at the specified range.

Engine speed	Heated oxygen sensor 1 heater
Above 3,600 rpm	OFF
Below 3,600 rpm after warming up	ON

Heated Oxygen Sensor 2

INFOID:0000000006036732

DESCRIPTION

The heated oxygen sensor 2, after three way catalyst (manifold), monitors the oxygen level in the exhaust gas on each bank.
Even if switching characteristics of the heated oxygen sensor 1 are shifted, the air fuel ratio is controlled to stoichiometric, by the signal from the heated oxygen sensor 2.
This sensor is made of ceramic zirconia. The zirconia generates voltage from approximately 1 V in richer conditions to 0 V in leaner conditions.
Under normal conditions the heated oxygen sensor 2 is not used for engine control operation.

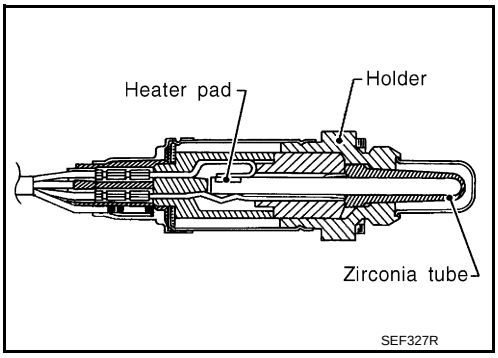

HEATED OXYGEN SENSOR 2 HEATER

Heated oxygen sensor 2 heater is integrated in the sensor.
The ECM performs ON/OFF control of the heated oxygen sensor 2 heater corresponding to the engine speed, amount of intake air and engine coolant temperature.

Engine speed	Heated oxygen sensor 2 heater
Above 3,600 rpm	OFF
Below 3,600 rpm after the following conditions are met. • Engine: After warming up • Keeping the engine speed between 3,500 and 4,000 rpm for 1 minute and at idle for 1 minute under no load	ON

Knock Sensor

INFOID:0000000006036735

The knock sensor is attached to the cylinder block. It senses engine knocking using a piezoelectric element. A knocking vibration from the cylinder block is sensed as vibrational pressure. This pressure is converted into a voltage signal and sent to the ECM.

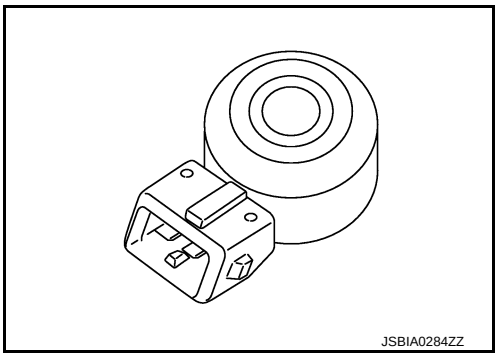

Cooling Fan

INFOID:0000000006036736

COOLING FAN CONTROL MODULE

Cooling fan control module receives ON/OFF pulse duty signal from IPDM E/R. Corresponding to this ON/OFF pulse duty signal, cooling fan control module sends cooling fan motor operating voltage to cooling fan motor. The revolution speed of cooling fan motor is controlled by duty cycle of the voltage.

COOLING FAN MOTOR

Cooling fan motor receives cooling fan motor operating voltage from cooling fan control module. The revolution speed of cooling fan motor is controlled by duty cycle of the voltage.

EVAP Canister Purge Volume Control Solenoid Valve

INFOID:0000000006036738

The EVAP canister purge volume control solenoid valve is used to control the flow rate of fuel vapor from the EVAP canister. The EVAP canister purge volume control solenoid valve is moved by ON/OFF pulses from the ECM. The longer the ON pulse, the greater the amount of fuel vapor that will flow through the valve.

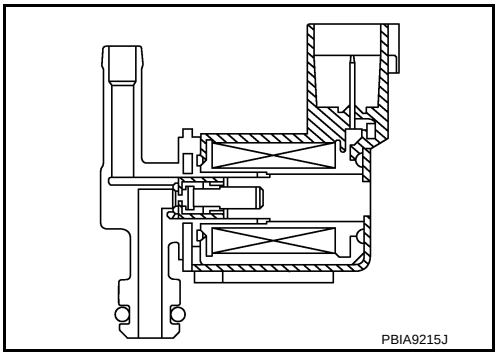

Refrigerant Pressure Sensor

INFOID:0000000006036740

The refrigerant pressure sensor is installed at the condenser of the air conditioner system. The sensor uses an electrostatic volume pressure transducer to convert refrigerant pressure to voltage. The voltage signal is sent to ECM, and ECM controls cooling fan system.

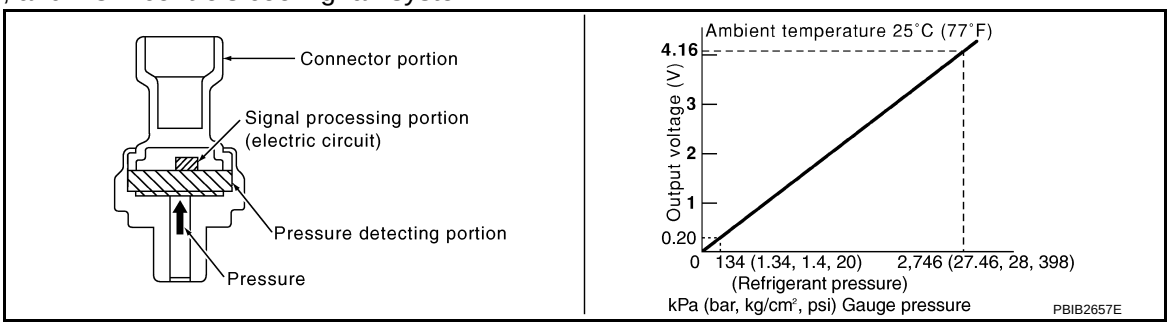

Stop Lamp Switch

INFOID:0000000006036741

Brake switch signal is applied to the ECM through the stop lamp switch when the brake pedal is depressed. This signal is used mainly to decrease the engine speed when the vehicle is being driven.

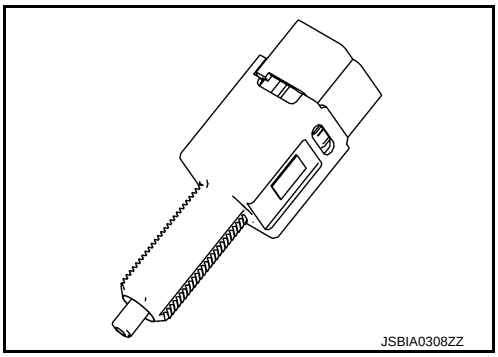

SYSTEM

ENGINE CONTROL SYSTEM

ENGINE CONTROL SYSTEM : System Diagram

INFOID:0000000006036802

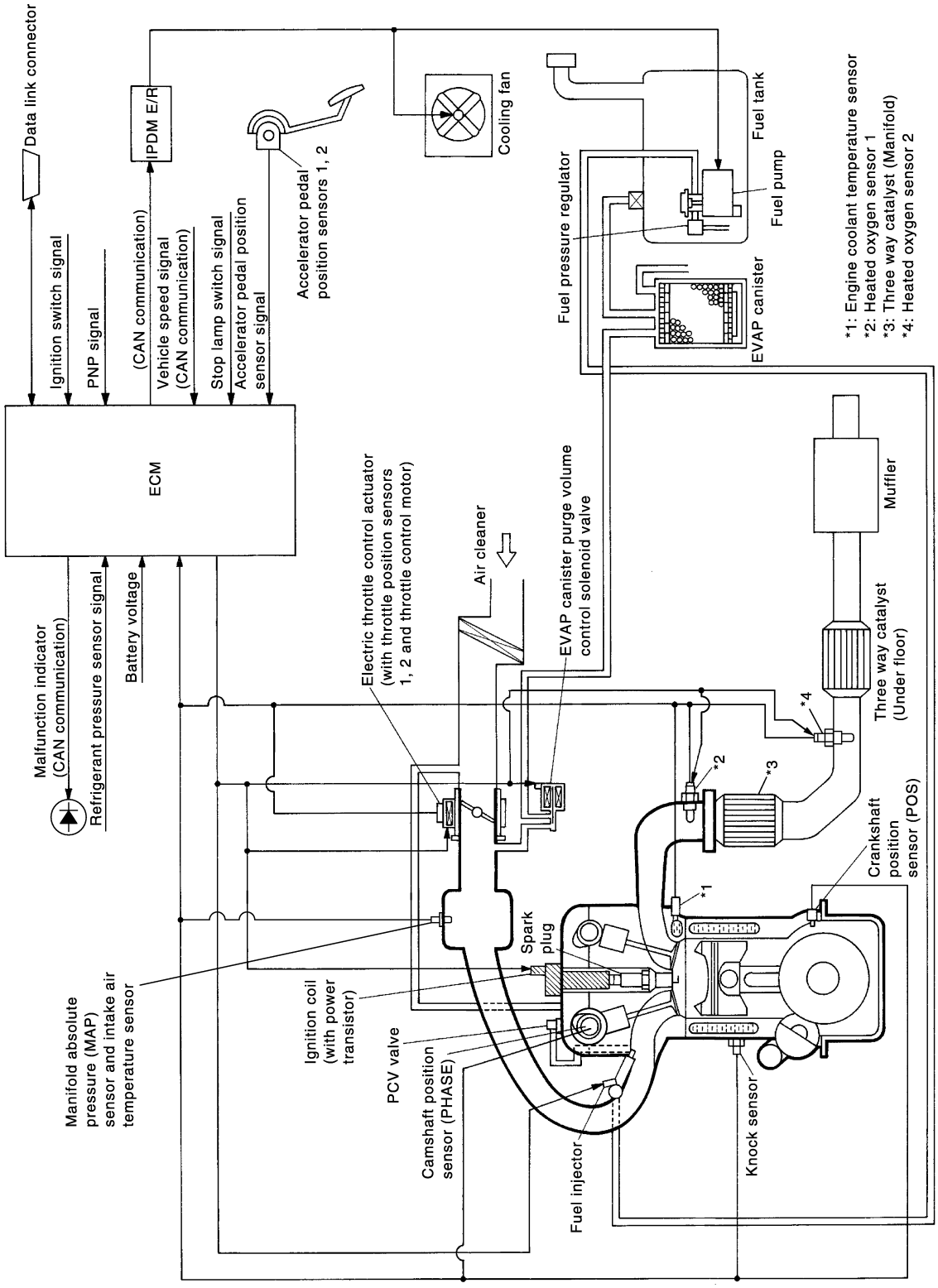

JPBIA3238GB

ENGINE CONTROL SYSTEM : System Description

INFOID:0000000006038721

ECM performs various controls such as fuel injection control and ignition timing control.

ENGINE CONTROL SYSTEM : Fail Safe

INFOID:0000000006036844

NON DTC RELATED ITEM

Detected items	Engine operating condition in fail-safe mode	Remarks	Reference page
Malfunction indicator circuit	Engine speed will not rise more than 2,500 rpm due to the fuel cut	When there is an open circuit on MIL circuit, the ECM cannot warn the driver by lighting up MIL when there is malfunction on engine control system. Therefore, when electrical controlled throttle and part of ECM related diagnoses are continuously detected as NG for 5 trips, ECM warns the driver that engine control system malfunctions and MIL circuit is open by means of operating fail safe function. The fail safe function also operates when above diagnoses except MIL circuit are detected and demands the driver to repair the malfunction.	EC-509, "Component Function Check"

DTC RELATED ITEM

DTC No.	Detected items	Engine operating condition in fail safe mode	
P0107 P0108	Manifold absolute pressure (MAP) sensor	Engine speed will not rise more than 2,500 rpm due to the fuel cut.	
P0117 P0118	Engine coolant temperature sensor circuit	Engine coolant temperature will be determined by ECM based on the following conditions. CONSULT-III displays the engine coolant temperature decided by ECM.	
		Condition	Engine coolant temperature decided (CONSULT-III display)
		Just as ignition switch is turned ON or START	40°C (104°F)
		Approx. 4 minutes or more after engine starting	80°C (176°F)
		Except as shown above	40 - 80°C (104 - 176°F) (Depends on the time)
		When the fail safe system for engine coolant temperature sensor is activated, the cooling fan operates while engine is running.	
P0122 P0123 P0222 P0223 P2135	Throttle position sensor	The ECM controls the electric throttle control actuator in regulating the throttle opening in order for the idle position to be within +10 degrees. The ECM regulates the opening speed of the throttle valve to be slower than the normal condition. So, the acceleration will be poor.	
P0605	ECM	(When ECM calculation function is malfunctioning:) ECM stops the electric throttle control actuator control, throttle valve is maintained at a fixed opening (approx. 5 degrees) by the return spring.	
P1121	Electric throttle control actuator	(When electric throttle control actuator does not function properly due to the return spring malfunction:) ECM controls the electric throttle actuator by regulating the throttle opening around the idle position. The engine speed will not rise more than 2,000 rpm.	
		(When throttle valve opening angle in fail safe mode is not in specified range:) ECM controls the electric throttle control actuator by regulating the throttle opening to 20 degrees or less.	
		(When ECM detects the throttle valve is stuck open:) While the vehicle is driving, it slows down gradually by fuel cut. After the vehicle stops, the engine stalls. The engine can restart in the Neutral position, and engine speed will not exceed 1,000 rpm or more.	
P1122	Electric throttle control function	ECM stops the electric throttle control actuator control, throttle valve is maintained at a fixed opening (approx. 5 degrees) by the return spring.	

DTC No.	Detected items	Engine operating condition in fail safe mode
P1124 P1126	Throttle control motor relay	ECM stops the electric throttle control actuator control, throttle valve is maintained at a fixed opening (approx. 5 degrees) by the return spring.
P1128	Throttle control motor	ECM stops the electric throttle control actuator control, throttle valve is maintained at a fixed opening (approx. 5 degrees) by the return spring.
P1171	Intake air	When accelerator pedal is depressed, engine speed will not rise more than 2,500 rpm due to fuel cut.
P1229	Sensor power supply	ECM stops the electric throttle control actuator control, throttle valve is maintained at a fixed opening (approx. 5 degrees) by the return spring.
P1805	Brake switch	ECM controls the electric throttle control actuator by regulating the throttle opening to a small range. Therefore, acceleration will be poor. Vehicle condition / Driving condition When engine is idling / Normal When accelerating / Poor acceleration
P2122 P2123 P2127 P2128 P2138	Accelerator pedal position sensor	The ECM controls the electric throttle control actuator in regulating the throttle opening in order for the idle position to be within +10 degrees. The ECM regulates the opening speed of the throttle valve to be slower than the normal condition. So, the acceleration will be poor.

MULTIPORT FUEL INJECTION SYSTEM

MULTIPORT FUEL INJECTION SYSTEM : System Diagram

INFOID:0000000006036809

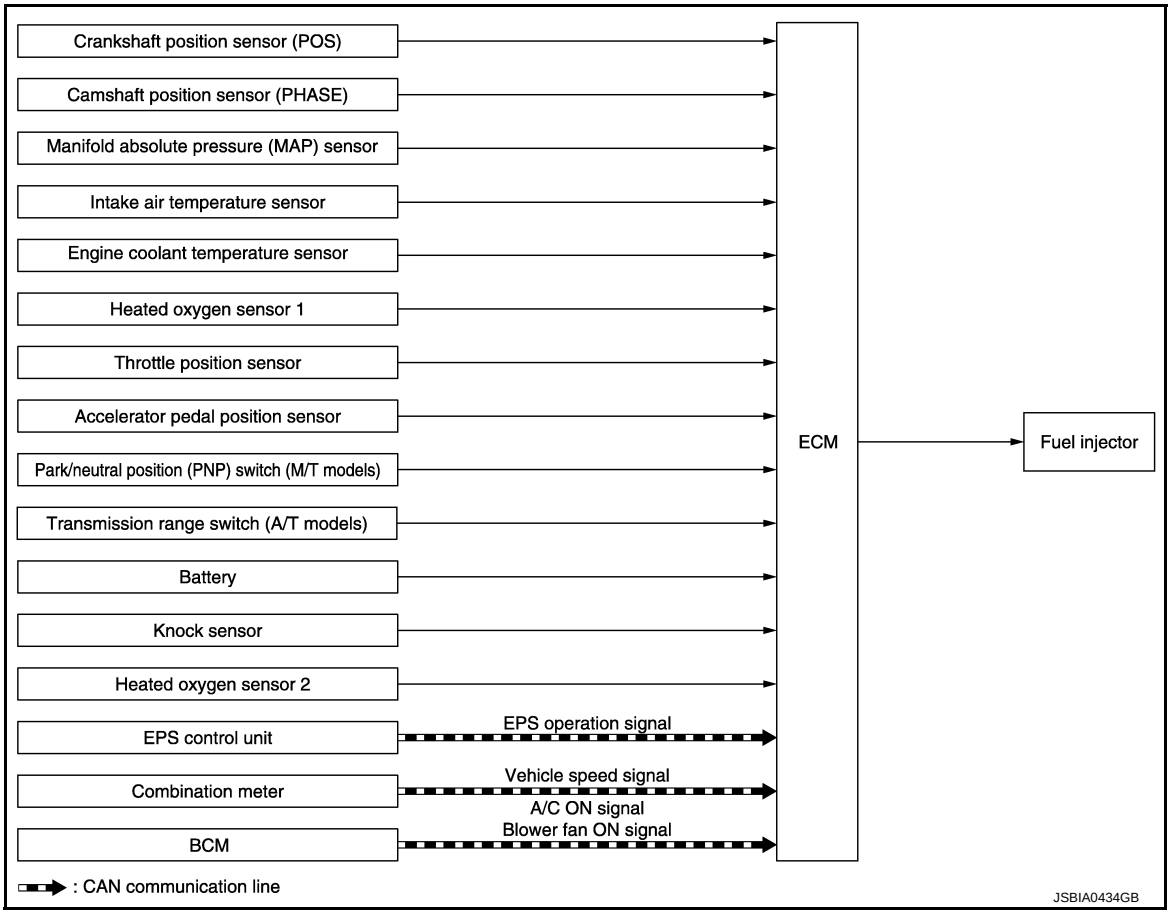

MULTIPORT FUEL INJECTION SYSTEM : System Description

INFOID:0000000006036810

INPUT/OUTPUT SIGNAL CHART

Sensor	Input signal to ECM	ECM function	Actuator
Crankshaft position sensor (POS)	Engine speed*2 Piston position	Fuel injection & mixture ratio control	Fuel injector
Camshaft position sensor (PHASE)			
Manifold absolute pressure (MAP) sensor	Amount of intake air		
Intake air temperature sensor	Intake air temperature		
Engine coolant temperature sensor	Engine coolant temperature		
Heated oxygen sensor 1	Density of oxygen in exhaust gas		
Throttle position sensor	Throttle position		
Accelerator pedal position sensor	Accelerator pedal position		
Park/neutral position (PNP) switch (M/T models)	PNP signal		
Transmission range switch (A/T models)			
Battery	Battery voltage*2		
Knock sensor	Engine knocking condition		
Heated oxygen sensor 2*1	Density of oxygen in exhaust gas		
EPS control unit	EPS operation signal*3		
Combination meter	Vehicle speed signal*3		
BCM	A/C ON signal*3 Blower fan ON signal*3		

*1: This sensor is not used to control the engine system under normal conditions.
*2: ECM determines the start signal status by the signals of engine speed and battery voltage.
*3: This signal is sent to the ECM through CAN communication line.

SYSTEM DESCRIPTION

The amount of fuel injected from the fuel injector is determined by the ECM. The ECM controls the length of time the valve remains open (injection pulse duration). The amount of fuel injected is a program value in the ECM memory. The program value is preset by engine operating conditions. These conditions are determined by input signals (for engine speed and intake air) from the crankshaft position sensor (POS), camshaft position sensor (PHASE) and the manifold absolute pressure (MAP) sensor.

VARIOUS FUEL INJECTION INCREASE/DECREASE COMPENSATION

In addition, the amount of fuel injected is compensated to improve engine performance under various operating conditions as listed below.

<Fuel increase>
- During warm-up
- When starting the engine
- During acceleration
- Hot-engine operation
- High-load, high-speed operation

<Fuel decrease>
- During deceleration
- During high engine speed operation

MIXTURE RATIO FEEDBACK CONTROL (CLOSED LOOP CONTROL)

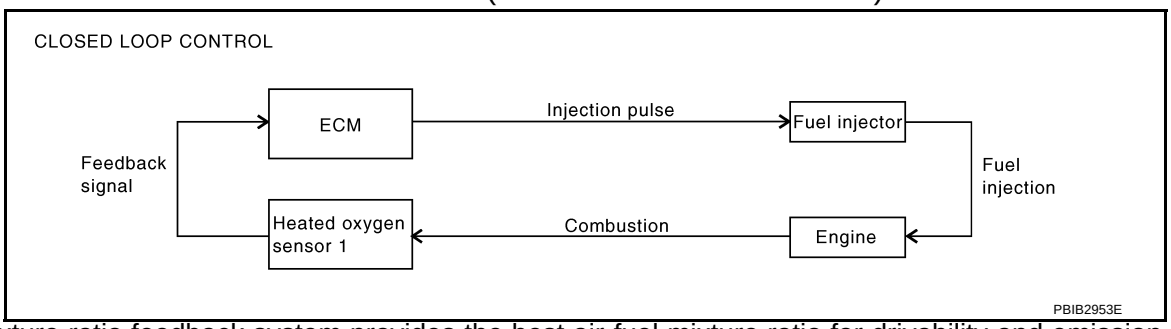

The mixture ratio feedback system provides the best air-fuel mixture ratio for drivability and emission control. The three way catalyst (manifold) can better reduce CO, HC and NOx emissions. This system uses heated oxygen sensor 1 in the exhaust manifold to monitor whether the engine operation is rich or lean. The ECM adjusts the injection pulse width according to the sensor voltage signal. For more information about heated oxygen sensor 1, refer to EC-331, "Heated Oxygen Sensor 1". This maintains the mixture ratio within the range of stoichiometric (ideal air-fuel mixture).
This stage is referred to as the closed loop control condition.
Heated oxygen sensor 2 is located downstream of the three way catalyst (manifold). Even if the switching characteristics of heated oxygen sensor 1 shift, the air-fuel ratio is controlled to stoichiometric by the signal from heated oxygen sensor 2.

- Open Loop Control
  The open loop system condition refers to when the ECM detects any of the following conditions. Feedback control stops in order to maintain stabilized fuel combustion.

- Deceleration and acceleration
- High-load, high-speed operation
- Malfunction of heated oxygen sensor 1 or its circuit
- Insufficient activation of heated sensor 1 at low engine coolant temperature
- High engine coolant temperature
- During warm-up
- When starting the engine

MIXTURE RATIO SELF-LEARNING CONTROL

The mixture ratio feedback control system monitors the mixture ratio signal transmitted from heated oxygen sensor 1. This feedback signal is then sent to the ECM. The ECM controls the basic mixture ratio as close to the theoretical mixture ratio as possible. However, the basic mixture ratio is not necessarily controlled as originally designed. Both manufacturing differences (i.e., manifold absolute pressure sensor silicon diaphragm) and characteristic changes during operation (i.e., fuel injector clogging) directly affect mixture ratio.
Accordingly, the difference between the basic and theoretical mixture ratios is monitored in this system. This is then computed in terms of “injection pulse duration” to automatically compensate for the difference between the two ratios.
“Fuel trim” refers to the feedback compensation value compared against the basic injection duration. Fuel trim includes “short-term fuel trim” and “long-term fuel trim”.
“Short-term fuel trim” is the short-term fuel compensation used to maintain the mixture ratio at its theoretical value. The signal from heated oxygen sensor 1 indicates whether the mixture ratio is RICH or LEAN compared to the theoretical value. The signal then triggers a reduction in fuel volume if the mixture ratio is rich, and an increase in fuel volume if it is lean.
“Long-term fuel trim” is overall fuel compensation carried out long-term to compensate for continual deviation of the “short-term fuel trim” from the central value. Such deviation will occur due to individual engine differences, wear over time and changes in the usage environment.

FUEL INJECTION TIMING

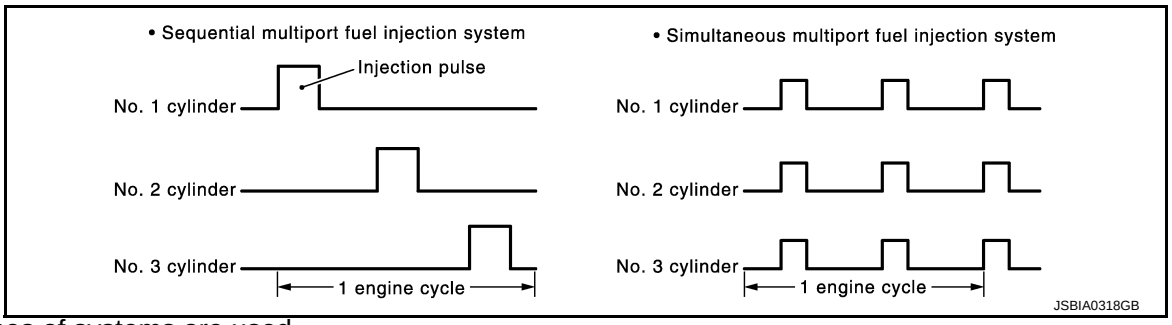

Two types of systems are used.

- Sequential Multiport Fuel Injection System
  Fuel is injected into each cylinder during each engine cycle according to the firing order. This system is used when the engine is running.
- Simultaneous Multiport Fuel Injection System
  Fuel is injected simultaneously into all three cylinders twice each engine cycle. In other words, pulse signals of the same width are simultaneously transmitted from the ECM.
  The three injectors will then receive the signals two times for each engine cycle.
  This system is used when the engine is being started and/or if the fail safe system (CPU) is operating.

FUEL SHUT-OFF

Fuel to each cylinder is cut off during deceleration, operation of the engine at excessively high speeds or operation of the vehicle at excessively high speeds.

ELECTRIC IGNITION SYSTEM

ELECTRIC IGNITION SYSTEM : System Diagram

INFOID:0000000006036815

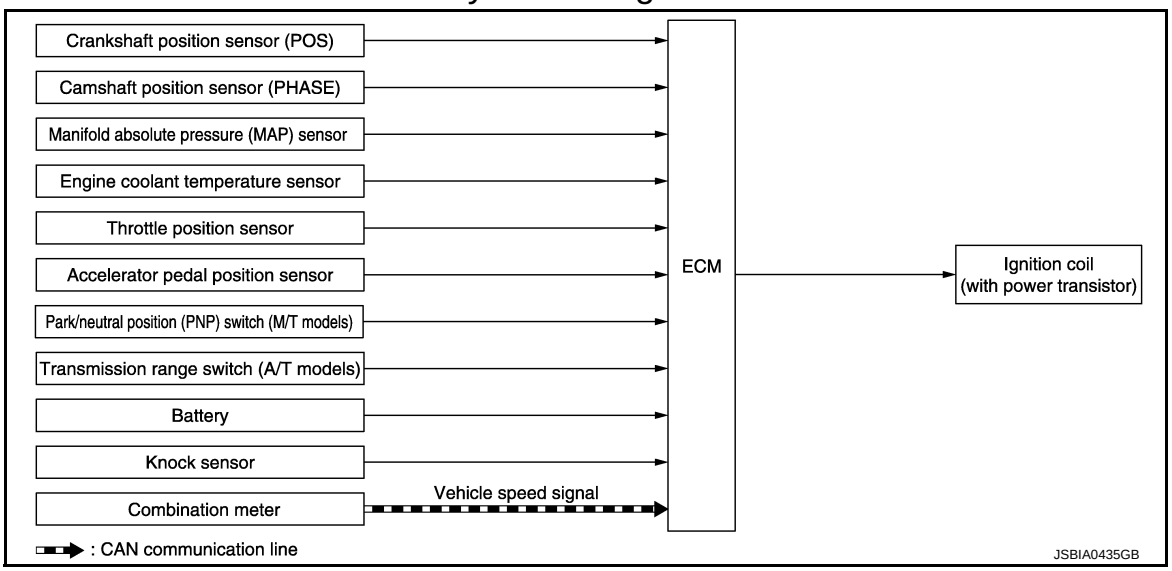

ELECTRIC IGNITION SYSTEM : System Description

INFOID:0000000006036816

INPUT/OUTPUT SIGNAL CHART

Sensor	Input signal to ECM	ECM function	Actuator
Crankshaft position sensor (POS)	Engine speed*1 Piston position	Ignition timing control	Ignition coil (with power transistor)
Camshaft position sensor (PHASE)			
Manifold absolute pressure (MAP) sensor	Amount of intake air		
Engine coolant temperature sensor	Engine coolant temperature		
Throttle position sensor	Throttle position		
Accelerator pedal position sensor	Accelerator pedal position		
Park/neutral position (PNP) switch (M/T models)	PNP signal		
Transmission range switch (A/T models)			
Battery	Battery voltage*1		
Knock sensor	Engine knocking		
Combination meter	Vehicle speed signal*2		

*1: ECM determines the start signal status by the signals of engine speed and battery voltage.
*2: This signal is sent to the ECM through CAN communication line.

SYSTEM DESCRIPTION

Firing order: 1 - 2 - 3

The ignition timing is controlled by the ECM to maintain the best air-fuel ratio for every running condition of the engine. The ignition timing data is stored in the ECM.

The ECM receives information such as the injection pulse width and camshaft position sensor (PHASE) signal. Computing this information, ignition signals are transmitted to the power transistor.

During the following conditions, the ignition timing is revised by the ECM according to the other data stored in the ECM.

- At starting
- During warm-up
- At idle
- At low battery voltage
- During acceleration

The knock sensor retard system is designed only for emergencies. The basic ignition timing is programmed within the anti-knocking zone, if recommended fuel is used under dry conditions. The retard system does not operate under normal driving conditions. If engine knocking occurs, the knock sensor monitors the condition. The signal is transmitted to the ECM. The ECM retards the ignition timing to eliminate the knocking condition.

AIR CONDITIONING CUT CONTROL

AIR CONDITIONING CUT CONTROL : System Diagram

INFOID:0000000006036819

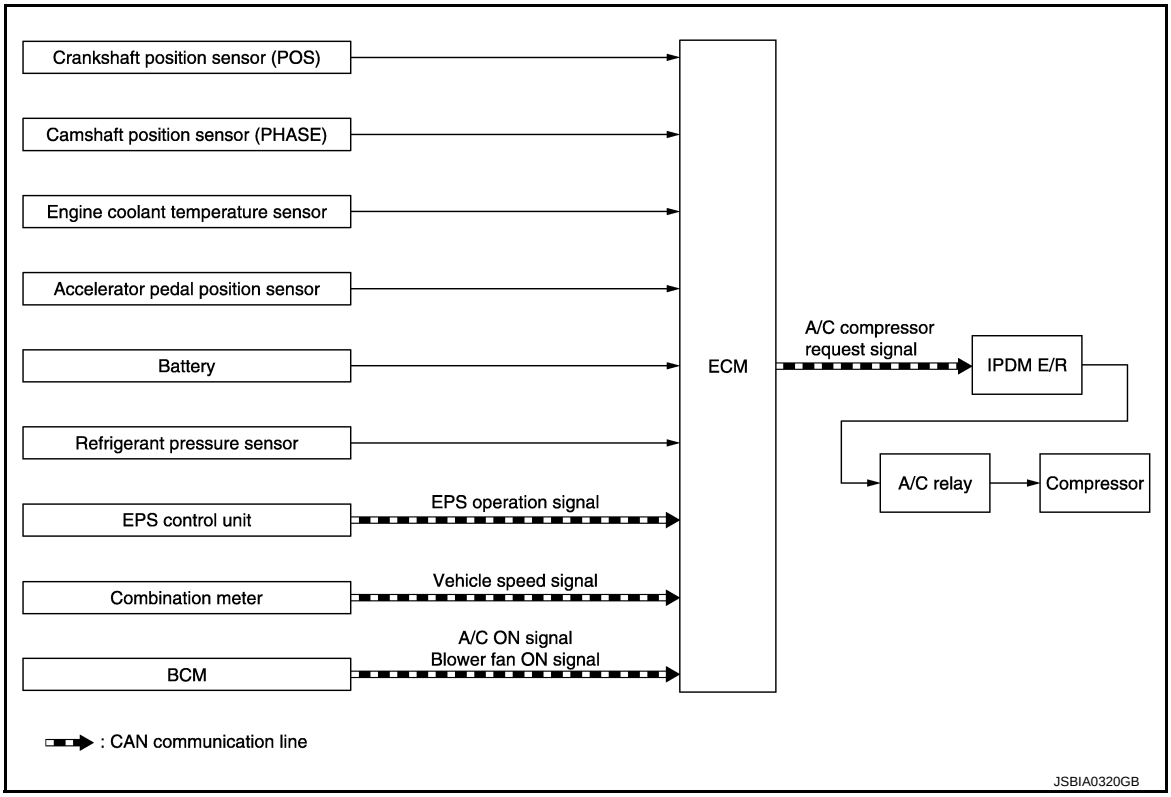

AIR CONDITIONING CUT CONTROL : System Description

INFOID:0000000006036820

INPUT/OUTPUT SIGNAL CHART

Sensor	Input signal to ECM	ECM function	Actuator
Crankshaft position sensor (POS) Camshaft position sensor (PHASE)	Engine speed*1	A/C compressor repuest signal	IPDM E/R ↓ Air conditioner relay ↓ Compressor
Engine coolant temperature sensor	Engine coolant temperature		
Accelerator pedal position sensor	Accelerator pedal position		
Battery	Battery voltage*1		
Refrigerant pressure sensor	Refrigerant pressure		
EPS control unit	EPS operation signal*2		
Combination meter	Vehicle speed signal*2		
BCM	A/C ON signal*2 Blower fan ON signal		

*1: ECM determines the start signal status by the signals of engine speed and battery voltage.
*2: This signal is sent to the ECM through CAN communication line.

SYSTEM DESCRIPTION

This system improves engine operation when the air conditioner is used.
Under the following conditions, the air conditioner is turned off.

- When the accelerator pedal is fully depressed.
- When cranking the engine.
- At high engine speeds.
- When the engine coolant temperature becomes excessively high.
- When operating power steering during low engine speed or low vehicle speed.
- When engine speed is excessively low.
- When refrigerant pressure is excessively low or high.

CAN COMMUNICATION

CAN COMMUNICATION : System Description

INFOID:0000000006036821

CAN (Controller Area Network) is a serial communication line for real time application. It is an on-vehicle multiplex communication line with high data communication speed and excellent error detection ability. Many electronic control units are equipped onto a vehicle, and each control unit shares information and links with other control units during operation (not independent). In CAN communication, control units are connected with 2 communication lines (CAN H line, CAN L line) allowing a high rate of information transmission with less wiring. Each control unit transmits/receives data but selectively reads required data only.
Refer to LAN-23, "CAN COMMUNICATION SYSTEM : CAN Communication Signal Chart", about CAN communication for detail.

COOLING FAN CONTROL

COOLING FAN CONTROL : System Diagram

INFOID:0000000006036824

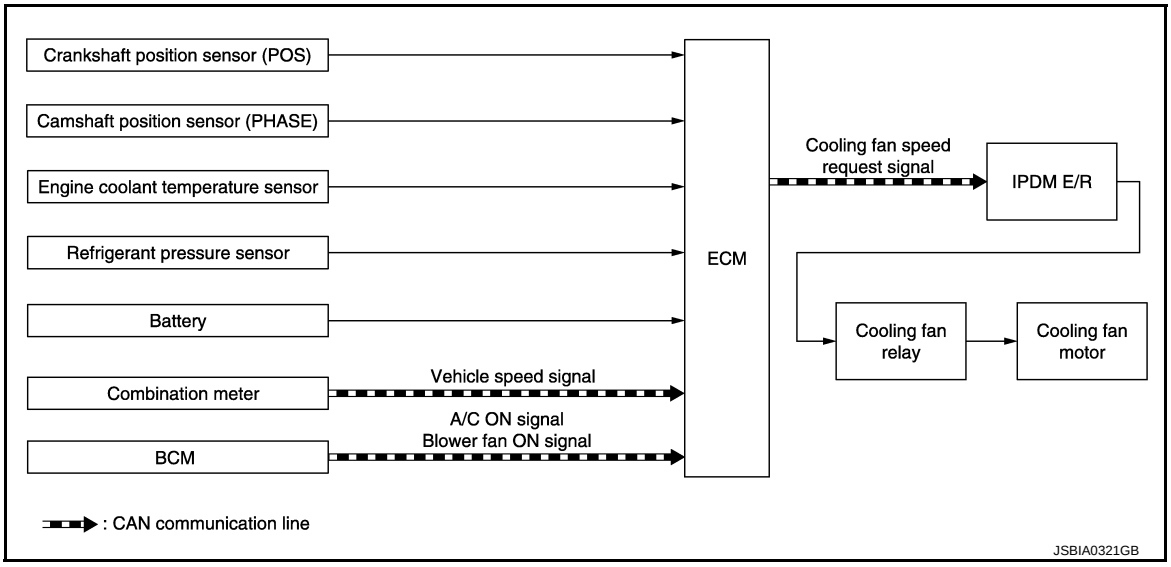

COOLING FAN CONTROL : System Description

INFOID:0000000006036825

INPUT/OUTPUT SIGNAL CHART

Sensor	Input signal to ECM	ECM function	Actuator
Crankshaft position sensor (POS) Camshaft position sensor (PHASE)	Engine speed*1	Cooling fan speed request signal	IPDM E/R ↓ Cooling fan relay ↓ Cooling fan motor
Engine coolant temperature sensor	Engine coolant temperature		
Refrigerant pressure sensor	Refrigerant pressure		
Battery	Battery voltage*1		
Combination meter	Vehicle speed signal*2		
BCM	A/C ON signal*2 Blower fan ON signal		

*1: ECM determines the start signal status by the signals of engine speed and battery voltage.
*2: This signal is sent to ECM through CAN communication line.

SYSTEM DESCRIPTION

ECM controls cooling fan speed corresponding to vehicle speed, engine coolant temperature, refrigerant pressure, air conditioner ON signal. Then control system has 2-step control [HIGH/OFF].

Cooling Fan Operation

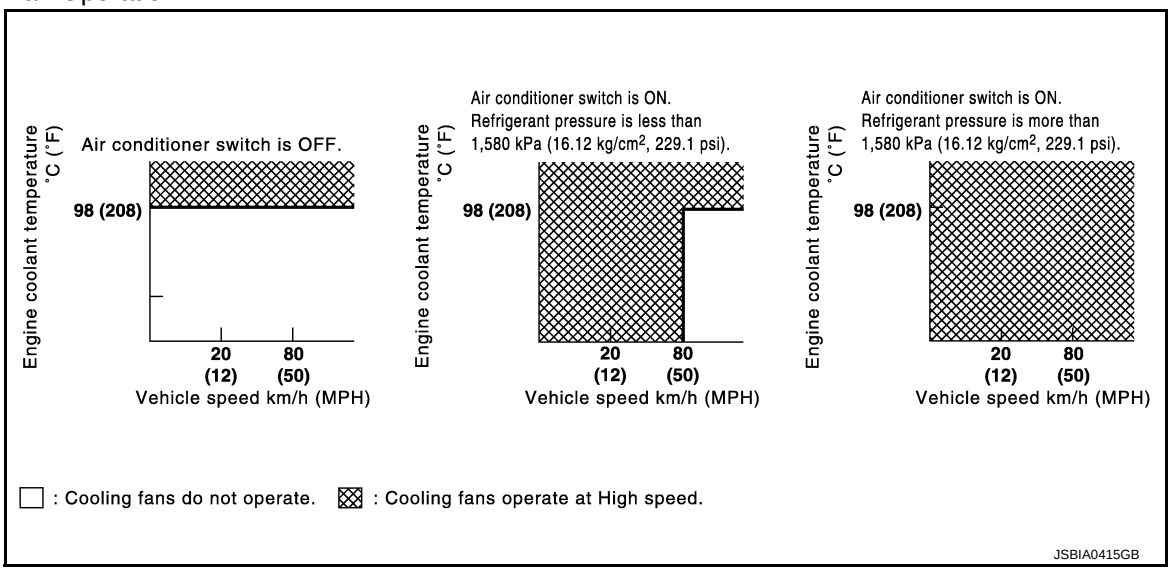

Cooling Fan Relay Operation

The ECM controls cooling fan relays through CAN communication line.

Cooling fan speed	Cooling fan relay
Stop (OFF)	OFF
High (HI)	ON

EVAPORATIVE EMISSION SYSTEM

EVAPORATIVE EMISSION SYSTEM : System Diagram

INFOID:0000000006036828

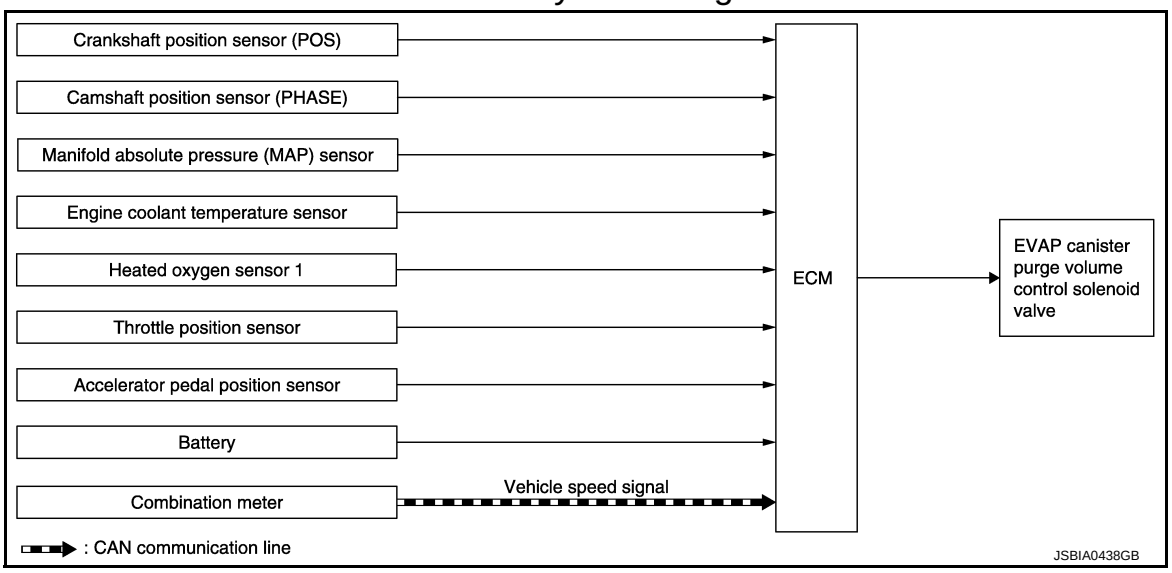

EVAPORATIVE EMISSION SYSTEM : System Description

INFOID:0000000006036829

INPUT/OUTPUT SIGNAL CHART

Sensor	Input signal to ECM	ECM function	Actuator
Crankshaft position sensor (POS) Camshaft position sensor (PHASE)	Engine speed*1	EVAP canister purge flow control	EVAP canister purge volume control solenoid valve
Manifold absolute pressure (MAP) sensor	Amount of intake air		
Engine coolant temperature sensor	Engine coolant temperature		
Heated oxygen sensor 1	Density of oxygen in exhaust gas (Mixture ratio feedback signal)		
Throttle position sensor	Throttle position		
Accelerator pedal position sensor	Accelerator pedal position		
Battery	Battery voltage*1		
Combination meter	Vehicle speed signal*2		

*1: ECM determines the start signal status by the signals of engine speed and battery voltage.
*2: This signal is sent to the ECM through CAN communication line.

SYSTEM DESCRIPTION

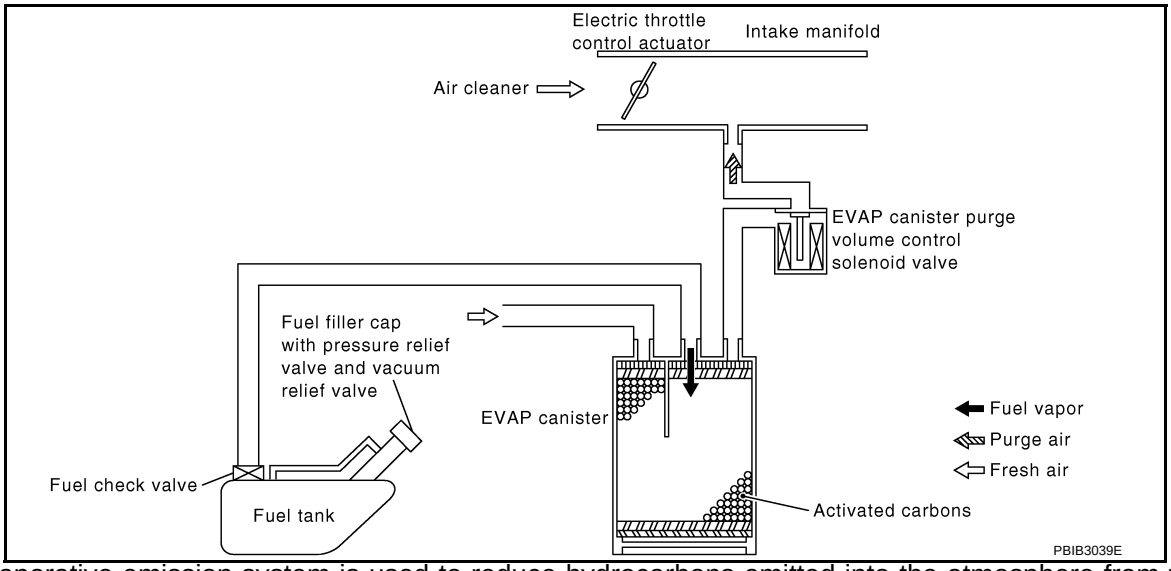

The evaporative emission system is used to reduce hydrocarbons emitted into the atmosphere from the fuel system. This reduction of hydrocarbons is accomplished by activated charcoals in the EVAP canister.
The fuel vapor in the sealed fuel tank is led into the EVAP canister which contains activated carbon and the vapor is stored there when the engine is not operating or when refueling to the fuel tank.
The vapor in the EVAP canister is purged by the air through the purge line to the intake manifold when the engine is operating. EVAP canister purge volume control solenoid valve is controlled by ECM. When the engine operates, the flow rate of vapor controlled by EVAP canister purge volume control solenoid valve is proportionally regulated as the air flow increases.
EVAP canister purge volume control solenoid valve also shuts off the vapor purge line during decelerating and idling.

DIAGNOSIS SYSTEM (ECM)

Diagnosis Description

INFOID:0000000005886479

INTRODUCTION

The ECM has an on board diagnostic system, which detects malfunctions related to engine sensors or actuators. The ECM also records various emission-related diagnostic information including:

Emission-related diagnostic information
Diagnostic Trouble Code (DTC)
Freeze Frame data
1st Trip Diagnostic Trouble Code (1st Trip DTC)
1st Trip Freeze Frame data

The above information can be checked using procedures listed in the table below.

×: Applicable —: Not applicable

	DTC	1st trip DTC	Freeze Frame data	1st trip Freeze Frame data
CONSULT-III	×	×	×	×
ECM	×	×*	—	—

*: When DTC and 1st trip DTC simultaneously appear on the display, they cannot be clearly distinguished from each other.

The malfunction indicator (MIL) on the instrument panel lights up when the same malfunction is detected in two consecutive trips (Two trip detection logic), or when the ECM enters fail-safe mode. (Refer to EC-363, "Fail Safe".)

TWO TRIP DETECTION LOGIC

When a malfunction is detected for the first time, 1st trip DTC and 1st trip Freeze Frame data are stored in the ECM memory. The MIL will not light up at this stage. <1st trip>

If the same malfunction is detected again during the next drive, the DTC and Freeze Frame data are stored in the ECM memory, and the MIL lights up. The MIL lights up at the same time when the DTC is stored. <2nd trip> The “trip” in the “Two Trip Detection Logic” means a driving mode in which self-diagnosis is performed during vehicle operation.

DTC AND FREEZE FRAME DATA

DTC and 1st Trip DTC

The 1st trip DTC (whose number is the same as the DTC number) is displayed for the latest self-diagnostic result obtained. If the ECM memory was cleared previously, and the 1st trip DTC did not recur, the 1st trip DTC will not be displayed.

If a malfunction is detected during the 1st trip, the 1st trip DTC is stored in the ECM memory. The MIL will not light up (two trip detection logic). If the same malfunction is not detected in the 2nd trip (meeting the required driving pattern), the 1st trip DTC is cleared from the ECM memory. If the same malfunction is detected in the 2nd trip, both the 1st trip DTC and DTC are stored in the ECM memory and the MIL lights up. In other words, the DTC is stored in the ECM memory and the MIL lights up when the same malfunction occurs in two consecutive trips. If a 1st trip DTC is stored and a non-diagnostic operation is performed between the 1st and 2nd trips, only the 1st trip DTC will continue to be stored. For malfunctions that light up the MIL during the 1st trip, the DTC and 1st trip DTC are stored in the ECM memory.

Procedures for clearing the DTC and the 1st trip DTC from the ECM memory are described in “How to Erase DTC and 1st trip DTC” below.

When a 1st trip DTC is detected, check, print out or write down and erase (1st trip) DTC and Freeze Frame data as specified in Work Flow procedure Step 2, refer to EC-372, "Work Flow". Then perform DTC CONFIRMATION PROCEDURE or Component Function Check to try to duplicate the malfunction. If the malfunction is duplicated, the item requires repair.

Freeze Frame Data and 1st Trip Freeze Frame Data

The ECM records the driving conditions such as fuel system status, engine coolant temperature, short term fuel trim, long term fuel trim, engine speed, vehicle speed, absolute throttle position, base fuel schedule and intake air temperature at the moment a malfunction is detected.

Data which are stored in the ECM memory, along with the 1st trip DTC, are called 1st trip freeze frame data. The data, stored together with the DTC data, are called freeze frame data. The 1st trip freeze frame data and the freeze frame data can only be displayed on the CONSULT-III screen.
Only one set of freeze frame data (either 1st trip freeze frame data or freeze frame data) can be stored in the ECM. There is no priority for 1st trip freeze frame data and it is updated each time a different 1st trip DTC is detected. However, once freeze frame data (2nd trip detection/MIL ON) is stored in the ECM memory, 1st trip freeze frame data is no longer stored. Remember, only one set of freeze frame data can be stored in the ECM. Both 1st trip freeze frame data and freeze frame data (along with the DTCs) are cleared when the ECM memory is erased. Procedures for clearing the ECM memory are described in “How to Erase DTC and 1st trip DTC” below.

How to Read DTC and 1st Trip DTC

With CONSULT-III
CONSULT-III displays the DTC in "SELF-DIAG RESULTS" mode.
Examples: P0117, P0340, P1217, etc.
These DTCs are prescribed by SAE J1979/ISO 15031-5.
(CONSULT-III also displays the malfunctioning component or system.)

Without CONSULT-III
The number of blinks of the MIL in the Diagnostic Test Mode II (Self-Diagnostic Results) indicates the DTC.
Example: 0117, 0340, 1217, etc.
These DTCs are controlled by NISSAN.
- **1st trip DTC No. is the same as DTC No.**
- **Output of a DTC indicates a malfunction. However, the Diagnostic Test Mode II do not indicate whether the malfunction is still occurring or has occurred in the past and has returned to normal. CONSULT-III can identify malfunction status as shown below. Therefore, using CONSULT-III (if available) is recommended.**

DTC or 1st trip DTC of a malfunction is displayed in “Self diagnostic Result” mode of CONSULT-III.
Time data indicates how many times the vehicle was driven after the last detection of a DTC.
If the DTC is being detected currently, the time data will be [0].
If a 1st trip DTC is stored in the ECM, the time data will be [1t].

How to Erase DTC and 1st Trip DTC

With CONSULT-III
NOTE:
If the ignition switch stays ON after repair work, be sure to turn ignition OFF once. Wait at least 10 seconds and then turn it ON (engine stopped) again.

1. Select “ENGINE” with CONSULT-III.
2. Select “SELF-DIAG RESULTS”.
3. Touch “ERASE”. (DTC in ECM will be erased.)

Without CONSULT-III
NOTE:
If the ignition switch stays ON after pair work, be sure to turn ignition OFF once. Wait at least 10 seconds and then turn it ON (engine stopped) again.

1. Erase DTC in ECM. Refer to “How to Erase Diagnostic Test Mode II (Self-diagnostic Results) below.

- **If the battery is disconnected, the emission-related diagnostic information will be lost within 24 hours.**
- **The following data are cleared when the ECM memory is erased.**

- Diagnostic trouble codes
- 1st trip diagnostic trouble codes
- Freeze frame data
- 1st trip freeze frame data

Actual work procedures are explained using a DTC as an example. Be careful so that not only the DTC, but all of the data listed above, are cleared from the ECM memory during work procedures.

MALFUNCTION INDICATOR LAMP (MIL)

Description

The MIL is located on the instrument panel.

1. The MIL will light up when the ignition switch is turned ON without the engine running. This is a bulb check.
   If the MIL does not light up, check MIL circuit. Refer to EC-509, "Component Function Check".
2. When the engine is started, the MIL should go off.
   If the MIL remains on, the on board diagnostic system has detected an engine system malfunction.

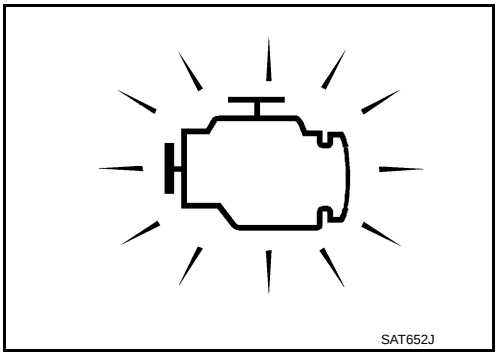

On Board Diagnostic System Function

The on board diagnostic system has the following four functions.

Diagnostic Test Mode	KEY and ENG. Status	Function	Explanation of Function
Mode I	Ignition switch in ON position Engine stopped	BULB CHECK	This function checks the MIL bulb for damage (blown, open circuit, etc.). If the MIL does not come on, check MIL circuit.
	Engine running	MALFUNCTION WARNING	This is a usual driving condition. When a malfunction is detected twice in two consecutive driving cycles (two trip detection logic), the MIL will light up to inform the driver that a malfunction has been detected. One trip detection diagnoses will light up the MIL in the 1st trip.
Mode II	Ignition switch in ON position Engine stopped	SELF-DIAGNOSTIC RESULTS	This function allows DTCs and 1st trip DTCs to be read.
	Engine running	HEATED OXYGEN SENSOR 1 MONITOR	This function allows the fuel mixture condition (lean or rich), monitored by heated oxygen sensor 1, to be read.

Diagnostic Test Mode I — Bulb Check

In this mode, the MIL on the instrument panel should stay ON. If it remains OFF, check MIL circuit. Refer to EC-509, "Component Function Check".

Diagnostic Test Mode I — Malfunction Warning

MIL	Condition
ON	When the malfunction is detected.
OFF	No malfunction.

This DTC number is clarified in Diagnostic Test Mode II (Self-diagnostic Results)

Diagnostic Test Mode II — Self-diagnostic Results

In this mode, the DTC and 1st trip DTC are indicated by the number of blinks of the MIL as shown below.

The DTC and 1st trip DTC are displayed at the same time. If the MIL does not illuminate in diagnostic test mode I (Malfunction warning), all displayed items are 1st trip DTCs. If only one code is displayed when the MIL illuminates in diagnostic test mode II (Self-diagnostic Results), it is a DTC; if two or more codes are displayed, they may be either DTCs or 1st trip DTCs. DTC No. is same as that of 1st trip DTC. These unidentified codes can be identified by using the CONSULT-III. A DTC will be used as an example for how to read a code.

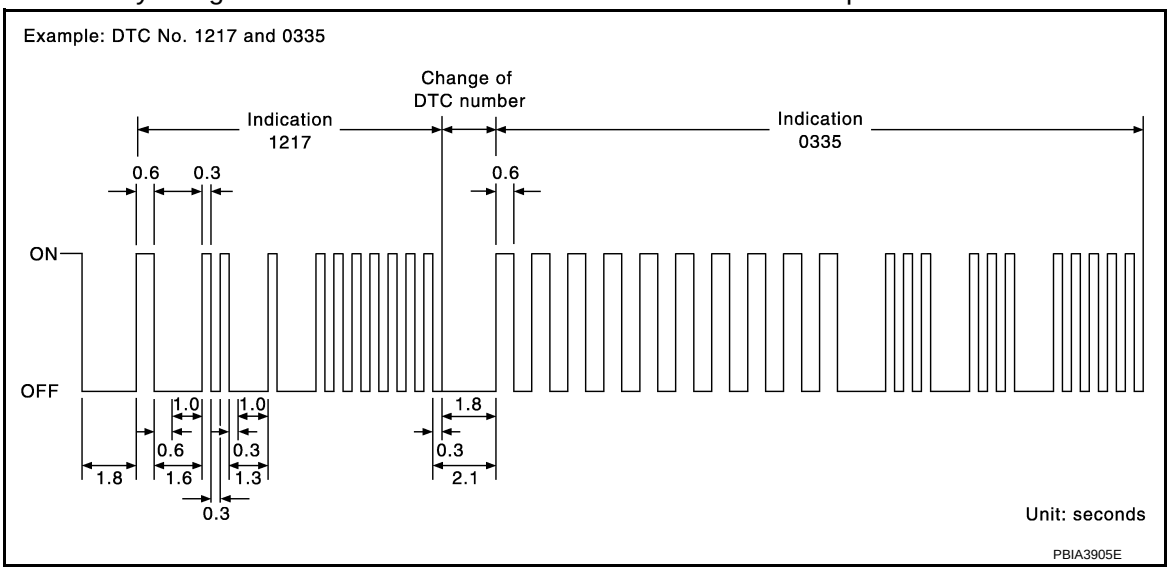

A particular trouble code can be identified by the number of four-digit numeral flashes. The “zero” is indicated by the number of ten flashes. The length of time the 1,000th-digit numeral flashes on and off is 1.2 seconds consisting of an ON (0.6-second) - OFF (0.6-second) cycle.
The 100th-digit numeral and lower digit numerals consist of a 0.3-second ON and 0.3-second OFF cycle.
A change from one digit numeral to another occurs at an interval of 1.0-second OFF. In other words, the later numeral appears on the display 1.3 seconds after the former numeral has disappeared.
A change from one trouble code to another occurs at an interval of 1.8-second OFF.
In this way, all the detected malfunctions are classified by their DTC numbers. The DTC 0000 refers to no malfunction. (See EC-365, "DTC Index".)
The DTC can be erased from the back up memory in the ECM by depressing accelerator pedal. Refer to “How to Switch Diagnostic Test Mode” below.

- **If the battery is disconnected, the DTC will be lost from the backup memory within 24 hours.**
- **Be careful not to erase the stored memory before starting trouble diagnoses.**

Diagnostic Test Mode II — Heated Oxygen Sensor 1 Monitor

In this mode, the MIL displays the condition of the fuel mixture (lean or rich) which is monitored by the heated oxygen sensor 1.

MIL	Fuel mixture condition in the exhaust gas	Air fuel ratio feedback control condition
ON	Lean	Closed loop system
OFF	Rich	
*Remains ON or OFF	Any condition	Open loop system

*: Maintains conditions just before switching to open loop.

To check the heated oxygen sensor 1 function, start engine in the Diagnostic Test Mode II and warm it up until engine coolant temperature indicator points to the middle of the gauge.
Next run engine at about 2,000 rpm for about 2 minutes under no load conditions. Then make sure that the MIL comes ON more than 5 times within 10 seconds with engine running at 2,000 rpm under no load.

MIL FLASHING WITHOUT DTC

If the ECM is in Diagnostic Test Mode II, MIL may flash when engine is running. In this case, check ECM diagnostic test mode. How to switch the diagnostic test (function) modes, and details of the above functions are described later.
The following emission-related diagnostic information is cleared when the ECM memory is erased.

- Diagnostic trouble codes
- 1st trip diagnostic trouble codes
- Freeze frame data
- 1st trip freeze frame data

How to Switch Diagnostic Test Mode

NOTE:

- **It is better to count the time accurately with a clock.**
- **It is impossible to switch the diagnostic mode when an accelerator pedal position sensor circuit has a malfunction.**
- **Always ECM returns to Diagnostic Test Mode I after ignition switch is turned OFF.**

HOW TO SET DIAGNOSTIC TEST MODE II (SELF-DIAGNOSTIC RESULTS)

1. Confirm that accelerator pedal is fully released, turn ignition switch ON and wait 3 seconds.
2. Repeat the following procedure quickly five times within 5 seconds.

a. Fully depress the accelerator pedal.

b. Fully release the accelerator pedal.

3. Wait 7 seconds, fully depress the accelerator pedal and keep it for approx. 10 seconds until the MIL starts blinking.
4. Fully release the accelerator pedal.
   ECM has entered to Diagnostic Test Mode II (Self-diagnostic results).
   NOTE:
   Wait until the same DTC (or 1st trip DTC) appears to confirm all DTCs certainly.

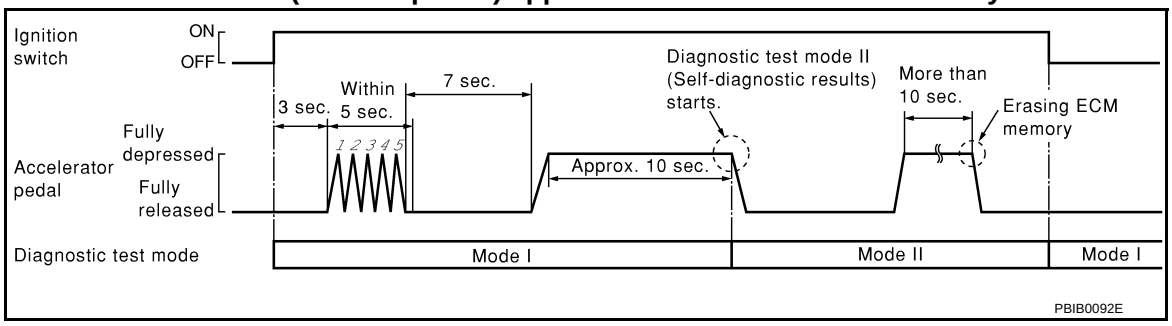

HOW TO SET DIAGNOSTIC TEST MODE II (HEATED OXYGEN SENSOR 1 MONITOR)

1. Set the ECM in Diagnostic Test Mode II (Self-diagnostic results).
   Refer to “HOW TO SET DIAGNOSTIC TEST MODE II (SELF-DIAGNOSTIC RESULTS)” above.
2. Start Engine.
   ECM has entered to Diagnostic Test Mode II (Heated oxygen sensor 1 monitor).

HOW TO ERASE DIAGNOSTIC TEST MODE II (SELF-DIAGNOSTIC RESULTS)

1. Set ECM in Diagnostic Test Mode II (Self-diagnostic results). Refer to “HOW TO SET DIAGNOSTIC TEST MODE II (SELF-DIAGNOSTIC RESULTS)” above.
2. Fully depress the accelerator pedal and keep it for more than 10 seconds.
   The emission-related diagnostic information has been erased from the backup memory in the ECM.
3. Fully release the accelerator pedal, and confirm the DTC 0000 is displayed.

CONSULT-III Function

INFOID:0000000005886480

FUNCTION

Diagnostic test mode	Function
Ecu Identification	ECM part number can be read.
Self Diagnostic Result	Self-diagnostic results such as 1st trip DTC, DTCs and 1st trip freeze frame data or freeze frame data can be read and erased quickly.*
Data Monitor	Input/Output data in the ECM can be read.
Active Test	Diagnostic Test Mode in which CONSULT-III drives some actuators apart from the ECMs and also shifts some parameters in a specified range.
Function Test	This mode is used to inform customers when their vehicle condition requires periodic maintenance.
Work Support	This mode enables a technician to adjust some devices faster and more accurately by following the indications on the CONSULT-III unit.

*: The following emission-related diagnostic information is cleared when the ECM memory is erased.

- Diagnostic trouble codes
- 1st trip diagnostic trouble codes

- Freeze frame data
- 1st trip freeze frame data

SELF DIAGNOSTIC RESULT MODE

Self Diagnostic Item

Regarding items of DTC and 1st trip DTC, refer to EC-365, "DTC Index".)

Freeze Frame Data and 1st Trip Freeze Frame Data

Freeze frame data item*	Description
DTC RESULT	• The engine control component part/control system has a trouble code, it is displayed as PXXXX. (Refer to EC-365, "DTC Index".)
COOLANT TEMP [°C] or [°F]	• The engine coolant temperature at the moment a malfunction is detected is displayed.
L-FUEL TRM-B1 [%]	• "Long-term fuel trim" at the moment a malfunction is detected is displayed. • The long-term fuel trim indicates much more gradual feedback compensation to the base fuel schedule than short-term fuel trim.
S-FUEL TRM-B1 [%]	• "Short-term fuel trim" at the moment a malfunction is detected is displayed. • The short-term fuel trim indicates dynamic or instantaneous feedback compensation to the base fuel schedule.
ENGINE SPEED [rpm]	• The engine speed at the moment a malfunction is detected is displayed.
VEHICL SPEED [km/h] or [mph]	• The vehicle speed at the moment a malfunction is detected is displayed.
INT MANI PRES [kPa]	• These items are displayed but are not applicable to this model.
ABSOL TH·P/S [%]	• The throttle valve opening angle at the moment a malfunction is detected is displayed.
B/FUEL SCHDL [msec]	• The base fuel schedule at the moment a malfunction is detected is displayed.
INT/A TEMP SE [°C] or [°F]	• The intake air temperature at the moment a malfunction is detected is displayed.
FUEL SYS-B1	• "Fuel injection system status" at the moment a malfunction is detected is displayed. • One mode in the following is displayed. Mode2: Open loop due to detected system malfunction Mode3: Open loop due to driving conditions (power enrichment, deceleration enleanment) Mode4: Closed loop - using oxygen sensor(s) as feedback for fuel control Mode5: Open loop - has not yet satisfied condition to go to closed loop
COMBUST CONDITION	• These items are displayed but are not applicable to this model.

*: The items are the same as those of 1st trip freeze frame data.

DATA MONITOR MODE

Monitored Item

Monitored item	Unit	Description	Remarks
ENG SPEED	rpm	• Indicates the engine speed computed from the signal of the crankshaft position sensor (POS) and camshaft position sensor (PHASE).	• Accuracy becomes poor if engine speed drops below the idle rpm. • If the signal is interrupted while the engine is running, an abnormal value may be indicated.
B/FUEL SCHDL	msec	• "Base fuel schedule" indicates the fuel injection pulse width programmed into ECM, prior to any learned on board correction.	• When engine is running, specification range is indicated in "SPEC".

Monitored item	Unit	Description	Remarks
A/F ALPHA-B1	%	• The mean value of the air-fuel ratio feedback correction factor per cycle is indicated.	• When the engine is stopped, a certain value is indicated. • When engine is running, specification range is indicated in “SPEC”. • This data also includes the data for the air-fuel ratio learning control.
COOLAN TEMP/S	°C or °F	• The engine coolant temperature (determined by the signal voltage of the engine coolant temperature sensor) is displayed.	• When the engine coolant temperature sensor is open or short-circuited, ECM enters fail-safe mode. The engine coolant temperature determined by the ECM is displayed.
HO2S1 (B1)	V	• The A/F signal computed from the input signal of the heated oxygen sensor 1 is displayed.	
HO2S2 (B1)	V	• The signal voltage of the heated oxygen sensor 2 is displayed.	
HO2S1 MNTR(B1)	RICH/LEAN	• Display of heated oxygen sensor 1 signal during air-fuel ratio feedback control: RICH: means the mixture became ″rich″, and control is being affected toward a leaner mixture. LEAN: means the mixture became ″lean″, and control is being affected toward a rich mixture.	• After turning ON the ignition switch, ″RICH″ is displayed until air-fuel mixture ratio feedback control begins. • When the air-fuel ratio feedback is clamped, the value just before the clamping is displayed continuously.
HO2S2 MNTR(B1)	RICH/LEAN	• Display of heated oxygen sensor 2 signal: RICH: means the amount of oxygen after three way catalyst is relatively small. LEAN: means the amount of oxygen after three way catalyst is relatively large.	• When the engine is stopped, a certain value is indicated.
VHCL SPEED SE	km/h or mph	• The vehicle speed computed from the vehicle speed signal sent from combination meter is displayed.	
BATTERY VOLT	V	• The power supply voltage of ECM is displayed.	
ACCEL SEN 1 ACCEL SEN 2	V	• The accelerator pedal position sensor signal voltage is displayed.	• ACCEL SEN 2 signal is converted by ECM internally. Thus, it differs from ECM terminal voltage signal.
TP SEN 1-B1 TP SEN 2-B1	V	• The throttle position sensor signal voltage is displayed.	• TP SEN 2-B1 signal is converted by ECM internally. Thus, it differs from ECM terminal voltage signal.
START SIGNAL	ON/OFF	• Indicates start signal status [ON/OFF] computed by the ECM according to the signals of engine speed and battery voltage.	• After starting the engine, [OFF] is displayed regardless of the starter signal.
CLSD THL POS	ON/OFF	• Indicates idle position [ON/OFF] computed by ECM according to the accelerator pedal position sensor signal.	
AIR COND SIG	ON/OFF	• Indicates [ON/OFF] condition of the air conditioner switch as determined by the air conditioner signal.	
PW/ST SIGNAL	ON/OFF	• [ON/OFF] condition of the power steering system (determined by the signal sent from EPS control unit) is indicated.	
LOAD SIGNAL	ON/OFF	• Indicates [ON/OFF] condition from the electrical load signal. ON: Rear window defogger switch is ON and/or lighting switch is in 2nd position. OFF: Both rear window defogger switch and lighting switch are OFF.	
IGNITION SW	ON/OFF	• Indicates [ON/OFF] condition from ignition switch signal.	
HEATER FAN SW	ON/OFF	• Indicates [ON/OFF] condition from the heater fan switch signal.	

Monitored item	Unit	Description	Remarks
BRAKE SW	ON/OFF	• Indicates [ON/OFF] condition from the stop lamp switch signal.	
INJ PULSE-B1	msec	• Indicates the actual fuel injection pulse width compensated by ECM according to the input signals.	• When the engine is stopped, a certain computed value is indicated.
IGN TIMING	BTDC	• Indicates the ignition timing computed by ECM according to the input signals.	• When the engine is stopped, a certain value is indicated.
PURG VOL C/V	%	• Indicates the EVAP canister purge volume control solenoid valve control value computed by the ECM according to the input signals. • The opening becomes larger as the value increases.	
AIR COND RLY	ON/OFF	• The air conditioner relay control condition (determined by ECM according to the input signals) is indicated.	
FUEL PUMP RLY	ON/OFF	• Indicates the fuel pump relay control condition determined by ECM according to the input signals.	
THRTL RELAY	ON/OFF	• Indicates the throttle control motor relay control condition determined by the ECM according to the input signals.	
COOLING FAN	HI/LOW/OFF	• Indicates the condition of the cooling fan (determined by ECM according to the input signals). HI: High speed operation LOW: Low speed operation OFF: Stop	
HO2S1 HTR (B1)	ON/OFF	• Indicates [ON/OFF] condition of heated oxygen sensor 1 heater determined by ECM according to the input signals.	
HO2S2 HTR (B1)	ON/OFF	• Indicates [ON/OFF] condition of heated oxygen sensor 2 heater determined by ECM according to the input signals.	
VEHICLE SPEED	km/h or mph	• The vehicle speed computed from the vehicle speed signal sent from TCM is displayed.	
IDL A/V LEARN	YET/CMPLT	• Displays the condition of Idle Air Volume Learning YET: Idle air volume learning has not been performed yet. CMPLT: Idle air volume learning has already been performed successfully.	
P/N POSI SW	ON/OFF	• Indicates [ON/OFF] condition from the park/neutral position (PNP) switch signal.	
INT/A TEMP SE	°C or °F	• The intake air temperature (determined by the signal voltage of the intake air temperature sensor) is indicated.	
TRVL AFTER MIL	km or mile	• Distance traveled while MIL is activated.	
AC PRESS SEN	V	• The signal voltage from the refrigerant pressure sensor is displayed.	
TURBO BST SEN	V	• The signal voltage of the manifold absolute pressure sensor is displayed.	
O2SEN HTR DTY	%	• Heated oxygen sensor 1 heater control value computed by ECM according to the input signals. • The current flow to the heater becomes larger as the value increases.	

NOTE:
Any monitored item that does not match the vehicle being diagnosed is deleted from the display automatically.

ACTIVE TEST MODE

Test Item

TEST ITEM	CONDITION	JUDGMENT	CHECK ITEM (REMEDY)
ENG COOLANT TEMP	• Engine: Return to the original trouble condition • Change the engine coolant temperature using CONSULT-III.	If trouble symptom disappears, see CHECK ITEM.	• Harness and connectors • Engine coolant temperature sensor • Fuel injector
FUEL INJECTION	• Engine: Return to the original trouble condition • Change the amount of fuel injection using CONSULT-III.	If trouble symptom disappears, see CHECK ITEM.	• Harness and connectors • Fuel injector • Heated oxygen sensor 1
PURG VOL CONT/V	• Engine: After warming up, run engine at 1,500 rpm. • Change the EVAP canister purge volume control solenoid valve opening percent using CONSULT-III.	Engine speed changes according to the opening percent.	• Harness and connectors • Solenoid valve
FUEL PUMP RELAY	• Ignition switch: ON (Engine stopped) • Turn the fuel pump relay “ON” and “OFF” using CONSULT-III and listen to operating sound.	Fuel pump relay makes the operating sound.	• Harness and connectors • Fuel pump relay
IGNITION TIMING	• Engine: Return to the original trouble condition • Timing light: Set • Retard the ignition timing using CONSULT-III.	If trouble symptom disappears, see CHECK ITEM.	• Perform Idle Air Volume Learning.
COOLING FAN*	• Ignition switch: ON • Turn the cooling fan “LOW”, “HI” and “OFF” CONSULT-III.	Cooling fan moves and stops.	• Harness and connectors • IPDM E/R (Cooling fan relay) • Cooling fan motor
POWER BALANCE	• Engine: After warming up, idle the engine. • A/C switch OFF • Shift lever: Neutral • Cut off each fuel injector signal one at a time using CONSULT-III.	Engine runs rough or dies.	• Harness and connectors • Compression • Fuel injector • Power transistor • Spark plug • Ignition coil

*: Leaving cooling fan OFF with CONSULT-III while engine is running may cause the engine to overheat.

WORK SUPPORT MODE

Work Item

WORK ITEM	CONDITION	USAGE
FUEL PRESSURE RELEASE	• FUEL PUMP WILL STOP BY TOUCHING “START” DURING IDLING. CRANK A FEW TIMES AFTER ENGINE STALLS.	When releasing fuel pressure from fuel line
IDLE AIR VOL LEARN	• THE IDLE AIR VOLUME THAT KEEPS THE ENGINE WITHIN THE SPECIFIED RANGE IS MEMORIZED IN ECM.	When learning the idle air volume
SELF-LEARNING CONT	• THE COEFFICIENT OF SELF-LEARNING CONTROL MIXTURE RATIO RETURNS TO THE ORIGINAL COEFFICIENT.	When clearing mixture ratio self-learning value
TARGET IDLE RPM ADJ*	• IDLE CONDITION	When setting target idle speed
TARGET IGN TIM ADJ*	• IDLE CONDITION	When adjusting target ignition timing

*: This function is not necessary in the usual service procedure.

ECU DIAGNOSIS INFORMATION

ECM

Reference Value

INFOID:0000000005888308

VALUES ON THE DIAGNOSIS TOOL

Remarks:
- Specification data are reference values.
- Specification data are output/input values which are detected or supplied by the ECM at the connector.

*Specification data may not be directly related to their components signals/values/operations.
I.e. Adjust ignition timing with a timing light before monitoring IGN TIMING, because the monitor may show the specification data in spite of the ignition timing not being adjusted to the specification data. this IGN TIMING monitors the data calculated by the ECM according to the signals input from the camshaft position sensor and other ignition timing related sensors.

Monitor Item	Condition		Values/Status
ENG SPEED	• Run engine and compare CONSULT-III value with the tachometer indication.		Almost the same speed as the tachometer indication.
B/FUEL SCHDL	See EC-388, "Description".		
A/F ALPHA-B1	See EC-388, "Description".		
COOLAN TEMP/S	• Engine: After warming up		More than 70°C (158F)
HO2S1 (B1)	• Engine: After warming up	Maintaining engine speed at 2,000 rpm	0 - 0.3 V ←→ Approx. 0.6 - 1.0 V
HO2S2 (B1)	• Revving engine from idle up to 3,000 rpm quickly after the following conditions are met. - Engine: After warming up - After keeping engine speed between 3,500 and 4,000 rpm for 1 minute and at idle for 1 minute under no load		0 - 0.3 V ←→ Approx. 0.6 - 1.0 V
HO2S1 MNTR (B1)	• Engine: After warming up	Maintaining engine speed at 2,000 rpm	LEAN ←→ RICH Changes more than 5 times during 10 seconds
HO2S2 MNTR (B1)	• Revving engine from idle up to 3,000 rpm quickly after the following conditions are met. - Engine: After warming up - After keeping engine speed between 3,500 and 4,000 rpm for 1 minute and at idle for 1 minute under no load		LEAN ←→ RICH
VHCL SPEED SE	• Turn drive wheels and compare CONSULT-III value with the speedometer indication.		Almost the same speed as speedometer indication
BATTERY VOLT	• Ignition switch: ON (Engine stopped)		11 - 14 V
ACCEL SEN 1	• Ignition switch: ON (Engine stopped)	Accelerator pedal: Fully released	0.6 - 0.9 V
		Accelerator pedal: Fully depressed	4.0 - 4.8 V
ACCEL SEN 2	• Ignition switch: ON (Engine stopped)	Accelerator pedal: Fully released	0.6 - 0.9 V
		Accelerator pedal: Fully depressed	3.9 - 4.8 V
TP SEN 1-B1	• Ignition switch: ON (Engine stopped) • Shift lever: 1st	Accelerator pedal: Fully released	More than 0.36 V
		Accelerator pedal: Fully depressed	Less than 4.75 V
TP SEN 2-B1	• Ignition switch: ON (Engine stopped) • Shift lever:1st	Accelerator pedal: Fully released	More than 0.36 V
		Accelerator pedal: Fully depressed	Less than 4.75 V
START SIGNAL	• Ignition switch: ON → START → ON		Off → On → Off
CLSD THL POS	• Ignition switch: ON (Engine stopped)	Accelerator pedal: Fully released	On
		Accelerator pedal: Slightly depressed	Off

Monitor Item	Condition		Values/Status
AIR COND SIG	• Engine: After warming up, idle the engine	Air conditioner switch: OFF	Off
		Air conditioner switch: ON (Compressor operates.)	On
PW/ST SIGNAL	• Engine: After warming up, idle the engine	Steering wheel: Not being turned	Off
		Steering wheel: Being turned	On
LOAD SIGNAL	• Ignition switch: ON	Rear window defogger switch: ON and/or Lighting switch: 2nd position	On
		Rear window defogger switch and lighting switch: OFF	Off
IGNITION SW	• Ignition switch: ON → OFF → ON		On → Off → On
HEATER FAN SW	• Engine: After warming up, idle the engine	Heater fan switch: ON	On
		Heater fan switch: OFF	Off
BRAKE SW	• Ignition switch: ON	Brake pedal: Fully released	Off
		Brake pedal: Slightly depressed	On
INJ PULSE-B1	• Engine: After warming up • Shift lever: Neutral • Air conditioner switch: OFF • No load	Idle	2.0 - 3.0 msec
		2,000 rpm	1.9 - 2.9 msec
IGN TIMING	• Engine: After warming up • Shift lever: Neutral • Air conditioner switch: OFF • No load	Idle	1° - 11°BTDC
		2,000 rpm	25° - 45°BTDC
PURG VOL C/V	• Engine: After warming up • Shift lever: Neutral • Air conditioner switch: OFF • No load	Idle	0%
		2,000 rpm	0% - 50%
AIR COND RLY	• Engine: After warming up, idle the engine	Air conditioner switch: OFF	Off
		Air conditioner switch: ON (Compressor operates)	On
FUEL PUMP RLY	• For 1 seconds after turning ignition switch: ON • Engine running or cranking		On
	• Except above		Off
THRTL RELAY	• Ignition switch: ON		On
COOLING FAN	• Engine: After warning up, idle the engine • Air conditioner switch: OFF	Engine coolant temperature is 95°C (203°F) or less	Off
		Engine coolant temperature is between 95°C (203°F) and 99°C (210°F)	LOW
		Engine coolant temperature is 100°C (212°F) or more	HIGH
HO2S1 HTR (B1)	• Engine: After warming up • Engine speed: Below 3,600 rpm		On
	• Engine speed: Above 3,600 rpm		Off
HO2S2 HTR (B1)	• Engine speed: Below 3,900 rpm after the following conditions are met. - Engine: After warming up - Keeping the engine speed between 3,500 and 4,000 rpm for 1 minute and at idle for 1 minute under no load		On
VEHICLE SPEED	• Turn drive wheels and compare CONSULT-III value with the speedometer indication.		Almost the same speed as speedometer indication
IDL A/V LEARN	• Engine: running	Idle air volume learning has not been performed yet.	YET
		Idle air volume learning has already been performed successfully.	CMPLT

Monitor Item	Condition		Values/Status
P/N POSI SW	• Ignition switch: ON	Shift lever: Neutral	On
		Shift lever: Except above	Off
INT/A TEMP SE	• Ignition switch: ON		Indicates intake air temperature.
AC PRESS SEN	• Engine: Idle • Both A/C switch and blower fan switch: ON (Compressor operates)		1.0 - 4.0 V
TURBO BST SEN	• Engine: After warming up	Ignition switch: ON Engine stopped	4.5 V Output voltage varies with atmospheric pressure.
		Engine: Idle	1.3 - 1.5 V
		Maintaining engine speed at 2,000 rpm	1.0 - 1.2V
O2 SEN HTR DTY	• Engine coolant temperature when engine started: More than 80°C (176°F) • Engine speed: Below 3,600 rpm		Approx. 30%

*: Accelerator pedal position sensor 2 signal and throttle position sensor 2 signal are converted by ECM internally. Thus, they differ from ECM terminals voltage signal.

TERMINAL LAYOUT

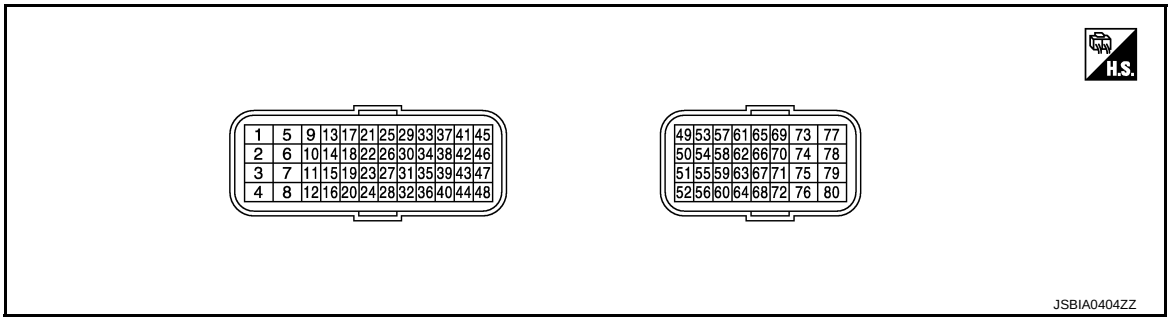

PHYSICAL VALUES

NOTE:
- ECM is located in the engine room left side near battery.
- When disconnecting ECM harness connector (A), loosen (C) it with levers as far as they will go as shown in the figure.
  - ECM (1)
  - Fasten (B)
- Connect a break-out box and harness adapter between the ECM and ECM harness connector.
  - Use extreme care not to touch 2 pins at one time.
  - Data is for comparison and may not be exact.
- Specification data are reference values and are measured between each terminals.
- Pulse signal is measured by CONSULT-III.

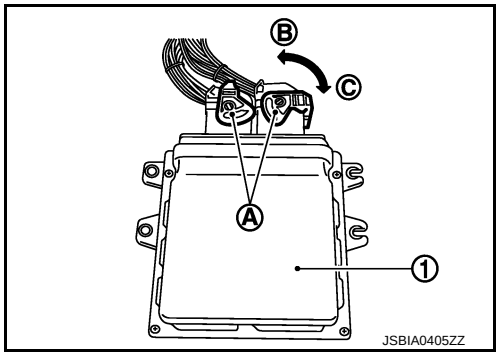

Terminal No.		Description		Condition	Value (Approx.)
+	–	Signal name	Input/ Output		
1 (L)	80 (B)	Throttle control motor (Open)	Output	[Ignition switch: ON] • Engine stopped • Shift lever: D (A/T) or 1st (M/T) • Accelerator pedal: Fully depressed	2 V★ 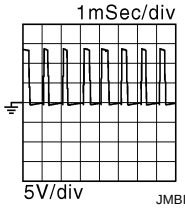
2 (SB)	80 (B)	Throttle control motor power supply	Input	[Ignition switch: ON]	BATTERY VOLTAGE (11 - 14 V)
3 (P)	80 (B)	Throttle control motor (Close)	Output	[Ignition switch: ON] • Engine stopped • Shift lever: D (A/T) or 1st (M/T) • Accelerator pedal: Fully released	2 V★ 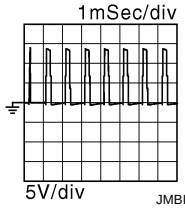
4 (B)	—	ECM ground	—	—	—
5 (G)	80 (B)	Heated oxygen sensor 1 heater	Output	[Engine is running] • Warm-up condition • Idle speed	2.9 - 8.8 V★ 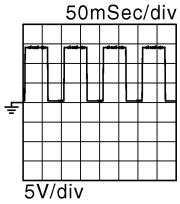
				[Engine is running] • Engine speed: Above 3,600 rpm	BATTERY VOLTAGE (11 - 14 V)
6 (Y) 7 (O)	80 (B)	Fuel injector No. 1 Fuel injector No. 2	Output	[Engine is running] • Warm-up condition • Idle speed **NOTE:** The pulse cycle changes depending on rpm at idle	BATTERY VOLTAGE (11 - 14 V)★ 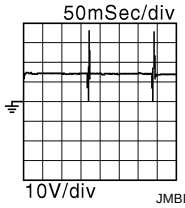
8 (L)		Fuel injector No. 3		[Engine is running] • Warm-up condition • Engine speed: 2,000 rpm	BATTERY VOLTAGE (11 - 14 V)★ 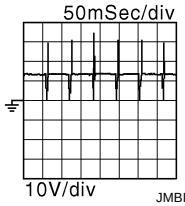

Terminal No. +	Terminal No. –	Description: Signal name	Description: Input/Output	Condition	Value (Approx.)
9 (G)	80 (B)	Heated oxygen sensor 2 heater	Output	[Engine is running] • Engine speed: Below 3,900 rpm after the following conditions are met - Engine: after warming up - Keeping the engine speed between 3,500 and 4,000 rpm for 1 minute and at idle for 1 minute under no load	10 V★ 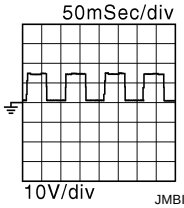
				[Ignition switch: ON] • Engine stopped [Engine is running] • Engine speed: Above 3,900 rpm	BATTERY VOLTAGE (11 - 14 V)
10 (LG) 14 (R) 15 (SB)	80 (B)	Ignition signal No. 2 Ignition signal No. 1 Ignition signal No. 3	Output	[Engine is running] • Warm-up condition • Idle speed **NOTE:** The pulse cycle changes depending on rpm at idle	0 - 0.3 V★ 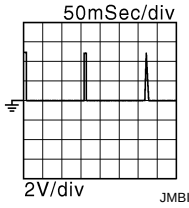
				[Engine is running] • Warm-up condition • Engine speed: 2,500 rpm	0.2 - 0.5 V★ 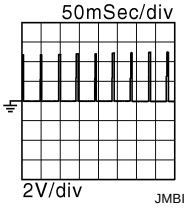
11 (Y)	80 (B)	Throttle control motor relay	Output	[Ignition switch: ON → OFF]	0 - 1.0 V ↓ BATTERY VOLTAGE (11 - 14 V) ↓ 0 V
				[Ignition switch: ON]	0 - 1.0 V
13 (P)	80 (B)	EVAP canister purge volume control solenoid valve	Output	[Engine is running] • Idle speed	BATTERY VOLTAGE (11 - 14 V)★ 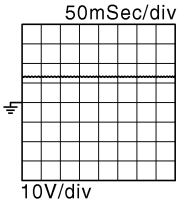
				[Engine is running] • Engine speed: About 2,000 rpm (More than 100 seconds after starting engine.)	BATTERY VOLTAGE (11 - 14 V)★ 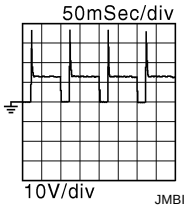

Terminal No.		Description		Condition	Value (Approx.)
+	–	Signal name	Input/ Output		
16 (GR)	80 (B)	Fuel pump relay	Output	[Ignition switch: ON] • For 1 second after turning ignition switch ON [Engine is running]	0 - 1.0 V
				[Ignition switch: ON] • More than 1 second after turning ignition switch ON	BATTERY VOLTAGE (11 - 14 V)
18 (P)	80 (B)	ECM relay (Self shut-off)	Output	[Engine is running] [Ignition switch: OFF] • A few seconds after turning ignition switch OFF	0 - 1.0 V
				[Ignition switch: OFF] • More than a few seconds after turning ignition switch OFF	BATTERY VOLTAGE (11 - 14 V)
20 (Y)	—	Sensor ground (Throttle position sensor)	—	—	—
21 (LG)	20 (Y)	Throttle position sensor 1	Input	[Ignition switch: ON] • Engine stopped • Shift lever: D (A/T) or 1st (M/T) • Accelerator pedal: Fully released	More than 0.36 V
				[Ignition switch: ON] • Engine stopped • Shift lever: D (A/T) or 1st (M/T) • Accelerator pedal: Fully depressed	Less than 4.75 V
22 (O)	20 (Y)	Throttle position sensor 2	Input	[Ignition switch: ON] • Engine stopped • Shift lever: D (A/T) or 1st (M/T) • Accelerator pedal: Fully released	Less than 4.75 V
				[Ignition switch: ON] • Engine stopped • Shift lever: D (A/T) or 1st (M/T) • Accelerator pedal: Fully depressed	More than 0.36 V
23 —	—	Sensor ground (Knock sensor shield circuit)	—	—	—
24 (B)	—	Sensor ground (Engine coolant temperature sensor)	—	—	—
25 (W)	23 —	Knock sensor	Input	[Engine is running] • Idle speed	2.5 V
26 (P)	24 (B)	Engine coolant temperature sensor	Input	[Engine is running]	0 - 4.8 V Output voltage varies with engine coolant temperature.
27 (BR)	—	Sensor ground (Refrigerant pressure sensor)	—	—	—
28 (BR)	—	Sensor ground [Manifold absolute pressure (MAP) sensor]	—	—	—
29 (GR)	27 (BR)	Refrigerant pressure sensor	Input	[Engine is running] • Warm-up condition • Both A/C switch and blower fan switch: ON (Compressor operates)	1.0 - 4.0 V

Terminal No.		Description		Condition	Value (Approx.)
+	–	Signal name	Input/ Output		
30 (P)	28 (B)	Manifold absolute pressure (MAP) sensor	Output	[Engine is running] • Warm-up condition • Both A/C switch and blower fan switch: ON (Compressor operates)	4.5 V Output voltage varies with atmospheric pressure.
				[Engine is running] • Warm-up condition • Idle speed	1.5 V
				[Engine is running] • Warm-up condition • Engine speed: 2,000 rpm	1.2 V
31 (P)	28 (B)	Intake air temperature sensor	Input	[Engine is running]	0 - 4.8 V Output voltage varies with intake air temperature.
33 (SB)	35 (P)	Heated oxygen sensor 1	—	[Engine is running] • Warm-up condition • Engine speed: 2,000 rpm	0 - 1.0 V (Periodically change)
34 (W)	36 (B)	Heated oxygen sensor 2	Input	[Engine is running] • Revving engine from idle to 3,000 rpm quickly after the following conditions are met - Engine: after warming up - Keeping the engine speed between 3,500 and 4,000 rpm for 1 minute and at idle for 1 minute under no load	0 - 1.0 V
35 (P)	—	Sensor ground (Heated oxygen sensor 1)	—	—	—
36 (B)	—	Sensor ground (Heated oxygen sensor 2)	—	—	—
37 (W)	39 (R)	Crankshaft position sensor (POS)	Input	[Engine is running] • Warm-up condition • Idle speed **NOTE:** The pulse cycle changes depending on rpm at idle	4.0 V★ 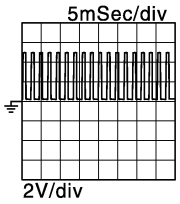 JSBIA0395GB
				[Engine is running] • Engine speed: 2,000 rpm	4.0 V★ 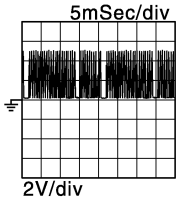 JSBIA0396GB
38 (W)	27 (BR)	Sensor power supply (Refrigerant pressure sensor)	—	[Ignition switch: ON]	5 V
39 (R)	—	Sensor ground [Crankshaft position sensor (POS)]	—	—	—
40 (BR)	—	Sensor ground [Camshaft position sensor (PHASE)]	—	—	—

Terminal No.		Description		Condition	Value (Approx.)
+	–	Signal name	Input/ Output		
41 (G)	40 (BR)	Camshaft position sensor (PHASE)	Input	[Engine is running] • Warm-up condition • Idle speed **NOTE:** The pulse cycle changes depending on rpm at idle	0.8 V★ 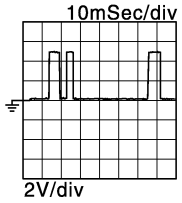 JSBIA0397GB
				[Engine is running] • Engine speed is 2,000 rpm	0.8 V★ 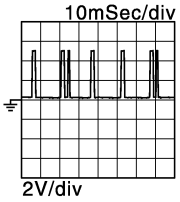 JSBIA0398GB
42 (BR)	39 (R)	Sensor power supply [Crankshaft position sensor (POS)]	—	[Ignition switch: ON]	5 V
43 (O)	40 (BR)	Sensor power supply [Camshaft position sensor (PHASE)]	—	[Ignition switch: ON]	5 V
44 (V)	20 (Y)	Sensor power supply (Throttle position sensor)	—	[Ignition switch: ON]	5 V
45 (W)	80 (B)	Park/Neutral position signal	Input	[Ignition switch: ON] • Shift lever: Neutral position	BATTERY VOLTAGE (11 - 14 V)
				[Ignition switch: ON] • Shift lever: Except above position	0 V
46 (V)	28 (Y)	Sensor power supply [Manifold absolute pressure (MAP) sensor]	—	[Ignition switch: ON]	5 V
49 (V)	80 (Y)	Power supply for ECM (Back-up)	Input	[Ignition switch: OFF]	BATTERY VOLTAGE (11 - 14 V)
51 (P)	—	CAN communication line	Input/ Output	—	—
52 (L)	—	CAN communication line	Input/ Output	—	—
56 (SB)	—	Data link connector	Input/ Output	—	—
61 (O)	80 (B)	Ignition switch	Input	[Ignition switch: OFF]	0 V
				[Ignition switch: ON]	BATTERY VOLTAGE (11 - 14 V)
67 (R)	80 (B)	Stop lamp switch	Input	[Ignition switch: OFF] • Brake pedal: Fully released	0 V
				[Ignition switch: OFF] • Brake pedal: Slightly depressed	BATTERY VOLTAGE (11 - 14 V)
70 (BR)	72 (R)	Sensor power supply (Accelerator pedal position sensor 2)	—	[Ignition switch: ON]	5 V

Terminal No.		Description		Condition	Value (Approx.)
+	–	Signal name	Input/ Output		
71 (W)	72 (R)	Accelerator pedal position sensor 2	Input	[Ignition switch: ON] • Engine stopped • Accelerator pedal: Fully released	0.3 - 0.6 V
				[Ignition switch: ON] • Engine stopped • Accelerator pedal: Fully depressed	1.95 - 2.4 V
72 (R)	—	Sensor ground (Accelerator pedal position sensor 2)	—	—	—
73 (G)	80 (B)	Power supply for ECM	Input	[Ignition switch: ON]	BATTERY VOLTAGE (11 - 14 V)
74 (V)	79 (GR)	Sensor power supply (Accelerator pedal position sensor 1)	—	[Ignition switch: ON]	5 V
75 (B)	—	ECM ground	—	—	—
78 (SB)	79 (GR)	Accelerator pedal position sensor 1	Input	[Ignition switch: ON] • Engine stopped • Accelerator pedal: Fully released	0.6 - 0.9 V
				[Ignition switch: ON] • Engine stopped • Accelerator pedal: Fully depressed	3.9 - 4.7 V
79 (GR)	—	Sensor ground (Accelerator pedal position sensor 1)	—	—	—
80 (B)	—	ECM ground	—	—	—

★: Average voltage for pulse signal (Actual pulse signal can be confirmed by oscilloscope.)

Fail Safe

INFOID:0000000005888309

NON DTC RELATED ITEM

Detected items	Engine operating condition in fail-safe mode	Remarks	Reference page
Malfunction indicator circuit	Engine speed will not rise more than 2,500 rpm due to the fuel cut	When there is an open circuit on MIL circuit, the ECM cannot warn the driver by lighting up MIL when there is malfunction on engine control system. Therefore, when electrical controlled throttle and part of ECM related diagnoses are continuously detected as NG for 5 trips, ECM warns the driver that engine control system malfunctions and MIL circuit is open by means of operating fail safe function. The fail safe function also operates when above diagnoses except MIL circuit are detected and demands the driver to repair the malfunction.	EC-509, "Component Function Check"

DTC RELATED ITEM

DTC No.	Detected items	Engine operating condition in fail safe mode
P0107 P0108	Manifold absolute pressure (MAP) sensor	Engine speed will not rise more than 2,500 rpm due to the fuel cut.

DTC No.	Detected items	Engine operating condition in fail safe mode	
P0117 P0118	Engine coolant temperature sensor circuit	Engine coolant temperature will be determined by ECM based on the following conditions. CONSULT-III displays the engine coolant temperature decided by ECM.	
		Condition	Engine coolant temperature decided (CONSULT-III display)
		Just as ignition switch is turned ON or START	40°C (104°F)
		Approx. 4 minutes or more after engine starting	80°C (176°F)
		Except as shown above	40 - 80°C (104 - 176°F) (Depends on the time)
		When the fail safe system for engine coolant temperature sensor is activated, the cooling fan operates while engine is running.	
P0122 P0123 P0222 P0223 P2135	Throttle position sensor	The ECM controls the electric throttle control actuator in regulating the throttle opening in order for the idle position to be within +10 degrees. The ECM regulates the opening speed of the throttle valve to be slower than the normal condition. So, the acceleration will be poor.	
P0605	ECM	(When ECM calculation function is malfunctioning:) ECM stops the electric throttle control actuator control, throttle valve is maintained at a fixed opening (approx. 5 degrees) by the return spring.	
P1121	Electric throttle control actuator	(When electric throttle control actuator does not function properly due to the return spring malfunction:) ECM controls the electric throttle actuator by regulating the throttle opening around the idle position. The engine speed will not rise more than 2,000 rpm.	
		(When throttle valve opening angle in fail safe mode is not in specified range:) ECM controls the electric throttle control actuator by regulating the throttle opening to 20 degrees or less.	
		(When ECM detects the throttle valve is stuck open:) While the vehicle is driving, it slows down gradually by fuel cut. After the vehicle stops, the engine stalls. The engine can restart in the Neutral position, and engine speed will not exceed 1,000 rpm or more.	
P1122	Electric throttle control function	ECM stops the electric throttle control actuator control, throttle valve is maintained at a fixed opening (approx. 5 degrees) by the return spring.	
P1124 P1126	Throttle control motor relay	ECM stops the electric throttle control actuator control, throttle valve is maintained at a fixed opening (approx. 5 degrees) by the return spring.	
P1128	Throttle control motor	ECM stops the electric throttle control actuator control, throttle valve is maintained at a fixed opening (approx. 5 degrees) by the return spring.	
P1171	Intake air	When accelerator pedal is depressed, engine speed will not rise more than 2,500 rpm due to fuel cut.	
P1229	Sensor power supply	ECM stops the electric throttle control actuator control, throttle valve is maintained at a fixed opening (approx. 5 degrees) by the return spring.	
P1805	Brake switch	ECM controls the electric throttle control actuator by regulating the throttle opening to a small range. Therefore, acceleration will be poor.	
		Vehicle condition	Driving condition
		When engine is idling	Normal
		When accelerating	Poor acceleration
P2122 P2123 P2127 P2128 P2138	Accelerator pedal position sensor	The ECM controls the electric throttle control actuator in regulating the throttle opening in order for the idle position to be within +10 degrees. The ECM regulates the opening speed of the throttle valve to be slower than the normal condition. So, the acceleration will be poor.	

DTC Inspection Priority Chart

INFOID:0000000005888310

If some DTCs are displayed at the same time, perform inspections one by one based on the following priority chart.

Priority	DTC	Detected items
1	U1000, U1001	CAN communication line
	U1010	CAN communication
	P0107, P0108, P1171	Manifold absolute pressure (MAP) sensor
	P0117, P0118	Engine coolant temperature sensor
	P0122, P0123, P0222, P0223, P1225, P1226, P2135	Throttle position sensor
	P0327, P0328	Knock sensor
	P0335	Crankshaft position sensor (POS)
	P0340	Camshaft position sensor (PHASE)
	P0605	ECM
	P1229	Sensor power supply
	P1610 - P1615	NATS
	P1706	Park/neutral position (PNP) switch
	P2122, P2123, P2127, P2128, P2138	Accelerator pedal position sensor
2	P0132, P0134	Heated oxygen sensor 1
	P0138	Heated oxygen sensor 2
	P1065	ECM
	P1122	Electric throttle control function
	P1124, P1126	Throttle control motor relay
	P1128	Throttle control motor
	P1217	Engine over temperature (OVERHEAT)
	P1805	Brake switch
3	P1121	Electric throttle control actuator

DTC Index

INFOID:0000000005888311

×:Applicable —: Not applicable

DTC*1		Items (CONSULT-III screen terms)	Trip	MIL	Reference page
CONSULT-III*2	ECM*3				
U1000	1000*4	CAN COMM CIRCUIT	2	—	EC-399, "DTC Logic"
U1001	1001*4	CAN COMM CIRCUIT	2	—	EC-399, "DTC Logic"
U1010	1010	CONTROL UNIT(CAN)	2	—	EC-400, "DTC Logic"
P0000	**0000**	**NO DTC IS DETECTED. FURTHER TESTING MAY BE REQUIRED.**	—	**Flashing*5**	**—**
P0107	0107	ABSL PRES SEN/CIRC	2	×	EC-401, "DTC Logic"
P0108	0108	ABSL PRES SEN/CIRC	2	×	EC-401, "DTC Logic"
P0117	0117	ECT SEN/CIRC	2	×	EC-404, "DTC Logic"

DTC*1		Items (CONSULT-III screen terms)	Trip	MIL	Reference page
CONSULT-III*2	ECM*3				
P0118	0118	ECT SEN/CIRC	2	×	EC-404, "DTC Logic"
P0122	0122	TP SEN 2/CIRC-B1	1	×	EC-406, "DTC Logic"
P0123	0123	TP SEN 2/CIRC-B1	1	×	EC-406, "DTC Logic"
P0132	0132	HO2S1 (B1)	2	×	EC-409, "DTC Logic"
P0134	0134	HO2S1 (B1)	2	×	EC-413, "DTC Logic"
P0138	0138	HO2S2 (B1)	2	×	EC-417, "DTC Logic"
P0222	0222	TP SEN 1/CIRC-B1	1	×	EC-421, "DTC Logic"
P0223	0223	TP SEN 1/CIRC-B1	1	×	EC-421, "DTC Logic"
P0327	0327	KNOCK SEN/CIRC-B1	2	—	EC-424, "DTC Logic"
P0328	0328	KNOCK SEN/CIRC-B1	2	—	EC-424, "DTC Logic"
P0335	0335	CKP SEN/CIRCUIT	2	×	EC-426, "DTC Logic"
P0340	0340	CMP SEN/CIRC-B1	2	×	EC-430, "DTC Logic"
P0605	0605	ECM	1 or 2	× or —	EC-433, "DTC Logic"
P1065	1065	ECM BACK UP/CIRCUIT*6	2	×	EC-435, "DTC Logic"
P1121	1121	ETC ACTR-B1	1	×	EC-436, "DTC Logic"
P1122	1122	ETC FUNCTION/CIRC-B1	1	×	EC-438, "DTC Logic"
P1124	1124	ETC MOT PWP	1	×	EC-442, "DTC Logic"
P1126	1126	ETC MOT PWP-B1	1	×	EC-442, "DTC Logic"
P1128	1128	ETC MOT-B1	1	×	EC-445, "DTC Logic"
P1171	1171	INTAKE ERROR	1	×	EC-447, "DTC Logic"
P1217	1217	ENG OVER TEMP	1	×	EC-449, "DTC Logic"
P1225	1225	CTP LEARNING-B1	2	—	EC-453, "DTC Logic"
P1226	1226	CTP LEARNING-B1	2	—	EC-454, "DTC Logic"
P1229	1129	SENSOR POWER/CIRC	1	×	EC-456, "DTC Logic"
P1610	1610	LOCK MODE	2	—	SEC-38, "DTC Logic" SEC-144, "DTC Logic"

DTC*1		Items (CONSULT-III screen terms)	Trip	MIL	Reference page
CONSULT-III*2	ECM*3				
P1611	1611	ID DISCORD, IMMU-ECM	2	—	SEC-39, "DTC Logic" SEC-145, "DTC Logic"
P1612	1612	CHAIN OF ECM-IMMU	2	—	SEC-41, "DTC Logic" SEC-146, "DTC Logic"
P1614	1614	CHAIN OF IMMU-KEY	2	—	SEC-42, "DTC Logic" SEC-147, "DTC Logic"
P1615	1615	DIFFERENCE OF KEY	2	—	XX-XX, "*****" SEC-150, "DTC Logic"
P1706	1706	P-N POS SW/CIRCUIT	2	×	EC-458, "DTC Logic"
P1805	1805	BRAKE SW/CIRCUIT	1	—	EC-461, "DTC Logic"
P2122	2122	APP SEN 1/CIRC	1	×	EC-463, "DTC Logic"
P2123	2123	APP SEN 1/CIRC	1	×	EC-463, "DTC Logic"
P2127	2127	APP SEN 2/CIRC	1	×	EC-466, "DTC Logic"
P2128	2128	APP SEN 2/CIRC	1	×	EC-466, "DTC Logic"
P2135	2135	TP SENSOR-B1	1	×	EC-469, "DTC Logic"
P2138	2138	APP SENSOR	1	×	EC-472, "DTC Logic"

*1: 1st trip DTC No. is the same as DTC No.
*2: This number is prescribed by SAE J2012/ISO 15031-6.
*3: In Diagnostic Test Mode II (Self-diagnostic results), this number is controlled by NISSAN.
*4: The troubleshooting for this DTC needs CONSULT-III.
*5: When engine is running, MIL may flash. For the details, refer to EC-346, "Diagnosis Description".
*6: This self-diagnosis is not for ECM power supply circuit, even though “ECM BACK UP/CIRCUIT” is displayed on CONSULT-III screen.

WIRING DIAGRAM

ENGINE CONTROL SYSTEM

Wiring Diagram

INFOID:0000000005886485

For connector terminal arrangements, harness layouts, and alphabets in a ⬡ (option abbreviation; if not described in wiring diagram), refer to GI-12, "Connector Information".

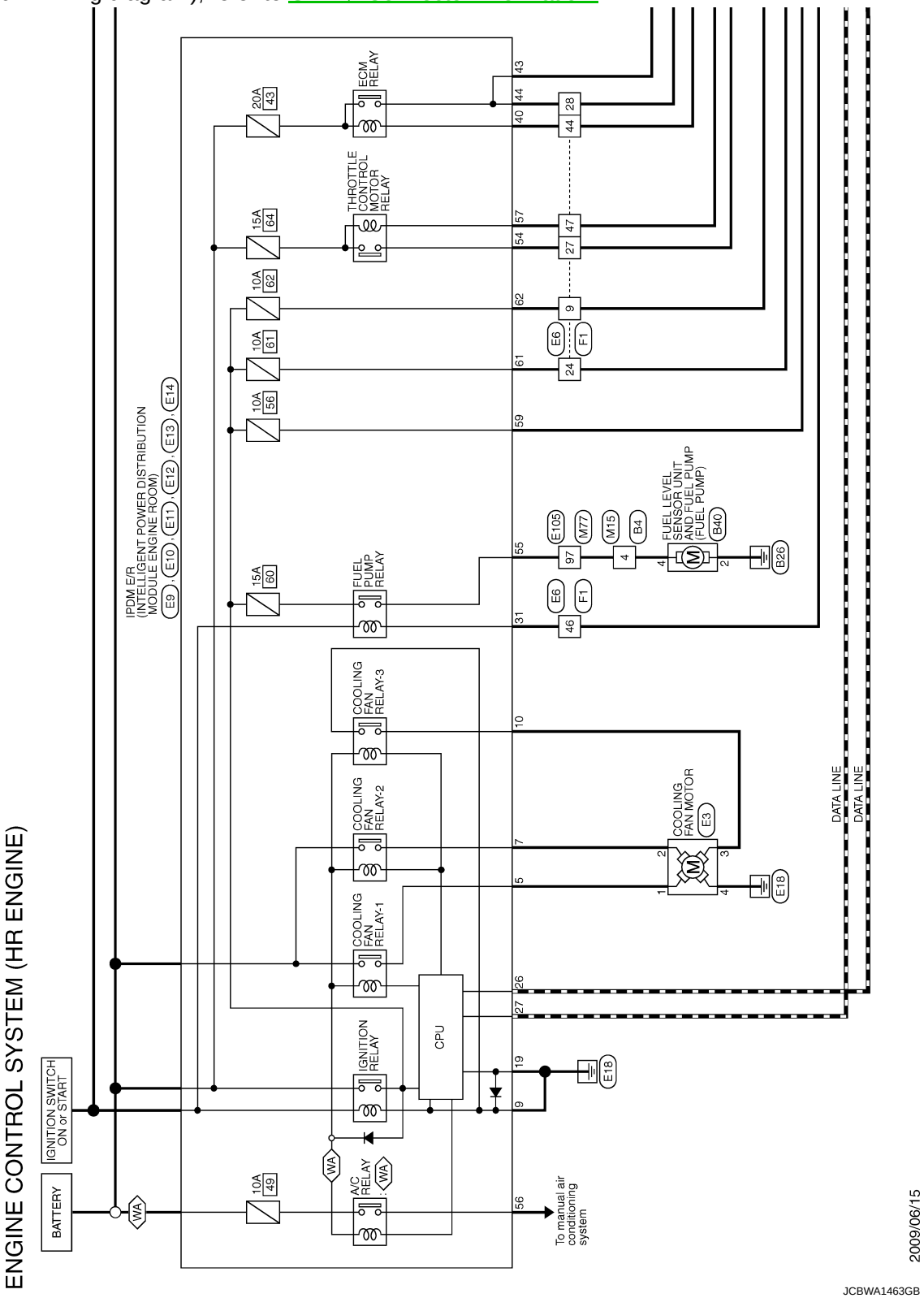

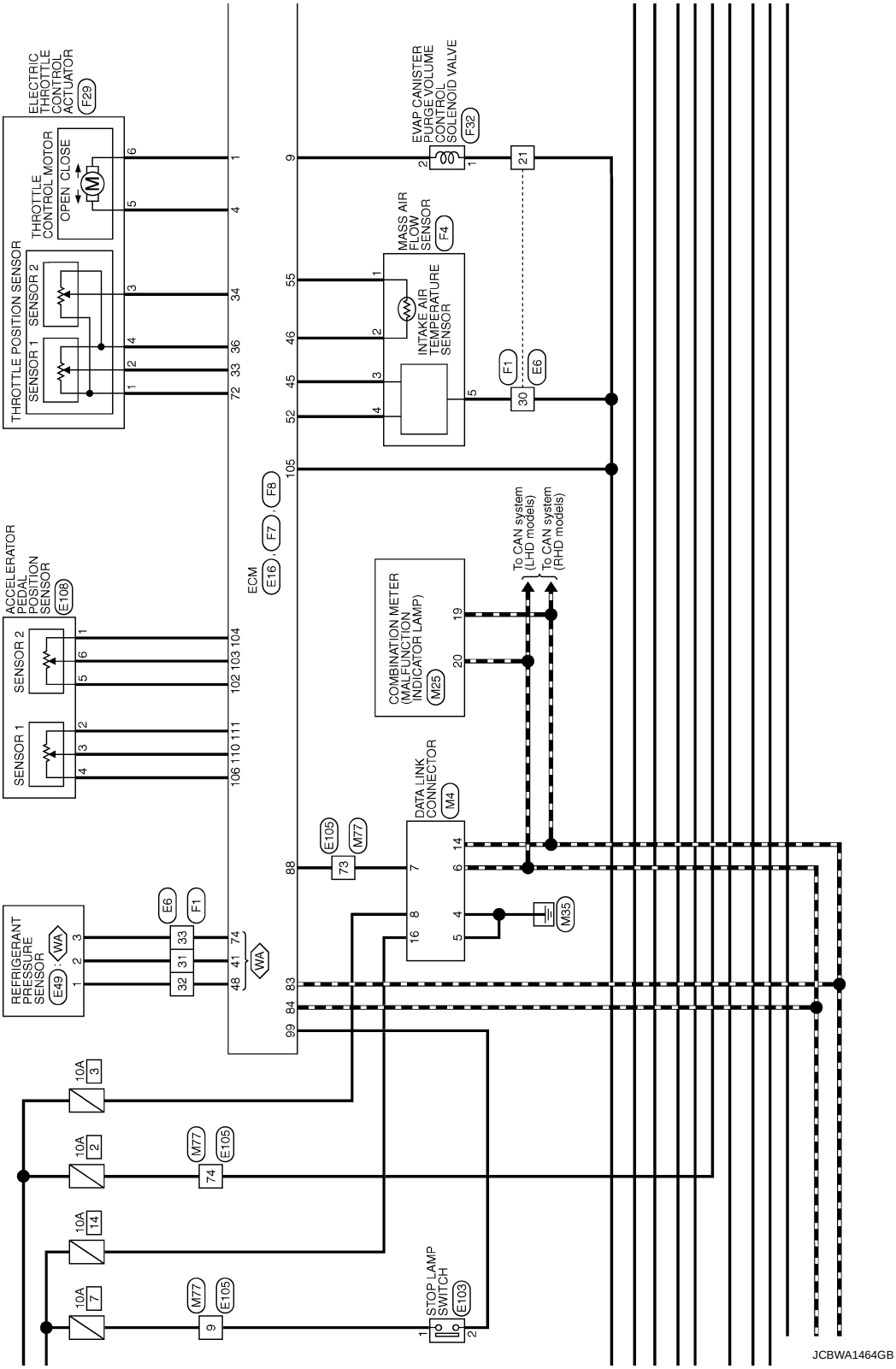
ELECTRIC THROTTLE CONTROL ACTUATOR
F29
THROTTLE CONTROL MOTOR
OPEN CLOSE
THROTTLE POSITION SENSOR
SENSOR 1
SENSOR 2
ACCELERATOR PEDAL POSITION SENSOR
E108
SENSOR 1
SENSOR 2
REFRIGERANT PRESSURE SENSOR
E49
WA
ECM
E16
F7
F8
EVAP CANISTER PURGE VOLUME CONTROL SOLENOID VALVE
F32
MASS AIR FLOW SENSOR
F4
INTAKE AIR TEMPERATURE SENSOR
F1
E6
COMBINATION METER (MALFUNCTION INDICATOR LAMP)
M25
To CAN system (LHD models)
To CAN system (RHD models)
DATA LINK CONNECTOR
M4
E105
M77
73
M35
10A 3
10A 2
10A 14
10A 7
74
9
STOP LAMP SWITCH
E103
JCBWA1464GB

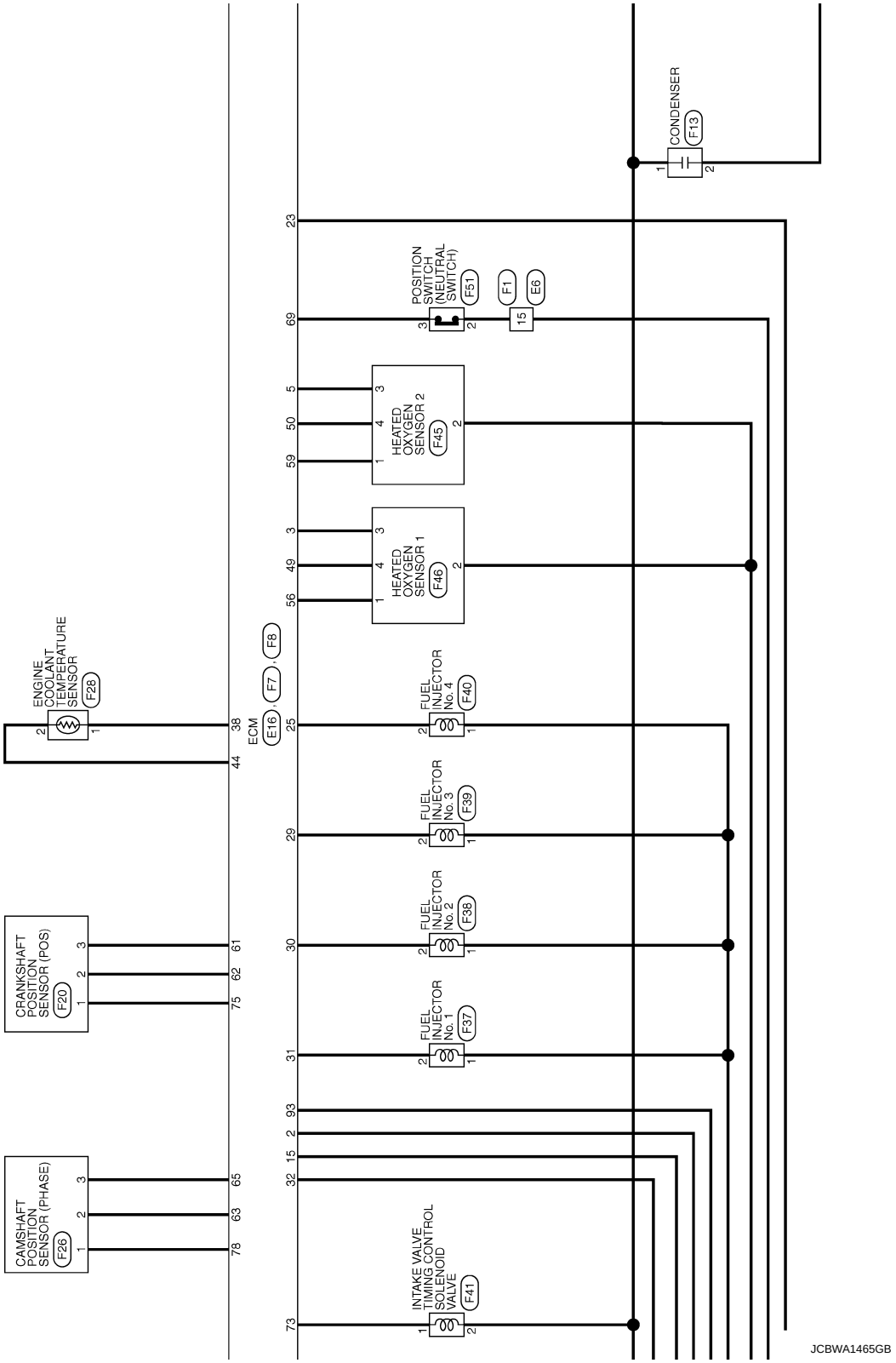
CONDENSER
F13
POSITION SWITCH (NEUTRAL SWITCH)
F51
F1
E6
15
HEATED OXYGEN SENSOR 2
F45
HEATED OXYGEN SENSOR 1
F46
ENGINE COOLANT TEMPERATURE SENSOR
F28
ECM
E16
F7
F8
FUEL INJECTOR No. 4
F40
FUEL INJECTOR No. 3
F39
FUEL INJECTOR No. 2
F38
FUEL INJECTOR No. 1
F37
CRANKSHAFT POSITION SENSOR (POS)
F20
CAMSHAFT POSITION SENSOR (PHASE)
F26
INTAKE VALVE TIMING CONTROL SOLENOID VALVE
F41
23
69
5
50
59
3
49
56
38
44
25
29
30
31
93
2
15
32
73
61
62
75
65
63
78
JCBWA1465GB

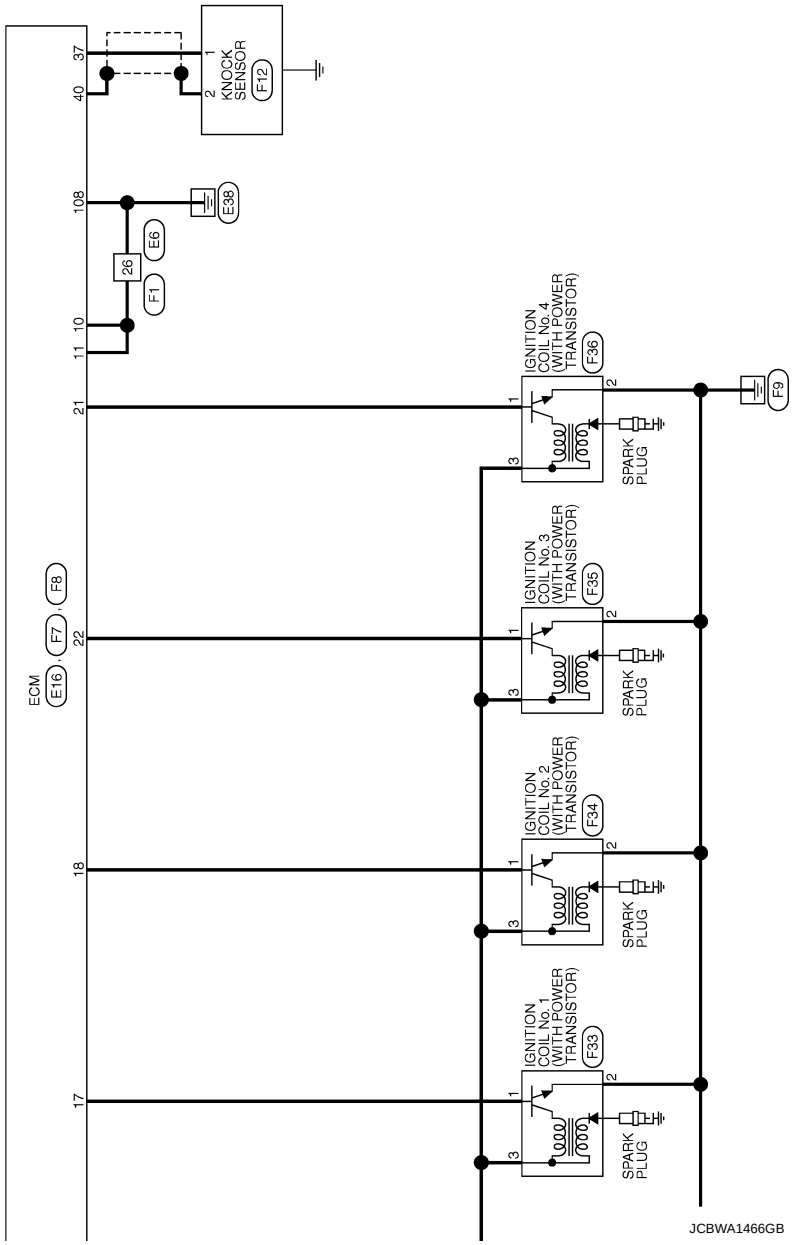
ECM
E16
F7
F8
17
18
22
21
11
10
108
40
37
26
F1
E6
E38
KNOCK SENSOR
F12
IGNITION COIL No.1 (WITH POWER TRANSISTOR)
F33
IGNITION COIL No.2 (WITH POWER TRANSISTOR)
F34
IGNITION COIL No.3 (WITH POWER TRANSISTOR)
F35
IGNITION COIL No.4 (WITH POWER TRANSISTOR)
F36
SPARK PLUG
F9
JCBWA1466GB

BASIC INSPECTION

DIAGNOSIS AND REPAIR WORKFLOW

Work Flow

INFOID:0000000005886486

OVERALL SEQUENCE

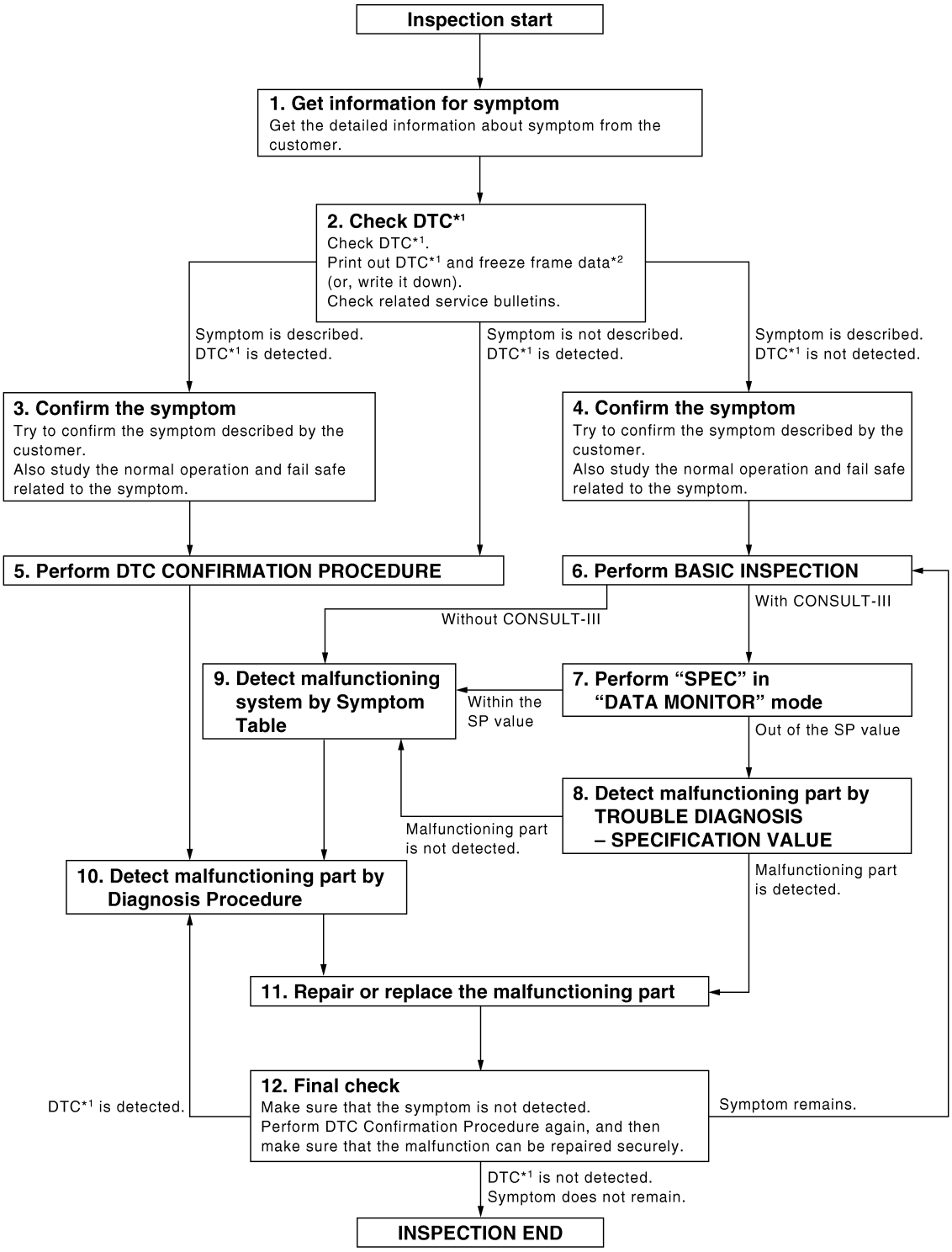

*1: Include 1st trip DTC.
*2: Include 1st trip freeze frame data.

JMBIA0078GB

DETAILED FLOW

1. GET INFORMATION FOR SYMPTOM

Get the detailed information from the customer about the symptom (the condition and the environment when the incident/malfunction occurred) using the “Diagnostic Work Sheet”. (Refer to EC-374, "Diagnostic Work Sheet".)

>> GO TO 2.

2. CHECK DTC

1. Check DTC.
2. Perform the following procedure if DTC is displayed.
- Record DTC and freeze frame data. (Print them out with CONSULT-III.)
- Erase DTC. (Refer to “How to Erase DTC and 1st trip DTC” in EC-346, "Diagnosis Description".)
- Study the relationship between the cause detected by DTC and the symptom described by the customer. (Symptom Table is useful. Refer to EC-513, "Symptom Table".)
3. Check related service bulletins for information.

Is any symptom described and is any DTC detected?

Symptom is described, DTC is detected>>GO TO 3.
Symptom is described, DTC is not detected>>GO TO 4.
Symptom is not described, DTC is detected>>GO TO 5.

3. CONFIRM THE SYMPTOM

Try to confirm the symptom described by the customer (except MIL ON).
Also study the normal operation and fail safe related to the symptom. Refer to EC-519, "Description" and EC-363, "Fail Safe".
Diagnosis Work Sheet is useful to verify the incident.
Verify relation between the symptom and the condition when the symptom is detected.

>> GO TO 5.

4. CONFIRM THE SYMPTOM

Try to confirm the symptom described by the customer.
Also study the normal operation and fail safe related to the symptom. Refer to EC-519, "Description" and EC-363, "Fail Safe".
Diagnosis Work Sheet is useful to verify the incident.
Verify relation between the symptom and the condition when the symptom is detected.

>> GO TO 6.

5. PERFORM DTC CONFIRMATION PROCEDURE

Perform DTC CONFIRMATION PROCEDURE for the displayed DTC, and then make sure that DTC is detected again.
If two or more DTCs are detected, refer to EC-365, "DTC Inspection Priority Chart" and determine trouble diagnosis order.

NOTE:
- Freeze frame data is useful if the DTC is not detected.
- Perform Component Function Check if DTC CONFIRMATION PROCEDURE is not included on Service Manual. This simplified check procedure is an effective alternative though DTC cannot be detected during this check.
  If the result of Component Function Check is NG, it is the same as the detection of DTC by DTC CONFIRMATION PROCEDURE.

Is DTC detected?

YES >> GO TO 10.
NO >> Check according to GI-33, "Intermittent Incident".

6. PERFORM BASIC INSPECTION

Perform EC-382, "Work Procedure".

Do you have CONSULT-III?

YES >> GO TO 7.
NO >> GO TO 9.

7. PERFORM "SPEC" IN DATA MONITOR MODE

With CONSULT-III

Make sure that "B/FUEL SCHDL" and "A/F ALPHA-B1" are within the SP value in "SPEC" of "DATA MONITOR" mode with CONSULT-III. Refer to EC-388, "Component Function Check".

Is the measurement value within the SP value?

YES >> GO TO 9.
NO >> GO TO 8.

8. DETECT MALFUNCTIONING PART BY TROUBLE DIAGNOSIS - SPECIFICATION VALUE

Detect malfunctioning part according to EC-389, "Diagnosis Procedure".

Is malfunctioning part detected?

YES >> GO TO 11.
NO >> GO TO 9.

9. DETECT MALFUNCTIONING SYSTEM BY SYMPTOM TABLE

Detect malfunctioning system according to EC-513, "Symptom Table" based on the confirmed symptom in step 4, and determine the trouble diagnosis order based on possible causes and symptom.

>> GO TO 10.

10. DETECT MALFUNCTIONING PART BY DIAGNOSIS PROCEDURE

Inspect according to Diagnosis Procedure of the system.

NOTE:

The Diagnosis Procedure in EC section described based on open circuit inspection. A short circuit inspection is also required for the circuit check in the Diagnosis Procedure. For details, refer to GI-35, "Circuit Inspection".

Is malfunctioning part detected?

YES >> GO TO 11.
NO >> Monitor input data from related sensors or check the voltage of related ECM terminals using CONSULT-III. Refer to EC-355, "Reference Value".

11. REPAIR OR REPLACE THE MALFUNCTIONING PART

1. Repair or replace the malfunctioning part.
2. Reconnect parts or connectors disconnected during Diagnosis Procedure again after repair and replacement.
3. Check DTC. If DTC is displayed, erase it. Refer to "How to Erase DTC and 1st trip DTC" in EC-346, "Diagnosis Description".

>> GO TO 12.

12. FINAL CHECK

When DTC was detected in step 2, perform DTC CONFIRMATION PROCEDURE or Component Function Check again, and then make sure that the malfunction have been repaired securely.
When symptom was described from the customer, refer to confirmed symptom in step 3 or 4, and make sure that the symptom is not detected.

Is DTC detected and does symptom remain?

YES-1 >> DTC is detected: GO TO 10.
YES-2 >> Symptom remains: GO TO 6.
NO >> Before returning the vehicle to the customer, make sure to erase unnecessary DTC in ECM. (Refer to "How to Erase DTC and 1st trip DTC" in EC-346, "Diagnosis Description".)

Diagnostic Work Sheet

INFOID:0000000005886487

DESCRIPTION

There are many operating conditions that lead to the malfunction of engine components. A good grasp of such conditions can make troubleshooting faster and more accurate.
In general, each customer feels differently about an incident. It is important to fully understand the symptoms or conditions for a customer complaint.
Utilize a diagnostic worksheet like the WORKSHEET SAMPLE below in order to organize all the information for troubleshooting.

KEY POINTS

WHAT ..... Vehicle & engine model
WHEN ..... Date, Frequencies
WHERE..... Road conditions
HOW ..... Operating conditions, Weather conditions, Symptoms

SEF907L

WORKSHEET SAMPLE

Customer name MR/MS	Model & Year	VIN
Engine #	Trans.	Mileage
Incident Date	Manuf. Date	In Service Date
Fuel and fuel filler cap	☐ Vehicle ran out of fuel causing misfire ☐ Fuel filler cap was left off or incorrectly screwed on.	
Symptoms — ☐ Startability	☐ Impossible to start ☐ No combustion ☐ Partial combustion ☐ Partial combustion affected by throttle position ☐ Partial combustion NOT affected by throttle position ☐ Possible but hard to start ☐ Others [ ]	
Symptoms — ☐ Idling	☐ No fast idle ☐ Unstable ☐ High idle ☐ Low idle ☐ Others [ ]	
Symptoms — ☐ Driveability	☐ Stumble ☐ Surge ☐ Knock ☐ Lack of power ☐ Intake backfire ☐ Exhaust backfire ☐ Others [ ]	
Symptoms — ☐ Engine stall	☐ At the time of start ☐ While idling ☐ While accelerating ☐ While decelerating ☐ Just after stopping ☐ While loading	
Incident occurrence	☐ Just after delivery ☐ Recently ☐ In the morning ☐ At night ☐ In the daytime	
Frequency	☐ All the time ☐ Under certain conditions ☐ Sometimes	
Weather conditions	☐ Not affected	
Weather conditions — Weather	☐ Fine ☐ Raining ☐ Snowing ☐ Others [ ]	
Weather conditions — Temperature	☐ Hot ☐ Warm ☐ Cool ☐ Cold ☐ Humid °F	
Engine conditions	☐ Cold ☐ During warm-up ☐ After warm-up Engine speed 0 2,000 4,000 6,000 8,000 rpm	
Road conditions	☐ In town ☐ In suburbs ☐ Highway ☐ Off road (up/down)	
Driving conditions	☐ Not affected ☐ At starting ☐ While idling ☐ At racing ☐ While accelerating ☐ While cruising ☐ While decelerating ☐ While turning (RH/LH) Vehicle speed 0 10 20 30 40 50 60 MPH	
Malfunction indicator lamp	☐ Turned on ☐ Not turned on	

MTBL0017

ADDITIONAL SERVICE WHEN REPLACING ECM

Description

INFOID:0000000006036892

When replacing ECM, this procedure must be performed.

Work Procedure

INFOID:0000000006036893

1. PERFORM INITIALIZATION OF NATS SYSTEM AND REGISTRATION OF ALL NATS IGNITION KEY IDS

Refer to SEC-36, "ECM : Work Procedure" (With intelligent key system), SEC-36, "ECM : Work Procedure" (Without intelligent key system).

>> GO TO 2.

2. PERFORM ACCELERATOR PEDAL RELEASED POSITION LEARNING

Refer to EC-377, "Work Procedure".

>> GO TO 3.

3. PERFORM THROTTLE VALVE CLOSED POSITION LEARNING

Refer to EC-378, "Work Procedure".

>> GO TO 4.

4. PERFORM IDLE AIR VOLUME LEARNING

Refer to EC-379, "Work Procedure".

>> END

ACCELERATOR PEDAL RELEASED POSITION LEARNING

Description

INFOID:0000000006036894

Accelerator Pedal Released Position Learning is a function of ECM to learn the fully released position of the accelerator pedal by monitoring the accelerator pedal position sensor output signal. It must be performed each time harness connector of accelerator pedal position sensor or ECM is disconnected.

Work Procedure

INFOID:0000000006036895

1.START

1. Make sure that accelerator pedal is fully released.
2. Turn ignition switch ON and wait at least 2 seconds.
3. Turn ignition switch OFF and wait at least 10 seconds.
4. Turn ignition switch ON and wait at least 2 seconds.
5. Turn ignition switch OFF and wait at least 10 seconds.

>> END

THROTTLE VALVE CLOSED POSITION LEARNING

Description

INFOID:0000000006036896

Throttle Valve Closed Position Learning is a function of ECM to learn the fully closed position of the throttle valve by monitoring the throttle position sensor output signal. It must be performed each time harness connector of electric throttle control actuator or ECM is disconnected.

Work Procedure

INFOID:0000000006036897

1.START

1. Make sure that accelerator pedal is fully released.
2. Turn ignition switch ON.
3. Turn ignition switch OFF and wait at least 10 seconds.
   Make sure that throttle valve moves during above 10 seconds by confirming the operating sound.

>> END

IDLE AIR VOLUME LEARNING

Description

INFOID:0000000006036898

Idle Air Volume Learning is a function of ECM to learn the idle air volume that keeps each engine idle speed within the specific range. It must be performed under any of the following conditions:
- Each time electric throttle control actuator or ECM is replaced.
- Idle speed or ignition timing is out of specification.

Work Procedure

INFOID:0000000006036899

1. PRECONDITIONING

Make sure that all of the following conditions are satisfied.
Learning will be cancelled if any of the following conditions are missed for even a moment.
- Battery voltage: More than 12.9 V (At idle)
- Engine coolant temperature: 70 - 100°C (158 - 212°F)
- Shift lever: P or N (A/T), Neutral (M/T)
- Electric load switch: OFF
  (Air conditioner, headlamp, rear window defogger)
- Steering wheel: Neutral (Straight-ahead position) position
- Vehicle speed: Stopped
- Transmission: Warmed-up
- A/T models
- With CONSULT-III: Drive vehicle until “ATF TEMP SE 1” in “DATA MONITOR” mode of “A/T” system indicates less than 0.9V.
- Without CONSULT-III: Drive vehicle for 10 minutes.
- M/T models
- Drive vehicle for 10 minutes.

Do you have CONSULT-III?

YES >> GO TO 2.
NO >> GO TO 3.

2. IDLE AIR VOLUME LEARNING

With CONSULT-III

1. Perform ACCELERATOR PEDAL RELEASED POSITION LEARNING. Refer to EC-377, "Work Procedure".
2. Perform THROTTLE VALVE CLOSED POSITION LEARNING. Refer to EC-378, "Work Procedure".
3. Start engine and warm it up to normal operating temperature.
4. Select “IDLE AIR VOL LEARN” in “WORK SUPPORT” mode with CONSULT-III.
5. Touch “START” and wait 20 seconds.

Is “CMPLT” displayed on CONSULT-III screen?

YES >> GO TO 4.
NO >> GO TO 5.

3. IDLE AIR VOLUME LEARNING

Without CONSULT-III

NOTE:
- **It is better to count the time accurately with a clock.**
- **It is impossible to switch the diagnostic mode when an accelerator pedal position sensor circuit has a malfunction.**

1. Perform ACCELERATOR PEDAL RELEASED POSITION LEARNING. Refer to EC-377, "Work Procedure".
2. Perform THROTTLE VALVE CLOSED POSITION LEARNING. Refer to EC-378, "Work Procedure".
3. Start engine and warm it up to normal operating temperature.
4. Turn ignition switch OFF and wait at least 10 seconds.
5. Confirm that accelerator pedal is fully released, turn ignition switch ON and wait 3 seconds.
6. Repeat the following procedure quickly five times within 5 seconds.

- Fully depress the accelerator pedal.
- Fully release the accelerator pedal.

7. Wait 7 seconds, fully depress the accelerator pedal and keep it for approx. 20 seconds until the MIL stops blinking and turned ON.
8. Fully release the accelerator pedal within 3 seconds after the MIL turned ON.
9. Start engine and let it idle.
10. Wait 20 seconds.

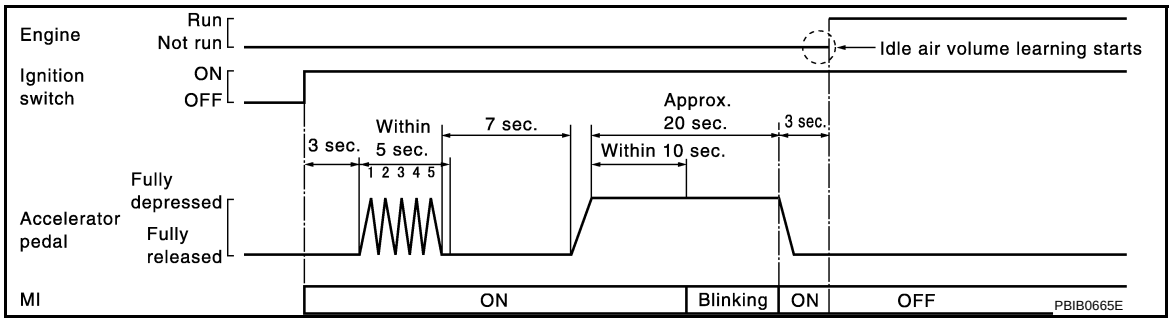

>> GO TO 4.

4. CHECK IDLE SPEED AND IGNITION TIMING

Rev up the engine two or three times and make sure that idle speed and ignition timing are within the specifications.
For specification, refer to EC-315, "Idle Speed" and EC-315, "Ignition Timing".

Is the inspection result normal?

YES >> INSPECTION END
NO >> GO TO 5.

5. DETECT MALFUNCTIONING PART

Check the following
- Check that throttle valve is fully closed.
- Check PCV valve operation.
- Check that downstream of throttle valve is free from air leakage.

Is the inspection result normal?

YES >> GO TO 6.
NO >> Repair or replace malfunctioning part.

6. DETECT MALFUNCTIONING PART

Engine component parts and their installation condition are questionable. Check and eliminate the cause of the incident.
It is useful to perform “TROUBLE DIAGNOSIS - SPECIFICATION VALUE”. Refer to EC-115, "Description".
If any of the following conditions occur after the engine has started, eliminate the cause of the incident and perform Idle Air Volume Learning all over again:
- Engine stalls.
- Erroneous idle.

>> INSPECTION END

MIXTURE RATIO SELF-LEARNING VALUE CLEAR

Description

INFOID:0000000006036902

This describes how to erase the mixture ratio self-learning value. For the actual procedure, follow the instructions in “Diagnosis Procedure”.

Work Procedure

INFOID:0000000005886497

1.START

With CONSULT-III
1. Start engine and warm it up to normal operating temperature.
2. Select “SELF-LEARNING CONT” in “WORK SUPPORT” mode with CONSULT-III.
3. Clear mixture ratio self-learning value by touching “CLEAR”.

Without CONSULT-III
1. Start engine and warm it up to normal operating temperature.
2. Turn ignition switch OFF.
3. Disconnect manifold absolute pressure (MAP) sensor harness connector.
4. Restart engine and let it idle for at least 5 seconds.
5. Stop engine and reconnect manifold absolute pressure (MAP) sensor harness connector.
6. Check DTC. Make sure DTC P0107 is detected.
7. Erase the DTC P0107.

>> END

BASIC INSPECTION

Work Procedure

INFOID:0000000005886498

1. INSPECTION START

1. Check service records for any recent repairs that may indicate a related malfunction, or a current need for scheduled maintenance.
2. Open engine hood and check the following:
- Harness connectors for improper connections
- Wiring harness for improper connections, pinches and cut
- Vacuum hoses for splits, kinks and improper connections
- Hoses and ducts for leaks
- Air cleaner clogging
- Gasket
3. Confirm that electrical or mechanical loads are not applied.
- Headlamp switch is OFF.
- Air conditioner switch is OFF.
- Rear window defogger switch is OFF.
- Steering wheel is in the straight-ahead position, etc.

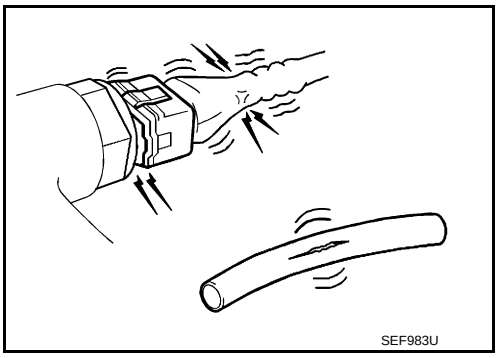
SEF983U

4. Start engine and warm it up until engine coolant temperature indicator points to the middle of gauge.
   Ensure engine stays below 1,000 rpm.

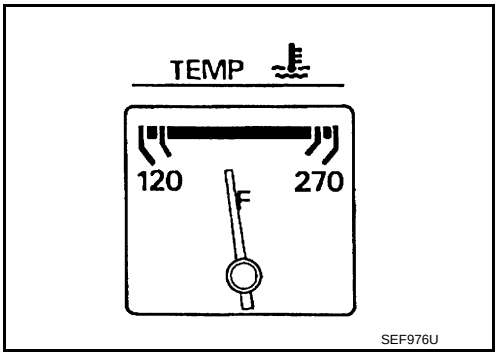

SEF976U

5. Run engine at about 2,000 rpm for about 2 minutes under no load.
6. Make sure that no DTC is displayed with CONSULT-III or ECM [Diagnostic Test Mode II (self-diagnostic results)].

Is any DTC detected?

YES >> GO TO 2.
NO >> GO TO 3.

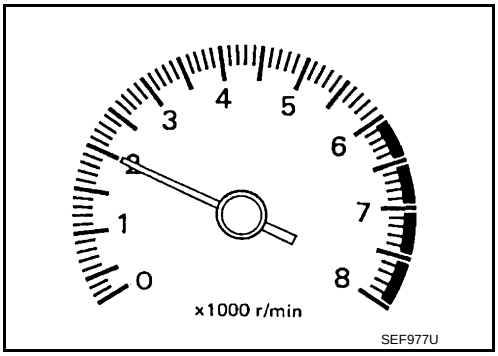

SEF977U

2. REPAIR OR REPLACE

Repair or replace components as necessary according to corresponding Diagnostic Procedure.

>> GO TO 3

3. CHECK TARGET IDLE SPEED

1. Run engine at about 2,000 rpm for about 2 minutes under no load.

2. Rev engine (2,000 to 3,000 rpm) two or three times under no load, then run engine at idle speed for about 1 minute.
3. Check idle speed.
   For procedure, refer to EC-520, "Inspection".
   For specification, refer to EC-527, "Idle Speed".

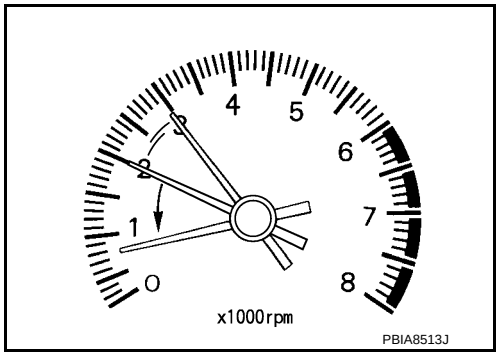

Is the inspection result normal?

YES >> GO TO 10.
NO >> GO TO 4.

4. PERFORM ACCELERATOR PEDAL RELEASED POSITION LEARNING

1. Stop engine.
2. Perform EC-377, "Work Procedure".

>> GO TO 5.

5. PERFORM THROTTLE VALVE CLOSED POSITION LEARNING

Perform EC-378, "Work Procedure".

>> GO TO 6.

6. PERFORM IDLE AIR VOLUME LEARNING

Perform EC-379, "Work Procedure".

Is Idle Air Volume Learning carried out successfully?

YES >> GO TO 7.
NO >> Follow the instruction of IDLE AIR VOLUME LEARNING. Then GO TO 4.

7. CHECK TARGET IDLE SPEED AGAIN

1. Start engine and warm it up to normal operating temperature.
2. Check idle speed.
   For procedure, refer to EC-520, "Inspection".
   For specification, refer to EC-527, "Idle Speed".

Is the inspection result normal?

YES >> GO TO 10.
NO >> GO TO 8.

8. DETECT MALFUNCTIONING PART

Check the Following.
- Check camshaft position sensor (PHASE) and circuit. Refer to EC-432, "Component Inspection".
- Check crankshaft position sensor (POS) and circuit. Refer to EC-428, "Component Inspection".

Is the inspection result normal?

YES >> GO TO 9.
NO >> Repair or replace. Then GO TO 4.

9. CHECK ECM FUNCTION

1. Substitute another known-good ECM to check ECM function. (ECM may be the cause of an incident, but this is a rare case.)
2. Perform initialization of NATS system and registration of all NATS ignition key IDs. Refer to SEC-36, "ECM : Description" (With intelligent key system), SEC-142, "ECM : Description" (Without intelligent key system).

>> GO TO 4.

10. CHECK IGNITION TIMING

1. Run engine at idle.

2. Check ignition timing with a timing light.
   For procedure, refer to EC-521, "Inspection".
   For specification, refer to EC-527, "Ignition Timing".
- Timing indicator (1)

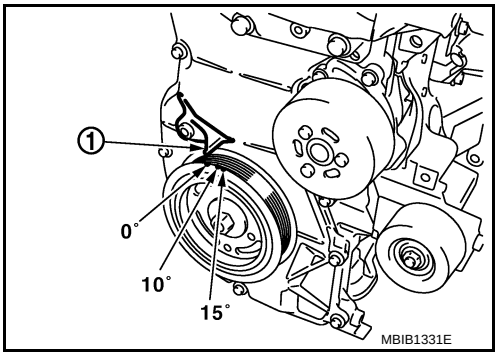

Is the inspection result normal?

YES >> GO TO 19.
NO >> GO TO 11.

11. PERFORM ACCELERATOR PEDAL RELEASED POSITION LEARNING

1. Stop engine.
2. Perform EC-377, "Work Procedure".

>> GO TO 12.

12. PERFORM THROTTLE VALVE CLOSED POSITION LEARNING

Perform EC-378, "Work Procedure".

>> GO TO 13.

13. PERFORM IDLE AIR VOLUME LEARNING

Perform EC-379, "Work Procedure".

Is idle air volume learning carried out successfully?

YES >> GO TO 14.
NO >> Follow the instruction of IDLE AIR VOLUME LEARNING. Then GO TO 4.

14. CHECK TARGET IDLE SPEED AGAIN

1. Start engine and warm it up to normal operating temperature.
2. Check idle speed.
   For procedure, refer to EC-520, "Inspection".
   For specification, refer to EC-527, "Idle Speed".

Is the inspection result normal?

YES >> GO TO 15.
NO >> GO TO 17.

15. CHECK IGNITION TIMING AGAIN

1. Run engine at idle.
2. Check ignition timing with a timing light.
   For procedure, refer to EC-521, "Inspection".
   For specification, refer to EC-527, "Ignition Timing".
- Timing indicator (1)

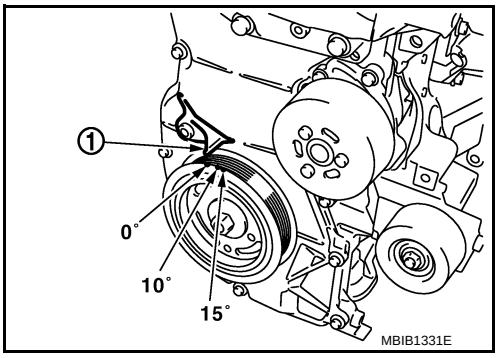

Is the inspection result normal?

YES >> GO TO 19.
NO >> GO TO 16.

16. CHECK TIMING CHAIN INSTALLATION

Check timing chain installation. Refer to EM-43, "Removal and Installation".

Is the inspection result normal?

YES >> GO TO 17.
NO >> Repair the timing chain installation. Then GO TO 4.

17. DETECT MALFUNCTIONING PART

Check the following.
- Check camshaft position sensor (PHASE) and circuit. Refer to EC-432, "Component Inspection".
- Check crankshaft position sensor (POS) and circuit. Refer to EC-428, "Component Inspection".

Is the inspection result normal?

YES >> GO TO 18.
NO >> Repair or replace. Then GO TO 4.

18. CHECK ECM FUNCTION

1. Substitute another known-good ECM to check ECM function. (ECM may be the cause of an incident, but this is a rare case.)
2. Perform initialization of NATS system and registration of all NATS ignition key IDs. Refer to SEC-36, "ECM : Description" (With intelligent key system), SEC-142, "ECM : Description" (Without intelligent key system).

>> GO TO 4.

19. INSPECTION END

If ECM is replaced during this BASIC INSPECTION procedure, perform “ADDITIONAL SERVICE WHEN REPLACING CONTROL UNIT”. Refer to EC-376, "Work Procedure".

>> INSPECTION END

FUEL PRESSURE CHECK

Work Procedure

INFOID:0000000006036949

FUEL PRESSURE RELEASE

1.FUEL PRESSURE RELEASE

With CONSULT-III

1. Turn ignition switch ON.
2. Perform “FUEL PRESSURE RELEASE” in “WORK SUPPORT” mode with CONSULT-III.
3. Start engine.
4. After engine stalls, crank it two or three times to release all fuel pressure.
5. Turn ignition switch OFF.

Without CONSULT-III

1. Remove fuel pump fuse located in IPDM E/R.
2. Start engine.
3. After engine stalls, crank it two or three times to release all fuel pressure.
4. Turn ignition switch OFF.
5. Reinstall fuel pump fuse after servicing fuel system.

>> INSPECTION END

FUEL PRESSURE CHECK

1.FUEL PRESSURE CHECK

CAUTION:

- **Before disconnecting fuel line, release fuel pressure from fuel line to eliminate danger.**
- **The fuel hose connection method used when taking fuel pressure check must not be used for other purposes.**
- **Be careful not to scratch or put debris around connection area when servicing, so that the quick connector maintains seal ability with O-rings inside.**
- **Do not perform fuel pressure check with electrical systems operating (i.e. lights, rear defogger, A/C, etc.) Fuel pressure gauge may indicate false readings due to varying engine load and changes in manifold vacuum.**

NOTE:

Prepare pans or saucers under the disconnected fuel line because the fuel may spill out. The fuel pressure cannot be completely released because this models do not have fuel return system.

1. Release fuel pressure to zero.
2. Prepare fuel hose for fuel pressure check (B) and fuel tube adapter [SST (KV10120000)] (D), then connect fuel pressure gauge (A).

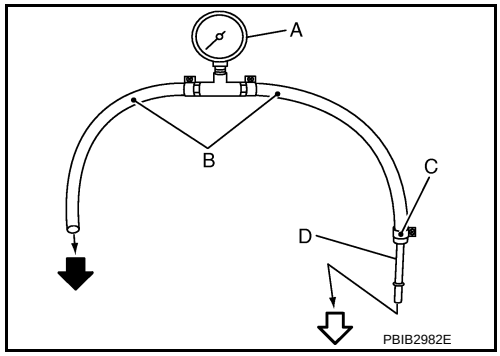

⇦ **To quick connector**

⬅ **To fuel tube (engine side)**

C **: Hose clamp**

CAUTION:

- **Use suitable fuel hose for fuel pressure check (genuine NISSAN fuel hose without quick connector).**
- **To avoid unnecessary force or tension to hose, use moderately long fuel hose for fuel pressure check.**
- **Do not use the fuel hose for checking fuel pressure with damage or cracks on it.**
- **Use Pressure Gauge to check fuel pressure.**

3. Disconnect fuel feed hose from fuel tube. Refer to EM-37, "Exploded View".

CAUTION:

Do not twist or kink fuel hose because it is plastic hose.

4. Connect fuel hose for fuel pressure check (1) to fuel tube (engine side) with clamp (2) as shown in the figure.

   5 : No.2 spool

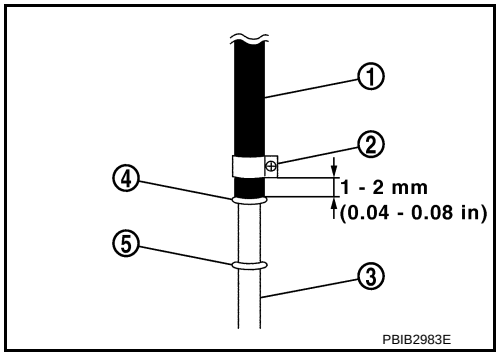

CAUTION:
- **Wipe off oil or dirt from hose insertion part using cloth moistened with gasoline.**
- **Apply proper amount of gasoline between top of the fuel tube (3) and No.1 spool (4).**
- **Insert fuel hose for fuel pressure check until it touches the No.1 spool on fuel tube.**
- **Use NISSAN genuine hose clamp (part number: 16439 N4710 or 16439 40U00).**
- **When reconnecting fuel line, always use new clamps.**
- **Use a torque driver to tighten clamps.**
- **Install hose clamp to the position within 1 - 2 mm (0.04 - 0.08 in).**

Tightening torque : 1 - 1.5 N·m (0.1 - 0.15 kg-m, 9 - 13 in-lb)

- **Make sure that clamp screw does not contact adjacent parts.**

5. Connect fuel tube adapter (C) to quick connector (1).

   A : Fuel pressure gauge
   B : Fuel hose for fuel pressure check

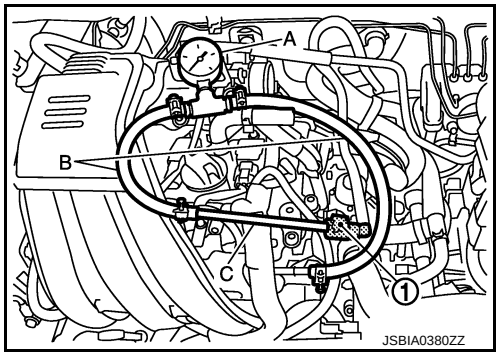

6. After connecting fuel hose for fuel pressure check, pull the hose with a force of approximately 98 N (10 kg, 22 lb) to confirm fuel tube does not come off.
7. Reinstall the part removed at Step 3.
   NOTE:
   Install the part to allow smooth engine starts.
8. Turn ignition switch ON and check for fuel leakage.
9. Start engine and check for fuel leakage.
10. Read the indication of fuel pressure gauge.
    CAUTION:
    - **Do not perform fuel pressure check with system operating. Fuel pressure gauge may indicate false readings.**
    - **During fuel pressure check, confirm for fuel leakage from fuel connection every 3 minutes.**

At idling: Approximately 350 kPa (3.5 bar, 3.57 kg/cm^2, 51 psi)

Is the inspection result normal?

YES >> INSPECTION END
NO >> GO TO 2.

2. CHECK FUEL HOSE AND FUEL TUBE

If result is unsatisfactory, check fuel hoses and fuel tubes for clogging.

Is the inspection result normal?

YES >> Replace fuel level sensor unit, fuel filter and fuel pump assembly. Refer to FL-5, "Exploded View".
NO >> Repair or replace.

DTC/CIRCUIT DIAGNOSIS

TROUBLE DIAGNOSIS - SPECIFICATION VALUE

Description

INFOID:0000000006045694

The specification (SP) value indicates the tolerance of the value that is displayed in “SPEC” of “DATA MONITOR” mode of CONSULT-III during normal operation of the Engine Control System. When the value in “SPEC” of “DATA MONITOR” mode is within the SP value, the Engine Control System is confirmed OK. When the value in “SPEC” of “DATA MONITOR” mode is NOT within the SP value, the Engine Control System may have one or more malfunctions.
The SP value is used to detect malfunctions that may affect the Engine Control System, but will not light the MIL.
The SP value will be displayed for the following two items:
- B/FUEL SCHDL (The fuel injection pulse width programmed into ECM prior to any learned on board correction)
- A/F ALPHA-B1 (The mean value of air-fuel ratio feedback correction factor per cycle)

Component Function Check

INFOID:0000000006045695

1. START

Make sure that all of the following conditions are satisfied.
- Vehicle driven distance: More than 5,000 km (3,107 miles)
- Barometric pressure: 98.3 - 104.3 kPa (0.983 - 1.043 bar, 1.003 - 1.064 kg/cm^2, 14.25 - 15.12 psi)
- Atmospheric temperature: 20 - 30°C (68 - 86°F)
- Engine coolant temperature: 75 - 95°C (167 - 203°F)
- Transmission: Warmed-up
  - For A/T models: After the engine is warmed up to normal operating temperature, drive vehicle until “ATF TEMP SE 1” (A/T fluid temperature sensor signal) indicates more than 60°C (140°F).
  - For M/T models: After the engine is warmed up to normal operating temperature, drive for 5 minutes.
- Electrical load: Not applied
  - Rear window defogger switch, air conditioner switch, lighting switch are OFF. Steering wheel is straight ahead.
- Engine speed: Idle

>> GO TO 2.

2. PERFORM “SPEC” OF “DATA MONITOR” MODE

With CONSULT-III
NOTE:
Perform “SPEC” in “DATA MONITOR” mode in maximum scale display.
1. Perform XX-XX, "*****".
2. Select “B/FUEL SCHDL” and “A/F ALPHA-B1” in “SPEC” of “DATA MONITOR” mode with CONSULT-III.
3. Make sure that monitor items are within the SP value.

Is the inspection result normal?

YES >> END
NO >> Go to EC-389, "Diagnosis Procedure".

Diagnosis Procedure

INFOID:0000000006045696

OVERALL SEQUENCE

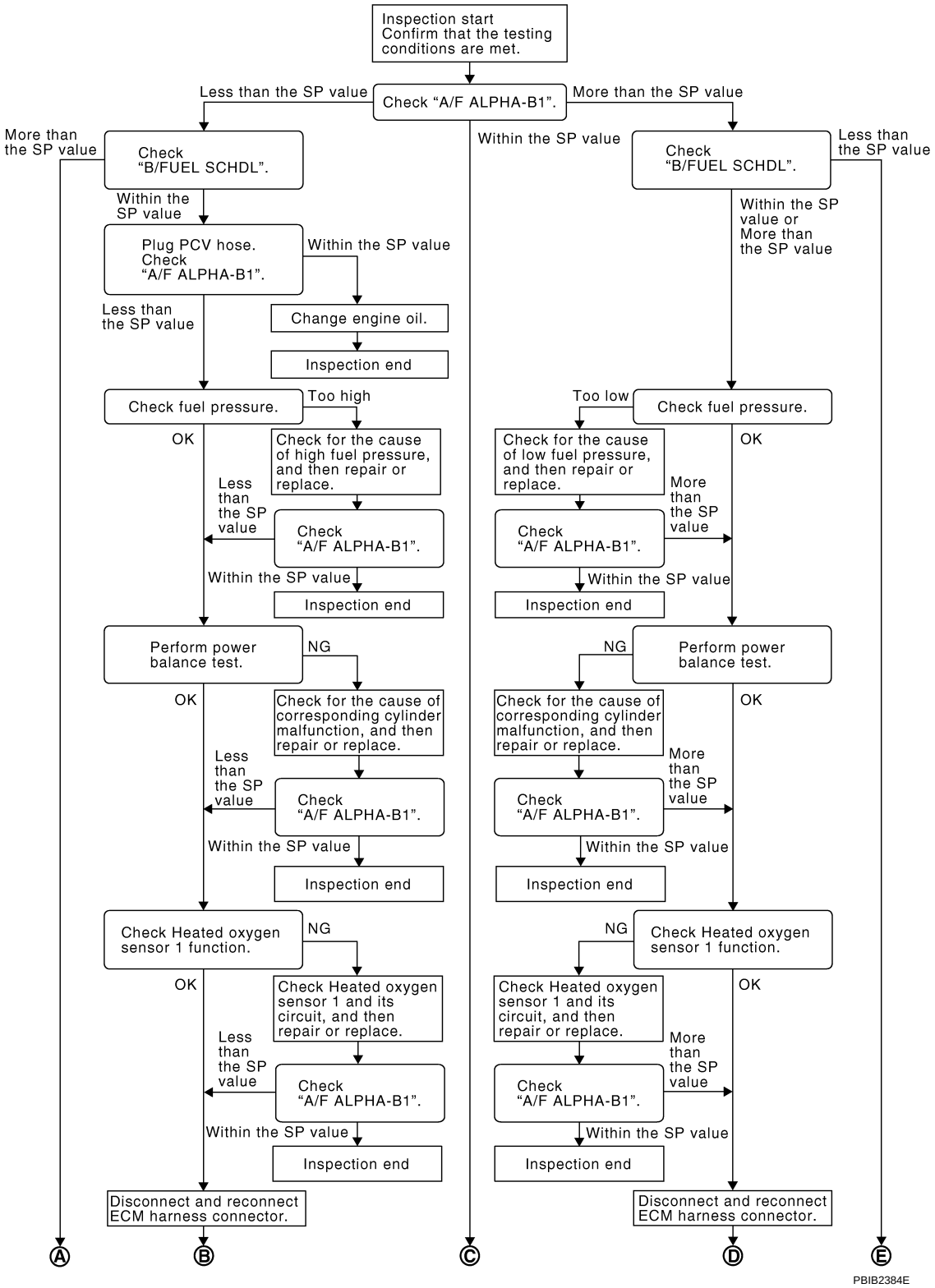

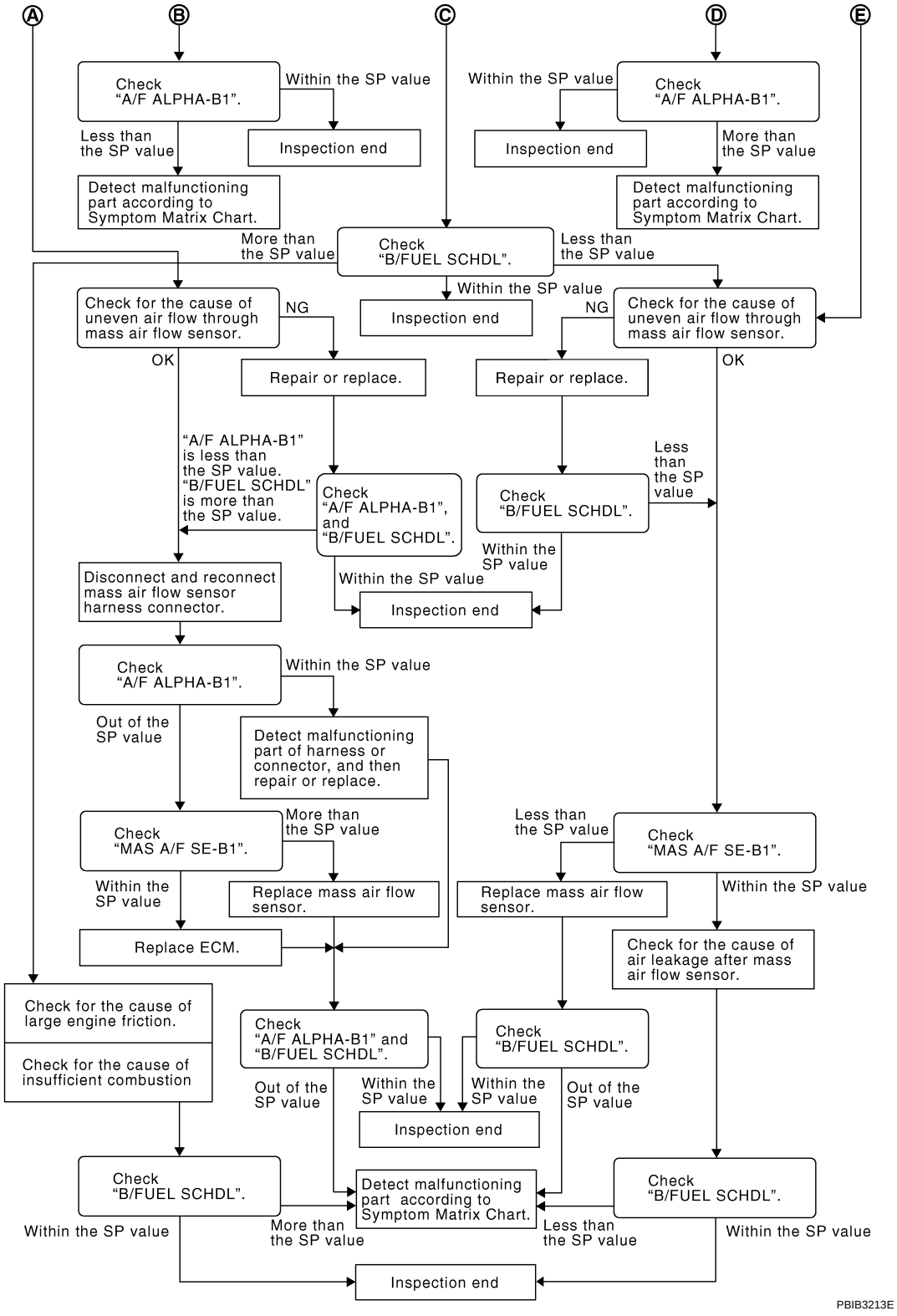

DETAILED PROCEDURE

1. CHECK "A/F ALPHA-B1"

With CONSULT-III

1. Start engine.
2. Confirm that the testing conditions are met. Refer to EC-388, "Component Function Check".
3. Select "A/F ALPHA-B1" in "SPEC" of "DATA MONITOR" mode, and make sure that the indication is within the SP value.

NOTE:

Check “A/F ALPHA-B1” for approximately 1 minute because they may fluctuate. It is NG if the indication is out of the SP value even a little.

Is the measurement value within the SP value?

YES >> GO TO 17.
NO-1 >> Less than the SP value: GO TO 2.
NO-2 >> More than the SP value: GO TO 3.

2. CHECK “B/FUEL SCHDL”

Select “B/FUEL SCHDL” in “SPEC” of “DATA MONITOR” mode, and make sure that the indication is within the SP value.

Is the measurement value within the SP value?

YES >> GO TO 4.
NO >> More than the SP value: GO TO 19.

3. CHECK “B/FUEL SCHDL”

Select “B/FUEL SCHDL” in “SPEC” of “DATA MONITOR” mode, and make sure that the indication is within the SP value.

Is the measurement value within the SP value?

YES >> GO TO 6.
NO-1 >> More than the SP value: GO TO 6.
NO-2 >> Less than the SP value: GO TO 25.

4. CHECK “A/F ALPHA-B1”

1. Stop the engine.
2. Disconnect PCV hose, and then plug it.
3. Start engine.
4. Select “A/F ALPHA-B1” in “SPEC” of “DATA MONITOR” mode, and make sure that the indication is within the SP value.

Is the measurement value within the SP value?

YES >> GO TO 5.
NO >> GO TO 6.

5. CHANGE ENGINE OIL

1. Stop the engine.
2. Change engine oil.

NOTE:
This symptom may occur when a large amount of gasoline is mixed with engine oil because of driving conditions (such as when engine oil temperature does not rise enough since a journey distance is too short during winter). The symptom will not be detected after changing engine oil or changing driving condition.

>> **INSPECTION END**

6. CHECK FUEL PRESSURE

Check fuel pressure. (Refer to XX-XX, "*****".)

Is the inspection result normal?

YES >> GO TO 9.
NO-1 >> Fuel pressure is too high: Replace “fuel level sensor unit and fuel pump” and then GO TO 8.
NO-2 >> Fuel pressure is too low: GO TO 7.

7. DETECT MALFUNCTIONING PART

Check fuel hoses and fuel tubes for clogging

Is the inspection result normal?

YES >> Replace “fuel level sensor unit and fuel pump” and then GO TO 8.
NO >> Repair or replace and then GO TO 8.

8. CHECK “A/F ALPHA-B1”

1. Start engine.

2. Select “A/F ALPHA-B1” in “SPEC” of “DATA MONITOR” mode, and make sure that the indication is within the SP value.

Is the measurement value within the SP value?

YES >> INSPECTION END
NO >> GO TO 9.

9. PERFORM POWER BALANCE TEST

1. Perform “POWER BALANCE” in “ACTIVE TEST” mode.
2. Make sure that the each cylinder produces a momentary engine speed drop.

Is the inspection result normal?

YES >> GO TO 12.
NO >> GO TO 10.

10. DETECT MALFUNCTIONING PART

Check the following.
1. Ignition coil and its circuit (Refer to XX-XX, "*****".)
2. Fuel injector and its circuit (Refer to XX-XX, "*****".)
3. Intake air leakage
4. Low compression pressure (Refer to XX-XX, "*****".)

Is the inspection result normal?

YES >> Replace fuel injector and then GO TO 11.
NO >> Repair or replace malfunctioning part and then GO TO 11.

11. CHECK “A/F ALPHA-B1”

1. Start engine.
2. Select “A/F ALPHA-B1” in “SPEC” of “DATA MONITOR” mode, and make sure that the indication is within the SP value.

Is the measurement value within the SP value?

YES >> INSPECTION END
NO >> GO TO 12.

12. CHECK HEATED OXYGEN SENSOR 1 FUNCTION

1. Run engine at about 2,000 rpm for about 2 minutes under no load.
2. Select “HO2S1 MNTR (B1)” in “DATA MONITOR” mode.
3. Running engine at 2,000 rpm under no load (The engine is warmed up to normal operating temperature.), check that the monitor fluctuates between LEAN and RICH more than 5 times during 10 seconds.

1 time : RICH → LEAN → RICH
2 times : RICH → LEAN → RICH → LEAN → RICH

Is the inspection result more than 5 times during 10 seconds?

YES >> GO TO 15.
NO >> GO TO 13.

13. CHECK HEATED OXYGEN SENSOR 1 CIRCUIT

Check heated oxygen sensor and its circuit. Refer to XX-XX, "*****".

>> GO TO 14.

14. CHECK “A/F ALPHA-B1”

1. Start engine.
2. Select “A/F ALPHA-B1” in “SPEC” of “DATA MONITOR” mode, and make sure that the indication is within the SP value.

Is the measurement value within the SP value?

YES >> INSPECTION END
NO >> GO TO 15.

15. DISCONNECT AND RECONNECT ECM HARNESS CONNECTOR

1. Stop the engine.
2. Disconnect ECM harness connector. Check pin terminal and connector for damage, and then reconnect it.

>> GO TO 16.

16. CHECK “A/F ALPHA-B1”

1. Start engine.
2. Select “A/F ALPHA-B1” in “SPEC” of “DATA MONITOR” mode, and make sure that the indication is within the SP value.

Is the measurement value within the SP value?

YES >> INSPECTION END
NO >> Detect malfunctioning part according to XX-XX, "*****".

17. CHECK “B/FUEL SCHDL”

Select “B/FUEL SCHDL” in “SPEC” of “DATA MONITOR” mode, and make sure that the indication is within the SP value.

Is the measurement value within the SP value?

YES >> INSPECTION END
NO-1 >> More than the SP value: GO TO 18.
NO-2 >> Less than the SP value: GO TO 25.

18. DETECT MALFUNCTIONING PART

1. Check for the cause of large engine friction. Refer to the following.
- Engine oil level is too high
- Engine oil viscosity
- Belt tension of alternator, A/C compressor, etc. is excessive
- Noise from engine
- Noise from transmission, etc.
2. Check for the cause of insufficient combustion. Refer to the following.
- Valve clearance malfunction
- Intake valve timing control function malfunction
- Camshaft sprocket installation malfunction, etc.

>> Repair or replace malfunctioning part, and then GO TO 30.

19. CHECK INTAKE SYSTEM

Check for the cause of uneven air flow passing through throttle body. Refer to the following.
- Crushed air ducts
- Malfunctioning seal of air cleaner element
- Uneven dirt of air cleaner element
- Improper specification of intake air system

Is the inspection result normal?

YES >> GO TO 21.
NO >> Repair or replace malfunctioning part, and then GO TO 20.

20. CHECK “A/F ALPHA-B1”, AND “B/FUEL SCHDL”

Select “A/F ALPHA-B1” and “B/FUEL SCHDL” in “SPEC” of “DATA MONITOR” mode, and make sure that the each indication is within the SP value.

Is the measurement value within the SP value?

YES >> **INSPECTION END**
NO >> “B/FUEL SCHDL” is more, “A/F ALPHA-B1” is less than the SP value: GO TO 21

21. DISCONNECT AND RECONNECT MANIFOLD ABSOLUTE PRESSURE (MAP) SENSOR HARNESS CONNECTOR

1. Stop the engine.
2. Disconnect manifold absolute pressure (MAP) sensor harness connector. Check pin terminal and connector for damage and then reconnect it again.

>> GO TO 22.

22. CHECK “A/F ALPHA-B1”

1. Start engine.
2. Select “A/F ALPHA-B1” in “SPEC” of “DATA MONITOR” mode, and make sure that the indication is within the SP value.

Is the measurement value within the SP value?

YES >> Detect malfunctioning part of manifold absolute pressure (MAP) sensor circuit and repair it. Refer to XX-XX, "*****". Then GO TO 29.
NO >> GO TO 23.

23. CHECK “TURBO BST SEN”

Select “TURBO BST SEN” in “SPEC” of “DATA MONITOR” mode, and make sure that the indication is within the SP value. Refer to EC-402, "Component Inspection".

Is the measurement value within the SP value?

YES >> GO TO 24.
NO >> More than the SP value: Replace manifold absolute pressure (MAP) sensor, and then GO TO 29.

24. REPLACE ECM

1. Replace ECM.
2. Go to XX-XX, "*****".

>> GO TO 29.

25. CHECK INTAKE SYSTEM

Check for the cause of uneven air flow through manifold absolute pressure (MAP) sensor. Refer to the following.

- Crushed air ducts
- Malfunctioning seal of air cleaner element
- Uneven dirt of air cleaner element
- Improper specification of intake air system

Is the inspection result normal?

YES >> GO TO 27.
NO >> Repair or replace malfunctioning part, and then GO TO 26.

26. CHECK “B/FUEL SCHDL”

Select “B/FUEL SCHDL” in “SPEC” of “DATA MONITOR” mode, and make sure that the indication is within the SP value.

Is the measurement value within the SP value?

YES >> INSPECTION END
NO >> Less than the SP value: GO TO 27.

27. CHECK “TURBO BST SEN”

Select “TURBO BST SEN” in “SPEC” of “DATA MONITOR” mode, and make sure that the indication is within the SP value.

Is the measurement value within the SP value?

YES >> GO TO 28.
NO >> Less than the SP value: Replace manifold absolute pressure (MAP) sensor, and then GO TO 30.

28. CHECK INTAKE SYSTEM

Check for the cause of air leakage after the manifold absolute pressure (MAP) sensor. Refer to the following.

- Disconnection, looseness, and cracks in air duct
- Looseness of oil filler cap
- Disconnection of oil level gauge
- Open stuck, breakage, hose disconnection, or cracks of PCV valve
- Disconnection or cracks of EVAP purge hose, open stuck of EVAP canister purge volume control solenoid valve
- Malfunctioning seal of rocker cover gasket

- Disconnection, looseness, or cracks of hoses, such as vacuum hose, connecting to intake air system parts
- Malfunctioning seal of intake air system, etc.

>> GO TO 30.

29. CHECK “A/F ALPHA-B1” AND “B/FUEL SCHDL”

Select “A/F ALPHA-B1” and “B/FUEL SCHDL” in “SPEC” of “DATA MONITOR” mode, and make sure that the indication is within the SP value.

Is the measurement value within the SP value?

YES >> INSPECTION END
NO >> Detect malfunctioning part according to XX-XX, "*****".

30. CHECK “B/FUEL SCHDL”

Select “B/FUEL SCHDL” in “SPEC” of “DATA MONITOR” mode, and then make sure that the indication is within the SP value.

Is the measurement value within the SP value?

YES >> INSPECTION END
NO >> Detect malfunctioning part according to XX-XX, "*****".

POWER SUPPLY AND GROUND CIRCUIT

Diagnosis Procedure

INFOID:0000000006037299

1. CHECK GROUND CONNECTION

1. Turn ignition switch OFF.
2. Check ground connection E38. Refer to Ground Inspection in XX-XX, "*****".

Is the inspection result normal?

YES >> GO TO 2.
NO >> Repair or replace ground connection.

2. CHECK ECM GROUND CIRCUIT FOR OPEN AND SHORT

1. Disconnect ECM harness connectors.
2. Check the continuity between ECM harness connector and ground.

ECM		Ground	Continuity
Connector	Terminal		
F7	10	Ground	Existed
	11		
E18	107		

3. Also check harness for short to power.

Is the inspection result normal?

YES >> GO TO 4.
NO >> GO TO 3.

3. DETECT MALFUNCTIONING PART

Check harness for open or short between ECM and ground.

>> Repair open circuit or short to power in harness or connectors.

4. CHECK ECM POWER SUPPLY CIRCUIT-I

1. Reconnect ECM harness connectors.
2. Turn ignition switch ON.
3. Check the voltage between ECM harness connector and ground.

ECM		Ground	Voltage
Connector	Terminal		
E18	93	Ground	Battery voltage

Is the inspection result normal?

YES >> GO TO 6.
NO >> GO TO 5.

5. DETECT MALFUNCTIONING PART

Check harness for open or short between ECM and fuse.

>> Repair open circuit or short to ground or short to power in harness or connectors.

6. CHECK ECM POWER SUPPLY CIRCUIT-II

1. Turn ignition switch OFF and wait at least 10 seconds.
2. Turn ignition switch ON and then OFF.
   Check the voltage between ECM harness connector and ground.

ECM		Ground	Voltage
Connector	Terminal		
E18	105	Ground	After turning ignition switch OFF, battery voltage will exist for a few seconds, then drop to approximately 0 V.

Is the inspection result normal?

YES >> GO TO 7.
NO >> GO TO 9.

7. CHECK ECM POWER SUPPLY CIRCUIT-III

1. Turn ignition switch ON.
2. Check the voltage between IPDM E/R harness connector and ground.

IPDM E/R		Ground	Voltage
Connector	Terminal		
F115	75	Ground	Battery voltage

Is the inspection result normal?

YES >> GO TO 8.
NO >> Replace IPDM E/R. Refer to PCS-52, "Exploded View".

8. CHECK INTERMITTENT INCIDENT

Check intermittent incident. Refer to XX-XX, "*****".

>> Repair or replace malfunctioning part.

9. CHECK ECM POWER SUPPLY CIRCUIT-IV

1. Turn ignition switch OFF and wait at least 10 seconds.
2. Check the voltage between ECM harness connector and ground.

ECM		Ground	Voltage
Connector	Terminal		
F7	32	Ground	Battery voltage

Is the inspection result normal?

YES >> GO TO 13.
NO >> GO TO 10.

10. CHECK ECM POWER SUPPLY CIRCUIT-V

1. Disconnect ECM harness connector.
2. Disconnect IPDM E/R harness connector F113.
3. Check the continuity between ECM harness connector and IPDM E/R harness connector.

ECM		IPDM E/R		Continuity
Connector	Terminal	Connector	Terminal	
F7	32	F113	50	Existed

4. Also check harness for short to ground and short to power.

Is the inspection result normal?

YES >> GO TO 12.
NO >> GO TO 11.

11. DETECT MALFUNCTIONING PART

Check harness for open or short between ECM and IPDM E/R.

>> Repair open circuit or short to ground or short to power in harness or connectors.

12. CHECK 20 A FUSE

1. Disconnect 20 A fuse (No. 49) from IPDM E/R.
2. Check 20 A fuse.

Is the inspection result normal?

YES >> GO TO 14.
NO >> Replace 20 A fuse.

13. CHECK ECM POWER SUPPLY CIRCUIT-VI

1. Disconnect ECM harness connector.
2. Disconnect IPDM E/R harness connector E14.
3. Check the continuity between ECM harness connector and IPDM E/R harness connector.

ECM		IPDM E/R		Continuity
Connector	Terminal	Connector	Terminal	
E18	105	E12	35	Existed

4. Also check harness for short to ground and short to power.

Is the inspection result normal?

YES >> GO TO 14.
NO >> Repair open circuit or short to ground or short power in harness or connectors.

14. CHECK INTERMITTENT INCIDENT

Check intermittent incident. Refer to XX-XX, "*****".

Is the inspection result normal?

YES >> Replace IPDM E/R. Refer to PCS-52, "Exploded View".
NO >> Repair or replace harness or connectors.

U1000, U1001 CAN COMM CIRCUIT

Description

INFOID:0000000005886504

CAN (Controller Area Network) is a serial communication line for real time application. It is an on-vehicle multiplex communication line with high data communication speed and excellent error detection ability. Many electronic control units are equipped onto a vehicle, and each control unit shares information and links with other control units during operation (not independent). In CAN communication, control units are connected with 2 communication lines (CAN H line, CAN L line) allowing a high rate of information transmission with less wiring. Each control unit transmits/receives data but selectively reads required data only.

DTC Logic

INFOID:0000000005886505

DTC DETECTION LOGIC

DTC No.	Trouble diagnosis name	DTC detecting condition	Possible cause
U1000	CAN communication line	When ECM is not transmitting or receiving CAN communication signal of OBD (emission-related diagnosis) for 2 seconds or more.	• Harness or connectors (CAN communication line is open or shorted)
U1001		When ECM is not transmitting or receiving CAN communication signal other than OBD (emission related diagnosis) for 2 seconds or more.	

DTC CONFIRMATION PROCEDURE

1. PERFORM DTC CONFIRMATION PROCEDURE

1. Turn ignition switch ON and wait at least 3 seconds.
2. Check DTC.

Is DTC detected?

YES >> EC-399, "Diagnosis Procedure".
NO >> INSPECTION END

Diagnosis Procedure

INFOID:0000000005886506

Go to XX-XX, "*****".

U1010 CONTROL UNIT (CAN)

Description

INFOID:0000000005888312

CAN (Controller Area Network) is a serial communication line for real time application. It is an on-vehicle multiplex communication line with high data communication speed and excellent error detection ability. Many electronic control units are equipped onto a vehicle, and each control unit shares information and links with other control units during operation (not independent). In CAN communication, control units are connected with 2 communication lines (CAN H line, CAN L line) allowing a high rate of information transmission with less wiring. Each control unit transmits/receives data but selectively reads required data only.

DTC Logic

INFOID:0000000005888313

DTC DETECTION LOGIC

DTC No.	Trouble diagnosis name	DTC detecting condition	Possible cause
U1010	CAN communication bus	When detecting error during the initial diagnosis of CAN controller of ECM.	• ECM

DTC CONFIRMATION PROCEDURE

1. PERFORM DTC CONFIRMATION PROCEDURE

1. Turn ignition switch ON.
2. Check DTC.

Is DTC detected?

YES >> Go to EC-400, "Diagnosis Procedure".
NO >> INSPECTION END

Diagnosis Procedure

INFOID:0000000005888314

1. INSPECTION START

1. Erase DTC.
2. Perform DTC CONFIRMATION PROCEDURE.
   See EC-400, "DTC Logic".
3. Check DTC.

Is the DTC U1010 displayed again?

YES >> GO TO 2.
NO >> INSPECTION END

2. REPLACE ECM

1. Replace ECM.
2. Perform XX-XX, "*****".

>> INSPECTION END

P0107, P0108 MAP SENSOR

DTC Logic

INFOID:0000000006037309

DTC DETECTION LOGIC

NOTE:
If DTC P0107 or P0108 is displayed with DTC P1229, first perform the trouble diagnosis for DTC P1229. Refer to EC-456, "DTC Logic".

DTC No.	Trouble diagnosis name	DTC detecting condition	Possible cause
P0107	Manifold absolute pressure sensor circuit low input	An excessively low voltage from the sensor is sent to ECM.	• Harness or connectors (The sensor circuit is open or shorted.) • Manifold absolute pressure sensor
P0108	Manifold absolute pressure sensor circuit high input	An excessively high voltage from the sensor is sent to ECM.	• Harness or connectors (The sensor circuit is open or shorted) • Manifold absolute pressure sensor • Intake air leaks

DTC CONFIRMATION PROCEDURE

1. PRECONDITIONING

If DTC Confirmation Procedure has been previously conducted, always turn ignition switch OFF and wait atleast 10 seconds before conducting the next test.

>> GO TO 2.

2. PERFORM DTC CONFIRMATION PROCEDURE

1. Turn ignition switch ON and wait at least 5 seconds.
2. Check 1st trip DTC.

Is DTC 1st trip detected?

YES >> Go to XX-XX, "*****".
NO >> INSPECTION END

Diagnosis Procedure

INFOID:0000000006044842

1. CHECK MAP SENSOR POWER SUPPLY CIRCUIT

1. Disconnect manifold absolute pressure sensor (MAP) sensor harness connector.
2. Turn ignition switch ON.
3. Check the voltage between MAP sensor harness connector and ground.

+		-	Voltage (V)
MAP sensor		Ground	
Connector	Terminal		
F50	1	Ground	Approx. 5

Is the inspection result normal?

YES >> GO TO 2.
NO >> Repair open circuit, short to ground or short to power in harness or connectors.

2. CHECK MAP SENSOR GROUND CIRCUIT FOR OPEN AND SHORT

1. Turn ignition switch OFF.
2. Disconnect ECM harness connector.
3. Check the continuity between MAP sensor harness connector and ECM harness connector.

+		-		Continuity
MAP sensor		ECM		
Connector	Terminal	Connector	Terminal	
F50	3	F102	96	Existed

4. Also check harness for short to ground and power.

Is the inspection result normal?

YES >> GO TO 3.
NO >> Repair open circuit, short to ground or short to power in harness or connectors.

3.CHECK MAP SENSOR INTPUT SIGNAL CIRCUIT FOR OPEN AND SHORT

1. Check the continuity between MAP sensor harness connector and ECM harness connector.

+		-		Continuity
MAP sensor		ECM		
Connector	Terminal	Connector	Terminal	
F50	2	F101	38	Existed

2. Also check harness for short to ground and power.

Is the inspection result normal?

YES >> GO TO 4.
NO >> Repair open circuit, short to ground or short to power in harness or connectors.

4.CHECK MAP SENSOR

Check map sensor. Refer to XX-XX, "*****".

Is the inspection result normal?

YES >> GO TO 5.
NO >> Replace MAP sensor.

5.CHECK INTERMITTENT INCIDENT

Check intermittent incident. Refer to XX-XX, "*****".

>> INSPECTION END

Component Inspection

INFOID:0000000006044845

1.CHECK MAP SENSOR-I

1. Turn ignition switch OFF.
2. Start engine and warm it up to normal operating temperature.
3. Turn ignition switch OFF, wait at least 5 seconds and then turn ON.
4. Check the voltage between ECM harness connector terminals as follows.

ECM			
+		–	
Connector	Terminal	Connector	Terminal
F101	38	F102	96

NOTE:
- To avoid the influence of intake manifold vacuum, check the voltage 1 or more minutes past after engine is stopped.
- Because the sensor is absolute pressure sensor, output value may differ depending on atmospheric pressure and altitude.

5. Measure the atmospheric pressure.

NOTE:

As the atmospheric pressure described on the synoptic chart is the value at sea level, compensate the pressure with the following chart.

Altitude (m)	Compensated pressure (hPa)
0	0
200	-24
400	-47
600	-70
800	-92
1000	-114
1500	-168
2000	-218

6. Check the manifold absolute pressure sensor value corresponding to the atmospheric pressure.

Atmospheric pressure (hPa)	Voltage (V)
800	3.1 – 3.7
850	3.3 – 3.9
900	3.5 – 4.1
950	3.8 – 4.3
1000	4.0 – 4.6
1050	4.2 – 4.8

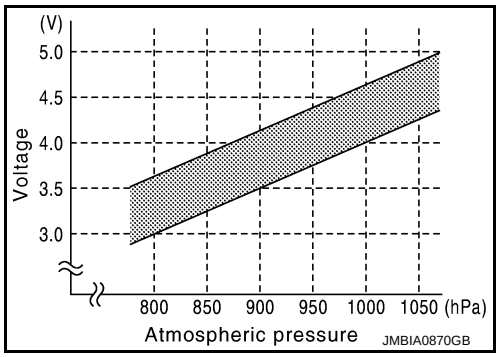

Is the inspection result normal?

YES >> GO TO 2.
NO >> Replace MAP sensor.

2. CHECK MAP SENSOR-II

1. Start engine and let it idle.
2. Check intake manifold vacuum.
3. Check the voltage between ECM harness connector terminals as per the following.

ECM			
+		–	
Connector	Terminal	Connector	Terminal
F101	38	F102	96

4. Confirm the difference of the voltage when engine is stopped and at idling is within the values shown in the following chart.

Intake manifold vacuum	Voltage difference (V)
-40kPa (-300mmHg)	1.5 – 2.0
-53.3kPa (-400mmHg)	2.0 – 2.6
-66.7kPa (-500mmHg)	2.6 – 3.2
-80kPa (-600mmHg)	3.2 – 3.8

Is the inspection result normal?

YES >> INSPECTION END
NO >> Replace MAP sensor.

P0117, P0118 ECT SENSOR

DTC Logic

INFOID:0000000006037333

DTC DETECTION LOGIC

DTC No.	Trouble diagnosis name	DTC detecting condition	Possible cause
P0117	Engine coolant temperature sensor circuit low input	An excessively low voltage from the sensor is sent to ECM.	• Harness or connectors (The sensor circuit is open or shorted.) • Engine coolant temperature sensor
P0118	Engine coolant temperature sensor circuit high input	An excessively high voltage from the sensor is sent to ECM.	

DTC CONFIRMATION PROCEDURE

1. PRECONDITIONING

If DTC Confirmation Procedure has been previously conducted, always turn ignition switch OFF and wait at least 10 seconds before conducting the next test.

>> GO TO 2.

2. PERFORM DTC CONFIRMATION PROCEDURE

1. Turn ignition switch ON and wait at least 5 seconds.
2. Check DTC.

Is DTC detected?

YES >> Go to EC-404, "Diagnosis Procedure".
NO >> INSPECTION END

Diagnosis Procedure

INFOID:0000000006037334

1. CHECK ECT SENSOR POWER SUPPLY CIRCUIT

1. Disconnect engine coolant temperature (ECT) sensor harness connector.
2. Turn ignition switch ON.
3. Check the voltage between ECT sensor harness connector and ground.

ECT sensor		Ground	Voltage
Connector	Terminal		
F28	1	Ground	Approx. 5 V

Is the inspection result normal?

YES >> GO TO 2.
NO >> Repair open circuit or short to ground or short to power in harness or connectors.

2. CHECK ECT SENSOR GROUND CIRCUIT FOR OPEN AND SHORT

1. Turn ignition switch OFF.
2. Disconnect ECM harness connector.
3. Check the continuity between ECT sensor harness connector and ECM harness connector.

ECT sensor		ECM		Continuity
Connector	Terminal	Connector	Terminal	
F28	2	F16	44	Existed

4. Also check harness for short to ground and short to power.

Is the inspection result normal?

YES >> GO TO 3.
NO >> Repair open circuit or short to ground or short to power in harness or connectors.

3. CHECK ENGINE COOLANT TEMPERATURE SENSOR

Check engine coolant temperature sensor. Refer to EC-405, "Component Inspection".

Is the inspection result normal?

YES >> GO TO 4.
NO >> Replace engine coolant temperature sensor. Refer to CO-23, "Exploded View".

4. CHECK INTERMITTENT INCIDENT

Check intermittent incident. Refer to XX-XX, "*****".

>> Repair or replace malfunctioning part.

Component Inspection

INFOID:0000000006037335

1. CHECK ENGINE COOLANT TEMPERATURE SENSOR

1. Turn ignition switch OFF.
2. Disconnect engine coolant temperature sensor harness connector.
3. Remove engine coolant temperature sensor.
4. Check resistance between engine coolant temperature sensor terminals by heating with hot water as shown in the figure.

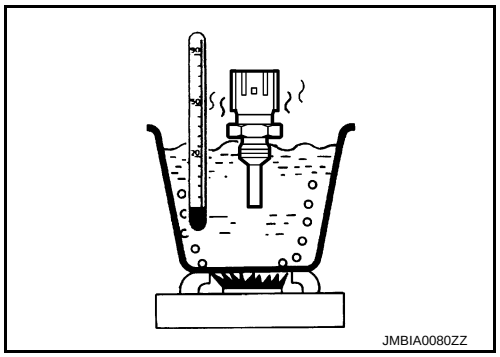

Terminals	Condition		Resistance
1 and 2	Temperature [°C (°F)]	20 (68)	2.35 - 2.73 kΩ
		50 (122)	0.68 - 1.00 kΩ
		90 (194)	0.236 - 0.260 kΩ

Is the inspection result normal?

YES >> INSPECTION END
NO >> Replace engine coolant temperature sensor. Refer to CO-23, "Exploded View".

P0122, P0123 TP SENSOR

DTC Logic

INFOID:0000000006037336

DTC DETECTION LOGIC

NOTE:
If DTC P0122 or P0123 is displayed with DTC P0643, first perform the trouble diagnosis for DTC P0643. Refer to EC-228, "DTC Logic".

DTC No.	Trouble diagnosis name	DTC detecting condition	Possible cause
P0122	Throttle position sensor 2 circuit low input	An excessively low voltage from the TP sensor 2 is sent to ECM.	• Harness or connectors (TP sensor 2 circuit is open or shorted.) • Electric throttle control actuator (TP sensor 2)
P0123	Throttle position sensor 2 circuit high input	An excessively high voltage from the TP sensor 2 is sent to ECM.	

DTC CONFIRMATION PROCEDURE

1. PRECONDITIONING

If DTC Confirmation Procedure has been previously conducted, always turn ignition switch OFF and wait at least 10 seconds before conducting the next test.
TESTING CONDITION:
Before performing the following procedure, confirm that battery voltage is more than 10 V at idle.

>> GO TO 2.

2. PERFORM DTC CONFIRMATION PROCEDURE

1. Start engine and let it idle for 1 second.
2. Check DTC.

Is DTC detected?

YES >> Go to EC-406, "Diagnosis Procedure".
NO >> INSPECTION END

Diagnosis Procedure

INFOID:0000000006037337

1. CHECK THROTTLE POSITION SENSOR 2 POWER SUPPLY CIRCUIT

1. Disconnect electric throttle control actuator harness connector.
2. Turn ignition switch ON.
3. Check the voltage between electric throttle control actuator harness connector and ground.

Electric throttle control actuator		Ground	Voltage
Connector	Terminal		
F29	1	Ground	Approx. 5 V

Is the inspection result normal?

YES >> GO TO 2.
NO >> Repair open circuit or short to ground or short to power in harness or connectors.

2. CHECK THROTTLE POSITION SENSOR 2 GROUND CIRCUIT FOR OPEN AND SHORT

1. Turn ignition switch OFF.
2. Disconnect ECM harness connector.
3. Check the continuity between electric throttle control actuator harness connector and ECM harness connector.

Electric throttle control actuator		ECM		Continuity
Connector	Terminal	Connector	Terminal	
F29	4	F16	36	Existed

4. Also check harness for short to ground and short to power.

Is the inspection result normal?

YES >> GO TO 3.
NO >> Repair open circuit or short to ground or short to power in harness or connectors.

3. CHECK THROTTLE POSITION SENSOR 2 INPUT SIGNAL CIRCUIT FOR OPEN AND SHORT

1. Check the continuity between electric throttle control actuator harness connector and ECM harness connector.

Electric throttle control actuator		ECM		Continuity
Connector	Terminal	Connector	Terminal	
F29	3	F16	34	Existed

2. Also check harness for short to ground and short to power.

Is the inspection result normal?

YES >> GO TO 4.
NO >> Repair open circuit or short to ground or short to power in harness or connectors.

4. CHECK THROTTLE POSITION SENSOR

Check throttle position sensor. Refer to EC-407, "Component Inspection".

Is the inspection result normal?

YES >> GO TO 5.
NO >> Replace electric throttle control actuator. Refer to EM-29, "WITH EGR CONTROL VALVE : Exploded View".

5. CHECK INTERMITTENT INCIDENT

Check intermittent incident. Refer to XX-XX, "*****".

>> Repair or replace malfunctioning part.

Component Inspection

INFOID:0000000006037338

1. CHECK THROTTLE POSITION SENSOR

1. Turn ignition switch OFF.
2. Reconnect all harness connectors disconnected.
3. Perform EC-105, "Work Procedure".
4. Turn ignition switch ON.
5. Set selector lever to D (A/T) 1st (M/T) position.
6. Check the voltage between ECM harness connector and ground.

ECM			Condition		Voltage
Connector	Terminal				
	+	–			
F8	33 (TP sensor 1 signal)	36	Accelerator pedal	Fully released	More than 0.36 V
				Fully depressed	Less than 4.75 V
	34 (TP sensor 2 signal)			Fully released	Less than 4.75 V
				Fully depressed	More than 0.36 V

Is the inspection result normal?

YES >> INSPECTION END
NO >> GO TO 2.

2. REPLACE ELECTRIC THROTTLE CONTROL ACTUATOR

1. Replace electric throttle control actuator.
2. Perform EC-408, "Special Repair Requirement".

>> INSPECTION END

Special Repair Requirement

INFOID:0000000006037339

1. PERFORM THROTTLE VALVE CLOSED POSITION LEARNING

Perform throttle valve closed position learning. Refer to EC-105, "Work Procedure".

>> GO TO 2

2. PERFORM IDLE AIR VOLUME LEARNING

Perform idle air volume learning. Refer to EC-106, "Work Procedure".

>> END

P0132 HO2S1

DTC Logic

INFOID:0000000005886524

DTC DETECTION LOGIC

To judge the malfunction, the diagnosis checks that the heated oxygen sensor 1 is not inordinately high.

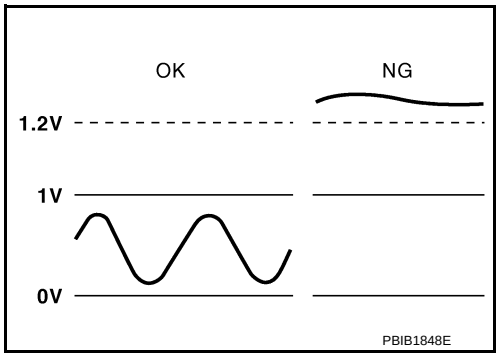

DTC No.	Trouble diagnosis name	DTC detecting condition	Possible Cause
P0132	Heated oxygen sensor 1 circuit high voltage	An excessively high voltage from the sensor is sent to ECM.	• Harness or connectors (The sensor circuit is open or shorted.) • Heated oxygen sensor 1

DTC CONFIRMATION PROCEDURE

1. PRECONDITIONING

If DTC Confirmation Procedure has been previously conducted, always turn ignition switch OFF and wait at least 10 seconds before conducting the next test.

>> GO TO 2.

2. PERFORM DTC CONFIRMATION PROCEDURE

1. Start engine and warm it up to normal operating temperature.
2. Turn ignition switch OFF and wait at least 10 seconds.
3. Restart engine and let it idle for 2 minutes.
4. Check 1st trip DTC.

Is 1st trip DTC is detected?

YES >> Go to EC-409, "Diagnosis Procedure".
NO >> INSPECTION END

Diagnosis Procedure

INFOID:0000000005886525

1. CHECK GROUND CONNECTION

1. Turn ignition switch OFF.
2. Check ground connection E38. Refer to Ground Inspection in XX-XX, "*****".

Is the inspection result normal?

YES >> GO TO 2.
NO >> Repair or replace ground connection.

2. RETIGHTEN HEATED OXYGEN SENSOR 1

Loosen and retighten heated oxygen sensor 1. Refer to XX-XX, "*****".

>> GO TO 3.

3. CHECK HO2S1 GROUND CIRCUIT FOR OPEN AND SHORT

1. Disconnect heated oxygen sensor 1 (HO2S1) harness connector.
2. Disconnect ECM harness connector.

3. Check harness continuity between HO2S1 harness connector and ECM harness connector.

HO2S1		ECM		Continuity
Connector	Terminal	Connector	Terminal	
F46	1	F8	56	existed

4. Also check harness for short to ground and short to power.

Is the inspection result normal?

YES >> GO TO 4.
NO >> Repair open circuit or short to ground or short to power in harness or connectors.

4. CHECK HO2S1 INPUT SIGNAL CIRCUIT FOR OPEN AND SHORT

1. Check harness continuity between HO2S1 harness connector and ECM harness connector.

HO2S1		ECM		Continuity
Connector	Terminal	Connector	Terminal	
F46	4	F8	49	existed

2. Check harness continuity between HO2S1 harness connector or ECM harness connector and ground.

HO2S1		ECM		Ground	Continuity
Connector	Terminal	Connector	Terminal		
F46	4	F8	49	Ground	Not existed

3. Also check harness for short to power.

Is the inspection result normal?

YES >> GO TO 5.
NO >> Repair open circuit or short to ground or short to power in harness or connectors.

5. CHECK HO2S1 CONNECTOR FOR WATER

Check heated oxygen sensor 1 connector for water.

Is the inspection result normal?

YES >> GO TO 6.
NO >> Repair or replace harness or connectors.

6. CHECK HEATED OXYGEN SENSOR 1

Refer to EC-410, "Component Inspection".

Is the inspection result normal?

YES >> GO TO 7.
NO >> Replace heated oxygen sensor 1.

7. CHECK INTERMITTENT INCIDENT

Refer to XX-XX, "*****".

>> INSPECTION END

Component Inspection

INFOID:0000000005886526

1. INSPECTION START

Do you have CONSULT-III?

Do you have CONSULT-III?

YES >> GO TO 2.
NO >> GO TO 3.

2. CHECK HEATED OXYGEN SENSOR 1

With CONSULT-III

1. Start engine and warm it up to normal operating temperature.
2. Set “POST TRIGGER” to 100% in “DATA MONITOR” mode with CONSULT-III.
3. Select “HO2S1 (B1)” and “HO2S1 MNTR (B1)”.
4. Hold engine speed at 2,000 rpm under no load during the following steps.
5. Touch “RECORD” on CONSULT-III screen.
6. Check the following.

- “HO2S1 MNTR (B1)” in “DATA MONITOR” mode changes from “RICH” to “LEAN” to “RICH” more than 5 times in 10 seconds.
  5 times (cycles) are counted as shown in the figure.
- “HO2S1 (B1)” voltage goes above 0.6 V at least once.
- “HO2S1 (B1)” voltage goes below 0.3 V at least once.
- “HO2S1 (B1)” voltage never exceeds 1.0 V.

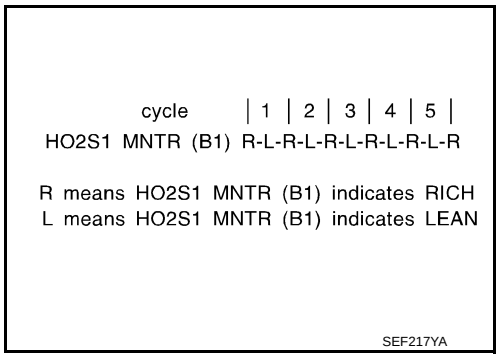

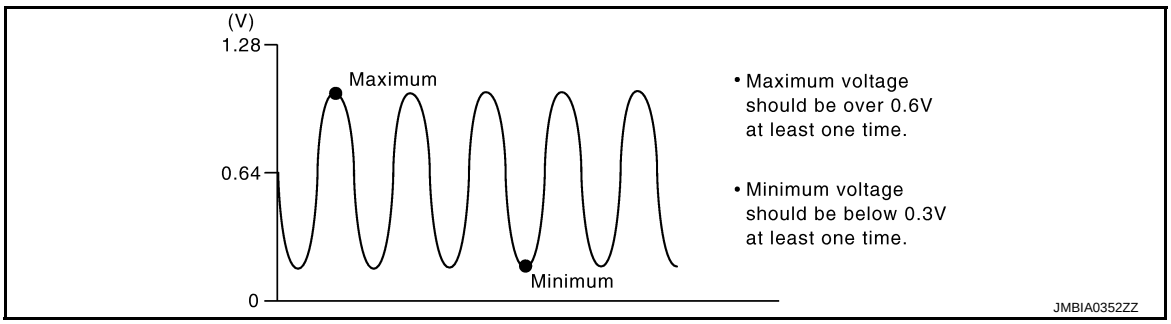

Is the inspection result normal?

YES >> INSPECTION END
NO >> GO TO 4.

3. CHECK HEATED OXYGEN SENSOR 1

Without CONSULT-III

1. Start engine and warm it up to normal operating temperature.
2. Check the voltage between ECM harness connector and ground under the following condition.

ECM			Condition	Voltage
Connector	Terminal			
	+	–		
F8	49 (HO2S1 signal)	56	Engine speed held at 2,000 rpm constant under no load.	• The voltage fluctuates between 0 to 0.3 V and 0.6 to 1.0 V more than 5 times within 10 seconds. • The maximum voltage is over 0.6 V at least 1 time. • The minimum voltage is below 0.3 V at least 1 time. • The voltage never exceeds 1.0 V. 1 time: 0 - 0.3 V → 0.6 - 1.0 V → 0 - 0.3 V 2 times: 0 - 0.3 V → 0.6 - 1.0 V → 0 - 0.3 V → 0.6 - 1.0 V → 0 - 0.3 V

Is the inspection result normal?

YES >> INSPECTION END
NO >> GO TO 4.

4. REPLACE HEATED OXYGEN SENSOR 1

Replace heated oxygen sensor 1.

CAUTION:

- **Discard any heated oxygen sensor which has been dropped from a height of more than 0.5 m (19.7 in) onto a hard surface such as a concrete floor; use a new one.**

- **Before installing new heated oxygen sensor, clean exhaust system threads using Oxygen Sensor Thread Cleaner (commercial service tool) and approved Anti-seize Lubricant (commercial service tool).**

>> INSPECTION END

P0134 HO2S1

DTC Logic

INFOID:0000000005886527

DTC DETECTION LOGIC

Under the condition in which the heated oxygen sensor 1 signal is not input, the ECM circuits will read a continuous approx. 0.3 V. Therefore, for this diagnosis, the time that output voltage is within 200 to 400 mV range is monitored, and the diagnosis checks that this time is not inordinately long.

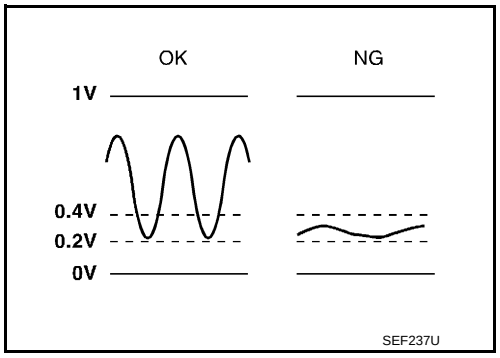

DTC No.	Trouble diagnosis name	DTC detecting condition	Possible cause
P0134	Heated oxygen sensor 1 circuit no activity detected	The voltage from the sensor is constantly approx. 0.3 V.	• Harness or connectors (The sensor circuit is open or shorted.) • Heated oxygen sensor 1

DTC CONFIRMATION PROCEDURE

1. INSPECTION START

Do you have CONSULT-III?

Do you have CONSULT-III?

YES >> GO TO 2.
NO >> GO TO 4.

2. PRECONDITIONING

If DTC Confirmation Procedure has been previously conducted, always turn ignition switch OFF and wait at least 10 seconds before conducting the next test.

TESTING CONDITION:
Always perform at a temperature above -10°C (14°F).
Before performing the following procedure, confirm that battery voltage is more than 11 V at idle.

>> GO TO 3.

3. PERFORM DTC CONFIRMATION PROCEDURE

With CONSULT-III

1. Start engine and warm it up to normal operating temperature.
2. Stop engine and wait at least 10 seconds.
3. Turn ignition switch ON and select “HO2S1 (B1) P0134” of “HO2S1” in “DTC WORK SUPPORT” mode with CONSULT-III.
4. Touch “START”.
5. Start engine and let it idle for at least 3 minutes.
   NOTE:
   Never raise engine speed above 3,600 rpm after this step. If the engine speed limit is exceeded, return to step 5.
6. When the following conditions are met, “TESTING” will be displayed on the CONSULT-III screen. Maintain the conditions continuously until “TESTING” changes to “COMPLETED”. (It will take approximately 40 to 50 seconds.)
   CAUTION:
   Always drive vehicle at a safe speed.

ENG SPEED	1,500 - 3,100 rpm
VHCL SPEED SE	More than 64 km/h (40 MPH)
B/FUEL SCHDL	2.0 - 9.0 msec
Shift lever	Suitable position

If "TESTING" is not displayed after 5 minutes, retry from step 2.

7. Touch "SELF-DIAG RESULTS".

Which is displayed on COUSULT-III screen?

YES >> INSPECTION END
NO >> Go to EC-414, "Diagnosis Procedure".

4. PERFORM COMPONENT FUNCTION CHECK

Perform Component Function Check. Refer to EC-414, "Component Function Check".

NOTE:
Use Component Function Check to check the overall function of heated oxygen sensor 1 circuit. During this check, a 1st trip DTC might not be confirmed.

Is the inspection result normal?

YES >> INSPECTION END
NO >> Go to EC-414, "Diagnosis Procedure".

Component Function Check

INFOID:0000000005886528

1. PERFORM COMPONENT FUNCTION CHECK

Without CONSULT-III

1. Start engine and warm it up to normal operating temperature.
2. Check the voltage between ECM harness connector and ground under the following conditions.

ECM			Condition	Voltage
Connector	Terminal			
	+	–		
F8	49 (HO2S1 signal)	56	Engine speed held at 2,000 rpm constant under no load.	• The voltage dose not remain in the range of 0.2 to 0.4 V.

Is the inspection result normal?

YES >> INSPECTION END
NO >> Go to EC-414, "Diagnosis Procedure".

Diagnosis Procedure

INFOID:0000000005886529

1. CHECK GROUND CONNECTION

1. Turn ignition switch OFF.
2. Check ground connection E38. Refer to Ground Inspection in XX-XX, "*****".

Is the inspection result normal?

YES >> GO TO 2.
NO >> Repair or replace ground connection.

2. CHECK HO2S1 GROUND CIRCUIT FOR OPEN AND SHORT

1. Disconnect heated oxygen sensor 1 (HO2S1) harness connector.
2. Disconnect ECM harness connector.
3. Check harness continuity between HO2S1 harness connector and ECM harness connector.

HO2S1		ECM		Continuity
Connector	Terminal	Connector	Terminal	
F46	1	F8	56	Existed

4. Also check harness for short to ground and short to power.

Is inspection result normal?

YES >> GO TO 3.
NO >> Repair open circuit or short to ground or short to power in harness or connectors.

3. CHECK HO2S1 INPUT SIGNAL CIRCUIT FOR OPEN AND SHORT

1. Check harness continuity between HO2S1 harness connector and ECM harness connector.

HO2S1		ECM		Continuity
Connector	Terminal	Connector	Terminal	
F46	4	F8	49	Existed

2. Check harness continuity between ECM harness connector 49 or HO2S1 harness connector and ground.

HO2S1		ECM		Ground	Continuity
Connector	Terminal	Connector	Terminal		
F46	4	F8	49	Ground	Not existed

3. Also check harness for short to power.

Is inspection result normal?

YES >> GO TO 4.
NO >> Repair open circuit or short to ground or short to power in harness or connectors.

4. CHECK HEATED OXYGEN SENSOR 1

Refer to XX-XX, "*****".

Is inspection result normal?

YES >> GO TO 5.
NO >> Replace heated oxygen sensor 1.

5. CHECK INTERMITTENT INCIDENT

Refer to XX-XX, "*****".

>> INSPECTION END

Component Inspection

INFOID:0000000005886530

1. INSPECTION START

Do you have CONSULT-III?

Do you have CONSULT-III?

YES >> GO TO 2.
NO >> GO TO 3.

2. CHECK HEATED OXYGEN SENSOR 1

With CONSULT-III

1. Start engine and warm it up to normal operating temperature.
2. Set “POST TRIGGER” to 100% in “DATA MONITOR” mode with CONSULT-III.
3. Select “HO2S1 (B1)” and “HO2S1 MNTR (B1)”.
4. Hold engine speed at 2,000 rpm under no load during the following steps.
5. Touch “RECORD” on CONSULT-III screen.

6. Check the following.
- "HO2S1 MNTR (B1)" in "DATA MONITOR" mode changes from "RICH" to "LEAN" to "RICH" more than 5 times in 10 seconds.
  5 times (cycles) are counted as shown in the figure.
- "HO2S1 (B1)" voltage goes above 0.6 V at least once.
- "HO2S1 (B1)" voltage goes below 0.3 V at least once.
- "HO2S1 (B1)" voltage never exceeds 1.0 V.

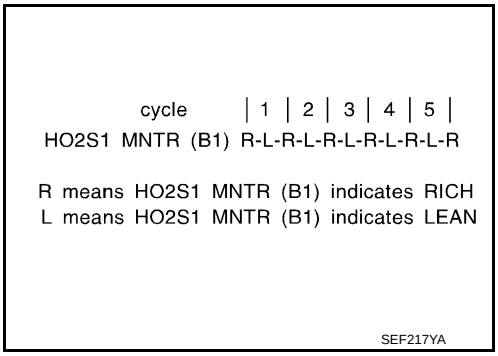

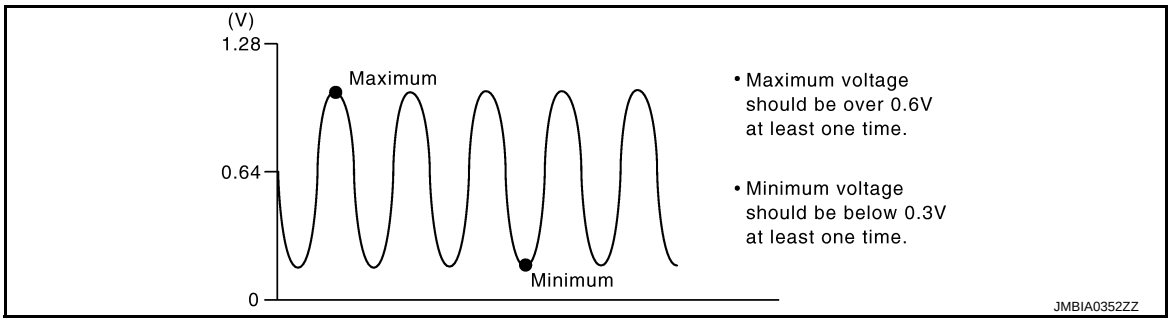

Is the inspection result normal?

YES >> INSPECTION END
NO >> GO TO 4.

3. CHECK HEATED OXYGEN SENSOR 1

Without CONSULT-III

1. Start engine and warm it up to normal operating temperature.
2. Check the voltage between ECM harness connector and ground under the following condition.

ECM			Condition	Voltage
Connector	Terminal			
	+	–		
F8	49 (HO2S1 signal)	56	Engine speed held at 2,000 rpm constant under no load.	• The voltage fluctuates between 0 to 0.3 V and 0.6 to 1.0 V more than 5 times within 10 seconds. • The maximum voltage is over 0.6 V at least 1 time. • The minimum voltage is below 0.3 V at least 1 time. • The voltage never exceeds 1.0 V. 1 time: 0 - 0.3 V → 0.6 - 1.0 V → 0 - 0.3 V 2 times: 0 - 0.3 V → 0.6 - 1.0 V → 0 - 0.3 V → 0.6 - 1.0 V → 0 - 0.3 V

Is the inspection result normal?

YES >> INSPECTION END
NO >> GO TO 4.

4. REPLACE HEATED OXYGEN SENSOR 1

Replace heated oxygen sensor 1.

CAUTION:

- **Discard any heated oxygen sensor which has been dropped from a height of more than 0.5 m (19.7 in) onto a hard surface such as a concrete floor; use a new one.**
- **Before installing new heated oxygen sensor, clean exhaust system threads using Oxygen Sensor Thread Cleaner (commercial service tool) and approved Anti-seize Lubricant (commercial service tool).**

>> INSPECTION END

P0138 HO2S2

DTC Logic

INFOID:0000000006046437

DTC DETECTION LOGIC

The heated oxygen sensor 2 has a much longer switching time between rich and lean than the heated oxygen sensor 1. The oxygen storage capacity of the three way catalyst (manifold) causes the longer switching time.
To judge the malfunctions of heated oxygen sensor 2, ECM monitors whether the voltage is unusually high during the various driving condition such as fuel cut.

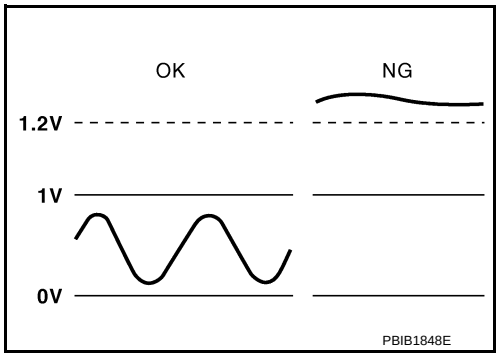

DTC No.	Trouble diagnosis name	DTC detecting condition	Possible cause
P0138	Heated oxygen sensor 2 circuit high voltage	An excessively high voltage from the sensor is sent to ECM.	• Harness or connectors (The sensor circuit is open or shorted) • Heated oxygen sensor 2

DTC CONFIRMATION PROCEDURE

1. PRECONDITIONING

If DTC Confirmation Procedure has been previously conducted, always turn ignition switch OFF and wait at least 10 seconds before conducting the next test.

>> GO TO 2.

2. PERFORM DTC CONFIRMATION PROCEDURE

1. Start engine and warm it up to normal operating temperature.
2. Turn ignition switch OFF and wait at least 10 seconds.
3. Start engine and keep the engine speed between 3,500 and 4,000 rpm for at least 1 minute under no load.
4. Let engine idle for 2 minutes.
5. Check 1st trip DTC.

Is 1st trip DTC detected?

YES >> Go to EC-417, "Diagnosis Procedure".
NO >> INSPECTION END

Diagnosis Procedure

INFOID:0000000006046438

1. CHECK GROUND CONNECTION

1. Turn ignition switch OFF.
2. Check ground connection E38. Refer to Ground Inspection in XX-XX, "*****".

Is the inspection result normal?

YES >> GO TO 2.
NO >> Repair or replace ground connection.

2. CHECK HO2S2 GROUND CIRCUIT FOR OPEN AND SHORT

1. Disconnect heated oxygen sensor 2 (HO2S2) harness connector.
2. Disconnect ECM harness connector.
3. Check the continuity between HO2S2 harness connector and ECM harness connector.

HO2S2		ECM		Continuity
Connector	Terminal	Connector	Terminal	
F45	1	F8	59	Existed

4. Also check harness for short to ground and short to power.

Is the inspection result normal?

YES >> GO TO 3.
NO >> Repair open circuit or short to ground or short to power in harness or connectors.

3. CHECK HO2S2 INPUT SIGNAL CIRCUIT FOR OPEN AND SHORT

1. Check the continuity between HO2S2 harness connector and ECM harness connector.

HO2S2		ECM		Continuity
Connector	Terminal	Connector	Terminal	
F45	4	F8	50	Existed

2. Check the continuity between HO2S2 harness connector or ECM harness connector and ground.

HO2S2		ECM		Ground	Continuity
Connector	Terminal	Connector	Terminal		
F45	4	F8	50	Ground	Not existed

3. Also check harness for short to power.

Is the inspection result normal?

YES >> GO TO 4.
NO >> Repair open circuit or short to ground or short to power in harness or connectors.

4. CHECK HO2S2 CONNECTOR FOR WATER

Check connectors for water.

Water should not exist.

Is the inspection result normal?

YES >> GO TO 5.
NO >> Repair or replace harness or connectors.

5. CHECK HEATED OXYGEN SENSOR 2

Refer to EC-418, "Component Inspection".

Is the inspection result normal?

YES >> GO TO 6.
NO >> Replace heated oxygen sensor 2.

6. CHECK INTERMITTENT INCIDENT

Refer to XX-XX, "*****".

>> INSPECTION END

Component Inspection

INFOID:0000000006046439

1. INSPECTION START

Do you have CONSULT-III?

Do you have CONSULT-III?

YES >> GO TO 2.
NO >> GO TO 3.

2. CHECK HEATED OXYGEN SENSOR 2

With CONSULT-III

1. Turn ignition switch ON and select “DATA MONITOR” mode with CONSULT-III.
2. Start engine and warm it up to the normal operating temperature.
3. Turn ignition switch OFF and wait at least 10 seconds.
4. Start engine and keep the engine speed between 3,500 and 4,000 rpm for at least 1 minute under no load.
5. Let engine idle for 1 minute.
6. Select “FUEL INJECTION” in “ACTIVE TEST” mode, and select “HO2S2 (B1)” as the monitor item with CONSULT-III.
7. Check “HO2S2 (B1)” at idle speed when adjusting “FUEL INJECTION” to ± 25%.

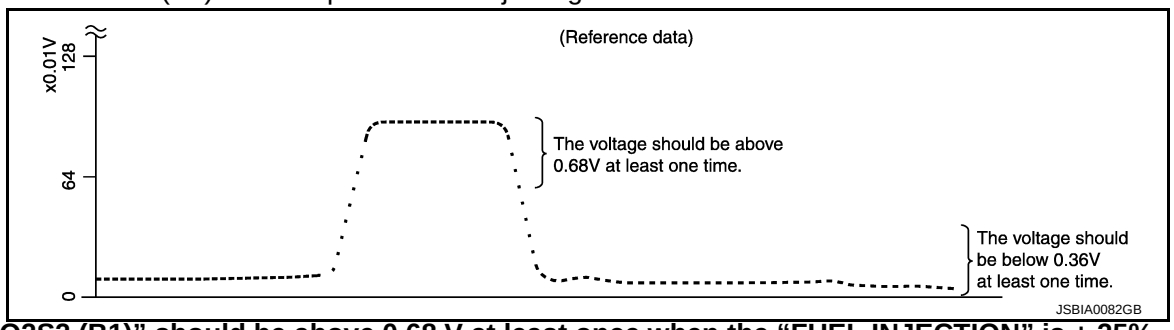

“HO2S2 (B1)” should be above 0.68 V at least once when the “FUEL INJECTION” is + 25%.
“HO2S2 (B1)” should be below 0.36 V at least once when the “FUEL INJECTION” is – 25%.

Is the inspection result normal?

YES >> INSPECTION END
NO >> GO TO 6.

3. CHECK HEATED OXYGEN SENSOR 2-I

Without CONSULT-III

1. Start engine and warm it up to the normal operating temperature.
2. Turn ignition switch OFF and wait at least 10 seconds.
3. Start engine and keep the engine speed between 3,500 and 4,000 rpm for at least 1 minute under no load.
4. Let engine idle for 1 minute.
5. Check the voltage between ECM harness connector and ground under the following conditions.

ECM			Condition	Voltage
Connector	Terminal			
	+	–		
F8	50 (HO2S2 signal)	59	Revving up to 4,000 rpm under no load at least 10 times	The voltage should be above 0.68 V at least once during this procedure. The voltage should be below 0.36 V at least once during this procedure.

Is the inspection result normal?

YES >> INSPECTION END
NO >> GO TO 4.

4. CHECK HEATED OXYGEN SENSOR 2-II

Check the voltage between ECM harness connector and ground under the following conditions.

ECM			Condition	Voltage
Connector	Terminal			
	+	–		
F8	50 (HO2S2 signal)	59	Keeping engine speed at idle for 10 minutes	The voltage should be above 0.68 V at least once during this procedure. The voltage should be below 0.36 V at least once during this procedure.

Is the inspection result normal?

YES >> INSPECTION END

NO >> GO TO 5.

5. CHECK HEATED OXYGEN SENSOR 2-III

Check the voltage between ECM harness connector and ground under the following conditions.

ECM			Condition	Voltage
Connector	Terminal			
	+	–		
F8	50 (HO2S2 signal)	59	Coasting from 80 km/h (50 MPH) in D position (A/T), 4th gear position	The voltage should be above 0.68 V at least once during this procedure. The voltage should be below 0.36 V at least once during this procedure.

Is the inspection result normal?

YES >> INSPECTION END
NO >> GO TO 6.

6. REPLACE HEATED OXYGEN SENSOR 2

Replace heated oxygen sensor 2.

CAUTION:

- **Discard any heated oxygen sensor which has been dropped from a height of more than 0.5 m (19.7 in) onto a hard surface such as a concrete floor; use a new one.**
- **Before installing new heated oxygen sensor, clean exhaust system threads using Oxygen Sensor Thread Cleaner (commercial service tool) and approved Anti-seize lubricant (commercial service tool).**

>> INSPECTION END

P0222, P0223 TP SENSOR

DTC Logic

INFOID:0000000006037345

DTC DETECTION LOGIC

NOTE:
If DTC P0222 or P0223 is displayed with DTC P0643, first perform the trouble diagnosis for DTC P0643. Refer to EC-228, "DTC Logic".

DTC No.	Trouble diagnosis name	DTC detecting condition	Possible cause
P0222	Throttle position sensor 1 circuit low input	An excessively low voltage from the TP sensor 1 is sent to ECM.	• Harness or connectors (TP sensor 1 circuit is open or shorted.) • Electric throttle control actuator (TP sensor 1)
P0223	Throttle position sensor 1 circuit high input	An excessively high voltage from the TP sensor 1 is sent to ECM.	

DTC CONFIRMATION PROCEDURE

1. PRECONDITIONING

If DTC Confirmation Procedure has been previously conducted, always turn ignition switch OFF and wait at least 10 seconds before conducting the next test.
TESTING CONDITION:
Before performing the following procedure, confirm that battery voltage is more than 10 V at idle.

>> GO TO 2.

2. PERFORM DTC CONFIRMATION PROCEDURE

1. Start engine and let it idle for 1 second.
2. Check DTC.

Is DTC detected?

YES >> Go to EC-421, "Diagnosis Procedure".
NO >> INSPECTION END

Diagnosis Procedure

INFOID:0000000006037346

1. CHECK GROUND CONNECTION

1. Turn ignition switch OFF.
2. Check ground connection E38. Refer to Ground Inspection in XX-XX, "*****".

Is the inspection result normal?

YES >> GO TO 2.
NO >> Repair or replace ground connection.

2. CHECK THROTTLE POSITION SENSOR 1 POWER SUPPLY CIRCUIT

1. Disconnect electric throttle control actuator harness connector.
2. Turn ignition switch ON.
3. Check the voltage between electric throttle control actuator harness connector and ground.

Electric throttle control actuator		Ground	Voltage
Connector	Terminal		
F29	1	Ground	Approx. 5 V

Is the inspection result normal?

YES >> GO TO 3.
NO >> Repair open circuit or short to ground or short to power in harness or connectors.

3. CHECK THROTTLE POSITION SENSOR 1 GROUND CIRCUIT FOR OPEN AND SHORT

1. Turn ignition switch OFF.
2. Disconnect ECM harness connector.

3. Check the continuity between electric throttle control actuator harness connector and ECM harness connector.

Electric throttle control actuator		ECM		Continuity
Connector	Terminal	Connector	Terminal	
F29	4	F8	36	Existed

4. Also check harness for short to ground and short to power.

Is the inspection result normal?

YES >> GO TO 4.
NO >> Repair open circuit or short to ground or short to power in harness or connectors.

4. CHECK THROTTLE POSITION SENSOR 1 INPUT SIGNAL CIRCUIT FOR OPEN AND SHORT

1. Check the continuity between electric throttle control actuator harness connector and ECM harness connector.

Electric throttle control actuator		ECM		Continuity
Connector	Terminal	Connector	Terminal	
F29	2	F8	33	Existed

2. Also check harness for short to ground and short to power.

Is the inspection result normal?

YES >> GO TO 5.
NO >> Repair open circuit or short to ground or short to power in harness or connectors.

5. CHECK THROTTLE POSITION SENSOR

Check throttle position sensor. Refer to XX-XX, "*****".

Is the inspection result normal?

YES >> GO TO 6.
NO >> Replace electric throttle control actuator. Refer to EM-29, "WITH EGR CONTROL VALVE : Exploded View".

6. CHECK INTERMITTENT INCIDENT

Check intermittent incident. Refer to XX-XX, "*****".

>> Repair or replace malfunctioning part.

Component Inspection

INFOID:0000000006046132

1. CHECK THROTTLE POSITION SENSOR

1. Turn ignition switch OFF.
2. Reconnect all harness connectors disconnected.
3. Perform EC-105, "Work Procedure".
4. Turn ignition switch ON.
5. Set selector lever to D (A/T) 1st (M/T) position.
6. Check the voltage between ECM harness connector and ground.

ECM			Condition		Voltage
Connector	Terminal				
	+	–			
F8	33 (TP sensor 1 signal)	36	Accelerator pedal	Fully released	More than 0.36 V
				Fully depressed	Less than 4.75 V
	34 (TP sensor 2 signal)			Fully released	Less than 4.75 V
				Fully depressed	More than 0.36 V

Is the inspection result normal?

YES >> INSPECTION END
NO >> GO TO 2.

2. REPLACE ELECTRIC THROTTLE CONTROL ACTUATOR

1. Replace electric throttle control actuator.
2. Perform EC-423, "Special Repair Requirement".

>> INSPECTION END

Special Repair Requirement

INFOID:0000000006046133

1. PERFORM THROTTLE VALVE CLOSED POSITION LEARNING

Perform throttle valve closed position learning. Refer to EC-105, "Work Procedure".

>> GO TO 2

2. PERFORM IDLE AIR VOLUME LEARNING

Perform idle air volume learning. Refer to EC-106, "Work Procedure".

>> END

P0327, P0328 KS

DTC Logic

INFOID:0000000006037349

DTC DETECTION LOGIC

DTC No.	Trouble diagnosis name	DTC detected condition	Possible cause
P0327	Knock sensor circuit low input	An excessively low voltage from the sensor is sent to ECM.	• Harness or connectors (The sensor circuit is open or shorted.) • Knock sensor
P0328	Knock sensor circuit high input	An excessively high voltage from the sensor is sent to ECM.	

DTC CONFIRMATION PROCEDURE

1. PRECONDITIONING

If DTC Confirmation Procedure has been previously conducted, always turn ignition switch OFF and wait at least 10 seconds before conducting the next test.

TESTING CONDITION:

Before performing the following procedure, confirm that battery voltage is more than 10 V at idle.

>> GO TO 2.

2. PERFORM DTC CONFIRMATION PROCEDURE

1. Start engine and let it idle for at least 5 seconds.
2. Check 1st trip DTC.

Is 1st trip DTC detected?

YES >> Go to EC-424, "Diagnosis Procedure".
NO >> INSPECTION END

Diagnosis Procedure

INFOID:0000000006037350

1. CHECK KNOCK SENSOR GROUND CIRCUIT FOR OPEN AND SHORT

1. Disconnect knock sensor harness connector.
2. Disconnect ECM harness connector.
3. Check the continuity between knock sensor harness connector and ECM harness connector.

Knock sensor		ECM		Continuity
Connector	Terminal	Connector	Terminal	
F12	2	F16	40	Existed

4. Also check harness for short to ground and short to power.

Is the inspection result normal?

YES >> GO TO 2.
NO >> Repair open circuit or short to ground or short to power in harness or connectors.

2. CHECK KNOCK SENSOR INPUT SIGNAL CIRCUIT FOR OPEN AND SHORT

1. Check the continuity between knock sensor harness connector and ECM harness connector.

Knock sensor		ECM		Continuity
Connector	Terminal	Connector	Terminal	
F12	1	F16	37	Existed

2. Also check harness for short to ground and short to power.

Is the inspection result normal?

YES >> GO TO 3.
NO >> Repair open circuit or short to ground or short to power in harness or connectors.

3. CHECK KNOCK SENSOR

Check knock sensor. Refer to EC-425, "Component Inspection".

Is the inspection result normal?

YES >> GO TO 4.
NO >> Replace knock sensor. Refer to EM-85, "Exploded View".

4. CHECK INTERMITTENT INCIDENT

Check intermittent incident. Refer to XX-XX, "*****".

>> Repair or replace malfunctioning part.

Component Inspection

INFOID:0000000006037351

1. CHECK KNOCK SENSOR

1. Turn ignition switch OFF.
2. Disconnect knock sensor harness connector.
3. Check resistance between knock sensor terminals as follows.
   NOTE:
   It is necessary to use an ohmmeter which can measure more than 10 MΩ.

Terminals	Resistance [at 20°C (68°F)]
1 and 2	Approx. 532 - 588 kΩ

CAUTION:
Do not use any knock sensors that have been dropped or physically damaged. Use only new ones.

Is the inspection result normal?

YES >> INSPECTION END
NO >> Replace knock sensor. Refer to EM-85, "Exploded View".

P0335 CKP SENSOR (POS)

DTC Logic

INFOID:0000000006037352

DTC DETECTION LOGIC

DTC No.	Trouble diagnosis name	DTC detecting condition	Possible cause
P0335	Crankshaft position sensor (POS) circuit	• The crankshaft position sensor (POS) signal is not detected by the ECM during the first few seconds of engine cranking. • The proper pulse signal from the crankshaft position sensor (POS) is not sent to ECM while the engine is running. • The crankshaft position sensor (POS) signal is not in the normal pattern during engine running.	• Harness or connectors [Crankshaft position sensor (POS) circuit is open or shorted.] (Refrigerant pressure sensor circuit is shorted.) (Accelerator pedal position sensor circuit is shorted.) • Crankshaft position sensor (POS) • Refrigerant pressure sensor • Accelerator pedal position sensor • Accelerator pedal position sensor • Signal plate

DTC CONFIRMATION PROCEDURE

1.PRECONDITIONING

If DTC Confirmation Procedure has been previously conducted, always turn ignition switch OFF and wait at least 10 seconds before conducting the next test.

TESTING CONDITION:

Before performing the following procedure, confirm that battery voltage is more than 10.5 V with ignition switch ON.

>> GO TO 2.

2.PERFORM DTC CONFIRMATION PROCEDURE

1. Start engine and let it idle for at least 5 seconds.
   If engine does not start, crank engine for at least 2 seconds.
2. Check 1st trip DTC.

Is 1st trip DTC detected?

YES >> Go to EC-426, "Diagnosis Procedure".
NO >> INSPECTION END

Diagnosis Procedure

INFOID:0000000006037353

1.CHECK GROUND CONNECTION

1. Turn ignition switch OFF.
2. Check ground connection E38. Refer to Ground Inspection in XX-XX, "*****".

Is the inspection result normal?

YES >> GO TO 2.
NO >> Repair or replace ground connection.

2.CHECK CRANKSHAFT POSITION (CKP) SENSOR (POS) POWER SUPPLY CIRCUIT-I

1. Disconnect crankshaft position (CKP) sensor (POS) harness connector.
2. Turn ignition switch ON.
3. Check the voltage between CKP sensor (POS) harness connector and ground.

CKP sensor (POS)		Ground	Voltage
Connector	Terminal		
F20	1	Ground	Approx. 5 V

Is the inspection result normal?

YES >> GO TO 8.
NO >> GO TO 3.

3. CHECK CRANKSHAFT POSITION (CKP) SENSOR (POS) POWER SUPPLY CIRCUIT-II

1. Turn ignition switch OFF.
2. Disconnect ECM harness connector.
3. Check the continuity between CKP sensor (POS) harness connector and ECM harness connector.

CKP sensor (POS)		ECM		Continuity
Connector	Terminal	Connector	Terminal	
F20	1	F8	75	Existed

Is the inspection result normal?

YES >> GO TO 4.
NO >> Repair open circuit.

4. CHECK SENSOR POWER SUPPLY CIRCUIT

Check harness for short to power and short to ground, between the following terminals.

ECM		Sensor		
Connector	Terminal	Name	Connector	Terminal
F8	74	Refrigerant pressure sensor	E49	3
	75	CKP sensor (POS)	F20	1
E16	102	APP sensor	M206	5

Is the inspection result normal?

YES >> GO TO 5.
NO >> Repair short to ground or short to power in harness or connectors.

5. CHECK REFRIGERANT PRESSURE SENSOR

Check the refrigerant pressure sensor. Refer to EC-297, "Component Function Check".

Is the inspection result normal?

YES >> GO TO 6.
NO >> Replace refrigerant pressure sensor.

6. CHECK APP SENSOR

Refer to EC-464, "Component Inspection".

Is the inspection result normal?

YES >> GO TO 12.
NO >> GO TO 7.

7. REPLACE ACCELERATOR PEDAL ASSEMBLY

1. Replace accelerator pedal assembly.
2. Perform EC-465, "Special Repair Requirement".

>> INSPECTION END

8. CHECK CKP SENSOR (POS) GROUND CIRCUIT FOR OPEN AND SHORT

1. Turn ignition switch OFF.
2. Check the continuity between CKP sensor (POS) harness connector and ECM harness connector.

CKP sensor (POS)		ECM		Continuity
Connector	Terminal	Connector	Terminal	
F20	2	F8	62	Existed

3. Also check harness for short to ground and short to power.

Is the inspection result normal?

YES >> GO TO 9.
NO >> Repair open circuit or short to ground or short to power in harness or connectors.

9. CHECK CKP SENSOR (POS) INPUT SIGNAL CIRCUIT FOR OPEN AND SHORT

1. Disconnect ECM harness connector.
2. Check the continuity between CKP sensor (POS) harness connector and ECM harness connector.

CKP sensor (POS)		ECM		Continuity
Connector	Terminal	Connector	Terminal	
F20	3	F8	61	Existed

3. Also check harness for short to ground and short to power.

Is the inspection result normal?

YES >> GO TO 10.
NO >> Repair open circuit or short to ground or short to power in harness or connectors.

10. CHECK CRANKSHAFT POSITION SENSOR (POS)

Refer to EC-428, "Component Inspection".

Is the inspection result normal?

YES >> GO TO 11.
NO >> Replace crankshaft position sensor (POS).

11. CHECK GEAR TOOTH

Visually check for chipping signal plate gear tooth.

Is the inspection result normal?

YES >> GO TO 12.
NO >> Replace the signal plate.

12. CHECK INTERMITTENT INCIDENT

Refer to XX-XX, "*****".

>> INSPECTION END

Component Inspection

INFOID:0000000006037354

1. CHECK CRANKSHAFT POSITION SENSOR (POS)-I

1. Turn ignition switch OFF.
2. Loosen the fixing bolt of the sensor.
3. Disconnect crankshaft position sensor (POS) harness connector.
4. Remove the sensor.
5. Visually check the sensor for chipping.

Is the inspection result normal?

YES >> GO TO 2.
NO >> Replace crankshaft position sensor (POS).

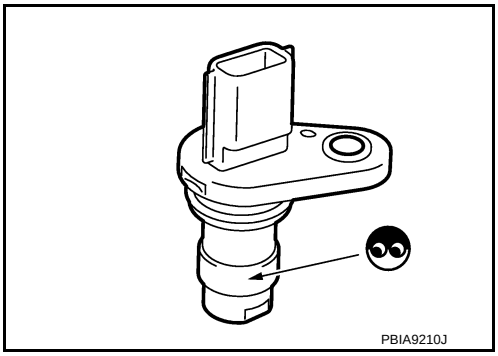

2. CHECK CRANKSHAFT POSITION SENSOR (POS)-II

Check resistance between crankshaft position sensor (POS) terminals as follows.

Terminals (Polarity)	Resistance [at 25°C (77°F)]
1 (+) - 2 (–)	Except 0 or ∞ Ω
1 (+) - 3 (–)	
2 (+) - 3 (–)	

Is the inspection result normal?

YES >> INSPECTION END
NO >> Replace crankshaft position sensor (POS).

P0340 CMP SENSOR (PHASE)

DTC Logic

INFOID:0000000006037355

DTC DETECTION LOGIC

NOTE:
If DTC P0340 is displayed with DTC P0643, first perform the trouble diagnosis for DTC P0643. Refer to EC-228, "DTC Logic".

DTC No.	Trouble diagnosis name	DTC detecting condition	Possible cause
P0340	Camshaft position sensor (PHASE) circuit	• The cylinder No. signal is not sent to ECM for the first few seconds during engine cranking. • The cylinder No. signal is not sent to ECM during engine running. • The cylinder No. signal is not in the normal pattern during engine running.	• Harness or connectors (The sensor circuit is open or shorted) • Camshaft position sensor (PHASE) • Camshaft (INT) • Starter motor • Starting system circuit • Dead (Weak) battery

DTC CONFIRMATION PROCEDURE

1. PRECONDITIONING

If DTC Confirmation Procedure has been previously conducted, always turn ignition switch OFF and wait at least 10 seconds before conducting the next test.
TESTING CONDITION:
Before performing the following procedure, confirm that battery voltage is more than 10.5 V with ignition switch ON.

>> GO TO 2.

2. PERFORM DTC CONFIRMATION PROCEDURE-I

1. Start engine and let it idle for at least 5 seconds.
   If engine does not start, crank engine for at least 2 seconds.
2. Check 1st trip DTC.

Is 1st trip DTC detected?

YES >> Go to EC-430, "Diagnosis Procedure".
NO >> GO TO 3.

3. PERFORM DTC CONFIRMATION PROCEDURE-II

1. Keep engine speed at more than 800 rpm for at least 5 seconds.
2. Check 1st trip DTC.

Is 1st trip DTC detected?

YES >> Go to EC-430, "Diagnosis Procedure".
NO >> INSPECTION END

Diagnosis Procedure

INFOID:0000000006037356

1. CHECK STARTING SYSTEM

Turn ignition switch to START position.

Does the engine turn over? Does the starter motor operate?

YES >> GO TO 2.
NO >> Check starting system.

2. CHECK CAMSHAFT POSITION (CMP) SENSOR (PHASE) POWER SUPPLY CIRCUIT

1. Disconnect camshaft position (CMP) sensor (PHASE) harness connector.
2. Turn ignition switch ON.
3. Check the voltage between CMP sensor (PHASE) harness connector and ground.

CMP sensor (PHASE)		Ground	Voltage
Connector	Terminal		
F26	1	Ground	Approx. 5 V

Is the inspection result normal?

YES >> GO TO 3.
NO >> Repair open circuit or short to ground or short to power in harness or connectors.

3. CHECK CMP SENSOR (PHASE) GROUND CIRCUIT FOR OPEN AND SHORT

1. Turn ignition switch OFF.
2. Disconnect ECM harness connectors.
3. Check the continuity between CMP sensor (PHASE) harness connector and ECM harness connector.

CMP sensor (PHASE)		ECM		Continuity
Connector	Terminal	Connector	Terminal	
F26	2	F16	63	Existed

4. Also check harness for short to ground and short to power.

Is the inspection result normal?

YES >> GO TO 4.
NO >> Repair open circuit or short to ground or short to power in harness or connectors.

4. CHECK CMP SENSOR (PHASE) INPUT SIGNAL CIRCUIT FOR OPEN AND SHORT

1. Check the continuity between CMP sensor (PHASE) harness connector and ECM harness connector.

CMP sensor (PHASE)		ECM		Continuity
Connector	Terminal	Connector	Terminal	
F26	3	F16	65	Existed

2. Also check harness for short to ground and short to power.

Is the inspection result normal?

YES >> GO TO 5.
NO >> Repair open circuit or short to ground or short to power in harness or connectors.

5. CHECK CAMSHAFT POSITION SENSOR (PHASE)

Check camshaft position sensor (phase). Refer to EC-432, "Component Inspection".

Is the inspection result normal?

YES >> GO TO 6.
NO >> Replace camshaft position sensor (PHASE). Refer to EM-53, "Exploded View".

6. CHECK CAMSHAFT (INT)

Check the following.

- Accumulation of debris to the signal plate of camshaft (1) rear end
- Chipping signal plate of camshaft rear end

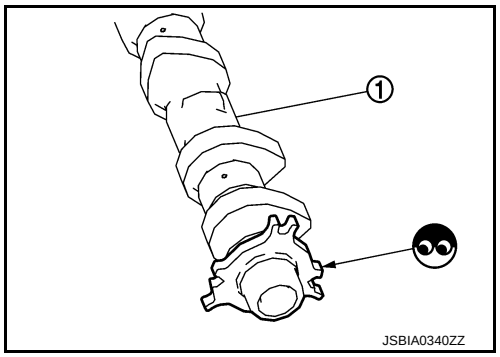

Is the inspection result normal?

YES >> GO TO 7.
NO >> Remove debris and clean the signal plate of camshaft rear end or replace camshaft. Refer to EM-53, "Exploded View".

7. CHECK INTERMITTENT INCIDENT

Check intermittent incident. Refer to XX-XX, "*****".

>> Repair or replace malfunctioning part.

Component Inspection

INFOID:0000000006037357

1. CHECK CAMSHAFT POSITION SENSOR (PHASE)-I

1. Turn ignition switch OFF.
2. Loosen the fixing bolt of the sensor.
3. Disconnect camshaft position sensor (PHASE) harness connector.
4. Remove the sensor.
5. Visually check the sensor for chipping.

Is the inspection result normal?

YES >> GO TO 2.
NO >> Replace camshaft position sensor (PHASE). Refer to EM-53, "Exploded View".

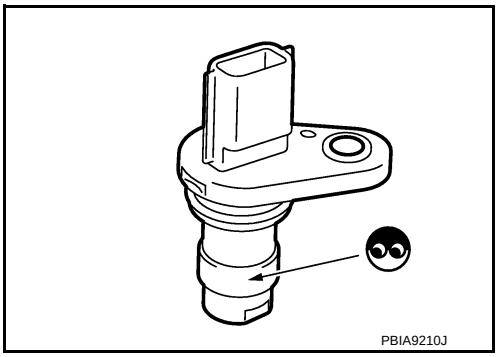

2. CHECK CAMSHAFT POSITION SENSOR (PHASE)-II

Check resistance camshaft position sensor (PHASE) terminals as follows.

Terminals (Polarity)	Resistance [at 25°C (77°F)]
1 (+) - 2 (–)	Except 0 or ∞ Ω
1 (+) - 3 (–)	
2 (+) - 3 (–)	

Is the inspection result normal?

YES >> INSPECTION END
NO >> Replace camshaft position sensor (PHASE). Refer to EM-53, "Exploded View".

P0605 ECM

DTC Logic

INFOID:0000000005886549

DTC DETECTION LOGIC

DTC No.	Trouble diagnosis name	DTC detecting condition		Possible cause
P0605	Engine control module	A)	ECM calculation function is malfunctioning.	• ECM
		B)	ECM EEP-ROM system is malfunctioning.	
		C)	ECM self shut-off function is malfunctioning.	

DTC CONFIRMATION PROCEDURE

1. PRECONDITIONING

If DTC Confirmation Procedure has been previously conducted, always turn ignition switch OFF and wait at least 10 seconds before conducting the next test.

>> GO TO 2.

2. PERFORM DTC CONFIRMATION PROCEDURE FOR MALFUNCTION A

1. Turn ignition switch ON.
2. Check 1st trip DTC.

Is 1st trip DTC detected?

YES >> Go to EC-433, "Diagnosis Procedure".
NO >> GO TO 3.

3. PERFORM DTC CONFIRMATION PROCEDURE FOR MALFUNCTION B

1. Turn ignition switch ON and wait at least 1 second.
2. Turn ignition switch OFF, wait at least 10 seconds, and then turn ON.
3. Check 1st trip DTC.

Is 1st trip DTC detected?

YES >> Go to EC-433, "Diagnosis Procedure".
NO >> GO TO 4.

4. PERFORM DTC CONFIRMATION PROCEDURE FOR MALFUNCTION C

1. Turn ignition switch ON and wait at least 1 second.
2. Turn ignition switch OFF, wait at least 10 seconds, and then turn ON.
3. Repeat step 2 for 32 times.
4. Check 1st trip DTC.

Is 1st trip DTC detected?

YES >> Go to EC-433, "Diagnosis Procedure".
NO >> INSPECTION END

Diagnosis Procedure

INFOID:0000000005886550

1. INSPECTION START

1. Erase DTC.
2. Perform DTC CONFIRMATION PROCEDURE.
   See EC-433, "DTC Logic".

Is the 1st trip DTC P0605 displayed again?

YES >> GO TO 2.
NO >> INSPECTION END

2. REPLACE ECM

1. Replace ECM.
2. Perform XX-XX, "*****".

>> INSPECTION END

P1065 ECM

DTC Logic

INFOID:0000000005886552

DTC DETECTION LOGIC

DTC No.	Trouble diagnosis name	DTC detecting condition	Possible cause
P1065*	Engine control module	ECM back-up RAM system does not function properly.	• ECM

*: This self-diagnosis is not for ECM power supply circuit, even though “ECM BACK UP/CIRCUIT” is displayed on CONSULT-III screen.

DTC CONFIRMATION PROCEDURE

1.PRECONDITIONING

If DTC Confirmation Procedure has been previously conducted, always turn ignition switch OFF and wait at least 10 seconds before conducting the next test.

>> GO TO 2.

2.PERFORM DTC CONFIRMATION PROCEDURE

1. Turn ignition switch ON wait at least 10 seconds.
2. Turn ignition switch OFF and wait at least 5 minutes
3. Turn ignition switch ON, wait at least 10 seconds.
4. Repeat step 2 and 3 for five times.
5. Check 1st trip DTC.

Is 1st trip DTC detected?

YES >> Go to EC-435, "Diagnosis Procedure".
NO >> INSPECTION END

Diagnosis Procedure

INFOID:0000000005886553

1.INSPECTION START

1. Erase DTC.
2. Perform DTC CONFIRMATION PROCEDURE.
   See EC-435, "DTC Logic".

Is the 1st trip DTC P1065 displayed again?

YES >> GO TO 2.
NO >> INSPECTION END

2.REPLACE ECM

1. Replace ECM.
2. Perform XX-XX, "*****".

>> INSPECTION END

P1121 ELECTRIC THROTTLE CONTROL ACTUATOR

DTC Logic

INFOID:0000000005886557

DTC DETECTION LOGIC

DTC No.	Trouble diagnosis name	DTC detecting condition		Possible cause
P1121	Electric throttle control actuator	A)	Electric throttle control actuator does not function properly due to the return spring malfunction.	• Electric throttle control actuator
		B)	Throttle valve opening angle in fail-safe mode is not in specified range.	
		C)	ECM detect the throttle valve is stuck open.	

DTC CONFIRMATION PROCEDURE

1. PRECONDITIONING

If DTC Confirmation Procedure has been previously conducted, always turn ignition switch OFF and wait at least 10 seconds before conducting the next test.

>> GO TO 2.

2. PERFORM DTC CONFIRMATION PROCEDURE FOR MALFUNCTION A AND B

1. Turn ignition switch ON and wait at least 1 second.
2. Set shift lever to D position (A/T) or 1st position (M/T) position and wait at least 3 seconds.
3. Set shift lever to P position (A/T) or Neutral position (M/T).
4. Turn ignition switch OFF and wait at least 10 seconds.
5. Turn ignition switch ON and wait at least 1 second.
6. Set shift lever to D position (A/T) or 1st position (M/T) position and wait at least 3 seconds.
7. Set shift lever to P position (A/T) or Neutral position (M/T).
8. Turn ignition switch OFF, wait at least 10 seconds, and then turn ON.
9. Check DTC.

Is DTC detected?

YES >> Go to EC-436, "Diagnosis Procedure".
NO >> GO TO 3.

3. PERFORM DTC CONFIRMATION PROCEDURE FOR MALFUNCTION C

1. Turn ignition switch ON and wait at least 1 second.
2. Set shift lever to D position (A/T) or 1st position (M/T) position and wait at least 3 seconds.
3. Set shift lever to P position (A/T) or Neutral position (M/T).
4. Start engine and let it idle for 3 seconds.
5. Check DTC.

Is DTC detected?

YES >> Go to EC-436, "Diagnosis Procedure".
NO >> INSPECTION END

Diagnosis Procedure

INFOID:0000000005886558

1. CHECK ELECTRIC THROTTLE CONTROL ACTUATOR VISUALLY

1. Turn ignition switch OFF.
2. Remove the intake air duct.

3. Check if foreign matter is caught between the throttle valve (1) and the housing.

- ⇦: Vehicle front

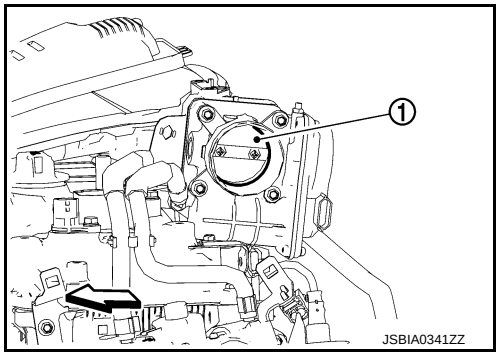

Is the inspection result normal?

YES >> GO TO 2.
NO >> Remove the foreign matter and clean the electric throttle control actuator inside.

2. REPLACE ELECTRIC THROTTLE CONTROL ACTUATOR

1. Replace electric throttle control actuator.
2. Perform XX-XX, "*****".

>> INSPECTION END

Special Repair Requirement

INFOID:0000000006037447

1. PERFORM THROTTLE VALVE CLOSED POSITION LEARNING

Perform throttle valve closed position learning. Refer to EC-105, "Work Procedure".

>> GO TO 2

2. PERFORM IDLE AIR VOLUME LEARNING

Perform idle air volume learning. Refer to EC-106, "Work Procedure".

>> END

P1122 ELECTRIC THROTTLE CONTROL FUNCTION

DTC Logic

INFOID:0000000005886561

DTC DETECTION LOGIC

NOTE:

- **If DTC P1122 is displayed with DTC P1121, first perform the trouble diagnosis for DTC P1121. Refer to EC-436, "DTC Logic".**
- **If DTC P1122 is displayed with DTC P1126, first perform the trouble diagnosis for DTC P1126. Refer to EC-442, "DTC Logic".**

DTC No.	Trouble diagnosis name	DTC detecting condition	Possible cause
P1122	Electric throttle control performance	Electric throttle control function does not operate properly.	• Harness or connectors (Throttle control motor circuit is open or shorted) • Electric throttle control actuator

DTC CONFIRMATION PROCEDURE

1. PRECONDITIONING

If DTC Confirmation Procedure has been previously conducted, always turn ignition switch OFF and wait at least 10 seconds before conducting the next test.

TESTING CONDITION:

Before performing the following procedure, confirm that battery voltage is more than 11 V when engine is running.

>> GO TO 2.

2. PERFORM DTC CONFIRMATION PROCEDURE

1. Turn ignition switch ON and wait at least 2 seconds.
2. Start engine and let it idle for 5 seconds.
3. Check DTC.

Is DTC detected?

YES >> Go to EC-438, "Diagnosis Procedure".
NO >> INSPECTION END

Diagnosis Procedure

INFOID:0000000005886562

1. CHECK GROUND CONNECTION

1. Turn ignition switch OFF.
2. Check ground connection E38. Refer to Ground Inspection in XX-XX, "*****".

Is the inspection result normal?

YES >> GO TO 2.
NO >> Repair or replace ground connection.

2. CHECK THROTTLE CONTROL MOTOR RELAY INPUT SIGNAL CIRCUIT

1. Turn ignition switch ON.
2. Check the voltage between ECM harness connector and ground.

ECM			Condition	Voltage
Connector	Terminal			
	+	–		
F7	2	108	Ignition switch OFF	Approx. 0 V
			Ignition switch ON	Battery voltage

Is the inspection result normal?

YES >> GO TO 10.

NO >> GO TO 3.

3. CHECK THROTTLE CONTROL MOTOR RELAY POWER SUPPLY CIRCUIT-I

1. Turn ignition switch OFF.
2. Check voltage between ECM harness connector and ground.

ECM			Voltage
Connector	Terminal		
	+	–	
F7	15	108	Battery voltage

Is the inspection result normal?

YES >> GO TO 7.
NO >> GO TO 4.

4. CHECK THROTTLE CONTROL MOTOR RELAY POWER SUPPLY CIRCUIT-II

1. Disconnect ECM harness connector.
2. Disconnect IPDM E/R harness connector E14.
3. Check the continuity between ECM harness connector and IPDM E/R harness connector.

IPDM E/R		ECM		Continuity
Connector	Terminal	Connector	Terminal	
E14	57	F7	15	Existed

4. Also check harness for short to ground and short to power.

Is the inspection result normal?

YES >> GO TO 6.
NO >> GO TO 5.

5. DETECT MALFUNCTIONING PART

Check the following.
- Harness connectors E6, F1
- IPDM E/R connector E14
- Harness for open or short between IPDM E/R and ECM

>> Repair open circuit or short to ground or short to power in harness or connectors.

6. CHECK FUSE

1. Disconnect 15 A fuse (No. 64) from IPDM E/R.
2. Check 15 A fuse for blown.

Is the inspection result normal?

YES >> GO TO 9.
NO >> Replace 15 A fuse.

7. CHECK THROTTLE CONTROL MOTOR RELAY POWER SUPPLY CIRCUIT-III

1. Disconnect ECM harness connector.
2. Disconnect IPDM E/R harness connector E14.
3. Check the continuity between ECM harness connector and IPDM E/R harness connector.

IPDM E/R		ECM		Continuity
Connector	Terminal	Connector	Terminal	
E14	54	F7	2	Existed

4. Also check harness for short to ground and short to power.

Is the inspection result normal?

YES >> GO TO 9.
NO >> GO TO 8.

8. DETECT MALFUNCTIONING PART

Check the following.
- Harness connectors E6, F1
- IPDM E/R connector E14
- Harness for open or short between IPDM E/R and ECM

>> Repair open circuit or short to ground or short to power in harness or connectors.

9. CHECK INTERMITTENT INCIDENT

Refer to XX-XX, "*****".

Is the inspection result normal?

YES >> Replace IPDM E/R.
NO >> Repair or replace harness or connectors.

10. CHECK THROTTLE CONTROL MOTOR OUTPUT SIGNAL CIRCUIT FOR OPEN OR SHORT

1. Turn ignition switch OFF.
2. Disconnect electric throttle control actuator harness connector.
3. Disconnect ECM harness connector.
4. Check the continuity between electric throttle control actuator harness connector and ECM harness connector.

Electric throttle control actuator		ECM		Continuity
Connector	Terminal	Connector	Terminal	
F29	5	F7	1	Not existed
			4	Existed
F29	6	F7	1	Existed
			4	Not existed

5. Also check harness for short to ground and short to power.

Is the inspection result normal?

YES >> GO TO 11.
NO >> Repair or replace harness or connectors.

11. CHECK ELECTRIC THROTTLE CONTROL ACTUATOR VISUALLY

1. Remove the intake air duct.
2. Check if foreign matter is caught between the throttle valve (1) and the housing.

- ⇦: Vehicle front

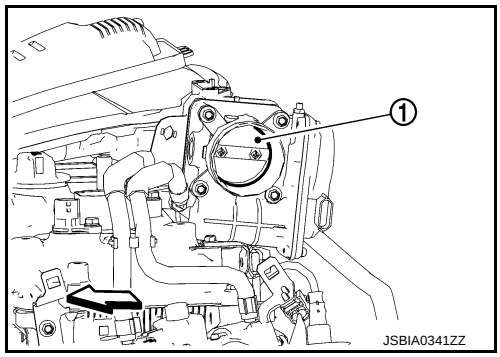

Is the inspection result normal?

YES >> GO TO 12.
NO >> Remove the foreign matter and clean the electric throttle control actuator inside.

12. CHECK THROTTLE CONTROL MOTOR

Refer to EC-441, "Component Inspection".

Is the inspection result normal?

YES >> GO TO 13.
NO >> GO TO 14.

13. CHECK INTERMITTENT INCIDENT

Refer to XX-XX, "*****".

Is the inspection result normal?

YES >> GO TO 14.
NO >> Repair or replace harness or connectors.

14. REPLACE ELECTRIC THROTTLE CONTROL ACTUATOR

1. Replace malfunction electric throttle control actuator.
2. Perform XX-XX, "*****".

>> INSPECTION END

Component Inspection

INFOID:0000000005886563

1. CHECK THROTTLE CONTROL MOTOR

1. Disconnect electric throttle control actuator harness connector.
2. Check resistance between electric throttle control actuator terminals as follows.

Terminals	Resistance [at 25°C (77°F)]
5 and 6	Approx. 1 - 15 Ω

Is the inspection result normal?

YES >> INSPECTION END
NO >> GO TO 2.

2. REPLACE ELECTRIC THROTTLE CONTROL ACTUATOR

1. Replace electric throttle control actuator.
2. Perform XX-XX, "*****".

>> INSPECTION END

Special Repair Requirement

INFOID:0000000006037449

1. PERFORM THROTTLE VALVE CLOSED POSITION LEARNING

Perform throttle valve closed position learning. Refer to EC-105, "Work Procedure".

>> GO TO 2

2. PERFORM IDLE AIR VOLUME LEARNING

Perform idle air volume learning. Refer to EC-106, "Work Procedure".

>> END

P1124, P1126 THROTTLE CONTROL MOTOR RELAY

DTC Logic

INFOID:0000000005886566

DTC DETECTION LOGIC

DTC No.	Trouble diagnosis name	DTC detecting condition	Possible cause
P1124	Throttle control motor relay circuit short	ECM detect the throttle control motor relay is stuck ON.	• Harness or connectors (Throttle control motor relay circuit is shorted) • Throttle control motor relay
P1126	Throttle control motor relay circuit open	ECM detects a voltage of power source for throttle control motor is excessively low.	• Harness or connectors (Throttle control motor relay circuit is open) • Throttle control motor relay

DTC CONFIRMATION PROCEDURE

1.PRECONDITIONING

If DTC Confirmation Procedure has been previously conducted, always turn ignition switch OFF and wait at least 10 seconds before conducting the next test.

TESTING CONDITION:

Before performing the following procedure, confirm that battery voltage is more than 8 V.

Witch DTC is detected?

P1124 >> GO TO 2.
P1126 >> GO TO 3.

2.PERFORM DTC CONFIRMATION PROCEDURE FOR DTC P1124

1. Turn ignition switch ON and wait at least 1 second.
2. Check DTC.

Is DTC detected?

YES >> Go to EC-442, "Diagnosis Procedure".
NO >> INSPECTION END

3.PERFORM DTC CONFIRMATION PROCEDURE FOR DTC P1126

1. Turn ignition switch ON and wait at least 2 seconds.
2. Start engine and let it idle for 5 seconds.
3. Check DTC.

Is DTC detected?

YES >> Go to EC-442, "Diagnosis Procedure".
NO >> INSPECTION END

Diagnosis Procedure

INFOID:0000000005886567

1.CHECK THROTTLE CONTROL MOTOR RELAY POWER SUPPLY CIRCUIT-I

1. Turn ignition switch OFF.
2. Check voltage between ECM harness connector and ground.

ECM			Voltage
Connector	Terminal		
	+	–	
F7	15	108	Battery voltage

Is the inspection result normal?

YES >> GO TO 5.
NO >> GO TO 2.

2. CHECK THROTTLE CONTROL MOTOR RELAY INPUT SIGNAL CIRCUIT-I

1. Disconnect ECM harness connector.
2. Disconnect IPDM E/R harness connector E14.
3. Check the continuity between ECM harness connector and IPDM E/R harness connector.

ECM		IPDM E/R		Continuity
Connector	Terminal	Connector	Terminal	
F7	15	E14	57	Existed

4. Also check harness for short to ground and short to power.

Is the inspection result normal?

YES >> GO TO 4.
NO >> GO TO 3.

3. DETECT MALFUNCTIONING PART

Check the following.
- Harness connectors E6, F1
- IPDM E/R connector E14
- Harness for open or short between IPDM E/R and ECM

>> Repair open circuit or short to ground or short to power in harness or connectors.

4. CHECK FUSE

1. Disconnect 15 A fuse (No. 64) from IPDM E/R.
2. Check 15 A fuse for blown.

Is the inspection result normal?

YES >> GO TO 8.
NO >> Replace 15 A fuse.

5. CHECK THROTTLE CONTROL MOTOR RELAY INPUT SIGNAL CIRCUIT-I

1. Check voltage between ECM harness connector and ground under the following conditions.

ECM			Conditions	Voltage
Connector	Terminal			
	+	–		
F7	2	108	Ignition switch: OFF	Approx. 0 V
			Ignition switch: ON	Battery voltage

Is the inspection result normal?

YES >> GO TO 8.
NO >> GO TO 6.

6. CHECK THROTTLE CONTROL MOTOR RELAY INPUT SIGNAL CIRCUIT-II

1. Turn ignition switch OFF.
2. Disconnect ECM harness connector.
3. Disconnect IPDM E/R harness connector E14.
4. Check the continuity between ECM harness connector and IPDM E/R harness connector.

ECM		IPDM E/R		Continuity
Connector	Terminal	Connector	Terminal	
F7	2	E14	54	Existed

5. Also check harness for short to ground and short to power.

Is the inspection result normal?

YES >> GO TO 8.

NO >> GO TO 7.

7. DETECT MALFUNCTIONING PART

Check the following.
- Harness connectors E6, F1
- IPDM E/R connector E14
- Harness for open or short between IPDM E/R and ECM

>> Repair open circuit or short to ground or short to power in harness or connectors.

8. CHECK INTERMITTENT INCIDENT

Refer to XX-XX, "*****".

Is the inspection result normal?

YES >> Replace IPDM E/R.
NO >> Repair or replace harness or connectors.

P1128 THROTTLE CONTROL MOTOR

DTC Logic

INFOID:0000000005886568

DTC DETECTION LOGIC

DTC No.	Trouble diagnosis name	DTC detecting condition	Possible cause
P1128	Throttle control motor circuit short	ECM detects short in both circuits between ECM and throttle control motor.	• Harness or connectors (Throttle control motor circuit is shorted.) • Electric throttle control actuator (Throttle control motor)

DTC CONFIRMATION PROCEDURE

1. PRECONDITIONING

If DTC Confirmation Procedure has been previously conducted, always turn ignition switch OFF and wait at least 10 seconds before conducting the next test.

>> GO TO 2.

2. PERFORM DTC CONFIRMATION PROCEDURE

1. Turn ignition switch ON and wait at least 2 seconds.
2. Start engine and let it idle for 5 seconds.
3. Check DTC.

Is DTC detected?

YES >> Go to EC-445, "Diagnosis Procedure".
NO >> INSPECTION END

Diagnosis Procedure

INFOID:0000000005886569

1. CHECK GROUND CONNECTION

1. Turn ignition switch OFF.
2. Check ground connection E38. Refer to Ground Inspection in XX-XX, "*****".

Is the inspection result normal?

YES >> GO TO 2.
NO >> Repair or replace ground connection.

2. CHECK THROTTLE CONTROL MOTOR OUTPUT SIGNAL CIRCUIT FOR OPEN AND SHORT

1. Disconnect electric throttle control actuator harness connector.
2. Disconnect ECM harness connector.
3. Check the continuity between electric throttle control actuator harness connector and ECM harness connector.

Electric throttle control actuator		ECM		Continuity
Connector	Terminal	Connector	Terminal	
F29	5	F7	1	Not existed
			4	Existed
F29	6	F7	1	Existed
			4	Not existed

4. Also check harness for short to ground and short to power.

Is the inspection result normal?

YES >> GO TO 3.
NO >> Repair or replace harness or connectors.

3. CHECK THROTTLE CONTROL MOTOR

Refer to XX-XX, "*****".

Is the inspection result normal?

YES >> GO TO 4.
NO >> GO TO 5.

4. CHECK INTERMITTENT INCIDENT

Refer to XX-XX, "*****".

Is the inspection result normal?

YES >> GO TO 5.
NO >> Repair or replace harness or connectors.

5. REPLACE ELECTRIC THROTTLE CONTROL ACTUATOR

1. Replace electric throttle control actuator.
2. Perform XX-XX, "*****".

>> INSPECTION END

Component Inspection

INFOID:0000000005888562

1. CHECK THROTTLE CONTROL MOTOR

1. Disconnect electric throttle control actuator harness connector.
2. Check resistance between electric throttle control actuator terminals as follows.

Terminals	Resistance [at 25°C (77°F)]
5 and 6	Approx. 1 - 15 Ω

Is the inspection result normal?

YES >> INSPECTION END
NO >> GO TO 2.

2. REPLACE ELECTRIC THROTTLE CONTROL ACTUATOR

1. Replace electric throttle control actuator.
2. Perform XX-XX, "*****".

>> INSPECTION END

Special Repair Requirement

INFOID:0000000006037448

1. PERFORM THROTTLE VALVE CLOSED POSITION LEARNING

Perform throttle valve closed position learning. Refer to EC-105, "Work Procedure".

>> GO TO 2

2. PERFORM IDLE AIR VOLUME LEARNING

Perform idle air volume learning. Refer to EC-106, "Work Procedure".

>> END

P1171 INTAKE ERROR

DTC Logic

INFOID:0000000006044874

DTC DETECTION LOGIC

DTC No.	Trouble diagnosis name	DTC detecting condition	Possible cause
P1171	Intake error	A high voltage from the sensor is sent to ECM under light load driving condition.	• Harness or connectors (The manifold absolute pressure sensor circuit is open or shorted.) • Manifold absolute pressure • Intake air leaks • Vacuum hoses

DTC CONFIRMATION PROCEDURE

1.PRECONDITIONING

If DTC Confirmation Procedure has been previously conducted, always turn ignition switch OFF and wait atleast 10 seconds before conducting the next test.

>> GO TO 2.

2.PERFORM DTC CONFIRMATION PROCEDURE

1. Start the engine and wait at least 5 seconds.
2. Check 1st trip DTC.

Is 1st trip DTC detected?

YES >> Go to EC-447, "Diagnosis Procedure".
NO >> INSPECTION END

Diagnosis Procedure

INFOID:0000000006044875

1.CHECK INTAKE AIR LEAK

1. Start engine and run it at idle.
2. Listen for an intake air leak after the air cleaner element.

Is intake air leak detected?

YES >> GO TO 2.
NO >> Repair or replace.

2.CHECK VACUUM HOSE

Check intake manifold vacuum hoses for clogging or disconnection.

Is the inspection result normal?

YES >> GO TO 3.
NO >> Repair or replace.

3.CHECK MAP SENSOR POWER SUPPLY CIRCUIT

1. Disconnect manifold absolute pressure sensor harness connector.
2. Turn ignition switch ON.
3. Check the voltage between MAP sensor harness connector and ground.

MAP sensor		Ground	Voltage (V)
Connector	Terminal		
F50	2	Ground	Approx. 5

Is the inspection result normal?

YES >> GO TO 4.
NO >> Repair open circuit, short to ground or short to power in harness or connectors.

4. CHECK MAP SENSOR GROUND CIRCUIT FOR OPEN AND SHORT

1. Turn ignition switch OFF.
2. Disconnect ECM harness connector.
3. Check the continuity between MAP sensor harness connector and ECM harness connector.

MAP sensor		ECM		Continuity
Connector	Terminal	Connector	Terminal	
F50	4	F46	56	Existed

4. Also check harness for short to ground and power.

Is the inspection result normal?

YES >> GO TO 5.
NO >> Repair open circuit, short to ground or short to power in harness or connectors.

5. CHECK MAP SENSOR INPUT SIGNAL CIRCUIT FOR OPEN AND SHORT

1. Check the continuity between MAP sensor harness connector and ECM harness connector.

MAP sensor		ECM		Continuity
Connector	Terminal	Connector	Terminal	
F50	1	F46	51	Existed

2. Also check harness for short to ground and power.

Is the inspection result normal?

YES >> GO TO 6.
NO >> Repair open circuit, short to ground or short to power in harness or connectors.

6. CHECK MAP SENSOR

Check map sensor. Refer to EC-402, "Component Inspection".

Is the inspection result normal?

YES >> GO TO 7.
NO >> Replace MAP sensor.

7. CHECK INTERMITTENT INCIDENT

Check intermittent incident. Refer to GI-33, "Intermittent Incident".

>> INSPECTION END

P1217 ENGINE OVER TEMPERATURE

DTC Logic

INFOID:0000000006037372

DTC DETECTION LOGIC

NOTE:
- **If DTC P1217 is displayed with DTC U1000 or U1001, first perform the trouble diagnosis for DTC U1000, U1001. Refer to EC-126, "DTC Logic".**
- **If DTC P1217 is displayed with DTC U1010, first perform the trouble diagnosis for DTC U1010. Refer to XX-XX, "*****".**

If the cooling fan or another component in the cooling system malfunctions, engine coolant temperature will rise.
When the engine coolant temperature reaches an abnormally high temperature condition, a malfunction is indicated.

DTC No.	Trouble diagnosis name	DTC detecting condition	Possible cause
P1217	Engine over temperature (Overheat)	• Cooling fan does not operate properly (Overheat). • Cooling fan system does not operate properly (Overheat). • Engine coolant was not added to the system using the proper filling method. • Engine coolant is not within the specified range.	• Harness or connectors (The cooling fan circuit is open or shorted.) • IPDM E/R (Cooling fan relays -1, -2 and -3) • Cooling fan motor • Radiator hose • Radiator • Radiator cap • Reservoir tank • Water pump • Thermostat

CAUTION:
When a malfunction is indicated, be sure to replace the coolant. Refer to XX-XX, "***". Also, replace the engine oil. Refer to XX-XX, "*****".**
1. **Fill radiator with coolant up to specified level with a filling speed of 2 liters per minute. Be sure to use coolant with the proper mixture ratio. Refer to XX-XX, "*****".**
2. **After refilling coolant, run engine to ensure that no water-flow noise is emitted.**

DTC CONFIRMATION PROCEDURE

1. PERFORM COMPONENT FUNCTION CHECK

Perform component function check. Refer to EC-449, "Component Function Check".
NOTE:
Use component function check to check the overall function of the cooling fan. During this check, a DTC might not be confirmed.

Is the inspection result normal?

YES >> INSPECTION END
NO >> Go to EC-450, "Diagnosis Procedure".

Component Function Check

INFOID:0000000006037373

1. PERFORM COMPONENT FUNCTION CHECK-I

WARNING:
Never remove the radiator cap when the engine is hot. Serious burns could be caused by high pressure fluid escaping from the radiator.
Wrap a thick cloth around cap. Carefully remove the cap by turning it a quarter turn to allow built-up pressure to escape. Then turn the cap all the way off.

Check the coolant level in the reservoir tank and radiator.
Allow engine to cool before checking coolant level.

Is the coolant level in the reservoir tank and/or radiator below the proper range?

YES >> Go to EC-450, "Diagnosis Procedure".
NO >> GO TO 2

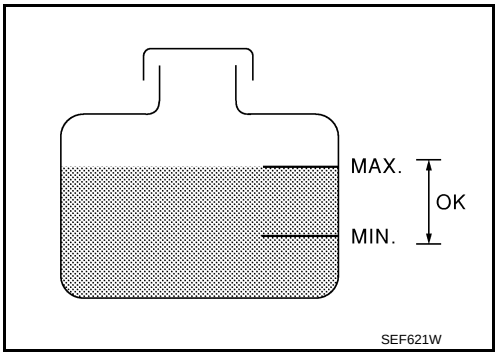

2. PERFORM COMPONENT FUNCTION CHECK-II

Confirm whether customer filled the coolant or not.

Did customer fill the coolant?

YES >> Go to EC-450, "Diagnosis Procedure".
NO >> GO TO 3.

3. PERFORM COMPONENT FUNCTION CHECK-III

With CONSULT-III

1. Turn ignition switch ON.
2. Perform “COOLING FAN” in “ACTIVE TEST” mode with CONSULT-III.
3. Touch “LOW” and “HI” on the CONSULT-III screen.
4. Check that cooling fan operates.

NOTE:
The cooling fan operates at high speeds even when “LOW” is selected in CONSULT-III “ACTIVE TEST”.

Without CONSULT-III

1. Perform IPDM E/R auto active test and check cooling fan motor operation. Refer to PCS-11, "Diagnosis Description" (WITH I-KEY) or PCS-36, "Diagnosis Description" (WITHOUT I-KEY).
2. Check that cooling fan operates.

Is the inspection result normal?

YES >> INSPECTION END
NO >> Refer to EC-234, "Diagnosis Procedure".

Diagnosis Procedure

INFOID:0000000006037374

1. CHECK COOLING FAN OPERATION

With CONSULT-III

1. Turn ignition switch ON.
2. Perform “COOLING FAN” in “ACTIVE TEST” mode with CONSULT-III.
3. Touch “LOW” and “HI” on the CONSULT-III screen.
4. Check that cooling fan operates.

NOTE:
The cooling fan operates at high speeds even when “LOW” is selected in CONSULT-III “ACTIVE TEST”.

Without CONSULT-III

1. Perform IPDM E/R auto active test and check cooling fan motor operation. Refer to PCS-11, "Diagnosis Description" (WITH I-KEY) or PCS-36, "Diagnosis Description" (WITHOUT I-KEY).
2. Check that cooling fan operates.

Is the inspection result normal?

YES >> GO TO 2.
NO >> Go to EC-281, "Diagnosis Procedure".

2. CHECK COOLING SYSTEM FOR LEAK-I

Check cooling system for leak. Refer to XX-XX, "*****".

Is leakage detected?

YES >> GO TO 3.
NO >> GO TO 4.

3. CHECK COOLING SYSTEM FOR LEAK-II

Check the following for leak.
- Hose (Refer to XX-XX, "*****".)
- Radiator (Refer to XX-XX, "*****".)
- Water pump (Refer to XX-XX, "*****".)

>> Repair or replace malfunctioning part.

4. CHECK RADIATOR CAP

Check radiator cap. Refer to XX-XX, "*****".

Is the inspection result normal?

YES >> GO TO 5.
NO >> Replace radiator cap. Refer to CO-14, "Exploded View".

5. CHECK THERMOSTAT

Check thermostat. Refer to XX-XX, "*****".

Is the inspection result normal?

YES >> GO TO 6.
NO >> Replace thermostat. Refer to CO-21, "Exploded View".

6. CHECK ENGINE COOLANT TEMPERATURE SENSOR

Check engine coolant temperature sensor. Refer to EC-405, "Component Inspection".

Is the inspection result normal?

YES >> GO TO 7.
NO >> Replace engine coolant temperature sensor. Refer to CO-23, "Exploded View".

7. CHECK MAIN 12 CAUSES

If the cause cannot be isolated, check the following.

Engine	Step	Inspection item	Equipment	Standard	Reference page
OFF	1	• Blocked radiator • Blocked condenser • Blocked radiator grille • Blocked bumper	• Visual	No blocking	—
	2	• Coolant mixture	• Coolant tester	XX-XX, "*****"	
	3	• Coolant level	• Visual	Coolant up to MAX level in reservoir tank and radiator filler neck	XX-XX, "*****"
	4	• Radiator cap	• Pressure tester	XX-XX, "*****"	
ON*2	5	• Coolant leaks	• Visual	No leaks	XX-XX, "*****"
ON*2	6	• Thermostat	• Touch the upper and lower radiator hoses	Both hoses should be hot	XX-XX, "*****"
ON*1	7	• Cooling fan motor	• CONSULT-III	Operating	EC-282, "Component Inspection"
OFF	8	• Combustion gas leak	• Color checker chemical tester 4 Gas analyzer	Negative	—
ON*3	9	• Coolant temperature gauge	• Visual	Gauge less than 3/4 when driving	—
		• Coolant overflow to reservoir tank	• Visual	No overflow during driving and idling	XX-XX, "*****"
OFF*4	10	• Coolant return from reservoir tank to radiator	• Visual	Should be initial level in reservoir tank	XX-XX, "*****"

Engine	Step	Inspection item	Equipment	Standard	Reference page
OFF	11	• Cylinder head	• Straight gauge feeler gauge	0.1 mm (0.004 in) Maximum distortion (warping)	XX-XX, "*****"
	12	• Cylinder block and pistons	• Visual	No scuffing on cylinder walls or piston	XX-XX, "*****"

*1: Turn the ignition switch ON.

*2: Engine running at 3,000 rpm for 10 minutes.

*3: Drive at 90 km/h (56 MPH) for 30 minutes and then let idle for 10 minutes.

*4: After 60 minutes of cool down time.

For more information, refer to XX-XX, "*****".

>> INSPECTION END

P1225 TP SENSOR

DTC Logic

INFOID:0000000006037375

DTC DETECTION LOGIC

DTC No.	Trouble diagnosis name	DTC detecting condition	Possible cause
P1225	Closed throttle position learning performance	Closed throttle position learning value is excessively low.	• Electric throttle control actuator (TP sensor 1 and 2)

DTC CONFIRMATION PROCEDURE

1.PRECONDITIONING

If DTC Confirmation Procedure has been previously conducted, always turn ignition switch OFF and wait at least 10 seconds before conducting the next test.
TESTING CONDITION:
Before performing the following procedure, confirm that battery voltage is more than 10 V at idle.

>> GO TO 2.

2.PERFORM DTC CONFIRMATION PROCEDURE

1. Turn ignition switch ON.
2. Turn ignition switch OFF and wait at least 10 seconds.
3. Turn ignition switch ON.
4. Check 1st trip DTC.

Is 1st trip DTC detected?

YES >> Go to EC-453, "Diagnosis Procedure".
NO >> INSPECTION END

Diagnosis Procedure

INFOID:0000000006037376

1.CHECK ELECTRIC THROTTLE CONTROL ACTUATOR VISUALLY

1. Turn ignition switch OFF.
2. Remove the intake air duct.
3. Check if foreign matter is caught between the throttle valve (1) and the housing.

- ⇦: Vehicle front

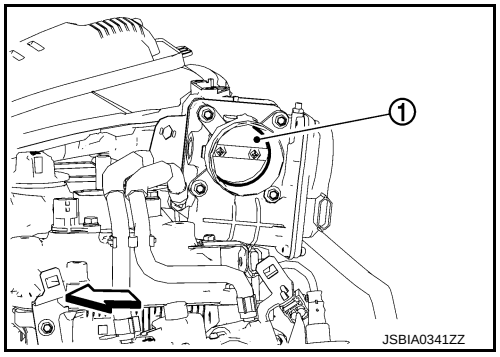

Is the inspection result normal?

YES >> Replace electric throttle control actuator. Refer to EM-29, "WITH EGR CONTROL VALVE : Exploded View".
NO >> Remove the foreign matter and clean the electric throttle control actuator inside.

Special Repair Requirement

INFOID:0000000006037377

1.PERFORM THROTTLE VALVE CLOSED POSITION LEARNING

Perform throttle valve closed position learning. Refer to EC-105, "Work Procedure".

>> GO TO 2

2.PERFORM IDLE AIR VOLUME LEARNING

Perform idle air volume learning. Refer to EC-106, "Work Procedure".

>> END

P1226 TP SENSOR

DTC Logic

INFOID:0000000006037378

DTC DETECTION LOGIC

DTC No.	Trouble diagnosis name	DTC detecting condition	Possible cause
P1226	Closed throttle position learning performance	Closed throttle position learning is not performed successfully, repeatedly.	• Electric throttle control actuator (TP sensor 1 and 2)

DTC CONFIRMATION PROCEDURE

1. PRECONDITIONING

If DTC Confirmation Procedure has been previously conducted, always turn ignition switch OFF and wait at least 10 seconds before conducting the next test.

TESTING CONDITION:

Before performing the following procedure, confirm that battery voltage is more than 10 V at idle.

>> GO TO 2.

2. PERFORM DTC CONFIRMATION PROCEDURE

1. Turn ignition switch ON.
2. Turn ignition switch OFF and wait at least 10 seconds.
3. Turn ignition switch ON.
4. Repeat steps 2 and 3 for 32 times.
5. Check 1st trip DTC.

Is 1st trip DTC detected?

YES >> Go to EC-454, "Diagnosis Procedure".
NO >> INSPECTION END

Diagnosis Procedure

INFOID:0000000006037379

1. CHECK ELECTRIC THROTTLE CONTROL ACTUATOR VISUALLY

1. Turn ignition switch OFF.
2. Remove the intake air duct.
3. Check if foreign matter is caught between the throttle valve (1) and the housing.

- ⇦: Vehicle front

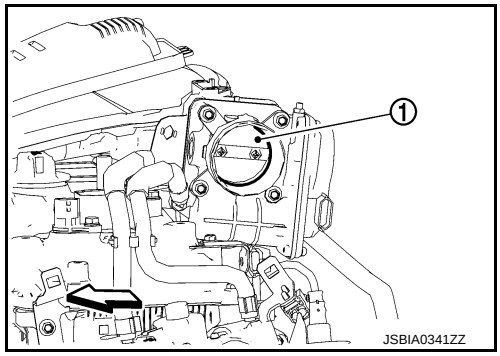

Is the inspection result normal?

YES >> GO TO 2.
NO >> Remove the foreign matter and clean the electric throttle control actuator inside.

2. REPLACE ELECTRIC THROTTLE CONTROL ACTUATOR

1. Replace electric throttle control actuator.
2. Perform EC-454, "Special Repair Requirement".

>> INSPECTION END

Special Repair Requirement

INFOID:0000000006037380

1. PERFORM THROTTLE VALVE CLOSED POSITION LEARNING

Perform throttle valve closed position learning. Refer to EC-105, "Work Procedure".

>> GO TO 2

2. PERFORM IDLE AIR VOLUME LEARNING

Perform idle air volume learning. Refer to EC-106, "Work Procedure".

>> END

P1229 SENSOR POWER SUPPLY

DTC Logic

INFOID:0000000005886587

DTC DETECTION LOGIC

DTC No.	Trouble diagnosis name	DTC detecting condition	Possible cause
P1229	Sensor power supply circuit short	ECM detects a voltage of power source for sensor is excessively low or high.	• Harness or connectors (APP sensor 1 circuit is shorted.) (TP sensor circuit is shorted.) [Camshaft position sensor (PHASE) circuit is shorted.] • Accelerator pedal position sensor • Throttle position sensor • Camshaft position sensor (PHASE)

DTC CONFIRMATION PROCEDURE

1.PRECONDITIONING

If DTC Confirmation Procedure has been previously conducted, always turn ignition switch OFF and wait at least 10 seconds before conducting the next test.

TESTING CONDITION:

Before performing the following procedure, confirm that battery voltage is more than 10 V at idle.

>> GO TO 2.

2.PERFORM DTC CONFIRMATION PROCEDURE

1. Start engine and let it idle for 1 second.
2. Check DTC.

Is DTC detected?

YES >> Go to EC-456, "Diagnosis Procedure".
NO >> INSPECTION END

Diagnosis Procedure

INFOID:0000000005886588

1.CHECK GROUND CONNECTION

1. Turn ignition switch OFF.
2. Check ground connection E38. Refer to Ground Inspection in XX-XX, "*****".

Is the inspection result normal?

YES >> GO TO 2.
NO >> Repair or replace ground connection.

2.CHECK ACCELERATOR PEDAL POSITION SENSOR 1 POWER SUPPLY CIRCUIT

1. Disconnect accelerator pedal position (APP) sensor harness connector.
2. Turn ignition switch ON.
3. Check the voltage between APP sensor harness connector and ground.

APP sensor		Ground	Voltage
Connector	Terminal		
E108	4	Ground	Approx. 5 V

Is the inspection result normal?

YES >> GO TO 7.
NO >> GO TO 3.

3.CHECK SENSOR POWER SUPPLY CIRCUIT

Check harness for short to power and short to ground, between the following terminals.

ECM		Sensor		
Connector	Terminal	Item	Connector	Terminal
F8	72	Electric throttle control actuator	F29	1
	78	CMP sensor (PHASE)	F26	1
E16	106	APP sensor	E108	4

Is the inspection result normal?

YES >> GO TO 4.
NO >> Repair short to ground or short to power in harness or connectors.

4. CHECK CAMSHAFT POSITION SENSOR (PHASE)

Refer to XX-XX, "*****".

Is the inspection result normal?

YES >> GO TO 5.
NO >> Replace camshaft position sensor (PHASE).

5. CHECK THROTTLE POSITION SENSOR

Refer to XX-XX, "*****".

Is the inspection result normal?

YES >> GO TO 9.
NO >> GO TO 6.

6. REPLACE ELECTRIC THROTTLE CONTROL ACTUATOR

1. Replace electric throttle control actuator.
2. Perform XX-XX, "*****".

>> INSPECTION END

7. CHECK APP SENSOR

Refer to XX-XX, "*****".

Is the inspection result normal?

YES >> GO TO 9.
NO >> GO TO 8.

8. REPLACE ACCELERATOR PEDAL ASSEMBLY

1. Replace accelerator pedal assembly.
2. Perform XX-XX, "*****".

>> INSPECTION END

9. CHECK INTERMITTENT INCIDENT

Refer to XX-XX, "*****".

>> INSPECTION END

P1706 PNP SWITCH

Description

INFOID:0000000005886589

When the selector lever position is P or N (A/T), Neutral position (M/T), park/neutral position (PNP) signal is ON.

DTC Logic

INFOID:0000000005886590

DTC DETECTION LOGIC

DTC No.	Trouble diagnosis name	DTC detecting condition	Possible cause
P1706	Park/neutral position signal	The park/neutral position (PNP) signal is not changed in the process of engine starting and driving.	• Harness or connectors [The park/neutral position (PNP) signal circuit is open or shorted.] • Transmission range switch (A/T models) • Park/neutral position (PNP) switch (M/T models)

DTC CONFIRMATION PROCEDURE

1. INSPECTION START

Do you have CONSULT-III?

Do you have CONSULT-III?

YES >> GO TO 2.
NO >> GO TO 5.

2. PRECONDITIONING

If DTC Confirmation Procedure has been previously conducted, always turn ignition switch OFF and wait at least 10 seconds before conducting the next test.

>> GO TO 3.

3. CHECK PNP SIGNAL FUNCTION

With CONSULT-III

1. Turn ignition switch ON.
2. Select “P/N POSI SW” in “DATA MONITOR” mode with CONSULT-III. Then check “P/N POSI SW” signal under the following conditions.

Shift lever position	Known-good signal
N or P position (A/T) Neutral position (M/T)	ON
Except above position	OFF

Is the inspection result normal?

YES >> GO TO 4.
NO >> Go to EC-459, "Diagnosis Procedure".

4. PERFORM DTC CONFIRMATION PROCEDURE

1. Select “DATA MONITOR” mode with CONSULT-III.
2. Start engine and warm it up to normal operating temperature.
3. Maintain the following conditions for at least 50 consecutive seconds.
   CAUTION:
   Always drive vehicle at a safe speed.

ENG SPEED	1,925 - 6,375 rpm
COOLAN TEMP/S	More than 70°C (158°F)

B/FUEL SCHDL	2.5 - 31.8 msec
VHCL SPEED SE	More than 64 km/h (40 mph)
Shift lever	Suitable position

4. Check 1st trip DTC.

Is 1st trip DTC detected?

YES >> Go to EC-459, "Diagnosis Procedure".
NO >> INSPECTION END

5. PERFORM COMPONENT FUNCTION CHECK

Perform component function check. Refer to EC-459, "Component Function Check".

NOTE:
Use component function check the overall function of the park/neutral position (PNP) signal circuit. During this check, a 1st trip DTC might not be confirmed.

Is the inspection result normal?

YES >> INSPECTION END
NO >> Go to EC-459, "Diagnosis Procedure".

Component Function Check

INFOID:0000000005886591

1. PERFORM COMPONENT FUNCTION CHECK

1. Turn ignition switch ON.
2. Check the voltage between ECM harness connector and ground.

ECM			Condition		Voltage
Connector	Terminal				
	+	–			
F8	69 (PNP signal)	108	Shift lever	Neutral position	Battery voltage
				Except above	Approx. 0 V

Is the inspection result normal?

YES >> INSPECTION END
NO >> Go to EC-459, "Diagnosis Procedure".

Diagnosis Procedure

INFOID:0000000005886592

1. CHECK TRANSMISSION RANGE SWITCH (A/T) OR PARK/NEUTRAL POSITION (PNP) SWITCH (M/T) POWER SUPPLY CIRCUIT

1. Turn ignition switch OFF.
2. Disconnect transmission range switch (A/T) or PNP switch (M/T) harness connector.
3. Turn ignition switch ON.
4. Check the voltage between transmission range switch (A/T) or PNP switch (M/T) harness connector and ground.

Transmission range switch (A/T) PNP switch (M/T)		Ground	Voltage
Connector	Terminal		
F51	2	Ground	Battery voltage

Is the inspection result normal?

YES >> GO TO 3.
NO >> GO TO 2.

2. DETECT MALFUNCTIONING PART

Check the following
- Harness connectors E6, F1
- IPDM E/R connector E14

- 10 A fuse (No.56)
- Harness for open or short between transmission range switch (A/T) or PNP switch (M/T) and fuse

>> Repair open circuit or short to ground or short to power in harness or connectors.

3. CHECK PNP SWITCH INPUT SIGNAL CIRCUIT FOR OPEN AND SHORT

1. Turn ignition switch OFF.
2. Disconnect ECM harness connector.
3. Check the continuity between transmission range switch (A/T) or PNP switch (M/T) harness connector and ECM harness connector.

Transmission range switch (A/T) PNP switch (M/T)		ECM		Continuity
Connector	Terminal	Connector	Terminal	
F46	3	F8	69	Existed

4. Also check harness for short to ground and short to power.

Is the inspection result normal?

YES >> GO TO 4.
NO >> Repair open circuit or short to ground or short to power in harness or connectors.

4. CHECK TRANSMISSION RANGE SWITCH (A/T) OR PNP SWITCH (M/T)

Check transmission range switch (A/T) or PNP switch (M/T). Refer to Dummy cross-reference("XX-XX").

Is the inspection result normal?

YES >> GO TO 5.
NO >> Replace transmission range switch (A/T) or PNP switch (M/T).

5. CHECK INTERMITTENT INCIDENT

Check intermittent incident. Refer to XX-XX, "*****".

>> INSPECTION END

P1805 BRAKE SWITCH

DTC Logic

INFOID:0000000006037381

DTC DETECTION LOGIC

DTC No.	Trouble diagnosis name	DTC detecting condition	Possible cause
P1805	Brake switch	A brake switch signal is not sent to ECM for extremely long time while the vehicle is driving.	• Harness or connectors (Stop lamp switch circuit is open or shorted.) • Stop lamp switch

DTC CONFIRMATION PROCEDURE

1. PERFORM DTC CONFIRMATION PROCEDURE

1. Turn ignition switch ON.
2. Fully depress the brake pedal for at least 5 seconds.
3. Erase DTC.
4. Check 1st trip DTC.

Is 1st trip DTC detected?

YES >> Go to EC-461, "Diagnosis Procedure".
NO >> INSPECTION END

Diagnosis Procedure

INFOID:0000000006037382

1. CHECK STOP LAMP SWITCH CIRCUIT

1. Turn ignition switch OFF.
2. Check the stop lamp when depressing and releasing the brake pedal.

Brake pedal	Stop lamp
Fully released	Not illuminated
Slightly depressed	Illuminated

Is the inspection result normal?

YES >> GO TO 4.
NO >> GO TO 2.

2. CHECK STOP LAMP SWITCH POWER SUPPLY CIRCUIT

1. Turn ignition switch OFF.
2. Disconnect stop lamp switch harness connector.
3. Check the voltage between stop lamp switch harness connector and ground.

Stop lamp switch		Ground	Voltage
Connector	Terminal		
E114	1	Ground	Battery voltage

Is the inspection result normal?

YES >> GO TO 4.
NO >> GO TO 3.

3. DETECT MALFUNCTIONING PART

Check harness for open or short between stop lamp switch and battery.

>> Repair open circuit or short to ground or short to power in harness or connectors.

4. CHECK STOP LAMP SWITCH INPUT SIGNAL CIRCUIT FOR OPEN AND SHORT

1. Disconnect stop lamp switch harness connector.
2. Disconnect ECM harness connector.

3. Check the continuity between ECM harness connector and stop lamp switch harness connector.

ECM		Stop lamp switch		Continuity
Connector	Terminal	Connector	Terminal	
E18	99	E114	2	Existed

4. Also check harness for short to ground and short to power.

Is the inspection result normal?

YES >> GO TO 5.
NO >> Repair open circuit or short to ground or short to power in harness or connectors.

5. CHECK STOP LAMP SWITCH

Check stop lamp switch. Refer to EC-462, "Component Inspection".

Is the inspection result normal?

YES >> GO TO 6.
NO >> Replace brake pedal assembly. Refer to BR-16, "Exploded View".

6. CHECK INTERMITTENT INCIDENT

Check intermittent incident. Refer to XX-XX, "*****".

>> Repair or replace malfunctioning part.

Component Inspection

INFOID:0000000006037383

1. CHECK STOP LAMP SWITCH-I

1. Turn ignition switch OFF.
2. Disconnect stop lamp switch harness connector.
3. Check the continuity between stop lamp switch terminals under the following conditions.

Terminals	Condition		Continuity
1 and 2	Brake pedal	Fully released	Not existed
		Slightly depressed	Existed

Is the inspection result normal?

YES >> INSPECTION END
NO >> GO TO 2.

2. CHECK STOP LAMP SWITCH-II

1. Adjust stop lamp switch installation. Refer to XX-XX, "*****".
2. Check the continuity between stop lamp switch terminals under the following conditions.

Terminals	Condition		Continuity
1 and 2	Brake pedal	Fully released	Not existed
		Slightly depressed	Existed

Is the inspection result normal?

YES >> INSPECTION END
NO >> Replace brake pedal assembly. Refer to BR-16, "Exploded View".

P2122, P2123 APP SENSOR

DTC Logic

INFOID:0000000006037385

DTC DETECTION LOGIC

NOTE:
If DTC P2122 or P2123 is displayed with DTC P0643, first perform the trouble diagnosis for DTC P0643. Refer to EC-228, "DTC Logic".

DTC No.	Trouble diagnosis name	DTC detecting condition	Possible cause
P2122	Accelerator pedal position sensor 1 circuit low input	An excessively low voltage from the APP sensor 1 is sent to ECM.	• Harness or connectors (APP sensor 1 circuit is open or shorted.) • Accelerator pedal position sensor (APP sensor 1)
P2123	Accelerator pedal position sensor 1 circuit high input	An excessively high voltage from the APP sensor 1 is sent to ECM.	

DTC CONFIRMATION PROCEDURE

1. PRECONDITIONING

If DTC Confirmation Procedure has been previously conducted, always turn ignition switch OFF and wait at least 10 seconds before conducting the next test.
TESTING CONDITION:
Before performing the following procedure, confirm that battery voltage is more than 10 V at idle.

>> GO TO 2.

2. PERFORM DTC CONFIRMATION PROCEDURE

1. Start engine and let it idle for 1 second.
2. Check DTC.

Is DTC detected?

YES >> Go to EC-463, "Diagnosis Procedure".
NO >> INSPECTION END

Diagnosis Procedure

INFOID:0000000006037386

1. CHECK GROUND CONNECTION

1. Turn ignition switch OFF.
2. Check ground connection E38. Refer to Ground Inspection in XX-XX, "*****".

Is the inspection result normal?

YES >> GO TO 2.
NO >> Repair or replace ground connection.

2. CHECK APP SENSOR 1 POWER SUPPLY CIRCUIT

1. Disconnect accelerator pedal position (APP) sensor harness connector.
2. Turn ignition switch ON.
3. Check the voltage between APP sensor harness connector and ground.

APP sensor		Ground	Voltage
Connector	Terminal		
M206	4	Ground	Approx. 5 V

Is the inspection result normal?

YES >> GO TO 3.
NO >> Repair open circuit or short to ground or short to power in harness or connectors.

3. CHECK APP SENSOR 1 GROUND CIRCUIT FOR OPEN AND SHORT

1. Turn ignition switch OFF.
2. Disconnect ECM harness connector.

3. Check the continuity between APP sensor harness connector and ECM harness connector.

APP sensor		ECM		Continuity
Connector	Terminal	Connector	Terminal	
M206	2	E16	111	Existed

4. Also check harness for short to ground and short to power.

Is the inspection result normal?

YES >> GO TO 4.
NO >> Repair open circuit or short to ground or short to power in harness or connectors.

4. CHECK APP SENSOR 1 INPUT SIGNAL CIRCUIT FOR OPEN AND SHORT

1. Check the continuity between APP sensor harness connector and ECM harness connector.

APP sensor		ECM		Continuity
Connector	Terminal	Connector	Terminal	
M206	3	E16	110	Existed

2. Also check harness for short to ground and short to power.

Is the inspection result normal?

YES >> GO TO 5.
NO >> Repair open circuit or short to ground or short to power in harness or connectors.

5. CHECK APP SENSOR

Refer to EC-464, "Component Inspection".

Is the inspection result normal?

YES >> GO TO 6.
NO >> Replace accelerator pedal assembly. Refer to ACC-3, "Exploded View".

6. CHECK INTERMITTENT INCIDENT

Refer to XX-XX, "*****".

>> INSPECTION END

Component Inspection

INFOID:0000000006037387

1. CHECK ACCELERATOR PEDAL POSITION SENSOR

1. Reconnect all harness connectors disconnected.
2. Turn ignition switch ON.
3. Check the voltage between ECM harness connector and ground.

ECM			Condition		Voltage
Connector	+	–			
	Terminal	Terminal			
E16	110 (APP sensor 1 signal)	111	Accelerator pedal	Fully released	0.6 - 0.9 V
				Fully depressed	3.9 - 4.7 V
	103 (APP sensor 2 signal)	104		Fully released	0.3 - 0.6 V
				Fully depressed	1.95 - 2.4 V

Is the inspection result normal?

YES >> INSPECTION END
NO >> Replace accelerator pedal assembly. Refer to ACC-3, "Exploded View".

Special Repair Requirement

INFOID:0000000006037388

1. PERFORM ACCELERATOR PEDAL RELEASED POSITION LEARNING

Refer to EC-104, "Work Procedure".

>> GO TO 2.

2. PERFORM THROTTLE VALVE CLOSED POSITION LEARNING

Refer to EC-105, "Work Procedure".

>> GO TO 3.

3. PERFORM IDLE AIR VOLUME LEARNING

Refer to EC-106, "Work Procedure".

>> END

P2127, P2128 APP SENSOR

DTC Logic

INFOID:0000000006037389

DTC DETECTION LOGIC

DTC No.	Trouble diagnosis name	DTC detecting condition	Possible cause
P2127	Accelerator pedal position sensor 2 circuit low input	An excessively low voltage from the APP sensor 2 is sent to ECM.	• Harness or connectors (APP sensor 2 circuit is open or shorted.) [Crankshaft position sensor (POS) circuit is shorted.] (Refrigerant pressure sensor circuit is shorted.) • Accelerator pedal position sensor (APP sensor 2) • Crankshaft position sensor (POS) • Refrigerant pressure sensor
P2128	Accelerator pedal position sensor 2 circuit high input	An excessively high voltage from the APP sensor 2 is sent to ECM.	

DTC CONFIRMATION PROCEDURE

1.PRECONDITIONING

If DTC Confirmation Procedure has been previously conducted, always turn ignition switch OFF and wait at least 10 seconds before conducting the next test.

TESTING CONDITION:

Before performing the following procedure, confirm that battery voltage is more than 10 V at idle.

>> GO TO 2.

2.PERFORM DTC CONFIRMATION PROCEDURE

1. Start engine and let it idle for 1 second.
2. Check DTC.

Is DTC detected?

YES >> Go to EC-466, "Diagnosis Procedure".
NO >> INSPECTION END

Diagnosis Procedure

INFOID:0000000006037390

1.CHECK GROUND CONNECTION

1. Turn ignition switch OFF.
2. Check ground connection E38. Refer to Ground Inspection in XX-XX, "*****".

Is the inspection result normal?

YES >> GO TO 2.
NO >> Repair or replace ground connection.

2.CHECK APP SENSOR 2 POWER SUPPLY CIRCUIT-I

1. Disconnect accelerator pedal position (APP) sensor harness connector.
2. Turn ignition switch ON.
3. Check the voltage between APP sensor harness connector and ground.

APP sensor		Ground	Voltage
Connector	Terminal		
M206	5	Ground	Approx. 5 V

Is the inspection result normal?

YES >> GO TO 6.
NO >> GO TO 3.

3.CHECK APP SENSOR 2 POWER SUPPLY CIRCUIT-II

1. Turn ignition switch OFF.
2. Disconnect ECM harness connector.

3. Check the continuity between APP sensor harness connector and ECM harness connector.

APP sensor		ECM		Continuity
Connector	Terminal	Connector	Terminal	
M206	5	E16	102	Existed

Is the inspection result normal?

YES >> GO TO 4.
NO >> Repair open circuit or short to ground or short to power in harness or connectors.

4. CHECK SENSOR POWER SUPPLY CIRCUIT

Check harness for short to power and short to ground, between the following terminals.

ECM		Sensor		
Connector	Terminal	Item	Connector	Terminal
F8	74	Refrigerant pressure sensor	E49	3
	75	CKP sensor (POS)	F20	1
E16	102	APP sensor	M206	5

Is the inspection result normal?

YES >> GO TO 5.
NO >> Repair short to ground or short to power in harness or connectors.

5. CHECK COMPONENTS

Check the following.
- Refrigerant pressure sensor (Refer to EC-297, "Diagnosis Procedure".)
- Crankshaft position sensor (POS) (Refer to EC-428, "Component Inspection".)

Is the inspection result normal?

YES >> GO TO 10.
NO >> Replace malfunctioning component.

6. CHECK APP SENSOR 2 GROUND CIRCUIT FOR OPEN AND SHORT

1. Turn ignition switch OFF.
2. Disconnect ECM harness connector.
3. Check the continuity between APP sensor harness connector and ECM harness connector.

APP sensor		ECM		Continuity
Connector	Terminal	Connector	Terminal	
M206	1	E16	104	Existed

4. Also check harness for short to ground and short to power.

Is the inspection result normal?

YES >> GO TO 7.
NO >> Repair open circuit or short to ground or short to power in harness or connectors.

7. CHECK APP SENSOR 2 INPUT SIGNAL CIRCUIT FOR OPEN AND SHORT

1. Check the continuity between APP sensor harness connector and ECM harness connector.

APP sensor		ECM		Continuity
Connector	Terminal	Connector	Terminal	
M206	6	E16	103	Existed

2. Also check harness for short to ground and short to power.

Is the inspection result normal?

YES >> GO TO 8.
NO >> Repair open circuit or short to ground or short to power in harness or connectors.

8. CHECK APP SENSOR

Refer to EC-468, "Component Inspection".

Is the inspection result normal?

YES >> GO TO 10.
NO >> GO TO 9.

9. REPLACE ACCELERATOR PEDAL ASSEMBLY

1. Replace accelerator pedal assembly.
2. Perform EC-468, "Special Repair Requirement".

>> INSPECTION END

10. CHECK INTERMITTENT INCIDENT

Refer to XX-XX, "*****".

>> INSPECTION END

Component Inspection

INFOID:0000000006037391

1. CHECK ACCELERATOR PEDAL POSITION SENSOR

1. Reconnect all harness connectors disconnected.
2. Turn ignition switch ON.
3. Check the voltage between ECM harness connector and ground.

ECM			Condition		Voltage
Connector	+	–			
	Terminal	Terminal			
E16	110 (APP sensor 1 signal)	111	Accelerator pedal	Fully released	0.6 - 0.9 V
				Fully depressed	3.9 - 4.7 V
	103 (APP sensor 2 signal)	104		Fully released	0.3 - 0.6 V
				Fully depressed	1.95 - 2.4 V

Is the inspection result normal?

YES >> INSPECTION END
NO >> Replace accelerator pedal assembly. Refer to ACC-3, "Exploded View".

Special Repair Requirement

INFOID:0000000006037392

1. PERFORM ACCELERATOR PEDAL RELEASED POSITION LEARNING

Refer to EC-104, "Work Procedure".

>> GO TO 2.

2. PERFORM THROTTLE VALVE CLOSED POSITION LEARNING

Refer to EC-105, "Work Procedure".

>> GO TO 3.

3. PERFORM IDLE AIR VOLUME LEARNING

Refer to EC-106, "Work Procedure".

>> END

P2135 TP SENSOR

DTC Logic

INFOID:0000000006037393

DTC DETECTION LOGIC

NOTE:
If DTC P2135 is displayed with DTC P0643, first perform the trouble diagnosis for DTC P0643. Refer to EC-228, "DTC Logic".

DTC No.	Trouble diagnosis name	DTC detecting condition	Possible cause
P2135	Throttle position sensor circuit range/performance	Rationally incorrect voltage is sent to ECM compared with the signals from TP sensor 1 and TP sensor 2.	• Harness or connector (TP sensor 1 and 2 circuit is open or shorted.) • Electric throttle control actuator (TP sensor 1 and 2)

DTC CONFIRMATION PROCEDURE

1. PRECONDITIONING

If DTC Confirmation Procedure has been previously conducted, always turn ignition switch OFF and wait at least 10 seconds before conducting the next test.
TESTING CONDITION:
Before performing the following procedure, confirm that battery voltage is more than 10 V at idle.

>> GO TO 2.

2. PERFORM DTC CONFIRMATION PROCEDURE

1. Start engine and let it idle for 1 second.
2. Check DTC.

Is DTC detected?

YES >> Go to EC-469, "Diagnosis Procedure".
NO >> INSPECTION END

Diagnosis Procedure

INFOID:0000000006037394

1. CHECK THROTTLE POSITION SENSOR POWER SUPPLY CIRCUIT

1. Disconnect electric throttle control actuator harness connector.
2. Turn ignition switch ON.
3. Check the voltage between electric throttle control actuator harness connector and ground.

Electric throttle control actuator		Ground	Voltage
Connector	Terminal		
F29	1	Ground	Approx. 5 V

Is the inspection result normal?

YES >> GO TO 2.
NO >> Repair open circuit or short to ground or short to power in harness or connectors.

2. CHECK THROTTLE POSITION SENSOR GROUND CIRCUIT FOR OPEN AND SHORT

1. Turn ignition switch OFF.
2. Disconnect ECM harness connector.
3. Check the continuity between electric throttle control actuator harness connector and ground.

Electric throttle control actuator		ECM		Continuity
Connector	Terminal	Connector	Terminal	
F29	4	F8	36	Existed

4. Also check harness for short to ground and short to power.

Is the inspection result normal?

YES >> GO TO 3.
NO >> Repair open circuit or short to ground or short to power in harness or connectors.

3. CHECK THROTTLE POSITION SENSOR INPUT SIGNAL CIRCUIT FOR OPEN AND SHORT

1. Check the continuity between electric throttle control actuator harness connector and ground.

Electric throttle control actuator		ECM		Continuity
Connector	Terminal	Connector	Terminal	
F29	2	F8	33	Existed
	3		34	

2. Also check harness for short to ground and short to power.

Is the inspection result normal?

YES >> GO TO 4.
NO >> Repair open circuit or short to ground or short to power in harness or connectors.

4. CHECK THROTTLE POSITION SENSOR

Check throttle position sensor. Refer to EC-470, "Component Inspection".

Is the inspection result normal?

YES >> GO TO 5.
NO >> Replace electric throttle control actuator. Refer to EM-29, "WITH EGR CONTROL VALVE : Exploded View".

5. CHECK INTERMITTENT INCIDENT

Check intermittent incident. Refer to XX-XX, "*****".

>> Repair or replace malfunctioning part.

Component Inspection

INFOID:0000000006037395

1. CHECK THROTTLE POSITION SENSOR

1. Turn ignition switch OFF.
2. Reconnect all harness connectors disconnected.
3. Perform EC-105, "Work Procedure".
4. Turn ignition switch ON.
5. Set selector lever to D (A/T) or 1st (M/T) position.
6. Check the voltage between ECM harness connector and ground.

ECM			Condition		Voltage
Connector	Terminal				
	+	–			
F8	33 (TP sensor 1 signal)	36	Accelerator pedal	Fully released	More than 0.36 V
				Fully depressed	Less than 4.75 V
	34 (TP sensor 2 signal)			Fully released	Less than 4.75 V
				Fully depressed	More than 0.36 V

Is the inspection result normal?

YES >> INSPECTION END
NO >> GO TO 2.

2. REPLACE ELECTRIC THROTTLE CONTROL ACTUATOR

1. Replace electric throttle control actuator.
2. Perform EC-471, "Special Repair Requirement".

>> INSPECTION END

Special Repair Requirement

INFOID:0000000006037396

1. PERFORM THROTTLE VALVE CLOSED POSITION LEARNING

Perform throttle valve closed position learning. Refer to EC-105, "Work Procedure".

>> GO TO 2

2. PERFORM IDLE AIR VOLUME LEARNING

Perform idle air volume learning. Refer to EC-106, "Work Procedure".

>> END

P2138 APP SENSOR

DTC Logic

INFOID:0000000006037397

DTC DETECTION LOGIC

NOTE:
If DTC P2138 is displayed with DTC P0643, first perform the trouble diagnosis for DTC P0643. Refer to EC-228, "DTC Logic".

DTC No.	Trouble diagnosis name	DTC detecting condition	Possible cause
P2138	Accelerator pedal position sensor circuit range/performance	Rationally incorrect voltage is sent to ECM compared with the signals from APP sensor 1 and APP sensor 2.	• Harness or connector (APP sensor 1 and 2 circuit is open or shorted.) [Crankshaft position sensor (POS) circuit is shorted.) (Refrigerant pressure sensor circuit is shorted.) • Accelerator pedal position sensor (APP sensor 1 and 2) • Crankshaft position sensor (POS) • Refrigerant pressure sensor

DTC CONFIRMATION PROCEDURE

1. PRECONDITIONING

If DTC Confirmation Procedure has been previously conducted, always turn ignition switch OFF and wait at least 10 seconds before conducting the next test.
TESTING CONDITION:
Before performing the following procedure, confirm that battery voltage is more than 10 V at idle.

>> GO TO 2.

2. PERFORM DTC CONFIRMATION PROCEDURE

1. Start engine and let it idle for 1 second.
2. Check DTC.

Is DTC detected?

YES >> Go to EC-472, "Diagnosis Procedure".
NO >> INSPECTION END

Diagnosis Procedure

INFOID:0000000006037398

1. CHECK GROUND CONNECTION

1. Turn ignition switch OFF.
2. Check ground connection E38. Refer to Ground Inspection in XX-XX, "*****".

Is the inspection result normal?

YES >> GO TO 2.
NO >> Repair or replace ground connection.

2. CHECK APP SENSOR 1 POWER SUPPLY CIRCUIT

1. Disconnect accelerator pedal position (APP) sensor harness connector.
2. Turn ignition switch ON.
3. Check the voltage between APP sensor harness connector and ground.

APP sensor		Ground	Voltage
Connector	Terminal		
M206	4	Ground	Approx. 5 V

Is the inspection result normal?

YES >> GO TO 3.
NO >> Repair open circuit or short to ground or shot to power in harness or connectors.

3. CHECK APP SENSOR 2 POWER SUPPLY CIRCUIT-I

Check the voltage between APP sensor harness connector and ground.

APP sensor		Ground	Voltage
Connector	Terminal		
M206	5	Ground	Approx. 5 V

Is the inspection result normal?

YES >> GO TO 7.
NO >> GO TO 4.

4. CHECK APP SENSOR 2 POWER SUPPLY CIRCUIT-II

1. Turn ignition switch OFF.
2. Disconnect ECM harness connector.
3. Check the continuity between APP sensor harness connector and ECM harness connector.

APP sensor		ECM		Continuity
Connector	Terminal	Connector	Terminal	
M206	5	E16	102	Existed

Is the inspection result normal?

YES >> GO TO 5.
NO >> Repair open circuit or short to ground or shot to power in harness or connectors.

5. CHECK SENSOR POWER SUPPLY CIRCUIT

Check harness for short to power and short to ground, between the following terminals.

ECM		Sensor		
Connector	Terminal	Item	Connector	Terminal
F8	74	Refrigerant pressure sensor	E49	3
	75	CKP sensor (POS)	F20	1
E16	102	APP sensor	M206	5

Is the inspection result normal?

YES >> GO TO 6.
NO >> Repair short to ground or short to power in harness or connectors.

6. CHECK COMPONENTS

Check the following.
- Crankshaft position sensor (POS) (Refer to EC-428, "Component Inspection".)
- Refrigerant pressure sensor (Refer to EC-297, "Diagnosis Procedure".)

Is the inspection result normal?

YES >> GO TO 9.
NO >> Replace malfunctioning component.

7. CHECK APP SENSOR GROUND CIRCUIT FOR OPEN AND SHORT

1. Turn ignition switch OFF.
2. Disconnect ECM harness connector.
3. Check the continuity between APP sensor harness connector and ECM harness connector as follows.

APP sensor		ECM		Continuity
Connector	Terminal	Connector	Terminal	
M206	1	E16	104	Existed
	2		111	

4. Also check harness for short to ground and short to power.

Is the inspection result normal?

YES >> GO TO 8.
NO >> Repair open circuit or short to ground or shot to power in harness or connectors.

8. CHECK APP SENSOR INPUT SIGNAL CIRCUIT FOR OPEN AND SHORT

1. Check the continuity between APP sensor harness connector and ECM harness connector as follows.

APP sensor		ECM		Continuity
Connector	Terminal	Connector	Terminal	
M206	3	E16	110	Existed
	6		103	

2. Also check harness for short to ground and short to power.

Is the inspection result normal?

YES >> GO TO 9.
NO >> Repair open circuit or short to ground or shot to power in harness or connectors.

9. CHECK APP SENSOR

Refer to EC-474, "Component Inspection".

Is the inspection result normal?

YES >> GO TO 11.
NO >> GO TO 10.

10. REPLACE ACCELERATOR PEDAL ASSEMBLY

1. Replace accelerator pedal assembly.
2. Perform EC-475, "Special Repair Requirement".

>> INSPECTION END

11. CHECK INTERMITTENT INCIDENT

Refer to XX-XX, "*****".

>> INSPECTION END

Component Inspection

INFOID:0000000006037399

1. CHECK ACCELERATOR PEDAL POSITION SENSOR

1. Reconnect all harness connectors disconnected.
2. Turn ignition switch ON.
3. Check the voltage between ECM harness connector and ground.

ECM			Condition		Voltage
Connector	+	–			
	Terminal	Terminal			
E16	110 (APP sensor 1 signal)	111	Accelerator pedal	Fully released	0.6 - 0.9 V
				Fully depressed	3.9 - 4.7 V
	103 (APP sensor 2 signal)	104		Fully released	0.3 - 0.6 V
				Fully depressed	1.95 - 2.4 V

Is the inspection result normal?

YES >> INSPECTION END
NO >> Replace accelerator pedal assembly. Refer to ACC-3, "Exploded View".

Special Repair Requirement

INFOID:0000000006037400

1. PERFORM ACCELERATOR PEDAL RELEASED POSITION LEARNING

Refer to EC-104, "Work Procedure".

>> GO TO 2.

2. PERFORM THROTTLE VALVE CLOSED POSITION LEARNING

Refer to EC-105, "Work Procedure".

>> GO TO 3.

3. PERFORM IDLE AIR VOLUME LEARNING

Refer to EC-106, "Work Procedure".

>> END

COOLING FAN

Component Function Check

INFOID:0000000006037456

1. CHECK COOLING FAN FUNCTION

With CONSULT-III

1. Turn ignition switch ON.
2. Perform “COOLING FAN” in “ACTIVE TEST” mode with CONSULT-III.
3. Touch “LOW” and “HI” on the CONSULT-III screen.
4. Check that cooling fan operates.

NOTE:

The cooling fan operates at high speeds even when “LOW” is selected in CONSULT-III “ACTIVE TEST”.

Without CONSULT-III

1. Perform IPDM E/R auto active test and check cooling fan motor operation. Refer to XX-XX, "*****" (WITH I-KEY) or XX-XX, "*****" (WITHOUT I-KEY).
2. Check that cooling fan operates.

Is the inspection result normal?

YES >> INSPECTION END
NO >> Refer to EC-476, "Diagnosis Procedure".

Diagnosis Procedure

INFOID:0000000006037457

1. CHECK GROUND CONNECTION

1. Turn ignition switch OFF.
2. Check ground connection E38. Refer to Ground Inspection in XX-XX, "*****".

Is the inspection result normal?

YES >> GO TO 2.
NO >> Repair or replace ground connection.

2. CHECK COOLING FAN MOTOR CIRCUIT

1. Disconnect cooling fan motor harness connector.
2. Check the continuity between IPDM E/R harness connector and cooling fan motor harness connector.

IPDM E/R		Cooling fan motor		Continuity
Connector	Terminal	Connector	Terminal	
E10	5	E62	1	Existed
	7		2	
E11	10		3	

3. Check the continuity between cooling fan motor harness connector and ground.

Cooling fan motor		Ground	Continuity
Connector	Terminal		
E62	4	Ground	Existed

4. Also check harness for short to ground and short to power.

YES or NO

YES >> GO TO 4.
NO >> GO TO 3.

3. DETECT MALFUNCTIONING PART

Check the following.

- Harness for open or short between cooling fan motor and IPDM E/R
- Harness for open or short between cooling fan motor and ground

>> Repair open circuit or short to ground or short to power in harness or connectors.

4. CHECK COOLING FAN MOTOR

Refer to EC-477, "Component Inspection".

YES or NO

YES >> GO TO 5.
NO >> Replace cooling fan motor.

5. CHECK INTERMITTENT INCIDENT

Perform XX-XX, "*****".

YES or NO

YES >> Replace IPDM E/R. Refer to XX-XX, "*****" (WITH I-KEY) or XX-XX, "*****" (WITHOUT I-KEY).
NO >> Repair or replace harness or connector.

Component Inspection

INFOID:0000000006037458

1. CHECK COOLING FAN MOTOR

1. Turn ignition switch OFF.
2. Disconnect cooling fan motor harness connector.
3. Supply cooling fan motor terminals with battery voltage and check operation.

Cooling fan motor			Operation
Connector	terminals		
	(+)	(–)	
E62	1	4	Cooling fan operates.
	2	3	

Is the inspection result normal?

YES >> INSPECTION END
NO >> Replace cooling fan motor.

ELECTRICAL LOAD SIGNAL

Description

INFOID:0000000006037459

The electrical load signal (Headlamp switch signal, rear window defogger switch signal, etc.) is transferred to ECM through the CAN communication line.

Component Function Check

INFOID:0000000006037460

1.CHECK REAR WINDOW DEFOGGER SWITCH FUNCTION

1. Turn ignition switch ON.
2. Select “DATA MONITOR” mode with CONSULT-III.
3. Select “LOAD SIGNAL” and check indication under the following conditions.

Monitor item	Condition		Indication
LOAD SIGNAL	Rear window defogger switch	ON	ON
		OFF	OFF

Is the inspection result normal?

YES >> GO TO 2.
NO >> Go to EC-478, "Diagnosis Procedure".

2.CHECK LIGHTING SWITCH FUNCTION

Check “LOAD SIGNAL” indication under the following conditions.

Monitor item	Condition		Indication
LOAD SIGNAL	Lighting switch	ON at 2nd position	ON
		OFF	OFF

Is the inspection result normal?

YES >> GO TO 3.
NO >> Go to EC-478, "Diagnosis Procedure".

3.CHECK HEATER FAN CONTROL SWITCH FUNCTION

Select “HEATER FAN SW” and check indication under the following conditions.

Monitor item	Condition		Indication
HEATER FAN SW	Heater fan control switch	ON	ON
		OFF	OFF

Is the inspection result normal?

YES >> INSPECTION END
NO >> Go to EC-478, "Diagnosis Procedure".

Diagnosis Procedure

INFOID:0000000006037461

1.INSPECTION START

Confirm the malfunctioning circuit (rear window defogger, headlamp or heater fan). Refer to EC-478, "Component Function Check".

Which circuit is related to the incident?

Rear window defogger>>GO TO 2
Headlamp>>GO TO 3.
Heater fan>>GO TO 4.

2.CHECK REAR WINDOW DEFOGGER SYSTEM

Refer to XX-XX, "*****".

>> INSPECTION END

3. CHECK HEADLAMP SYSTEM

Refer to XX-XX, "*****".

>> INSPECTION END

4. CHECK HEATER FAN CONTROL SYSTEM

Refer to XX-XX, "*****" (AUTOMATIC AIR CONDITIONING) or XX-XX, "*****" (MANUAL AIR CONDITIONING).

>> INSPECTION END

EVAP CANISTER PURGE VOLUME CONTROL SOLENOID VALVE

Component Function Check

INFOID:0000000005886624

1. CHECK EVAP CANISTER PURGE VOLUME CONTROL SOLENOID VALVE FUNCTION

With CONSULT-III

1. Turn ignition switch OFF.
2. Disconnect the EVAP purge hose from EVAP canister purge volume control solenoid valve (EVAP canister side).
3. Start engine and let it idle.
4. Select “PURG VOL CONT/V” in “ACTIVE TEST” mode wit CONSULT-III.
5. Touch “Qu” and “Qd” on CONSULT-III screen to adjust “PURG VOL C/V” and check vacuum existence under the following conditions.

PURG VOL C/V	Vacuum
100%	Existed
0 %	Not existed

Without CONSULT-III

1. Turn ignition switch OFF.
2. Disconnect the EVAP purge hose from EVAP canister purge volume control solenoid valve (EVAP canister side).
3. Start engine and let it idle for at least 100 seconds.
4. Check vacuum existence under the following conditions.

Condition	Vacuum
At idle	Not existed
About 2,000 rpm	Existed

Is the inspection result normal?

YES >> INSPECTION END
NO >> Go to EC-480, "Diagnosis Procedure".

Diagnosis Procedure

INFOID:0000000005886625

1. CHECK EVAP CANISTER

Refer to XX-XX, "*****".

Is the inspection result normal?

YES >> GO TO 2.
NO >> Repair or replace.

2. CHECK EVAP CANISTER PURGE VOLUME CONTROL SOLENOID VALVE POWER SUPPLY CIRCUIT

1. Turn ignition switch OFF.
2. Disconnect EVAP canister purge volume control solenoid valve harness connector.
3. Turn ignition switch ON.
4. Check the voltage between EVAP canister purge volume control solenoid valve harness connector and ground.

EVAP canister purge volume control solenoid valve		Ground	Voltage
Connector	Terminal		
F32	1	Ground	Battery voltage

Is the inspection result normal?

YES >> GO TO 4.
NO >> GO TO 3.

3. DETECT MALFUNCTIONING PART

Check the following.
- Harness connectors E6, F1
- Harness for open or short between EVAP canister purge volume control solenoid valve and IPDM E/R
- Harness for open or short between EVAP canister purge volume control solenoid valve and ECM

>> Repair open circuit or short to ground or short to power in harness or connectors.

4. CHECK EVAP CANISTER PURGE VOLUME CONTROL SOLENOID VALVE OUTPUT SIGNAL CIRCUIT FOR OPEN AND SHORT

1. Turn ignition switch OFF.
2. Disconnect ECM harness connector.
3. Check the continuity between EVAP canister purge volume control solenoid valve harness connector and ECM harness connector.

EVAP canister purge volume control solenoid valve		ECM		Continuity
Connector	Terminal	Connector	Terminal	
F32	2	F7	9	Existed

4. Also check harness for short to ground and short to power.

Is the inspection result normal?

YES-1 >> With CONSULT-III: GO TO 5.
YES-2 >> Without CONSULT-III: GO TO 6.
NO >> Repair open circuit or short to ground or short to power in harness or connectors.

5. CHECK EVAP CANISTER PURGE VOLUME CONTROL SOLENOID VALVE OPERATION

With CONSULT-III

1. Reconnect all harness connectors disconnected.
2. Start engine.
3. Perform “PURG VOL CONT/V” in “ACTIVE TEST” mode with CONSULT-III. Check that engine speed varies according to the valve opening.

Does engine speed vary according to the valve opening?

YES >> GO TO 7.
NO >> GO TO 6.

6. CHECK EVAP CANISTER PURGE VOLUME CONTROL SOLENOID VALVE

Refer to EC-481, "Component Inspection".

Is the inspection result normal?

YES >> GO TO 7.
NO >> Replace EVAP canister purge volume control solenoid valve.

7. CHECK INTERMITTENT INCIDENT

Refer to XX-XX, "*****".

>> INSPECTION END

Component Inspection

INFOID:0000000005886626

1. CHECK EVAP CANISTER PURGE VOLUME CONTROL SOLENOID VALVE

With CONSULT-III

1. Turn ignition switch OFF.
2. Reconnect all harness connectors disconnected.
3. Disconnect EVAP purge hoses connected to EVAP canister purge volume control solenoid valve.
4. Turn ignition switch ON.
5. Select “PURG VOL CONT/V” in “ACTIVE TEST” mode with CONSULT-III.

6. Touch “Qd” and “Qu” on CONSULT-III screen to adjust “PURG VOL C/V” opening and check air passage continuity of EVAP canister purge volume control solenoid valve under the following conditions.

Condition (PURG VOL C/V value)	Air passage continuity between (A) and (B)
100%	Existed
0%	Not existed

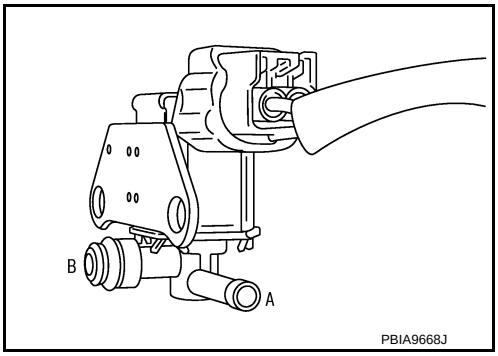

Without CONSULT-III

1. Turn ignition switch OFF.
2. Disconnect EVAP canister purge volume control solenoid valve harness connector.
3. Disconnect EVAP purge hoses connected to EVAP canister purge volume control solenoid valve.
4. Check air passage continuity of EVAP canister purge volume control solenoid valve under the following conditions.

Condition	Air passage continuity between (A) and (B)
12V direct current supply between terminals 1 and 2	Existed
No supply	Not existed

Is the inspection result normal?

YES >> INSPECTION END
NO >> Replace EVAP canister purge volume control solenoid valve.

FUEL INJECTOR

Component Function Check

INFOID:0000000006037462

1. INSPECTION START

Turn ignition switch to START.

Is any cylinder ignited?

YES >> GO TO 2.
NO >> Go to EC-483, "Diagnosis Procedure".

2. CHECK FUEL INJECTOR FUNCTION

With CONSULT-III

1. Start engine.
2. Perform “POWER BALANCE” in “ACTIVE TEST” mode with CONSULT-III.
3. Make sure that each circuit produces a momentary engine speed drop.

Without CONSULT-III

1. Let engine idle.
2. Listen to each fuel injector operating sound.

Clicking noise should be heard.

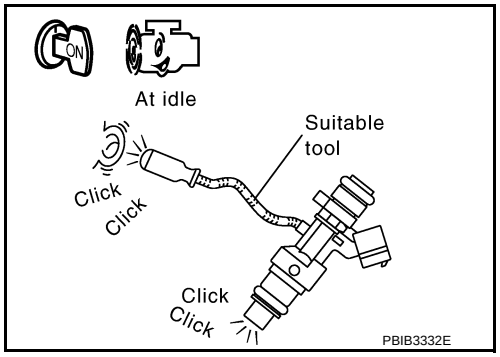

Is the inspection result normal?

YES >> INSPECTION END
NO >> Go to EC-483, "Diagnosis Procedure".

Diagnosis Procedure

INFOID:0000000006037463

1. CHECK FUEL INJECTOR POWER SUPPLY CIRCUIT

1. Turn ignition switch OFF.
2. Disconnect fuel injector harness connector.
3. Turn ignition switch ON.
4. Check the voltage between fuel injector harness connector and ground.

Fuel injector			Ground	Voltage
Cylinder	Connector	Terminal		
1	F37	1	Ground	Battery voltage
2	F38	1		
3	F39	1		
4	F40	1		

Is the inspection result normal?

YES >> GO TO 3.
NO >> GO TO 2.

2. DETECT MALFUNCTIONING PART

Check the following.

- Harness connectors E8, F1
- IPDM E/R connector E15
- 15 A fuse (No. 62)
- Harness for open or short between fuel injector and fuse

>> Repair open circuit or short to ground or short to power in harness or connectors.

3. CHECK FUEL INJECTOR OUTPUT SIGNAL CIRCUIT FOR OPEN AND SHORT

1. Turn ignition switch OFF.
2. Disconnect ECM harness connector.
3. Check the continuity between fuel injector harness connector and ECM harness connector.

Fuel injector			ECM		Continuity
Cylinder	Connector	Terminal	Connector	Terminal	
1	F37	2	F7	31	Existed
2	F38	2		30	
3	F39	2		29	
4	F40	2		25	

4. Also check harness for short to ground and short to power.

Is the inspection result normal?

YES >> GO TO 4.
NO >> Repair open circuit or short to ground or short to power in harness or connectors.

4. CHECK FUEL INJECTOR

Refer to EC-484, "Component Inspection".

Is the inspection result normal?

YES >> GO TO 5.
NO >> Replace malfunctioning fuel injector.

5. CHECK INTERMITTENT INCIDENT

Refer to XX-XX, "*****".

Is the inspection result normal?

YES >> Replace IPDM E/R.
NO >> Repair or replace harness or connectors.

Component Inspection

INFOID:0000000006037464

1. CHECK FUEL INJECTOR

1. Turn ignition switch OFF.
2. Disconnect fuel injector harness connector.
3. Check resistance between fuel injector terminals as follows.

Terminals	Resistance
1 and 2	11.1 - 14.5 Ω [at 10 - 60°C (50 - 140°F)]

Is the inspection result normal?

YES >> INSPECTION END
NO >> Replace malfunctioning fuel injector.

FUEL PUMP

Component Function Check

INFOID:0000000006046395

1. CHECK FUEL PUMP FUNCTION

1. Turn ignition switch ON.
2. Pinch fuel feed hose (1) with two fingers.

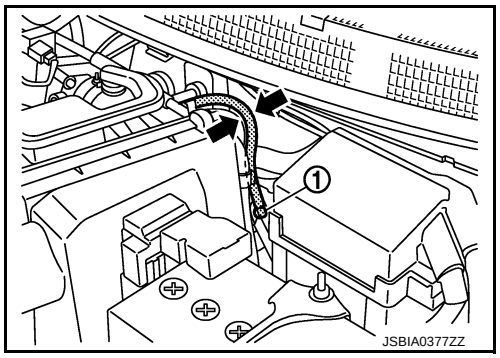

Fuel pressure pulsation should be felt on the fuel feed hose for 1 second after ignition switch is turned ON.

Is the inspection result normal?

YES >> INSPECTION END
NO >> XX-XX, "*****".

Diagnosis Procedure

INFOID:0000000006037615

1. CHECK FUEL PUMP POWER SUPPLY CIRCUIT-I

1. Turn ignition switch OFF.
2. Disconnect ECM harness connector.
3. Turn ignition switch ON.
4. Check the voltage between ECM harness connector and ground.

ECM			Voltage
Connector	Terminal		
	+	–	
F7	23	108	Battery voltage

Is the inspection result normal?

YES >> GO TO 4.
NO >> GO TO 2.

2. CHECK FUEL PUMP POWER SUPPLY CIRCUIT-II

1. Turn ignition switch OFF.
2. Disconnect IPDM E/R harness connector.
3. Check the continuity between IPDM E/R harness connector and ECM harness connector.

ECM		IPDM E/R		Continuity
Connector	Terminal	Connector	Terminal	
F7	23	E12	31	Existed

4. Also check harness for short to ground and short to power.

Is the inspection result normal?

YES >> GO TO 10.
NO >> GO TO 3.

3. DETECT MALFUNCTIONING PART

Check the following.
- Harness or connectors E6, F1
- IPDM E/R connector E12
- Harness for open or short to ground and short power

>> Repair open circuit or short to ground or short to power in harness or connectors.

4. CHECK FUEL PUMP POWER SUPPLY CIRCUIT-III

1. Turn ignition switch OFF.
2. Reconnect all harness connectors disconnected.
3. Disconnect “fuel level sensor unit and fuel pump” harness connector.
4. Turn ignition switch ON.
5. Check voltage between “fuel level sensor unit and fuel pump” harness connector and ground.

Fuel level sensor unit and fuel pump		Ground	Voltage
Connector	Terminal		
B40	4	Ground	Battery voltage should for exist 1 second after ignition switch is turn ON.

Is the inspection result normal?

YES >> GO TO 8.
NO >> GO TO 5.

5. CHECK 15 A FUSE

1. Turn ignition switch OFF.
2. Disconnect 15 A fuse (No. 60) from IPDM E/R.
3. Check 15 A fuse.

Is the inspection result normal?

YES >> GO TO 6.
NO >> Replace fuse.

6. CHECK FUEL PUMP POWER SUPPLY CIRCUIT-IV

1. Disconnect IPDM E/R harness connector.
2. Check the continuity between IPDM E/R harness connector and “fuel level sensor unit and fuel pump” harness connector.

IPDM E/R		Fuel level sensor unit and fuel pump		Continuity
Connector	Terminal	Connector	Terminal	
E14	55	B40	4	Existed

3. Also check harness for short to ground and short to power.

Is the inspection result normal?

YES >> GO TO 10.
NO >> GO TO 7.

7. DETECT MALFUNCTIONING PART

Check the following.
- Harness connectors E105, M77
- Harness connectors B4, M15
- Harness for open or short between IPDM E/R and “fuel level sensor unit and fuel pump”

>> Repair open circuit or short to ground or short to power in harness or connectors.

8. CHECK FUEL PUMP GROUND CIRCUIT

1. Check the continuity between “fuel level sensor unit and fuel pump” and ground.

Fuel level sensor unit and fuel pump		Ground	Continuity
Connector	Terminal		
B40	2	Ground	Existed

2. Also check harness for short to power.

Is the inspection result normal?

YES >> GO TO 9.
NO >> Repair open circuit or short to power in harness or connectors.

9. CHECK FUEL PUMP

Refer to XX-XX, "*****".

Is the inspection result normal?

YES >> GO TO 10.
NO >> Replace “fuel level sensor unit and fuel pump”.

10. CHECK INTERMITTENT INCIDENT

Refer to XX-XX, "*****".

Is the inspection result normal?

YES >> Replace IPDM E/R.
NO >> Repair or replace harness or connectors.

Component Inspection (Fuel pump)

INFOID:0000000006066590

1. CHECK FUEL PUMP

1. Turn ignition switch OFF.
2. Disconnect “fuel level sensor unit and fuel pump (main)” harness connector.
3. Check resistance between “fuel level sensor unit and fuel pump (main)” terminals as follows.

Terminals	Resistance
1 and 3	0.2 - 5.0 Ω [at 25°C (77°F)]

Is the inspection result normal?

YES >> INSPECTION END
NO >> Replace “fuel level sensor unit and fuel pump (main)”

HO2S1

Component Function Check

INFOID:0000000005886633

1. CHECK HEATED OXYGEN SENSOR 1 FUNCTION

With CONSULT-III

1. Start engine and warm it up to normal operating temperature.
2. Select “HO2S1 MNITOR (B1)” in ”DATA MONITOR” mode with CONSULT-III.
3. Keep the engine speed at 2,000 rpm under no load, and make sure that the monitors fluctuates between LEAN and RICH more than five times in 10 seconds.

1 times: RICH → LEAN → RICH

2 times: RICH → LEAN → RICH → LEAN → RICH

cycle	1	2	3	4	5
HO2S1 MNTR (B1)	R-L-R-L-R-L-R-L-R-L-R				

R means HO2S1 MNTR (B1) indicates RICH
L means HO2S1 MNTR (B1) indicates LEAN

SEF217YA

Without CONSULT-III

1. Start engine and warm it up to normal operating temperature.
2. Stop engine and wait at least 10 seconds.
3. Set ECM in Diagnostic test mode - II (Heated oxygen sensor 1 monitor). Refer to EC-346, "Diagnosis Description".
4. Keep the engine speed at 2,000 rpm under no load, and make sure that the MIL comes ON more than five times in 10 seconds.

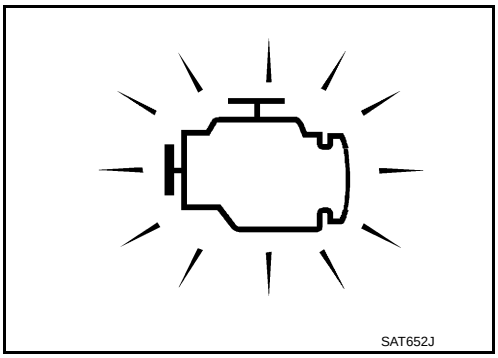

SAT652J

Is the inspection result normal?

YES >> INSPECTION END
NO >> Go to EC-488, "Diagnosis Procedure".

Diagnosis Procedure

INFOID:0000000005886634

1. CHECK GROUND CONNECTION

1. Turn ignition switch OFF.
2. Check ground connection E38. Refer to Ground Inspection in XX-XX, "*****".

Is the inspection result normal?

YES >> GO TO 2.
NO >> Repair or replace ground connection.

2. RETIGHTEN HEATED OXYGEN SENSOR 1

Loosen and retighten the heated oxygen sensor 1. Refer to XX-XX, "*****".

>> GO TO 3.

3. CHECK EXHAUST GAS LEAK

1. Start engine and run it at idle.

2. Listen for an exhaust gas leak before three way catalyst (manifold).

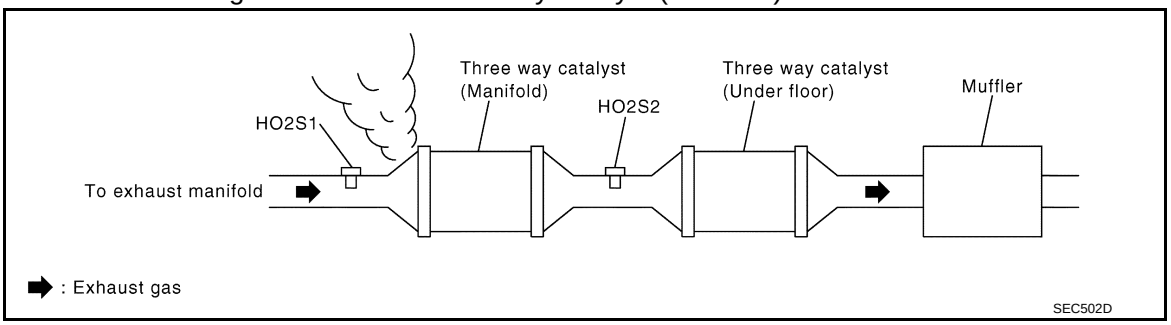

Is exhaust gas leak detected?

YES >> Repair or replace.
NO >> GO TO 4.

4. CHECK FOR INTAKE AIR LEAK

Listen for an intake air leak after the manifold absolute pressure (MAP) sensor.

Is intake air leak detected?

YES >> Repair or replace.
NO >> GO TO 5.

5. CHECK HO2S1 GROUND CIRCUIT FOR OPEN AND SHORT

1. Turn ignition switch OFF.
2. Disconnect heated oxygen sensor 1 harness connector.
3. Disconnect ECM harness connector.
4. Check harness continuity between HO2S1 harness connector and ECM harness connector.

HO2S1		ECM		Continuity
Connector	Terminal	Connector	Terminal	
F46	1	F8	56	existed

5. Also check harness for short to ground and short to power.

Is the inspection result normal?

YES >> GO TO 6.
NO >> Repair open circuit or short to ground or short to power in harness or connectors.

6. CHECK HEATED OXYGEN SENSOR 1 INPUT SIGNAL CIRCUIT FOR OPEN AND SHORT

1. Check the continuity between HO2S1 harness connector and ECM harness connector.

HO2S1		ECM		Continuity
Connector	Terminal	Connector	Terminal	
F46	4	F8	49	Existed

2. Check the continuity between HO2S1 harness connector or ECM harness connector and ground.

HO2S1		ECM		Ground	Continuity
Connector	Terminal	Connector	Terminal		
F46	4	F8	49	Ground	Not existed

3. Also check harness for short to power.

Is the inspection result normal?

YES >> GO TO 7.
NO >> Repair open circuit or short to ground or short to power in harness or connectors.

7. CHECK MANIFOLD ABSOLUTE PRESSURE (MAP) SENSOR

Check manifold absolute pressure (MAP) sensor.
Refer to EC-402, "Component Inspection".

Is the inspection result normal?

YES >> GO TO 8.
NO >> Replace manifold absolute pressure (MAP) sensor.

8. CHECK PCV VALVE

Refer to XX-XX, "*****".

Is the inspection result normal?

YES >> GO TO 9.
NO >> Repair or replace PCV valve.

9. CHECK HEATED OXYGEN SENSOR 1

Perform EC-490, "Component Inspection".

Is the inspection result normal?

YES >> GO TO 10.
NO >> Replace heated oxygen sensor 1.

10. CHECK INTERMITTENT INCIDENT

Refer to XX-XX, "*****".

>> INSPECTION END

Component Inspection

INFOID:0000000005886635

1. INSPECTION START

Do you have CONSULT-III?

Do you have CONSULT-III?

YES >> GO TO 2.
NO >> GO TO 3.

2. CHECK HEATED OXYGEN SENSOR 1

With CONSULT-III

1. Start engine and warm it up to normal operating temperature.
2. Set “POST TRIGGER” to 100% in “DATA MONITOR” mode with CONSULT-III.
3. Select “HO2S1 (B1)” and “HO2S1 MNTR (B1)”.
4. Hold engine speed at 2,000 rpm under no load during the following steps.
5. Touch “RECORD” on CONSULT-III screen.
6. Check the following.

- “HO2S1 MNTR (B1)” in “DATA MONITOR” mode changes from “RICH” to “LEAN” to “RICH” more than 5 times in 10 seconds.
  5 times (cycles) are counted as shown in the figure.
- “HO2S1 (B1)” voltage goes above 0.6 V at least once.
- “HO2S1 (B1)” voltage goes below 0.3 V at least once.
- “HO2S1 (B1)” voltage never exceeds 1.0 V.

cycle	1	2	3	4	5
HO2S1 MNTR (B1)	R-L-R-L-R-L-R-L-R-L-R				

R means HO2S1 MNTR (B1) indicates RICH
L means HO2S1 MNTR (B1) indicates LEAN

SEF217YA

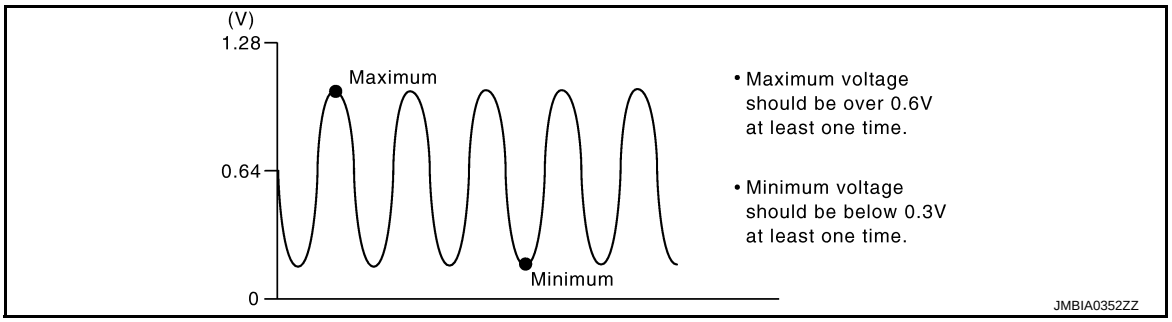

Is the inspection result normal?

YES >> INSPECTION END
NO >> GO TO 4.

3. CHECK HEATED OXYGEN SENSOR 1

Without CONSULT-III

1. Start engine and warm it up to normal operating temperature.
2. Check the voltage between ECM harness connector and ground under the following condition.

ECM			Condition	Voltage
Connector	Terminal			
	+	–		
F8	49 (HO2S1 signal)	56	Engine speed held at 2,000 rpm constant under no load.	• The voltage fluctuates between 0 to 0.3 V and 0.6 to 1.0 V more than 5 times within 10 seconds. • The maximum voltage is over 0.6 V at least 1 time. • The minimum voltage is below 0.3 V at least 1 time. • The voltage never exceeds 1.0 V. 1 time: 0 - 0.3 V → 0.6 - 1.0 V → 0 - 0.3 V 2 times: 0 - 0.3 V → 0.6 - 1.0 V → 0 - 0.3 V → 0.6 - 1.0 V → 0 - 0.3 V

Is the inspection result normal?

YES >> INSPECTION END
NO >> GO TO 4.

4. REPLACE HEATED OXYGEN SENSOR 1

Replace heated oxygen sensor 1.

CAUTION:

- **Discard any heated oxygen sensor which has been dropped from a height of more than 0.5 m (19.7 in) onto a hard surface such as a concrete floor; use a new one.**
- **Before installing new heated oxygen sensor, clean exhaust system threads using Oxygen Sensor Thread Cleaner (commercial service tool) and approved Anti-seize Lubricant (commercial service tool).**

>> INSPECTION END

HO2S1 HEATER

Component Function Check

INFOID:0000000005886636

1. CHECK HEATED OXYGEN SENSOR 2 HEATER FUNCTION

1. Start engine and warm it up to normal operating temperature.
2. Turn ignition switch OFF and wait at least 10 seconds.
3. Set tester prove between ECM harness connector and ground.
4. Start engine and let it idle.
5. Check the voltage under the following conditions.
   Verify that the oscilloscope screen shows the signal waves as shown below.

ECM			Condition	Voltage
Connector	Terminal			
	+	–		
F7	3 (HO2S1 heater signal)	108	At idle	Approximately 2.9 - 8.8 V★ 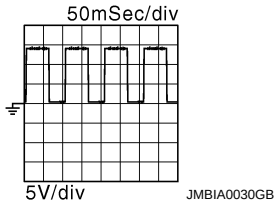
			Engine speed: Above 3,600 rpm	BATTERY VOLTAGE (11 - 14V)

★: Average voltage for pulse signal (Actual pulse signal can be confirmed by oscilloscope.)

Is the inspection result normal?

YES >> INSPECTION END
NO >> Go to EC-492, "Diagnosis Procedure".

Diagnosis Procedure

INFOID:0000000005886637

1. CHECK GROUND CONNECTION

1. Turn ignition switch OFF.
2. Check ground connection E38. Refer to Ground Inspection in XX-XX, "*****".

Is the inspection result normal?

YES >> GO TO 2.
NO >> Repair or replace ground connection.

2. CHECK HO2S1 POWER SUPPLY CIRCUIT

1. Disconnect HO2S1 harness connector.
2. Turn ignition switch ON.
3. Check the voltage between HO2S1 harness connector and ground.

HO2S1		Ground	Voltage
Connector	Terminal		
F46	2	Ground	Battery voltage

Is the inspection result normal?

YES >> GO TO 4.
NO >> GO TO 3.

3. DETECT MALFUNCTIONING PART

Check the following.

- Harness connectors E6, F1
- IPDM connectors E14
- 10 A fuse (No. 61)
- Harness for open or short between HO2S1 and fuse

>> Repair or replace harness or connectors.

4. CHECK HO2S1 HEATER OUTPUT SIGNAL CIRCUIT

1. Turn ignition switch OFF.
2. Disconnect ECM harness connector.
3. Check the continuity between HO2S1 harness connector and ECM harness connector.

HO2S1		ECM		Continuity
Connector	Terminal	Connector	Terminal	
F46	3	F7	3	Existed

4. Also check harness for short to ground and short to power.

Is the inspection result normal?

YES >> GO TO 5.
NO >> Repair open circuit or short to ground or short to power in harness or connectors.

5. CHECK HO2S1 HEATER

Refer to EC-493, "Component Inspection".

Is the inspection result normal?

YES >> GO TO 7.
NO >> GO TO 6.

6. REPLACE HEATED OXYGEN SENSOR 1

Replace heated oxygen sensor 1.

CAUTION:

- **Discard any heated oxygen sensor which has been dropped from a height of more than 0.5 m (19.7 in) onto a hard surface such as a concrete floor; use a new one.**
- **Before installing new heated oxygen sensor, clean exhaust system threads using Oxygen Sensor Thread Cleaner (commercial service tool) and approved Anti-seize Lubricant (commercial service tool).**

>> INSPECTION END

7. CHECK INTERMITTENT INCIDENT

Perform XX-XX, "*****".

>> INSPECTION END

Component Inspection

INFOID:0000000005886638

1. CHECK HEATED OXYGEN SENSOR 1

1. Turn ignition switch OFF.
2. Disconnect heated oxygen sensor 1 harness connector.
3. Check resistance between HO2S1 terminals as follows.

Terminals	Resistance [at 25°C (77°F)]
2 and 3	3.4 - 4.4 Ω
1 and 2, 3, 4	∞ Ω (Continuity should not exist)
4 and 1, 2, 3	

Is the inspection result normal?

YES >> INSPECTION END
NO >> GO TO 2.

2. REPLACE HEATED OXYGEN SENSOR 1

Replace heated oxygen sensor 1.

CAUTION:

- **Discard any heated oxygen sensor which has been dropped from a height of more than 0.5 m (19.7 in) onto a hard surface such as a concrete floor; use a new one.**
- **Before installing new heated oxygen sensor, clean exhaust system threads using Oxygen Sensor Thread Cleaner (commercial service tool) and approved Anti-seize Lubricant (commercial service tool).**

>> INSPECTION END

HO2S2

Component Function Check

INFOID:0000000005886639

1. PERFORM COMPONENT FUNCTION CHECK-I

1. Start engine and warm it up to the normal operating temperature.
2. Turn ignition switch OFF and wait at least 10 seconds.
3. Start engine and keep the engine speed between 3,500 and 4,000 rpm for at least 1 minute under no load.
4. Let engine idle for 1 minute.
5. Check the voltage between ECM harness connector and ground under the following condition.

ECM			Condition	Voltage
Connector	Terminal			
	+	–		
F8	50 (HO2S2 signal)	59	Revving up to 4,000 rpm under no load at least 10 times	The voltage does not remain in the range of 0.2 - 0.4V.

Is the inspection result normal?

YES >> INSPECTION END
NO >> GO TO 2.

2. PERFORM COMPONENT FUNCTION CHECK-II

Check the voltage between ECM harness connector and ground under the following condition.

ECM			Condition	Voltage
Connector	Terminal			
	+	–		
F8	50 (HO2S2 signal)	59	Keeping engine speed at idle for 10 minutes	The voltage does not remain in the range of 0.2 - 0.4V.

Is the inspection result normal?

YES >> INSPECTION END
NO >> GO TO 3.

3. PERFORM COMPONENT FUNCTION CHECK-III

Check the voltage between ECM harness connector and ground under the following condition.

ECM			Condition	Voltage
Connector	Terminal			
	+	–		
F8	50 (HO2S2 signal)	59	Coasting from 80 km/h (50 MPH) in 3rd gear position	The voltage does not remain in the range of 0.2 - 0.4V.

Is the inspection result normal?

YES >> INSPECTION END
NO >> Go to EC-495, "Diagnosis Procedure".

Diagnosis Procedure

INFOID:0000000005886640

1. CHECK GROUND CONNECTION

1. Turn ignition switch OFF.
2. Check ground connection E38. Refer to Ground Inspection in XX-XX, "*****".

Is the inspection result normal?

YES >> GO TO 2.
NO >> Repair or replace ground connection.

2. CHECK HO2S2 GROUND CIRCUIT FOR OPEN AND SHORT

1. Turn ignition switch OFF.
2. Disconnect heated oxygen sensor 2 (HO2S2) harness connector.
3. Disconnect ECM harness connector.
4. Check the continuity between HO2S2 harness connector and ECM harness connector.

HO2S2		ECM		Continuity
Connector	Terminal	Connector	Terminal	
F45	1	F8	59	Existed

5. Also check harness for short to ground and short to power.

Is the inspection result normal?

YES >> GO TO 3.
NO >> Repair open circuit or short to ground or short to power in harness or connectors.

3. CHECK HO2S2 INPUT SIGNAL CIRCUIT FOR OPEN AND SHORT

1. Check the continuity between HO2S2 harness connector and ECM harness connector.

HO2S2		ECM		Continuity
Connector	Terminal	Connector	Terminal	
F45	4	F8	50	Existed

2. Check the continuity between HO2S2 harness connector or ECM harness connector and ground.

HO2S2		ECM		Ground	Continuity
Connector	Terminal	Connector	Terminal		
F45	4	F8	50	Ground	Not existed

3. Also check harness for short to power.

Is the inspection result normal?

YES >> GO TO 4.
NO >> Repair open circuit or short to ground or short to power in harness or connectors.

4. CHECK HEATED OXYGEN SENSOR 2

Refer to XX-XX, "*****".

Is the inspection result normal?

YES >> GO TO 6.
NO >> GO TO 5.

5. REPLACE HEATED OXYGEN SENSOR 2

Replace heated oxygen sensor 2.

CAUTION:

- **Discard any heated oxygen sensor which has been dropped from a height of more than 0.5 m (19.7 in) onto a hard surface such as a concrete floor; use a new one.**
- **Before installing new heated oxygen sensor, clean exhaust system threads using Oxygen Sensor Thread Cleaner (commercial service tool) and approved Anti-seize Lubricant (commercial service tool).**

>> INSPECTION END

6. CHECK INTERMITTENT INCIDENT

Refer to XX-XX, "*****".

>> INSPECTION END

Component Inspection

INFOID:0000000006037468

1. INSPECTION START

Do you have CONSULT-III?

Do you have CONSULT-III?

YES >> GO TO 2.
NO >> GO TO 3.

2. CHECK HEATED OXYGEN SENSOR 2

With CONSULT-III

1. Turn ignition switch ON and select “ENGINE” using CONSULT-III.
2. Select “DATA MONITOR” mode.
3. Start engine and warm it up to the normal operating temperature.
4. Turn ignition switch OFF and wait at least 10 seconds.
5. Start engine and keep the engine speed between 3,500 and 4,000 rpm for at least 1 minute under no load.
6. Let engine idle for 1 minute.
7. Select “FUEL INJECTION” in “ACTIVE TEST” mode, and select “HO2S2 (B1)” as the monitor item with CONSULT-III.
8. Check “HO2S2 (B1)” at idle speed when adjusting “FUEL INJECTION” to ±25%.

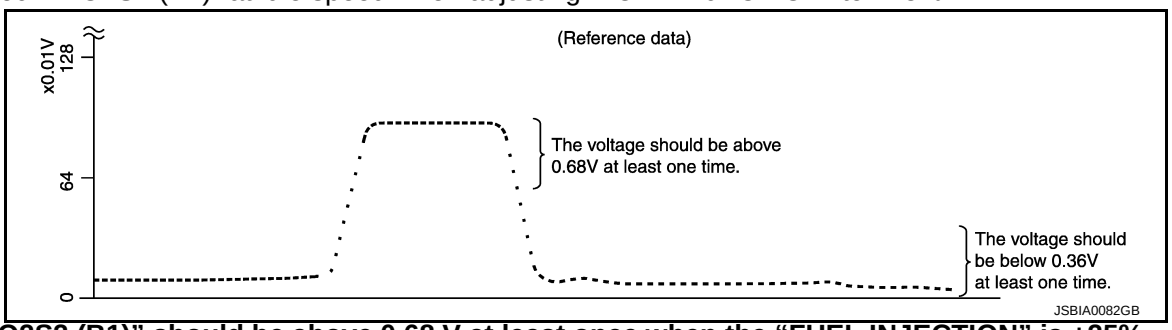

“HO2S2 (B1)” should be above 0.68 V at least once when the “FUEL INJECTION” is +25%.
“HO2S2 (B1)” should be below 0.36 V at least once when the “FUEL INJECTION” is –25%.

Is the inspection result normal?

YES >> INSPECTION END
NO >> GO TO 6.

3. CHECK HEATED OXYGEN SENSOR 2-I

Without CONSULT-III

1. Start engine and warm it up to the normal operating temperature.
2. Turn ignition switch OFF and wait at least 10 seconds.
3. Start engine and keep the engine speed between 3,500 and 4,000 rpm for at least 1 minute under no load.
4. Let engine idle for 1 minute.
5. Check the voltage between ECM harness connector terminals under the following condition.

ECM			Condition	Voltage
Connector	+	–		
	Terminal	Terminal		
F16	50 (HO2S2)	59	Revving up to 4,000 rpm under no load at least 10 times	The voltage should be above 0.68 V at least once during this procedure. The voltage should be below 0.36 V at least once during this procedure.

Is the inspection result normal?

YES >> INSPECTION END
NO >> GO TO 4.

4. CHECK HEATED OXYGEN SENSOR 2-II

Check the voltage between ECM harness connector terminals under the following condition.

ECM			Condition	Voltage
Connector	+	–		
	Terminal	Terminal		
F16	50 (HO2S2)	59	Keeping engine at idle for 10 minutes	The voltage should be above 0.68 V at least once during this procedure. The voltage should be below 0.36 V at least once during this procedure.

Is the inspection result normal?

YES >> INSPECTION END
NO >> GO TO 5.

5. CHECK HEATED OXYGEN SENSOR 2-III

Check the voltage between ECM harness connector terminals under the following condition.

ECM			Condition	Voltage
Connector	+	–		
	Terminal	Terminal		
F16	50 (HO2S2)	59	Coasting from 80 km/h (50 MPH) in 4th gear position	The voltage should be above 0.68 V at least once during this procedure. The voltage should be below 0.36 V at least once during this procedure.

Is the inspection result normal?

YES >> INSPECTION END
NO >> Replace malfunctioning heated oxygen sensor 2. Refer to EX-5, "Exploded View".

HO2S2 HEATER

Component Function Check

INFOID:0000000005886642

1. CHECK HEATED OXYGEN SENSOR 2 HRATER FUNCTION

1. Start engine and warm it up to the normal operating temperature.
2. Turn ignition switch OFF and wait at least 10 seconds.
3. Start engine and let it idle.
4. Check the voltage between ECM harness connector and ground under the following condition.

ECM			Condition	Voltage signal
Connector	Terminal +	Terminal –		
F7	5 (HO2S2 heater signal)	108	At idle	Approx. 10V★ 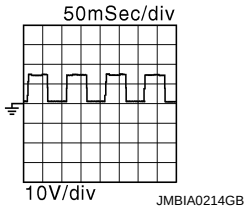
			Engine speed: Above 3,900 rpm	BATTERY VOLTAGE (11 - 14V)

★: Average voltage for pulse signal (Actual pulse signal can be confirmed by oscilloscope.)

Is the inspection result normal?

YES >> INSPECTION END
NO >> Go to EC-499, "Diagnosis Procedure".

Diagnosis Procedure

INFOID:0000000005886643

1. CHECK GROUND CONNECTION

1. Turn ignition switch OFF.
2. Check ground connection E21. Refer to Ground Inspection in XX-XX, "*****".

Is the inspection result normal?

YES >> GO TO 2.
NO >> Repair or replace ground connection.

2. CHECK HO2S2 HEATER POWER SUPPLY CIRCUIT

1. Disconnect HO2S2 harness connector.
2. Turn ignition switch ON.
3. Check the voltage between HO2S2 harness connector and ground.

HO2S2		Ground	Voltage
Connector	Terminal		
F45	2	Ground	Battery voltage

Is the inspection result normal?

YES >> GO TO 4.
NO >> GO TO 3.

3. DETECT MALFUNCTIONING PART

Check the following.
- Harness connectors E6, F1
- IPDM E/R connector E14
- 10 A fuse (No. 61)

- Harness for open or short between heated oxygen sensor 2 and IPDM E/R

>> Repair open circuit or short to ground or short to power in harness or connectors.

4. CHECK HO2S2 HEATER OUTPUT SIGNAL CIRCUIT FOR OPEN AND SHORT

1. Turn ignition switch OFF.
2. Disconnect ECM harness connector.
3. Check the continuity between HO2S2 harness connector and ECM harness connector.

HO2S2		ECM		Continuity
Connector	Terminal	Connector	Terminal	
F45	3	F7	5	Existed

4. Also check harness for short to ground and short to power.

Is the inspection result normal?

YES >> GO TO 5.
NO >> Repair open circuit or short to ground or short to power in harness or connectors.

5. CHECK HO2S2 HEATER

Refer to EC-500, "Component Inspection".

Is the inspection result normal?

YES >> GO TO 7.
NO >> GO TO 6.

6. REPLACE HEATED OXYGEN SENSOR 2

Replace heated oxygen sensor 2.

CAUTION:

- **Discard any heated oxygen sensor which has been dropped from a height of more than 0.5 m (19.7 in) onto a hard surface such as a concrete floor; use a new one.**
- **Before installing new heated oxygen sensor, clean exhaust system threads using Oxygen Sensor Thread Cleaner (commercial service tool) and approved Anti-seize Lubricant (commercial service tool).**

>> INSPECTION END

7. CHECK INTERMITTENT INCIDENT

Refer to XX-XX, "*****".

>> INSPECTION END

Component Inspection

INFOID:0000000005886644

1. CHECK HEATED OXYGEN SENSOR 2 HEATER

1. Turn ignition switch OFF.
2. Disconnect heated oxygen sensor 2 harness connector.
3. Check resistance between HO2S2 terminals as follows.

Terminals	Resistance [at 25°C (77°F)]
2 and 3	3.3 - 4.4 Ω
1 and 2, 3, 4	∞ Ω (Continuity should not exist)
4 and 1, 2, 3	

Is the inspection result normal?

YES >> INSPECTION END
NO >> GO TO 2.

2. REPLACE HEATED OXYGEN SENSOR 2

Replace heated oxygen sensor 2.

CAUTION:

- **Discard any heated oxygen sensor which has been dropped from a height of more than 0.5 m (19.7 in) onto a hard surface such as a concrete floor; use a new one.**
- **Before installing new heated oxygen sensor, clean exhaust system threads using Oxygen Sensor Thread Cleaner (commercial service tool) and approved Anti-seize Lubricant (commercial service tool).**

>> INSPECTION END

IAT SENSOR

Component Function Check

INFOID:0000000005886645

1. CHECK INTAKE AIR TEMPERATURE SENSOR FUNCTION

1. Turn ignition switch ON.
2. Check the voltage between ECM harness connector and ground.

ECM			Voltage
Connector	Terminal		
	+	–	
F8	46	55	Approx. 0 - 4.8 V

Is the inspection result normal?

YES >> INSPECTION END
NO >> Go to EC-502, "Diagnosis Procedure".

Diagnosis Procedure

INFOID:0000000005886646

1. CHECK GROUND CONNECTION

1. Turn ignition switch OFF.
2. Check ground connection E38. Refer to Ground Inspection in XX-XX, "*****".

Is the inspection result normal?

YES >> GO TO 2.
NO >> Repair or replace ground connection.

2. CHECK INTAKE AIR TEMPERATURE SENSOR POWER SUPPLY CIRCUIT

1. Disconnect manifold absolute pressure (MAP) sensor (with intake air temperature sensor) harness connector.
2. Turn ignition switch ON.
3. Check the voltage between manifold absolute pressure (MAP) sensor harness connector and ground.

MAF sensor		Ground	Voltage
Connector	Terminal		
F4	2	Ground	Approx. 5 V

Is the inspection result normal?

YES >> GO TO 3.
NO >> Repair open circuit or short to ground or short to power in harness or connectors.

3. CHECK INTAKE AIR TEMPERATURE SENSOR GROUND CIRCUIT FOR OPEN AND SHORT

1. Turn ignition switch OFF.
2. Disconnect ECM harness connector.
3. Check the continuity between manifold absolute pressure (MAP) sensor harness connector and ECM harness connector.

MAF sensor		ECM		Continuity
Connector	Terminal	Connector	Terminal	
F4	1	F8	55	Existed

4. Also check harness for short to ground and short to power.

Is the inspection result normal?

YES >> GO TO 4.
NO >> Repair open circuit or short to ground or short to power in harness or connectors.

4. CHECK INTAKE AIR TEMPERATURE SENSOR

Refer to EC-503, "Component Inspection".

Is the inspection result normal?

YES >> GO TO 5.
NO >> Replace manifold absolute pressure (MAP) sensor (with intake air temperature sensor).

5. CHECK INTERMITTENT INCIDENT

Refer to XX-XX, "*****".

>> INSPECTION END

Component Inspection

INFOID:0000000005886647

1. CHECK INTAKE AIR TEMPERATURE SENSOR

1. Turn ignition switch OFF.
2. Disconnect manifold absolute pressure (MAP) sensor harness connector.
3. Check resistance between manifold absolute pressure (MAP) sensor terminals as follows.

Terminals	Condition		Resistance
1 and 2	Temperature [°C (°F)]	25 (77)	1.800 - 2.200 kΩ

Is the inspection result normal?

YES >> INSPECTION END
NO >> Replace manifold absolute pressure (MAP) sensor (with intake air temperature sensor).

IGNITION SIGNAL

Component Function Check

INFOID:0000000006037473

1. INSPECTION START

Turn ignition switch OFF, and restart engine.

Does the engine start?

YES-1 >> With CONSULT-III: GO TO 2.
YES-2 >> Without CONSULT-III: GO TO 3.
NO >> Go to EC-504, "Diagnosis Procedure".

2. IGNITION SIGNAL FUNCTION

With CONSULT-III

1. Perform “POWER BALANCE” in “ACTIVE TEST” mode with CONSULT-III.
2. Make sure that each circuit produces a momentary engine speed drop.

Is the inspection result normal?

YES >> INSPECTION END
NO >> Go to EC-504, "Diagnosis Procedure".

3. IGNITION SIGNAL FUNCTION

Without CONSULT-III

1. Let engine idle.
2. Check the voltage signal between ECM harness connector and ground with an oscilloscope.

ECM			Voltage signal
Connector	+	–	
	Terminal	Terminal	
F7	17	108	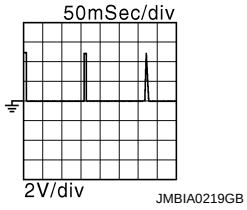
	18		
	21		
	22		

NOTE:
The pulse cycle changes depending on rpm at idle.

Is the inspection result normal?

YES >> INSPECTION END
NO >> Go to EC-504, "Diagnosis Procedure".

Diagnosis Procedure

INFOID:0000000006037474

1. CHECK IGNITION COIL POWER SUPPLY CIRCUIT-I

1. Turn ignition switch OFF, wait at least 10 seconds and then turn ON.
2. Check the voltage between ECM harness connector and ground.

ECM			Voltage
Connector	+	–	
	Terminal	Terminal	
E16	105	108	Battery voltage

Is the inspection result normal?

YES >> GO TO 2.
NO >> Go to EC-123, "Diagnosis Procedure".

2. CHECK IGNITION COIL POWER SUPPLY CIRCUIT-II

1. Turn ignition switch OFF.
2. Disconnect condenser harness connector.
3. Turn ignition switch ON.
4. Check the voltage between condenser harness connector and ground.

Condenser		Ground	Voltage
Connector	Terminal		
F13	1	Ground	Battery voltage

Is the inspection result normal?

YES >> GO TO 5.
NO >> GO TO 3.

3. CHECK IGNITION COIL POWER SUPPLY CIRCUIT-III

1. Turn ignition switch OFF.
2. Disconnect IPDM E/R harness connector E11.
3. Check the continuity between IPDM E/R harness connector and condenser harness connector.

IPDM E/R		Condenser		Continuity
Connector	Terminal	Connector	Terminal	
E14	44	F13	1	Existed

4. Also check harness for short to ground and short to power.

Is the inspection result normal?

YES >> GO TO 11.
NO >> GO TO 4.

4. DETECT MALFUNCTIONING PART

Check the following.
- Harness connectors E8, F1
- Harness for open or short between IPDM E/R and condenser

>> Repair open circuit or short to ground or short to power in harness or connectors.

5. CHECK CONDENSER GROUND CIRCUIT FOR OPEN AND SHORT

1. Turn ignition switch OFF.
2. Check the continuity between condenser harness connector and ground.

Condenser		Ground	Continuity
Connector	Terminal		
F13	2	Ground	Existed

3. Also check harness for short to power.

Is the inspection result normal?

YES >> GO TO 6.
NO >> Repair open circuit or short to ground or short to power in harness or connectors.

6. CHECK CONDENSER

Refer to EC-508, "Component Inspection (Condenser)"

Is the inspection result normal?

YES >> GO TO 7.
NO >> Replace condenser.

7. CHECK IGNITION COIL POWER SUPPLY CIRCUIT-V

1. Reconnect all harness connectors disconnected.

2. Disconnect ignition coil harness connector.
3. Turn ignition switch ON.
4. Check the voltage between ignition coil harness connector and ground.

Ignition coil			Ground	Voltage
Cylinder	Connector	Terminal		
1	F33	3	Ground	Battery voltage
2	F34	3		
3	F35	3		
4	F36	3		

Is the inspection result normal?

YES >> GO TO 8.
NO >> Repair open circuit or short to ground or short to power in harness or connectors.

8. CHECK IGNITION COIL GROUND CIRCUIT FOR OPEN AND SHORT

1. Turn ignition switch OFF.
2. Check the continuity between ignition coil harness connector and ground.

Ignition coil			Ground	Continuity
Cylinder	Connector	Terminal		
1	F33	2	Ground	Existed
2	F34	2		
3	F35	2		
4	F36	2		

3. Also check harness for short to power.

Is the inspection result normal?

YES >> GO TO 9.
NO >> Repair open circuit or short to power in harness or connectors.

9. CHECK IGNITION COIL OUTPUT SIGNAL CIRCUIT FOR OPEN AND SHORT

1. Disconnect ECM harness connector.
2. Check the continuity between ECM harness connector and ignition coil harness connector.

Ignition coil			ECM		Continuity
Cylinder	Connector	Terminal	Connector	Terminal	
1	F33	1	F7	17	Existed
2	F34	1		18	
3	F35	1		22	
4	F36	1		21	

3. Also check harness for short to ground and short to power.

Is the inspection result normal?

YES >> GO TO 10.
NO >> Repair open circuit or short to ground or short to power in harness or connectors.

10. CHECK IGNITION COIL WITH POWER TRANSISTOR

Refer to EC-507, "Component Inspection (Ignition Coil with Power Transistor)".

Is the inspection result normal?

YES >> GO TO 11.
NO >> Replace malfunctioning ignition coil with power transistor.

11. CHECK INTERMITTENT INCIDENT

Refer to XX-XX, "*****".

>> INSPECTION END

Component Inspection (Ignition Coil with Power Transistor)

INFOID:0000000006037475

1. CHECK IGNITION COIL WITH POWER TRANSISTOR-I

1. Turn ignition switch OFF.
2. Disconnect ignition coil harness connector.
3. Check resistance between ignition coil terminals as follows.

Terminals	Resistance
1 and 2	Except 0 or ∞ Ω [at 25°C (77°F)]
1 and 3	Except 0 Ω [at 25°C (77°F)]
2 and 3	

Is the inspection result normal?

YES >> GO TO 2.
NO >> Replace malfunctioning ignition coil with power transistor.

2. CHECK IGNITION COIL WITH POWER TRANSISTOR-II

CAUTION:
Do the following procedure in the place where ventilation is good without the combustible.

1. Turn ignition switch OFF.
2. Reconnect all harness connectors disconnected.
3. Remove fuel pump fuse in IPDM E/R to release fuel pressure.
   NOTE:
   Do not use CONSULT-III to release fuel pressure, or fuel pressure applies again during the following procedure.
4. Start engine.
5. After engine stalls, crank it two or three times to release all fuel pressure.
6. Turn ignition switch OFF.
7. Remove all ignition coil harness connectors to avoid the electrical discharge from the ignition coils.
8. Remove ignition coil and spark plug of the cylinder to be checked.
9. Crank engine for 5 seconds or more to remove combustion gas in the cylinder.
10. Connect spark plug and harness connector to ignition coil.
11. Fix ignition coil using a rope etc. with gap of 13 - 17 mm (0.52 - 0.66 in) between the edge of the spark plug and grounded metal portion as shown in the figure.
12. Crank engine for about three seconds, and check whether spark is generated between the spark plug and the grounded metal portion.

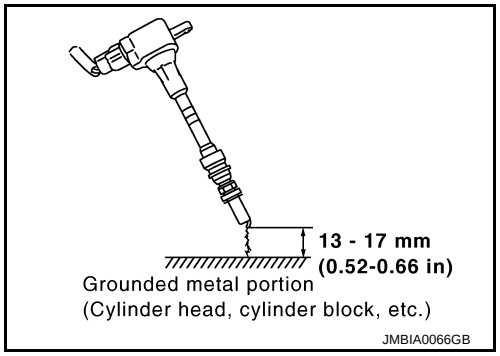

Spark should be generated.

CAUTION:
- **Do not approach to the spark plug and the ignition coil within 50 cm (19.7 in). Be careful not to get an electrical shock while checking, because the electrical discharge voltage becomes 20 kV or more.**
- **It might cause to damage the ignition coil if the gap of more than 17 mm (0.66 in) is taken.**

NOTE:
When the gap is less than 13 mm (0.52 in), the spark might be generated even if the coil is malfunctioning.

Is the inspection result normal?

YES >> INSPECTION END
NO >> Replace malfunctioning ignition coil with power transistor.

Component Inspection (Condenser)

INFOID:0000000006037476

1. CHECK CONDENSER

1. Turn ignition switch OFF.
2. Disconnect condenser harness connector.
3. Check resistance between condenser terminals as follows.

Terminals	Resistance [at 25°C (77°F)]
1 and 2	Above 1 MΩ

Is the inspection result normal?

YES >> INSPECTION END
NO >> Replace condenser.

MALFUNCTION INDICATOR LAMP

Component Function Check

INFOID:0000000006037477

1.CHECK MIL FUNCTION

1. Turn ignition switch ON.
2. Make sure that MIL lights up.

Is the inspection result normal?

YES >> INSPECTION END
NO >> Go to EC-509, "Diagnosis Procedure".

Diagnosis Procedure

INFOID:0000000006037478

1.CHECK DTC

Check that DTC U1000 or U1001 is not displayed.

Is DTC detected?

YES >> Perform trouble diagnosis for DTC U1000, U1001. Refer to EC-126, "Diagnosis Procedure".
NO >> GO TO 2.

2.CHECK COMBINATION METER

Refer to XX-XX, "*****".

Is DTC detected?

YES >> Perform troubleshooting relevant to DTC indicated.
NO >> GO TO 3.

3.CHECK INTERMITTENT INCIDENT

Refer to XX-XX, "*****".

Is the inspection result normal?

YES >> Replace combination meter.
NO >> Repair or replace harness or connectors.

REFRIGERANT PRESSURE SENSOR

Component Function Check

INFOID:0000000006037479

1. CHECK REFRIGERANT PRESSURE SENSOR OVERALL FUNCTION

1. Start engine and warm it up to normal operating temperature.
2. Turn A/C switch and blower fan switch ON.
3. Check the voltage between ECM harness connector and ground.

ECM			Voltage
Connector	+	–	
	Terminal	Terminal	
F8	41 (Refrigerant pressure sensor signal)	48	1.0 - 4.0V

Is the inspection result normal?

YES >> INSPECTION END
NO >> Go to EC-510, "Diagnosis Procedure".

Diagnosis Procedure

INFOID:0000000006037480

1. CHECK GROUND CONNECTION

1. Turn A/C switch and blower fan switch OFF.
2. Stop engine.
3. Turn ignition switch OFF.
4. Check ground connection E38. Refer to Ground Inspection in XX-XX, "*****".

Is the inspection result normal?

YES >> GO TO 2.
NO >> Repair or replace ground connection.

2. CHECK REFRIGERANT PRESSURE SENSOR POWER SUPPLY CIRCUIT

1. Disconnect refrigerant pressure sensor harness connector.
2. Turn ignition switch ON.
3. Check the voltage between refrigerant pressure sensor harness connector and ground.

Refrigerant pressure sensor		Ground	Voltage
Connector	Terminal		
E49	3	Ground	Approx. 5 V

Is the inspection result normal?

YES >> GO TO 4.
NO >> GO TO 3.

3. DETECT MALFUNCTIONING PART

Check the following.
- Harness connectors E8, F1
- Harness for open or short between ECM and refrigerant pressure sensor

>> Repair open circuit or short to ground or short to power in harness or connectors.

4. CHECK REFRIGERANT PRESSURE SENSOR GROUND CIRCUIT FOR OPEN AND SHORT

1. Turn ignition switch OFF.
2. Disconnect ECM harness connector.
3. Check the continuity between refrigerant pressure sensor harness connector and ECM harness connector.

Refrigerant pressure sensor		ECM		Continuity
Connector	Terminal	Connector	Terminal	
E49	1	F8	48	Existed

4. Also check harness for short to ground and short to power.

Is the inspection result normal?

YES >> GO TO 6.
NO >> GO TO 5.

5. DETECT MALFUNCTIONING PART

Check the following.
- Harness connectors E8, F1
- Harness for open or short between ECM and refrigerant pressure sensor

>> Repair open circuit or short to ground or short to power in harness or connectors.

6. CHECK REFRIGERANT PRESSURE SENSOR INPUT SIGNAL CIRCUIT FOR OPEN AND SHORT

1. Check the continuity between ECM harness connector and refrigerant pressure sensor harness connector.

Refrigerant pressure sensor		ECM		Continuity
Connector	Terminal	Connector	Terminal	
E49	2	F8	41	Existed

2. Also check harness for short to ground and short to power.

Is the inspection result normal?

YES >> GO TO 8.
NO >> GO TO 7.

7. DETECT MALFUNCTIONING PART

Check the following.
- Harness connectors E8, F1
- Harness for open or short between ECM and refrigerant pressure sensor

>> Repair open circuit or short to ground or short to power in harness or connectors.

8. CHECK INTERMITTENT INCIDENT

Refer to XX-XX, "*****".

Is the inspection result normal?

YES >> Replace refrigerant pressure sensor.
NO >> Repair or replace.

VSS

Description

INFOID:0000000006037485

The vehicle speed signal is sent to the combination meter from the “ABS actuator and electric unit (control unit)” by CAN communication line. The combination meter then sends a signal to the ECM by CAN communication line.

Component Function Check

INFOID:0000000005886657

1.INSPECTION START

Do you have CONSULT-III?

Do you have CONSULT-III?

YES >> GO TO 2.
NO >> GO TO 3.

2.CHECK VEHICLE SPEED FUNCTION

With CONSULT-III

1. Turn ignition switch OFF.
2. Lift up the vehicle.
3. Start engine and let it idle.
4. Select “VHCL SPEED SE” in “DATA MONITOR” mode with CONSULT-III.
5. Check “VHCL SPEED SE” indication when rotating wheels with suitable gear position.

“VHCL SPEED SE” indication should exceed 10 km/h (6 MPH).

Is the inspection result normal?

YES >> INSPECTION END
NO >> Go to EC-512, "Diagnosis Procedure".

3.CHECK VEHICLE SPEED FUNCTION

Without CONSULT-III

1. Lift up drive wheels.
2. Start engine.
3. Check vehicle speed of speedometer.
   The vehicle speed should be able to exceed 10 km/h (6 MPH) when rotating wheels with suitable gear position.

Is the inspection result normal?

YES >> INSPECTION END
NO >> Go to EC-512, "Diagnosis Procedure".

Diagnosis Procedure

INFOID:0000000005886658

1.CHECK DTC WITH “ABS ACTUATOR AND ELECTRIC UNIT (CONTROL UNIT)”

Refer to XX-XX, "*****" (ABS) or XX-XX, "*****" (ESP/TCS/ABS).

Is the inspection result normal?

YES >> GO TO 2.
NO >> Repair or replace.

2.CHECK COMBINATION METER FUNCTION

Refer to XX-XX, "*****".

>> INSPECTION END

SYMPTOM DIAGNOSIS

ENGINE CONTROL SYSTEM SYMPTOMS

Symptom Table

INFOID:0000000005886659

SYSTEM — BASIC ENGINE CONTROL SYSTEM

		SYMPTOM													Reference page
		HARD/NO START/RESTART (EXCP. HA)	ENGINE STALL	HESITATION/SURGING/FLAT SPOT	SPARK KNOCK/DETONATION	LACK OF POWER/POOR ACCELERATION	HIGH IDLE/LOW IDLE	ROUGH IDLE/HUNTING	IDLING VIBRATION	SLOW/NO RETURN TO IDLE	OVERHEATS/WATER TEMPERATURE HIGH	EXCESSIVE FUEL CONSUMPTION	EXCESSIVE OIL CONSUMPTION	BATTERY DEAD (UNDER CHARGE)	
Warranty symptom code		AA	AB	AC	AD	AE	AF	AG	AH	AJ	AK	AL	AM	HA	
Fuel	Fuel pump circuit	1	1	2	3	2		2	2			3		2	XX-XX, "*****"
	Fuel pressure regulator system	3	3	4	4	4	4	4	4	4		4			XX-XX, "*****"
	Fuel injector circuit	1	1	2	3	2		2	2			2			XX-XX, "*****"
	Evaporative emission system	3	3	4	4	4	4	4	4	4		4			XX-XX, "*****"
Air	Positive crankcase ventilation system	3	3	4	4	4	4	4	4	4		4	1		XX-XX, "*****"
	Incorrect idle speed adjustment						1	1	1	1		1			EC-382, "Work Procedure"
	Electric throttle control actuator	1	1	2	3	3	2	2	2	2		2		2	EC-436, "DTC Logic" EC-438, "DTC Logic" EC-445, "DTC Logic"
Ignition	Incorrect ignition timing adjustment	3	3	1	1	1		1	1			1			EC-382, "Work Procedure"
	Ignition signal circuit	1	1	2	2	2		2	2			2			XX-XX, "*****"
Main power supply and ground circuit		2	2	3	3	3		3	3		2	3			XX-XX, "*****"

	SYMPTOM													Reference page
	HARD/NO START/RESTART (EXCP. HA)	ENGINE STALL	HESITATION/SURGING/FLAT SPOT	SPARK KNOCK/DETONATION	LACK OF POWER/POOR ACCELERATION	HIGH IDLE/LOW IDLE	ROUGH IDLE/HUNTING	IDLING VIBRATION	SLOW/NO RETURN TO IDLE	OVERHEATS/WATER TEMPERATURE HIGH	EXCESSIVE FUEL CONSUMPTION	EXCESSIVE OIL CONSUMPTION	BATTERY DEAD (UNDER CHARGE)	
Warranty symptom code	AA	AB	AC	AD	AE	AF	AG	AH	AJ	AK	AL	AM	HA	
Manifold absolute pressure (MAP) sensor circuit	1			2										XX-XX, "*****"
Engine coolant temperature sensor circuit						3			3					XX-XX, "*****"
Heated oxygen sensor 1 circuit		1	2	3	2		2	2			2			EC-409, "DTC Logic" EC-413, "DTC Logic"
Throttle position sensor circuit						2			2					XX-XX, "*****" XX-XX, "*****" XX-XX, "*****" XX-XX, "*****" XX-XX, "*****"
Accelerator pedal position sensor circuit			3	2	1									XX-XX, "*****" XX-XX, "*****" XX-XX, "*****"
Knock sensor circuit			2								3			XX-XX, "*****"
Crankshaft position sensor (POS) circuit	2	2												XX-XX, "*****"
Camshaft position sensor (PHASE) circuit	3	2												XX-XX, "*****"
Vehicle speed signal circuit		2	3		3						3			EC-512, "Diagnosis Procedure"
ECM	2	2	3	3	3	3	3	3	3	3	3			EC-433, "DTC Logic" EC-435, "DTC Logic"

	SYMPTOM													Reference page
	HARD/NO START/RESTART (EXCP. HA)	ENGINE STALL	HESITATION/SURGING/FLAT SPOT	SPARK KNOCK/DETONATION	LACK OF POWER/POOR ACCELERATION	HIGH IDLE/LOW IDLE	ROUGH IDLE/HUNTING	IDLING VIBRATION	SLOW/NO RETURN TO IDLE	OVERHEATS/WATER TEMPERATURE HIGH	EXCESSIVE FUEL CONSUMPTION	EXCESSIVE OIL CONSUMPTION	BATTERY DEAD (UNDER CHARGE)	
Warranty symptom code	AA	AB	AC	AD	AE	AF	AG	AH	AJ	AK	AL	AM	HA	
Intake valve timing control solenoid valve circuit		3	2		1	3	2	2	3		3			XX-XX, "*****"
PNP signal circuit			3		3		3	3			3			EC-458, "DTC Logic"
Refrigerant pressure sensor circuit		2				3			3		4			XX-XX, "*****"
Electrical load signal circuit							3							XX-XX, "*****"
Air conditioner circuit	2	2	3	3	3	3	3	3	3		3		2	XX-XX, "*****"
ABS actuator and electric unit (control unit)			4											XX-XX, "*****" XX-XX, "*****"

1 - 6: The numbers refer to the order of inspection.

(continued on next table)

SYSTEM — ENGINE MECHANICAL & OTHER

		SYMPTOM													Reference page
		HARD/NO START/RESTART (EXCP. HA)	ENGINE STALL	HESITATION/SURGING/FLAT SPOT	SPARK KNOCK/DETONATION	LACK OF POWER/POOR ACCELERATION	HIGH IDLE/LOW IDLE	ROUGH IDLE/HUNTING	IDLING VIBRATION	SLOW/NO RETURN TO IDLE	OVERHEATS/WATER TEMPERATURE HIGH	EXCESSIVE FUEL CONSUMPTION	EXCESSIVE OIL CONSUMPTION	BATTERY DEAD (UNDER CHARGE)	
Warranty symptom code		AA	AB	AC	AD	AE	AF	AG	AH	AJ	AK	AL	AM	HA	
Fuel	Fuel tank	5	5												XX-XX, "*****"
	Fuel piping			5	5	5		5	5			5			XX-XX, "*****"
	Vapor lock														—
	Valve deposit	5		5	5	5		5	5			5			—
	Poor fuel (Heavy weight gasoline, Low octane)														—
Air	Air duct	5	5	5	5	5	5	5	5	5		5			XX-XX, "*****"
	Air cleaner														XX-XX, "*****"
	Air leakage from air duct [Manifold absolute pressure (MAP) sensor — electric throttle control actuator]														XX-XX, "*****"
	Electric throttle control actuator														XX-XX, "*****"
	Air leakage from intake manifold/ Collector/Gasket														XX-XX, "*****"
Cranking	Battery	1	1	1		1		1	1			1		1	XX-XX, "*****"
	Generator circuit														XX-XX, "*****"
	Starter circuit	3													XX-XX, "*****"
	Signal plate	6													XX-XX, "*****"
	PNP signal	4													XX-XX, "*****"

		SYMPTOM													Reference page
		HARD/NO START/RESTART (EXCP. HA)	ENGINE STALL	HESITATION/SURGING/FLAT SPOT	SPARK KNOCK/DETONATION	LACK OF POWER/POOR ACCELERATION	HIGH IDLE/LOW IDLE	ROUGH IDLE/HUNTING	IDLING VIBRATION	SLOW/NO RETURN TO IDLE	OVERHEATS/WATER TEMPERATURE HIGH	EXCESSIVE FUEL CONSUMPTION	EXCESSIVE OIL CONSUMPTION	BATTERY DEAD (UNDER CHARGE)	
Warranty symptom code		AA	AB	AC	AD	AE	AF	AG	AH	AJ	AK	AL	AM	HA	
Engine	Cylinder head	5	5	5	5	5		5	5			5			XX-XX, "*****"
	Cylinder head gasket										4		3		
	Cylinder block	6	6	6	6	6		6	6			6	4		XX-XX, "*****"
	Piston														
	Piston ring														
	Connecting rod														
	Bearing														
	Crankshaft														
Valve mecha-nism	Timing chain	5	5	5	5	5		5	5			5			XX-XX, "*****"
	Camshaft														XX-XX, "*****"
	Intake valve timing control														XX-XX, "*****"
	Intake valve												3		XX-XX, "*****"
	Exhaust valve														
Exhaust	Exhaust manifold/Tube/Muffler/Gasket	5	5	5	5	5		5	5			5			XX-XX, "*****"
	Three way catalyst														XX-XX, "*****"
Lubrica-tion	Oil pan/Oil strainer/Oil pump/Oil filter/Oil gallery/Oil cooler	5	5	5	5	5		5	5			5			XX-XX, "*****"
	Oil level (Low)/Filthy oil														XX-XX, "*****"

		SYMPTOM													Reference page
		HARD/NO START/RESTART (EXCP. HA)	ENGINE STALL	HESITATION/SURGING/FLAT SPOT	SPARK KNOCK/DETONATION	LACK OF POWER/POOR ACCELERATION	HIGH IDLE/LOW IDLE	ROUGH IDLE/HUNTING	IDLING VIBRATION	SLOW/NO RETURN TO IDLE	OVERHEATS/WATER TEMPERATURE HIGH	EXCESSIVE FUEL CONSUMPTION	EXCESSIVE OIL CONSUMPTION	BATTERY DEAD (UNDER CHARGE)	
Warranty symptom code		AA	AB	AC	AD	AE	AF	AG	AH	AJ	AK	AL	AM	HA	
Cooling	Radiator/Hose/Radiator filler cap	5	5	5	5	5		5	5		4	5			XX-XX, "*****" XX-XX, "*****"
	Thermostat									5					XX-XX, "*****"
	Water pump														XX-XX, "*****"
	Water gallery														XX-XX, "*****"
	Cooling fan									5					XX-XX, "*****"
	Coolant level (Low)/Contaminated coolant														XX-XX, "*****"
NATS (NISSAN Vehicle Immobilizer System)		1	1												XX-XX, "*****" XX-XX, "*****"

1 - 6: The numbers refer to the order of inspection.

NORMAL OPERATING CONDITION

Description

INFOID:0000000006037486

FUEL CUT CONTROL (AT NO LOAD AND HIGH ENGINE SPEED)

If the engine speed is above 2,400 rpm under no load (for example, the shift lever position is neutral and engine speed is over 2,400 rpm) fuel will be cut off after some time. The exact time when the fuel is cut off varies based on engine speed.

Fuel cut will be operated until the engine speed reaches 2,000 rpm, then fuel cut will be cancelled.

NOTE:

This function is different from deceleration control listed under Multiport Fuel Injection (MFI) System, XX-XX, "*****".

PERIODIC MAINTENANCE

IDLE SPEED

Inspection

INFOID:0000000005886661

1.CHECK IDLE SPEED

With CONSULT-III
Check idle speed in “DATA MONITOR” mode with CONSULT-III.

Without CONSULT-III
Check idle speed by installing the pulse type tachometer clamp on the high-tension wire which installed between No.1 ignition coil and No.1 spark plug.

>> INSPECTION END

IGNITION TIMING

Inspection

INFOID:0000000006037487

1. CHECK IGNITION TIMING

1. Attach timing light (A) to loop wire (1) as shown.

   ⇦ : Vehicle front

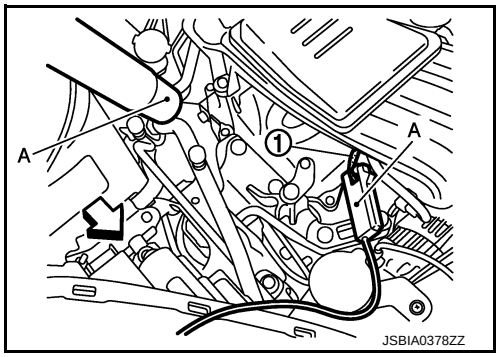

2. Check ignition timing.

   1 : Timing indicator

   >> INSPECTION END

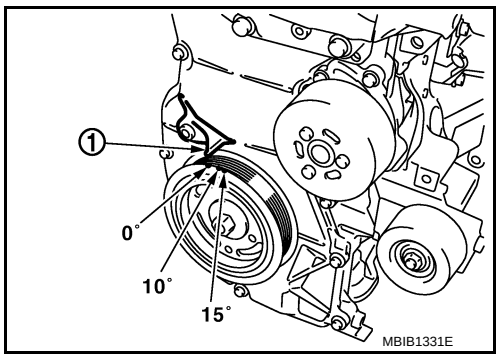

EVAPORATIVE EMISSION SYSTEM

Inspection

INFOID:0000000006037488

1. Visually inspect EVAP vapor lines for improper attachment and for cracks, damage, loose connections, chafing and deterioration.
2. Check EVAP canister as follows:

a. Block port (A). Orally blow air through port (B). Check that air flows freely through port (C).

b. Block port (B). Orally blow air through port (A). Check that air flows freely through port (C).

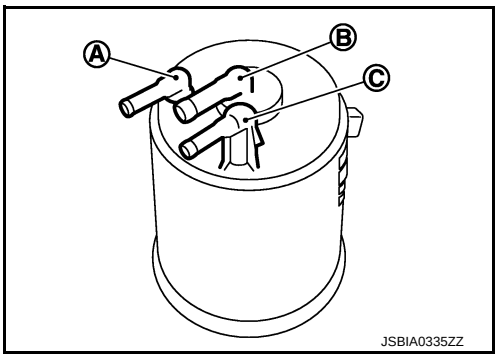

3. Inspect fuel tank filler cap vacuum relief valve for clogging, sticking, etc.

a. Wipe clean valve housing.

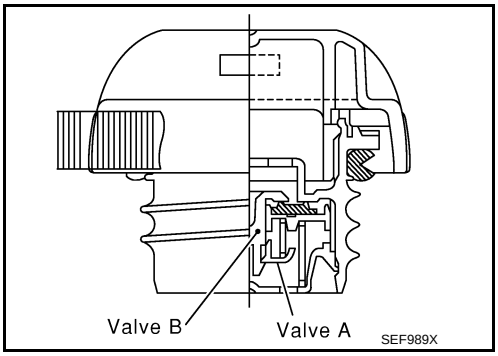

b. Check valve opening pressure and vacuum.

Pressure:	15.3 - 20.0 kPa (0.153 - 0.200 bar, 0.156 - 0.204 kg/cm^2, 2.22 - 2.90 psi)
Vacuum:	–6.0 to –3.4 kPa (–0.06 bar to –-0.034bar, –0.061 to –0.035 kg/cm^2, –0.87 to –0.49 psi)

c. If out of specification, replace fuel filler cap as an assembly.

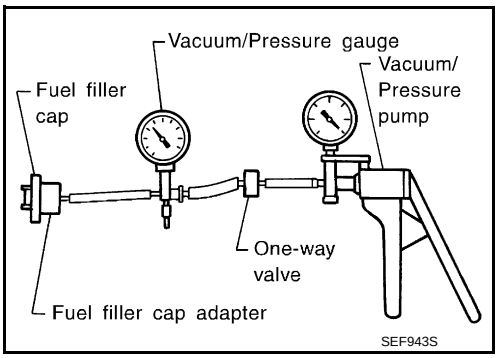

POSITIVE CRANKCASE VENTILATION

Inspection

INFOID:0000000006037489

1. CHECK PCV VALVE

With engine running at idle, remove PCV valve from rocker cover. A properly working valve makes a hissing noise as air passes through it. A strong vacuum should be felt immediately when a finger is placed over valve inlet.

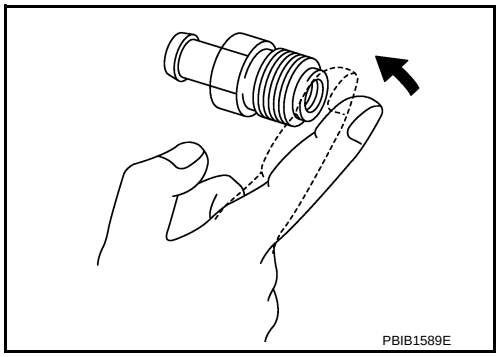

Is the inspection result normal?

YES >> INSPECTION END
NO >> Replace PCV valve.

REMOVAL AND INSTALLATION

ECM

Exploded View

INFOID:0000000006037491

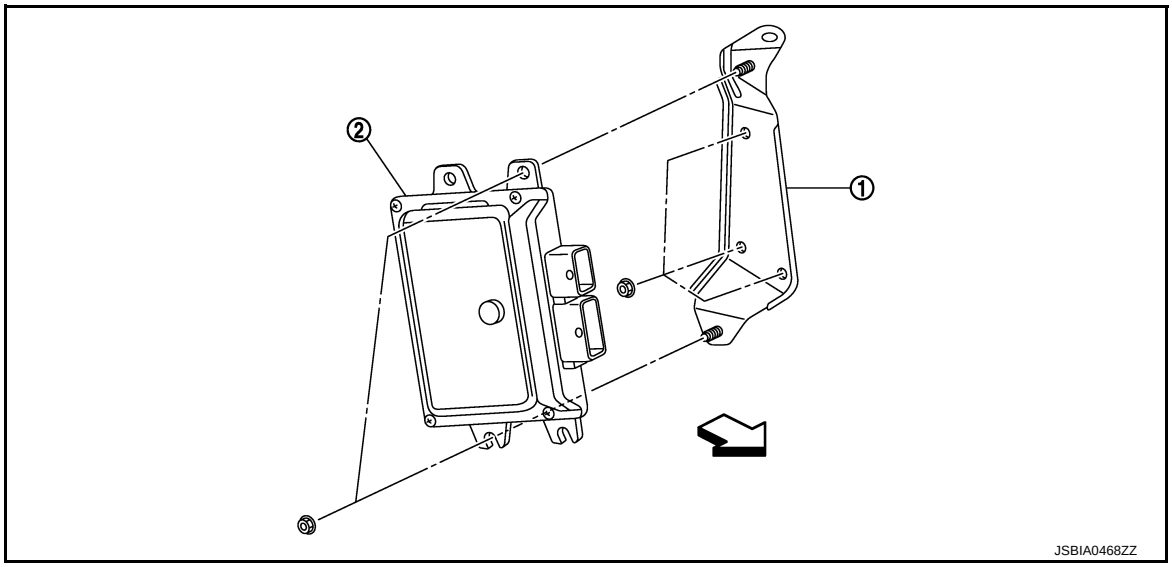

1. ECM bracket
2. ECM

⇦ : Vehicle front

Removal and Installation

INFOID:0000000006037492

REMOVAL

1. Remove battery. Refer to PG-143, "Exploded View".
2. Remove IPDM E/R. Refer to PCS-28, "Exploded View" (WITH I-KEY) or PCS-52, "Exploded View" (WITHOUT I-KEY).
3. Remove mounting nut (A) and bolts (B).
4. Disconnect harness connectors, and then remove IPDM E/R cover (1).

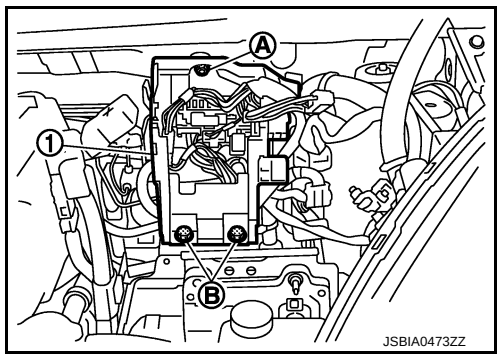

5. Disconnect ECM harness connectors.
6. Remove ECM mounting nuts.
7. Remove ECM from ECM bracket.

INSTALLATION

Install in the reverse order of removal.

CAUTION:

Must be perform additional service when replacing ECM. Refer to EC-103, "Work Procedure".

EVAP CANISTER

Hydraulic Layout

INFOID:0000000006037493

EVAPORATIVE EMISSION LINE DRAWING

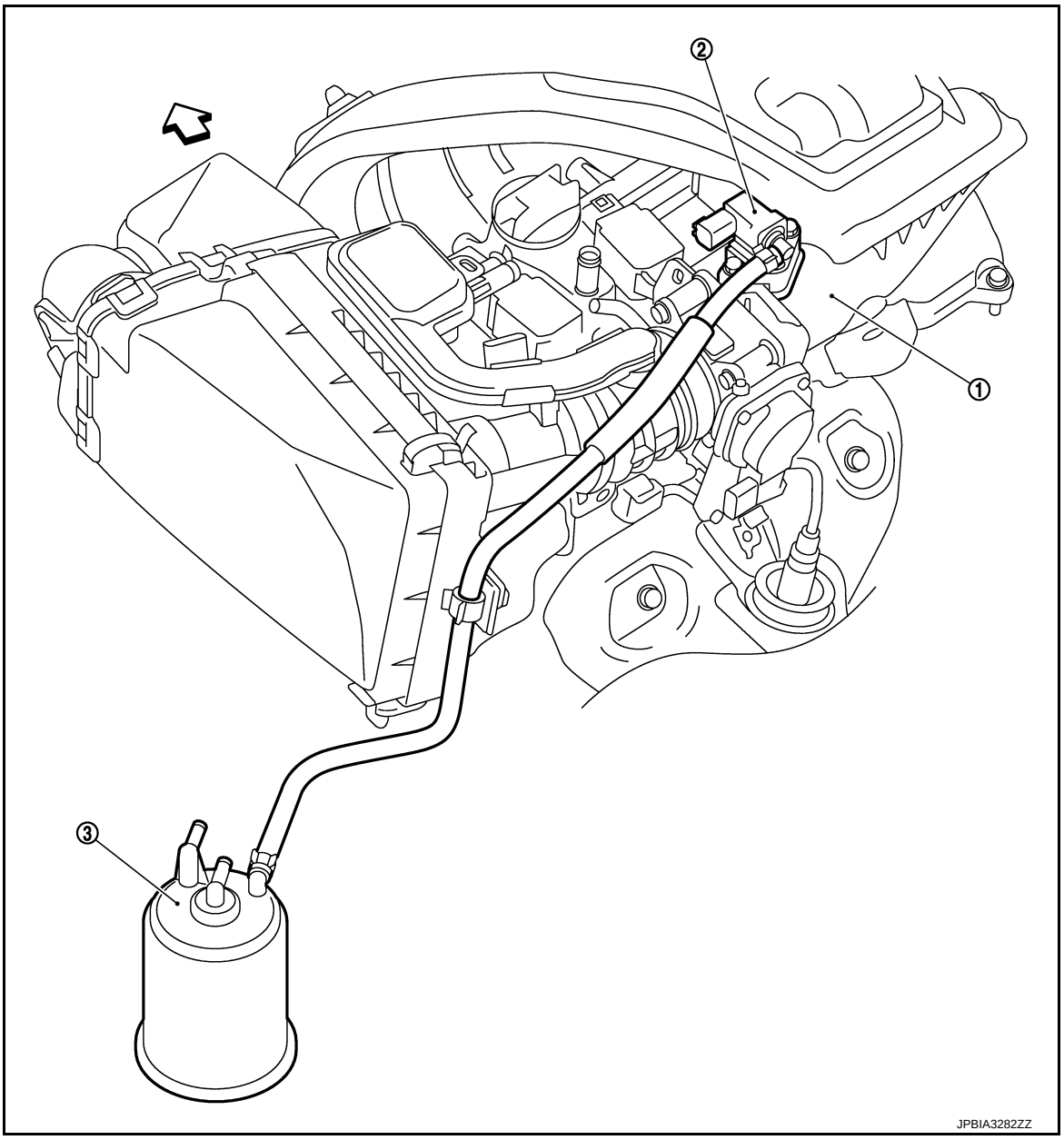

1. Intake manifold collector
2. EVAP canister purge volume control solenoid valve
3. EVAP canister

⇦ : Vehicle front

NOTE:
Do not use soapy water or any type of solvent while installing vacuum hose or purge hoses.

FUEL PUMP CONTROL MODULE

Removal and Installation

INFOID:0000000006037494

REMOVAL

1. Pull up passenger side floor carpet. Refer to XX-XX, "*****".
2. Disconnect fuel pump control module (FPCM) connector.
3. Remove fuel pump control module (FPCM) fixing bolts.
4. Remove fuel pump control module (FPCM).

INSTALLATION

Install in the reverse order of removal.

SERVICE DATA AND SPECIFICATIONS (SDS)

SERVICE DATA AND SPECIFICATIONS (SDS)

Idle Speed

INFOID:0000000006037495

Condition	Specification
No load* (in Neutral position)	750 ± 50 rpm

*: Under the following conditions

- A/C switch: OFF
- Electric load: OFF (Lights, heater fan & rear window defogger)
- Steering wheel: Kept in straight-ahead position

Ignition Timing

INFOID:0000000006037496

Condition	Specification
No load* (in Neutral position)	12 ±2°BTDC

*: Under the following conditions

- A/C switch: OFF
- Electric load: OFF (Lights, heater fan & rear window defogger)
- Steering wheel: Kept in straight-ahead position

SECTION EM
ENGINE MECHANICAL

CONTENTS

HR12DE

PRECAUTION 3

PRECAUTIONS 3
Precaution for Procedure without Cowl Top Cover.....3
Precaution Necessary for Steering Wheel Rotation after Battery Disconnect 3
Precaution for Supplemental Restraint System (SRS) "AIR BAG" and "SEAT BELT PRE-TENSIONER" 3
Draining Engine Coolant 4
Disconnecting Fuel Piping 4
Removal and Disassembly 4
Inspection, Repair and Replacement 4
Assembly and Installation 4
Parts Requiring Angle Tightening 4
Liquid Gasket 5

PREPARATION 7

PREPARATION 7
Special Service Tools 7
Commercial Service Tools 8

BASIC INSPECTION 11

CAMSHAFT VALVE CLEARANCE 11
Inspection and Adjustment 11

COMPRESSION PRESSURE 14
Inspection 14

SYMPTOM DIAGNOSIS 16

NOISE, VIBRATION AND HARSHNESS (NVH) TROUBLESHOOTING 16
NVH troubleshooting Chart 16

PERIODIC MAINTENANCE 18

DRIVE BELT 18
Checking 18
Tension Adjustment 18
Removal and Installation 19

AIR CLEANER FILTER 21
Exploded View 21
Removal and Installation 21

SPARK PLUG 22
Removal and Installation 22
Inspection 22

REMOVAL AND INSTALLATION 23

DRIVE BELT IDLER PULLEY 23
Removal and Installation 23

AIR CLEANER AND AIR DUCT 24
Exploded View 24
Removal and Installation 24
Inspection 25

EGR SYSTEM 26
Exploded View 26
Removal and Installation 26

INTAKE MANIFOLD 28

WITHOUT EGR CONTROL VALVE 28
WITHOUT EGR CONTROL VALVE : Exploded View 28
WITHOUT EGR CONTROL VALVE : Removal and Installation 28

WITH EGR CONTROL VALVE 29
WITH EGR CONTROL VALVE : Exploded View 29
WITH EGR CONTROL VALVE : Removal and Installation 30

EXHAUST MANIFOLD 32
Exploded View 32
Removal and Installation 32
Inspection 33

OIL PAN (LOWER) 34
Exploded View 34
Removal and Installation 34
Inspection 36

FUEL INJECTOR AND FUEL TUBE 37
Exploded View 37
Removal and Installation 37
Inspection 40

IGNITION COIL, SPARK PLUG AND ROCKER COVER 41
Exploded View 41
Removal and Installation 41

TIMING CHAIN 43
Exploded View 43
Removal and Installation 43
Inspection 51

CAMSHAFT 53
Exploded View 53
Removal and Installation 53
Inspection 64

OIL SEAL 69

VALVE OIL SEAL 69
VALVE OIL SEAL : Removal and Installation 69

FRONT OIL SEAL 69
FRONT OIL SEAL : Removal and Installation 70

REAR OIL SEAL 70
REAR OIL SEAL : Removal and Installation 70

CYLINDER HEAD 72
Exploded View 72
Removal and Installation 73
Disassembly and Assembly 74
Inspection 76

UNIT REMOVAL AND INSTALLATION 79

ENGINE ASSEMBLY 79
Exploded View 79
Removal and Installation 79
Inspection 82

UNIT DISASSEMBLY AND ASSEMBLY ... 84

OIL PAN (UPPER) 84
Exploded View 84

CYLINDER BLOCK 85
Exploded View 85

HOW TO SELECT PISTON AND BEARING ... 87
Description 87
Connecting Rod Bearing 87
Main Bearing 89

SERVICE DATA AND SPECIFICATIONS (SDS) 92

SERVICE DATA AND SPECIFICATIONS (SDS) 92
General Specification 92
Drive Belt 92
Spark Plug 93
Exhaust Manifold 93
Camshaft 93
Cylinder head 95
Cylinder Block 97
Main Bearing 99
Connecting Rod Bearing 100

PRECAUTION

PRECAUTIONS

Precaution for Procedure without Cowl Top Cover

INFOID:0000000005988153

When performing the procedure after removing cowl top cover, cover the lower end of windshield with urethane, etc.

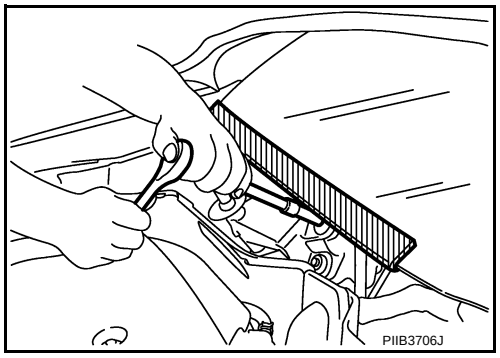

Precaution Necessary for Steering Wheel Rotation after Battery Disconnect

INFOID:0000000005988154

NOTE:
- Before removing and installing any control units, first turn the push-button ignition switch to the LOCK position, then disconnect both battery cables.
- After finishing work, confirm that all control unit connectors are connected properly, then re-connect both battery cables.
- Always use CONSULT-III to perform self-diagnosis as a part of each function inspection after finishing work. If a DTC is detected, perform trouble diagnosis according to self-diagnosis results.

For vehicle with steering lock unit, if the battery is disconnected or discharged, the steering wheel will lock and cannot be turned.
If turning the steering wheel is required with the battery disconnected or discharged, follow the operation procedure below before starting the repair operation.

OPERATION PROCEDURE

1. Connect both battery cables.
   NOTE:
   Supply power using jumper cables if battery is discharged.
2. Turn the push-button ignition switch to ACC position.
   (At this time, the steering lock will be released.)
3. Disconnect both battery cables. The steering lock will remain released with both battery cables disconnected and the steering wheel can be turned.
4. Perform the necessary repair operation.
5. When the repair work is completed, re-connect both battery cables. With the brake pedal released, turn the push-button ignition switch from ACC position to ON position, then to LOCK position. (The steering wheel will lock when the push-button ignition switch is turned to LOCK position.)
6. Perform self-diagnosis check of all control units using CONSULT-III.

Precaution for Supplemental Restraint System (SRS) "AIR BAG" and "SEAT BELT PRE-TENSIONER"

INFOID:0000000006046375

The Supplemental Restraint System such as “AIR BAG” and “SEAT BELT PRE-TENSIONER”, used along with a front seat belt, helps to reduce the risk or severity of injury to the driver and front passenger for certain types of collision. Information necessary to service the system safely is included in the “SRS AIR BAG” and “SEAT BELT” of this Service Manual.

WARNING:
- **To avoid rendering the SRS inoperative, which could increase the risk of personal injury or death in the event of a collision which would result in air bag inflation, all maintenance must be performed by an authorized NISSAN/INFINITI dealer.**

- **Improper maintenance, including incorrect removal and installation of the SRS, can lead to personal injury caused by unintentional activation of the system. For removal of Spiral Cable and Air Bag Module, see the "SRS AIR BAG".**
- **Do not use electrical test equipment on any circuit related to the SRS unless instructed to in this Service Manual. SRS wiring harnesses can be identified by yellow and/or orange harnesses or harness connectors.**

PRECAUTIONS WHEN USING POWER TOOLS (AIR OR ELECTRIC) AND HAMMERS

WARNING:

- **When working near the Air Bag Diagnosis Sensor Unit or other Air Bag System sensors with the ignition ON or engine running, DO NOT use air or electric power tools or strike near the sensor(s) with a hammer. Heavy vibration could activate the sensor(s) and deploy the air bag(s), possibly causing serious injury.**
- **When using air or electric power tools or hammers, always switch the ignition OFF, disconnect the battery, and wait at least 3 minutes before performing any service.**

Draining Engine Coolant

INFOID:0000000005988156

Drain engine coolant and engine oil when the engine is cooled.

Disconnecting Fuel Piping

INFOID:0000000005988157

- Before starting work, check no fire or spark producing items are in the work area.
- Release fuel pressure before disconnecting and disassembly.
- After disconnecting pipes, plug openings to stop fuel leakage.

Removal and Disassembly

INFOID:0000000005988158

- When instructed to use SST, use specified tools. Always be careful to work safely, avoid forceful or uninstructed operations.
- Exercise maximum care to avoid damage to mating or sliding surfaces.
- Dowel pins are used for several parts alignment. When replacing and reassembling parts with dowel pins, check that dowel pins are installed in the original position.
- Cover openings of engine system with a tape or equivalent, if necessary, to seal out foreign materials.
- Mark and arrange disassembly parts in an organized way for easy troubleshooting and reassembly.
- When loosening nuts and bolts, as a basic rule, start with the one furthest outside, then the one diagonally opposite, and so on. If the order of loosening is specified, do exactly as specified. Power tools may be used in the step.

Inspection, Repair and Replacement

INFOID:0000000005988159

Before repairing or replacing, thoroughly inspect parts. Inspect new replacement parts in the same way, and replace if necessary.

Assembly and Installation

INFOID:0000000005988160

- Use torque wrench to tighten bolts or nuts to specification.
- When tightening nuts and bolts, as a basic rule, equally tighten in several different steps starting with the ones in center, then ones on inside and outside diagonally in this order. If the order of tightening is specified, do exactly as specified.
- Replace with new gasket, packing, oil seal or O-ring.
- Thoroughly wash, clean, and air-blow each part. Carefully check engine oil or engine coolant passages for any restriction and blockage.
- Avoid damaging sliding or mating surfaces. Completely remove foreign materials such as cloth lint or dust. Before assembly, oil sliding surfaces well.
- Release air within route when refilling after draining engine coolant.
- After repairing, start the engine and increase engine speed to check engine coolant, fuel, engine oil, and exhaust gases for leakage.

Parts Requiring Angle Tightening

INFOID:0000000005988161

- Use the angle wrench [SST: KV10112100] for the final tightening of the following engine parts:
- Camshaft sprocket (INT) bolt

- Cylinder head bolts
- Main bearing cap bolts
- Connecting rod cap bolts
- Crankshaft pulley bolt (No the angle wrench is required as bolt flange is provided with notches for angle tightening)

• Do not use a torque value for final tightening.
• The torque value for these parts are for a preliminary step.
• Ensure thread and seat surfaces are clean and coated with engine oil.

Liquid Gasket

INFOID:0000000005988162

REMOVAL OF LIQUID GASKET SEALING

• After removing mounting nuts and bolts, separate the mating surface using the seal cutter [SST: KV10111100] (A) and remove old liquid gasket sealing.
CAUTION:
Be careful not to damage the mating surfaces.
• Tap the seal cutter [SST: KV10111100] to insert it (B), and then slide it (C) by tapping on the side as shown in the figure.
• In areas where the seal cutter [SST: KV10111100] is difficult to use, lightly tap the parts using a plastic hammer to remove it.
CAUTION:
If for some unavoidable reason tool such as a screwdriver is used, be careful not to damage the mating surfaces.

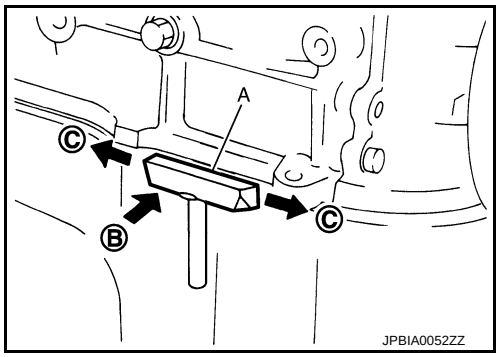

LIQUID GASKET APPLICATION PROCEDURE

1. Using a scraper (A), remove old liquid gasket adhering to the liquid gasket application surface and the mating surface.
   • Remove liquid gasket completely from the groove of the liquid gasket application surface, mounting bolts, and bolt holes.
2. Wipe the liquid gasket application surface and the mating surface with white gasoline (lighting and heating use) to remove adhering moisture, grease and foreign materials.

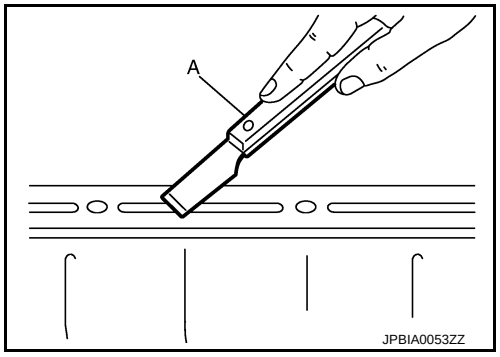

3. Attach liquid gasket tube to the tube presser (commercial service tool).
   Use Genuine Liquid Gasket or equivalent.
4. Apply liquid gasket without gaps to the specified location according to the specified dimensions.
   • If there is a groove for liquid gasket application, apply liquid gasket to the groove.

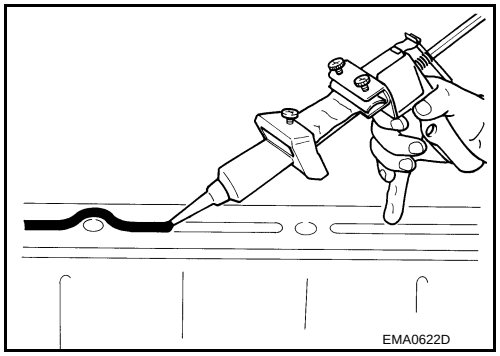

- As for bolt holes (B), normally apply liquid gasket inside the holes. Occasionally, it should be applied outside the holes. Check to read the text of this manual.

  A : Groove

  ⇦ : Inside

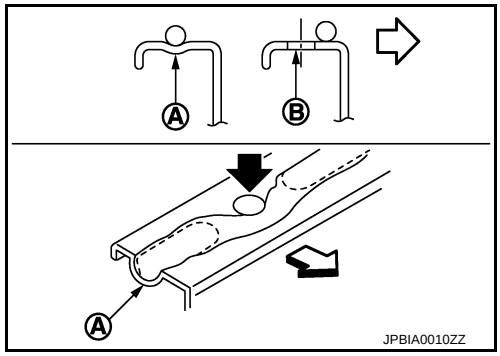

- Within five minutes of liquid gasket application, install the mating component.
- If liquid gasket protrudes, wipe it off immediately.
- Do not retighten mounting bolts or nuts after the installation.
- After 30 minutes or more have passed from the installation, fill engine oil and engine coolant.

CAUTION:

If there are specific instructions in this manual, observe them.

PREPARATION

PREPARATION

Special Service Tools

INFOID:0000000005988163

Tool number Tool name	Description
KV10111100 Seal cutter 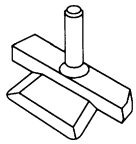 S-NT046	Removing oil pan (upper and lower) etc.
KV10116200 Valve spring compressor 1. KV10115900 Attachment 2. KV10109220 Adapter 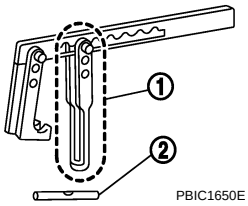 PBIC1650E	Disassembling and assembling valve mechanism Part (1) is a component of KV10116200, but Part (2) is not so.
KV10112100 Angle wrench 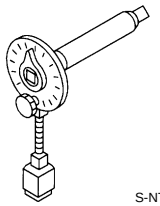 S-NT014	Tightening bolts for main bearing cap, cylinder head, etc.
KV10117100 Heated oxygen sensor wrench 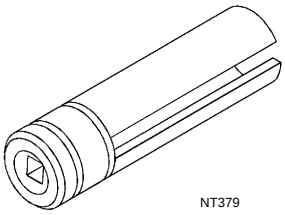 NT379	Loosening or tightening air fuel ratio sensor 1 **For 22 mm (0.87 in) width hexagon nut**
KV10107902 Valve oil seal puller 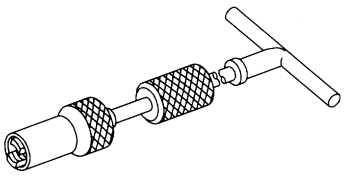 NT011	Removing valve oil seal
KV10115600 Valve oil seal drift 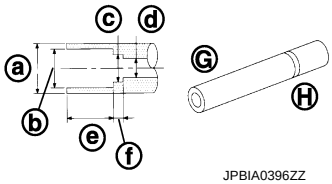 JPBIA0396ZZ	Installing valve oil seal **Use side A (G).** **a: 20 (0.79) dia.** **d: 8 (0.31) dia.** **b: 13 (0.51) dia.** **e: 10.7 (0.421)** **c: 10.3 (0.406) dia.** **f: 5 (0.20)** **H: Side B** Unit: mm (in)

Tool number Tool name	Description
EM03470000 Piston ring compressor 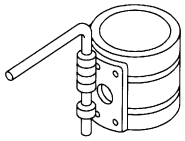 S-NT044	Installing piston assembly into cylinder bore
ST16610001 Pilot bushing puller 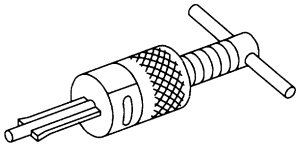 S-NT045	Removing pilot converter
KV11103000 Pulley puller 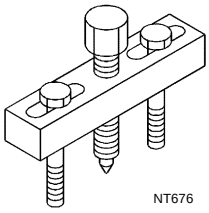 NT676	Removing crankshaft pulley
KV11105210 Stopper plate 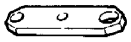 ZZA0009D	Fixing drive plate

Commercial Service Tools

INFOID:0000000005988164

Tool name	Description
Spark plug wrench 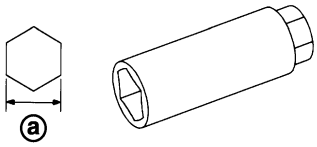 JPBIA0399ZZ	Removing and installing spark plug a: 14 mm (0.55 in)
Pulley holder ZZA1010D	Crankshaft pulley removing and installing

Tool name	Description
Valve seat cutter set 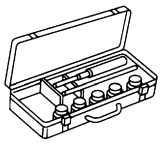 S-NT048	Finishing valve seat dimensions
Piston ring expander 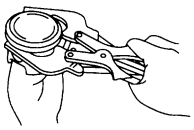 S-NT030	Removing and installing piston ring
Valve guide drift 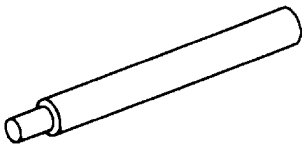 PBIC4012E	Removing and installing valve guide
Valve guide reamer 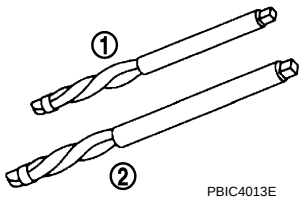 PBIC4013E	1: Reaming valve guide inner hole 2: Reaming hole for oversize valve guide
Oxygen sensor thread cleaner 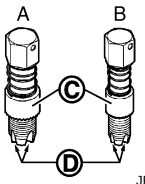 JPBIA0238ZZ	Reconditioning the exhaust system threads before installing a new air fuel ratio sensor (Use with anti-seize lubricant shown below.) **A: [18 mm (0.71 in) dia.] for zirconia heated oxygen sensor** **B: [12 mm (0.47 in) dia.] for titania heated oxygen sensor** C: Mating surface shave cylinder D: Flutes
Anti-seize lubricant (Permatex 133AR or equivalent meeting MIL specification MIL-A-907) 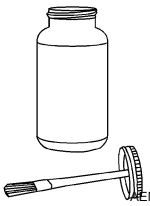 JEM489	Lubricating oxygen sensor thread cleaning tool when reconditioning exhaust system threads

Tool name	Description
Manual lift table caddy 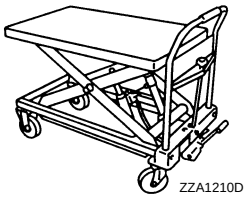 ZZA1210D	Removing and installing engine
Tube presser 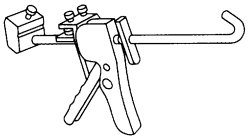 S-NT052	Pressing the tube of liquid gasket

BASIC INSPECTION

CAMSHAFT VALVE CLEARANCE

Inspection and Adjustment

INFOID:0000000005988165

INSPECTION

Perform inspection as follows after removal, installation or replacement of camshaft or valve-related parts, or if there is unusual engine conditions regarding valve clearance.

1. Remove rocker cover. Refer to EM-41, "Removal and Installation".
2. Measure the valve clearance with the following procedure:

a. Set No. 1 cylinder at TDC of its compression stroke.
- Rotate crankshaft pulley (2) clockwise and align TDC mark (no paint) (A) to timing indicator (1) on front cover.

B : White paint mark (Not use for service)

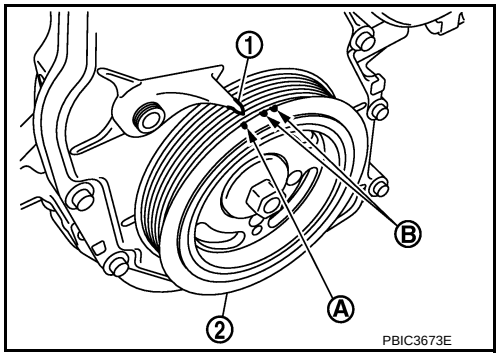

- At the same time, check that both intake and exhaust cam noses of No. 1 cylinder face inside (⬅) as shown in the figure.

1 : Camshaft (INT)
2 : Camshaft (EXH)
⇦ : Engine front

- If they do not face inside, rotate crankshaft pulley once more (360 degrees) and align as shown in the figure.

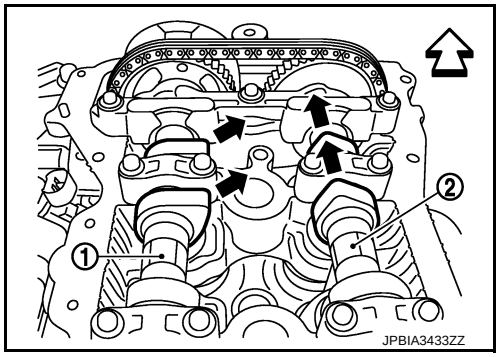

b. Use a feeler gauge, measure the clearance between valve lifter and camshaft.

Valve clearance : Refer to EM-93, "Camshaft".

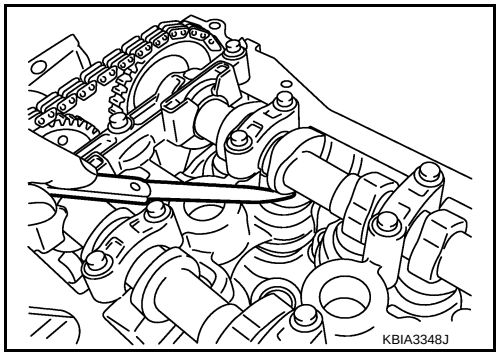

- By referring to the figure, measure the valve clearances at locations marked "×" as shown in the table below [locations indicated with black arrow (⬅) in the figure] with a feeler gauge.

  A : No. 1 cylinder at compression TDC

  ⇦ : Engine front

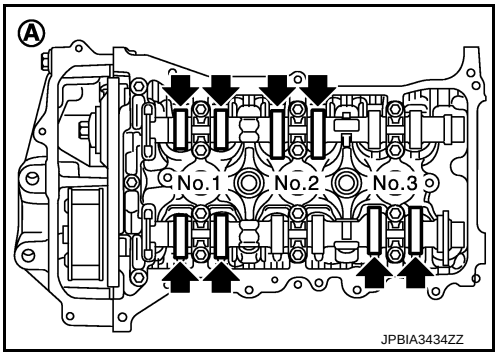

Measuring position		No. 1 CYL.	No. 2 CYL.	No. 3 CYL.
No. 1 cylinder at compression TDC	EXH	×	×	
	INT	×		×

c. Set No. 3 cylinder at TDC of its compression stroke.
- Rotate crankshaft pulley (2) one revolution (360 degrees) and align TDC mark (no paint) (A) to timing indicator (1) on front cover.

  B : White paint mark (Not use for service)

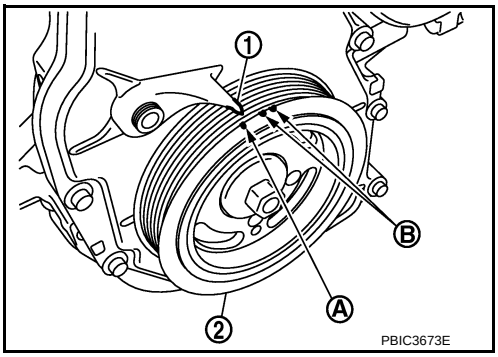

- By referring to the figure, measure the valve clearance at locations marked "×" as shown in the table below [locations indicated with black arrow (⬅) in the figure] with a feeler gauge.

  A : No. 3 cylinder at compression TDC

  ⇦ : Engine front

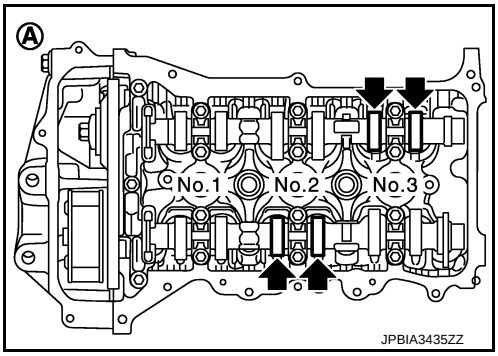

Measuring position		No. 1 CYL.	No. 2 CYL.	No. 3 CYL.
No. 3 cylinder at compression TDC	EXH			×
	INT		×	

3. If out of standard, perform adjustment. Refer to "ADJUSTMENT".

ADJUSTMENT

- Perform adjustment depending on selected head thickness of valve lifter.

1. Remove camshaft. Refer to EM-53, "Exploded View".
2. Remove valve lifters at the locations that are out of the standard.

3. Measure the center thickness of the removed valve lifters with a micrometer (A).

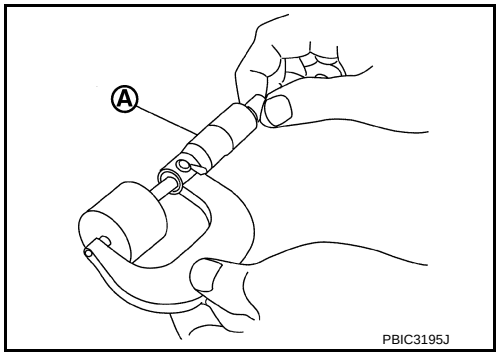

4. Use the equation below to calculate valve lifter thickness for replacement.

Valve lifter thickness calculation: $t = t_1 + (C_1 - C_2)$

t = Valve lifter thickness to be replaced

t_1 = Removed valve lifter thickness

C_1 = Measured valve clearance

C_2 = Standard valve clearance:

Intake : 0.30 mm (0.012 in)

Exhaust : 0.33 mm (0.013 in)

- Thickness of new valve lifter (B) can be identified by stamp mark (A) on the reverse side (inside the cylinder).
- Stamp mark “302” indicates 3.02 mm (0.1189 in) in thickness.

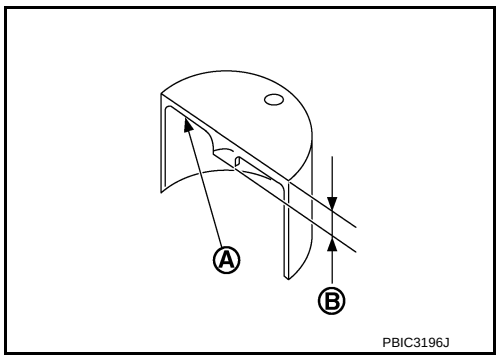

NOTE:
Available thickness of valve lifter: 26 sizes range 3.00 to 3.50 mm (0.1181 to 0.1378 in) in steps of 0.02 mm (0.0008 in) (when manufactured at factory). Refer to EM-93, "Camshaft".

5. Install the selected valve lifter.
6. Install camshaft. Refer to EM-53, "Exploded View".
7. Install timing chain and related parts. Refer to EM-43, "Exploded View".
8. Manually rotate crankshaft pulley a few rotations.
9. Check that the valve clearances is within the standard. Refer to “INSPECTION”.
10. Install remaining parts in the reverse order of removal.
11. Warm up the engine, and check for unusual noise and vibration.

COMPRESSION PRESSURE

Inspection

INFOID:0000000005988166

1. Warm up engine thoroughly. Then, stop it.
2. Release fuel pressure. Refer to following.
   - HR12DE (TYPE 1): EC-113, "Work Procedure"
   - HR12DE (TYPE 2): EC-386, "Work Procedure"
3. Remove ignition coil and spark plug from each cylinder. Refer to EM-41, "Removal and Installation".
4. Connect engine tachometer (not required in use of CONSULT-III).
5. Install compression gauge (B) with an adapter (A) (commercial service tool) onto spark plug hole.

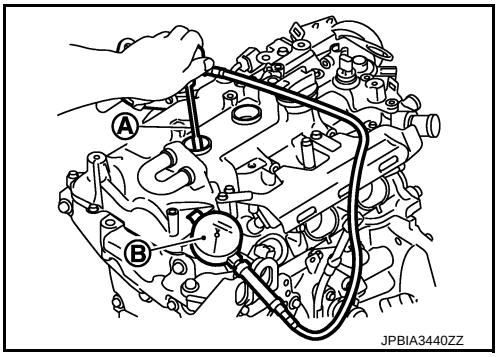

   - Use the adapter whose picking up end inserted to spark plug hole is smaller than 20 mm (0.79 in) in diameter. Otherwise, it may be caught by cylinder head during removal.

     a : 20 mm (0.79 in)

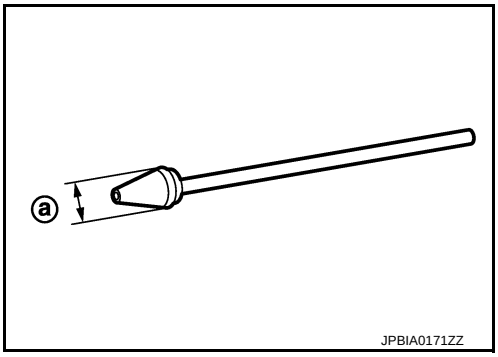

6. With accelerator pedal fully depressed, turn ignition switch to “START” for cranking. When the gauge pointer stabilizes, read the compression pressure and the engine rpm. Perform these steps to check each cylinder.

   Compression pressure : Refer to EM-92, "General Specification".

   CAUTION:
   Always use a fully charged battery to obtain the specified engine speed.
   - If the engine speed is out of the specified range, check battery liquid for proper gravity. Check the engine speed again with normal battery gravity. Refer to PG-130, "How to Handle Battery".
   - If compression pressure is below minimum value, check valve clearances, and parts associated with combustion chamber (valve, valve seat, piston, piston ring, cylinder bore, cylinder head, and cylinder head gasket). After the checking, measure compression pressure again.
   - If some cylinder has low compression pressure, pour small amount of engine oil into the spark plug hole of the cylinder to recheck it for compression.
   - If the added engine oil improves the compression, piston rings may be worn out or damaged. Check piston rings and replace if necessary.
   - If the compression pressure remains at low level despite the addition of engine oil, valves may be malfunctioning. Check valves for damage. Replace valve or valve seat accordingly.
   - If two adjacent cylinders have respectively low compression pressure and their compression remains low even after the addition of engine oil, cylinder head gaskets are leaking. In such a case, replace cylinder head gaskets.
7. After inspection is completed, install removed parts.
8. Start the engine, and check that the engine runs smoothly.

9. Perform trouble diagnosis. If DTC appears, erase it. Refer to following.
   - HR12DE (TYPE 1): EC-45, "Diagnosis Description"
   - HR12DE (TYPE 2): EC-346, "Diagnosis Description"

SYMPTOM DIAGNOSIS

NOISE, VIBRATION AND HARSHNESS (NVH) TROUBLESHOOTING

NVH troubleshooting Chart

INFOID:0000000005988167

イラストが
有りません
！

JPBIA3381ZZ

1. Locate the area where noise occurs.
2. Confirm the type of noise.
3. Specify the operating condition of engine.

4. Check specified noise source.

If necessary, repair or replace these parts.

Location of noise	Type of noise	Operating condition of engine						Source of noise	Check item	Reference page
		Before warm-up	After warm-up	When starting	When idling	When racing	While driving			
Top of engine Rocker cover Cylinder head	Ticking or clicking	C	A	—	A	B	—	Tappet noise	Valve clearance	EM-11
	Rattle	C	A	—	A	B	C	Camshaft bearing noise	Camshaft journal oil clearance Camshaft runout	EM-93
Crankshaft pulley Cylinder block (Side of engine) Oil pan	Slap or knock	—	A	—	B	B	—	Piston pin noise	Piston to piston pin oil clearance Connecting rod bushing oil clearance	EM-97
	Slap or rap	A	—	—	B	B	A	Piston slap noise	Piston to cylinder bore clearance Piston ring side clearance Piston ring end gap Connecting rod bend and torsion	EM-97
	Knock	A	B	C	B	B	B	Connecting rod bearing noise	Connecting rod bushing oil clearance Connecting rod bearing oil clearance	EM-97 EM-100
	Knock	A	B	—	A	B	C	Main bearing noise	Main bearing oil clearance Crankshaft runout	EM-99 EM-97
Front of engine Front cover	Tapping or ticking	A	A	—	B	B	B	Timing chain and chain tensioner noise	Timing chain cracks and wear Timing chain tensioner operation	EM-51 EM-43
Front of engine	Squeaking or fizzing	A	B	—	B	—	C	Drive belt (Sticking or slipping)	Drive belt deflection	EM-92
	Creaking	A	B	A	B	A	B	Drive belt (Slipping)	Idler pulley bearing operation	
	Squall Creak	A	B	—	B	A	B	Water pump noise	Water pump operation	CO-19

A: Closely related B: Related C: Sometimes related —: Not related

PERIODIC MAINTENANCE

DRIVE BELT

Checking

INFOID:0000000005988168

- Inspection should be done only when engine is cold or over 30 minutes after the engine is stopped.

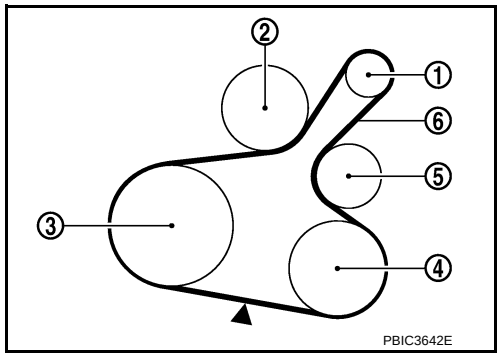

1	: Alternator
2	: Water pump
3	: Crankshaft pulley
4	: A/C compressor (With A/C models) : Idler pulley (Without A/C models)
5	: Idler pulley
6	: Drive belt

- Visually check belts for wear, damage, and cracks on inside and edges.
- Turn crankshaft pulley two time clockwise, and check tension on all pulleys is equal before doing the test.
- When measuring deflection, apply 98 N (10 kg, 22 lb) at the (▼) marked point.
- Measure the belt tension and frequency with acoustic tension gauge (commercial service tool) at the (▼) marked point.

CAUTION:
- **When the tension and frequency are measured, the acoustic tension gauge should be used.**
- **When checking immediately after installation, first adjust it to the specified value. Then, after turning crankshaft two turns or more, readjust to the specified value to avoid variation in deflection between pulleys.**

Belt Deflection/Belt Tension and Frequency: Refer to EM-92, "Drive Belt".

Tension Adjustment

INFOID:0000000005988169

Location	Location of adjuster and tightening method
Drive belt	Adjusting bolt on idler pulley

CAUTION:
- **When belt is replaced with new one, adjust belt tension to the value for “New belt”, because new belt will not fully seat in the pulley groove.**
- **When tension of the belt being used exceeds “Limit”, adjust it to the value for “After adjusted”.**
- **When installing a belt, check it is correctly engaged with the pulley groove.**
- **Never allow oil or engine coolant to get on the belt.**
- **Never twist or bend the belt strongly.**

1. Remove front fender protector (RH). Refer to EXT-17, "FENDER PROTECTOR : Exploded View".
2. Loosen the idler pulley lock nut (A) from the tightening position with the specified torque by 45 degrees.

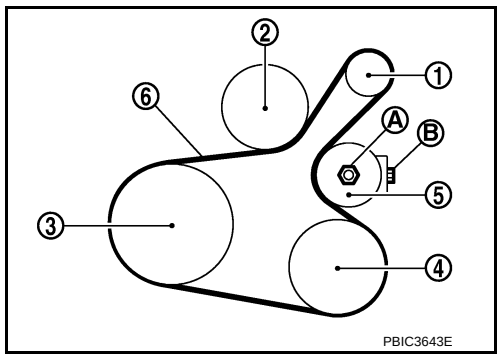

1	: Alternator
2	: Water pump
3	: Crankshaft pulley
4	: A/C compressor (with A/C models) : Idler pulley (without A/C models)
5	: Idler pulley
6	: Drive belt

CAUTION:
- **When the lock nut is loosened excessively, the idler pulley tilts and the correct tension adjustment cannot be performed. Never loosen it excessively (more than 45 degrees).**

- **Put a matching mark on the lock nut (A), and check turning angle with a protractor. Never visually check the tightening angle.**

3. Adjust the belt tension by turning the adjusting bolt (B). Refer to EM-18, "Checking".
   CAUTION:
   - **When checking immediately after installation, first adjust it to the specified value. Then, after turning crankshaft two turns or more, readjust to the specified value to avoid variation in deflection between pulleys.**
   - **When the tension adjustment is performed, the lock nut should be in the condition at step“ 2”. If the tension adjustment is performed when the lock nut is loosened more than the standard, the idler pulley tilts and the correct tension adjustment cannot be performed.**
4. Tighten the lock nut.

   : 34.8 N·m (3.5 kg-m, 26 ft-lb)

Removal and Installation

INFOID:0000000005988170

REMOVAL

1. Remove front fender protector (RH). Refer to EXT-17, "FENDER PROTECTOR : Exploded View".
2. Loosen the lock nut (A), and then adjust the belt tension by turning the adjusting bolt (B).

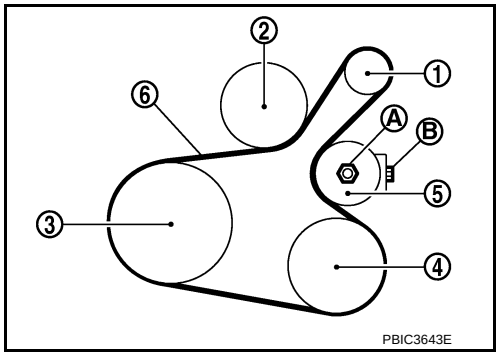

1	: Alternator
2	: Water pump
3	: Crankshaft pulley
4	: A/C compressor (with A/C models) : Idler pulley (without A/C models)
5	: Idler pulley
6	: Drive belt

3. Remove drive belt.

INSTALLATION

1. Pull the idler pulley in the loosening direction, and then temporarily tighten the lock nut (A) to the following torque.

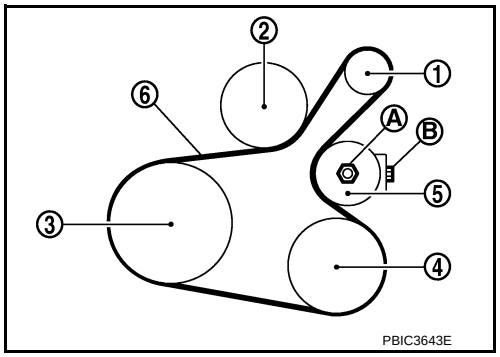

1	: Alternator
2	: Water pump
3	: Crankshaft pulley
4	: A/C compressor (with A/C models) : Idler pulley (without A/C models)
5	: Idler pulley
6	: Drive belt

   : 4.4 N·m (0.45 kg-m, 39 in-lb)

   NOTE:
   Do not move the lock nut from the tightened position. Go to step “2”.
2. Install the drive belt to each pulley.
   CAUTION:
   - **Check that there is no oil, grease, or coolant, etc. in pulley grooves.**
   - **Check that the belt is securely inside the groove on each pulley.**
3. Adjust drive belt tension by turning the adjusting bolt (B). Refer to EM-18, "Tension Adjustment".
   CAUTION:
   - **Perform the belt tension adjustment with the lock nut temporarily tightened at the step “1” so as not to tilt the idler pulley.**

- **When checking immediately after installation, first adjust it to the specified value. Then, after turning crankshaft two turns or more, readjust to the specified value to avoid variation in deflection between pulleys.**

4. Tighten the lock nut.

   : 34.8 N·m (3.5 kg-m, 26 ft-lb)

5. Check that belt tension of each belt within the standard.

AIR CLEANER FILTER

Exploded View

INFOID:0000000005988171

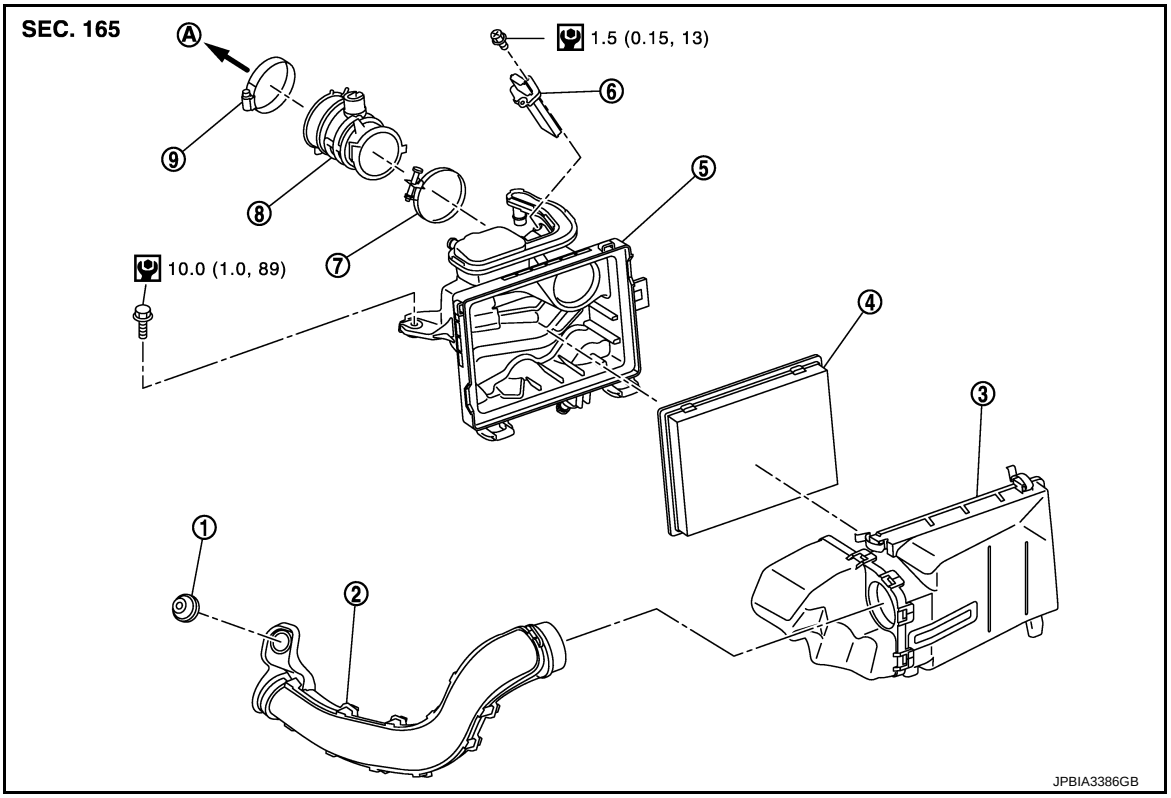

1.	Mounting rubber	2.	Air duct (inlet)	3.	Air cleaner body assembly
4.	Air cleaner filter	5.	Air cleaner cover assembly	6.	Mass air floe sensor
7.	Clamp	8.	Air duct	9.	Clamp
A.	To electric throttle control actuator				

Refer toGI-4, "Components" for symbols in the figure.

Removal and Installation

INFOID:0000000005988172

REMOVAL

1. Remove air duct (inlet).
2. Remove air cleaner body assembly (2) with air cleaner filter (1).

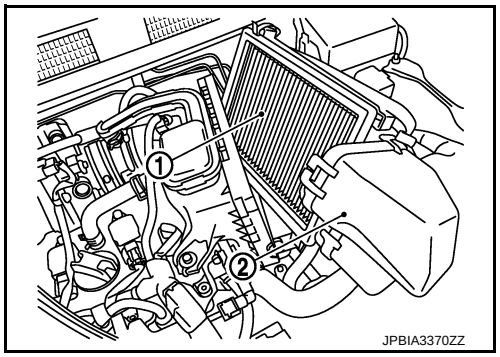

INSTALLATION

Install in the reverse order of removal.

SPARK PLUG

Removal and Installation

INFOID:0000000005988173

REMOVAL

1. Remove ignition coil. Refer to EM-41, "Exploded View".
2. Remove spark plug with a spark plug wrench (commercial service tool).

a : 14 mm (0.55 in)

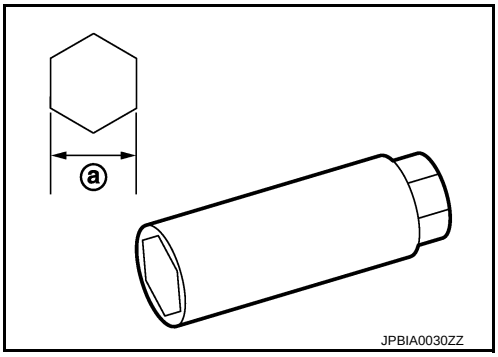

CAUTION:
Never drop or shock spark plug.

INSTALLATION

Install in the reverse order of removal.

Inspection

INFOID:0000000005988174

INSPECTION AFTER REMOVAL

Use the standard type spark plug for normal condition.

Spark plug (Standard type) : Refer to EM-93, "Spark Plug".

CAUTION:
- **Never drop or shock spark plug.**
- **Never use a wire brush for cleaning.**
- **If plug tip is covered with carbon, spark plug cleaner may be used.**

Cleaner air pressure	**: Less than 588 kPa (6 kg/cm^2, 85 psi)**
Cleaning time	**: Less than 20 seconds**

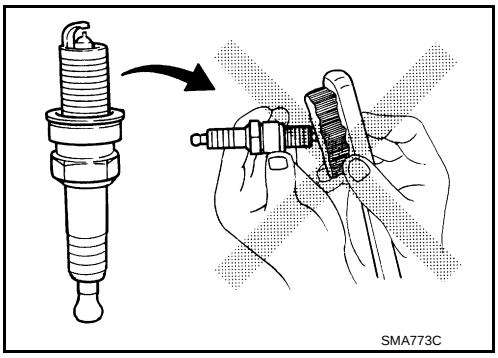

REMOVAL AND INSTALLATION

DRIVE BELT IDLER PULLEY

Removal and Installation

INFOID:0000000005988175

REMOVAL

1. Remove drive belt. Refer to EM-19, "Removal and Installation".
2. Remove the lock nut, and then remove the plate (7), idler pulley (6), and washer (5).

   1 : Alternator bracket

3. Remove the center shaft (2) together with the spacer (3) with inserting the adjusting bolt (4).

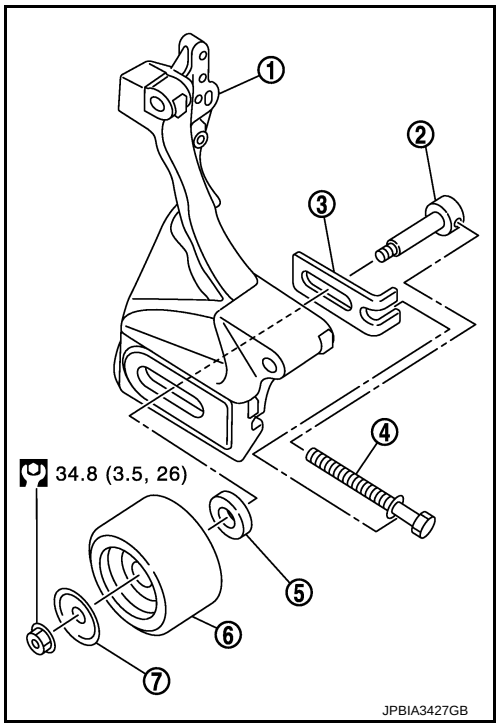

INSTALLATION

1. Insert the center shaft (1) into the slide groove of the spacer (2). Fully screw in the adjusting bolt (3) in the belt loosening direction (⇦).
   - At that time, place the flange (a) of the adjusting bolt and the seat (b) of the center shaft on the spacer.
2. Place each surface (c and d) of the spacer on the alternator bracket. Install the washer, idler pulley, and plate, and then temporarily tighten the lock nut.

   : 4.4 N·m (0.45 kg-m, 39 in-lb)

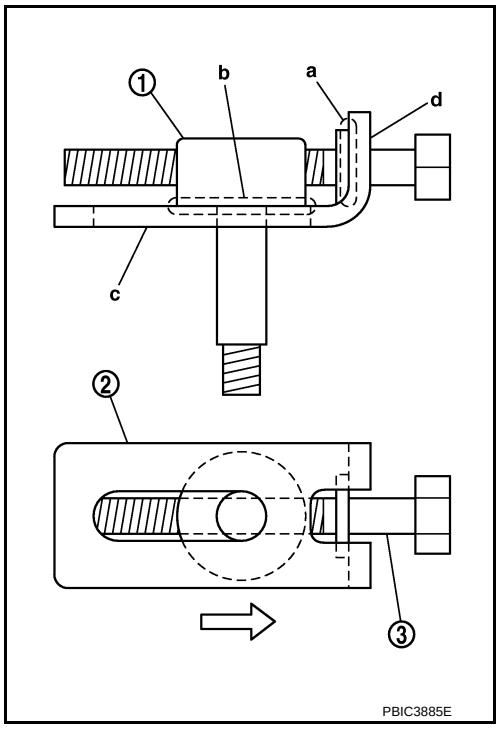

3. Install removed parts in the reverse order of removal.

AIR CLEANER AND AIR DUCT

Exploded View

INFOID:0000000005988176

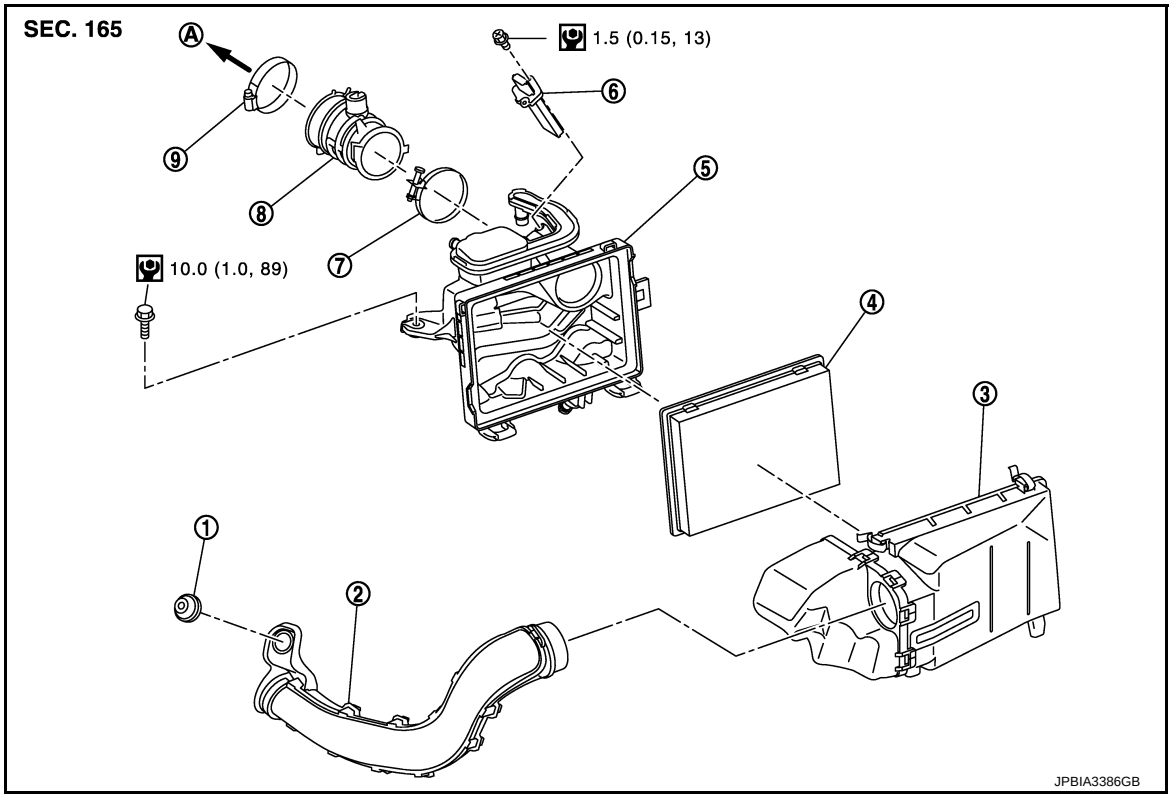

1.	Mounting rubber	2.	Air duct (inlet)	3.	Air cleaner body assembly
4.	Air cleaner filter	5.	Air cleaner cover assembly	6.	Mas air flow sensor
7.	Clamp	8.	Air duct	9.	Clamp
A.	To electric throttle control actuator				

Refer toGI-4, "Components" for symbols in the figure.

Removal and Installation

INFOID:0000000005988177

REMOVAL

NOTE:

Mass air flow sensor is removable under the car-mounted condition.

1. Remove air duct (inlet).
2. Remove the air cleaner body assembly with air cleaner filter.
3. Disconnect PCV hose.
4. Disconnect mass air flow sensor harness connector.
5. Remove air cleaner cover assembly with air duct (between air cleaner cover assembly and electric throttle control actuator).
   - Add matching marks if necessary for easier installation.
6. Separate air duct and air cleaner cover assembly.
7. Remove mass air flow sensor from air cleaner case, if necessary.
   CAUTION:
   Handle the mass air flow sensor with following cares.
   - **Never shock the mass air flow sensor.**
   - **Never disassemble the mass air flow sensor.**
   - **Never touch the sensor of the mass air flow sensor.**

INSTALLATION

Note the following, and install in the reverse order of removal.
- Align marks. Attach each joint. Screw clamps firmly.

Inspection

INFOID:0000000005988178

INSPECTION AFTER REMOVAL

Inspect air duct and resonator assembly for crack or tear.
- If anything found, replace air duct and resonator assembly.

EGR SYSTEM

Exploded View

INFOID:0000000006038725

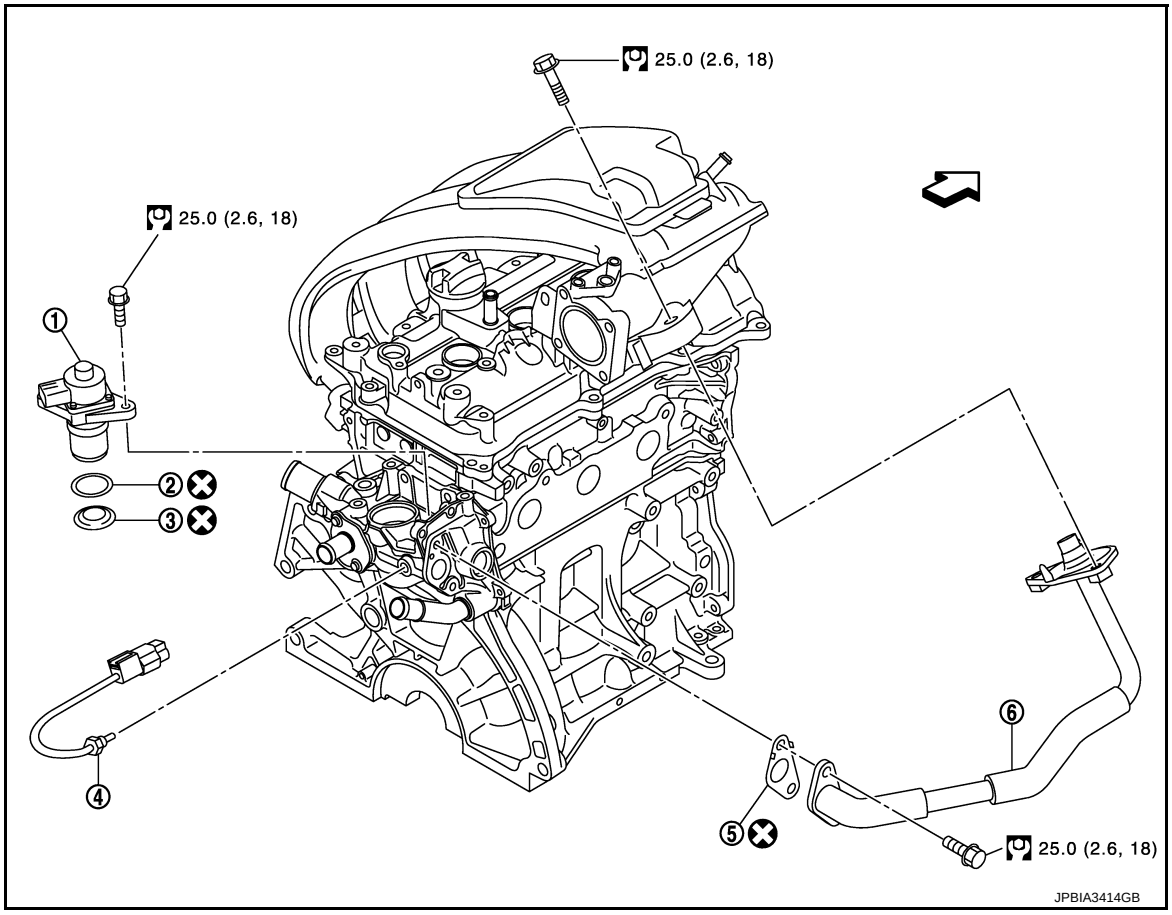

1. EGR volume control valve
2. O-ring
3. Holder
4. EGR temperature sensor
5. Gasket
6. EGR guide tube

⇦ Engine front

- Refer to GI-4, "Components" for symbol marks except in the above.

Removal and Installation

INFOID:0000000006038726

REMOVAL

1. Remove air duct (inlet) and air cleaner assembly. Refer to EM-24, "Removal and Installation".
2. Remove EGR guide tube.
3. Remove EGR volume control valve.
   - Remove holder (2) from water outlet (1) if removed from EGR volume control valve.

   CAUTION:
   - **Do not damage or impact EGR volume control valve.**
   - **Do not disassemble or adjust EGR volume control valve.**

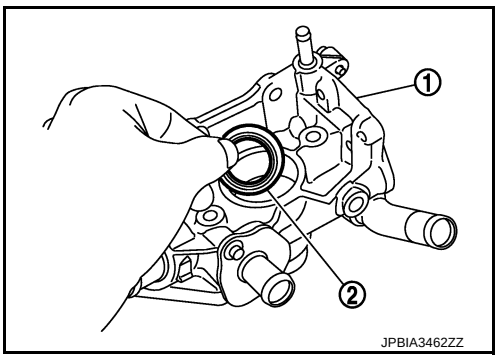

Installation

1. Install O-ring (2) to the mounting groove of EGR volume control valve (3).

   A : Upside down

2. Install holder (1) to EGR volume control valve in the direction as shown in the figure.

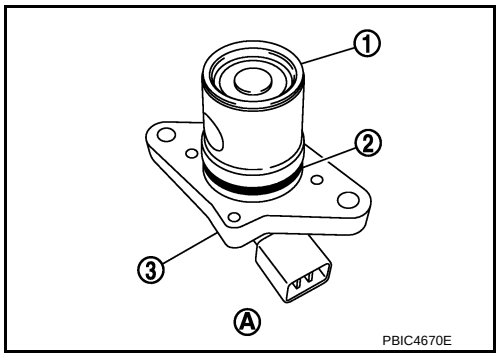

3. Install EGR volume control valve to water outlet.
4. Install gasket to intake manifold.
5. Install EGR tube (2) and tighten bolts (A) temporarily (approximately two or three turns) with the EGR tube aligned with the installation position of intake manifold.

   3 : Water outlet

6. Tighten bolts (B) temporarily.
7. Tighten bolts (B) to the specified torque.
8. Tighten bolts (A) to the specified torque.

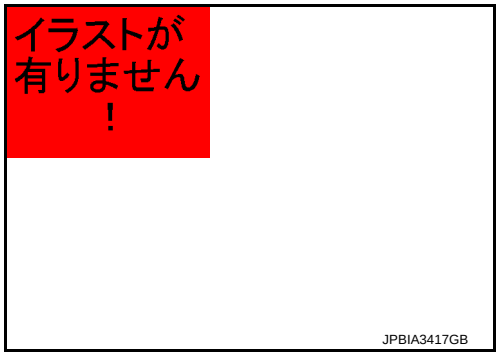

9. Install in the reverse order of removal.

INTAKE MANIFOLD

WITHOUT EGR CONTROL VALVE

WITHOUT EGR CONTROL VALVE : Exploded View

INFOID:0000000006038272

WITHOUT EGR CONTROL VALVE

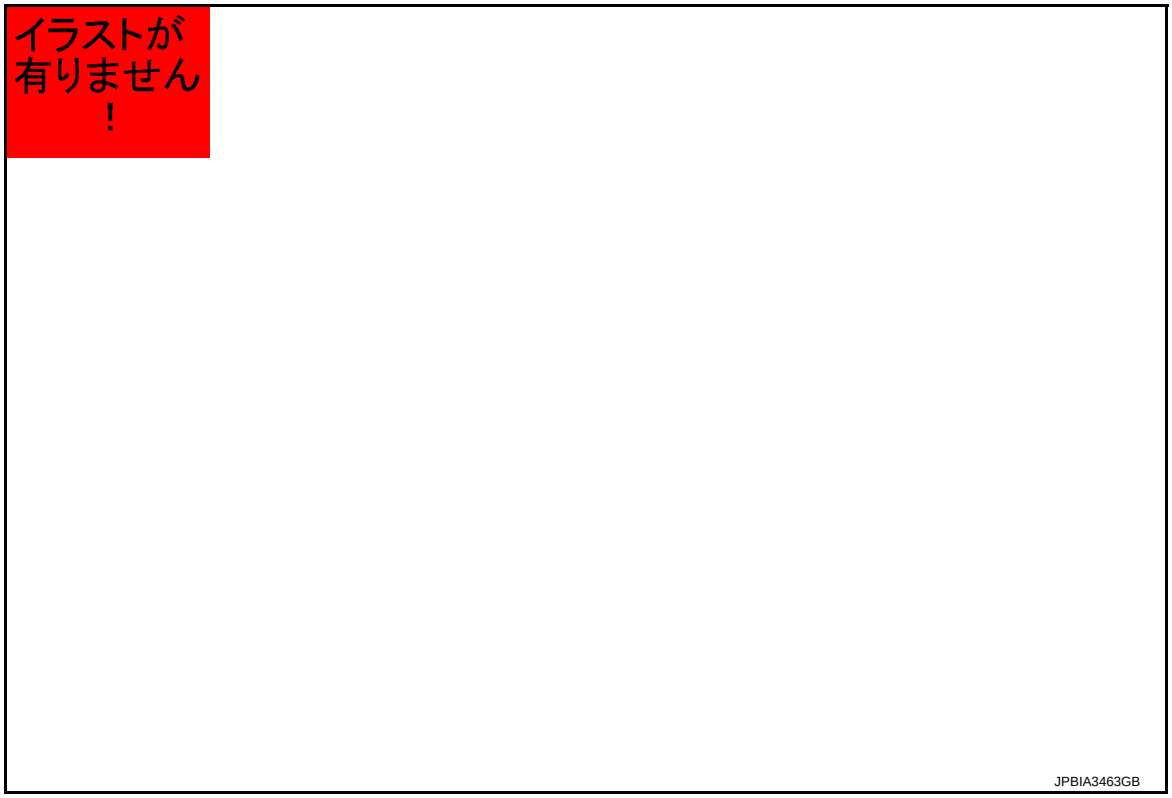

1. Electric throttle control actuator
2. Gasket
3. EVAP canister purge volume control solenoid valve
4. Intake manifold
5. Vacuum hose
6. Gasket
7. Gasket
8. Blind plug

A. To brake booster

Refer to GI-4, "Components" for symbols in the figure.

WITHOUT EGR CONTROL VALVE : Removal and Installation

INFOID:0000000006038273

REMOVAL

1. Remove air duct (inlet) and air cleaner assembly. Refer to EM-24, "Removal and Installation".
2. Pull out oil level gauge.
   CAUTION:
   Cover the oil level gauge guide openings to avoid entry of foreign materials.
3. Remove electric throttle control actuator.
   CAUTION:
   - **Handle carefully to avoid any shock to electric throttle control actuator.**
   - **Never disassemble electric throttle control actuator.**
4. Disconnect the harness connector and EVAP hose from the EVAP canister purge volume control solenoid valve.
   CAUTION:
   Handle it carefully and avoid impacts.
5. Disconnect vacuum hose for brake booster from intake manifold.
6. Remove intake manifold mounting bolts.

7. Loosen mounting bolts in reverse order as shown in the figure.

   ⇦ : Engine front

   CAUTION:
   Cover engine openings to avoid entry of foreign materials.

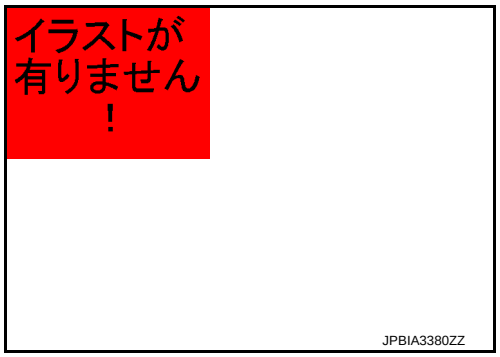

8. Remove intake manifold.

INSTALLATION

Note the following, and install in the reverse order of removal.

Intake Manifold

1. Install the gasket to the intake manifold.
   NOTE:
   Be sure the intake manifold gasket is seated correctly in groove of intake manifold.
2. Place the intake manifold into the installation position.
3. Tighten bolts in the numerical order as shown in the figure.

   ⇦ : Engine front

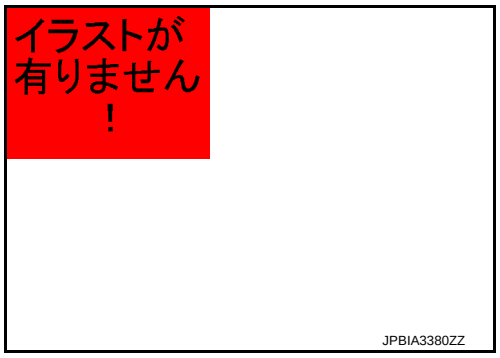

4. Tighten intake manifold mounting bolts.
5. Install electric throttle control actuator.

Electric Throttle Control Actuator

- Tighten bolts of electric throttle control actuator equally and diagonally in several steps.
- Perform “Throttle Valve Closed Position Learning” after repair when removing harness connector of the electric throttle control actuator. Refer to following.
  - HR12DE (TYPE 1): EC-105, "Work Procedure"
  - HR12DE (TYPE 2): EC-378, "Work Procedure"
- Perform “Throttle Valve Closed Position Learning” and “Idle Air Volume Learning” after repair when replacing electric throttle control actuator. Refer to following.
  - HR12DE (TYPE 1): EC-105, "Work Procedure" and EC-106, "Work Procedure"
  - HR12DE (TYPE 2): EC-378, "Work Procedure" and EC-379, "Work Procedure"

WITH EGR CONTROL VALVE

WITH EGR CONTROL VALVE : Exploded View

INFOID:0000000005988179

WITH EGR CONTROL VALVE

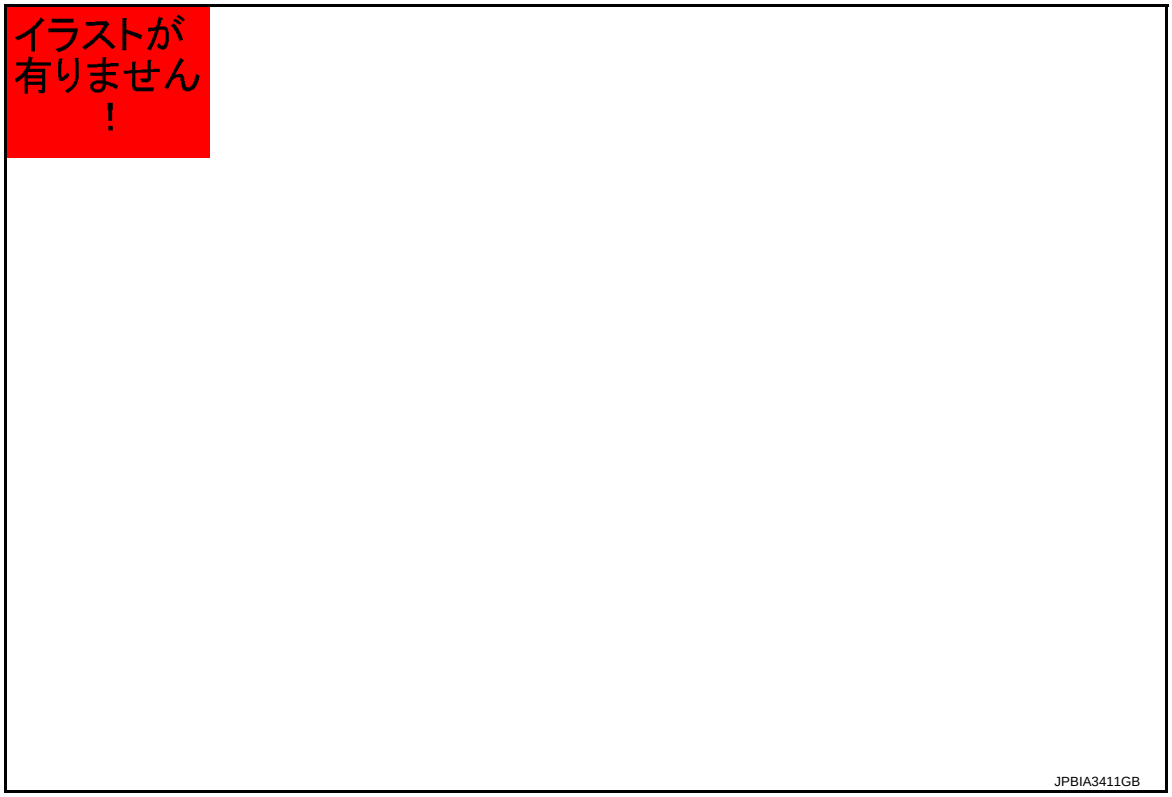

1. Electric throttle control actuator
2. Gasket
3. EVAP canister purge volume control solenoid valve
4. Intake manifold
5. Gasket
6. Gasket
7. Vacuum hose
8. EGR guide tube

A. To Water outlet

Refer to GI-4, "Components" for symbols in the figure.

WITH EGR CONTROL VALVE : Removal and Installation

INFOID:0000000005988180

REMOVAL

1. Remove air duct (inlet) and air cleaner assembly. Refer to EM-24, "Exploded View".
2. Drain engine coolant. Refer to CO-9, "Draining".
   CAUTION:
   - **Perform this step when the engine is cold.**
   - **Never spill engine coolant on drive belt.**

   NOTE:
   This step is not required when removing only intake manifold.
3. Pull out oil level gauge.
   CAUTION:
   Cover the oil level gauge guide openings to avoid entry of foreign materials.
4. Disconnect water hoses from electric throttle control actuator as follows:
   - Attach plug to prevent engine coolant leakage when engine coolant is not drained. Refer to CO-9, "Draining".
     CAUTION:
     Perform this step when the engine is cold.
     NOTE:
     This step is not required when removing only intake manifold.
5. Remove electric throttle control actuator.
   CAUTION:
   - **Handle carefully to avoid any shock to electric throttle control actuator.**
   - **Never disassemble electric throttle control actuator.**

NOTE:
When removing only intake manifold, move the electric throttle actuator without disconnecting the water hose.

6. Disconnect the harness connector and EVAP hose from the EVAP canister purge volume control solenoid valve.
   CAUTION:
   Handle it carefully and avoid impacts.
7. Disconnect vacuum hose for brake booster from intake manifold.
8. Remove EGR guide tube. Refer to EM-26, "Removal and Installation".
9. Remove intake manifold mounting bolts.
10. Loosen mounting bolts in reverse order as shown in the figure.

    ⇦ : Engine front

    CAUTION:
    Cover engine openings to avoid entry of foreign materials.

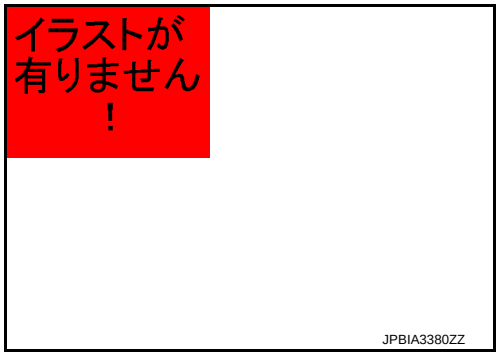

11. Remove intake manifold.

INSTALLATION

Note the following, and install in the reverse order of removal.

Intake Manifold

1. Install the gasket to the intake manifold.
   NOTE:
   Be sure the intake manifold gasket is seated correctly in groove of intake manifold.
2. Place the intake manifold into the installation position.
3. Tighten bolts in the numerical order as shown in the figure.

   ⇦ : Engine front

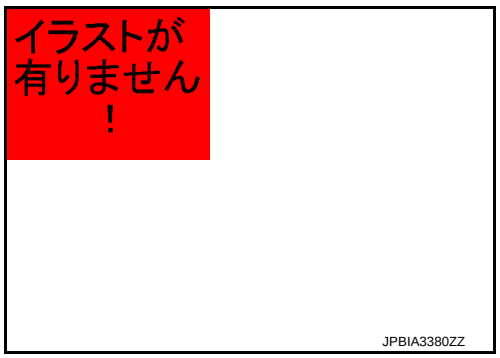

4. Tighten intake manifold mounting bolts.
5. Install EGR guide tube.
6. Install electric throttle control actuator.

Electric Throttle Control Actuator

- Tighten bolts of electric throttle control actuator equally and diagonally in several steps.
- Perform “Throttle Valve Closed Position Learning” after repair when removing harness connector of the electric throttle control actuator. Refer to following;
  - HR12DE (TYPE 1): EC-105, "Work Procedure"
  - HR12DE (TYPE 2): EC-378, "Work Procedure"
- Perform “Throttle Valve Closed Position Learning” and “Idle Air Volume Learning” after repair when replacing electric throttle control actuator. Refer to following;
  - HR12DE (TYPE 1): EC-105, "Work Procedure" and EC-106, "Work Procedure"
  - HR12DE (TYPE 2): EC-378, "Work Procedure" and EC-379, "Work Procedure"

EXHAUST MANIFOLD

Exploded View

INFOID:0000000005988181

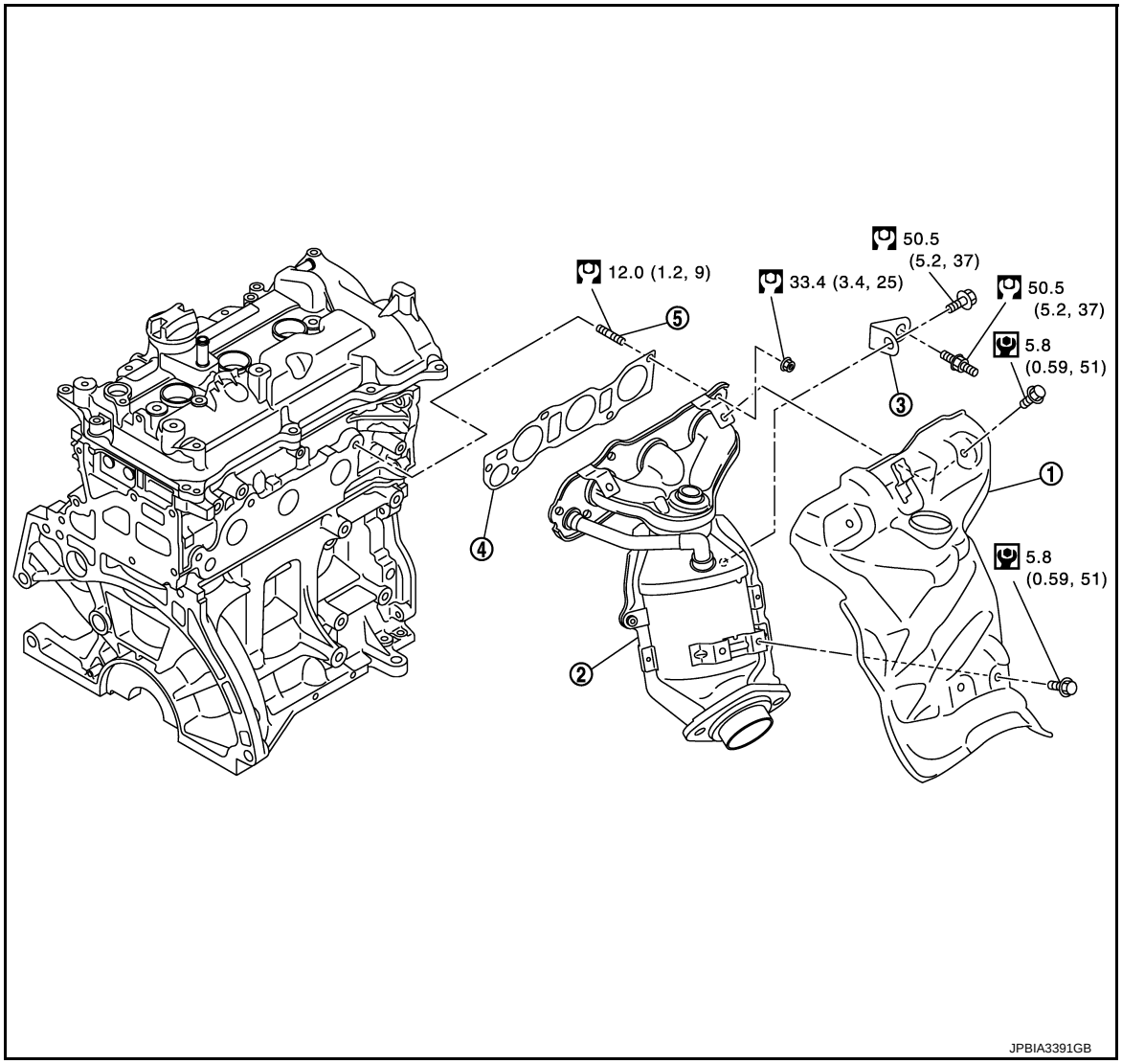

1. Exhaust manifold cover
2. Exhaust manifold
3. Exhaust manifold stay
4. Gasket
5. Stud bolt

Refer to GI-4, "Components" for symbols in the figure.

Removal and Installation

INFOID:0000000005988182

REMOVAL

1. Remove exhaust front tube. Refer to EX-5, "Removal and Installation".
2. Remove air duct (inlet) and air cleaner assembly. Refer to EM-24, "Exploded View".
3. Remove electric throttle control actuator. EM-28, "WITHOUT EGR CONTROL VALVE : Exploded View" (without EGR control valve) or EM-29, "WITH EGR CONTROL VALVE : Exploded View" (with EGR control valve) or.
4. Disconnect air fuel ratio sensor 1 harness connector.
5. Remove air fuel ratio sensor 1.
   - Using heated oxygen sensor wrench [SST: KV10117100] (A), remove air fuel ratio sensor 1.
     CAUTION:
     Handle air fuel ratio sensor 1 carefully and avoid impacts.

6. Remove exhaust manifold cover.
7. Remove exhaust manifold side mounting bolt of exhaust manifold stay.
8. Remove exhaust manifold.
   - Loosen nuts in reverse order as shown in the figure.

⇦ : Engine front

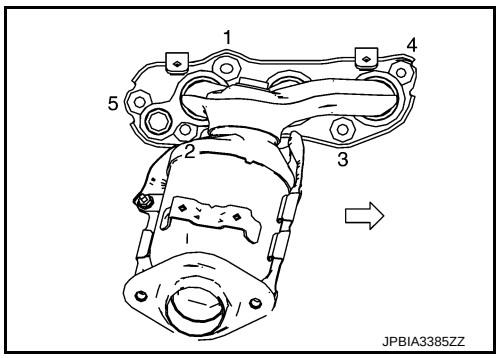

9. Remove stud bolt from cylinder head.
   - Using TORX socket.

INSTALLATION

Note the following, and install in the reverse order of removal.

Exhaust manifold

1. Tighten nuts in numerical order as shown in the figure.

⇦ : Engine front

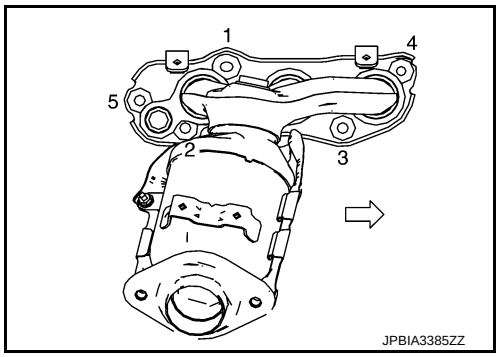

2. Tighten to the specified torque again.

Inspection

INFOID:0000000005988183

INSPECTION AFTER REMOVAL

Surface Distortion

- Using feeler gauge (A) and straightedge (B), check the surface distortion of exhaust manifold mating surface in each exhaust port and entire part.

Limit : Refer to EM-93, "Exhaust Manifold".

- If it exceeds the limit, replace exhaust manifold.

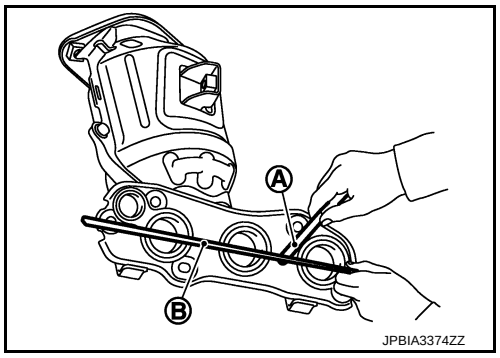

OIL PAN (LOWER)

Exploded View

INFOID:0000000005988184

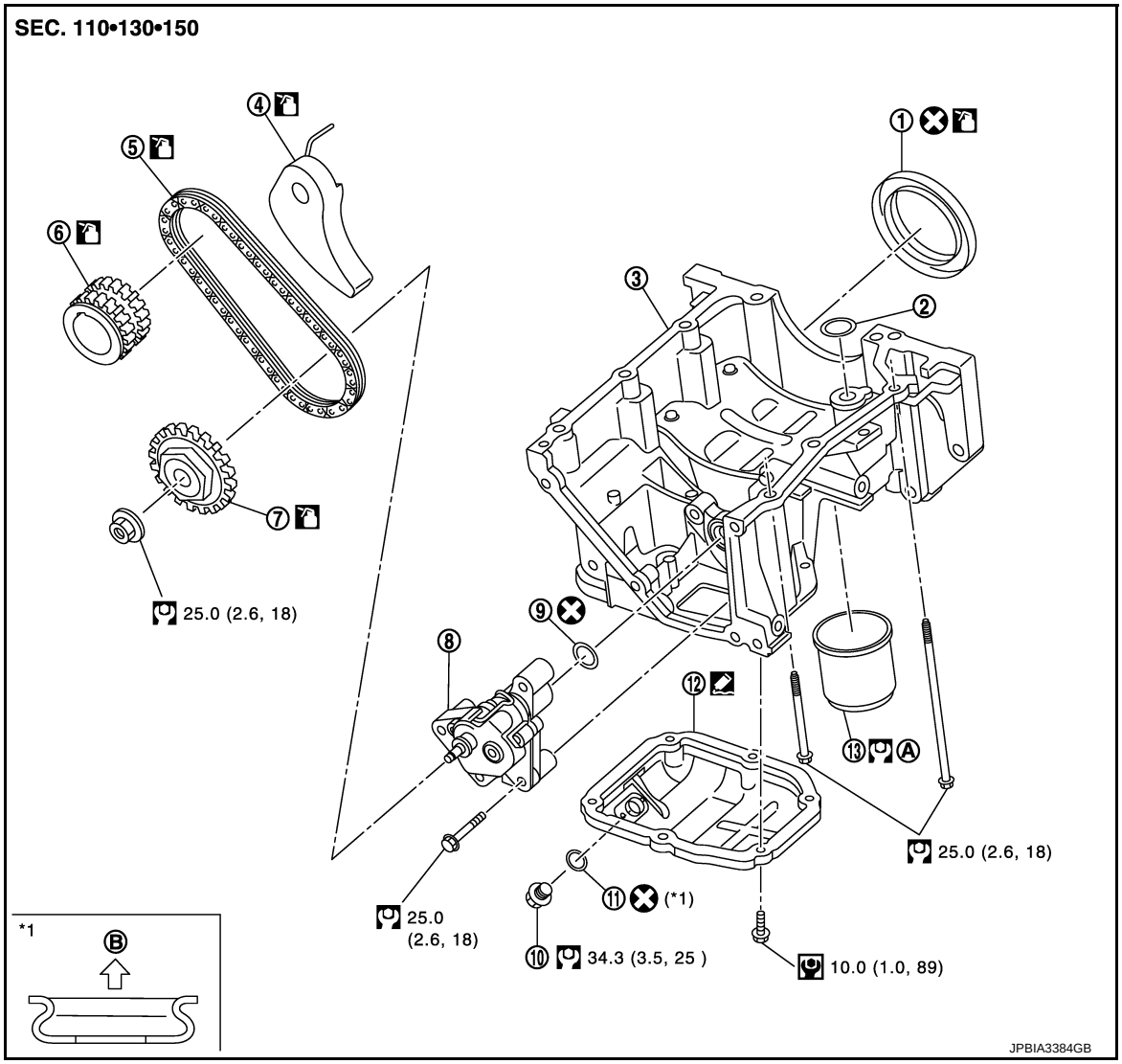

1.	Rear oil seal	2.	O-ring	3.	Oil pan (upper)
4.	Oil pump chain tensioner	5.	Oil pump drive chain	6.	Crankshaft sprocket
7.	Oil pump sprocket	8.	Oil pump	9.	O-ring
10.	Drain plug	11.	Drain plug washer	12.	Oil pan (lower)
13.	Oil filter				
A.	Refer to LU-10, "Removal and Installation"	B.	Oil pan (lower) side		

Refer to GI-4, "Components" for symbols in the figure.

Removal and Installation

INFOID:0000000005988185

REMOVAL

1. Drain engine oil. Refer to LU-8, "Draining".
2. Remove oil pan (lower) with the following procedure:

a. Loosen mounting bolts in reverse order as shown in the figure.

⇦ : Engine front

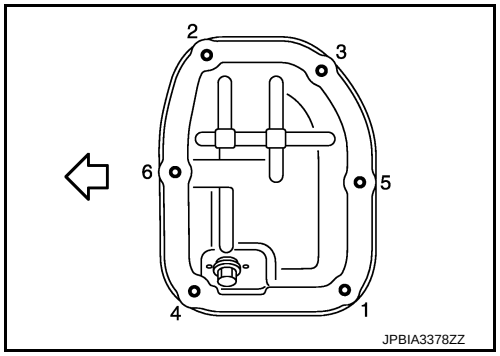

b. Insert seal cutter [SST: KV10111100] (A) between oil pan (upper) and oil pan (lower).
CAUTION:
- **Be careful not to damage the mating surface.**
- **Never insert a screwdriver. This damages the mating surfaces.**

c. Slide the seal cutter [SST: KV10111100] by tapping on the side of tool with a hammer.

d. Remove oil pan (lower).

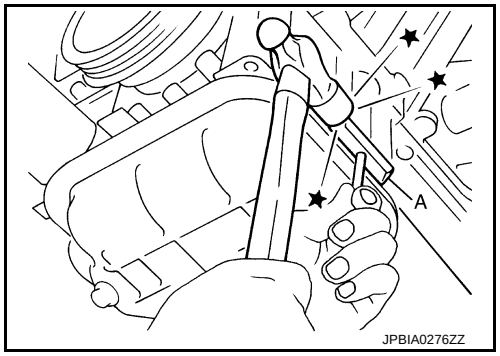

INSTALLATION

1. Install oil pan (lower) as follows:

a. Use a scraper (A) to remove old liquid gasket from mating surfaces.
- Also remove old liquid gasket from mating surface of oil pan (upper).
- Remove old liquid gasket from the bolt holes and threads.

CAUTION:
Never scratch or damage the mating surface when cleaning off old liquid gasket.

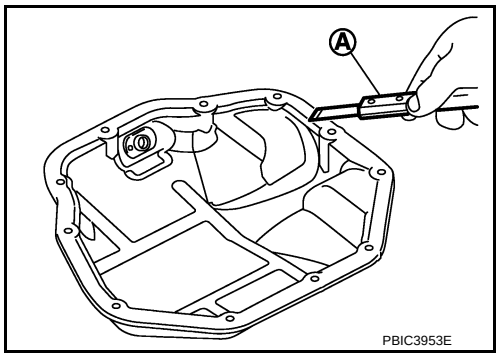

b. Apply a continuous bead of liquid gasket (B) with a tube presser (commercial service tool) as shown in the figure.

a : 7.5 - 9.5 mm (0.295 - 0.374 in)
c : ϕ4.0 - 5.0 mm (0.157 - 0.197 in)
1 : Oil pan (lower)
⬅ : Engine outside

Use Genuine Liquid Gasket or equivalent.
CAUTION:
Attaching should be done within 5 minutes after liquid gasket application.

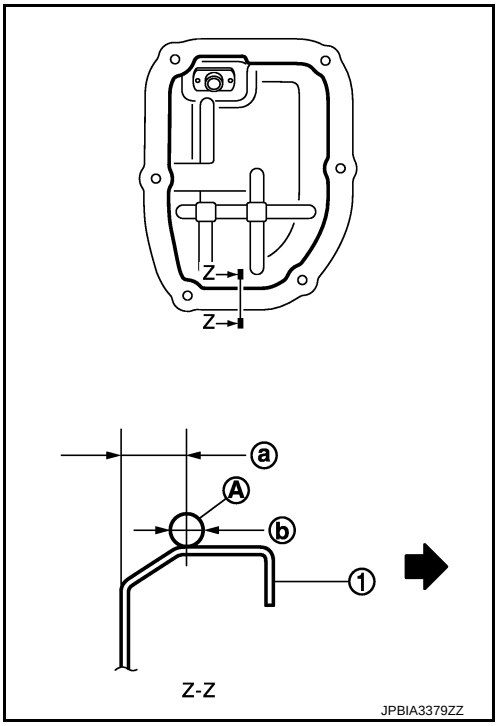

c. Tighten bolts in numerical order as shown in the figure.

⇦ : Engine front

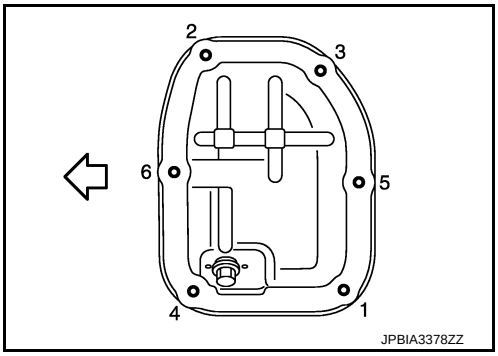

2. Install oil pan drain plug.
   - Refer to the figure of components of former page for installation direction of drain plug washer. Refer to EM-34, "Exploded View".
3. Install in the reverse order of removal after this step.
   NOTE:
   Wait at last 30 minutes after oil pan (lower) is installed before pouring engine oil.

Inspection

INFOID:0000000005988186

INSPECTION AFTER REMOVAL

Clean oil strainer if any object attached.

INSPECTION AFTER INSTALLATION

1. Check the engine oil level and adjust engine oil. Refer to LU-7, "Inspection".
2. Start engine, and check there is no leakage of engine oil.
3. Stop engine and wait for 10 minutes.
4. Check the engine oil level again. Refer to LU-7, "Inspection".

FUEL INJECTOR AND FUEL TUBE

Exploded View

INFOID:0000000005988187

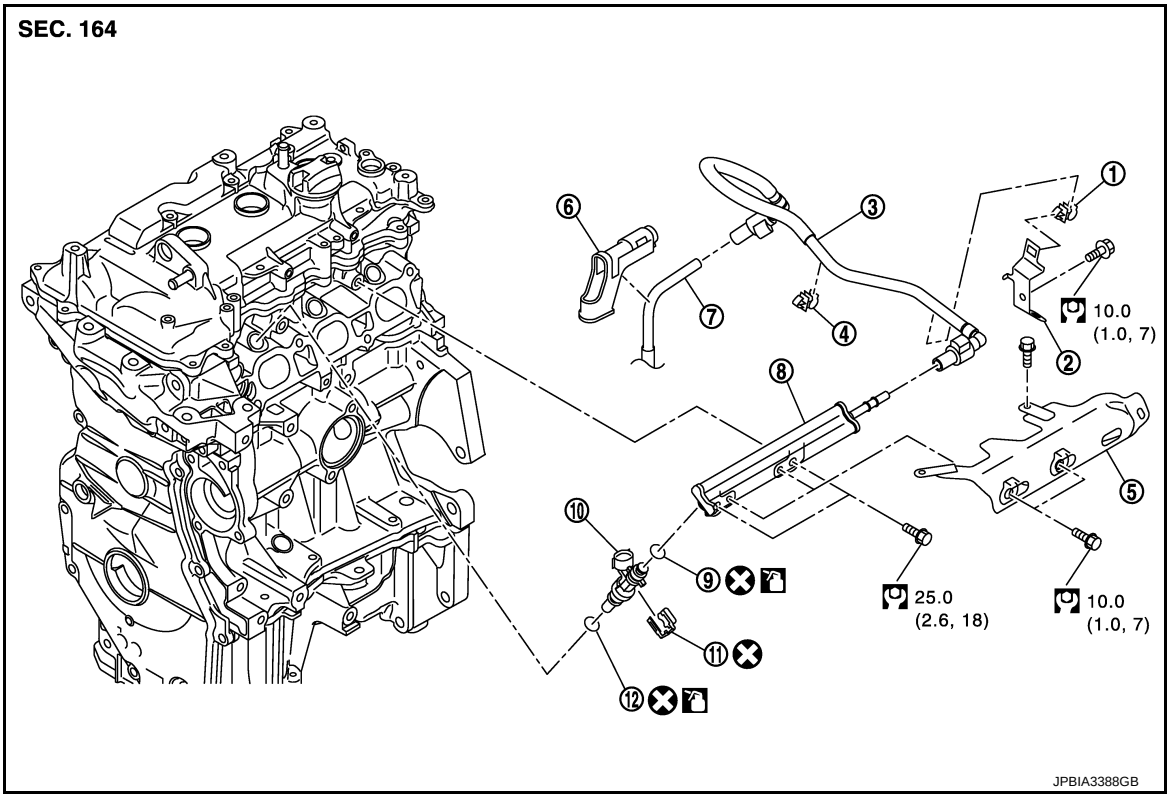

1. Clamp
2. Bracket
3. Fuel feed tube
4. Fuel tube protector
5. Quick connector cap
6. Fuel pipe
7. Fuel tube
8. O-ring (black)
9. Fuel injector
10. Clip
11. O-ring (green)

Refer to GI-4, "Components" for symbols in the figure.

CAUTION:
Never remove or disassemble parts unless instructed as shown in the figure.

Removal and Installation

INFOID:0000000005988188

WARNING:
- **Put a “CAUTION: FLAMMABLE” sign in the workshop.**
- **Be sure to work in a well ventilated area and furnish workshop with a CO_2 fire extinguisher.**
- **Never smoke while servicing fuel system. Keep open flames and sparks away from the work area.**

REMOVAL

1. Release the fuel pressure. Refer to folloeing;
   - HR12DE (TYPE 1): EC-113, "Work Procedure"
   - HR12DE (TYPE 2): EC-386, "Work Procedure"
2. Disconnect battery cable from negative terminal.
3. Remove air duct (inlet) and air cleaner assembly. Refer to EM-24, "Removal and Installation".
4. Remove intake manifold. Refer to EM-28, "WITHOUT EGR CONTROL VALVE : Removal and Installation" (Without EGR control valve) or EM-30, "WITH EGR CONTROL VALVE : Removal and Installation" (With EGR control valve).
5. Disconnect quick connector with the following procedure.

a. Remove fuel feed tube protector.

b. Disconnect fuel feed hose from hose clamp.

c. Disengage (C) and pull up (B) the pawl (A) of the quick connector retainer (3) by hand to disconnect quick connector (2) from the fuel tube.

NOTE:

If the fuel tube connector is stuck, hold the fuel pipe by hand and disconnect it by pushing and pulling.

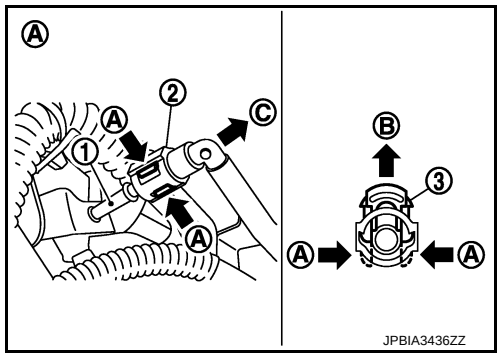

CAUTION:

- **Never pull with lateral force applied. O-ring inside quick connector may be damaged.**
- **Prepare container and cloth beforehand as fuel will leakage out.**
- **Avoid fire and sparks.**
- **Keep parts away from heat source. Especially, be careful when welding is performed around them.**
- **Never expose parts to battery electrolyte or other acids.**
- **Never bend or twist connection between quick connector and fuel feed tube during installation/removal.**
- **To keep clean the connecting portion and to avoid damage and foreign materials, cover them completely with plastic bags, etc. (A) or something similar.**

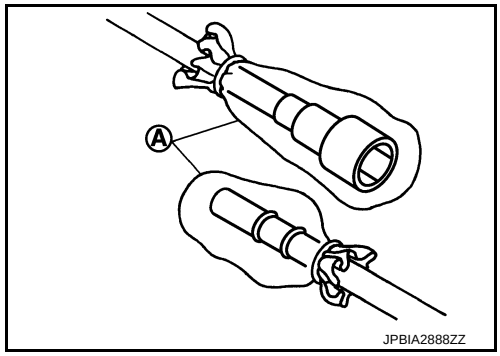

6. Disconnect harness connector from fuel injector.

7. Remove fuel tube protector.
   - Loosen mounting bolts in reverse order as shown in the figure.

⇦ : Engine front

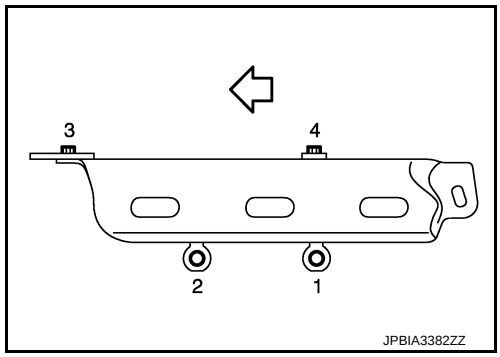

8. Remove fuel tube and fuel injector assembly.

CAUTION:

- **When removing, be careful to avoid any interference with fuel injector.**
- **Use a shop cloth to absorb any fuel leakage from fuel tube.**

9. Remove fuel injector from fuel tube with the following procedure:

a. Open and remove clip (2).
b. Remove fuel injector (3) from fuel tube (1) by pulling straight.
CAUTION:
- **Be careful with remaining fuel that may go out from fuel tube.**
- **Be careful not to damage fuel injector nozzle during removal.**
- **Never bump or drop fuel injector.**
- **Never disassemble fuel injector.**

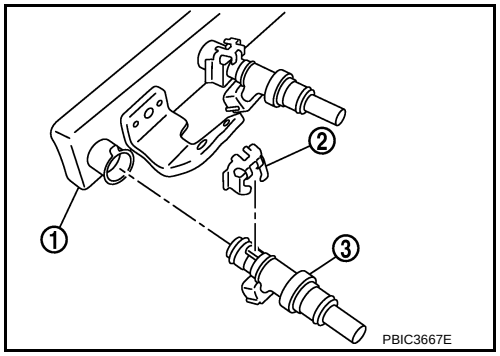

INSTALLATION

1. Note the following, and install O-rings to fuel injector.
CAUTION:
- **Upper and lower O-rings are different. Be careful not to confuse them.**

Fuel tube side	**: Black**
Nozzle side	**: Green**

- **Handle O-ring with bare hands. Never wear gloves.**
- **Lubricate O-ring with new engine oil.**
- **Never clean O-ring with solvent.**
- **Check that O-ring and its mating part are free of foreign material.**
- **When installing O-ring, be careful not to scratch it with tool or fingernails. Also be careful not to twist or stretch O-ring. If O-ring is stretched while installing, never insert it quickly into fuel tube.**
- **Insert O-ring straight into fuel tube. Never decenter or twist it.**

2. Install fuel injector to fuel tube with the following procedure:
a. Insert clip (2) into clip mounting groove on fuel injector (4).

3 : O-ring (black)
5 : O-ring (green)

- Insert clip so that protrusion (F) of fuel injector matches cut-out (D) of clip.
CAUTION:
- **Never reuse clip. Replace it with a new one.**
- **Be careful to keep clip from interfering with O-ring. If interference occurs, replace O-ring.**

b. Insert fuel injector into fuel tube (1) with clip attached.
- Insert it while matching it to the axial center.
- Insert fuel injector so that protrusion (B) of fuel tube matches cut-out (C) of clip.
- Check that fuel tube flange (A) is securely fixed in flange fixing groove (E) on clip.

c. Check that installation is complete by checking that fuel injector does not rotate or come off.

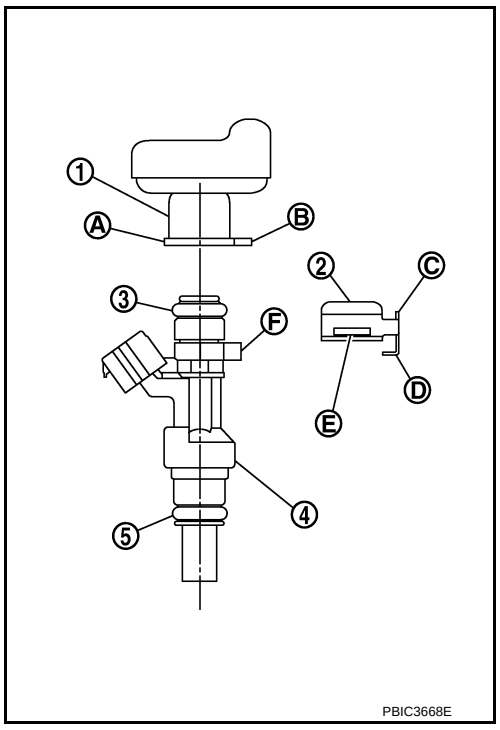

3. Set fuel tube and fuel injector assembly at its position for installation on cylinder head.
CAUTION:
For installation, be careful not to interfere with fuel injector nozzle.
4. Install fuel tube and injector assembly onto cylinder.
5. Install fuel tube protector.

- After temporary tightening of bolts (3), tighten mounting bolts in numerical order as shown in the figure.

⇦ : Engine front

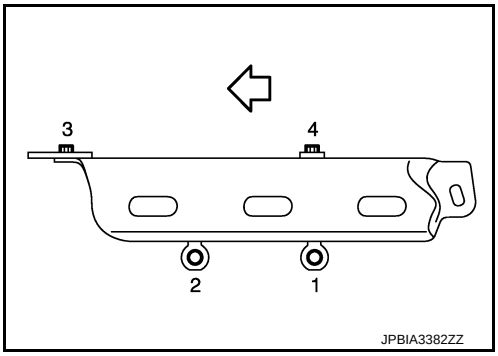

6. Connect harness connector to fuel injector.
7. Connect fuel feed tube with the following procedure.

a. Align the axes of the quick connector and the fuel tube to press into the quick connector (A). Press down (B) the retainer (1).
NOTE:
If the connection is firm, apply a tiny amount of engine oil to the tip of the fuel pipe.

b. After connecting the fuel tube, pull it to check for secure connection.
CAUTION:
- **Carefully align center to avoid inclined insertion to prevent damage to O-ring inside quick connector.**
- **Insert until you hear a "click" sound and actually feel the engagement.**

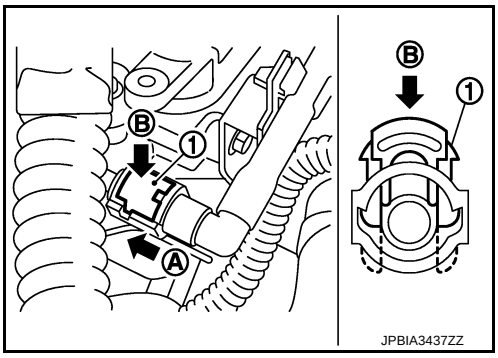

c. Install fuel feed hose to hose clamp.
d. Install fuel tube protector.

8. Install remaining parts in the reverse order of removal.

Inspection

INFOID:0000000005988189

INSPECTION AFTER INSTALLATION

Check on Fuel Leakage

1. Turn ignition switch "ON" (with the engine stopped). With fuel pressure applied to fuel piping, check there are no fuel leakage at connection points.
NOTE:
Use mirrors for checking at points out of clear sight.
2. Start the engine. With engine speed increased, check again that there are no fuel leakage at connection points.
CAUTION:
Never touch the engine immediately after stopped, as the engine becomes extremely hot.

IGNITION COIL, SPARK PLUG AND ROCKER COVER

Exploded View

INFOID:0000000005988190

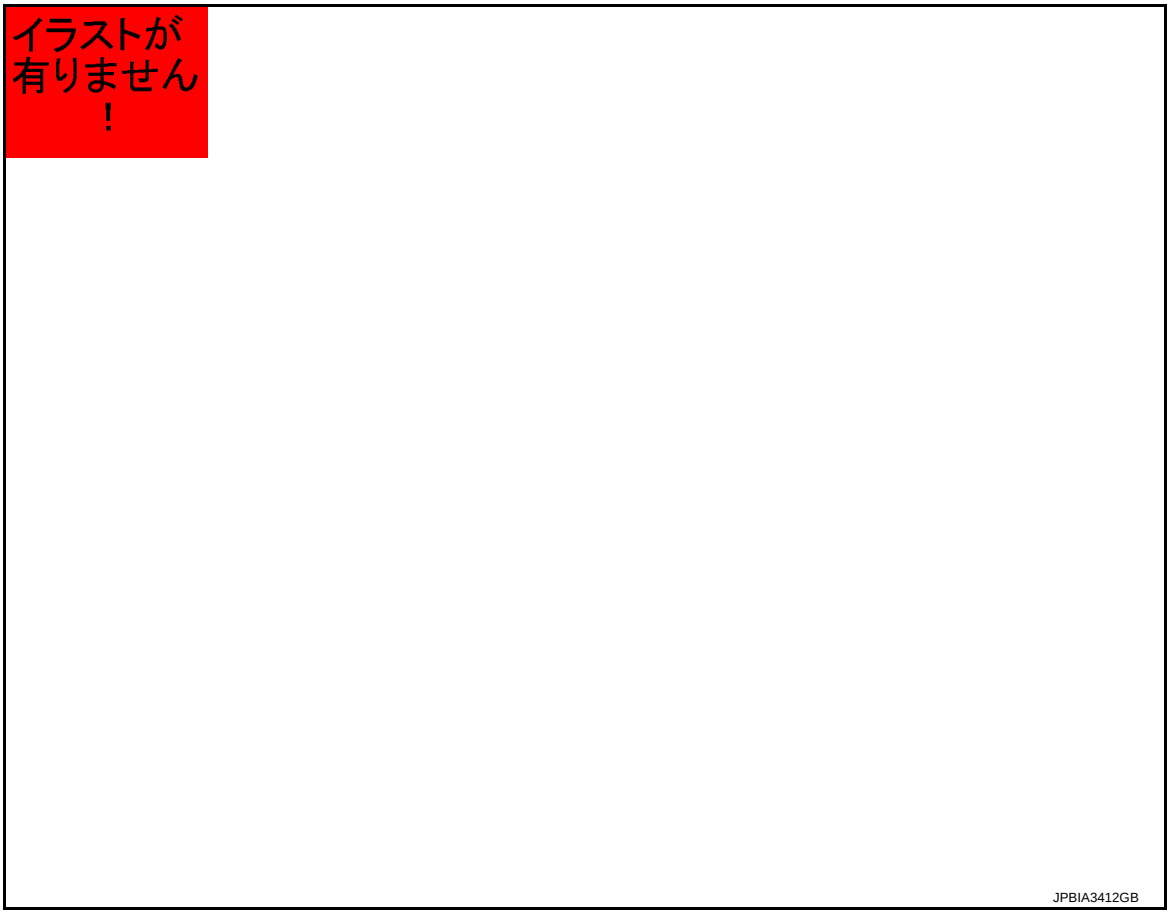

1. PCV hose
2. Clamp
3. Oil filler cap
4. Ignition coil
5. Spark plug
6. Rocker cover
7. Grommet
8. PCV valve
9. Clamp
10. PCV hose
11. Gasket
12. O-ring
13. Camshaft position sensor

A. To air duct assembly

Refer to GI-4, "Components" for symbols in the figure.

Removal and Installation

INFOID:0000000005988191

REMOVAL

1. Remove air duct (inlet) and air cleaner case assembly. Refer to EM-24, "Removal and Installation"..
2. Remove intake manifold. Refer to EM-28, "WITHOUT EGR CONTROL VALVE : Removal and Installation" (Without EGR control valve) or EM-30, "WITH EGR CONTROL VALVE : Removal and Installation" (With EGR control valve).
3. Remove ignition coil.
   CAUTION:
   - **Never drop or shock ignition coil.**
   - **Never disassemble ignition coil.**
4. Remove fuel tube protector. Refer to EM-37, "Removal and Installation".
5. Remove fuel injector harness clamp, and move injector harness.
6. Remove engine mounting stay. Refer to EM-79, "Removal and Installation".

7. Remove PCV valve and PCV hose, if necessary.
8. Remove rocker cover.
   - Loosen bolts in reverse order as shown in the figure.

   ⇦ : Engine front

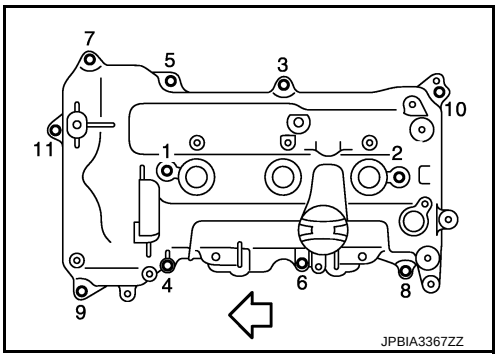

9. Remove rocker cover gasket from rocker cover.
10. Use scraper to remove all traces of liquid gasket from cylinder head and front cover.
    CAUTION:
    Never scratch or damage the mating surface when cleaning off old liquid gasket.

INSTALLATION

1. Rocker cover with the following procedure:

a. Install the rocker cover gasket to rocker cover.

b. Apply liquid gasket to the position as shown in the figure.

   1 : Cylinder head
   2 : Front cover
   a : ϕ2.5 - 3.5 mm

   Use Genuine Liquid Gasket or equivalent.

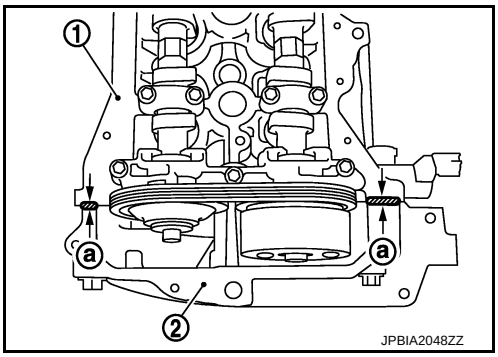

c. Install rocker cover to cylinder head.
   CAUTION:
   Check the gasket is not dropped.
   - Tighten bolts in two steps separately in numerical order as shown in the figure.

   ⇦ : Engine front

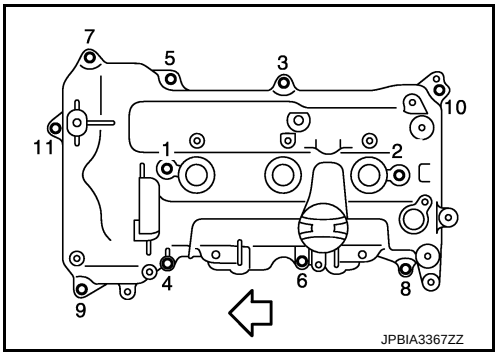

2. Install in the reverse order of removal, for the rest of parts.

TIMING CHAIN

Exploded View

INFOID:0000000005988192

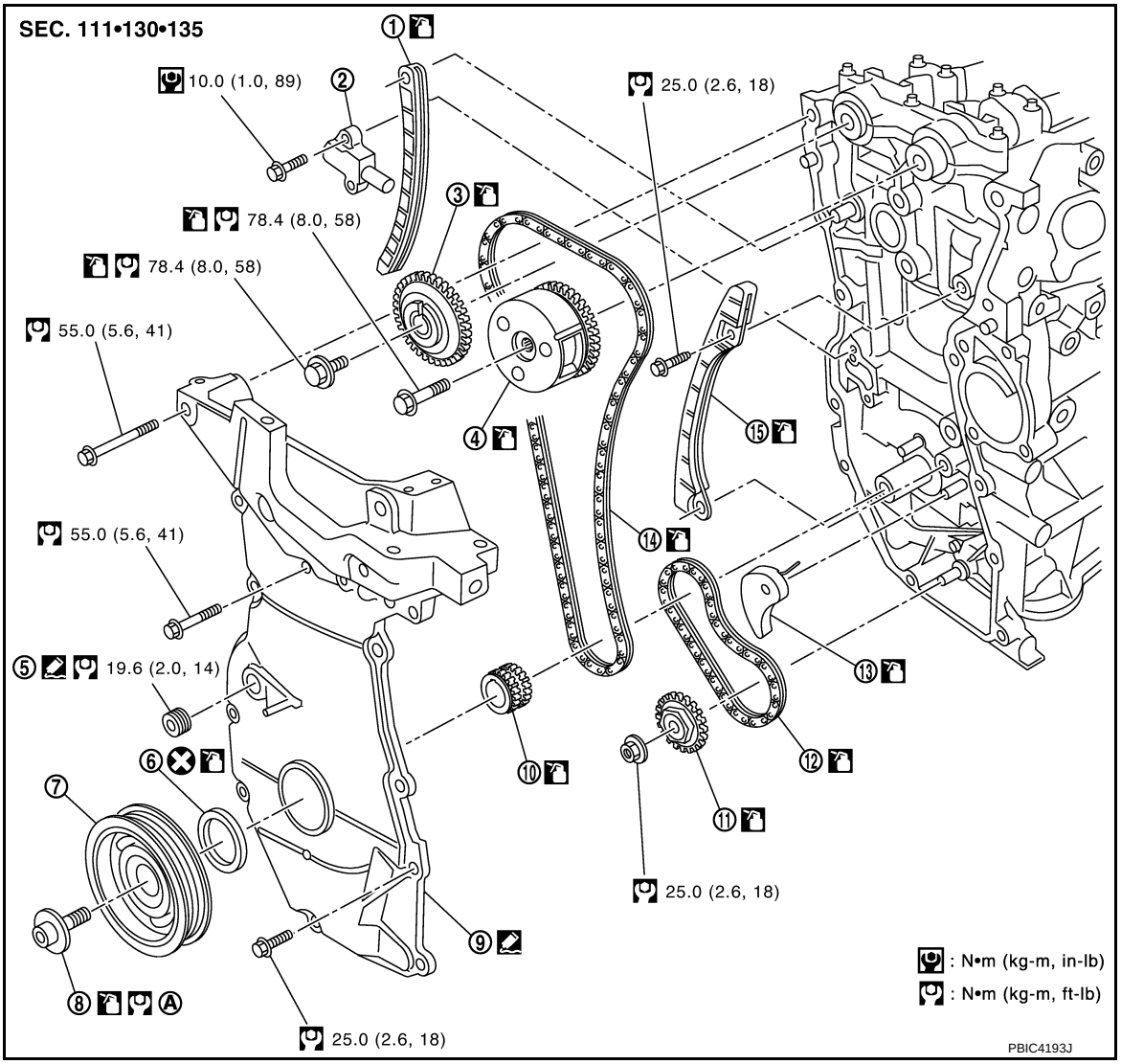

1.	Timing chain slack guide	2.	Timing chain tensioner	3.	Camshaft sprocket (EXH)
4.	Camshaft sprocket (INT)	5.	Plug	6.	Front oil seal
7.	Crankshaft pulley	8.	Crankshaft pulley bolt	9.	Front cover
10.	Crankshaft sprocket	11.	Oil pump sprocket	12.	Oil pump drive chain
13.	Chain tensioner (for oil pump drive chain)	14.	Timing chain	15.	Timing chain tension guide
A.	Tightening must be done following the installation procedure. Refer to EM-43				

Refer to GI-4, "Components" for symbols in the figure.

Removal and Installation

INFOID:0000000005988193

CAUTION:
The rotation direction indicated in the text indicates all directions seen from the engine front direction.

REMOVAL

1. Remove front road wheel (RH).

2. Remove front fender protector (RH). Refer to EXT-17, "FENDER PROTECTOR : Removal and Installation".
3. Drain engine oil. Refer to LU-8, "Draining".
   NOTE:
   Perform this step when engine is cold.
4. Remove the following parts.
   - Rocker cover: Refer to EM-41, "Exploded View".
   - Drive belt: Refer to EM-19, "Removal and Installation".
   - Water pump pulley: Refer to CO-19, "Removal and Installation".
   - Ground cable (between front cover and radiator core support)
5. Support the bottom surface of engine using a transmission jack, and then remove the engine mounting bracket and insulator (RH). Refer to EM-79, "Exploded View".
6. Set No. 1 cylinder at TDC of its compression stroke with the following procedure:

a. Rotate crankshaft pulley (2) clockwise and align TDC mark (without paint mark) (A) to timing indicator (1) on front cover.

B : White paint mark (Not use for service)

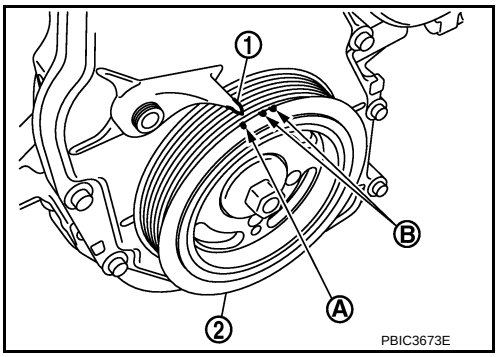

b. Check the matching marks on each camshaft sprocket are positioned as shown in the figure.

1 : Camshaft sprocket (EXH)
2 : Camshaft sprocket (INT)
A : Matching mark (stamp)
B : Matching mark (peripheral stamp line)

- If not, rotate crankshaft pulley one more turn to align matching marks to the positions in the figure.

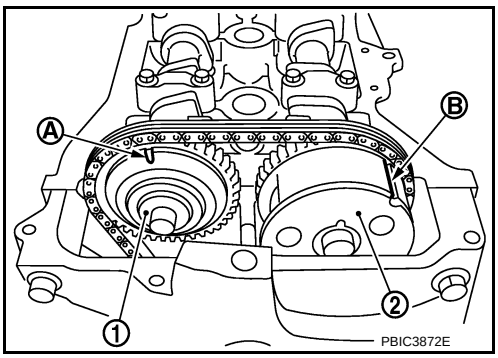

7. Remove crankshaft pulley with the following procedure:

a. Secure crankshaft pulley (1) using a pulley holder (commercial service tool) (A).

b. Loosen and pull out crankshaft pulley bolts.
   CAUTION:
   Never remove the mounting bolts as they will be used as a supporting point for the pulley puller [SST: KV11103000].

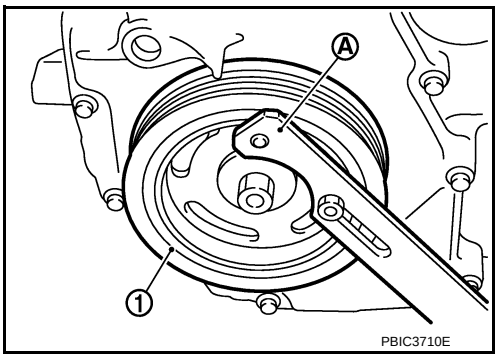

c. Attach a pulley puller [SST: KV11103000] (A) in the M 6 thread hole on crankshaft pulley, and remove crankshaft pulley.

B : M6 bolt

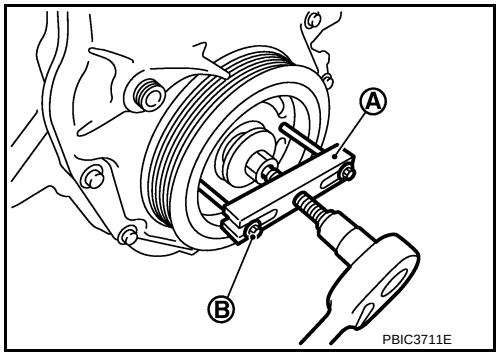

8. Remove front cover with the following procedure:

a. Loosen bolts in the reverse of the order as shown in the figure.

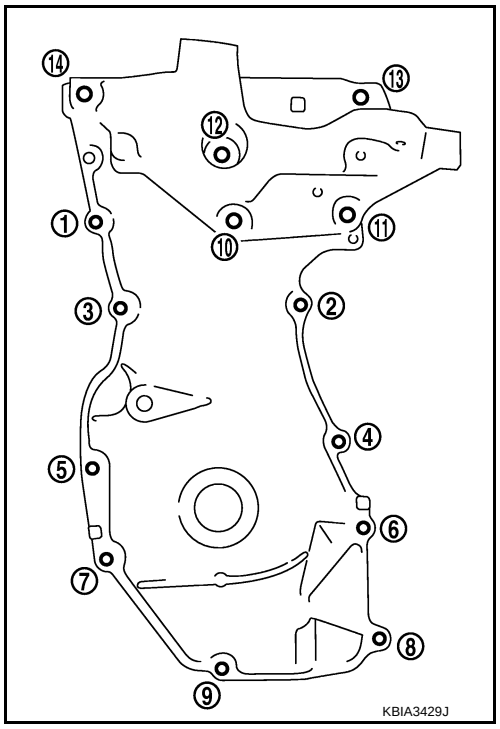

b. Cut liquid gasket by prying the position (⬅) as shown in the figure, and then remove the front cover.

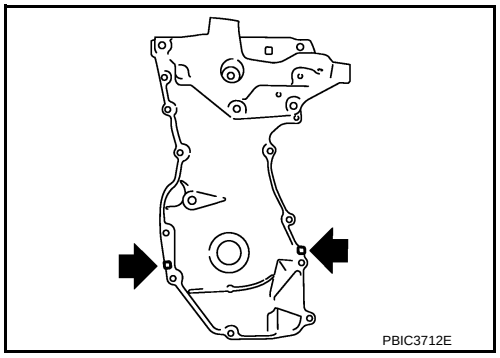

9. Remove front oil seal from front cover.
   - Remove by lifting it up using a suitable tool.

   CAUTION:
   Be careful not to damage the front cover.

10. Remove chain tensioner (1) with the following procedure.

a. Fully push down the chain tensioner lever (A), and then push the plunger (C) into the inside of tensioner.
   - The tab (B) is released by fully pushing the lever down. As a result, the plunger can be moved.

b. Pull up the lever to align its hole position with the body hole position.
   - When the lever hole is aligned with the body hole position, the plunger is fixed.
   - When the protrusion parts of the plunger ratchet and the tab face each other, both hole positions are not aligned. At that time, correctly engage them and align these hole positions by slightly moving the plunger.

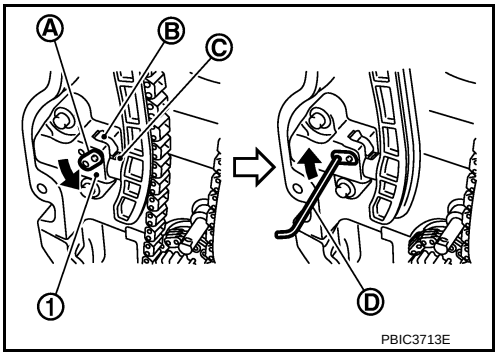

c. Insert the stopper pin (D) into the body hole through the lever hole, and then fix the lever at the upper position.
   - Figure shows the example that a hexagonal wrench for 2.5 mm (0.098 in) is used.

d. Remove chain tensioner.

11. Remove the timing chain tension guide (2) and the timing chain slack guide (1).

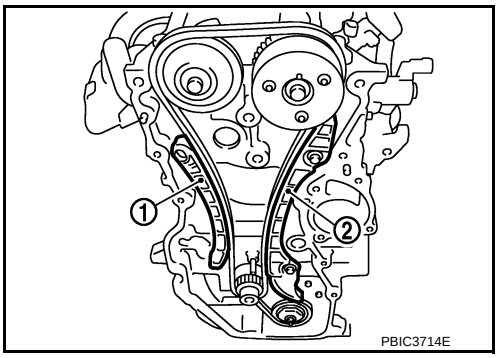

12. Remove the timing chain (2).
   - Pull the looseness of timing chain toward the camshaft sprocket (EXH) (1), and then remove the timing chain and start the removal from camshaft sprocket (EXH) side.

   CAUTION:
   Never rotate crankshaft or camshaft while timing chain is removed. It causes interference between valve and piston.

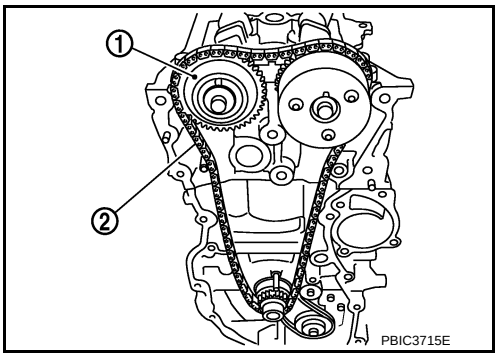

13. Remove the crankshaft sprocket and the oil pump drive related parts with the following procedure.

a. Remove chain tensioner (1).
   - Pull out from the shaft (B) and spring fixing holes (A).

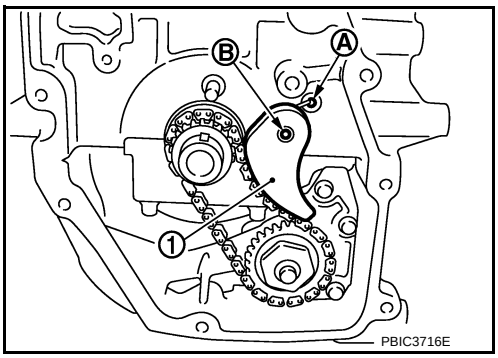

b. Hold the top of the oil pump shaft using the TORX socket (size: E8), and then loosen the oil pump sprocket nuts and remove them.

c. Remove the crankshaft sprocket (1), the oil pump drive chain (2), and the oil pump sprocket (3) at the same time.

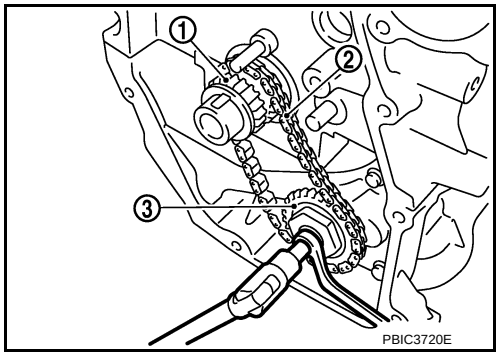

INSTALLATION

NOTE:
The figure shows the relationship between the matching mark on each timing chain and that on the corresponding sprocket, with the components installed.

1 : Timing chain
2 : Camshaft sprocket (EXH)
3 : Timing chain slack guide
4 : Chain tensioner
5 : Oil pump drive chain
6 : Oil pump sprocket
7 : Crankshaft sprocket
8 : Timing chain tension guide
9 : Camshaft sprocket (INT)
A : Blue link
B : Matching mark (stamp)
C : Orange link
D : Matching mark (stamp)
E : Crankshaft key (point straight up)
F : Matching mark (peripheral stamp line)
G : Blue link

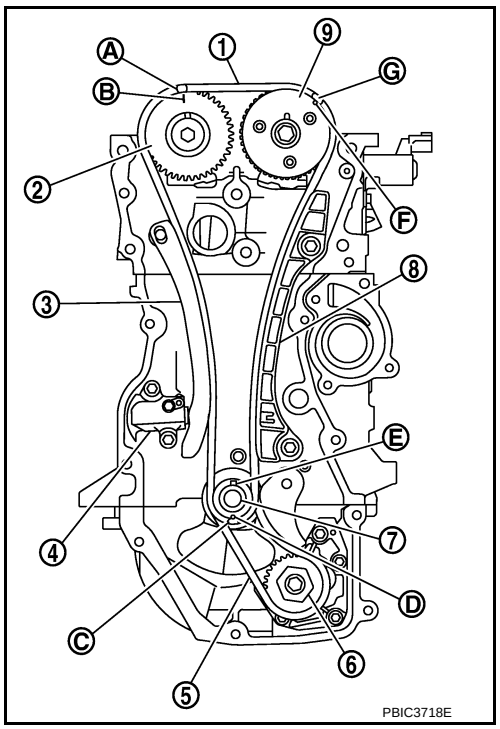

1. Install the crankshaft sprocket and the oil pump drive related parts with the following procedure:

a. Install the crankshaft sprocket (1), the oil pump drive chain (2), and the oil pump sprocket (3) at the same time.

⇦ : Engine front

- Install the crankshaft sprocket so that its invalid gear area (A) is towards the back of the engine.
- Install the oil pump sprocket so that its hexagonal surface faces (B) the front of engine.

NOTE:
There is no matching mark in the oil pump drive related parts.

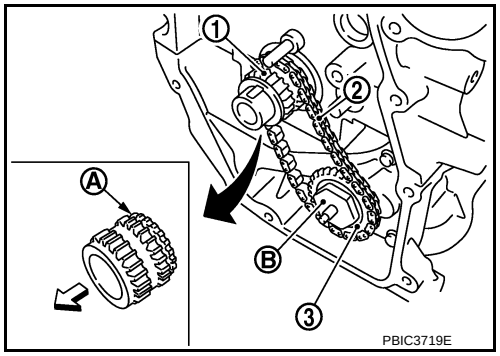

b. Hold the top of the oil pump shaft using the TORX socket (size: E8), and then tighten the oil pump sprocket nuts.

1 : Crankshaft sprocket
2 : Oil pump drive chain
3 : Oil pump sprocket

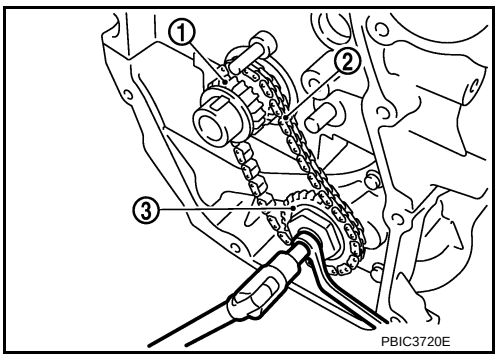

c. Install chain tensioner (1).
- Insert the body into the shaft (B) while inserting the spring into the fixing hole (A) of cylinder block front surface.
- Check that the tension is applied to the oil pump drive chain after installing.

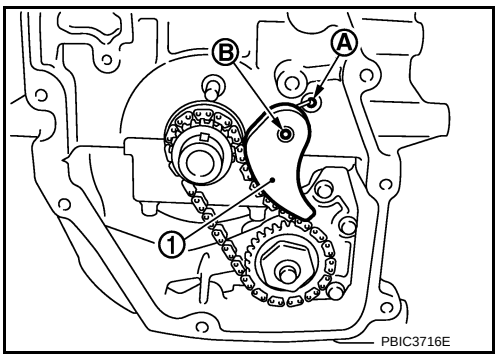

2. Install timing chain with the following procedure.

A : Blue link
B : Matching mark (stamp)
C : Orange link
D : Matching mark (stamp)
E : Crankshaft key (point straight up)
F : Matching mark (peripheral stamp line)
G : Blue link

- Install by aligning matching marks on each sprocket and timing chain.
- If these matching marks are not aligned, rotate the camshaft slightly to correct the position.

CAUTION:
- **For the following note, after the matching marks are aligned, keep them aligned by holding them with a hand.**
- **To avoid skipped teeth, never rotate crankshaft and camshaft until front cover is installed.**

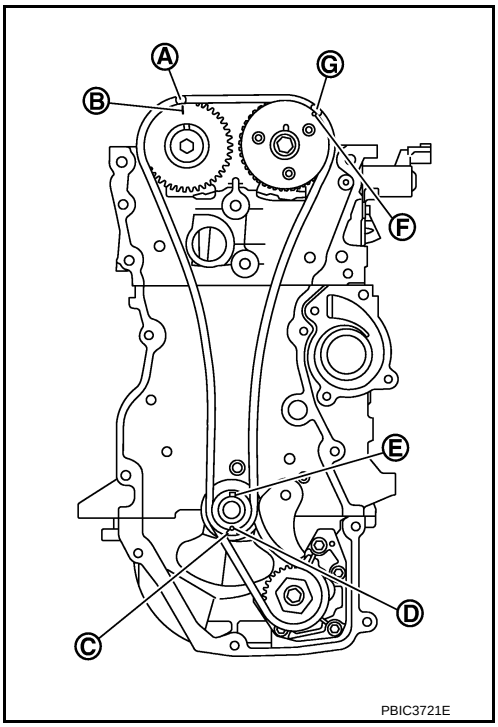

3. Install timing chain tension guide (2) and timing chain slack guide (1).

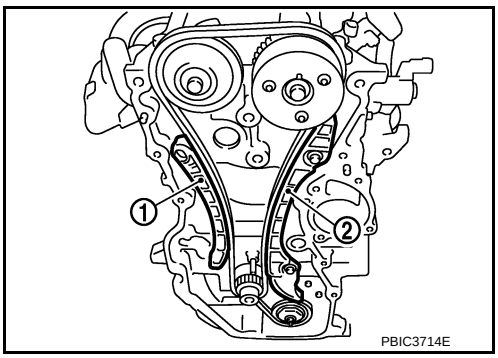

4. Install chain tensioner (1).
   - Fix the plunger at the most compressed position using a stopper pin (A), and then install it.
   - Securely pull out the stopper pin after installing the chain tensioner.

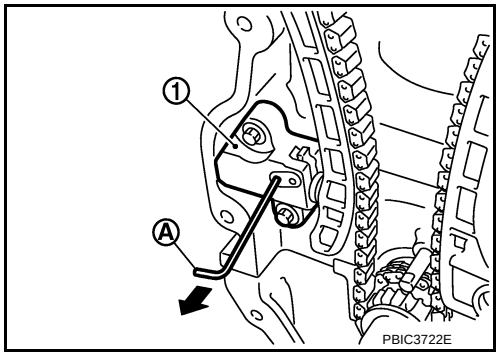

5. Check matching mark position of timing chain and each sprocket again.
6. Install the front oil seal to the front cover. Refer to EM-70, "FRONT OIL SEAL : Removal and Installation"
7. Install front cover with the following procedure:

a. Apply a continuous bead of liquid gasket with tube presser (commercial service tool) to front cover as shown in the figure.
Use Genuine Liquid Gasket or equivalent.

1 : Cylinder head
2 : Cylinder block
3 : Oil pan (upper)
A : Liquid gasket application area [ϕ3.0 - 4.0 mm (0.12 - 0.16 in)]

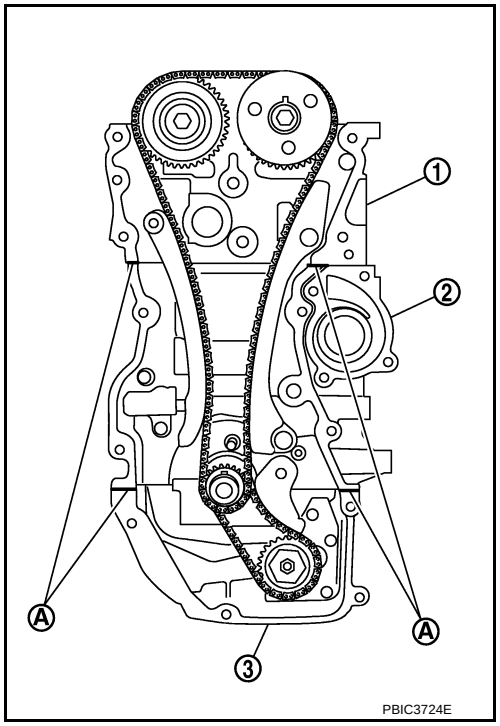

b. Apply a continuous bead of liquid gasket with tube presser (commercial service tool) to front cover as shown in the figure.
Use Genuine Liquid Gasket or equivalent.

A : Liquid gasket application area [ϕ3.0 - 4.0 mm (0.12 - 0.16 in)]

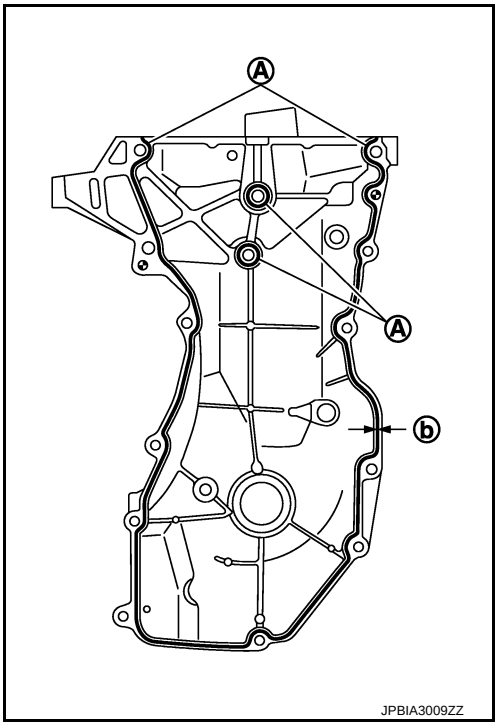

c. Tighten bolts in the numerical order as shown in the figure.
d. After all bolts are tightened, retighten them to specified torque in numerical order as shown in the figure.
CAUTION:
Be sure to wipe off any excessive liquid gasket leaking to surface.

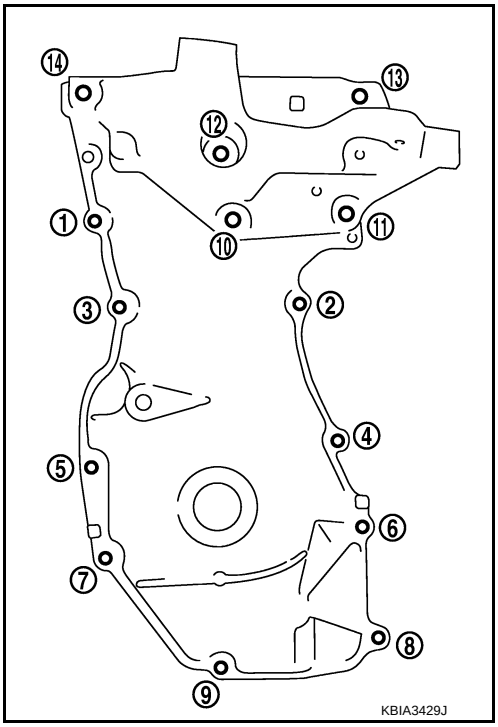

8. Insert crankshaft pulley by aligning with crankshaft key.
   - When inserting crankshaft pulley with a plastic hammer, tap on its center portion (not circumference).
   CAUTION:
   Install protecting front oil seal lip section from any damage.
9. Tighten crankshaft pulley bolt with the following procedure:
   - Secure crankshaft pulley with a pulley holder (commercial service tool), and tighten crankshaft pulley bolt.

a. Apply new engine oil to thread and seat surfaces of crankshaft pulley bolt.
b. Tighten crankshaft pulley bolt.

: 35.0 N·m (3.6 kg-m, 26 ft-lb)

c. Put a paint mark (B) on crankshaft pulley, mating with any one of six easy to recognize angle marks (A) on crankshaft bolt flange (1).

d. Turn another 60 degrees clockwise (angle tightening).
   - Check the tightening angle with movement of one angle mark.

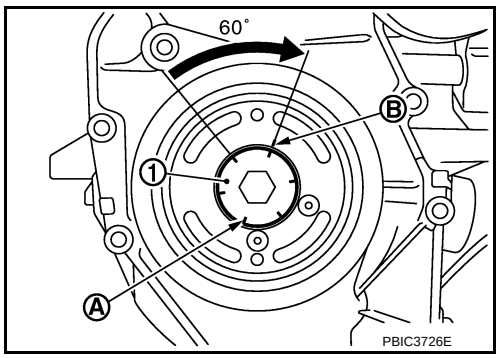

10. Check that crankshaft turns smoothly by rotating by hand clockwise.
11. Install in the reverse order of removal.

Inspection

INFOID:0000000005988194

INSPECTION AFTER REMOVAL

Timing Chain

Check for cracks (A) and any excessive wear (B) at link plates and roller links of timing chain. Replace timing chain if necessary.

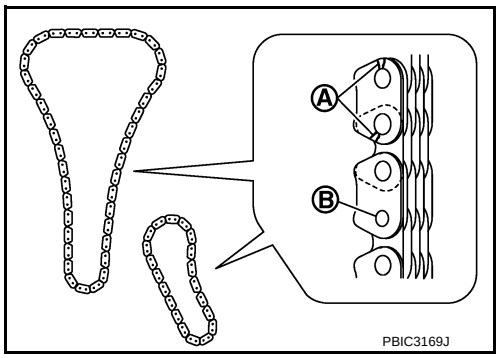

INSPECTION AFTER INSTALLATION

Inspection for Leakage

The following are procedures for checking fluids leakage, lubricates leakage, and exhaust gases leakage.

- Before starting engine, check oil/fluid levels including engine coolant and engine oil. If less than required quantity, fill to the specified level. Refer to MA-8, "Fluids and Lubricants".
- Use procedure below to check for fuel leakage.
  - Turn ignition switch “ON” (with engine stopped). With fuel pressure applied to fuel piping, check for fuel leakage at connection points.
  - Start engine. With engine speed increased, check again for fuel leakage at connection points.
- Run engine to check for unusual noise and vibration.

  NOTE:

  If hydraulic pressure inside chain tensioner drops after removal/installation, slack in guide may generate a pounding noise during and just after the engine start. However, this does not indicate an unusualness. Noise will stop after hydraulic pressure rises.
- Warm up engine thoroughly to check there is no leakage of fuel, or any oil/fluids including engine oil and engine coolant.
- Bleed air from lines and hoses of applicable lines, such as in cooling system.
- After cooling down engine, again check oil/fluid levels including engine oil and engine coolant. Refill to the specified level, if necessary.

Summary of the inspection items:

Items	Before starting engine	Engine running	After engine stopped
Engine coolant	Level	Leakage	Level
Engine oil	Level	Leakage	Level

Other oils and fluid*	Level	Leakage	Level
Fuel	Leakage	Leakage	Leakage

*: Transmission/transaxle/CVT fluid, power steering fluid, brake fluid, etc.

CAMSHAFT

Exploded View

INFOID:0000000005988195

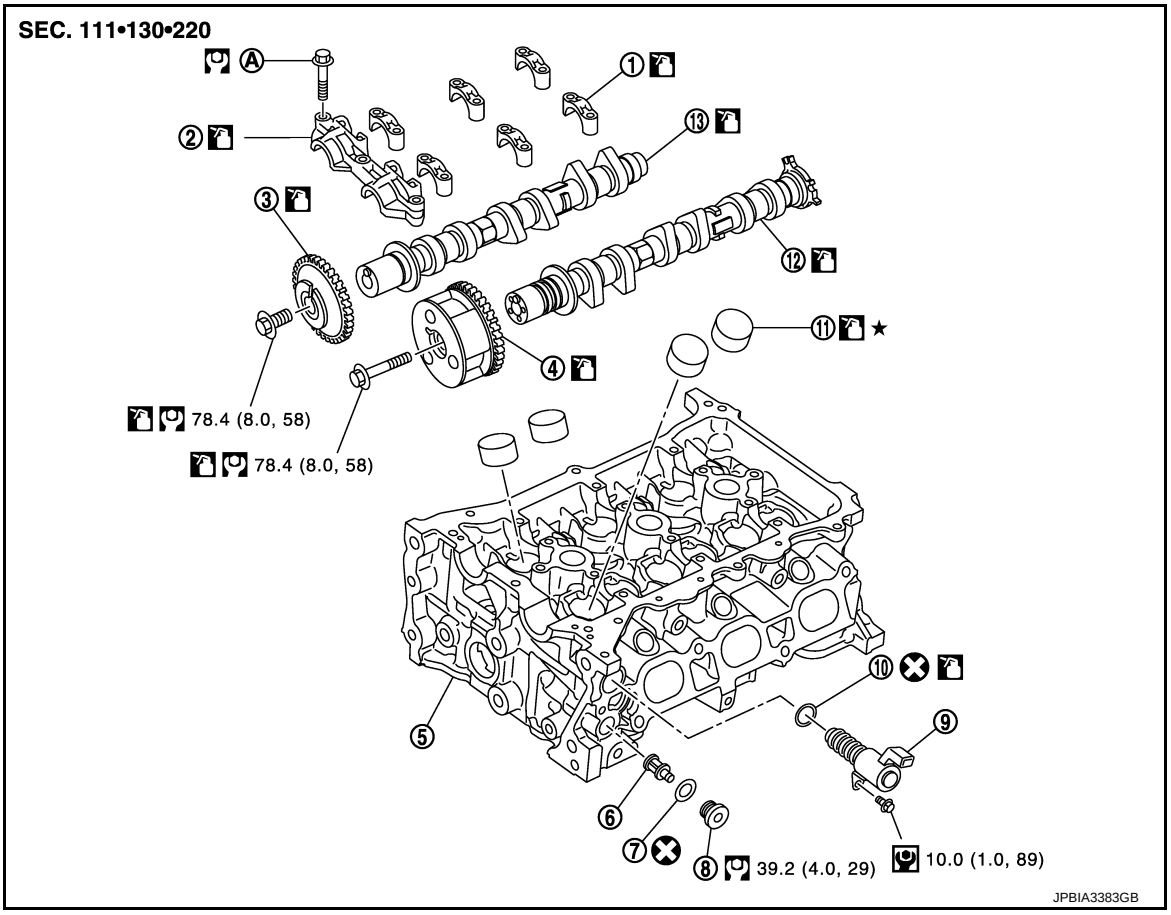

1.	Camshaft bracket (No. 2 to 4)	2.	Camshaft bracket (No. 1)	3.	Camshaft sprocket (EXH)
4.	Camshaft sprocket (INT)	5.	Cylinder head	6.	Oil filter (for intake valve timing control solenoid valve)
7.	Washer	8.	Plug	9.	Intake valve timing control solenoid valve
10.	O-ring	11.	Valve lifter	12.	Camshaft (INT)

A. Tightening must be done following the installation procedure. Refer to EM-53

Refer to GI-4, "Components" for symbols in the figure.

Removal and Installation

INFOID:0000000005988196

CAUTION:
The rotation direction indicated in the text indicates all directions seen from the engine front direction.

REMOVAL

NOTE:
This section describes the procedure for removal and installation of camshaft with front cover. If the front cover is removed first, change the following procedure.

·Step 8 : After camshaft sprocket is removed, remove the camshaft brackets (No. 2 to 4).

·Step 9 : The camshaft (EXH) can be removed simultaneously with the camshaft (INT).

·Step 10 : When the camshaft sprocket (INT) mounting bolt is removed, the lifting up of camshaft is not necessary.

1. Support the bottom surface of engine using a transmission jack, and then remove the engine mounting bracket and insulator (RH). Refer to EM-79, "Exploded View".
2. Remove rocker cover. Refer to EM-41, "Exploded View".
3. Place cylinder No. 1 at TDC with the following procedure.

a. Rotate crankshaft pulley (2) clockwise and align TDC mark (without paint mark) (A) to timing indicator (1) on front cover.

B : White paint mark (Not use for service)

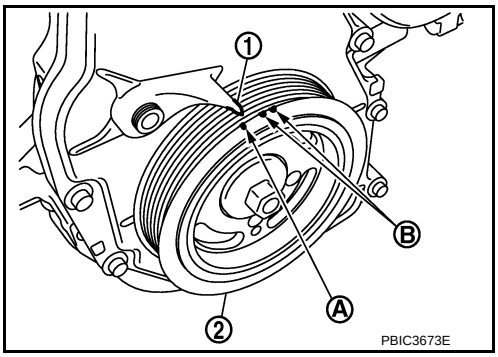

b. Check that the matching marks on each camshaft sprocket are in the position as shown in the figure.

1. : Timing chain
2. : Camshaft sprocket (EXH)
3. : Camshaft sprocket (INT)

A : Matching mark (Paint)
B : Matching mark (Stamp)
C : Matching mark (Peripheral stamp line)

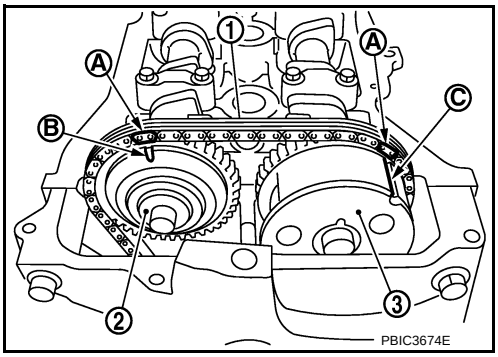

- If the matching marks are not in place, rotate crankshaft pull one more turn to satisfy the position shown in figure.

c. Check that the cam nose of cylinder 1 is positioned as shown in the figure.

1. : Camshaft (EXH)
2. : Camshaft (INT)

⇦ : Cylinder head side

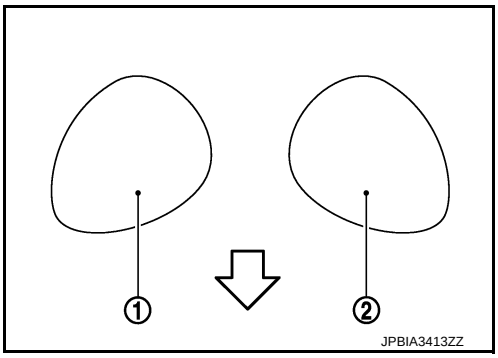

d. Paint matching marks (A) on the timing chain links

4. Secure the plunger of chain tensioner in the fully compressed position with the following procedure. And then, loosen the timing chain tension.

a. Remove the plug (2) from the front cover (1).

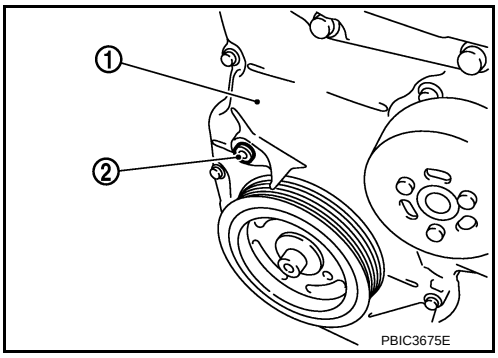

b. Fully push down the lever (B) of chain tensioner (2) from the plug hole, and then insert the stopper pin (A) into the body side hole and secure the lever at the lowest position.

C : Front cover has been omitted

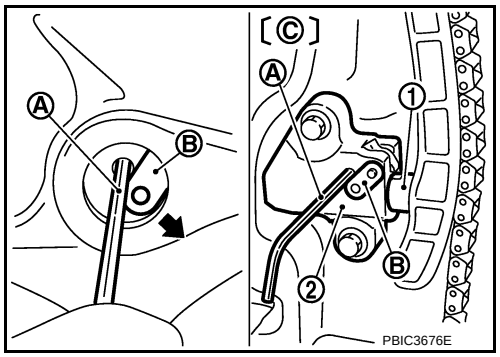

- The tab is released by fully pushing the lever down. As a result, the plunger (1) can be moved.

NOTE:
Hexagonal wrench [2.5 mm (0.098 in)] is used for a stopper pin as an example.

CAUTION:
The stopper pin must use a shape that cannot fall in the front cover when dropping out.

c. Turn the crankshaft pulley (2) counterclockwise with the camshaft (EXH) (1) fixing. Apply the tension to the timing chain, and then push the plunger of into the inside of chain tensioner.

CAUTION:
Hold the camshaft hexagonal part (A), and then secure the camshaft.

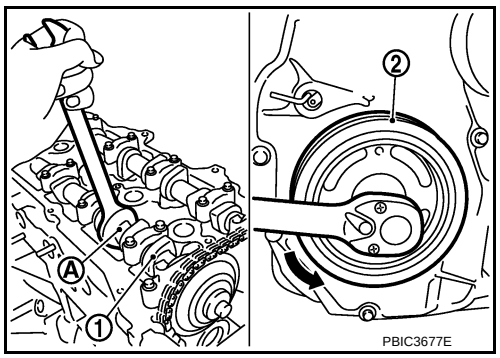

d. Pull out the stopper pin (A) of chain tensioner (2) side from plug hole. Lift the lever (B) up to align its hole position with the hole of the body.

D : Front cover has been omitted

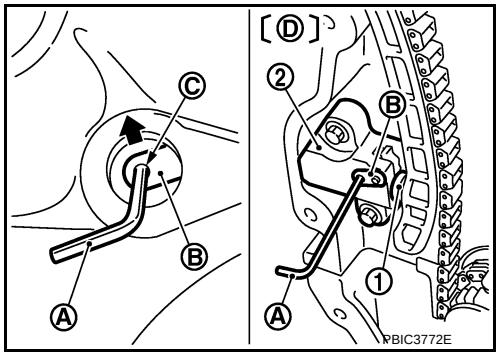

- When the lever hole (C) is aligned with the body hole position, the plunger (1) is fixed.
- When the protrusion parts of the plunger ratchet and the tab face each other, both hole positions are not aligned. At that time, correctly engage them and align these hole positions by slightly moving the plunger.

e. Insert the stopper pin into the body hole through the lever hole, and then fix the lever at the upper position.

f. Slightly rotate the crankshaft pulley (2) clockwise to loosen the timing chain on camshaft sprocket (EXH) (1) side.

CAUTION:
Hold the camshaft hexagonal part (A), and then secure the camshaft.

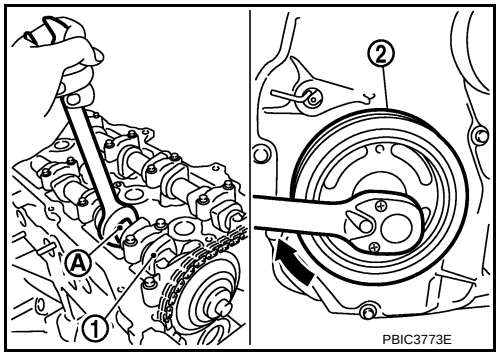

5. Remove camshaft sprocket (EXH) (1).

CAUTION:

- **Hold the camshaft hexagonal part (A), and then secure the camshaft.**
- **Never rotate crankshaft and camshaft separately, so as not to contact valve with piston in the following steps.**

NOTE:

The timing chain with the front cover installed is not disengaged from the crankshaft sprocket and it is not dropped into the front cover. Therefore, the timing chain tension holding device is not necessary.

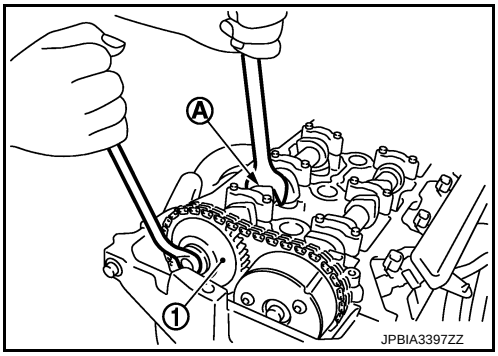

6. Turn the camshaft sprocket (INT) to the most advanced position.

CAUTION:

Installation and removal of the camshaft sprocket (INT) must be done in the most advanced position for the following reasons, so check that you follow the procedure exactly.

- **The sprocket (C) and vane (camshaft coupling) (B) are designed to spin and move within the range of a certain angle.**
- **With the engine stopped and the vane in the most retarded angle, it will not spin because it is locked to the sprocket side by the internal lock pin (A).**
- **If the camshaft sprocket mounting bolts are turned in the situation described above, the lock pin will become damaged and cause malfunctions because of the increased horizontal load (cutting force) on the lock pin.**

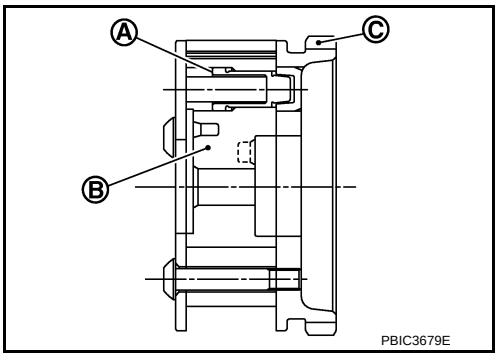

- Put the camshaft sprocket (INT) in the most advance position with the following procedure.

a. Remove camshaft bracket (No. 1) (1).

⇦ : Engine front

- Loosen the bolts in several steps, and then remove them.

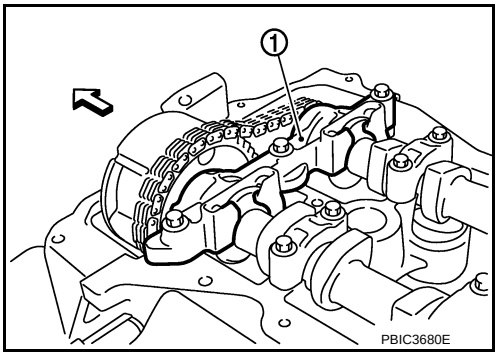

b. Apply the following air pressure to the No. 1 journal oil hole (A) of camshaft (INT) (1) shown in the figure using an air gun.

Pressure : 300 kPa (3.0 bar, 3.1 kg/cm^2, 44psi) or more

- Apply the air pressure into the oil hole on the second groove from the front of camshaft thrust (B).
- Proceed all the way through step “e” with the air pressure on.

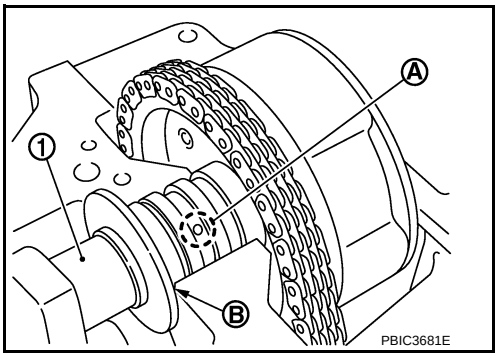

- Attach the rubber nozzle (B) narrowed to the top of the air gun (A) to prevent air leakage from the oil hole. Securely apply the air pressure to the oil hole.

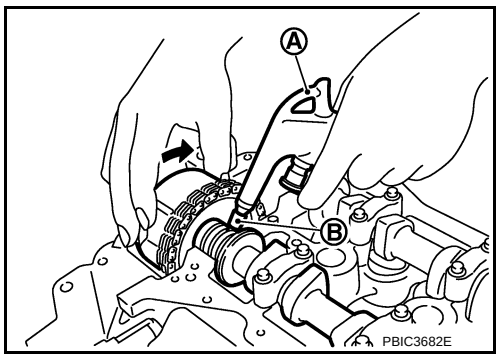

CAUTION:
- **There are other oil holes in the side grooves. Never use the incorrect oil holes.**
- **Be sure not to damage the oil path with the tip of the air gun.**
- **Wipe all the oil off the air gun to prevent oil from being blown all over along with the air, and the area around the air gun should be wiped with a rag when applying air pressure. Eye protection should be worn as needed.**

NOTE:
The air pressure is used to move the lock pin into the disengage position.

c. Hold the camshaft sprocket (INT) with hands, and then apply the power counterclockwise/clockwise alternatively.
- Finally rotate the sprocket of the camshaft sprocket (INT) counterclockwise [the direction shown by the arrow (⬅)].
- Perform the work while applying the air pressure to the oil hole.
- If the lock pin is not released by hands, tap the camshaft sprocket (INT) lightly with a plastic hammer (A).
- If the camshaft sprocket (INT) is not rotated counterclockwise even if the above procedures are performed, check the air pressure and the oil hole position.

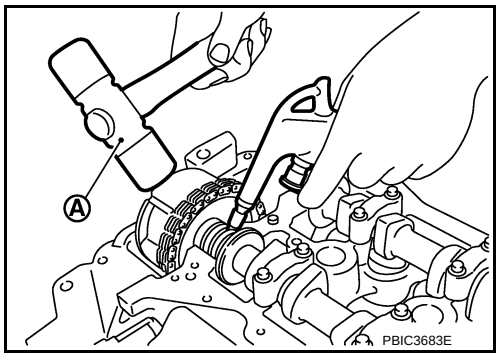

d. While doing the above, once you hear a click (the sound of the internal lock pin disengaging) from inside the camshaft sprocket (INT), start turning the camshaft sprocket (INT) in the counterclockwise direction in the most advanced angle position.

C : Lock pin engaged
D : Most advanced angle

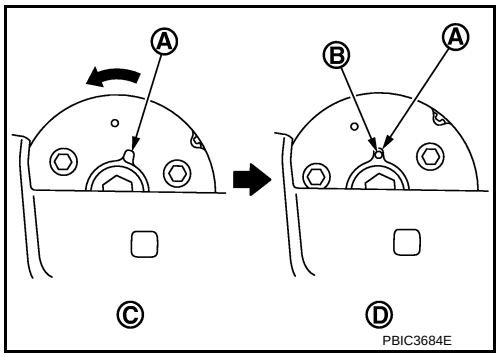

- Keep the air pressure on.
- If there is no click, as soon as the vane-side (camshaft side) starts moving independently of the sprocket, the lock pin has become disengaged.
- Check that it is in the most advanced angle position by seeing if the stopper pin groove (A) and the stopper pin hole (B) are matched up as shown in the figure.

e. Complete the applying procedure of air pressure and the holding procedure of camshaft (INT).

f. Insert the stopper pin (A) into the stopper pin holes in the camshaft sprocket (INT) and lock in the most advanced angle position.

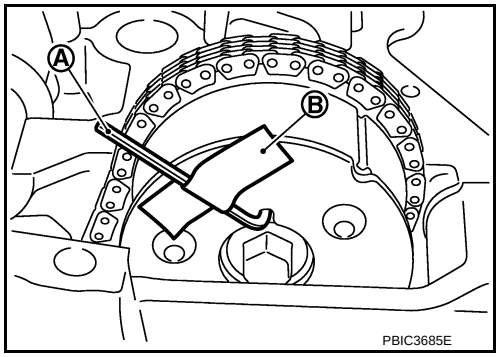

CAUTION:
No load is exerted on the stopper pin (spring reaction, etc.). Since it comes out easily, secure it with tape (B) to prevent it from coming out.

NOTE:
The stopper pin in the figure shows one example of a hexagonal wrench for 2.5 mm (0.098 in) [length of inserted section: approximately15 mm (0.59 in)].

7. Remove camshaft brackets (No. 2 to 5).

- Loosen bolts in several steps in the reverse of the order as shown in the figure.

A : EXH side
B : INT side
⇦ : Engine front

NOTE:
The camshaft bracket (No. 1) has been already removed.

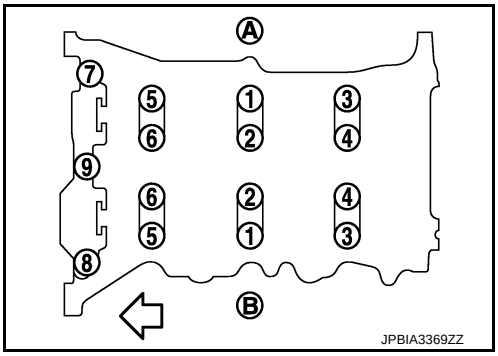

8. Remove camshaft (EXH).
9. Remove the camshaft (INT) (1) and the camshaft sprocket (INT) (2) with the following procedure.

a. Lift up the camshaft sprocket (INT), and then set the thin tools (a box wrench, etc.) to the mounting bolt (A).

b. Return the camshaft (INT) to the cylinder head journal quietly.

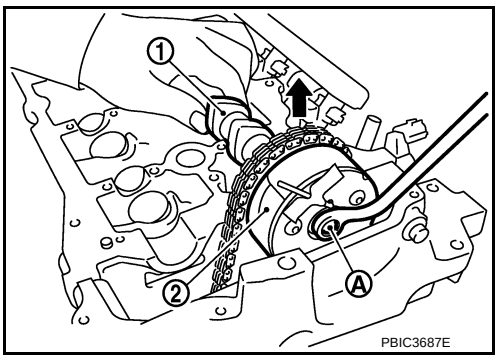

c. Keeping the camshaft hexagonal part (A) still with the wrench, loosen mounting the bolts for the camshaft sprocket (INT) (2).

1. Camshaft (INT)

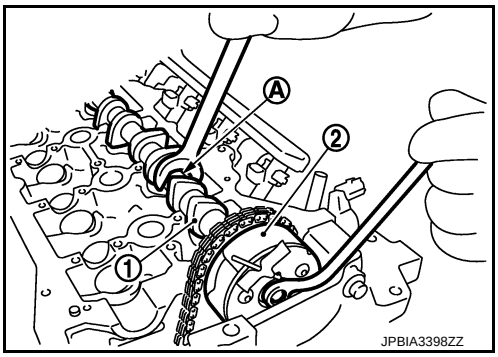

d. Lift up the camshaft (INT) (1), and then disassemble the camshaft from the camshaft sprocket (INT) (2).

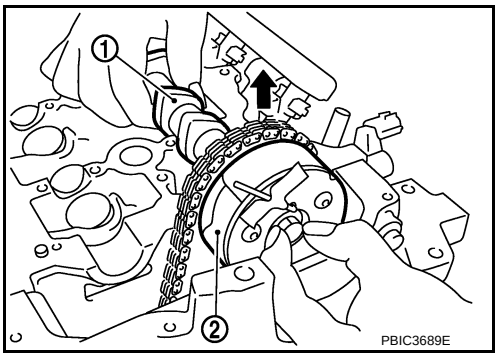

e. Remove camshaft (INT) rearward.
CAUTION:
Never damage the signal plate of rear end.

f. Remove camshaft sprocket (INT) (1).
CAUTION:
Never drop stopper pin.

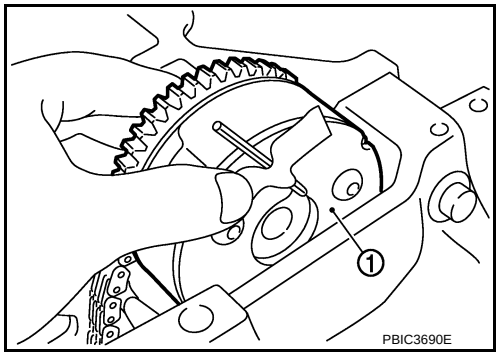

CAUTION:
- **Tape (C) the stopper pin (B) so it does not come out.**
- **Never subject it to impact by dropping.**
- **Never disassemble. [Never loosen the three mounting bolts (A)].**

NOTE:
While removing the camshaft sprocket (INT), if you have taken out the stopper pin and the lock pin has been rejoined in the most retarded angle, do the following to restore it.

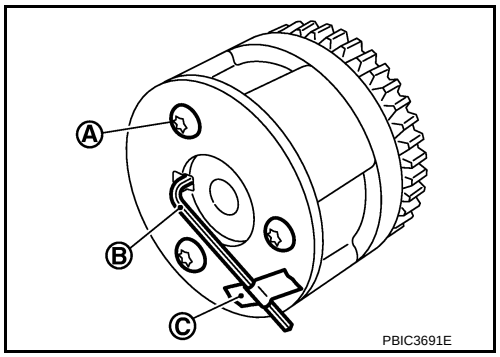

i. Install the camshaft (INT) and tighten the mounting bolts enough to prevent air from leaking out.
CAUTION:
The internal lock pin will get damaged, so keep the torque on the mounting bolts to the minimum required to prevent air from escaping.

ii. Apply the air pressure, disengage the lock pin, and turn the vane to the most advanced angle position.

iii. Insert the stopper pin.

iv. Remove camshaft sprocket (INT) from the camshaft.

10. Remove valve lifter.
    - Identify installation positions, and store them without mixing them up.

11. Remove intake valve timing control solenoid valve (1).

12. Remove the alternator and bracket, remove the plug (2), and then remove the oil filter. Refer to CHG-27, "Removal and Installation".

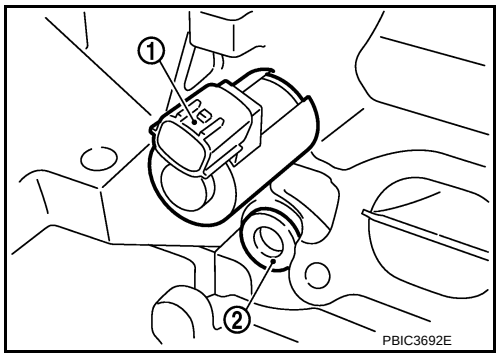

INSTALLATION

1. Install the oil filter (1).

   2 : Washer

   - The oil filter is assembled to the plug (3), and then install it to the cylinder head.

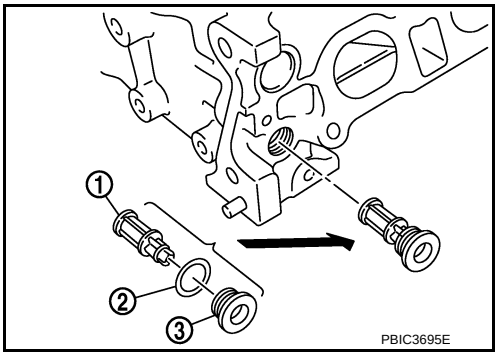

2. Install intake valve timing control solenoid valve.
   - Insert it straightly into the cylinder head.
   - Tighten bolts after placing it completely.

3. Install valve lifter.
   - If it is reused, install in its original positions.

4. Put a matching mark for positioning the camshaft (INT) and the camshaft sprocket (INT) with the following procedure.
   NOTE:
   It prevents the knock pin from engaging with the incorrect pin hole after installing the camshaft (INT) and the camshaft sprocket (INT).

a. Put the matching marks (A) on a line extending from the knock pin position of camshaft (INT) (1) front surface.
   - Put the marks on the visible position with the camshaft sprocket installed. (The figure shows an example.)

b. Put the matching marks on a line extending from the knock pin hole (B) position of camshaft sprocket (INT) (2). (The figure shows an example.)
   - Put the marks on the visible position with it installed to the camshaft.

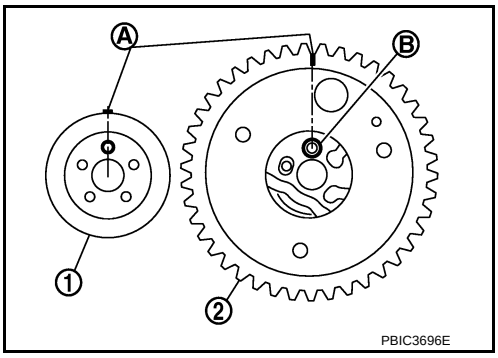

5. Set the camshaft sprocket (INT) to between cylinder head and front cover.
   - Set it with the knock pin hole (A) facing up.
   CAUTION:
   Check the stopper pin is inserted at the most advanced position beforehand.

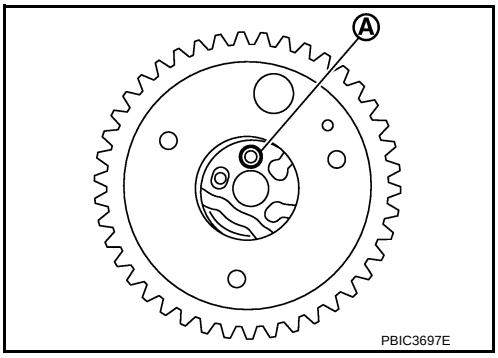

6. Install camshaft.

   1 : Camshaft (EXH)
   2 : Camshaft (INT)
   A : Identification mark

   - Distinction between camshaft (INT and EXH) is performed with the different shapes of rear end.

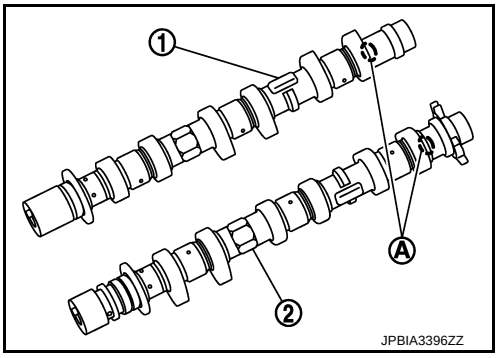

- Install camshafts to the cylinder head so that knock pins (A) on front end are positioned as shown in the figure.

1 : Camshaft (EXH)
2 : Camshaft (INT)
⇦ : Upper side

NOTE:
Though camshaft does not stop at the portion as shown in the figure, for the placement of cam nose, it is generally accepted camshaft is placed for the same direction of the figure.

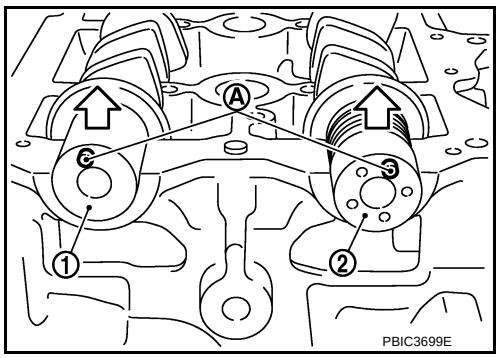

7. Install the camshaft sprocket (INT) to the camshaft (INT) with the following procedure.

a. Refer to the matching mark (A) put according to step “4”. Securely align the knock pin and the pin hole, and then install them.

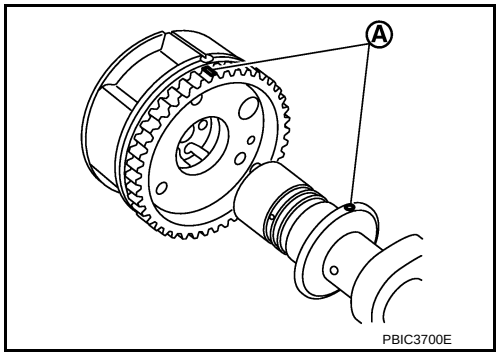

b. Lift up the front side of camshaft (INT) (1), and then temporarily tighten the bolt.

2 : Camshaft sprocket (INT)

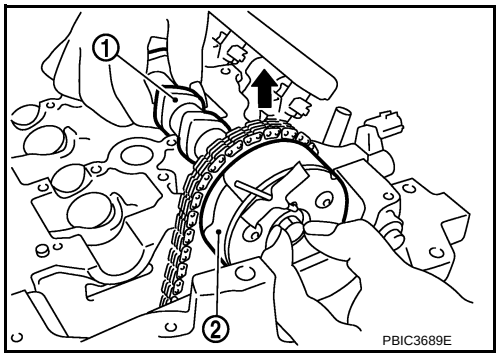

8. Put a thick shop cloth (B) to the lower surface, and then set the tools to the bolt while lifting up the front side of camshaft (INT) (1).
9. Tighten the mounting bolt.
CAUTION:
Hold the camshaft hexagonal part (A), and then secure the camshaft.

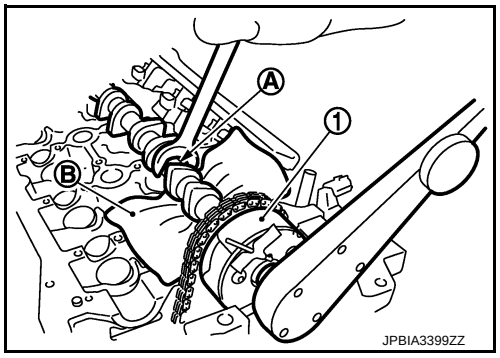

10. Return the camshaft (INT) to the cylinder head quietly.

11. Install timing chain (1) by aligning its matching mark (marked when timing chain is removed) (B) with matching mark (peripheral stamp line) (A) on camshaft sprocket (INT) (2).

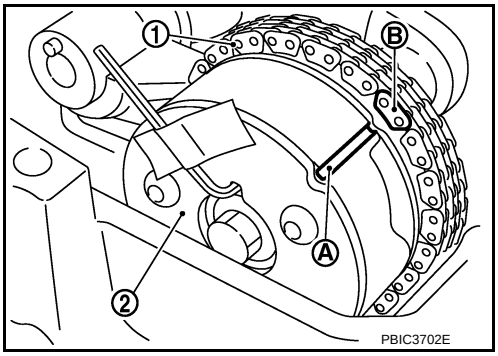

12. Install camshaft brackets (No. 2 to 4) aligning the identification marks on upper surface as shown in the figure.

A : EXH side
B : INT side
⇦ : Engine front

- Install so that identification mark can be correctly read when viewed from the INT side.

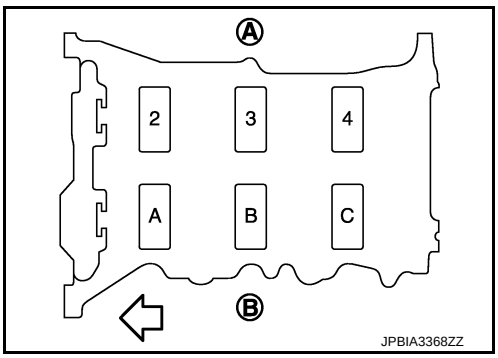

13. Tighten mounting bolts of camshaft brackets in the following steps, in numerical order as shown in the figure.

A : EXH side
B : INT side
⇦ : Engine front

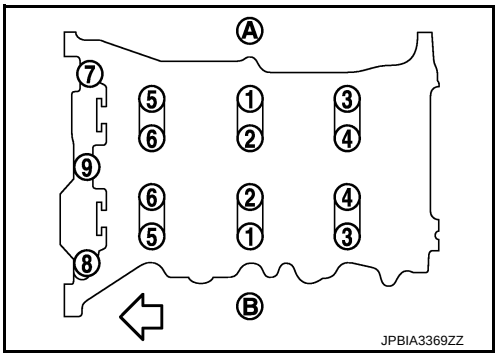

a. Tighten No. 7 to 9 in numerical order.

: 2.0 N·m (0.2 kg-m, 1 ft-lb)

b. Tighten No. 1 to 6 in numerical order.

: 2.0 N·m (0.2 kg-m, 1 ft-lb)

c. Tighten all bolts in numerical order.

: 5.9 N·m (0.6 kg-m, 4 ft-lb)

d. Tighten all bolts in numerical order.

: 10.4 N·m (1.1 kg-m, 8 ft-lb)

14. Install the camshaft (EXH) to the camshaft sprocket (EXH) (2) while aligning the matching mark (marked when timing chain is removed) (A) and the matching mark (stamp) (B) of camshaft sprocket (EXH).

1 : Timing chain
3 : Camshaft sprocket (INT)
C : Matching mark (peripheral stamp line)

- If the positions of knock pin and pin groove are not aligned, move the camshaft (EXH) slightly to correct these positions.

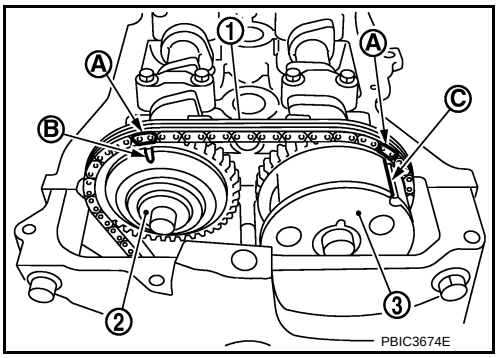

15. Tighten the mounting bolt.

1 : Camshaft sprocket (EXH)

CAUTION:
- **Hold the camshaft hexagonal part (A), and then secure the camshaft.**
- **Check that the matching mark (marked when timing chain is removed) and each camshaft sprocket matching mark are in the correct location.**

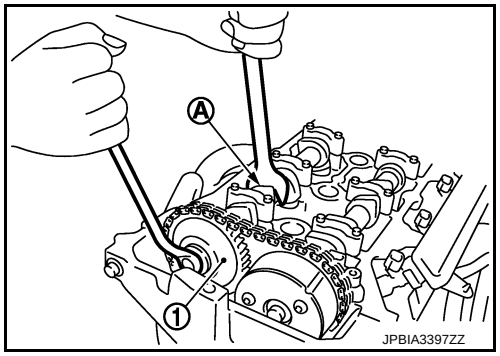

16. Pull out the stopper pin (A), and then apply the tension to the timing chain by rotating the crankshaft pulley clockwise slightly.

1 : Plunger
2 : Chain tensioner
B : Lever
C : Lever hole
D : Front cover has been omitted

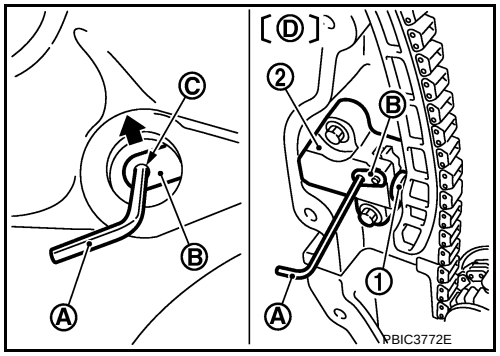

17. Install the plug (2) to the front cover (1).
- Apply liquid gasket to the threads, and tighten them.

Use Genuine Liquid Gasket or equivalent.

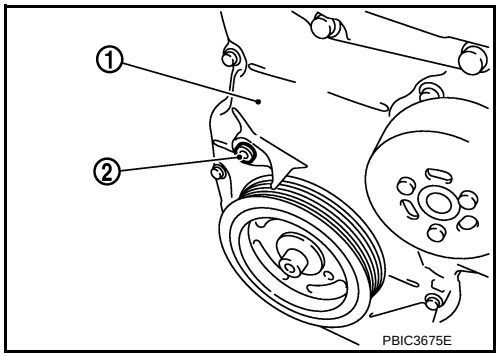

18. Return the camshaft sprocket (INT) in the most retarded position with the following procedure.

a. Remove the stopper pin (A) from the camshaft sprocket (INT).

B : Tape

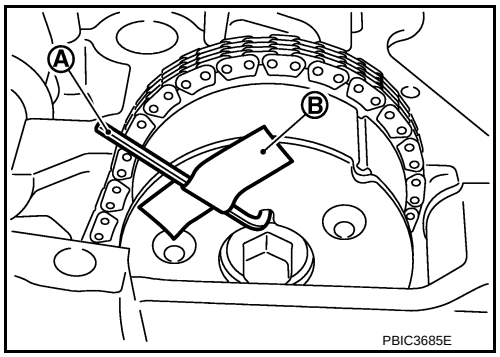

b. Turn the crankshaft pulley (1) slowly clockwise (A) and return the camshaft sprocket (INT) to the most retarded angle position.

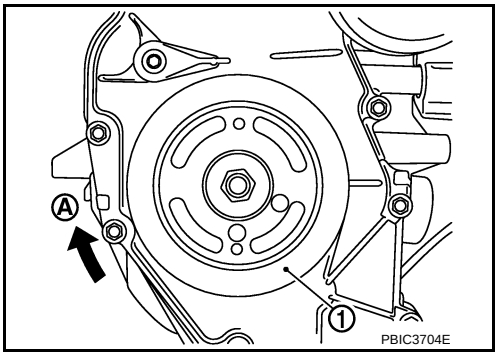

- When first turning the crankshaft the camshaft sprocket (INT) will turn. Once it is turned more, and the vane (camshaft) also turns, then it has reached the most retarded angle position.

  B : Stopper pin hole
  C : Most advanced angle
  D : Lock pin engaged

- The most retarded angle position can be checked by seeing if the stopper pin groove (A) is shifted clockwise.
- After spinning the crankshaft slightly in the counterclockwise direction, you can check the lock pin has joined by seeing if the vane (camshaft) and the sprocket move together.

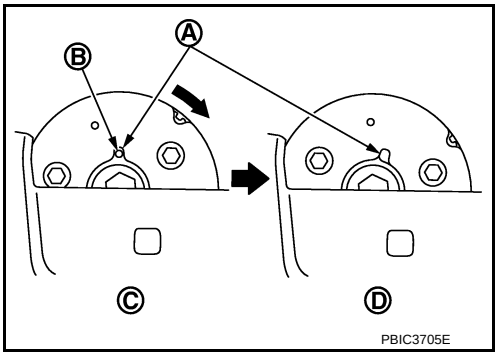

19. Install the camshaft position sensor (PHASE) to the rear end of cylinder head.
    - Tighten bolts with it seated completely.
20. Check and adjust valve clearance. Refer to EM-11, "Inspection and Adjustment".
21. Install in the reverse order of removal.

Inspection

INFOID:0000000005988197

INSPECTION AFTER REMOVAL

Oil Filter

- Check that there is no foreign material on the oil filter (1) and check it for clogging.
- Check the oil filter for damage.
- If there is some damage, replace the oil filter, the plug, and the washer as a set.

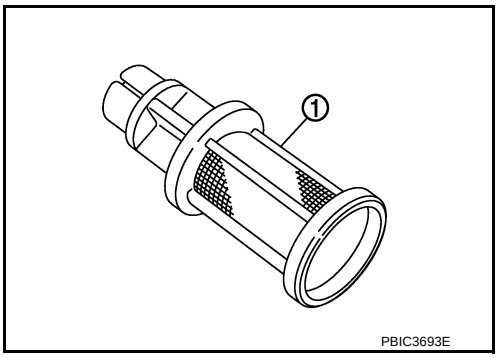

Camshaft Runout

1. Put V-block on a precise flat table, and support No. 2 and 5 journals of camshaft.
   CAUTION:
   Never support No. 1 journal (on the side of camshaft sprocket) because it has a different diameter from the other four locations.
2. Set a dial indicator vertically to No. 3 journal.
3. Turn camshaft to one direction with hands, and measure the camshaft runout on the dial indicator. (Total indicator reading)

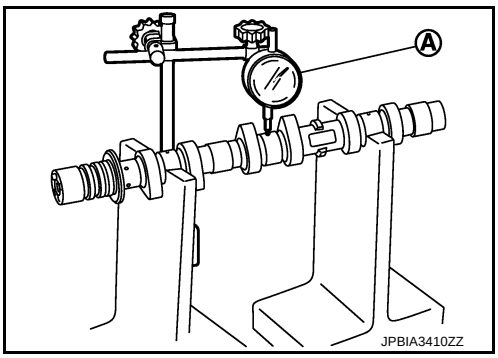

Standard and Limit

: Refer to EM-93, "Camshaft".

4. If it exceeds the limit, replace camshaft.

Camshaft Cam Height

1. Measure the camshaft cam height with a micrometer (A).

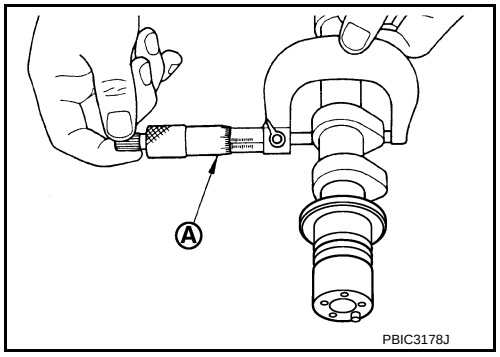

Standard and Limit

Intake
Exhaust **: Refer to EM-93, "Camshaft".**

Cam wear limit:

: Refer to EM-93, "Camshaft".

2. If wear exceeds the limit, replace camshaft.

Camshaft Journal Oil Clearance

CAMSHAFT JOURNAL DIAMETER

Measure the outer diameter of camshaft journal with a micrometer (A).

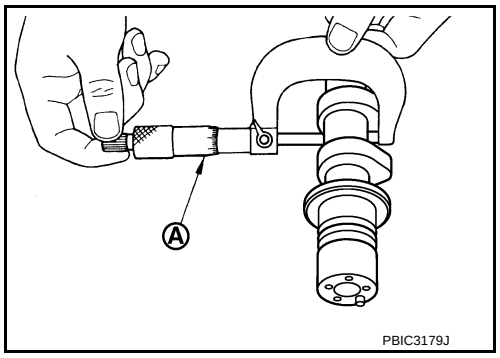

Standard: **: Refer to EM-93, "Camshaft".**

CAMSHAFT BRACKET INNER DIAMETER

- Tighten camshaft bracket bolts with the specified torque. Refer to “INSTALLATION” for the tightening procedure.
- Measure inner diameter (B) of camshaft bracket with a bore gauge (A).

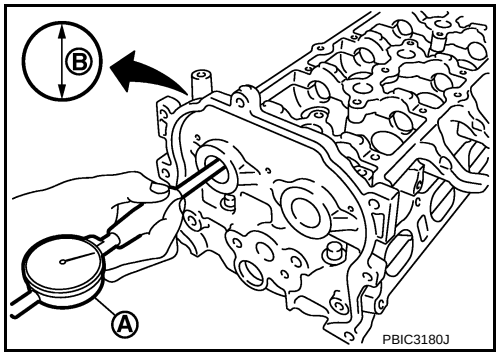

Standard **: Refer to EM-93, "Camshaft".**

CAMSHAFT JOURNAL OIL CLEARANCE

- (Oil clearance) = (Camshaft bracket inner diameter) – (Camshaft journal diameter)

Standard and Limit **: Refer to EM-93, "Camshaft".**

- If it exceeds the limit, replace either or both camshaft and cylinder head.
  NOTE:
  Camshaft brackets cannot be replaced as single parts, because they are machined together with cylinder head. Replace whole cylinder head assembly.

Camshaft End Play

1. Install camshaft in cylinder head. Refer to EM-53, "Removal and Installation" for tightening procedure.
2. Install a dial indicator (A) in thrust direction on front end of camshaft. Measure the camshaft end play on the dial indicator when camshaft is moved forward/backward (in direction to axis).

Standard and Limit : Refer to EM-93, "Camshaft".

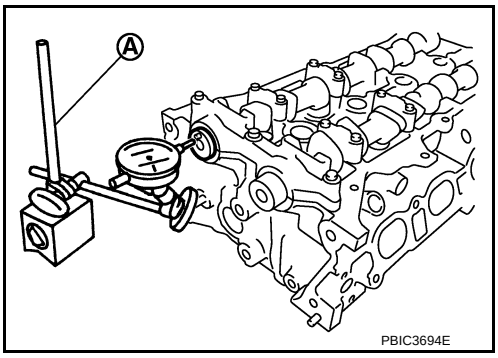

- Measure the following parts if out of the standard.
- Dimension “A” for cylinder head No. 1 journal bearing

Standard : 4.000 - 4.030 mm (0.1574 - 0.1586 in)

- Dimension “B” for camshaft thrust

Standard : 3.877 - 3.925 mm (0.1526 - 0.1545 in)

- Refer to the standards above, and then replace camshaft and/or cylinder head.

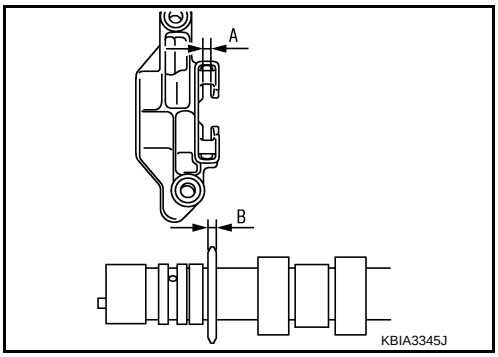

Camshaft Sprocket Runout

1. Put V-block on precise flat table, and support No. 2 and 5 journals of camshaft.
   CAUTION:
   Never support No. 1 journal (on the side of camshaft sprocket) because it has a different diameter from the other four locations.
2. Measure the camshaft sprocket runout with a dial indicator. (Total indicator reading)

Limit : 0.15 mm (0.0059 in)

- If it exceeds the limit, replace camshaft sprocket.

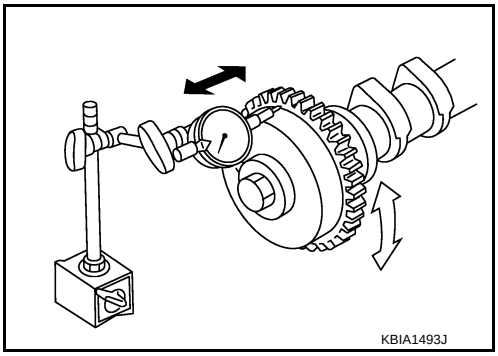

Valve Lifter

Check if surface of valve lifter has any wear or cracks.

- If anything above is found, replace valve lifter. Refer to EM-93, "Camshaft".

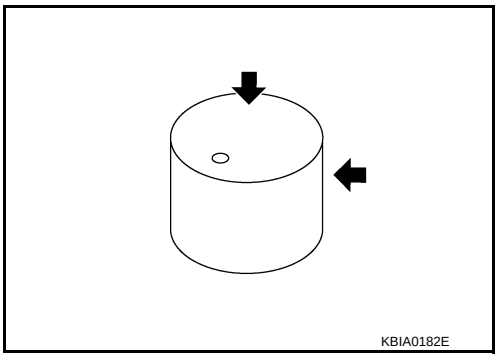

Valve Lifter Clearance

VALVE LIFTER OUTER DIAMETER

- Measure the outer diameter of valve lifter with a micrometer (A).

Standard : Refer to EM-93, "Camshaft".

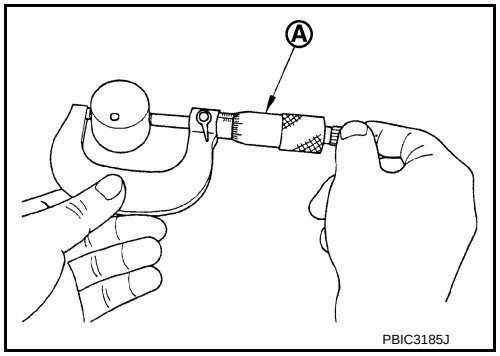

VALVE LIFTER HOLE DIAMETER

Measure the diameter of valve lifter hole of cylinder head with an inside micrometer (A).

Standard : Refer to EM-93, "Camshaft".

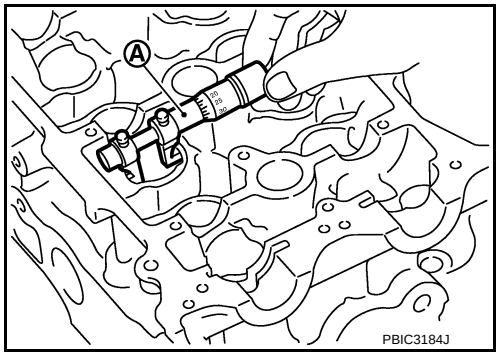

VALVE LIFTER CLEARANCE

- (Valve lifter clearance) = (Valve lifter hole diameter) – (Valve lifter outer diameter)

Standard : Refer to EM-93, "Camshaft".

- If out of the standard, referring to the each standard of valve lifter outer diameter and valve lifter hole diameter, replace either or both valve lifter and cylinder head.

INSPECTION AFTER INSTALLATION

Inspection for Leaks

The following are procedures for checking fluids leak, lubricates leak.

- Before starting engine, check oil/fluid levels including engine coolant and engine oil. If less than required quantity, fill to the specified level. Refer to MA-8, "Fluids and Lubricants".
- Use procedure below to check for fuel leakage.
  - Turn ignition switch “ON” (with engine stopped). With fuel pressure applied to fuel piping, check for fuel leakage at connection points.
  - Start engine. With engine speed increased, check again for fuel leakage at connection points.
- Run engine to check for unusual noise and vibration.

  NOTE:

  If hydraulic pressure inside timing chain tensioner drops after removal/installation, slack in the guide may generate a pounding noise during and just after engine start. However, this is normal. Noise will stop after hydraulic pressure rises.
- Warm up engine thoroughly to check there is no leakage of fuel, or any oil/fluids including engine oil and engine coolant.
- Bleed air from lines and hoses of applicable lines, such as in cooling system.
- After cooling down engine, again check oil/fluid levels including engine oil and engine coolant. Refill to the specified level, if necessary.

Summary of the inspection items:

Items	Before starting engine	Engine running	After engine stopped
Engine coolant	Level	Leakage	Level
Engine oil	Level	Leakage	Level
Other oils and fluid*	Level	Leakage	Level

Fuel	Leakage	Leakage	Leakage
Exhaust gases	—	Leakage	—

*: Transmission/transaxle fluid, power steering fluid, brake fluid, etc.

Inspection of Camshaft Sprocket (INT) Oil Groove

CAUTION:

- **Perform this inspection only when DTC P0011 is detected in self-diagnostic results of CONSULT-III and it is directed according to inspection procedure of EC section. Refer to EC-127, "DTC Logic".**
- **Check when engine is cold so as to prevent burns from the splashing engine oil.**

1. Check engine oil level. Refer to LU-7, "Inspection".
2. Perform the following procedure so as to prevent the engine from being unintentionally started while checking.

a. Release the fuel pressure. Refer to following;
   - HR12DE (TYPE 1): EC-113, "Work Procedure"
   - HR12DE (TYPE 2): EC-386, "Work Procedure"

b. Remove intake manifold. Refer to EM-29, "WITH EGR CONTROL VALVE : Exploded View".

c. Disconnect ignition coil and injector harness connectors. Refer to EM-41, "Exploded View".

3. Remove intake valve timing control solenoid valve. Refer to EM-53, "Exploded View".
4. Crank engine, and then check that engine oil comes out from intake valve timing control solenoid valve hole (A). End crank after checking.

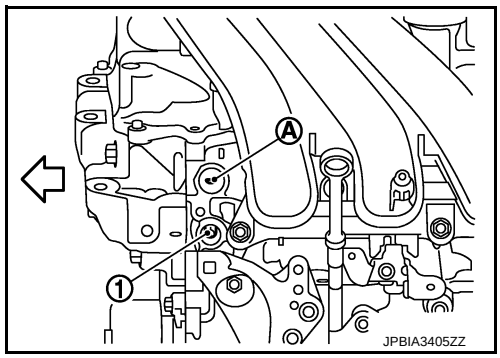

1 : Plug

⇦ :Engine front

WARNING:

Be careful not to touch rotating parts (drive belts, idler pulley, and crankshaft pulley, etc.).

CAUTION:

- **Prevent splashing by using a shop cloth so as to prevent the worker from injury from engine oil and so as to prevent engine oil contamination.**
- **Prevent splashing by using a shop cloth so as to prevent engine oil from being splashed to engine and vehicle. Especially, be careful not to apply engine oil to rubber parts of drive belts, engine mounting insulator, etc. Wipe engine oil off immediately if it is splashed.**

5. Perform the following inspection if engine oil does not come out from intake valve timing control solenoid valve oil hole of the cylinder head.
   - Remove oil filter, and then clean it. Refer to LU-10, "Removal and Installation".
   - Clean oil groove between oil strainer and intake valve timing control solenoid valve. Refer to LU-6, "Engine Lubrication System".
6. Remove components between intake valve timing control solenoid valve and camshaft sprocket (INT), and then check each oil groove for clogging.
   - Clean oil groove if necessary. Refer to LU-6, "Engine Lubrication System".
7. After inspection, install removed parts in the reverse order.

OIL SEAL

VALVE OIL SEAL

VALVE OIL SEAL : Removal and Installation

INFOID:0000000005988198

REMOVAL

1. Remove camshafts. Refer to EM-53, "Exploded View".
2. Remove valve lifters. Refer to EM-53, "Exploded View".
3. Rotate crankshaft, and set piston whose valve oil seal is to be removed to TDC. This will prevent valve from dropping into cylinder.
   CAUTION:
   When rotating crankshaft, be careful to avoid scarring front cover with timing chain.
4. Remove valve collet.
   - Compress valve spring with the valve spring compressor [SST: KV10116200] (A), the attachment [SST: KV10115900] (C), and the adapter [SST: KV10109220] (B). Remove valve collet with magnet hand.
   CAUTION:
   Be careful not to damage valve lifter holes.

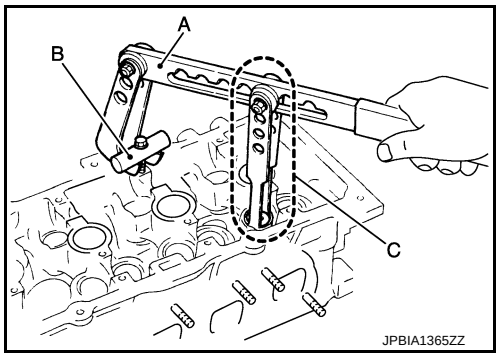

5. Remove valve spring retainer and valve spring (with valve spring seat).
   CAUTION:
   Never remove valve spring seat from valve spring.
6. Remove valve oil seal with the valve oil seal puller [SST: KV10107902] (A).

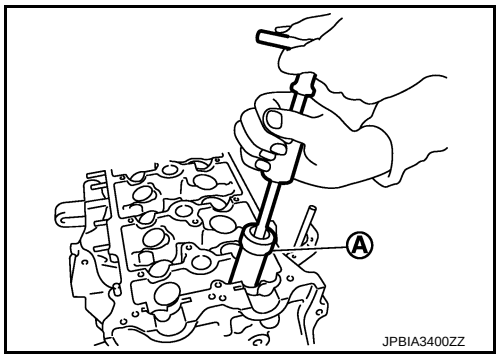

INSTALLATION

1. Apply new engine oil to valve oil seal joint surface and seal lip.
2. Press in valve oil seal to the height (H) shown in the figure with the valve oil seal drift [SST: KV10115600] (A).

   Height (H) : 13.2 - 13.8 mm (0.520 - 0.543 in)

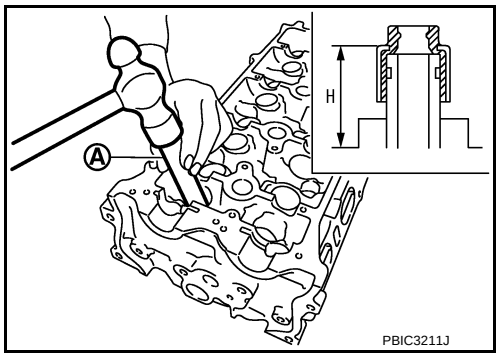

3. Install in the reverse order of removal, for the rest of parts.

FRONT OIL SEAL

FRONT OIL SEAL : Removal and Installation

INFOID:0000000005988199

REMOVAL

1. Remove the following parts.
   - Front fender protector (RH): Refer to EXT-17, "FENDER PROTECTOR : Exploded View".
   - Drive belt: Refer to EM-19, "Removal and Installation".
   - Crankshaft pulley: Refer to EM-43, "Exploded View".
2. Remove front oil seal with a suitable tool.
   CAUTION:
   Be careful not to damage front cover and crankshaft.

INSTALLATION

1. Apply new engine oil to new front oil seal joint surface and seal lip.
2. Install front oil seal so that each seal lip is oriented as shown in the figure.

   A : Dust seal lip
   B : Oil seal lip
   ⇦ : Engine outside
   ⬅ : Engine inside

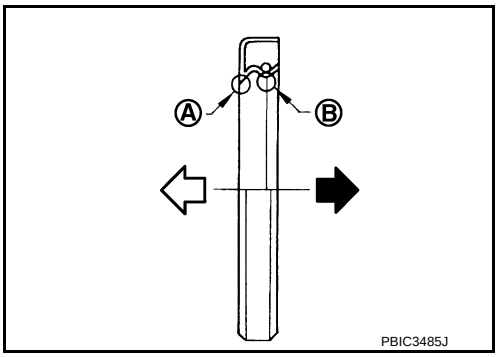

   - Press-fit front oil seal using a suitable drift with outer diameter 50 mm (1.97 in) and inner diameter 44 mm (1.73 in).
     CAUTION:
     - **Be careful not to damage front cover and crankshaft.**
     - **Press-fit oil seal straight to avoid causing burrs or tilting.**
3. Install in the reverse order of removal, for the rest of parts.

REAR OIL SEAL

REAR OIL SEAL : Removal and Installation

INFOID:0000000005988200

REMOVAL

1. Remove transaxle assembly. Refer to TM-19, "Removal and Installation" (M/T models).
2. Remove clutch cover and clutch disk (M/T models). Refer to CL-17, "Removal and Installation".
3. Remove flywheel (M/T models). Refer to EM-85, "Exploded View".
4. Remove rear oil seal with a suitable tool.
   CAUTION:
   Be careful not to damage crankshaft and cylinder block.

INSTALLATION

1. Apply the liquid gasket lightly to entire outside area of new rear oil seal.
   Use Genuine Liquid Gasket or equivalent.

2. Install rear oil seal so that each seal lip is oriented as shown in the figure.

A : Dust seal lip
B : Oil seal lip
⇦ : Engine outside
⬅ : Engine inside

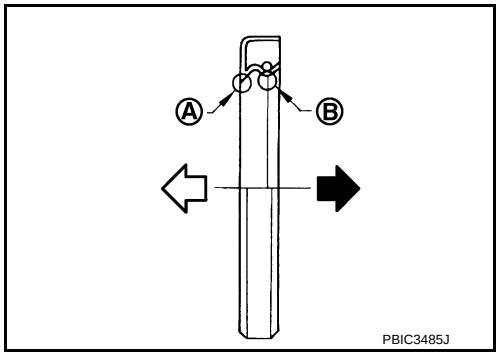

- Press-fit rear oil seal with a suitable drift (A) outer diameter 113 mm (4.45 in) and inner diameter 90 mm (3.54 in).

CAUTION:
- **Be careful not to damage crankshaft and cylinder block.**
- **Press-fit oil seal straight to avoid causing burrs or tilting.**
- **Never touch grease applied onto oil seal lip.**

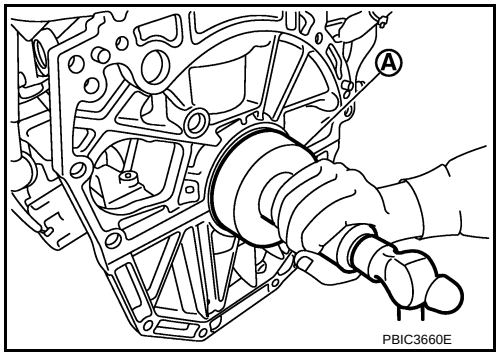

- Press in rear oil seal (1) to the position as shown in the figure.

A : Rear end surface of cylinder block
b : 0 - 0.5 mm (0 - 0.020 in)

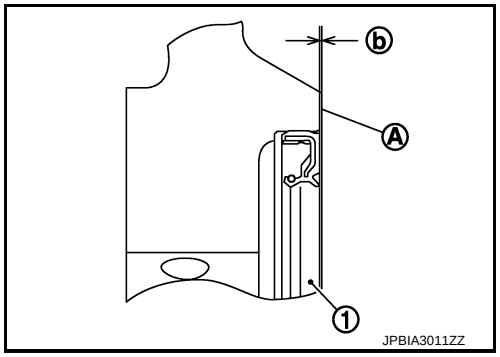

3. Install in the reverse order of removal, for the rest of parts.

CYLINDER HEAD

Exploded View

INFOID:0000000005988201

REMOVAL

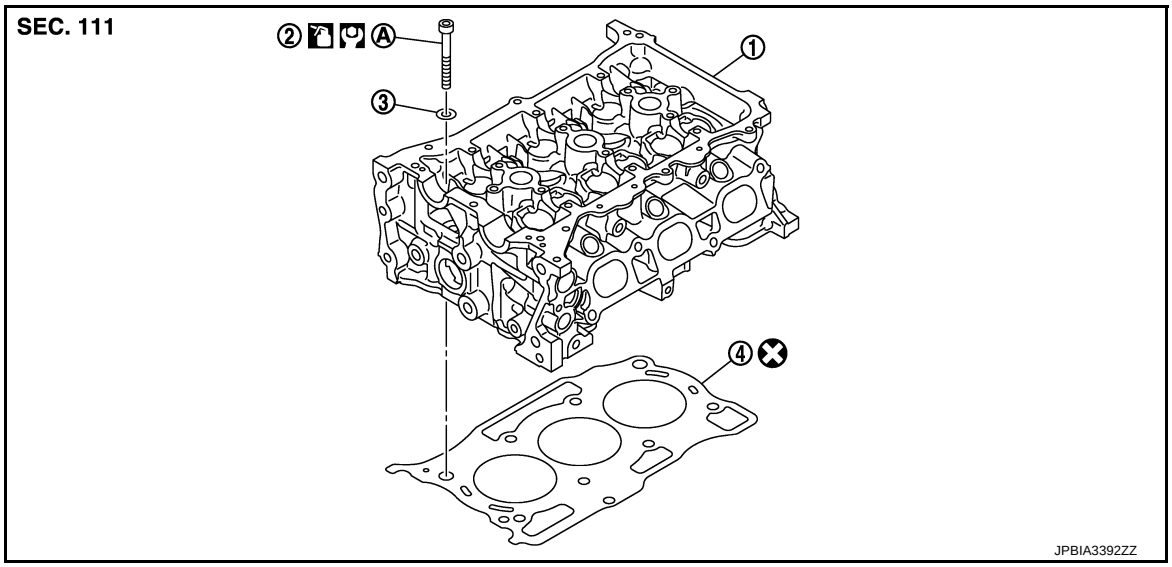

1. Cylinder head assembly
2. Cylinder head bolt
3. Washer
4. Cylinder head gasket

A. Tightening must be done following the installation procedure. Refer to EM-73

Refer to GI-4, "Components" for symbols in the figure.

DISASSEMBLY

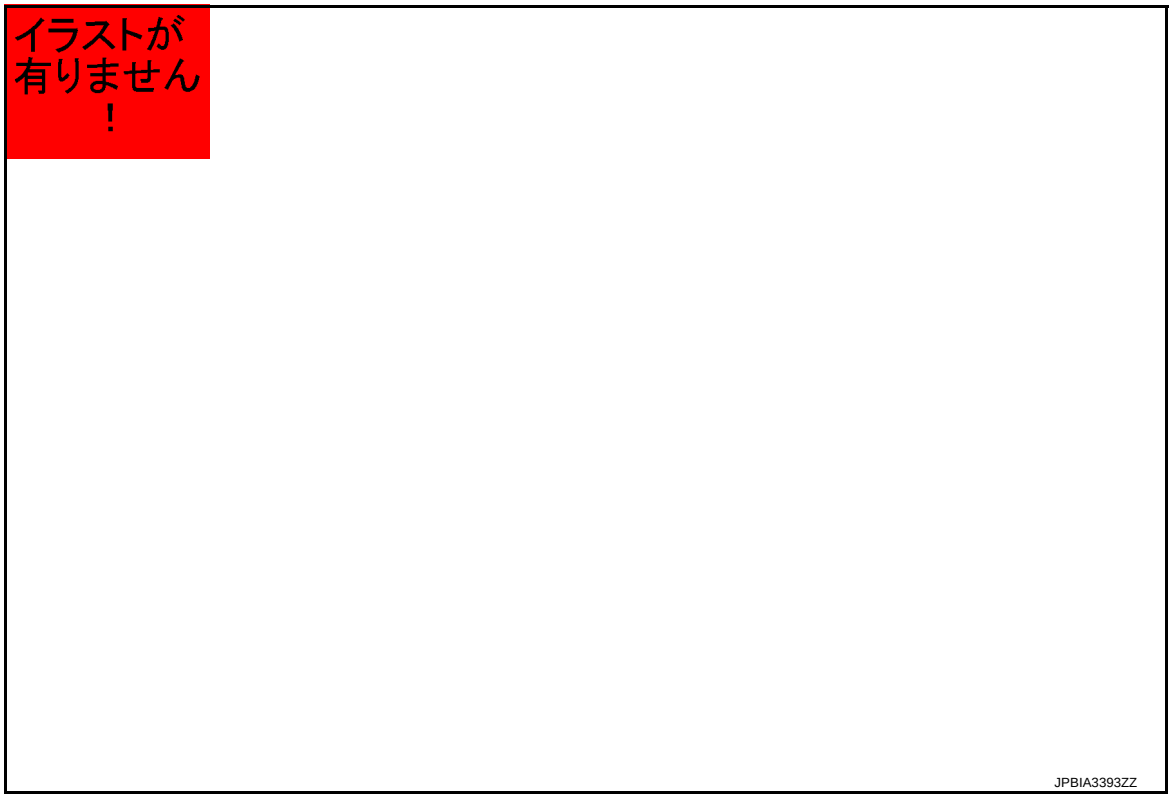

1. Spark plug	2. Valve collet	3. Valve spring retainer
4. Valve spring	5. Valve spring seat	6. Valve oil seal
7. Valve guide (EXH)	8. Valve guide (INT)	9. Cylinder head
10. Valve seat (EXH)	11. Valve (EXH)	12. Valve seat (INT)
13. Valve (INT)		
A. Replacement must be following the disassembly and assembly procedure. Refer to EM-74		

Refer to GI-4, "Components" for symbols in the figure.

Removal and Installation

INFOID:0000000005988202

REMOVAL

1. Release fuel pressure. Refer to following;
   - HR12DE (TYPE 1): EC-113, "Work Procedure"
   - HR12DE (TYPE 2): EC-386, "Work Procedure"
2. Drain engine coolant and engine oil. Refer to CO-9, "Draining" and LU-8, "Draining".
   CAUTION:
   Perform this step when the engine is cold.
3. Remove the following components and related parts.
   - Front road wheel and tire (RH): Refer to WT-4, "Removal and Installation".
   - Front fender protector (RH): Refer to EXT-17, "FENDER PROTECTOR : Exploded View".
   - Drive belt: Refer to EM-19, "Removal and Installation".
   - Air duct: Refer to EM-24, "Exploded View".
   - Intake manifold: Refer to EM-29, "WITH EGR CONTROL VALVE : Exploded View".
   - Fuel tube and fuel injector: Refer to EM-37, "Exploded View".
   - Water outlet: Refer to CO-23, "Exploded View".
   - Exhaust manifold: Refer to EX-5, "Exploded View".
   - Rocker cover: Refer to EM-41, "Exploded View".
   - Front cover and timing chain: Refer to EM-43, "Exploded View".
   - Camshaft: Refer to EM-53, "Exploded View".
4. Remove cylinder head loosening bolts in reverse order as shown in the figure with cylinder head wrench (commercial service tool).

   A : EXH side
   B : INT side
   ⇦ : Engine front

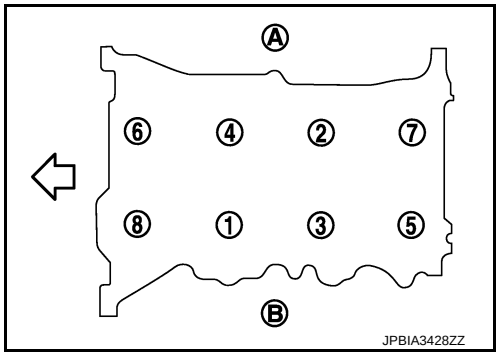

5. Remove cylinder head gasket.

INSTALLATION

1. Install new cylinder head gasket.

2. Tighten cylinder head bolts in numerical order as shown in the figure with the following procedure to install cylinder head.

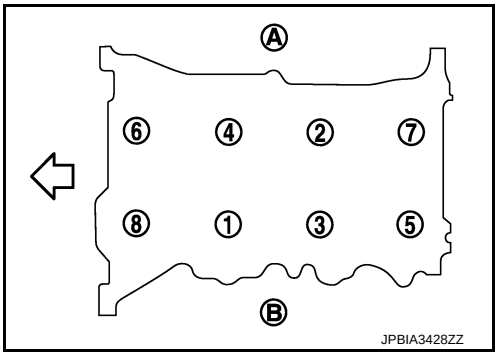

A : EXH side
B : INT side
⇦ : Engine front

CAUTION:
If cylinder head bolts are reused, check their outer diameters before installation. Refer to "Cylinder Head Bolts Outer Diameter".

a. Apply new engine oil to threads and seating surfaces of mounting bolts.
b. Tighten all bolts.

: 40.0 N·m (4.1 kg-m, 30 ft-lb)

c. Turn all bolts 60 degrees clockwise (angle tightening).
CAUTION:
Check and confirm the tightening angle by using the angle wrench [SST: KV10112100] (A) or protractor. Avoid judgment by visual inspection without the tool.

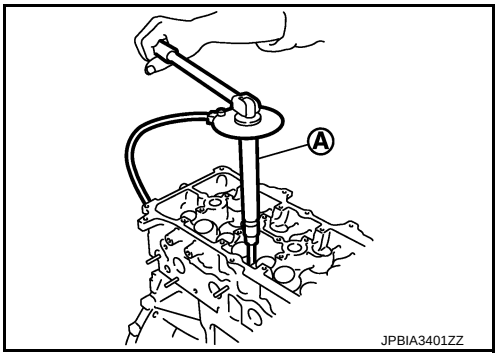

d. Completely loosen.

: 0 N·m (0 kg-m, 0 ft-lb)

CAUTION:
In this step, loosen bolts in reverse order of that indicated in the figure.

e. Tighten all bolts.

: 40.0 N·m (4.1 kg-m, 30 ft-lb)

f. Turn all bolts 75 degrees clockwise (angle tightening).
g. Turn all bolts 75 degrees clockwise again (angle tightening).
3. Install in the reverse order of removal after this step.

Disassembly and Assembly

INFOID:0000000005988203

DISASSEMBLY

1. Remove spark plug with a spark plug wrench (commercial service tool).
2. Remove valve lifter.
   - Identify installation positions, and store them without mixing them up.
3. Remove valve collet.

- Compress valve spring with the valve spring compressor, the attachment and the adapter [SST: KV10116200] (A). Remove valve collet with a magnet hand (B).

CAUTION:
When working, be careful not to damage valve lifter holes.

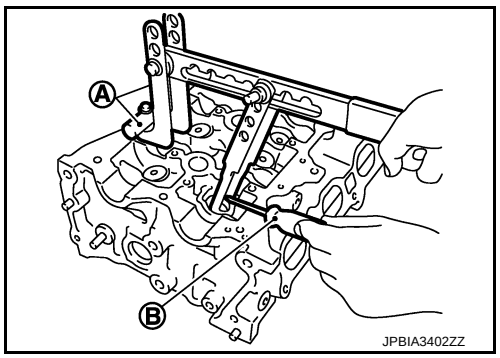

4. Remove valve spring retainer and valve spring.
5. Push valve stem to combustion chamber side, and remove valve.
   - Identify installation positions, and store them without mixing them up.
6. Remove valve oil seal with the valve oil seal puller [SST: KV10107902] (A).

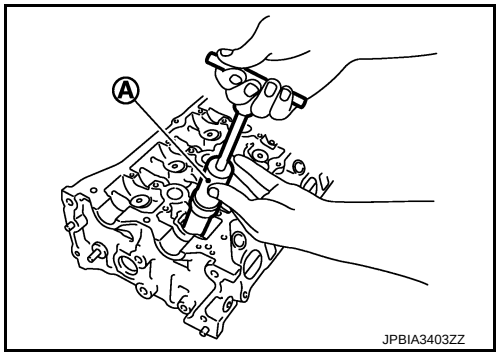

7. Remove valve spring seat.
8. When valve seat must be replaced, refer to EM-76, "Inspection" to removal.
9. When valve guide must be replaced, refer to EM-76, "Inspection" to removal.

ASSEMBLY

1. Install valve guide if removed. Refer to EM-76, "Inspection".
2. Install valve seat if removed. Refer to EM-76, "Inspection".
3. Install valve oil seal.
   - Install with the valve oil seal drift [SST: KV10115600] (A) to match dimension in the figure.

Height "H" : 13.2 - 13.8 mm (0.519 - 0.543 in)

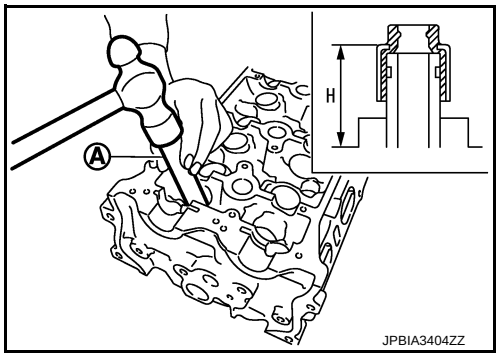

4. Install valve spring seat.
5. Install valve.
   - Install larger diameter to intake side.
6. Install valve spring.
   NOTE:
   It can be installed in either direction.
7. Install valve spring retainer.
8. Install valve collet.

- Compress valve spring with the valve spring compressor, the attachment and the adapter [SST: KV10116200] (A). Install valve collet with a magnet hand (B).
  CAUTION:
  When working, be careful not to damage valve lifter holes.
- Tap valve stem edge lightly with a plastic hammer after installation to check its installed condition.

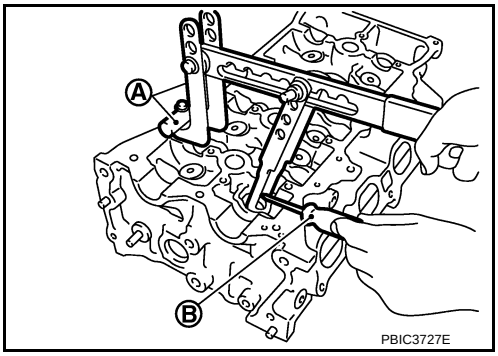

9. Install valve lifter.
10. Install spark plug with a spark plug wrench (commercial service tool).

Inspection

INFOID:0000000005988204

INSPECTION AFTER REMOVAL

Cylinder Head Bolts Outer Diameter

- Cylinder head bolts are tightened by plastic zone tightening method. Whenever the size difference between “d1” and “d2” exceeds the limit, replace them with a new one.

  Limit (“d1”–“d2”): 0.15 mm (0.0059 in)

- If reduction of outer diameter appears in a position other than “d2”, use it as “d2” point.

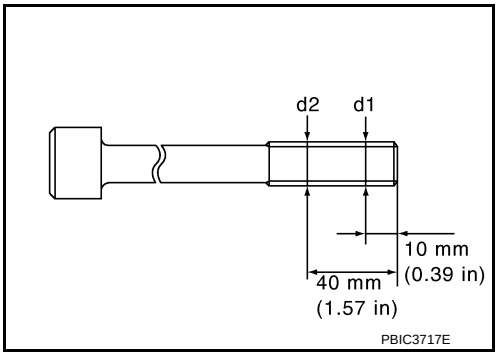

Cylinder Head Distortion

NOTE:
When performing this inspection, cylinder block distortion should be also checking. Refer to EM-76, "Inspection".

1. Wipe off engine oil and remove water scale (like deposit), gasket, sealant, carbon, etc. with a scraper.
   CAUTION:
   Use utmost care not to allow gasket debris to enter passages for engine oil or engine coolant.
2. At each of several locations on bottom surface of cylinder head, measure the distortion in six directions.

   A : Straightedge
   B : Feeler gauge

   Limit : Refer to EM-95, "Cylinder head".

   - If it exceeds the limit, replace cylinder head.

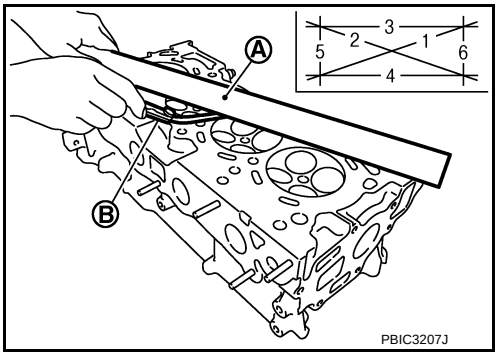

INSPECTION AFTER DISASSEMBLY

VALVE DIMENSIONS

- Check the dimensions of each valve. For the dimensions, refer to EM-95, "Cylinder head".
- If dimensions are out of the standard, replace valve and check valve seat contact. Refer to “VALVE SEAT CONTACT”.

VALVE GUIDE CLEARANCE

Valve Stem Diameter

- Measure the diameter of valve stem with micrometer (A).

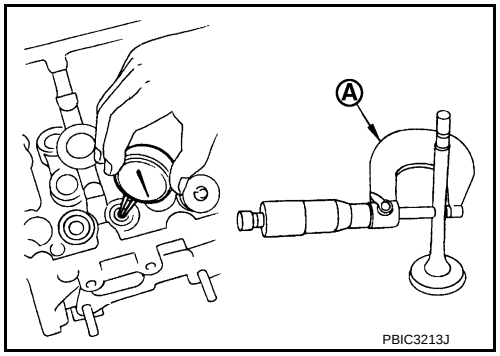

Standard : Refer to EM-95, "Cylinder head".

Valve Guide Inner Diameter
- Measure the inner diameter of valve guide with bore gauge.

Standard : Refer to EM-95, "Cylinder head".

Valve Guide Clearance
- (Valve guide clearance) = (Valve guide inner diameter) – (Valve stem diameter)

Standard and Limit : Refer to EM-95, "Cylinder head".

- If the calculated value exceeds the limit, replace valve and/or valve guide. When valve guide must be replaced. Refer to EM-74, "Disassembly and Assembly".

VALVE SEAT CONTACT
- After confirming that the dimensions of valve guides and valves are within the specifications, perform this procedure.
- Apply prussian blue (or white lead) onto contacting surface of valve seat to check the condition of the valve contact on the surface.
- Check if the contact area band is continuous all around the circumference.

A : OK

- If not, grind to adjust valve fitting and check again. If the contacting surface still has “NG” conditions (B) even after the recheck, replace valve seat. Refer to EM-74, "Disassembly and Assembly".

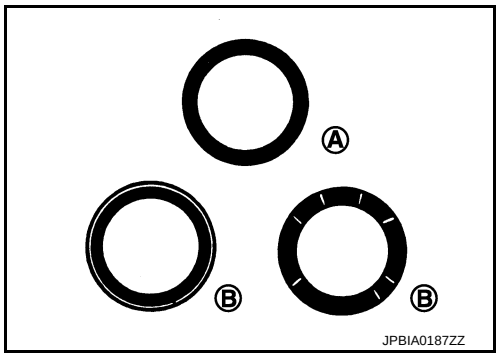

VALVE SPRING SQUARENESS
- Set a try square (A) along the side of valve spring and rotate spring. Measure the maximum clearance between the top of spring and try square.

B : Contact

Limit : Refer to EM-95, "Cylinder head".

- If it exceeds the limit, replace valve spring.

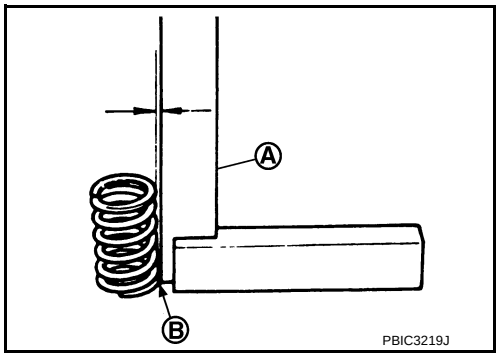

VALVE SPRING DIMENSIONS AND VALVE SPRING PRESSURE LOAD
- Check valve spring pressure with valve spring seat installed at the specified spring height.

CAUTION:
Never remove valve spring seat from valve spring.

Standard : Refer to EM-95, "Cylinder head".

- If the installation load or load with valve open is out of the standard, replace valve spring (with valve spring seat).

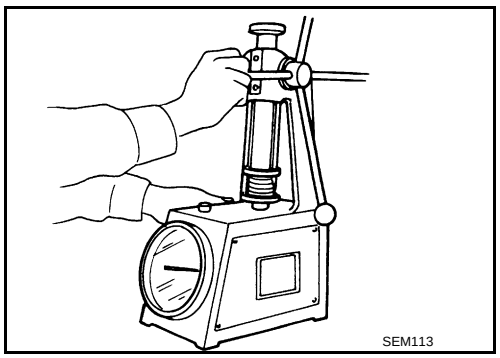

INSPECTION AFTER INSTALLATION

Inspection for Leaks

The following are procedures for checking fluids leak, lubricates leak and exhaust gases leak.

- Before starting engine, check oil/fluid levels including engine coolant and engine oil. If less than required quantity, fill to the specified level. Refer to MA-8, "Fluids and Lubricants".
- Use procedure below to check for fuel leakage.
  - Turn ignition switch ON (with engine stopped). With fuel pressure applied to fuel piping, check for fuel leakage at connection points.
  - Start engine. With engine speed increased, check again for fuel leakage at connection points.
- Run engine to check for unusual noise and vibration.

  NOTE:

  If hydraulic pressure inside timing chain tensioner drops after removal/installation, slack in the guide may generate a pounding noise during and just after engine start. However, this is normal. Noise will stop after hydraulic pressure rises.
- Warm up engine thoroughly to check there is no leakage of fuel, exhaust gases, or any oil/fluids including engine oil and engine coolant.
- Bleed air from lines and hoses of applicable lines, such as in cooling system.
- After cooling down engine, again check oil/fluid levels including engine oil and engine coolant. Refill to the specified level, if necessary.

Summary of the inspection items:

Items	Before starting engine	Engine running	After engine stopped
Engine coolant	Level	Leakage	Level
Engine oil	Level	Leakage	Level
Other oils and fluid*	Level	Leakage	Level
Fuel	Leakage	Leakage	Leakage
Exhaust gases	—	Leakage	—

*: Transmission/transaxle fluid, power steering fluid, brake fluid, etc.

UNIT REMOVAL AND INSTALLATION

ENGINE ASSEMBLY

Exploded View

INFOID:0000000005988205

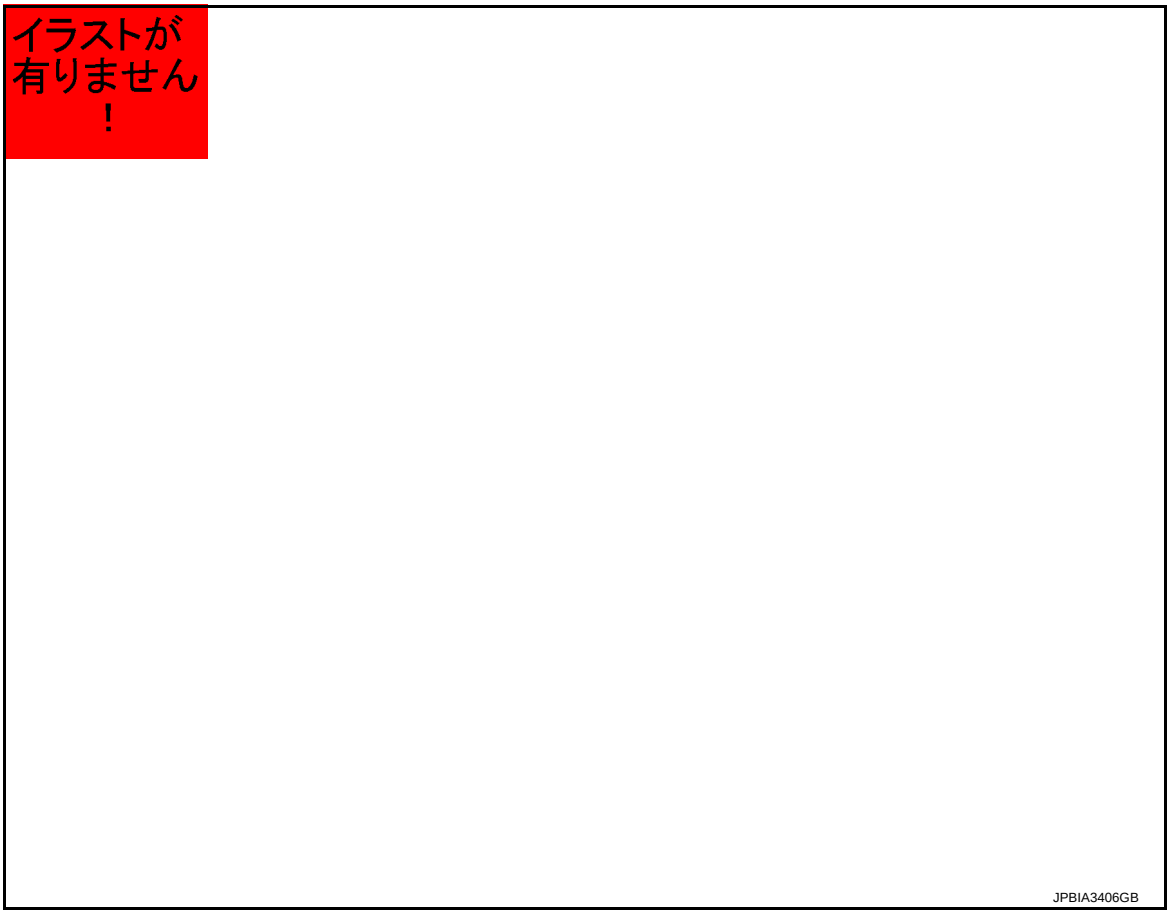

1. Engine mounting stay
2. Engine mounting insulator (RH)
3. Rear engine mounting bracket
4. Rear torque rod
5. Engine mounting bracket (LH)
6. Engine mounting frame support (LH)
7. Engine mounting insulator (LH)
8. Mass damper (M/T models)

Refer to GI-4, "Components" for symbols in the figure.

CAUTION:
Check that the stud bolt (*2) is tight at the specified torque before tightening the mounting nut (*1) shown in the figure. [Stud bolt (*2) may be loosened after loosening the mounting nut (*1)]

Removal and Installation

INFOID:0000000005988206

WARNING:
- **Situate the vehicle on a flat and solid surface.**
- **Place chocks at front and back of rear wheels.**
- **Attach proper slingers and bolts described in PARTS CATALOG if engine slingers are not equipped.**

CAUTION:
- **Always be careful to work safely, avoid forceful or uninstructed operations.**
- **Never start working until exhaust system and coolant are cool enough.**
- **If items or work required are not covered by the engine section, refer to the applicable sections.**
- **Always use the support point specified for lifting.**
- **Use either 2-pole lift type or separate type lift as best you can. If board-on type is used for unavoidable reasons, support at the rear axle jacking point with a transmission jack or similar tool before starting work, in preparation for the backward shift of center of gravity.**

- **For supporting points for lifting and jacking point at rear axle, refer to GI-28, "Garage Jack and Safety Stand and 2-Pole Lift".**

REMOVAL

Outline

Remove the engine and the transaxle assembly from the vehicle downward. Separate the engine and the transaxle.

Preparation

1. Release fuel pressure. Refer to following;
   HR12DE (TYPE 1): EC-113, "Work Procedure"
   HR12DE (TYPE 2): EC-386, "Work Procedure"
2. Drain engine coolant from radiator. Refer to CO-9, "Draining".
   CAUTION:
   - **Perform this step when the engine is cold.**
   - **Never spill engine coolant on drive belts.**
3. Remove the following parts.
   - Front road wheels and tires (RH and LH)
   - Front fender protector (RH and LH): Refer to EXT-17, "FENDER PROTECTOR : Exploded View".
   - Drive belt: Refer to EM-19, "Removal and Installation".
   - Battery and battery tray: Refer to PG-143, "Removal and Installation".
   - Air duct (inlet), air duct, and air cleaner assembly: Refer to EM-24, "Removal and Installation".
   - Radiator hose (upper and lower): Refer to CO-14, "Exploded View".
   - Radiator fan shroud assembly. Refer to CO-17, "Removal and Installation".
   - Exhaust front tube: Refer to EX-5, "Exploded View".

Engine Room LH

1. Disconnect all connections of engine harness around the battery, and then temporarily secure the engine harness into the engine side.
   CAUTION:
   Protect connectors using a resin bag against foreign materials during the operation.
2. Disconnect heater hoses. Refer to CO-23, "Exploded View".
3. Disconnect fuel feed tube at engine side. Refer to EM-37, "Exploded View".
4. Disconnect control linkage from transaxle. Refer to TM-15, "Removal and Installation"(M/T models).
5. Disconnect clutch tube on transaxle side from clutch damper (M/T models). Refer to CL-14, "Removal and Installation".

Engine Room RH

1. Remove ground cable at engine side.
2. Remove alternator. Refer to CHG-25, "Exploded View".
3. Disconnect vacuum hose from intake manifold. Refer to EM-29, "WITH EGR CONTROL VALVE : Exploded View".
4. Remove EVAP hoses. Refer to EM-29, "WITH EGR CONTROL VALVE : Exploded View".
5. Remove A/C compressor. Refer to HA-31, "COMPRESSOR : Removal and Installation".

Vehicle Underbody

1. Remove ground cable at transaxle side.
2. Remove drive shafts (RH and LH). Refer to FAX-16, "Exploded View".

3. Remove rear torque rod (1).

2 : Rear engine mounting bracket
A : Front mark
⇦ : Vehicle front

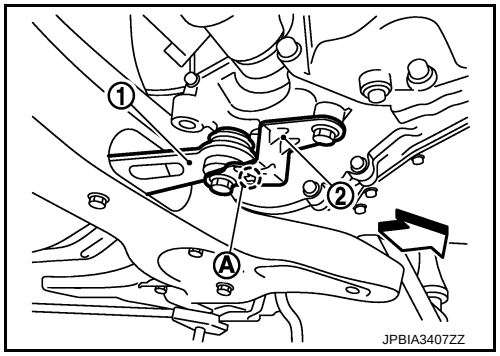

4. Preparation for the separation work of transaxle is as follows:
   - Remove transaxle joint bolts which pierce at oil pan (upper) lower rear side. Refer to EM-34, "Exploded View".

Removal

1. Use a manual lift table caddy (commercial service tool) (A) or equivalently rigid tool such as a transmission jack. Securely support bottom of the engine and the transaxle assembly.
   CAUTION:
   Put a piece of wood or an equivalent as the supporting surface, secure a completely stable condition.

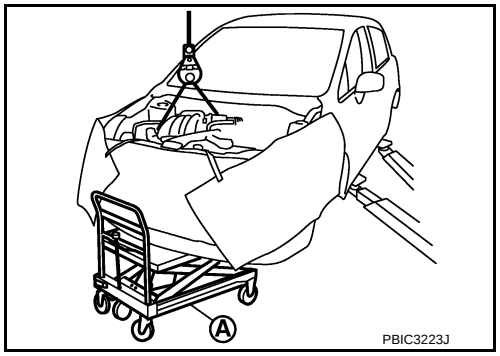

2. Remove engine mounting bracket (RH) (2), and engine mounting insulator (RH) (1).

3 : Engine mounting insulator (LH)
A : Engine front side
B : Transaxle side

3. Remove engine mounting through bolt-securing nut (C).

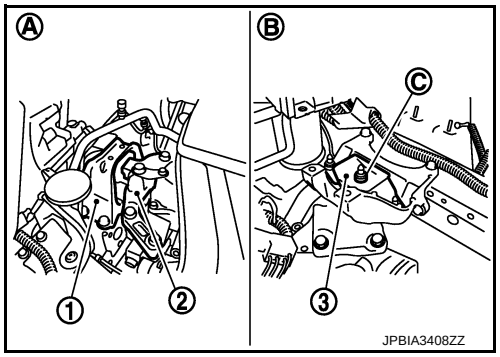

4. Carefully lower jack, or raise lift to remove the engine and the transaxle assembly. When performing work, observe the following caution.
   CAUTION:
   - **Check that no part interferes with the vehicle side.**
   - **Before and during this lifting, always check if any harnesses are left connected.**
   - **During the removal, always be careful to prevent the vehicle from falling off the lift due to changes in the center of gravity.**
   - **If necessary, support the vehicle by setting jack or suitable tool at the rear.**

Separation

1. When engine can be hoisted, install engine slinger to cylinder head front left side (A) and rear right side (B) and support the engine position with a hoist.

   ⇦ : Engine front

   Slinger bolts **: 25.0 N·m (2.6 kg-m, 18 ft-lb)**

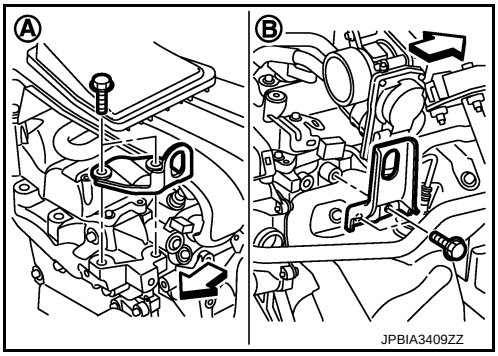

2. Remove starter motor. Refer to STR-18, "Exploded View".
3. Lift with a hoist and separate the engine from the transaxle assembly. Refer to TM-19, "Exploded View" (M/T models).

INSTALLATION

Note the following, and install in the reverse order of removal.

CAUTION:

- **Never allow engine oil to get on engine mounting insulator. Be careful not to damage engine mounting insulator.**
- **Check that each mounting insulator is seated properly, and tighten mounting nuts and bolts.**
- **When installation directions are specified, install parts according to the direction marks on them referring to the figure of components. Refer to EM-79, "Exploded View".**

Engine Mounting Bracket (RH)

- Tighten mounting bolts in the numerical order as shown in the figure.

  ⇦ : Vehicle front

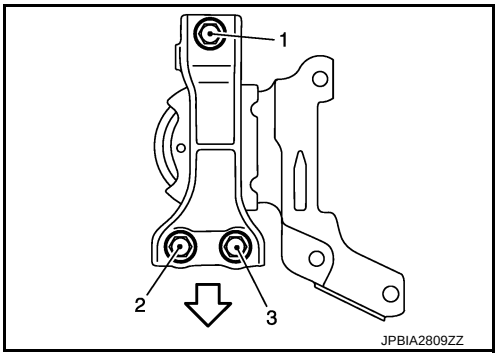

Inspection

INFOID:0000000005988207

INSPECTION AFTER INSTALLATION

Inspection for Leakage

The following are procedures for checking fluids leakage, lubricates leakage, and exhaust gases leakage.

- Before starting engine, check oil/fluid levels including engine coolant and engine oil. If less than required quantity, fill to the specified level. Refer to MA-8, "Fluids and Lubricants".
- Use procedure below to check for fuel leakage.
  - Turn ignition switch “ON” (with engine stopped). With fuel pressure applied to fuel piping, check for fuel leakage at connection points.
  - Start engine. With engine speed increased, check again for fuel leakage at connection points.
- Run engine to check for unusual noise and vibration.
- Warm up engine thoroughly to check there is no leakage of fuel, exhaust gases, or any oil/fluids including engine oil and engine coolant.
- Bleed air from lines and hoses of applicable lines, such as in cooling system.
- After cooling down engine, again check oil/fluid levels including engine oil and engine coolant. Refill to the specified level, if necessary.

Summary of the inspection items:

Items	Before starting engine	Engine running	After engine stopped
Engine coolant	Level	Leakage	Level
Engine oil	Level	Leakage	Level

Other oils and fluid*	Level	Leakage	Level
Fuel	Leakage	Leakage	Leakage
Exhaust gases	—	Leakage	—

*: Transmission/transaxle/CVT fluid, power steering fluid, brake fluid, etc.

UNIT DISASSEMBLY AND ASSEMBLY

OIL PAN (UPPER)

Exploded View

INFOID:0000000005988211

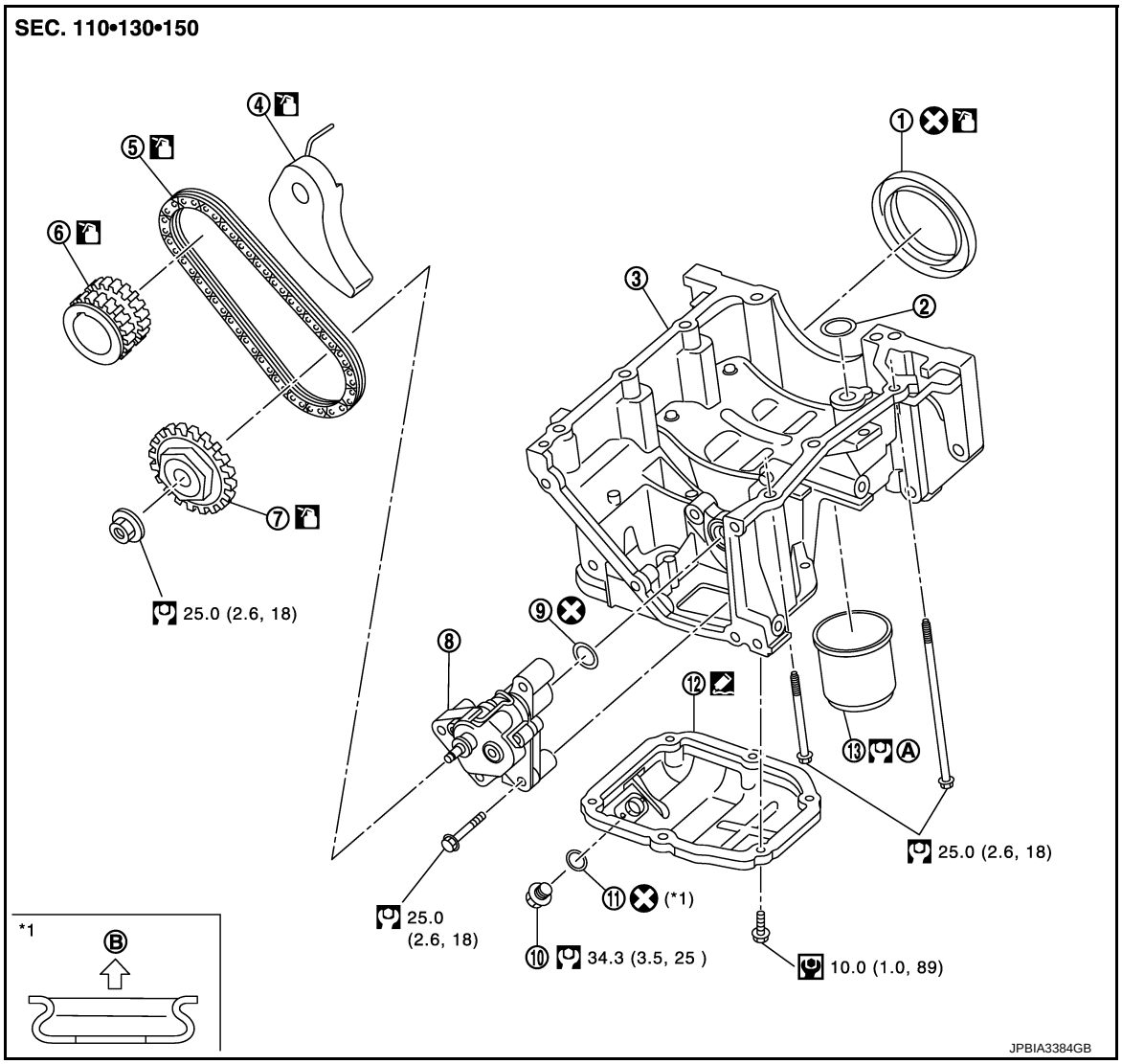

1.	Rear oil seal	2.	O-ring	3.	Oil pan (upper)
4.	Oil pump chain tensioner	5.	Oil pump drive chain	6.	Crankshaft sprocket
7.	Oil pump sprocket	8.	Oil pump	9.	O-ring
10.	Drain plug	11.	Drain plug washer	12.	Oil pan (lower)
13.	Oil filter				
A.	Refer to LU-10, "Removal and Installation"	B.	Oil pan (lower) side		

Refer to GI-4, "Components" for symbols in the figure.

CYLINDER BLOCK

Exploded View

INFOID:0000000005988214

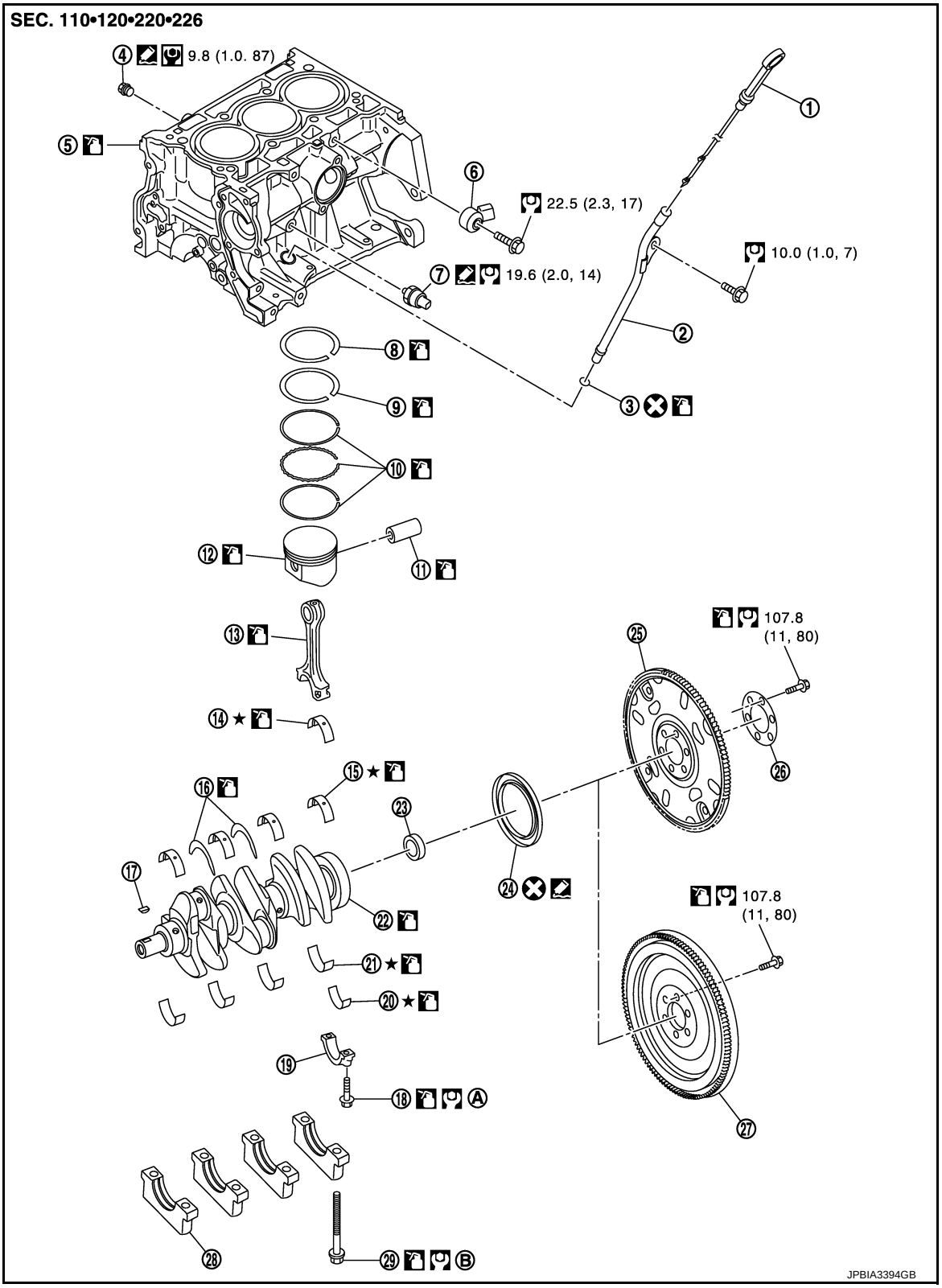

1. Oil level gauge
2. Oil level gauge guide
3. O-ring
4. Drain plug
5. Cylinder block
6. Knock sensor
7. Oil pressure switch
8. Top ring
9. Second ring

10.	Oil ring	11.	Piston pin	12.	Piston
13.	Connecting rod	14.	Connecting rod bearing (upper)	15.	Main bearing (upper)
16.	Thrust bearing	17.	Crankshaft key	18.	Connecting rod bolt
19.	Connecting rod cap	20.	Connecting rod bearing (lower)	21.	Main bearing (lower)
22.	Crankshaft	23.	Pilot converter	24.	Rear oil seal
25.	Drive plate	26.	Reinforcement plate	27.	Flywheel
A.	Tightening must be done following the assembly procedure. Refer to EM	B.	Chamfered		

⇦ : Crankshaft side

Refer to GI-4, "Components" for symbols in the figure.

HOW TO SELECT PISTON AND BEARING

Description

INFOID:0000000005988217

Selection points	Selection parts	Selection items	Selection methods
Between cylinder block and crankshaft	Main bearing	Main bearing grade (bearing thickness)	Determined by match of cylinder block bearing housing grade (inner diameter of housing) and crankshaft journal grade (outer diameter of journal)
Between crankshaft and connecting rod	Connecting rod bearing	Connecting rod bearing grade (bearing thickness)	Combining service grades for connecting rod big end diameter and crankshaft pin outer diameter determine connecting rod bearing selection.

- The identification grade stamped on each part is the grade for the dimension measured in new condition. This grade cannot apply to reused parts.
- For reused or repaired parts, measure the dimension accurately. Determine the grade by comparing the measurement with the values of each selection table.
- For details of the measurement method of each part, the reuse standards and the selection method of the selective fitting parts, refer to the text.

Connecting Rod Bearing

INFOID:0000000005988218

WHEN NEW CONNECTING ROD AND CRANKSHAFT ARE USED

1. Apply connecting rod big end diameter grade stamped (C) on connecting rod side face to the row in the “Connecting Rod Bearing Selection Table”.

   A : Oil hole
   B : Cylinder number
   D : Front mark

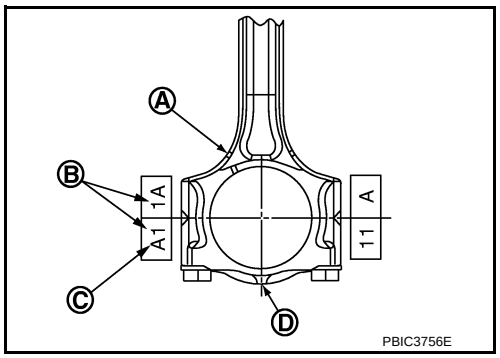

2. Apply crankshaft pin journal diameter grade stamped (B) on crankshaft front side to the column in the “Connecting Rod Bearing Selection Table”.

   A : Main journal diameter grade (No. 1 to 5 from left)
   B : Crankshaft pin journal diameter grade (No. 1 to 4 from left)

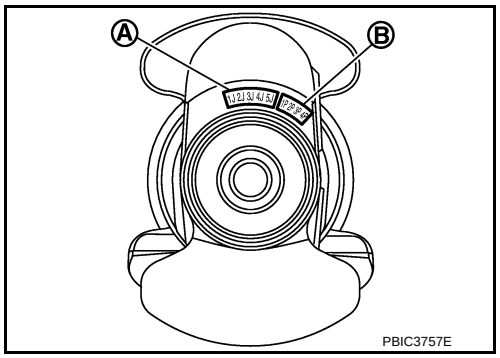

3. Read the symbol at the cross point of selected row and column in the “Connecting Rod Bearing Selection Table”.
4. Apply the symbol obtained to the “Connecting Rod Bearing Grade Table” to select connecting rod bearing.

WHEN CONNECTING ROD AND CRANKSHAFT ARE REUSED

1. Measure the dimensions of the connecting rod big end diameter and crankshaft pin journal diameter individually. Refer to EM.

2. Apply the measured dimension to the “Connecting Rod Bearing Selection Table”.
3. Read the symbol at the cross point of selected row and column in the “Connecting Rod Bearing Selection Table”.
4. Apply the symbol obtained to the “Connecting Rod Bearing Grade Table” to select connecting rod bearing.

Connecting Rod Bearing Selection Table

Connecting rod big end diameter / Crankshaft pin journal diameter	I.D. mark	A	B	C	D	E	F	G	H	J	K	L	M	N
	Hole diameter Unit: mm (in)	43.000 - 43.001 (1.6929 - 1.6929)	43.001 - 43.002 (1.6929 - 1.6930)	43.002 - 43.003 (1.6930 - 1.6930)	43.003 - 43.004 (1.6930 - 1.6931)	43.004 - 43.005 (1.6931 - 1.6931)	43.005 - 43.006 (1.6931 - 1.6931)	43.006 - 43.007 (1.6931 - 1.6932)	43.007 - 43.008 (1.6932 - 1.6932)	43.008 - 43.009 (1.6932 - 1.6933)	43.009 - 43.010 (1.6933 - 1.6933)	43.010 - 43.011 (1.6933 - 1.6933)	43.011 - 43.012 (1.6933 - 1.6934)	43.012 - 43.013 (1.6934 - 1.6934)
I.D. mark	Axle diameter Unit mm (in)													
A	39.971 - 39.970 (1.5737 - 1.5736)	0	0	0	0	0	01	01	01	1	1	1	12	12
B	39.970 - 39.969 (1.5736 - 1.5736)	0	0	0	0	01	01	01	1	1	1	12	12	12
C	39.969 - 39.968 (1.5736 - 1.5735)	0	0	0	01	01	01	1	1	1	12	12	12	2
D	39.968 - 39.967 (1.5735 - 1.5735)	0	0	01	01	01	1	1	1	12	12	12	2	2
E	39.967 - 39.966 (1.5735 - 1.5735)	0	01	01	01	1	1	1	12	12	12	2	2	2
F	39.966 - 39.965 (1.5735 - 1.5734)	01	01	01	1	1	1	12	12	12	2	2	2	23
G	39.965 - 39.964 (1.5734 - 1.5734)	01	01	1	1	1	12	12	12	2	2	2	23	23
H	39.964 - 39.963 (1.5734 - 1.5733)	01	1	1	1	12	12	12	2	2	2	23	23	23
J	39.963 - 39.962 (1.5733 - 1.5733)	1	1	1	12	12	12	2	2	2	23	23	23	3
K	39.962 - 39.961 (1.5733 - 1.5733)	1	1	12	12	12	2	2	2	23	23	23	3	3
L	39.961 - 39.960 (1.5733 - 1.5732)	1	12	12	12	2	2	2	23	23	23	3	3	3
M	39.960 - 39.959 (1.5732 - 1.5732)	12	12	12	2	2	2	23	23	23	3	3	3	34
N	39.959 - 39.958 (1.5732 - 1.5731)	12	12	2	2	2	23	23	23	3	3	3	34	34
P	39.958 - 39.957 (1.5731 - 1.5731)	12	2	2	2	23	23	23	3	3	3	34	34	34
R	39.957 - 39.956 (1.5731 - 1.5731)	2	2	2	23	23	23	3	3	3	34	34	34	4
S	39.956 - 39.955 (1.5731 - 1.5730)	2	2	23	23	23	3	3	3	34	34	34	4	4
T	39.955 - 39.954 (1.5730 - 1.5730)	2	23	23	23	3	3	3	34	34	34	4	4	4
U	39.954 - 39.953 (1.5730 - 1.5729)	23	23	23	3	3	3	34	34	34	4	4	4	4

PBIC3758E

Connecting Rod Bearing Grade Table

Connecting Rod Bearing Grade Table : Refer to EM-100, "Connecting Rod Bearing".

Undersize Bearings Usage Guide

- When the specified connecting rod bearing oil clearance is not obtained with standard size connecting rod bearings, use undersize (US) bearings.
- When using undersize (US) bearing, measure the connecting rod bearing inner diameter with bearing installed, and grind the crankshaft pin so that the connecting rod bearing oil clearance satisfies the standard.

CAUTION:

In grinding crankshaft pin to use undersize bearings, keep the fillet R (A) [0.8 - 1.2 mm (0.031 - 0.047 in)].

Bearing undersize table:

Refer to EM-100, "Connecting Rod Bearing".

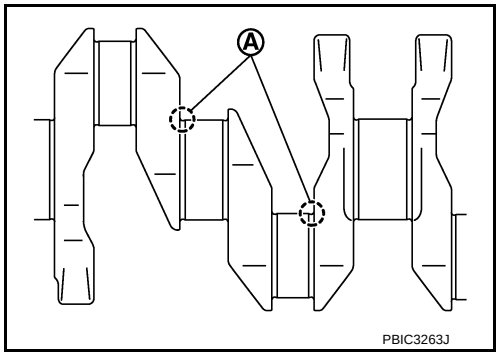

Main Bearing

INFOID:0000000005988219

HOW TO SELECT MAIN BEARING

When New Cylinder Block and Crankshaft Are Used

1. "Main Bearing Selection Table" rows correspond to main bearing housing grade on left side of cylinder block.

   A : Basic stamp mark

   ⇦ : Engine front

   - If there is a corrected stamp mark (B) on cylinder block, use it as a correct reference.

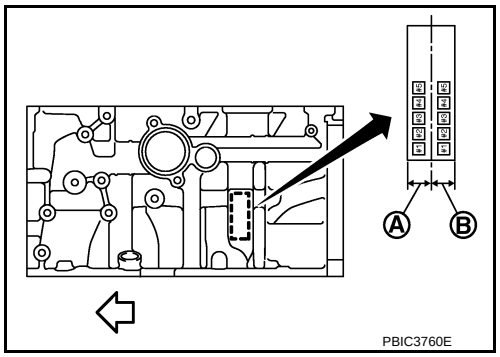

2. Apply main journal diameter grade stamped on crankshaft front side to column in the "Main Bearing Selection Table".

   A : Main journal diameter grade (No. 1 to 5 from left)

   B : Crankshaft pin journal diameter grade (No. 1 to 4 from left)

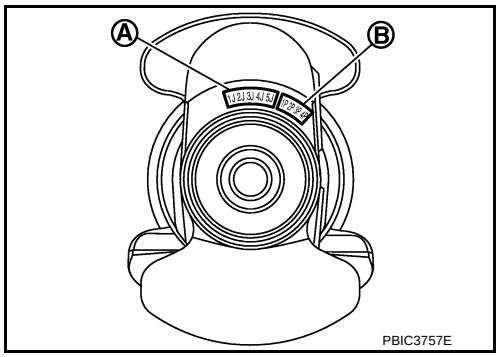

3. Read the symbol at the cross point of selected row and column in the "Main Bearing Selection Table".
4. Apply the symbol obtained to the "Main Bearing Grade Table" to select main bearing.
   NOTE:
   Service part is available as a set of both upper and lower.

When Cylinder Block and Crankshaft Are Reused

1. Measure the dimensions of the cylinder block main bearing housing inner diameter and crankshaft main journal diameter individually. Refer to EM.
2. Apply the measured dimension to the "Main Bearing Selection Table".
3. Read the symbol at the cross point of selected row and column in the "Main Bearing Selection Table".
4. Apply the symbol obtained to the "Main Bearing Grade Table" to select main bearing.

Main Bearing Selection Table

Crankshaft main journal diameter: I.D. mark	Axle diameter Unit mm (in)	A 51.997 - 51.998 (2.0471 - 2.0472)	B 51.998 - 51.999 (2.0472 - 2.0472)	C 51.999 - 52.000 (2.0472 - 2.0472)	D 52.000 - 52.001 (2.0472 - 2.0472)	E 52.001 - 52.002 (2.0473 - 2.0473)	F 52.002 - 52.003 (2.0473 - 2.0473)	G 52.003 - 52.004 (2.0474 - 2.0474)	H 52.004 - 52.005 (2.0474 - 2.0474)	J 52.005 - 52.006 (2.0474 - 2.0474)	K 52.006 - 52.007 (2.0475 - 2.0475)	L 52.007 - 52.008 (2.0475 - 2.0475)	M 52.0008 - 52.009 (2.0476 - 2.0476)	N 52.009 - 52.010 (2.0476 - 2.0476)	P 52.010 - 52.011 (2.0476 - 2.0476)	R 52.011 - 52.012 (2.0477 - 2.0477)	S 52.012 - 52.013 (2.0477 - 2.0477)	T 52.013 - 52.014 (2.0478 - 2.0478)	U 52.014 - 52.015 (2.0478 - 2.0478)	V 52.015 - 52.016 (2.0478 - 2.0478)	W 52.016 - 52.017 (2.0479 - 2.0479)
A	47.979 - 47.978 (1.8889 - 1.8889)	0	0	0	0	0	0	0	01	01	01	1	1	1	12	12	12	2	2	2	23
B	47.978 - 47.977 (1.8889 - 1.8889)	0	0	0	0	0	0	01	01	01	1	1	1	12	12	12	2	2	2	23	23
C	47.977 - 47.976 (1.8889 - 1.8888)	0	0	0	0	0	01	01	01	1	1	1	12	12	12	2	2	2	23	23	23
D	47.976 - 47.975 (1.8888 - 1.8888)	0	0	0	0	01	01	01	1	1	1	12	12	12	2	2	2	23	23	23	3
E	47.975 - 47.974 (1.8888 - 1.8887)	0	0	0	01	01	01	1	1	1	12	12	12	2	2	2	23	23	23	3	3
F	47.974 - 47.973 (1.8887 - 1.8887)	0	0	01	01	01	1	1	1	12	12	12	2	2	2	23	23	23	3	3	3
G	47.973 - 47.972 (1.8887 - 1.8887)	0	01	01	01	1	1	1	12	12	12	2	2	2	23	23	23	3	3	3	34
H	47.972 - 47.971 (1.8887 - 1.8886)	01	01	01	1	1	1	12	12	12	2	2	2	23	23	23	3	3	3	34	34
J	47.971 - 47.970 (1.8886 - 1.8886)	01	01	1	1	1	12	12	12	2	2	2	23	23	23	3	3	3	34	34	34
K	47.970 - 47.969 (1.8886 - 1.8885)	01	1	1	1	12	12	12	2	2	2	23	23	23	3	3	3	34	34	34	4
L	47.969 - 47.968 (1.8885 - 1.8885)	1	1	1	12	12	12	2	2	2	23	23	23	3	3	3	34	34	34	4	4
M	47.968 - 47.967 (1.8885 - 1.8885)	1	1	12	12	12	2	2	2	23	23	23	3	3	3	34	34	34	4	4	4
N	47.967 - 47.966 (1.8885 - 1.8884)	1	12	12	12	2	2	2	23	23	23	3	3	3	34	34	34	4	4	4	45
P	47.966 - 47.965 (1.8884 - 1.8884)	12	12	12	2	2	2	23	23	23	3	3	3	34	34	34	4	4	4	45	45
R	47.965 - 47.964 (1.8884 - 1.8883)	12	12	2	2	2	23	23	23	3	3	3	34	34	34	4	4	4	45	45	45
S	47.964 - 47.963 (1.8883 - 1.8883)	12	2	2	2	23	23	23	3	3	3	34	34	34	4	4	4	45	45	45	5
T	47.963 - 47.962 (1.8883 - 1.8883)	2	2	2	23	23	23	3	3	3	34	34	34	4	4	4	45	45	45	5	5
U	47.962 - 47.961 (1.8883 - 1.8882)	2	2	23	23	23	3	3	3	34	34	34	4	4	4	45	45	45	5	5	5
V	47.961 - 47.960 (1.8882 - 1.8882)	2	23	23	23	3	3	3	34	34	34	4	4	4	45	45	45	5	5	5	5
W	47.960 - 47.959 (1.8882 - 1.8881)	23	23	23	3	3	3	34	34	34	4	4	4	45	45	45	5	5	5	5	5

PBIC3759E

Main Bearing Grade Table

Main Bearing Grade Table : Refer to EM-99, "Main Bearing".

Use Undersize Bearing Usage Guide

- When the specified main bearing oil clearance is not obtained with standard size main bearings, use undersize (US) bearing.
- When using undersize (US) bearing, measure the main bearing inner diameter with bearing installed, and grind main journal so that the main bearing oil clearance satisfies the standard.

CAUTION:

In grinding crankshaft main journal to use undersize bearings, keep fillet R (A) [0.8 - 1.2 mm (0.031 - 0.047 in)].

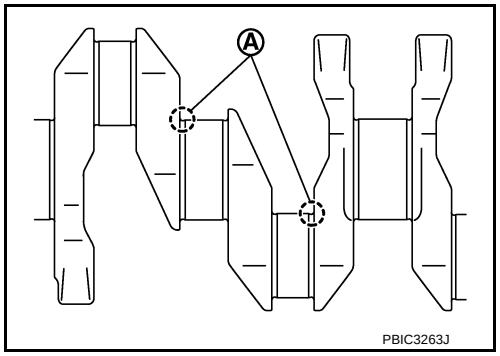

Bearing undersize table:

Refer to EM-99, "Main Bearing".

SERVICE DATA AND SPECIFICATIONS (SDS)

SERVICE DATA AND SPECIFICATIONS (SDS)

General Specification

INFOID:0000000005988220

GENERAL SPECIFICATIONS

Engine type		HR12DE
Cylinder arrangement		In-line 3
Displacement	cm^3 (cu in)	1,198 (73.1)
Bore and stroke	mm (in)	78.0×83.6 (3.070×3.291)
Valve arrangement		DOHC
Firing order		1-2-3
Number of piston rings	Compression	2
	Oil	1
Compression ratio		10.7
Compression pressure kPa (bar, kg/cm^2, psi) / 200 rpm	Standard	1,510 (15.1, 15.4, 219)
	Minimum	1,270 (12.7, 12.95, 184)
	Differential limit between cylinders	100 (1.0, 1.0, 14.5)

Valve Timing

Unit: degree

Valve timing
⇦: Intake valve
⬅: Exhaust valve

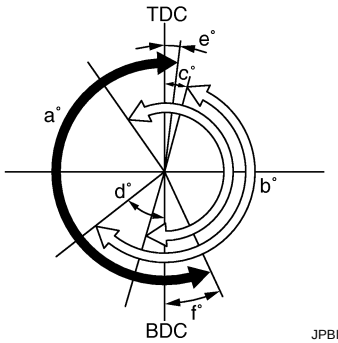

JPBIA0552ZZ

a	b	c	d	e	f
208	228	11 (–24) ATDC	59 (24) ABDC	4	24

( ): Valve timing control “ON”

Drive Belt

INFOID:0000000005988221

DRIVE BELT

Belt Deflection

Location		Deflection adjustment *		Unit: mm (in)
		Used belt		New belt
		Limit	After adjusted	
Drive belt	With A/C	10.9 (0.32)	5.1 - 5.6 (0.19 - 0.21)	4.3 - 4.7 (0.16 - 0.17)
	Without A/C	9.8	4.6 - 5.0	3.9 - 4.2
Applied pushing force		98 N (10 kg, 22 lb)		

*: When engine is cold.

Belt Tension and Frequency

Location	Tension adjustment *		Unit: N (kg, lb)	Frequency adjustment *		Unit: Hz
	Used belt		New belt	Used belt		New belt
	Limit	After adjusted		Limit	After adjusted	
Drive belt	330 (51.0, 112)	876 - 964 (89.4 - 98.3, 197 - 217)	1064 - 1152 (108.5 - 117.5, 239 - 259)	133	217 - 227	239 - 248

*: When engine is cold.

Spark Plug

INFOID:0000000005988222

SPARK PLUG (PLATINUM-TIPPED TYPE)

With EGR control valve

Unit: mm (in)

Make		DENSO
Standard type		FXE20MR11
Spark plug gap	Standard	1.1 (0.043)

Without EGR control valve

Unit: mm (in)

Make		FEDEMO
Standard type		REA12MC4
Spark plug gap	Standard	1.1 (0.043)

Exhaust Manifold

INFOID:0000000005988223

EXHAUST MANIFOLD

Unit: mm (in)

Items	Limit
Surface distortion	0.3 (0.012)

Camshaft

INFOID:0000000005988224

CAMSHAFT

Unit: mm (in)

Items	Standard	Limit
Camshaft runout [TIR*]	0.02 (0.0008)	0.1 (0.0039)

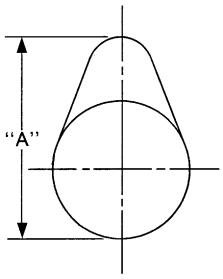

SEM671

Camshaft cam height "A"	Intake	40.915 - 41.105 (1.6419 - 1.6494)	—
	Exhaust	40.175 - 40.365 (1.5816 - 1.5891)	—
Camshaft journal outer diameter	No. 1	27.935 - 27.955 (1.0998 - 1.1006)	—
	No. 2, 3, 4	24.950 - 24.970 (0.9822 - 0.9830)	—

Items		Standard	Limit
Camshaft bracket inner diameter	No. 1	28.000 - 28.021 (1.1024 - 1.1032)	—
	No. 2, 3, 4	25.000 - 25.021 (0.9842 - 0.9850)	—
Camshaft journal oil clearance	No. 1	0.045 - 0.086 (0.0018 - 0.0034)	—
	No. 2, 3, 4	0.030 - 0.071 (0.0011 - 0.0027)	—
Camshaft end play		0.075 - 0.153 (0.0029 - 0.0060)	0.2 (0.0078)
Camshaft sprocket runout [TIR*]		—	0.15 (0.0059)

*: Total indicator reading

Valve Lifter

Unit: mm (in)

Items	Standard
Valve lifter outer diameter	29.977 - 29.987 (1.1801 - 1.1805)
Valve lifter hole diameter	30.000 - 30.021 (1.1811 - 1.1819)
Valve lifter clearance	0.013 - 0.044 (0.0005 - 0.0017)

Valve Clearance

Unit: mm (in)

	Cold	Hot * (reference data)
Intake	0.26 - 0.34 (0.010 - 0.013)	0.304 - 0.416 (0.012 - 0.016)
Exhaust	0.29 - 0.37 (0.011 - 0.014)	0.308 - 0.432 (0.012 - 0.017)

*:Approximately 80°C (176°F)

Available Valve Lifter

Unit: mm (in)

Identification mark (A)	Thickness (B)

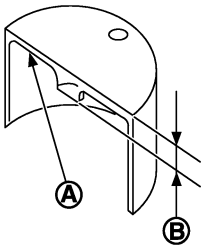

JPBIA0170ZZ

300	3.00 (0.1181)
302	3.02 (0.1188)
304	3.04 (0.1196)
306	3.06 (0.1204)
308	3.08 (0.1212)
310	3.10 (0.1220)
312	3.12 (0.1228)
314	3.14 (0.1236)
316	3.16 (0.1244)
318	3.18 (0.1251)
320	3.20 (0.1259)
322	3.22 (0.1267)
324	3.24 (0.1275)

Identification mark (A)	Thickness (B)
326	3.26 (0.1283)
328	3.28 (0.1291)
330	3.30 (0.1299)
332	3.32 (0.1307)
334	3.34 (0.1314)
336	3.36 (0.1322)
338	3.38 (0.1330)
340	3.40 (0.1338)
342	3.42 (0.1346)
344	3.44 (0.1354)
346	3.46 (0.1362)
348	3.48 (0.1370)
350	3.50 (0.1377)

Cylinder head

INFOID:0000000005988225

CYLINDER HEAD

Unit: mm (in)

Items	Limit
Head surface distortion	0.1 (0.004)

Valve Dimensions

Unit: mm (in)

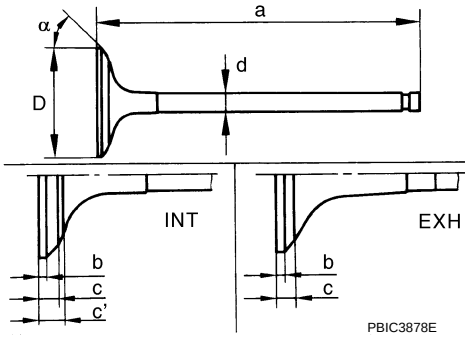

Valve head diameter “D”	Intake	31.0 - 31.3 (1.220 - 1.232)
	Exhaust	25.3 - 25.6 (0.996 - 1.007)
Valve length “a”	Intake	101.73 (4.01)
	Exhaust	102.49 (4.04)
“b”	Intake	1.0 (0.0393)
	Exhaust	1.0 (0.0393)
“c”	Intake	2.1 - 2.8 (0.0826 - 0.1102)
	Exhaust	2.3 - 3.0 (0.0905 - 0.1181)
“c′”	Intake	3.0 (0.1181)
	Exhaust	–
“d ”	Intake	4.965 - 4.980 (0.1954 - 0.1960)
	Exhaust	4.955 - 4.970 (0.1950 - 0.1956)
Valve seat angle “α”	Intake	45°15′ - 45°45′
	Exhaust	

Valve Guide

Unit: mm (in)

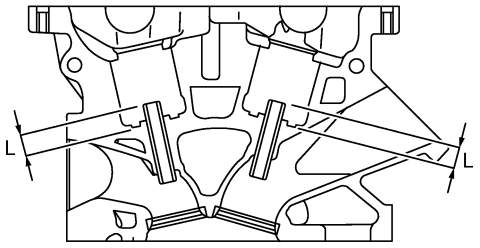

PBIC0184E

Items		Standard part	Service part
Valve guide	Outer diameter	9.023 - 9.034 (0.3552 - 0.3556)	9.223 - 9.234 (0.3631 - 0.3635)
	Inner diameter (Finished size)	5.000 - 5.018 (0.1968 - 0.1975)	
Cylinder head valve guide hole diameter		8.975 - 8.996 (0.3533 - 0.3541)	9.175 - 9.196 (0.3612 - 0.3620)
Interference fit of valve guide		0.027 - 0.059 (0.0011 - 0.0023)	
Items		Standard	Limit
Valve guide clearance	Intake	0.020 - 0.053 (0.0008 - 0.0021)	0.1 (0.004)
	Exhaust	0.030 - 0.063 (0.0012 - 0.0025)	0.1 (0.004)
Projection length “H”		11.4 - 11.8 (0.448 - 0.464)	

Valve Seat

Unit: mm (in)

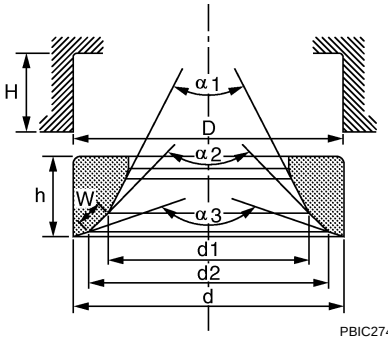

PBIC2745E

Items		Standard	Oversize [0.5 (0.02)] (Service)
Cylinder head seat recess diameter “D”	Intake	31.400 - 31.416 (1.2362 - 1.2368)	31.900 - 31.916 (1.2559 - 1.2565)
	Exhaust	25.900 - 25.916 (1.0196 - 1.0203)	26.400 - 26.416 (1.0393 - 1.0399)
Valve seat outer diameter “d”	Intake	31.497 - 31.513 (1.2400 - 1.2406)	31.997 - 32.013 (1.2597 - 1.2603)
	Exhaust	25.997 - 26.013 (1.0235 - 1.0241)	26.497 - 26.513 (1.0431 - 1.0438)
Valve seat interference fit	Intake	0.081 - 0.113 (0.0032 - 0.0044)	
	Exhaust	0.081 - 0.113 (0.0032 - 0.0044)	
Diameter “d1”*1	Intake	29.0 (1.141)	
	Exhaust	23.0 (0.905)	
Diameter “d2”*2	Intake	30.6 - 30.8 (1.204 - 1.212)	
	Exhaust	24.9 - 25.1 (0.980 - 0.988)	
Angle “α1”	Intake	60°	
	Exhaust	45°	

Angle “α2”	Intake	89°45′ - 90°15′	
	Exhaust	89°45′ - 90°15′	
Angle “α3”	Intake	120°	
	Exhaust	120°	
Contacting width “W”*3	Intake	1.05 - 1.35 (0.0413 - 0.0531)	
	Exhaust	1.25 - 1.55 (0.0492 - 0.0610)	
Height “h”	Intake	6.0 (0.236)	5.45 (0.214)
	Exhaust	6.0 (0.236)	5.43 (0.213)
Depth “H”		6.0 (0.236)	

*1: Diameter made by intersection point of conic angles α1 and α2

*2: Diameter made by intersection point of conic angles α2 and α3

*3: Machining data

Valve Spring

Standard:

Free height	42.26 mm (1.6637 in)
Installation height	32.40 mm (1.2755 in)
Installation load	136 - 154 N (13.9 - 15.7 kg, 31 - 35 lb)
Height during valve open	23.96 mm (0.9433 in)
Load with valve open	262 - 296 N (26.7 - 30.2 kg, 59 - 67 lb)

Cylinder Block

INFOID:0000000005988226

CYLINDER BLOCK

Unit: mm (in)

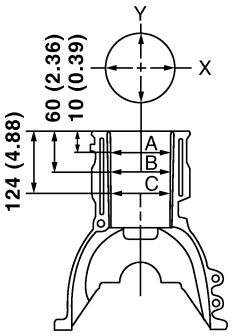

PBIC3924E

Surface distortion		Limit	0.1 (0.004)
Cylinder bore	Inner diameter	Standard	78.000 - 78.015 (3.0708 - 3.0714)
		Wear limit	—
Out-of-round (Difference between “a” and “b”)		Limit	0.015 (0.0006)
Taper (Difference between “c” and “d”)			0.010 (0.0004)

Cylinder block main bearing housing inner diameter grade	Grade No. A	51.997 - 51.998 (2.0471 - 2.0472)
	Grade No. B	51.998 - 51.999 (2.0472 - 2.0472)
	Grade No. C	51.999 - 52.000 (2.0472 - 2.0472)
	Grade No. D	52.000 - 52.001 (2.0472 - 2.0472)
	Grade No. E	52.001 - 52.002 (2.0473 - 2.0473)
	Grade No. F	52.002 - 52.003 (2.0473 - 2.0473)
	Grade No. G	52.003 - 52.004 (2.0474 - 2.0474)
	Grade No. H	52.004 - 52.005 (2.0474 - 2.0474)
	Grade No. J	52.005 - 52.006 (2.0474 - 2.0474)
	Grade No. K	52.006 - 52.007 (2.0475 - 2.0475)
	Grade No. L	52.007 - 52.008 (2.0475 - 2.0475)
	Grade No. M	52.008 - 52.009 (2.0476 - 2.0476)
	Grade No. N	52.009 - 52.010 (2.0476 - 2.0476)
	Grade No. P	52.010 - 52.011 (2.0476 - 2.0476)
	Grade No. R	52.011 - 52.012 (2.0477 - 2.0477)
	Grade No. S	52.012 - 52.013 (2.0477 - 2.0477)
	Grade No. T	52.013 - 52.014 (2.0478 - 2.0478)
	Grade No. U	52.014 - 52.015 (2.0478 - 2.0478)
	Grade No. V	52.015 - 52.016 (2.0478 - 2.0478)
	Grade No. W	52.016 - 52.017 (2.0479 - 2.0479)
Difference in inner diameter between cylinders	Standard	Less than 0.03 (0.0012)

Available Piston

Unit: mm (in)

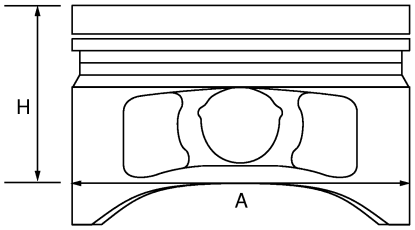

PBIC0188E

Piston skirt diameter “A”	77.965 - 77.980 (3.0694 - 3.0700)
Piston height “H” dimension	37.1 (1.460)
Piston pin hole diameter	19.006 - 19.012 (0.7482 - 0.7485)
Piston to cylinder bore clearance	0.020 - 0.050 (0.0007 - 0.0019)

Piston Ring

Unit: mm (in)

Items		Standard	Limit
Side clearance	Top	0.040 - 0.080 (0.0015 - 0.0031)	0.11 (0.0043)
	2nd	0.030 - 0.070 (0.0012 - 0.0028)	0.10 (0.0039)
	Oil (rail ring)	0.045 - 0.125 (0.0017 - 0.0049)	—
End gap	Top	0.20 - 0.30 (0.0078 - 0.0118)	0.50 (0.0196)
	2nd	0.35 - 0.50 (0.0137 - 0.0196)	0.66 (0.0259)
	Oil (rail ring)	0.20 - 0.60 (0.0079 - 0.0236)	0.92 (0.0362)

Piston Pin

Unit: mm (in)

Piston pin outer diameter		18.996 - 19.002 (0.7478 - 0.7481)
Piston to piston pin oil clearance	Standard	0.008 - 0.012 (0.0003 - 0.0004)
Connecting rod bushing oil clearance	Standard	–0.018 to –0.044 (–0.0007 to –0.0017)

Connecting Rod

Unit: mm (in)

Center distance		129.84 - 129.94 (5.1118 - 5.1157)
Bend [per 100 (3.94)]	Limit	0.15 (0.0059)
Torsion [per 100 (3.94)]	Limit	0.30 (0.0118)
Connecting rod bushing inner diameter*		18.958 - 18.978 (0.7463 - 0.7471)
Side clearance	Standard	0.200 - 0.352 (0.0079 - 0.0138)
Connecting rod big end diameter	Grade No. A Grade No. B Grade No. C Grade No. D Grade No. E Grade No. F Grade No. G Grade No. H Grade No. J Grade No. K Grade No. L Grade No. M Grade No. N	43.000 - 43.001 (1.6929 - 1.6929) 43.001 - 43.002 (1.6929 - 1.6930) 43.002 - 43.003 (1.6930 - 1.6930) 43.003 - 43.004 (1 6930 - 1.6931) 43.004 - 43.005 (1.6931 - 1.6931) 43.005 - 43.006 (1.6931 - 1.6931) 43.006 - 43.007 (1.6931 - 1.6932) 43.007 - 43.008 (1.6932 - 1.6932) 43.008 - 43.009 (1.6932 - 1.6933) 43.009 - 43.010 (1.6933 - 1.6933) 43.010 - 43.011 (1.6933 - 1.6933) 43.011 - 43.012 (1.6933 - 1.6934) 43.012 - 43.013 (1.6934 - 1.6934)

*: After installing in connecting rod

Main Bearing

INFOID:0000000005988227

MAIN BEARING

Unit: mm (in)

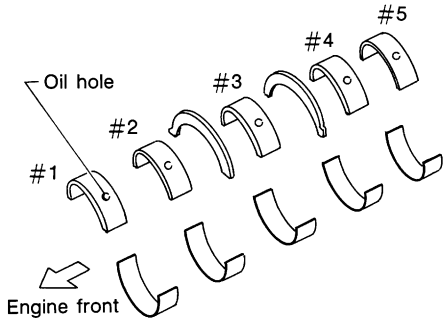

SEM685D

Grade number	Thickness	Identification color	Remarks
0	1.996 - 1.999 (0.0785 - 0.0787)	Black	Grade and color are the same for upper and lower bearings.
1	1.999 - 2.002 (0.0787 - 0.0788)	Brown	
2	2.002 - 2.005 (0.0788 - 0.0789)	Green	
3	2.005 - 2.008 (0.0789 - 0.0790)	Yellow	
4	2.008 - 2.011 (0.0790 - 0.0791)	Blue	
5	2.011 - 2.014 (0.0791 - 0.0792)	Pink	

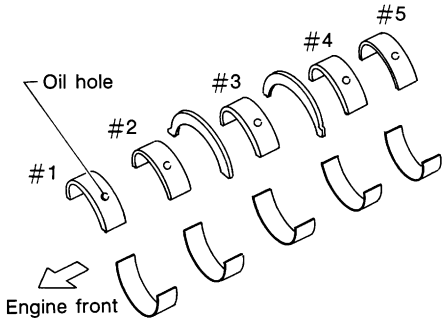

SEM685D

Grade number		Thickness	Identification color	Remarks
01	UPR	1.996 - 1.999 (0.0785 - 0.0787)	Black	Grade and color are different for upper and lower bearings.
	LWR	1.999 - 2.002 (0.0787 - 0.0788)	Brown	
12	UPR	1.999 - 2.002 (0.0787 - 0.0788)	Brown	
	LWR	2.002 - 2.005 (0.0788 - 0.0789)	Green	
23	UPR	2.002 - 2.005 (0.0788 - 0.0789)	Green	
	LWR	2.005 - 2.008 (0.0789 - 0.0790)	Yellow	
34	UPR	2.005 - 2.008 (0.0789 - 0.0790)	Yellow	
	LWR	2.008 - 2.011 (0.0790 - 0.0791)	Blue	
45	UPR	2.008 - 2.011 (0.0790 - 0.0791)	Blue	
	LWR	2.011 - 2.014 (0.0791 - 0.0792)	Pink	

Undersize

Unit: mm (in)

Items	Thickness	Main journal diameter
US 0.25 (0.0098)	2.126 - 2.134 (0.0837 - 0.0840)	Grind so that bearing clearance is the specified value.

Bearing Oil Clearance

Unit: mm (in)

Main bearing oil clearance	Standard	0.024 - 0.034 (0.0009 - 0.0013)

Connecting Rod Bearing

INFOID:0000000005988228

CONNECTING ROD BEARING

Unit: mm (in)

Grade number		Thickness	Identification color	Remarks
0		1.498 - 1.501 (0.0590 - 0.0591)	Black	Grade and color are the same for upper and lower bearings.
1		1.501 - 1.504 (0.0591 - 0.0592)	Brown	
2		1.504 - 1.507 (0.0592 - 0.0593)	Green	
3		1.507 - 1.510 (0.0593 - 0.0594)	Yellow	
4		1.510 - 1.513 (0.0594 - 0.0596)	Blue	
01	UPR	1.498 - 1.501 (0.0590 - 0.0591)	Black	Grade and color are different between upper and lower bearings.
	LWR	1.501 - 1.504 (0.0591 - 0.0592)	Brown	
12	UPR	1.501 - 1.504 (0.0591 - 0.0592)	Brown	
	LWR	1.504 - 1.507 (0.0592 - 0.0593)	Green	
23	UPR	1.504 - 1.507 (0.0592 - 0.0593)	Green	
	LWR	1.507 - 1.510 (0.0593 - 0.0594)	Yellow	
34	UPR	1.507 - 1.510 (0.0593 - 0.0594)	Yellow	
	LWR	1.510 - 1.513 (0.0594 - 0.0596)	Blue	

Undersize

Unit: mm (in)

Items	Thickness	Crankshaft pin journal diameter
US 0.25 (0.0098)	1.627 - 1.635 (0.0640 - 0.0644)	Grind so that bearing clearance is the specified value.

Bearing Oil Clearance

Unit: mm (in)

Connecting rod bearing oil clearance	Standard	0.029 - 0.039 (0.0011 - 0.0015)
	Limit	0.10 (0.0039)

SECTION EX
EXHAUST SYSTEM

CONTENTS

PRECAUTION 2

PRECAUTIONS 2
Removal and Installation 2

PREPARATION 3

PREPARATION 3
Special Service Tools 3
Commercial Service Tools 3

PERIODIC MAINTENANCE 4

EXHAUST SYSTEM 4
Inspection 4

REMOVAL AND INSTALLATION 5

EXHAUST SYSTEM 5
Exploded View 5
Removal and Installation 5
Inspection 6

PRECAUTION

PRECAUTIONS

Removal and Installation

INFOID:0000000005988494

CAUTION:

- **Be sure to use genuine exhaust system parts or equivalents which are specially designed for heat resistance, corrosion resistance, and shape.**
- **Perform the operation with the exhaust system fully cooled down because the system will be hot just after engine stops.**
- **Be careful not to cut your hand on the heat insulator edge.**

PREPARATION

PREPARATION

Special Service Tools

INFOID:0000000005988495

Tool number Tool name	Description
KV10114400 Heated oxygen sensor wrench 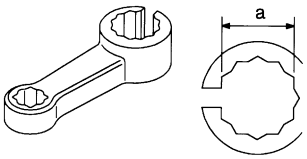 S-NT636	Loosening or tightening heated oxygen sensor 2 **a: For 22 mm (0.87 in) width hexagon nut**

Commercial Service Tools

INFOID:0000000005988496

Tool name	Description
Power tool 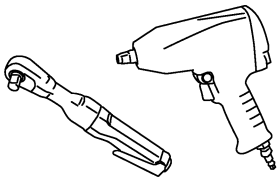 PBIC0190E	Loosening nuts and bolts
Heated oxygen sensor thread cleaner 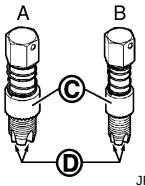 JPBIA0238ZZ	Reconditioning the exhaust system threads before installing a new heated oxygen sensor (Use with anti-seize lubricant shown below.) **A: J-43897-18 [18 mm (0.71 in) dia.] for zirconia heated oxygen sensor** **B: J-43897-12 [12 mm (0.47 in) dia.] for titania heated oxygen sensor** **C: Mating surface shave cylinder** **D: Flutes**
Anti-seize lubricant (Permatex 133AR or equivalent meeting MIL specification MIL-A-907) 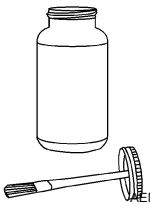 JEM489	Lubricating heated oxygen sensor thread cleaner when reconditioning exhaust system threads

PERIODIC MAINTENANCE

EXHAUST SYSTEM

Inspection

INFOID:0000000005988497

Check exhaust pipes, muffler, and mounting for improper attachment, leakage, cracks, damage or deterioration.

- If anything is found, repair or replace damaged parts.

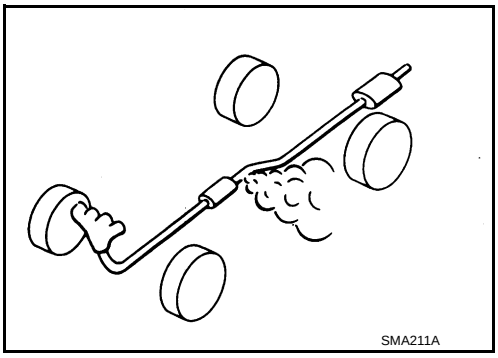

REMOVAL AND INSTALLATION

EXHAUST SYSTEM

Exploded View

INFOID:0000000005988498

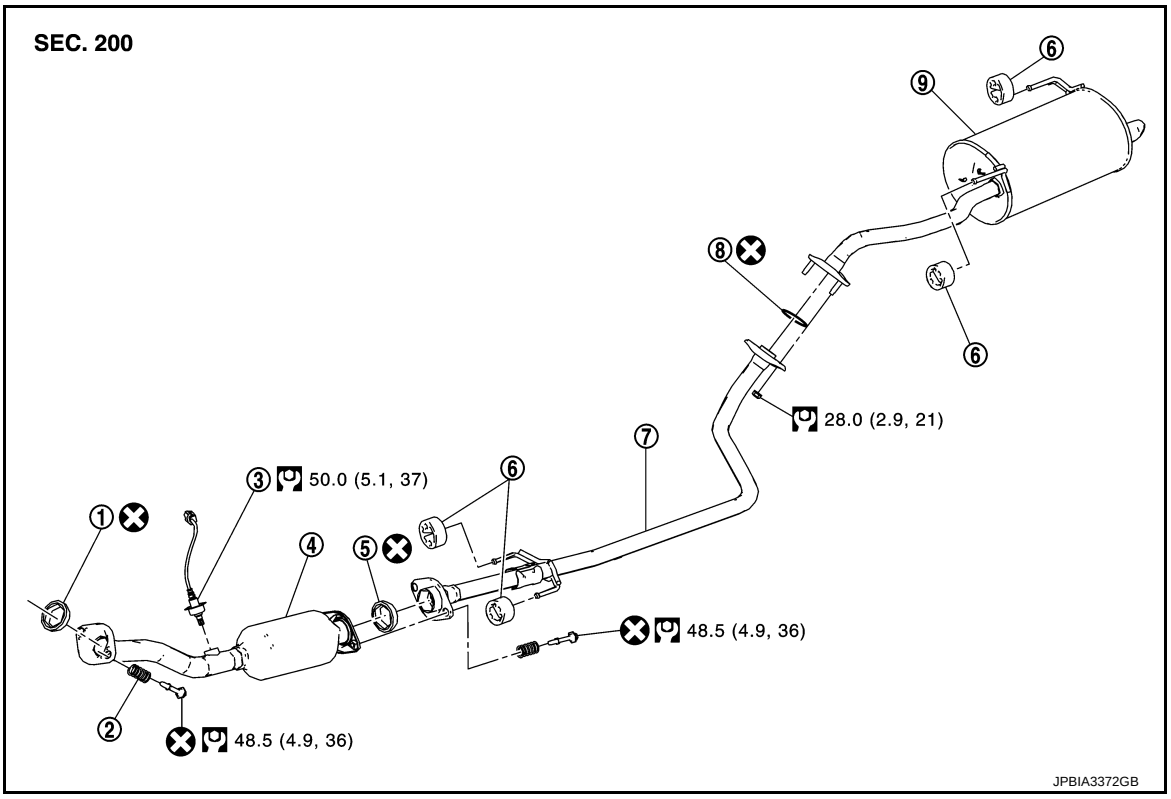

1.	Seal bearing	2.	Spring	3.	Heated oxygen sensor 2
4.	Exhaust front tube	5.	Seal bearing	6.	Mounting bracket
7.	Center muffler	8.	Ring gasket	9.	Main muffler

Refer to GI-4, "Components" for symbols in the figure.

Removal and Installation

INFOID:0000000005988499

REMOVAL

- Disconnect each joint and mounting.
- Remove heated oxygen sensor 2 with following procedure:

- Using heated oxygen sensor wrench [SST: KV10114400] (A), removal heated oxygen sensor 2 (1).

2 : Exhaust front tube

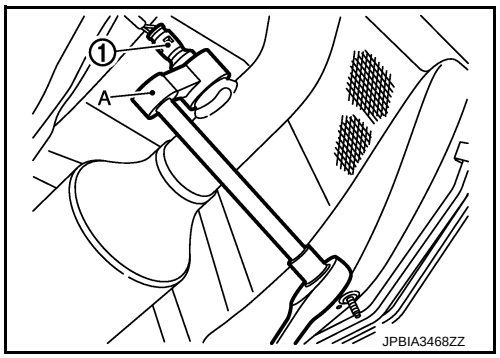

CAUTION:
Be careful not to damage heated oxygen sensor 2.

INSTALLATION

Note the following, and install in the reverse order of removal.

CAUTION:

- **Always replace seal bearings with new ones when reassembling.**

- **Discard any heated oxygen sensor 2 which has been dropped onto a hard surface such as a concrete floor. Use a new one.**
- **Before installing a new heated oxygen sensor 2, clean exhaust system threads using the heated oxygen sensor thread cleaner [commercial service tool: J-43897-18 or J-43897-12] and apply anti-seize lubricant (commercial service tool).**
- **Never over torque heated oxygen sensor 2. Doing so may cause damage to the heated oxygen sensor 2, resulting in the "MIL" coming on.**
- **If heat insulator is badly deformed, repair or replace it. If deposits such as mud pile up on the heat insulator, remove them.**
- **When installing heat insulator avoid large gaps or interference between heat insulator and each exhaust pipe.**
- **Remove deposits from the sealing surface of each connection. Connect them securely to avoid gas leakage.**
- **When installing each mounting rubber, use silicon oil to avoid twisting.**
- **Temporarily tighten mounting nuts and bolts. Check each part for unusual interference and mounting rubber interference, and then tighten them to the specified torque.**
- **When installing each mounting rubber, avoid twisting or unusual extension in up/down, front/rear and right/left directions.**

Exhaust Manifold to Exhaust Front Tube

1. Securely insert seal bearing (2) into exhaust manifold (1) side in the direction shown in the figure.

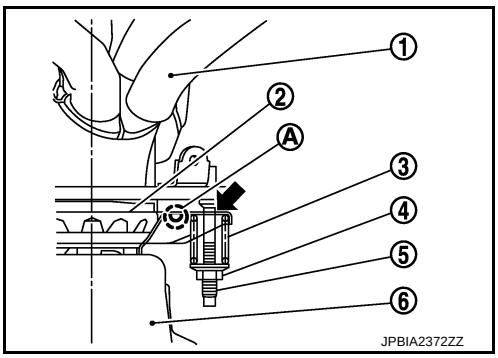

   3 : Spring
   4 : Nut
   5 : Stud bolt
   6 : Exhaust front tube

   CAUTION:
   Be careful not to damage seal bearing surface when installing.
2. With spring, tighten nut.
   CAUTION:
   - **Fasten stud bolts to the flange of exhaust manifold side to the specified torque before fastening mounting nuts.**
   - **Ensure springs are seated correctly on the flange and not sitting on (A).**
   - **Be careful that stud bolt does not interfere with mounting hole of exhaust front tube (⬅).**
3. After installing, check that stud bolt does not interfere with mounting hole of exhaust front tube.

Exhaust Front Tube to Center Muffler

1. Securely insert seal bearing (2) into exhaust front tube (1) side in the direction shown in the figure.

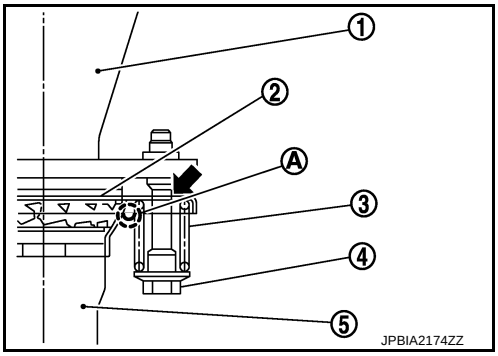

   3 : Spring
   4 : Bolt
   5 : Center muffler

   CAUTION:
   Be careful not to damage seal bearing surface when installing.
2. With spring, tighten bolt.
   CAUTION:
   - **Ensure springs are seated correctly on the flange and not sitting on (A).**
   - **Be careful that bolt does not interfere with mounting hole of center muffler (⬅).**
3. After installing, check that bolt does not interfere with mounting hole of center muffler.

Inspection

INFOID:0000000005988500

INSPECTION AFTER INSTALLATION

- Check clearance between tail tube and rear bumper is even.

- With engine running, check exhaust tube joints for gas leakage and unusual noises.
- Check to ensure that mounting brackets and mounting rubbers are installed properly and free from undue stress. Improper installation could result in excessive noise and vibration.

SECTION EXL
EXTERIOR LIGHTING SYSTEM

CONTENTS

PRECAUTION 4

PRECAUTIONS 4
Precaution for Supplemental Restraint System (SRS) "AIR BAG" and "SEAT BELT PRE-TENSIONER" 4

SYSTEM DESCRIPTION 5

COMPONENT PARTS 5

EXTERIOR LIGHTING SYSTEM 5
EXTERIOR LIGHTING SYSTEM : Component Parts Location 5
EXTERIOR LIGHTING SYSTEM : Component Description 6

SYSTEM 7

HEADLAMP SYSTEM 7
HEADLAMP SYSTEM : System Diagram 7
HEADLAMP SYSTEM : System Description 7

FRONT FOG LAMP SYSTEM 7
FRONT FOG LAMP SYSTEM : System Diagram 8
FRONT FOG LAMP SYSTEM : System Description 8

TURN SIGNAL AND HAZARD WARNING LAMP SYSTEM 8
TURN SIGNAL AND HAZARD WARNING LAMP SYSTEM : System Diagram 8
TURN SIGNAL AND HAZARD WARNING LAMP SYSTEM : System Description 8

PARKING, LICENSE PLATE AND TAIL LAMP SYSTEM 9
PARKING, LICENSE PLATE AND TAIL LAMP SYSTEM : System Diagram 9
PARKING, LICENSE PLATE AND TAIL LAMP SYSTEM : System Description 9

EXTERIOR LAMP BATTERY SAVER SYSTEM 9
EXTERIOR LAMP BATTERY SAVER SYSTEM : System Diagram 10
EXTERIOR LAMP BATTERY SAVER SYSTEM : System Description 10

DIAGNOSIS SYSTEM (BCM) (WITH INTELLIGENT KEY SYSTEM) 12

COMMON ITEM 12
COMMON ITEM : CONSULT-III Function (BCM - COMMON ITEM) 12

HEADLAMP 13
HEADLAMP : CONSULT-III Function (BCM - HEAD LAMP) 13

FLASHER 15
FLASHER : CONSULT-III Function (BCM - FLASHER) 15

DIAGNOSIS SYSTEM (BCM) (WITHOUT INTELLIGENT KEY SYSTEM) 17

COMMON ITEM 17
COMMON ITEM : CONSULT-III Function (BCM - COMMON ITEM) 17

HEADLAMP 17
HEADLAMP : CONSULT-III Function (BCM - HEAD LAMP) 18

FLASHER 19
FLASHER : CONSULT-III Function (BCM - FLASHER) 19

DIAGNOSIS SYSTEM (IPDM E/R) (WITH INTELLIGENT KEY SYSTEM) 21
Diagnosis Description 21
CONSULT-III Function (IPDM E/R) 23

DIAGNOSIS SYSTEM (IPDM E/R) (WITHOUT INTELLIGENT KEY SYSTEM) 25
Diagnosis Description 25

CONSULT-III Function (IPDM E/R) 27

ECU DIAGNOSIS INFORMATION 29

BCM, IPDM E/R 29
List of ECU Reference 29

WIRING DIAGRAM 30

HEADLAMP SYSTEM 30
Wiring Diagram - HEADLAMP - 30

FRONT FOG LAMP SYSTEM 35
Wiring Diagram - FRONT FOG LAMP - 35

TURN SIGNAL AND HAZARD WARNING LAMP SYSTEM 39
Wiring Diagram - TURN AND HAZARD WARNING LAMPS - 39

PARKING, LICENSE PLATE, SIDE MARKER AND TAIL LAMPS SYSTEM 44
Wiring Diagram - PARKING, LICENSE PLATE, SIDE MARKER AND TAIL LAMPS - 44

STOP LAMP 51
Wiring Diagram - STOP LAMP - 51

BACK-UP LAMP 55
Wiring Diagram - BACK-UP LAMP - 55

BASIC INSPECTION 59

DIAGNOSIS AND REPAIR WORKFLOW 59
Work Flow 59

DTC/CIRCUIT DIAGNOSIS 61

EXTERIOR LAMP FUSE 61
Diagnosis Procedure 61

HEADLAMP (HI) CIRCUIT 62
Component Function Check 62
Diagnosis Procedure 62

HEADLAMP (LO) CIRCUIT 64
Component Function Check 64
Diagnosis Procedure 64

FRONT FOG LAMP CIRCUIT 66
Component Function Check 66
Diagnosis Procedure 66

PARKING LAMP CIRCUIT 68
Component Function Check 68
Diagnosis Procedure 68

TURN SIGNAL LAMP CIRCUIT 70
Component Function Check 70
Diagnosis Procedure 70

HAZARD SWITCH 72
Component Function Check 72
Diagnosis Procedure 72

TAIL LAMP CIRCUIT 74
Component Function Check 74
Diagnosis Procedure 74

LICENSE PLATE LAMP CIRCUIT 75
Component Function Check 75
Diagnosis Procedure 75

FRONT FOG LAMP RELAY 76
Diagnosis Procedure 76
Component Inspection 77

SYMPTOM DIAGNOSIS 78

EXTERIOR LIGHTING SYSTEM SYMPTOMS.. 78
Symptom Table 78

BOTH SIDE HEADLAMPS (HI) ARE NOT TURNED ON 80
Description 80
Diagnosis Procedure 80

BOTH SIDE HEADLAMPS (LO) ARE NOT TURNED ON 81
Description 81
Diagnosis Procedure 81

PARKING, LICENSE PLATE AND TAIL LAMPS ARE NOT TURNED ON 82
Description 82
Diagnosis Procedure 82

BOTH SIDE FRONT FOG LAMPS ARE NOT TURNED ON 83
Description 83
Diagnosis Procedure 83

PERIODIC MAINTENANCE 84

HEADLAMP AIMING ADJUSTMENT 84
Description 84
Aiming Adjustment Procedure 85

FRONT FOG LAMP AIMING ADJUSTMENT ... 87
Description 87
Aiming Adjustment Procedure 87

REMOVAL AND INSTALLATION 89

FRONT COMBINATION LAMP 89
Exploded View 89
Removal and Installation 90
Replacement 90
Disassembly and Assembly 91

FRONT FOG LAMP 92
Exploded View 92
Removal and Installation 92
Replacement 92

LIGHTING & TURN SIGNAL SWITCH **94**
Exploded View 94

SIDE TURN SIGNAL LAMP **95**
Exploded View 95
Removal and Installation 95
Replacement 95

HAZARD SWITCH **97**
Exploded View 97
Removal and Installation 97

REAR COMBINATION LAMP **98**
Exploded View 98
Removal and Installation 98
Replacement 99

HIGH-MOUNTED STOP LAMP **101**
Exploded View 101
Removal and Installation 101
Replacement 102

LICENSE PLATE LAMP **103**
Exploded View 103
Removal and Installation 103
Replacement 103

SERVICE DATA AND SPECIFICATIONS (SDS) **104**

SERVICE DATA AND SPECIFICATIONS (SDS) **104**
Bulb Specifications 104

PRECAUTION

PRECAUTIONS

Precaution for Supplemental Restraint System (SRS) "AIR BAG" and "SEAT BELT PRE-TENSIONER"

INFOID:0000000005912264

The Supplemental Restraint System such as “AIR BAG” and “SEAT BELT PRE-TENSIONER”, used along with a front seat belt, helps to reduce the risk or severity of injury to the driver and front passenger for certain types of collision. This system includes seat belt switch inputs and dual stage front air bag modules. The SRS system uses the seat belt switches to determine the front air bag deployment, and may only deploy one front air bag, depending on the severity of a collision and whether the front occupants are belted or unbelted.
Information necessary to service the system safely is included in the “SRS AIR BAG” and “SEAT BELT” of this Service Manual.

WARNING:

- **To avoid rendering the SRS inoperative, which could increase the risk of personal injury or death in the event of a collision that would result in air bag inflation, all maintenance must be performed by an authorized NISSAN/INFINITI dealer.**
- **Improper maintenance, including incorrect removal and installation of the SRS, can lead to personal injury caused by unintentional activation of the system. For removal of Spiral Cable and Air Bag Module, see the “SRS AIR BAG”.**
- **Do not use electrical test equipment on any circuit related to the SRS unless instructed to in this Service Manual. SRS wiring harnesses can be identified by yellow and/or orange harnesses or harness connectors.**

PRECAUTIONS WHEN USING POWER TOOLS (AIR OR ELECTRIC) AND HAMMERS

WARNING:

- **When working near the Air Bag Diagnosis Sensor Unit or other Air Bag System sensors with the ignition ON or engine running, DO NOT use air or electric power tools or strike near the sensor(s) with a hammer. Heavy vibration could activate the sensor(s) and deploy the air bag(s), possibly causing serious injury.**
- **When using air or electric power tools or hammers, always switch the ignition OFF, disconnect the battery, and wait at least 3 minutes before performing any service.**

SYSTEM DESCRIPTION

COMPONENT PARTS

EXTERIOR LIGHTING SYSTEM

EXTERIOR LIGHTING SYSTEM : Component Parts Location

INFOID:0000000005912270

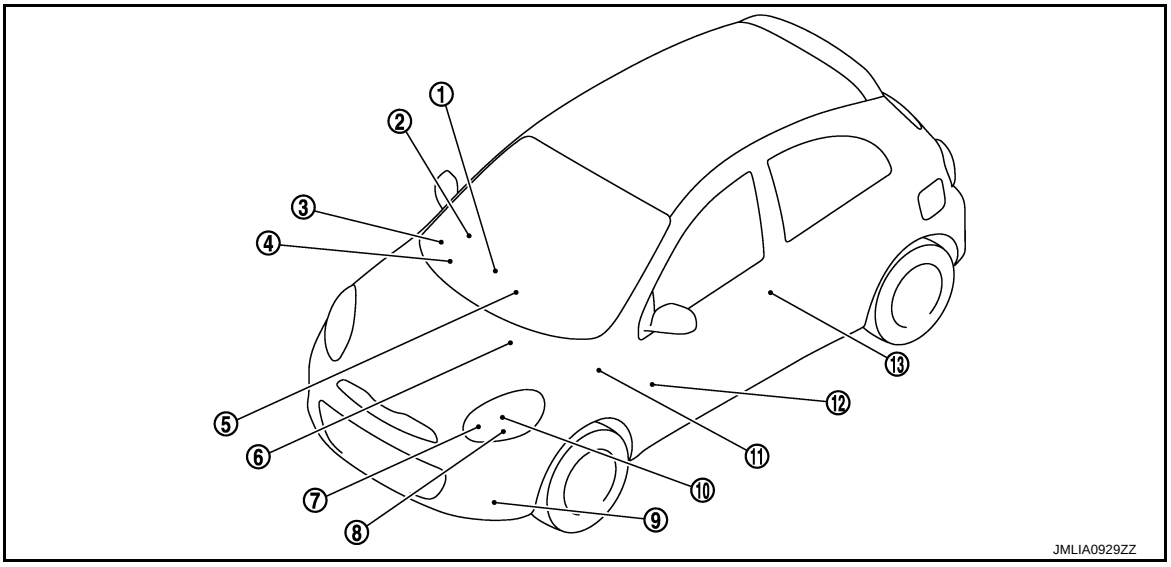

1. Push switch (With Intelligent Key)
2. Key switch (Without Intelligent Key)
3. Combination switch
4. Combination meter
5. Hazard switch
6. IPDM E/R Refer to PCS-5, "Component Parts Location".
7. Front turn signal lamp
8. Parking lamp
9. Front fog lamp (With Intelligent Key)
10. Headlamp
11. BCM Refer to BCS-5, "BODY CONTROL SYSTEM : Component Parts Location".
12. Side turn signal lamp
13. Front door request switch (passenger side) (With Intelligent Key)

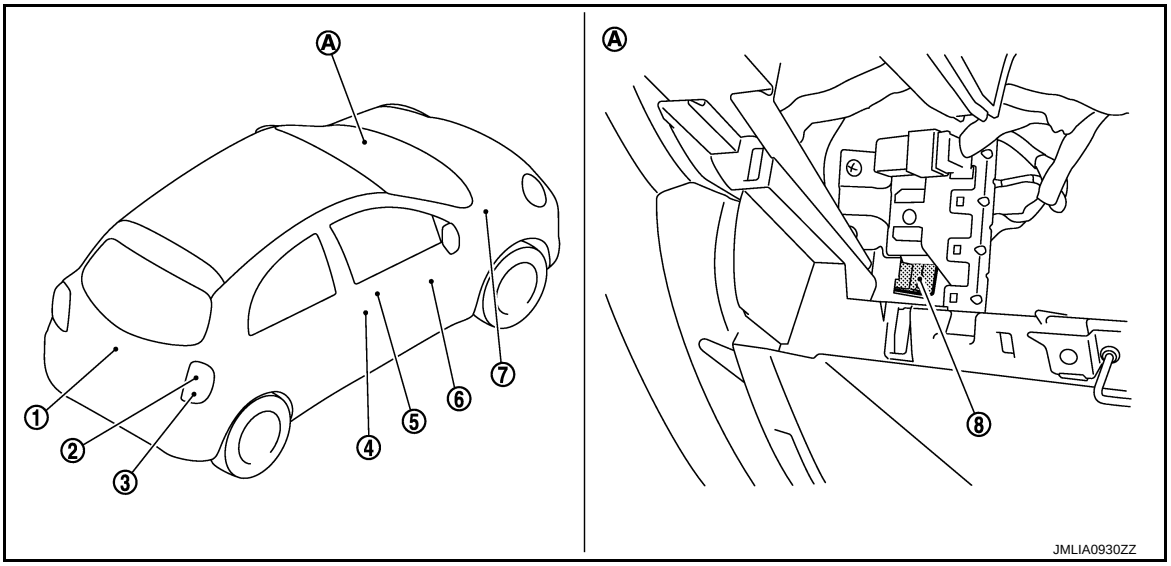

1. License plate lamp
2. Tail lamp
3. Rear turn signal lamp
4. Front door switch (driver side)
5. Front door request switch (driver side)
(With Intelligent Key)
6. Power window main switch (door lock and unlock switch)
(With door lock and unlock switch)
7. Remote keyless entry receiver
Refer to DLK-11, "DOOR LOCK SYSTEM : Component Parts Location"
8. Front fog lamp relay
(With front fog lamp)

A. View with glove box cover assembly is removed

EXTERIOR LIGHTING SYSTEM : Component Description

INFOID:0000000005912271

Part	Description
BCM	• Detects each switch condition by the combination switch reading function • Judges that the headlamp is turned ON according to the vehicle condition - Requests the headlamp relay (HI/LO) ON to IPDM E/R (with CAN communication) - Requests the high beam indicator lamp ON to the combination meter (with CAN communication)
IPDM E/R	Controls the integrated relay, and supplies voltage to the load according to the request from BCM (with CAN communication)
Combination switch (Lighting & turn signal switch)	Refer to BCS-9, "COMBINATION SWITCH READING SYSTEM : System Description"
Combination meter (High beam indicator lamp)	Turns the high beam indicator lamp ON according to the request from BCM (with CAN communication)
Push-button ignition switch (With Intelligent Key)	Refer to DLK-12, "DOOR LOCK SYSTEM : Component Description"
Key switch (Without Intelligent key)	Refer to DLK-152, "Component Description"
Hazard switch	Inputs the hazard switch ON/OFF signal to BCM
Door request switch (With Intelligent Key)	Refer to DLK-12, "DOOR LOCK SYSTEM : Component Description"
Door switch	Refer to DLK-12, "DOOR LOCK SYSTEM : Component Description"
Door lock and unlock switch (With door lock and unlock switch)	Refer to DLK-12, "DOOR LOCK SYSTEM : Component Description"
Remote keyless entry receiver	Refer to DLK-12, "DOOR LOCK SYSTEM : Component Description"

SYSTEM

HEADLAMP SYSTEM

HEADLAMP SYSTEM : System Diagram

INFOID:0000000005912268

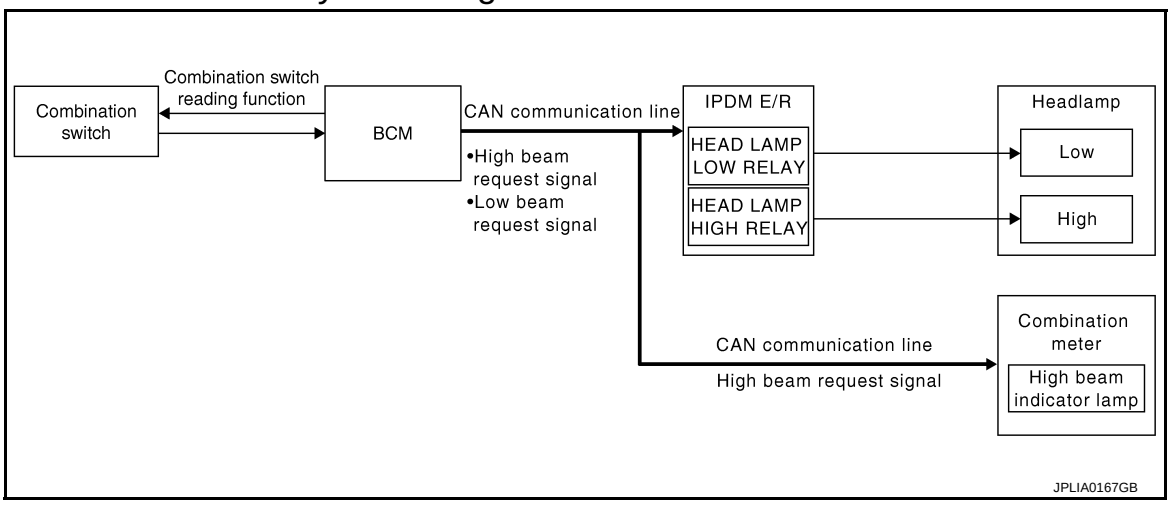

HEADLAMP SYSTEM : System Description

INFOID:0000000005912269

OUTLINE

Headlamp is controlled by combination switch reading function and headlamp control function of BCM, and relay control function of IPDM E/R.

HEADLAMP (LO) OPERATION

- BCM detects the combination switch condition with the combination switch reading function.
- BCM transmits the low beam request signal to IPDM E/R with CAN communication according to the headlamp (LO) ON condition.

Headlamp (LO) ON condition

- Lighting switch 2ND
- IPDM E/R turns the integrated headlamp low relay ON, and turns the headlamp ON according to the low beam request signal.

HEADLAMP (HI) OPERATION

- BCM transmits the high beam request signal to IPDM E/R and the combination meter with CAN communication according to the headlamp (HI) ON condition.

Headlamp (HI) ON condition

- Lighting switch HI with the lighting switch 2ND
- Lighting switch PASS
- Combination meter turns the high beam indicator lamp ON according to the high beam request signal.
- IPDM E/R turns the integrated headlamp high relay ON, and turns the headlamp ON according to the high beam request signal.

FRONT FOG LAMP SYSTEM

FRONT FOG LAMP SYSTEM : System Diagram

INFOID:0000000005912280

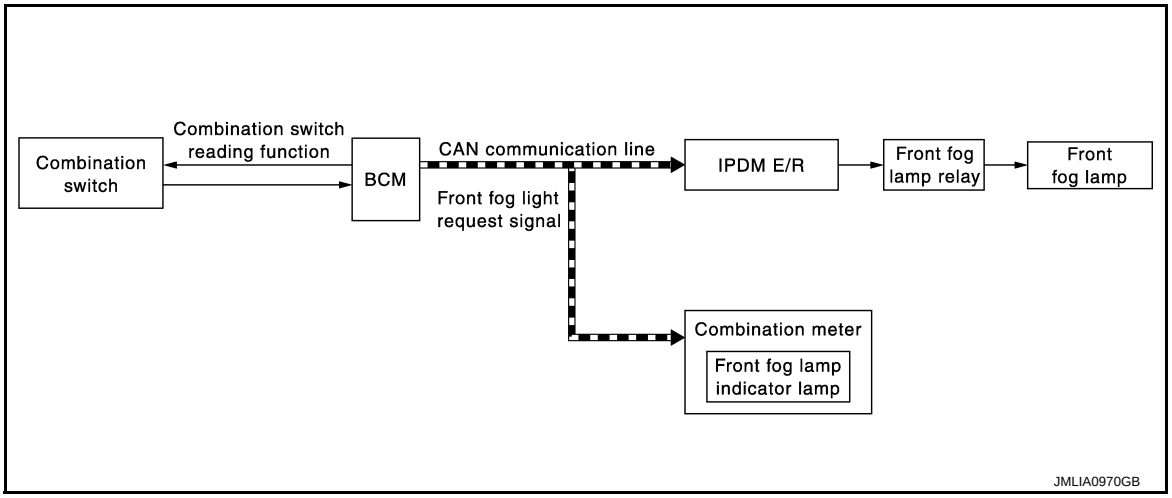

FRONT FOG LAMP SYSTEM : System Description

INFOID:0000000005912281

OUTLINE

Front fog lamp is controlled by combination switch reading function and front fog lamp control function of BCM, and relay control function of IPDM E/R.

FRONT FOG LAMP OPERATION

- BCM detects the combination switch condition by the combination switch reading function.
- BCM transmits the front fog light request signal to IPDM E/R with CAN communication according to the front fog lamp ON condition.

Front fog lamp ON condition
- Front fog lamp switch ON
- Lighting switch 1ST, 2ND
- IPDM E/R turns front fog lamp relay ON, and turns the front fog lamp ON according to the front fog lights request signal.

TURN SIGNAL AND HAZARD WARNING LAMP SYSTEM

TURN SIGNAL AND HAZARD WARNING LAMP SYSTEM : System Diagram

INFOID:0000000005912284

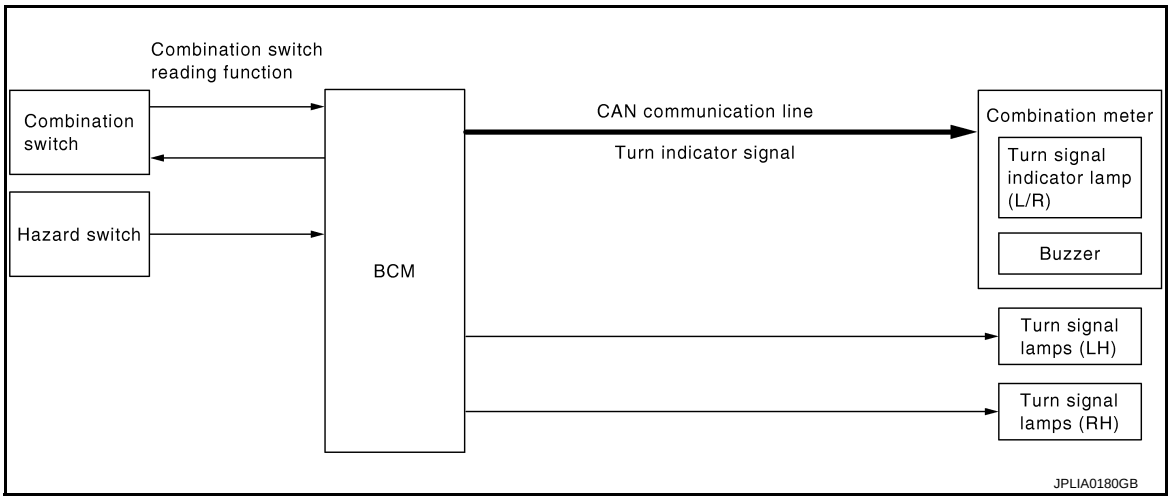

TURN SIGNAL AND HAZARD WARNING LAMP SYSTEM : System Description

INFOID:0000000005912285

OUTLINE

Turn signal lamp and the hazard warning lamp is controlled by combination switch reading function and the flasher control function of BCM.

TURN SIGNAL LAMP OPERATION

- BCM detects the combination switch condition by the combination switch reading function.
- BCM supplies voltage to the right (left) turn signal lamp circuit when the ignition switch is ON and the turn signal switch is in the right (left) position. BCM blinks the turn signal lamp.

HAZARD WARNING LAMP OPERATION

BCM supplies voltage to both turn signal lamp circuit when the hazard switch is ON. BCM blinks the hazard warning lamp.

TURN SIGNAL INDICATOR LAMP AND TURN SIGNAL OPERATION

- BCM transmits the turn signal indicator lamp signal to the combination meter with CAN communication while the turn signal lamp and the hazard warning lamp are operating.
- Combination meter outputs the turn signal sound with the integrated buzzer while blinking the turn signal indicator lamp according to the turn signal indicator lamp signal.

HIGH FLASHER OPERATION

- BCM detects the turn signal lamp circuit status from the current value.
- BCM increases the turn signal lamp blinking speed if the bulb or harness open is detected with the turn signal lamp operating.

  NOTE:

  The blinking speed is normal while operating the hazard warning lamp.

PARKING, LICENSE PLATE AND TAIL LAMP SYSTEM

PARKING, LICENSE PLATE AND TAIL LAMP SYSTEM : System Diagram

INFOID:0000000005912288

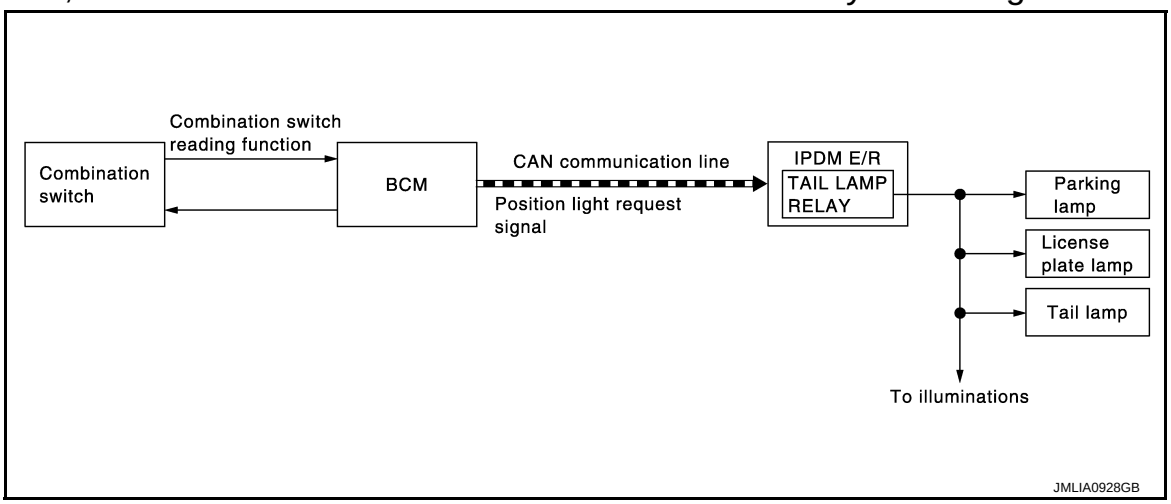

PARKING, LICENSE PLATE AND TAIL LAMP SYSTEM : System Description

INFOID:0000000005912289

OUTLINE

Parking, license plate, tail and rear side marker lamps are controlled by combination switch reading function and headlamp control function of BCM, and relay control function of IPDM E/R.

PARKING, LICENSE PLATE AND TAIL LAMPS OPERATION

- BCM detects the combination switch condition by the combination switch reading function.
- BCM transmits the position light request signal to IPDM E/R and the combination meter with CAN communication according to the ON/OFF condition of the parking, license plate and tail lamps.

Parking, license plate and tail lamps ON condition

- Lighting switch 1ST
- Lighting switch 2ND

- IPDM E/R turns the integrated tail lamp relay ON and turns the parking lamp, the license plate and tail lamps ON according to the position light request signal.

EXTERIOR LAMP BATTERY SAVER SYSTEM

EXTERIOR LAMP BATTERY SAVER SYSTEM : System Diagram

INFOID:0000000005912292

WITH INTELLIGENT KEY SYSTEM

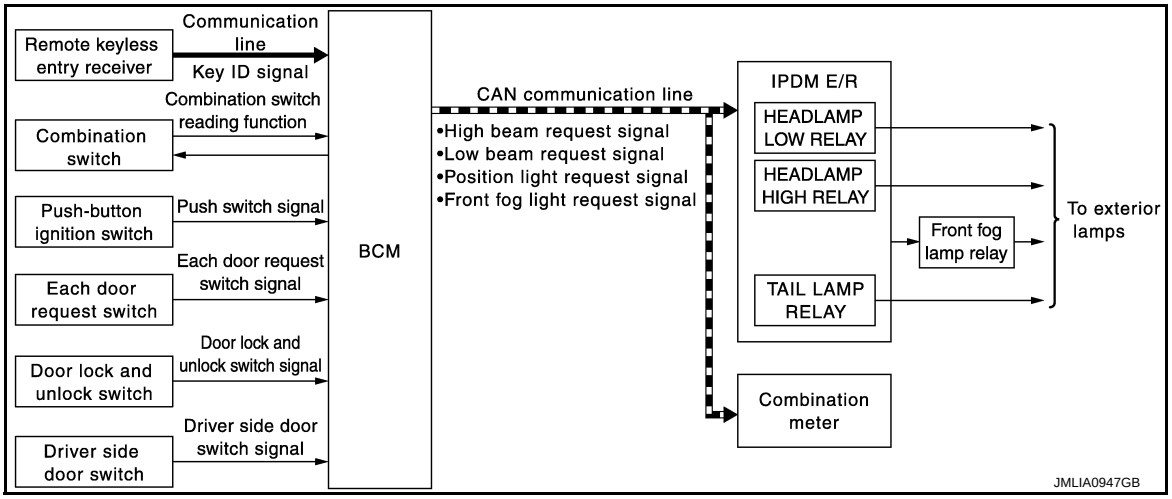

WITH REMOTE KEYLESS ENTRY SYSTEM

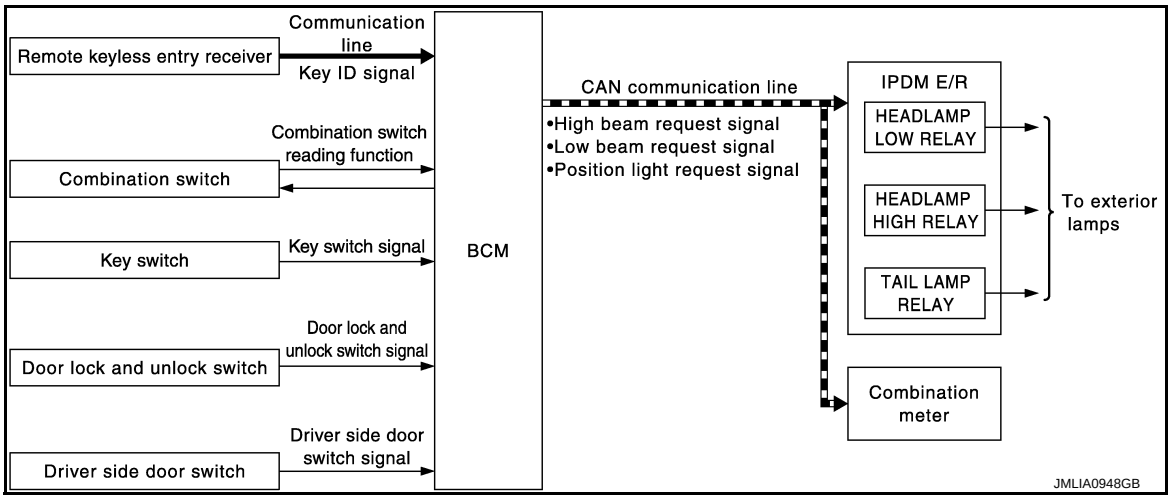

EXTERIOR LAMP BATTERY SAVER SYSTEM : System Description

INFOID:0000000005912293

OUTLINE

- Exterior lamp battery saver system is controlled by each function of BCM and IPDM E/R.

Control by BCM

- Combination switch reading function
- Headlamp control function
- Exterior lamp battery saver function

Control by IPDM E/R

- Relay control function
- BCM turns the exterior lamp* OFF, according to the vehicle status when key switch is turned OFF while exterior lamp is ON, for preventing battery discharge.

*: Headlamp (LO/HI), parking lamp, tail lamp, license plate lamp and front fog lamp

EXTERIOR LAMP BATTERY SAVER ACTIVATION

BCM turns the exterior lamps OFF (battery saver is activated) when in all of following conditions.

- Push-button ignition switch does not pressed
- Ignition switch is in the OFF position (with Intelligent Key system) or key switch is OFF (without Intelligent Key system).
- BCM detects door lock signal (auto door lock function, each door request switch, remote keyless entry receiver)

NOTE:

When in any of following conditions (after the exterior lamp battery saver is activated), exterior lamps can be turned ON.

- Ignition switch is in the OFF position (with Intelligent Key system) or key switch is OFF (without Intelligent Key system).
- Switch position of lighting switch is changed
- Front door switch (driver side) is turn from OFF→ON
- Passing switch is turned from OFF→ON
- Front fog lamp switch is changed

DIAGNOSIS SYSTEM (BCM) (WITH INTELLIGENT KEY SYSTEM) COMMON ITEM

COMMON ITEM : CONSULT-III Function (BCM - COMMON ITEM)

INFOID:0000000006046536

APPLICATION ITEM

CONSULT-III performs the following functions via CAN communication with BCM.

Diagnosis mode	Function Description
Work Support	Changes the setting for each system function.
Self Diagnostic Result	Displays the diagnosis results judged by BCM.
CAN Diag Support Monitor	Monitors the reception status of CAN communication viewed from BCM. Refer to CONSULT-III operation manual.
Data Monitor	The BCM input/output signals are displayed.
Active Test	The signals used to activate each device are forcibly supplied from BCM.
Ecu Identification	The BCM part number is displayed.
Configuration	• Read and save the vehicle specification. • Write the vehicle specification when replacing BCM.

SYSTEM APPLICATION

BCM can perform the following functions for each system.

NOTE:

It can perform the diagnosis modes except the following for all sub system selection items.

×: Applicable item

System	Sub system selection item	Diagnosis mode		
		Work Support	Data Monitor	Active Test
Door lock	DOOR LOCK	×	×	×
Rear window defogger	REAR DEFOGGER		×	×
Warning chime	BUZZER		×	×
Interior room lamp timer	INT LAMP	×	×	×
Exterior lamp	HEAD LAMP	×	×	×
Wiper and washer	WIPER	×	×	×
Turn signal and hazard warning lamps	FLASHER	×	×	×
Automatic air conditioner	AIR CONDITONER		×	×
• Intelligent Key system • Engine start system	INTELLIGENT KEY	×	×	×
Combination switch	COMB SW		×	
Body control system	BCM	×		
NATS	IMMU	×	×	×
Interior room lamp battery saver	BATTERY SAVER	×	×	×
Back door	TRUNK		×	
—	THEFT ALM*	×	×	×
—	RETAINED PWR*		×	
Signal buffer system	SIGNAL BUFFER		×	×

*: This item is displayed, but is not used.

FREEZE FRAME DATA (FFD)

The BCM records the following vehicle condition at the time a particular DTC is detected, and displays on CONSULT-III.

CONSULT screen item	Indication/Unit	Description	
Vehicle Speed	km/h	Vehicle speed of the moment a particular DTC is detected	
Odo/Trip Meter	km	Total mileage (Odometer value) of the moment a particular DTC is detected	
Vehicle Condition	SLEEP>LOCK	Power position status of the moment a particular DTC is detected	While turning BCM status from low power consumption mode to normal mode (Power supply position is “LOCK”)
	SLEEP>OFF		While turning BCM status from low power consumption mode to normal mode (Power supply position is “OFF”.)
	LOCK>ACC		While turning power supply position from “LOCK” to “ACC”
	ACC>ON		While turning power supply position from “ACC” to “IGN”
	RUN>ACC		While turning power supply position from “RUN” to “ACC” (Vehicle is stopping and selector lever is except P position.)
	CRANK>RUN		While turning power supply position from “CRANKING” to “RUN” (From cranking up the engine to run it)
	RUN>URGENT		While turning power supply position from “RUN“ to “ACC” (Emergency stop operation)
	ACC>OFF		While turning power supply position from “ACC” to “OFF”
	OFF>LOCK		While turning power supply position from “OFF” to “LOCK”
	OFF>ACC		While turning power supply position from “OFF” to “ACC”
	ON>CRANK		While turning power supply position from “IGN” to “CRANKING”
	OFF>SLEEP		While turning BCM status from normal mode (Power supply position is “OFF”.) to low power consumption mode
	LOCK>SLEEP		While turning BCM status from normal mode (Power supply position is “LOCK”.) to low power consumption mode
	LOCK		Power supply position is “LOCK” (Ignition switch OFF with steering is locked.)
	OFF		Power supply position is “OFF” (Ignition switch OFF with steering is unlocked.)
	ACC		Power supply position is “ACC” (Ignition switch ACC)
	ON		Power supply position is “IGN” (Ignition switch ON with engine stopped)
	ENGINE RUN		Power supply position is “RUN” (Ignition switch ON with engine running)
	CRANKING		Power supply position is “CRANKING” (At engine cranking)
IGN Counter	0 - 39	The number of times that ignition switch is turned ON after DTC is detected • The number is 0 when a malfunction is detected now. • The number increases like 1 → 2 → 3...38 → 39 after returning to the normal condition whenever ignition switch OFF → ON. • The number is fixed to 39 until the self-diagnosis results are erased if it is over 39.	

HEADLAMP

HEADLAMP : CONSULT-III Function (BCM - HEAD LAMP)

INFOID:0000000005912297

WORK SUPPORT

Service item	Setting item	Setting
AUTO LIGHT LOGIC SET	MODE 1	**NOTE:** The item is indicated, but not operated.
	MODE 2	
	MODE 3	
	MODE 4	
	MODE 5	
	MODE 6	
CUSTOM A/LIGHT SETTING	MODE 1*	**NOTE:** The item is indicated, but not operated.
	MODE 2	
	MODE 3	
	MODE 4	
BATTERY SAVER SET	On*	With the exterior lamp battery saver function
	Off	Without the exterior lamp battery saver function

*: Factory setting

DATA MONITOR

Monitor item [Unit]	Description
PUSH SW [On/Off]	The switch status input from push-button ignition switch
ENGINE STATE [Stop/Stall/Crank/Run]	The engine status received from ECM with CAN communication
VEH SPEED 1 [km/h]	The value of the vehicle speed received from combination meter with CAN communication
HI BEAM SW [On/Off]	Each switch status that BCM judges from the combination switch reading function
HEAD LAMP SW1 [On/Off]	
HEAD LAMP SW2 [On/Off]	
PASSING SW [On/Off]	
FR FOG SW [On/Off]	
DOOR SW-DR [On/Off]	The switch status input from front door switch (driver side)
DOOR SW-AS [On/Off]	The switch status input from front door switch (passenger side)
DOOR SW-RR [On/Off]	The switch status input from rear door switch RH
DOOR SW-RL [On/Off]	The switch status input from rear door switch LH
DOOR SW-BK [On/Off]	The switch status input from back door switch

Monitor item [Unit]	Description
TURN SIGNAL R [On/Off]	Each switch status that BCM judges from the combination switch reading function
TURN SIGNAL L [On/Off]	
TAIL LAMP SW [On/Off]	

ACTIVE TEST

Test item	Operation	Description
TAIL LAMP	On	Transmits the position light request signal to IPDM E/R with CAN communication to turn the tail lamp ON.
	Off	Stops the tail lamp request signal transmission.
HEAD LAMP	Hi	Transmits the high beam request signal with CAN communication to turn the headlamp (HI).
	Lo	Transmits the low beam request signal with CAN communication to turn the headlamp (LO).
	Off	Stops the high & low beam request signal transmission.
FR FOG LAMP	On	Transmits the front fog lights request signal to IPDM E/R with CAN communication to turn the front fog lamp ON.
	Off	Stops the front fog lights request signal transmission.
ILL DIM SIGNAL	On	**NOTE:** The item is indicated, but cannot be tested.
	Off	

FLASHER

FLASHER : CONSULT-III Function (BCM - FLASHER)

INFOID:0000000005912298

WORK SUPPORT

Service item	Setting item	Setting	
HAZARD ANSWER BACK	Lock Only	With locking only	Sets the hazard warning lamp answer back function when the door is lock/unlock with the door request switch and the Intelligent Key.
	Unlk Only	With unlocking only	
	Lock/Unlk*	With locking/unlocking	
	Off	Without the function	

*: Factory setting

DATA MONITOR

Monitor item [Unit]	Description
REQ SW-DR [On/Off]	The switch status input from the request switch (driver side)
REQ SW-AS [On/Off]	The switch status input from the request switch (passenger side)
PUSH SW [On/Off]	The switch status input from the push-button ignition switch
TURN SIGNAL R [On/Off]	Each switch status that BCM detects from the combination switch reading function
TURN SIGNAL L [On/Off]	

< SYSTEM DESCRIPTION >

Monitor item [Unit]	Description
HAZARD SW [On/Off]	The switch status input from the hazard switch
RKE-LOCK [On/Off]	Lock signal status received from the remote keyless entry receiver
RKE-UNLOCK [On/Off]	Unlock signal status received from the remote keyless entry receiver
RKE-PANIC [On/Off]	Panic alarm signal status received from the remote keyless entry receiver

ACTIVE TEST

Test item	Operation	Description
FLASHER	RH	Outputs the voltage to blink the right side turn signal lamps.
	LH	Outputs the voltage to blink the left side turn signal lamps.
	Off	Stops the voltage to turn the turn signal lamps OFF.

DIAGNOSIS SYSTEM (BCM) (WITHOUT INTELLIGENT KEY SYSTEM) COMMON ITEM

COMMON ITEM : CONSULT-III Function (BCM - COMMON ITEM)

INFOID:0000000006046537

APPLICATION ITEM

CONSULT-III performs the following functions via CAN communication with BCM.

Diagnosis mode	Function Description
Work Support	Changes the setting for each system function.
Self Diagnostic Result	Displays the diagnosis results judged by BCM.
CAN Diag Support Monitor	Monitors the reception status of CAN communication viewed from BCM. Refer to CONSULT-III operation manual.
Data Monitor	The BCM input/output signals are displayed.
Active Test	The signals used to activate each device are forcibly supplied from BCM.
Ecu Identification	The BCM part number is displayed.
Configuration	• Read and save the vehicle specification. • Write the vehicle specification when replacing BCM.

SYSTEM APPLICATION

BCM can perform the following functions for each system.

NOTE:

It can perform the diagnosis modes except the following for all sub system selection items.

×: Applicable item

System	Sub system selection item	Diagnosis mode		
		Work Support	Data Monitor	Active Test
Door lock	DOOR LOCK		×	×
Rear window defogger	REAR DEFOGGER		×	×
Warning chime	BUZZER		×	×
Interior room lamp control	INT LAMP	×	×	×
Remote keyless entry system	MULTI REMOTE ENT	×	×	×
Exterior lamp	HEAD LAMP	×	×	×
Wiper and washer	WIPER	×	×	×
Turn signal and hazard warning lamps	FLASHER		×	×
• Automatic air conditioner • Manual air conditioner	AIR CONDITONER		×	
Combination switch	COMB SW		×	
Body control system	BCM	×		
NATS	IMMU	×*1		×
Interior room lamp battery saver	BATTERY SAVER	×	×	×
Back door	TRUNK		×	
—	THEFT ALM*2		×	×
—	RETAINED PWR*2			
Signal buffer system	SIGNAL BUFFER		×	×
Panic alarm	PANIC ALARM			×

- *1: For models without NATS this mode is not used.
- *2: This item is displayed, but is not used.

HEADLAMP

HEADLAMP : CONSULT-III Function (BCM - HEAD LAMP)

INFOID:0000000005969677

WORK SUPPORT

Service item	Setting item	Setting
AUTO LIGHT LOGIC SET*1	MODE 1	**NOTE:** The item is displayed, but cannot be used
	MODE 2	
	MODE 3	
	MODE 4	
	MODE 5	
	MODE 6	
BATTERY SAVER SET	On*2	With the exterior lamp battery saver function
	Off	Without the exterior lamp battery saver function

*1: With remote keyless entry system models
*2: Factory setting

DATA MONITOR

Monitor item [Unit]	Description
IGN ON SW [On/Off]	Ignition switch (ON) status judged from IGN signal (ignition power supply)
ACC ON SW [On/Off]	Ignition switch (ACC) status judged from ACC signal (ACC power supply)
VEH SPEED [km/h]	The value of the vehicle speed received from combination meter with CAN communication
HI BEAM SW [On/Off]	Each switch status that BCM judges from the combination switch reading function
HEAD LAMP SW1 [On/Off]	
HEAD LAMP SW2 [On/Off]	
PASSING SW [On/Off]	
FR FOG SW [On/Off]	**NOTE:** The item is indicated, but not monitored
AUTO LIGHT SW*1 [On/Off]	**NOTE:** The item is indicated, but not monitored
RR FOG SW*1 [On/Off]	**NOTE:** The item is indicated, but not monitored
DOOR SW-DR [On/Off]	The switch status input from front door switch (driver side)
DOOR SW-AS [On/Off]	The switch status input from front door switch (passenger side)
DOOR SW-RR [On/Off]	The switch status input from rear door switch RH
DOOR SW- RL [On/Off]	The switch status input from rear door switch LH
BACK DOOR SW [On/Off]	The switch status input from back door switch

Monitor item [Unit]	Description
TURN SIGNAL R [On/Off]	Each switch status that BCM judges from the combination switch reading function
TURN SIGNAL L [On/Off]	
TAIL LAMP SW [On/Off]	
KEY ON SW [On/Off]	The switch status input from key on switch
KEYLESS LOCK*2 [On/Off]	Lock signal status received from remote keyless entry receiver (integrated in the BCM)
PKB SW [On/Off]	The parking brake switch status received from combination meter with CAN communication
ENGINE RUN [On/Off]	The engine status received from ECM with CAN communication
OPTI SEN (DTCT)*1 [V]	**NOTE:** The item is indicated, but not monitored
OPTI SEN (FILT)*1 [V]	**NOTE:** The item is indicated, but not monitored

*1: With remote keyless entry system models
*2: Without power door lock system models do not displayed, Without remote keyless entry system models are displayed but does not monitored.

ACTIVE TEST

Test item	Operation	Description
TAIL LAMP	On	Transmits the position light request signal to IPDM E/R with CAN communication to turn the tail lamp ON.
	Off	Stops the tail lamp request signal transmission.
HEAD LAMP	Hi	Transmits the high beam request signal with CAN communication to turn the headlamp (HI).
	Lo	Transmits the low beam request signal with CAN communication to turn the headlamp (LO).
	Off	Stops the high & low beam request signal transmission.
ILL DIM SIGNAL*	On	**NOTE:** The item is indicated, but cannot be tested.
	Off	
FR FOG LAMP	On	**NOTE:** The item is indicated, but cannot be tested.
	Off	

*: With remote keyless entry system models

FLASHER

FLASHER : CONSULT-III Function (BCM - FLASHER)

INFOID:0000000005969678

DATA MONITOR

Monitor item [Unit]	Description
IGN ON SW [On/Off]	Ignition switch (ON) status judged from IGN signal (ignition power supply)

Monitor item [Unit]	Description
TURN SIGNAL R [On/Off]	Each switch status that BCM detects from the combination switch reading function
TURN SIGNAL L [On/Off]	
HAZARD SW [On/Off]	The switch status input from the hazard switch

ACTIVE TEST

Test item	Operation	Description
FLASHER	RH	Outputs the voltage to blink the right side turn signal lamps.
	LH	Outputs the voltage to blink the left side turn signal lamps.
	Off	Stops the voltage to turn the turn signal lamps OFF.

DIAGNOSIS SYSTEM (IPDM E/R) (WITH INTELLIGENT KEY SYSTEM)

Diagnosis Description

INFOID:0000000006046538

AUTO ACTIVE TEST

Description

In auto active test, the IPDM E/R sends a drive signal to the following systems to check their operation.

- Oil pressure warning lamp
- Front wiper (LO, HI)
- Parking lamps
- License plate lamps
- Tail lamps
- Front fog lamps
- Headlamps (LO, HI)
- A/C compressor (magnet clutch)
- Cooling fan

Operation Procedure

CAUTION:

Never perform auto active test in the following conditions.

- **Engine is running**
- **CONSULT-III is connected**

1. Close the hood and lift the wiper arms from the windshield. (Prevent windshield damage due to wiper operation)
   NOTE:
   When auto active test is performed with hood opened, sprinkle water on windshield beforehand.
2. Turn the ignition switch OFF.
3. Turn the ignition switch ON, and within 20 seconds, press the driver door switch 10 times. Then turn the ignition switch OFF.
   CAUTION:
   Close passenger door.
4. Turn the ignition switch ON within 10 seconds. After that the horn sounds once and the auto active test starts.
   CAUTION:
   Engine starts when ignition switch is turned ON while brake pedal is depressed.
5. The oil pressure warning lamp starts blinking when the auto active test starts.
6. After a series of the following operations is repeated 3 times, auto active test is completed.

NOTE:

- When auto active test has to be cancelled halfway through test, turn the ignition switch OFF.
- When auto active test is not activated, door switch may be the cause. Check door switch. Refer to XX-XX, "*****".

Inspection in Auto Active Test

When auto active test is actuated, the following operation sequence is repeated 3 times.

Operation sequence	Inspection location	Operation
1	Oil pressure warning lamp	Blinks continuously during operation of auto active test
2	Front wiper	LO for 5 seconds → HI for 5 seconds
3	• Parking lamps • License plate lamps • Tail lamps • Front fog lamps	10 seconds
4	Headlamps	LO for 10 seconds →HI ON ⇔ OFF 5 times
5	A/C compressor (magnet clutch)	ON ⇔ OFF 5 times
6	Cooling fan	LO for 5 seconds → MID for 3 seconds → HI for 2 seconds

Concept of Auto Active Test

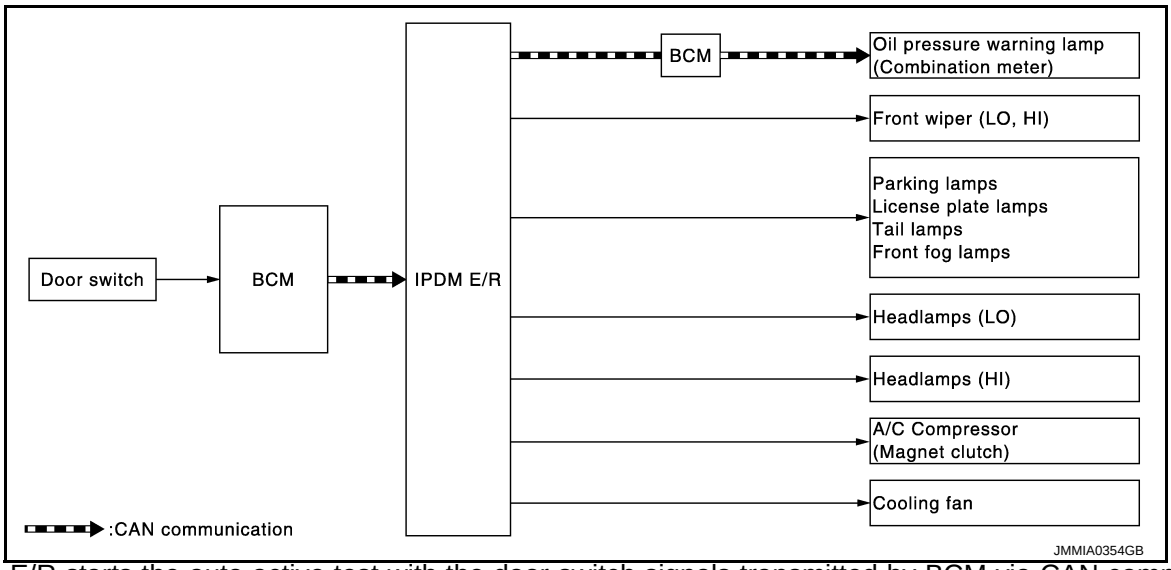

- IPDM E/R starts the auto active test with the door switch signals transmitted by BCM via CAN communication. Therefore, the CAN communication line between IPDM E/R and BCM is considered normal if the auto active test starts successfully.
- The auto active test facilitates troubleshooting if any systems controlled by IPDM E/R cannot be operated.

Diagnosis Chart in Auto Active Test

Symptom	Inspection contents		Possible cause
Any of the following components do not operate • Parking lamps • License plate lamps • Tail lamps • Front fog lamps • Headlamps (HI, LO) • Front wiper (HI, LO)	Perform auto active test. Does the applicable system operate?	YES	BCM signal input circuit
		NO	• Lamp or motor • Lamp or motor ground circuit • Harness or connector between IPDM E/R and applicable system • IPDM E/R
A/C compressor does not operate	Perform auto active test. Does the magnet clutch operate?	YES	• BCM signal input circuit • CAN communication signal between BCM and ECM • CAN communication signal between ECM and IPDM E/R
		NO	• Magnet clutch • Harness or connector between IPDM E/R and magnet clutch • IPDM E/R
Oil pressure warning lamp does not operate	Perform auto active test. Does the oil pressure warning lamp blink?	YES	• Harness or connector between IPDM E/R and oil pressure switch • Oil pressure switch • IPDM E/R
		NO	• CAN communication signal between IPDM E/R and BCM • CAN communication signal between BCM and combination meter • Combination meter
Cooling fan does not operate	Perform auto active test. Does the cooling fan operate?	YES	• ECM signal input circuit • CAN communication signal between ECM and IPDM E/R
		NO	• Cooling fan motor • Harness or connector between IPDM E/R and cooling fan motor • IPDM E/R

CONSULT-III Function (IPDM E/R)

INFOID:0000000006046539

APPLICATION ITEM

CONSULT-III performs the following functions via CAN communication with IPDM E/R.

Diagnosis mode	Description
Ecu Identification	Allows confirmation of IPDM E/R part number.
Self Diagnostic Result	Displays the diagnosis results judged by IPDM E/R.
Data Monitor	Displays the real-time input/output data from IPDM E/R input/output data.
Active Test	IPDM E/R can provide a drive signal to electronic components to check their operations.
CAN Diag Support Monitor	The results of transmit/receive diagnosis of CAN communication can be read.

SELF DIAGNOSTIC RESULT

Refer to PCS-22, "DTC Index".

DATA MONITOR

Monitor item

Monitor Item [Unit]	MAIN SIGNALS	Description
MOTOR FAN REQ [1/2/3/4]	×	Displays the value of the cooling fan speed request signal received from ECM via CAN communication.
AC COMP REQ [Off/On]	×	Displays the status of the A/C compressor request signal received from ECM via CAN communication.
TAIL&CLR REQ [Off/On]	×	Displays the status of the position light request signal received from BCM via CAN communication.
HL LO REQ [Off/On]	×	Displays the status of the low beam request signal received from BCM via CAN communication.
HL HI REQ [Off/On]	×	Displays the status of the high beam request signal received from BCM via CAN communication.
FR FOG REQ [Off/On]	×	Displays the status of the front fog light request signal received from BCM via CAN communication.
FR WIP REQ [Stop/1LOW/Low/Hi]	×	Displays the status of the front wiper request signal received from BCM via CAN communication.
WIP AUTO STOP [STOP P/ACT P]	×	Displays the status of the front wiper stop position signal judged by IPDM E/R.
WIP PROT [Off/BLOCK]	×	Displays the status of the front wiper fail-safe operation judged by IPDM E/R.
IGN RLY1 -REQ [Off/On]		Displays the status of the ignition switch ON signal received from BCM via CAN communication.
IGN RLY [Off/On]	×	Displays the status of the ignition relay judged by IPDM E/R.
PUSH SW [Off/On]		Displays the status of the push-button ignition switch judged by IPDM E/R.
INTER/NP SW [Off/On]		Displays the status of the shift position judged by IPDM E/R.
ST RLY CONT [Off/On]		Displays the status of the starter relay status signal received from BCM via CAN communication.
IHBT RLY -REQ [Off/On]		Displays the status of the starter control relay signal received from BCM via CAN communication.
ST/INHI RLY [Off/ ST ON/INHI ON/UNKWN]		Displays the status of the starter relay and starter control relay judged by IPDM E/R.
DETENT SW [Off/On]		Displays the status of the A/T shift selector (detention switch) judged by IPDM E/R.

Monitor Item [Unit]	MAIN SIGNALS	Description
S/L RLY -REQ [Off/On]		Displays the status of the steering lock relay signal received from BCM via CAN communication.
S/L STATE [LOCK/UNLK/UNKWN]		Displays the status of the steering lock judged by IPDM E/R.
DTRL REQ [Off/On]		**NOTE:** This item is indicated, but not monitored.
OIL P SW [Open/Close]		Displays the status of the oil pressure switch judged by IPDM E/R.
HOOD SW [Off/On]		**NOTE:** This item is indicated, but not monitored
HL WASHER REQ [Off/On]		**NOTE:** This item is indicated, but not monitored.
THFT HRN REQ [Off/On]		Displays the status of the theft warning horn request signal received from BCM via CAN communication.
HORN CHIRP [Off/On]		**NOTE:** This item is indicated, but not monitored.

ACTIVE TEST

Test item

Test item	Operation	Description
CORNERING LAMP	LH	**NOTE:** This item is indicated, but cannot be tested.
	RH	
HORN	On	Operates horn relay for 20 ms.
FRONT WIPER	Off	OFF
	Lo	Operates the front wiper relay.
	Hi	Operates the front wiper relay and front wiper high relay.
MOTOR FAN	1	OFF
	2	Operates the cooling fan relay (LO operation).
	3	Operates the cooling fan relay (MID operation).
	4	Operates the cooling fan relay (HI operation).
HEAD LAMP WASHER	Off	**NOTE:** This item is indicated, but cannot be tested.
EXTERNAL LAMPS	Off	OFF
	TAIL	Operates the tail lamp relay.
	Lo	Operates the headlamp low relay.
	Hi	Operates the headlamp low relay and ON/OFF the headlamp high relay at 1 second intervals.
	Fog	Operates the front fog lamp relay.

DIAGNOSIS SYSTEM (IPDM E/R) (WITHOUT INTELLIGENT KEY SYSTEM)

Diagnosis Description

INFOID:0000000006046540

AUTO ACTIVE TEST

Description

In auto active test, the IPDM E/R sends a drive signal to the following systems to check their operation.

- Oil pressure warning lamp
- Front wiper (LO, HI)
- Parking lamps
- License plate lamps
- Tail lamps
- Headlamps (LO, HI)
- A/C compressor (magnet clutch)
- Cooling fan

Operation Procedure

CAUTION:

Never perform auto active test in the following conditions.

- **Engine is running**
- **CONSULT-III is connected**

1. Close the hood and lift the wiper arms from the windshield. (Prevent windshield damage due to wiper operation)
   NOTE:
   When auto active test is performed with hood opened, sprinkle water on windshield beforehand.
2. Turn the ignition switch OFF.
3. Turn the ignition switch ON, and within 20 seconds, press the driver door switch 10 times. Then turn the ignition switch OFF.
   CAUTION:
   Close passenger door.
4. Turn the ignition switch ON within 10 seconds. After that the horn sounds once and the auto active test starts.
   CAUTION:
   Engine starts when ignition switch is turned ON while brake pedal is depressed.
5. The oil pressure warning lamp starts blinking when the auto active test starts.
6. After a series of the following operations is repeated 3 times, auto active test is completed.

NOTE:

- When auto active test has to be cancelled halfway through test, turn the ignition switch OFF.
- When auto active test is not activated, door switch may be the cause. Check door switch. Refer to XX-XX, "*****".

Inspection in Auto Active Test

When auto active test is actuated, the following operation sequence is repeated 3 times.

Operation sequence	Inspection location	Operation
1	Oil pressure warning lamp	Blinks continuously during operation of auto active test
2	Front wiper	LO for 5 seconds → HI for 5 seconds
3	• Parking lamps • License plate lamps • Tail lamps	10 seconds
4	Headlamps	LO for 10 seconds →HI ON ⇔ OFF 5 times
5	A/C compressor (magnet clutch)	ON ⇔ OFF 5 times
6	Cooling fan	LO for 5 seconds → MID for 3 seconds → HI for 2 seconds

Concept of Auto Active Test

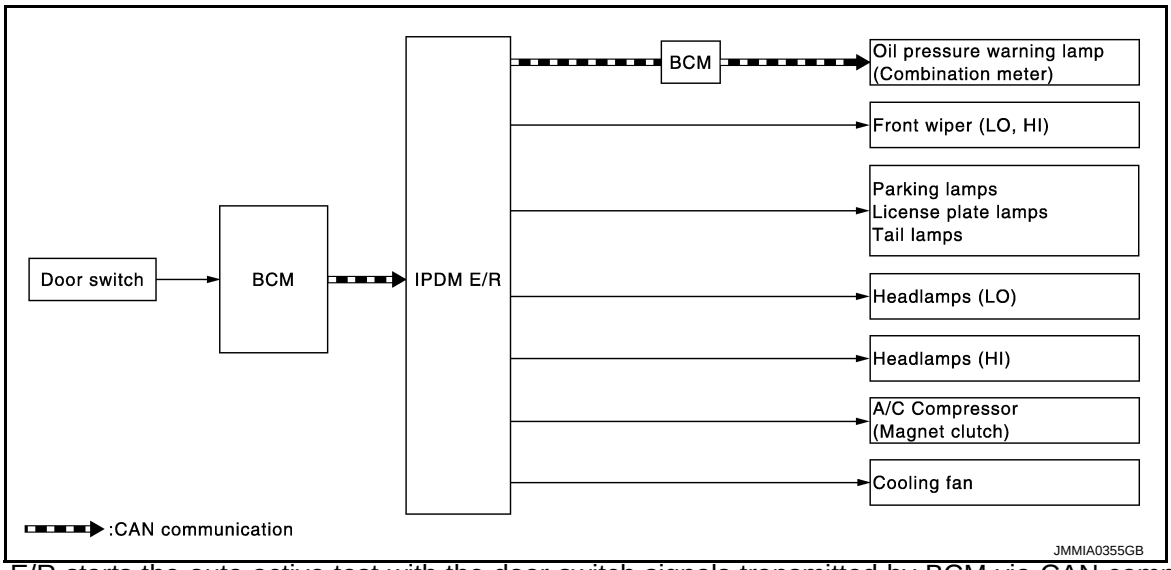

- IPDM E/R starts the auto active test with the door switch signals transmitted by BCM via CAN communication. Therefore, the CAN communication line between IPDM E/R and BCM is considered normal if the auto active test starts successfully.
- The auto active test facilitates troubleshooting if any systems controlled by IPDM E/R cannot be operated.

Diagnosis chart in auto active test mode

Symptom	Inspection contents		Possible cause
Any of the following components do not operate • Parking lamps • License plate lamps • Tail lamps • Headlamps (HI, LO) • Front wiper (HI, LO)	Perform auto active test. Does the applicable system operate?	YES	BCM signal input circuit
		NO	• Lamp or motor • Lamp or motor ground circuit • Harness or connector between IPDM E/R and applicable system • IPDM E/R
A/C compressor does not operate	Perform auto active test. Does the magnet clutch operate?	YES	• BCM signal input circuit • CAN communication signal between BCM and ECM • CAN communication signal between ECM and IPDM E/R
		NO	• Magnet clutch • Harness or connector between IPDM E/R and magnet clutch • IPDM E/R
Oil pressure warning lamp does not operate	Perform auto active test. Does the oil pressure warning lamp blink?	YES	• Harness or connector between IPDM E/R and oil pressure switch • Oil pressure switch • IPDM E/R
		NO	• CAN communication signal between IPDM E/R and BCM • CAN communication signal between BCM and combination meter • Combination meter
Cooling fan does not operate	Perform auto active test. Does the cooling fan operate?	YES	• ECM signal input circuit • CAN communication signal between ECM and IPDM E/R
		NO	• Cooling fan motor • Harness or connector between IPDM E/R and cooling fan motor • IPDM E/R

CONSULT-III Function (IPDM E/R)

INFOID:0000000006046541

APPLICATION ITEM

CONSULT-III performs the following functions via CAN communication with IPDM E/R.

Diagnosis mode	Description
Ecu Identification	Allows confirmation of IPDM E/R part number.
Self Diagnostic Result	Displays the diagnosis results judged by IPDM E/R.
Data Monitor	Displays the real-time input/output data from IPDM E/R input/output data.
Active Test	IPDM E/R can provide a drive signal to electronic components to check their operations.
CAN Diag Support Monitor	The results of transmit/receive diagnosis of CAN communication can be read.

SELF DIAGNOSTIC RESULT

Refer to PCS-45, "DTC Index".

DATA MONITOR

Monitor item

Monitor Item [Unit]	MAIN SIG-NALS	Description
MOTOR FAN REQ [1/2/3/4]	×	Displays the value of the cooling fan speed request signal received from ECM via CAN communication.
AC COMP REQ [Off/On]	×	Displays the status of the A/C compressor request signal received from ECM via CAN communication.
TAIL&CLR REQ [Off/On]	×	Displays the status of the position light request signal received from BCM via CAN communication.
HL LO REQ [Off/On]	×	Displays the status of the low beam request signal received from BCM via CAN communication.
HL HI REQ [Off/On]	×	Displays the status of the high beam request signal received from BCM via CAN communication.
FR FOG REQ [Off/On]	×	**NOTE:** This item is indicated, but not monitored.
FR WIP REQ [Stop/1LOW/Low/Hi]	×	Displays the status of the front wiper request signal received from BCM via CAN communication.
WIP AUTO STOP [STOP P/ACT P]	×	Displays the status of the front wiper stop position signal judged by IPDM E/R.
WIP PROT [Off/BLOCK]	×	Displays the status of the front wiper fail-safe operation judged by IPDM E/R.
IGN RLY [Off/On]	×	Displays the status of the ignition relay judged by IPDM E/R.
INTER/NP SW [Off/On]		Displays the status of the shift position judged by IPDM E/R.
ST RLY REQ [Off/On]		Displays the status of the starter control relay signal received from BCM via CAN communication.
DTRL REQ [Off/On]		**NOTE:** This item is indicated, but not monitored.
OIL P SW [Open/Close]		Displays the status of the oil pressure switch judged by IPDM E/R.
HOOD SW [Off/On]		**NOTE:** This item is indicated, but not monitored.
HL WASHER REQ [Off/On]		**NOTE:** This item is indicated, but not monitored.
THFT HRN REQ [Off/On]		Displays the status of the theft warning horn request signal received from BCM via CAN communication.

Monitor Item [Unit]	MAIN SIGNALS	Description
HORN CHIRP [Off/On]		**NOTE:** This item is indicated, but not monitored.
CRNRNG LMP REQ [Off/On]		**NOTE:** This item is indicated, but not monitored.

ACTIVE TEST

Test item

Test item	Operation	Description
CORNERING LAMP	LH	**NOTE:** This item is indicated, but cannot be tested.
	RH	
HORN	On	Operates horn relay for 20 ms.
FRONT WIPER	Off	OFF
	Lo	Operates the front wiper relay.
	Hi	Operates the front wiper relay and front wiper high relay.
MOTOR FAN	1	OFF
	2	Operates the cooling fan relay (LO operation).
	3	Operates the cooling fan relay (MID operation).
	4	Operates the cooling fan relay (HI operation).
HEAD LAMP WASHER	Off	**NOTE:** This item is indicated, but cannot be tested.
EXTERNAL LAMPS	Off	OFF
	TAIL	Operates the tail lamp relay.
	Lo	Operates the headlamp low relay.
	Hi	Operates the headlamp low relay and ON/OFF the headlamp high relay at 1 second intervals.
	Fog	**NOTE:** This item is indicated, but cannot be tested.

ECU DIAGNOSIS INFORMATION

BCM, IPDM E/R

List of ECU Reference

INFOID:0000000005912390

WITH INTELLIGENT KEY

ECU	Reference
BCM	BCS-18, "Reference Value"
	BCS-37, "Fail-safe"
	BCS-39, "DTC Inspection Priority Chart"
	BCS-40, "DTC Index"
IPDM E/R	PCS-15, "Reference Value"
	PCS-20, "Fail-Safe"
	PCS-22, "DTC Index"

WITHOUT INTELLIGENT KEY

ECU	Reference
BCM	BCS-72, "Reference Value"
	BCS-85, "Fail-safe"
	BCS-85, "DTC Inspection Priority Chart"
	BCS-86, "DTC Index"
IPDM E/R	PCS-40, "Reference Value"
	PCS-44, "Fail-Safe"
	PCS-45, "DTC Index"

WIRING DIAGRAM

HEADLAMP SYSTEM

Wiring Diagram - HEADLAMP -

INFOID:0000000005912396

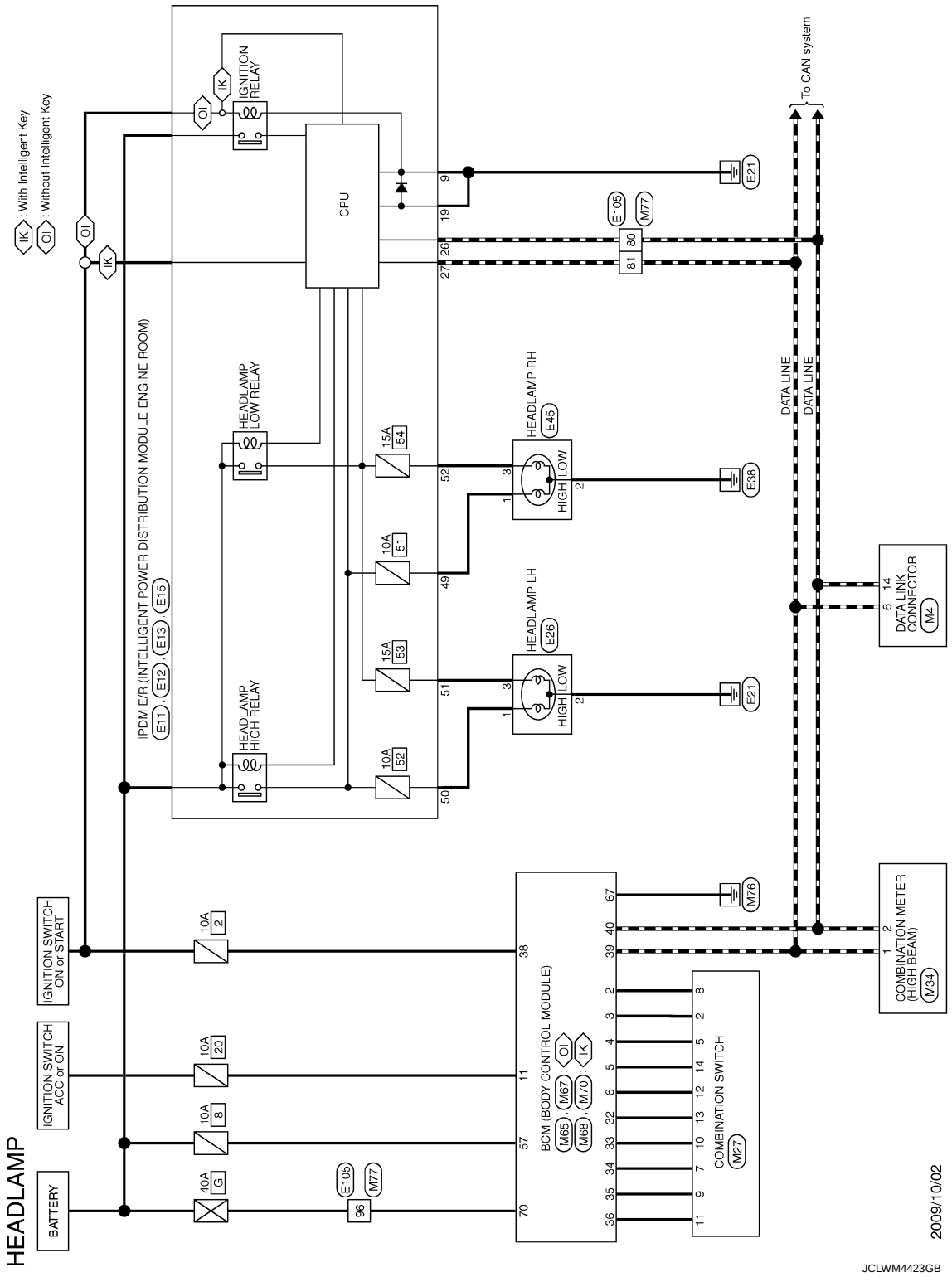

HEADLAMP

Connector No.	E11
Connector Name	IPDM E/R (INTELLIGENT POWER DISTRIBUTION MODULE ENGINE ROOM)
Connector Type	M06FB-LC

Terminal No.	Color of Wire	Signal Name [Specification]
9	B/W	–
10	L	–
13	W	–

Connector No.	E12
Connector Name	IPDM E/R (INTELLIGENT POWER DISTRIBUTION MODULE ENGINE ROOM)
Connector Type	NS08FBR-CS

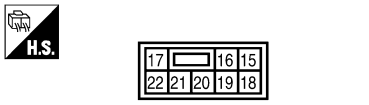

Terminal No.	Color of Wire	Signal Name [Specification]
18	Y	–
19	B/W	–
21	W	–
22	V	–

Connector No.	E13
Connector Name	IPDM E/R (INTELLIGENT POWER DISTRIBUTION MODULE ENGINE ROOM)
Connector Type	TH12FW-NH

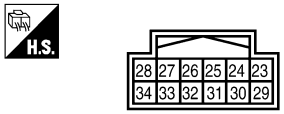

Terminal No.	Color of Wire	Signal Name [Specification]
24	LG	–
25	Y	–
26	P	–
27	L	–
28	P	–
30	SB	–
31	W	–
33	O	–
34	R	–

Connector No.	E15
Connector Name	IPDM E/R (INTELLIGENT POWER DISTRIBUTION MODULE ENGINE ROOM)
Connector Type	NS16FW-CS

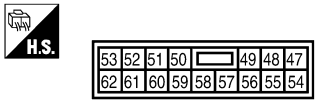

Terminal No.	Color of Wire	Signal Name [Specification]
47	BR	–
49	W	–
50	GR	–
51	R	–
52	P	–
54	GR	–
55	P	–
56	SB	–
57	G	–
58	R	– [With CVT]
58	Y	– [With M/T]
59	Y	–
60	V	–
61	W	–
62	L	–

Connector No.	E26
Connector Name	HEADLAMP LH
Connector Type	NQ03FB

Terminal No.	Color of Wire	Signal Name [Specification]
1	GR	–
2	B/R	–
3	R	–

Connector No.	E45
Connector Name	HEADLAMP RH
Connector Type	NQ03FB

Terminal No.	Color of Wire	Signal Name [Specification]
1	W	–
2	R	– [With daytime running light system]
2	B/Y	– [Without daytime running light system]
3	SB	– [With daytime running light system]
3	P	– [Without daytime running light system]

JCLWM4424GB

HEADLAMP

Connector No.	E105
Connector Name	WIRE TO WIRE
Connector Type	TH80MW-CS16-TM4

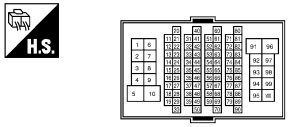

Terminal No.	Color of Wire	Signal Name [Specification]
1	V	–
2	W	–
3	SB	–
4	G	–
5	P	–
6	R	–
7	Y	–
8	O	–
9	W	–
10	SB	–
31	V	–
32	R	–
33	GR	–
34	P	–
35	Y	–
36	BR	–
39	SB	–
44	R	–
45	V	–
46	P	–
47	W	–
48	L	–
49	Y	–
50	W	–
51	BR	– [With CVT]
51	B	– [With M/T]
53	SB	–
54	W	– [With CVT]
54	O	– [With M/T]
57	LG	–
59	L	–
60	O	–
61	G	–
62	W	–
63	L	–
67	GR	– [With CVT]
67	V	– [With M/T]
69	P	–
70	SHIELD	–
71	GR	–
72	LG	–
73	P	–
74	V	–
76	Y	–
77	LG	–
78	O	–
79	G	–
80	P	–
81	L	–
82	W	–
83	BR	–
84	B	–
87	GR	–
91	W	–
92	Y	–
93	Y	–
94	R	–
95	V	–
96	LG	–
97	R	–
98	SB	–
99	G	–
100	P	–

Connector No.	M4
Connector Name	DATA LINK CONNECTOR
Connector Type	BD16FW

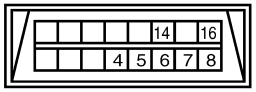

Terminal No.	Color of Wire	Signal Name [Specification]
4	B	–
5	B	–
6	L	–
7	GR/R	–
8	O	–
14	P	–
16	LG/R	–

Connector No.	M27
Connector Name	COMBINATION SWITCH
Connector Type	TH16FW-NH

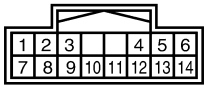

Terminal No.	Color of Wire	Signal Name [Specification]
1	O	WASHER (RR)
2	GR	INPUT 4
3	L	WASHER (FR)
4	W	IGN
5	L/Y	INPUT 3
6	B	GND
7	W	OUTPUT 3
8	BR/W	INPUT 5
9	R/L	OUTPUT 2
10	Y/L	OUTPUT 4
11	L/O	OUTPUT 1
12	L/R	INPUT 1
13	LG	OUTPUT 5
14	G	INPUT 2

Connector No.	M34
Connector Name	COMBINATION METER
Connector Type	TH40FW-NH

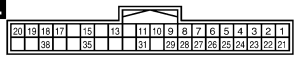

Terminal No.	Color of Wire	Signal Name [Specification]
1	L	CAN-H
2	P	CAN-L
3	V	VEHICLE SPEED SIGNAL (2-PULSE)
4	L	VEHICLE SPEED SIGNAL (8-PULSE)
6	BR/Y	FUEL LEVEL SENSOR SIGNAL
7	R/G	AIR BAG SIGNAL
8	P	OVERDRIVE CONTROL SWITCH SIGNAL
9	O	SEAT BELT BUCKLE SWITCH SIGNAL (DRIVER SIDE)
10	SB	PARKING BRAKE SWITCH SIGNAL
11	G/R	BRAKE FLUID LEVEL SWITCH SIGNAL
13	B/R	ILLUMINATION CONTROL SIGNAL
15	L/Y	ACC POWER SUPPLY
17	G	WASHER LEVEL SWITCH SIGNAL
18	R/Y	SECURITY SIGNAL
19	V/W	AMBIENT SENSOR SIGNAL
20	R/W	AMBIENT SENSOR GROUND
21	B	GROUND
22	B	GROUND
23	B	GROUND
24	V	FUEL LEVEL SENSOR GROUND
25	B	VDC GROUND
27	LG	BATTERY POWER SUPPLY
28	GR	IGNITION SIGNAL
29	BR	PASSENGER SEAT BELT WARNING SIGNAL
31	R	A/C AUTO AMP. CONNECTION RECOGNITION SIGNAL
35	BR	ENGINE COOLANT TEMPERATURE SIGNAL
38	GR	ALTERNATOR SIGNAL

HEADLAMP

Connector No.	M65
Connector Name	BCM (BODY CONTROL MODULE)
Connector Type	TH40FW-NH

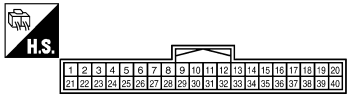

Terminal No.	Color of Wire	Signal Name [Specification]
2	BR/W	COMBI SW INPUT 5
3	GR	COMBI SW INPUT 4
4	L/Y	COMBI SW INPUT 3
5	G	COMBI SW INPUT 2
6	L/R	COMBI SW INPUT 1
7	W/R	KEY CYL UNLOCK SW
8	W/B	KEY CYL LOCK SW
9	R	STOP LAMP SW
10	W/L	REAR WINDOW DEFOGGER SW
11	L/Y	ACC
12	SB	PASSENGER DOOR SW
13	GR/L	REAR RH DOOR SW
14	L/B	OPTICAL SENSOR
15	V/W	TIRE PRESS WARNING CHECK SW
17	R/G	OPTICAL SENSOR POWER SUPPLY
18	V	RECEIVER/SENSOR GND
19	BR	KEYLESS ENTRY RECEIVER POWER SUPPLY
20	G/Y	KEYLESS ENTRY RECEIVER COMM
21	P/L	NATS ANTENNA AMP.
23	R/Y	SECURITY INDICATOR LAMP
24	GR/R	DONGLE LINK
25	LG	NATS ANTENNA AMP.
26	GR	THERMO CONTROL AMP.
27	Y/G	A/C SW [With auto A/C]
27	Y/R	A/C SW [With manual A/C]
28	G/W	BLOWER FAN SW
29	L/W	HAZARD SW
31	G/Y	FR DEFROSTER SW
32	LG	COMBI SW OUTPUT 5
33	Y/L	COMBI SW OUTPUT 4
34	W	COMBI SW OUTPUT 3
35	R/L	COMBI SW OUTPUT 2
36	L/O	COMBI SW OUTPUT 1
37	R/W	KEY SWITCH
38	O	IGN
39	L	CAN-H
40	P	CAN-L

Connector No.	M67
Connector Name	BCM (BODY CONTROL MODULE)
Connector Type	FEA09FB-FHA6-SA

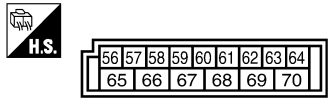

Terminal No.	Color of Wire	Signal Name [Specification]
56	L	INTERIOR ROOM LAMP POWER SUPPLY
57	Y	BAT (FUSE)
59	L/B	DRIVER DOOR UNLOCK OUTPUT
60	W/B	TURN SIGNAL LH OUTPUT
61	W/L	TURN SIGNAL RH OUTPUT
63	BR	ROOM LAMP TIMER CONTROL
65	V	ALL DOOR LOCK OUTPUT
66	G	PASSENGER DOOR, REAR DOOR UNLOCK OUTPUT
67	B	GND
68	L	POWER WINDOW POWER SUPPLY (IGN)
69	L/W	POWER WINDOW POWER SUPPLY (BAT)
70	Y	BAT (F/L)

Connector No.	M68
Connector Name	BCM (BODY CONTROL MODULE)
Connector Type	TH40FB-NH

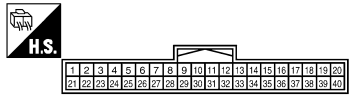

Terminal No.	Color of Wire	Signal Name [Specification]
2	BR/W	COMBI SW INPUT 5
3	GR	COMBI SW INPUT 4
4	L/Y	COMBI SW INPUT 3
5	G	COMBI SW INPUT 2
6	L/R	COMBI SW INPUT 1
7	W/R	KEY CYL UNLOCK SW
8	W/B	KEY CYL LOCK SW
9	R	STOP LAMP SW 1
10	V/W	TIRE PRESS WARNING CHECK SW
11	L/Y	ACC F/B
12	SB	PASSENGER DOOR SW
13	GR/L	REAR RH DOOR SW
14	L/B	OPTICAL SENSOR
15	W/L	REAR WINDOW DEFOGGER SW
17	R/G	OPTICAL SENSOR POWER SUPPLY
18	V	RECEIVER / SENSOR GND
19	BR	KEYLESS ENTRY RECEIVER POWER SUPPLY
20	G/Y	KEYLESS ENTRY RECEIVER COMM
21	P/L	NATS ANTENNA AMP.
22	W/G	KEYLESS ENTRY RECEIVER RSSI
23	R/Y	SECURITY INDICATOR LAMP
24	GR/R	DONGLE LINK
25	LG	NATS ANTENNA AMP.
27	Y/R	A/C SW
28	G/W	BLOWER FAN SW
29	L/W	HAZARD SW
31	G/B	DR DOOR UNLOCK SENSOR
32	LG	COMBI SW OUTPUT 5
33	Y/L	COMBI SW OUTPUT 4
34	W	COMBI SW OUTPUT 3
35	R/L	COMBI SW OUTPUT 2
36	L/O	COMBI SW OUTPUT 1
37	G/O	SHIFT P
38	O	IGN F/B
39	L	CAN-H
40	P	CAN-L

Connector No.	M70
Connector Name	BCM (BODY CONTROL MODULE)
Connector Type	FEA09FB-FHA6-SA

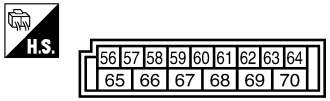

Terminal No.	Color of Wire	Signal Name [Specification]
56	L	INTERIOR ROOM LAMP POWER SUPPLY
57	Y	BAT (FUSE)
59	G	PASSENGER DOOR UNLOCK OUTPUT
60	W/B	TURN SIGNAL LH OUTPUT
61	W/L	TURN SIGNAL RH OUTPUT
63	BR	ROOM LAMP TIMER CONTROL
65	V	ALL DOOR LOCK OUTPUT
66	L/B	DRIVER DOOR UNLOCK OUTPUT
67	B	GND
68	L	POWER WINDOW POWER SUPPLY (IGN)
69	L/W	POWER WINDOW POWER SUPPLY (BAT)
70	Y	BAT (F/L)

HEADLAMP

Connector No.	M77
Connector Name	WIRE TO WIRE
Connector Type	TH80FW-CS16-TM4

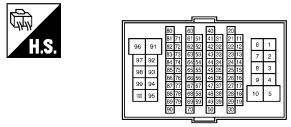

Terminal No.	Color of Wire	Signal Name [Specification]
1	B/O	–
2	R	–
3	G/R	–
4	G/B	–
5	L	–
6	L	–
7	W/R	–
8	G/W	–
9	Y/L	–
10	W	–
31	GR/L	–
32	L/B	–
33	R/Y	–
34	SB	–
35	BR	–
36	G	–
39	L/R	–
44	G/O	–
45	LG/R	–
46	GR/W	–
47	BR/Y	–
48	L/O	–
49	L/W	–
50	P/L	–
51	B/W	–
53	R/L	–
54	O	–
57	GR	–
59	V	–
60	R/W	–
61	V/W	–
62	W/L	–
63	W/B	–
67	Y/R	–
69	LG	–
70	SHIELD	–
71	P/B	–
72	R/G	–
73	R	–
74	L/Y	–
76	W/G	–
77	GR/R	–
78	O	–
79	LG	–
80	P	–
81	L	–
82	GR	–
83	G/R	–
84	B	–
87	G	–
91	R	–
92	O	–
93	Y	–
94	R/B	–
95	L/W	–
96	Y	–
97	L	–
98	BR/W	–
99	W	–
100	G/R	–

JCLWM4427GB

FRONT FOG LAMP SYSTEM

Wiring Diagram - FRONT FOG LAMP -

INFOID:0000000005912397

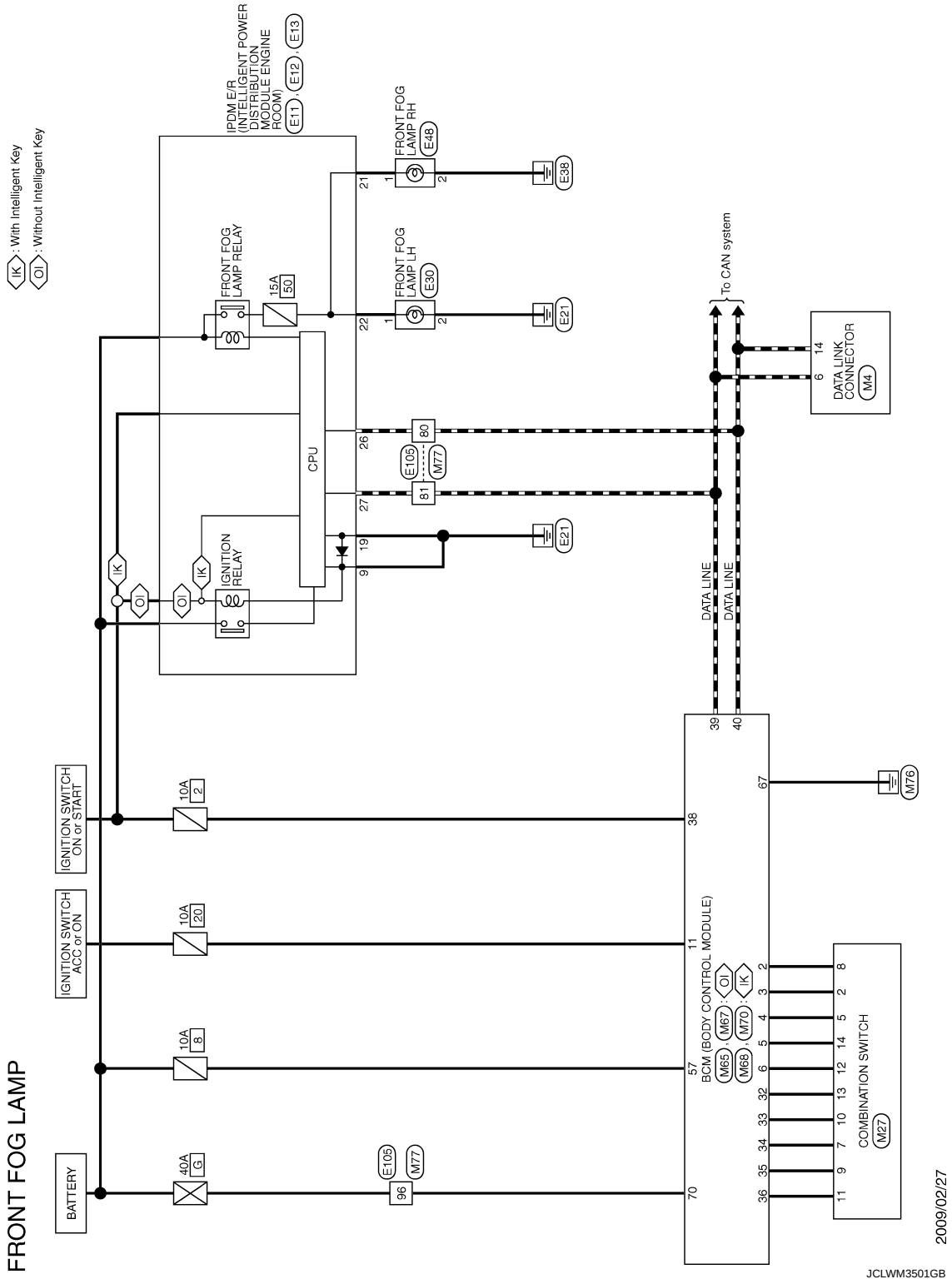

FRONT FOG LAMP

Connector No.	E11
Connector Name	IPDM E/R (INTELLIGENT POWER DISTRIBUTION MODULE ENGINE ROOM)
Connector Type	M06FB-LC

Terminal No.	Color of Wire	Signal Name [Specification]
9	B/W	–
10	L	–
13	W	–

Connector No.	E12
Connector Name	IPDM E/R (INTELLIGENT POWER DISTRIBUTION MODULE ENGINE ROOM)
Connector Type	NS08FBR-CS

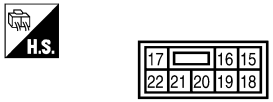

Terminal No.	Color of Wire	Signal Name [Specification]
18	Y	–
19	B/W	–
21	W	–
22	V	–

Connector No.	E13
Connector Name	IPDM E/R (INTELLIGENT POWER DISTRIBUTION MODULE ENGINE ROOM)
Connector Type	TH12FW-NH

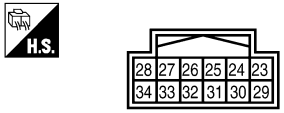

Terminal No.	Color of Wire	Signal Name [Specification]
24	LG	–
25	Y	–
26	P	–
27	L	–
28	P	–
30	SB	–
31	W	–
33	O	–
34	R	–

Connector No.	E30
Connector Name	FRONT FOG LAMP LH
Connector Type	FCI 240PC023S4019

Terminal No.	Color of Wire	Signal Name [Specification]
1	V	–
2	B/W	–

Connector No.	E48
Connector Name	FRONT FOG LAMP RH
Connector Type	FCI 240PC023S4019

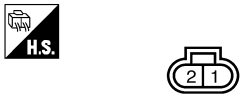

Terminal No.	Color of Wire	Signal Name [Specification]
1	W	–
2	B/Y	–

Connector No.	E105
Connector Name	WIRE TO WIRE
Connector Type	TH80MW-CS16-TM4

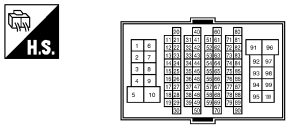

Terminal No.	Color of Wire	Signal Name [Specification]
1	V	–
2	W	–
3	SB	–
4	G	–
5	P	–
6	R	–
7	Y	–
8	O	–
9	W	–
10	SB	–
31	V	–
32	R	–
33	GR	–
34	P	–
35	Y	–
36	BR	–
39	SB	–
44	R	–
45	V	–
46	P	–
47	W	–
48	L	–
49	Y	–
50	W	–
51	BR	– [With CVT]
51	B	– [With M/T]
53	SB	–
54	W	– [With CVT]
54	O	– [With M/T]
57	LG	–
59	L	–
60	O	–
61	G	–
62	W	–
63	L	–
67	GR	– [With CVT]
67	V	– [With M/T]
69	P	–
70	SHIELD	–
71	GR	–
72	LG	–
73	P	–
74	V	–
76	Y	–
77	LG	–
78	O	–
79	G	–
80	P	–
81	L	–
82	W	–
83	BR	–
84	B	–
87	GR	–
91	W	–
92	Y	–
93	Y	–
94	R	–
95	V	–
96	LG	–
97	R	–
98	SB	–
99	G	–
100	P	–

Connector No.	M4
Connector Name	DATA LINK CONNECTOR
Connector Type	BD16FW

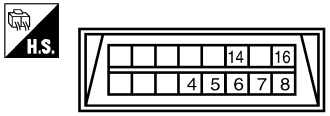

Terminal No.	Color of Wire	Signal Name [Specification]
4	B	–
5	B	–
6	L	–
7	GR/R	–
8	O	–
14	P	–
16	LG/R	–

FRONT FOG LAMP SYSTEM

FRONT FOG LAMP

Connector No.	M27
Connector Name	COMBINATION SWITCH
Connector Type	TH16FW-NH

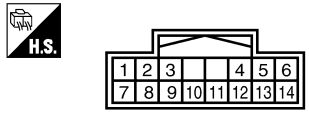

Terminal No.	Color of Wire	Signal Name [Specification]
1	O	WASHER (RR)
2	GR	INPUT 4
3	L	WASHER (FR)
4	W	IGN
5	L/Y	INPUT 3
6	B	GND
7	W	OUTPUT 3
8	BR/W	INPUT 5
9	R/L	OUTPUT 2
10	Y/L	OUTPUT 4
11	L/O	OUTPUT 1
12	L/R	INPUT 1
13	LG	OUTPUT 5
14	G	INPUT 2

Connector No.	M65
Connector Name	BCM (BODY CONTROL MODULE)
Connector Type	TH40FW-NH

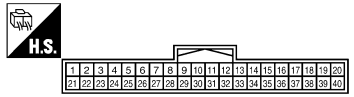

Terminal No.	Color of Wire	Signal Name [Specification]
2	BR/W	COMBI SW INPUT 5
3	GR	COMBI SW INPUT 4
4	L/Y	COMBI SW INPUT 3
5	G	COMBI SW INPUT 2
6	L/R	COMBI SW INPUT 1
7	W/R	KEY CYL UNLOCK SW
8	W/B	KEY CYL LOCK SW
9	R	STOP LAMP SW
10	W/L	REAR WINDOW DEFOGGER SW
11	L/Y	ACC
12	SB	PASSENGER DOOR SW
13	GR/L	REAR RH DOOR SW
14	L/B	OPTICAL SENSOR
15	V/W	TIRE PRESS WARNING CHECK SW
17	R/G	OPTICAL SENSOR POWER SUPPLY
18	V	RECEIVER/SENSOR GND
19	BR	KEYLESS ENTRY RECEIVER POWER SUPPLY
20	G/Y	KEYLESS ENTRY RECEIVER COMM
21	P/L	NATS ANTENNA AMP.
23	R/Y	SECURITY INDICATOR LAMP
24	GR/R	DONGLE LINK
25	LG	NATS ANTENNA AMP.
26	GR	THERMO CONTROL AMP.
27	Y/G	A/C SW [With auto A/C]
27	Y/R	A/C SW [With manual A/C]
28	G/W	BLOWER FAN SW
29	L/W	HAZARD SW
31	G/Y	FR DEFROSTER SW
32	LG	COMBI SW OUTPUT 5
33	Y/L	COMBI SW OUTPUT 4
34	W	COMBI SW OUTPUT 3
35	R/L	COMBI SW OUTPUT 2
36	L/O	COMBI SW OUTPUT 1
37	R/W	KEY SWITCH
38	O	IGN
39	L	CAN-H
40	P	CAN-L

Connector No.	M67
Connector Name	BCM (BODY CONTROL MODULE)
Connector Type	FEA09FB-FHA6-SA

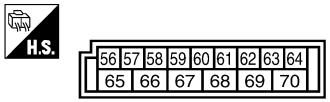

Terminal No.	Color of Wire	Signal Name [Specification]
56	L	INTERIOR ROOM LAMP POWER SUPPLY
57	Y	BAT (FUSE)
59	L/B	DRIVER DOOR UNLOCK OUTPUT
60	W/B	TURN SIGNAL LH OUTPUT
61	W/L	TURN SIGNAL RH OUTPUT
63	BR	ROOM LAMP TIMER CONTROL
65	V	ALL DOOR LOCK OUTPUT
66	G	PASSENGER DOOR, REAR DOOR UNLOCK OUTPUT
67	B	GND
68	L	POWER WINDOW POWER SUPPLY (IGN)
69	L/W	POWER WINDOW POWER SUPPLY (BAT)
70	Y	BAT (F/L)

Connector No.	M68
Connector Name	BCM (BODY CONTROL MODULE)
Connector Type	TH40FB-NH

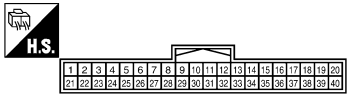

Terminal No.	Color of Wire	Signal Name [Specification]
2	BR/W	COMBI SW INPUT 5
3	GR	COMBI SW INPUT 4
4	L/Y	COMBI SW INPUT 3
5	G	COMBI SW INPUT 2
6	L/R	COMBI SW INPUT 1
7	W/R	KEY CYL UNLOCK SW
8	W/B	KEY CYL LOCK SW
9	R	STOP LAMP SW 1
10	V/W	TIRE PRESS WARNING CHECK SW
11	L/Y	ACC F/B
12	SB	PASSENGER DOOR SW
13	GR/L	REAR RH DOOR SW
14	L/B	OPTICAL SENSOR
15	W/L	REAR WINDOW DEFOGGER SW
17	R/G	OPTICAL SENSOR POWER SUPPLY
18	V	RECEIVER / SENSOR GND
19	BR	KEYLESS ENTRY RECEIVER POWER SUPPLY
20	G/Y	KEYLESS ENTRY RECEIVER COMM
21	P/L	NATS ANTENNA AMP.
22	W/G	KEYLESS ENTRY RECEIVER RSSI
23	R/Y	SECURITY INDICATOR LAMP
24	GR/R	DONGLE LINK
25	LG	NATS ANTENNA AMP.
27	Y/R	A/C SW
28	G/W	BLOWER FAN SW
29	L/W	HAZARD SW
31	G/B	DR DOOR UNLOCK SENSOR
32	LG	COMBI SW OUTPUT 5
33	Y/L	COMBI SW OUTPUT 4
34	W	COMBI SW OUTPUT 3
35	R/L	COMBI SW OUTPUT 2
36	L/O	COMBI SW OUTPUT 1
37	G/O	SHIFT P
38	O	IGN F/B
39	L	CAN-H
40	P	CAN-L

Connector No.	M70
Connector Name	BCM (BODY CONTROL MODULE)
Connector Type	FEA09FB-FHA6-SA

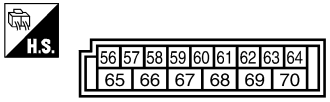

Terminal No.	Color of Wire	Signal Name [Specification]
56	L	INTERIOR ROOM LAMP POWER SUPPLY
57	Y	BAT (FUSE)
59	G	PASSENGER DOOR UNLOCK OUTPUT
60	W/B	TURN SIGNAL LH OUTPUT
61	W/L	TURN SIGNAL RH OUTPUT
63	BR	ROOM LAMP TIMER CONTROL
65	V	ALL DOOR LOCK OUTPUT
66	L/B	DRIVER DOOR UNLOCK OUTPUT
67	B	GND
68	L	POWER WINDOW POWER SUPPLY (IGN)
69	L/W	POWER WINDOW POWER SUPPLY (BAT)
70	Y	BAT (F/L)

JCLWM4442GB

FRONT FOG LAMP

Connector No.	M77
Connector Name	WIRE TO WIRE
Connector Type	TH80FW-CS16-TM4

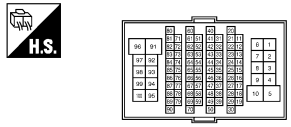

Terminal No.	Color of Wire	Signal Name [Specification]
1	B/O	–
2	R	–
3	G/R	–
4	G/B	–
5	L	–
6	L	–
7	W/R	–
8	G/W	–
9	Y/L	–
10	W	–
31	GR/L	–
32	L/B	–
33	R/Y	–
34	SB	–
35	BR	–
36	G	–
39	L/R	–
44	G/O	–
45	LG/R	–
46	GR/W	–
47	BR/Y	–
48	L/O	–
49	L/W	–
50	P/L	–
51	B/W	–
53	R/L	–
54	O	–
57	GR	–
59	V	–
60	R/W	–
61	V/W	–
62	W/L	–
63	W/B	–
67	Y/R	–
69	LG	–
70	SHIELD	–
71	P/B	–
72	R/G	–
73	R	–
74	L/Y	–
76	W/G	–
77	GR/R	–
78	O	–
79	LG	–
80	P	–
81	L	–
82	GR	–
83	G/R	–
84	B	–
87	G	–
91	R	–
92	O	–
93	Y	–
94	R/B	–
95	L/W	–
96	Y	–
97	L	–
98	BR/W	–
99	W	–
100	G/R	–

JCLWM4443GB

TURN SIGNAL AND HAZARD WARNING LAMP SYSTEM

Wiring Diagram - TURN AND HAZARD WARNING LAMPS -

INFOID:0000000005912398

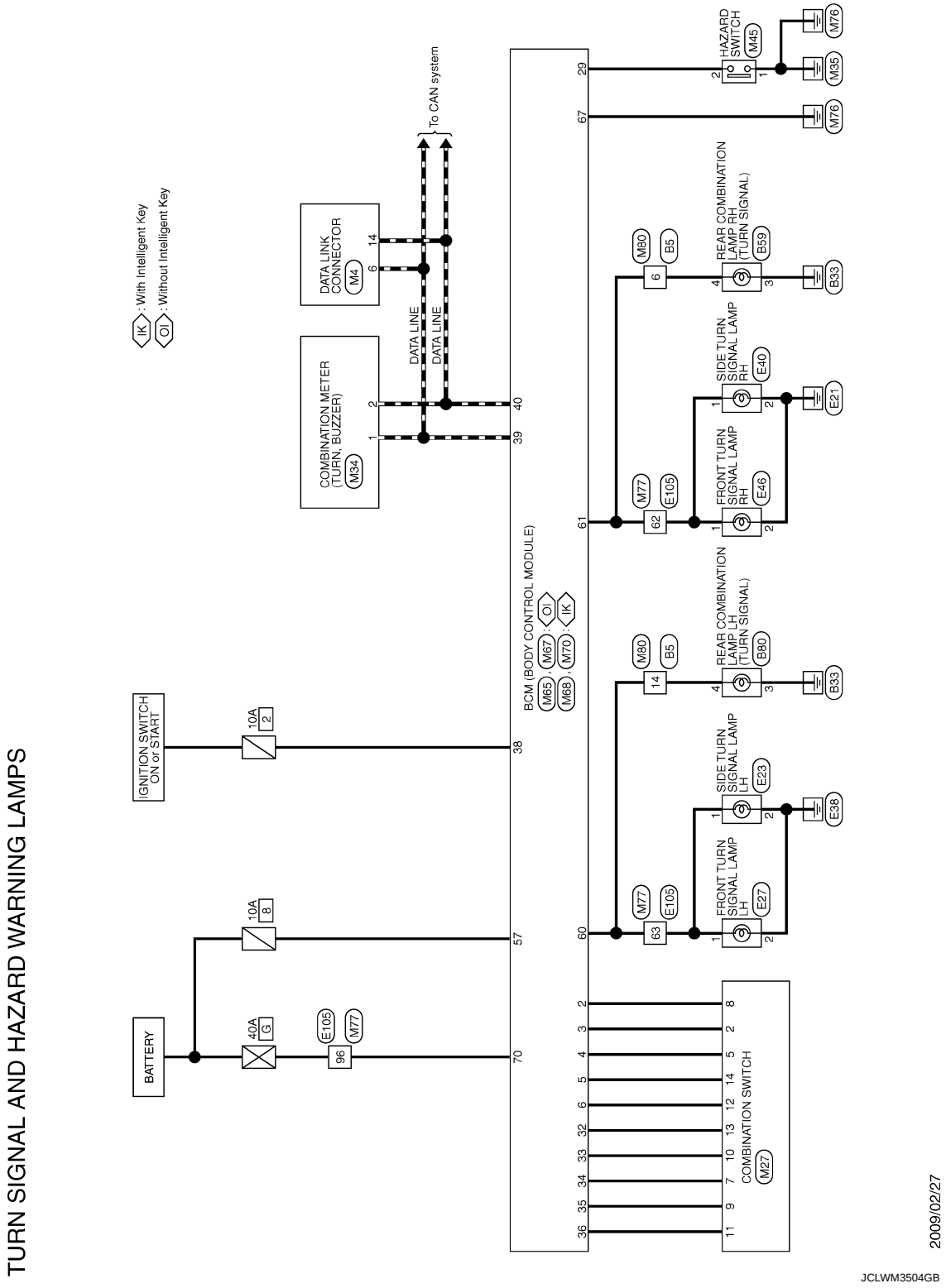

TURN SIGNAL AND HAZARD WARNING LAMPS

Connector No.	B5
Connector Name	WIRE TO WIRE
Connector Type	TH16MW-NH

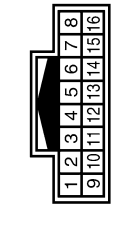

Terminal No.	Color of Wire	Signal Name [Specification]
1	V	–
2	GR	–
5	V	–
6	W	–
8	LG	–
9	R	–
11	O	–
13	GR	–
14	P	–
16	W	–

Connector No.	B59
Connector Name	REAR COMBINATION LAMP RH
Connector Type	RS06FB-PR

Terminal No.	Color of Wire	Signal Name [Specification]
1	Y	–
3	B	–
4	W	–
5	R	–
6	V	–

Connector No.	B80
Connector Name	REAR COMBINATION LAMP LH
Connector Type	RS06FB-PR

Terminal No.	Color of Wire	Signal Name [Specification]
1	Y	–
3	B	–
4	P	–
5	R	–
6	GR	–

Connector No.	E23
Connector Name	SIDE TURN SIGNAL LAMP LH
Connector Type	STL02FW

Terminal No.	Color of Wire	Signal Name [Specification]
1	L	–
2	B/R	–

Connector No.	E27
Connector Name	FRONT TURN SIGNAL LAMP LH
Connector Type	RS02FB

Terminal No.	Color of Wire	Signal Name [Specification]
1	L	–
2	B/Y	–

Connector No.	E40
Connector Name	SIDE TURN SIGNAL LAMP RH
Connector Type	STL02FW

Terminal No.	Color of Wire	Signal Name [Specification]
1	W	–
2	B/Y	–

Connector No.	E46
Connector Name	FRONT TURN SIGNAL LAMP RH
Connector Type	RS02FB

Terminal No.	Color of Wire	Signal Name [Specification]
1	W	–
2	B/Y	–

JCLWM4444GB

TURN SIGNAL AND HAZARD WARNING LAMPS

Connector No.	E105
Connector Name	WIRE TO WIRE
Connector Type	TH80MW-CS16-TM4

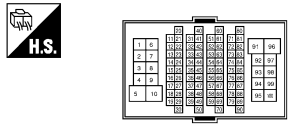

Terminal No.	Color of Wire	Signal Name [Specification]
1	V	–
2	W	–
3	SB	–
4	G	–
5	P	–
6	R	–
7	Y	–
8	O	–
9	W	–
10	SB	–
31	V	–
32	R	–
33	GR	–
34	P	–
35	Y	–
36	BR	–
39	SB	–
44	R	–
45	V	–
46	P	–
47	W	–
48	L	–
49	Y	–
50	W	–
51	BR	– [With CVT]
51	B	– [With M/T]
53	SB	–
54	W	– [With CVT]
54	O	– [With M/T]
57	LG	–
59	L	–
60	O	–
61	G	–
62	W	–
63	L	–
67	GR	– [With CVT]
67	V	– [With M/T]
69	P	–
70	SHIELD	–
71	GR	–
72	LG	–
73	P	–
74	V	–
76	Y	–
77	LG	–
78	O	–
79	G	–
80	P	–
81	L	–
82	W	–
83	BR	–
84	B	–
87	GR	–
91	W	–
92	Y	–
93	Y	–
94	R	–
95	V	–
96	LG	–
97	R	–
98	SB	–
99	G	–
100	P	–

Connector No.	M4
Connector Name	DATA LINK CONNECTOR
Connector Type	BD16FW

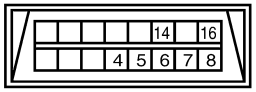

Terminal No.	Color of Wire	Signal Name [Specification]
4	B	–
5	B	–
6	L	–
7	GR/R	–
8	O	–
14	P	–
16	LG/R	–

Connector No.	M27
Connector Name	COMBINATION SWITCH
Connector Type	TH16FW-NH

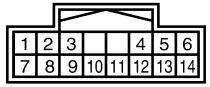

Terminal No.	Color of Wire	Signal Name [Specification]
1	O	WASHER (RR)
2	GR	INPUT 4
3	L	WASHER (FR)
4	W	IGN
5	L/Y	INPUT 3
6	B	GND
7	W	OUTPUT 3
8	BR/W	INPUT 5
9	R/L	OUTPUT 2
10	Y/L	OUTPUT 4
11	L/O	OUTPUT 1
12	L/R	INPUT 1
13	LG	OUTPUT 5
14	G	INPUT 2

Connector No.	M34
Connector Name	COMBINATION METER
Connector Type	TH40FW-NH

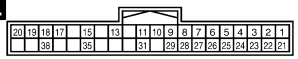

Terminal No.	Color of Wire	Signal Name [Specification]
1	L	CAN-H
2	P	CAN-L
3	V	VEHICLE SPEED SIGNAL (2-PULSE)
4	L	VEHICLE SPEED SIGNAL (8-PULSE)
6	BR/Y	FUEL LEVEL SENSOR SIGNAL
7	R/G	AIR BAG SIGNAL
8	P	OVERDRIVE CONTROL SWITCH SIGNAL
9	O	SEAT BELT BUCKLE SWITCH SIGNAL (DRIVER SIDE)
10	SB	PARKING BRAKE SWITCH SIGNAL
11	G/R	BRAKE FLUID LEVEL SWITCH SIGNAL
13	B/R	ILLUMINATION CONTROL SIGNAL
15	L/Y	ACC POWER SUPPLY
17	G	WASHER LEVEL SWITCH SIGNAL
18	R/Y	SECURITY SIGNAL
19	V/W	AMBIENT SENSOR SIGNAL
20	R/W	AMBIENT SENSOR GROUND
21	B	GROUND
22	B	GROUND
23	B	GROUND
24	V	FUEL LEVEL SENSOR GROUND
25	B	VDC GROUND
27	LG	BATTERY POWER SUPPLY
28	GR	IGNITION SIGNAL
29	BR	PASSENGER SEAT BELT WARNING SIGNAL
31	R	A/C AUTO AMP. CONNECTION RECOGNITION SIGNAL
35	BR	ENGINE COOLANT TEMPERATURE SIGNAL
38	GR	ALTERNATOR SIGNAL

Connector No.	M45
Connector Name	HAZARD SWITCH
Connector Type	TK04FW

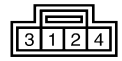

Terminal No.	Color of Wire	Signal Name [Specification]
1	B	–
2	L/W	–
3	W	–
4	B/R	–

JCLWM4445GB

TURN SIGNAL AND HAZARD WARNING LAMPS

Connector No.	M65
Connector Name	BCM (BODY CONTROL MODULE)
Connector Type	TH40FW-NH

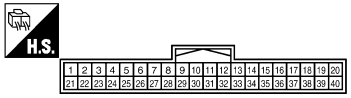

Terminal No.	Color of Wire	Signal Name [Specification]
2	BR/W	COMBI SW INPUT 5
3	GR	COMBI SW INPUT 4
4	L/Y	COMBI SW INPUT 3
5	G	COMBI SW INPUT 2
6	L/R	COMBI SW INPUT 1
7	W/R	KEY CYL UNLOCK SW
8	W/B	KEY CYL LOCK SW
9	R	STOP LAMP SW
10	W/L	REAR WINDOW DEFOGGER SW
11	L/Y	ACC
12	SB	PASSENGER DOOR SW
13	GR/L	REAR RH DOOR SW
14	L/B	OPTICAL SENSOR
15	V/W	TIRE PRESS WARNING CHECK SW
17	R/G	OPTICAL SENSOR POWER SUPPLY
18	V	RECEIVER/SENSOR GND
19	BR	KEYLESS ENTRY RECEIVER POWER SUPPLY
20	G/Y	KEYLESS ENTRY RECEIVER COMM
21	P/L	NATS ANTENNA AMP.
23	R/Y	SECURITY INDICATOR LAMP
24	GR/R	DONGLE LINK
25	LG	NATS ANTENNA AMP.
26	GR	THERMO CONTROL AMP.
27	Y/G	A/C SW [With auto A/C]
27	Y/R	A/C SW [With manual A/C]
28	G/W	BLOWER FAN SW
29	L/W	HAZARD SW
31	G/Y	FR DEFROSTER SW
32	LG	COMBI SW OUTPUT 5
33	Y/L	COMBI SW OUTPUT 4
34	W	COMBI SW OUTPUT 3
35	R/L	COMBI SW OUTPUT 2
36	L/O	COMBI SW OUTPUT 1
37	R/W	KEY SWITCH
38	O	IGN
39	L	CAN-H
40	P	CAN-L

Connector No.	M67
Connector Name	BCM (BODY CONTROL MODULE)
Connector Type	FEA09FB-FHA6-SA

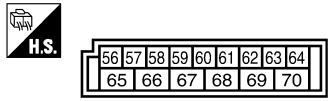

Terminal No.	Color of Wire	Signal Name [Specification]
56	L	INTERIOR ROOM LAMP POWER SUPPLY
57	Y	BAT (FUSE)
59	L/B	DRIVER DOOR UNLOCK OUTPUT
60	W/B	TURN SIGNAL LH OUTPUT
61	W/L	TURN SIGNAL RH OUTPUT
63	BR	ROOM LAMP TIMER CONTROL
65	V	ALL DOOR LOCK OUTPUT
66	G	PASSENGER DOOR, REAR DOOR UNLOCK OUTPUT
67	B	GND
68	L	POWER WINDOW POWER SUPPLY (IGN)
69	L/W	POWER WINDOW POWER SUPPLY (BAT)
70	Y	BAT (F/L)

Connector No.	M68
Connector Name	BCM (BODY CONTROL MODULE)
Connector Type	TH40FB-NH

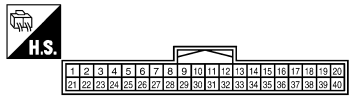

Terminal No.	Color of Wire	Signal Name [Specification]
2	BR/W	COMBI SW INPUT 5
3	GR	COMBI SW INPUT 4
4	L/Y	COMBI SW INPUT 3
5	G	COMBI SW INPUT 2
6	L/R	COMBI SW INPUT 1
7	W/R	KEY CYL UNLOCK SW
8	W/B	KEY CYL LOCK SW
9	R	STOP LAMP SW 1
10	V/W	TIRE PRESS WARNING CHECK SW
11	L/Y	ACC F/B
12	SB	PASSENGER DOOR SW
13	GR/L	REAR RH DOOR SW
14	L/B	OPTICAL SENSOR
15	W/L	REAR WINDOW DEFOGGER SW
17	R/G	OPTICAL SENSOR POWER SUPPLY
18	V	RECEIVER / SENSOR GND
19	BR	KEYLESS ENTRY RECEIVER POWER SUPPLY
20	G/Y	KEYLESS ENTRY RECEIVER COMM
21	P/L	NATS ANTENNA AMP.
22	W/G	KEYLESS ENTRY RECEIVER RSSI
23	R/Y	SECURITY INDICATOR LAMP
24	GR/R	DONGLE LINK
25	LG	NATS ANTENNA AMP.
27	Y/R	A/C SW
28	G/W	BLOWER FAN SW
29	L/W	HAZARD SW
31	G/B	DR DOOR UNLOCK SENSOR
32	LG	COMBI SW OUTPUT 5
33	Y/L	COMBI SW OUTPUT 4
34	W	COMBI SW OUTPUT 3
35	R/L	COMBI SW OUTPUT 2
36	L/O	COMBI SW OUTPUT 1
37	G/O	SHIFT P
38	O	IGN F/B
39	L	CAN-H
40	P	CAN-L

Connector No.	M70
Connector Name	BCM (BODY CONTROL MODULE)
Connector Type	FEA09FB-FHA6-SA

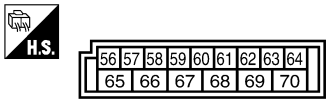

Terminal No.	Color of Wire	Signal Name [Specification]
56	L	INTERIOR ROOM LAMP POWER SUPPLY
57	Y	BAT (FUSE)
59	G	PASSENGER DOOR UNLOCK OUTPUT
60	W/B	TURN SIGNAL LH OUTPUT
61	W/L	TURN SIGNAL RH OUTPUT
63	BR	ROOM LAMP TIMER CONTROL
65	V	ALL DOOR LOCK OUTPUT
66	L/B	DRIVER DOOR UNLOCK OUTPUT
67	B	GND
68	L	POWER WINDOW POWER SUPPLY (IGN)
69	L/W	POWER WINDOW POWER SUPPLY (BAT)
70	Y	BAT (F/L)

JCLWM4446GB

TURN SIGNAL AND HAZARD WARNING LAMPS

Connector No.	M77
Connector Name	WIRE TO WIRE
Connector Type	TH80FW-CS16-TM4

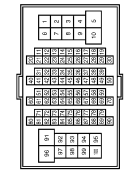

Terminal No.	Color of Wire	Signal Name [Specification]
1	B/O	–
2	R	–
3	G/R	–
4	G/B	–
5	L	–
6	L	–
7	W/R	–
8	G/W	–
9	Y/L	–
10	W	–
31	GR/L	–
32	L/B	–
33	R/Y	–
34	SB	–
35	BR	–
36	G	–
39	L/R	–
44	G/O	–
45	LG/R	–
46	GR/W	–
47	BR/Y	–
48	L/O	–
49	L/W	–
50	P/L	–
51	B/W	–
53	R/L	–
54	O	–
57	GR	–
59	V	–
60	R/W	–
61	V/W	–
62	W/L	–
63	W/B	–
67	Y/R	–
69	LG	–
70	SHIELD	–
71	P/B	–
72	R/G	–
73	R	–
74	L/Y	–
76	W/G	–
77	GR/R	–
78	O	–
79	LG	–
80	P	–
81	L	–
82	GR	–
83	G/R	–
84	B	–
87	G	–
91	R	–
92	O	–
93	Y	–
94	R/B	–
95	L/W	–
96	Y	–
97	L	–
98	BR/W	–
99	W	–
100	G/R	–

Connector No.	M80
Connector Name	WIRE TO WIRE
Connector Type	TH16FW-NH

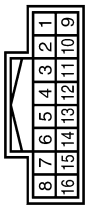

Terminal No.	Color of Wire	Signal Name [Specification]
1	L/B	–
2	GR/L	–
5	W	–
6	W/L	–
8	BR/Y	–
9	R/Y	–
11	O	–
13	BR/W	–
14	W/B	–
16	W/G	–

JCLWM4447GB

PARKING, LICENSE PLATE, SIDE MARKER AND TAIL LAMPS SYSTEM

Wiring Diagram - PARKING, LICENSE PLATE, SIDE MARKER AND TAIL LAMPS -

INFOID:0000000005912399

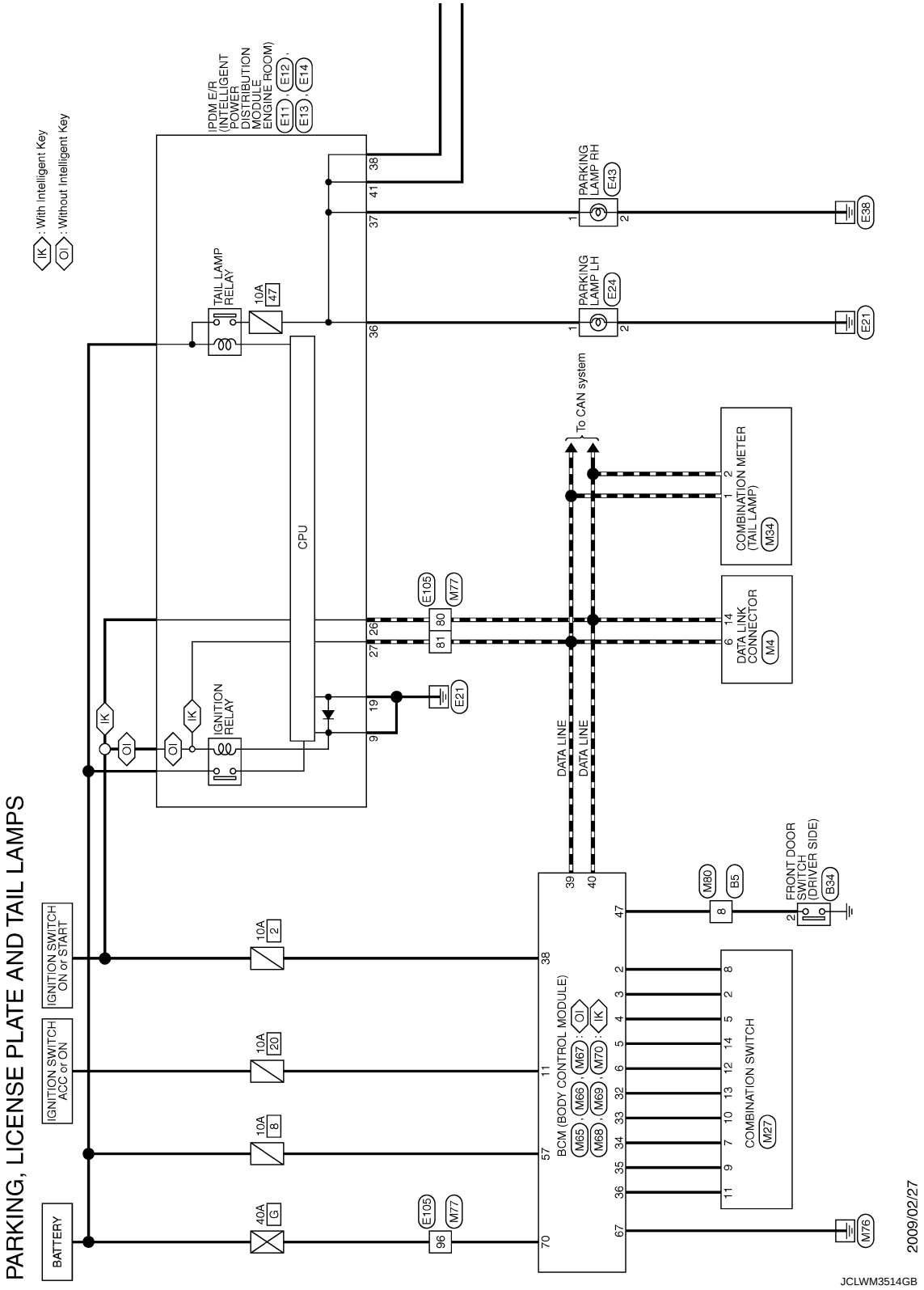

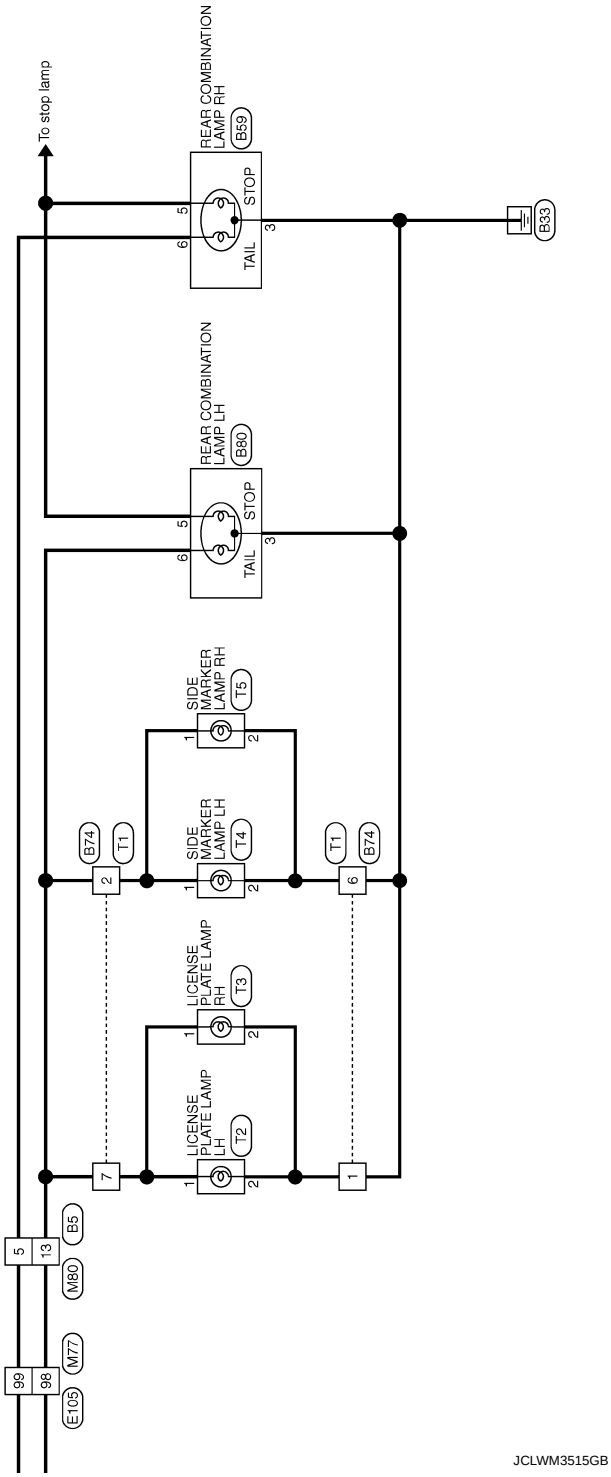
To stop lamp
REAR COMBINATION LAMP RH
B59
TAIL
STOP
REAR COMBINATION LAMP LH
B80
TAIL
STOP
SIDE MARKER LAMP RH
T5
SIDE MARKER LAMP LH
T4
LICENSE PLATE LAMP RH
T3
LICENSE PLATE LAMP LH
T2
B74
T1
B33
B5
M80
M77
E105
JCLWM3515GB

PARKING, LICENSE PLATE AND TAIL LAMPS

Connector No.	B5
Connector Name	WIRE TO WIRE
Connector Type	TH16MW-NH

H.S.

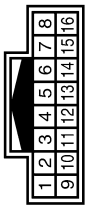

Terminal No.	Color of Wire	Signal Name [Specification]
1	V	–
2	GR	–
5	V	–
6	W	–
8	LG	–
9	R	–
11	O	–
13	GR	–
14	P	–
16	W	–

Connector No.	B34
Connector Name	FRONT DOOR SWITCH (DRIVER SIDE)
Connector Type	A03FW

H.S.

Terminal No.	Color of Wire	Signal Name [Specification]
2	LG	–

Connector No.	B59
Connector Name	REAR COMBINATION LAMP RH
Connector Type	RS06FB-PR

H.S.

Terminal No.	Color of Wire	Signal Name [Specification]
1	Y	–
3	B	–
4	W	–
5	R	–
6	V	–

Connector No.	B74
Connector Name	WIRE TO WIRE
Connector Type	RH10FB

H.S.

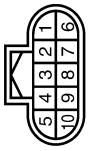

Terminal No.	Color of Wire	Signal Name [Specification]
1	B	–
2	GR	–
6	B	–
7	GR	–

Connector No.	B80
Connector Name	REAR COMBINATION LAMP LH
Connector Type	RS06FB-PR

H.S.

Terminal No.	Color of Wire	Signal Name [Specification]
1	Y	–
3	B	–
4	P	–
5	R	–
6	GR	–

Connector No.	E11
Connector Name	IPDM E/R (INTELLIGENT POWER DISTRIBUTION MODULE ENGINE ROOM)
Connector Type	M06FB-LC

H.S.

Terminal No.	Color of Wire	Signal Name [Specification]
9	B/W	–
10	L	–
13	W	–

Connector No.	E12
Connector Name	IPDM E/R (INTELLIGENT POWER DISTRIBUTION MODULE ENGINE ROOM)
Connector Type	NS08FBR-CS

H.S.

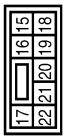

Terminal No.	Color of Wire	Signal Name [Specification]
18	Y	–
19	B/W	–
21	W	–
22	V	–

Connector No.	E13
Connector Name	IPDM E/R (INTELLIGENT POWER DISTRIBUTION MODULE ENGINE ROOM)
Connector Type	TH12FW-NH

H.S.

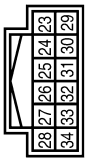

Terminal No.	Color of Wire	Signal Name [Specification]
24	LG	–
25	Y	–
26	P	–
27	L	–
28	P	–
30	SB	–
31	W	–
33	O	–
34	R	–

JCLWM4454GB

PARKING, LICENSE PLATE AND TAIL LAMPS

Connector No.	E14
Connector Name	IPDM E/R (INTELLIGENT POWER DISTRIBUTION MODULE ENGINE ROOM)
Connector Type	NS12FBR-CS

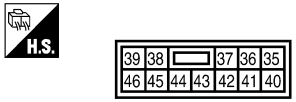

Terminal No.	Color of Wire	Signal Name [Specification]
36	Y	–
37	V	–
38	G	–
39	V	–
40	R	–
41	SB	–
42	W	–
43	G	–
44	P	–
45	Y	–
46	O	–

Connector No.	E24
Connector Name	PARKING LAMP LH
Connector Type	RK02FB

Terminal No.	Color of Wire	Signal Name [Specification]
1	Y	–
2	B/R	–

Connector No.	E43
Connector Name	PARKING LAMP RH
Connector Type	RK02FB

Terminal No.	Color of Wire	Signal Name [Specification]
1	V	–
2	B/Y	–

Connector No.	E105
Connector Name	WIRE TO WIRE
Connector Type	TH80MW-CS16-TM4

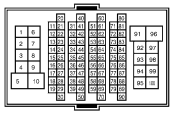

Terminal No.	Color of Wire	Signal Name [Specification]
1	V	–
2	W	–
3	SB	–
4	G	–
5	P	–
6	R	–
7	Y	–
8	O	–
9	W	–
10	SB	–
31	V	–
32	R	–
33	GR	–
34	P	–
35	Y	–
36	BR	–
39	SB	–
44	R	–
45	V	–
46	P	–
47	W	–
48	L	–
49	Y	–
50	W	–
51	BR	– [With CVT]
51	B	– [With M/T]
53	SB	–
54	W	– [With CVT]
54	O	– [With M/T]
57	LG	–
59	L	–
60	O	–
61	G	–
62	W	–
63	L	–
67	GR	– [With CVT]
67	V	– [With M/T]
69	P	–
70	SHIELD	–
71	GR	–
72	LG	–
73	P	–
74	V	–
76	Y	–
77	LG	–
78	O	–
79	G	–
80	P	–
81	L	–
82	W	–
83	BR	–
84	B	–
87	GR	–
91	W	–
92	Y	–
93	Y	–
94	R	–
95	V	–
96	LG	–
97	R	–
98	SB	–
99	G	–
100	P	–

Connector No.	M4
Connector Name	DATA LINK CONNECTOR
Connector Type	BD16FW

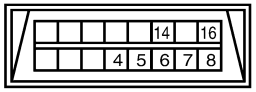

Terminal No.	Color of Wire	Signal Name [Specification]
4	B	–
5	B	–
6	L	–
7	GR/R	–
8	O	–
14	P	–
16	LG/R	–

Connector No.	M27
Connector Name	COMBINATION SWITCH
Connector Type	TH16FW-NH

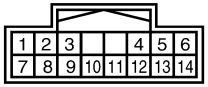

Terminal No.	Color of Wire	Signal Name [Specification]
1	O	WASHER (RR)
2	GR	INPUT 4
3	L	WASHER (FR)
4	W	IGN
5	L/Y	INPUT 3
6	B	GND
7	W	OUTPUT 3
8	BR/W	INPUT 5
9	R/L	OUTPUT 2
10	Y/L	OUTPUT 4
11	L/O	OUTPUT 1
12	L/R	INPUT 1
13	LG	OUTPUT 5
14	G	INPUT 2

PARKING, LICENSE PLATE AND TAIL LAMPS

Connector No.	M34
Connector Name	COMBINATION METER
Connector Type	TH40FW-NH

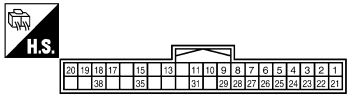

Terminal No.	Color of Wire	Signal Name [Specification]
1	L	CAN-H
2	P	CAN-L
3	V	VEHICLE SPEED SIGNAL (2-PULSE)
4	L	VEHICLE SPEED SIGNAL (8-PULSE)
6	BR/Y	FUEL LEVEL SENSOR SIGNAL
7	R/G	AIR BAG SIGNAL
8	P	OVERDRIVE CONTROL SWITCH SIGNAL
9	O	SEAT BELT BUCKLE SWITCH SIGNAL (DRIVER SIDE)
10	SB	PARKING BRAKE SWITCH SIGNAL
11	G/R	BRAKE FLUID LEVEL SWITCH SIGNAL
13	B/R	ILLUMINATION CONTROL SIGNAL
15	L/Y	ACC POWER SUPPLY
17	G	WASHER LEVEL SWITCH SIGNAL
18	R/Y	SECURITY SIGNAL
19	V/W	AMBIENT SENSOR SIGNAL
20	R/W	AMBIENT SENSOR GROUND
21	B	GROUND
22	B	GROUND
23	B	GROUND
24	V	FUEL LEVEL SENSOR GROUND
25	B	VDC GROUND
27	LG	BATTERY POWER SUPPLY
28	GR	IGNITION SIGNAL
29	BR	PASSENGER SEAT BELT WARNING SIGNAL
31	R	A/C AUTO AMP. CONNECTION RECOGNITION SIGNAL
35	BR	ENGINE COOLANT TEMPERATURE SIGNAL
38	GR	ALTERNATOR SIGNAL

Connector No.	M65
Connector Name	BCM (BODY CONTROL MODULE)
Connector Type	TH40FW-NH

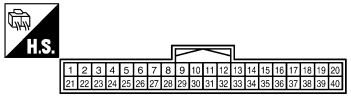

Terminal No.	Color of Wire	Signal Name [Specification]
2	BR/W	COMBI SW INPUT 5
3	GR	COMBI SW INPUT 4
4	L/Y	COMBI SW INPUT 3
5	G	COMBI SW INPUT 2
6	L/R	COMBI SW INPUT 1
7	W/R	KEY CYL UNLOCK SW
8	W/B	KEY CYL LOCK SW
9	R	STOP LAMP SW
10	W/L	REAR WINDOW DEFOGGER SW
11	L/Y	ACC
12	SB	PASSENGER DOOR SW
13	GR/L	REAR RH DOOR SW
14	L/B	OPTICAL SENSOR
15	V/W	TIRE PRESS WARNING CHECK SW
17	R/G	OPTICAL SENSOR POWER SUPPLY
18	V	RECEIVER/SENSOR GND
19	BR	KEYLESS ENTRY RECEIVER POWER SUPPLY
20	G/Y	KEYLESS ENTRY RECEIVER COMM
21	P/L	NATS ANTENNA AMP.
23	R/Y	SECURITY INDICATOR LAMP
24	GR/R	DONGLE LINK
25	LG	NATS ANTENNA AMP.
26	GR	THERMO CONTROL AMP.
27	Y/G	A/C SW [With auto A/C]
27	Y/R	A/C SW [With manual A/C]
28	G/W	BLOWER FAN SW
29	L/W	HAZARD SW
31	G/Y	FR DEFROSTER SW
32	LG	COMBI SW OUTPUT 5
33	Y/L	COMBI SW OUTPUT 4
34	W	COMBI SW OUTPUT 3
35	R/L	COMBI SW OUTPUT 2
36	L/O	COMBI SW OUTPUT 1
37	R/W	KEY SWITCH
38	O	IGN
39	L	CAN-H
40	P	CAN-L

Connector No.	M66
Connector Name	BCM (BODY CONTROL MODULE)
Connector Type	FEA09FW-FHA6-SA

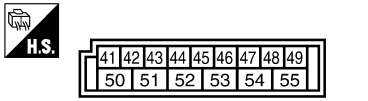

Terminal No.	Color of Wire	Signal Name [Specification]
43	W	BACK DOOR SW
44	LG	REAR WIPER STOP POSITION
45	GR	CENTRAL DOOR LOCK SW
46	BR	CENTRAL DOOR UNLOCK SW
47	BR/Y	DRIVER DOOR SW
48	W/G	REAR LH DOOR SW
50	SB	A/C INDICATOR OUTPUT
54	L/W	REAR WIPER OUTPUT

Connector No.	M67
Connector Name	BCM (BODY CONTROL MODULE)
Connector Type	FEA09FB-FHA6-SA

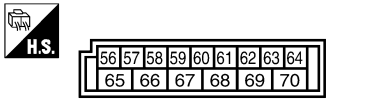

Terminal No.	Color of Wire	Signal Name [Specification]
56	L	INTERIOR ROOM LAMP POWER SUPPLY
57	Y	BAT (FUSE)
59	L/B	DRIVER DOOR UNLOCK OUTPUT
60	W/B	TURN SIGNAL LH OUTPUT
61	W/L	TURN SIGNAL RH OUTPUT
63	BR	ROOM LAMP TIMER CONTROL
65	V	ALL DOOR LOCK OUTPUT
66	G	PASSENGER DOOR, REAR DOOR UNLOCK OUTPUT
67	B	GND
68	L	POWER WINDOW POWER SUPPLY (IGN)
69	L/W	POWER WINDOW POWER SUPPLY (BAT)
70	Y	BAT (F/L)

Connector No.	M68
Connector Name	BCM (BODY CONTROL MODULE)
Connector Type	TH40FB-NH

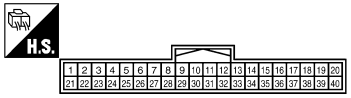

Terminal No.	Color of Wire	Signal Name [Specification]
2	BR/W	COMBI SW INPUT 5
3	GR	COMBI SW INPUT 4
4	L/Y	COMBI SW INPUT 3
5	G	COMBI SW INPUT 2
6	L/R	COMBI SW INPUT 1
7	W/R	KEY CYL UNLOCK SW
8	W/B	KEY CYL LOCK SW
9	R	STOP LAMP SW 1
10	V/W	TIRE PRESS WARNING CHECK SW
11	L/Y	ACC F/B
12	SB	PASSENGER DOOR SW
13	GR/L	REAR RH DOOR SW
14	L/B	OPTICAL SENSOR
15	W/L	REAR WINDOW DEFOGGER SW
17	R/G	OPTICAL SENSOR POWER SUPPLY
18	V	RECEIVER / SENSOR GND
19	BR	KEYLESS ENTRY RECEIVER POWER SUPPLY
20	G/Y	KEYLESS ENTRY RECEIVER COMM
21	P/L	NATS ANTENNA AMP.
22	W/G	KEYLESS ENTRY RECEIVER RSSI
23	R/Y	SECURITY INDICATOR LAMP
24	GR/R	DONGLE LINK
25	LG	NATS ANTENNA AMP.
27	Y/R	A/C SW
28	G/W	BLOWER FAN SW
29	L/W	HAZARD SW
31	G/B	DR DOOR UNLOCK SENSOR
32	LG	COMBI SW OUTPUT 5
33	Y/L	COMBI SW OUTPUT 4
34	W	COMBI SW OUTPUT 3
35	R/L	COMBI SW OUTPUT 2
36	L/O	COMBI SW OUTPUT 1
37	G/O	SHIFT P
38	O	IGN F/B
39	L	CAN-H
40	P	CAN-L

PARKING, LICENSE PLATE AND TAIL LAMPS

Connector No.	M69
Connector Name	BCM (BODY CONTROL MODULE)
Connector Type	FEA09FW-FHA6-SA

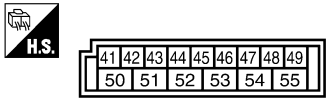

Terminal No.	Color of Wire	Signal Name [Specification]
43	W	BACK DOOR SW
44	LG	REAR WIPER STOP POSITION
45	GR	CENTRAL DOOR LOCK SW
46	BR	CENTRAL DOOR UNLOCK SW
47	BR/Y	DRIVER DOOR SW
48	W/G	REAR LH DOOR SW
54	L/W	REAR WIPER OUTPUT
55	G	REAR DOOR UNLOCK OUTPUT

Connector No.	M70
Connector Name	BCM (BODY CONTROL MODULE)
Connector Type	FEA09FB-FHA6-SA

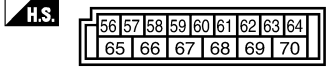

Terminal No.	Color of Wire	Signal Name [Specification]
56	L	INTERIOR ROOM LAMP POWER SUPPLY
57	Y	BAT (FUSE)
59	G	PASSENGER DOOR UNLOCK OUTPUT
60	W/B	TURN SIGNAL LH OUTPUT
61	W/L	TURN SIGNAL RH OUTPUT
63	BR	ROOM LAMP TIMER CONTROL
65	V	ALL DOOR LOCK OUTPUT
66	L/B	DRIVER DOOR UNLOCK OUTPUT
67	B	GND
68	L	POWER WINDOW POWER SUPPLY (IGN)
69	L/W	POWER WINDOW POWER SUPPLY (BAT)
70	Y	BAT (F/L)

Connector No.	M77
Connector Name	WIRE TO WIRE
Connector Type	TH80FW-CS16-TM4

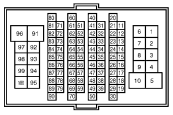

Terminal No.	Color of Wire	Signal Name [Specification]
1	B/O	–
2	R	–
3	G/R	–
4	G/B	–
5	L	–
6	L	–
7	W/R	–
8	G/W	–
9	Y/L	–
10	W	–
31	GR/L	–
32	L/B	–
33	R/Y	–
34	SB	–
35	BR	–
36	G	–
39	L/R	–
44	G/O	–
45	LG/R	–
46	GR/W	–
47	BR/Y	–
48	L/O	–
49	L/W	–
50	P/L	–
51	B/W	–
53	R/L	–
54	O	–
57	GR	–
59	V	–
60	R/W	–
61	V/W	–
62	W/L	–
63	W/B	–
67	Y/R	–
69	LG	–
70	SHIELD	–
71	P/B	–
72	R/G	–
73	R	–
74	L/Y	–
76	W/G	–
77	GR/R	–
78	O	–
79	LG	–
80	P	–
81	L	–
82	GR	–
83	G/R	–
84	B	–
87	G	–
91	R	–
92	O	–
93	Y	–
94	R/B	–
95	L/W	–
96	Y	–
97	L	–
98	BR/W	–
99	W	–
100	G/R	–

Connector No.	M80
Connector Name	WIRE TO WIRE
Connector Type	TH16FW-NH

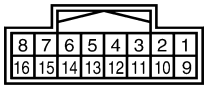

Terminal No.	Color of Wire	Signal Name [Specification]
1	L/B	–
2	GR/L	–
5	W	–
6	W/L	–
8	BR/Y	–
9	R/Y	–
11	O	–
13	BR/W	–
14	W/B	–
16	W/G	–

Connector No.	T1
Connector Name	WIRE TO WIRE
Connector Type	RH10MB

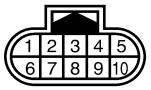

Terminal No.	Color of Wire	Signal Name [Specification]
1	BR	–
2	GR	–
6	B	–
7	W	–

Connector No.	T2
Connector Name	LICENSE PLATE LAMP LH
Connector Type	RK02FBR

Terminal No.	Color of Wire	Signal Name [Specification]
1	W	–
2	BR	–

JCLWM4457GB

PARKING, LICENSE PLATE AND TAIL LAMPS

Connector No.	T3
Connector Name	LICENSE PLATE LAMP RH
Connector Type	RK02FBR

H.S.

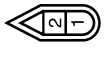

Terminal No.	Color of Wire	Signal Name [Specification]
1	GR	–
2	B	–

Connector No.	T4
Connector Name	SIDE MARKER LAMP LH
Connector Type	HS02FG-W

H.S.

Terminal No.	Color of Wire	Signal Name [Specification]
1	GR	–
2	B	–

Connector No.	T5
Connector Name	SIDE MARKER LAMP RH
Connector Type	HS02FG-W

H.S.

Terminal No.	Color of Wire	Signal Name [Specification]
1	GR	–
2	B	–

JCLWM4458GB

STOP LAMP

Wiring Diagram - STOP LAMP -

INFOID:0000000005912400

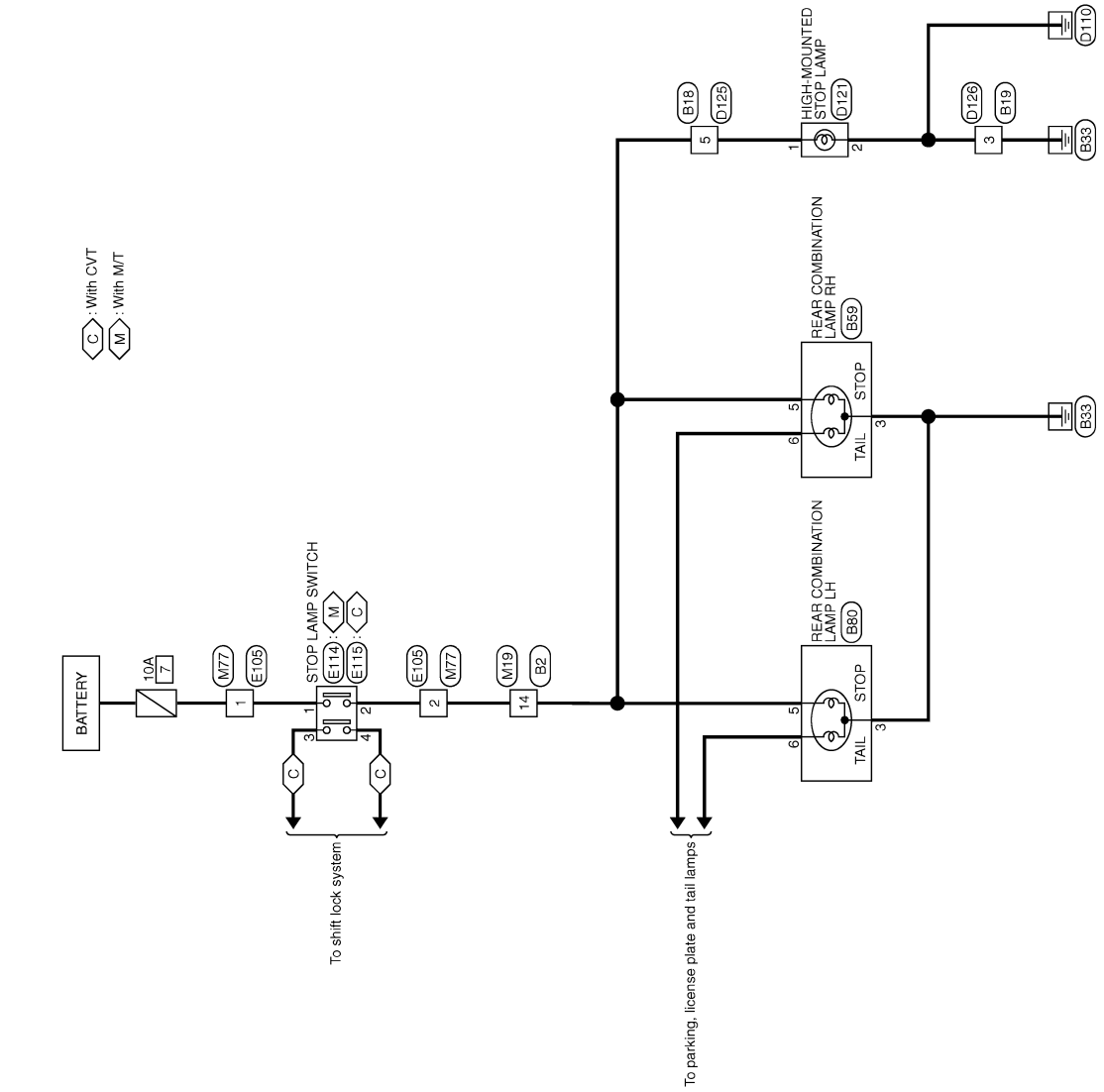

STOP LAMP

2009/02/27

JCLWM3508GB

STOP LAMP

Connector No.	B2
Connector Name	WIRE TO WIRE
Connector Type	NS16MW-CS

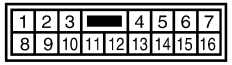

Terminal No.	Color of Wire	Signal Name [Specification]
1	V	–
5	O	–
6	R	–
7	L	–
8	L	–
9	G	–
10	V	–
11	P	–
12	LG	–
14	R	–
15	Y	–
16	B	–

Connector No.	B18
Connector Name	WIRE TO WIRE
Connector Type	NH10MW-CS10

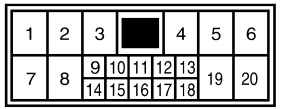

Terminal No.	Color of Wire	Signal Name [Specification]
1	V	–
3	BR	–
5	R	–
6	P	–
7	B	– [With Intelligent Key]
7	G	– [Without Intelligent Key]
8	SHIELD	–
9	R	–
10	Y	–
11	G	–
12	W	–
13	O	–
14	BR	–
15	Y	–
16	L	–
17	R	–
18	B	–
20	LG	–

Connector No.	B19
Connector Name	WIRE TO WIRE
Connector Type	M04MW-LC

Terminal No.	Color of Wire	Signal Name [Specification]
1	R	–
3	B	–

Connector No.	B59
Connector Name	REAR COMBINATION LAMP RH
Connector Type	RS06FB-PR

Terminal No.	Color of Wire	Signal Name [Specification]
1	Y	–
3	B	–
4	W	–
5	R	–
6	V	–

Connector No.	B80
Connector Name	REAR COMBINATION LAMP LH
Connector Type	RS06FB-PR

Terminal No.	Color of Wire	Signal Name [Specification]
1	Y	–
3	B	–
4	P	–
5	R	–
6	GR	–

Connector No.	D121
Connector Name	HIGH-MOUNTED STOP LAMP
Connector Type	HS02FG-W

Terminal No.	Color of Wire	Signal Name [Specification]
1	GR	–
2	B	–

Connector No.	D125
Connector Name	WIRE TO WIRE
Connector Type	NH10FW-CS10

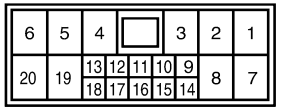

Terminal No.	Color of Wire	Signal Name [Specification]
1	Y	–
3	SB	–
5	GR	–
6	G	–
7	GR	–
8	SHIELD	–
9	R	–
10	Y	–
11	G	–
12	BR	–
13	W	–
14	BR	–
15	Y	–
16	L	–
17	R	–
18	L	–
20	LG	–

Connector No.	D126
Connector Name	WIRE TO WIRE
Connector Type	M04FW-LC

Terminal No.	Color of Wire	Signal Name [Specification]
1	R	–
3	B	–

STOP LAMP

Connector No.	E105
Connector Name	WIRE TO WIRE
Connector Type	TH80MW-CS16-TM4

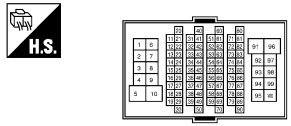

Terminal No.	Color of Wire	Signal Name [Specification]
1	V	–
2	W	–
3	SB	–
4	G	–
5	P	–
6	R	–
7	Y	–
8	O	–
9	W	–
10	SB	–
31	V	–
32	R	–
33	GR	–
34	P	–
35	Y	–
36	BR	–
39	SB	–
44	R	–
45	V	–
46	P	–
47	W	–
48	L	–
49	Y	–
50	W	–
51	BR	– [With CVT]
51	B	– [With M/T]
53	SB	–
54	W	– [With CVT]
54	O	– [With M/T]
57	LG	–
59	L	–
60	O	–
61	G	–
62	W	–
63	L	–
67	GR	– [With CVT]
67	V	– [With M/T]
69	P	–
70	SHIELD	–
71	GR	–
72	LG	–
73	P	–
74	V	–
76	Y	–
77	LG	–
78	O	–
79	G	–
80	P	–
81	L	–
82	W	–
83	BR	–
84	B	–
87	GR	–
91	W	–
92	Y	–
93	Y	–
94	R	–
95	V	–
96	LG	–
97	R	–
98	SB	–
99	G	–
100	P	–

Connector No.	E114
Connector Name	STOP LAMP SWITCH
Connector Type	M02FB-LC

Terminal No.	Color of Wire	Signal Name [Specification]
1	V	–
2	W	–

Connector No.	E115
Connector Name	STOP LAMP SWITCH
Connector Type	M04FW-LC

Terminal No.	Color of Wire	Signal Name [Specification]
1	V	–
2	W	–
3	O	–
4	G	–

Connector No.	M19
Connector Name	WIRE TO WIRE
Connector Type	NS16FW-CS

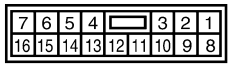

Terminal No.	Color of Wire	Signal Name [Specification]
1	V	–
5	L/R	–
6	R	–
7	L	–
8	R/B	–
9	G	–
10	V	–
11	L/W	–
12	LG	–
14	R	–
15	Y/R	–
16	B/R	–

JCLWM4449GB

STOP LAMP

Connector No.	M77
Connector Name	WIRE TO WIRE
Connector Type	TH80FW-CS16-TM4

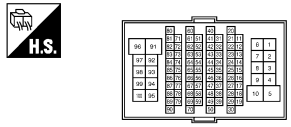

Terminal No.	Color of Wire	Signal Name [Specification]
1	B/O	–
2	R	–
3	G/R	–
4	G/B	–
5	L	–
6	L	–
7	W/R	–
8	G/W	–
9	Y/L	–
10	W	–
31	GR/L	–
32	L/B	–
33	R/Y	–
34	SB	–
35	BR	–
36	G	–
39	L/R	–
44	G/O	–
45	LG/R	–
46	GR/W	–
47	BR/Y	–
48	L/O	–
49	L/W	–
50	P/L	–
51	B/W	–
53	R/L	–
54	O	–
57	GR	–
59	V	–
60	R/W	–
61	V/W	–
62	W/L	–
63	W/B	–
67	Y/R	–
69	LG	–
70	SHIELD	–
71	P/B	–
72	R/G	–
73	R	–
74	L/Y	–
76	W/G	–
77	GR/R	–
78	O	–
79	LG	–
80	P	–
81	L	–
82	GR	–
83	G/R	–
84	B	–
87	G	–
91	R	–
92	O	–
93	Y	–
94	R/B	–
95	L/W	–
96	Y	–
97	L	–
98	BR/W	–
99	W	–
100	G/R	–

BACK-UP LAMP

Wiring Diagram - BACK-UP LAMP -

INFOID:0000000005912401

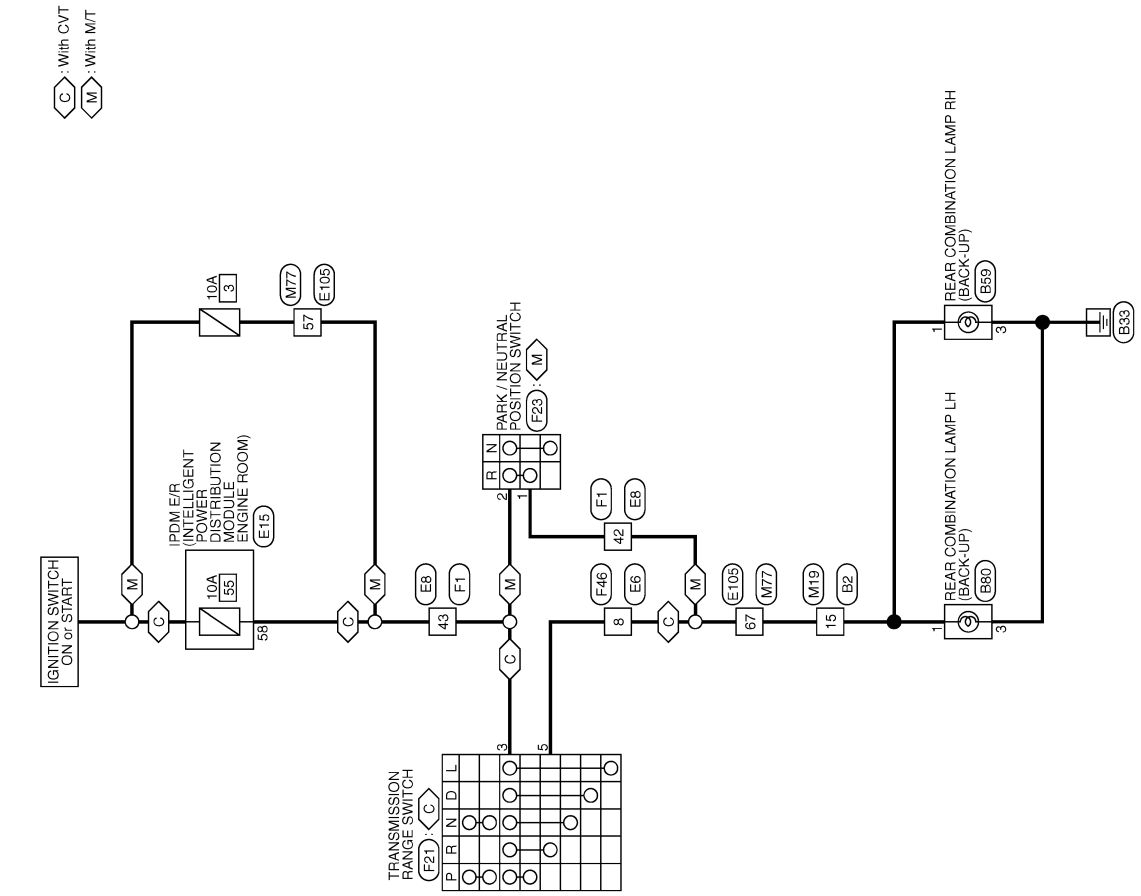

BACK-UP LAMP

2009/02/27

JCLWM3511GB

BACK-UP LAMP

Connector No.	B2
Connector Name	WIRE TO WIRE
Connector Type	NS16MW-CS

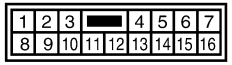

Terminal No.	Color of Wire	Signal Name [Specification]
1	V	–
5	O	–
6	R	–
7	L	–
8	L	–
9	G	–
10	V	–
11	P	–
12	LG	–
14	R	–
15	Y	–
16	B	–

Connector No.	B59
Connector Name	REAR COMBINATION LAMP RH
Connector Type	RS06FB-PR

Terminal No.	Color of Wire	Signal Name [Specification]
1	Y	–
3	B	–
4	W	–
5	R	–
6	V	–

Connector No.	B80
Connector Name	REAR COMBINATION LAMP LH
Connector Type	RS06FB-PR

Terminal No.	Color of Wire	Signal Name [Specification]
1	Y	–
3	B	–
4	P	–
5	R	–
6	GR	–

Connector No.	E6
Connector Name	WIRE TO WIRE
Connector Type	RH12FB

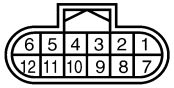

Terminal No.	Color of Wire	Signal Name [Specification]
1	L	–
2	BR	–
3	P	–
4	V	–
5	LG	–
6	R	–
7	SB	–
8	GR	–
9	LG	–
10	R	–
11	W	–

Connector No.	E8
Connector Name	WIRE TO WIRE
Connector Type	SAA36MB-RS10-SJZ2

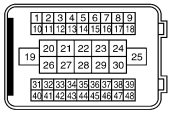

Terminal No.	Color of Wire	Signal Name [Specification]
1	BR	–
2	LG	–
3	Y	–
4	W	–
7	Y	–
8	SB	–
9	L	–
10	V	–
11	P	–
12	BR	–
13	LG	–
14	Y	–
15	SB	–
16	L	–
17	W	–
18	O	–
21	G	–
23	SB	–
24	W	–
25	BR	–
26	B	–
27	GR	–
28	P	–
29	V	–
30	G	–
31	G	–
32	O	–
33	W	–
34	Y	–
35	V	–
36	P	–
37	LG	–
39	SB	–
40	GR	–
41	O	–
42	V	–
43	R	– [With CVT]
43	LG	– [With M/T]
44	R	–
46	W	–
47	G	–
48	BR	–

Connector No.	E15
Connector Name	IPDM E/R (INTELLIGENT POWER DISTRIBUTION MODULE ENGINE ROOM)
Connector Type	NS16FW-CS

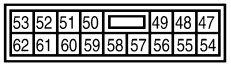

Terminal No.	Color of Wire	Signal Name [Specification]
47	BR	–
49	W	–
50	GR	–
51	R	–
52	P	–
54	GR	–
55	P	–
56	SB	–
57	G	–
58	R	– [With CVT]
58	Y	– [With M/T]
59	Y	–
60	V	–
61	W	–
62	L	–

BACK-UP LAMP

Connector No.	E105
Connector Name	WIRE TO WIRE
Connector Type	TH80MW-CS16-TM4

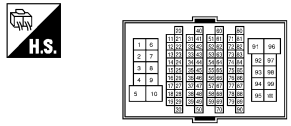

Terminal No.	Color of Wire	Signal Name [Specification]
1	V	–
2	W	–
3	SB	–
4	G	–
5	P	–
6	R	–
7	Y	–
8	O	–
9	W	–
10	SB	–
31	V	–
32	R	–
33	GR	–
34	P	–
35	Y	–
36	BR	–
39	SB	–
44	R	–
45	V	–
46	P	–
47	W	–
48	L	–
49	Y	–
50	W	–
51	BR	– [With CVT]
51	B	– [With M/T]
53	SB	–
54	W	– [With CVT]
54	O	– [With M/T]
57	LG	–
59	L	–
60	O	–
61	G	–
62	W	–
63	L	–
67	GR	– [With CVT]
67	V	– [With M/T]
69	P	–
70	SHIELD	–
71	GR	–
72	LG	–
73	P	–
74	V	–
76	Y	–
77	LG	–
78	O	–
79	G	–
80	P	–
81	L	–
82	W	–
83	BR	–
84	B	–
87	GR	–
91	W	–
92	Y	–
93	Y	–
94	R	–
95	V	–
96	LG	–
97	R	–
98	SB	–
99	G	–
100	P	–

Connector No.	F1
Connector Name	WIRE TO WIRE
Connector Type	SAA36FB-RS10-SJZ2

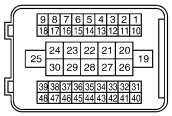

Terminal No.	Color of Wire	Signal Name [Specification]
1	SB	–
2	LG	–
3	R	–
4	Y	–
7	V	–
8	G	–
9	SB	–
10	L	–
11	Y	–
12	GR	–
13	BR	–
14	G	–
15	W	–
16	Y	–
17	P	–
18	BR	–
21	G	–
23	W	–
24	R	–
25	R	–
26	B	–
27	SB	–
28	V	–
29	V	–
30	BR	–
31	GR	–
32	BR	–
33	W	–
34	LG	–
35	V	–
36	Y	–
37	W	–
39	G	–
40	P	–
41	O	–
42	G	–
43	R	–
44	P	–
46	GR	–
47	Y	–
48	BR	–

Connector No.	F21
Connector Name	TRANSMISSION RANGE SWITCH
Connector Type	RK08FG

Terminal No.	Color of Wire	Signal Name [Specification]
1	V	–
2	BR	–
3	R	–
4	GR	–
5	SB	–
6	W	–
7	Y	–
8	G	–

Connector No.	F23
Connector Name	PARK / NEUTRAL POSITION SWITCH
Connector Type	FEA03FG

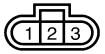

Terminal No.	Color of Wire	Signal Name [Specification]
1	G	–
2	R	–
3	L	–

Connector No.	F46
Connector Name	WIRE TO WIRE
Connector Type	RH12MB

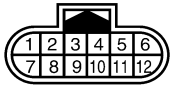

Terminal No.	Color of Wire	Signal Name [Specification]
1	G	–
2	O	–
3	L	–
4	V	–
5	BR	–
6	LG	–
7	Y	–
8	SB	–
9	W	–
10	R	–
11	G	–

BACK-UP LAMP

Connector No.	M19
Connector Name	WIRE TO WIRE
Connector Type	NS16FW-CS

H.S.

Terminal No.	Color of Wire	Signal Name [Specification]
1	V	–
5	L/R	–
6	R	–
7	L	–
8	R/B	–
9	G	–
10	V	–
11	L/W	–
12	LG	–
14	R	–
15	Y/R	–
16	B/R	–

Connector No.	M77
Connector Name	WIRE TO WIRE
Connector Type	TH80FW-CS16-TM4

H.S.

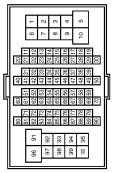

Terminal No.	Color of Wire	Signal Name [Specification]
1	B/O	–
2	R	–
3	G/R	–
4	G/B	–
5	L	–
6	L	–
7	W/R	–
8	G/W	–
9	Y/L	–
10	W	–

31	GR/L	–
32	L/B	–
33	R/Y	–
34	SB	–
35	BR	–
38	G	–
39	L/R	–
44	G/O	–
45	LG/R	–
46	GR/W	–
47	BR/Y	–
48	L/O	–
49	L/W	–
50	P/L	–
51	B/W	–
53	R/L	–
54	O	–
57	GR	–
59	V	–
60	R/W	–
61	V/W	–
62	W/L	–
63	W/B	–
67	Y/R	–
69	LG	–
70	SHIELD	–
71	P/B	–
72	R/G	–
73	R	–
74	L/Y	–
76	W/G	–
77	GR/R	–
78	O	–
79	LG	–
80	P	–
81	L	–
82	GR	–
83	G/R	–
84	B	–
87	G	–
91	R	–
92	O	–
93	Y	–
94	R/B	–
95	L/W	–
96	Y	–
97	L	–
98	BR/W	–
99	W	–
100	G/R	–

JCLWM4453GB

BASIC INSPECTION

DIAGNOSIS AND REPAIR WORKFLOW

Work Flow

INFOID:0000000005912402

OVERALL SEQUENCE

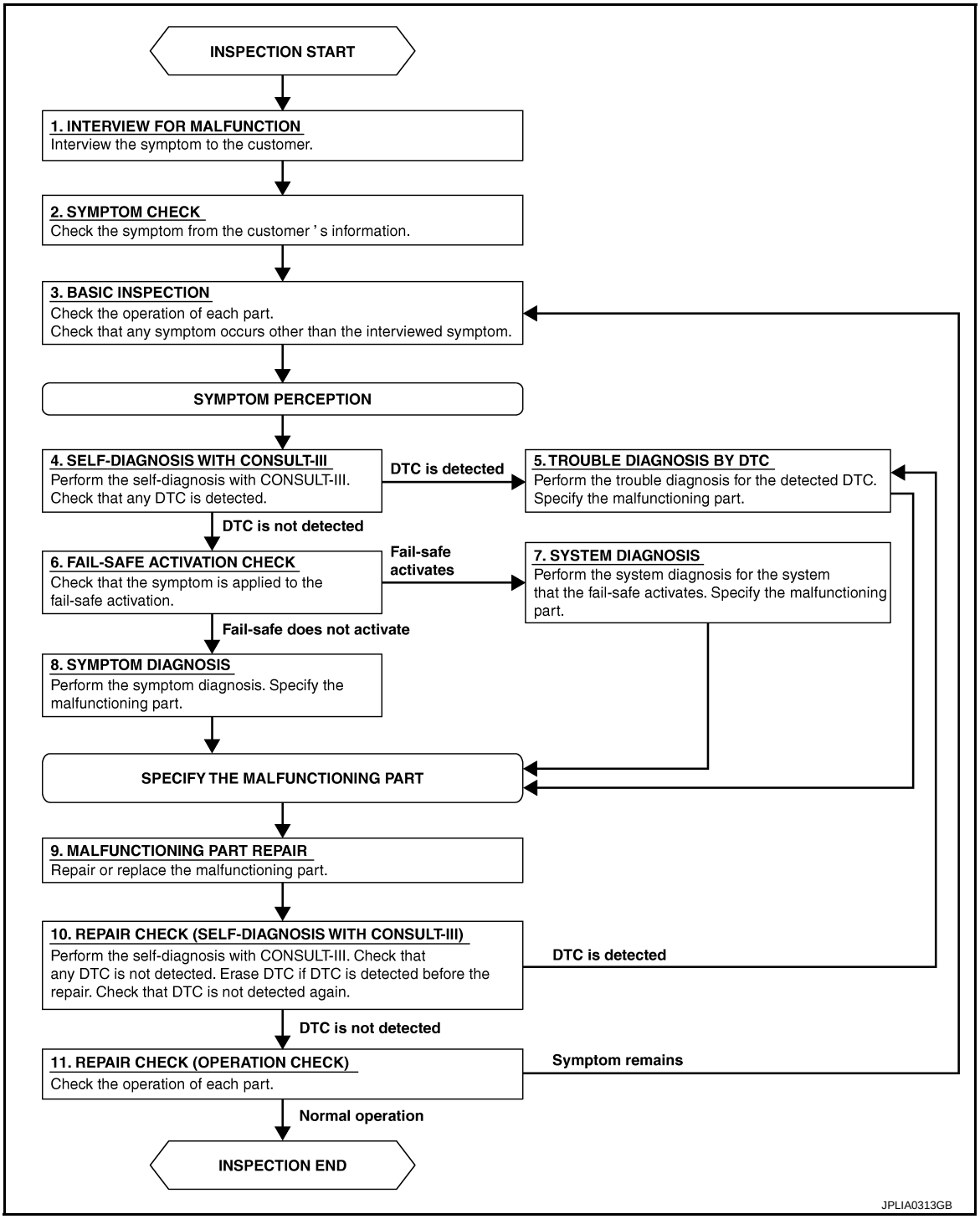

DETAILED FLOW

1. INTERVIEW FOR MALFUNCTION

Interview the symptom to the customer.

< BASIC INSPECTION >

>> GO TO 2.

2. SYMPTOM CHECK

Check the symptom from the customer's information.

>> GO TO 3.

3. BASIC INSPECTION

Check the operation of each part. Check that any symptom occurs other than the interviewed symptom.

>> GO TO 4.

4. SELF-DIAGNOSIS WITH CONSULT-III

Perform the self-diagnosis with CONSULT-III. Check that any DTC is detected.

Is any DTC detected?

YES >> GO TO 5.
NO >> GO TO 6.

5. TROUBLE DIAGNOSIS BY DTC

Perform the trouble diagnosis for the detected DTC. Specify the malfunctioning part.

>> GO TO 9.

6. FAIL-SAFE ACTIVATION CHECK

Check that the symptom is applied to the fail-safe activation.

Does the fail-safe activate?

YES >> GO TO 7.
NO >> GO TO 8.

7. SYSTEM DIAGNOSIS

Perform the system diagnosis for the system that the fail-safe activates. Specify the malfunctioning part.

>> GO TO 9.

8. SYMPTOM DIAGNOSIS

Perform the symptom diagnosis. Specify the malfunctioning part.

>> GO TO 9.

9. MALFUNCTION PART REPAIR

Repair or replace the malfunctioning part.

>> GO TO 10.

10. REPAIR CHECK (SELF-DIAGNOSIS WITH CONSULT-III)

Perform the self-diagnosis with CONSULT-III. Check that any DTC is not detected. Erase DTC if DTC is detected before the repair. Check that DTC is not detected again.

Is any DTC detected?

YES >> GO TO 5.
NO >> GO TO 11.

11. REPAIR CHECK (OPERATION CHECK)

Check the operation of each part.

Does it operate normally?

YES >> INSPECTION END
NO >> GO TO 3.

DTC/CIRCUIT DIAGNOSIS

EXTERIOR LAMP FUSE

Diagnosis Procedure

INFOID:0000000005912408

1.CHECK FUSE

Check that the following fuses are not fusing.

Unit	Location	Fuse No.	Capacity
Headlamp HI (LH)	IPDM E/R	#45	10 A
Headlamp HI (RH)	IPDM E/R	#44	10 A
Headlamp LO (LH)	IPDM E/R	#42	15 A
Headlamp LO (RH)	IPDM E/R	#41	15 A
Front fog lamp	Refer to EXL-5	#39	15 A
• Parking lamp • Tail lamp • Rear side marker lamp • License plate lamp • Each illumination	IPDM E/R	#46	10 A
Stop lamp	FUSE BLOCK (J/B)	#38	10 A
Back-up lamp	IPDM E/R	#52 (with A/T models)	10 A
		#5 (with M/T models)	10 A

Is the fuse fusing?

YES >> Repair the applicable circuit. And then replace the fuse.
NO >> The fuse is normal.

HEADLAMP (HI) CIRCUIT

Component Function Check

INFOID:0000000005912411

1. CHECK HEADLAMP (HI) OPERATION

IPDM E/R AUTO ACTIVE TEST

1. Start IPDM E/R auto active test. Refer to EXL-21, "Diagnosis Description" (With Intelligent Key) or EXL-25, "Diagnosis Description" (Without Intelligent Key).
2. Check that the headlamp switches to the high beam.

CONSULT-III ACTIVE TEST

1. Select “EXTERNAL LAMPS” of IPDM E/R active test item.
2. With operating the test items, check that the headlamp (HI) is turned ON.

Hi : Headlamp (HI) ON

Off : Headlamp (HI) OFF

NOTE:
ON/OFF is repeated 1 second each.

Is the headlamp (HI) turned ON?

YES >> Headlamp (HI) circuit is normal.
NO >> Refer to EXL-62, "Diagnosis Procedure".

Diagnosis Procedure

INFOID:0000000005912412

1. CHECK HEADLAMP (HI) OUTPUT VOLTAGE

CONSULT-III ACTIVE TEST

1. Turn the ignition switch OFF.
2. Disconnect the headlamp connector.
3. Turn the ignition switch ON.
4. Select “EXTERNAL LAMPS” of IPDM E/R active test item.
5. With operating the test items, check the voltage between the IPDM E/R harness connector and the ground.

Terminals				Test item	Voltage (Approx.)
(+)			(–)		
IPDM E/R			Ground	EXTERNAL LAMPS	
Connector		Terminal			
RH	E14	63		Hi	Battery voltage
				Off	0 V
LH		61		Hi	Battery voltage
				Off	0 V

Is the measurement value normal?

YES >> GO TO 2.
NO >> GO TO 3.

2. CHECK HEADLAMP (HI) OPEN CIRCUIT

1. Turn the ignition switch OFF.
2. Disconnect the IPDM E/R connector.
3. Check continuity between the IPDM E/R harness connector and the headlamp harness connector.

IPDM E/R			Headlamp		Continuity
Connector		Terminal	Connector	Terminal	
RH	E14	63	E45	1	Existed
LH		61	E26	1	

Does continuity exist?

YES >> GO TO 5.
NO >> Repair the harnesses or connectors.

3. CHECK HEADLAMP (HI) FUSE

1. Turn the ignition switch OFF.
2. Check that the following fuses are not fusing.

Unit	Location	Fuse No.	Capacity
Headlamp HI (RH)	IPDM E/R	#44	10 A
Headlamp HI (LH)	IPDM E/R	#45	10 A

Is the fuse fusing?

YES >> GO TO 4.
NO >> Replace IPDM E/R. Refer to PCS-28, "Removal and Installation".

4. CHECK HEADLAMP HIGH (HI) SHORT CIRCUIT

1. Disconnect the IPDM E/R connector.
2. Check continuity between the IPDM E/R harness connector terminal and the ground.

IPDM E/R			Ground	Continuity
Connector		Terminal		
RH	E14	63		Not existed
LH		61		

Does continuity exist?

YES >> Repair the harnesses or connectors. And then replace the fuse.
NO >> Replace the fuse. (Replace IPDM E/R if the fuse is fusing again.)

5. CHECK HEADLAMP (HI) GROUND OPEN CIRCUIT

Check continuity between the headlamp harness connector and the ground.

Headlamp			Ground	Continuity
Connector		Terminal		
RH	E45	2		Existed
LH	E26	2		

Does continuity exist?

YES >> Replace the headlamp (HI) bulb.
NO >> Repair the harnesses or connectors.

HEADLAMP (LO) CIRCUIT

Component Function Check

INFOID:0000000005912413

1. CHECK HEADLAMP (LO) OPERATION

IPDM E/R AUTO ACTIVE TEST

1. Start IPDM E/R auto active test. Refer to EXL-21, "Diagnosis Description" (With Intelligent Key) or EXL-25, "Diagnosis Description" (Without Intelligent Key).
2. Check that the headlamp is turned ON.

CONSULT-III ACTIVE TEST

1. Select “EXTERNAL LAMPS” of IPDM E/R active test item.
2. With operating the test items, check that the headlamp (LO) is turned ON.

Lo : Headlamp (LO) ON

Off : Headlamp (LO) OFF

Is the headlamp (LO) turned ON?

YES >> Headlamp (LO) is normal.
NO >> Refer to EXL-64, "Diagnosis Procedure".

Diagnosis Procedure

INFOID:0000000005912415

1. CHECK HEADLAMP (LO) OUTPUT VOLTAGE

CONSULT-III ACTIVE TEST

1. Turn the ignition switch OFF.
2. Disconnect the headlamp connector.
3. Turn the ignition switch ON.
4. Select “EXTERNAL LAMPS” of IPDM E/R active test item.
5. With operating the test items, check the voltage between the IPDM E/R harness connector and the ground.

Terminals				Test item	Voltage (Approx.)
(+)			(–)		
IPDM E/R				EXTERNAL LAMPS	
Connector		Terminal			
RH	E12	40	Ground	Lo	Battery voltage
				Off	0 V
LH		38		Lo	Battery voltage
				Off	0 V

Is the measurement value normal?

YES >> GO TO 2.
NO >> GO TO 3.

2. CHECK HEADLAMP (LO) OPEN CIRCUIT

1. Turn the ignition switch OFF.
2. Disconnect IPDM E/R connector.
3. Check continuity between the IPDM E/R harness connector and the headlamp harness connector.

IPDM E/R			Headlamp		Continuity
Connector		Terminal	Connector	Terminal	
RH	E12	40	E45	3	Existed
LH		38	E26	3	

Does continuity exist?

YES >> GO TO 5.
NO >> Repair the harnesses or connectors.

3. CHECK HEADLAMP (LO) FUSE

1. Turn the ignition switch OFF.
2. Check that the following fuses are not fusing.

Unit	Lotion	Fuse No.	Capacity
Headlamp LO (RH)	IPDM E/R	#41	15 A
Headlamp LO (LH)	IPDM E/R	#42	15 A

Is the fuse fusing?

YES >> GO TO 4.
NO >> Replace IPDM E/R. Refer to PCS-28, "Removal and Installation".

4. CHECK HEADLAMP (LO) SHORT CIRCUIT

1. Disconnect the IPDM E/R connector.
2. Check continuity between the IPDM E/R harness connector and the ground.

IPDM E/R			Ground	Continuity
Connector		Terminal		
RH	E12	40		Not existed
LH		38		

Does continuity exist?

YES >> Repair the harnesses or connectors. And then replace the fuse.
NO >> Replace the fuse. (Replace IPDM E/R if the fuse is fusing again.)

5. CHECK HEADLAMP (LO) GROUND OPEN CIRCUIT

Check continuity between the headlamp harness connector and the ground.

Headlamp			Ground	Continuity
Connector		Terminal		
RH	E45	2		Existed
LH	E26	2		

Does continuity exist?

YES >> Replace the headlamp (LO) bulb. (Bulb socket is abnormally.)
NO >> Repair the harnesses or connectors.

FRONT FOG LAMP CIRCUIT

Component Function Check

INFOID:0000000005912416

1. CHECK FRONT FOG LAMP OPERATION

IPDM E/R AUTO ACTIVE TEST
1. Activate IPDM E/R auto active test. Refer to PCS-11, "Diagnosis Description".
2. Check that the front fog lamp is turned ON.

CONSULT-III ACTIVE TEST
1. Select “EXTERNAL LAMPS” of IPDM E/R active test item.
2. With operating the test items, check that the front fog lamp is turned ON.

Fog : Front fog lamp ON
Off : Front fog lamp OFF

Is the front fog lamp turned ON?

YES >> Front fog lamp circuit is normal.
NO >> Refer to EXL-66, "Diagnosis Procedure".

Diagnosis Procedure

INFOID:0000000005912417

1. CHECK FRONT FOG LAMP INPUT SIGNAL

CONSULT-III ACTIVE TEST
1. Disconnect the front fog lamp connector.
2. Turn the ignition switch ON.
3. Select “EXTERNAL LAMPS” of IPDM E/R active test item.
4. With operating the test items, check the voltage between the front fog lamp harness connector and the ground.

Terminals			Test item	Voltage (Approx.)
(+)		(–)		
Front fog lamp		Ground	EXTERNAL LAMPS	
Connector	Terminal			
E30	1		Fog	Battery voltage
			Off	0 V
E48			Fog	Battery voltage
			Off	0 V

Is the inspection result normal?

YES >> GO TO 2.
NO >> GO TO 3.

2. CHECK FRONT FOG LAMP GROUND CIRCUIT

1. Turn the ignition switch OFF.
2. Check continuity between the front fog lamp relay harness connector and ground.

Front fog lamp		Ground	Continuity
Connector	Terminal		
E30	1		Existed
E48	1		

Is the inspection result normal?

YES >> Replace the bulb.
NO >> Repair the harnesses or connectors.

3. CHECK FRONT FOG LAMP OPEN CIRCUIT

1. Turn the ignition switch OFF.
2. Disconnect front fog lamp relay connector.
3. Check continuity between the front fog lamp relay harness connector and the front fog lamp harness connector.

Front fog lamp relay		Front fog lamp		Continuity
Connector	Terminal	Connector	Terminal	
E3	3	E30	1	Existed
		E48	1	

Is the inspection result normal?

YES >> Replace front fog lamp relay.
NO >> Repair the harnesses or connectors.

PARKING LAMP CIRCUIT

Component Function Check

INFOID:0000000005912422

1. CHECK PARKING LAMP OPERATION

IPDM E/R AUTO ACTIVE TEST
1. Activate IPDM E/R auto active test. Refer to PCS-11, "Diagnosis Description".
2. Check that the parking lamp is turned ON.

CONSULT-III ACTIVE TEST
1. Select “EXTERNAL LAMPS” of IPDM E/R active test item.
2. With operating the test items, check that the parking lamp is turned ON.

TAIL : Parking lamp ON
Off : Parking lamp OFF

Is the parking lamp turned ON?

YES >> Parking lamp circuit is normal.
NO >> Refer to EXL-68, "Diagnosis Procedure".

Diagnosis Procedure

INFOID:0000000005912423

1. CHECK PARKING LAMP FUSE

1. Turn the ignition switch OFF.
2. Check that the following fuses are not fusing.

Unit	Location	Fuse No.	Capacity
• Parking lamp • License plate lamp • Tail lamp	IPDM E/R	#46	10 A

Is the fuse fusing?

YES >> GO TO 2.
NO >> GO TO 3.

2. CHECK PARKING LAMP SHORT CIRCUIT

1. Disconnect IPDM E/R, parking, license plate and tail lamps connectors.
2. Check continuity between the IPDM E/R harness connector and the ground.

IPDM E/R		Ground	Continuity
Connector	Terminal		
E14	59		Not existed

Does continuity exist?

YES >> Repair the harnesses or connectors. And then replace the fuse.
NO >> Replace the fuse. (Replace IPDM E/R if fusing is found again.)

3. CHECK PARKING LAMP BULB

Check the applicable lamp bulb.

Is the bulb normal?

YES >> GO TO 4.
NO >> Replace the bulb.

4. CHECK PARKING LAMP OUTPUT VOLTAGE

CONSULT-III ACTIVE TEST
1. Disconnect the parking lamp connector.
2. Connect the IPDM E/Rconnector.
3. Turn the ignition switch ON.
4. Select “EXTERNAL LAMPS” of IPDM E/R active test item.

5. With operating the test items, check the voltage between the IPDM E/R harness connector and the ground.

Terminals			Test item	Voltage (Approx.)
(+)		(–)		
IPDM E/R		Ground	EXTERNAL LAMPS	
Connector	Terminal			
E14	59		TAIL	Battery voltage
			OFF	0 V

Is the measurement value normal?

YES >> GO TO 5.
NO >> Replace IPDM E/R. Refer to PCS-28, "Removal and Installation".

5. CHECK PARKING LAMP OPEN CIRCUIT

1. Turn the ignition switch OFF.
2. Disconnect IPDM E/R connector.
3. Check continuity between the IPDM E/R harness connector and the parking lamp harness connector.

IPDM E/R			Parking lamp		Continuity
Connector		Terminal	Connector	Terminal	
RH	E14	59	E43	1	Existed
LH			E24	1	

Does continuity exist?

YES >> GO TO 6.
NO >> Repair the harnesses or connectors.

6. CHECK PARKING LAMP GROUND OPEN CIRCUIT

Check continuity between the parking lamp harness connector and the ground.

Parking lamp			Ground	Continuity
Connector		Terminal		
RH	E43	2		Existed
LH	E24	2		

Does continuity exist?

YES >> Replace the front combination lamp.
NO >> Repair the harnesses or connectors.

TURN SIGNAL LAMP CIRCUIT

Component Function Check

INFOID:0000000005912425

1.CHECK TURN SIGNAL LAMP

CONSULT-III ACTIVE TEST
1. Select “FLASHER” of BCM (FLASHER) active test item.
2. With operating the test items, check that the turn signal lamps blink.

LH : Turn signal lamps (LH) blink
RH : Turn signal lamps (RH) blink
Off : Turn signal lamps OFF

Does the turn signal lamps blink?

YES >> Turn signal lamp circuit is normal.
NO >> Refer to EXL-70, "Diagnosis Procedure".

Diagnosis Procedure

INFOID:0000000005912426

1.CHECK TURN SIGNAL LAMP BULB

Check the applicable lamp bulb.

Is the bulb normal?

YES >> GO TO 2.
NO >> Replace the bulb.

2.CHECK TURN SIGNAL LAMP OPEN CIRCUIT

1. Turn the ignition switch OFF.
2. Disconnect BCM connector.
3. Disconnect the front turn signal lamp connector, side turn signal lamp connector, or the rear combination lamp connector.
4. Check continuity between the BCM harness connector and the front turn signal lamp, side turn signal lamp or the rear combination lamp harness connector.

Front turn signal lamp

BCM			Front turn signal lamp		Continuity
Connector		Terminal	Connector	Terminal	
RH	M67*1	61	E46	1	Existed
LH		60	E27		
RH	M70*2	61	E46	1	Existed
LH		60	E27		

Side turn signal lamp

BCM			Side turn signal lamp		Continuity
Connector		Terminal	Connector	Terminal	
RH	M67*1	61	E40	1	Existed
LH		60	E23		
RH	M70*2	61	E40	1	Existed
LH		60	E23		

Rear turn signal lamp

BCM			Rear combination lamp		Continuity
Connector		Terminal	Connector	Terminal	
RH	M67*1	61	B59	4	Existed
LH		60	B80		

BCM			Rear combination lamp		Continuity
Connector		Terminal	Connector	Terminal	
RH	M70*2	61	B59	4	Existed
LH		60	B80		

*1: Without Intelligent Key
*2: With Intelligent Key

Does continuity exist?

YES >> GO TO 3.
NO >> Repair the harnesses or connectors.

3. CHECK TURN SIGNAL LAMP SHORT CIRCUIT

Check continuity between the BCM harness connector and the ground.

BCM			Ground	Continuity
Connector		Terminal		
RH	M67*1	61	Ground	Not existed
LH		60		
RH	M70*2	61		
LH		60		

*1: Without Intelligent Key
*2: With Intelligent Key

Does continuity exist?

YES >> Repair the harnesses or connectors.
NO >> GO TO 4.

4. CHECK TURN SIGNAL LAMP GROUND OPEN CIRCUIT

Check continuity between the BCM harness connector and the front turn signal lamp, side turn signal lamp or the rear combination lamp and the ground.

Front turn signal lamp

Front turn signal lamp			Ground	Continuity
Connector		Terminal		
RH	E46	2	Ground	Existed
LH	E27			

Side turn signal lamp

Side turn signal lamp			Ground	Continuity
Connector		Terminal		
RH	E40	2	Ground	Existed
LH	E23			

Rear turn signal lamp

Rear combination lamp			Ground	Continuity
Connector		Terminal		
RH	B59	3	Ground	Existed
LH	B80			

Does continuity exist?

YES >> Replace BCM. Refer to BCS-57, "Removal and Installation" (With Intelligent Key) or BCS-99, "Removal and Installation" (Without Intelligent Key).
NO >> Repair the harnesses or connectors.

HAZARD SWITCH

Component Function Check

INFOID:0000000005912430

1. CHECK HAZARD SWITCH SIGNAL BY CONSULT-III

CONSULT-III DATA MONITOR
1. Turn the ignition switch ON.
2. Select “HAZARD SW” of BCM (FLASHER) data monitor item.
3. With operating the hazard switch, check the monitor status.

Monitor item	Condition		Monitor status
HAZARD SW	Hazard switch	ON	On
		OFF	Off

Is the item status normal?

YES >> Hazard switch circuit is normal.
NO >> Refer to EXL-72, "Diagnosis Procedure".

Diagnosis Procedure

INFOID:0000000005912431

1. CHECK HAZARD SWITCH SIGNAL INPUT

With operating the hazard switch, check the voltage between the BCM harness connector and the ground.

Terminals			Condition	Voltage (Approx.)
(+)		(–)		
BCM			Hazard switch	
Connector	Terminal			
M65*1	29	Ground	ON	0 V
			OFF	12 V
M68*2			ON	0 V
			OFF	12 V

*1: Without Intelligent Key
*2: With Intelligent Key

Is the measurement value normal?

YES >> Replace BCM. Refer to BCS-57, "Removal and Installation" (With Intelligent Key) or BCS-99, "Removal and Installation" (Without Intelligent Key).
NO >> GO TO 2.

2. CHECK HAZARD SWITCH SIGNAL OPEN CIRCUIT

1. Turn the ignition switch OFF.
2. Disconnect the hazard switch connector and BCM connector.
3. Check continuity between the hazard switch harness connector and the BCM harness connector.

Hazard switch		BCM		Continuity
Connector	Terminal	Connector	Terminal	
M45	2	M65*1	29	Existed
		M68*2		

*1: Without Intelligent Key
*2: With Intelligent Key

Does continuity exist?

YES >> GO TO 3.
NO >> Repair the harnesses or connectors.

3. CHECK HAZARD SWITCH SIGNAL SHORT CIRCUIT

Check continuity between the hazard switch harness connector and the ground.

Hazard switch		Ground	Continuity
Connector	Terminal		
M45	2		Not existed

Does continuity exist?

YES >> Repair the harnesses or connectors.
NO >> GO TO 4.

4. CHECK HAZARD SWITCH GROUND OPEN CIRCUIT

Check continuity between the hazard switch harness connector and the ground.

Hazard switch		Ground	Continuity
Connector	Terminal		
M45	1		Existed

Does continuity exist?

YES >> Replace the hazard switch.
NO >> Repair the harnesses or connectors.

TAIL LAMP CIRCUIT

Component Function Check

INFOID:0000000005912432

NOTE:
Check the parking lamp circuit if the parking lamp and the tail lamp are not turned ON.

1.CHECK TAIL LAMP OPERATION

IPDM E/R AUTO ACTIVE TEST
1. Activate IPDM E/R auto active test. Refer to PCS-11, "Diagnosis Description".
2. Check that the tail lamp is turned ON.

CONSULT-III ACTIVE TEST
1. Select “EXTERNAL LAMPS” of IPDM E/R active test item.
2. With operating the test items, check that the tail lamp is turned ON.

TAIL : Tail lamp ON
Off : Tail lamp OFF

Is the tail lamp turned ON?

YES >> Tail lamp circuit is normal.
NO >> Refer to EXL-74, "Diagnosis Procedure".

Diagnosis Procedure

INFOID:0000000005912433

1.CHECK TAIL LAMP BULB

Check the applicable lamp bulb.

Is the measurement value normal?

YES >> GO TO 2.
NO >> Replace the bulb.

2.CHECK TAIL LAMP OPEN CIRCUIT

1. Turn the ignition switch OFF.
2. Disconnect IPDM E/R connector.
3. Check continuity between the IPDM E/R harness connector and the rear combination lamp harness connector.

IPDM E/R			Rear combination lamp		Continuity
Connector		Terminal	Connector	Terminal	
RH	E14	59	B59	6	Existed
LH			B80		

Does continuity exist?

YES >> GO TO 3.
NO >> Repair the harnesses or connectors.

3.CHECK TAIL LAMP GROUND OPEN CIRCUIT

Check continuity between the rear combination lamp harness connector and the ground.

Rear combination lamp			Ground	Continuity
Connector		Terminal		
RH	B59	3		Existed
LH	B80			

Does continuity exist?

YES >> Replace the rear combination lamp.
NO >> Repair the harnesses or connectors.

LICENSE PLATE LAMP CIRCUIT

Component Function Check

INFOID:0000000005912436

NOTE:
Check the parking lamp circuit if the parking lamp and the license plate lamp are not turned ON.

1. CHECK LICENSE PLATE LAMP OPERATION

IPDM E/R AUTO ACTIVE TEST
1. Activate IPDM E/R auto active test. Refer to PCS-11, "Diagnosis Description".
2. Check that the license plate lamp is turned ON.

CONSULT-III ACTIVE TEST
1. Select “EXTERNAL LAMPS” of IPDM E/R active test item.
2. With operating the lighting switch, check that the license plate lamp is turned ON.

TAIL : License plate lamp ON
Off : License plate lamp OFF

Is the license plate lamp turned ON?

YES >> License plate lamp circuit is normal.
NO >> Refer to EXL-75, "Diagnosis Procedure".

Diagnosis Procedure

INFOID:0000000005912437

1. CHECK LICENSE PLATE LAMP BULB

Check the applicable lamp bulb.

Is the bulb normal?

YES >> GO TO 2.
NO >> Replace the bulb.

2. CHECK LICENSE PLATE LAMP OPEN CIRCUIT

1. Turn the ignition switch OFF.
2. Disconnect IPDM E/R connector and the license plate lamp connector.
3. Check continuity between the IPDM E/R harness connector and the license plate lamp harness connector.

IPDM E/R		License plate lamp		Continuity
Connector	Terminal	Connector	Terminal	
E14	59	B46	1	Existed

Does continuity exist?

YES >> GO TO 3.
NO >> Repair the harnesses or connectors.

3. CHECK LICENSE PLATE LAMP GROUND OPEN CIRCUIT

Check continuity between the license plate lamp harness connector and the ground.

License plate lamp		Ground	Continuity
Connector	Terminal		
B46	2		Existed

Does continuity exist?

YES >> Replace the license plate lamp.
NO >> Repair the harnesses or connectors.

FRONT FOG LAMP RELAY

Diagnosis Procedure

INFOID:0000000006052964

1. CHECK FUSE

1. Turn ignition switch OFF.
2. Check 15A fuse [No.39, located in fuse block (J/B)].

Is the inspection result normal?

YES >> GO TO 2.
NO >> Replace the blown fuse after repairing the affected circuit if a fuse is blown.

2. CHECK FRONT FOG LAMP RELAY CIRCUIT 1

1. Disconnect IPDM E/R connector.
2. Check voltage between IPDM E/R harness connector and ground.

(+)		(–)	Condition		Voltage (Approx.)
IPDM E/R					
Connector	Terminal				
E10	21	Ground	Front fog lamp switch (With lighting switch 1ST)	ON	0
				OFF	Battery voltage

Is the inspection result normal?

YES >> GO TO 5.
NO >> GO TO 3.

3. CHECK FRONT FOG LAMP RELAY CIRCUIT 2

1. Disconnect front fog lamp relay connector.
2. Check continuity between IPDM E/R harness connector and front fog lamp relay harness connector.

IPDM E/R		Front fog lamp relay		Continuity
Connector	Terminal	Connector	Terminal	
E10	21	E3	1	Existed

3. Check continuity between BCM harness connector and ground.

BCM		Ground	Continuity
Connector	Terminal		
E10	21		Not existed

Is the inspection result normal?

YES >> GO TO 4.
NO >> Repair or replace harness.

4. CHECK FRONT FOG LAMP RELAY

1. Remove front fog lamp relay,
2. Check front fog lamp relay.

Refer to EXL-77, "Component Inspection"

Is the inspection result normal?

YES >> GO TO 5.
NO >> Replace front fog lamp relay.

5. CHECK INTERMITTENT INCIDENT

Check intermittent incident.
Refer to GI-33, "Intermittent Incident".

>> INSPECTION END

Component Inspection

INFOID:0000000006052965

1. CHECK REAR WINDOW DEFOGGER RELAY

1. Turn ignition switch OFF.
2. Remove rear window defogger relay.
3. Check continuity between rear window defogger relay terminals.

Terminal		Condition	Continuity
Rear window defogger relay			
3	5	12 V direct current supply between terminals 1 and 2	Existed
		No current supply	Not existed

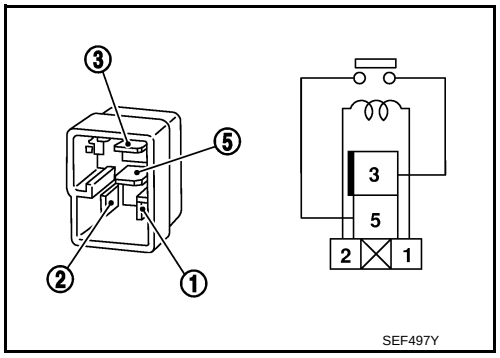

Is the inspection result normal?

YES >> INSPECTION END
NO >> Replace rear window defogger relay.

SYMPTOM DIAGNOSIS

EXTERIOR LIGHTING SYSTEM SYMPTOMS

Symptom Table

INFOID:0000000005912466

CAUTION:
Perform the self-diagnosis with CONSULT-III before the symptom diagnosis. Perform the trouble diagnosis if any DTC is detected.

Symptom		Possible cause	Inspection item
Headlamp (HI) is not turned ON.	One side	• Fuse • Halogen bulb (HI) • Harness between IPDM E/R and the headlamp • Harness between headlamp and the ground • IPDM E/R	Headlamp (HI) circuit Refer to EXL-62.
	Both sides	**Symptom diagnosis** "BOTH SIDE HEADLAMPS (HI) ARE NOT TURNED ON" Refer to EXL-80.	
High beam indicator lamp is not turned ON. [Headlamp (HI) is turned ON.]		Combination meter	• Combination meter Data monitor "HI-BEAM IND" • BCM (HEADLAMP) Active test "HEADLAMP"
Headlamp (LO) is not turned ON.	One side	• Fuse • Halogen bulb (LO) • Harness between IPDM E/R and the headlamp • Harness between headlamp and the ground • IPDM E/R	Headlamp (LO) circuit Refer to EXL-64.
	Both sides	**Symptom diagnosis** "BOTH SIDE HEADLAMPS (LO) ARE NOT TURNED ON" Refer to EXL-81.	
Headlamp is not turned OFF.	When ignition switch is turned ON.		
	When ignition switch is turned OFF.	IPDM E/R	—
Front fog lamp is not turned ON.	One side	• Front fog lamp bulb • Harness between front fog lamp relay and the front fog lamp • Front fog lamp • Front fog lamp relay	Front fog lamp circuit Refer to EXL-66.
	Both side	**Symptom diagnosis** "BOTH SIDE FRONT FOG LAMPS ARE NOT TURNED ON" Refer to EXL-83.	
Front fog lamp is not turned OFF.			
Parking lamp is not turned ON.		• Parking lamp bulb • Harness between IPDM E/R and the parking lamp • IPDM E/R	Parking lamp circuit Refer to EXL-68.
Tail lamp is not turned ON.		• Tail lamp bulb • Harness between IPDM E/R and the rear combination lamp • Rear combination lamp assembly • IPDM E/R	Tail lamp circuit Refer to EXL-74.
License plate lamp is not turned ON.		• License plate lamp bulb • Harness between IPDM E/R and the license plate lamp • License plate lamp assembly	License plate lamp circuit Refer to EXL-75.

Symptom		Possible cause	Inspection item
• Parking lamp, tail lamp and license plate lamp are not turned ON. • Parking lamp, tail lamp and license plate lamp are not turned OFF. (Each illumination is turned ON/OFF.)		**Symptom diagnosis** “PARKING, LICENSE PLATE AND TAIL LAMPS ARE NOT TURNED ON” Refer to EXL-82.	
Turn signal lamp does not blink.	Indicator lamp is normal. (Applicable side performs the high flasher activation.)	• Harness between BCM and each turn signal lamp • Turn signal lamp bulb	Turn signal circuit Refer to EXL-70.
	Indicator lamp is included.	• Combination switch • Harness between the combination switch and BCM • BCM	Combination switch Refer to BCS-56.
Turn signal indicator lamp does not blink. (Turn signal indicator lamp is normal.)	One side	Combination meter	—
	Both sides (Always)	• Turn signal indicator lamp signal - BCM • Combination meter	• Combination meter Data monitor “TURN IND” • BCM (FLASHER) Active test “FLASHER”
	Both sides (Only when activating hazard warning lamp with the ignition switch OFF.)	• Combination meter power supply and the ground circuit • Combination meter	Combination meter Power supply and the ground circuit Refer to MWI-40.
• Hazard warning lamp does not activate. • Hazard warning lamp continues activating. (Turn signal is normal.)		• Hazard switch • Harness between the hazard switch and BCM • BCM	Hazard switch Refer to EXL-72.

BOTH SIDE HEADLAMPS (HI) ARE NOT TURNED ON

Description

INFOID:0000000005912469

Both side headlamps (HI) are not turned ON when setting to the lighting switch HI or PASS.

Diagnosis Procedure

INFOID:0000000005912470

1. COMBINATION SWITCH INSPECTION

Check the combination switch. Refer to BCS-56, "Symptom Table".

Is the combination switch normal?

YES >> GO TO 2.
NO >> Repair or replace the malfunctioning part.

2. CHECK HEADLAMP (HI) REQUEST SIGNAL INPUT

CONSULT-III DATA MONITOR

1. Select “HL HI REQ” of IPDM E/R data monitor item.
2. With operating the lighting switch, check the monitor status.

Monitor item	Condition		Monitor status
HL HI REQ	Lighting switch (2ND)	HI or PASS	ON
		LO	OFF

Is the item status normal?

YES >> GO TO 3.
NO >> Replace BCM. Refer to BCS-57, "Removal and Installation".

3. HEADLAMP (HI) CIRCUIT INSPECTION

Check the headlamp (HI) circuit. Refer to EXL-62, "Component Function Check".

Is the headlamp (HI) circuit normal?

YES >> Replace IPDM E/R. Refer to PCS-28, "Removal and Installation".
NO >> Repair or replace the malfunctioning part.

BOTH SIDE HEADLAMPS (LO) ARE NOT TURNED ON

Description

INFOID:0000000005912471

Both side headlamps (LO) are not turned ON in any condition.

Diagnosis Procedure

INFOID:0000000005912472

1. CHECK COMBINATION SWITCH

Check the combination switch. Refer to BCS-56, "Symptom Table".

Is the combination switch normal?

YES >> GO TO 2.
NO >> Repair or replace the malfunctioning part.

2. CHECK HEADLAMP (LO) REQUEST SIGNAL INPUT

CONSULT-III DATA MONITOR

1. Select “HL LO REQ” of IPDM E/R data monitor item.
2. With operating the lighting switch, check the monitor status.

Monitor item	Condition		Monitor status
HL LO REQ	Lighting switch	2ND	ON
		OFF	OFF

Is the item status normal?

YES >> GO TO 3.
NO >> Replace BCM. Refer to BCS-57, "Removal and Installation" (With Intelligent Key) or BCS-99, "Removal and Installation" (Without Intelligent Key).

3. HEADLAMP (LO) CIRCUIT INSPECTION

Check the headlamp (LO) circuit. Refer to EXL-64, "Component Function Check".

Is the headlamp (LO) circuit normal?

YES >> Replace IPDM E/R.
NO >> Repair or replace the malfunctioning part.

PARKING, LICENSE PLATE AND TAIL LAMPS ARE NOT TURNED ON

Description

INFOID:0000000005912473

The parking, license plate, tail lamps and each illumination are not turned ON in any condition.

Diagnosis Procedure

INFOID:0000000005912474

1. COMBINATION SWITCH INSPECTION

Check the combination switch. Refer to BCS-56, "Symptom Table".

Is the combination switch normal?

YES >> GO TO 2.
NO >> Repair or replace the malfunctioning part.

2. CHECK TAIL LAMP RELAY REQUEST SIGNAL INPUT

CONSULT-III DATA MONITOR

1. Select “TAIL & CLR REQ” of IPDM E/R data monitor item.
2. With operating the lighting switch, check the monitor status.

Monitor item	Condition		Monitor status
TAIL & CLR REQ	Lighting switch	1ST	ON
		OFF	OFF

Is the item status normal?

YES >> GO TO 3.
NO >> Replace BCM. Refer to BCS-57, "Removal and Installation".

3. PARKING LAMP CIRCUIT INSPECTION

Check the parking lamp circuit. Refer to EXL-68, "Component Function Check".

Is the parking lamp circuit normal?

YES >> Replace IPDM E/R. Refer to PCS-28, "Removal and Installation".
NO >> Repair or replace the malfunctioning part.

BOTH SIDE FRONT FOG LAMPS ARE NOT TURNED ON

Description

INFOID:0000000005912475

The front fog lamps are not turned ON in any condition.

Diagnosis Procedure

INFOID:0000000005912476

1. CHECK FUSE

Check that the following fuse is fusing.

Unit	Location	Fuse No.	Capacity
Front fog lamp	IPDM E/R	#39	15 A

Is the fuse fusing?

YES >> Repair the applicable circuit. And then replace the fuse.
NO >> GO TO 2.

2. COMBINATION SWITCH INSPECTION

Check the combination switch. Refer to BCS-56, "Symptom Table" (With Intelligent Key) or BCS-98, "Symptom Table" (Without Intelligent Key).

Is the combination switch normal?

YES >> GO TO 3.
NO >> Repair or replace the malfunctioning part.

3. CHECK FRONT FOG LAMP REQUEST SIGNAL INPUT

CONSULT-III DATA MONITOR

1. Select “FR FOG REQ” of IPDM E/R data monitor item.
2. With operating the front fog lamp switch, check the monitor status.

Monitor item	Condition		Monitor status
FR FOG REQ	Front fog lamp switch (With lighting switch 1ST)	ON	ON
		OFF	OFF

Is the item status normal?

YES >> GO TO 4.
NO >> Replace BCM. Refer to BCS-57, "Removal and Installation" (With Intelligent Key) or BCS-99, "Removal and Installation" (Without Intelligent Key).

4. FRONT FOG LAMP RELAY CIRCUIT INSPECTION

Check the front fog lamp relay circuit. Refer to EXL-76, "Diagnosis Procedure".

Is the front fog lamp relay circuit normal?

YES >> GO TO 5.
NO >> Repair or replace the malfunctioning part.

5. FRONT FOG LAMP CIRCUIT INSPECTION

Check the front fog lamp circuit. Refer to EXL-66, "Component Function Check".

Is the front fog lamp circuit normal?

YES >> Replace IPDM E/R.
NO >> Repair or replace the malfunctioning part.

PERIODIC MAINTENANCE

HEADLAMP AIMING ADJUSTMENT

Description

INFOID:0000000006056700

PREPARATION BEFORE ADJUSTING

NOTE:

- For details, refer to the regulations in your own country.
- Perform aiming if the vehicle front body has been repaired and/or the headlamp assembly has been replaced.

Before performing aiming adjustment, check the following.

- Adjust the tire pressure to the specification.
- Fill with fuel, engine coolant and each oil.
- Maintain the unloaded vehicle condition. (Remove luggage from the passenger compartment and the luggage room.)
  NOTE:
  Do not remove the temporary tire, jack and on-vehicle tool.
- Wipe out dirt on the headlamp.
  CAUTION:
  Never use organic solvent (thinner, gasoline etc.)
- Ride alone on the driver seat.
- Headlamp aiming switch sets to “0”.

AIMING ADJUSTMENT SCREW

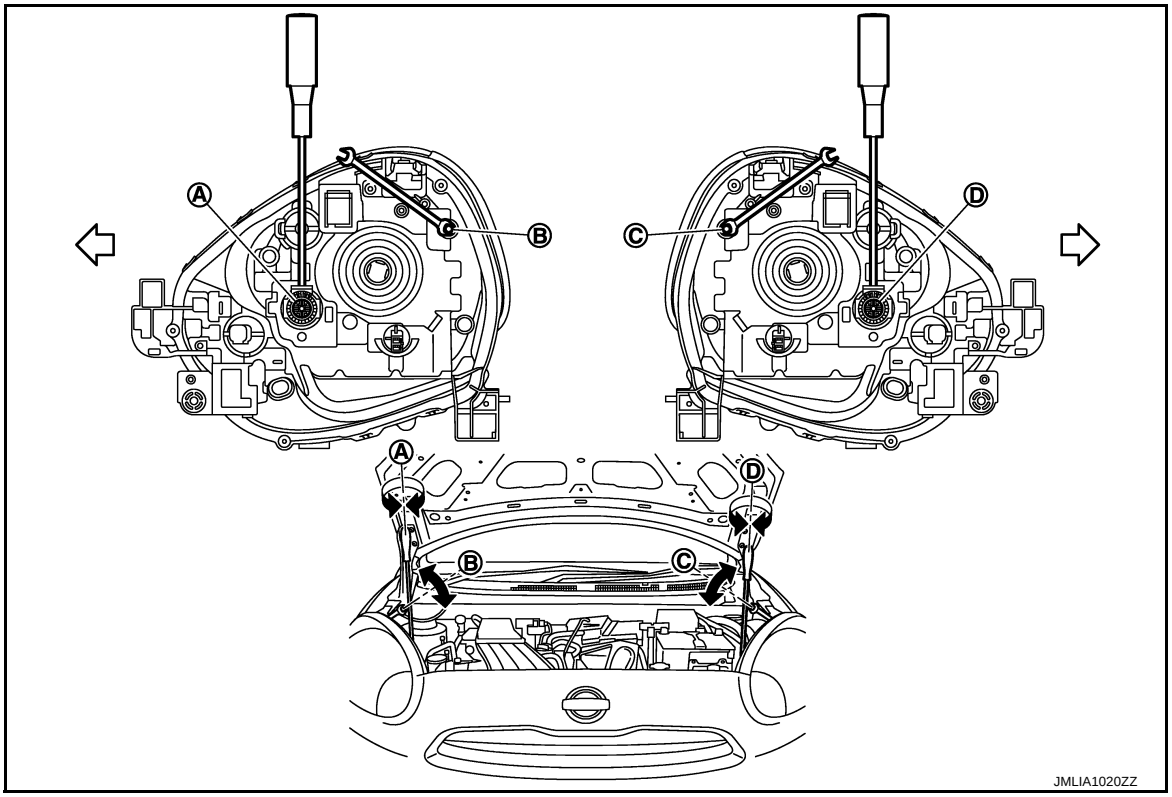

A. Headlamp RH (UP/DOWN) adjustment screw
B. Headlamp RH (INSIDE/OUTSIDE) adjustment screw
C. Headlamp LH (INSIDE/OUTSIDE) adjustment screw
D. Headlamp LH (UP/DOWN) adjustment screw

⇦: Vehicle center

Adjustment screw		Screw driver rotation	Facing direction
A	Headlamp RH (UP/DOWN)	Clockwise	UP
		Counterclockwise	DOWN
B	Headlamp RH (INSIDE/OUTSIDE)	Clockwise	INSIDE
		Counterclockwise	OUTSIDE
C	Headlamp LH (INSIDE/OUTSIDE)	Clockwise	INSIDE
		Counterclockwise	OUTSIDE
D	Headlamp LH (UP/DOWN)	Clockwise	UP
		Counterclockwise	DOWN

Aiming Adjustment Procedure

INFOID:0000000006056701

1. Place the screen.
   NOTE:
   - Stop the vehicle at the perpendicular angle to the wall.
   - Set the screen so that it is perpendicular to a level load surface.
2. Face the vehicle squarely toward the screen and make the distance between the headlamp bulb center and the screen 10 m (32.8 ft).
3. Start the engine and illuminate the headlamp (LO).
   NOTE:
   Block light from the headlamp that is not being adjusted with a thick fabric or another object, so that it does not reach the adjustment screen.
   CAUTION:
   Never cover lens surface with tape, etc. because it is made from plastic.
4. Use the aiming adjustment screw to adjust the elbow point projected by the low beams on the screen, so that it is within the aiming adjustment area.
   Low beam distribution on the screen

A. Aiming adjustment area
B. Elbow point
C. Headlamp center
H. Horizontal center line of headlamp
V. Vertical center line of headlamp

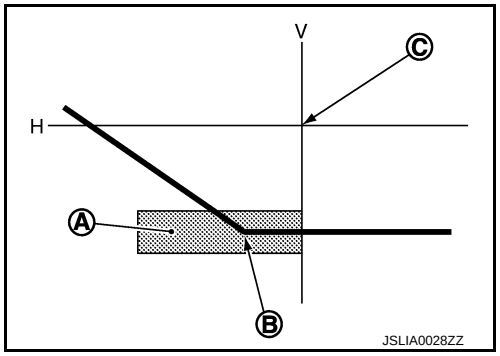

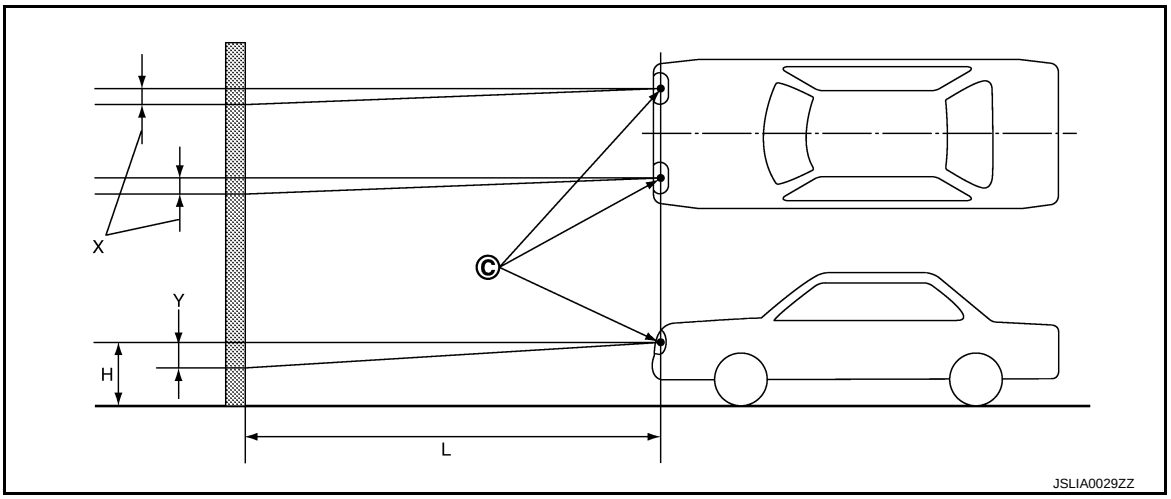

C. Vertical center line of headlamp
H. Horizontal center line of headlamp
L. Distance from headlamp center to screen
X. Aiming adjustment area (lateral)
Y. Aiming adjustment area (Vertical)

Distance from headlamp center to screen (L) : 10 m (32.8 ft)

Unit: mm (in)

Aiming adjustment area		
Vertical direction (Y) (Lower side from headlamp center height)		Lateral direction (X) (Right side from headlamp center line)
Highest light axis	100 (3.94)	0 - 100 (0 - 3.94)
Target light axis	100 (3.94)	
Lowest light axis	150 (5.91)	

FRONT FOG LAMP AIMING ADJUSTMENT

Description

INFOID:0000000006056702

PREPARATION BEFORE ADJUSTING

NOTE:
- For details, refer to the regulations in your own country.

Before performing aiming adjustment, check the following.
- Adjust the tire pressure to the specification.
- Fill with fuel, engine coolant and each oil.
- Maintain the unloaded vehicle condition. (Remove luggage from the passenger compartment and the luggage room.)
  NOTE:
  Do not remove the temporary tire, jack and on-vehicle tool.
- Wipe out dirt on the headlamp.
  CAUTION:
  Never use organic solvent (thinner, gasoline etc.)
- Ride alone on the driver seat.

AIMING ADJUSTMENT SCREW

- Turn the aiming adjusting screw for adjustment.

  A: UP

  B: DOWN

- For the position and direction of the adjusting screw, refer to the figure.
  NOTE:
  A screwdriver or hexagonal wrench [6 mm (0.24 in)] can be used for adjustment.

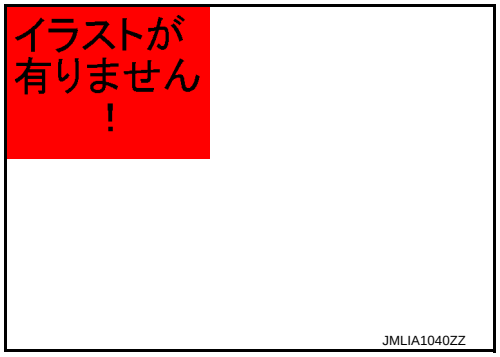

Aiming Adjustment Procedure

INFOID:0000000006056703

1. Place the screen.
   NOTE:
   - Stop the vehicle facing the wall.
   - Place the board on a plain road vertically.
2. Face the vehicle with the screen. Maintain 10 m (32.8 ft) between the front fog lamp center and the screen.
3. Start the engine. Illuminate the front fog lamp.
   CAUTION:
   Never cover the lens surface with a tape etc. The lens is made of resin.
   NOTE:
   Shut off the headlamp light with the board to prevent from illuminating the adjustment screen.
4. Adjust the cutoff line height (A) with the aiming adjustment screw so that the distance (X) between the horizontal center line of front fog lamp (H) and (A) becomes 200 mm (7.87 in).

Front fog lamp light distribution on the screen

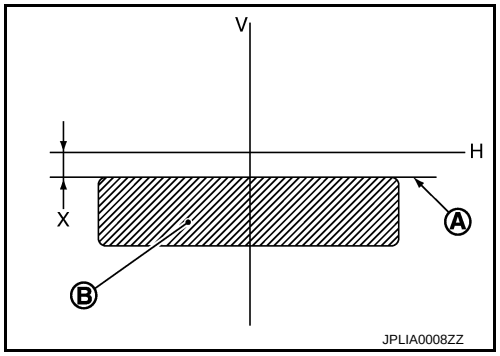

A : Cutoff line
B : High illuminance area
H : Horizontal center line of front fog lamp
V : Vertical center line of front fog lamp
X : Cutoff line height

REMOVAL AND INSTALLATION

FRONT COMBINATION LAMP

Exploded View

INFOID:0000000005912481

REMOVAL

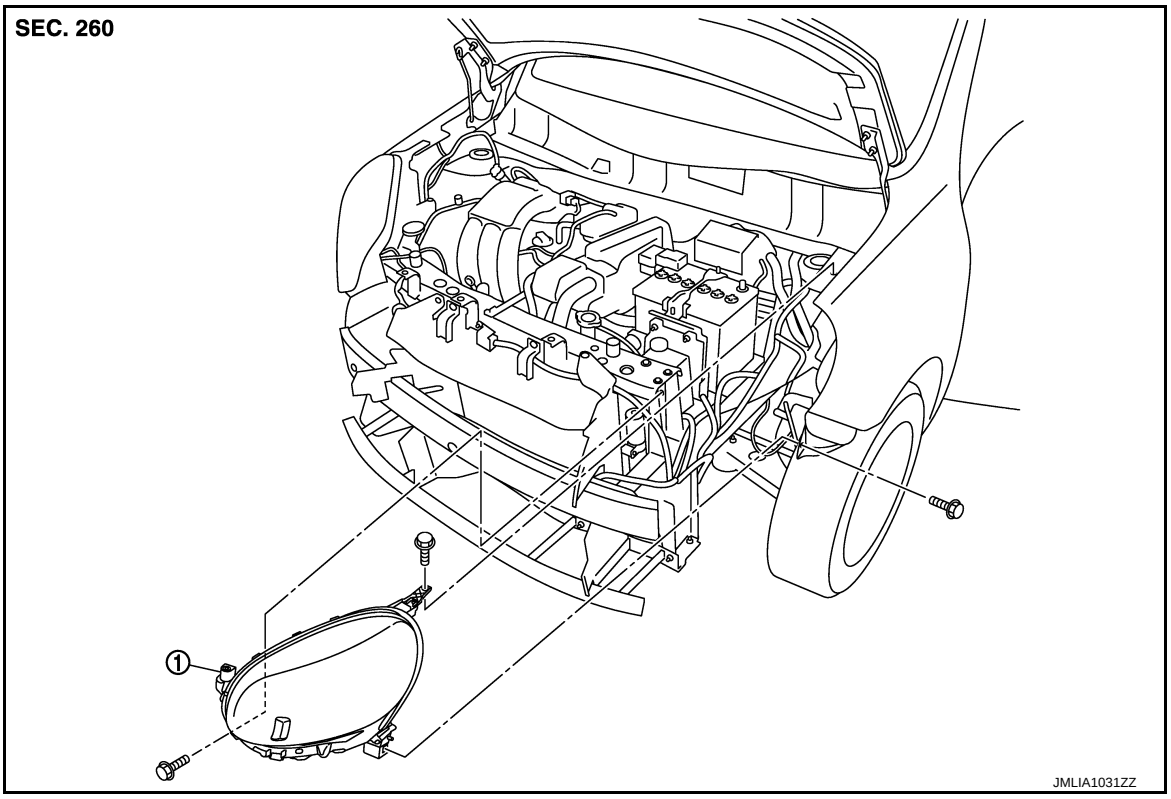

1. Front combination lamp

A. Air duct clip(only left)

DISASSEMBLY

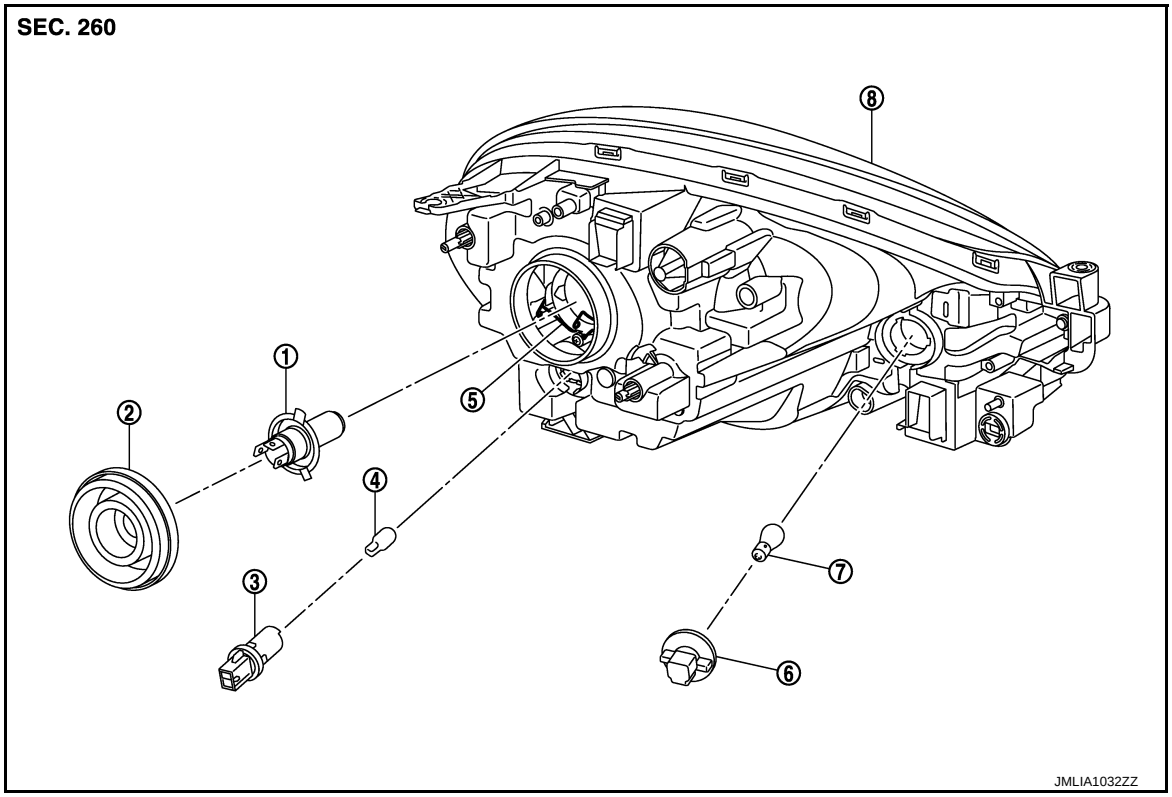

1. Halogen bulb
2. Back cover
3. Parking lamp bulb socket
4. Parking lamp bulb
5. Retaining spring
6. Front turn signal lamp bulb socket
7. Front turn signal lamp bulb
8. Headlamp housing assembly

Removal and Installation

INFOID:0000000005912482

REMOVAL

CAUTION:

Disconnect the battery negative terminal or the fuse.

1. Remove front bumper fascia. Refer to XX-XX, "*****".
2. Remove the headlamp mounting bolts.
3. Pull out the headlamp assembly forward the vehicle.
4. Disconnect the connectors, and then remove headlamp assembly.

INSTALLATION

Note the following item, and then install in the reverse order of removal.

NOTE:

After installation, perform aiming adjustment. Refer to XX-XX, "*****".

Replacement

INFOID:0000000005912483

CAUTION:

- **Disconnect the battery negative terminal or the fuse.**
- **After installing the bulb, install the resin cap and the bulb socket securely for watertightness.**
- **Never touch the glass of bulb directly by hand. Keep grease and other oily matters away from it.**
- **Never touch bulb by hand while it is lit or right after being turned off.**
- **Never leave bulb out of lamp reflector for a long time because dust, moisture smoke, etc. may affect the performance of lamp. When replacing bulb, be sure to replace it with new one.**

HEADLAMP BULB

1. Disconnect the headlamp bulb connector.
2. Remove the back cover.

3. Remove the retaining spring lock. And remove the bulb from the headlamp housing assembly.

PARKING LAMP BULB

1. Rotate the bulb socket counterclockwise and unlock it.
2. Remove the bulb from the bulb socket.

FRONT TURN SIGNAL LAMP BULB

1. Rotate the bulb socket counterclockwise and unlock it.
2. Remove the bulb from the bulb socket.

Disassembly and Assembly

INFOID:0000000005912484

DISASSEMBLY

1. Remove the back cover.
2. Remove the retaining spring lock, and then remove the bulb from the headlamp housing assembly.
3. Rotate the parking lamp bulb socket counterclockwise and unlock it.
4. Remove the bulb from the parking lamp bulb socket.
5. Rotate the front turn signal lamp bulb socket counterclockwise and unlock it.
6. Remove the bulb from the front turn signal lamp bulb socket.

ASSEMBLY

Note the following item, and then assemble in the reverse order of disassembly.

CAUTION:

After installing the bulb, install the resin cap and the bulb socket securely for watertightness.

FRONT FOG LAMP

Exploded View

INFOID:0000000005912485

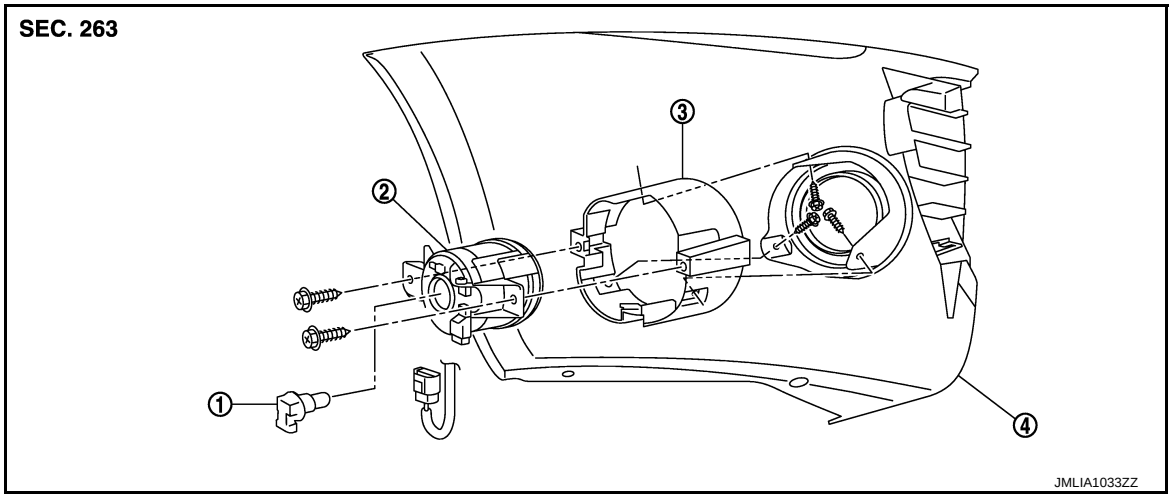

1. Front fog lamp bulb
2. Front fog lamp
3. Front fog lamp bracket
4. Front bumper

Removal and Installation

INFOID:0000000005912486

CAUTION:
Disconnect the battery negative terminal or the fuse.

REMOVAL

1. Remove the fender protector. Refer to XX-XX, "*****".
2. Remove the front fog lamp connector.
3. Remove the fixing screws, and then remove front fog lamp.

INSTALLATION

Install in the reverse order of removal.
NOTE:
After installation, perform aiming adjustment. Refer to XX-XX, "*****".

Replacement

INFOID:0000000005912487

CAUTION:
- **Disconnect the battery negative terminal or the fuse.**
- **Never touch the glass of bulb directly by hand. Keep grease and other oily matters away from it.**
- **Never touch bulb by hand while it is lit or right after being turned off.**
- **Never leave bulb out of lamp reflector for a long time because dust, moisture smoke, etc. may affect the performance of lamp. When replacing bulb, be sure to replace it with new one.**

FRONT FOG LAMP BULB

1. Remove the fender protector. Keep the service area.Refer to XX-XX, "*****".

2. Remove the front fog lamp bulb connector (1).
3. Rotate the bulb (2) counterclockwise and unlock it.

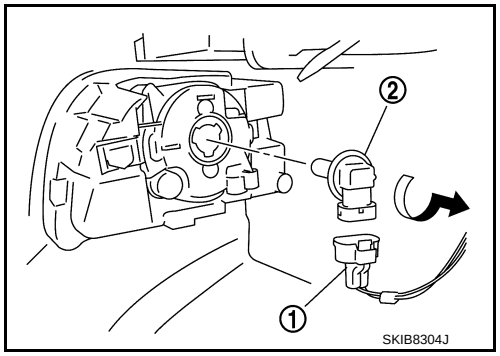

LIGHTING & TURN SIGNAL SWITCH

Exploded View

INFOID:0000000005912490

The lighting & turn switch is integrated in the combination switch. Refer to XX-XX, "*****".

SIDE TURN SIGNAL LAMP

Exploded View

INFOID:0000000005912491

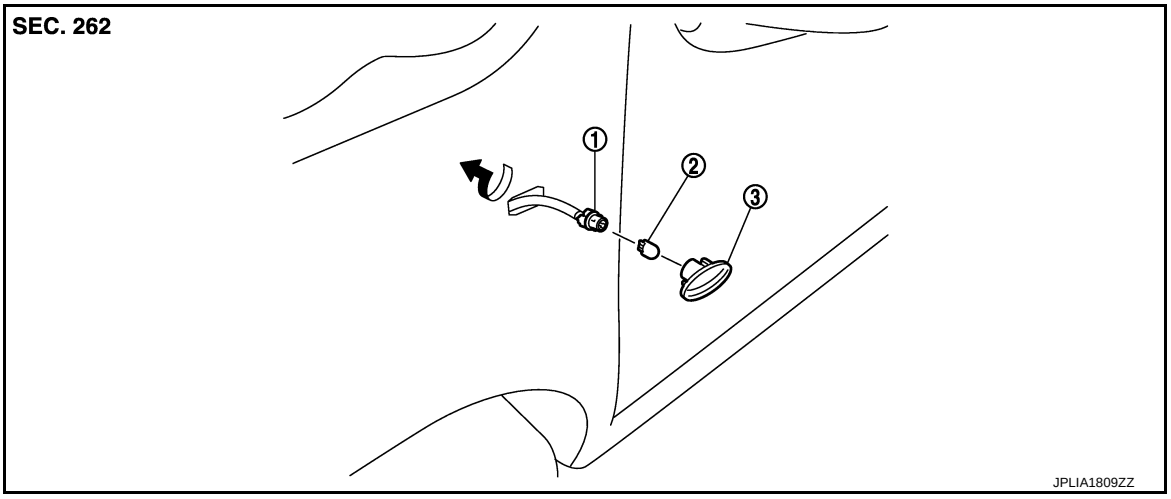

1. Side turn signal lamp bulb socket
2. Side turn signal lamp bulb
3. Side turn signal lamp housing

Removal and Installation

INFOID:0000000005912492

CAUTION:
Disconnect battery negative terminal or remove the fuse.

REMOVAL

1. Remove the side turn signal lamp in numerical order shown in the figure.

   ⇦ : Installable both direction

2. Rotate the bulb socket counterclockwise and unlock it.
   NOTE:
   Support side turn signal lamp harness with tape so that it won't fall into the front fender.

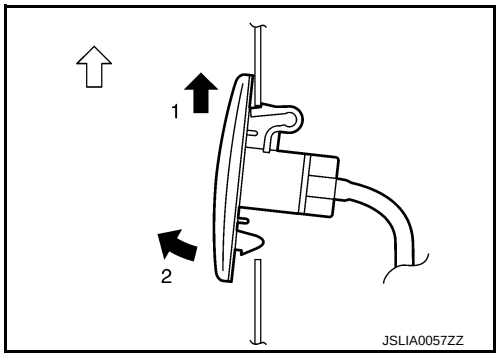

INSTALLATION

1. Rotate the bulb socket clockwise and lock it.
2. Fix the pawl-side behind the side turn signal lamp housing first, then push the resin clip-side.

Replacement

INFOID:0000000005912493

CAUTION:
- **Disconnect battery negative terminal or remove the fuse.**
- **Never touch the glass of bulb directly by hand. Keep grease and other oily matters away from it.**
- **Never touch bulb by hand while it is lit or right after being turned off.**
- **Never leave bulb out of lamp reflector for a long time because dust, moisture smoke, etc. may affect the performance of lamp. When replacing bulb, be sure to replace it with new one.**

SIDE TURN SIGNAL LAMP BULB

1. Remove the side turn signal lamp.
2. Rotate the bulb socket counterclockwise and unlock it.
   NOTE:

Support the vehicle-side harness of the side turn signal lamp with tape so that it does not drop inside the front fender.

3. Remove the bulb from the bulb socket.

HAZARD SWITCH

Exploded View

INFOID:0000000005912494

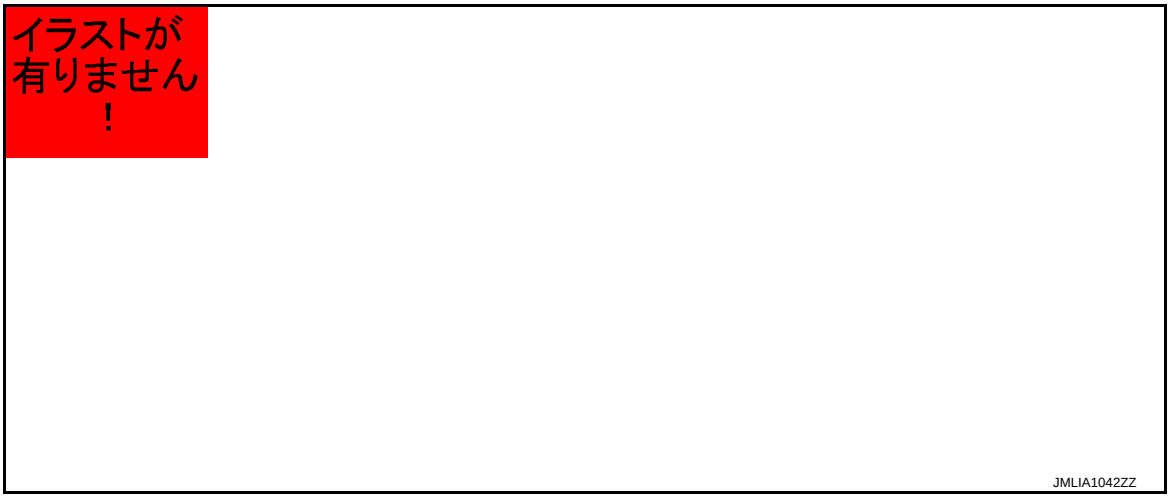

1. Cluster lid C
2. Hazard switch

△ Pawl

Removal and Installation

INFOID:0000000005912495

REMOVAL

1. Remove the cluster lid C. Refer to XX-XX, "*****".
2. While pressing pawls, push the hazard switch to remove it.

INSTALLATION

Install in the reverse order of removal.

REAR COMBINATION LAMP

Exploded View

INFOID:0000000005912496

REMOVAL

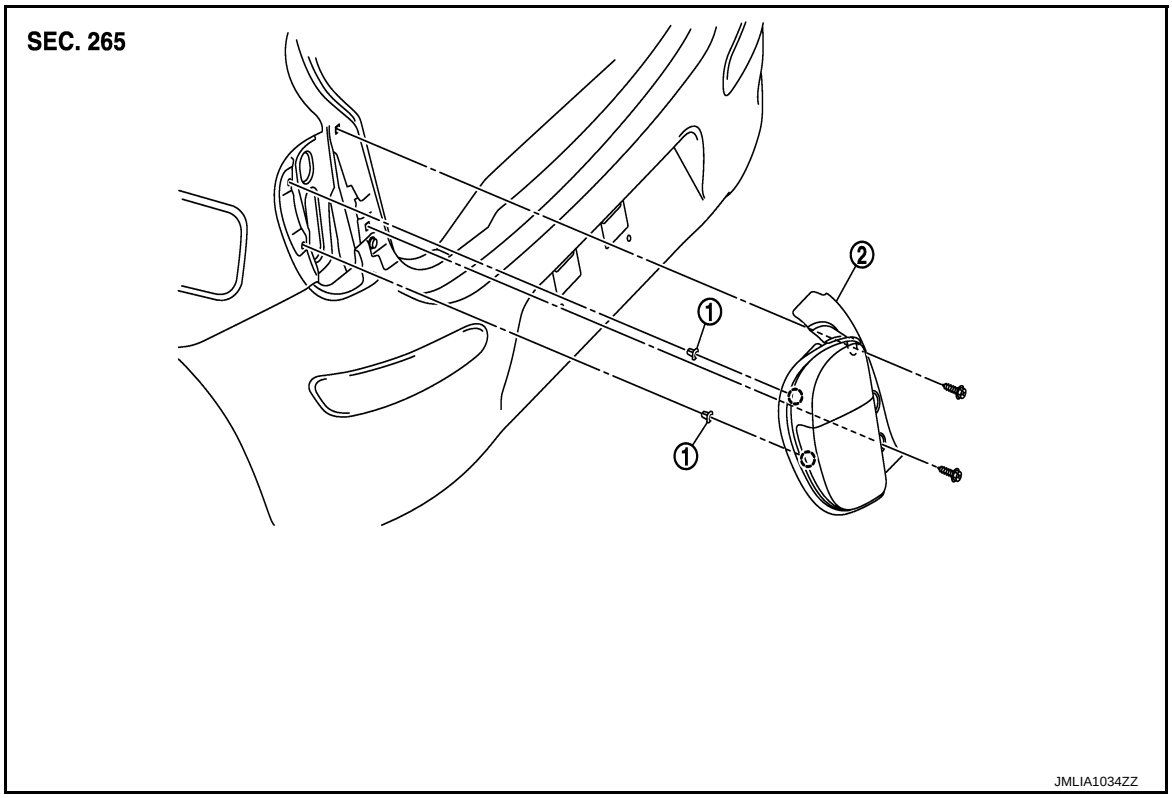

1. Grommet
2. Rear combination lamp

DISASSEMBLY

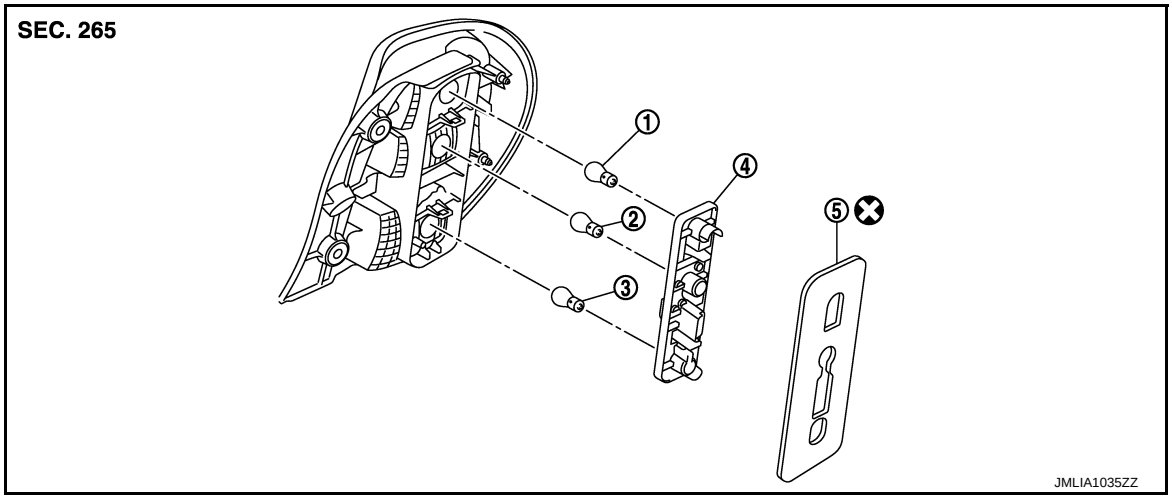

1. Stop/tail lamp bulb
2. Rear turn signal lamp bulb
3. Reverse lamp bulb
4. Bulb holder
5. Seal packing

Refer to GI-4, "Components" for symbols in the figure.

Removal and Installation

INFOID:0000000005912497

CAUTION:

- **Disconnect the battery negative terminal or the fuse.**
- **Wrap the tip of remover tool with a cloth to protect the body from damage.**

REMOVAL

1. Remove rear combination lamp mounting bolts.
2. Pull rear combination lamp toward rear of the vehicle.
3. Disconnect rear combination lamp connector, and then remove rear combination lamp.

INSTALLATION

Install in the reverse order of removal.

Replacement

INFOID:0000000005912498

CAUTION:

- **Disconnect the battery negative terminal or the fuse.**
- **Never touch the glass of bulb directly by hand. Keep grease and other oily matters away from it.**
- **Never touch bulb by hand while it is lit or right after being turned off.**
- **Never leave bulb out of lamp reflector for a long time because dust, moisture smoke, etc. may affect the performance of lamp. When replacing bulb, be sure to replace it with new one.**

STOP/TAIL LAMP BULB

1. Remove rear combination lamp assembly.
2. Disengage fixing pawls, and then remove bulb holder.

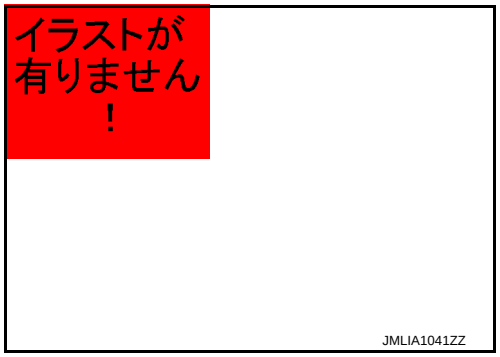

3. Rotate stop/tail lamp bulb counterclockwise, and then remove stop/tail lamp bulb.

REAR TURN SIGNAL LAMP BULB

1. Remove rear combination lamp assembly.
2. Disengage fixing pawls, and then remove bulb holder.

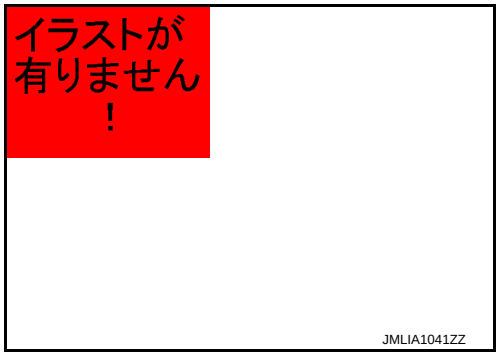

3. Rotate rear turn signal lamp bulb counterclockwise, and then remove rear turn signal lamp bulb.

BACK-UP LAMP BULB

1. Remove rear combination lamp assembly.

2. Disengage fixing pawls, and then remove bulb holder.

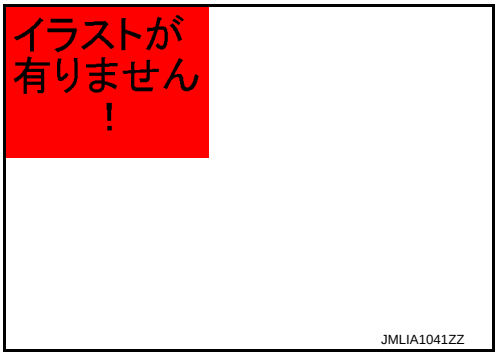

3. Rotate back-up lamp bulb counterclockwise, and then remove back-up lamp bulb.

HIGH-MOUNTED STOP LAMP

Exploded View

INFOID:0000000005912502

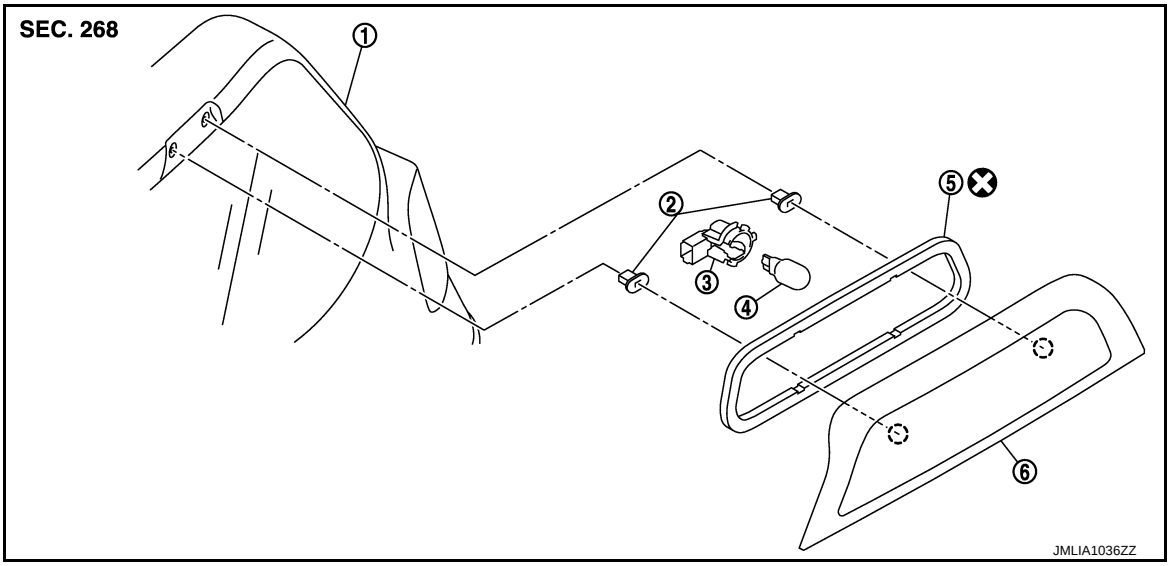

1. Back door
2. Grommet
3. High-mounted stop lamp socket
4. High-mounted stop lamp bulb
5. Seal packing
6. High-mounted stop lamp

Refer to XX-XX, "*****" for symbols in the figure.

Removal and Installation

INFOID:0000000005912503

CAUTION:
Disconnect battery negative terminal or remove the fuse.

REMOVAL

1. Disengage high-mounted stop lamp fixing pawls with remover tool (A).

   : Metal clip

   CAUTION:
   - **Apply protect tape (B) on back door to protect the painted surface from damage.**

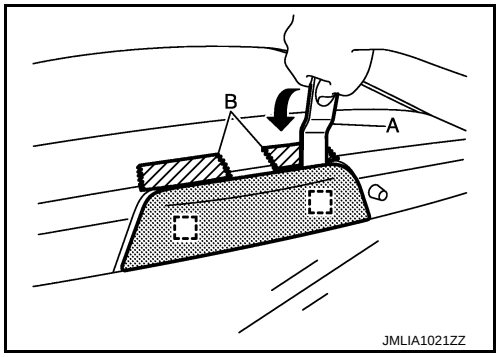

   - **Never insert remover tool in the back door glass side to prevent damage of back door glass.**

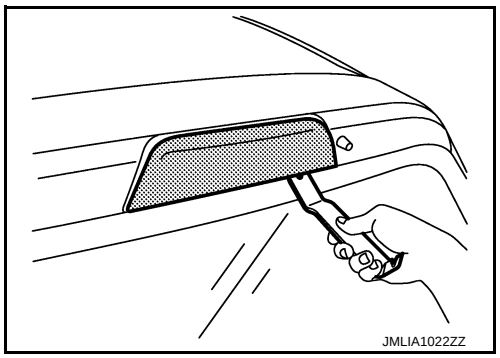

2. Pull the high-mounted stop lamp toward rear of the vehicle.

3. Disconnect the high-mounted stop lamp harness connector, and then remove high-mounted stop lamp.

INSTALLATION

Install in the reverse order of removal.

Replacement

INFOID:0000000005912504

CAUTION:

- **Disconnect the battery negative terminal or the fuse.**
- **Never touch the glass of bulb directly by hand. Keep grease and other oily matters away from it.**
- **Never touch bulb by hand while it is lit or right after being turned off.**
- **Never leave bulb out of lamp reflector for a long time because dust, moisture smoke, etc. may affect the performance of lamp. When replacing bulb, be sure to replace it with new one.**

HIGH-MOUNTED STOP LAMP BULB

1. Remove the high-mounted stop lamp.
2. Rotate the bulb socket counterclockwise, and unlock it.
3. Remove the bulb from the bulb socket.

LICENSE PLATE LAMP

Exploded View

INFOID:0000000005912505

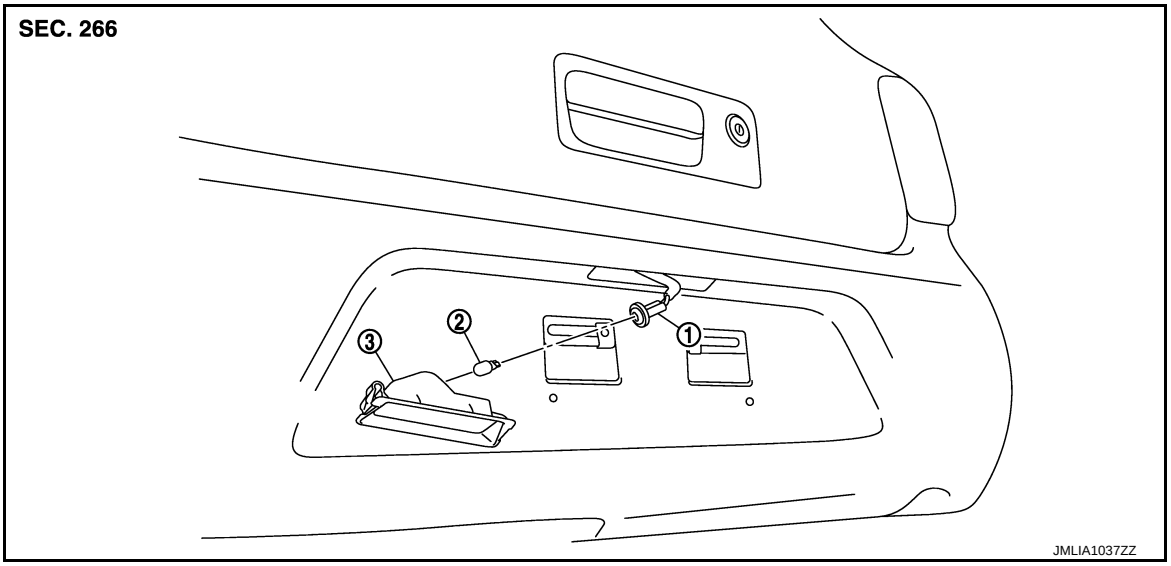

1. License plate lamp

Removal and Installation

INFOID:0000000005912506

CAUTION:
Disconnect the battery negative terminal or remove the fuse.

REMOVAL

1. While pressing the license plate lamp fixing pawl to direction right side, pull it to direction lower side and then remove it.
2. Rotate the bulb socket counterclockwise, and then remove bulb socket.
3. Remove the license plate lamp.

INSTALLATION

Install in the reverse order of removal.

Replacement

INFOID:0000000005912507

CAUTION:
- **Disconnect the battery negative terminal or remove the fuse.**
- **Never touch the glass of bulb directly by hand. Keep grease and other oily matters away from it.**
- **Never touch bulb by hand while it is lit or right after being turned off.**
- **Never leave bulb out of lamp reflector for a long time because dust, moisture smoke, etc. may affect the performance of lamp. When replacing bulb, be sure to replace it with new one.**

LICENSE PLATE LAMP BULB

1. Remove the license plate lamp.
2. Remove the bulb from the socket.

SERVICE DATA AND SPECIFICATIONS (SDS)

SERVICE DATA AND SPECIFICATIONS (SDS)

Bulb Specifications

INFOID:0000000005912508

Item		Type	Wattage (W)
Front combination lamp	Headlamp (HI/LO)	H4	60/55
	Front turn signal lamp	PY21W (Amber)	21
	Parking lamp	W5W	5
Front fog lamp		H11	55
Side turn signal lamp		WY5W (Amber)	5
Rear combination lamp	Stop lamp/Tail lamp	P21W	21/5
	Rear turn signal lamp	PY21W (Amber)	21
	Back-up lamp	P21W	21
License plate lamp		W5W	5
High-mounted stop lamp		W16W	18

SECTION EXT
EXTERIOR

CONTENTS

PRECAUTION 2

PRECAUTIONS 2
Precaution for Supplemental Restraint System (SRS) "AIR BAG" and "SEAT BELT PRE-TENSIONER" 2
Precaution Necessary for Steering Wheel Rotation after Battery Disconnect 2
Precaution for Procedure without Cowl Top Cover..... 3
Precaution for Work 3

PREPARATION 4

PREPARATION 4
Commercial Service Tools 4

SYMPTOM DIAGNOSIS 5

SQUEAK AND RATTLE TROUBLE DIAGNOSES 5
Work Flow 5
Inspection Procedure 7
Diagnostic Worksheet 9

REMOVAL AND INSTALLATION 11

FRONT BUMPER 11
Exploded View 11
Removal and Installation 11

REAR BUMPER 13
Exploded View 13
Removal and Installation 13

COWL TOP 15
Exploded View 15
Removal and Installation 15

FENDER PROTECTOR 17

FENDER PROTECTOR 17
FENDER PROTECTOR : Exploded View 17
FENDER PROTECTOR : Removal and Installation 17

ROOF SIDE MOLDING 18
Exploded View 18
Removal and Installation 18

DOOR OUTSIDE MOLDING 20
Exploded View 20
Removal and Installation 20

REAR SPOILER 22
Exploded View 22
Removal and Installation 22

PRECAUTION

PRECAUTIONS

Precaution for Supplemental Restraint System (SRS) "AIR BAG" and "SEAT BELT PRE-TENSIONER"

INFOID:0000000006052858

The Supplemental Restraint System such as “AIR BAG” and “SEAT BELT PRE-TENSIONER”, used along with a front seat belt, helps to reduce the risk or severity of injury to the driver and front passenger for certain types of collision. This system includes seat belt switch inputs and dual stage front air bag modules. The SRS system uses the seat belt switches to determine the front air bag deployment, and may only deploy one front air bag, depending on the severity of a collision and whether the front occupants are belted or unbelted.
Information necessary to service the system safely is included in the “SRS AIR BAG” and “SEAT BELT” of this Service Manual.

WARNING:

- **To avoid rendering the SRS inoperative, which could increase the risk of personal injury or death in the event of a collision that would result in air bag inflation, all maintenance must be performed by an authorized NISSAN/INFINITI dealer.**
- **Improper maintenance, including incorrect removal and installation of the SRS, can lead to personal injury caused by unintentional activation of the system. For removal of Spiral Cable and Air Bag Module, see the “SRS AIR BAG”.**
- **Do not use electrical test equipment on any circuit related to the SRS unless instructed to in this Service Manual. SRS wiring harnesses can be identified by yellow and/or orange harnesses or harness connectors.**

PRECAUTIONS WHEN USING POWER TOOLS (AIR OR ELECTRIC) AND HAMMERS

WARNING:

- **When working near the Air Bag Diagnosis Sensor Unit or other Air Bag System sensors with the ignition ON or engine running, DO NOT use air or electric power tools or strike near the sensor(s) with a hammer. Heavy vibration could activate the sensor(s) and deploy the air bag(s), possibly causing serious injury.**
- **When using air or electric power tools or hammers, always switch the ignition OFF, disconnect the battery, and wait at least 3 minutes before performing any service.**

Precaution Necessary for Steering Wheel Rotation after Battery Disconnect

INFOID:0000000006052859

NOTE:

- Before removing and installing any control units, first turn the push-button ignition switch to the LOCK position, then disconnect both battery cables.
- After finishing work, confirm that all control unit connectors are connected properly, then re-connect both battery cables.
- Always use CONSULT-III to perform self-diagnosis as a part of each function inspection after finishing work. If a DTC is detected, perform trouble diagnosis according to self-diagnosis results.

For vehicle with steering lock unit, if the battery is disconnected or discharged, the steering wheel will lock and cannot be turned.
If turning the steering wheel is required with the battery disconnected or discharged, follow the operation procedure below before starting the repair operation.

OPERATION PROCEDURE

1. Connect both battery cables.
   NOTE:
   Supply power using jumper cables if battery is discharged.
2. Turn the push-button ignition switch to ACC position.
   (At this time, the steering lock will be released.)
3. Disconnect both battery cables. The steering lock will remain released with both battery cables disconnected and the steering wheel can be turned.
4. Perform the necessary repair operation.

5. When the repair work is completed, re-connect both battery cables. With the brake pedal released, turn the push-button ignition switch from ACC position to ON position, then to LOCK position. (The steering wheel will lock when the push-button ignition switch is turned to LOCK position.)
6. Perform self-diagnosis check of all control units using CONSULT-III.

Precaution for Procedure without Cowl Top Cover

INFOID:0000000006052860

When performing the procedure after removing cowl top cover, cover the lower end of windshield with urethane, etc.

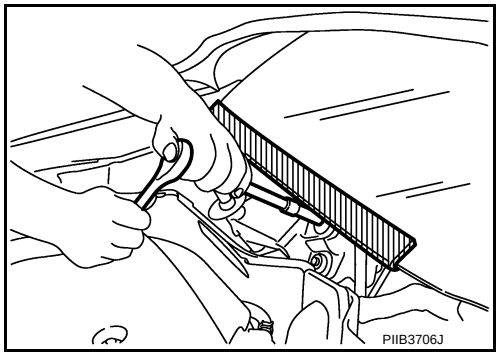

Precaution for Work

INFOID:0000000006052861

- After removing and installing the opening/closing parts, be sure to carry out fitting adjustments to check their operation.
- Check the lubrication level, damage, and wear of each part. If necessary, grease or replace it.

PREPARATION

PREPARATION

Commercial Service Tools

INFOID:0000000006052862

Tool name		Description
Engine ear	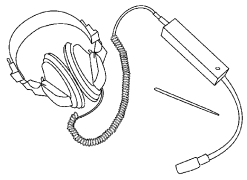 SIIA0995E	Locates the noise
Remover tool	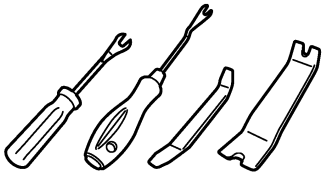 JMKIA3050ZZ	Removes clips, pawls, and metal clips
Power tool	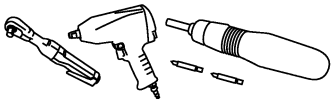 PIIB1407E	

SYMPTOM DIAGNOSIS

SQUEAK AND RATTLE TROUBLE DIAGNOSES

Work Flow

INFOID:0000000006052855

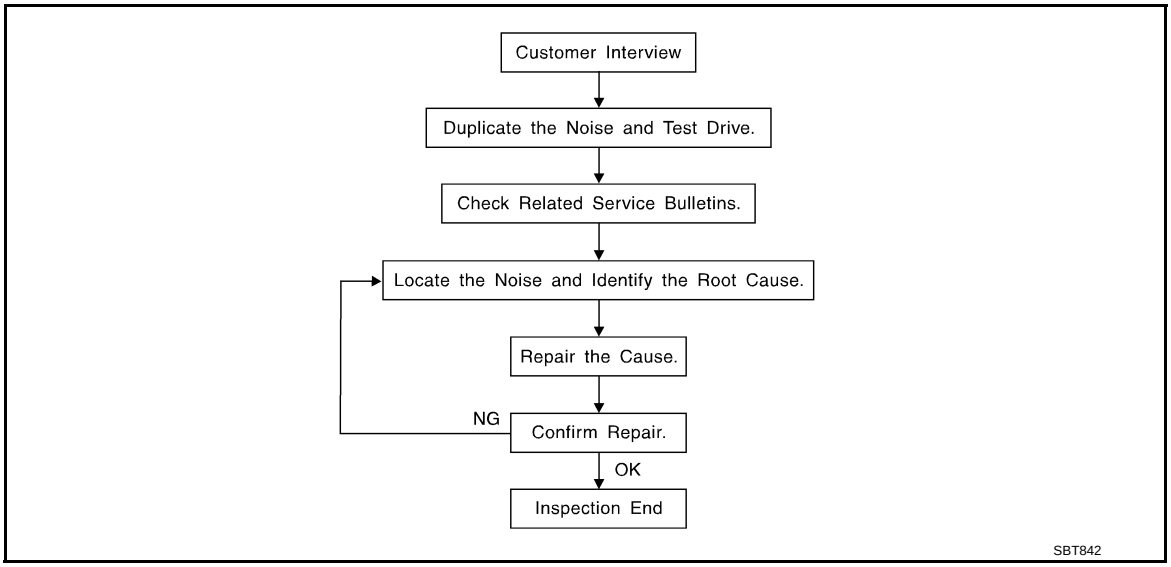

CUSTOMER INTERVIEW

Interview the customer if possible, to determine the conditions that exist when the noise occurs. Use the Diagnostic Worksheet during the interview to document the facts and conditions when the noise occurs and any of the customer's comments; refer to EXT-9, "Diagnostic Worksheet". This information is necessary to duplicate the conditions that exist when the noise occurs.

- The customer may not be able to provide a detailed description or the location of the noise. Attempt to obtain all the facts and conditions that exist when the noise occurs (or does not occur).
- If there is more than one noise in the vehicle, be sure to diagnose and repair the noise that the customer is concerned about. This can be accomplished by a test drive with the customer.
- After identifying the type of noise, isolate the noise in terms of its characteristics. The noise characteristics are provided so the customer, service adviser and technician are all speaking the same language when defining the noise.
- Squeak – (Like tennis shoes on a clean floor)
  Squeak characteristics include the light contact/fast movement/brought on by road conditions/hard surfaces = higher pitch noise/softer surfaces = lower pitch noises/edge to surface = chirping
- Creak – (Like walking on an old wooden floor)
  Creak characteristics include firm contact/slow movement/twisting with a rotational movement/pitch dependent on materials/often brought on by activity.
- Rattle – (Like shaking a baby rattle)
  Rattle characteristics include the fast repeated contact/vibration or similar movement/loose parts/missing clip or fastener/incorrect clearance.
- Knock – (Like a knock on a door)
  Knock characteristics include hollow sounding/sometimes repeating/often brought on by driver action.
- Tick – (Like a clock second hand)
  Tick characteristics include gentle contacting of light materials/loose components/can be caused by driver action or road conditions.
- Thump – (Heavy, muffled knock noise)
  Thump characteristics include softer knock/dead sound often brought on by activity.
- Buzz – (Like a bumble bee)
  Buzz characteristics include high frequency rattle/firm contact.
- Often the degree of acceptable noise level will vary depending upon the person. A noise that a technician may judge as acceptable may be very irritating to the customer.
- Weather conditions, especially humidity and temperature, may have a great effect on noise level.

DUPLICATE THE NOISE AND TEST DRIVE

If possible, drive the vehicle with the customer until the noise is duplicated. Note any additional information on the Diagnostic Worksheet regarding the conditions or location of the noise. This information can be used to duplicate the same conditions when the repair is reconfirmed.
If the noise can be duplicated easily during the test drive, to help identify the source of the noise, try to duplicate the noise with the vehicle stopped by doing one or all of the following:
1) Close a door.
2) Tap or push/pull around the area where the noise appears to be coming from.
3) Rev the engine.
4) Use a floor jack to recreate vehicle “twist”.
5) At idle, apply engine load (electrical load, half-clutch on M/T model, drive position on A/T model).
6) Raise the vehicle on a hoist and hit a tire with a rubber hammer.
- Drive the vehicle and attempt to duplicate the conditions the customer states exist when the noise occurs.
- If it is difficult to duplicate the noise, drive the vehicle slowly on an undulating or rough road to stress the vehicle body.

LOCATE THE NOISE AND IDENTIFY THE ROOT CAUSE

1. Narrow down the noise to a general area. To help pinpoint the source of the noise, use a listening tool (Engine Ear or mechanics stethoscope).
2. Narrow down the noise to a more specific area and identify the cause of the noise by:

- Removing the components in the area that is are suspected to be the cause of the noise.
  Do not use too much force when removing clips and fasteners, otherwise clips and fastener can be broken or lost during the repair, resulting in the creation of new noise.
- Tapping or pushing/pulling the component that is are suspected to be the cause of the noise.
  Do not tap or push/pull the component with excessive force, otherwise the noise will be eliminated only temporarily.
- Feeling for a vibration by hand by touching the component(s) that is are suspected to be the cause of the noise.
- Placing a piece of paper between components that is are suspected to be the cause of the noise.
- Looking for loose components and contact marks.
  Refer to EXT-7, "Inspection Procedure".

REPAIR THE CAUSE

- If the cause is a loose component, tighten the component securely.
- If the cause is insufficient clearance between components:
- Separate components by repositioning or loosening and retightening the component, if possible.
- Insulate components with a suitable insulator such as urethane pads, foam blocks, felt cloth tape or urethane tape. These insulators are available through the authorized Nissan Parts Department.

CAUTION:
Never use excessive force as many components are constructed of plastic and may be damaged.
NOTE:
- URETHANE PADS
  Insulates connectors, harness, etc.
- INSULATOR (Foam blocks)
  Insulates components from contact. Can be used to fill space behind a panel.
- INSULATOR (Light foam block)
- FELT CLOTHTAPE
  Used to insulate where movement does not occur. Ideal for instrument panel applications.
  The following materials, not available through NISSAN Parts Department, can also be used to repair squeaks and rattles.
- UHMW(TEFLON) TAPE
  Insulates where slight movement is present. Ideal for instrument panel applications.
- SILICONE GREASE
  Used in place of UHMW tape that is be visible or does not fit.
  Note: Will only last a few months.
- SILICONE SPRAY
  Used when grease cannot be applied.
- DUCT TAPE
  Used to eliminate movement.

CONFIRM THE REPAIR

Confirm that the cause of a noise is repaired by test driving the vehicle. Operate the vehicle under the same conditions as when the noise originally occurred. Refer to the notes on the Diagnostic Worksheet.

Inspection Procedure

INFOID:0000000006052856

Refer to Table of Contents for specific component removal and installation information.

INSTRUMENT PANEL

Most incidents are caused by contact and movement between:

1. Cluster lid A and instrument panel
2. Acrylic lens and combination meter housing
3. Instrument panel to front pillar garnish
4. Instrument panel to windshield
5. Instrument panel mounting pins
6. Wiring harnesses behind the combination meter
7. A/C defroster duct and duct joint

These incidents can usually be located by tapping or moving the components to duplicate the noise or by pressing on the components while driving to stop the noise. Most of these incidents can be repaired by applying felt cloth tape or silicon spray (in hard to reach areas). Urethane pads can be used to insulate wiring harness.

CAUTION:

Never use silicone spray to isolate a squeak or rattle. If the area is saturated with silicone, the recheck of repair becomes impossible.

CENTER CONSOLE

Components to pay attention to include:

1. Shifter assembly cover to finisher
2. A/C control unit and cluster lid C
3. Wiring harnesses behind audio and A/C control unit

The instrument panel repair and isolation procedures also apply to the center console.

DOORS

Pay attention to the following:

1. Finisher and inner panel making a slapping noise
2. Inside handle escutcheon to door finisher
3. Wiring harnesses tapping
4. Door striker out of alignment causing a popping noise on starts and stops

Tapping or moving the components or pressing on them while driving to duplicate the conditions can isolate many of these incidents. The areas can usually be insulated with felt cloth tape or insulator foam blocks to repair the noise.

TRUNK

Trunk noises are often caused by a loose jack or loose items put into the trunk by the customer.
In addition look for the following:

1. Trunk lid dumpers out of adjustment
2. Trunk lid striker out of adjustment
3. Trunk lid torsion bars knocking together
4. A loose license plate or bracket

Most of these incidents can be repaired by adjusting, securing or insulating the item(s) or component(s) causing the noise.

SUNROOF/HEADLINING

Noises in the sunroof/headlining area can often be traced to one of the following:

1. Sunroof lid, rail, linkage or seals making a rattle or light knocking noise
2. Sunvisor shaft shaking in the holder
3. Front or rear windshield touching headlining and squeaking

Again, pressing on the components to stop the noise while duplicating the conditions can isolate most of these incidents. Repairs usually consist of insulating with felt cloth tape.

SEATS

When isolating seat noise it is important to note the position the seat is in and the load placed on the seat when the noise occurs. These conditions should be duplicated when verifying and isolating the cause of the noise.

Cause of seat noise include:

1. Headrest rods and holder
2. A squeak between the seat pad cushion and frame
3. Rear seatback lock and bracket

These noises can be isolated by moving or pressing on the suspected components while duplicating the conditions under which the noise occurs. Most of these incidents can be repaired by repositioning the component or applying urethane tape to the contact area.

UNDERHOOD

Some interior noise may be caused by components under the hood or on the engine wall. The noise is then transmitted into the passenger compartment.

Causes of transmitted underhood noise include:

1. Any component mounted to the engine wall
2. Components that pass through the engine wall
3. Engine wall mounts and connectors
4. Loose radiator mounting pins
5. Hood bumpers out of adjustment
6. Hood striker out of adjustment

These noises can be difficult to isolate since they cannot be reached from the interior of the vehicle. The best method is to secure, move or insulate one component at a time and test drive the vehicle. Also, engine RPM or load can be changed to isolate the noise. Repairs can usually be made by moving, adjusting, securing, or insulating the component causing the noise.

Diagnostic Worksheet

INFOID:0000000006052857

SQUEAK & RATTLE DIAGNOSTIC WORKSHEET

Dear Nissan Customer:
We are concerned about your satisfaction with your Nissan vehicle. Repairing a squeak or rattle sometimes can be very difficult. To help us fix your Nissan right the first time, please take a moment to note the area of the vehicle where the squeak or rattle occurs and under what conditions. You may be asked to take a test drive with a service advisor or technician to ensure we confirm the noise you are hearing.

I. WHERE DOES THE NOISE COME FROM? (circle the area of the vehicle)
The illustrations are for reference only, and may not reflect the actual configuration of your vehicle.

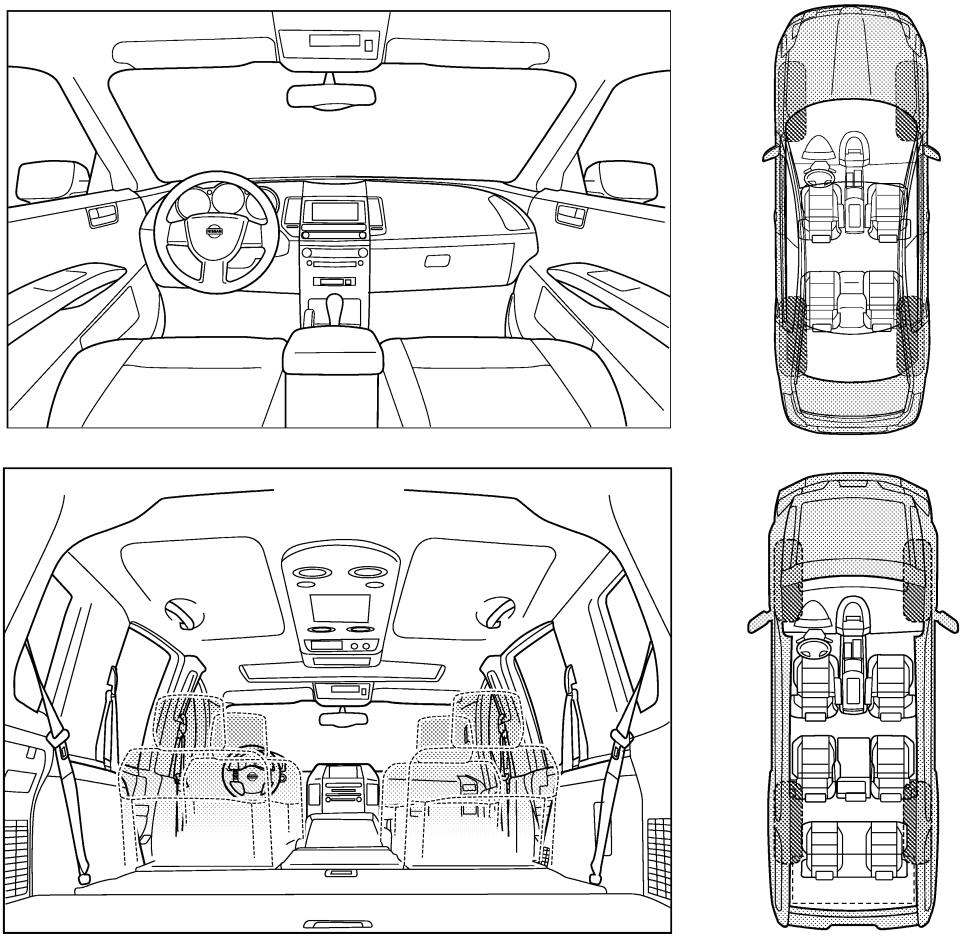

Continue to page 2 of the worksheet and briefly describe the location of the noise or rattle. In addition, please indicate the conditions which are present when the noise occurs.

PIIB8740E

SQUEAK & RATTLE DIAGNOSTIC WORKSHEET - page 2

Briefly describe the location where the noise occurs:

_____

_____

II. WHEN DOES IT OCCUR? (please check the boxes that apply)

- ☐ anytime
- ☐ 1st time in the morning
- ☐ only when it is cold outside
- ☐ only when it is hot outside
- ☐ after sitting out in the rain
- ☐ when it is raining or wet
- ☐ dry or dusty conditions
- ☐ other:

III. WHEN DRIVING:

- ☐ through driveways
- ☐ over rough roads
- ☐ over speed bumps
- ☐ only about ____ mph
- ☐ on acceleration
- ☐ coming to a stop
- ☐ on turns: left, right or either (circle)
- ☐ with passengers or cargo
- ☐ other: _____
- ☐ after driving _____ miles or _____ minutes

IV. WHAT TYPE OF NOISE

- ☐ squeak (like tennis shoes on a clean floor)
- ☐ creak (like walking on an old wooden floor)
- ☐ rattle (like shaking a baby rattle)
- ☐ knock (like a knock at the door)
- ☐ tick (like a clock second hand)
- ☐ thump (heavy, muffled knock noise)
- ☐ buzz (like a bumble bee)

TO BE COMPLETED BY DEALERSHIP PERSONNEL

Test Drive Notes:

_____

_____

_____

	YES	NO	Initials of person performing
Vehicle test driven with customer	☐	☐	_____
- Noise verified on test drive	☐	☐	_____
- Noise source located and repaired	☐	☐	_____
- Follow up test drive performed to confirm repair	☐	☐	_____

VIN: _____ Customer Name: _____

W.O.# _____ Date: _____

This form must be attached to Work Order

PIIB8742E

REMOVAL AND INSTALLATION

FRONT BUMPER

Exploded View

INFOID:0000000006052863

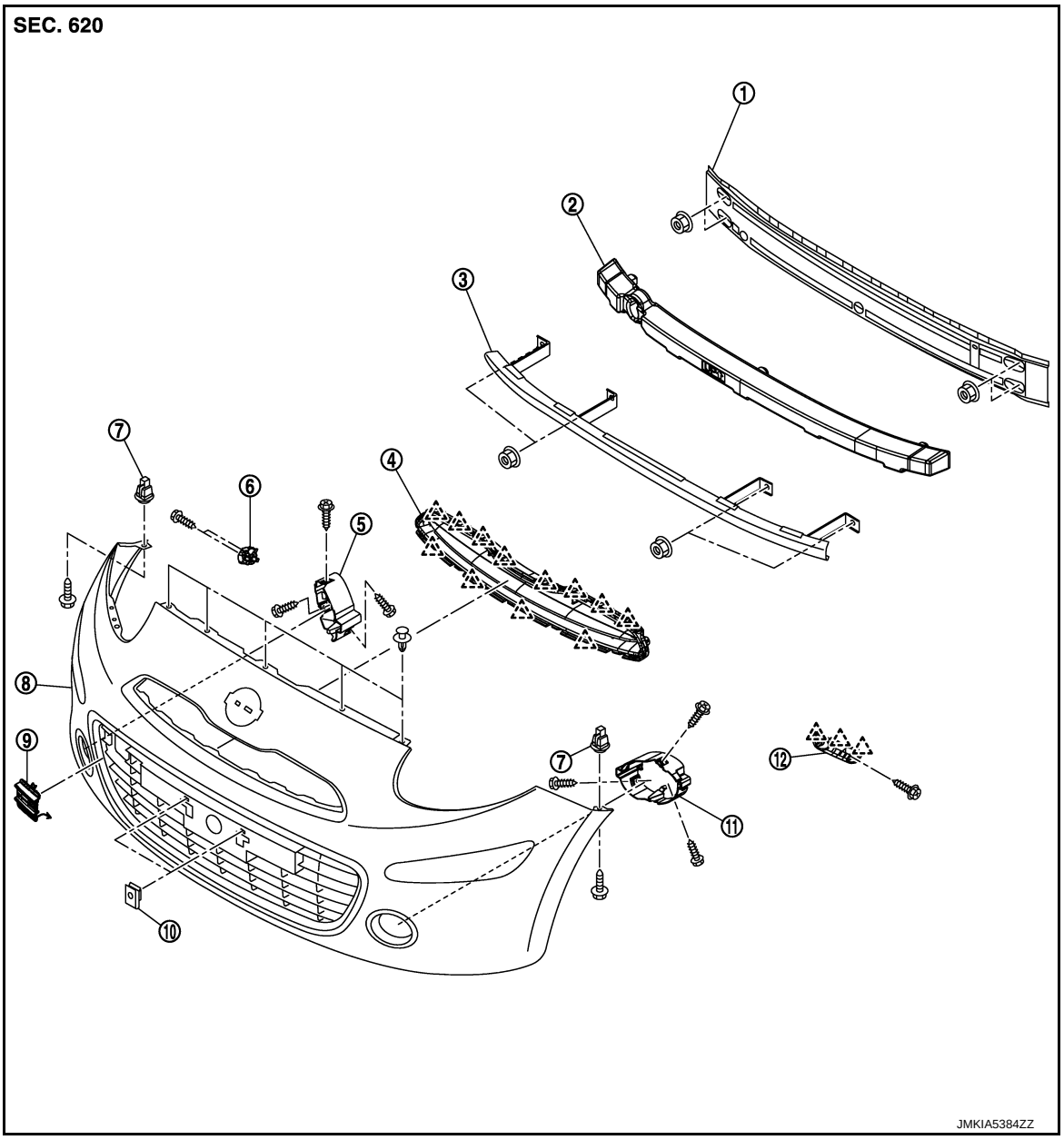

1. Bumper reinforcement	2. Bumper energy absorber	3. Bumper reinforcement lower
4. Front grille	5. Front fog lamp bracket RH	6. Bumper side bracket RH
7. Grommet	8. Bumper fascia assembly	9. Bumper bracket cover
10. Spring nut	11. Front fog lamp bracket LH	12. Bumper side bracket LH

Removal and Installation

INFOID:0000000006052864

REMOVAL

CAUTION:

Bumper fascia is made of resin. Never apply strong force to it, and be careful to prevent contact with oil.

1. Fully open hood assembly.
2. Remove fender protector fixing clips and screws to access bumper fascia assembly fixing screw, and then remove bumper fascia assembly fixing screws (LH/RH).
3. Remove bumper fascia assembly lower side fixing clips.
4. Pull bumper fascia assembly side toward the vehicle side as shown by the arrows in the figure, and then disengage bumper fascia assembly from bumper side brackets (LH/RH).

   : Pawl

   CAUTION:
   When removing bumper fascia, 2 workers are required so as to prevent it from dropping.

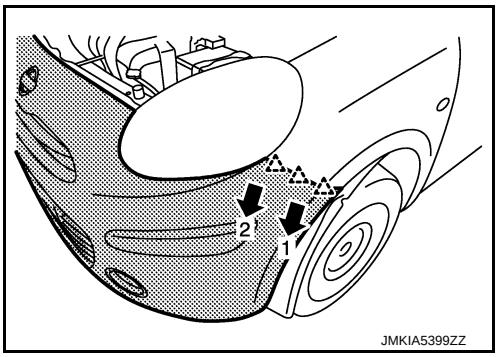

5. Disconnect front fog lamp harness connectors (LH/RH).
6. Remove bumper fascia assembly.
   CAUTION:
   When removing bumper fascia, 2 workers are required so as to prevent it from dropping.
7. Remove the following parts after removing bumper fascia.
   - License plate bracket
   - Front bumper side brackets (LH/RH)
   - Fog lamps (LH/RH). Refer to XX-XX, "*****".
   - Front grille
8. Remove bumper energy absorber.
9. Remove mounting nuts, and then bumper reinforcement.

INSTALLATION

Note the following item, and then install in the reverse order of removal.

NOTE:

After installing, perform fitting adjustment.

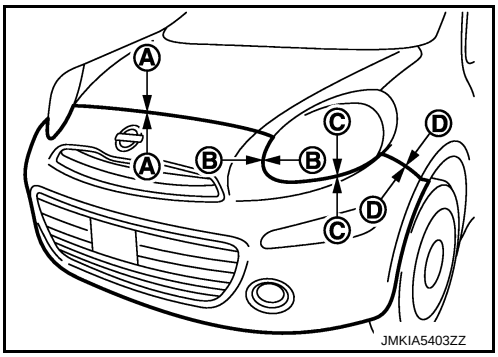

Portion		Clearance	Surface height difference
Front bumper – Hood	A – A	2.4 – 6.7 mm (0.094 – 0.264 in)	(–2.5) – (+1.5) mm [(–0.098) – (+0.059) in]
Front bumper – Headlamp	B – B	0.0 – 4.0 mm (0.000 – 0.157 in)	—
	C – C	0.0 – 4.0 mm (0.000 – 0.157 in)	—
Front bumper – Front fender	D – D	0.0 – 1.0 mm (0.000 – 0.039 in)	(–1.65) – (+0.35) mm [(–0.065) – (+0.014) in]

REAR BUMPER

Exploded View

INFOID:0000000006052865

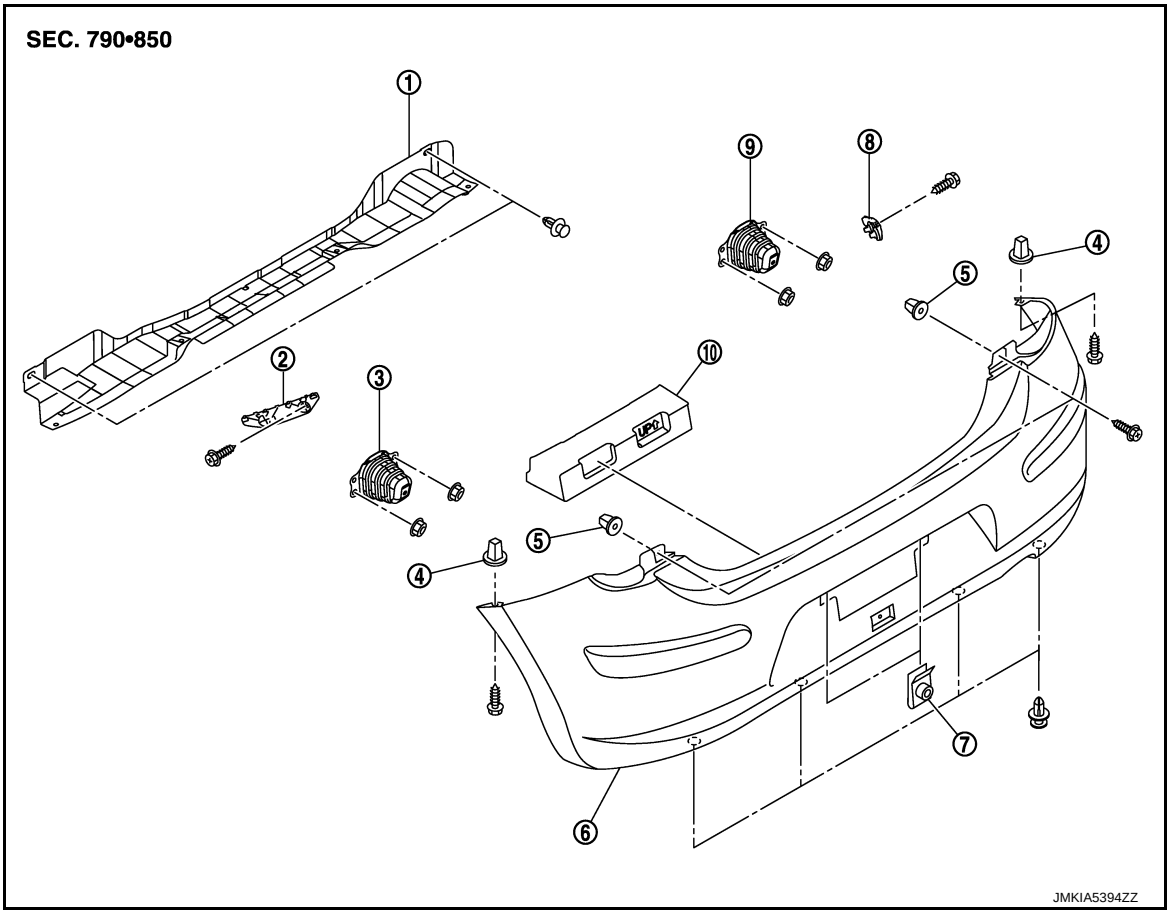

1. Rear lower panel
2. Bumper side bracket LH
3. Bumper stay LH
4. Grommet
5. Screw grommet
6. Bumper fascia
7. J nut
8. Bumper side bracket RH
9. Bumper stay RH
10. Bumper energy absorber

: Pawl

Refer to XX-XX, "*****" for symbols in the figure.

Removal and Installation

INFOID:0000000006052866

REMOVAL

CAUTION:

Bumper fascia is made of resin. Never apply strong force to it, and be careful to prevent contact with oil.

1. Fully open back door.
2. Remove rear combination lamps (LH,RH). Refer to XX-XX, "*****".
3. Remove rear bumper fixing screws (LH,RH).
4. Remove bumper fascia lower fixing clips.
5. Remove bumper fascia both ends fixing screws.

6. Pull bumper fascia assembly toward the vehicle out side as shown by the arrows in the figure, and then disengage the bumper fascia assembly from bumper side brackets (LH/RH).

   : Pawl

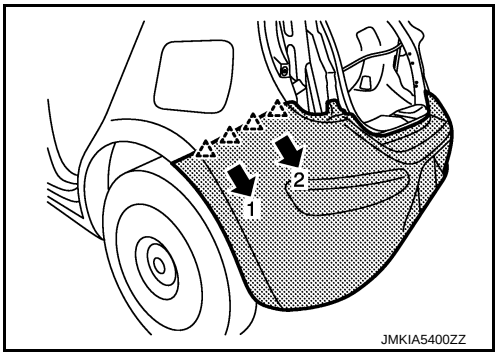

7. Remove bumper fascia assembly.
   CAUTION:
   When removing bumper fascia, 2 workers are required so as to prevent it from dropping.
8. Remove the following parts after removing bumper fascia.
   - Bumper side brackets (LH/RH)
   - Rear panel lower
9. Remove bumper energy absorber.
10. Remove mounting nuts, and then remove bumper stay.

INSTALLATION

Note the following item, and then Install in the reverse order of removal.

NOTE:

After installing, perform fitting adjustment.

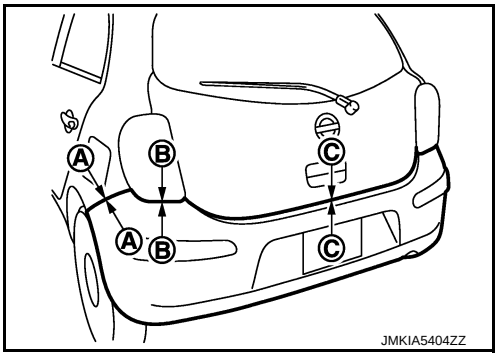

Portion		Clearance	Surface height difference
Rear bumper – Rear fender	A – A	(–1.7) – (+0.3) mm [(–0.067) – (+0.012) in]	0.0 – 1.0 mm (0.000 – 0.039 in)
Rear bumper – Rear combination lamp	B – B	(–0.5) – (+3.5) mm [(–0.020) – (+0.138) in]	—
Rear bumper – Back door	C – C	5.0 – 7.0 mm (0.197 – 0.276 in)	—

COWL TOP

Exploded View

INFOID:0000000006052869

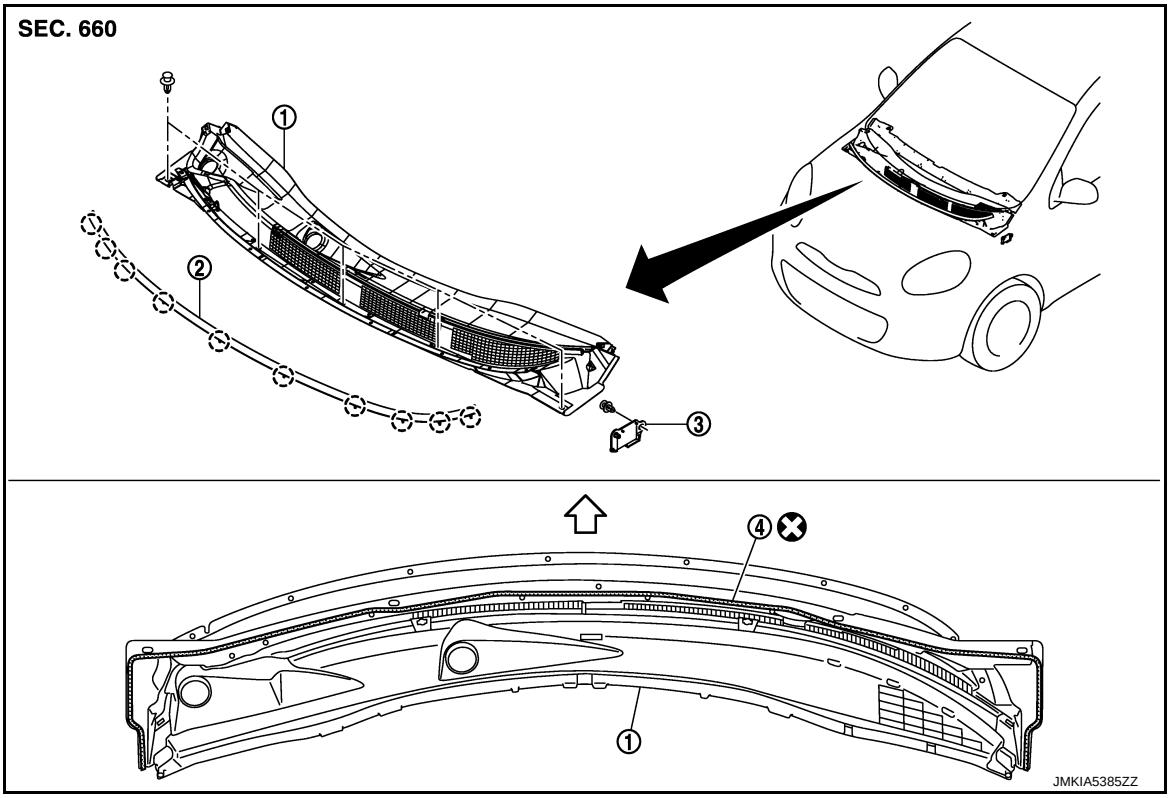

1. Cowl top cover
2. Cowl top cover seal
3. Cowl cover oneway valve
4. EPT sealer [3.0 mm (0.118 in)]

: Clip

: Vehicle front

Refer to GI-4, "Components" for symbols in the figure.

Removal and Installation

INFOID:0000000006052870

REMOVAL

1. Remove front wiper arm, and blades (LH,RH). Refer to XX-XX, "*****".
2. Remove front fender cover.
3. Remove cowl top cover fixing clips.
4. Pull forward to release cowl top cover from windshield glass.
   CAUTION:
   When performing the procedure after removing cowl top cover, protect the lower of windshield glass with urethane etc.

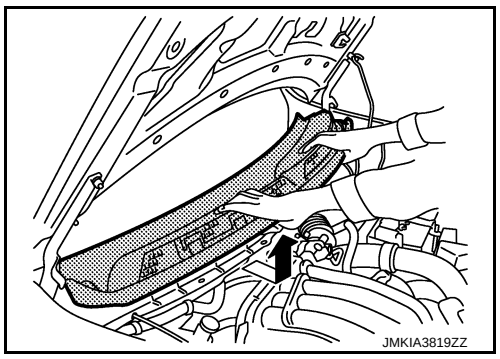

5. Disconnect wind washer tube connector.
6. Remove cowl top cover.

7. Remove the following parts after removing cowl top cover.
   - EPT sealer
   - Cowl top cover seal
   - Washer tube
   - Washer nozzles. Refer to XX-XX, "*****".

INSTALLATION

Note the following item, and then install in the reverse order of removal.

CAUTION:

- **Always replace cowl top cover EPT sealer on rear of vehicle with a new one when installing old cowl top cover.**
- **After installing, perform adjustment of wiper arm. Refer to XX-XX, "*****".**

FENDER PROTECTOR

FENDER PROTECTOR

FENDER PROTECTOR : Exploded View

INFOID:0000000006052871

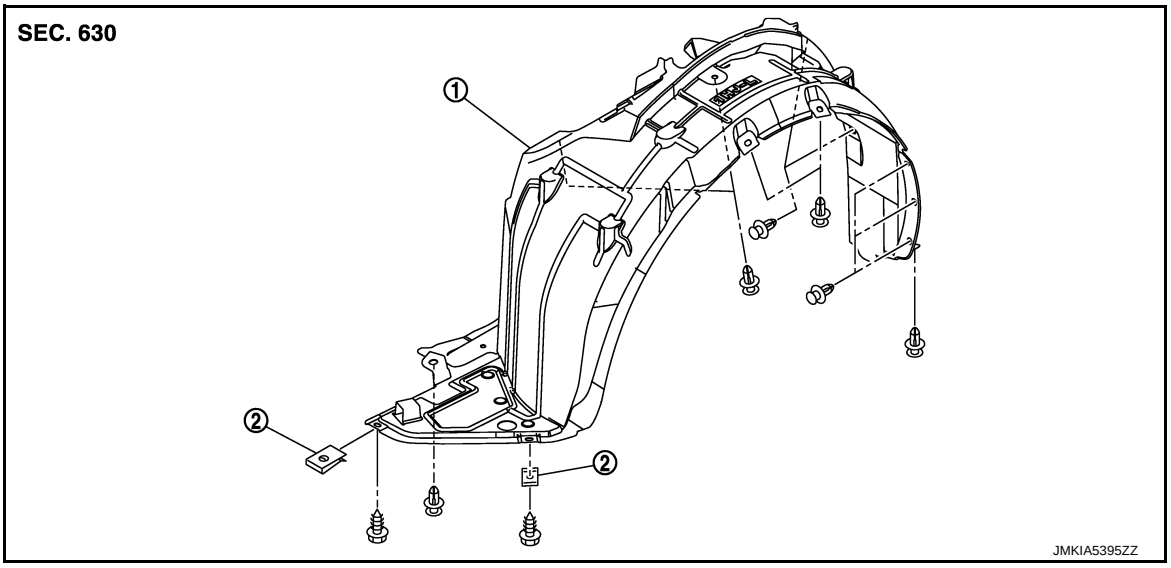

1. Fender protector
2. J nut

FENDER PROTECTOR : Removal and Installation

INFOID:0000000006052872

REMOVAL

1. Remove front fender protector fixing screws and clips.
2. Disengage fender clips and fender protector, and then remove fender protector.

INSTALLATION

Install in the reverse order of removal.

ROOF SIDE MOLDING

Exploded View

INFOID:0000000006052875

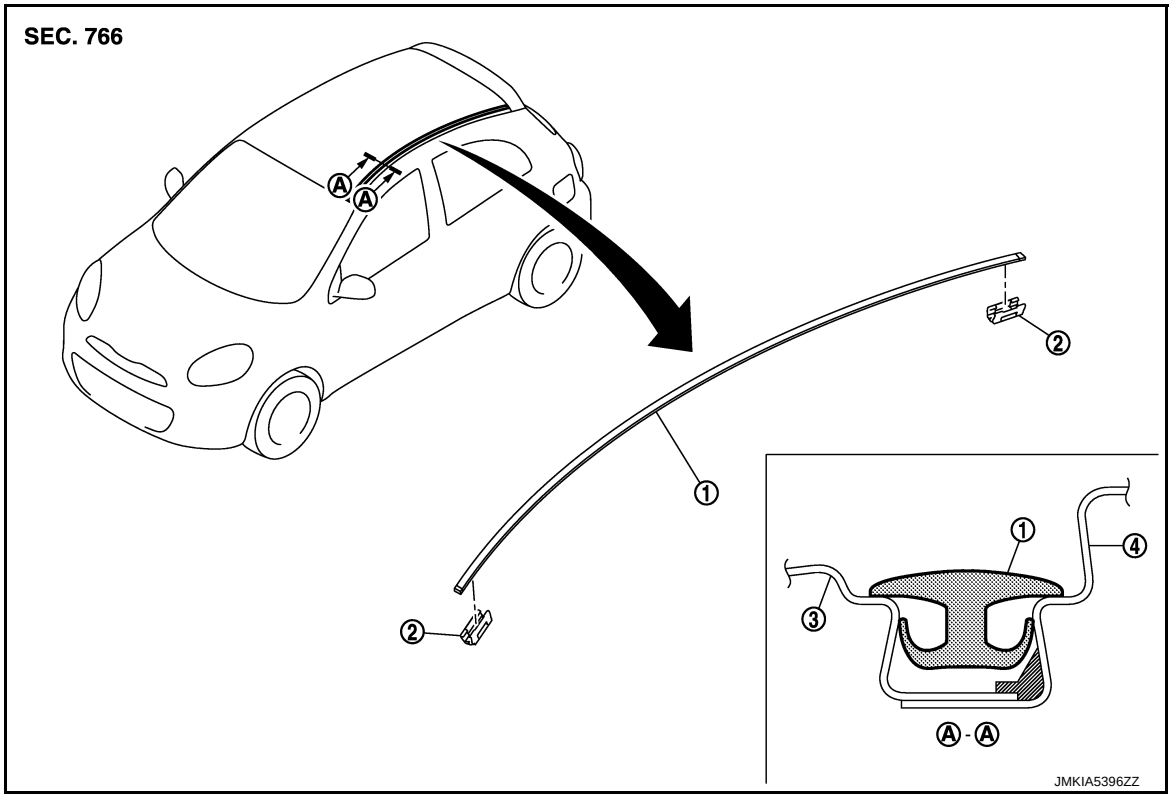

1. Roof side molding
2. Roof side molding clip
3. Roof panel
4. Body side outer panel

Refer to GI-4, "Components" for symbols in the figure.

Removal and Installation

INFOID:0000000006052876

REMOVAL

1. Disengage roof side molding fixing clip, using remover tool (A).

   : Clip

   CAUTION:
   Apply protective tape (B) on body to protect the painted surface from damage.

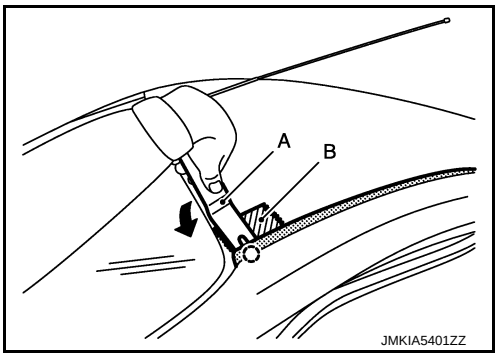

2. Remove roof side molding from front end.
   CAUTION:
   Never pull the roof side molding strongly.

INSTALLATION

Install in the reverse order of removal.

REMOVAL AND INSTALLATION OF ROOF SIDE MOLDING CLIP

Removal

1. Remove roof side molding.
2. Heat adhesive tape interface using a dryer, and then peel roof side molding clips (body side) using long-nose pliers.

CAUTION:
Be careful not to damage the body.

Installation

1. Clean tape removed surface with a shop cloth soaked in white gasoline or IPA.
2. Use two-part epoxy adhesive.

   Adhesive : 3M-weld DP–100 or equivalent

3. Apply adhesive evenly to clip tape surface.

   Thickness : Approximately 0.5 mm (0.020 in)

4. Position applied parts to the proper location, and then sufficiently press-fit until the adhesive protrudes to tape side.

   Press-fit limit : 19.6 N (2.0 Kg - 4.41 lb) × 2 seconds

5. Tape clips after press fit, and temporarily hold it for specified time based on the following.

5 to 10 °C (41 to 50 °F)	**: 1 hour or more**
11 to 23 °C (52 to 73 °F)	**: 30 minutes or more**
24 °C or more (75 °F or more)	**: 15 minutes or more**

6. Install from roof side molding rear end to front end in this order after temporarily holding.

CAUTION:
- **Use double-faced adhesive tape after hardening for clips.**
- **Securely insert molding rear end cap onto roof rear end cutout (installation standard).**
- **When installing roof side molding of windshield portion, check that molding fastener is securely inserted and then press in.**
- **Never wash the vehicle with in 24 hours so as to keep adhesive.**

DOOR OUTSIDE MOLDING

Exploded View

INFOID:0000000006052877

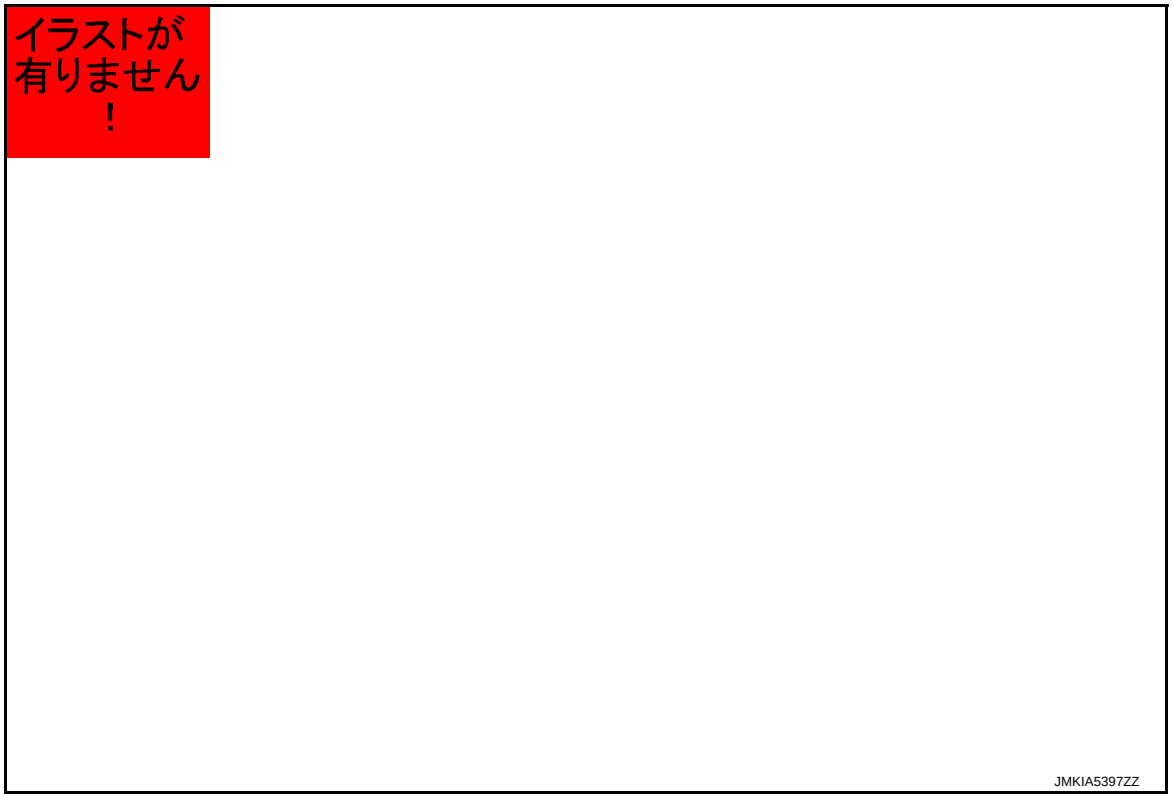

1. Front door panel
2. Front door outside molding
3. Rear door panel
4. Rear door outside molding

Removal and Installation

INFOID:0000000006052878

REMOVAL

FRONT DOOR OUTSIDE MOLDING

1. Fully open front door glass.
2. Twist door outside molding toward the outside of the vehicle, and then lift up and remove it while disengaging the pawls.

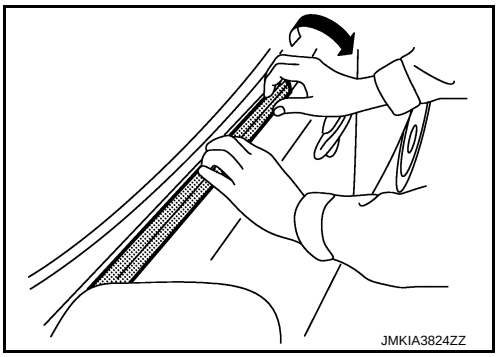

REAR DOOR OUTSIDE MOLDING

1. Fully open door window.

2. Twist door outside molding to ward the outside of the vehicle, and then lift up and remove it while disengaging the pawls.

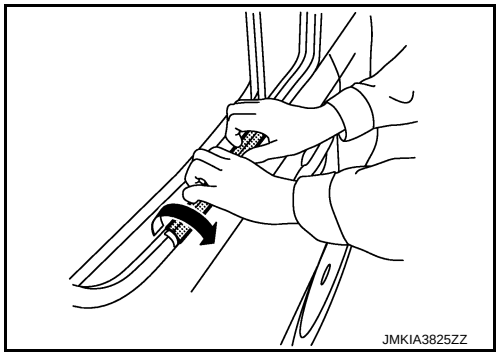

INSTALLATION

Install in the reverse order of removal.

REAR SPOILER

Exploded View

INFOID:0000000006056665

1. Rear spoiler assembly
2. Rear spoiler spacer
3. Grommet
4. Double-faced adhesive tape
   [t: 2.0mm (0.079 in)]

: Clip

Refer to XX-XX, "*****" for symbols in the figure.

Removal and Installation

INFOID:0000000006056666

REMOVAL

1. Remove rear spoiler side covers.
2. Remove rear spoiler fixing screws.
3. Disengage clips with remover tool while peeling the double-sided tape with threads.
   CAUTION:
   Apply protective tape around the outer edge of mating surface between rear spoiler and back door to prevent damage.
4. Disconnect high-mounted stop lamp harness connector, and then remove rear spoiler.
5. Remove grommets after removing rear spoiler.

INSTALLATION

Install in the reverse order of removal.

CAUTION:

- **Be careful no to damage the back door.**
- **Always replace double-sided tape with a new one, if rear spoiler is reused.**
- **Remove double-sided tape remaining on back door panel and back of rear spoiler with a double-sided tape remover, after removing rear spoiler.**
- **When installing, visually check the rear spoiler and the clips, then replace them with new parts if they are damaged.**
- **When installing rear spoiler, check that clips and bolts are securely fitted in back door panel holes, and then press them in.**
- **Never wash the vehicle within 24 hours after installing so as to keep adhesive.**

SECTION FAX
FRONT AXLE

CONTENTS

PRECAUTION 2

PRECAUTIONS 2
Precaution for Supplemental Restraint System (SRS) "AIR BAG" and "SEAT BELT PRE-TENSIONER" 2
Precaution Necessary for Steering Wheel Rotation after Battery Disconnect 2
Precautions for Drive Shaft 3

PREPARATION 4

PREPARATION 4
Special Service Tool 4
Commercial Service Tool 5

SYMPTOM DIAGNOSIS 6

NOISE, VIBRATION AND HARSHNESS (NVH) TROUBLESHOOTING 6
NVH Troubleshooting Chart 6

PERIODIC MAINTENANCE 7

FRONT WHEEL HUB AND KNUCKLE 7
Inspection 7

FRONT DRIVE SHAFT 8
Inspection 8

REMOVAL AND INSTALLATION 9

FRONT WHEEL HUB AND KNUCKLE 9
Exploded View 9
Removal and Installation 9
Disassembly and Assembly 10
Inspection 11

FRONT DRIVE SHAFT BOOT 12
Exploded View 12

WHEEL SIDE 13
WHEEL SIDE : Removal and Installation 13

TRANSAXLE SIDE 15
TRANSAXLE SIDE : Removal and Installation 15
Inspection 15

FRONT DRIVE SHAFT 16
Exploded View 16
Removal and Installation 17

WHEEL SIDE 18
WHEEL SIDE : Disassembly and Assembly 18

TRANSAXLE SIDE 19
TRANSAXLE SIDE : Disassembly and Assembly 19
Inspection 21

SERVICE DATA AND SPECIFICATIONS (SDS) 23

SERVICE DATA AND SPECIFICATIONS (SDS) 23
Wheel Bearing 23
Drive Shaft 23

PRECAUTION

PRECAUTIONS

Precaution for Supplemental Restraint System (SRS) "AIR BAG" and "SEAT BELT PRE-TENSIONER"

INFOID:0000000006046461

The Supplemental Restraint System such as “AIR BAG” and “SEAT BELT PRE-TENSIONER”, used along with a front seat belt, helps to reduce the risk or severity of injury to the driver and front passenger for certain types of collision. Information necessary to service the system safely is included in the “SRS AIR BAG” and “SEAT BELT” of this Service Manual.

WARNING:

- **To avoid rendering the SRS inoperative, which could increase the risk of personal injury or death in the event of a collision which would result in air bag inflation, all maintenance must be performed by an authorized NISSAN/INFINITI dealer.**
- **Improper maintenance, including incorrect removal and installation of the SRS, can lead to personal injury caused by unintentional activation of the system. For removal of Spiral Cable and Air Bag Module, see the “SRS AIR BAG”.**
- **Do not use electrical test equipment on any circuit related to the SRS unless instructed to in this Service Manual. SRS wiring harnesses can be identified by yellow and/or orange harnesses or harness connectors.**

PRECAUTIONS WHEN USING POWER TOOLS (AIR OR ELECTRIC) AND HAMMERS

WARNING:

- **When working near the Air Bag Diagnosis Sensor Unit or other Air Bag System sensors with the ignition ON or engine running, DO NOT use air or electric power tools or strike near the sensor(s) with a hammer. Heavy vibration could activate the sensor(s) and deploy the air bag(s), possibly causing serious injury.**
- **When using air or electric power tools or hammers, always switch the ignition OFF, disconnect the battery, and wait at least 3 minutes before performing any service.**

Precaution Necessary for Steering Wheel Rotation after Battery Disconnect

INFOID:0000000006046462

NOTE:

- Before removing and installing any control units, first turn the push-button ignition switch to the LOCK position, then disconnect both battery cables.
- After finishing work, confirm that all control unit connectors are connected properly, then re-connect both battery cables.
- Always use CONSULT-III to perform self-diagnosis as a part of each function inspection after finishing work. If a DTC is detected, perform trouble diagnosis according to self-diagnosis results.

For vehicle with steering lock unit, if the battery is disconnected or discharged, the steering wheel will lock and cannot be turned.

If turning the steering wheel is required with the battery disconnected or discharged, follow the operation procedure below before starting the repair operation.

OPERATION PROCEDURE

1. Connect both battery cables.
   NOTE:
   Supply power using jumper cables if battery is discharged.
2. Turn the push-button ignition switch to ACC position.
   (At this time, the steering lock will be released.)
3. Disconnect both battery cables. The steering lock will remain released with both battery cables disconnected and the steering wheel can be turned.
4. Perform the necessary repair operation.
5. When the repair work is completed, re-connect both battery cables. With the brake pedal released, turn the push-button ignition switch from ACC position to ON position, then to LOCK position. (The steering wheel will lock when the push-button ignition switch is turned to LOCK position.)
6. Perform self-diagnosis check of all control units using CONSULT-III.

Precautions for Drive Shaft

INFOID:0000000006044456

Observe the following precautions when disassembling and assembling drive shaft.
- Never disassemble joint sub-assembly because it is non-overhaul parts.
- Perform work in a location which is as dust-free as possible.
- Clean the parts, before disassembling and assembling.
- Prevent the entry of foreign objects during disassembly of the service location.
- Reassemble disassembled parts carefully in the correct order. If work is interrupted, a clean cover must be placed over parts.
- Use paper waste. Fabric shop cloths must not be used because of the danger of lint adhering to parts.
- Clean disassembled parts (except for rubber parts) with kerosene which shall be removed by blowing with air or wiping with paper waste.

PREPARATION

PREPARATION

Special Service Tool

INFOID:0000000006044457

Tool number Tool name		Description
ST35271000 Drift a: ϕ72 mm (2.83 in) dia. b: ϕ63 mm (2.48 in) dia.	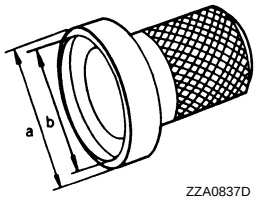 ZZA0837D	Installing wheel bearing
ST33710000 Drift a: ϕ30 mm (1.18 in) dia. b: ϕ23 mm (0.91 in) dia.	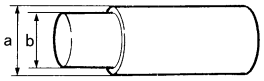 ZZA1233D	Removing wheel hub
ST35321000 Drift a: ϕ49 mm (1.93 in) dia. b: ϕ41 mm (1.61 in) dia.	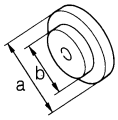 ZZA1051D	• Removing wheel bearing • Installing wheel hub
KV40107300 Boot band crimping tool	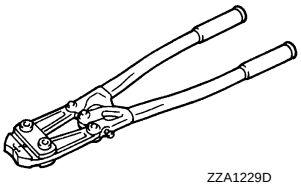 ZZA1229D	Installing boot band
KV40107500 Drive shaft attachment	 ZZA1230D	Removing drive shaft
KV38107900 Protector a: ϕ32 mm (1.26 in) dia.	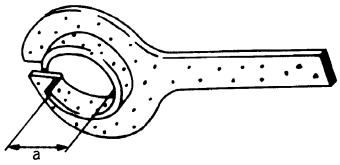 PDIA1183J	Installing drive shaft

Commercial Service Tool

INFOID:0000000006044458

Tool name	Description
Drive shaft puller 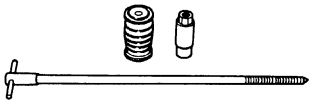 JPDIG0152ZZ	Remove drive shaft joint sub assembly
Sliding hummer 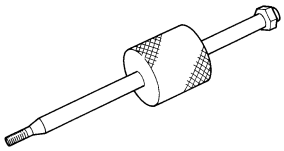 ZZA0023D	Remove drive shaft

SYMPTOM DIAGNOSIS

NOISE, VIBRATION AND HARSHNESS (NVH) TROUBLESHOOTING

NVH Troubleshooting Chart

INFOID:0000000006044453

Use chart below to find the cause of the symptom. If necessary, repair or replace these parts.

Reference page			—	FAX-21	—	FAX-9	—	FAX-7	NVH in FAX and FSU sections	Refer to Front axle in this chart	NVH in WT section	NVH in WT section	Refer to DRIVE SHAFT in this chart	NVH in BR section	NVH in ST section
Possible cause and SUSPECTED PARTS			Excessive joint angle	Joint sliding resistance	Imbalance	Improper installation, looseness	Parts interference	Wheel bearing damage	FRONT AXLE AND FRONT SUSPENSION	FRONT AXLE	TIRE	ROAD WHEEL	DRIVE SHAFT	BRAKE	STEERING
Symptom	DRIVE SHAFT	Noise	×	×				×	×	×	×	×		×	×
		Shake	×		×			×	×	×	×	×		×	×
	FRONT AXLE	Noise				×	×	×	×		×	×	×	×	×
		Shake				×	×	×	×		×	×	×	×	×
		Vibration				×	×	×	×		×		×		×
		Shimmy				×	×		×		×	×		×	×
		Judder				×			×		×	×		×	×
		Poor quality ride or handling				×	×		×		×	×			

×: Applicable

PERIODIC MAINTENANCE

FRONT WHEEL HUB AND KNUCKLE

Inspection

INFOID:0000000006044459

COMPONENT PART

Check that the mounting conditions (looseness, backlash) of each component and component conditions (wear, damage) are normal.

WHEEL HUB AND WHEEL BEARING

Check the following items, and replace the part if necessary.

- Move wheel hub and wheel bearing in the axial direction by hand. Check there is no looseness of wheel bearing.

Axial end play **: Refer to XX-XX, "*****".**

- Rotate wheel hub and wheel bearing and check there is no unusual noise or other irregular conditions. If there is any of irregular conditions, replace wheel hub and wheel bearing.

FRONT DRIVE SHAFT

Inspection

INFOID:0000000006044460

Check the following items, and replace the part if necessary.

- Check drive shaft mounting point and joint for looseness and other damage.
  CAUTION:
  Replace entire drive shaft assembly when noise or vibration occurs from drive shaft.
- Check boot for cracks and other damage.

REMOVAL AND INSTALLATION

FRONT WHEEL HUB AND KNUCKLE

Exploded View

INFOID:0000000006044461

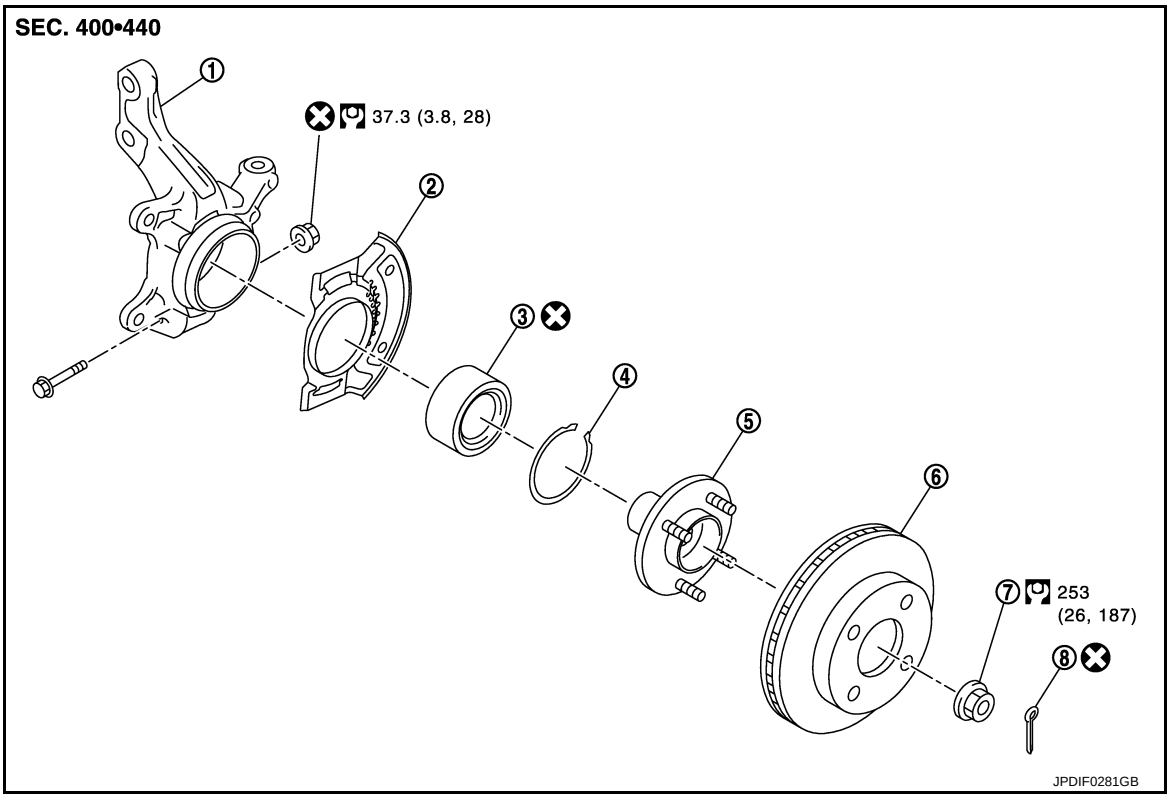

1. Steering knuckle
2. Splash guard
3. Wheel bearing
4. Snap ring
5. Wheel hub
6. Disc rotor
7. Wheel hub lock nut
8. Cotter pin

Refer to XX-XX, "*****" for symbols in the figure.

Removal and Installation

INFOID:0000000006044462

REMOVAL

1. Remove tires. Refer to XX-XX, "*****".
2. Remove lock plate from strut assembly. Refer to XX-XX, "*****".
3. Remove caliper assembly. Hang caliper assembly not to interfere with work. Refer to XX-XX, "*****".
   CAUTION:
   Never depress brake pedal while brake caliper is removed.
4. Remove disc rotor.
5. Remove cotter pin, and then loosen wheel hub lock nut.
6. Patch wheel hub lock nut with a piece of wood. Hammer the wood to disengage wheel hub from drive shaft.
   CAUTION:
   - **Never place drive shaft joint at an extreme angle. Also be careful not to overextend slide joint.**
   - **Never allow drive shaft to hang down without support for joint sub-assembly, shaft and the other parts.**

   NOTE:
   Use suitable puller, if wheel hub and drive shaft cannot be separated even after performing the above procedure.
7. Remove wheel hub lock nut.

8. Suspend the drive shaft with suitable wire.
9. Remove steering outer socket from steering knuckle. Refer to XX-XX, "*****".
10. Remove steering knuckle from transverse link.
11. Remove steering knuckle from strut assembly. Refer to XX-XX, "*****".

INSTALLATION

Note the following, and install in the reverse order of the removal.

- Clean the matching surface of wheel hub lock nut and wheel hub.
  CAUTION:
  Never apply lubricating oil to these matching surface.
- Tighten the wheel hub lock nut to the specified torque. Refer to FAX-9, "Exploded View".
  CAUTION:
  Never use a power tool to tighten the wheel hub lock nut.
- Perform the final tightening of each of parts under unladen conditions, which were removed when removing wheel hub and axle housing.
- Never reuse cotter pin.

Disassembly and Assembly

INFOID:0000000006044496

DISASSEMBLY

1. Remove wheel hub, using the drift (SST).
2. Remove snap ring from steering knuckle, using a suitable tool.
   CAUTION:
   Never damage steering knuckle.

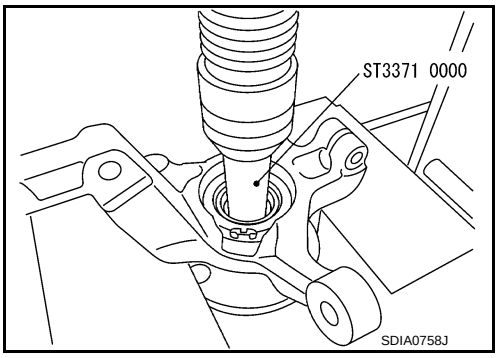

3. Remove wheel bearing using the drift (SST).

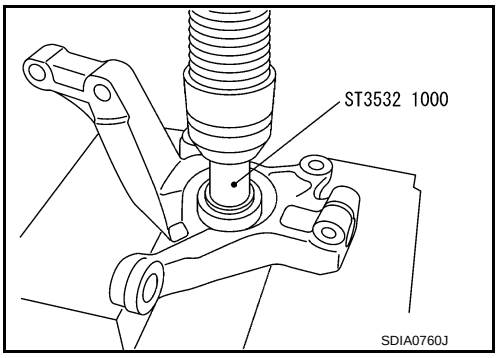

ASSEMBLY

1. Install wheel bearing, using the drift (A) (SST: ST35271000) and suitable drift (B).
   CAUTION:
   - **Be sure that wheel bearing is completely press-fit until sensor housing contacts the body tightly.**
   - **Never reuse wheel bearing.**
2. Install snap ring to steering knuckle.

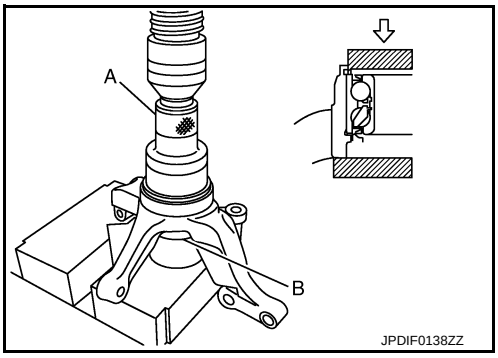

3. Install wheel hub, using the drift (SST) and the drift (SST).

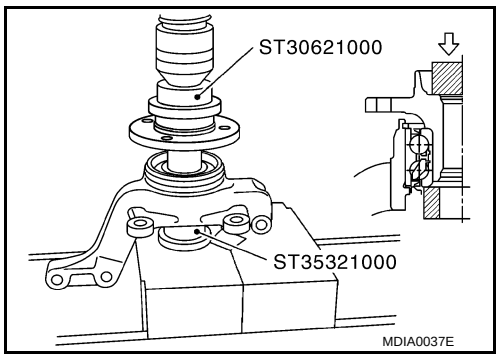

Inspection

INFOID:0000000006044463

INSPECTION AFTER REMOVAL

Check the following items, and replace the part if necessary.

- Check components for deformation, cracks, and other damage.
- Check boots of transverse link and steering outer socket ball joint for breakage, axial end play, and swing torque. Refer to XX-XX, "*****" and XX-XX, "*****".

INSPECTION AFTER DISASSEMBLY

Wheel Hub

- Check wheel hub for cracks (with magnetic exploration or dye testing). Replace if necessary.

Steering Knuckle

- Check steering knuckle for deformation, cracks, and other damage. Replace if any non-standard conditions are found.

Snap Rings

- Check snap ring for wear or cracks. Replace if necessary.

INSPECTION AFTER ASSEMBLY

1. Apply a load of 34,300 to 49,000 N (3,500 to 5,000 kg, 7,710 - 11,015 lb). In this condition, rotate in forward and reverse directions 10 times each to insure a good fit.
2. Set a spring balance on strut mounting hole (upper). Measure rotating torque at an rpm of 8 - 12 rpm.

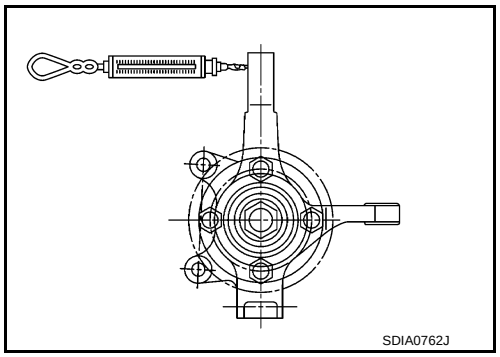

Rotating torque	**: Refer to XX-XX, "*****".**
Spring balance measurement	**: Refer to XX-XX, "*****".**

NOTE:
In case the above loading is not possible

- Assemble drive shaft and tighten wheel hub lock nuts to specified torque. Then rotate in forward and reverse direction 10 times each to insure a good fit.
- At a rotating speed of 8 - 12 rpm, place a spring balance on hub bolt to measure torque.

Rotating torque	**: 2.32 N·m (0.24 kg-m, 21 in-lb) or less**
Spring balance measurement	**: 15.9 N (1.6 kg, 3.57 lb) or less**

INSPECTION AFTER INSTALLATION

1. Check the wheel alignment. Refer to XX-XX, "*****".
2. Adjust neutral position of steering angle sensor. Refer to XX-XX, "*****".

FRONT DRIVE SHAFT BOOT

Exploded View

INFOID:0000000006068168

LEFT SIDE

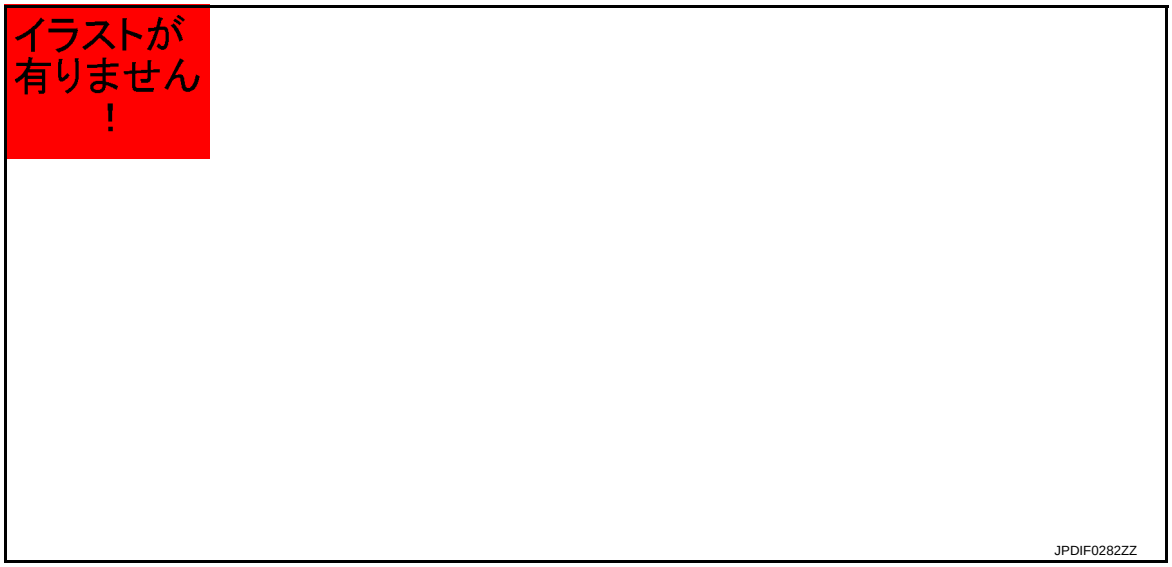

1.	Joint sub-assembly	2.	Circular clip	3.	Boot band
4.	Boot	5.	Shaft	6.	Spider assembly
7.	Snap ring	8.	Housing	9.	Dust shield

⇦ : Wheel side

: Fill NISSAN Genuine grease or equivalent.

Refer to GI-4, "Components" for symbols not described on the above.

RIGHT SIDE

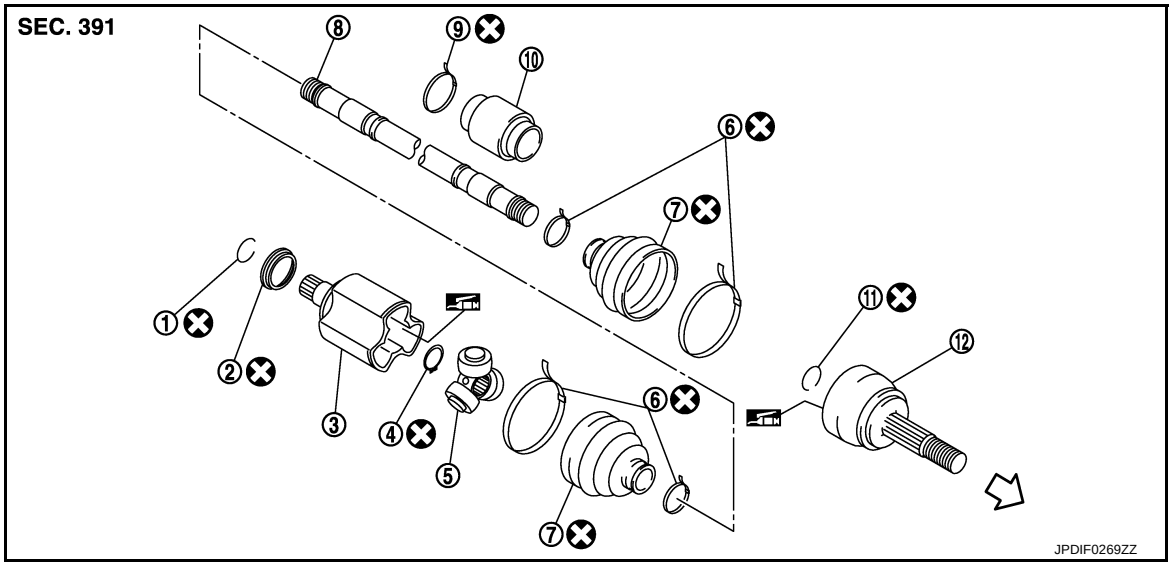

1.	Circular clip	2.	Dust shield	3.	Housing
4.	Snap ring	5.	Spider assembly	6.	Boot band
7.	Boot	8.	Shaft	9.	Damper band
10.	Dynamic damper	11.	Circular clip	12.	Joint sub-assembly

⇦ : Wheel side

: Fill NISSAN Genuine grease or equivalent.

Refer to GI-4, "Components" for symbols not described on the above.

WHEEL SIDE

WHEEL SIDE : Removal and Installation

INFOID:0000000006044465

REMOVAL

1. Remove tires. Refer to XX-XX, "*****".
2. Remove lock plate from strut assembly. Refer to XX-XX, "*****".
3. Remove caliper assembly. Hang caliper assembly not to interfere with work. Refer to XX-XX, "*****" .
   CAUTION:
   Never depress brake pedal while brake caliper is removed.
4. Remove disc rotor.
5. Remove cotter pin, and then loosen wheel hub lock nut. Refer to FAX-9, "Exploded View".
6. Patch wheel hub lock nut with a piece of wood. Hammer the wood to disengage wheel hub from drive shaft.
   CAUTION:
   - **Never place drive shaft joint at an extreme angle. Also be careful not to overextend slide joint.**
   - **Never allow drive shaft to hang down without support for joint sub-assembly, shaft and the other parts.**

   NOTE:
   Use suitable puller, if wheel hub and drive shaft cannot be separated even after performing the above procedure.
7. Remove wheel hub lock nut.
8. Remove strut assembly from steering knuckle. Refer to XX-XX, "*****".
9. Remove drive shaft from wheel hub.
10. Remove boot bands, and then remove boot from joint subassembly.
11. Screw drive shaft puller (commercial service tool) (A) into joint sub-assembly screw part to a length of 30 mm (1.18 in) or more. Support drive shaft with one hand and pull out joint sub-assembly from shaft.
    CAUTION:
    - **Align drive shaft puller and drive shaft and remove them by pulling firmly and uniformly.**
    - **If joint sub-assembly cannot be pulled out, try after removing drive shaft from vehicle. Refer to FAX-18, "WHEEL SIDE : Disassembly and Assembly".**

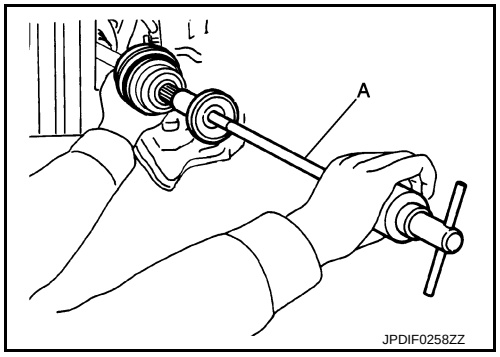

12. Remove circular clip from shaft.
13. Remove boot from shaft.

INSTALLATION

1. Clean the old grease on joint sub-assembly with paper waste.
2. Fill serration slot joint sub-assembly with NISSAN genuine grease or equivalent until the serration slot and ball groove become full to the brim.
   CAUTION:
   After applying grease, use a paper waste to wipe off old grease that has oozed out.
3. Install boot and boot bands to shaft.
   CAUTION:
   - **Wrap serration on shaft with tape to protect the boot from damage.**
   - **Never reuse boot and boot band.**
4. Remove the tape wrapped around the serration on shaft.
5. Position the circular clip on groove at the shaft edge.
   CAUTION:

Never reuse circular clip.
NOTE:
Drive joint inserter is recommended when installing circular clip.

6. Align both center axles of the shaft edge and joint sub-assembly. Then assemble shaft with joint sub-assembly holding circular clip.
7. Install joint sub-assembly (1) to shaft using plastic hammer.
   CAUTION:
   Confirm that joint sub-assembly is correctly engaged while rotating drive shaft.
8. Apply the specified amount of grease into the boot inside from large diameter side of boot.

   Grease amount : Refer to FAX-23, "Drive Shaft".

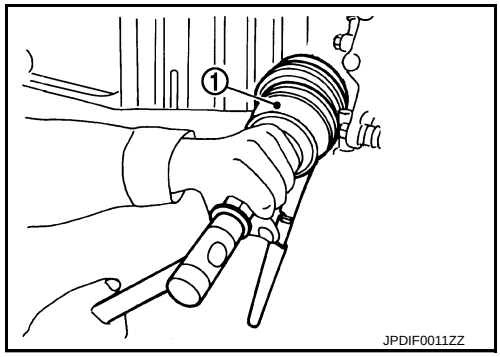

9. Install the boot securely into grooves (indicated by "*" marks) shown in the figure.
   CAUTION:
   If grease adheres to the boot mounting surface (indicated by "*" mark) on the shaft or joint sub-assembly, boot may be removed. Remove all grease from the boot mounting surface.
10. To prevent the deformation of the boot, adjust the boot installation length (L) to the specified value shown below by inserting the suitable tool into inside of the boot from the large diameter side of the boot and discharging the inside air.

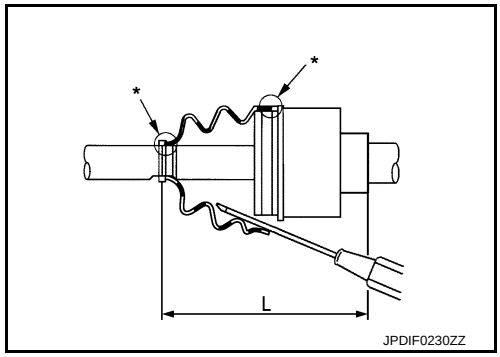

   L : Refer to FAX-23, "Drive Shaft".

   CAUTION:
   - **If the boot installation length exceeds the standard, it may cause breakage of the boot.**
   - **Be careful not to touch the inside of the boot with a tip of tool.**
11. Secure the large and small ends of the boot with boot bands using the boot band crimping tool (SST: KV40107300) (A).
    CAUTION:
    - **Never reuse boot band.**

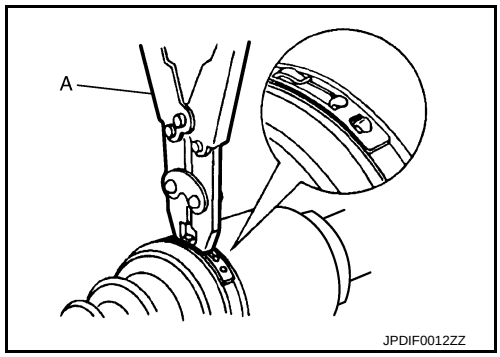

    - **Secure boot band so that dimension (M) meets the specification as shown in the figure.**

      M : 1.0 – 4.0 mm (0.039 – 0.157 in)

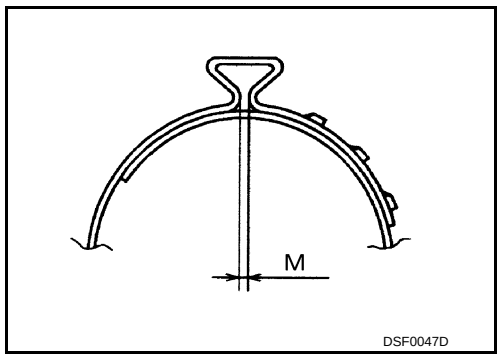

12. Secure joint sub-assembly and shaft, and then check that they are in the correct position when rotating boot. Reinstall them using boot bands when boot installation positions become incorrect.
    CAUTION:
    Never reuse boot band.
13. Clean the matching surface of wheel hub lock nut and wheel hub.

CAUTION:
Never apply lubricating oil to these matching surface.

14. Insert drive shaft to wheel hub, and then temporarily tighten wheel hub lock nut.
15. Install strut assembly to steering knuckle. Refer to XX-XX, "*****".
16. Install disc rotor.
17. Install caliper assembly to steering knuckle. Refer to XX-XX, "*****".
18. Install lock plate to strut assembly. Refer to XX-XX, "*****".
19. Tighten the wheel hub lock nut to the specified torque. Refer to FAX-9, "Exploded View".
    CAUTION:
    Never use a power tool to tighten the wheel hub lock nut.
20. Install cotter pin. Refer to FAX-9, "Exploded View".
    CAUTION:
    - **Never reuse cotter pin.**
    - **Bend cotter pin at the root sufficiently to prevent any looseness.**
21. Install tires. Refer to XX-XX, "*****".

TRANSAXLE SIDE

TRANSAXLE SIDE : Removal and Installation

INFOID:0000000006044466

NOTE:
Remove boot after removing drive shaft.
- Remove: refer to FAX-17, "Removal and Installation".
- Disassembly: refer to FAX-19, "TRANSAXLE SIDE : Disassembly and Assembly".

Inspection

INFOID:0000000006044467

INSPECTION AFTER INSTALLATION

Check the following items, and replace the part if necessary.
- Move joint up/down, left/right, and in the axial directions. Check for motion that is not smooth and for significant looseness.
- Check boot for cracks, damage, and leakage of grease.

FRONT DRIVE SHAFT

Exploded View

INFOID:0000000006044468

LEFT SIDE

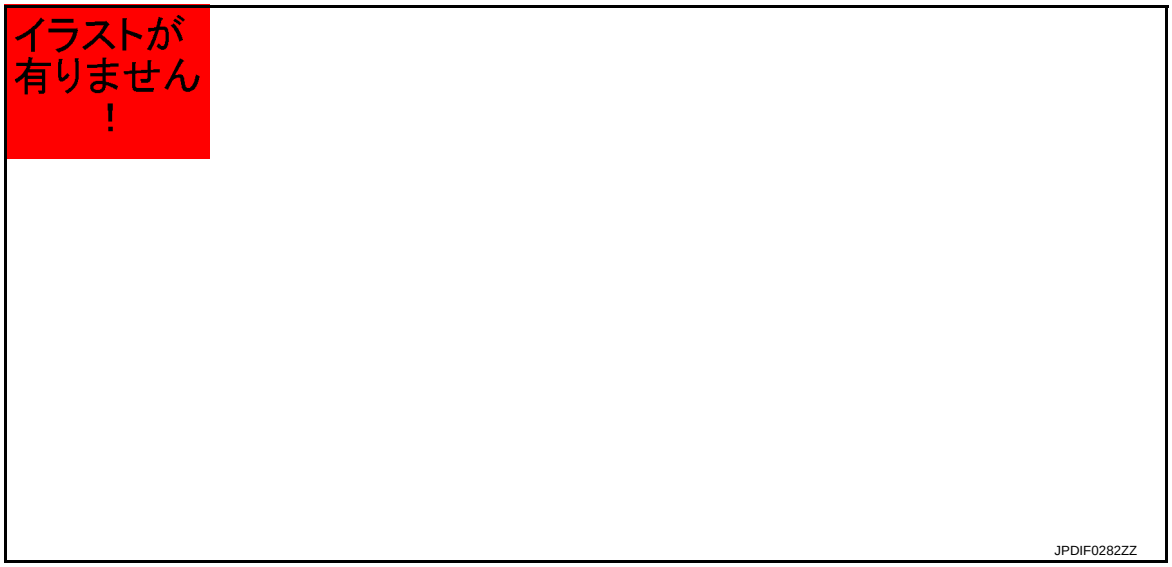

1.	Joint sub-assembly	2.	Circular clip	3.	Boot band
4.	Boot	5.	Shaft	6.	Spider assembly
7.	Snap ring	8.	Housing	9.	Dust shield

⇦ : Wheel side

: Fill NISSAN Genuine grease or equivalent.

Refer to GI-4, "Components" for symbols not described on the above.

RIGHT SIDE

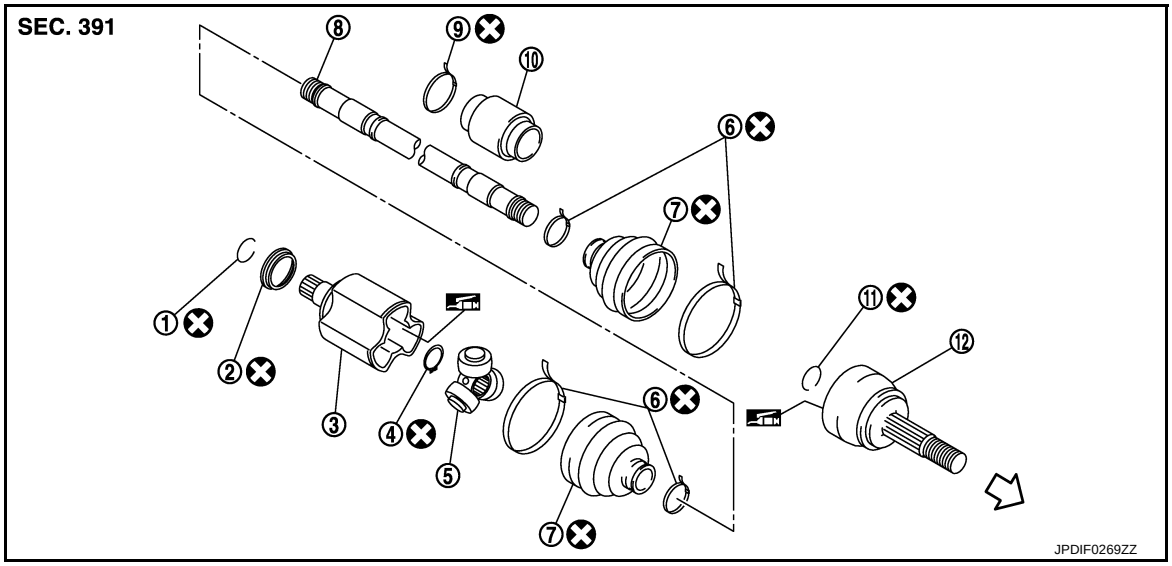

1.	Circular clip	2.	Dust shield	3.	Housing
4.	Snap ring	5.	Spider assembly	6.	Boot band
7.	Boot	8.	Shaft	9.	Damper band
10.	Dynamic damper	11.	Circular clip	12.	Joint sub-assembly

⇦ : Wheel side

: Fill NISSAN Genuine grease or equivalent.

Refer to GI-4, "Components" for symbols not described on the above.

Removal and Installation

INFOID:0000000006044469

REMOVAL

1. Remove tires. Refer to XX-XX, "*****".
2. Remove lock plate from strut assembly. Refer to XX-XX, "*****".
3. Remove caliper assembly. Hang caliper assembly not to interfere with work. Refer to XX-XX, "*****" .
   CAUTION:
   Never depress brake pedal while brake caliper is removed.
4. Remove disc rotor.
5. Remove cotter pin, and then loosen wheel hub lock nut. Refer to FAX-9, "Exploded View".
6. Patch wheel hub lock nut with a piece of wood. Hammer the wood to disengage wheel hub from drive shaft.
   CAUTION:
   - **Never place drive shaft joint at an extreme angle. Also be careful not to overextend slide joint.**
   - **Never allow drive shaft to hang down without support for joint sub-assembly, shaft and the other parts.**

   NOTE:
   Use suitable puller, if wheel hub and drive shaft cannot be separated even after performing the above procedure.
7. Remove wheel hub lock nut.
8. Remove strut assembly from steering knuckle. Refer to XX-XX, "*****".
9. Remove drive shaft from wheel hub.
10. Use the drive shaft attachment (SST: KV40107500) (A) and a sliding hammer (commercial service tool) (B) while inserting tip of the drive shaft attachment between shaft and transaxle assembly, and then remove drive shaft from transaxle assembly.
    CAUTION:
    - **Never place drive shaft joint at an extreme angle when removing drive shaft. Also be careful not to overextend slide joint.**
    - **Confirm that the circular clip is attached to the drive shaft.**

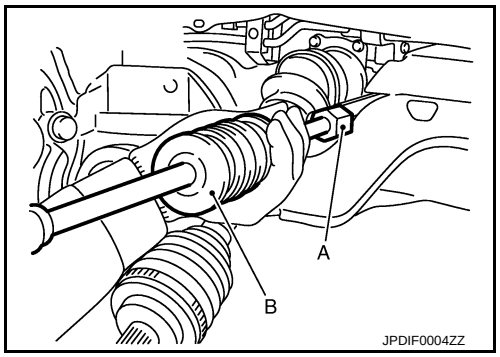

INSTALLATION

Note the following, and install in the reverse order of removal.

Transaxle Side

- Always replace differential side oil seal with new one when installing drive shaft. Refer to XX-XX, "*****".
- Place the protector (SST: KV38107900) (A) onto transaxle assembly to prevent damage to the oil seal while inserting drive shaft. Slide drive shaft sliding joint and tap with a hammer to install securely.
  CAUTION:
  Check that circular clip is completely engaged.

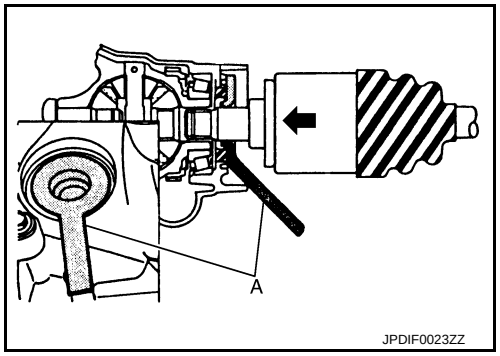

Wheel Hub Side

- Clean the matching surface of wheel hub lock nut and wheel hub.
  CAUTION:
  Never apply lubricating oil to these matching surface.

- Tighten the wheel hub lock nut to the specified torque. Refer to FAX-9, "Exploded View".
  CAUTION:
  Never use a power tool to tighten the wheel hub lock nut.
- Perform the final tightening of each of parts under unladen conditions, which were removed when removing wheel hub and axle housing.
- Never reuse cotter pin.

WHEEL SIDE

WHEEL SIDE : Disassembly and Assembly

INFOID:0000000006044470

DISASSEMBLY

1. Fix shaft with a vise.
   CAUTION:
   Protect shaft when fixing with a vise using aluminum or copper plates.
2. Remove boot bands, and then remove boot from joint sub-assembly.
3. Screw drive shaft puller (commercial service tool) (A) into joint sub-assembly screw part to a length of 30 mm (1.18 in) or more. Support drive shaft with one hand and pull out joint sub-assembly from shaft.
   CAUTION:
   - **Align drive shaft puller and drive shaft and remove them by pulling firmly and uniformly.**
   - **If joint sub-assembly cannot be removed after five or more unsuccessful attempts, replace shaft and joint sub assembly as a set.**

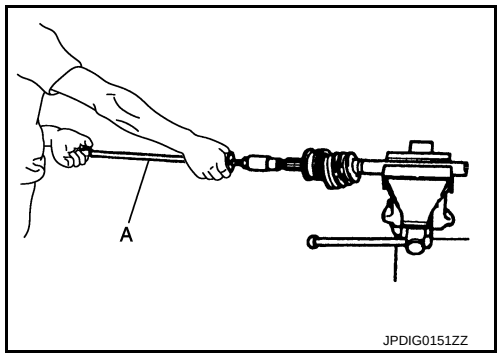

4. Remove circular clip from shaft.
5. Remove boot from shaft.

ASSEMBLY

1. Clean the old grease on joint sub-assembly with paper waste.
2. Fill serration slot joint sub-assembly with NISSAN genuine grease or equivalent until the serration slot and ball groove become full to the brim.
   CAUTION:
   After applying grease, use a paper waste to wipe off old grease that has oozed out.
3. Install boot and boot bands to shaft.
   CAUTION:
   - **Wrap serration on shaft with tape to protect the boot from damage.**
   - **Never reuse boot and boot band.**
4. Remove the tape wrapped around the serration on shaft.
5. Position the circular clip on groove at the shaft edge.
   CAUTION:
   Never reuse circular clip.
   NOTE:
   Drive joint inserter is recommended when installing circular clip.
6. Align both center axles of the shaft edge and joint sub-assembly. Then assemble shaft with joint sub-assembly holding circular clip.
7. Install joint sub-assembly to shaft using plastic hammer.
   CAUTION:
   - **Check circular clip is properly positioned on groove of the joint sub-assembly.**
   - **Confirm that joint sub-assembly is correctly engaged while rotating drive shaft.**
8. Apply the specified amount of grease into the boot inside from large diameter side of boot.

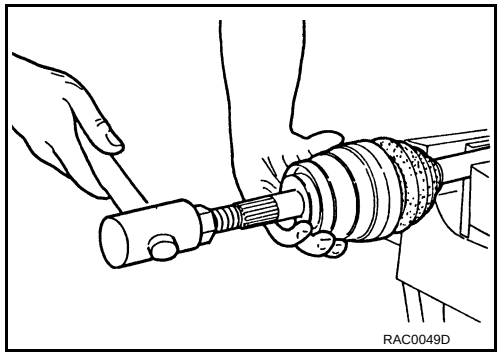

Grease amount : **Refer to FAX-23, "Drive Shaft".**

9. Install the boot securely into grooves (indicated by "*" marks) shown in the figure.
   CAUTION:
   If grease adheres to the boot mounting surface (indicated by "*" mark) on the shaft or joint sub-assembly, boot may be removed. Remove all grease from the boot mounting surface.

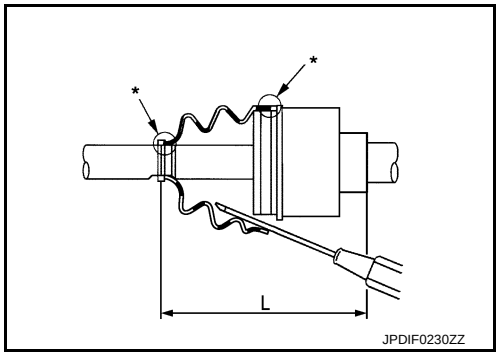

10. To prevent the deformation of the boot, adjust the boot installation length (L) to the specified value shown below by inserting the suitable tool into inside of the boot from the large diameter side of the boot and discharging the inside air.

    L : Refer to FAX-23, "Drive Shaft".

    CAUTION:
    - **If the boot installation length exceeds the standard, it may cause breakage of the boot.**
    - **Be careful not to touch the inside of the boot with a tip of tool.**

11. Secure the large and small ends of the boot with boot bands using the boot band crimping tool (SST: KV40107300) (A).
    CAUTION:
    - **Never reuse boot band.**

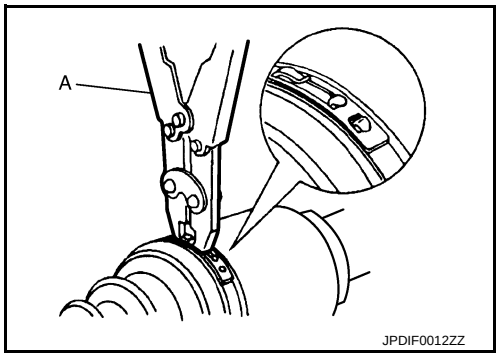

    - **Secure boot band so that dimension (M) meets the specification as shown in the figure.**

    M : 1.0 – 4.0 mm (0.039 – 0.157 in)

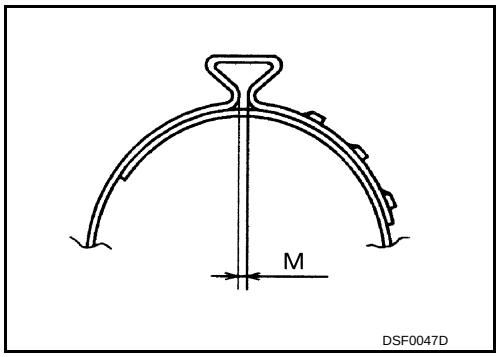

12. Secure joint sub-assembly and shaft, and then check that they are in the correct position when rotating boot. Reinstall them using boot bands when boot installation positions become incorrect.
    CAUTION:
    Never reuse boot band.

TRANSAXLE SIDE

TRANSAXLE SIDE : Disassembly and Assembly

INFOID:0000000006044471

DISASSEMBLY

1. Fix shaft with a vise.
   CAUTION:
   Protect shaft using aluminum or copper plates when fixing with a vise.
2. Remove boot bands, and then remove boot from housing.
3. Put matching marks on housing and shaft, and then pull out housing from shaft.
   CAUTION:
   Use paint or an equivalent for matching marks. Never scratch the surfaces.

4. Put matching marks (A) on the spider assembly and shaft.
   CAUTION:
   Use paint or an equivalent for matching marks. Never scratch the surfaces.

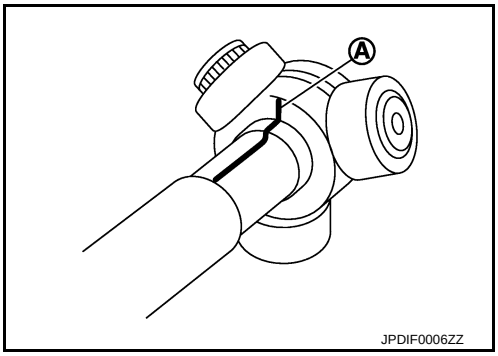

5. Remove snap ring (1), and then remove spider assembly from shaft.
6. Remove boot from shaft.
7. Remove dust shield from housing.
8. Remove circular clip from housing.
9. Clean old grease on housing with paper towels.
10. Remove damper bands, then remove dynamic damper from shaft. (RH)

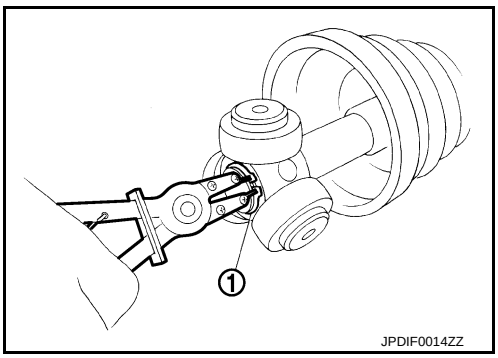

ASSEMBLY

1. Install dynamic damper, follow the procedure described below. (RH)

a. Install dynamic damper to shaft.

b. Secure dynamic damper with bands in the following specified position (A) when installing.
   CAUTION:
   Never reuse bands.

   A : Refer to FAX-23, "Drive Shaft".

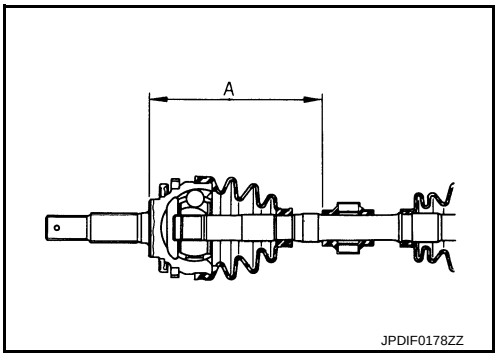

2. Install new boot and boot bands to shaft.
   CAUTION:
   - **Wrap serration on shaft with tape (A) to protect boot from damage.**
   - **Never reuse boot and boot bands.**
3. Remove the tape wrapped around the serration on shaft.

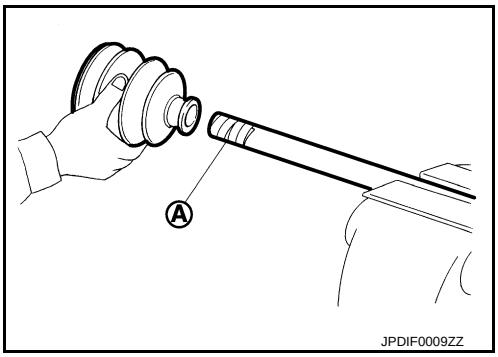

4. To install the spider assembly (1), align it with the matching marks (A) on the shaft (2) during the removal, and direct the serration mounting surface (B) to the shaft.

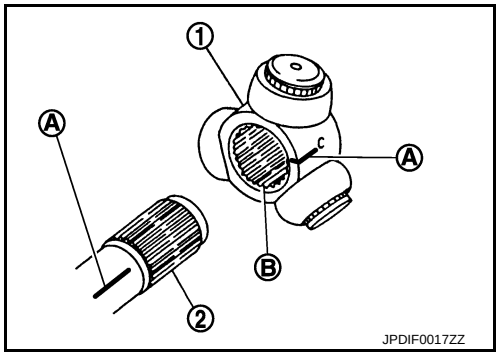

5. Secure spider assembly onto shaft with snap ring (1).
   CAUTION:
   Never reuse snap ring.
6. Apply the appropriate amount of grease to spider assembly and sliding surface.
7. Assemble the housing onto spider assembly, and apply the balance of the specified amount grease.

   Grease amount : Refer to FAX-23, "Drive Shaft".

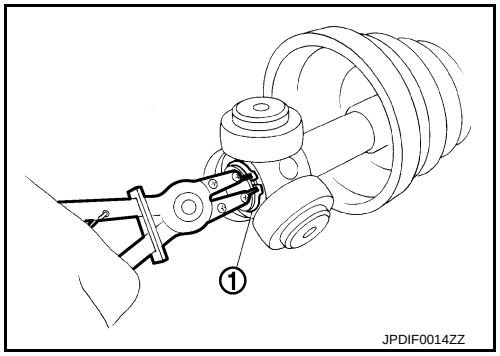

8. Align matching marks put during the removal of housing.
9. Install boot securely into grooves (indicated by "*" marks) shown in the figure.
   CAUTION:
   If grease adheres to the boot mounting surface (with "*" mark) on shaft or housing, boot may be removed. Remove all grease from the surface.
10. To prevent the deformation of the boot, adjust the boot installation length to the value shown below (L) by inserting the suitable tool into the inside of boot from the large diameter side of boot and discharging inside air.

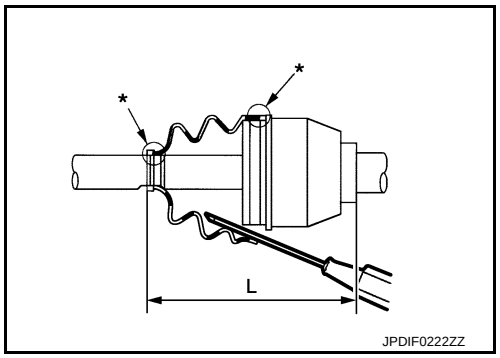

   L : Refer to FAX-23, "Drive Shaft".

   CAUTION:
   - **If the boot installation length exceeds the standard, it may cause breakage of the boot.**
   - **Be careful not to touch the inside of the boot with the tip of tool.**
11. Install new boot bands securely as shown in the figure.
    CAUTION:
    Never reuse boot bands.
12. Secure housing and shaft, and then check that they are in the correct position when rotating boot. Install them with new boot band when the mounting positions become incorrect.
13. Install dust shield.
    CAUTION:
    Never reuse dust shield.
14. Install circular clip to housing.
    CAUTION:
    Never reuse circular clip.

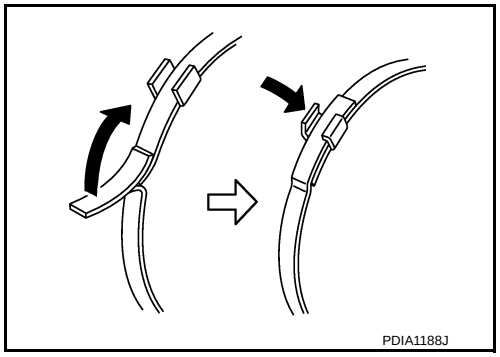

Inspection

INFOID:0000000006044472

INSPECTION AFTER REMOVAL

Check the following items, and replace the part if necessary.
- Move joint up/down, left/right, and in the axial directions. Check for motion that is not smooth and for significant looseness.
- Check boot for cracks, damage, and leakage of grease.

INSPECTION AFTER DISASSEMBLY

Check the following items, and replace the part if necessary.

Shaft

Check shaft for runout, cracks, or other damage.

Dynamic Damper

Check damper for cracks or wear.

Joint Sub-Assembly (Wheel Side)

Check the following:

- Joint sub-assembly for rough rotation and excessive axial looseness.
- The inside of the joint sub-assembly for entry of foreign material.
- Joint sub-assembly for compression scars, cracks, and fractures inside of joint sub-assembly.

Replace joint sub-assembly if there are any non-standard conditions of components.

Housing and spider assembly (Transaxle Side)

Replace housing and spider assembly if there is scratching or wear of housing roller contact surface or spider roller contact surface.

NOTE:

Housing and spider assembly are used in a set.

INSPECTION AFTER INSTALLATION

1. Check the wheel alignment. Refer to XX-XX, "*****".
2. Adjust neutral position of steering angle sensor. Refer to XX-XX, "*****".

SERVICE DATA AND SPECIFICATIONS (SDS)

SERVICE DATA AND SPECIFICATIONS (SDS)

Wheel Bearing

INFOID:0000000006046121

Item	Standard
Axial end play	0.05 mm (0.002 in) or less
Rotating torque	1.9 N·m (0.19 kg-m, 17 in-lb·) or less
Spring balance measurement	13.0 N (1.3 kg, 2.92lb) or less

Drive Shaft

INFOID:0000000006044474

Item		Standard
Grease quantity	Wheel side	55 – 75 g (1.94 – 2.65 oz)
	Transaxle side	85 – 105 g (3.00 – 3.70 oz)
Boots installed length	Wheel side	119.5 mm (4.70 in)
	Transaxle side	163.9 mm (6.45 in)
Dimension of dynamic damper	Right side	246 – 252 mm (9.69 – 9.92 in)

SECTION FL
FUEL SYSTEM

CONTENTS

HR12DE

PRECAUTION 2

PRECAUTIONS 2
General Precautions 2

PREPARATION 3

PREPARATION 3
Special Service Tool 3
Commercial Service Tools 3

PERIODIC MAINTENANCE 4

FUEL SYSTEM 4
Inspection 4
Quick Connector 4

REMOVAL AND INSTALLATION 5

FUEL LEVEL SENSOR UNIT, FUEL FILTER AND FUEL PUMP ASSEMBLY 5
Exploded View 5
Removal and Installation 5
Inspection 8

FUEL TANK 9
Exploded View 9
Removal and Installation 9
Inspection 11

SERVICE DATA AND SPECIFICATIONS (SDS) 12

SERVICE DATA AND SPECIFICATIONS (SDS) 12
Fuel Tank 12

PRECAUTION

PRECAUTIONS

General Precautions

INFOID:0000000005988482

WARNING:
When replacing fuel line parts, be sure to observe the following.
- **Put a “CAUTION: FLAMMABLE” sign in the workshop.**
- **Be sure to work in a well ventilated area and furnish workshop with a CO_2 fire extinguisher.**
- **Never smoke while servicing fuel system. Keep open flames and sparks away from the work area.**

CAUTION:
- **Use gasoline required by the regulations for octane number. Refer to GI-27, "Fuel".**
- **Before removing fuel line parts, perform out the following procedures:**
  - **Put drained fuel in an explosion-proof container and put the lid on securely. Keep the container in safe area.**
  - **Release fuel pressure from the fuel lines. Refer to EC-113, "Work Procedure".**
  - **Disconnect the battery cable from the negative terminal.**
- **Always replace O-ring and clamps with new ones.**
- **Never kink or twist tubes when they are being installed.**
- **Never tighten hose clamps excessively to avoid damaging hoses.**
- **After installing tubes, check there is no fuel leakage at connections in the following steps.**
  - **Apply fuel pressure to fuel lines with turning ignition switch “ON” (with engine stopped). Then check for fuel leakage at connections.**
  - **Start engine and rev it up and check for fuel leakage at connections.**
- **Use only a genuine NISSAN fuel filler cap as a replacement. If an incorrect fuel filler cap is used, the “MI” may come on.**
- **For servicing “EVAPORATIVE EMISSION SYSTEM” parts, refer to EC-313, "Hydraulic Layout".**

PREPARATION

PREPARATION

Special Service Tool

INFOID:0000000005988483

Tool number Tool name	Description
KV99104700 Lock ring wrench イラストが有りません！ JPBIA3555ZZ	Removing and Installing lock ring

Commercial Service Tools

INFOID:0000000005988484

Tool name	Description
Power tool 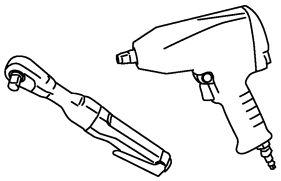 PBIC0190E	Loosening bolts and nuts

PERIODIC MAINTENANCE

FUEL SYSTEM

Inspection

INFOID:0000000005988485

Inspect fuel lines, fuel filler cap, and fuel tank for improper attachment, leakage, cracks, damage, loose connections, chafing or deterioration.

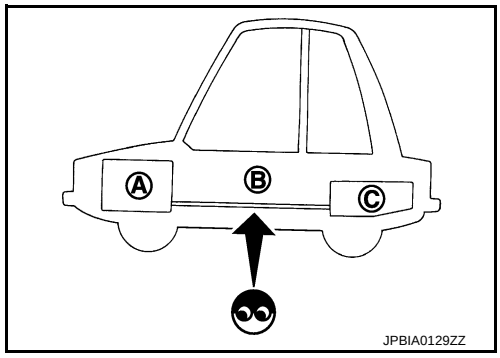

A : Engine
B : Fuel line
C : Fuel tank

If necessary, repair or replace damaged parts.

Quick Connector

INFOID:0000000005988486

CAUTION:
- **After connecting fuel tube quick connectors, check quick connectors are secure.**
- **Ensure that connector and resin tube never contact any adjacent parts.**

REMOVAL AND INSTALLATION

FUEL LEVEL SENSOR UNIT, FUEL FILTER AND FUEL PUMP ASSEMBLY

Exploded View

INFOID:0000000005988487

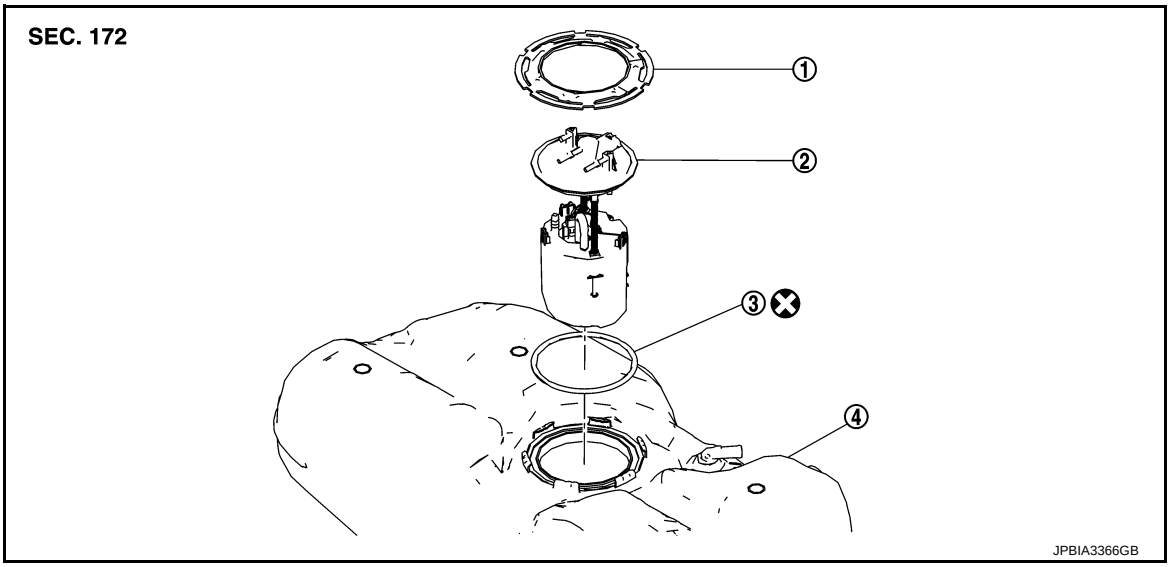

1. Lock ring
2. Fuel level sensor unit, fuel filter and fuel pump assembly
3. O-ring
4. Fuel tank

Refer to GI-4, "Components" for symbols in the figure.

Removal and Installation

INFOID:0000000005988488

WARNING:
Read “General Precautions” when working on the fuel system. Refer to FL-2, "General Precautions".

REMOVAL

1. Release the fuel pressure from the fuel lines. Refer to following;
   - HR12DE (TYPE1): EC-113, "Work Procedure"
   - HR12DE (TYPE2): EC-386, "Work Procedure"
2. Check fuel level on fuel gauge. If fuel gauge indicates more than 7/8 (full or nearly full), drain appropriate amount of fuel from fuel tank.
   - In the event of malfunction in fuel pump, insert a hose measuring approximately 20 mm in diameter into the filler opening to draw fuel from the filler tube. In addition to that, disconnect the fuel tube from the fuel tube from the from the fuel hose to draw fuel from the fuel hose.

   NOTE:
   Guideline: Drawing approximately 10 liters from the full-tank condition brings the fuel level into 7/8 of the tank.
3. Open fuel filler lid.
4. Open filler cap and release the pressure inside fuel tank.
5. Remove rear seat. Refer to SE-19, "Exploded View".
6. Remove inspection hole cover.

7. Disconnect harness connector (1), fuel feed tube (5), EVAP tube (4) and quick connector (3).

2 : Fuel level sensor unit, fuel filter and fuel pump assembly

⇦ : Vehicle front

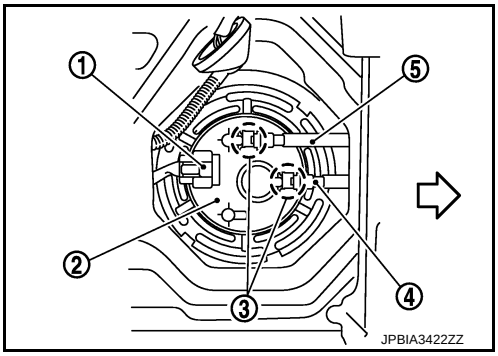

- Remove quick connector in the following procedures.
- Hold the sides of connector, press tabs and pull out fuel feed tube.

A : Pull

B : Push in tabs

- If quick connector sticks to tube of main fuel level sensor unit, push and pull quick connectors several times until they start to move. Then disconnect them by pulling.

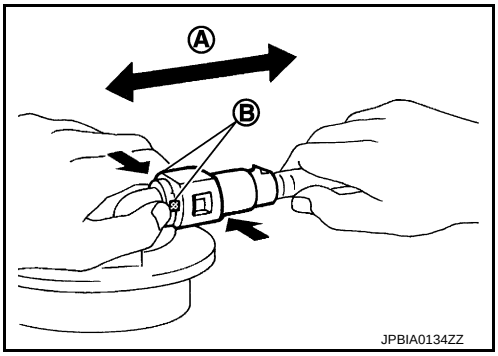

CAUTION:

- **Quick connector (1) can be disconnected when the tabs (F) are depressed completely. Never twist it more than necessary.**

B : Connection (cross-section)

D : To under floor fuel line

E : To fuel tank

G : Disconnection

- **Never use any tools to disconnected quick connector.**
- **Keep resin tube (C) away from heat. Be especially careful when welding near the resin tube.**
- **Prevent acid liquid such as battery electrolyte, etc. from getting on resin tube.**
- **Never bend or twist resin tube during installation and disconnection.**
- **Never remove the remaining retainer (2) on hard tube (or the equivalent) (A) except when resin tube or retainer is replaced.**
- **When resin tube or hard tube (or the equivalent) is replaced, also replace retainer with new one.**

Retainer color : White

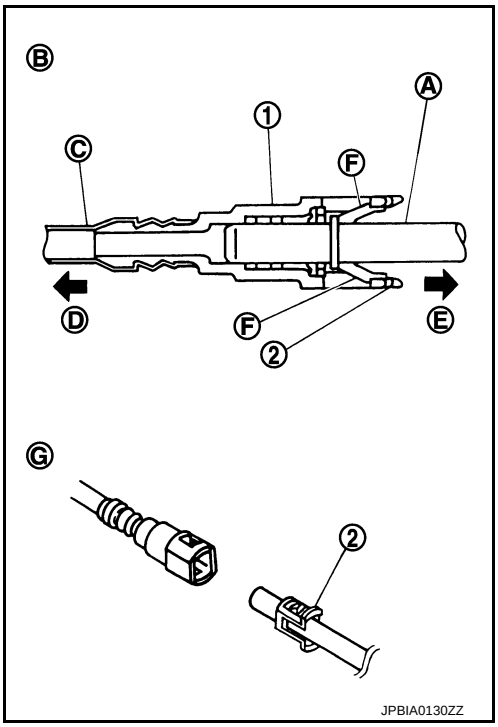

- **To keep the connecting portion clean and to avoid damage and foreign materials, cover them completely with plastic bags (A) or something similar.**

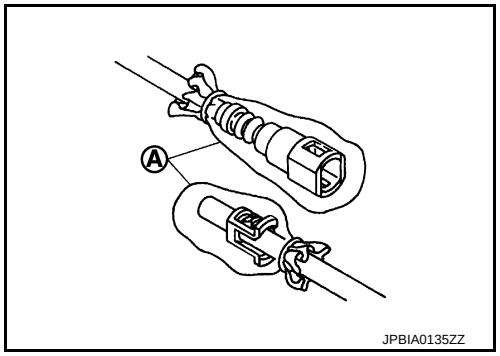

8. Use lock ring wrench [SST: KV10119900] (A) to remove lock ring.

   ⇦ : Vehicle front

   NOTE:
   For reference when installing, put a matching mark on lock ring, fuel pump assembly and fuel tank.

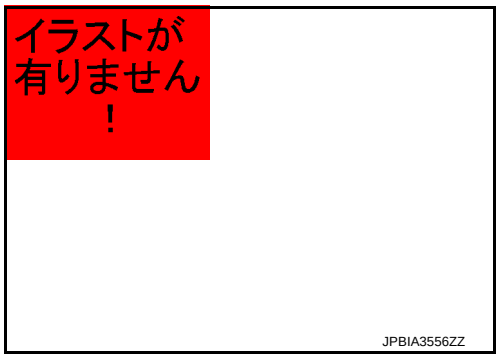

9. Remove fuel level sensor unit, fuel filter and fuel pump assembly (1).
   CAUTION:
   - **Never bend float arm (2) during removal.**
   - **Never pollute the inside by residue fuel. Draw out avoiding inclination by supporting with a cloth.**
   - **Never cause impacts such by dropping when handling components.**

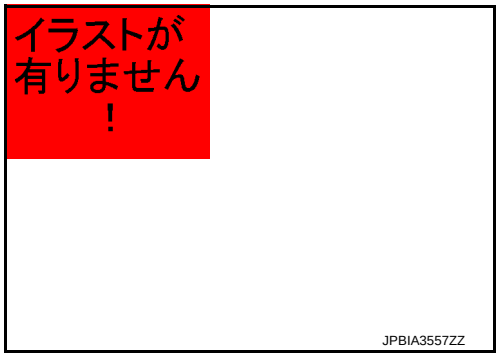

INSTALLATION

Note to the following, and install in the reverse order of removal.

Fuel Level Sensor Unit

1. Install new O-ring to fuel tank without any twist.
2. フューエルゲージ上面の（A）が車両後方になるようにフューエルタンクに取り付ける。.

   ⇦ : Vehicle front

   CAUTION:
   - **Never allow O-ring to drop.**
   - **Never bend float arm during installing.**

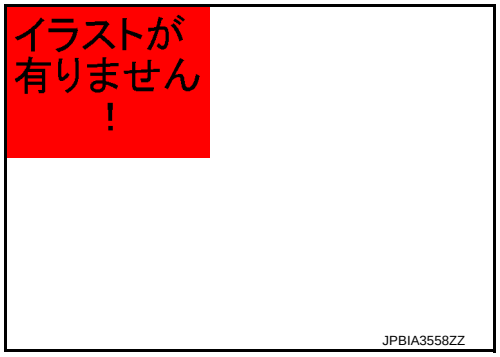

3. Install lock ring for fuel level sensor unit, fuel filter and fuel pump assembly with lock ring wrench [SST: KV10119900] by turning clockwise.
   CAUTION:
   - **Install lock ring horizontally.**

- 図のようにロックリングがフューエルタンク側にあるツメに噛み合うまでまわす。

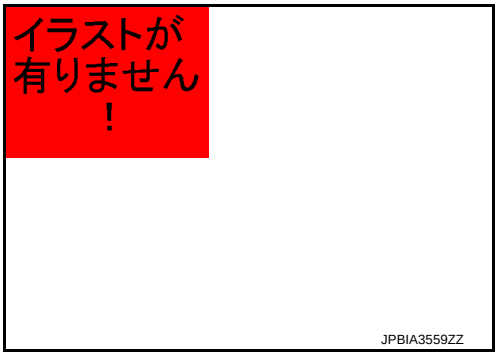

Quick Connector
Connect quick connector as follows:

1. Connect quick connector of fuel feed tube as per following procedures.

a. Check the connection for damage or any foreign materials.

b. Align the connector with the tube, then insert the connector straight into the tube until a “click” sound is heard.

c. After connecting, check that the connection is secured with following procedures.
   - Visually confirm that the two tabs are connected to the connector.
   - Pull (A) the tube and the connector to check that they are securely connected.

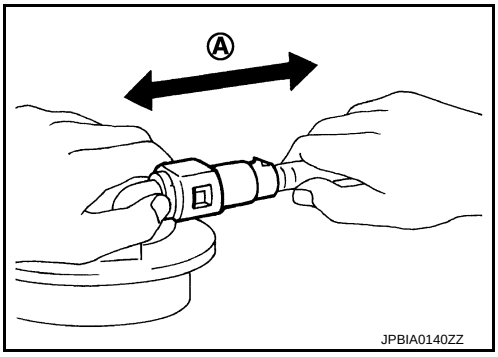

Inspection

INFOID:0000000005988489

INSPECTION AFTER INSTALLATION

Use the following procedure to check for fuel leakage.

1. Turn ignition switch “ON” (with engine stopped), then check connections for leakage by applying fuel pressure to fuel piping.
2. Start engine and let it idle and check there are no fuel leakage at the fuel system connections.

FUEL TANK

Exploded View

INFOID:0000000005988490

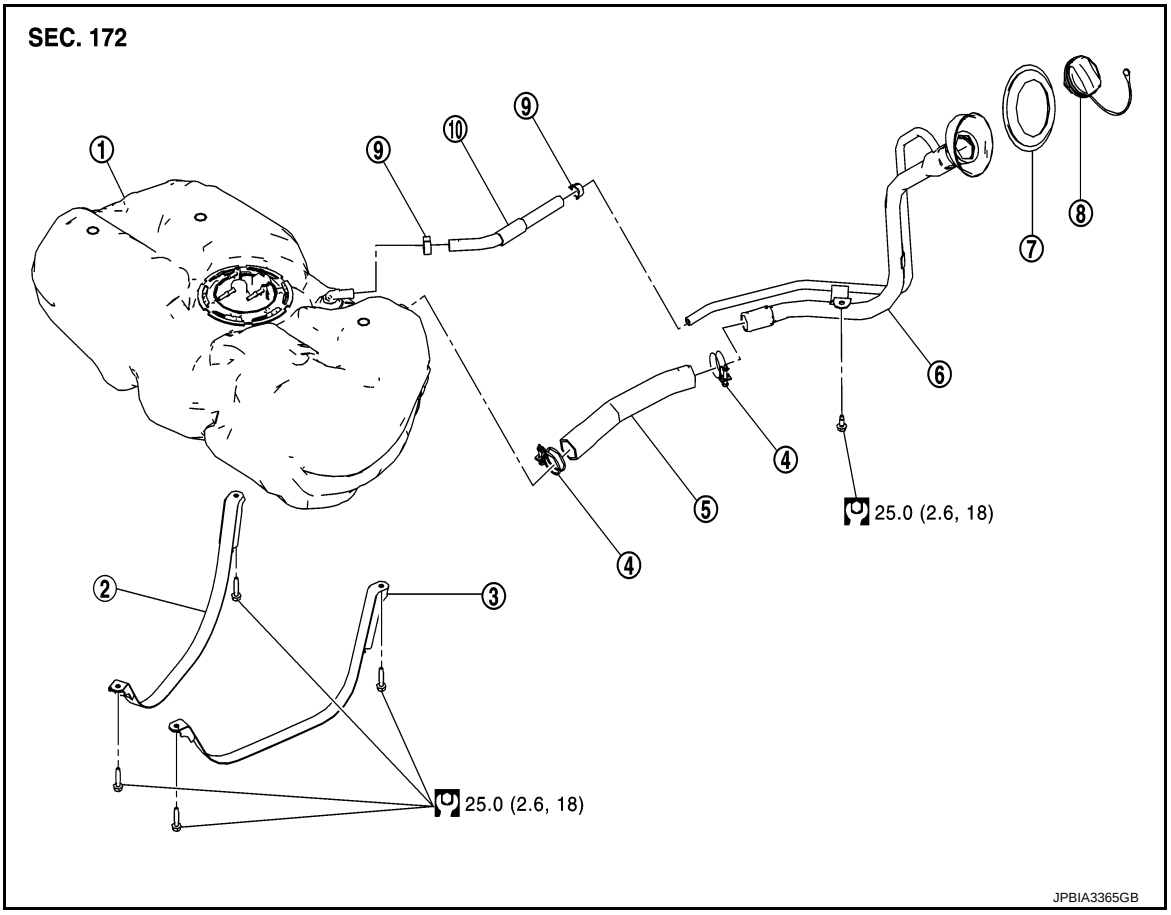

1. Fuel tank
2. Fuel tank mounting band (RH)
3. Fuel tank mounting band (LH)
4. Clamp
5. Fuel filler hose
6. Fuel filler tube
7. Grommet
8. Fuel filler cap
9. Clamp
10. Vent hose

Refer to GI-4, "Components" for symbols in the figure.

Removal and Installation

INFOID:0000000005988491

WARNING:
Be sure to read “General Precautions” when working on the fuel system. Refer to FL-2, "General Precautions".

REMOVAL

- Drain fuel from fuel tank if necessary. Refer to FL-5, "Removal and Installation".
- Perform work on level place.

1. Perform steps 2 to 7 of “REMOVAL” in “FUEL LEVEL SENSOR UNIT, FUEL FILTER AND FUEL PUMP ASSEMBLY” on fuel level sensor unit, fuel filter and fuel pump assembly. Refer to FL-5, "Removal and Installation".
2. Remove center muffler. Refer to EX-5, "Exploded View".
3. Remove insulator on vehicle side located above center and main mufflers.
4. Remove brake tube protector. Refer to BR-20, "REAR : Exploded View".

5. Disconnect fuel filler hose at fuel tank side.

   1 : Filler tube
   2 : Filler hose
   3 : Vent hose

6. Remove vent hose.

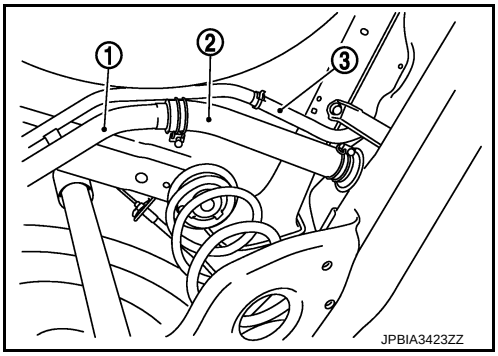

7. Support the center part of fuel tank (1) with transmission jack (A).

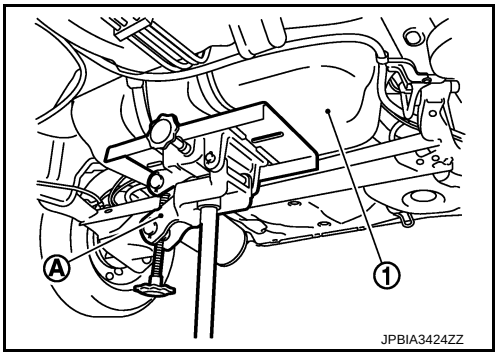

8. Remove fuel tank mounting bands (RH and LH).
9. Lower transmission jack carefully to remove fuel tank while holding it by hand.
   CAUTION:
   Fuel tank may be in an unstable condition because of the shape of fuel tank bottom. Never rely on jack too much. Be sure to hold tank securely.

INSTALLATION

Note the following, and install in the reverse order of removal.

Fuel Filler Hose

- Surely clamp fuel hose insert fuel filler hose to the length below.

Fuel filler hose	**: 35 mm (1.38 in)**
The other hose	**: 25 mm (0.98 in)**

- Be sure hose clamp is not placed on swelled area of fuel filler tube.
- Install fuel filler hose to fuel tank, paying attention to install mark.
- Tighten fuel filler hose clamp so that the remaining length of screw thread becomes to the following.

Hose clamp	**: 7 - 11 mm (0.28 - 0.43 in)**

EVAP Hose and Vent Tube

1. Check connections for damage or foreign material.
2. Align the matching side connection part with the center of shaft, and insert connector straight until it clicks.
3. After connecting, pull out quick connector and centralized under floor piping by hand. Check connections are secure.

   A : Pull

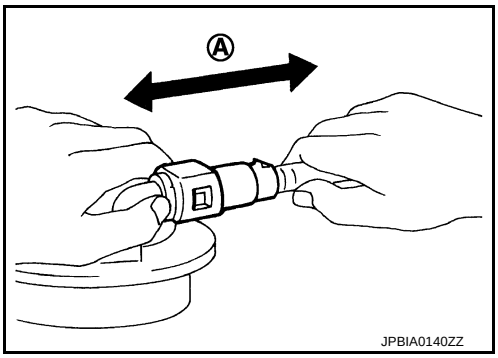

Inspection

INFOID:0000000005988492

INSPECTION AFTER INSTALLATION

Use the following procedure to check for fuel leakage.

1. Turn ignition switch “ON” (with engine stopped), and check connections for leakage by applying fuel pressure to fuel piping.
2. Start engine and rev it up and check there are no fuel leakage at the fuel system tube and hose connections.

SERVICE DATA AND SPECIFICATIONS (SDS)

SERVICE DATA AND SPECIFICATIONS (SDS)

Fuel Tank

INFOID:0000000005988493

Standard and Limit

Fuel tank capacity	Approx. 41.0 ℓ (9.0 Imp gal)
Fuel recommendation	Refer to GI-27, "Fuel"

SECTION FSU
FRONT SUSPENSION

CONTENTS

PRECAUTION 2

PRECAUTIONS 2
Precaution for Supplemental Restraint System (SRS) "AIR BAG" and "SEAT BELT PRE-TENSIONER" 2
Precaution Necessary for Steering Wheel Rotation after Battery Disconnect 2
Precautions for Suspension 3

PREPARATION 4

PREPARATION 4
Special Service Tool 4
Commercial Service Tool 4

SYMPTOM DIAGNOSIS 5

NOISE, VIBRATION AND HARSHNESS (NVH) TROUBLESHOOTING 5
NVH Troubleshooting Chart 5

PERIODIC MAINTENANCE 6

FRONT SUSPENSION ASSEMBLY 6
Inspection 6

WHEEL ALIGNMENT 7
Inspection 7

REMOVAL AND INSTALLATION 9

FRONT COIL SPRING AND STRUT 9
Exploded View 9
Removal and Installation 9
Disassembly and Assembly 9
Inspection 10
Disposal 11

TRANSVERSE LINK 12
Exploded View 12
Removal and Installation 12
Inspection 12

FRONT SUSPENSION MEMBER 14
Exploded View 14
Removal and Installation 14
Inspection 14

SERVICE DATA AND SPECIFICATIONS (SDS) 15

SERVICE DATA AND SPECIFICATIONS (SDS) 15
Wheel Alignment 15
Ball Joint 15
Wheelarch Height 15

PRECAUTION

PRECAUTIONS

Precaution for Supplemental Restraint System (SRS) "AIR BAG" and "SEAT BELT PRE-TENSIONER"

INFOID:0000000006046459

The Supplemental Restraint System such as “AIR BAG” and “SEAT BELT PRE-TENSIONER”, used along with a front seat belt, helps to reduce the risk or severity of injury to the driver and front passenger for certain types of collision. Information necessary to service the system safely is included in the “SRS AIR BAG” and “SEAT BELT” of this Service Manual.

WARNING:

- **To avoid rendering the SRS inoperative, which could increase the risk of personal injury or death in the event of a collision which would result in air bag inflation, all maintenance must be performed by an authorized NISSAN/INFINITI dealer.**
- **Improper maintenance, including incorrect removal and installation of the SRS, can lead to personal injury caused by unintentional activation of the system. For removal of Spiral Cable and Air Bag Module, see the “SRS AIR BAG”.**
- **Do not use electrical test equipment on any circuit related to the SRS unless instructed to in this Service Manual. SRS wiring harnesses can be identified by yellow and/or orange harnesses or harness connectors.**

PRECAUTIONS WHEN USING POWER TOOLS (AIR OR ELECTRIC) AND HAMMERS

WARNING:

- **When working near the Air Bag Diagnosis Sensor Unit or other Air Bag System sensors with the ignition ON or engine running, DO NOT use air or electric power tools or strike near the sensor(s) with a hammer. Heavy vibration could activate the sensor(s) and deploy the air bag(s), possibly causing serious injury.**
- **When using air or electric power tools or hammers, always switch the ignition OFF, disconnect the battery, and wait at least 3 minutes before performing any service.**

Precaution Necessary for Steering Wheel Rotation after Battery Disconnect

INFOID:0000000006046460

NOTE:

- Before removing and installing any control units, first turn the push-button ignition switch to the LOCK position, then disconnect both battery cables.
- After finishing work, confirm that all control unit connectors are connected properly, then re-connect both battery cables.
- Always use CONSULT-III to perform self-diagnosis as a part of each function inspection after finishing work. If a DTC is detected, perform trouble diagnosis according to self-diagnosis results.

For vehicle with steering lock unit, if the battery is disconnected or discharged, the steering wheel will lock and cannot be turned.

If turning the steering wheel is required with the battery disconnected or discharged, follow the operation procedure below before starting the repair operation.

OPERATION PROCEDURE

1. Connect both battery cables.
   NOTE:
   Supply power using jumper cables if battery is discharged.
2. Turn the push-button ignition switch to ACC position.
   (At this time, the steering lock will be released.)
3. Disconnect both battery cables. The steering lock will remain released with both battery cables disconnected and the steering wheel can be turned.
4. Perform the necessary repair operation.
5. When the repair work is completed, re-connect both battery cables. With the brake pedal released, turn the push-button ignition switch from ACC position to ON position, then to LOCK position. (The steering wheel will lock when the push-button ignition switch is turned to LOCK position.)
6. Perform self-diagnosis check of all control units using CONSULT-III.

Precautions for Suspension

INFOID:0000000006046083

- When installing rubber bushings, the final tightening must be carried out under unladen conditions with tires on ground. Spilled oil might shorten the life of rubber bushings. Be sure to wipe off any spilled oil.
- Unladen conditions mean that fuel, engine coolant and lubricant are full. Spare tire, jack, hand tools and mats are in designated positions.
- After servicing suspension parts, be sure to check wheel alignment.
- Self-lock nuts are not reusable. Always use new ones when installing. Since new self-lock nuts are pre-oiled, tighten as they are.

PREPARATION

PREPARATION

Special Service Tool

INFOID:0000000006046084

Tool number Tool name		Description
KV991040S1 1. KV99104020 Adapter A 2. KV99104030 Adapter B 3. KV99104040 Adapter C 4. KV99104050 Adapter D 5. KV99104060 Plate 6. KV99104070 Guide bolt 7. KV99104080 Spring 8. KV99104090 Center plate	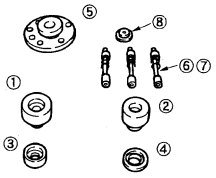 ZZA1167D	Measuring wheel alignment
ST35652000 Strut attachment	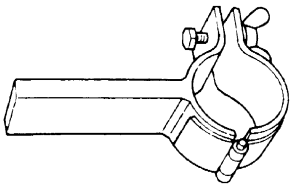 ZZA0807D	Disassembling and assembling strut
KV10106700 Drift a: 25 mm (0.98 in) dia. a: 18.5 mm (0.728 in) dia.	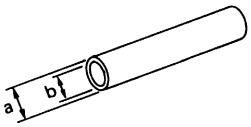 ZZA0534D	Disassembling and assembling strut mounting bearing.

Commercial Service Tool

INFOID:0000000006046085

Tool name		Description
Spring compressor	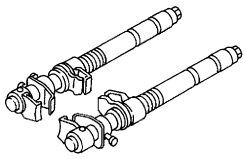 S-NT717	Removing and installing coil spring

SYMPTOM DIAGNOSIS

NOISE, VIBRATION AND HARSHNESS (NVH) TROUBLESHOOTING

NVH Troubleshooting Chart

INFOID:0000000006046080

Use chart below to find the cause of the symptom. If necessary, repair or replace these parts.

		Reference page	FSU-9, FSU-12, XX-XX, "*****", XX-XX, "*****"	FSU-10	—	—	—	FSU-9, FSU-12, XX-XX, "*****", XX-XX, "*****"	FSU-7	XX-XX, "*****"	NVH in DLN section	NVH in FAX and FSU sections	NVH in WT section	NVH in WT section	NVH in FAX section	NVH in BR section	NVH in ST section
Possible cause and SUSPECTED PARTS			Improper installation, looseness	Shock absorber deformation, damage or deflection	Bushing or mounting deterioration	Parts interference	Spring fatigue	Suspension looseness	Incorrect wheel alignment	Stabilizer bar fatigue	DIFFERENTIAL	FRONT AXLE AND FRONT SUSPENSION	TIRE	ROAD WHEEL	DRIVE SHAFT	BRAKE	STEERING
Symptom	FRONT SUSPENSION	Noise	×	×	×	×	×	×			×	×	×	×	×	×	×
		Shake	×	×	×	×		×				×	×	×	×	×	×
		Vibration	×	×	×	×	×					×	×		×		×
		Shimmy	×	×	×	×			×			×	×	×		×	×
		Judder	×	×	×							×	×	×		×	×
		Poor quality ride or handling	×	×	×	×	×		×	×		×	×	×			

×: Applicable

PERIODIC MAINTENANCE

FRONT SUSPENSION ASSEMBLY

Inspection

INFOID:0000000006046086

COMPONENT PART

Check the mounting conditions (looseness, backlash) of each component and component conditions (wear, damage) are normal.

BALL JOINT AXIAL END PLAY

1. Set front wheels in a straight-ahead position.
2. Measure axial end play by prying it up/down with iron bar or equivalent between transverse link and steering knuckle.

Axial end play : Refer to FSU-15, "Ball Joint".

CAUTION:
- **Never depress brake pedal when measuring.**
- **Never perform with tires on level ground.**
- **Be careful not to damage ball joint boot. Never damage the installation position by applying excessive force.**

STRUT ASSEMBLY

Check for oil leakage, damage, and replace if necessary.

WHEEL ALIGNMENT

Inspection

INFOID:0000000006046087

DESCRIPTION

CAUTION:
- **Camber, caster, kingpin inclination angles cannot be adjusted.**
- **If camber, caster, or kingpin inclination angle is outside the standard, check front suspension parts for wear and damage. Replace suspect parts if a malfunction is detected.**
- **Kingpin inclination angle is reference value, no inspection is required.**

Measure wheel alignment under unladen conditions.

NOTE:
"Unladen conditions" means that fuel, engine coolant, and lubricant are full. Spare tire, jack, hand tools and mats are in designated positions.

PRELIMINARY CHECK

Check the following:
- Tires for improper air pressure and wear.
- Road wheels for runout. Refer to XX-XX, "*****".
- Wheel bearing axial end play. Refer to XX-XX, "*****" (HR16DE) or XX-XX, "*****" (K9K).
- Transverse link ball joint axial end play. Refer to FSU-12, "Inspection".
- Strut operation.
- Each mounting part of axle and suspension for looseness and deformation.
- Each of suspension member, strut and transverse link for cracks, deformation and other damage.
- Vehicle height (posture).

CAMBER, CASTER, AND KINGPIN INCLINATION ANGLES

- Camber, caster, kingpin inclination angles cannot be adjusted.
- Before inspection, mount front wheels onto turning radius gauge. Mount rear wheels onto a stand at the same height so that vehicle remains horizontal.

Using a CCK Gauge

Install the CCK gauge attachment (SST: KV991040S1) with the following procedure on wheel, then measure wheel alignment.

1. Remove three wheel to nuts, and install the guide bolts to hub bolt.
2. Screw the adapter into the plate until it contacts the plate tightly.
3. Screw the center plate into the plate.
4. Insert the plate assembly on the guide bolt. Put the spring in, and then evenly screw the three guide bolt nuts. When fastening the guide nuts, do not completely compress the spring.

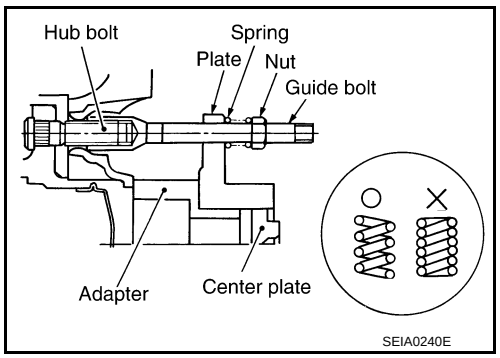

5. Place the dent of alignment gauge onto the projection of the center plate and tightly contact them to measure.

Camber, caster, kingpin inclination angles	**: Refer to FSU-15, "Wheel Alignment".**

CAUTION:
- **If camber, caster, or kingpin inclination angle exceeds the standard value, check front suspension parts for wear and damage. Replace suspect parts if a malfunction is detected.**
- **Kingpin inclination angle is reference value, no inspection is required.**

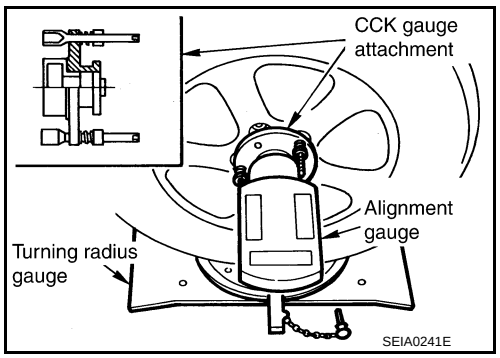

TOE-IN

Measure toe-in by the following procedure.

WARNING:
- **Always perform the following procedure on a flat surface.**
- **Check that no person is in front of vehicle before pushing it.**

1. Bounce front of vehicle up and down to stabilize the vehicle height (posture).
2. Push vehicle straight ahead about 5 m (16 ft).
3. Put matching mark (A) on base line of the tread (rear side) of both tires at the same height of hub center. These are measuring points.

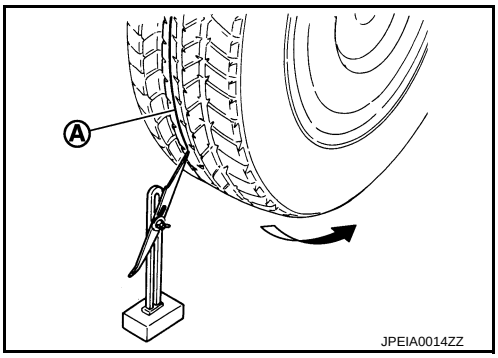

4. Measure distance (A) (rear side).

   ⇦ : Vehicle front

5. Push vehicle slowly ahead to rotate wheels 180 degrees (1/2 turn).
   NOTE:
   If the wheels rotates more than 180 degrees (1/2 turn), start this procedure again from the beginning. Do not push the vehicle backward.
6. Measure distance (B) (front side).

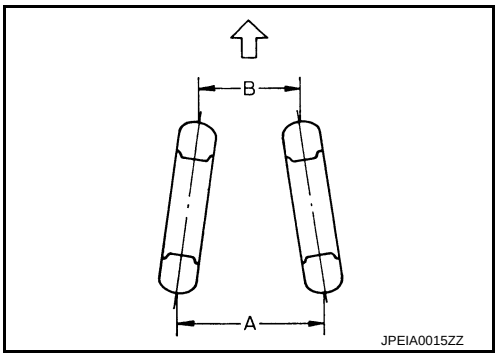

Total toe-in = A – B

Total toe-in : Refer to FSU-15, "Wheel Alignment".

- If toe-in exceeds the standard value, adjust toe-in by varying the length of between steering outer socket and inner socket.

REMOVAL AND INSTALLATION

FRONT COIL SPRING AND STRUT

Exploded View

INFOID:0000000006046088

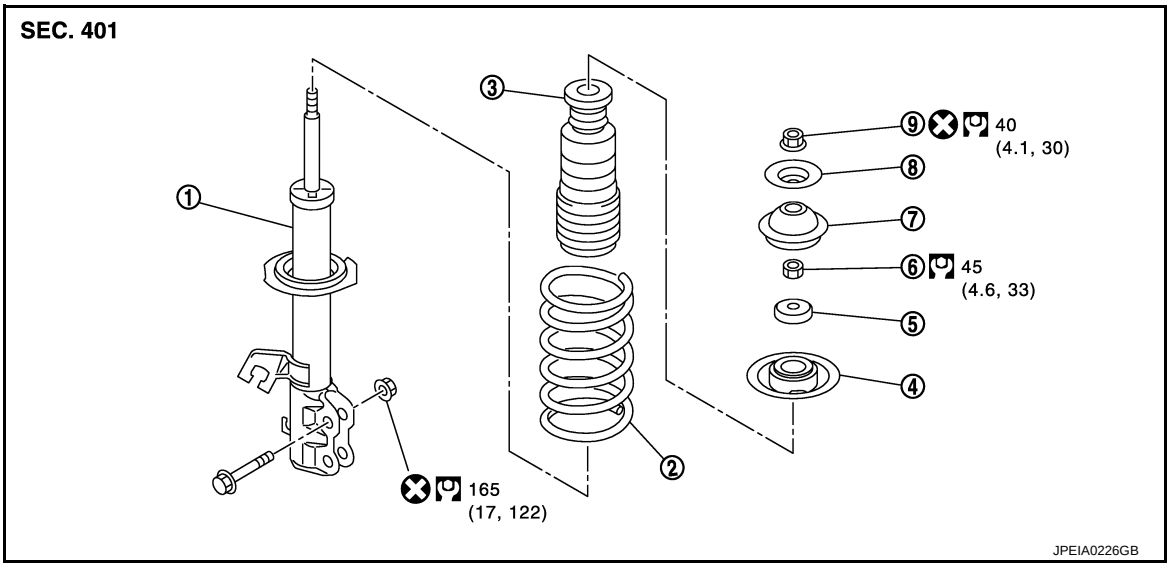

1.	Strut	2.	Coil spring	3.	Bound bumper
4.	Spring upper seat	5.	Strut mounting bearing	6.	Piston rod lock nut
7.	Strut mounting insulator	8.	Stopper insulator	9.	Stopper insulator lock nut

Refer to XX-XX, "*****" for symbols in the figure.

Removal and Installation

INFOID:0000000006046089

REMOVAL

1. Remove tires. Refer to XX-XX, "*****".
2. Remove lock plate. Refer to XX-XX, "*****".
3. Remove strut mounting bolts and nuts from steering knuckle.
4. Remove stopper insulator lock nut and stopper insulator.
5. Remove strut assembly.

INSTALLATION

Note the following, and install in the reverse order of removal.

- Perform final tightening of bolts and nuts, under unladen conditions with tires on level ground.
- Never reuse strut mounting nut and stopper insulator lock nut.

Disassembly and Assembly

INFOID:0000000006046090

DISASSEMBLY

CAUTION:

Never damage strut assembly piston rod when removing components from strut assembly.

1. Remove strut mounting insulator.
2. Install strut attachment (SST: ST35652000) to strut assembly and secure it in a vise.
   CAUTION:
   When installing the strut attachment to strut assembly, wrap a shop cloth around strut to protect from damage.
3. Using a spring compressor (commercial service tool), compress coil spring between spring upper seat and lower seat (strut assembly) until coil spring with a spring compressor is free.
   CAUTION:

Be sure a spring compressor is securely attached to coil spring. Compress coil spring.

4. Check coil spring with a spring compressor between spring upper seat and lower seat (strut assembly) is free. And then remove piston rod lock nut while securing the piston rod tip so that piston rod does not turn.
5. Remove strut mounting bearing, spring upper seat, and bound bumper as a set.
6. Remove bound bumper from spring upper seat.
7. Remove strut mounting bearing (1) from spring upper seat (2), using a drift (A) (SST: KV10106700).
8. After removing coil spring with a spring compressor, then gradually release a spring compressor.
   CAUTION:
   Loosen while making sure coil spring attachment position does not move.
9. Remove the strut attachment (SST: ST35652000) from strut.

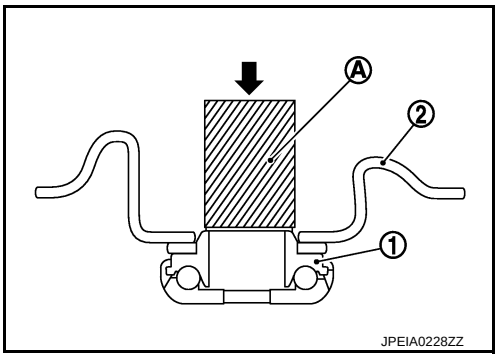

ASSEMBLY

1. Install strut attachment (SST: ST35652000) to strut and secure it in a vise.
   CAUTION:
   When installing the strut attachment to strut assembly, wrap a shop cloth around strut to protect from damage.
2. Install strut mounting bearing (1) to spring upper seat (2), using a drift (A) (SST: KV10106700).
   CAUTION:
   Never press to aluminum shield.
3. Install bound bumper to spring upper seat.

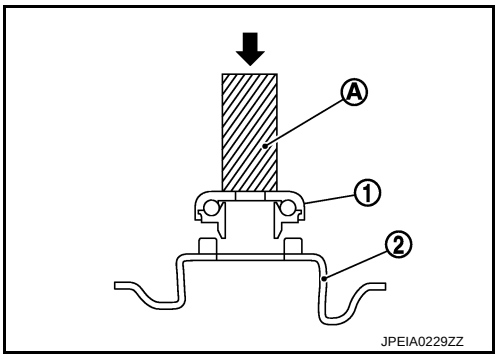

4. Compress coil spring using a spring compressor (commercial service tool), and install it onto strut assembly.
   CAUTION:
   - **Face tube side of coil spring (1) downward. Align the lower end (A) to lower seat (strut assembly) (2).**
   - **Be sure a compressor is securely attached to coil spring. Compress coil spring.**
5. Install strut mounting bearing, spring upper seat, and bound bumper as a set.
6. Secure piston rod tip so that piston rod does not turn, then tighten piston rod lock nut with specified torque.
7. Gradually release a spring compressor, and remove coil spring.
   CAUTION:
   Loosen while making sure coil spring attachment position does not move.
8. Remove the strut attachment from strut assembly.
9. Install strut mounting insulator.

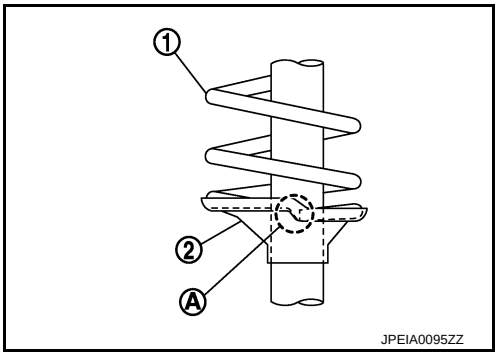

Inspection

INFOID:0000000006046091

INSPECTION AFTER DISASSEMBLY

Check the following items, and replace the parts if necessary.

Strut

- Strut for deformation, cracks or damage
- Piston rod for damage, uneven wear or distortion
- Oil leakage

Strut Mounting Insulator and bound bumper Inspection

Check strut mounting insulator and bound bumper for cracks, wear or damage.

Coil Spring

Check coil spring for cracks, wear or damage.

INSPECTION AFTER INSTALLATION

1. Check wheel alignment. Refer to FSU-7, "Inspection".
2. Adjust neutral position of steering angle sensor. Refer to XX-XX, "*****".

Disposal

INFOID:0000000006046092

1. Set strut assembly horizontally to the ground with the piston rod fully extracted.
2. Drill 2 – 3 mm (0.08 – 0.12 in) hole at the position (●) from top as shown in the figure to release gas gradually.
   CAUTION:
   - **Wear eye protection (safety glass).**
   - **Wear gloves.**
   - **Be careful with metal chips or oil blown out by the compressed gas.**

   NOTE:
   - Drill vertically in this direction (⬅).
   - Directly to the outer tube avoiding brackets.
   - The gas is clear, colorless, odorless, and harmless.

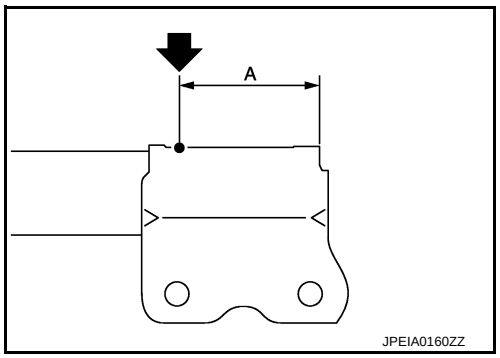

A : 20 – 30 mm (0.79 – 1.18 in)

3. Position the drilled hole downward and drain oil by moving the piston rod several times.
   CAUTION:
   Dispose of drained oil according to the law and local regulations.

TRANSVERSE LINK

Exploded View

INFOID:0000000006046093

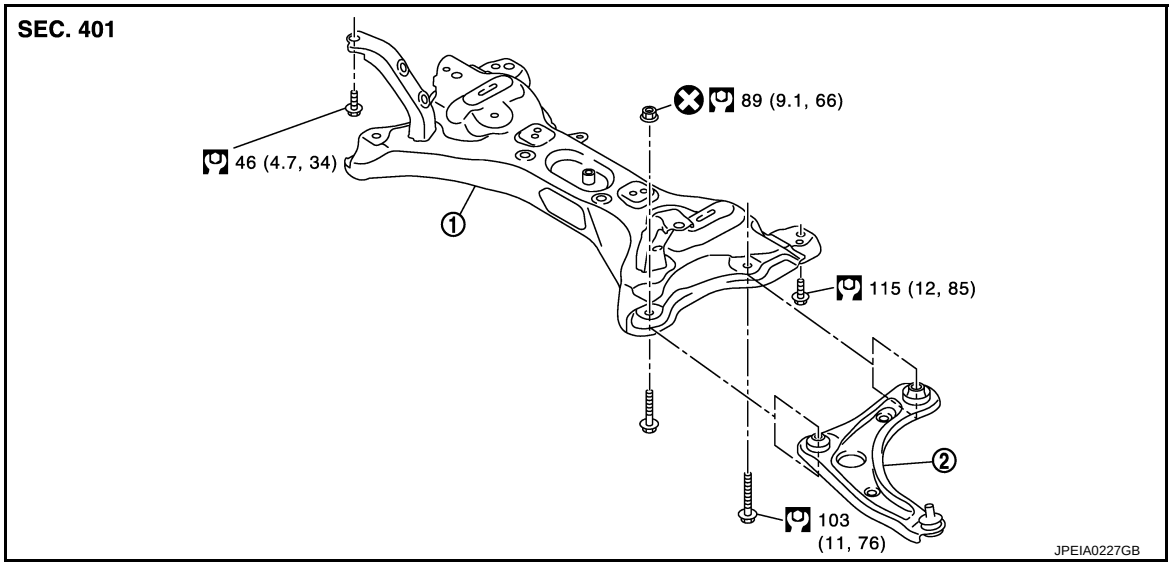

1. Front suspension member
2. Transverse link

Refer to XX-XX, "*****" for symbols in the figure.

Removal and Installation

INFOID:0000000006046094

REMOVAL

1. Remove tires. Refer to XX-XX, "*****".
2. Remove lock plate from strut assembly. Refer to Dummy cross-reference("XX-XX").
3. Remove strut mounting bolts and nuts from steering knuckle. Refer to Dummy cross-reference("XX-XX").
4. Remove transverse link from steering knuckle.
5. Remove transverse link from suspension member.

INSTALLATION

Note the following, and install in the reverse order of removal.

- Perform final tightening of bolts and nuts at the front suspension member, under unladen conditions with tires on level ground.

Inspection

INFOID:0000000006046095

INSPECTION AFTER REMOVAL

Check the following items, and replace the parts if necessary.

Transverse Link

- Transverse link and bushing for deformation, cracks or damage.
- Ball joint boot for cracks or other damage, and also for grease leakage.

Swing Torque

1. Manually move ball stud to confirm it moves smoothly with no binding.
2. Move ball stud at least ten times by hand to check for smooth movement.

3. Hook a spring balance (A) at cutout on ball stud (B). Confirm spring balance measurement value is within specifications when ball stud begins moving.

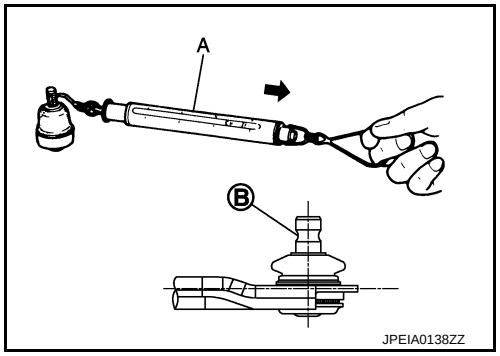

Swing torque : **Refer to FSU-15, "Ball Joint".**

Measurement on spring balance : **Refer to FSU-15, "Ball Joint"**

- If swing torque exceeds standard range, replace transverse link assembly.

Axial End Play

1. Move ball stud at least ten times by hand to check for smooth movement.
2. Move tip of ball stud in axial direction to check for looseness.

Axial end play : **Refer to FSU-15, "Ball Joint".**

- If axial end play exceeds the standard value, replace transverse link assembly.

INSPECTION AFTER INSTALLATION

1. Check wheel alignment. Refer to FSU-7, "Inspection".
2. Adjust neutral position of steering angle sensor. Refer to XX-XX, "*****".

FRONT SUSPENSION MEMBER

Exploded View

INFOID:0000000006046458

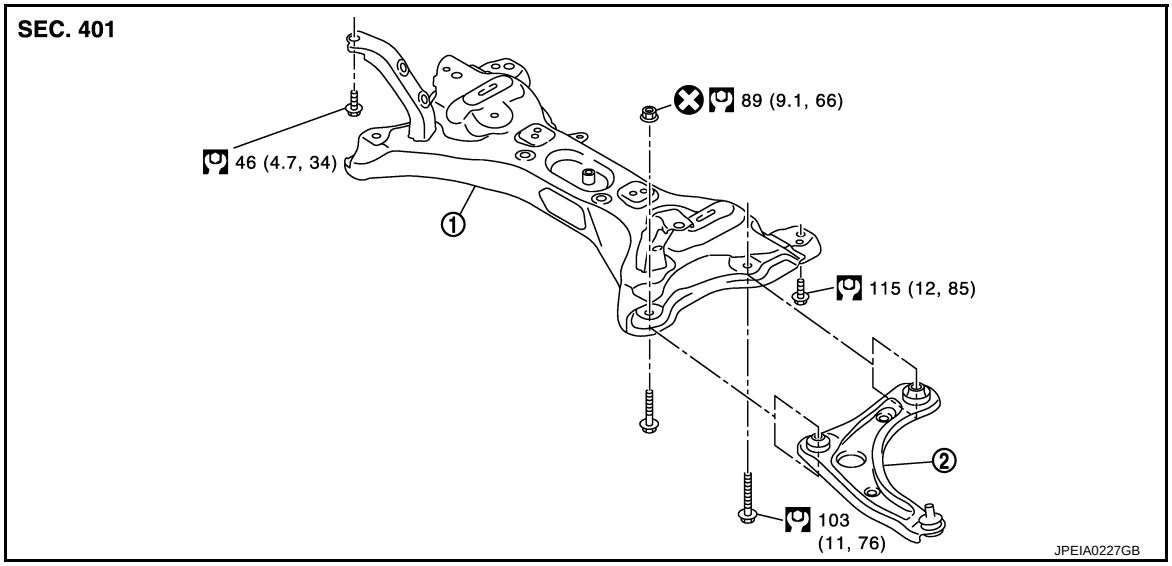

1. Front suspension member
2. Transverse link

Refer to XX-XX, "*****" for symbols in the figure.

Removal and Installation

INFOID:0000000006046100

REMOVAL

1. Remove tires. Refer to XX-XX, "*****".
2. Remove transverse link. Refer to XX-XX, "*****".
3. Remove steering outer socket from steering knuckle. Refer to XX-XX, "*****".
4. Remove intermediate shaft from steering gear assembly. Refer to XX-XX, "*****".
5. Remove rear torque rod. Refer to XX-XX, "*****".
6. Set suitable jack under front suspension member.
   CAUTION:
   Check the stable condition when using a jack.
7. Remove suspension member mounting bolts.
8. Gradually lower the jack to remove front suspension member from vehicle body.
   CAUTION:
   Check the stable condition when using a jack.
9. Remove steering gear assembly from suspension member. Refer to XX-XX, "*****".

INSTALLATION

Note the following, and install in the reverse order of removal.

- Perform final tightening of bolts and nuts, under unladen conditions with tires on level ground.

Inspection

INFOID:0000000006046101

INSPECTION AFTER DISASSEMBLY

Check front suspension member for cracks, wear or damage. Replace it if necessary.

INSPECTION AFTER INSTALLATION

1. Check wheel alignment. Refer to FSU-7, "Inspection".
2. Adjust neutral position of steering angle sensor. Refer to XX-XX, "*****".

SERVICE DATA AND SPECIFICATIONS (SDS)

SERVICE DATA AND SPECIFICATIONS (SDS)

Wheel Alignment

INFOID:0000000006046102

Item			Standard
Camber Degree minute (Decimal degree)		Minimum	–0° 50′ (–0.83°)
		Nominal	–0° 05′ (–0.08°)
		Maximum	0° 40′ (0.66°)
		Left and right difference	0° 45′ (0.75°)
Caster Degree minute (Decimal degree)		Minimum	2° 50′ (2.84°)
		Nominal	3° 35′ (3.58°)
		Maximum	4° 20′ (4.33°)
		Left and right difference	0° 45′ (0.75°)
Kingpin inclination Degree minute (Decimal degree)		Minimum	11° 00′ (11.00°)
		Nominal	11° 45′ (11.75°)
		Maximum	12° 30′ (12.50°)
Toe-in	Total toe-in Distance	Minimum	0 mm (0 in)
		Nominal	In 1.0 mm (0.05 in)
		Maximum	In 2.0 mm (0.07 in)
	Toe angle (left wheel or right wheel) Degree minute (Decimal degree)	Minimum	0° 00′ (0.00°)
		Nominal	In 0° 05′ (0.08°)
		Maximum	In 0° 10′ (0.16°)

Measure value under unladen* conditions.

*: Fuel, engine coolant and lubricant are full. Spare tire, jack, hand tools and mats are in designated positions.

Ball Joint

INFOID:0000000006046103

Item	Standard
Swing torque	0.5 – 4.9 N·m (0.05 – 0.5 kg-m, 5 – 43 in-lb)
Measurement on spring balance	15.4 – 150.8 N (1.6 – 15.4 kg, 3.6 – 33.9 lb)
Axial end play	0 mm (0 in)

Wheelarch Height

INFOID:0000000006046457

Item	Standard	
Tire size	165/70R14	175/60R15
Front (Hf)	659 mm (25.94 in)	661 mm (26.02 in)

Item	Standard	
Tire size	165/70R14	175/60R15
Rear (Hr)	653 mm (25.71 in)	655 mm (25.79 in)

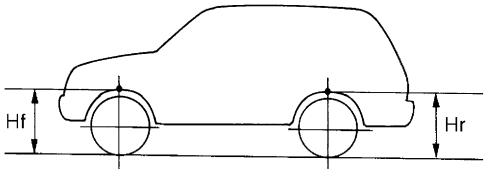

SFA746B

Measure value under unladen* conditions.

*: Fuel, engine coolant and lubricant are full. Spare tire, jack, hand tools and mats are in designated positions.

SECTION GI
GENERAL INFORMATION

CONTENTS

HOW TO USE THIS MANUAL 3

HOW TO USE THIS MANUAL 3
Description 3
Terms 3
Units 3
Contents 3
Relation between Illustrations and Descriptions 4
Components 4

HOW TO FOLLOW TROUBLE DIAGNOSES..... 6
Description 6
How to Follow Test Groups in Trouble Diagnosis.....6
Key to Symbols Signifying Measurements or Procedures 7

HOW TO READ WIRING DIAGRAMS 9
Connector Symbols 9
Sample/Wiring Diagram -Example- 10
Connector Information 12

ABBREVIATIONS 14
Abbreviation List 14

TIGHTENING TORQUE OF STANDARD BOLTS 15
Description 15
Tightening Torque Table (New Standard Included) 15

VEHICLE INFORMATION 18

IDENTIFICATION INFORMATION 18
Model Variation 18
Information About Identification or Model Code 18
Dimensions 21
Wheels & Tires 21

PRECAUTION 22

PRECAUTIONS 22
Description 22
Precaution for Supplemental Restraint System (SRS) "AIR BAG" and "SEAT BELT PRE-TENSIONER" 22
Precaution Necessary for Steering Wheel Rotation after Battery Disconnect 22
Precaution for Battery Service 23
Precaution for Procedure without Cowl Top Cover...23
General Precautions 23
Three Way Catalyst 25
Multiport Fuel Injection System or Engine Control System 25
Hoses 25
Engine Oils 26
Air Conditioning 26
Fuel 27

LIFTING POINT 28
Commercial Service Tools 28
Garage Jack and Safety Stand and 2-Pole Lift 28
Board-On Lift 29

TOW TRUCK TOWING 30
Tow Truck Towing 30
Vehicle Recovery (Freeing a Stuck Vehicle) 30

BASIC INSPECTION 32

SERVICE INFORMATION FOR ELECTRICAL INCIDENT 32
Work Flow 32
Control Units and Electrical Parts 32
Intermittent Incident 33
Circuit Inspection 35

CONSULT-III/GST CHECKING SYSTEM 41
Description 41
CONSULT-III Function and System Application*1...41
CONSULT-III/GST Data Link Connector (DLC) Circuit 41
Wiring Diagram - CONSULT-III/GST CHECKING SYSTEM - 43

INSPECTION AND ADJUSTMENT 46

ADDITIONAL SERVICE WHEN REMOVING BATTERY NEGATIVE TERMINAL 46

ADDITIONAL SERVICE WHEN REMOVING BATTERY NEGATIVE TERMINAL : Required Procedure After Battery Disconnection 46

HOW TO USE THIS MANUAL

HOW TO USE THIS MANUAL

Description

INFOID:0000000006023326

This volume explains “Removal, Disassembly, Installation, Inspection and Adjustment” and “Trouble Diagnoses”.

Terms

INFOID:0000000006023327

- The captions **WARNING** and **CAUTION** warn you of steps that must be followed to prevent personal injury and/or damage to some part of the vehicle.
  WARNING indicates the possibility of personal injury if instructions are not followed.
  CAUTION indicates the possibility of component damage if instructions are not followed.
  BOLD TYPED STATEMENTS except **WARNING** and **CAUTION** give you helpful information.
  Standard value: Tolerance at inspection and adjustment.
  Limit value: The maximum or minimum limit value that should not be exceeded at inspection and adjustment.

Units

INFOID:0000000006023328

- The **UNITS** given in this manual are primarily expressed as the SI UNIT (International System of Unit), and alternatively expressed in the metric system and in the yard/pound system.
  Also with regard to tightening torque of bolts and nuts, there are descriptions both about range and about the standard tightening torque.

  “Example”
  Range

  Outer Socket Lock Nut : 59 - 78 N·m (6.0 - 8.0 kg-m, 43 - 58 ft-lb)

  Standard

  Drive Shaft Installation Bolt : 44.3 N·m (4.5 kg-m, 33 ft-lb)

Contents

INFOID:0000000006023329

- **A QUICK REFERENCE INDEX**, a black tab (e.g. BR) is provided on the first page. You can quickly find the first page of each section by matching it to the section's black tab.
- **THE CONTENTS** are listed on the first page of each section.
- **THE TITLE** is indicated on the upper portion of each page and shows the part or system.
- **THE PAGE NUMBER** of each section consists of two or three letters which designate the particular section and a number (e.g. “BR-5”).
- **THE SMALL ILLUSTRATIONS** show the important steps such as inspection, use of special tools, knacks of work and hidden or tricky steps which are not shown in the previous large illustrations.
  Assembly, inspection and adjustment procedures for the complicated units such as the automatic transaxle or transmission, etc. are presented in a step-by-step format where necessary.

Relation between Illustrations and Descriptions

INFOID:0000000006023330

The following sample explains the relationship between the part description in an illustration, the part name in the text and the service procedures.

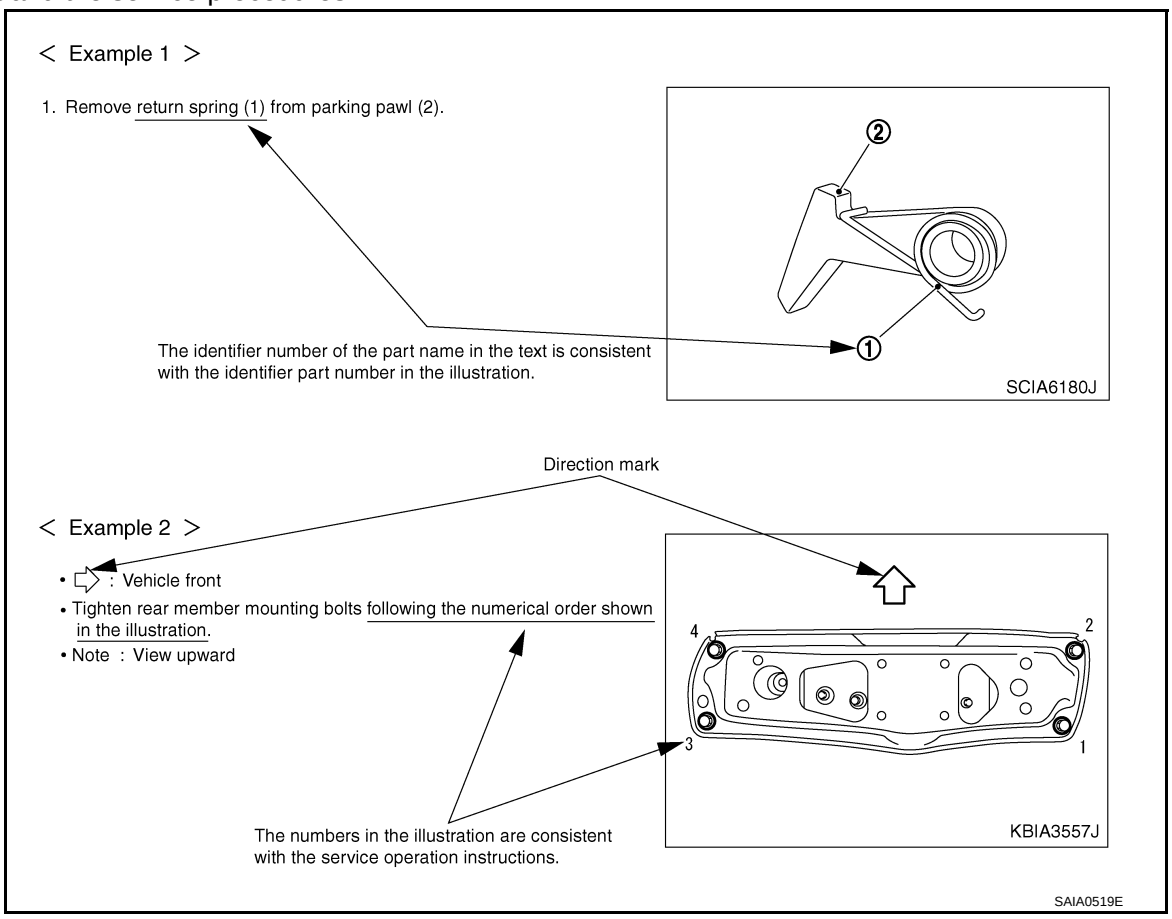

Components

INFOID:0000000006023331

- **THE LARGE ILLUSTRATIONS** are exploded views (see the following) and contain tightening torques, lubrication points, section number of the **PARTS CATALOG** (e.g. SEC. 440) and other information necessary to perform repairs.
  The illustrations should be used in reference to service matters only. When ordering parts, refer to the appropriate **PARTS CATALOG**.
  Components shown in an illustration may be identified by a circled number. When this style of illustration is used, the text description of the components will follow the illustration.

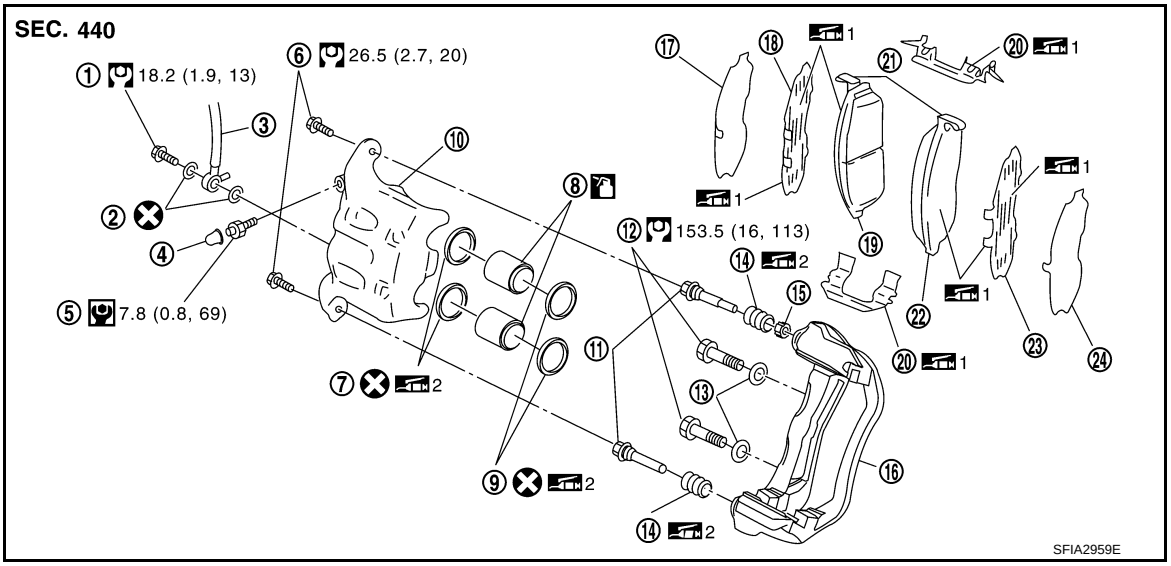

1. Union bolt	2. Copper washer	3. Brake hose
4. Cap	5. Bleed valve	6. Sliding pin bolt
7. Piston seal	8. Piston	9. Piston boot
10. Cylinder body	11. Sliding pin	12. Torque member mounting bolt
13. Washer	14. Sliding pin boot	15. Bushing
16. Torque member	17. Inner shim cover	18. Inner shim
19. Inner pad	20. Pad retainer	21. Pad wear sensor
22. Outer pad	23. Outer shim	24. Outer shim cover
1: PBC (Poly Butyl Cuprysil) grease or silicone-based grease	2: Rubber grease	: Brake fluid

Refer to GI section for additional symbol definitions.

SYMBOLS

SYMBOL	DESCRIPTION		SYMBOL	DESCRIPTION
	Tightening torque The tightening torque specifications of bolts and nuts may be presented as either a range or a standard tightening torque.	: N•m (kg-m, ft-lb)		Always replace after every disassembly.
		: N•m (kg-m, in-lb)	Ⓟ	Apply petroleum jelly.
	Should be lubricated with grease. Unless otherwise indicated, use recommended multi-purpose grease.		Ⓜ	Apply molybdenum added petroleum jelly.
	Should be lubricated with oil.		ATF	Apply ATF.
	Sealing point		★	Select with proper thickness.
Ⓛ	Sealing point with locking sealant.		☆	Adjustment is required.
	Checking point			

SAIA0749E

HOW TO FOLLOW TROUBLE DIAGNOSES

Description

INFOID:0000000006023332

NOTICE:
Trouble diagnoses indicate work procedures required to diagnose problems effectively. Observe the following instructions before diagnosing.

- Before performing trouble diagnoses, read the “Work Flow” in each section.
- After repairs, re-check that the problem has been completely eliminated.
- Refer to Component Parts and Harness Connector Location for the Systems described in each section for identification/location of components and harness connectors.
- When checking circuit continuity, ignition switch should be OFF.
- Refer to the Circuit Diagram for quick pinpoint check.
  If you need to check circuit continuity between harness connectors in more detail, such as when a sub-harness is used, refer to Wiring Diagram in each individual section and Harness Layout in PG section for identification of harness connectors.
- Before checking voltage at connectors, check battery voltage.
- After accomplishing the Diagnosis Procedures and Electrical Components Inspection, check that all harness connectors are reconnected as they were.

How to Follow Test Groups in Trouble Diagnosis

INFOID:0000000006023333

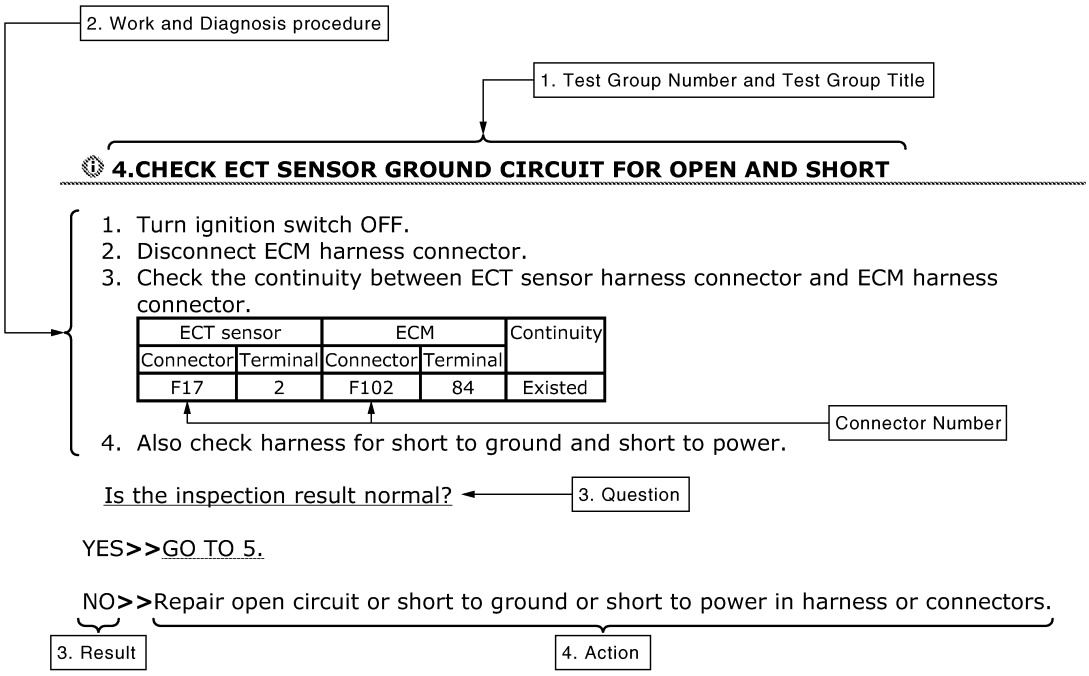

JPAIA0021GB

1. Test group number and test group title
   - Test group number and test group title are shown in the upper portion of each test group.
2. Work and diagnosis procedure
   - Start to diagnose a problem using procedures indicated in enclosed test groups.
3. Questions and results
   - Questions and required results are indicated in test group.
4. Action
   - Next action for each test group is indicated based on result of each question.

Key to Symbols Signifying Measurements or Procedures

INFOID:0000000006023334

SYMBOL	DESCRIPTION	SYMBOL	DESCRIPTION
	Check after disconnecting the connector to be measured.	GST	Procedure with Generic Scan Tool. (GST, OBD-II scan tool)
	Check after connecting the connector to be measured.	NO TOOLS	Procedure without CONSULT-II, CONSULT-III or GST
	Insert key into ignition switch.	A/C OFF	A/C switch is “OFF”.
	Remove key from ignition switch.	A/C ON	A/C switch is “ON”.
	Insert and remove key repeatedly.		REC switch is “ON”.
OFF	Turn ignition switch to “OFF” position.		REC switch is “OFF”.
ACC	Turn ignition switch to “ACC” position.	0 1 2 3 4	Fan switch is “ON”. (At any position except for “OFF” position)
ON	Turn ignition switch to “ON” position.	0 1 2 3 4	Fan switch is “OFF”.
ST	Turn ignition switch to “START” position.	FUSE	Apply fuse.
OFF → ACC	Turn ignition switch from “OFF” to “ACC” position.	FUSE BAT	Apply positive voltage from battery with fuse directly to components.
ACC → ON	Turn ignition switch from “ACC” to “ON” position.		
ACC → OFF	Turn ignition switch from “ACC” to “OFF” position.		

JPAIA0397GB

SYMBOL	DESCRIPTION	SYMBOL	DESCRIPTION
OFF ON	Turn ignition switch from “OFF” to “ON” position.		Drive vehicle.
ON OFF	Turn ignition switch from “ON” to “OFF” position.		
	Do not start engine, or check with engine stopped.	BAT	Disconnect battery negative cable.
	Start engine, or check with engine running.		Depress brake pedal.
	Apply parking brake.		Release brake pedal.
	Release parking brake.		Depress accelerator pedal.
C H	Check after engine is warmed up sufficiently.		Release accelerator pedal.
V	Voltage should be measured with a voltmeter.	H.S. 8 V	Pin terminal check for SMJ type ECM or TCM connectors. **For details regarding the terminal arrangement, refer to the “ELECTRICAL UNITS” electrical reference page at the end of the manual.**
Ω	Circuit resistance should be measured with an ohmmeter.		
A	Current should be measured with an ammeter.		
	Pulse signal should be checked with an oscilloscope.		
	Procedure with CONSULT-III		
	Procedure without CONSULT-III		
P	Place selector lever in “P” position.		
N	Place selector lever in “N” position.		
	Jack up front portion.		
	Jack up rear portion.		
	Inspect under engine room.		
	Inspect under floor.		
	Inspect rear under floor.		

JPAIA0398GB

HOW TO READ WIRING DIAGRAMS

Connector Symbols

INFOID:0000000006034278

Most of connector symbols in wiring diagrams are shown from the terminal side.

- Connector symbols shown from the terminal side are enclosed by a single line and followed by the direction mark.
- Connector symbols shown from the harness side are enclosed by a double line and followed by the direction mark.
- Certain systems and components, especially those related to OBD, may use a new style slide-locking type harness connector. For description and how to disconnect, refer to PG section, “Description”, “HARNESS CONNECTOR”.

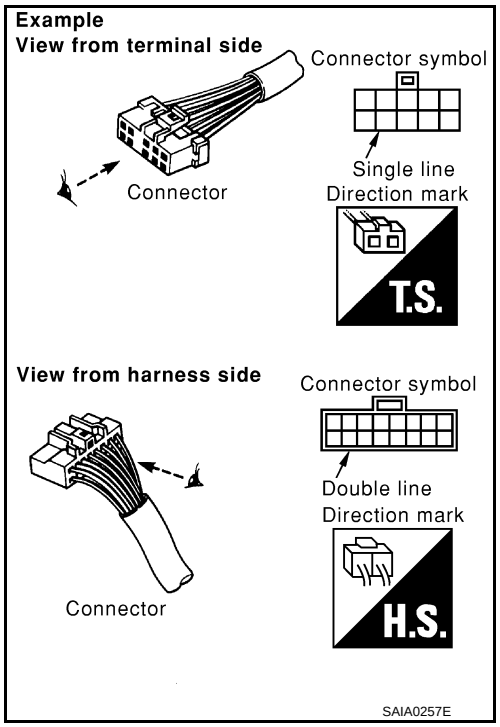

- Male and female terminals
  Connector guides for male terminals are shown in black and female terminals in white in wiring diagrams.

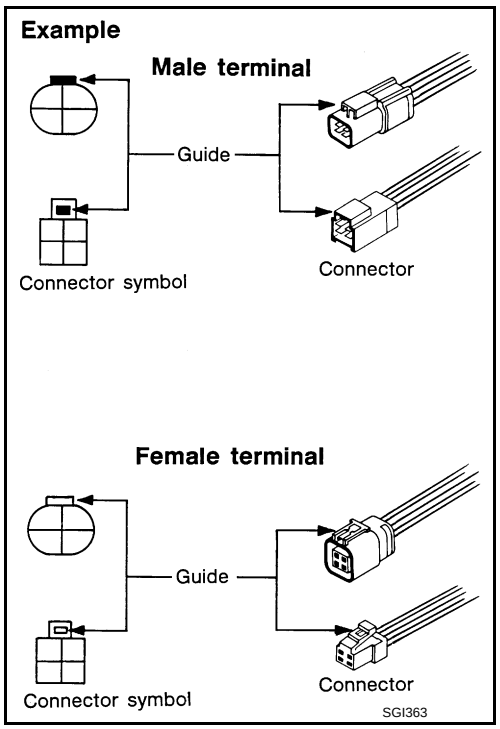

Sample/Wiring Diagram -Example-

INFOID:0000000006034279

Each section includes wiring diagrams.

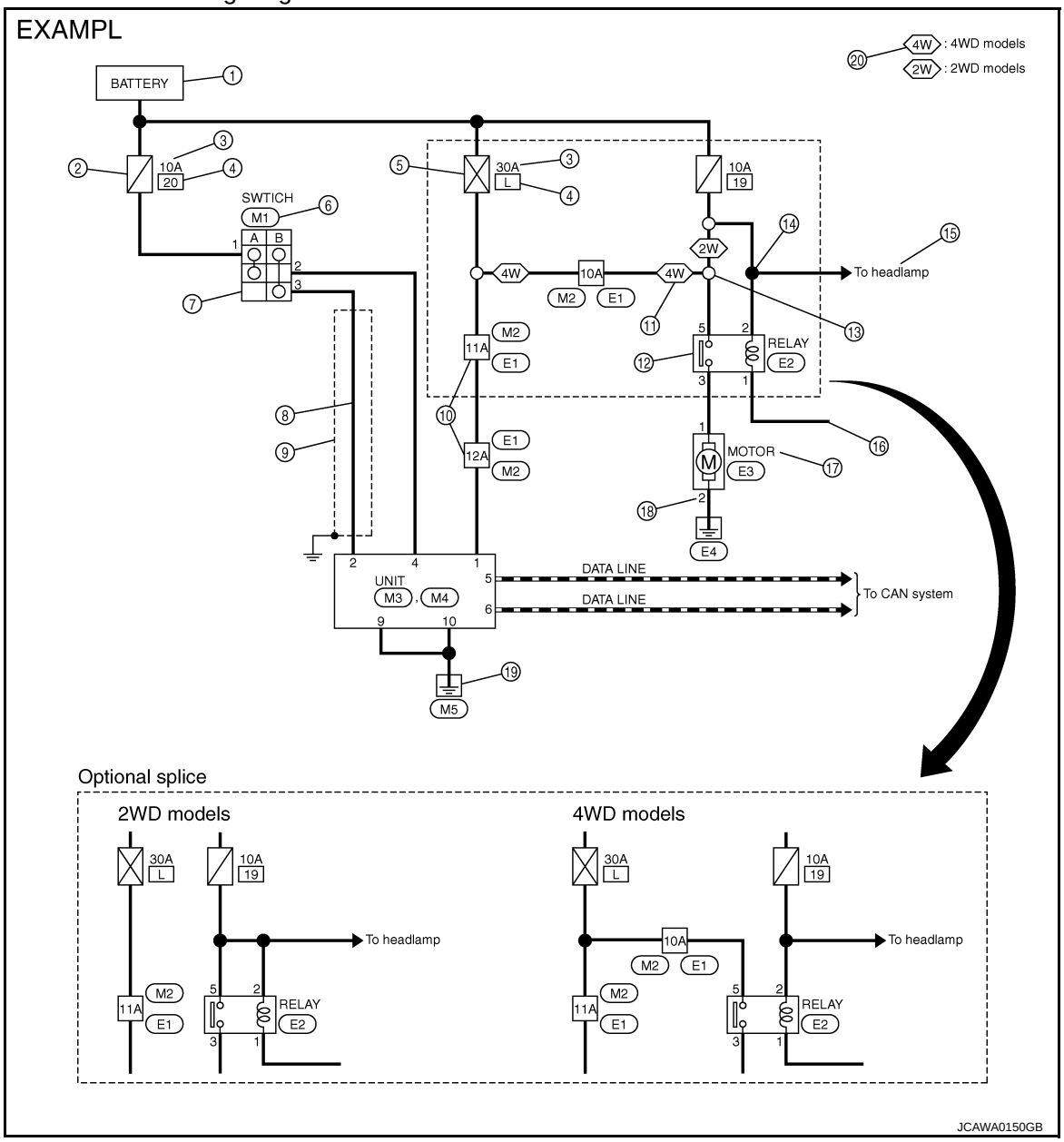

Description

Number	Item	Description
1	Power supply	• This means the power supply of fusible link or fuse.
2	Fuse	• "/" means the fuse.
3	Current rating of fusible link/fuse	• This means the current rating of the fusible link or fuse.
4	Number of fusible link/fuse	• This means the number of fusible link or fuse location.
5	Fusible link	• "X" means the fusible link.
6	Connector number	• Alphabetic characters show to which harness the connector is placed. • Numeric characters show the identification number of connectors.
7	Switch	• This shows that continuity exists between terminals 1 and 2 when the switch is in the A position. Continuity exists between terminals 1 and 3 when the switch is in the B position.
8	Circuit (Wiring)	• This means the wiring.

Number	Item	Description
9	Shielded line	• The line enclosed by broken line circle shows shield wire.
10	Connectors	• This means that a transmission line bypasses two connectors or more.
11	Option abbreviation	• This means the vehicle specifications which layouts the circuit between “○”.
12	Relay	• This shows an internal representation of the relay.
13	Optional splice	• The open circle shows that the splice is optional depending on vehicle application.
14	Splice	• The shaded circle “●” means the splice.
15	System branch	• This shows that the circuit is branched to other systems.
16	Page crossing	• This circuit continues to an adjacent page.
17	Component name	• This shows the name of a component.
18	Terminal number	• This means the terminal number of a connector.
19	Ground (GND)	• This shows the ground connection.
20	Explation of option description	• This shows a description of the option abbreviation used on the page.

SWITCH POSITIONS

Switches are shown in wiring diagrams as if the vehicle is in the “normal” condition.
A vehicle is in the “normal” condition when:

- ignition switch is “OFF”,
- doors, hood and trunk lid/back door are closed,
- pedals are not depressed, and
- parking brake is released.

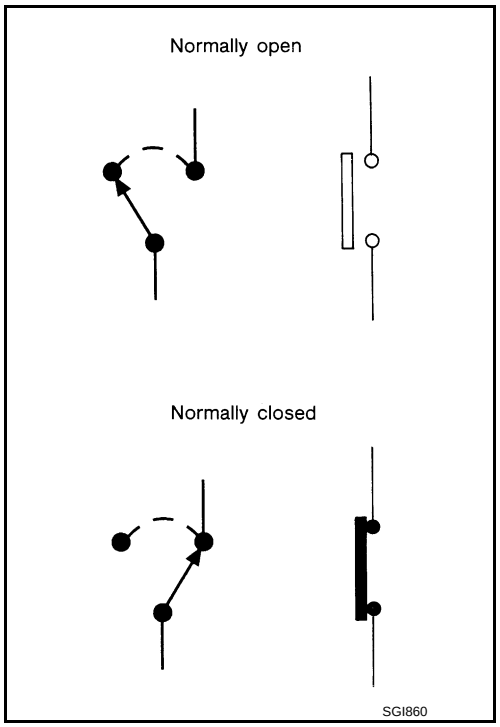

MULTIPLE SWITCH

The continuity of multiple switch is described in two ways as shown below.

- The switch chart is used in schematic diagrams.

- The switch diagram is used in wiring diagrams.

Example

(SWITCH CHART)

WIPER SWITCH

	OFF	INT	LO	HI	WASH
1					○
2				○	
3	○	○	○		
4	○	○			
5		○			
6		○	○	○	○

(SWITCH DIAGRAM)

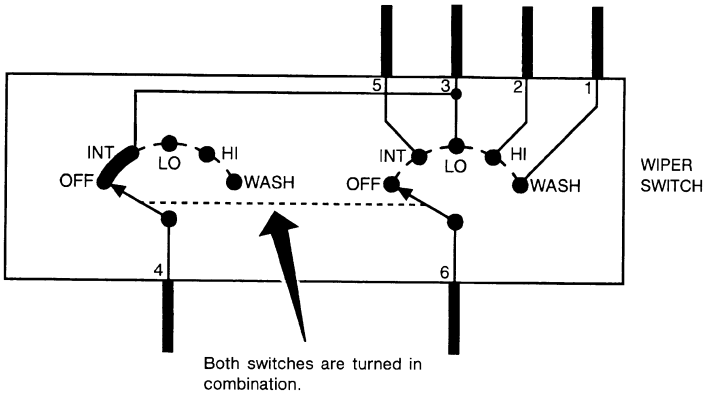

Continuity circuit of wiper switch

SWITCH POSITION	CONTINUITY CIRCUIT
OFF	3 - 4
INT	3 - 4, 5 - 6
LO	3 - 6
HI	2 - 6
WASH	1 - 6

JSAIA0017GB

Connector Information

INFOID:0000000006034280

CONNECTOR LIST

Connector information and harness layout are described in “POWER SUPPLY, GROUND & CIRCUIT ELEMENTS” Section.

Connector No.	Harness	Connector Information	Harness Layout
B	Body harness	PG-49, "B Body Harness"	PG-40, "Body Harness"
D	Door harness	PG-77, "D Door Harness"	PG-42, "Door Harness"
E	Engine room harness	PG-83, "E Engine Room Harness"	PG-36, "Engine Room Harness"
F	Engine control harness	PG-96, "F Engine Control Harness"	PG-38, "Engine Control Harness"
M	Main harness	PG-103, "M Main Harness"	PG-39, "Main Harness"
R	Room lamp harness	PG-128, "R Room Lamp Harness"	PG-47, "Room Lamp Harness"

HOW TO USE CONNECTOR INFORMATION

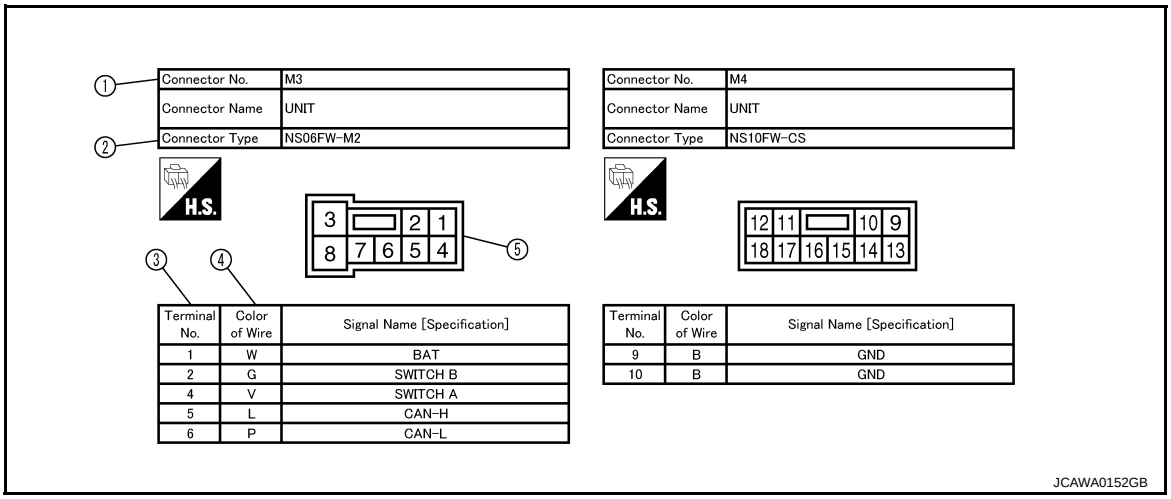

Description

Number	Item	Description
1	Connector number	• Alphabetic characters show to which harness the connector is placed. • Numeric characters show the identification number of connectors.
2	Connector type	• This means the connector number. Refer to PG-48, "How to Read Connector Type".
3	Terminal number	• This means the terminal number of a connector.
4	Wire color	• This shows a code for the color of the wire.
		B = Black W = White R = Red G = Green L = Blue Y = Yellow LG = Light Green BG = Beige BR = Brown OR or O = Orange P = Pink PU or V (Violet) = Purple GY or GR = Gray SB = Sky Blue CH = Dark Brown DG = Dark Green
		• When the wire color is striped, the base color is given first, followed by the stripe color as shown below: Example: L/W = Blue with White Stripe
5	Connector	• This means the connector information. • This unit-side is described by the connector symbols.

ABBREVIATIONS

Abbreviation List

INFOID:0000000006023338

The following **ABBREVIATIONS** are used:

ABBREVIATION	DESCRIPTION
A/C	Air Conditioner
A/T	Automatic Transaxle/Transmission
ATF	Automatic Transmission Fluid
D_1	Drive range first gear
D_2	Drive range second gear
D_3	Drive range third gear
D_4	Drive range fourth gear
FR, RR	Front, Rear
LH, RH	Left-Hand, Right-Hand
M/T	Manual Transaxle/Transmission
OD	Overdrive
P/S	Power Steering
SAE	Society of Automotive Engineers, Inc.
SDS	Service Data and Specifications
SST	Special Service Tools
2WD	2-Wheel Drive
2_2	2nd range second gear
2_1	2nd range first gear
1_2	1st range second gear
1_1	1st range first gear

TIGHTENING TORQUE OF STANDARD BOLTS

Description

INFOID:0000000006023339

This vehicle has both new standard based on ISO* and previous standard bolts/nuts. There are some differences between these two types of bolts/ nuts; shape of the head, grade of strength, hexagonal width across flats and the standard tightening torque.

- For guidance in discriminating, refer to GI-15, "Tightening Torque Table (New Standard Included)".
- The new standard machine screws and tapping screws have a head of ISO standard torx recess.
- If the tightening torque is not described in the description or figure, refer to GI-15, "Tightening Torque Table (New Standard Included)".

*ISO: International Organization for Standardization

Tightening Torque Table (New Standard Included)

INFOID:0000000006023340

CAUTION:

- **The special parts are excluded.**
- **The bolts/nuts in these tables have a strength (discrimination) number/symbol assigned to the head or the like. As to the relation between the strength grade in these tables and the strength (discrimination) number/symbol, refer to “DISCRIMINATION OF BOLTS AND NUTS”.**

PREVIOUS STANDARD

Grade (Strength grade)	Bolt size	Bolt diameter mm	Hexagonal width across flats mm	Pitch mm	Tightening torque (Without lubricant)							
					Hexagon head bolt				Hexagon flange bolt			
					N·m	kg-m	ft-lb	in-lb	N·m	kg-m	ft-lb	in-lb
4T	M6	6.0	10	1.0	5.5	0.56	4	49	7	0.71	5	62
	M8	8.0	12	1.25	13.5	1.4	10	—	17	1.7	13	—
				1.0	13.5	1.4	10	—	17	1.7	13	—
	M10	10.0	14	1.5	28	2.9	21	—	35	3.6	26	—
				1.25	28	2.9	21	—	35	3.6	26	—
	M12	12.0	17	1.75	45	4.6	33	—	55	5.6	41	—
				1.25	45	4.6	33	—	65	6.6	48	—
	M14	14.0	19	1.5	80	8.2	59	—	100	10	74	—
7T	M6	6.0	10	1.0	9	0.92	7	80	11	1.1	8	97
	M8	8.0	12	1.25	22	2.2	16	—	28	2.9	21	—
				1.0	22	2.2	16	—	28	2.9	21	—
	M10	10.0	14	1.5	45	4.6	33	—	55	5.6	41	—
				1.25	45	4.6	33	—	55	5.6	41	—
	M12	12.0	17	1.75	80	8.2	59	—	100	10	74	—
				1.25	80	8.2	59	—	100	10	74	—
	M14	14.0	19	1.5	130	13	96	—	170	17	125	—
9T	M6	6.0	10	1.0	11	1.1	8	—	13.5	1.4	10	—
	M8	8.0	12	1.25	28	2.9	21	—	35	3.6	26	—
				1.0	28	2.9	21	—	35	3.6	26	—
	M10	10.0	14	1.5	55	5.6	41	—	80	8.2	59	—
				1.25	55	5.6	41	—	80	8.2	59	—
	M12	12.0	17	1.75	100	10	74	—	130	13	96	—
				1.25	100	10	74	—	130	13	96	—
	M14	14.0	19	1.5	170	17	125	—	210	21	155	—

CAUTION:

TIGHTENING TORQUE OF STANDARD BOLTS

The parts with aluminum or the cast iron washer surface/thread surface are excluded.

NEW STANDARD BASED ON ISO

Grade (Strength grade)	Bolt size	Bolt diameter mm	Hexagonal width across flats mm	Pitch mm	Tightening torque							
					Hexagon head bolt				Hexagon flange bolt			
					N·m	kg-m	ft-lb	in-lb	N·m	kg-m	ft-lb	in-lb
4.8 (Without lubricant)	M6	6.0	10	1.0	5.5	0.56	4	49	7	0.71	5	62
	M8	8.0	13	1.25	13.5	1.4	10	—	17	1.7	13	—
				1.0	13.5	1.4	10	—	17	1.7	13	—
	M10	10.0	16	1.5	28	2.9	21	—	35	3.6	26	—
				1.25	28	2.9	21	—	35	3.6	26	—
	M12	12.0	18	1.75	45	4.6	33	—	55	5.6	41	—
				1.25	45	4.6	33	—	65	6.6	48	—
	M14	14.0	21	1.5	80	8.2	59	—	100	10	74	—
4.8 (With lubricant)	M6	6.0	10	1.0	4	0.41	3	35	5.5	0.56	4	49
	M8	8.0	13	1.25	11	1.1	8	—	13.5	1.4	10	—
				1.0	11	1.1	8	—	13.5	1.4	10	—
	M10	10.0	16	1.5	22	2.2	16	—	28	2.9	21	—
				1.25	22	2.2	16	—	28	2.9	21	—
	M12	12.0	18	1.75	35	3.6	26	—	45	4.6	33	—
				1.25	35	3.6	26	—	45	4.6	33	—
	M14	14.0	21	1.5	65	6.6	48	—	80	8.2	59	—
8.8 (With lubricant)	M6	6.0	10	1.0	8	0.82	6	71	10	1.0	7	89
	M8	8.0	13	1.25	21	2.1	15	—	25	2.6	18	—
				1.0	21	2.1	15	—	25	2.6	18	—
	M10	10.0	16	1.5	40	4.1	30	—	50	5.1	37	—
				1.25	40	4.1	30	—	50	5.1	37	—
	M12	12.0	18	1.75	70	7.1	52	—	85	8.7	63	—
				1.25	70	7.1	52	—	85	8.7	63	—
	M14	14.0	21	1.5	120	12	89	—	140	14	103	—
10.9 (With lubricant)	M6	6.0	10	1.0	10	1.0	7	89	12	1.2	9	106
	M8	8.0	13	1.25	27	2.8	20	—	32	3.3	24	—
				1.0	27	2.8	20	—	32	3.3	24	—
	M10	10.0	16	1.5	55	5.6	41	—	65	6.6	48	—
				1.25	55	5.6	41	—	65	6.6	48	—
	M12	12.0	18	1.75	95	9.7	70	—	110	11	81	—
				1.25	95	9.7	70	—	110	11	81	—
	M14	14.0	21	1.5	160	16	118	—	180	18	133	—

CAUTION:

1. **Use tightening torque with lubricant for the new standard bolts/nuts in principle. Friction coefficient stabilizer is applied to the new standard bolts/nuts.**
2. **However, use tightening torque without lubricant for the following cases. Friction coefficient stabilizer is not applied to the following bolts/nuts.**

- **Grade 4.8, M6 size bolt, Conical spring washer installed**
- **Paint removing nut (Size M6 and M8) for fixing with weld bolt**

DISCRIMINATION OF BOLTS AND NUTS

BOLTS

	Grade (Strength)	Discrimination	
Previous standard	4T (392N/mm²)	4	(No number/ symbol)
	7T (686N/mm²)	7	
	9T (883N/mm²)	9	
New Standard	4.8 (420N/mm²)	4.8	(No number/ symbol)
	8.8 (800N/mm²)	8.8	
	10.9 (1040N/mm²)	10.9	

NUTS

	Grade (Proof load stress)	Discrimination		
Previous standard	7N (686N/mm²)	(No number/ symbol)		
	9N (883N/mm²)	9		
New Standard	8 (800N/mm²)	8		(No number/ symbol)
	10 (1040N/mm²)	10		

NOTICE:
- A number is assigned on the side of the nuts in some cases.
- A number or symbol is assigned on the upper surface of the flange for the nut with flange.

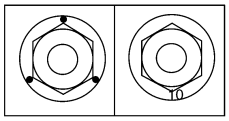

MACHINE SCREWS AND TAPPING SCREWS

Shape of the head :
Cross recess for the previous standard
Torx recess for the new standard

Screw size	Screw diameter	Torx size
M4	4.0	T20
M5	5.0	T20
M6	6.0	T30

NOTICE:
Use torx size T20 (united with M4 screw) for M5 screw although ISO standard specifies T25.

SAIA0453E

VEHICLE INFORMATION

IDENTIFICATION INFORMATION

Model Variation

INFOID:0000000006023342

Destination	Body	Engine	Transmission	Axle	Grade	Model
General areas	5–door Hatch-back	HR12DE	5M/T	2WD	KPI	FDWUREG-EH5
					Base	FDWURQG-EH5
					Middle	FDWURTG-EH5
			4A/T			FDWURTA-EH5
					Upper	FDWURVA-EH5
					Upper Safety	FDWURPA-EH5
			5M/T		Base	FDWURQG-XH5
					Middle	FDWURTG-XH5
India					Base	FDWURQG-EI5
					Middle	FDWURTG-EI5
					Upper	FDWURVG-EI5

Model variation code (Prefix and suffix designations)

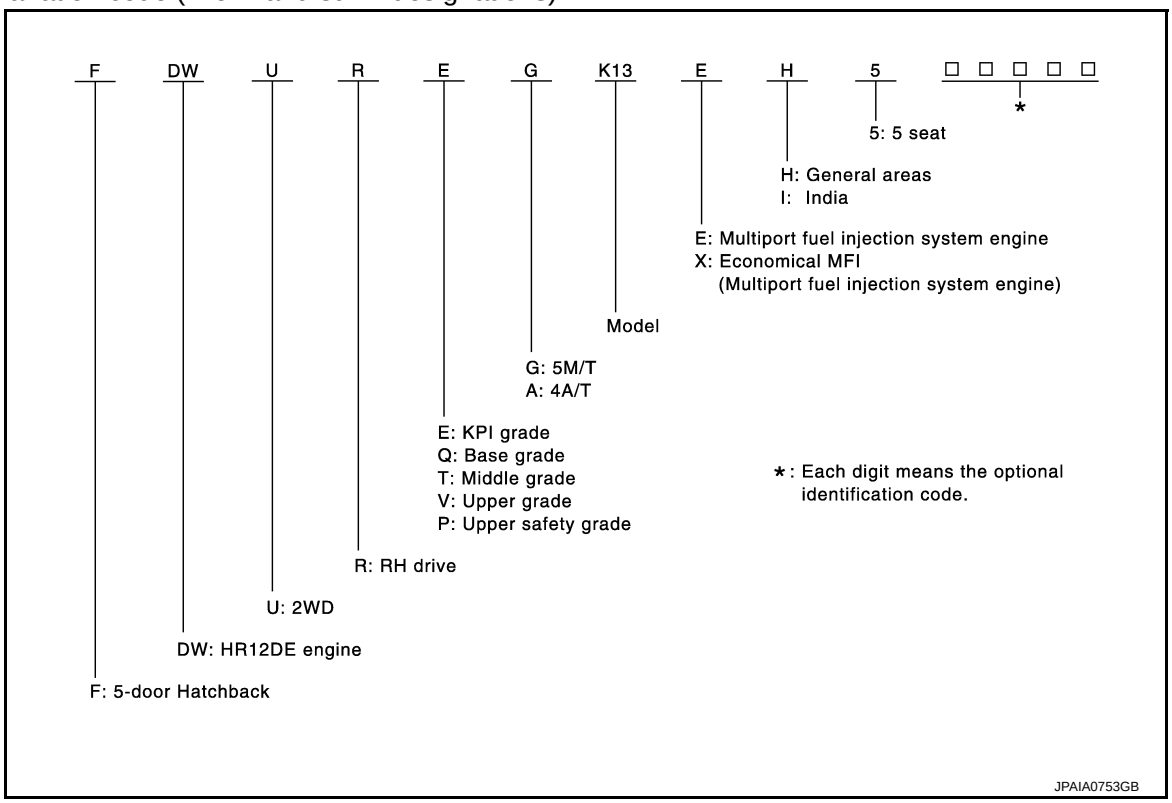

Information About Identification or Model Code

INFOID:0000000006023343

IDENTIFICATION NUMBER

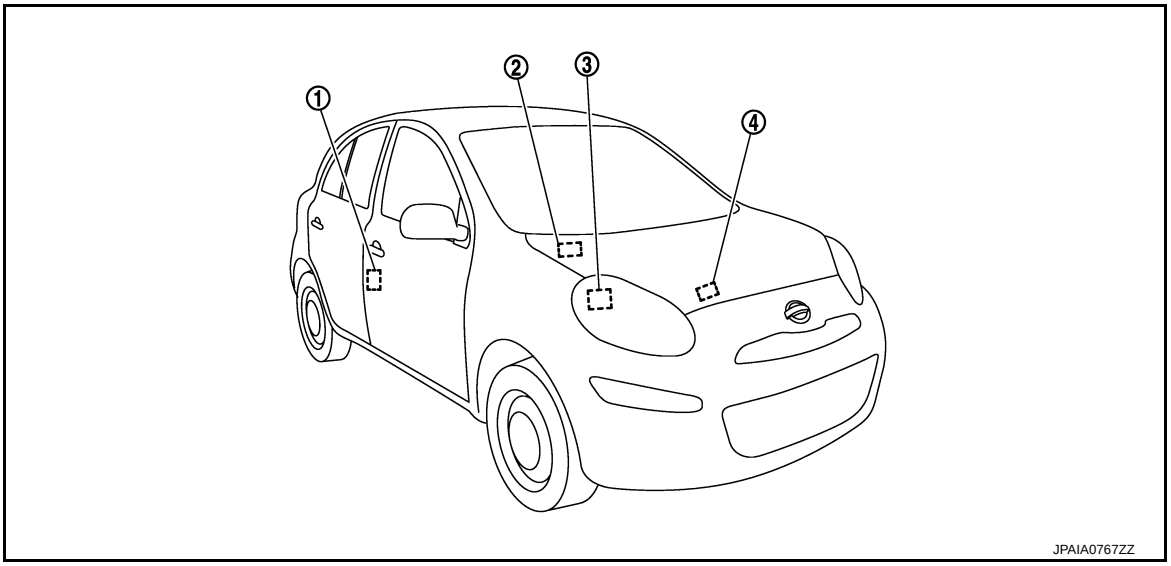

1. Tire placard
2. Vehicle identification number (Chassis number)
3. Vehicle identification number plate
4. Air conditioner specification label

VEHICLE IDENTIFICATION NUMBER ARRANGEMENT

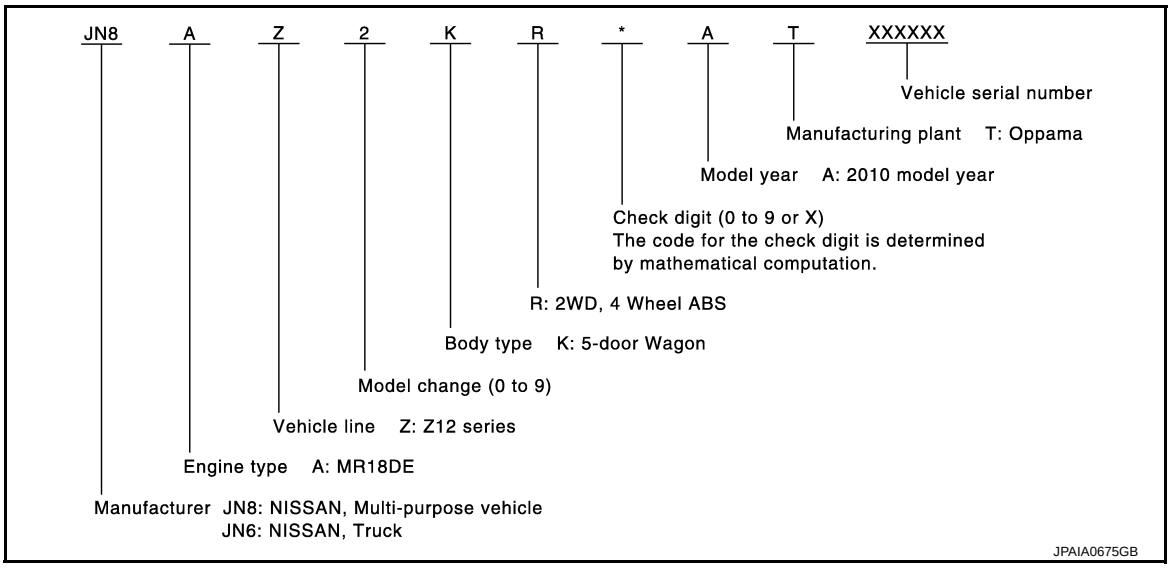

IDENTIFICATION PLATE

For General areas

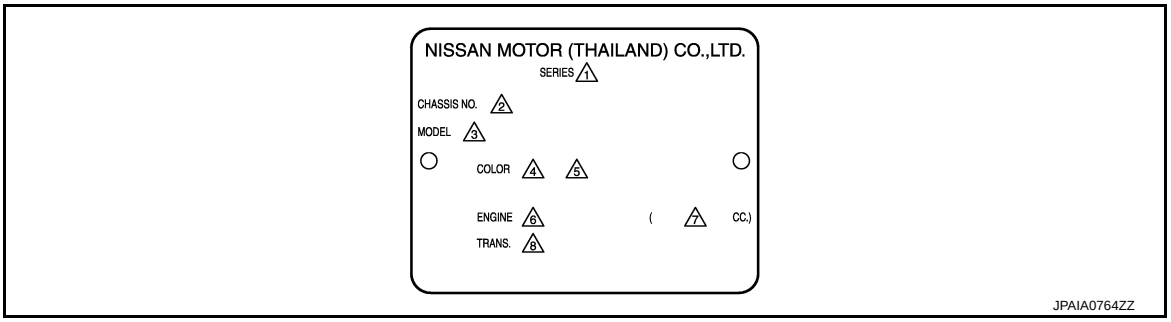

1. Type
2. Vehicle identification number (Chassis number)
3. Model variation code
4. Body color code
5. Trim color code
6. Engine model

7. Engine displacement
8. Transmission model
9. Axle model
10. Manufacturing Plant

For India

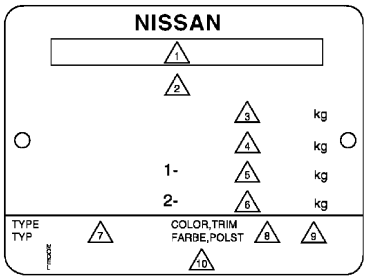

JPAIA0053ZZ

1. Type approval number (Models with WVTA)
   Blank (Models witout WVTA)
2. Vehicle identification number (Chassis number)
3. Gross vehicle weight
4. Gross vehicle weight + Gross trailing capacity (Weight)
5. Gross axle weight (Front)
6. Gross axle weight (Rear)
7. Vehicle type
8. Body color code
9. Trim color code
10. Model variation code

ENGINE SERIAL NUMBER

⇦ : Vehicle front

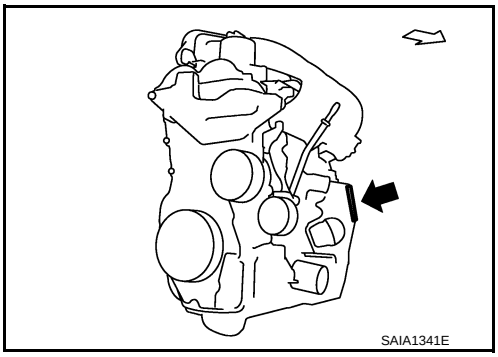
SAIA1341E

AUTOMATIC TRANSMISSION NUMBER

⇦ : Vehicle front

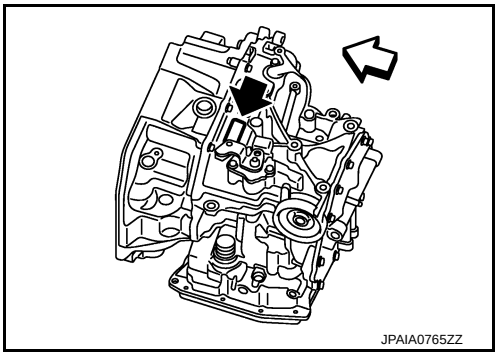
JPAIA0765ZZ

MANUAL TRANSAXLE NUMBER

⇦ : Vehicle front

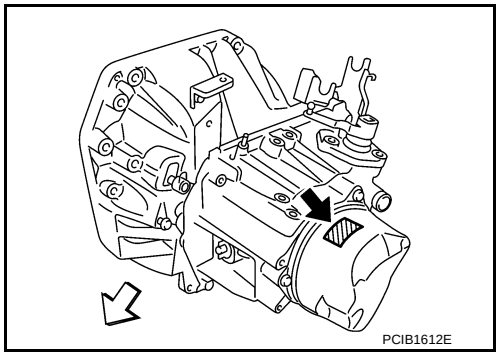

Dimensions

INFOID:0000000006023344

Unit: mm (in)

Overall length	3,780 (148.8)
Overall width	1,665 (65.6)
Overall height	1,512 (59.5)
Front tread	1,470 (57.9)
Rear tread	1,475 (58.1)
Wheelbase	2,450 (96.5)

Wheels & Tires

INFOID:0000000006023345

Application		Conventional	Spare
Road wheel/offset	mm (in)	14×5-1/2J 45	Conventional
Tire size		165/70R14 81S	Conventional

See the tire placard on your vehicle for more details.

PRECAUTION

PRECAUTIONS

Description

INFOID:0000000006023346

Observe the following precautions to ensure safe and proper servicing. These precautions are not described in each individual section.

Precaution for Supplemental Restraint System (SRS) "AIR BAG" and "SEAT BELT PRE-TENSIONER"

INFOID:0000000006034288

The Supplemental Restraint System such as “AIR BAG” and “SEAT BELT PRE-TENSIONER”, used along with a front seat belt, helps to reduce the risk or severity of injury to the driver and front passenger for certain types of collision. Information necessary to service the system safely is included in the “SRS AIR BAG” and “SEAT BELT” of this Service Manual.

WARNING:

- **To avoid rendering the SRS inoperative, which could increase the risk of personal injury or death in the event of a collision which would result in air bag inflation, all maintenance must be performed by an authorized NISSAN/INFINITI dealer.**
- **Improper maintenance, including incorrect removal and installation of the SRS, can lead to personal injury caused by unintentional activation of the system. For removal of Spiral Cable and Air Bag Module, see the “SRS AIR BAG”.**
- **Do not use electrical test equipment on any circuit related to the SRS unless instructed to in this Service Manual. SRS wiring harnesses can be identified by yellow and/or orange harnesses or harness connectors.**

PRECAUTIONS WHEN USING POWER TOOLS (AIR OR ELECTRIC) AND HAMMERS

WARNING:

- **When working near the Air Bag Diagnosis Sensor Unit or other Air Bag System sensors with the ignition ON or engine running, DO NOT use air or electric power tools or strike near the sensor(s) with a hammer. Heavy vibration could activate the sensor(s) and deploy the air bag(s), possibly causing serious injury.**
- **When using air or electric power tools or hammers, always switch the ignition OFF, disconnect the battery, and wait at least 3 minutes before performing any service.**

Precaution Necessary for Steering Wheel Rotation after Battery Disconnect

INFOID:0000000006034290

NOTE:

- Before removing and installing any control units, first turn the push-button ignition switch to the LOCK position, then disconnect both battery cables.
- After finishing work, confirm that all control unit connectors are connected properly, then re-connect both battery cables.
- Always use CONSULT-III to perform self-diagnosis as a part of each function inspection after finishing work. If a DTC is detected, perform trouble diagnosis according to self-diagnosis results.

For vehicle with steering lock unit, if the battery is disconnected or discharged, the steering wheel will lock and cannot be turned.

If turning the steering wheel is required with the battery disconnected or discharged, follow the operation procedure below before starting the repair operation.

OPERATION PROCEDURE

1. Connect both battery cables.
   NOTE:
   Supply power using jumper cables if battery is discharged.
2. Turn the push-button ignition switch to ACC position.
   (At this time, the steering lock will be released.)
3. Disconnect both battery cables. The steering lock will remain released with both battery cables disconnected and the steering wheel can be turned.
4. Perform the necessary repair operation.

5. When the repair work is completed, re-connect both battery cables. With the brake pedal released, turn the push-button ignition switch from ACC position to ON position, then to LOCK position. (The steering wheel will lock when the push-button ignition switch is turned to LOCK position.)
6. Perform self-diagnosis check of all control units using CONSULT-III.

Precaution for Battery Service

INFOID:0000000006034291

Before disconnecting the battery, lower both the driver and passenger windows. This will prevent any interference between the window edge and the vehicle when the door is opened/closed. During normal operation, the window slightly raises and lowers automatically to prevent any window to vehicle interference. The automatic window function will not work with the battery disconnected.

Precaution for Procedure without Cowl Top Cover

INFOID:0000000006034294

When performing the procedure after removing cowl top cover, cover the lower end of windshield with urethane, etc.

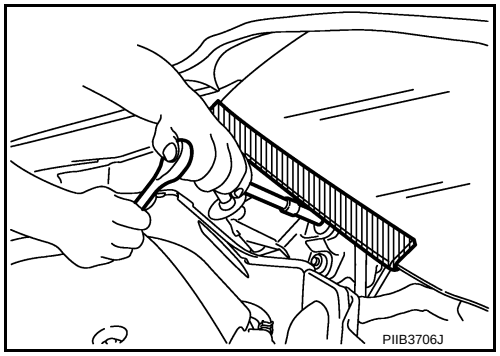

General Precautions

INFOID:0000000006023350

- Do not operate the engine for an extended period of time without proper exhaust ventilation.
  Keep the work area well ventilated and free of any inflammable materials. Special care should be taken when handling any inflammable or poisonous materials, such as gasoline, refrigerant gas, etc. When working in a pit or other enclosed area, be sure to properly ventilate the area before working with hazardous materials.
  Do not smoke while working on the vehicle.

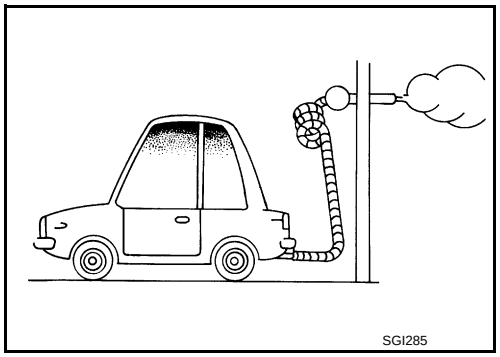

- Before jacking up the vehicle, apply wheel chocks or other tire blocks to the wheels to prevent the vehicle from moving. After jacking up the vehicle, support the vehicle weight with safety stands at the points designated for proper lifting before working on the vehicle.
  These operations should be done on a level surface.
- When removing a heavy component such as the engine or transaxle/transmission, be careful not to lose your balance and drop them. Also, do not allow them to strike adjacent parts, especially the brake tubes and master cylinder.

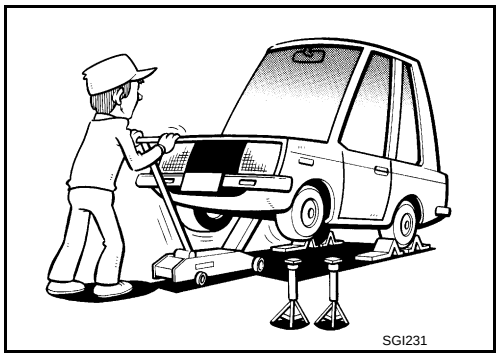

- Before starting repairs which do not require battery power:
  Turn off ignition switch.
  Disconnect the negative battery terminal.
- If the battery terminals are disconnected, recorded memory of radio and each control unit is erased.

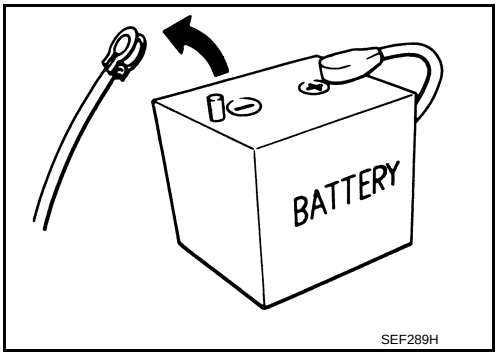

- To prevent serious burns:
  Avoid contact with hot metal parts.
  Do not remove the radiator cap when the engine is hot.
- Dispose of drained oil or the solvent used for cleaning parts in an appropriate manner.
- Do not attempt to top off the fuel tank after the fuel pump nozzle shuts off automatically.
  Continued refueling may cause fuel overflow, resulting in fuel spray and possibly a fire.
- Clean all disassembled parts in the designated liquid or solvent prior to inspection or assembly.
- Replace oil seals, gaskets, packings, O-rings, locking washers, cotter pins, self-locking nuts, etc. with new ones.

- Replace inner and outer races of tapered roller bearings and needle bearings as a set.
- Arrange the disassembled parts in accordance with their assembled locations and sequence.
- Do not touch the terminals of electrical components which use microcomputers (such as ECM).
  Static electricity may damage internal electronic components.
- After disconnecting vacuum or air hoses, attach a tag to indicate the proper connection.
- Use only the fluids and lubricants specified in this manual.
- Use approved bonding agent, sealants or their equivalents when required.
- Use hand tools, power tools (disassembly only) and recommended special tools where specified for safe and efficient service repairs.
- When repairing the fuel, oil, water, vacuum or exhaust systems, check all affected lines for leakage.

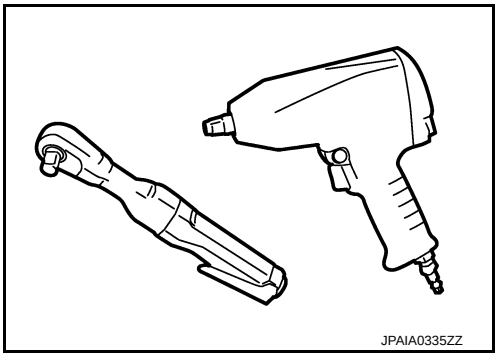

- Before servicing the vehicle:
  Protect fenders, upholstery and carpeting with appropriate covers.
  Take caution that keys, buckles or buttons do not scratch paint.

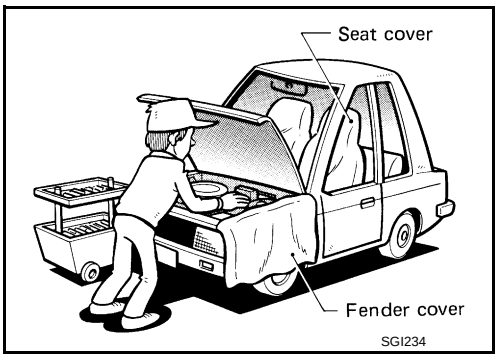

WARNING:

To prevent ECM from storing the diagnostic trouble codes, never carelessly disconnect the harness connectors which are related to the engine control system and TCM (transmission control module)

system. The connectors should be disconnected only when working according to the WORK FLOW of TROUBLE DIAGNOSES in EC and TM sections.

Three Way Catalyst

INFOID:0000000006023351

If a large amount of unburned fuel flows into the catalyst, the catalyst temperature will be excessively high. To prevent this, follow the instructions.

- Use unleaded gasoline only. Leaded gasoline will seriously damage the three way catalyst.
- When checking for ignition spark or measuring engine compression, make tests quickly and only when necessary.
- Do not run engine when the fuel tank level is low, otherwise the engine may misfire, causing damage to the catalyst.

Do not place the vehicle on flammable material. Keep flammable material off the exhaust pipe and the three way catalyst.

Multiport Fuel Injection System or Engine Control System

INFOID:0000000006023352

- Before connecting or disconnecting any harness connector for the multiport fuel injection system or ECM:
  Turn ignition switch to “OFF” position.
  Disconnect negative battery terminal.
  Otherwise, there may be damage to ECM.
- Before disconnecting pressurized fuel line from fuel pump to injectors, be sure to release fuel pressure.
- Be careful not to jar components such as ECM and mass air flow sensor.

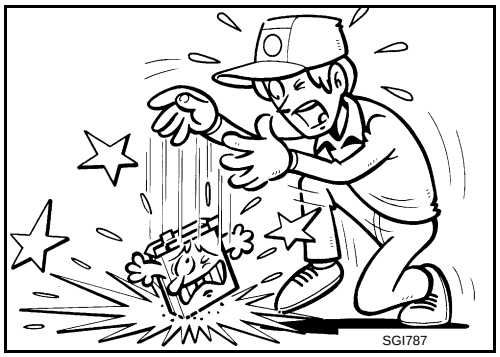

Hoses

INFOID:0000000006023353

HOSE REMOVAL AND INSTALLATION

- To prevent damage to rubber hose, do not pry off rubber hose with tapered tool or screwdriver.

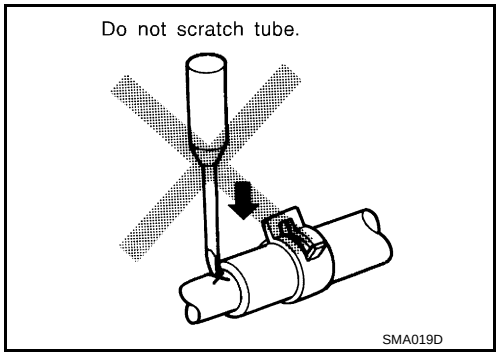

- To reinstall the rubber hose securely, check that hose insertion length and orientation is correct. (If tube is equipped with hose stopper, insert rubber hose into tube until it butts up against hose stopper.)

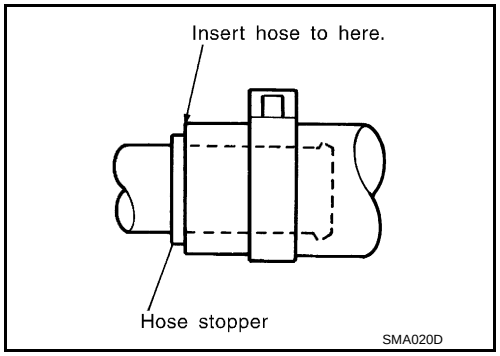

HOSE CLAMPING

- If old rubber hose is re-used, install hose clamp in its original position (at the indentation where the old clamp was). If there is a trace of tube bulging left on the old rubber hose, align rubber hose at that position.
- Discard old clamps; replace with new ones.

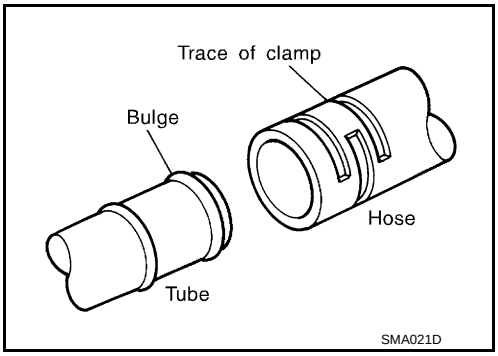

- After installing plate clamps, apply force to them in the direction of the arrow, tightening rubber hose equally all around.

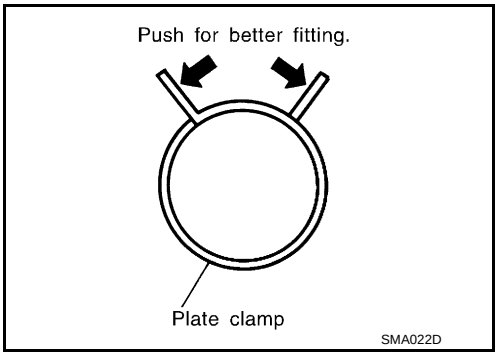

Engine Oils

INFOID:0000000006023354

Prolonged and repeated contact with used engine oil may cause skin cancer. Try to avoid direct skin contact with used oil.
If skin contact is made, wash thoroughly with soap or hand cleaner as soon as possible.

HEALTH PROTECTION PRECAUTIONS

- Avoid prolonged and repeated contact with oils, particularly used engine oils.
- Wear protective clothing, including impervious gloves where practicable.
- Do not put oily rags in pockets.
- Avoid contaminating clothes, particularly underpants, with oil.
- Heavily soiled clothing and oil-impregnated footwear should not be worn. Overalls must be cleaned regularly.
- First aid treatment should be obtained immediately for open cuts and wounds.
- Use barrier creams, applying them before each work period, to help the removal of oil from the skin.
- Wash with soap and water to ensure all oil is removed (skin cleansers and nail brushes will help). Preparations containing lanolin replace the natural skin oils which have been removed.
- Do not use gasoline, kerosene, diesel fuel, gas oil, thinners or solvents for cleaning skin.
- If skin disorders develop, obtain medical advice without delay.
- Where practical, degrease components prior to handling.
- Where there is a risk of eye contact, eye protection should be worn, for example, chemical goggles or face shields; in addition an eye wash facility should be provided.

ENVIRONMENTAL PROTECTION PRECAUTIONS

Dispose of used oil and used oil filters through authorized waste disposal contractors to licensed waste disposal sites, or to the waste oil reclamation trade. If in doubt, contact the local authority for advice on disposal facilities.
It is illegal to pour used oil on to the ground, down sewers or drains, or into water sources.
The regulations concerning pollution vary between regions.

Air Conditioning

INFOID:0000000006023355

Use an approved refrigerant recovery unit any time the air conditioning system must be discharged. Refer to HA section “REFRIGERANT” for specific instructions.

Fuel

INFOID:0000000006023356

Use unleaded regular gasoline of at least 91 octane.

CAUTION:
Do not use leaded gasoline. Using leaded gasoline will damage the three-way catalyst.

LIFTING POINT

Commercial Service Tools

INFOID:0000000006023357

Tool name	Description
Board on attachment	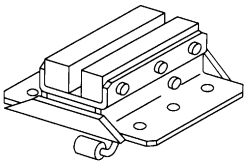 S-NT001
Safety stand attachment	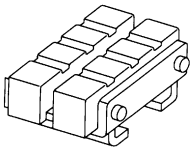 S-NT002

CAUTION:

- **Every time the vehicle is lifted up, maintain the complete vehicle curb condition.**
- **Since the vehicle's center of gravity changes when removing main parts on the front side (engine, transmission, suspension etc.), support a jack up point on the rear side garage jack with a mission jack or equivalent.**
- **Since the vehicle's center of gravity changes when removing main parts on the rear side (rear axle, suspension, etc.), support a jack up point on the front side garage jack with a mission jack or equivalent.**
- **Be careful not to smash or never do anything that would affect piping parts.**

Garage Jack and Safety Stand and 2-Pole Lift

INFOID:0000000006023358

WARNING:

- **Park the vehicle on a level surface when using the jack. Check to avoid damaging pipes, tubes, etc. under the vehicle.**
- **Never get under the vehicle while it is supported only by the jack. Always use safety stands when you have to get under the vehicle.**
- **Place wheel chocks at both front and back of the wheels on the ground.**
- **When lifting the vehicle, open the lift arms as wide as possible and ensure that the front and rear of the vehicle are well balanced.**
- **When setting the lift arm, never allow the arm to contact the brake tubes, brake cable, fuel lines and sill spoiler.**

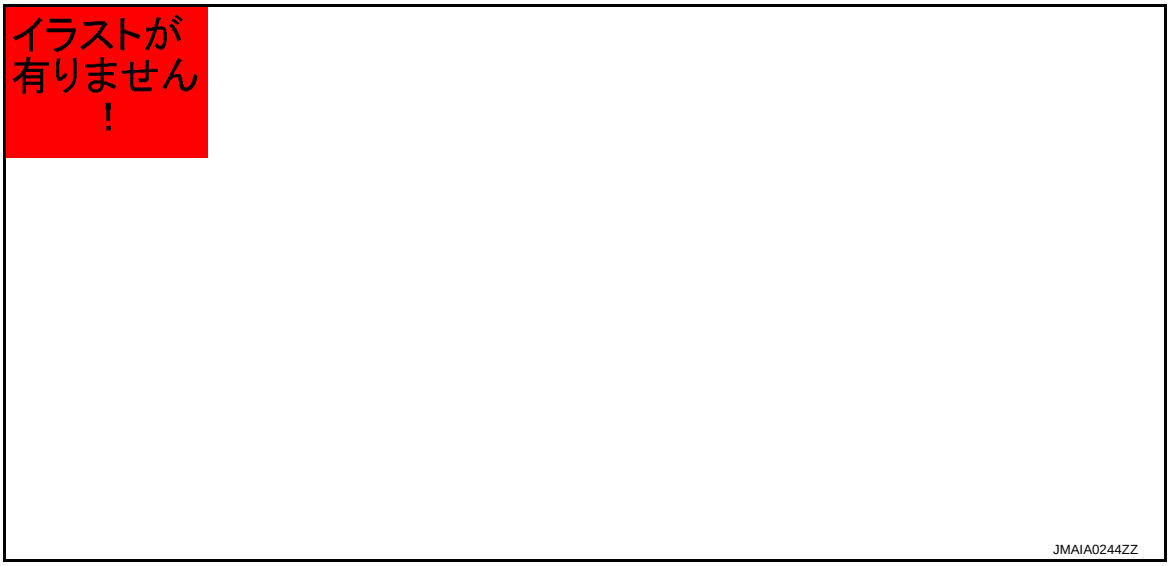

1. Safety stand point and lift up point (front)
2. Safety stand point and lift up point (rear)
3. Garage jack point (front)
4. Garage jack point (rear)

CAUTION:
There is canister just behind Garage jack point rear. Jack up carefully.

Board-On Lift

INFOID:0000000006023359

CAUTION:
Check vehicle is empty when lifting.
- **The board-on lift attachment (A) set at front end of vehicle should be set on the front of the sill under the front door opening.**
- **Position attachments at front and rear ends of board-on lift.**

⇦ : Vehicle front

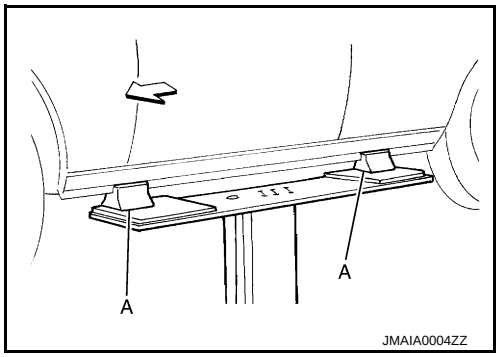

TOW TRUCK TOWING

Tow Truck Towing

INFOID:0000000006023360

CAUTION:

- **All applicable state or Provincial (in Canada) laws and local laws regarding the towing operation must be obeyed.**
- **It is necessary to use proper towing equipment to avoid possible damage to the vehicle during towing operation. Towing is in accordance with Towing Procedure Manual at dealer.**
- **Always attach safety chains before towing.**
- **When towing, check that the transmission, steering system and powertrain are in good order. If any unit is damaged, dollies must be used.**
- **Never tow a CVT model from the rear (that is backward) with four wheels on the ground. This may cause serious and expensive damage to the transmission.**

2WD MODELS

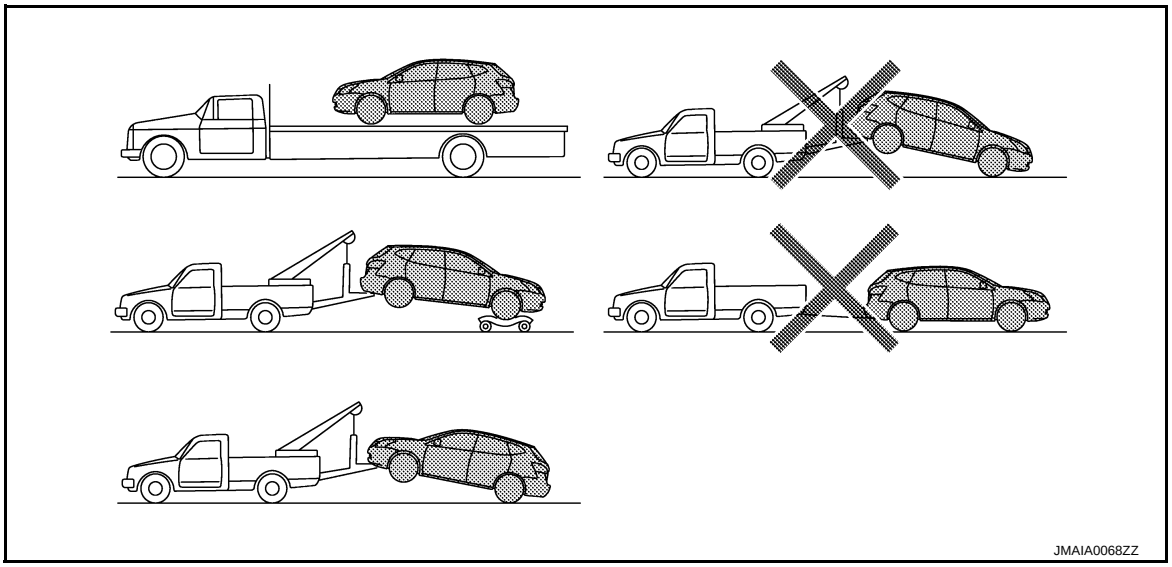

NISSAN recommends that vehicle be towed with the driving (front) wheels off the ground or that a dolly be used as illustrated.

CAUTION:

- **Never tow CVT models with the front wheels on the ground or four wheels on the ground (forward or backward), as this may cause serious and expensive damage to the transmission.**
  If it is necessary to tow the vehicle with the rear wheels raised, always use towing dollies under the front wheels.
- **When towing CVT models with the front wheels on towing dollies:**
- **Turn the ignition switch to the OFF position, and secure the steering wheel in a straight ahead position with a rope or similar device.Never secure the steering wheel by turning the ignition switch to the LOCK position. This may damage the steering lock mechanism.**
- **Move the selector lever to the N (Neutral) position.**
- **When the battery of vehicle equipped with the Intelligent Key system is discharged, your vehicle should be towed with the front wheels on towing dollies or place the vehicle on a flat bed truck.**
- **When towing two wheel drive CVT model with the rear wheels on the ground (if you do not use towing dollies): Always release the parking brake.**

Vehicle Recovery (Freeing a Stuck Vehicle)

INFOID:0000000006023361

FRONT

Securely install the vehicle recovery hook stored with jacking tools.
Check that the hook is properly secured in the stored place after use.

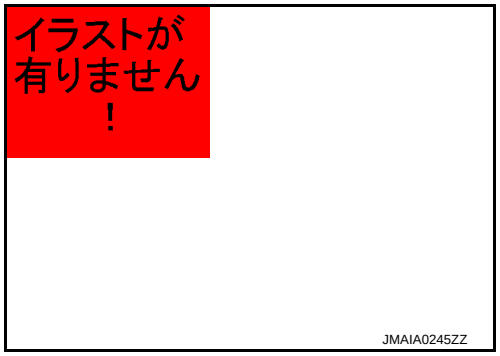

WARNING:

- **Stand clear of a stuck vehicle.**
- **Never spin your tires at high speed. This could cause them to explode and result in serious injury. Parts of your vehicle could also overheat and be damaged.**

CAUTION:

- **Tow chains or cables must be attached only to the vehicle recovery hooks or main structural members of the vehicle. Otherwise, the vehicle body will be damaged.**
- **Never use the vehicle tie downs to free a vehicle stuck in sand, snow, mud, etc. Never tow the vehicle using the vehicle tie downs or recovery hooks.**
- **Always pull the cable straight out from the front of the vehicle. Never pull on the hook at an angle.**
- **Pulling devices should be routed so they never touch any part of the suspension, steering, brake or cooling systems.**
- **Pulling devices such as ropes or canvas straps are not recommended for use in vehicle towing or recovery.**

REAR

WARNING:

- **Rear hook is not available.**

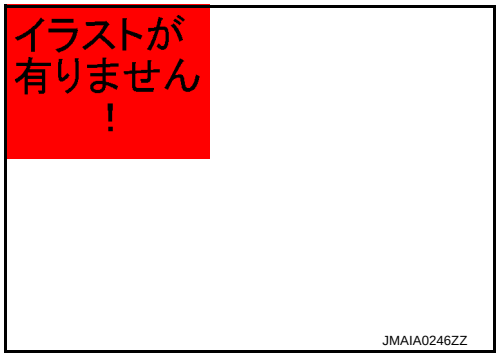

AUTOMATIC TRANSMISSION

To tow a vehicle equipped with an automatic transmission, an appropriate vehicle dolly **MUST** be placed under the towed vehicle's drive wheels. **Always** follow the dolly manufacture's recommendations when using their product.
If the vehicle is stuck in sand, snow, mud, etc., use the following procedure:

1. Turn off the Vehicle Dynamic Control System.
2. Check the area in front and behind the vehicle is clear of obstructions.
3. Turn the steering wheel right and left to clear an area around the front tires.
4. Slowly rock the vehicle forward and backward.
   Shift back and forth between R (reverse) and D (drive).
   Apply the accelerator as little as possible to maintain the rocking motion.
   Release the accelerator pedal before shifting between R and D.
   Do not spin the tires above 35 mph (55 km/h).
5. If the vehicle can not be freed after a few tries, contact a professional towing service to remove the vehicle.

BASIC INSPECTION

SERVICE INFORMATION FOR ELECTRICAL INCIDENT

Work Flow

INFOID:0000000006034708

WORK FLOW

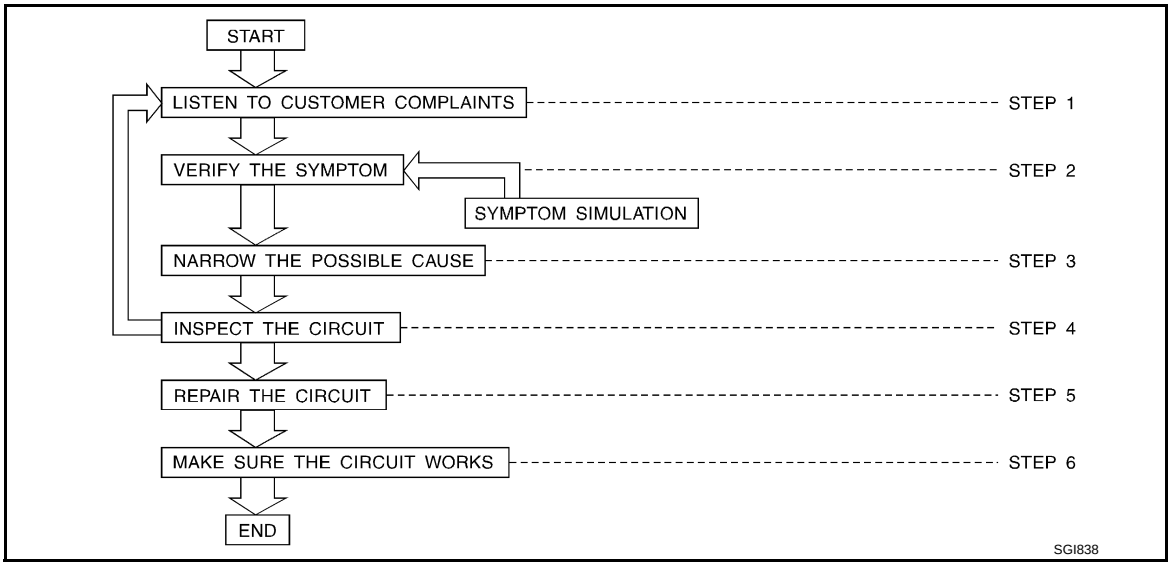

STEP	DESCRIPTION	
STEP 1	Get detailed information about the conditions and the environment when the incident occurred. The following are key pieces of information required to make a good analysis:	
	WHAT	Vehicle Model, Engine, Transmission/Transaxle and the System (i.e. Radio).
	WHEN	Date, Time of Day, Weather Conditions, Frequency.
	WHERE	Road Conditions, Altitude and Traffic Situation.
	HOW	System Symptoms, Operating Conditions (Other Components Interaction). Service History and if any After Market Accessories have been installed.
STEP 2	Operate the system, road test if necessary. Verify the parameter of the incident. If the problem cannot be duplicated, refer to “Incident Simulation Tests”.	
STEP 3	Get the proper diagnosis materials together including: • Power Supply Routing • System Operation Descriptions • Applicable Service Manual Sections • Check for any Service Bulletins Identify where to begin diagnosis based upon your knowledge of the system operation and the customer comments.	
STEP 4	Inspect the system for mechanical binding, loose connectors or wiring damage. Determine which circuits and components are involved and diagnose using the Power Supply Routing and Harness Layouts.	
STEP 5	Repair or replace the incident circuit or component.	
STEP 6	Operate the system in all modes. Verify the system works properly under all conditions. Check you have not inadvertently created a new incident during your diagnosis or repair steps.	

Control Units and Electrical Parts

INFOID:0000000006034709

PRECAUTIONS

- Never reverse polarity of battery terminals.
- Install only parts specified for a vehicle.
- Before replacing the control unit, check the input and output and functions of the component parts.
- Do not apply excessive force when disconnecting a connector.

- Do not apply excessive shock to the control unit by dropping or hitting it.
- Be careful to prevent condensation in the control unit due to rapid temperature changes and do not let water or rain get on it. If water is found in the control unit, dry it fully and then install it in the vehicle.
- Be careful not to let oil to get on the control unit connector.
- Avoid cleaning the control unit with volatile oil.
- Do not disassemble the control unit, and do not remove the upper and lower covers.

- When using a DMM, be careful not to let test probes get close to each other to prevent the power transistor in the control unit from damaging battery voltage because of short circuiting.
- When checking input and output signals of the control unit, use the specified check adapter.

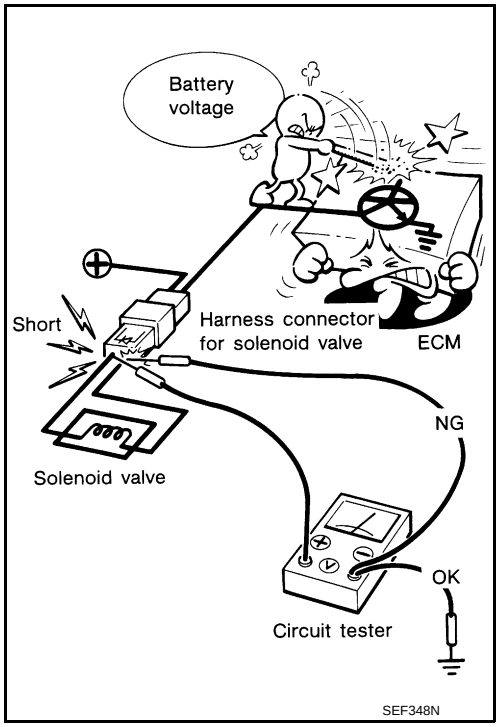

Intermittent Incident

INFOID:0000000006034710

DESCRIPTION

Sometimes the symptom is not present when the vehicle is brought in for service. If possible, re-create the conditions present at the time of the incident. Doing so may help avoid a No Trouble Found Diagnosis. The following section illustrates ways to simulate the conditions/environment under which the owner experiences an electrical incident.

The section is broken into the six following topics:

- Vehicle vibration
- Heat sensitive
- Freezing
- Water intrusion
- Electrical load
- Cold or hot start up

Get a thorough description of the incident from the customer. It is important for simulating the conditions of the problem.

VEHICLE VIBRATION

The problem may occur or become worse while driving on a rough road or when engine is vibrating (idle with A/C on). In such a case, you will want to check for a vibration related condition. Refer to the following illustration.

Connector & Harness

Determine which connectors and wiring harness would affect the electrical system you are inspecting. Gently shake each connector and harness while monitoring the system for the incident you are trying to duplicate. This test may indicate a loose or poor electrical connection.

Hint

Connectors can be exposed to moisture. It is possible to get a thin film of corrosion on the connector terminals. A visual inspection may not reveal this without disconnecting the connector. If the problem occurs intermittently, perhaps the problem is caused by corrosion. It is a good idea to disconnect, inspect and clean the terminals on related connectors in the system.

Sensor & Relay

Gently apply a slight vibration to sensors and relays in the system you are inspecting.
This test may indicate a loose or poorly mounted sensor or relay.

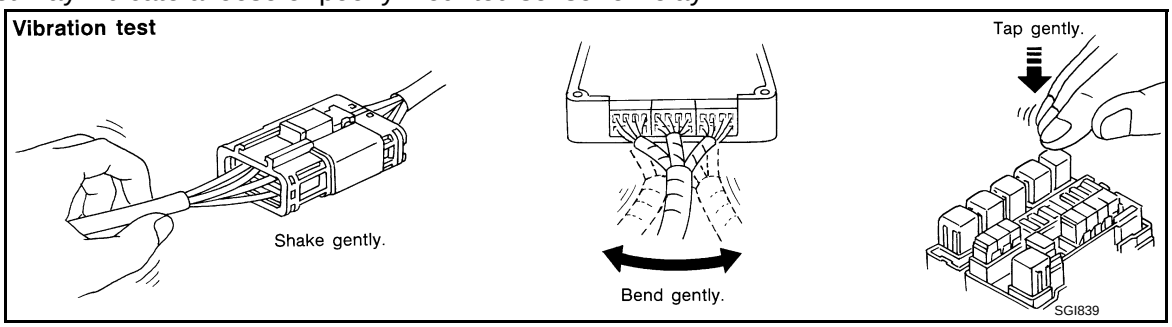

Engine Compartment

There are several reasons a vehicle or engine vibration could cause an electrical complaint. Some of the things to check for are:

- Connectors not fully seated.
- Wiring harness not long enough and is being stressed due to engine vibrations or rocking.
- Wires laying across brackets or moving components.
- Loose, dirty or corroded ground wires.
- Wires routed too close to hot components.

To inspect components under the hood, start by verifying the integrity of ground connections. (Refer to Ground Inspection described later.) First check that the system is properly grounded. Then check for loose connection by gently shaking the wiring or components as previously explained. Using the wiring diagrams inspect the wiring for continuity.

Behind the Instrument Panel

An improperly routed or improperly clamped harness can become pinched during accessory installation. Vehicle vibration can aggravate a harness which is routed along a bracket or near a screw.

Under Seating Areas

An unclamped or loose harness can cause wiring to be pinched by seat components (such as slide guides) during vehicle vibration. If the wiring runs under seating areas, inspect wire routing for possible damage or pinching.

HEAT SENSITIVE

- The customer's concern may occur during hot weather or after car has sat for a short time. In such cases you will want to check for a heat sensitive condition.
- To determine if an electrical component is heat sensitive, heat the component with a heat gun or equivalent.
  CAUTION:
  Never heat components above 60°C (140°F).
- If incident occurs while heating the unit, either replace or properly insulate the component.

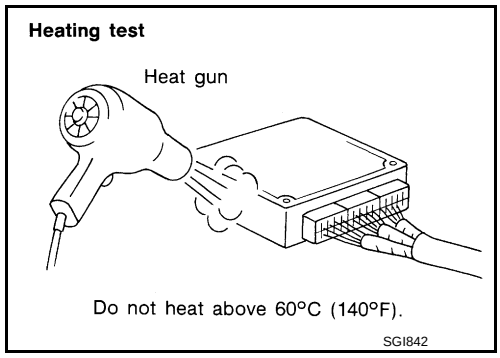

FREEZING

- The customer may indicate the incident goes away after the car warms up (winter time). The cause could be related to water freezing somewhere in the wiring/electrical system.
- There are two methods to check for this. The first is to arrange for the owner to leave his car overnight. Check it will get cold enough to demonstrate his complaint. Leave the car parked outside overnight. In the morning, do a quick and thorough diagnosis of those electrical components which could be affected.
- The second method is to put the suspect component into a freezer long enough for any water to freeze. Reinstall the part into the car and check for the reoccurrence of the incident. If it occurs, repair or replace the component.

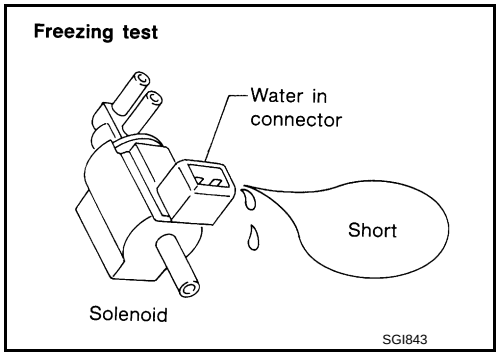

WATER INTRUSION

The incident may occur only during high humidity or in rainy/snowy weather. In such cases the incident could be caused by water intrusion on an electrical part. This can be simulated by soaking the car or running it through a car wash.

CAUTION:

Never spray water directly on any electrical components.

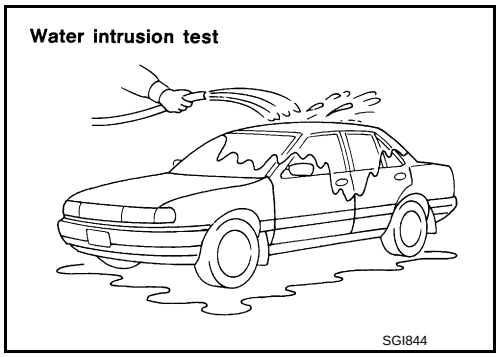

ELECTRICAL LOAD

The incident may be electrical load sensitive. Perform diagnosis with all accessories (including A/C, rear window defogger, radio, fog lamps) turned on.

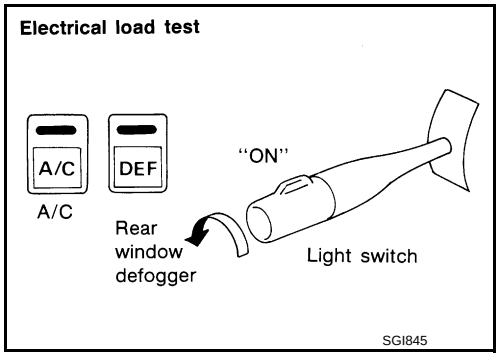

COLD OR HOT START UP

On some occasions an electrical incident may occur only when the car is started cold, or it may occur when the car is restarted hot shortly after being turned off. In these cases you may have to keep the car overnight to make a proper diagnosis.

Circuit Inspection

INFOID:0000000006034711

DESCRIPTION

- In general, testing electrical circuits is an easy task if it is approached in a logical and organized method. Before beginning it is important to have all available information on the system to be tested. Also, get a thorough understanding of system operation. Then you will be able to use the appropriate equipment and follow the correct test procedure.
- You may have to simulate vehicle vibrations while testing electrical components. Gently shake the wiring harness or electrical component to do this.

OPEN	A circuit is open when there is no continuity through a section of the circuit.	
SHORT	There are two types of shorts.	
	• SHORT CIRCUIT	When a circuit contacts another circuit and causes the normal resistance to change.
	• SHORT TO GROUND	When a circuit contacts a ground source and grounds the circuit.

TESTING FOR “OPENS” IN THE CIRCUIT

Before you begin to diagnose and test the system, you should rough sketch a schematic of the system. This will help you to logically walk through the diagnosis process. Drawing the sketch will also reinforce your working knowledge of the system.

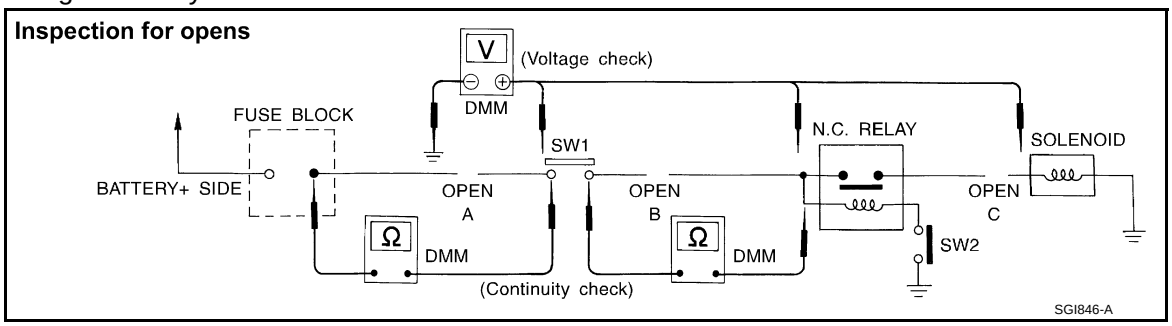

Continuity Check Method

The continuity check is used to find an open in the circuit. The digital multimeter (DMM) set on the resistance function will indicate an open circuit as over limit (no beep tone or no ohms symbol). Check to always start with the DMM at the highest resistance level.

To help in understanding the diagnosis of open circuits, please refer to the previous schematic.

- Disconnect the battery negative cable.
- Start at one end of the circuit and work your way to the other end. (At the fuse block in this example)
- Connect one probe of the DMM to the fuse block terminal on the load side.
- Connect the other probe to the fuse block (power) side of SW1. Little or no resistance will indicate that portion of the circuit has good continuity. If there were an open in the circuit, the DMM would indicate an over limit or infinite resistance condition. (point A)
- Connect the probes between SW1 and the relay. Little or no resistance will indicate that portion of the circuit has good continuity. If there were an open in the circuit, the DMM would indicate an over limit or infinite resistance condition. (point B)
- Connect the probes between the relay and the solenoid. Little or no resistance will indicate that portion of the circuit has good continuity. If there were an open in the circuit, the DMM would indicate an over limit or infinite resistance condition. (point C)

Any circuit can be diagnosed using the approach in the previous example.

Voltage Check Method

To help in understanding the diagnosis of open circuits please refer to the previous schematic.

In any powered circuit, an open can be found by methodically checking the system for the presence of voltage. This is done by switching the DMM to the voltage function.

- Connect one probe of the DMM to a known good ground.
- Begin probing at one end of the circuit and work your way to the other end.
- With SW1 open, probe at SW1 to check for voltage.
  voltage: open is further down the circuit than SW1.
  no voltage: open is between fuse block and SW1 (point A).
- Close SW1 and probe at relay.
  voltage: open is further down the circuit than the relay.
  no voltage: open is between SW1 and relay (point B).
- Close the relay and probe at the solenoid.
  voltage: open is further down the circuit than the solenoid.
  no voltage: open is between relay and solenoid (point C).

Any powered circuit can be diagnosed using the approach in the previous example.

TESTING FOR “SHORTS” IN THE CIRCUIT

To simplify the discussion of shorts in the system, please refer to the following schematic.

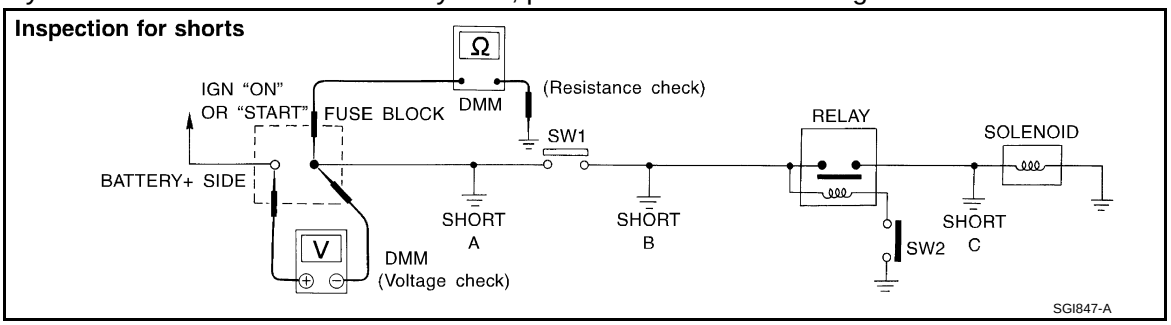

Resistance Check Method

- Disconnect the battery negative cable and remove the blown fuse.
- Disconnect all loads (SW1 open, relay disconnected and solenoid disconnected) powered through the fuse.
- Connect one probe of the DMM to the load side of the fuse terminal. Connect the other probe to a known good ground.
- With SW1 open, check for continuity.
  continuity: short is between fuse terminal and SW1 (point A).
  no continuity: short is further down the circuit than SW1.
- Close SW1 and disconnect the relay. Put probes at the load side of fuse terminal and a known good ground. Then, check for continuity.
  continuity: short is between SW1 and the relay (point B).
  no continuity: short is further down the circuit than the relay.
- Close SW1 and jump the relay contacts with jumper wire. Put probes at the load side of fuse terminal and a known good ground. Then, check for continuity.
  continuity: short is between relay and solenoid (point C).
  no continuity: check solenoid, retrace steps.

Voltage Check Method

- Remove the blown fuse and disconnect all loads (i.e. SW1 open, relay disconnected and solenoid disconnected) powered through the fuse.
- Turn the ignition switch to the ON or START position. Verify battery voltage at the battery + side of the fuse terminal (one lead on the battery + terminal side of the fuse block and one lead on a known good ground).
- With SW1 open and the DMM leads across both fuse terminals, check for voltage.
  voltage: short is between fuse block and SW1 (point A).
  no voltage: short is further down the circuit than SW1.
- With SW1 closed, relay and solenoid disconnected and the DMM leads across both fuse terminals, check for voltage.
  voltage: short is between SW1 and the relay (point B).
  no voltage: short is further down the circuit than the relay.
- With SW1 closed, relay contacts jumped with fused jumper wire check for voltage.
  voltage: short is down the circuit of the relay or between the relay and the disconnected solenoid (point C).
  no voltage: retrace steps and check power to fuse block.

GROUND INSPECTION

- Ground connections are very important to the proper operation of electrical and electronic circuits. Ground connections are often exposed to moisture, dirt and other corrosive elements. The corrosion (rust) can become an unwanted resistance. This unwanted resistance can change the way a circuit works.
- Electronically controlled circuits are very sensitive to proper grounding. A loose or corroded ground can drastically affect an electronically controlled circuit. A poor or corroded ground can easily affect the circuit. Even when the ground connection looks clean, there can be a thin film of rust on the surface.
- When inspecting a ground connection follow these rules:
- Remove the ground bolt or screw.
- Inspect all mating surfaces for tarnish, dirt, rust, etc.
- Clean as required to assure good contact.
- Reinstall bolt or screw securely.
- Inspect for "add-on" accessories which may be interfering with the ground circuit.
- If several wires are crimped into one ground eyelet terminal, check for proper crimps. Check all of the wires are clean, securely fastened and providing a good ground path. If multiple wires are cased in one eyelet check no ground wires have excess wire insulation.

- For detailed ground distribution information, refer to “Ground Distribution” in PG section.

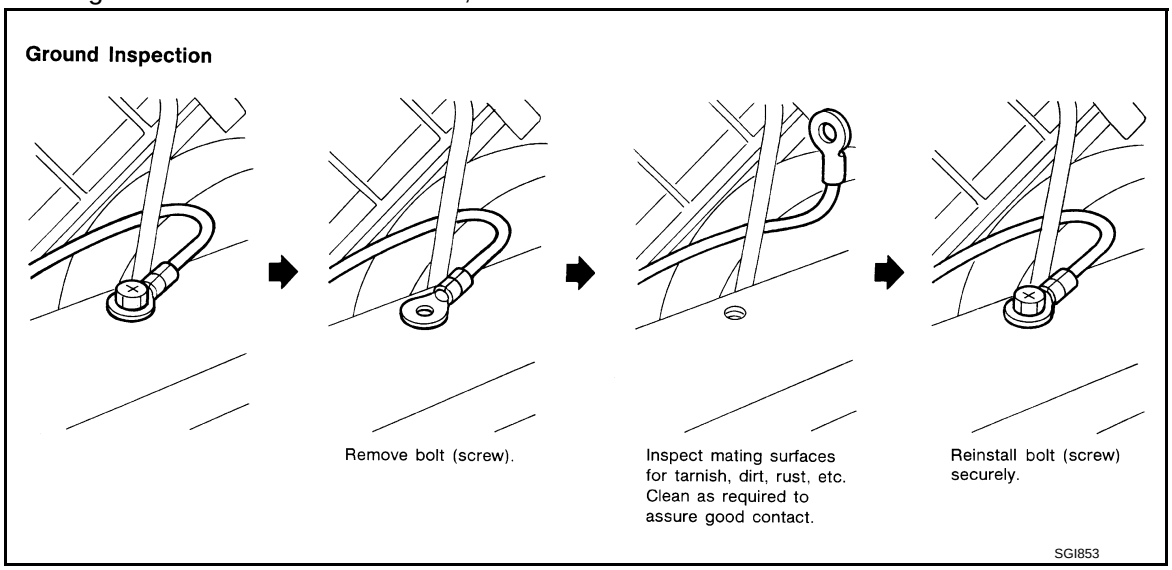

VOLTAGE DROP TESTS

- Voltage drop tests are often used to find components or circuits which have excessive resistance. A voltage drop in a circuit is caused by a resistance when the circuit is in operation.
- Check the wire in the illustration. When measuring resistance with DMM, contact by a single strand of wire will give reading of 0 ohms. This would indicate a good circuit. When the circuit operates, this single strand of wire is not able to carry the current. The single strand will have a high resistance to the current. This will be picked up as a slight voltage drop.
- Unwanted resistance can be caused by many situations as follows:
- Undersized wiring (single strand example)
- Corrosion on switch contacts
- Loose wire connections or splices.
- If repairs are needed always use wire that is of the same or larger gauge.

Measuring Voltage Drop — Accumulated Method

- Connect the DMM across the connector or part of the circuit you want to check. The positive lead of the DMM should be closer to power and the negative lead closer to ground.
- Operate the circuit.
- The DMM will indicate how many volts are being used to “push” current through that part of the circuit.

Note in the illustration that there is an excessive 4.1 volt drop between the battery and the bulb.

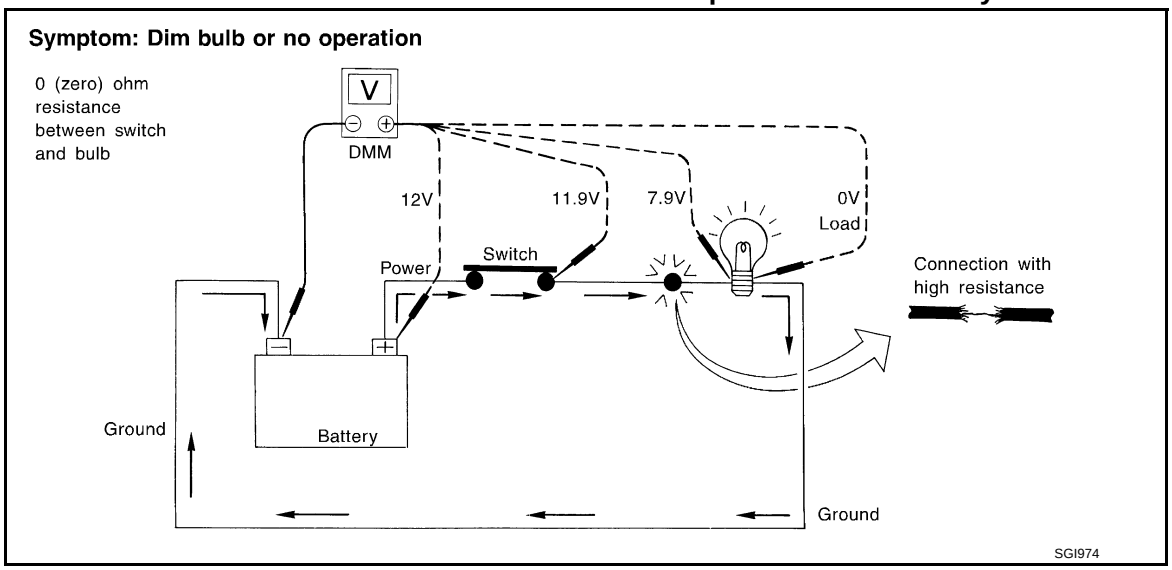

Measuring Voltage Drop — Step-by-Step

- The step-by-step method is most useful for isolating excessive drops in low voltage systems (such as those in “Computer Controlled Systems”).
- Circuits in the “Computer Controlled System” operate on very low amperage.

- The (Computer Controlled) system operations can be adversely affected by any variation in resistance in the system. Such resistance variation may be caused by poor connection, improper installation, improper wire gauge or corrosion.
- The step by step voltage drop test can identify a component or wire with too much resistance.

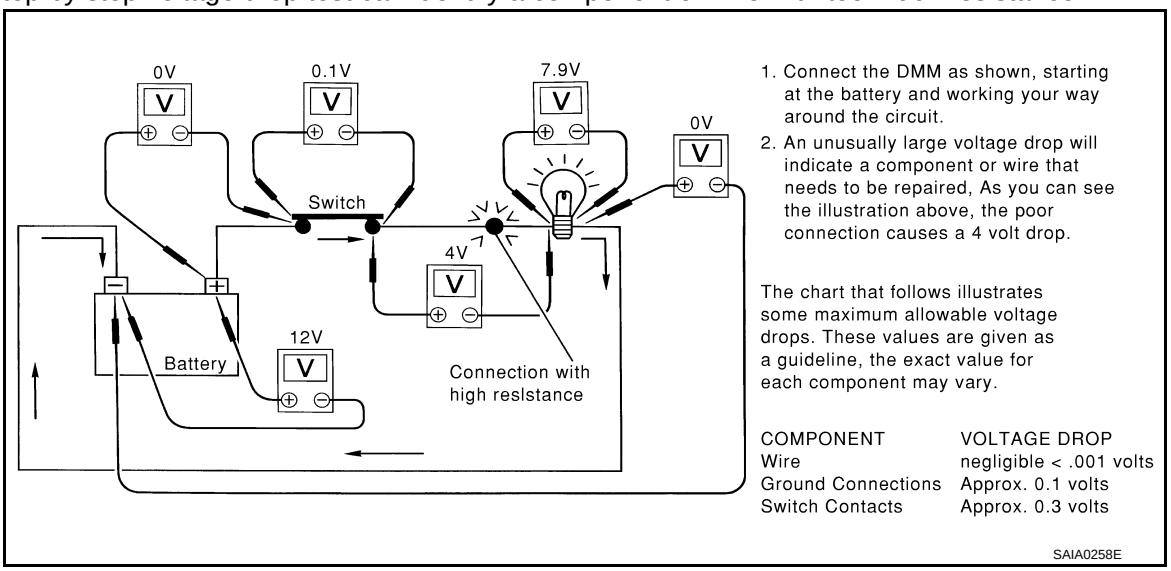

CONTROL UNIT CIRCUIT TEST

System Description

- When the switch is ON, the control unit lights up the lamp.

CASE 1

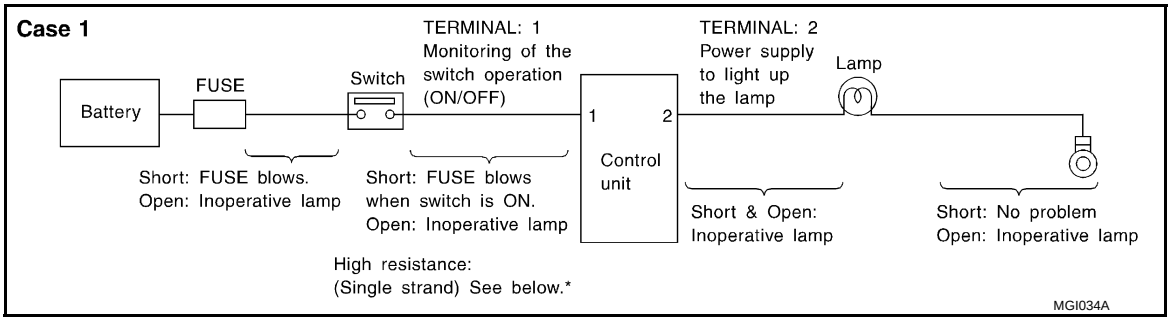

INPUT-OUTPUT VOLTAGE CHART

Terminal No.		Description		Condition	Value (Approx.)	In case of high resistance such as single strand (V) *
+	–	Signal name	Input/ Output			
1	Body ground	Switch	Input	Switch ON	Battery voltage	Lower than battery voltage Approx. 8 (Example)
				Switch OFF	0 V	Approx. 0
2	Body ground	Lamp	Output	Switch ON	Battery voltage	Approx. 0 (Inoperative lamp)
				Switch OFF	0 V	Approx. 0

- The voltage value is based on the body ground.
- *: If high resistance exists in the switch side circuit (caused by a single strand), terminal 1 does not detect battery voltage. Control unit does not detect the switch is ON even if the switch does not turn ON. Therefore, the control unit does not supply power to light up the lamp.

CASE 2

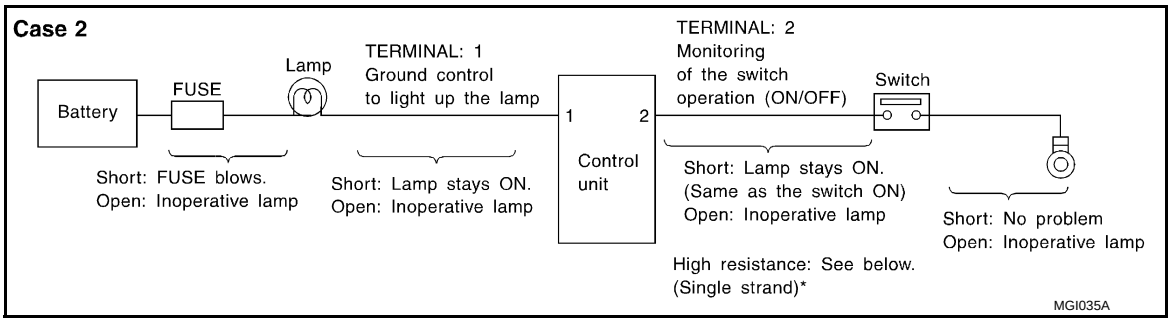

INPUT-OUTPUT VOLTAGE CHART

Terminal No.		Description		Condition	Value (Approx.)	In case of high resistance such as single strand (V) *
+	–	Signal name	Input/ Output			
1	Body ground	Lamp	Output	Switch ON	0 V	Battery voltage (Inoperative lamp)
				Switch OFF	Battery voltage	Battery voltage
2	Body ground	Switch	Input	Switch ON	0 V	Higher than 0 Approx. 4 (Example)
				Switch OFF	5 V	Approx. 5

- The voltage value is based on the body ground.
- *: If high resistance exists in the switch side circuit (caused by a single strand), terminal 2 does not detect approx. 0 V. Control unit does not detect the switch is ON even if the switch does not turn ON. Therefore, the control unit does not control ground to light up the lamp.

CONSULT-III/GST CHECKING SYSTEM

Description

INFOID:0000000006023367

- When CONSULT-III/GST is connected with a data link connector (A) equipped on the vehicle side, it will communicate with the control unit equipped in the vehicle and then enable various kinds of diagnostic tests.

  1 : Instrument lower panel LH

- Refer to “CONSULT-III Software Operation Manual” for more information.

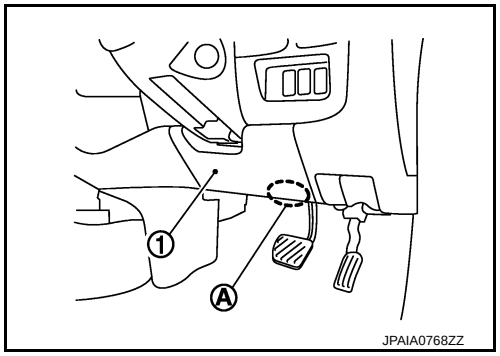

CONSULT-III Function and System Application*1

INFOID:0000000006023368

Diagnostic test mode	Function	ENGINE	AIR BAG	METER/M&A	BCM	IPDM E/R	EPS
Work support	This mode enables a technician to adjust some devices faster and more accurately.	x	-	-	x	-	-
Self Diagnostic Results	Retrieve DTC from ECU and display diagnostic items.	x	x	x	x	x	x
Data monitor	Monitor the input/output signal of the control unit in real time.	x	-	x	x	x	x
CAN diagnosis	This mode displays a network diagnosis result about CAN by a diagram.	x	-	x	x	x	x
CAN diagnosis support monitor	It monitors the status of CAN communication.	x	-	x	x	x	x
Active test	Send the drive signal from CONSULT-III to the actuator. The operation check can be performed.	x	-	-	x	x	-
DTC & SRT confirmation	The status of system monitoring tests and the self-diagnosis status/result can be confirmed.	x	-	-	-	-	-
ECU Identification	Display the ECU identification number (part number etc.) of the selected system.	x	x	-	x	x	x
Function test	This mode can show results of self-diagnosis of ECU with either “OK” or “NG”. For engines, more practical tests regarding sensors/switches and/or actuators are available.	x	x	-	-	-	-
Configuration	Function to READ/WRITE vehicle configuration.	-	-	-	x	-	-
Special Function	Other results or histories, etc. that are recorded in ECU are displayed.	-	x	x	-	-	-

x: Applicable

*1: If GST application is equipped, functions in accordance with SAE J1979 and ISO 15031-5 can be used.

CONSULT-III/GST Data Link Connector (DLC) Circuit

INFOID:0000000006023369

INSPECTION PROCEDURE

If the CONSULT-III/GST cannot diagnose the system properly, check the following items.

Symptom	Check item
CONSULT-III/GST cannot access any system.	• CONSULT-III/GST DLC power supply circuit (Terminal 8 and 16) and ground circuit (Terminal 4 and 5)
CONSULT-III cannot access individual system. (Other systems can be accessed.)	• Power supply and ground circuit for the control unit of the system (For detailed circuit, refer to wiring diagram for each system.) • Open or short circuit between the system and CONSULT-III DLC (For detailed circuit, refer to wiring diagram for each system.) • Open or short circuit CAN communication line. Refer to LAN-14, "Trouble Diagnosis Flow Chart".

NOTE:
The DDL1 and DDL2 circuits from DLC pins 12, 13, 14 and 15 may be connected to more than one system. A short in a DDL circuit connected to a control unit in one system may affect CONSULT-III access to other systems.
If the GST cannot operate properly, check the circuit based on the information of SAE J1962 and ISO 15031-3.

Wiring Diagram - CONSULT-III/GST CHECKING SYSTEM -

INFOID:0000000006023370

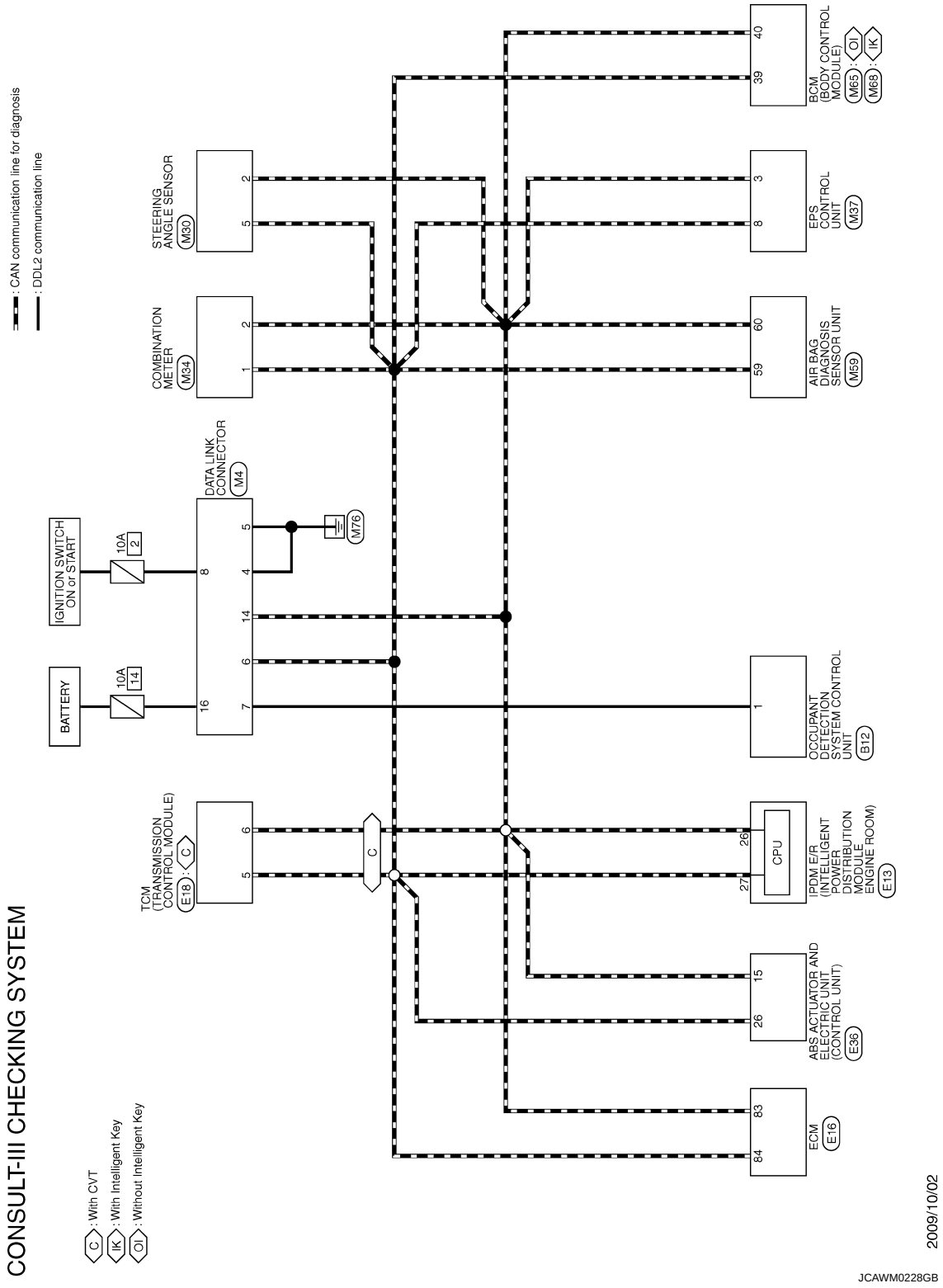

CONSULT-III CHECKING SYSTEM

Connector No.	B12
Connector Name	OCCUPANT DETECTION SYSTEM CONTROL UNIT
Connector Type	TH08FW-NH

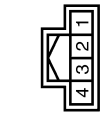

Terminal No.	Color of Wire	Signal Name [Specification]
1	GR	–
2	B	–
3	V	–
4	R	–

Connector No.	E13
Connector Name	IPDM E/R (INTELLIGENT POWER DISTRIBUTION MODULE ENGINE ROOM)
Connector Type	TH12FW-NH

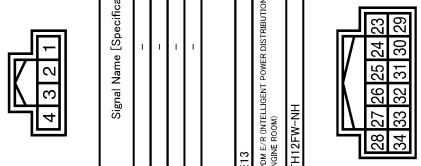

Terminal No.	Color of Wire	Signal Name [Specification]
24	LG	–
25	Y	–
26	P	–
27	L	–
28	P	–
30	SB	–
31	W	–
33	O	–
34	R	–

Connector No.	E16
Connector Name	ECM
Connector Type	RH24FB-RZ8-L-RH

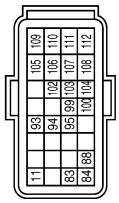

Terminal No.	Color of Wire	Signal Name [Specification]
83	P	CAN-L
84	L	CAN-H
88	LG	K LINE
93	L	IGNSW
94	SB	ASCDSW
95	BR	GNDA-ASCDSW
99	W	BRAKE
100	SB	BNCSW
102	O	AVCC-APS2
103	G	APS2
104	R	GNDA-APS2
105	G	VBR
106	V	AVCC-APS1
108	B	GND
110	BR	APS1
111	Y	GNDA-APS1

Connector No.	E18
Connector Name	TCM (TRANSMISSION CONTROL MODULE)
Connector Type	TK24FW

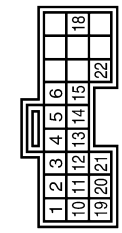

Terminal No.	Color of Wire	Signal Name [Specification]
1	Y	–
2	LG	–
3	BR	–
4	O	–
5	L	–
6	P	–

Terminal No.	Color of Wire	Signal Name [Specification]
10	R	–
11	W	–
12	L	–
13	SB	–
14	P	–
15	V	–
18	BR	–
19	R	–
20	SB	–
21	Y	–
22	GR	–

Connector No.	E36
Connector Name	ABS ACTUATOR AND ELECTRIC UNIT (CONTROL UNIT)
Connector Type	BAA22FB-AHZ4-RH

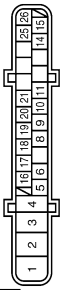

Terminal No.	Color of Wire	Signal Name [Specification]
1	B	GND (MTR)
2	Y	BAT (MTR)
3	L	BAT (SOL)
4	B	GND (SOL)
5	Y	DS FL
6	W	DP RL
8	O	DP RR
9	L	DP FR
10	R	DS FR
11	LG	K LINE
14	GR	CAN-L
15	P	CAN-L
16	BR	DP FL
17	G	DS RL
18	V	IGN
19	SB	DS RR
20	W	STOP LAMP SW
21	P	VDC OFF SW
25	R	CAN-H
26	L	CAN-H

Connector No.	M4
Connector Name	DATA LINK CONNECTOR
Connector Type	BD16FW

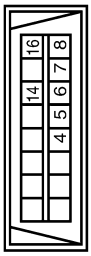

Terminal No.	Color of Wire	Signal Name [Specification]
4	B	–
5	B	–
6	L	–
7	GR/R	–
8	O	–
14	P	–
16	LG/R	–

Connector No.	M30
Connector Name	STEERING ANGLE SENSOR
Connector Type	TH08FW-NH

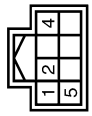

Terminal No.	Color of Wire	Signal Name [Specification]
1	B	GND
2	P	CAN-L
4	GR/L	IGN
5	L	CAN-H

JCAWM0229GB

CONSULT-III CHECKING SYSTEM

Connector No.	M34
Connector Name	COMBINATION METER
Connector Type	TH40FW-NH

Terminal No.	Color of Wire	Signal Name [Specification]
1	L	CAN-H
2	P	CAN-L
3	V	VEHICLE SPEED SIGNAL (2-PULSE)
4	L	VEHICLE SPEED SIGNAL (8-PULSE)
6	BR/Y	FUEL LEVEL SENSOR SIGNAL
7	R/G	AIR BAG SIGNAL
8	P	OVERDRIVE CONTROL SWITCH SIGNAL
9	O	SEAT BELT BUCKLE SWITCH SIGNAL (DRIVER SIDE)
10	SB	PARKING BRAKE SWITCH SIGNAL
11	G/R	BRAKE FLUID LEVEL SWITCH SIGNAL
13	B/R	ILLUMINATION CONTROL SIGNAL
15	L/Y	ACC POWER SUPPLY
17	G	WASHER LEVEL SWITCH SIGNAL
18	R/Y	SECURITY SIGNAL
19	V/W	AMBIENT SENSOR SIGNAL
20	R/W	AMBIENT SENSOR GROUND
21	B	GROUND
22	B	GROUND
23	B	GROUND
24	V	FUEL LEVEL SENSOR GROUND
25	B	VDC GROUND
27	LG	BATTERY POWER SUPPLY
28	GR	IGNITION SIGNAL
29	BR	PASSENGER SEAT BELT WARNING SIGNAL
31	R	A/C AUTO AMP. CONNECTION RECOGNITION SIGNAL
35	BR	ENGINE COOLANT TEMPERATURE SIGNAL
38	GR	ALTERNATOR SIGNAL

Connector No.	M37
Connector Name	EPS CONTROL UNIT
Connector Type	TH08FB

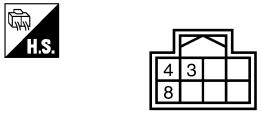

Terminal No.	Color of Wire	Signal Name [Specification]
3	P	CAN-L
4	O	IGN
8	L	CAN-H

Connector No.	M59
Connector Name	AIR BAG DIAGNOSIS SENSOR UNIT
Connector Type	NH28FY-EX

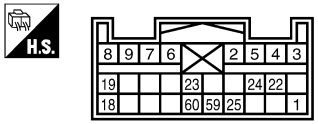

Terminal No.	Color of Wire	Signal Name [Specification]
1	R/L	IGN
2	B	GND
3	Y	DR1 (+)
4	Y/R	DR1 (−) DR2 (−)
5	L/Y	DR2 (+)
6	Y/G	AS1 (+)
7	Y/B	AS1 (−)
8	Y/L	AS2 (+)
9	G/Y	AS2 (−)
18	LG	ECZS (+)
19	V	ECZS (−)
22	SHIELD	SHIELD
23	R/G	AIR BAG W/L
24	BR	SEAT BELT W/L
25	R/B	CUTOFF TELLTALE
59	L	CAN-H
60	P	CAN-L

Connector No.	M65
Connector Name	BCM (BODY CONTROL MODULE)
Connector Type	TH40FW-NH

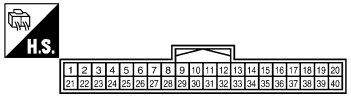

Terminal No.	Color of Wire	Signal Name [Specification]
2	BR/W	COMBI SW INPUT 5
3	GR	COMBI SW INPUT 4
4	L/Y	COMBI SW INPUT 3
5	G	COMBI SW INPUT 2
6	L/R	COMBI SW INPUT 1
7	W/R	KEY CYL UNLOCK SW
8	W/B	KEY CYL LOCK SW
9	R	STOP LAMP SW
10	W/L	REAR WINDOW DEFOGGER SW
11	L/Y	ACC
12	SB	PASSENGER DOOR SW
13	GR/L	REAR RH DOOR SW
14	L/B	OPTICAL SENSOR
15	V/W	TIRE PRESS WARNING CHECK SW
17	R/G	OPTICAL SENSOR POWER SUPPLY
18	V	RECEIVER/SENSOR GND
19	BR	KEYLESS ENTRY RECEIVER POWER SUPPLY
20	G/Y	KEYLESS ENTRY RECEIVER COMM
21	P/L	NATS ANTENNA AMP.
23	R/Y	SECURITY INDICATOR LAMP
24	GR/R	DONGLE LINK
25	LG	NATS ANTENNA AMP.
26	GR	THERMO CONTROL AMP.
27	Y/G	A/C SW [With auto A/C]
27	Y/R	A/C SW [With manual A/C]
28	G/W	BLOWER FAN SW
29	L/W	HAZARD SW
31	G/Y	FR DEFROSTER SW
32	LG	COMBI SW OUTPUT 5
33	Y/L	COMBI SW OUTPUT 4
34	W	COMBI SW OUTPUT 3
35	R/L	COMBI SW OUTPUT 2
36	L/O	COMBI SW OUTPUT 1
37	R/W	KEY SWITCH
38	O	IGN
39	L	CAN-H
40	P	CAN-L

Connector No.	M68
Connector Name	BCM (BODY CONTROL MODULE)
Connector Type	TH40FB-NH

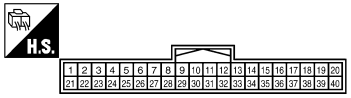

Terminal No.	Color of Wire	Signal Name [Specification]
2	BR/W	COMBI SW INPUT 5
3	GR	COMBI SW INPUT 4
4	L/Y	COMBI SW INPUT 3
5	G	COMBI SW INPUT 2
6	L/R	COMBI SW INPUT 1
7	W/R	KEY CYL UNLOCK SW
8	W/B	KEY CYL LOCK SW
9	R	STOP LAMP SW 1
10	V/W	TIRE PRESS WARNING CHECK SW
11	L/Y	ACC F/B
12	SB	PASSENGER DOOR SW
13	GR/L	REAR RH DOOR SW
14	L/B	OPTICAL SENSOR
15	W/L	REAR WINDOW DEFOGGER SW
17	R/G	OPTICAL SENSOR POWER SUPPLY
18	V	RECEIVER / SENSOR GND
19	BR	KEYLESS ENTRY RECEIVER POWER SUPPLY
20	G/Y	KEYLESS ENTRY RECEIVER COMM
21	P/L	NATS ANTENNA AMP.
22	W/G	KEYLESS ENTRY RECEIVER RSSI
23	R/Y	SECURITY INDICATOR LAMP
24	GR/R	DONGLE LINK
25	LG	NATS ANTENNA AMP.
27	Y/R	A/C SW
28	G/W	BLOWER FAN SW
29	L/W	HAZARD SW
31	G/B	DR DOOR UNLOCK SENSOR
32	LG	COMBI SW OUTPUT 5
33	Y/L	COMBI SW OUTPUT 4
34	W	COMBI SW OUTPUT 3
35	R/L	COMBI SW OUTPUT 2
36	L/O	COMBI SW OUTPUT 1
37	G/O	SHIFT P
38	O	IGN F/B
39	L	CAN-H
40	P	CAN-L

JCAWM0230GB

INSPECTION AND ADJUSTMENT

ADDITIONAL SERVICE WHEN REMOVING BATTERY NEGATIVE TERMINAL

ADDITIONAL SERVICE WHEN REMOVING BATTERY NEGATIVE TERMINAL : Required Procedure After Battery Disconnection

INFOID:0000000006023371

SYSTEM	ITEM	REFERENCE
Automatic temperature control	Temperature setting trimmer	HAC-41, "Temperature Setting Trimmer"
	Foot position setting trimmer*	—
	Inlet port memory function	HAC-42, "Inlet Port Memory Function"
	Inlet port memory function (FRE)*	—
	Inlet port memory function (REC)*	—
	Gas sensor sensitivity adjustment function*	—
	Auto intake switch interlocking movement change*	—
	Clean switch interlocking movement change*	—
Automatic drive positioner*	Automatic drive positioner system	—
Power window control	Power window control system	PWC-13, "Description"
Sunroof system*	Sunroof system	—
Sunshade system*	Sunshade system	—
Rear view monitor*	Rear view monitor possible route line center position adjustment	—
Around view monitor*	Predicted conurse line center position adjustment	—
Automatic back door system*	Automatic back door system	—
Engine oil level read*	Engine oil level read	—

*: Not equipped.

SECTION GW
GLASS & WINDOW SYSTEM

CONTENTS

PRECAUTION 2

PRECAUTIONS 2
Precaution for Supplemental Restraint System (SRS) "AIR BAG" and "SEAT BELT PRE-TENSIONER" 2
Precaution Necessary for Steering Wheel Rotation after Battery Disconnect 2
Precaution for Procedure without Cowl Top Cover..... 3
Handling for Adhesive and Primer 3

PREPARATION 4

PREPARATION 4
Commercial Service Tools 4

SYMPTOM DIAGNOSIS 5

SQUEAK AND RATTLE TROUBLE DIAGNOSES 5
Work Flow 5
Inspection Procedure 7
Diagnostic Worksheet 9

REMOVAL AND INSTALLATION 11

WINDSHIELD GLASS 11
Exploded View 11
Removal and Installation 11
Inspection 13

BACK DOOR WINDOW GLASS 14
Exploded View 14
Removal and Installation 14
Inspection 15

FRONT DOOR GLASS 16
Exploded View 16
Removal and Installation 16
Inspection and Adjustment 17

FRONT REGULATOR 18
Exploded View 18
Removal and Installation 18
Disassembly and Assembly 18
Inspection and Adjustment 19

REAR DOOR GLASS 20
Exploded View 20
Removal and Installation 20
Inspection and Adjustment 21

REAR REGULATOR 22
Exploded View 22
Removal and Installation 22
Disassembly and Assembly 23
Inspection and Adjustment 23

PRECAUTION

PRECAUTIONS

Precaution for Supplemental Restraint System (SRS) "AIR BAG" and "SEAT BELT PRE-TENSIONER"

INFOID:0000000006059342

The Supplemental Restraint System such as “AIR BAG” and “SEAT BELT PRE-TENSIONER”, used along with a front seat belt, helps to reduce the risk or severity of injury to the driver and front passenger for certain types of collision. This system includes seat belt switch inputs and dual stage front air bag modules. The SRS system uses the seat belt switches to determine the front air bag deployment, and may only deploy one front air bag, depending on the severity of a collision and whether the front occupants are belted or unbelted.
Information necessary to service the system safely is included in the “SRS AIR BAG” and “SEAT BELT” of this Service Manual.

WARNING:

- **To avoid rendering the SRS inoperative, which could increase the risk of personal injury or death in the event of a collision that would result in air bag inflation, all maintenance must be performed by an authorized NISSAN/INFINITI dealer.**
- **Improper maintenance, including incorrect removal and installation of the SRS, can lead to personal injury caused by unintentional activation of the system. For removal of Spiral Cable and Air Bag Module, see the “SRS AIR BAG”.**
- **Do not use electrical test equipment on any circuit related to the SRS unless instructed to in this Service Manual. SRS wiring harnesses can be identified by yellow and/or orange harnesses or harness connectors.**

PRECAUTIONS WHEN USING POWER TOOLS (AIR OR ELECTRIC) AND HAMMERS

WARNING:

- **When working near the Air Bag Diagnosis Sensor Unit or other Air Bag System sensors with the ignition ON or engine running, DO NOT use air or electric power tools or strike near the sensor(s) with a hammer. Heavy vibration could activate the sensor(s) and deploy the air bag(s), possibly causing serious injury.**
- **When using air or electric power tools or hammers, always switch the ignition OFF, disconnect the battery, and wait at least 3 minutes before performing any service.**

Precaution Necessary for Steering Wheel Rotation after Battery Disconnect

INFOID:0000000006059343

NOTE:

- Before removing and installing any control units, first turn the push-button ignition switch to the LOCK position, then disconnect both battery cables.
- After finishing work, confirm that all control unit connectors are connected properly, then re-connect both battery cables.
- Always use CONSULT-III to perform self-diagnosis as a part of each function inspection after finishing work. If a DTC is detected, perform trouble diagnosis according to self-diagnosis results.

For vehicle with steering lock unit, if the battery is disconnected or discharged, the steering wheel will lock and cannot be turned.
If turning the steering wheel is required with the battery disconnected or discharged, follow the operation procedure below before starting the repair operation.

OPERATION PROCEDURE

1. Connect both battery cables.
   NOTE:
   Supply power using jumper cables if battery is discharged.
2. Turn the push-button ignition switch to ACC position.
   (At this time, the steering lock will be released.)
3. Disconnect both battery cables. The steering lock will remain released with both battery cables disconnected and the steering wheel can be turned.
4. Perform the necessary repair operation.

5. When the repair work is completed, re-connect both battery cables. With the brake pedal released, turn the push-button ignition switch from ACC position to ON position, then to LOCK position. (The steering wheel will lock when the push-button ignition switch is turned to LOCK position.)
6. Perform self-diagnosis check of all control units using CONSULT-III.

Precaution for Procedure without Cowl Top Cover

INFOID:0000000006059344

When performing the procedure after removing cowl top cover, cover the lower end of windshield with urethane, etc.

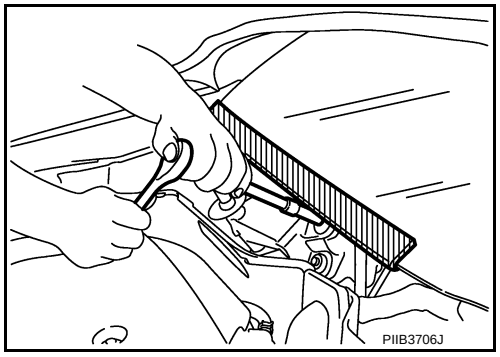

Handling for Adhesive and Primer

INFOID:0000000006059345

- Never use an adhesive that is past its usable date. Shelf life of this product is limited to six months after the date of manufacture. Carefully adhere to the expiration or manufacture date printed on the box.
- Keep primers and adhesive in a cool, dry place. Ideally, they should be stored in a refrigerator.
- Open the seal of the primer and adhesive just before application. Discard the remainder.
- Before application, be sure to shake the primer container to stir the contents. If any floating material is found, do not use it.
- If any primer or adhesive contacts the skin, wipe it off with gasoline or an equivalent and wash the skin with soap.
- When using primer and adhesive, always observe the precautions in the instruction manual.

PREPARATION

PREPARATION

Commercial Service Tools

INFOID:0000000006059346

Tool name		Description
Engine ear	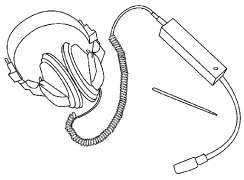 SIIA0995E	Locates the noise
Suction lifter	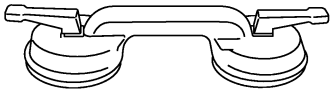 PIIB1805J	Holds the windshield glass, side window glass and back door window glass
Remover tools	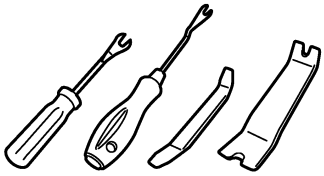 JMKIA3050ZZ	Removes the clips, pawls and metal clips
Hook and pick tool	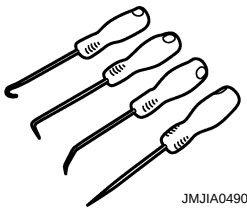 JMJIA0490ZZ	Removes snap pins

SYMPTOM DIAGNOSIS

SQUEAK AND RATTLE TROUBLE DIAGNOSES

Work Flow

INFOID:0000000006059347

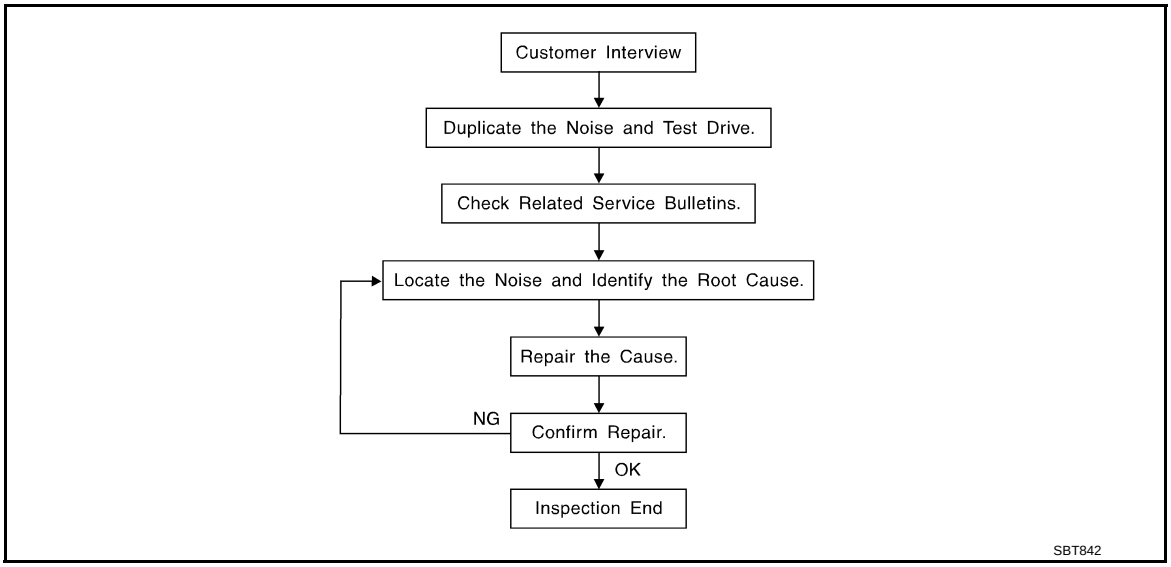

CUSTOMER INTERVIEW

Interview the customer if possible, to determine the conditions that exist when the noise occurs. Use the Diagnostic Worksheet during the interview to document the facts and conditions when the noise occurs and any of the customer's comments; refer to GW-9, "Diagnostic Worksheet". This information is necessary to duplicate the conditions that exist when the noise occurs.

- The customer may not be able to provide a detailed description or the location of the noise. Attempt to obtain all the facts and conditions that exist when the noise occurs (or does not occur).
- If there is more than one noise in the vehicle, be sure to diagnose and repair the noise that the customer is concerned about. This can be accomplished by a test drive with the customer.
- After identifying the type of noise, isolate the noise in terms of its characteristics. The noise characteristics are provided so the customer, service adviser and technician are all speaking the same language when defining the noise.
- Squeak – (Like tennis shoes on a clean floor)
  Squeak characteristics include the light contact/fast movement/brought on by road conditions/hard surfaces = higher pitch noise/softer surfaces = lower pitch noises/edge to surface = chirping
- Creak – (Like walking on an old wooden floor)
  Creak characteristics include firm contact/slow movement/twisting with a rotational movement/pitch dependent on materials/often brought on by activity.
- Rattle – (Like shaking a baby rattle)
  Rattle characteristics include the fast repeated contact/vibration or similar movement/loose parts/missing clip or fastener/incorrect clearance.
- Knock – (Like a knock on a door)
  Knock characteristics include hollow sounding/sometimes repeating/often brought on by driver action.
- Tick – (Like a clock second hand)
  Tick characteristics include gentle contacting of light materials/loose components/can be caused by driver action or road conditions.
- Thump – (Heavy, muffled knock noise)
  Thump characteristics include softer knock/dead sound often brought on by activity.
- Buzz – (Like a bumble bee)
  Buzz characteristics include high frequency rattle/firm contact.
- Often the degree of acceptable noise level will vary depending upon the person. A noise that a technician may judge as acceptable may be very irritating to the customer.
- Weather conditions, especially humidity and temperature, may have a great effect on noise level.

DUPLICATE THE NOISE AND TEST DRIVE

If possible, drive the vehicle with the customer until the noise is duplicated. Note any additional information on the Diagnostic Worksheet regarding the conditions or location of the noise. This information can be used to duplicate the same conditions when the repair is reconfirmed.
If the noise can be duplicated easily during the test drive, to help identify the source of the noise, try to duplicate the noise with the vehicle stopped by doing one or all of the following:
1) Close a door.
2) Tap or push/pull around the area where the noise appears to be coming from.
3) Rev the engine.
4) Use a floor jack to recreate vehicle “twist”.
5) At idle, apply engine load (electrical load, half-clutch on M/T model, drive position on A/T model).
6) Raise the vehicle on a hoist and hit a tire with a rubber hammer.
- Drive the vehicle and attempt to duplicate the conditions the customer states exist when the noise occurs.
- If it is difficult to duplicate the noise, drive the vehicle slowly on an undulating or rough road to stress the vehicle body.

LOCATE THE NOISE AND IDENTIFY THE ROOT CAUSE

1. Narrow down the noise to a general area. To help pinpoint the source of the noise, use a listening tool (Engine Ear or mechanics stethoscope).
2. Narrow down the noise to a more specific area and identify the cause of the noise by:

- Removing the components in the area that is are suspected to be the cause of the noise.
  Do not use too much force when removing clips and fasteners, otherwise clips and fastener can be broken or lost during the repair, resulting in the creation of new noise.
- Tapping or pushing/pulling the component that is are suspected to be the cause of the noise.
  Do not tap or push/pull the component with excessive force, otherwise the noise will be eliminated only temporarily.
- Feeling for a vibration by hand by touching the component(s) that is are suspected to be the cause of the noise.
- Placing a piece of paper between components that is are suspected to be the cause of the noise.
- Looking for loose components and contact marks.
  Refer to GW-7, "Inspection Procedure".

REPAIR THE CAUSE

- If the cause is a loose component, tighten the component securely.
- If the cause is insufficient clearance between components:
- Separate components by repositioning or loosening and retightening the component, if possible.
- Insulate components with a suitable insulator such as urethane pads, foam blocks, felt cloth tape or urethane tape. These insulators are available through the authorized Nissan Parts Department.

CAUTION:
Never use excessive force as many components are constructed of plastic and may be damaged.
NOTE:
- URETHANE PADS
  Insulates connectors, harness, etc.
- INSULATOR (Foam blocks)
  Insulates components from contact. Can be used to fill space behind a panel.
- INSULATOR (Light foam block)
- FELT CLOTHTAPE
  Used to insulate where movement does not occur. Ideal for instrument panel applications.
  The following materials, not available through NISSAN Parts Department, can also be used to repair squeaks and rattles.
- UHMW(TEFLON) TAPE
  Insulates where slight movement is present. Ideal for instrument panel applications.
- SILICONE GREASE
  Used in place of UHMW tape that is be visible or does not fit.
  Note: Will only last a few months.
- SILICONE SPRAY
  Used when grease cannot be applied.
- DUCT TAPE
  Used to eliminate movement.

CONFIRM THE REPAIR

Confirm that the cause of a noise is repaired by test driving the vehicle. Operate the vehicle under the same conditions as when the noise originally occurred. Refer to the notes on the Diagnostic Worksheet.

Inspection Procedure

INFOID:0000000006059348

Refer to Table of Contents for specific component removal and installation information.

INSTRUMENT PANEL

Most incidents are caused by contact and movement between:

1. Cluster lid A and instrument panel
2. Acrylic lens and combination meter housing
3. Instrument panel to front pillar garnish
4. Instrument panel to windshield
5. Instrument panel mounting pins
6. Wiring harnesses behind the combination meter
7. A/C defroster duct and duct joint

These incidents can usually be located by tapping or moving the components to duplicate the noise or by pressing on the components while driving to stop the noise. Most of these incidents can be repaired by applying felt cloth tape or silicon spray (in hard to reach areas). Urethane pads can be used to insulate wiring harness.

CAUTION:

Never use silicone spray to isolate a squeak or rattle. If the area is saturated with silicone, the recheck of repair becomes impossible.

CENTER CONSOLE

Components to pay attention to include:

1. Shifter assembly cover to finisher
2. A/C control unit and cluster lid C
3. Wiring harnesses behind audio and A/C control unit

The instrument panel repair and isolation procedures also apply to the center console.

DOORS

Pay attention to the following:

1. Finisher and inner panel making a slapping noise
2. Inside handle escutcheon to door finisher
3. Wiring harnesses tapping
4. Door striker out of alignment causing a popping noise on starts and stops

Tapping or moving the components or pressing on them while driving to duplicate the conditions can isolate many of these incidents. The areas can usually be insulated with felt cloth tape or insulator foam blocks to repair the noise.

TRUNK

Trunk noises are often caused by a loose jack or loose items put into the trunk by the customer.
In addition look for the following:

1. Trunk lid dumpers out of adjustment
2. Trunk lid striker out of adjustment
3. Trunk lid torsion bars knocking together
4. A loose license plate or bracket

Most of these incidents can be repaired by adjusting, securing or insulating the item(s) or component(s) causing the noise.

SUNROOF/HEADLINING

Noises in the sunroof/headlining area can often be traced to one of the following:

1. Sunroof lid, rail, linkage or seals making a rattle or light knocking noise
2. Sunvisor shaft shaking in the holder
3. Front or rear windshield touching headlining and squeaking

Again, pressing on the components to stop the noise while duplicating the conditions can isolate most of these incidents. Repairs usually consist of insulating with felt cloth tape.

SEATS

When isolating seat noise it is important to note the position the seat is in and the load placed on the seat when the noise occurs. These conditions should be duplicated when verifying and isolating the cause of the noise.
Cause of seat noise include:

1. Headrest rods and holder
2. A squeak between the seat pad cushion and frame
3. Rear seatback lock and bracket

These noises can be isolated by moving or pressing on the suspected components while duplicating the conditions under which the noise occurs. Most of these incidents can be repaired by repositioning the component or applying urethane tape to the contact area.

UNDERHOOD

Some interior noise may be caused by components under the hood or on the engine wall. The noise is then transmitted into the passenger compartment.
Causes of transmitted underhood noise include:

1. Any component mounted to the engine wall
2. Components that pass through the engine wall
3. Engine wall mounts and connectors
4. Loose radiator mounting pins
5. Hood bumpers out of adjustment
6. Hood striker out of adjustment

These noises can be difficult to isolate since they cannot be reached from the interior of the vehicle. The best method is to secure, move or insulate one component at a time and test drive the vehicle. Also, engine RPM or load can be changed to isolate the noise. Repairs can usually be made by moving, adjusting, securing, or insulating the component causing the noise.

Diagnostic Worksheet

INFOID:0000000006059349

SQUEAK & RATTLE DIAGNOSTIC WORKSHEET

Dear Nissan Customer:
We are concerned about your satisfaction with your Nissan vehicle. Repairing a squeak or rattle sometimes can be very difficult. To help us fix your Nissan right the first time, please take a moment to note the area of the vehicle where the squeak or rattle occurs and under what conditions. You may be asked to take a test drive with a service advisor or technician to ensure we confirm the noise you are hearing.

I. WHERE DOES THE NOISE COME FROM? (circle the area of the vehicle)
The illustrations are for reference only, and may not reflect the actual configuration of your vehicle.

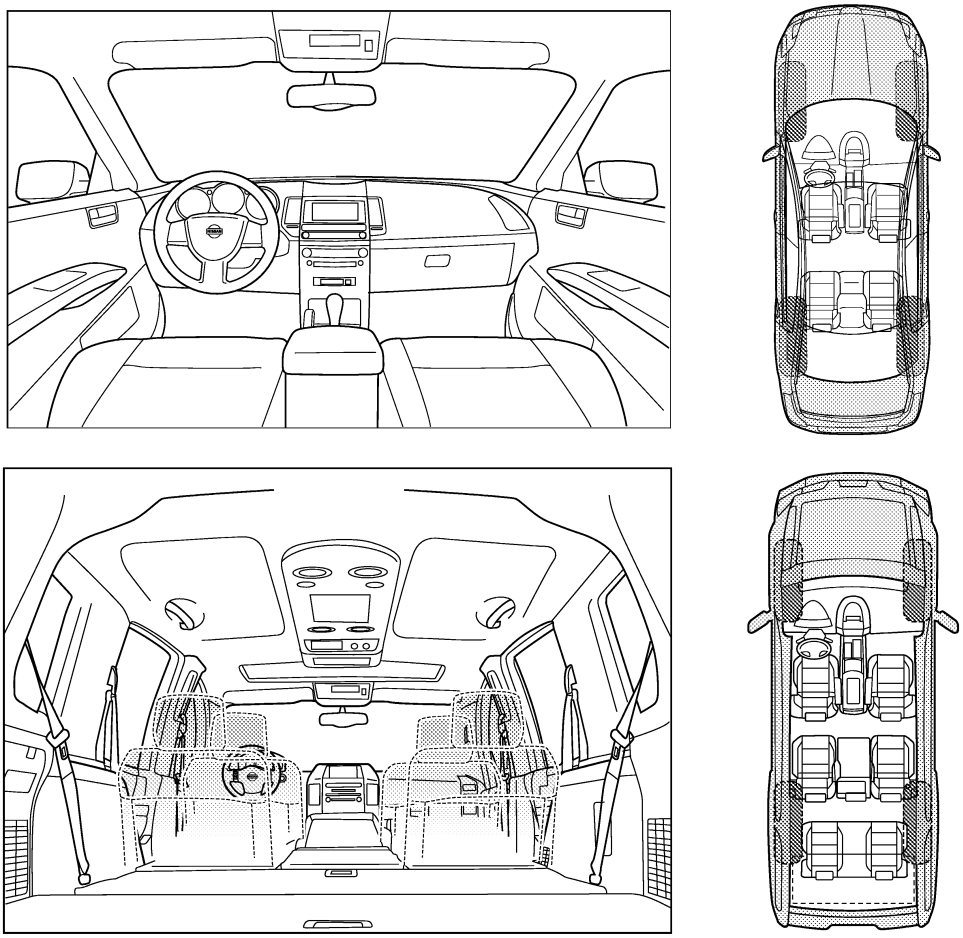

Continue to page 2 of the worksheet and briefly describe the location of the noise or rattle. In addition, please indicate the conditions which are present when the noise occurs.

PIIB8740E

SQUEAK & RATTLE DIAGNOSTIC WORKSHEET - page 2

Briefly describe the location where the noise occurs:

_____

_____

II. WHEN DOES IT OCCUR? (please check the boxes that apply)

- ☐ anytime
- ☐ 1st time in the morning
- ☐ only when it is cold outside
- ☐ only when it is hot outside
- ☐ after sitting out in the rain
- ☐ when it is raining or wet
- ☐ dry or dusty conditions
- ☐ other:

III. WHEN DRIVING:

- ☐ through driveways
- ☐ over rough roads
- ☐ over speed bumps
- ☐ only about ____ mph
- ☐ on acceleration
- ☐ coming to a stop
- ☐ on turns: left, right or either (circle)
- ☐ with passengers or cargo
- ☐ other: _____
- ☐ after driving _____ miles or _____ minutes

IV. WHAT TYPE OF NOISE

- ☐ squeak (like tennis shoes on a clean floor)
- ☐ creak (like walking on an old wooden floor)
- ☐ rattle (like shaking a baby rattle)
- ☐ knock (like a knock at the door)
- ☐ tick (like a clock second hand)
- ☐ thump (heavy, muffled knock noise)
- ☐ buzz (like a bumble bee)

TO BE COMPLETED BY DEALERSHIP PERSONNEL

Test Drive Notes:

_____

_____

_____

	YES	NO	Initials of person performing
Vehicle test driven with customer	☐	☐	_____
- Noise verified on test drive	☐	☐	_____
- Noise source located and repaired	☐	☐	_____
- Follow up test drive performed to confirm repair	☐	☐	_____

VIN: _____ Customer Name: _____

W.O.# _____ Date: _____

This form must be attached to Work Order

PIIB8742E

REMOVAL AND INSTALLATION

WINDSHIELD GLASS

Exploded View

INFOID:0000000006059350

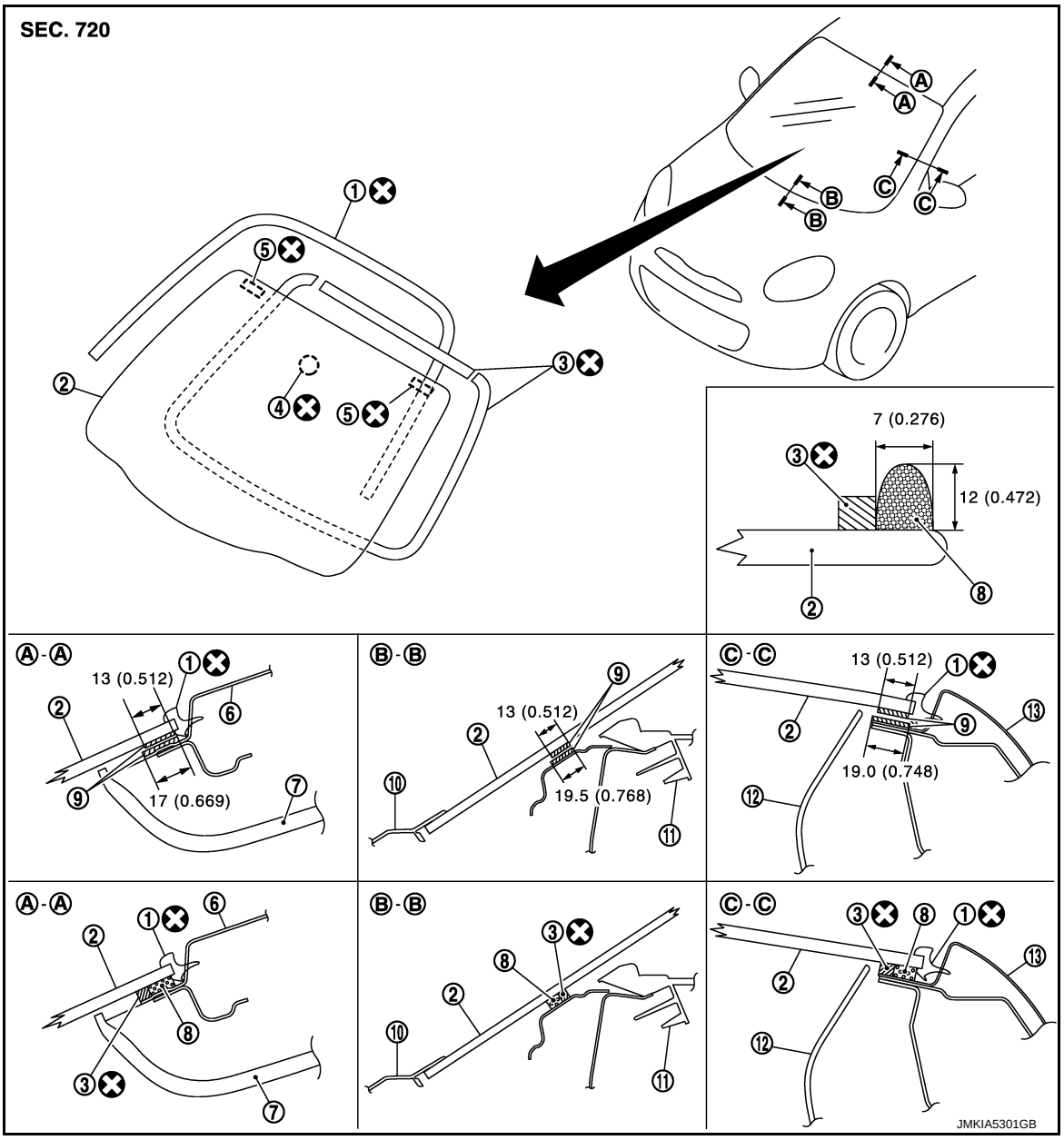

1. Windshield molding	2. Windshield glass	3. Dam sealant rubber (upper, lower)
4. Inside mirror base	5. Clip	6. Roof assembly
7. Headlining assembly	8. Adhesive	9. Primer
10. Cowl top cover	11. Instrument panel	12. Front pillar garnish
13. Body side outer		

Unit: mm (in)

⊗ : Do not reuse

Removal and Installation

INFOID:0000000006059351

REMOVAL

1. Remove front pillar garnish (LH/RH). Refer to INT-22, "FRONT PILLAR GARNISH : Removal and Installation".
2. Remove inside mirror assembly. Refer to MIR-33, "Removal and Installation".
   CAUTION:
   Replace inside mirror assembly after removal, when installing windshield glass.
3. Remove partially the headlining (front edge). Refer to INT-28, "Removal and Installation".
4. Remove front wiper arm and blade (LH/RH). Refer to WW-52, "Removal and Installation".
5. Remove front fender cover (LH/RH). Refer to EXT-17, "FENDER PROTECTOR : Removal and Installation".
6. Remove cowl top cover. Refer to EXT-15, "Removal and Installation".
7. Apply protective tape around the windshield glass to protect the painted surface from damage.
8. Remove glass using piano wire or power cutting tool (A) and an inflatable pump bag (B) after removing moldings.

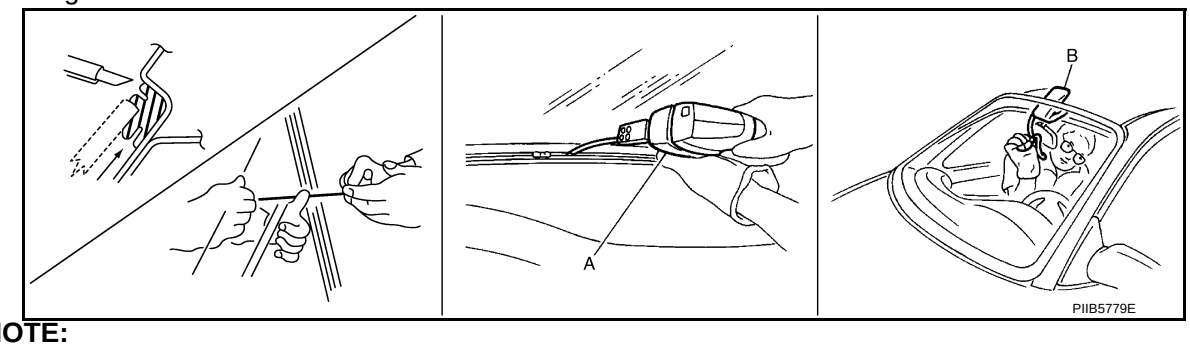

NOTE:
Mark the body and the glass with matching marks if the windshield glass is reused.

WARNING:
Always wear safety glasses and heavy gloves to help prevent injuries.
CAUTION:
- **Never use a cutting knife or power cutting tool when the glass is reused.**
- **Be careful not to scratch the glass when removing.**
- **Never set or stand the glass on its edge. Small chips may develop into cracks.**

INSTALLATION

- The dam sealant rubber should be installed in position.
- Use a genuine Nissan Urethane Adhesive Kit (if available) or an equivalent and follow the instructions provided with it.
- Open a door window while the urethane adhesive is curing. This prevents the glass from being forced out by passenger room air pressure when all door windows are closed.
- Inform the customer that the vehicle should remain stationary until the urethane adhesive is completely cured (approximately 24 hours). Curing time varies with temperature and humidity.

WARNING:
- **Keep heat and open flames away as primers and adhesive are flammable.**
- **The materials contained in the kit are harmful if swallowed, and may irritate skin and eyes. Never let them come in contact with the skin and eyes.**
- **Use in an open, well ventilated location. Never breathe the vapors. They may be harmful if inhaled. Move immediately to an area with fresh air if affected by vapor inhalation.**
- **Driving the vehicle before the urethane adhesive is completely cured may affect the performance of the windshield in an accident.**

CAUTION:
- **Perform adjustment of front wiper arms stop location. Refer to WW-52, "Adjustment".**
- **Never use an adhesive that is past its usable term. Shelf life of this product is limited to six months after the date of manufacture. Adhere carefully to the expiration or manufacture date printed on the box.**
- **Keep primers and adhesive in a cool, dry place. Ideally, they should be stored in a refrigerator.**
- **Never leave primers or adhesive cartridge unattended with their caps open or off.**
- **The vehicle should not be driven for 24 hours or more or until the urethane adhesive is completely cured. Curing time varies depending on temperature and humidity. The curing time increases under lower temperature and lower humidity.**

Inspection

INFOID:0000000006059352

REPAIRING WATER LEAKAGE FOR WINDSHIELD GLASS

Leakage can be repaired without removing the windshield glass.
Determine the extent of leakage if water is leaking between the urethane adhesive material and body or glass. This can be done by applying water to the windshield area while pushing glass outward.
Apply primer (if necessary) and then urethane adhesive to the leakage point to stop the leakage.

BACK DOOR WINDOW GLASS

Exploded View

INFOID:0000000006059359

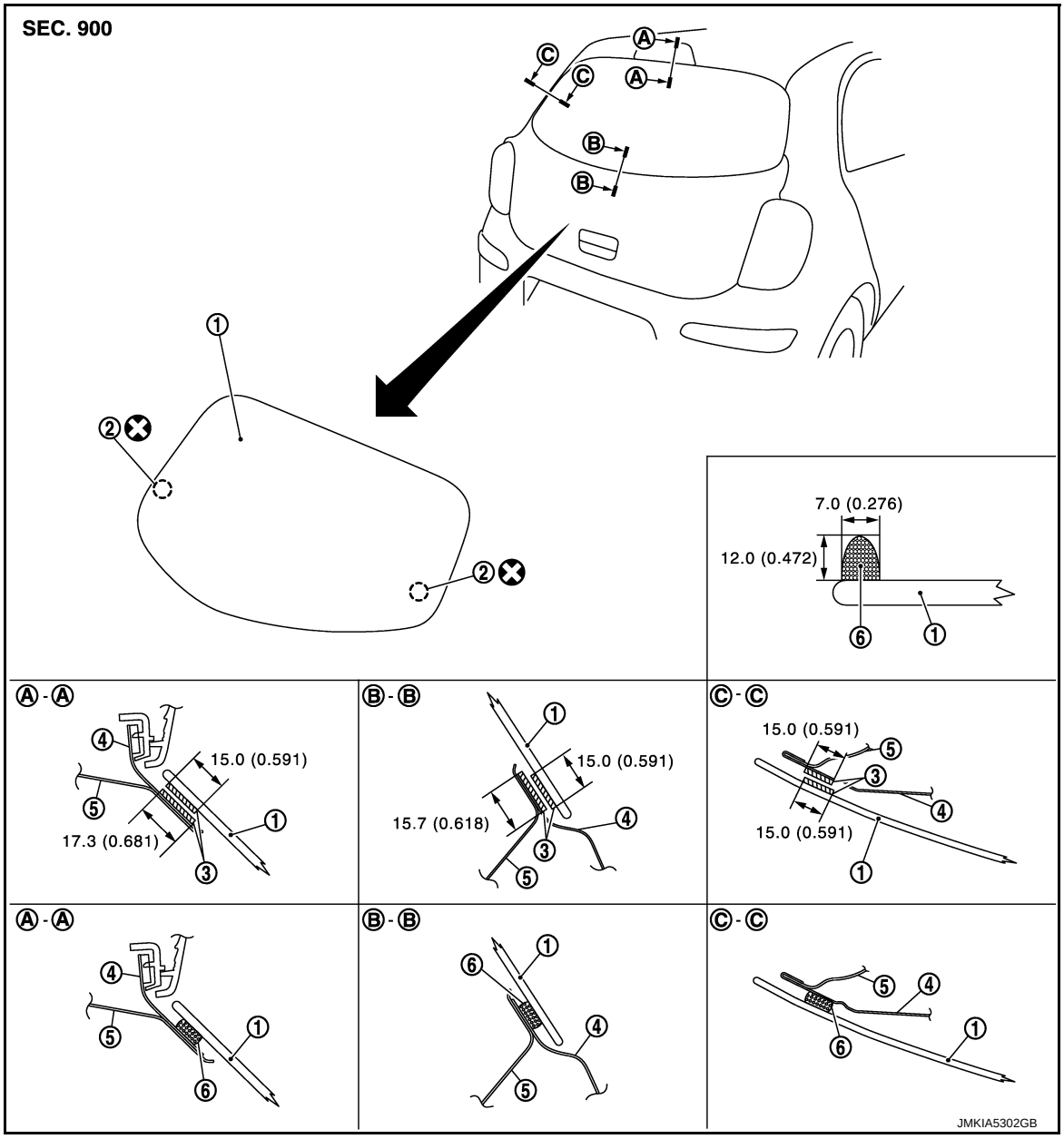

1.	Back door glass window	2.	Back door glass holder upper	3.	Primer
4.	Back door outer	5.	Back door inner	6.	Adhesive

Unit: mm (in)

⊗ : Do not reuse

Removal and Installation

INFOID:0000000006059360

REMOVAL

1. Remove rear wiper arm. Refer to WW-57, "Removal and Installation".
2. Remove rear wiper motor. Refer to WW-59, "Removal and Installation".
3. Remove the connectors and grounds for the back door window defogger.

4. Remove glass using piano wire or power cutting tool (A) and an inflatable pump bag (B) after removing molding using pliers.

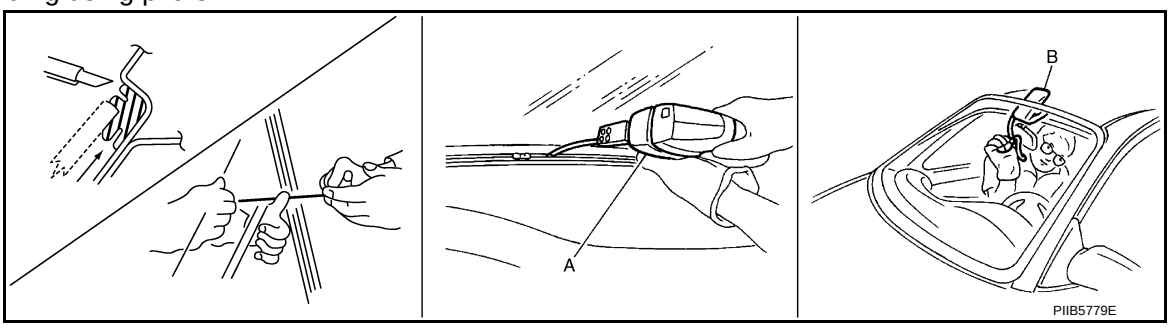

NOTE:
Mark the body and glass with a matching marks if the back door window is reused.

WARNING:
Always wear safety glasses and heavy gloves to help prevent injuries.

CAUTION:
- **Never use a cutting knife or power cutting tool when the back door window glass is reused.**
- **Be careful not to scratch the glass when removing.**
- **Never set or stand the glass on its edge. Small chips may develop into cracks.**

INSTALLATION
- The dam sealant rubber should be installed in position.
- Use a Genuine Nissan Urethane Adhesive Kit (if available) or an equivalent and follow the instructions provided with it.
- Open a door window while the urethane adhesive is curing. This prevents the glass from being forced out by passenger compartment air pressure when all door windows are closed.
- The molding must be installed securely so that it is in position and leaves no clearance.
- Inform the customer that the vehicle should remain stationary until the urethane adhesive is completely cured (approximately 24 hours). Curing time varies with temperature and humidity.

WARNING:
- **Keep heat and open flames away as primers and adhesive are flammable.**
- **The materials contained in the kit are harmful if swallowed, and may irritate skin and eyes. Never let them come in contact with the skin and eyes.**
- **Use in an open, well ventilated location. Never breathe the vapors. They may be harmful if inhaled. Move immediately to an area with fresh air if affected by vapor inhalation.**
- **Driving the vehicle before the urethane adhesive is completely cured may affect the performance of the back door window in an accident.**

CAUTION:
- **Perform adjustment of rear wiper arm stop location. Refer to WW-57, "Adjustment".**
- **Never use an adhesive that is past its usable term. Shelf life of this product is limited to six months after the date of manufacture. Adhere carefully to the expiration or manufacture date printed on the box.**
- **Keep primers and adhesive in a cool, dry place. Ideally, they should be stored in a refrigerator.**
- **Never leave primers or adhesive cartridge unattended with their caps open or off.**
- **The vehicle should not be driven for 24 hours or more or until the urethane adhesive is completely cured. Curing time varies depending on temperature and humidity. The curing time increases under lower temperature and lower humidity.**

Inspection

INFOID:0000000006059361

REPAIRING WATER LEAKAGE FOR BACK DOOR WINDOW GLASS

Leakage can be repaired without removing the glass.
Determine the extent of leakage if water is leaking between the urethane adhesive material and body or glass. This can be done by applying water to the back door window glass area while pushing glass outward.
Apply primer (if necessary) and then urethane adhesive to the leakage point to stop the leakage.

FRONT DOOR GLASS

Exploded View

INFOID:0000000006059379

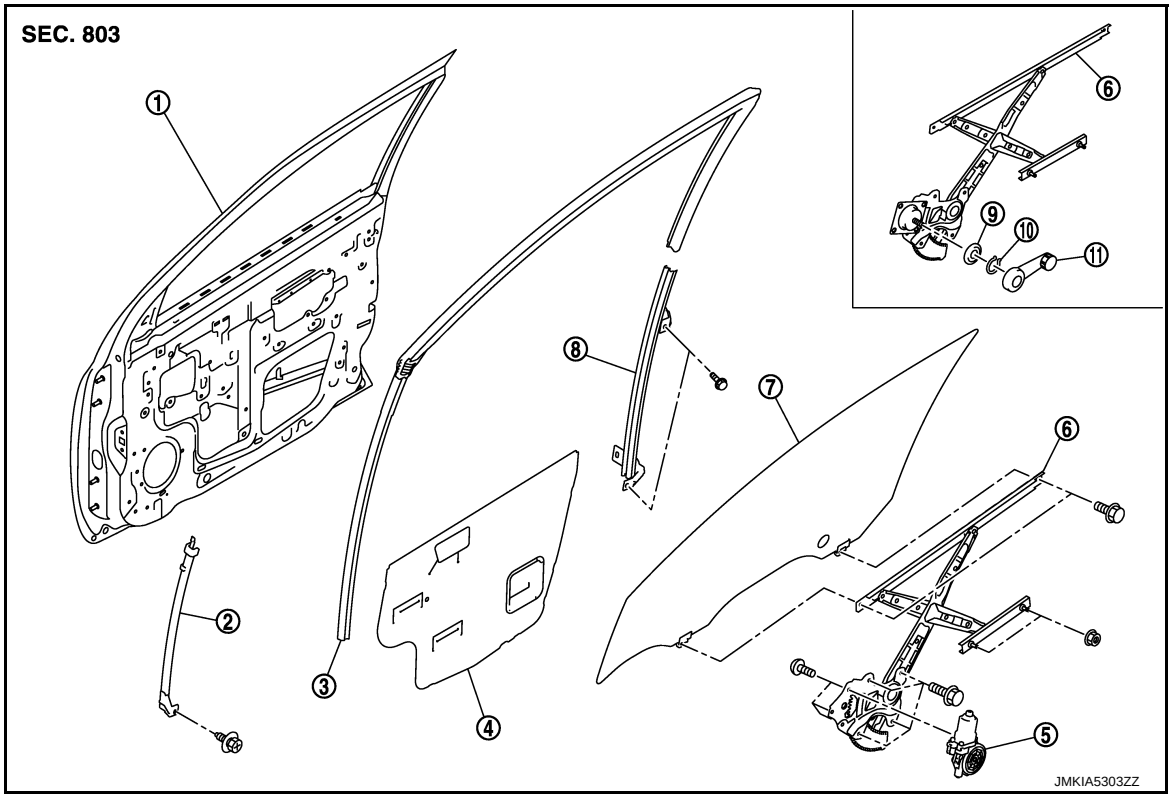

1. Front door panel	2. Front door lower sash (front)	3. Front door glass run
4. Front door sealing screen	5. Front door power window motor	6. Front door regulator
7. Front door glass	8. Front door lower sash (rear)	9. Regulator seal
10. Snap pin	11. Regulator handle	

Removal and Installation

INFOID:0000000006059380

REMOVAL

1. Fully open front door glass.
2. Remove door mirror corner cover. Refer to MIR-35, "DOOR MIRROR ASSEMBLY : Removal and Installation".
3. Remove the regulator handle (1). (Manual window model only)
   - Hang snap pin (2) on hook and pick tool (A) and pull it up to remove.
   - Pull back regulator handle.

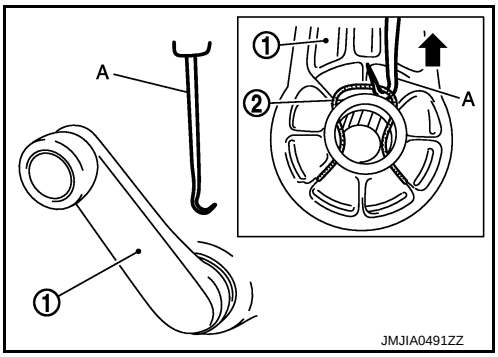

4. Remove the front door finisher. Refer to INT-14, "Removal and Installation".
5. Disconnect outside mirror harness connector and remove the fixing clip.
6. Remove front door sealing screen.
   NOTE:

Cut the butyl-tape so that some parts of the butyl-tape do not remain on the sealing screen, if the sealing screen is reused.

7. Operate the power window main switch or regulator handle to raise or lower the door window until the glass mounting bolts can be seen.
8. Remove the glass mounting bolts
9. Hold securely the front door glass and pull it out of the sash to remove the door glass.
10. Remove front door outside molding. Refer to EXT-20, "Removal and Installation".
11. Remove front door glass run.
12. Remove front door lower sash (rear).
    1. Remove lower sash (rear) mounting bolts.
    2. Reach the bottom part of lower sash and then pull it toward vehicle front.
    3. Hold the upper part of lower sash and then pull it up to remove.
13. Remove front door lower sash (front).
    1. Remove lower sash (rear) mounting bolt.
    2. Reach the bottom part of lower sash and then pull it toward rear of vehicle.
    3. Hold the upper part of lower sash and then pull it up to remove.

INSTALLATION

Install in the reverse order of removal.

Inspection and Adjustment

INFOID:0000000006059381

SYSTEM INITIALIZATION

Initialize the system if any of the following work is complete. Refer to XX-XX, "*****".

FITTING INSPECTION

- Check that the glass is fit securely into the sash groove.
- Lower the glass slightly [approximately 10 to 20 mm (0.394 to 0.787 in)], and check that the clearance to the sash is parallel. Loosen the regulator mounting bolts, guide rail mounting bolts, and glass and guide rail mounting bolts to correct the glass position if the clearance between the glass and sash is not parallel.

FRONT REGULATOR

Exploded View

INFOID:0000000006059400

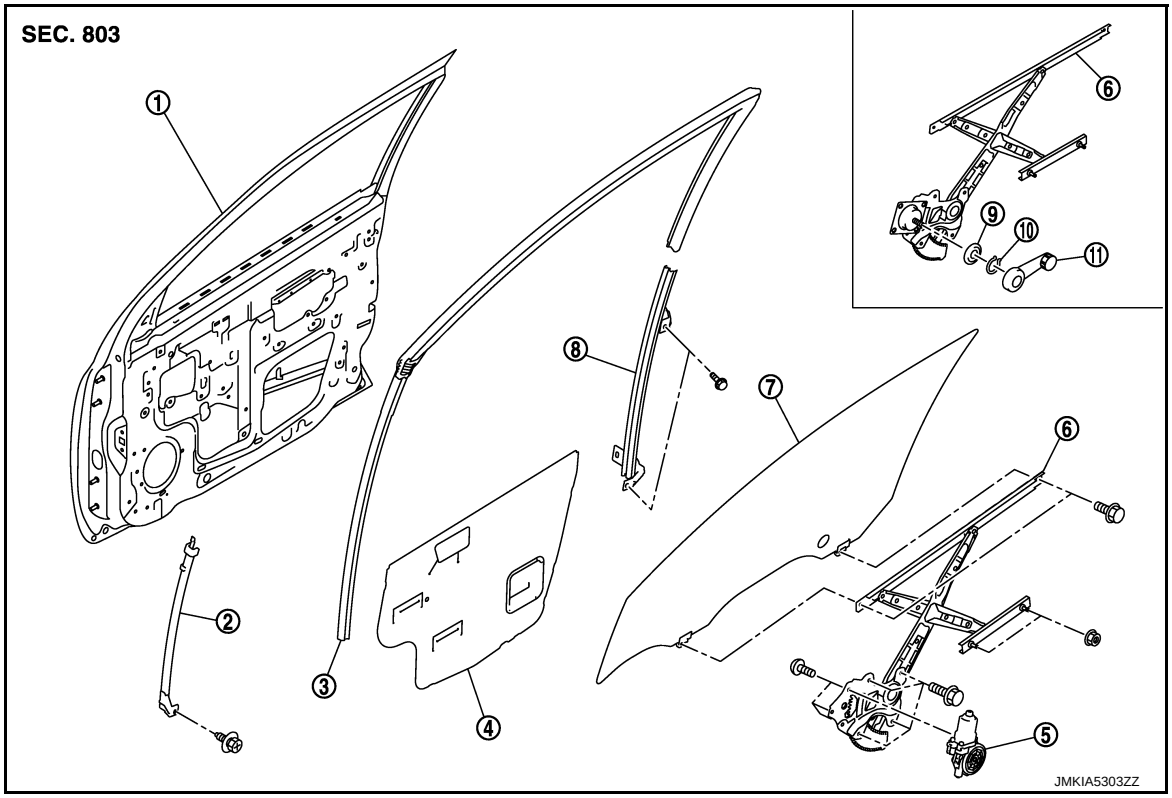

1. Front door panel
2. Front door lower sash (front)
3. Front door glass run
4. Front door sealing screen
5. Front door power window motor
6. Front door regulator
7. Front door glass
8. Front door lower sash (rear)
9. Regulator seal
10. Snap pin
11. Regulator handle

Removal and Installation

INFOID:0000000006059383

REMOVAL

1. Remove the front door glass. Refer to GW-16, "Removal and Installation".
2. Disconnect the power window motor harness connector.
3. Remove the regulator assembly mounting bolts and power window motor mounting bolts, and then remove regulator assembly from door panel.

INSTALLATION

Install in the reverse order of removal.

Disassembly and Assembly

INFOID:0000000006059384

DISASSEMBLY

Remove the power window motor from the regulator assembly.

INSPECTION AFTER REMOVAL

Check the regulator assembly for the following items. Replace or grease it if a malfunction is detected.

- Wire wear
- Regulator deformation

ASSEMBLY

Assemble in the reverse order of disassembly.

Inspection and Adjustment

INFOID:0000000006059393

SYSTEM INITIALIZATION

Initialize the system if any of the following work is complete. Refer to XX-XX, "*****".

FITTING INSPECTION

- Check that the glass is fit securely into the sash groove.
- Lower the glass slightly [approximately 10 to 20 mm (0.394 to 0.787 in)], and check that the clearance to the sash is parallel. Loosen the regulator mounting bolts, guide rail mounting bolts, and glass and guide rail mounting bolts to correct the glass position if the clearance between the glass and sash is not parallel.

REAR DOOR GLASS

Exploded View

INFOID:0000000006059386

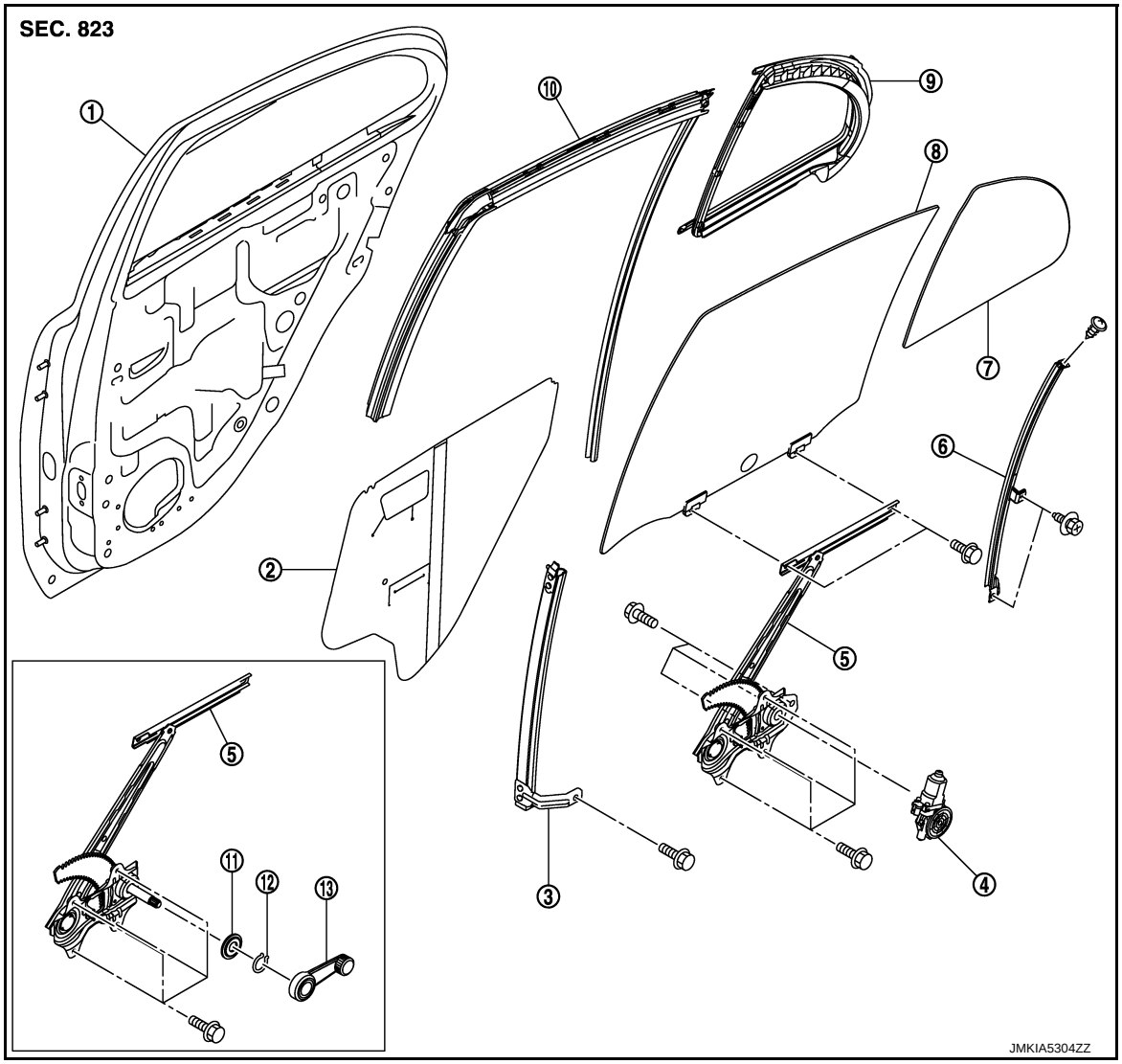

1. Rear door panel
2. Sealing screen
3. Rear door sash
4. Power window motor
5. Regulator assembly
6. Partition sash
7. Partition glass
8. Rear door glass
9. Partition weather-strip
10. Rear door glass run
11. Regulator seal
12. Snap pin
13. Regulator handle

Removal and Installation

INFOID:0000000006059387

REMOVAL

1. Fully open rear door glass.

2. Remove the regulator handle (1). (Manual window model only)
   - Hang snap pin (2) on hook and pick tool (A) and pull it up to remove.
   - Pull back regulator handle.

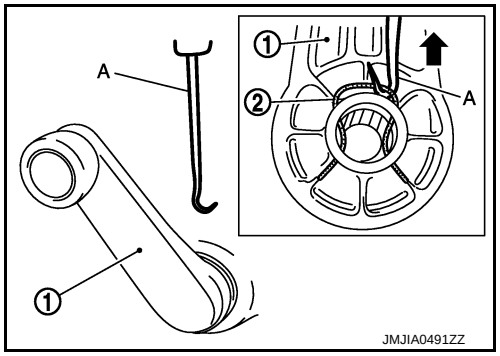

3. Remove rear door finisher. Refer to INT-18, "Removal and Installation".
4. Remove rear door sealing screen.
   NOTE:
   Cut the butyl-tape so that some parts of the butyl-tape do not remain on the sealing screen, if the sealing screen is reused.
5. Remove partition sash mounting bolts and screw.
6. Remove partition sash.
   1. Remove rear door glass run from partition sash.
   2. Pull slightly and straight down partition sash.
   3. From the upper side, slop partition sash toward vehicle and the remove.
7. Operate the power window main switch or regulator handle to raise or lower the door window until the glass mounting bolts can be seen.
8. Remove rear door glass from the rear panel.
9. Remove partition glass.
   1. Slide partition glass toward the direction of arrow 1.
   2. Pull partition glass toward the direction of arrow 2 to remove.
   3. Remove partition weather-strip after removing the partition glass.

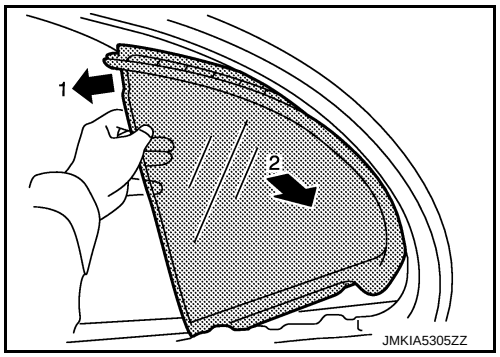

INSTALLATION
Install in the reverse order of removal.

Inspection and Adjustment

INFOID:0000000006059388

SYSTEM INITIALIZATION
Initialize the system if any of the following work is complete. Refer to XX-XX, "*****".

FITTING INSPECTION
- Check that the glass is fit securely into the sash groove.
- Lower the glass slightly [approximately 10 to 20 mm (0.394 to 0.787 in)], and check that the clearance to the sash is parallel. Loosen the regulator mounting bolts, guide rail mounting bolts, and glass and guide rail mounting bolts to correct the glass position if the clearance between the glass and sash is not parallel.

REAR REGULATOR

Exploded View

INFOID:0000000006059401

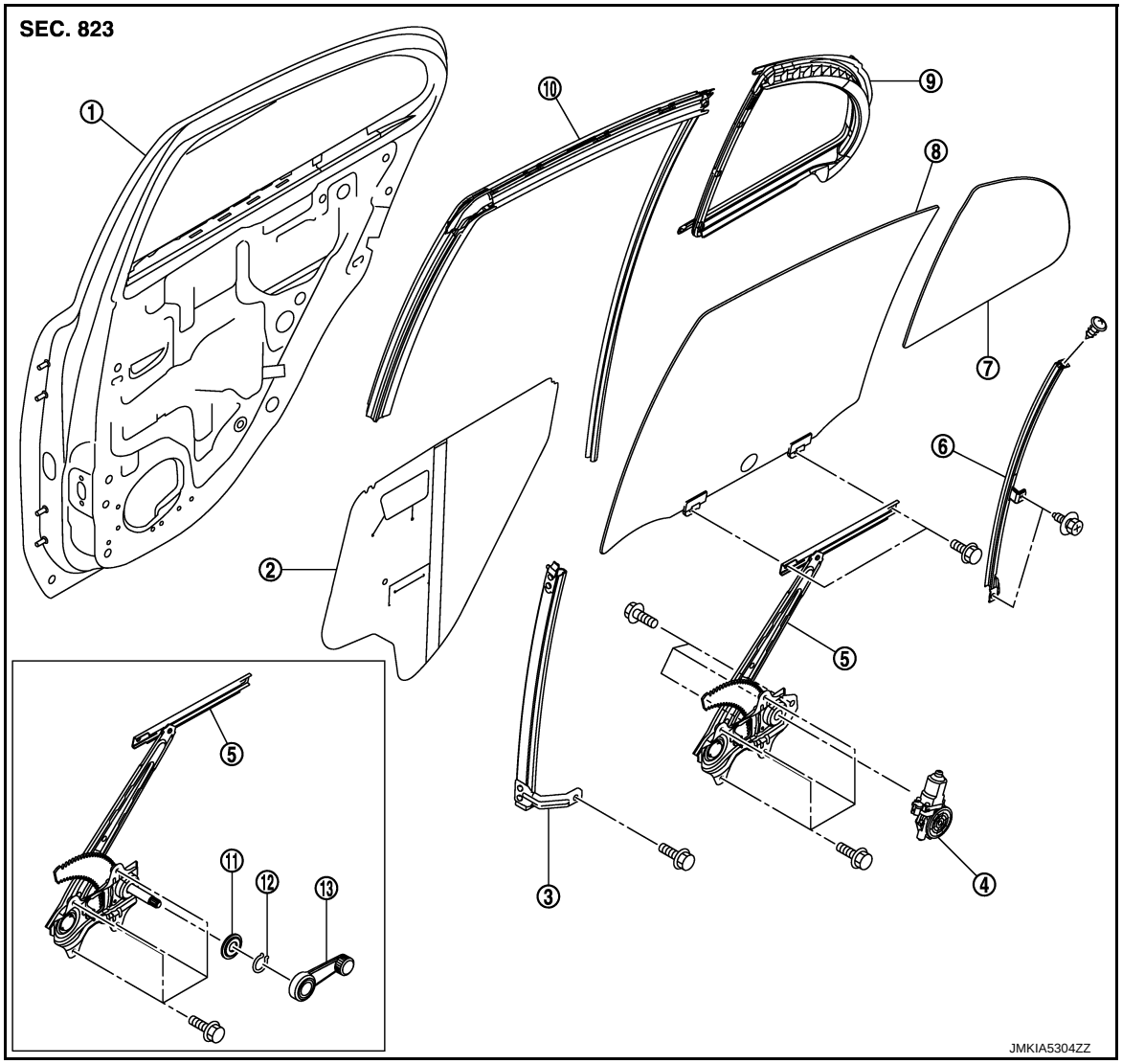

1. Rear door panel
2. Sealing screen
3. Rear door sash
4. Power window motor
5. Regulator assembly
6. Partition sash
7. Partition glass
8. Rear door glass
9. Partition weather-strip
10. Rear door glass run
11. Regulator seal
12. Snap pin
13. Regulator handle

Removal and Installation

INFOID:0000000006059390

REMOVAL

1. Remove rear door glass. Refer to GW-20, "Removal and Installation".
2. Disconnect the power window motor harness connector (B) (Power window model only).
3. Remove the regulator assembly mounting bolts and then remove regulator assembly from door panel.

INSTALLATION

Install in the reverse order of removal.

Disassembly and Assembly

INFOID:0000000006059391

DISASSEMBLY

Remove the power window motor from the regulator assembly.

INSPECTION AFTER REMOVAL

Check the regulator assembly for the following items. Replace or grease it if a malfunction is detected.

- Wire wear
- Regulator deformation

ASSEMBLY

Assemble in the reverse order of disassembly.

Inspection and Adjustment

INFOID:0000000006059394

SYSTEM INITIALIZATION

Initialize the system if any of the following work is complete. Refer to XX-XX, "*****".

FITTING INSPECTION

- Check that the glass is fit securely into the sash groove.
- Lower the glass slightly [approximately 10 to 20 mm (0.394 to 0.787 in)], and check that the clearance to the sash is parallel. Loosen the regulator mounting bolts, guide rail mounting bolts, and glass and guide rail mounting bolts to correct the glass position if the clearance between the glass and sash is not parallel.

SECTION HA

HEATER & AIR CONDITIONING SYSTEM

CONTENTS

PRECAUTION 3

PRECAUTIONS 3
- Precaution for Supplemental Restraint System (SRS) "AIR BAG" and "SEAT BELT PRE-TENSIONER" 3
- Precaution Necessary for Steering Wheel Rotation after Battery Disconnect 3
- Precaution for Procedure without Cowl Top Cover 4
- Precautions For Refrigerant System Service 4
- Service Equipment 6

PREPARATION 9

PREPARATION 9
- Special Service Tool 9
- Commercial Service Tools 10
- Sealant or/and Lubricant 11

SYSTEM DESCRIPTION 13

COMPONENT PARTS 13
- Component Parts Location 13
- Component Description 13

SYSTEM 14
- System Diagram 14
- System Description 14

BASIC INSPECTION 16

DIAGNOSIS AND REPAIR WORKFLOW 16
- Work Flow 16

REFRIGERANT 18
- Description 18
- Leak Test 18
- Recycle Refrigerant 20
- Charge Refrigerant 20

LUBRICANT 22
- Description 22
- Inspection 22
- Perform Lubricant Return Operation 22
- Lubricant Adjusting Procedure for Components Replacement Except Compressor 22
- Lubricant Adjusting Procedure for Compressor Replacement 23

PERFORMANCE TEST 25
- Inspection 25

SYMPTOM DIAGNOSIS 27

REFRIGERATION SYSTEM SYMPTOMS 27
- Trouble Diagnosis For Unusual Pressure 27
- Symptom Table 27

NOISE 29
- Symptom Table 29

REMOVAL AND INSTALLATION 30

COMPRESSOR 30
- Exploded View 30

COMPRESSOR 30
- COMPRESSOR : Removal and Installation 31

MAGNET CLUTCH 31
- MAGNET CLUTCH : Removal and Installation of Compressor Clutch 31
- Inspection 32

COOLER PIPE AND HOSE 33
- Exploded View 33

HIGH-PRESSURE FLEXIBLE HOSE 33
- HIGH-PRESSURE FLEXIBLE HOSE : Removal and Installation 33

LOW-PRESSURE FLEXIBLE HOSE 34
- LOW-PRESSURE FLEXIBLE HOSE : Removal and Installation 34

HIGH-PRESSURE PIPE 34

HIGH-PRESSURE PIPE : Removal and Installation 34

CONDENSER 36
Exploded View 36

CONDENSER 36
CONDENSER : Removal and Installation 36

LIQUID TANK 37
LIQUID TANK : Removal and Installation 37

REFRIGERANT PRESSURE SENSOR 37
REFRIGERANT PRESSURE SENSOR : Removal and Installation 37

A/C UNIT ASSEMBLY 39
Exploded View 39

A/C UNIT ASSEMBLY 42
A/C UNIT ASSEMBLY : Removal and Installation.. 42

EVAPORATOR 43
EVAPORATOR : Removal and Installation 43

HEATER CORE 43
HEATER CORE : Removal and Installation 43

EXPANSION VALVE 44
EXPANSION VALVE : Removal and Installation ... 44

SERVICE DATA AND SPECIFICATIONS (SDS) 45

SERVICE DATA AND SPECIFICATIONS (SDS) 45
Compressor 45
Lubricant 45
Refrigerant 45
Engine Idling Speed 45
Belt Tension 45

PRECAUTION

PRECAUTIONS

Precaution for Supplemental Restraint System (SRS) "AIR BAG" and "SEAT BELT PRE-TENSIONER"

INFOID:0000000006067225

The Supplemental Restraint System such as “AIR BAG” and “SEAT BELT PRE-TENSIONER”, used along with a front seat belt, helps to reduce the risk or severity of injury to the driver and front passenger for certain types of collision. Information necessary to service the system safely is included in the “SRS AIR BAG” and “SEAT BELT” of this Service Manual.

WARNING:

- **To avoid rendering the SRS inoperative, which could increase the risk of personal injury or death in the event of a collision which would result in air bag inflation, all maintenance must be performed by an authorized NISSAN/INFINITI dealer.**
- **Improper maintenance, including incorrect removal and installation of the SRS, can lead to personal injury caused by unintentional activation of the system. For removal of Spiral Cable and Air Bag Module, see the “SRS AIR BAG”.**
- **Do not use electrical test equipment on any circuit related to the SRS unless instructed to in this Service Manual. SRS wiring harnesses can be identified by yellow and/or orange harnesses or harness connectors.**

PRECAUTIONS WHEN USING POWER TOOLS (AIR OR ELECTRIC) AND HAMMERS

WARNING:

- **When working near the Air Bag Diagnosis Sensor Unit or other Air Bag System sensors with the ignition ON or engine running, DO NOT use air or electric power tools or strike near the sensor(s) with a hammer. Heavy vibration could activate the sensor(s) and deploy the air bag(s), possibly causing serious injury.**
- **When using air or electric power tools or hammers, always switch the ignition OFF, disconnect the battery, and wait at least 3 minutes before performing any service.**

Precaution Necessary for Steering Wheel Rotation after Battery Disconnect

INFOID:0000000006067226

NOTE:

- Before removing and installing any control units, first turn the push-button ignition switch to the LOCK position, then disconnect both battery cables.
- After finishing work, confirm that all control unit connectors are connected properly, then re-connect both battery cables.
- Always use CONSULT-III to perform self-diagnosis as a part of each function inspection after finishing work. If a DTC is detected, perform trouble diagnosis according to self-diagnosis results.

For vehicle with steering lock unit, if the battery is disconnected or discharged, the steering wheel will lock and cannot be turned.

If turning the steering wheel is required with the battery disconnected or discharged, follow the operation procedure below before starting the repair operation.

OPERATION PROCEDURE

1. Connect both battery cables.
   NOTE:
   Supply power using jumper cables if battery is discharged.
2. Turn the push-button ignition switch to ACC position.
   (At this time, the steering lock will be released.)
3. Disconnect both battery cables. The steering lock will remain released with both battery cables disconnected and the steering wheel can be turned.
4. Perform the necessary repair operation.
5. When the repair work is completed, re-connect both battery cables. With the brake pedal released, turn the push-button ignition switch from ACC position to ON position, then to LOCK position. (The steering wheel will lock when the push-button ignition switch is turned to LOCK position.)
6. Perform self-diagnosis check of all control units using CONSULT-III.

Precaution for Procedure without Cowl Top Cover

INFOID:0000000006067227

When performing the procedure after removing cowl top cover, cover the lower end of windshield with urethane, etc.

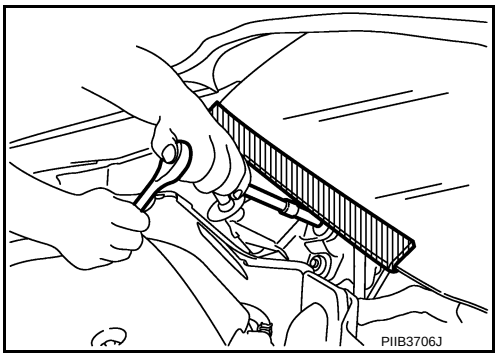

Precautions For Refrigerant System Service

INFOID:0000000006032306

GENERAL REFRIGERANT PRECAUTION

WARNING:

- **Never breathe A/C refrigerant and lubricant vapor or mist. Exposure may irritate eyes, nose and throat. Use only approved recovery/recycling equipment to discharge HFC-134a (R-134a) refrigerant. Ventilate work area before resuming service if accidental system discharge occurs. Additional health and safety information may be obtained from refrigerant and lubricant manufacturers.**
- **Never release refrigerant into the air. Use approved recovery/recycling recharging equipment to capture the refrigerant each time an air conditioning system is discharged.**
- **Wear always eye and hand protection (goggles and gloves) when working with any refrigerant or air conditioning system.**
- **Never store or heat refrigerant containers above 52°C (126°F).**
- **Never heat a refrigerant container with an open flame; Place the bottom of the container in a warm pail of water if container warming is required.**
- **Never intentionally drop, puncture, or incinerate refrigerant containers.**
- **Keep refrigerant away from open flames: poisonous gas is produced if refrigerant burns.**
- **Refrigerant displaces oxygen, therefore be certain to work in well ventilated areas to prevent suffocation.**
- **Never pressure test or leakage test HFC-134a (R-134a) service equipment and/or vehicle air conditioning systems with compressed air during repair. Some mixtures of air and HFC-134a (R-134a) have been shown to be combustible at elevated pressures. These mixtures, if ignited, may cause injury or property damage. Additional health and safety information may be obtained from refrigerant manufacturers.**

WORKING WITH HFC-134a (R-134a)

CAUTION:

- **CFC-12 (R-12) refrigerant and HFC-134a (R-134a) refrigerant are not compatible. These regrigerants must never be mixed, even in the smallest amounts. Compressor malfunction is likely occur if the refrigerants are mixed.**
- **Use only specified lubricant for the HFC-134a (R-134a) A/C system and HFC-134a (R-134a) components. Compressor malfunction is likely to occur if lubricant other than that specified is used.**
- **The specified HFC-134a (R-134a) lubricant rapidly absorbs moisture from the atmosphere. The following handling precautions must be observed:**
- **Cap (seal) immediately the component to minimize the entry of moisture from the atmosphere when removing refrigerant components from a vehicle.**
- **Never remove the caps (unseal) until just before connecting the components when installing refrigerant components to a vehicle. Connect all refrigerant loop components as quickly as possible to minimize the entry of moisture into system.**
- **Use only the specified lubricant from a sealed container. Reseal immediately containers of lubricant. Lubricant becomes moisture saturated and should not be used without proper sealing.**
- **Never allow lubricant (UV Luminous Oil Type R) to come in contact with styrene foam parts. Damage may result.**

REFRIGERANT CONNECTION

A new type refrigerant connection has been introduced to all refrigerant lines except the following location.

- Expansion valve to evaporator

- Refrigerant pressure sensor to liquid tank

WARNING:

Check that all refrigerant is discharged into the recycling equipment and the pressure in the system is less than atmospheric pressure. Then gradually loosen the discharge side hose fitting and remove it.

CAUTION:

Observe the following when replacing or cleaning refrigerant cycle components.

- **Store it in the same way at it is when mounted on the car when the compressor is removed. Failure to do so will cause lubricant to enter the low-pressure chamber.**
- **Use always a torque wrench and a back-up wrench when connecting tubes.**
- **Plug immediately all openings to prevent entry of dust and moisture after disconnecting tubes.**
- **Connect the pipes at the final stage of the operation when installing an air conditioner in the vehicle. Never remove the seal caps of pipes and other components until just before required for connection.**
- **Allow components stored in cool areas to warm to working area temperature before removing seal caps. This prevents condensation from forming inside A/C components.**
- **Remove thoroughly moisture from the refrigeration system before charging the refrigerant.**
- **Replace always used O-rings.**
- **Apply lubricant to circle of the O-rings shown in illustration when connecting tube. Be careful not to apply lubricant to threaded portion.**

Name : UV Luminous Oil Type R

- **O-ring must be closely attached to the groove portion of tube.**
- **Be careful not to damage O-ring and tube when replacing the O-ring.**
- **Connect tube until a click can be heard. Then tighten the nut or bolt by hand. Check that the O-ring is installed to tube correctly.**
- **Perform leakage test and make sure that there is no leakage from connections after connecting line. Disconnect that line and replace the O-ring when the refrigerant leaking point is found. Then tighten connections of seal seat to the specified torque.**

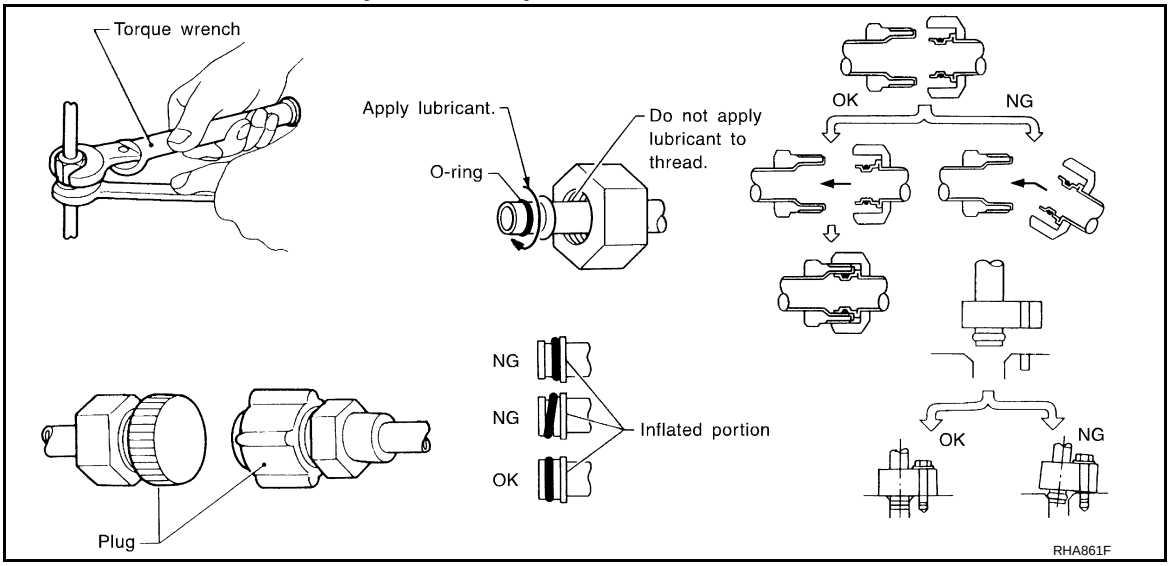

COMPRESSOR

CAUTION:

- **Plug all openings to prevent moisture and foreign matter from entering.**
- **Store it in the same way at it is when mounted on the car when the compressor is removed.**
- **Follow “MAINTENANCE OF LUBRICANT LEVEL IN COMPRESSOR” exactly when replacing or repairing compressor. Refer to HA-18, "Description".**
- **Keep friction surfaces between clutch and pulley clean. Wipe it off by using a clean waste cloth moistened with thinner if the surface is contaminated with lubricant.**
- **Turn the compressor shaft by hand more than five turns in both directions after compressor service operation. This distributes equally lubricant inside the compressor. Let the engine idle and operate the compressor for one hour after the compressor is installed.**
- **Apply voltage to the new one and check for normal operation after replacing the compressor magnet clutch.**

LEAK DETECTION DYE

CAUTION:

- **The A/C system contains a fluorescent leak detection dye used for locating refrigerant leakages. An ultraviolet (UV) lamp is required to illuminate the dye when inspecting for leakages.**
- **Wear always fluorescence enhancing UV safety goggles to protect eyes and enhance the visibility of the fluorescent dye.**
- **The fluorescent dye leak detector is not a replacement for an electrical leak detector. The fluorescent dye leak detector should be used in conjunction with an electrical leak detector to pin-point refrigerant leakages.**
- **Read and follow all manufacture's operating instructions and precautions prior to performing the work for the purpose of safety and customer's satisfaction.**
- **A compressor shaft seal should not necessarily be repaired because of dye seepage. The compressor shaft seal should only be repaired after confirming the leakage with an electrical leak detector.**
- **Remove always any remaining dye from the leakage area after repairs are completed to avoid a misdiagnosis during a future service.**
- **Never allow dye to come into contact with painted body panels or interior components. Clean immediately with the approved dye cleaner if dye is spilled. Fluorescent dye left on a surface for an extended period of time cannot be removed.**
- **Never spray the fluorescent dye cleaning agent on hot surfaces (engine exhaust manifold, etc.).**
- **Never use more than one refrigerant dye bottle [1/4 ounce (7.4 cc)] per A/C system.**
- **Leak detection dyes for HFC-134a (R-134a) and CFC-12 (R-12) A/C systems are different. Never use HFC-134a (R-134a) leak detection dye in CFC-12 (R-12) A/C system, or CFC-12 (R-12) leak detection dye in HFC-134a (R-134a) A/C system, or A/C system damage may result.**
- **The fluorescent properties of the dye remains for three or more years unless a compressor malfunction occurs.**

NOTE:

Identification

- Vehicles with factory installed fluorescent dye have a green label.
- Vehicles without factory installed fluorescent dye have a blue label.

Service Equipment

INFOID:0000000006032307

RECOVERY/RECYCLING RECHARGING EQUIPMENT

Be certain to follow the manufacturer's instructions for machine operation and machine maintenance. Never introduce any refrigerant other than that specified into the machine.

ELECTRICAL LEAK DETECTOR

Be certain to follow the manufacturer's instructions for tester operation and tester maintenance.

VACUUM PUMP

The lubricant contained inside the vacuum pump is not compatible with the specified lubricant for HFC-134a (R-134a) A/C systems. The vent side of the vacuum pump is exposed to atmospheric pressure. So the vacuum pump lubricant may migrate out of the pump into the service hose. This is possible when the pump is switched OFF after evacuation (vacuuming) and hose is connected to it.
To prevent this migration, use a manual valve placed near the hose-to-pump connection, as per the following.

- Vacuum pumps usually have a manual isolator valve as part of the pump. Close this valve to isolate the service hose from the pump.
- Use a hose equipped with a manual shut-off valve near the pump end for pumps without an isolator. Close the valve to isolate the hose from the pump.
- Disconnect the hose from the pump if the hose has an automatic shut-off valve. As long as the hose is connected, the valve is open and lubricating oil may migrate.

Some one-way valves open when vacuum is applied and close under no vacuum condition. Such valves may restrict the pump's ability to pull a deep vacuum and are not recommended.

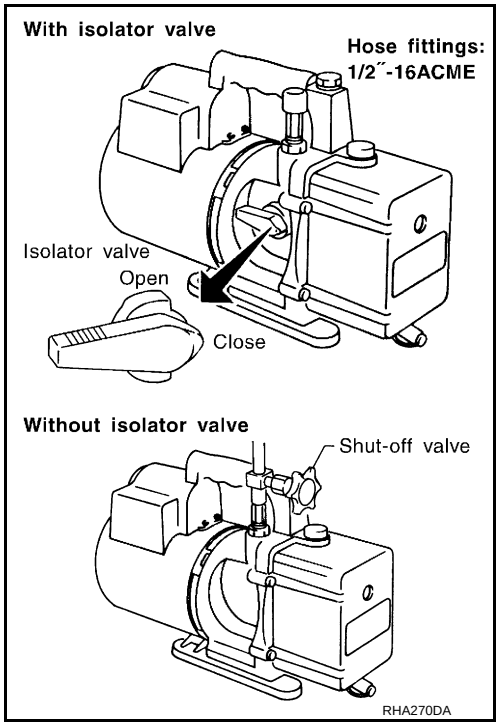

MANIFOLD GAUGE SET

Be certain that the gauge face indicates HFC-134a or R-134a. Be sure the gauge set has 1/2″-16 ACME threaded connections for service hoses. Confirm the set has been used only with refrigerant HFC-134a (R-134a) and specified lubricants.

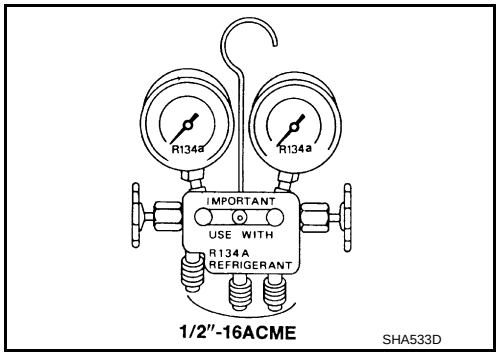

SERVICE HOSES

Be certain that the service hoses display the markings described (colored hose with black stripe). All hoses must equip positive shut-off devices (either manual or automatic) near the end of the hoses opposite to the manifold gauge.

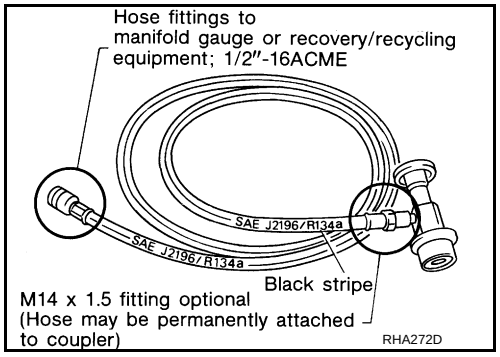

SERVICE COUPLERS

< PRECAUTION >

Never attempt to connect HFC-134a (R-134a) service couplers to the CFC-12 (R-12) A/C system. The HFC-134a (R-134a) couplers do not properly connect to the CFC-12 (R-12) system. However, if an improper connection is attempted, discharging and contamination may occur.

Shut-off valve rotation	A/C service valve
Clockwise	Open
Counterclockwise	Close

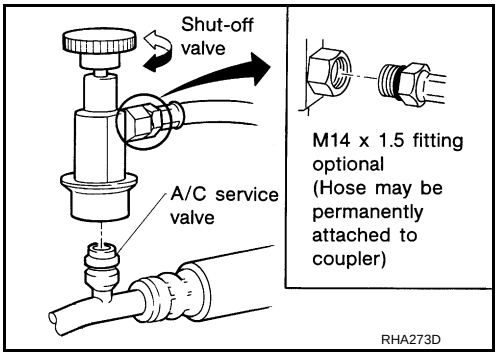

REFRIGERANT WEIGHT SCALE

Verify that no refrigerant other than HFC-134a (R-134a) and specified lubricants have been used with the scale. The hose fitting must be 1/2″-16 ACME if the scale controls refrigerant flow electronically.

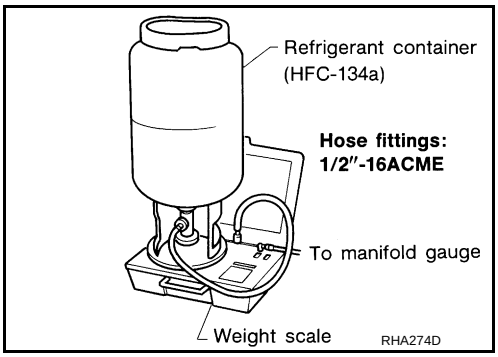

CALIBRATING ACR4 WEIGHT SCALE

Calibrate the scale each three month.
To calibrate the weight scale on the ACR4:

1. Press **“Shift/Reset”** and **“Enter”** at the same time.
2. Press **“8787”**. **“A1”** is displayed.
3. Remove all weight from the scale.
4. Press **“0”**, then press **“Enter”**. **“0.00”** is displayed and change to **“A2”**.
5. Place a known weight (dumbbell or similar weight), between 4.5 and 8.6 kg (10 and 19 lb.) on the center of the weight scale.
6. Enter the known weight using four digits. (Example 10 lb. = 10.00, 10.5 lb. = 10.50)
7. Press **“Enter”**— the display returns to the vacuum mode.
8. Press **“Shift/Reset”** and **“Enter”** at the same time.
9. Press **“6”**— the known weight on the scale is displayed.
10. Remove the known weight from the scale. **“0.00”** is displayed.
11. Press **“Shift/Reset”** to return the ACR4 to the program mode.

CHARGING CYLINDER

Using a charging cylinder is not recommended. Refrigerant may be vented into air from cylinder’s top valve when filling the cylinder with refrigerant. Also, the accuracy of the cylinder is generally less than that of an electronic scale or of quality recycle/recharge equipment.

PREPARATION

PREPARATION

Special Service Tool

INFOID:0000000006032308

HFC-134a (R-134a) Service Tool and Equipment

- Never mix HFC-134a (R-134a) refrigerant and/or its specified lubricant with CFC-12 (R-12) refrigerant and/or its lubricant.
- Separate and non-interchangeable service equipment must be used for handling each type of refrigerant/lubricant.
- Refrigerant container fittings, service hose fittings and service equipment fittings (equipment which handles refrigerant and/or lubricant) are different between CFC-12 (R-12) and HFC-134a (R-134a). This is to avoid mixed use of the refrigerants/lubricant.
- Never use adapters that convert one size fitting to another: refrigerant/lubricant contamination occurs and compressor malfunction may result.

Tool number (SPX-North America No.) Tool name		Description
(J-43926) Refrigerant dye leak detection kit Kit includes: (J-42220) UV lamp and UV safety goggles (J-41459) HFC-134a (R-134a) dye injector Use with J-41447, 1/4 ounce bottle (J-41447) HFC-134a (R-134a) fluorescent leak detection dye (Box of 24, 1/4 ounce bottles) (J-43872) Refrigerant dye cleaner	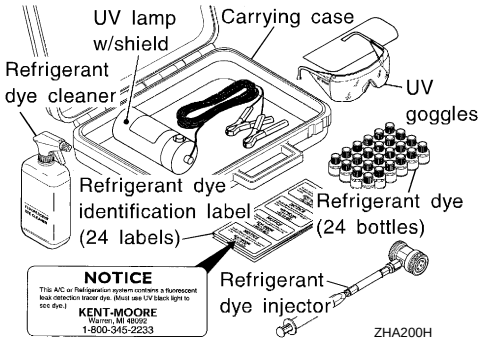	Power supply: DC 12 V (Battery terminal)
(J-42220) UV lamp and UV safety goggles	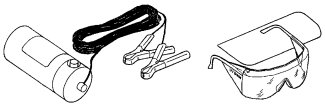	Power supply: DC 12 V (Battery terminal) For checking refrigerant leak when fluorescent dye is installed in A/C system Includes: UV lamp and UV safety goggles
(J-41447) HFC-134a (R-134a) fluorescent leak detection dye (Box of 24, 1/4 ounce bottles)	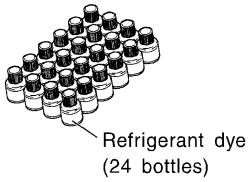	Application: For HFC-134a (R-134a) PAG oil Container: 1/4 ounce (7.4 cc) bottle (Includes self-adhesive dye identification labels for affixing to vehicle after charging system with dye.)

Tool number (SPX-North America No.) Tool name		Description
(J-41459) HFC-134a (R-134a) dye injector Use with J-41447, 1/4 ounce bottle	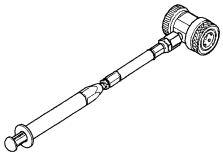 SHA440F	For injecting 1/4 ounce of fluorescent leak detection dye into A/C system
(J-43872) Refrigerant dye cleaner	 SHA441F	For cleaning dye spills

Commercial Service Tools

INFOID:0000000006032309

HFC-134a (R-134a) Service Tool and Equipment

- Never mix HFC-134a (R-134a) refrigerant and/or its specified lubricant with CFC-12 (R-12) refrigerant and/or its lubricant.
- Separate and non-interchangeable service equipment must be used for handling each type of refrigerant/lubricant.
- Refrigerant container fittings, service hose fittings and service equipment fittings (equipment which handles refrigerant and/or lubricant) are different between CFC-12 (R-12) and HFC-134a (R-134a). This is to avoid mixed use of the refrigerants/lubricant.
- Never use adapters that convert one size fitting to another: refrigerant/lubricant contamination occurs and compressor malfunction may result.

Tool name		Description
Recovery/recycling/recharging equipment (ACR4)	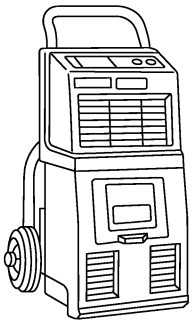 RJIA0195E	Function: Refrigerant recovery, recycling and recharging
Electrical leak detector	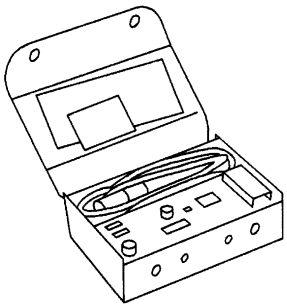 A/C leak detector SHA705EB	Power supply: DC 12 V (Cigarette lighter)

Tool name		Description
Manifold gauge set (with hoses and couplers)	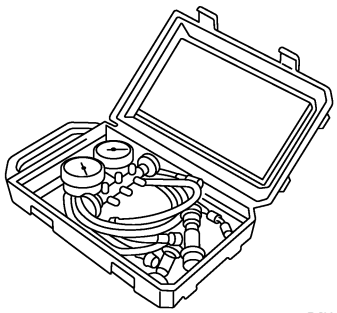 RJIA0196E	Identification: • The gauge face indicates HFC-134a (R-134a). Fitting size: Thread size • 1/2″-16 ACME
Service hoses • High-pressure side hose • Low-pressure side hose • Utility hose	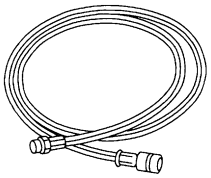 S-NT201	Hose color: • Low-pressure side hose: Blue with black stripe • High-pressure side hose: Red with black stripe • Utility hose: Yellow with black stripe or green with black stripe Hose fitting to gauge: • 1/2″-16 ACME
Service couplers • High-pressure side coupler • Low-pressure side coupler	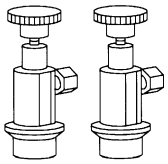 S-NT202	Hose fitting to service hose: M14 x 1.5 fitting is optional or permanently attached.
Refrigerant weight scale	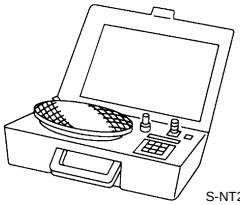 S-NT200	For measuring of refrigerant Fitting size: Thread size 1/2″-16 ACME
Vacuum pump (Including the isolator valve)	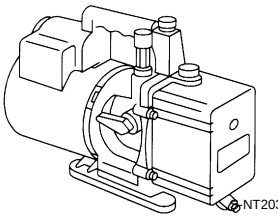 S-NT203	Capacity: • Air displacement: 4 CFM • Micron rating: 20 microns • Oil capacity: 482 g (17 oz.) Fitting size: Thread size • 1/2″-16 ACME

Sealant or/and Lubricant

INFOID:0000000006032310

HFC-134a (R-134a) Service Tool and Equipment

- Never mix HFC-134a (R-134a) refrigerant and/or its specified lubricant with CFC-12 (R-12) refrigerant and/or its lubricant.
- Separate and non-interchangeable service equipment must be used for handling each type of refrigerant/lubricant.
- Refrigerant container fittings, service hose fittings and service equipment fittings (equipment which handles refrigerant and/or lubricant) are different between CFC-12 (R-12) and HFC-134a (R-134a). This is to avoid mixed use of the refrigerants/lubricant.
- Never use adapters that convert one size fitting to another: refrigerant/lubricant contamination occurs and compressor malfunction may result.

Tool name		Description
HFC-134a (R-134a) refrigerant	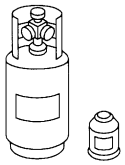 S-NT196	Container color: Light blue Container marking: HFC-134a (R-134a) Fitting size: Thread size • Large container 1/2″-16 ACME
UV Luminous Oil Type S (DH-PS)	S-NT197	Type: Polyalkylene glycol oil (PAG), type S (DH-PS) Application: HFC-134a (R-134a) swash plate compressors Capacity: 40 m ℓ (1.4 Imp fl oz.)

SYSTEM DESCRIPTION

COMPONENT PARTS

Component Parts Location

INFOID:0000000006032311

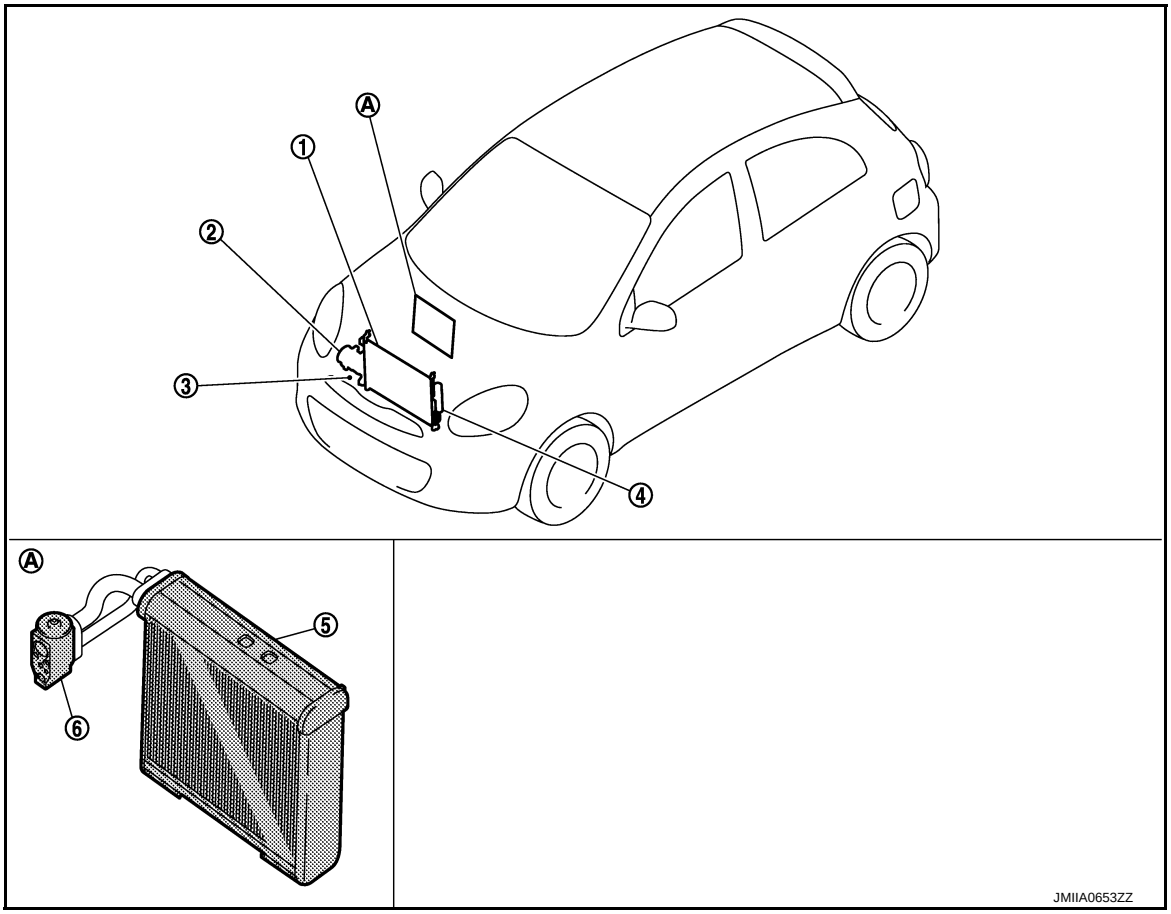

1. Condenser
2. Compressor
3. Refrigerant pressure sensor
4. Liquid tank
5. Evaporator
6. Expansion valve

A. Built-in heater & cooling unit assembly

Component Description

INFOID:0000000006032312

Component	Description
Evaporator	The mist form liquid refrigerant transforms to gas by evaporation by the air conveyed from blower motor. The air is cooled by the heat by evaporation.
Condenser	Cools refrigerant discharged from compressor, and transforms it to liquid refrigerant.
Compressor	Intakes, compresses, and discharges refrigerant, to circulate refrigerant inside the refrigerant cycle.
Refrigerant pressure sensor	Refer to EC-29, "Refrigerant Pressure Sensor" (for thailand) or EC-333, "Refrigerant Pressure Sensor" (except for thailand).
Liquid tank	Eliminates foreign matter in refrigerant, and stores temporarily liquid refrigerant.
Expansion valve	Transforms high-pressure liquid refrigerant to mist form low-pressure liquid refrigerant by drawing function.

SYSTEM

System Diagram

INFOID:0000000006032313

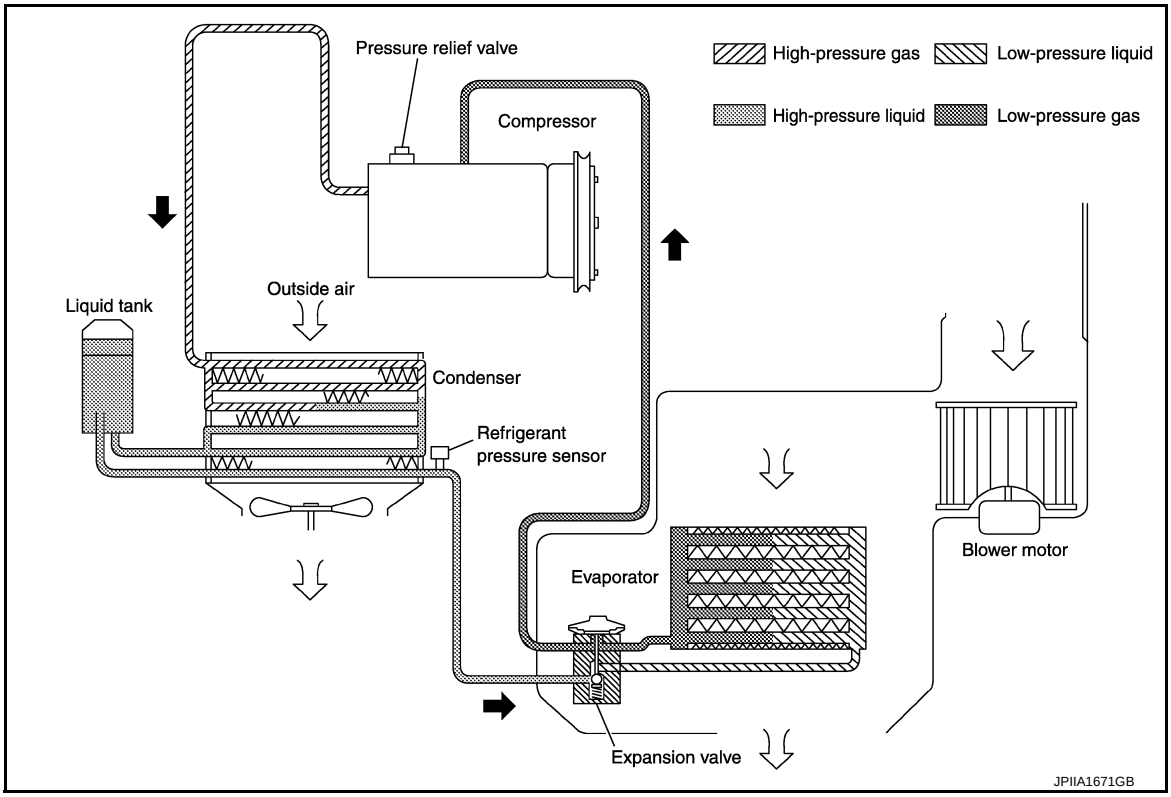

System Description

INFOID:0000000006032314

REFRIGERANT CYCLE

Refrigerant Flow

The refrigerant from the compressor, flows the condenser with liquid tank, the evaporator, and returns to the compressor. The refrigerant evaporation in the evaporator is controlled by an expansion valve.

Freeze Protection

Automatic air conditioner

- When intake sensor detects that evaporator surface temperature is 2°C (36°F) or less, A/C auto amp. requests BCM to turn the compressor OFF.
- BCM requests ECM to turn the compressor to OFF by the signal from A/C auto amp., and ECM makes A/C relay to OFF, and stops the compressor.

Manual air conditioner

- When thermo control amp. detects that evaporator surface temperature becomes 2°C (36°F) or less, BCM requests ECM to turn the compressor OFF, and stops the compressor.

REFRIGERANT SYSTEM PROTECTION

Refrigerant Pressure Sensor

- The refrigerant system is protected against excessively high- or low-pressures by the refrigerant pressure sensor, installed at the condenser exit. The refrigerant pressure sensor detects the pressure inside the refrigerant line and sends the voltage signal to the ECM if the system pressure rises above, or falls below the specifications.
- ECM turns the A/C relay to OFF and stops the compressor when the high-pressure side detected by refrigerant pressure sensor is following conditions;

- Approximately 3,120 kPa (31.2 bar, 31.8 kg/cm^2, 452 psi) or more (Engine speed is less than 1,500 rpm.)
- Approximately 2,740 kPa (27.4 bar, 27.9 kg/cm^2, 397 psi) or more (Engine speed is 1,500 rpm or more.)
- Approximately 120 kPa (1.2 bar, 1.2 kg/cm^2, 17 psi) or less

Pressure Relief Valve

The refrigerant system is also protected by a pressure relief valve, located in the rear head of the compressor. The release port on the pressure relief valve automatically opens and releases refrigerant into the atmosphere when the pressure of refrigerant in the system increases to an unusual level [more than 3,800 kPa (38 bar, 38.8 kg/cm^2, 551 psi)].

BASIC INSPECTION

DIAGNOSIS AND REPAIR WORKFLOW

Work Flow

INFOID:0000000006032315

OVERALL SEQUENCE

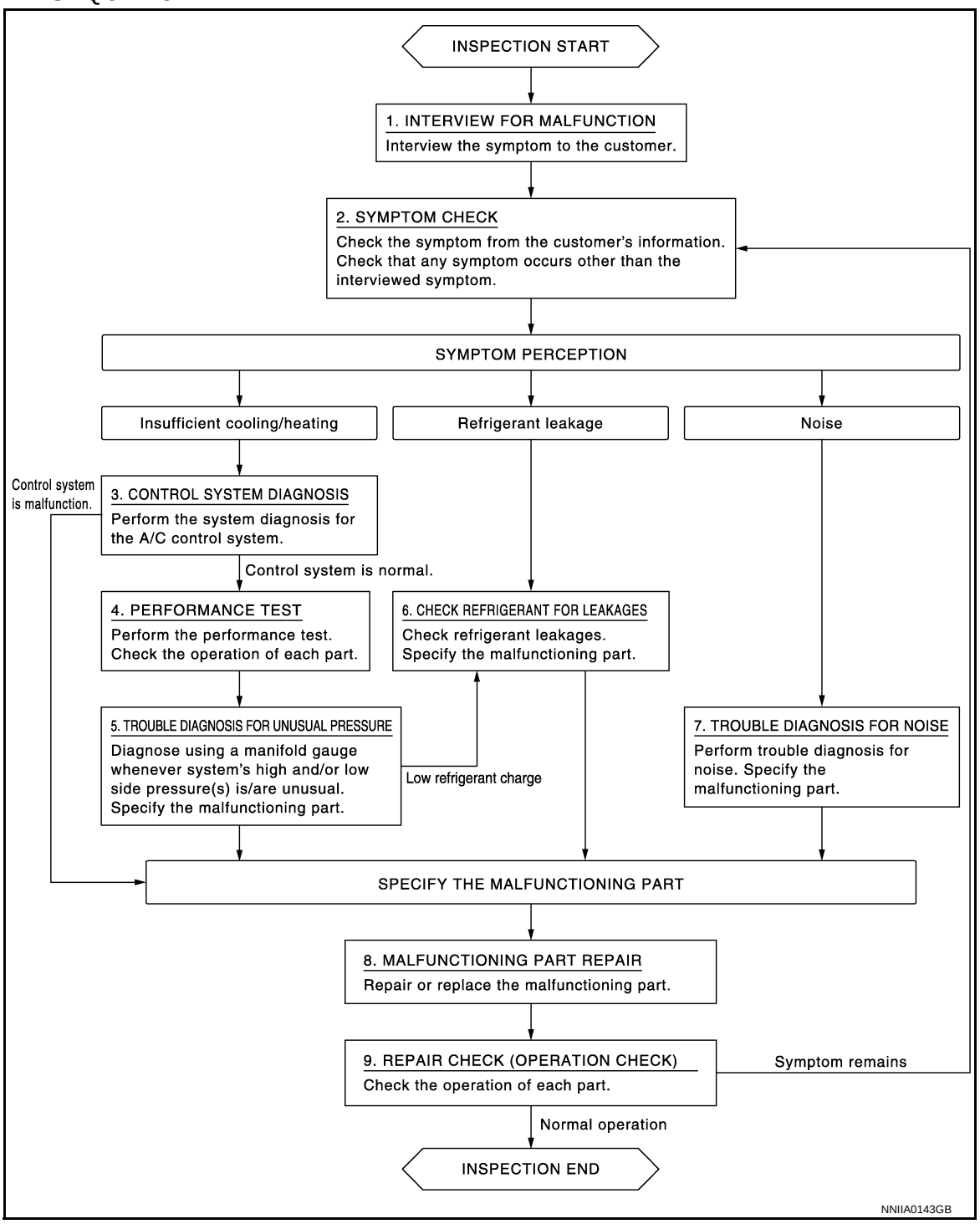

DETAILED FLOW

1. INTERVIEW FOR MALFUNCTION

Interview the symptom to the customer.

>> GO TO 2.

2. SYMPTOM CHECK

Check the symptom from the customer's information. Check that any symptom occurs other than the interviewed symptom.

Insufficient cooling/heating>>GO TO 3.
Refrigerant leakage>>GO TO 6.
Noise >> GO TO 7.

3. CONTROL SYSTEM DIAGNOSIS

Perform the system diagnosis for the A/C control system. Refer to HAC-36, "Work Flow" (AUTOMATIC AIR CONDITIONER) or HAC-97, "Work Flow" (MANUAL AIR CONDITIONER), HAC-136, "Work Flow" (HEATER AND VENTILATION).

Is A/C control system normal?

YES >> GO TO 4.
NO >> GO TO 8.

4. PERFORMANCE TEST

Perform the performance test. Check the operation of each part. Refer to HA-25, "Inspection".

>> GO TO 5.

5. TROUBLE DIAGNOSIS FOR UNUSUAL PRESSURE

Diagnose using a manifold gauge whenever system's high and/or low side pressure(s) is/are unusual. Specify the malfunctioning part. Refer to HA-27, "Symptom Table".

Low refrigerant charge>>GO TO 6.
Except above>>GO TO 8.

6. CHECK REFRIGERANT FOR LEAKAGES

Check refrigerant for leakages. Specify the malfunctioning part. Refer to HA-18, "Leak Test".

>> GO TO 8.

7. TROUBLE DIAGNOSIS FOR NOISE

Perform trouble diagnosis for noise. Specify the malfunctioning part. Refer to HA-29, "Symptom Table".

>> GO TO 8.

8. MALFUNCTION PART REPAIR

Repair or replace the malfunctioning part.

>> GO TO 9.

9. REPAIR CHECK (OPERATION CHECK)

Check the operation of each part.

Does it operate normally?

YES >> INSPECTION END
NO >> GO TO 2.

REFRIGERANT

Description

INFOID:0000000006032316

CONNECTION OF SERVICE TOOLS AND EQUIPMENT

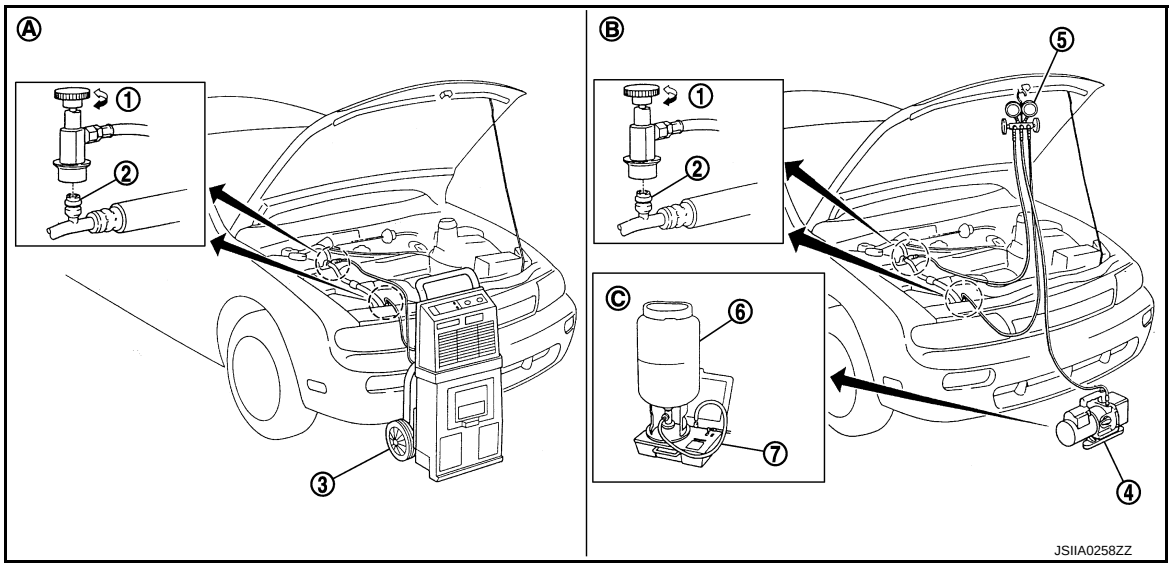

1. Shut-off valve	2. A/C service valve	3. Recovery/recycling/recharging equipment
4. Vacuum pump	5. Manifold gauge set	6. Refrigerant container (HFC-134a)
7. Weight scale		
A. Preferred (best) method	B. Alternative method	C. For charging

Leak Test

INFOID:0000000006032317

CHECK REFRIGERANT LEAKAGE USING FLUORESCENT LEAK DETECTION DYE

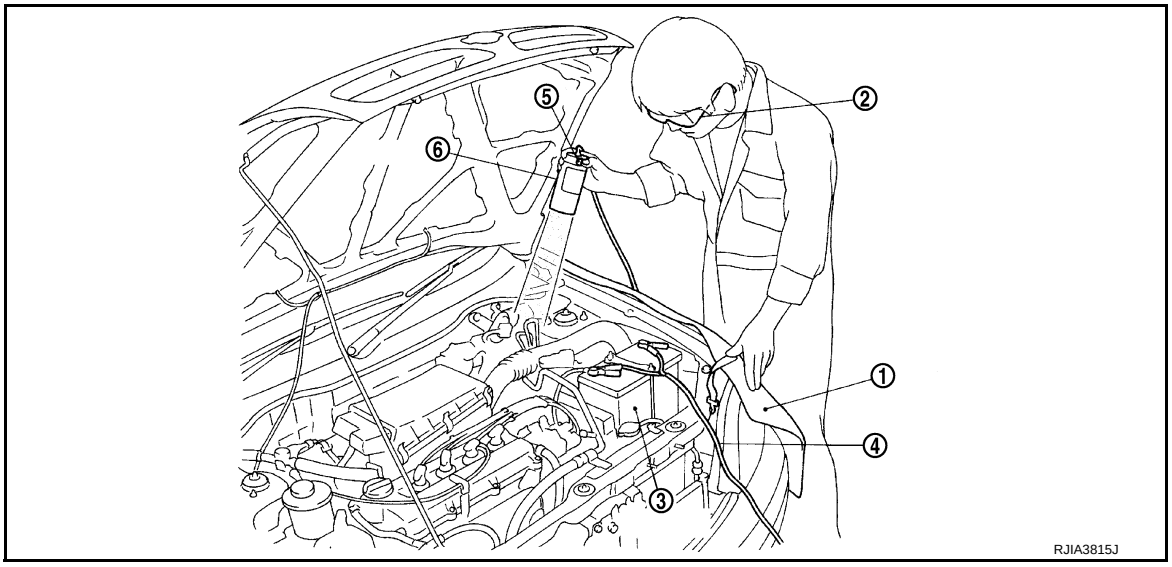

1. Install a fender cover (1).
2. Wear UV safety goggles (2) provided with refrigerant dye leak detection kit.
3. Connect power cable (4) of UV lamp (6) to positive and negative terminals of the battery (3).
4. Press UV lamp switch (5) and check A/C system for refrigerant leakage. (Where refrigerant leakage occurs, fluorescent leak detection dye appears in green color.)

   WARNING:

Never look directly into UV lamp light source.
NOTE:
- For continuous operating time of UV lamp, follow the manufacturer operating instructions.
- Illuminate piping joints from different angles using UV lamp and check that there is no leakage.
- Use a mirror in area that is difficult to see to check refrigerant leakage.
- Refrigerant leakage from evaporator can be detected by soaking cotton swab or a similar material with drain hose water and illuminating it using UV lamp.
- Dust, dirt, and packing materials adhesive used for condenser, evaporator, and other locations may fluoresce. Be careful not to misidentify leakage.

5. Repair or replace parts where refrigerant leakage occurs and wipe off fluorescent leak detection dye.
   NOTE:
   Completely wipe off fluorescent leak detection dye from gaps between parts, screw threads, and others using a cotton swab or similar materials.
6. Use a UV lamp to check that no fluorescent leak detection dye remains after finishing work.
   WARNING:
   Never look directly into UV lamp light source.
   NOTE:
   - For continuous operating time of UV lamp, follow the manufacturer operating instructions.
   - Dust, dirt, and packing materials adhesive used for condenser, evaporator, and other locations may fluoresce. Be careful not to misidentify leakage.

CHECK REFRIGERANT LEAKAGE USING ELECTRICAL LEAK DETECTOR

WARNING:
Never check refrigerant leakage while the engine is running.
CAUTION:
Be careful of the following items so that inaccurate checks or misidentifications are avoided.
- **Never allow refrigerant vapor, shop chemical vapors, cigarette smoke, or others around the vehicle.**
- **Always check refrigerant leakage in a low air flow environment so that refrigerant may not disperse when leakage occurs.**

1. Stop the engine.
2. Connect recovery/recycling/recharging equipment or manifold gauge set to A/C service valve.
3. Check that A/C refrigerant pressure is 345 kPa (3.45 bar, 3.52 kg/cm^2, 50 psi) or more when temperature is 16°C (61°F) or more. When pressure is lower than the specified value, recycle refrigerant completely and fill refrigerant to the specified level.
   NOTE:
   Leakages may not be detected if A/C refrigerant pressure is 345 kPa (3.45 bar, 3.52 kg/cm^2, 50 psi) or less when temperature is less than 16°C (61°F).
4. Clean area where refrigerant leakage check is performed, and check refrigerant leakage along all surfaces of pipe connections and A/C system components using electrical leak detector probe.
   CAUTION:
   - **Continue checking when a leakage is found. Always continue and complete checking along all pipe connections and A/C system components for additional leakage.**
   - **When a leakage is detected, clean leakage area using compressed air and check again.**
   - **When checking leakage of cooling unit inside, always clean inside of drain hose so that the probe surface may not be exposed to water or dirt.**

   NOTE:
   - Always check leakage starting from high-pressure side and continue to low-pressure side.
   - When checking leakage of cooling unit inside, operate blower fan motor for 15 minutes or more at the maximum fan speed while the engine is stopped, and then insert electrical leak detector probe into drain hose and hold for 10 minutes or more.
   - When disconnecting shut-off valve that is connected to A/C service valve, always evacuate remaining refrigerant so that misidentification can be avoided.
5. Repair or replace parts where refrigerant leakage is detected. (Leakage is detected but leakage area is unknown. GO TO 6.)
6. Start the engine and set A/C control in the following conditions.
   - A/C switch ON
   - Air flow: VENT (ventilation)
   - Intake door position: Recirculation

- Temperature setting: Full cold
- Fan speed: Maximum speed set

7. Run the engine at approximately 1,500 rpm for 2 minutes or more.
8. Stop the engine. Check again for refrigerant leakage. GO TO 4.

WARNING:
Be careful not to get burned when the engine is hot.
NOTE:
- Start refrigerant leakage check immediately after the engine is stopped.
- When refrigerant circulation is stopped, pressure on the low-pressure side rises gradually, and after this, pressure on the high-pressure side falls gradually.
- The higher the pressure is, the easier it is to find the refrigerant leakage.

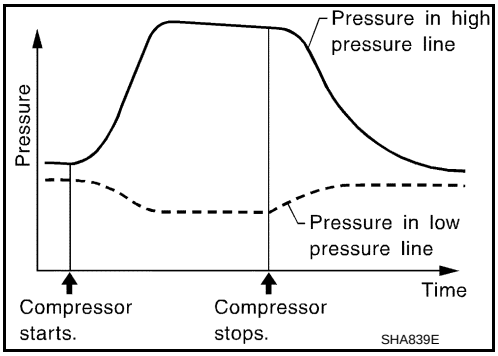

Recycle Refrigerant

INFOID:0000000006032318

WARNING:
- **Always use HFC-134a for A/C refrigerant. If CFC-12 is accidentally charged, compressor is damaged due to insufficient lubrication.**
- **Always observe and follow precautions described on refrigerant container. Incorrect handling may result in an explosion of refrigerant container, frostbite, or the loss of eyesight.**
- **Never breathe A/C refrigerant and lubricant vapor or mist. Exposure may irritate eyes, nose, or throat.**
- **Never allow HFC-134a to be exposed to an open flame or others because it generates poisonous gas when in contact with high temperature objects. Keep workshop well ventilated.**

1. Perform lubricant return operation. Refer to HA-22, "Perform Lubricant Return Operation". (If refrigerant or lubricant leakage is detected in a large amount, omit this step, and then GO TO 2.)
   CAUTION:
   Never perform lubricant return operation if a large amount of refrigerant or lubricant leakage is detected.
2. Check gauge pressure readings of recovery/recycling/recharging equipment. When remaining pressure exists, recycle refrigerant from high-pressure hose and low-pressure hose.
   NOTE:
   Follow manufacturer instructions for the handling or maintenance of the equipment. Never fill the equipment with non-specified refrigerant.
3. Remove A/C service valve cap from the vehicle.
4. Connect recovery/recycling/recharging equipment to A/C service valve.
5. Operate recovery/recycling/recharging equipment, and recycle refrigerant from the vehicle.
6. Evacuate air for 10 minutes or more to remove any remaining refrigerant integrated to compressor lubricant, etc.
7. Refrigerant recycle operation is complete.

Charge Refrigerant

INFOID:0000000006032319

WARNING:
- **Always use HFC-134a for A/C refrigerant. If CFC-12 is accidentally charged, compressor is damaged due to insufficient lubrication.**
- **Always observe and follow precautions described on refrigerant container. Incorrect handling may result in an explosion of refrigerant container, frostbite, or the loss of eyesight.**
- **Never breathe A/C refrigerant and lubricant vapor or mist. Exposure my irritate eyes, nose, or throat.**
- **Never allow HFC-134a to be exposed to an open flame or others because it generates poisonous gas when in contact with high temperature objects. Keep workshop well ventilated.**

1. Connect recovery/recycling/recharging equipment to the A/C service valve.

2. Operate recovery/recycling/recharging equipment, and evacuate air from A/C system for 25 minutes or more.
   CAUTION:
   Evacuate air for 15 minutes or more if the parts are replaced.
3. Check the airtightness of A/C system for 25 minutes or more. If pressure rises more than the specified level, charge A/C system with approximately 200 g (0.4 lb) refrigerant and check that there is no refrigerant leakage. Refer to HA-18, "Leak Test".
   CAUTION:
   Check the airtightness for 15 minutes or more if the parts are replaced.
4. If parts other than compressor are replaced, fill compressor lubricant according to parts that are replaced.
5. Charge the specified amount of refrigerant to A/C system.
6. Check that A/C system operates normally.
7. Disconnect recovery/recycling/recharging equipment. (Collect the refrigerant from the high-pressure hose and low-pressure hose of recovery/recycling/recharging equipment.)
8. Install A/C service valve cap.
9. Refrigerant charge is complete.

LUBRICANT

Description

INFOID:0000000006032320

MAINTENANCE OF LUBRICANT LEVEL

The compressor lubricant is circulating in the system together with the refrigerant. It is necessary to fill compressor with lubricant when replacing A/C system parts or when a large amount of refrigerant leakage is detected. It is important to always maintain lubricant level within the specified level. Otherwise, the following conditions may occur.

- Insufficient lubricant amount: Stuck compressor
- Excessive lubricant amount: Insufficient cooling (caused by insufficient heat exchange)

Name : UV Luminous Oil Type R

Inspection

INFOID:0000000006032321

If a compressor is malfunctioning (internal noise, insufficient cooling), check the compressor oil.

1. COMPRESSOR OIL JUDGMENT

1. Remove the compressor. Refer to HA-31, "COMPRESSOR : Removal and Installation".
2. Sample a compressor oil and judge on the figure.

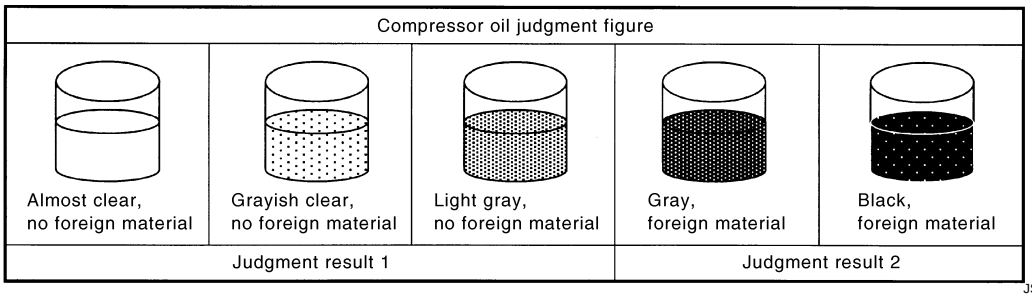

JSIIA0927GB

Judgement result 1>>Replace compressor only.
Judgement result 2>>Replace compressor and liquid tank.

Perform Lubricant Return Operation

INFOID:0000000006032322

CAUTION:
If a large amount of refrigerant or lubricant leakage is detected, never perform lubricant return operation.

1. Start the engine and set to the following conditions.
   - Engine speed: Idling to 1,200 rpm
   - A/C switch: ON
   - Fan speed: Maximum speed set
   - Intake door position: Recirculation
   - Temperature setting: Full cold
2. Perform lubricant return operation for approximately 10 minutes.
3. Stop the engine.
4. Lubricant return operation is complete.

Lubricant Adjusting Procedure for Components Replacement Except Compressor

INFOID:0000000006032323

Fill with lubricant for the amount that is calculated according to the following conditions.
Example: Lubricant amount to be added when replacing evaporator and liquid tank [m ℓ (Imp fl oz.)] = 35 (1.2) + 5 (0.2) + α

Conditions		Lubricant amount to be added to A/C system m ℓ (Imp fl oz.)
Replace evaporator		35 (1.2)
Replace condenser		15 (0.5)
Replace liquid tank		5 (0.2)
Refrigerant leakage is detected	Large amount leakage	30 (1.1)
	Small amount leakage	—
Lubricant amount that is recycled together with refrigerant during recycle operation		α

Lubricant Adjusting Procedure for Compressor Replacement

INFOID:0000000006032324

1. Drain lubricant from removed compressor and measure lubricant amount.
   1. Drain lubricant from high-pressure port (A) and low-pressure port (B) while rotating magnet clutch.

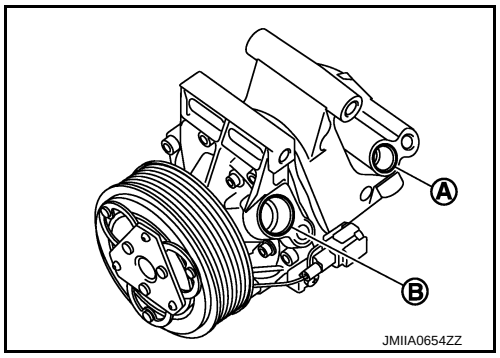

   2. Measure total amount of lubricant that is drained from removed compressor.
2. Drain lubricant from a new compressor that is calculated according to the following conditions.

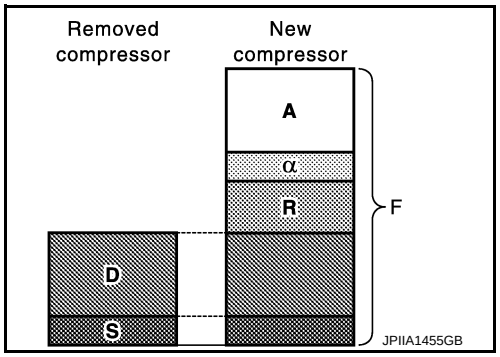

Amount to be drained (A) [m ℓ (Imp fl oz.)] = F – (D + S + R + α)

F : Lubricant amount that a new compressor contains [120 (4.2)]

D : Lubricant amount that is drained from removed compressor

S : Lubricant amount that remains inside of removed compressor [20 (0.7)]

R : Lubricant amount to be added according to components that are removed except compressor

α : Lubricant amount that is recycled together with refrigerant during recycle operation

CAUTION:
If lubricant amount that is drained from removed compressor is less than 60 m ℓ (2.1 Imp fl oz.), perform calculation by setting "D" as 40 m ℓ (1.4 Imp fl oz.).

Conditions	Lubricant amount to be added to A/C system m ℓ (Imp fl oz.)
Replace evaporator	35 (1.2)
Replace condenser	15 (0.5)
Replace liquid tank	5 (0.2)

Example: Lubricant amount to be drained from a new compressor when replacing compressor and liquid tank [m ℓ (Imp fl oz.)] [D = 60 (2.1), α = 5 (0.2)]

120 (4.2) – [60 (1.6) + 20 (0.7) + 5 (0.2) + 5 (0.2)] = 30 (1.0)

3. Install compressor and check the operation.

PERFORMANCE TEST

Inspection

INFOID:0000000006032325

INSPECTION PROCEDURE

1. Connect recovery/recycling/recharging equipment (for HFC-134a) or manifold gauge.
2. Start the engine, and set to the following condition.

Test condition

Surrounding condition		Indoors or in the shade (in a well-ventilated place)
Vehicle condition	Door	Closed
	Door glass	Full open
	Hood	Open
	Engine speed	Idle speed
A/C condition	Temperature control switch or dial	Full cold
	A/C switch	ON
	Air outlet	VENT (ventilation)
	Intake door position	Recirculation
	Fan speed	Maximum speed set

3. Maintain test condition until A/C system becomes stable. (Approximately 10 minutes)
4. Check that test results of “recirculating-to-discharge air temperature” and “ambient air temperature-to-operating pressure” are within the specified value.
5. When test results are within the specified value, inspection is complete.
   If any of test result is out of the specified value, perform diagnosis by gauge pressure. Refer to HA-27, "Symptom Table".

RECIRCULATING-TO-DISCHARGE AIR TEMPERATURE TABLE

Inside air (Recirculating air) at blower assembly inlet		Discharge air temperature from center ventilator °C (°F)
Relative humidity %	Air temperature °C (°F)	
50 – 60	20 (68)	4.7 – 6.7 (40 – 44)
	25 (77)	8.6 – 11.1 (47 – 52)
	30 (86)	12.6 – 15.6 (55 – 60)
	35 (95)	19.0 – 22.5 (66 – 73)
60 – 70	20 (68)	6.7 – 8.7 (44 – 48)
	25 (77)	11.1 – 13.6 (52 – 56)
	30 (86)	15.6 – 18.6 (60 – 65)
	35 (95)	22.5 – 26.0 (73 – 79)

AMBIENT AIR TEMPERATURE-TO-OPERATING PRESSURE TABLE

Fresh air		High-pressure (Discharge side) kPa (bar, kg/cm^2, psi)	Low-pressure (Suction side) kPa (bar, kg/cm^2, psi)
Relative humidity %	Air temperature °C (°F)		
50 – 70	25 (77)	909 – 1,112 (9.1 – 11.1, 9.2 – 11.3, 131.8 – 161.2)	159 – 194 (1.6 – 1.9, 1.6 – 2.0, 23.1 – 28.1)
	30 (86)	1,073 -– 1,312 (10.7 – 13.1, 10.9 – 13.4, 155.6 – 190.2)	211 – 259 (2.1 – 2.6, 2.2 – 2.6, 30.6 – 37.6)
	35 (95)	1,445 – 1,766 (14.5 – 17.7, 14.7 – 18.0, 209.5 – 256.1)	247 – 300 (2.5 – 3.0, 2.5 – 3.1, 35.8 – 43.5)
	40 (104)	1,650 – 2,017 (16.5 – 20.2, 16.8 – 20.6, 239.3 – 292.5)	290 – 355 (2.9 – 3.6, 3.0 – 3.6, 42.1 – 51.5)

SYMPTOM DIAGNOSIS

REFRIGERATION SYSTEM SYMPTOMS

Trouble Diagnosis For Unusual Pressure

INFOID:0000000006032326

Diagnose using a manifold gauge whenever system's high and/or low side pressure(s) is/are unusual. The marker above the gauge scale in the following tables indicates the standard (usual) pressure range. Refer to above table (Ambient air temperature-to-operating pressure table) since the standard (usual) pressure, however, differs from vehicle to vehicle.

Symptom Table

INFOID:0000000006032327

Gauge indication	Refrigerant cycle	Probable cause	Corrective action
Both high- and low-pressure sides are too high. 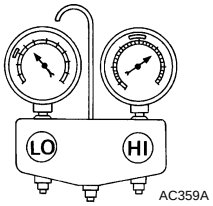	The pressure returns to normal soon after sprinkling water on condenser.	Overfilled refrigerant.	Collect all refrigerant, evacuate refrigerant cycle again, and then refill it with the specified amount of refrigerant.
	Air flow to condenser is insufficient.	Insufficient condenser cooling performance. • Poor fan rotation of radiator and condenser. • Improper installation of air guide. • Clogged or dirty condenser fins.	• Repair or replace malfunctioning parts. • Clean and repair condenser fins.
	When compressor is stopped, a high-pressure reading quickly drops by approximately 196 kPa (2 kg/cm^2, 28 psi). It then gradually decreases.	Air mixed in refrigerant cycle.	Collect all refrigerant, evacuate refrigerant cycle again, and then refill it with the specified amount of refrigerant.
	• Low-pressure pipe is cooler than the outlet of evaporator. • Low-pressure pipe is frosted.	Expansion valve opened too much (excessive flow of refrigerant).	Replace expansion valve.
High-pressure side is excessively high and low-pressure side is too low. 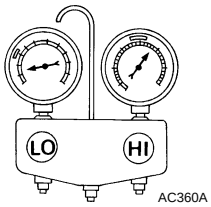	High-pressure pipe and upper side of condenser become hot, however, liquid tank does not become so hot.	Clogged or crushed high-pressure pipe located between compressor and condenser.	Repair or replace the malfunctioning parts.
High-pressure side is too low and low-pressure side is too high. 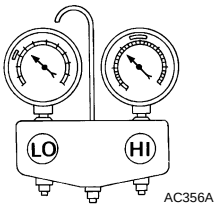	• The readings of both sides become equal soon after compressor operation stops. • There is no temperature difference between high- and low-pressure sides.	Malfunction in compressor system (insufficient compressor pressure operation). • Damage or breakage of valve. • Malfunctioning gaskets.	Replace compressor.

Gauge indication	Refrigerant cycle	Probable cause	Corrective action
Both high- and low-pressure sides are too low. 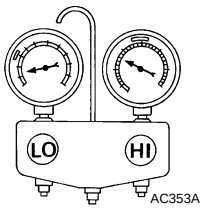	• The area around evaporator outlet does not become cold. • The area around evaporator inlet becomes frosted.	Clogged expansion valve. • Breakage of temperature sensor. • Clogging by foreign material.	Eliminate foreign material from expansion valve, or replace it.
	• There is a temperature difference between the areas around outlet and inlet pipes of liquid tank. • Liquid tank becomes frosted.	Malfunction in inner liquid tank (clogged strainer).	Replace liquid tank.
	Evaporator becomes frosted.	Clogged or crushed low-pressure pipe.	Repair or replace malfunctioning parts.
		Malfunction in intake sensor (AUTOMATIC AIR CONDITIONER) or thermo control amp. (MANUAL AIR CONDITIONER).	• Check intake sensor system. Refer to HAC-47, "Diagnosis Procedure" (AUTOMATIC AIR CONDITIONER). • Check thermo control amp. system. Refer to HAC-105, "Diagnosis Procedure" (MANUAL AIR CONDITIONER).
	There is a small temperature difference between the high and low pressure pipes for refrigerant cycle.	• Shortage of refrigerant. • Leakage of refrigerant.	• Check for leakage. • Collect all refrigerant, evacuate refrigerant cycle again, and then refill it with the specified amount of refrigerant.
Low-pressure side sometimes becomes negative. 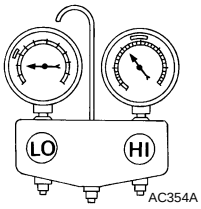	• Sometimes the area around evaporator outlet does not become cold. • Sometimes the area around evaporator inlet is frosted.	• Icing caused by the mixing of water in cooler cycle. • Deteriorated dryer in liquid tank.	• Collect all refrigerant. • Evacuate refrigerant cycle completely, and then refill it with the specified amount of refrigerant. At this time, always replace liquid tank.

NOISE

Symptom Table

INFOID:0000000006032328

Symptom	Noise source	Probable cause	Corrective action
Unusual noise from compressor when A/C is ON.	Inside of compressor	Wear, breakage, or clogging of foreign material in inner parts.	Check compressor oil. Refer to HA-22, "Inspection".
	Magnet clutch	Contact of clutch disc with pulley.	Check clearance between clutch disc and pulley. Refer to HA-32, "Inspection".
	Compressor body	Loosened compressor mounting bolts.	Check bolts for tightness. Refer to HA-30, "Exploded View".
Unusual noise from cooler piping.	Cooler piping (pipe and flexible hose)	Improper installation of clip and bracket.	Check the installation condition of the cooler piping. Refer to HA-33, "Exploded View".
Unusual noise from expansion valve when A/C is ON.	Expansion valve	Shortage of refrigerant.	• Check for leakage. • Collect all refrigerant, evacuate refrigerant cycle again, and then refill it with the specified amount of refrigerant.
		Wear, breakage, or clogging of foreign material in inner parts.	Eliminate foreign material from expansion valve, or replace it.
Unusual noise from belt.	—	Loosened belt	Check belt tension. Refer to EM-18, "Checking".
		Internal compressor parts get locked	Replace compressor.

REMOVAL AND INSTALLATION

COMPRESSOR

Exploded View

INFOID:0000000006032329

REMOVAL

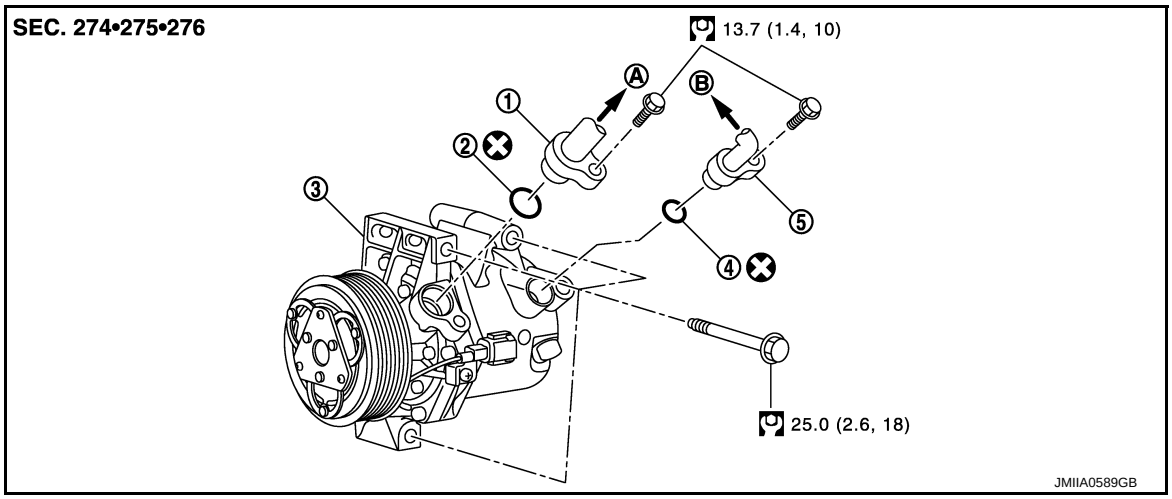

1.	Low-pressure flexible hose	2.	O-ring	3.	Compressor
4.	O-ring	5.	High-pressure flexible hose		
A.	To evaporator	B.	To condenser		

Refer to GI-4, "Components" for symbols in the figure.

DISASSEMBLY

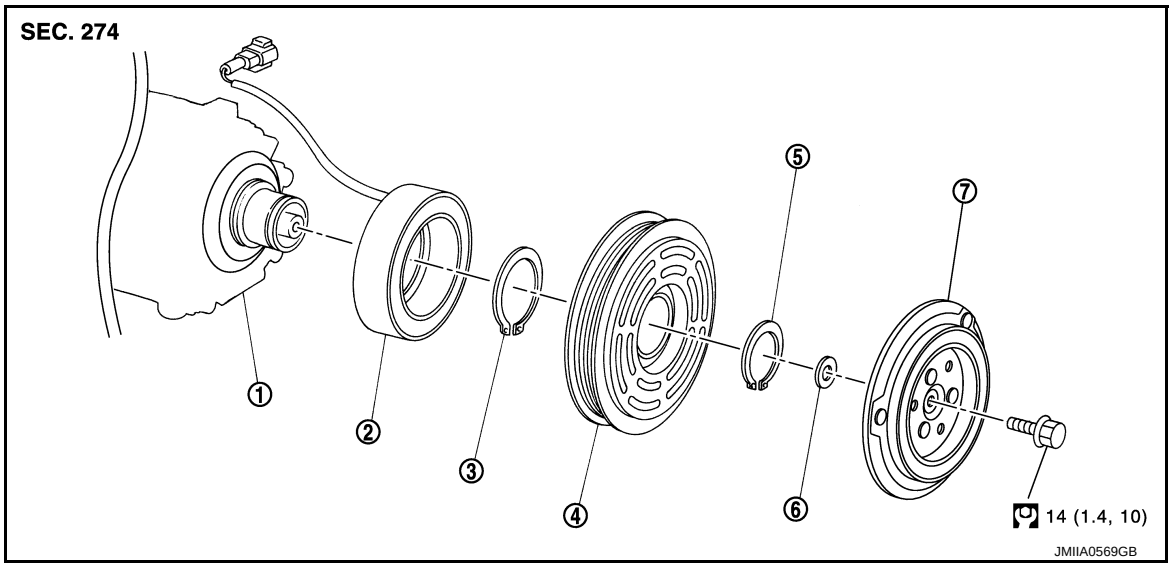

1.	Compressor unit	2.	Field coil	3.	Snap ring
4.	Pulley assembly	5.	Snap ring	6.	Shim
7.	Clutch disc				

Refer to GI-4, "Components" for symbols in the figure.

COMPRESSOR

COMPRESSOR : Removal and Installation

INFOID:0000000006032330

CAUTION:
Perform lubricant return operation before each refrigeration system disassembly. However, if a large amount of refrigerant or lubricant is detected, never perform lubricant return operation. Refer to HA-22, "Perform Lubricant Return Operation".

REMOVAL

1. Use a refrigerant collecting equipment (for HFC-134a) to discharge the refrigerant. Refer to HA-20, "Recycle Refrigerant".
2. Remove mounting bolts, and then disconnect low-pressure flexible hose and high-pressure flexible hose from the compressor.
   CAUTION:
   Cap or wrap the joint of the A/C piping and compressor with suitable material such as vinyl tape to avoid the entry of air.
3. Remove drive belt. Refer to EM-19, "Removal and Installation".
4. Disconnect compressor (magnet clutch) connector.
5. Remove mounting bolts, and then remove compressor form the vehicle.

INSTALLATION

Note the following items, and then install in the reverse order of removal.

CAUTION:
- **Replace O-rings with new ones. Then apply compressor oil to them when installing.**
- **Perform lubricant adjusting procedure before installing new compressor. Refer to HA-23, "Lubricant Adjusting Procedure for Compressor Replacement".**
- **Check for leakages when recharging refrigerant. Refer to HA-18, "Leak Test".**
- **Check tension of the drive belt after installing compressor. Refer to EM-18, "Checking".**

MAGNET CLUTCH

MAGNET CLUTCH : Removal and Installation of Compressor Clutch

INFOID:0000000006057762

REMOVAL

Overhaul

1. When removing center bolt, hold clutch disc with clutch disc wrench (SST:KV99232340) (A).

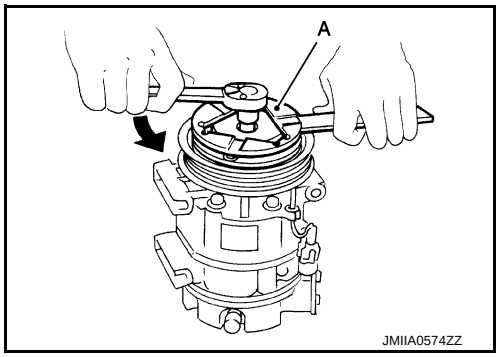

2. Remove clutch disc.
3. Remove snap ring using external snap ring pliers.
4. Position center pulley puller on the end of the drive shaft, and remove pulley assembly using any commercially available pulley puller.
   To prevent pulley groove from being deformed, puller claws should be positioned into the edge of the pulley assembly.
5. Disconnect harness connector from compressor unit.
6. Remove snap ring using external snap ring pliers, and then remove field coil.

INSTALLATION

1. Install field coil (1).

Be sure to align the coil's pin (2) with the hole in the compressor's front head.

2. Install field coil harness clip.

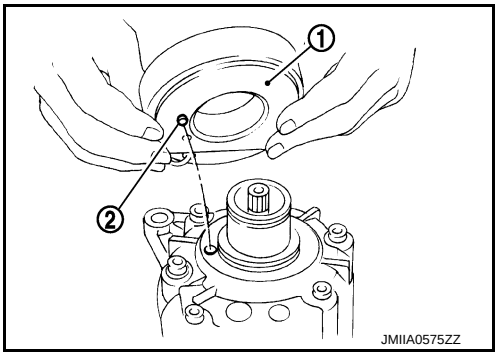

3. Install pulley assembly (1) using pulley installer (SST:KV99106200) (A) and a hand press, and then install snap ring (2) using snap ring pliers.

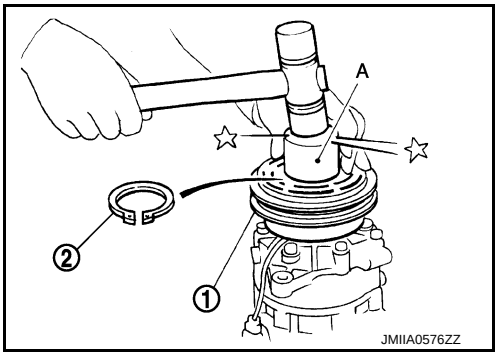

4. Install clutch disc on drive shaft, together with original shim(s). Press clutch disc down by hand.
5. Tighten center bolt to the specified torque while fixing clutch disc not to rotate using a clutch disc wrench (SST:KV99232340). After tightening the bolt, check that the pulley rotates smoothly.

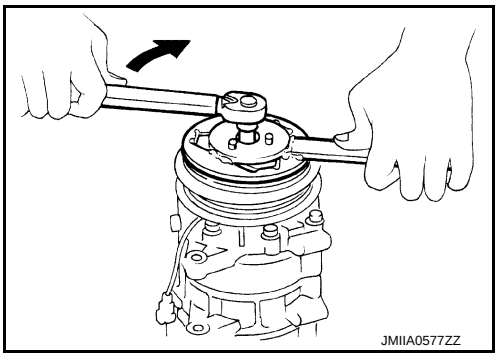

Break-in Operation

When replacing compressor clutch assembly, always perform the break-in operation, by engaging and disengaging the clutch approximately 30-times. Break-in operation increases the level of transmitted torque.

Inspection

INFOID:0000000006032331

CHECK DISC TO PULLEY CLEARANCE

Check the clearance (B) between pulley assembly (1) and clutch disc (2) along the entire periphery with a feeler gauge (A).

Clearance : Refer to HA-45, "Compressor".

Replace compressor if specified clearance is not obtained.

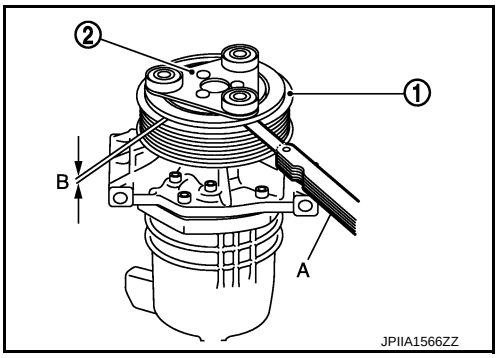

COOLER PIPE AND HOSE

Exploded View

INFOID:0000000006032332

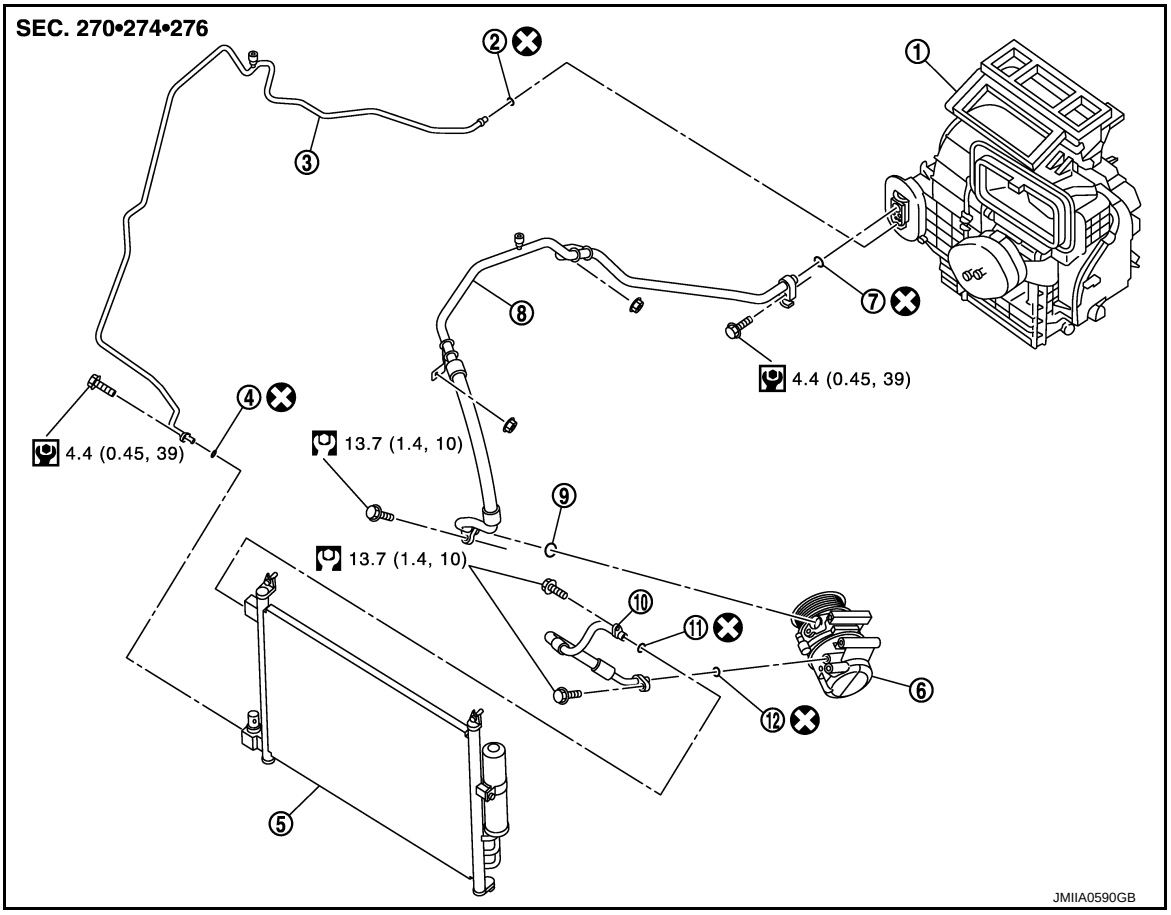

1.	A/C unit assembly	2.	O-ring	3.	High-pressure pipe
4.	O-ring	5.	Condenser	6.	Compressor
7.	O-ring	8.	Low-pressure flexible hose	9.	O-ring
10.	High-pressure flexible hose	11.	O-ring	12.	O-ring

Refer to GI-4, "Components" for symbols in the figure.

HIGH-PRESSURE FLEXIBLE HOSE

HIGH-PRESSURE FLEXIBLE HOSE : Removal and Installation

INFOID:0000000006032333

CAUTION:
Perform lubricant return operation before each refrigeration system disassembly. However, if a large amount of refrigerant or lubricant is detected, never perform lubricant return operation. Refer to HA-22, "Perform Lubricant Return Operation".

REMOVAL

1. Use a refrigerant collecting equipment (for HFC-134a) to discharge the refrigerant. Refer to HA-20, "Recycle Refrigerant".
2. Remove mounting bolt, and then disconnect high-pressure flexible hose from the condenser.
   CAUTION:
   Cap or wrap the joint of the A/C piping and condenser with suitable material such as vinyl tape to avoid the entry of air.
3. Remove mounting bolt, and then disconnect high-pressure flexible hose from the compressor.
   CAUTION:

Cap or wrap the joint of the A/C piping and compressor with suitable material such as vinyl tape to avoid the entry of air.

4. Remove high-pressure flexible hose from the vehicle.

INSTALLATION

Note the following items, and then install in the reverse order of removal.

CAUTION:

- **Replace O-rings with new ones. Then apply compressor oil to them when installing.**
- **Check for leakages when recharging refrigerant. Refer to HA-18, "Leak Test".**

LOW-PRESSURE FLEXIBLE HOSE

LOW-PRESSURE FLEXIBLE HOSE : Removal and Installation

INFOID:0000000006032334

CAUTION:

Perform lubricant return operation before each refrigeration system disassembly. However, if a large amount of refrigerant or lubricant is detected, never perform lubricant return operation. Refer to HA-22, "Perform Lubricant Return Operation".

REMOVAL

1. Use a refrigerant collecting equipment (for HFC-134a) to discharge the refrigerant. Refer to HA-20, "Recycle Refrigerant".
2. Remove the mounting bolt and nut installed in low-pressure flexible hose from the vehicle.
3. Remove mounting bolt, and then disconnect low-pressure flexible hose from expansion valve.
   CAUTION:
   Cap or wrap the joint of the A/C piping and expansion valve with suitable material such as vinyl tape to avoid the entry of air.
4. Remove mounting bolt, and then disconnect low-pressure flexible hose from the compressor.
   CAUTION:
   Cap or wrap the joint of the A/C piping and compressor with suitable material such as vinyl tape to avoid the entry of air.
5. Remove low-pressure flexible hose from the vehicle.

INSTALLATION

Note the following items, and then install in the reverse order of removal.

CAUTION:

- **Replace O-rings with new ones. Then apply compressor oil to them when installing.**
- **Check for leakages when recharging refrigerant. Refer to HA-18, "Leak Test".**

HIGH-PRESSURE PIPE

HIGH-PRESSURE PIPE : Removal and Installation

INFOID:0000000006032335

CAUTION:

Perform lubricant return operation before each refrigeration system disassembly. However, if a large amount of refrigerant or lubricant is detected, never perform lubricant return operation. Refer to HA-22, "Perform Lubricant Return Operation".

REMOVAL

1. Remove low-pressure flexible hose. Refer to HA-34, "LOW-PRESSURE FLEXIBLE HOSE : Removal and Installation".
2. Remove ground cable form the engine assembly.
3. Disconnect high-pressure pipe from expansion valve.
   CAUTION:
   Cap or wrap the joint of the A/C piping and expansion valve with suitable material such as vinyl tape to avoid the entry of air.
4. Remove mounting bolt, and then disconnect high-pressure pipe from the condenser.
   CAUTION:
   Cap or wrap the joint of the A/C piping and condenser with suitable material such as vinyl tape to avoid the entry of air.

5. Remove high-pressure pipe from the vehicle.

INSTALLATION

Note the following items, and then install in the reverse order of removal.

CAUTION:

- **Replace O-rings with new ones. Then apply compressor oil to them when installing.**
- **Check for leakages when recharging refrigerant. Refer to HA-18, "Leak Test".**

CONDENSER

Exploded View

INFOID:0000000006032336

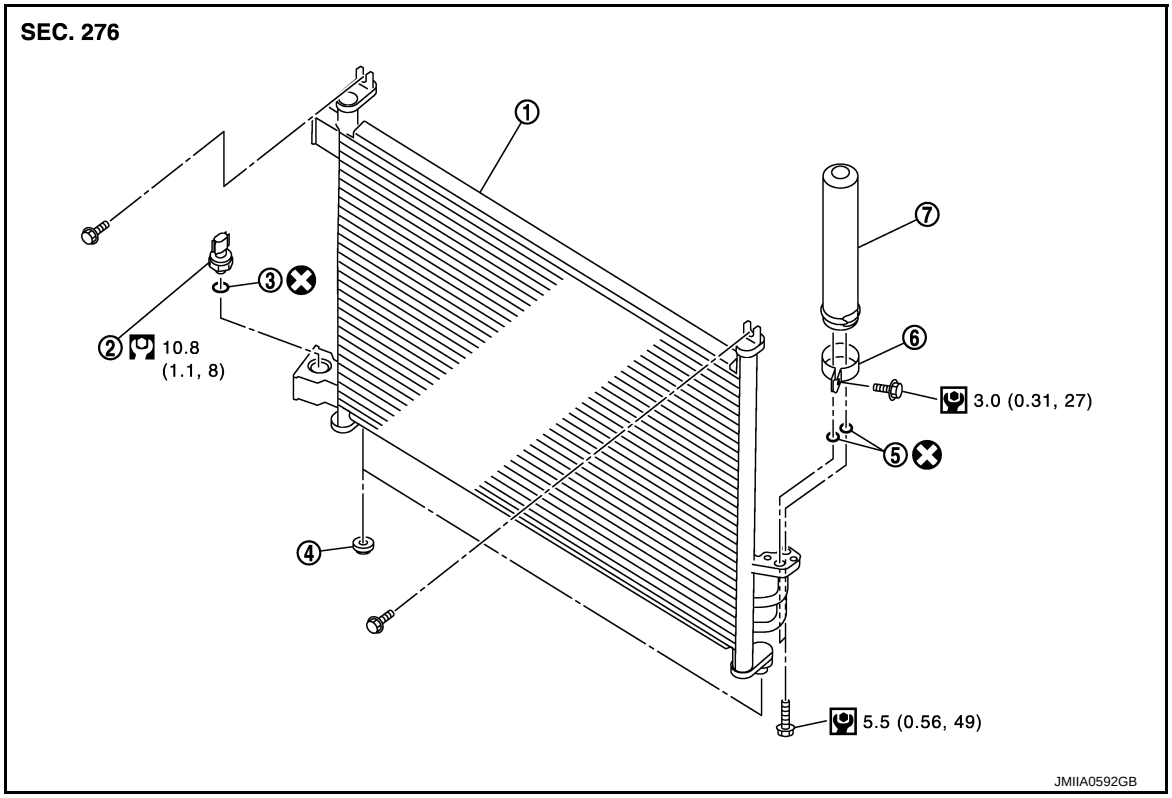

1. Condenser
2. Refrigerant pressure sensor
3. O-ring
4. Grommet
5. O-ring
6. Liquid tank bracket
7. Liquid tank

Refer to GI-4, "Components" for symbols in the figure.

CONDENSER

CONDENSER : Removal and Installation

INFOID:0000000006032337

CAUTION:
Perform lubricant return operation before each refrigeration system disassembly. However, if a large amount of refrigerant or lubricant is detected, never perform lubricant return operation. Refer to HA-22, "Perform Lubricant Return Operation".

REMOVAL

1. Use a refrigerant collecting equipment (for HFC-134a) to discharge the refrigerant. Refer to HA-20, "Recycle Refrigerant".
2. Remove the radiator core support upper. Refer to DLK-114, "Removal and Installation" (WITH I-KEY) or DLK-219, "Removal and Installation" (WITHOUT I-KEY).
3. Remove mounting bolt, and then disconnect high-pressure flexible hose from the condenser.
   CAUTION:
   Cap or wrap the joint of the A/C piping and condenser with suitable material such as vinyl tape to avoid the entry of air.
4. Remove mounting bolt, and then disconnect high-pressure pipe from the condenser.
   CAUTION:
   Cap or wrap the joint of the A/C piping and condenser with suitable material such as vinyl tape to avoid the entry of air.

5. Remove the condenser from the vehicle.
   CAUTION:
   Be careful not to damage core surface of condenser.

INSTALLATION

Note the following items, and then install in the reverse order of removal.

CAUTION:
- **Replace O-rings with new ones. Then apply compressor oil to them when installing.**
- **Perform lubricant adjusting procedure before installing new condenser. Refer to HA-23, "Lubricant Adjusting Procedure for Compressor Replacement".**
- **Check for leakages when recharging refrigerant. Refer to HA-18, "Leak Test".**

LIQUID TANK

LIQUID TANK : Removal and Installation

INFOID:0000000006032338

CAUTION:
Perform lubricant return operation before each refrigeration system disassembly. However, if a large amount of refrigerant or lubricant is detected, never perform lubricant return operation. Refer to HA-22, "Perform Lubricant Return Operation".

REMOVAL

1. Use a refrigerant collecting equipment (for HFC-134a) to discharge the refrigerant. Refer to HA-20, "Recycle Refrigerant".
2. Clean liquid tank and its surrounding area, and then remove dust and rust from liquid tank.
   CAUTION:
   Be sure to clean carefully.
3. Remove mounting bolts, and then remove liquid tank from the condenser.
   CAUTION:
   Cap or wrap the joint of the A/C piping and liquid tank with suitable material such as vinyl tape to avoid the entry of air.

INSTALLATION

Install liquid tank, and then install liquid tank bracket on condenser.

CAUTION:
- **Check that liquid tank bracket is securely installed at protrusion of condenser. (Check that liquid tank bracket does not move to a position below center of liquid tank.)**
- **Replace O-rings of the A/C piping with new ones. Then apply compressor oil to them when installing.**
- **Perform lubricant adjusting procedure before installing new liquid tank. Refer to HA-23, "Lubricant Adjusting Procedure for Compressor Replacement".**
- **Check for leakages when recharging refrigerant. Refer to HA-18, "Leak Test".**

REFRIGERANT PRESSURE SENSOR

REFRIGERANT PRESSURE SENSOR : Removal and Installation

INFOID:0000000006032339

CAUTION:
Perform lubricant return operation before each refrigeration system disassembly. However, if a large amount of refrigerant or lubricant is detected, never perform lubricant return operation. Refer to HA-22, "Perform Lubricant Return Operation".

REMOVAL

1. Use a refrigerant collecting equipment (for HFC-134a) to discharge the refrigerant. Refer to HA-20, "Recycle Refrigerant".
2. Clean refrigerant pressure sensor and its surrounding area, and then remove dust and rust from refrigerant pressure sensor.
   CAUTION:
   Be sure to clean carefully.
3. Disconnect refrigerant pressure sensor connector.
4. Use a adjustable wrench or other tool to hold the refrigerant pressure sensor mounting block, and then remove the refrigerant pressure sensor from the condenser.
   CAUTION:

- **Be careful not to damage liquid tank.**
- **Be careful not to damage core surface of condenser.**
- **Cap or wrap the joint of the condenser and liquid tank with suitable material such as vinyl tape to avoid the entry of air.**

INSTALLATION

Note the following items, and then install in the reverse order of removal.

CAUTION:

- **Replace O-ring with new one. Then apply compressor oil to them when installing.**
- **Check for leakages when recharging refrigerant. Refer to HA-18, "Leak Test".**

A/C UNIT ASSEMBLY

Exploded View

INFOID:0000000006032340

REMOVAL

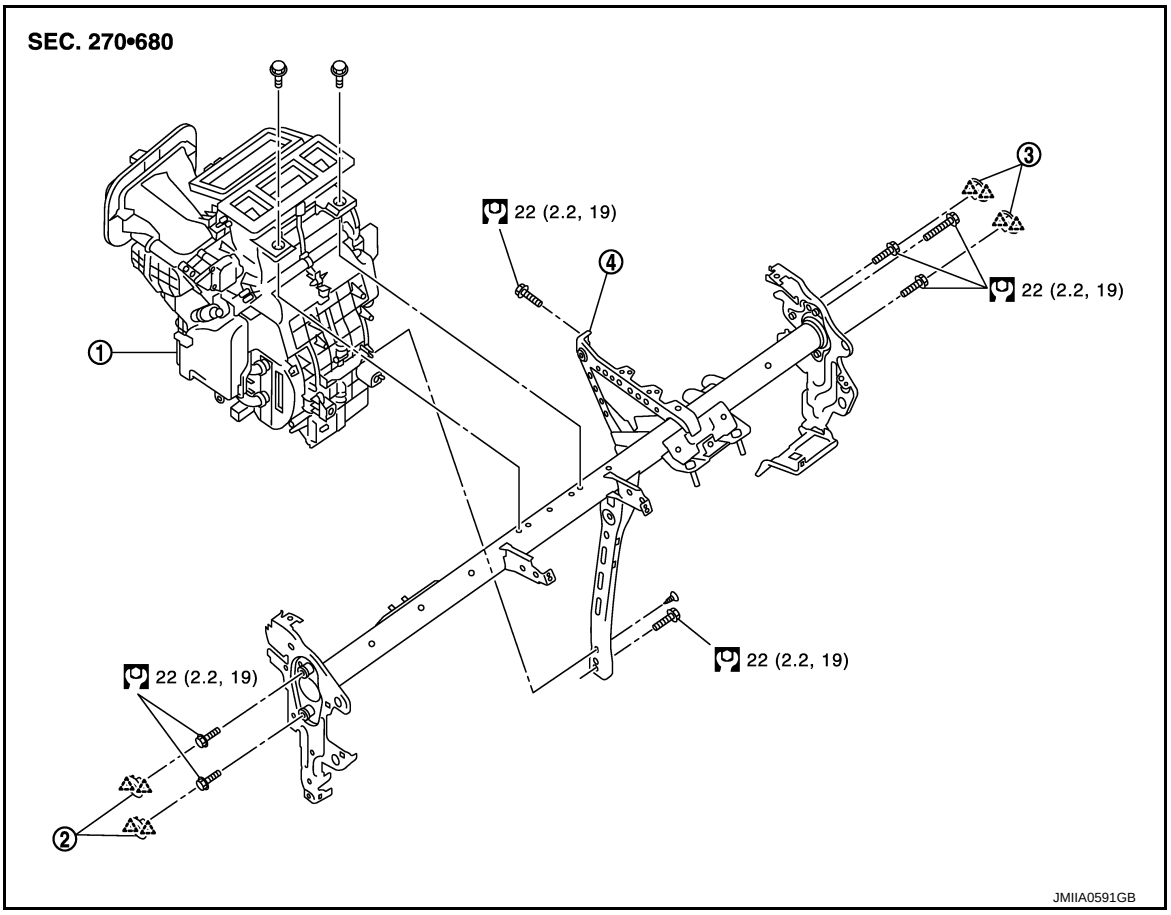

1. A/C unit assembly
2. Cap
3. Cap
4. Steering member

Refer to GI-4, "Components" for symbols in the figure.

DISASSEMBLY

Heater & cooling unit

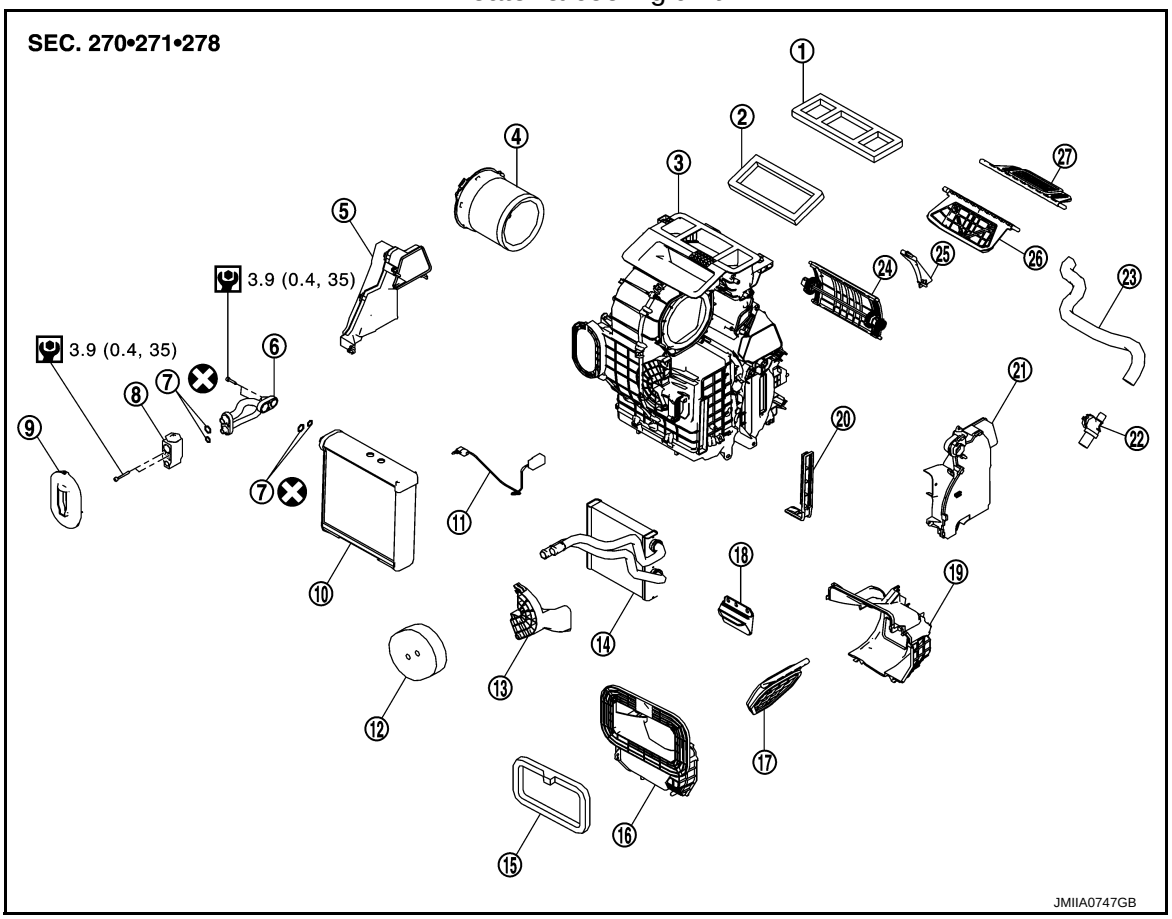

1.	Packing	2.	Packing	3.	A/C unit case assembly
4.	Blower motor	5.	Foot duct RH	6.	Evaporator pipe assembly
7.	O-ring	8.	Expanrion valve	9.	Gromet
10.	Evaporator	11.	Intake sensor	12.	Packing
13.	Heater pipe cover	14.	Heater core	15.	Packing
16.	Front intake case	17.	Intake door	18.	Sub intake door
19.	Rear intake case	20.	Filter cover	21.	Foot duct LH
22.	Aspirator	23.	Aspirator hose	24.	Air mix door
25.	Center plate	26.	Foot door	27.	Ventilator door

Refer to GI-4, "Components" for symbols in the figure.

Heater unit

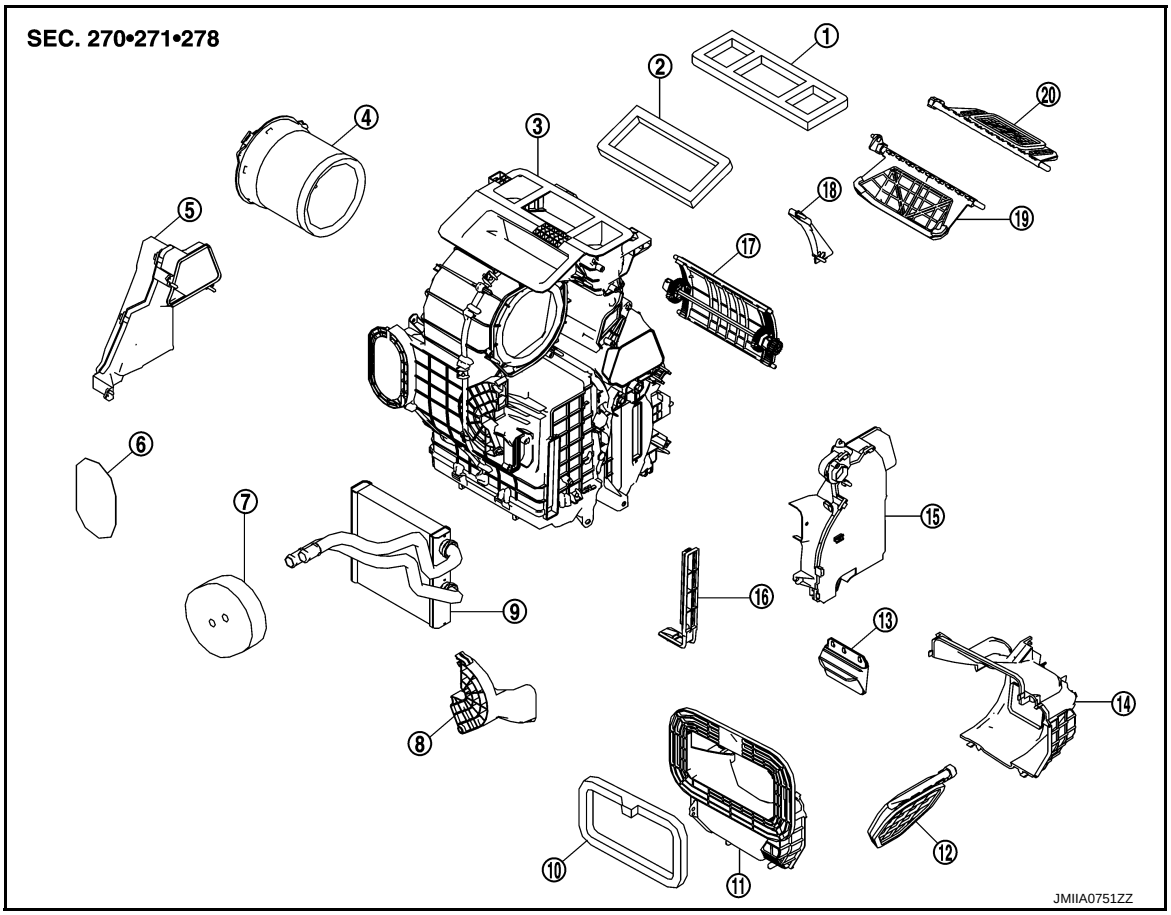

1. Packing	2. Packing	3. Heater unit case assembly
4. Blower motor	5. Foot duct RH	6. Patch
7. Packing	8. Heater pipe flange	9. Heater core
10. Packing	11. Front intake case	12. Intake door
13. Sub intake door	14. Rear intake case	15. Foot duct LH
16. Filter cover	17. Air mix door	18. Center plate
19. Foot door	20. Ventilator door	

Refer to GI-4, "Components" for symbols in the figure.

Ventilation unit

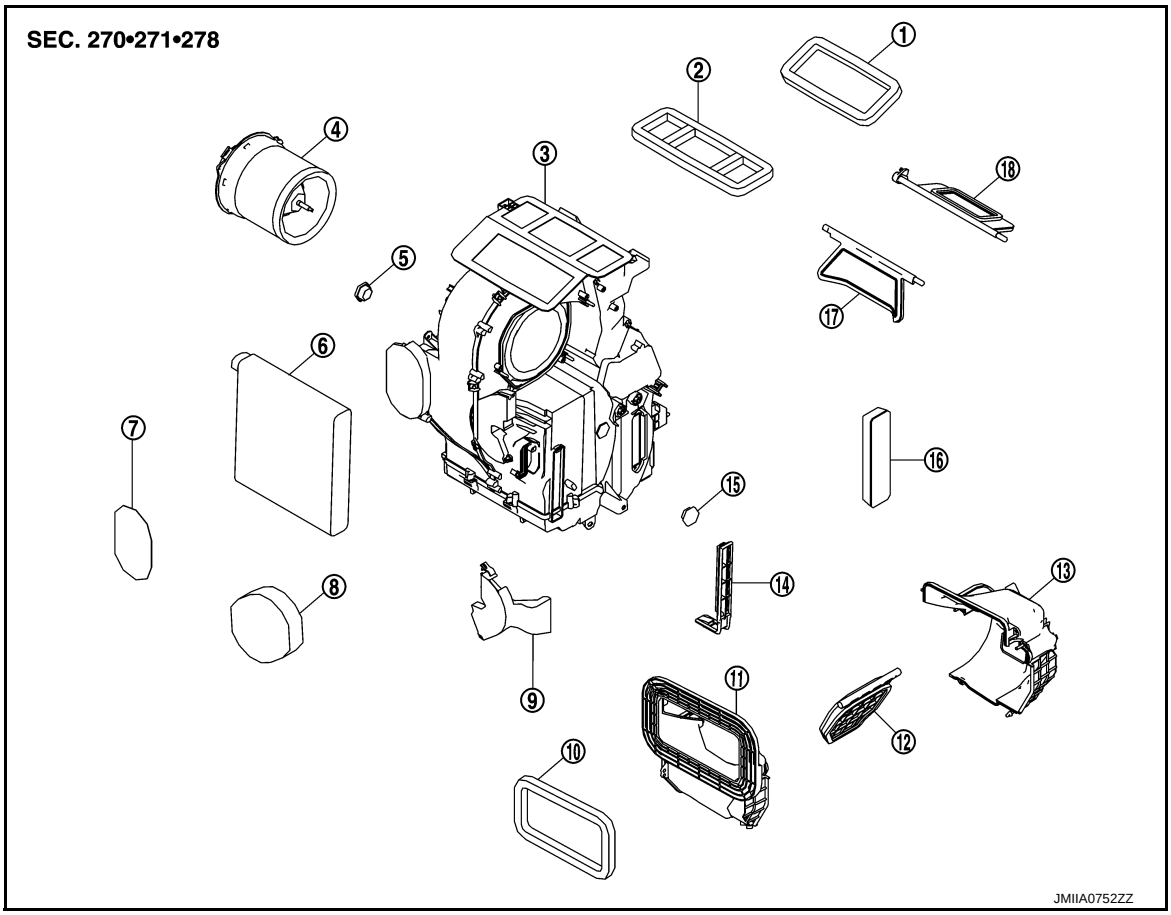

1. Packing	2. Packing	3. Ventilation unit case assembly
4. Blower motor	5. Cap	6. EVAP dummy
7. Patch	8. Patch	9. Heater pipe flange
10. Packing	11. Front intake door case	12. Intake door
13. Rear intake door case	14. Filter cover	15. Cap
16. Heater cover	17. Foot door	18. Ventilator door

Refer to GI-4, "Components" for symbols in the figure.

A/C UNIT ASSEMBLY

A/C UNIT ASSEMBLY : Removal and Installation

INFOID:0000000006032343

CAUTION:
Perform lubricant return operation before each refrigeration system disassembly. However, if a large amount of refrigerant or lubricant is detected, never perform lubricant return operation. Refer to HA-22, "Perform Lubricant Return Operation".

REMOVAL

1. Use a refrigerant collecting equipment (for HFC-134a) to discharge the refrigerant. Refer to HA-20, "Recycle Refrigerant". (If equipped)
2. Drain engine coolant from cooling system. Refer to CO-9, "Draining". (If equipped)
3. Remove front wiper drive assembly. Refer to WW-54, "Removal and Installation".
4. Remove mounting bolt, and then disconnect low-pressure flexible hose and high-pressure pipe from expansion valve. Refer to HA-34, "LOW-PRESSURE FLEXIBLE HOSE : Removal and Installation" and HA-34, "HIGH-PRESSURE PIPE : Removal and Installation". (If equipped)
   CAUTION:
   Cap or wrap the joint of the A/C piping and expansion valve with suitable material such as vinyl tape to avoid the entry of air.

5. Remove clamps, and then disconnect heater hoses from A/C unit assembly. (If equipped)
   CAUTION:
   - **Some coolant may spill when heater hoses are disconnected.**
   - **Close off the coolant inlet and outlet on the heater core (2 locations) with shop cloths.**
6. Move steering column assembly to a position where it dose not inhibit work. Refer to ST-11, "Removal and Installation".
7. Disconnect drain hose from A/C unit assembly.
8. Disconnect the harness connectors and clips required to remove the steering member, and then move the vehicle harness to the position without hindrance for work.
9. Remove the BCM mounting screws.
10. Remove the J/B mounting screws.
11. Remove ground bolts.
12. Remove mounting bolts, and then remove steering member and A/C unit assembly from the vehicle.
13. Remove mounting bolts, and then remove A/C unit assembly from the steering member.

INSTALLATION

Note the following items, and then install in the reverse order of removal.

CAUTION:
- **Replace O-rings with new ones. Then apply compressor oil to them when installing.**
- **Check for leakages when recharging refrigerant. Refer to HA-18, "Leak Test".**

NOTE:
Refer to CO-10, "Refilling" when filling radiator with engine coolant.

EVAPORATOR

EVAPORATOR : Removal and Installation

INFOID:0000000006032344

REMOVAL

1. Remove A/C unit assembly. Refer to HA-42, "A/C UNIT ASSEMBLY : Removal and Installation".
2. Disassemble A/C unit assembly, and then remove evaporator assembly.
3. Remove intake sensor from evaporator assembly. (automatic air conditioner)
4. Remove thermo control amp. from evaporator assembly. (manual air conditioner)
5. Remove mounting bolts, and then remove evaporator.

INSTALLATION

Installation is basically the reverse order of removal.

CAUTION:
- **Replace O-rings with new ones. Then apply compressor oil to them when installing.**
- **When install the intake sensor (automatic air conditioner) or the thermo control amp. (manual air conditioner), set the same position before replacement.**
- **Never rotate the bracket insertion part when removing and installing the intake sensor (automatic air conditioner) or the thermo control amp. (manual air conditioner).**
- **Perform lubricant adjusting procedure after installing new evaporator. Refer to HA-22, "Lubricant Adjusting Procedure for Components Replacement Except Compressor".**

HEATER CORE

HEATER CORE : Removal and Installation

INFOID:0000000006032345

REMOVAL

1. Remove instrumetn panel assembly. Refer to IP-13, "Removal and Installation".
2. Remove heater packing.
3. Remove heater flange.
4. Remove foot duct LH. Refer to VTL-6, "FOOT DUCT : Removal and Installation".
5. Remove mounting screw, and then remove bracket.
6. Remove heater core from A/C unit assembly.

INSTALLATION

Note the following items, and then install in the reverse order of removal.

NOTE:

Refer to CO-10, "Refilling" when filling radiator with engine coolant.

EXPANSION VALVE

EXPANSION VALVE : Removal and Installation

INFOID:0000000006053276

CAUTION:

Perform lubricant return operation before each refrigeration system disassembly. However, if a large amount of refrigerant or lubricant is detected, never perform lubricant return operation. Refer to HA-22, "Perform Lubricant Return Operation".

REMOVAL

1. Use a refrigerant collecting equipment (for HFC-134a) to discharge the refrigerant. Refer to HA-20, "Recycle Refrigerant".
2. Remove A/C unit assembly. Refer to HA-42, "A/C UNIT ASSEMBLY : Removal and Installation".
3. Remove gromet.
4. Remove mounting bolts, and then remove expansion valve.

   CAUTION:

   Cap or wrap the joint of the evaporator and expansion valve with suitable material such as vinyl tape to avoid the entry of air.

INSTALLATION

Note the following items, and then install in the reverse order of removal.

CAUTION:

- **Replace O-rings with new ones. Then apply compressor oil to them when installing.**
- **Check for leakages when recharging refrigerant. Refer to HA-18, "Leak Test".**

SERVICE DATA AND SPECIFICATIONS (SDS)

SERVICE DATA AND SPECIFICATIONS (SDS)

Compressor

INFOID:0000000006032348

Model		CALSONIC KANSEI make CR-10
Type		Vane rotary
Displacement cm^3 (cu in)/rev	Maximum	96 (5.9)
Direction of rotation		Clockwise (viewed from clutch)
Drive belt		Poly V
Disc to pulley clearance mm (in)	Standard	0.3 – 0.6 (0.012 – 0.024)

Lubricant

INFOID:0000000006032349

Name		UV Luminous Oil Type R (DH-PR)
Capacity m ℓ (US fl oz, Imp fl oz)	Total in system	120 (4.1, 4.2)
	Compressor (service part) charging amount	120 (4.1, 4.2)

Refrigerant

INFOID:0000000006032350

Type	HFC-134a (R-134a)
Capacity kg (lb)	0.45 (1.0)

Engine Idling Speed

INFOID:0000000006032351

Refer to EC-315, "Idle Speed" (for thailand) or EC-527, "Idle Speed" (except for thailand).

Belt Tension

INFOID:0000000006032352

Refer to EM-18, "Checking".

SECTION HAC

HEATER & AIR CONDITIONING CONTROL SYSTEM

CONTENTS

AUTOMATIC AIR CONDITIONER

PRECAUTION 5

PRECAUTIONS 5
Precaution for Supplemental Restraint System (SRS) "AIR BAG" and "SEAT BELT PRE-TENSIONER" 5
Precaution Necessary for Steering Wheel Rotation after Battery Disconnect 5

SYSTEM DESCRIPTION 7

COMPONENT PARTS 7

AUTOMATIC AIR CONDITIONING SYSTEM 7
AUTOMATIC AIR CONDITIONING SYSTEM : Component Parts Location 7
AUTOMATIC AIR CONDITIONING SYSTEM : Component Description 7

A/C UNIT ASSEMBLY 8
A/C UNIT ASSEMBLY : Air Mix Door Motor 8
A/C UNIT ASSEMBLY : Aspirator 8
A/C UNIT ASSEMBLY : Blower Motor 9
A/C UNIT ASSEMBLY : Intake Door Motor 9
A/C UNIT ASSEMBLY : Intake Sensor 9
A/C UNIT ASSEMBLY : Mode Door Motor 10
A/C UNIT ASSEMBLY : Power Transistor 10

COMPRESSOR 10
COMPRESSOR : Magnet Clutch 10
Ambient Sensor 10
A/C Auto Amp. 11
In-vehicle Sensor 11
Sunload Sensor 11

SYSTEM 13
System Diagram 13
System Description 13
Air Flow Control 13
Air Inlet Control 15
Air Outlet Control 15
Compressor Control 15
Door Control 16
Temperature Control 19

OPERATION 20
Switch Name and Function 20

DIAGNOSIS SYSTEM (A/C AUTO AMP.) 22
Diagnosis Description 22

DIAGNOSIS SYSTEM (BCM) (WITH INTELLIGENT KEY SYSTEM) 26

COMMON ITEM 26
COMMON ITEM : CONSULT-III Function (BCM - COMMON ITEM) 26

AIR CONDITIONER 27
AIR CONDITIONER : CONSULT-III Function (BCM - AUTO AIR CONDITIONER) 27

DIAGNOSIS SYSTEM (BCM) (WITHOUT INTELLIGENT KEY SYSTEM) 28

COMMON ITEM 28
COMMON ITEM : CONSULT-III Function (BCM - COMMON ITEM) 28

AIR CONDITIONER 28
AIR CONDITIONER : CONSULT-III Function (BCM - AUTO AIR CONDITIONER) 29

ECU DIAGNOSIS INFORMATION 30

A/C AUTO AMP. 30
Reference Value 30

ECM, IPDM E/R, BCM 33
List of ECU Reference 33

WIRING DIAGRAM 34

AUTOMATIC AIR CONDITIONING SYSTEM 34

Wiring Diagram 34

BASIC INSPECTION 36

DIAGNOSIS AND REPAIR WORK FLOW 36
Work Flow 36

OPERATION INSPECTION 39
Description & Inspection 39

SYSTEM SETTING 41
Temperature Setting Trimmer 41
Foot Position Setting Trimmer 41
Inlet Port Memory Function 42

DTC/CIRCUIT DIAGNOSIS 43

AMBIENT SENSOR 43
Diagnosis Procedure 43
Component Inspection 44

IN-VEHICLE SENSOR 45
Diagnosis Procedure 45
Component Inspection 46

INTAKE SENSOR 47
Diagnosis Procedure 47
Component Inspection 48

SUNLOAD SENSOR 49
Diagnosis Procedure 49
Component Inspection 50

AIR MIX DOOR MOTOR 51
Diagnosis Procedure 51

MODE DOOR MOTOR 53
Diagnosis Procedure 53

INTAKE DOOR MOTOR 55
Diagnosis Procedure 55

BLOWER MOTOR 57
Component Function Check 57
Diagnosis Procedure 57
Component Inspection 58

MAGNET CLUTCH 60
Component Function Check 60
Diagnosis Procedure 60

A/C ON SIGNAL 61
Component Function Check 61
Diagnosis Procedure 61

BLOWER FAN ON SIGNAL 63
Component Function Check 63
Diagnosis Procedure 63

POWER SUPPLY AND GROUND CIRCUIT 65

A/C AUTO AMP. 65
A/C AUTO AMP. : Diagnosis Procedure 65

A/C AUTO AMP. 67
Component Function Check 67
Diagnosis Procedure 67

SYMPTOM DIAGNOSIS 68

AUTOMATIC AIR CONDITIONER SYSTEM ... 68
Diagnosis Chart By Symptom 68

INSUFFICIENT COOLING 69
Description 69
Diagnosis Procedure 69

INSUFFICIENT HEATING 71
Description 71
Diagnosis Procedure 71

COMPRESSOR DOSE DOT OPERATE 72
Description 72
Diagnosis Procedure 72

MEMORY FUNCTION DOES NOT OPERATE.. 74
Description 74
Inspection Procedure 74

REMOVAL AND INSTALLATION 75

A/C CONTROL (A/C AUTO AMP.) 75
Removal and Installation 75

AMBIENT SENSOR 76
Removal and Installation 76

IN-VEHICLE SENSOR 77
Removal and Installation 77

SUNLOAD SENSOR 78
Removal and Installation 78

INTAKE SENSOR 79
Exploded View 79
Removal and Installation 79

REFRIGERANT PRESSURE SENSOR 80
Exploded View 80
Removal and Installation 80

POWER TRANSISTOR 81
Exploded View 81
Removal and Installation 81

DOOR MOTOR 82
Exploded View 82

INTAKE DOOR MOTOR 82
INTAKE DOOR MOTOR : Removal and Installation 82

MODE DOOR MOTOR 82
MODE DOOR MOTOR : Removal and Installation... 82

AIR MIX DOOR MOTOR 83

AIR MIX DOOR MOTOR : Removal and Installation 83

MANUAL AIR CONDITIONER

PRECAUTION 84

PRECAUTIONS 84
Precaution for Supplemental Restraint System (SRS) "AIR BAG" and "SEAT BELT PRE-TENSIONER" 84
Precaution Necessary for Steering Wheel Rotation after Battery Disconnect 84

SYSTEM DESCRIPTION 86

COMPONENT PARTS 86

MANUAL AIR CONDITIONING SYSTEM 86
MANUAL AIR CONDITIONING SYSTEM : Component Part Location 86
MANUAL AIR CONDITIONING SYSTEM : Component Description 86

A/C UNIT ASSEMBLY 86
A/C UNIT ASSEMBLY : Blower Fan Resistor 87
A/C UNIT ASSEMBLY : Blower Motor 87
A/C UNIT ASSEMBLY : Thermo Control Amp. 87

COMPRESSOR 87
COMPRESSOR : Magnet Clutch 87

SYSTEM 88
System Diagram 88
System Description 88
Compressor Control 88
Door Control 89

OPERATION 91
Switch Name and Function 91

DIAGNOSIS SYSTEM (BCM) 92

COMMON ITEM 92
COMMON ITEM : CONSULT-III Function (BCM - COMMON ITEM) 92

AIR CONDITIONER 92
AIR CONDITIONER : CONSULT-III Function 93

ECU DIAGNOSIS INFORMATION 94

ECM, BCM 94
List of ECU Reference 94

WIRING DIAGRAM 95

MANUAL AIR CONDITIONING SYSTEM 95
Wiring Diagram 95

BASIC INSPECTION 97

DIAGNOSIS AND REPAIR WORKFLOW 97
Work Flow 97

OPERATION INSPECTION 99
Description & Inspection 99

DTC/CIRCUIT DIAGNOSIS 101

BLOWER MOTOR 101
Diagnosis Procedure 101
Component Inspection 102

MAGNET CLUTCH 104
Component Function Check 104
Diagnosis Procedure 104

A/C SWITCH 105
Description 105
Component Function Check 105
Diagnosis Procedure 105

BLOWER FAN ON SIGNAL 108
Component Function Check 108
Diagnosis Procedure 108

SYMPTOM DIAGNOSIS 110

MANUAL AIR CONDITIONER SYSTEM 110
Diagnosis Chart By Symptom 110

INSUFFICIENT COOLING 111
Description 111
Diagnosis Procedure 111

INSUFFICIENT HEATING 112
Description 112
Diagnosis Procedure 112

COMPRESSOR DOSE DOT OPERATE 113
Description 113
Diagnosis Procedure 113

REMOVAL AND INSTALLATION 115

A/C CONTROL 115
Exploded View 115
Removal and Installation 115

THERMO CONTROL AMPLIFIER 116
Exploded View 116
Removal and Installation 116

REFRIGERANT PRESSURE SENSOR 117
Exploded View 117
Removal and Installation 117

BLOWER FAN RESISTOR 118
Exploded View 118
Removal and Installation 118

DOOR CABLE 119
Exploded View 119

INTAKE DOOR CABLE 119
INTAKE DOOR CABLE : Removal and Installation 119

INTAKE DOOR CABLE : Adjustment 119

MODE DOOR CABLE 120
MODE DOOR CABLE : Removal and Installation..120
MODE DOOR CABLE : Adjustment 120

AIR MIX DOOR CABLE 120
AIR MIX DOOR CABLE : Removal and Installation ..120
AIR MIX DOOR CABLE : Adjustment 121

HEATER AND VENTILATION

PRECAUTION 122

PRECAUTIONS 122
Precaution for Supplemental Restraint System (SRS) "AIR BAG" and "SEAT BELT PRE-TENSIONER" 122
Precaution Necessary for Steering Wheel Rotation after Battery Disconnect 122

SYSTEM DESCRIPTION 124

COMPONENT PARTS 124

HEATER AND VENTILATION CONTROL SYSTEM 124
HEATER AND VENTILATION CONTROL SYSTEM : Component Part Location 124
HEATER AND VENTILATION CONTROL SYSTEM : Component Description 124

HEATER AND VENTILATION UNIT ASSEMBLY ..124
HEATER AND VENTILATION UNIT ASSEMBLY : Blower Fan Resistor 125
HEATER AND VENTILATION UNIT ASSEMBLY : Blower Motor 125

SYSTEM 126
System Diagram 126
System Description 126

OPERATION 128
Switch Name and Function 128

DIAGNOSIS SYSTEM (BCM) 130

COMMON ITEM 130
COMMON ITEM : CONSULT-III Function (BCM - COMMON ITEM) 130

AIR CONDITIONER 130
AIR CONDITIONER : CONSULT-III Function 131

ECU DIAGNOSIS INFORMATION 132

BCM 132
List of ECU Reference 132

WIRING DIAGRAM 133

HEATER AND VENTILATION CONTROL SYSTEM 133
Wiring Diagram 133

BASIC INSPECTION 136

DIAGNOSIS AND REPAIR WORKFLOW 136
Work Flow 136

OPERATION INSPECTION 138
Description & Inspection 138

DTC/CIRCUIT DIAGNOSIS 139

BLOWER MOTOR 139
Diagnosis Procedure 139
Component Inspection 140

BLOWER FAN ON SIGNAL 142
Component Function Check 142
Diagnosis Procedure 142

SYMPTOM DIAGNOSIS 144

HEATER AND VENTILATION CONTROL SYSTEM 144
Diagnosis Chart By Symptom 144

INSUFFICIENT HEATING 145
Description 145
Diagnosis Procedure 145

REMOVAL AND INSTALLATION 146

HEATER CONTROL 146
Exploded View 146
Removal and Installation 146

BLOWER FAN RESISTOR 147
Exploded View 147
Removal and Installation 147

DOOR CABLE 148
Exploded View 148

INTAKE DOOR CABLE 148
INTAKE DOOR CABLE : Removal and Installation . 148
INTAKE DOOR CABLE : Adjustment 148

MODE DOOR CABLE 149
MODE DOOR CABLE : Removal and Installation. 149
MODE DOOR CABLE : Adjustment 149

AIR MIX DOOR CABLE 149
AIR MIX DOOR CABLE : Removal and Installation . 149
AIR MIX DOOR CABLE : Adjustment 150

PRECAUTION

PRECAUTIONS

Precaution for Supplemental Restraint System (SRS) "AIR BAG" and "SEAT BELT PRE-TENSIONER"

INFOID:0000000006024081

The Supplemental Restraint System such as “AIR BAG” and “SEAT BELT PRE-TENSIONER”, used along with a front seat belt, helps to reduce the risk or severity of injury to the driver and front passenger for certain types of collision. This system includes seat belt switch inputs and dual stage front air bag modules. The SRS system uses the seat belt switches to determine the front air bag deployment, and may only deploy one front air bag, depending on the severity of a collision and whether the front occupants are belted or unbelted.
Information necessary to service the system safely is included in the “SRS AIR BAG” and “SEAT BELT” of this Service Manual.

WARNING:

- **To avoid rendering the SRS inoperative, which could increase the risk of personal injury or death in the event of a collision that would result in air bag inflation, all maintenance must be performed by an authorized NISSAN/INFINITI dealer.**
- **Improper maintenance, including incorrect removal and installation of the SRS, can lead to personal injury caused by unintentional activation of the system. For removal of Spiral Cable and Air Bag Module, see the “SRS AIR BAG”.**
- **Do not use electrical test equipment on any circuit related to the SRS unless instructed to in this Service Manual. SRS wiring harnesses can be identified by yellow and/or orange harnesses or harness connectors.**

PRECAUTIONS WHEN USING POWER TOOLS (AIR OR ELECTRIC) AND HAMMERS

WARNING:

- **When working near the Air Bag Diagnosis Sensor Unit or other Air Bag System sensors with the ignition ON or engine running, DO NOT use air or electric power tools or strike near the sensor(s) with a hammer. Heavy vibration could activate the sensor(s) and deploy the air bag(s), possibly causing serious injury.**
- **When using air or electric power tools or hammers, always switch the ignition OFF, disconnect the battery, and wait at least 3 minutes before performing any service.**

Precaution Necessary for Steering Wheel Rotation after Battery Disconnect

INFOID:0000000006024082

NOTE:

- Before removing and installing any control units, first turn the push-button ignition switch to the LOCK position, then disconnect both battery cables.
- After finishing work, confirm that all control unit connectors are connected properly, then re-connect both battery cables.
- Always use CONSULT-III to perform self-diagnosis as a part of each function inspection after finishing work. If a DTC is detected, perform trouble diagnosis according to self-diagnosis results.

For vehicle with steering lock unit, if the battery is disconnected or discharged, the steering wheel will lock and cannot be turned.
If turning the steering wheel is required with the battery disconnected or discharged, follow the operation procedure below before starting the repair operation.

OPERATION PROCEDURE

1. Connect both battery cables.
   NOTE:
   Supply power using jumper cables if battery is discharged.
2. Turn the push-button ignition switch to ACC position.
   (At this time, the steering lock will be released.)
3. Disconnect both battery cables. The steering lock will remain released with both battery cables disconnected and the steering wheel can be turned.
4. Perform the necessary repair operation.

5. When the repair work is completed, re-connect both battery cables. With the brake pedal released, turn the push-button ignition switch from ACC position to ON position, then to LOCK position. (The steering wheel will lock when the push-button ignition switch is turned to LOCK position.)
6. Perform self-diagnosis check of all control units using CONSULT-III.

SYSTEM DESCRIPTION

COMPONENT PARTS

AUTOMATIC AIR CONDITIONING SYSTEM

AUTOMATIC AIR CONDITIONING SYSTEM : Component Parts Location

INFOID:0000000006024012

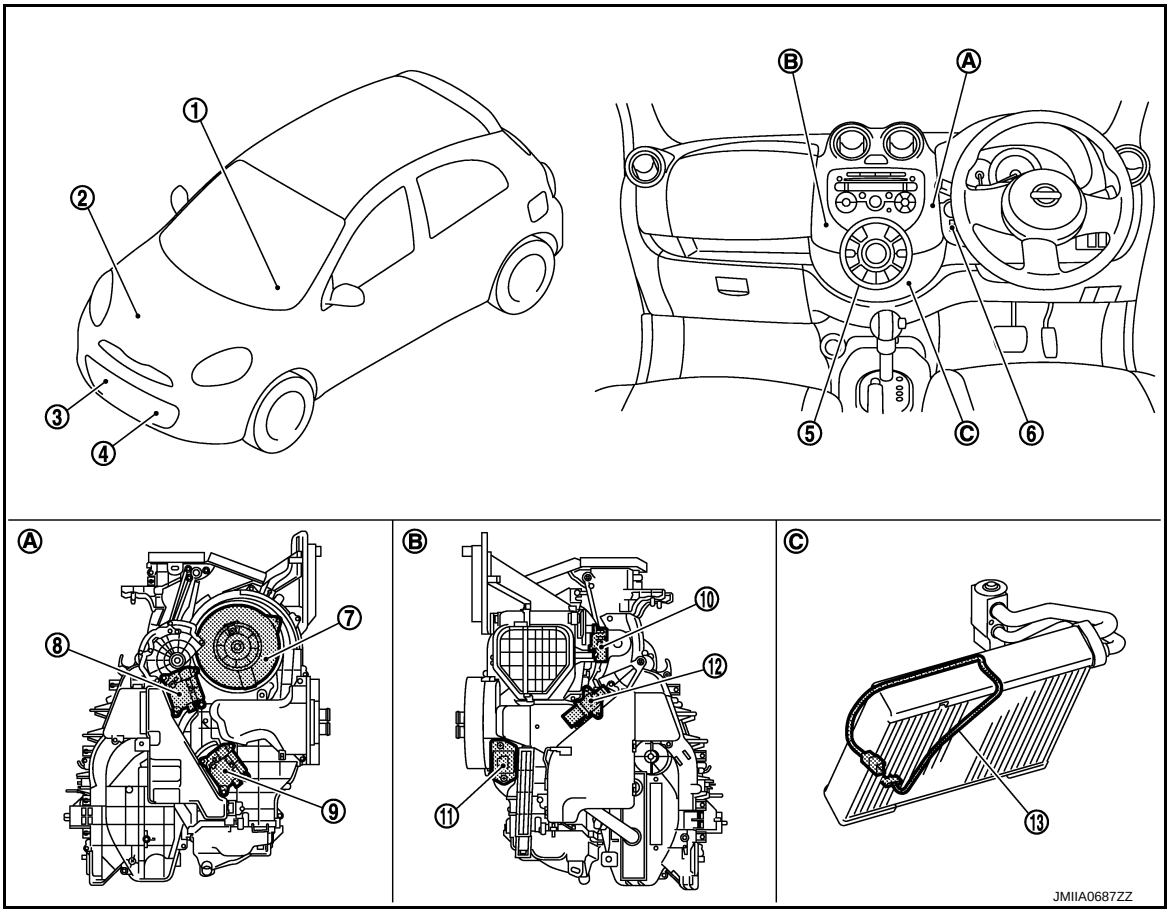

1. Sunload sensor	2. Magnet clutch	3. Refrigerant pressure sensor
4. Ambient sensor	5. A/C control (A/C auto amp.)	6. In-vehicle sensor
7. Blower motor	8. Mode door motor	9. Air mix door motor
10. Intake door motor	11. Fan control amp.	12. Intake sensor
A. Located in the right side of A/C unit assembly	B. Located in left side of A/C unit assembly	C. Located on the evaporator

AUTOMATIC AIR CONDITIONING SYSTEM : Component Description

INFOID:0000000006024013

Component	Description
Sunload sensor	HAC-11, "Sunload Sensor"
Ambient sensor	HAC-10, "Ambient Sensor"
Magnet clutch	HAC-10, "COMPRESSOR : Magnet Clutch"
Refrigerant pressure sensor	XX-XX, "*****"
A/C control (A/C auto amp.)	HAC-11, "A/C Auto Amp."
In-vehicle sensor	HAC-11, "In-vehicle Sensor"
Blower motor	HAC-9, "A/C UNIT ASSEMBLY : Blower Motor"

Component	Description
Air mix door motor	HAC-8, "A/C UNIT ASSEMBLY : Air Mix Door Motor"
Power transistor	HAC-9, "A/C UNIT ASSEMBLY : Blower Motor"
Intake sensor	HAC-9, "A/C UNIT ASSEMBLY : Intake Sensor"
Mode door motor	HAC-10, "A/C UNIT ASSEMBLY : Mode Door Motor"
Intake door motor	HAC-9, "A/C UNIT ASSEMBLY : Intake Door Motor"

A/C UNIT ASSEMBLY

A/C UNIT ASSEMBLY : Air Mix Door Motor

INFOID:0000000006024035

- The air mix door motor (1) is installed to the A/C unit assembly.
- The step motor system is adopted for air mix door motor.
- When a drive signal is input from auto amp. to door motor, a step motor built into the door the door motor rotates according to the drive signal, and then stops at the position of target door.

⇦ : Vehicle front

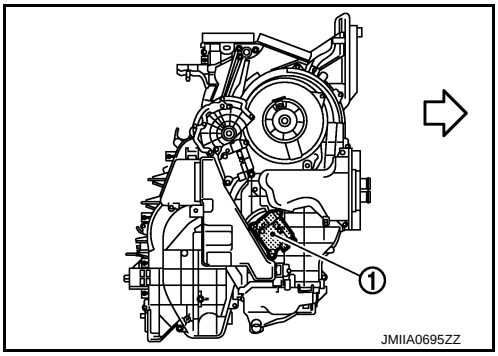

A/C UNIT ASSEMBLY : Aspirator

INFOID:0000000006043954

The aspirator (1) generates the vacuum by the air blown from the A/C unit assembly and draws the air of the passenger room to the in-vehicle sensor area via the aspirator duct.

⇦ : Vehicle front

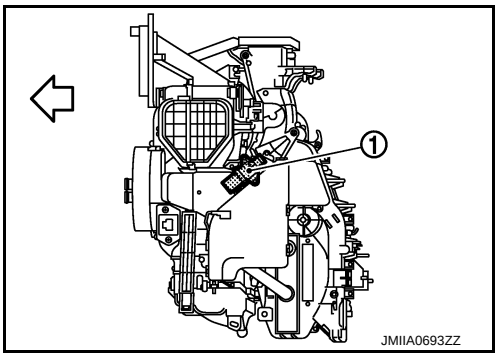

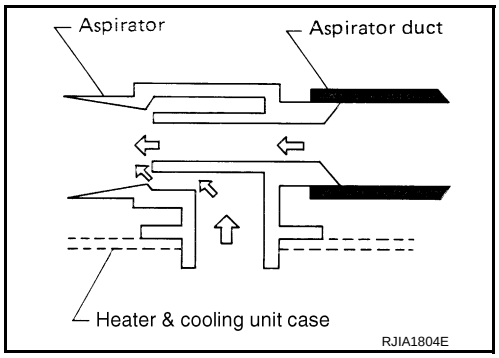

A/C UNIT ASSEMBLY : Blower Motor

INFOID:0000000006024044

- The blower motor (1) is installed in the RH side of A/C unit assembly.
- The blower motor adopts the forcible air cooling system and one-touch installation system without any screws.

⇦ : Vehicle front

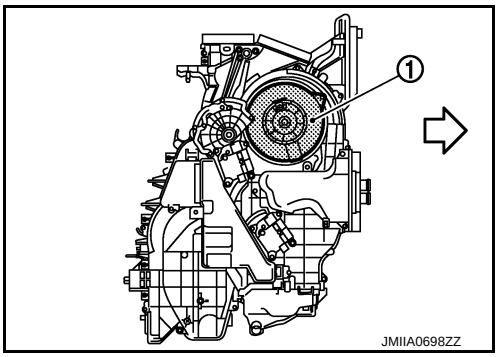

A/C UNIT ASSEMBLY : Intake Door Motor

INFOID:0000000006024041

- The intake door motor (1) is installed to A/C unit assembly.

⇦ : Vehicle front

- The A/C auto amp. sends the control signal to Intake door motor. When intake door motor receives the control signal, intake door is moved to appropriate position by PBR (Potentio Balance Resistor) opening angle indication signal.

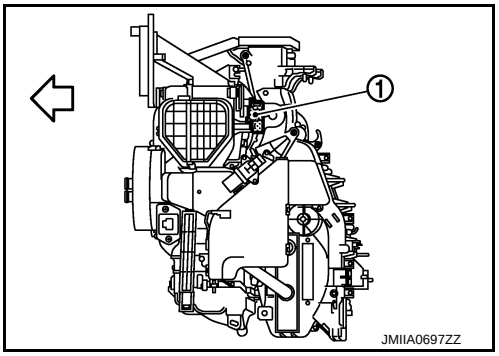

A/C UNIT ASSEMBLY : Intake Sensor

INFOID:0000000006024029

COMPONENT DESCRIPTION

- Intake sensor (1) is located on the evaporator.
- The intake sensor converts the evaporator surface temperature detected with thermistor into the voltage, and the A/C auto amp. inputs this voltage.

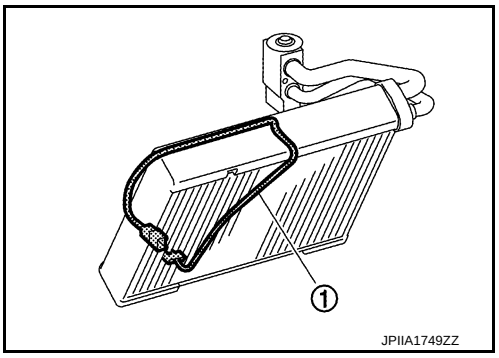

INTAKE TEMPERATURE CORRECTION

- The A/C auto amp. inputs the temperature detected with the intake sensor as the evaporator surface temperature.
- Perform the correction of the temperature detected with the intake sensor for air conditioner control.
- The A/C auto amp. performs the correction so that the recognition intake temperature changes depending on the difference between the detected intake temperature and the recognition intake temperature. If the difference is large, the changing is early. The changing becomes slow as the difference becomes small.

A/C UNIT ASSEMBLY : Mode Door Motor

INFOID:0000000006024038

- The mode door motor (1) is installed to the A/C unit assembly.
- Step motor system is adopted for the mode door motor.
- When a drive signal is input from auto amp. to door motor, a step motor built into the door motor rotates according to the drive signal, and then stops at the position of target door.

⇦ : Vehicle front

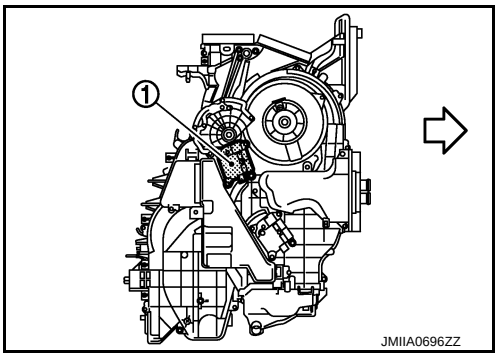

A/C UNIT ASSEMBLY : Power Transistor

INFOID:0000000006043955

- The power transistor (1) attached to A/C unit assembly.

⇦ : Vehicle front

- The power transistor controls the transmitting voltage to blower motor base on the gate voltage from A/C auto amp.
- The power transistor is set for low voltage drop, therefore it dose not require high relay while transmitting max voltage to blower motor.

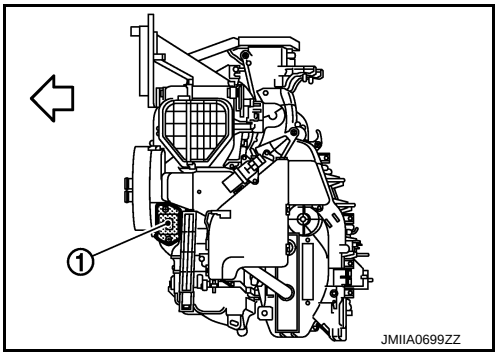

COMPRESSOR

COMPRESSOR : Magnet Clutch

INFOID:0000000006024048

- The magnet clutch is the device that drives the compressor with the signal from IPDM E/R.
- Compressor is driven by the magnet clutch which is charged magnetic force by electrified.
- IPDM E/R controls magnet clutch by turning the built in A/C relay to ON ⇔ OFF according to ECM request.

Ambient Sensor

INFOID:0000000006024023

COMPONENT DESCRIPTION

- The ambient sensor (1) is installed on the middle of radiator upper support.
- The ambient sensor converts the ambient temperature detected with thermistor into the voltage, and the A/C auto amp. inputs this voltage.

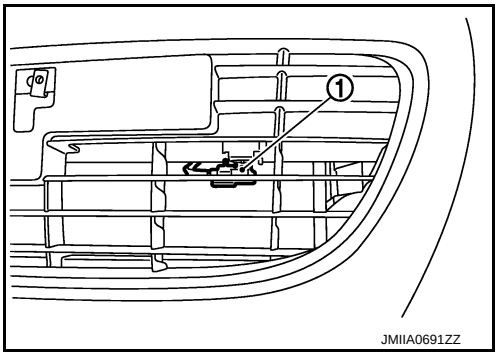

AMBIENT TEMPERATURE CORRECTION

- The A/C auto amp. inputs the temperature detected with the ambient sensor as the ambient temperature.
- Perform the correction of the temperature detected with the ambient sensor for air conditioner control and for ambient temperature display.
- Since the engine heat influences on the ambient sensor during idling condition, the A/C auto amp. retards the ambient temperature indication of the combination meter to avoid the effect of steep temperature change.
- Select and use the initial value of ambient temperature data depending on the coolant temperature when turning the ignition switch from OFF to ON. Use the detection temperature of the ambient sensor at low cool-

ant temperature [less than approximately 56°C (133°F)]. Use the memory data (before the ignition switch is OFF) when the engine is warming up [approximately 56°C (133°F) or more].
- Do not perform the correction of the ambient temperature when the detection temperature of the ambient temperature is less than approximately –20°C (–4°F).

SET TEMPERATURE CORRECTION

The A/C auto amp. performs the correction to the target temperature set by the temperature control switch so as to match the temperature felt by the passengers depending on the ambient temperature detected with the ambient sensor and controls it so that the interior air temperature is always the most suitable.

A/C Auto Amp.

INFOID:0000000006024058

- The A/C auto amp. has a built-in microcomputer which processes information sent from various sensors needed for air conditioner operation.
- The air mix door motor, mode door motor, intake door motor, blower motor and the compressor are then controlled.
- The A/C auto amp. is unitized with control mechanism. Signal from various switches are directly entered into A/C auto amp.
- Self-diagnosis functions are also built into A/C auto amp. to provide quick check of malfunctions in the auto air conditioner system.

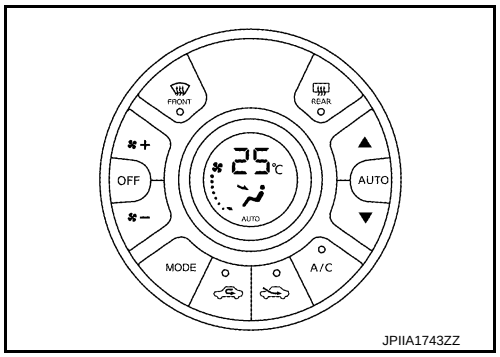

In-vehicle Sensor

INFOID:0000000006024026

COMPONENT DESCRIPTION

- The in-vehicle sensor (1) is installed to the finisher.
- The in-vehicle sensor converts the interior air temperature of the passenger room sucked by the aspirator detected with the thermistor into the voltage, and the A/C auto amp. inputs this voltage.

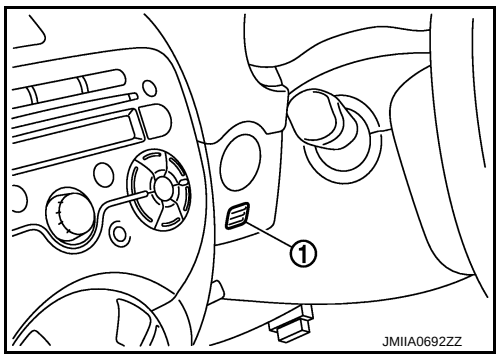

INTERIOR AIR TEMPERATURE CORRECTION

- The A/C auto amp. inputs the temperature detected with the in-vehicle sensor as the interior air temperature.
- Perform the correction of the temperature detected with the in-vehicle sensor for each air conditioner control.

Sunload Sensor

INFOID:0000000006024032

COMPONENT DESCRIPTION

- The sunload sensor (1) is installed to the right side of instrument panel assembly.
- The sunload sensor converts the sunload amount (illuminance) into the current value with the photodiode. The A/C auto amp. calculates this current value to the voltage and inputs it.

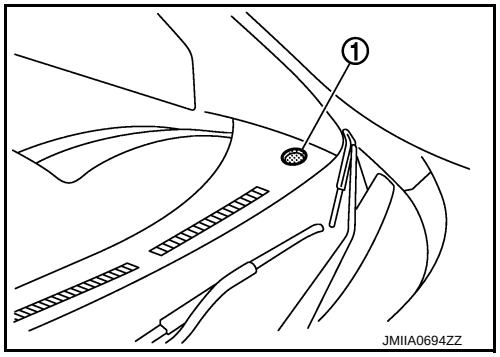

SUNLOAD AMOUNT CORRECTION

- The A/C auto amp. inputs the sunload amount detected with the sunload sensor.

- Perform the correction of the sunload amount detected with the sunload sensor for each air conditioner control.
- When the sunload amount suddenly changes, for example when entering a tunnel, perform the correction so that the recognition sunload amount of the A/C auto amp. changes slowly.

SYSTEM

System Diagram

INFOID:0000000006024014

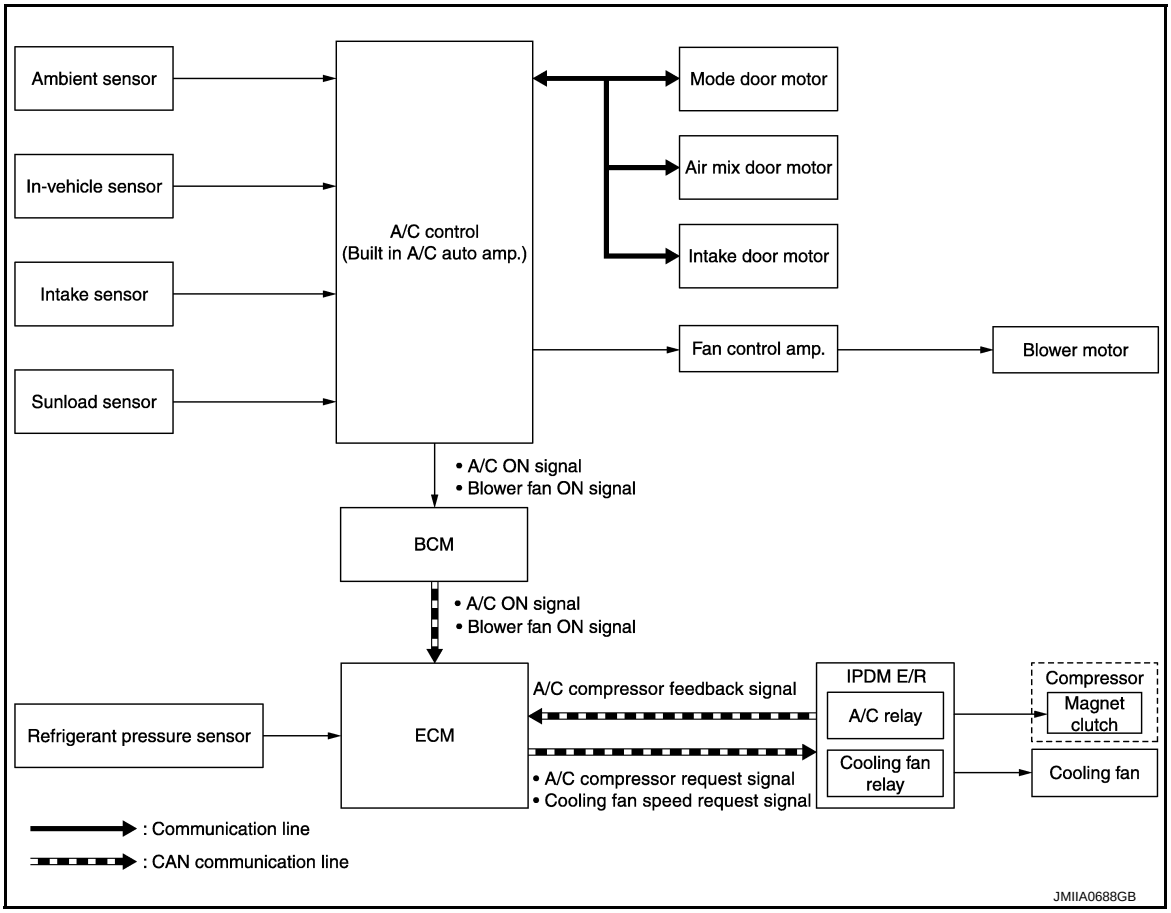

System Description

INFOID:0000000006043957

- Automatic air conditioner system is controlled by each function of A/C auto amp., ECM, BCM and IPDM E/R.

Control by A/C auto amp.
- Air outlet control
- Temperature control
- Air inlet control
- Air flow control
- Compressor control
- Door motor control (LCU communication control)

Control by BCM
- Compressor control

Control by ECM
- Cooling fan control. Refer to XX-XX, "*****".
- Air conditioning cut control. Refer to XX-XX, "*****".
- Compressor control

Control by IPDM E/R
- Relay control. Refer to XX-XX, "*****" (WITH I-KEY) or XX-XX, "*****" (WITHOUT I-KEY).
- Cooling fan control. Refer to XX-XX, "*****" (WITH I-KEY) or XX-XX, "*****" (WITHOUT I-KEY).

- Each A/C system can be operated by A/C controller (built-in A/C auto amp.).

Air Flow Control

INFOID:0000000006043958

DESCRIPTION

- A/C auto amp. changes duty ratio of blower motor drive signal and controls air flow continuously. When air flow is increased, duty ratio of blower motor drive signal gradually increases to prevent a sudden increase in air flow.
- In addition to manual control and automatic control, air flow control is compose of starting fan speed control, low coolant temperature starting control, high in-vehicle temperature starting control, and blower speed control at door motor operation.

AUTOMATIC AIR FLOW CONTROL

- A/C auto amp. decides target air flow depending on target air mix door opening angle.
- A/C auto amp. changes duty ratio of blower motor drive signal and controls air flow continuously so that air flow matches to target air flow.
- When air outlet is VENT or B/L, the minimum air flow is changed depending on sunload.

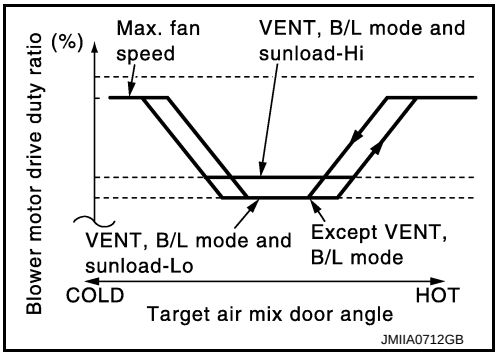

STARTING FAN SPEED CONTROL

When blower motor is activated, A/C auto amp. gradually increases duty ratio of blower fan drive signal to prevent a sudden increase in discharge air flow. (T_1 – T_2 = approximately 10 seconds)

NOTE:

Do not perform the starting air flow control when the discharge outlet is set to DEF.

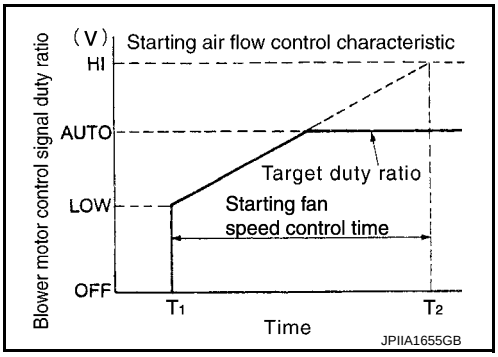

LOW COOLANT TEMPERATURE STARTING CONTROL

If the engine coolant temperature is 56°C (133°F) or less, to prevent a cold discharged air flow, A/C auto amp. suspends blower motor activation for the maximum 150 seconds depending on target air mix door opening angle. After this, blower fan drive signal is increased gradually, and blower motor is activated.

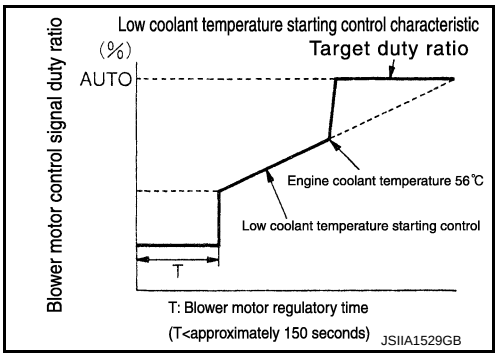

FAN SPEED CONTROL AT DOOR MOTOR OPERATION

When mode door motor is activated while air flow is more than the specified value, A/C auto amp. reduces temporarily fan speed so that mode door moves smoothly.

HIGH IN- TEMPERATURE STARTING CONTROL

When evaporator temperature is high [intake air temperature sensor value is 35°C (95°F) or more], to prevent a hot discharged air flow, A/C auto amp. suspends blower motor activation for approximately 3 seconds so that evaporator is cooled by refrigerant.

Air Inlet Control

INFOID:0000000006043959

- While air inlet is in automatic control, A/C auto amp. selects air inlet (fresh air intake, 20% fresh air intake, or recirculation) depending on set temperature, in-vehicle temperature, and ambient temperature.
- Air inlet is fixed to 80% FRE, only when the conditions are satisfied as follows:
- Air inlet is FOOT or D/F
- Ambient temperature is 2°C (36°F) or less
- Maximum fan speed

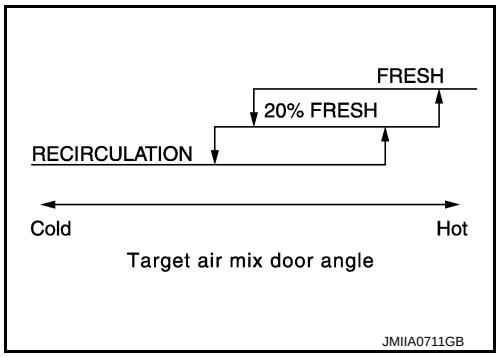

Air Outlet Control

INFOID:0000000006043960

- While air outlet is in automatic control, A/C auto amp. selects the mode door position depending on a target air mix door angle and outlet air temperature calculated from sunload.
- If ambient temperature is excessively low, D/F is selected to prevent windshield fogging when air outlet is set to FOOT.

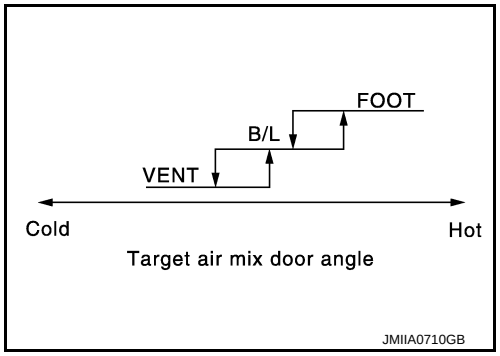

Compressor Control

INFOID:0000000006043956

DESCRIPTION

- When the compressor activation condition is satisfied while blower motor is activated, A/C auto amp. transmits A/C ON signal and blower fan ON signal to BCM.
- BCM transmits A/C ON signal and blower fan ON signal to ECM via CAN communication.
- ECM judges that the compressor can be activated depending on each sensors state (refrigerant pressure sensor signal, throttle opening angle sensor signal, and others). And transmits A/C relay control signal to IPDM E/R via CAN communication.
- IPDM E/R turns A/C relay ON and activates the compressor depending on request from ECM.

COMPRESSOR PROTECTION CONTROL AT PRESSURE MALFUNCTION

When high-pressure side value that is detected by refrigerant pressure sensor is as per the following state, ECM requests IPDM E/R to turn A/C relay OFF and stops the compressor.

- 3.12 MPa (31.8 kg/cm^2, 452 psi) or more (When the engine speed is less than 1,500 rpm)
- 2.74 MPa (27.9 kg/cm^2, 397 psi) or more (When the engine speed is 1,500 rpm or more)
- 0.14 MPa (1.4 kg/cm^2, 20 psi) or less

COMPRESSOR OIL CIRCULATION CONTROL

When the engine starts while the engine coolant temperature is 56°C (133°F) or less, ECM activates the compressor for approximately 6 seconds and circulates the compressor lubricant once.

LOW TEMPERATURE PROTECTION CONTROL

When intake sensor detects that evaporator surface temperature is 2°C (36°F) or less, A/C auto amp. requests ECM to turn the compressor OFF, and stops the compressor.
When the air temperature returns to 3.5°C (38°F) or more, the compressor is activated.

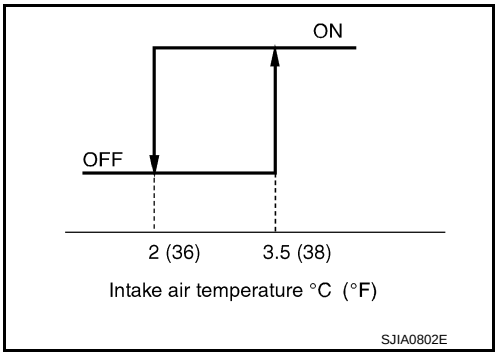

OPERATING RATE CONTROL

When set temperature is other than fully cold or air outlet is “VENT”, “B/L” or “FOOT” A/C auto amp. controls the compressor activation depending on ambient temperature.

AIR CONDITIONER CUT CONTROL

When the engine is running in excessively high load condition, ECM requests IPDM E/R to turn A/C relay OFF, and stops the compressor. Refer to XX-XX, "*****" for details.

Door Control

INFOID:0000000006043961

SWITCH AND THEIR CONTROL FUNCTION

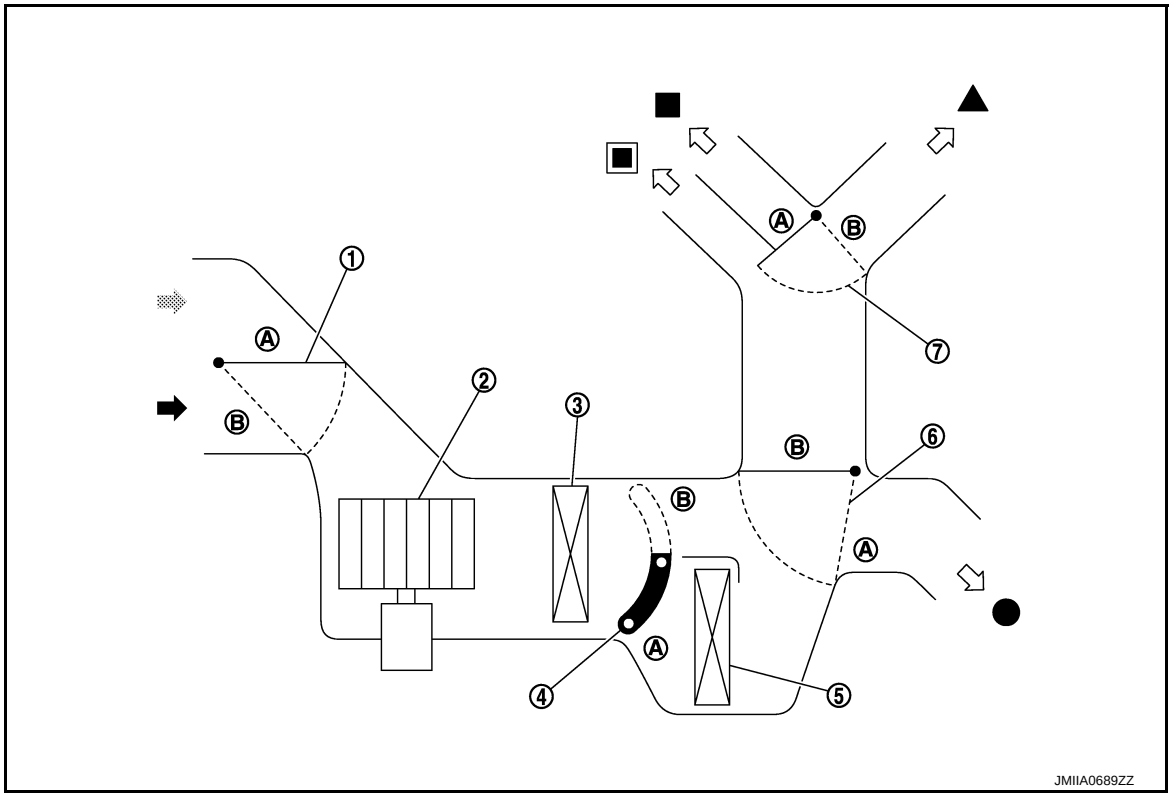

1. Intake door
2. Blower motor
3. Evaporator
4. Air mix door
5. Heater core
6. Foot door
7. Ventilator and defroster door

Fresh air intake
Recirculation air
Defroster
Center ventilator
Side ventilator
Foot

Switch position			Door position			
			Ventilator and defroster door	Foot door	Intake door	Air mix door
AUTO switch	AUTO		AUTO			
MODE switch			B	A	—	—
				A – B		
			A	B		
				A – B		
DEF switch		☀		A		
REC switch*		☀	—	—	B	
FRE switch*		☀			A	
Temperature control switch	Full cold 18°C (60°F)				—	A
	19°C – 31°C (61°F – 89°F)					AUTO
	Full hot 32°C (90°F)					B
OFF switch	OFF		A	A	B	—

*: Inlet status is displayed by indicator during activating automatic control

AIR DISTRIBUTION

Discharge air flow				
Mode position indication	Air outlet/distribution			
	Center ventilator	Side ventilator	Foot	Defroster
	50%	50%	—	—
	30%	30%	40%	—
	7%	7%	66%	20%
	7%	7%	51%	35%
	—	22%	—	78%

AIR CONDITIONER LAN CONTROL SYSTEM

The LAN (Local Area Network) system consists of the A/C auto amp., the mode door motor, the air mix door motors and the intake door motor.
A configuration of these components is as shown in the figure below.

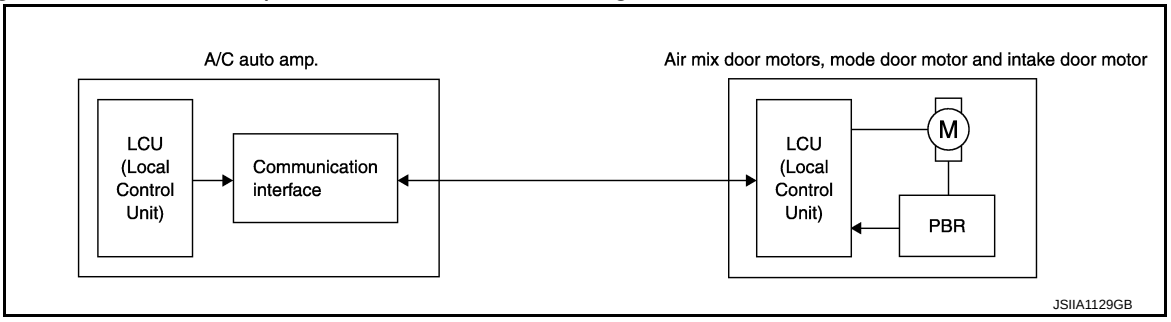

SYSTEM CONSTRUCTION

A small network exists between the A/C auto amp., the mode door motor, the air mix door motor and the intake door motor. The A/C auto amp. and motors are connected by data transmission lines and motor power supply lines. The LAN network is built through the ground circuits of each door motor.
Addresses, motor opening angle signals, motor stop signals and error checking messages are all transmitted through the data transmission lines connecting the A/C auto amp. and each door motor.
The following functions are contained in LCUs built into the mode door motor, the air mix door motors and the intake door motor.

- Address
- Motor opening angle signals
- Data transmission
- Motor stop and drive decision
- Opening angle sensor (PBR function)
- Comparison
- Decision (A/C auto amp. indicated value and motor opening angle comparison)

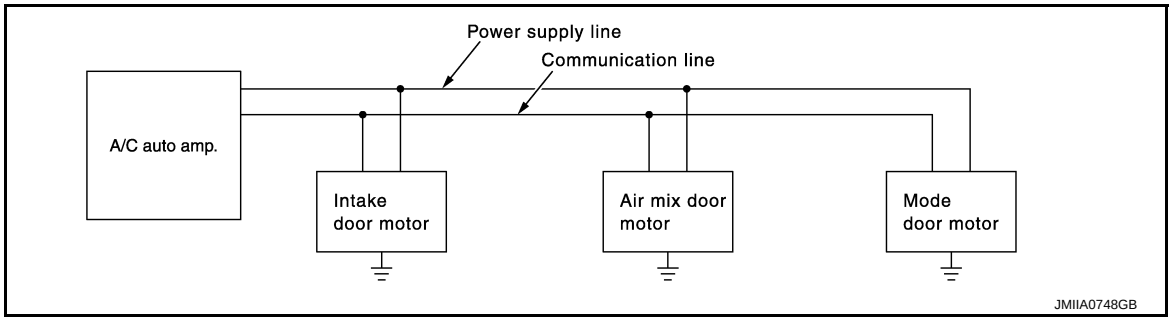

Operation
The A/C auto amp. receives data from each of the sensors. The A/C auto amp. sends mode door, the air mix door and the intake door opening angle data to the mode door motor LCU, the air mix door motor LCUs and the intake door motor LCU.
The mode door motor, the air mix door motors and the intake door motor read their respective signals according to the address signal. Opening angle indication signals received from the A/C auto amp. and each of the motor position sensors is compared by the LCUs in each door motor with the existing decision and opening angles. Next, HOT/COLD, DEF/VENT, OPEN/SHUT or FRE/REC operation is selected. The new selection data is returned to the A/C auto amp.

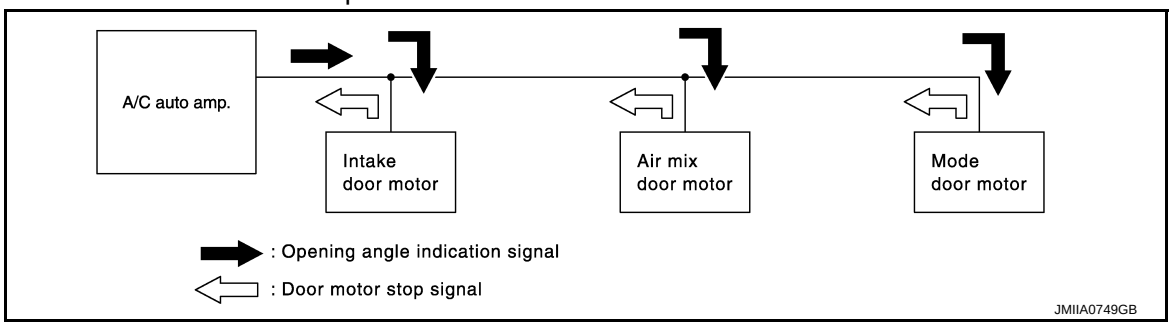

Transmission Data and Transmission Order
A/C auto amp. data is transmitted consecutively to each of the door motors following the form as shown in the figure below.

START:
- Initial compulsory signal is sent to each of the door motors.

ADDRESS:
- Data sent from the A/C auto amp. is selected according to data-based decisions made by the mode door motor, the air mix door motors and the intake door motor.
- If the addresses are identical, the opening angle data and error check signals are received by the door motor LCUs. The LCUs then make the appropriate error decision. If the opening angle data has no error, door control begins.
- If an error exists, the received data is rejected and the corrected data received. Finally, door control is based upon the corrected opening angle data.

OPENING ANGLE:
- Data that shows the indicated door opening angle of each door motor.

ERROR CHECK:
- In this procedure, transmitted and received data is checked for errors. Error data is then compiled. The error check prevents corrupted data from being used by the mode door motor, the air mix door motors and the intake door motor. Error data can be related to the following symptoms.
- Malfunction of electrical frequency
- Poor electrical connections
- Signal leakage from transmission lines
- Signal level fluctuation

STOP SIGNAL:
- At the end of each transmission, a stop operation, in-operation, or internal malfunction message is delivered to the A/C auto amp. This completes one data transmission and control cycle.

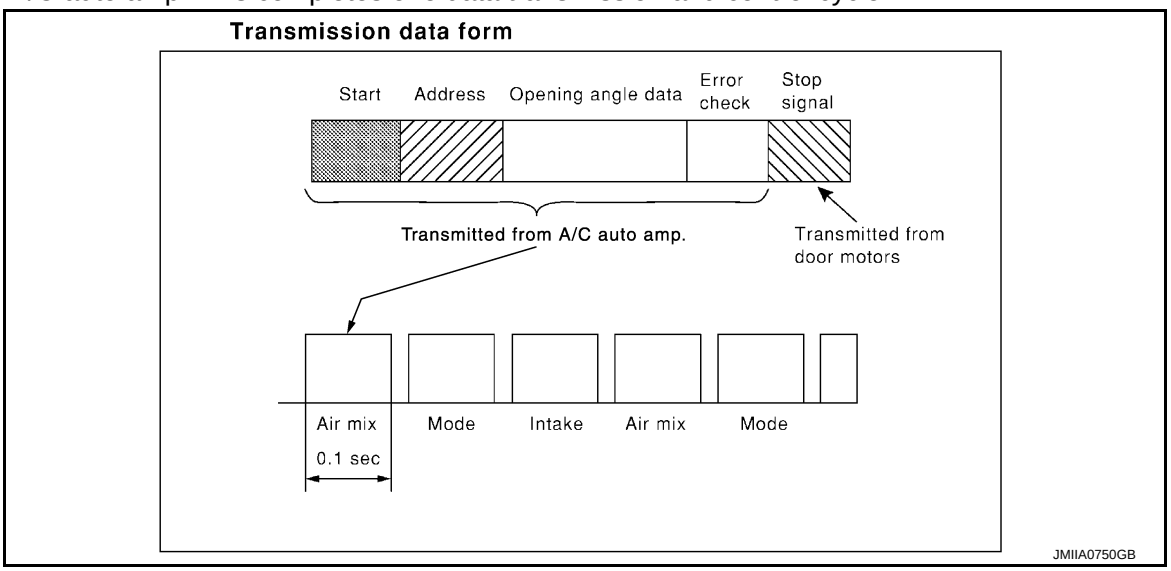

Temperature Control

INFOID:0000000006043962

- When ignition switch is in the ON position, A/C auto amp. always automatically controls temperature regardless of air conditioner operational state.
- A/C auto amp. calculates the target air mix door opening angle depending on set temperature, in-vehicle temperature, ambient temperature, and sunload.
- Air mix door is controlled depending on the comparison of current air mix door opening angle and target air mix door opening angle.
- Regardless of in-vehicle temperature, ambient temperature, and sunload, air mix door is fixed at the fully cold position when set temperature is 18°C (60°F), and at the fully hot position when set temperature is 32°C (90°F).

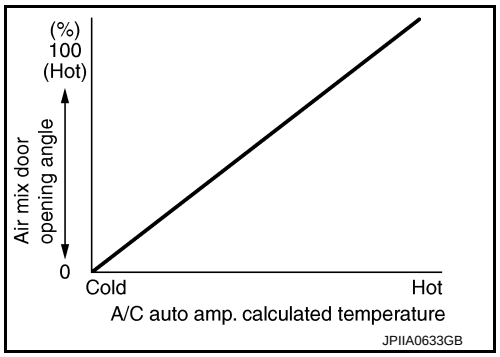

OPERATION

Switch Name and Function

INFOID:0000000006024015

CONTROLLER (A/C CONTROL)

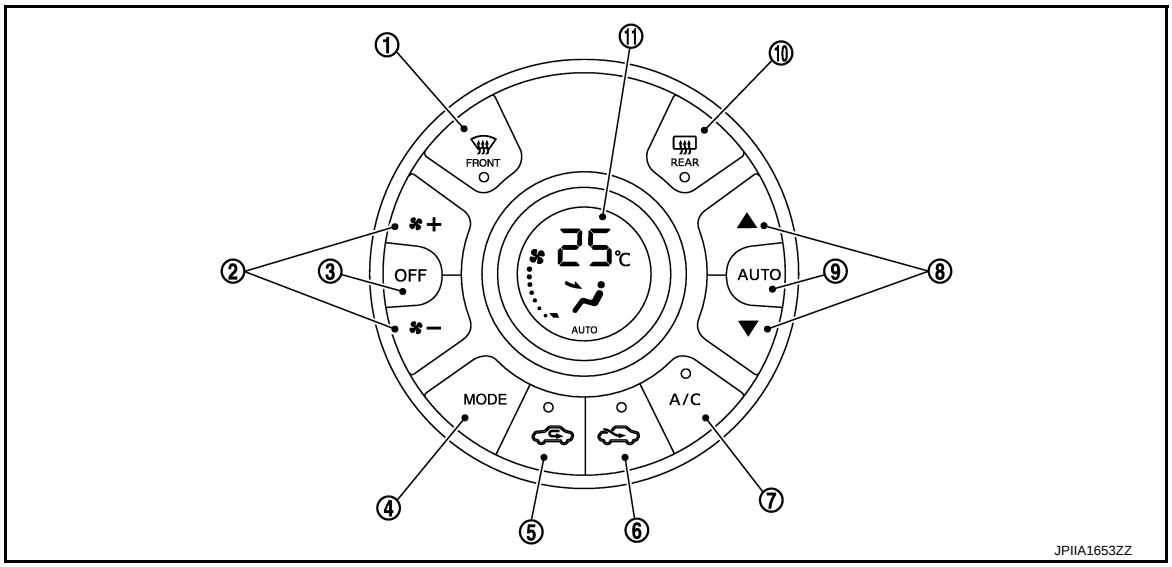

1. DEF switch
2. Fan control switch
3. OFF switch
4. MODE switch
5. REC switch
6. FRE switch
7. A/C switch
8. Temperature control switch
9. AUTO switch
10. Rear window defogger switch
11. A/C display

SWITCH OPERATION

DEF switch	• DEF switch indicator is turned ON ⇔ OFF by pressing DEF switch each time. • When DEF switch is operated while air conditioner system is activated, the system becomes the following states. - Compressor: ON - Air inlet: Fresh air intake - Blower fan: Auto control (if blower fan is set to manual mode before pressing DEF switch, it becomes manual mode) - When DEF mode set to OFF, air conditioner system returns previous condition which is set to DEF mode. • When DEF switch is operated while air conditioner system is inactivation, the system becomes the following states. - Air conditioner system: ON - Compressor: ON - Air inlet: Fresh air intake - Blower fan: Auto control • When DEF mode set to OFF, all air conditioner system is OFF. **NOTE:** When DEF mode is set to ON during auto control of air conditioner system, the system becomes manual control.
Fan control switch	Fan speed is selected within a range between 1st – 7th speed by pressing this switch. **NOTE:** • When air conditioner system is OFF, air conditioner system is set to ON by pressing this switch. • When fan control switch is operated during auto control of air conditioner system, the system becomes manual mode.
OFF switch	• Air conditioner system is turned OFF by pressing this switch. • When the air conditioner system becomes OFF, air inlet and outlet are set as follows: - Air inlet: FRE (except REC is manually selected) - Air outlet: FOOT

Mode switch	• Mode position is changed in order of VENT ⇒ B/L ⇒ FOOT ⇒ D/F ⇒ VENT by operating this switch each time. • When D/F is selected while blower motor is activated, air conditioner system becomes the following states. - Compressor: ON - Air inlet: Fresh air intake **NOTE:** When MODE switch is operated during auto control of air conditioner system, the system becomes manual mode.
REC switch	Air inlet is selected to recirculation (REC) by pressing this switch. • REC indicator ON • FRE indicator OFF **NOTE:** • Even if the air conditioner system is OFF, air inlet can be selected. • When mode position is D/F or DEF, recirculation (REC) cannot be selected. • When REC switch is selected, the compressor is turned ON. • When REC indicator is ON, pressing the REC switch for approximately 1.5 seconds or more, and then the FRE and REC switch indicators blink twice and the system is switched to the automatic control.
FRE switch	Air inlet is selected to fresh air intake (FRE) by pressing this switch. • FRE indicator: ON • REC indicator: OFF **NOTE:** • Even if the air conditioner system is OFF, air inlet can be selected. • When mode position is D/F or DEF, air inlet is set to FRE forcibly. • When FRE indicator is ON, pressing the FRE switch for approximately 1.5 seconds or more, and then the FRE and REC switch indicators blink twice and the system is switched to the automatic control.
Temperature control switch	Setting temperature is selected within a range between 18°C (60°F) – 32°C (90°F) by pressing this switch. • ▲ : Increase • ▼ : Decrease **NOTE:** Even if air conditioner system is OFF, setting temperature can be selected by pressing these switch.
A/C switch	The compressor control (switch indicator) is turned between ON ⇔ OFF by pressing this switch each time only when blower fan is activated. **NOTE:** • When blower fan is inactivation, compressor control can not be turned ON. • When mode position is D/F or DEF, A/C switch is turned ON forcibly.
Rear window defogger switch	Rear window defogger (switch indicator) is turned between ON ⇔ OFF by pressing this switch each time. Rear window defogger system details. Refer to XX-XX, "*****".

DIAGNOSIS SYSTEM (A/C AUTO AMP.)

Diagnosis Description

INFOID:0000000006024018

ON BOARD SELF-DIAGNOSIS SYSTEM

On board self-diagnosis system is built into A/C auto amp. to quickly locate the case of malfunctions. The self-diagnosis system diagnoses sensor, door motor, blower motor, etc. and also can make the setting of auxiliary mechanism.

Diagnosis item	Diagnosis content	Diagnosis part
STEP 1: Indicator check	Switch indicator and display indication are checked.	A/C control (A/C auto amp.)
STEP 2: Sensor diagnosis	The circuit diagnoses of each sensor and intake door motor are performed. A/C auto amp. indicates the result on the display.	• Ambient sensor • In-vehicle sensor • Intake sensor • Sunload sensor • Intake door motor (PBR)
STEP 3: Door motor diagnosis	The circuit diagnoses of mode door motor and air mix door motor are performed. A/C auto amp. indicates the result on the display.	• Mode door motor • Air mix door motor
STEP 4: Operation check	Operational check of each part is performed.	• Mode door motor • Intake door motor • Air mix door motor • Blower motor • Compressor • Condenser fan
STEP 5: Each sensor recognition temperature check	Each sensor recognition temperature is indicated on the display.	• Ambient sensor • In-vehicle sensor • Intake sensor
STEP 6: Temperature setting trimmer	Temperature setting trimmer is performed.	—
STEP 7: Inlet port memory function	Inlet port memory function is performed.	—

SELF-DIAGNOSIS PROCEDURE

Self-diagnosis Mode Entry

The self-diagnosis is started by pressing the OFF switch at 5 seconds or more within 10 seconds after starting engine.

NOTE:

If battery voltage drops below 12 V during diagnosis STEP-3, door motor speed becomes slower and as a result, the system may generate an error even when operation is normal. Start engine before performing this diagnosis to avoid this.

Changes of Step up and Step down

- The changes of STEP 1 – 5 can be performed by pressing the temperature control switch.
- The change of STEP 6 – 7 can be performed by pressing the fan control switch during the condition of STEP-5.

Self-diagnosis Cancellation

By AUTO switch is pressed or ignition switch is turned OFF, the self-diagnosis is canceled.

STEP-1: INDICATOR CHECK

Description

A/C switch indicator and A/C display indication are checked.
Normal: All switch indicator and display indication are turned ON.
Malfunction: Malfunctioning part indicator is not turned ON.

STEP-2: SENSOR DIAGNOSIS

Description

When STEP-2 is selected, “2” is indicated on the display for 3 seconds, in this period, sensor diagnosis is started.

Normal: “20” is displayed.

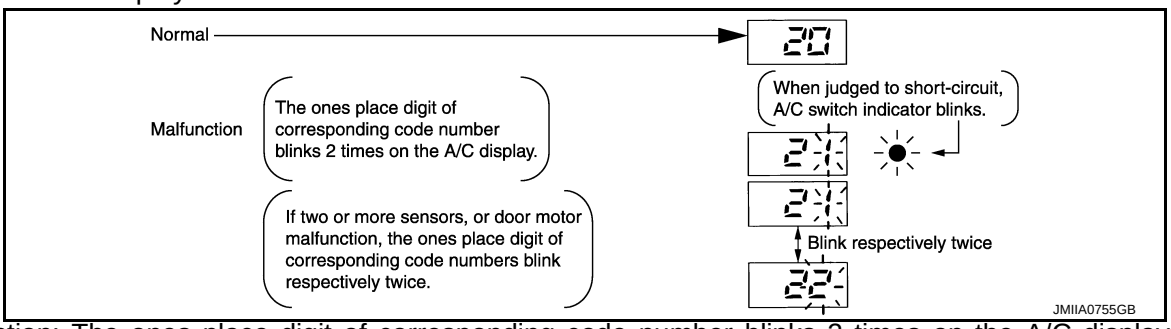

Malfunction: The ones place digit of corresponding code number blinks 2 times on the A/C display. When short-circuit error, A/C switch indicator“ blinks on the display.

NOTE:

If two or more sensors, or door motor malfunction, the ones place digit of corresponding code numbers blink respectively twice.

Diagnosis Result

Code No.	Corresponding sensor or door motor	Malfunctioning judgment condition		Reference
		Open	Short	
21 / ● 21	Ambient sensor	–42°C (–44°F) or less	100°C (212°F) or more	HAC-43, "Diagnosis Procedure"
22 / ● 22	In-vehicle sensor	–42°C (–44°F) or less	100°C (212°F) or more	HAC-45, "Diagnosis Procedure"
24 / ● 24	Intake sensor	–42°C (–44°F) or less	100°C (212°F) or more	HAC-47, "Diagnosis Procedure"
25 / ● 25	Sunload sensor*	64.7 W/m^2 (56 kcal/m^2·h)	2832 W/m^2 (2435 kcal/m^2·h)	HAC-49, "Diagnosis Procedure"
26 / ● 26	Intake door motor (PBR)	PBR angle 5% or less	PBR angle 95% or more	HAC-55, "Diagnosis Procedure"

*: Perform the self-diagnosis under sunshine. When performing indoors, aim a light (more than 60 W) at sunload sensor, otherwise code NO. 25 indicates despite that sunload sensor is functioning normally.

NOTE:

- When ambient sensor has the malfunction of open-circuit, the sensor judges that ambient temperature is extremely cold, and controls the in vehicle temperature to warmly.
- When performing the diagnosis of intake door motor, the target angle of PBR is set at 40%.
- The error judgment status of intake door motor is not decided by open or short circuit, it is decided by the voltage value as follows:
- Short: 2.5 V or more
- Open: 1.5 V or less

STEP-3: DOOR MOTOR DIAGNOSIS

Description

When STEP-3 is selected, “3” is indicated on the display for 1 second, in this period, door motor diagnosis is started.

The check of door motor is performed by A/C auto amp. transmitting output signal to each door motor.

Normal: “30” is displayed.

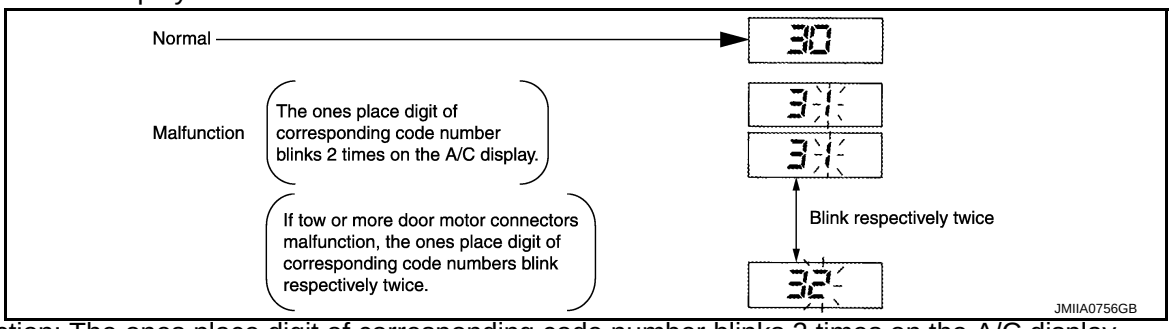

Malfunction: The ones place digit of corresponding code number blinks 2 times on the A/C display.

NOTE:

If two or more door motor connectors malfunction, the ones place digit of corresponding code numbers blink respectively twice.

Diagnosis Result

Code No.	Mode or intake door position		Reference
31	VENT	Mode door motor	HAC-53, "Diagnosis Procedure"
32	D/F1		
33	DEF		
37	FRE	Intake door motor	HAC-55, "Diagnosis Procedure"
38	20%%		
39	REC		

NOTE:

- If all four terminals of each door motor show an open circuit, there is probably a disconnected connector or an open circuit in door motor drive power supply harness.
- If a short circuit occurs in harness between terminals for each door motor drive signal, although it cannot be detected by self-diagnosis, door motor will vibrate when it operates.

STEP-4: OPERATION CHECK

Description

When STEP-4 is selected, each part operation is started with indicating “4” on the display.
Each time DEF switch is pressed, the display will change to 41 → 42 → 43 → 44 → 45 → 46 → 41.

Operation Contents

Checks must be visually, by listening the sound or by touching air outlets with hand, etc. for improper operation.

Code No.	Mode door position	Intake door position	Air mix door position	Magnet clutch	Blower fan motor (voltage)
41	VENT	REC	Full cold	ON	5.5 V
42	B/L	REC	Full cold	ON	Battery voltage
43	B/L	20% FRE	Full hot	OFF	9 V
44	D/F	FRE	Full hot	OFF	9 V
45	D/F	FRE	Full hot	ON	9 V
46	DEF	FRE	Full hot	ON	Battery voltage

STEP-5: EACH SENSOR RECOGNITION CHECK

Description

When STEP-5 is selected, “5” is indicated on the display.
Each time DEF switch is pressed, each sensor recognition temperature is changed in order of the following:
5 → Ambient temperature → In-vehicle temperature → Intake temperature → 5.

NOTE:

Each sensor recognition temperature is not displayed in less than –30°C (–22°F) or more than 55°C (131°F).

STEP-6: TEMPERATURE SETTING TRIMMER

Description

The trimmer compensates for differences in range of ±3°C (±6°F) between temperature setting (displayed digitally) and temperature felt by customer.

Setting Procedure

Refer to HAC-41, "Temperature Setting Trimmer".

FOOT POSITION SETTING TRIMMER

Description

Wind distribution ratio in FOOT mode can be set.
Refer to Dummy cross-reference("XX-XX").

INLET PORT MEMORY FUNCTION

Description

- Inlet port setting can be memorized when ignition switch is turned OFF.
- Inlet port setting can be selected from FRE (fresh air intake), REC (recirculation), or “Do not perform the memory” when ignition switch is turned ON.

Setting Procedure

Refer to XX-XX, "*****".

DIAGNOSIS SYSTEM (BCM) (WITH INTELLIGENT KEY SYSTEM) COMMON ITEM

COMMON ITEM : CONSULT-III Function (BCM - COMMON ITEM)

INFOID:0000000006057577

APPLICATION ITEM

CONSULT-III performs the following functions via CAN communication with BCM.

Diagnosis mode	Function Description
Work Support	Changes the setting for each system function.
Self Diagnostic Result	Displays the diagnosis results judged by BCM.
CAN Diag Support Monitor	Monitors the reception status of CAN communication viewed from BCM. Refer to CONSULT-III operation manual.
Data Monitor	The BCM input/output signals are displayed.
Active Test	The signals used to activate each device are forcibly supplied from BCM.
Ecu Identification	The BCM part number is displayed.
Configuration	• Read and save the vehicle specification. • Write the vehicle specification when replacing BCM.

SYSTEM APPLICATION

BCM can perform the following functions for each system.

NOTE:

It can perform the diagnosis modes except the following for all sub system selection items.

×: Applicable item

System	Sub system selection item	Diagnosis mode		
		Work Support	Data Monitor	Active Test
Door lock	DOOR LOCK	×	×	×
Rear window defogger	REAR DEFOGGER		×	×
Warning chime	BUZZER		×	×
Interior room lamp timer	INT LAMP	×	×	×
Exterior lamp	HEAD LAMP	×	×	×
Wiper and washer	WIPER	×	×	×
Turn signal and hazard warning lamps	FLASHER	×	×	×
Automatic air conditioner	AIR CONDITONER		×	×
• Intelligent Key system • Engine start system	INTELLIGENT KEY	×	×	×
Combination switch	COMB SW		×	
Body control system	BCM	×		
NATS	IMMU	×	×	×
Interior room lamp battery saver	BATTERY SAVER	×	×	×
Back door	TRUNK		×	
—	THEFT ALM*	×	×	×
—	RETAINED PWR*		×	
Signal buffer system	SIGNAL BUFFER		×	×

*: This item is displayed, but is not used.

FREEZE FRAME DATA (FFD)

The BCM records the following vehicle condition at the time a particular DTC is detected, and displays on CONSULT-III.

CONSULT screen item	Indication/Unit	Description	
Vehicle Speed	km/h	Vehicle speed of the moment a particular DTC is detected	
Odo/Trip Meter	km	Total mileage (Odometer value) of the moment a particular DTC is detected	
Vehicle Condition	SLEEP>LOCK	Power position status of the moment a particular DTC is detected	While turning BCM status from low power consumption mode to normal mode (Power supply position is “LOCK”)
	SLEEP>OFF		While turning BCM status from low power consumption mode to normal mode (Power supply position is “OFF”.)
	LOCK>ACC		While turning power supply position from “LOCK” to “ACC”
	ACC>ON		While turning power supply position from “ACC” to “IGN”
	RUN>ACC		While turning power supply position from “RUN” to “ACC” (Vehicle is stopping and selector lever is except P position.)
	CRANK>RUN		While turning power supply position from “CRANKING” to “RUN” (From cranking up the engine to run it)
	RUN>URGENT		While turning power supply position from “RUN“ to “ACC” (Emergency stop operation)
	ACC>OFF		While turning power supply position from “ACC” to “OFF”
	OFF>LOCK		While turning power supply position from “OFF” to “LOCK”
	OFF>ACC		While turning power supply position from “OFF” to “ACC”
	ON>CRANK		While turning power supply position from “IGN” to “CRANKING”
	OFF>SLEEP		While turning BCM status from normal mode (Power supply position is “OFF”.) to low power consumption mode
	LOCK>SLEEP		While turning BCM status from normal mode (Power supply position is “LOCK”.) to low power consumption mode
	LOCK		Power supply position is “LOCK” (Ignition switch OFF with steering is locked.)
	OFF		Power supply position is “OFF” (Ignition switch OFF with steering is unlocked.)
	ACC		Power supply position is “ACC” (Ignition switch ACC)
	ON		Power supply position is “IGN” (Ignition switch ON with engine stopped)
	ENGINE RUN		Power supply position is “RUN” (Ignition switch ON with engine running)
	CRANKING		Power supply position is “CRANKING” (At engine cranking)
IGN Counter	0 - 39	The number of times that ignition switch is turned ON after DTC is detected • The number is 0 when a malfunction is detected now. • The number increases like 1 → 2 → 3...38 → 39 after returning to the normal condition whenever ignition switch OFF → ON. • The number is fixed to 39 until the self-diagnosis results are erased if it is over 39.	

AIR CONDITIONER

AIR CONDITIONER : CONSULT-III Function (BCM - AUTO AIR CONDITIONER)

INFOID:0000000006024020

DATA MONITOR

Display Item List

Monitor Item [Unit]		Contents
FAN ON SIG	[On/Off]	Displays the blower fan status as jugged from the A/C auto amp.
AIR COND SW	[On/Off]	Displays [COMP (On)/COMP (Off)] status as judged from the A/C auto amp.

DIAGNOSIS SYSTEM (BCM) (WITHOUT INTELLIGENT KEY SYSTEM) COMMON ITEM

COMMON ITEM : CONSULT-III Function (BCM - COMMON ITEM)

INFOID:0000000006057585

APPLICATION ITEM

CONSULT-III performs the following functions via CAN communication with BCM.

Diagnosis mode	Function Description
Work Support	Changes the setting for each system function.
Self Diagnostic Result	Displays the diagnosis results judged by BCM.
CAN Diag Support Monitor	Monitors the reception status of CAN communication viewed from BCM. Refer to CONSULT-III operation manual.
Data Monitor	The BCM input/output signals are displayed.
Active Test	The signals used to activate each device are forcibly supplied from BCM.
Ecu Identification	The BCM part number is displayed.
Configuration	• Read and save the vehicle specification. • Write the vehicle specification when replacing BCM.

SYSTEM APPLICATION

BCM can perform the following functions for each system.

NOTE:

It can perform the diagnosis modes except the following for all sub system selection items.

×: Applicable item

System	Sub system selection item	Diagnosis mode		
		Work Support	Data Monitor	Active Test
Door lock	DOOR LOCK		×	×
Rear window defogger	REAR DEFOGGER		×	×
Warning chime	BUZZER		×	×
Interior room lamp control	INT LAMP	×	×	×
Remote keyless entry system	MULTI REMOTE ENT	×	×	×
Exterior lamp	HEAD LAMP	×	×	×
Wiper and washer	WIPER	×	×	×
Turn signal and hazard warning lamps	FLASHER		×	×
• Automatic air conditioner • Manual air conditioner	AIR CONDITONER		×	
Combination switch	COMB SW		×	
Body control system	BCM	×		
NATS	IMMU	×*1		×
Interior room lamp battery saver	BATTERY SAVER	×	×	×
Back door	TRUNK		×	
—	THEFT ALM*2		×	×
—	RETAINED PWR*2			
Signal buffer system	SIGNAL BUFFER		×	×
Panic alarm	PANIC ALARM			×

- *1: For models without NATS this mode is not used.
- *2: This item is displayed, but is not used.

AIR CONDITIONER

AIR CONDITIONER : CONSULT-III Function (BCM - AUTO AIR CONDITIONER)

INFOID:0000000006024022

DATA MONITOR

Display Item List

Monitor Item [Unit]		Contents
IGN SW	[On/Off]	Displays ignition switch position status as judged from ignition switch signal.
FAN ON SIG	[On/Off]	Displays the blower fan status as jugged from the A/C auto amp.
AIR COND SW	[On/Off]	Displays [COMP (On)/COMP (Off)] status as judged from the A/C auto amp.

ECU DIAGNOSIS INFORMATION

A/C AUTO AMP.

Reference Value

INFOID:0000000006024061

TERMINAL LAYOUT

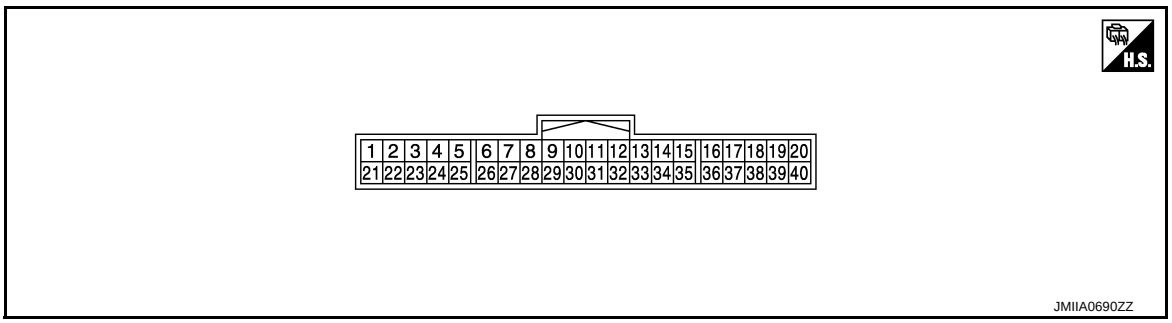

PHYSICAL VALUES

Terminal No. (Wire color)		Description		Condition	Value (Approx.)
+	–	Signal name	Input/ Output		
1 (BR)	Ground	Battery power supply	—	Ignition switch OFF	Battery voltage
2 (SB)	Ground	IGN power supply	—	Ignition switch ON	Battery voltage
4 (W)	Ground	Each door motor power supply	Output	Ignition switch ON	12 V
5 (V)	Ground	A/C LAN signal	Input/ Output	Ignition switch ON	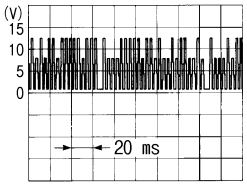 SJIA1453J
9 (Y)	Ground	IGN2 power supply	—	Ignition switch ON	Battery voltage
10 (R)	Ground	Blower motor feedback signal	Input	Blower speed: 1st	10V
12 (SB)	Ground	Fan ON signal	Output	• Ignition switch ON • Fan speed: 1st speed (manual)	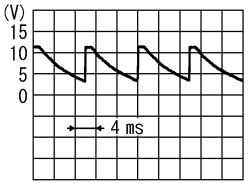 SJIA1425J

Terminal No. (Wire color)		Description		Condition	Value (Approx.)
+	–	Signal name	Input/ Output		
13 (W)	Ground	A/C ON signal	Output	• Ignition switch ON • A/C switch: ON	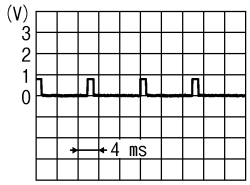 ZJIA1036J
				• Ignition switch ON • A/C switch: OFF	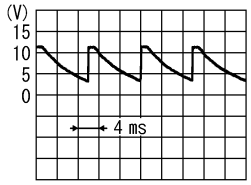 SJIA1425J
16* (GR)	—	—	—	—	—
17 (G)	Ground	Engine coolant temperature signal	Input	• Ignition switch ON • Engine idling [Approximately 20°C (68°F)]	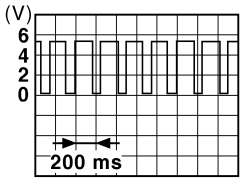 PKID0590E
				• Ignition switch ON • Engine idling [Approximately 80°C (176°F)]	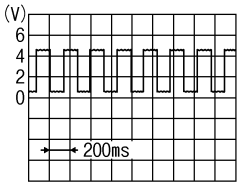 SKIB3651J
18 (V)	Ground	Sunload sensor signal	Input	—	0 – 4.8 V Output voltage varies with sun load
19 (LG)	Ground	In-vehicle sensor signal	Input	—	0 – 4.8 V Output voltage varies with in-vehicle temperature
21 (B)	Ground	Ground	—	Ignition switch ON	0V
22 (B/W)	Ground	Door motor ground	—	Ignition switch ON	0 V
23 (B)	Ground	Ground	—	Ignition switch ON	0 V
30 (GR)	Ground	Blower motor control signal	Output	• Ignition switch ON • Fan speed: 1st-6th speed (manual)	2.5V
				• Ignition switch ON • Fan speed: 7th speed (manual)	9.0V

Terminal No. (Wire color)		Description		Condition	Value (Approx.)
+	–	Signal name	Input/ Output		
37 (P)	Ground	Intake sensor signal	Input	—	0 – 4.8 V Output voltage varies with intake temperature
39 (R)	Ground	Ambient sensor signal	Input	—	0 – 4.8 V Output voltage varies with ambient temperature
40 (R)	Ground	Sensor ground	—	Ignition switch ON	0 V

*: A/C auto amp. is not used for control.

ECM, IPDM E/R, BCM

List of ECU Reference

INFOID:0000000006043964

ECU		Reference
ECM	HR TYPE 1	XX-XX, "*****"
		XX-XX, "*****"
		XX-XX, "*****"
		XX-XX, "*****"
	HR TYPE 2	Dummy cross-reference("XX-XX")
		Dummy cross-reference("XX-XX")
		Dummy cross-reference("XX-XX")
		Dummy cross-reference("XX-XX")
	HR TYPE 3	Dummy cross-reference("XX-XX")
		Dummy cross-reference("XX-XX")
		Dummy cross-reference("XX-XX")
		Dummy cross-reference("XX-XX")
	HR16DE (WITHOUT EURO-OBD)	Dummy cross-reference("XX-XX")
		Dummy cross-reference("XX-XX")
		XX-XX, "*****"
		XX-XX, "*****"
IPDM E/R	WITH INTELLIGENT KEY SYSTEM	PCS-15, "Reference Value"
		PCS-20, "Fail-Safe"
		PCS-22, "DTC Index"
	WITHOUT INTELLIGENT KEY SYSTEM	PCS-40, "Reference Value"
		PCS-44, "Fail-Safe"
		PCS-45, "DTC Index"
BCM	WITH INTELLIGENT KEY SYSTEM	BCS-18, "Reference Value"
		BCS-37, "Fail-safe"
		BCS-39, "DTC Inspection Priority Chart"
		BCS-40, "DTC Index"
	WITHOUT INTELLIGENT KEY SYSTEM	BCS-72, "Reference Value"
		BCS-85, "Fail-safe"
		BCS-85, "DTC Inspection Priority Chart"
		BCS-86, "DTC Index"

WIRING DIAGRAM

AUTOMATIC AIR CONDITIONING SYSTEM

Wiring Diagram

INFOID:0000000006024062

For connector terminal arrangements, harness layouts, and alphabets in a ⬡ (option abbreviation; if not described in wiring diagram), refer to GI-12, "Connector Information".

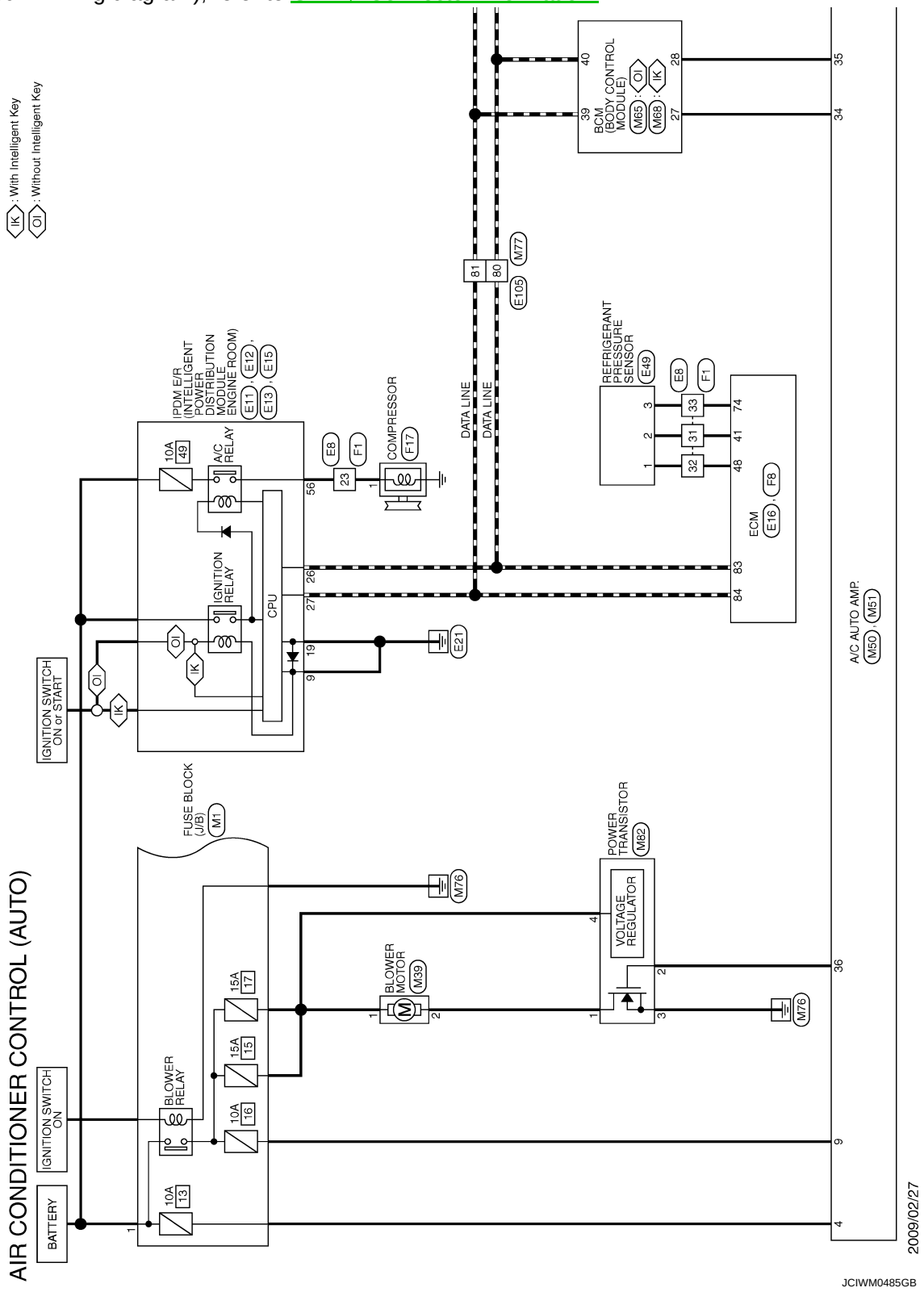

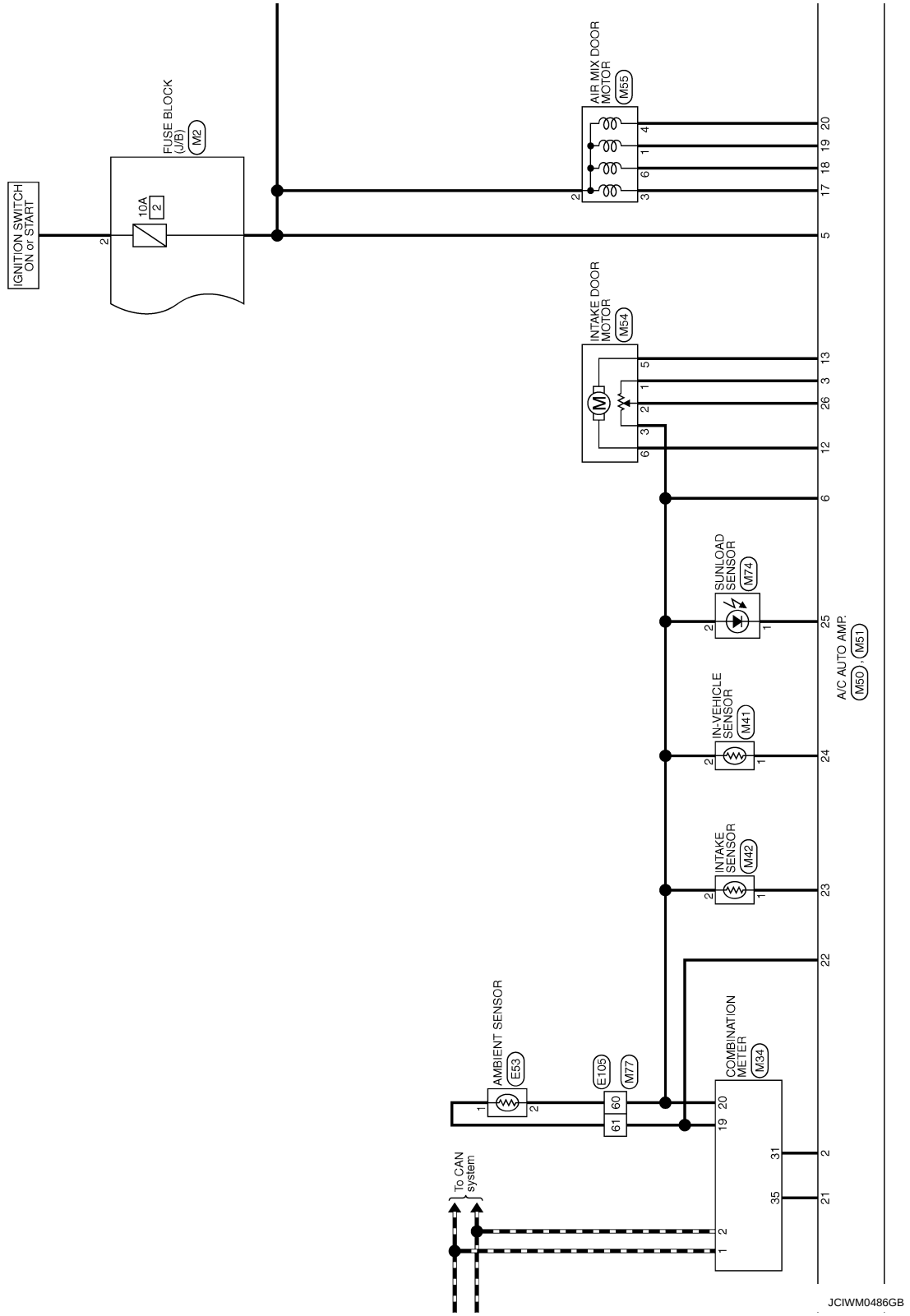
IGNITION SWITCH ON or START
FUSE BLOCK (J/B) M2
10A 2
AIR MIX DOOR MOTOR M55
INTAKE DOOR MOTOR M54
SUNLOAD SENSOR M74
IN-VEHICLE SENSOR M41
INTAKE SENSOR M42
AMBIENT SENSOR E53
E105 M77
COMBINATION METER M34
To CAN system
A/C AUTO AMP. M50, M51
JCIWM0486GB

BASIC INSPECTION

DIAGNOSIS AND REPAIR WORK FLOW

Work Flow

INFOID:0000000006024007

OVERALL SEQUENCE

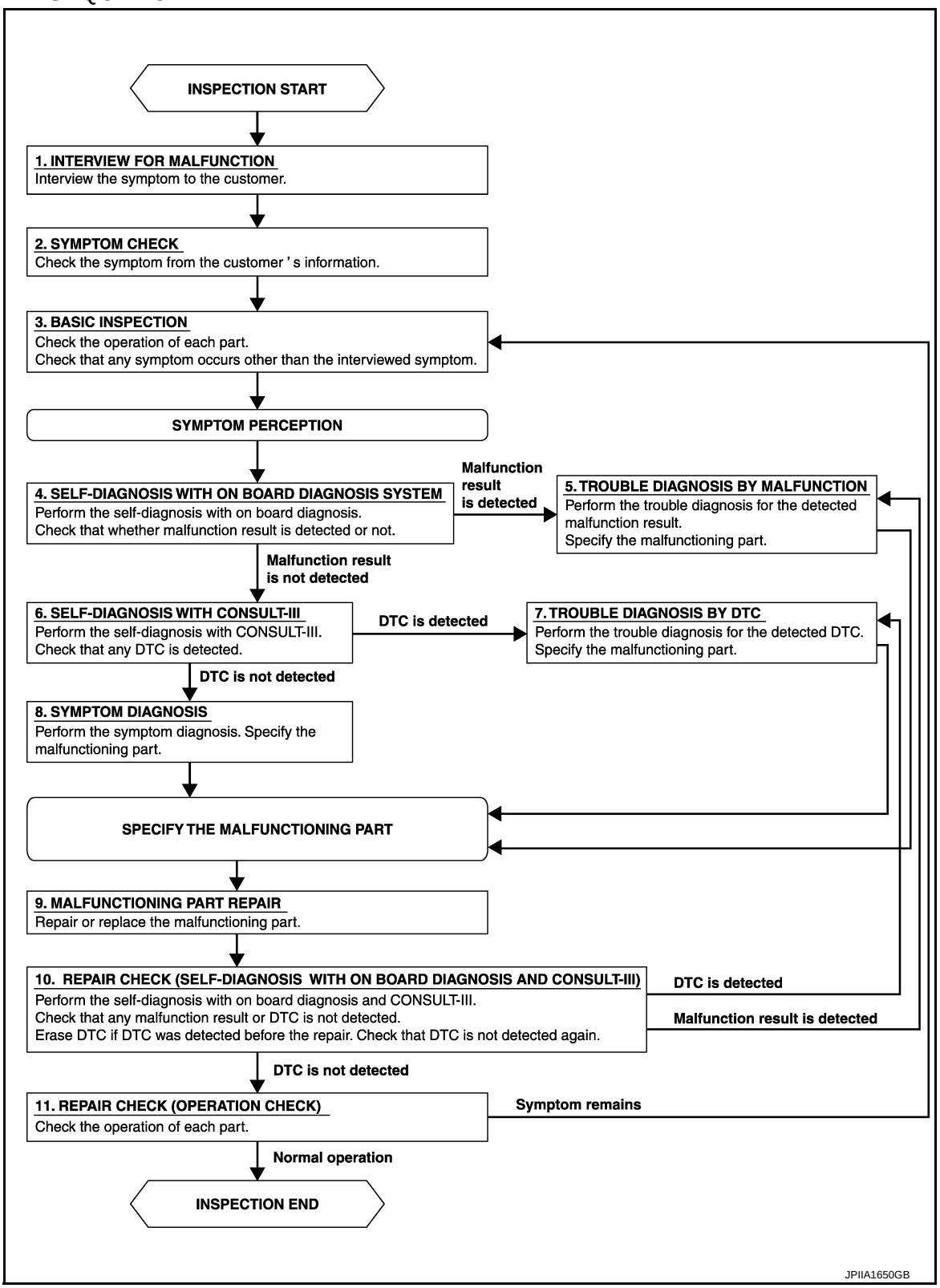

DETAILED FLOW

1. INTERVIEW FOR MALFUNCTION

Interview the symptom to the customer.

>> GO TO 2.

2. SYMPTOM CHECK

Check the symptom from the customer's information.

>> GO TO 3.

3. BASIC INSPECTION

Check the operation of each part. Check that any symptom occurs other than the interviewed symptom.

>> GO TO 4.

4. SELF-DIAGNOSIS WITH ON BOARD DIAGNOSIS SYSTEM

Perform the self-diagnosis with on board diagnosis. Check that whether malfunction result is detected or not. Refer to HAC-22, "Diagnosis Description".

Is any malfunction result detected?

YES >> GO TO 5.
NO >> GO TO 6.

5. TROUBLE DIAGNOSIS BY MALFUNCTION

Perform the trouble diagnosis for the detected malfunction result. Specify the malfunction part.

>> GO TO 6.

6. SELF-DIAGNOSIS WITH CONSULT-III

Perform the self-diagnosis with CONSULT-III. Check that any DTC is detected.

Is any DTC detected?

YES >> GO TO 7.
NO >> GO TO 8.

7. TROUBLE DIAGNOSIS BY DTC

Perform the trouble diagnosis for the detected DTC. Specify the malfunctioning part.

>> GO TO 8.

8. SYMPTOM DIAGNOSIS

Perform the symptom diagnosis. Specify the malfunctioning part.

>> GO TO 9.

9. MALFUNCTION PART REPAIR

Repair or replace the malfunctioning part.

>> GO TO 10.

10. REPAIR CHECK (SELF-DIAGNOSIS WITH ON BOARD DIAGNOSIS AND CONSULT-III)

Perform the self-diagnoses with on board diagnosis and CONSULT-III. Check that any DTC or malfunction result is not detected. Erase DTC if DTC is detected before the repair. Check that DTC is not detected again.

Is any or malfunction result or DTC detected?

YES-1 >> If malfunction result is detected, GO TO 5.
YES-2 >> If DTC is detected, GO TO 7.
NO >> GO TO 11.

11. REPAIR CHECK (OPERATION CHECK)

Check the operation of each part.

Does it operate normally?

YES >> INSPECTION END
NO >> GO TO 3.

OPERATION INSPECTION

Description & Inspection

INFOID:0000000006024008

DESCRIPTION

The purpose of the operational check is to check that the individual system operates normally.

Check condition : Engine running at normal operating temperature.

INSPECTION PROCEDURE

1. CHECK MEMORY FUNCTION

1. Start the engine.
2. Set the temperature to 32°C (90°F) by operating the temperature control switch.
3. Press OFF switch.
4. Turn ignition switch OFF.
5. Turn ignition switch ON.
6. Press AUTO switch.
7. Check that the set temperature is maintained.

Is the inspection result normal?

YES >> GO TO 2.
NO >> Memory function malfunction. Refer to HAC-74, "Inspection Procedure".

2. CHECK BLOWER MOTOR

1. Start the engine.
2. Operate the fan control switch. Check that the fan speed changes. Check the operation for all fan speeds.
3. Leave blower on maximum speed.

Is the inspection result normal?

YES >> GO TO 3.
NO >> Blower motor system malfunction. Refer to HAC-57, "Diagnosis Procedure".

3. CHECK DISCHARGE AIR

1. Operate MODE switch and DEF switch to each position.
2. Check that the air outlets change according to each indicated air outlet by placing a hand in front of the outlets. Refer to XX-XX, "*****".

Is the inspection result normal?

YES >> GO TO 4.
NO >> Mode door system malfunction. Refer to HAC-53, "Diagnosis Procedure".

4. CHECK INTAKE AIR

1. Press REC switch to set the air outlet to recirculation.
2. The REC indicator turns ON.
3. Listen to intake sound and confirm air inlets change.
4. Press FRE switch again to set the air outlet to fresh air intake.
5. The FRE indicator turns ON.
6. Listen to intake sound and confirm air inlets change.

Is the inspection result normal?

YES >> GO TO 5.
NO >> Intake door system malfunction. Refer to HAC-55, "Diagnosis Procedure".

5. CHECK A/C SWITCH

1. Press the A/C switch.
2. Check that the indicator of the A/C switch turns ON. Check visually and by sound that the compressor operates.
3. Press the A/C switch again.
4. Check that the indicator of the A/C switch turns OFF. Check that the compressor stops.

Is the inspection result normal?

YES >> GO TO 6.

NO >> Magnet clutch system malfunction. Refer to HAC-60, "Diagnosis Procedure".

6. CHECK DISCHARGE AIR TEMPERATURE

Operate the temperature control switch. Check that the discharge air temperature changes.

Is the inspection result normal?

YES >> GO TO 7.
NO >> Air mix door system malfunction. Refer to HAC-51, "Diagnosis Procedure".

7. CHECK TEMPERATURE DECREASE

1. Operate the compressor.
2. Operate the temperature control switch to lower temperature setting at 18°C (60°F).
3. Check that the cool air blows from the outlets.

Is the inspection result normal?

YES >> GO TO 8.
NO >> Insufficient cooling. Refer to HAC-69, "Diagnosis Procedure".

8. CHECK TEMPERATURE INCREASE

1. Turn temperature control switch to raise temperature setting at 32°C (90°F) after warming up the engine.
2. Check that warm air blows from outlets.

Is the inspection result normal?

YES >> GO TO 9.
NO >> Insufficient heating. Refer to HAC-71, "Diagnosis Procedure".

9. CHECK AUTO MODE

1. Press AUTO switch to confirm that “AUTO” is indicated on the display.
2. Operate the temperature control switch to check that the fan speed or air outlet changes (the air flow temperature or fan speed varies depending on the ambient temperature, in-vehicle temperature, and set temperature).

Is the inspection result normal?

YES >> INSPECTION END
NO >> Refer to HAC-68, "Diagnosis Chart By Symptom" and perform the appropriate diagnosis.

SYSTEM SETTING

Temperature Setting Trimmer

INFOID:0000000006024009

DESCRIPTION

If the temperature felt by the customer is different than the air flow temperature controlled by the temperature setting, the A/C auto amp. control temperature can be adjusted to compensate for the temperature setting.

OPERATING PROCEDURES

1. Begin self-diagnosis STEP 5 mode. Refer to HAC-22, "Diagnosis Description".
2. Press fan control switch (up: +) to enter the set temperature setting trimmer mode from STEP 5, and then display shows “0°C (0°F)”.
3. The indication temperature will be changed by 0.5°C (32.9°F) in range of –3°C (–6.6°F) to +3°C (37.4°F) by pressing the temperature control switch each time.

Temperature control switch operation	Display	Correction (°C)
▲ 6 time pressing	30	+3.0
▲ 5 time pressing	25	+2.5
▲ 4 time pressing	20	+2.0
▲ 3 time pressing	15	+1.5
▲ 2 time pressing	10	+1.0
▲ 1 time pressing	5	+0.5
Initial status	0	0
▼ 1 time pressing	● (A/C switch indicator) 5	–0.5
▼ 2 time pressing	● (A/C switch indicator) 10	–1.0
▼ 3 time pressing	● (A/C switch indicator) 15	–1.5
▼ 4 time pressing	● (A/C switch indicator) 20	–2.0
▼ 5 time pressing	● (A/C switch indicator) 25	–2.5
▼ 6 time pressing	● (A/C switch indicator) 30	–3.0

NOTE:
- When –3°C (–6.6°F) is corrected on the temperature setting set as 25°C (77°F), the temperature controlled by A/C auto amp. is 25°C (77°F) – 3°C (26.6°F) = 22.0°C (71.6°F) and the temperature becomes lower than the temperature setting.
- When the battery cable is disconnected from the negative terminal or when the battery voltage becomes 10 V or less, the setting of the difference between the set temperature and control temperature may be cancelled.

Foot Position Setting Trimmer

INFOID:0000000006057626

DESCRIPTION

Wind distribution ratio in FOOT mode can be set.

Operating procedures for this trimmer are as per the following:
1. Begin self-diagnosis STEP-5 mode. Refer to HAC-22, "Diagnosis Description".
2. Press fan (UP: +) switch to set system in auxiliary mode.
3. Press mode switch as desired.

Display	Defroster door position	
	Automatically controls the FOOT mode	Manually controls the FOOT mode
(Initial setting)	OPEN	OPEN
	OPEN	CLOSE
	CLOSE	OPEN
	CLOSE	CLOSE

NOTE:
When battery cable is disconnected or battery voltage is below 10 V, trimmer operation is canceled. Air distribution ratio set becomes that of initial condition.

Inlet Port Memory Function

INFOID:0000000006057627

DESCRIPTION

When ignition switch is turned from OFF to ON, inlet port can be set to AUTO or manual.

Operating procedures for this trimmer are as per the following:
1. Begin self-diagnosis STEP-5 mode. Refer to HAC-22, "Diagnosis Description".
2. Press fan (UP: +) switch to set system in auxiliary mode.
3. Press FRE/REC switch as desired.

FRE indicator	REC indicator	Setting status		Setting changeover method
		FRE	REC	
OFF	ON	Shall be memorized (Initial setting)	Shall be memorized. (Initial setting)	FRE/REC switch: ON
ON	ON	Shall be memorized.	Shall be memorized.	
ON	OFF	Shall be memorized.	Shall not be memorized.	
OFF	OFF	Shall not be memorized.	Shall not be memorized.	

NOTE:
When battery cable is disconnected or battery voltage is below 10 V, memory function is canceled. Memory function set becomes that of initial condition.

DTC/CIRCUIT DIAGNOSIS

AMBIENT SENSOR

Diagnosis Procedure

INFOID:0000000006024024

1. CHECK AMBIENT SENSOR POWER SUPPLY CIRCUIT

1. Turn the ignition switch OFF.
2. Disconnect the ambient sensor connector.
3. Turn the ignition switch ON.
4. Check voltage between ambient sensor harness connector and the ground.

(+)		(–)	Voltage (Approx.)
Ambient sensor		—	
Connector	Terminal		
E53	1	Ground	5 V

Is the inspection result normal?

YES >> GO TO 2.
NO >> GO TO 4.

2. CHECK AMBIENT SENSOR GROUND CIRCUIT CONTINUITY

1. Turn the ignition switch OFF.
2. Disconnect the A/C auto amp. connector.
3. Check continuity between ambient sensor harness connector and A/C auto amp harness connector.

Ambient sensor		A/C auto amp.		Continuity
Connector	Terminal	Connector	Terminal	
E53	2	M50	37	Existed

Is the inspection result normal?

YES >> GO TO 3.
NO >> Repair the harnesses or connectors.

3. CHECK AMBIENT SENSOR

Check the ambient sensor components. Refer to HAC-44, "Component Inspection".

Is the inspection result normal?

YES >> INSPECTION END
NO >> Replace the ambient sensor.

4. CHECK AMBIENT SENSOR OPEN CIRCUIT

1. Turn the ignition switch OFF.
2. Disconnect the A/C auto amp. connector.
3. Check continuity between ambient sensor harness connector and A/C auto amp. harness connector.

Ambient sensor		A/C auto amp.		Continuity
Connector	Terminal	Connector	Terminal	
E53	1	M51	39	Existed

Is the inspection result normal?

YES >> GO TO 5.
NO >> Repair the harnesses or connectors.

5. CHECK AMBIENT SENSOR SHORT CIRCUIT

Check continuity between ambient sensor harness connector and the ground.

Ambient sensor		—	Continuity
Connector	Terminal		
E53	1	Ground	Not existed

Is the inspection result normal?

YES >> Replace the A/C auto amp.
NO >> Repair the harnesses or connectors.

Component Inspection

INFOID:0000000006024025

1. CHECK AMBIENT SENSOR

1. Turn the ignition switch OFF.
2. Remove the ambient sensor. Refer to XX-XX, "*****".
3. Check the resistance between the ambient sensor terminals. Refer to the applicable table for the normal value.

Terminal		Condition Temperature: °C (°F)	Resistance: kΩ
1	2	–15 (5)	12.73
		–10 (14)	9.92
		–5 (23)	7.80
		0 (32)	6.19
		5 (41)	4.95
		10 (50)	3.99
		15 (59)	3.24
		20 (68)	2.65
		25 (77)	2.19
		30 (86)	1.81
		35 (95)	1.51
		40 (104)	1.27
		45 (113)	1.07

Is the inspection result normal?

YES >> INSPECTION END
NO >> Replace the ambient sensor.

IN-VEHICLE SENSOR

Diagnosis Procedure

INFOID:0000000006024027

1. CHECK IN-VEHICLE SENSOR POWER SUPPLY CIRCUIT

1. Turn the ignition switch OFF.
2. Disconnect the in-vehicle sensor connector.
3. Turn the ignition switch ON.
4. Check voltage between in-vehicle sensor harness connector and the ground.

(+)		(–)	Voltage (Approx.)
In-vehicle sensor		—	
Connector	Terminal		
M41	1	Ground	5 V

Is the inspection result normal?

YES >> GO TO 2.
NO >> GO TO 4.

2. CHECK IN-VEHICLE SENSOR GROUND CIRCUIT CONTINUITY

1. Turn the ignition switch OFF.
2. Disconnect the A/C auto amp. connector.
3. Check continuity between in-vehicle sensor harness connector and A/C auto amp. harness connector.

In-vehicle sensor		A/C auto amp.		Continuity
Connector	Terminal	Connector	Terminal	
M41	2	M50	40	Existed

Is the inspection result normal?

YES >> GO TO 3.
NO >> Repair the harnesses or connectors.

3. CHECK IN-VEHICLE SENSOR

Check the in-vehicle sensor components. Refer to HAC-46, "Component Inspection".

Is the inspection result normal?

YES >> INSPECTION END
NO >> Replace the in-vehicle sensor.

4. CHECK IN-VEHICLE SENSOR OPEN CIRCUIT

1. Turn the ignition switch OFF.
2. Disconnect the A/C auto amp. connector.
3. Check continuity between in-vehicle sensor harness connector and A/C auto amp. harness connector.

In-vehicle sensor		A/C auto amp.		Continuity
Connector	Terminal	Connector	Terminal	
M41	1	M50	19	Existed

Is the inspection result normal?

YES >> GO TO 5.
NO >> Repair the harnesses or connectors.

5. CHECK IN-VEHICLE SENSOR SHORT CIRCUIT

Check continuity between in-vehicle sensor harness connector and the ground.

In-vehicle sensor		—	Continuity
Connector	Terminal		
M41	1	Ground	Not existed

Is the inspection result normal?

YES >> Replace the A/C auto amp.
NO >> Repair the harnesses or connectors.

Component Inspection

INFOID:0000000006024028

1. CHECK IN-VEHICLE SENSOR

1. Turn the ignition switch OFF.
2. Remove the in-vehicle sensor. Refer to XX-XX, "*****".
3. Check the resistance between the in-vehicle sensor terminals. Refer to the applicable table for the normal value.

Terminal		Condition	Resistance: kΩ
		Temperature: °C (°F)	
1	2	–15 (5)	12.73
		–10 (14)	9.92
		–5 (23)	7.80
		0 (32)	6.19
		5 (41)	4.95
		10 (50)	3.99
		15 (59)	3.24
		20 (68)	2.65
		25 (77)	2.19
		30 (86)	1.81
		35 (95)	1.51
		40 (104)	1.27
		45 (113)	1.07

Is the inspection result normal?

YES >> INSPECTION END
NO >> Replace the in-vehicle sensor.

INTAKE SENSOR

Diagnosis Procedure

INFOID:0000000006024030

1. CHECK INTAKE SENSOR POWER SUPPLY CIRCUIT

1. Turn the ignition switch OFF.
2. Disconnect the intake sensor connector.
3. Turn the ignition switch ON.
4. Check voltage between intake sensor harness connector and the ground.

(+)		(–)	Voltage (Approx.)
Intake sensor		—	
Connector	Terminal		
M42	1	Ground	5 V

Is the inspection result normal?

YES >> GO TO 2.
NO >> GO TO 4.

2. CHECK INTAKE SENSOR GROUND CIRCUIT CONTINUITY

1. Turn the ignition switch OFF.
2. Disconnect the A/C auto amp. connector.
3. Check continuity between intake sensor harness connector and A/C auto amp. harness connector.

Intake sensor		A/C auto amp.		Continuity
Connector	Terminal	Connector	Terminal	
M42	2	M50	40	Existed

Is the inspection result normal?

YES >> GO TO 3.
NO >> Repair the harnesses or connectors.

3. CHECK INTAKE SENSOR

Check the intake sensor components. Refer to HAC-48, "Component Inspection".

Is the inspection result normal?

YES >> INSPECTION END
NO >> Replace the intake sensor.

4. CHECK INTAKE SENSOR OPEN CIRCUIT

1. Turn the ignition switch OFF.
2. Disconnect the A/C auto amp. connector.
3. Check continuity between intake sensor harness connector and A/C auto amp. harness connector.

Intake sensor		A/C auto amp.		Continuity
Connector	Terminal	Connector	Terminal	
M42	1	M50	37	Existed

Is the inspection result normal?

YES >> GO TO 5.
NO >> Repair the harnesses or connectors.

5. CHECK INTAKE SENSOR SHORT CIRCUIT

Check continuity between intake sensor harness connector and the ground.

Intake sensor		—	Continuity
Connector	Terminal		
M42	1	Ground	Not existed.

Is the inspection result normal?

YES >> Replace the A/C auto amp.
NO >> Repair the harnesses or connectors.

Component Inspection

INFOID:0000000006024031

1. CHECK INTAKE SENSOR

1. Turn the ignition switch OFF.
2. Disconnect the intake sensor connector.
3. Check the resistance between the intake sensor terminals. Refer to the applicable table for the normal value.

Terminal		Condition	Resistance: kΩ
		Temperature: °C (°F)	
1	2	–15 (5)	12.34
		–10 (14)	9.62
		–5 (23)	7.56
		0 (32)	6.00
		5 (41)	4.80
		10 (50)	3.87
		15 (59)	3.15
		20 (68)	2.57
		25 (77)	2.12
		30 (86)	1.76
		35 (95)	1.47
		40 (104)	1.23
		45 (113)	1.04

Is the inspection result normal?

YES >> INSPECTION END
NO >> Replace the intake sensor.

SUNLOAD SENSOR

Diagnosis Procedure

INFOID:0000000006024033

1. CHECK SUNLOAD SENSOR POWER SUPPLY CIRCUIT

1. Turn the ignition switch OFF.
2. Disconnect the sunload sensor connector.
3. Turn the ignition switch ON.
4. Check voltage between sunload sensor harness connector and the ground.

(+)		(–)	Voltage (Approx.)
Sunload sensor		—	
Connector	Terminal		
M74	1	Ground	5 V

Is the inspection result normal?

YES >> GO TO 2.
NO >> GO TO 4.

2. CHECK SUNLOAD SENSOR GROUND CIRCUIT CONTINUITY

1. Turn the ignition switch OFF.
2. Disconnect the A/C auto amp. connector.
3. Check continuity between sunload sensor harness connector and A/C auto amp. harness connector.

Sunload sensor		A/C auto amp.		Continuity
Connector	Terminal	Connector	Terminal	
M74	2	M50	40	Existed

Is the inspection result normal?

YES >> GO TO 3.
NO >> Repair the harnesses or connectors.

3. CHECK SUNLOAD SENSOR

1. Connect the sunload sensor connector.
2. Connect the A/C auto amp. connector.
3. Check the sunload sensor components. Refer to HAC-50, "Component Inspection".

Is the inspection result normal?

YES >> INSPECTION END
NO >> Replace the sunload sensor.

4. CHECK SUNLOAD SENSOR OPEN CIRCUIT

1. Turn the ignition switch OFF.
2. Disconnect the A/C auto amp. connector.
3. Check continuity between sunload sensor harness connector and A/C auto amp. harness connector.

Sunload sensor		A/C auto amp.		Continuity
Connector	Terminal	Connector	Terminal	
M74	1	M50	18	Existed

Is the inspection result normal?

YES >> GO TO 5.
NO >> Repair the harnesses or connectors.

5. CHECK SUNLOAD SENSOR SHORT CIRCUIT

Check continuity between sunload sensor harness connector and the ground.

Sunload sensor		—	Continuity
Connector	Terminal		
M74	1	Ground	Not existed

Is the inspection result normal?

YES >> Replace the A/C auto amp.
NO >> Repair the harnesses or connectors.

Component Inspection

INFOID:0000000006024034

1. CHECK SUNLOAD SENSOR

1. Turn the ignition switch ON.
2. Check the input voltage from sunload sensor between A/C auto amp. harness connector and the ground. Refer to the applicable table for the normal value.

(+)		(–)
A/C auto amp.		—
Connector	Terminal	
M50	18	Ground

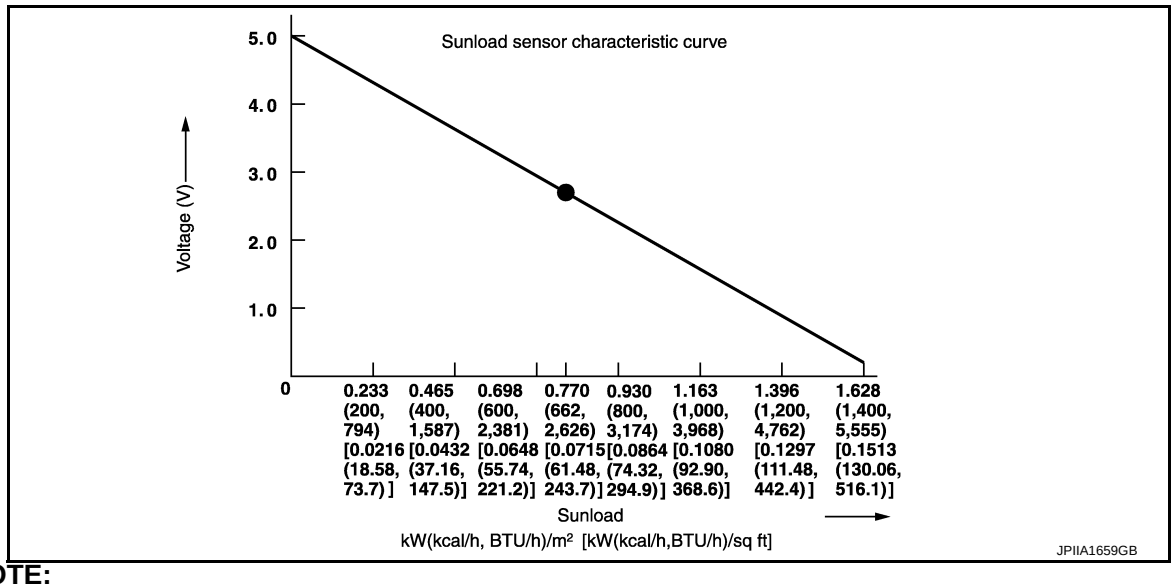

NOTE:

- When checking indoors, use a lamp of approximately 60 W. Move the lamp towards and away from the sensor to check.
- The sunload amount produced by direct sunshine in fair weather is equivalent to approximately 0.77 kW/m^2 (662 $kcal/m^2 \cdot h$).

Is the inspection result normal?

YES >> INSPECTION END
NO >> Replace the sunload sensor.

AIR MIX DOOR MOTOR

Diagnosis Procedure

INFOID:0000000006024036

1. PERFORM SELF-DIAGNOSIS

Perform self-diagnosis function. Refer to HAC-22, "Diagnosis Description".

Is the inspection result normal?

YES >> GO TO 5.
NO >> GO TO 2.

2. CHECK POWER SUPPLY FOR AIR MIX DOOR MOTOR

Check voltage between air mix door motor harness connector and ground.

(+)		(–)	Voltage (Approx.)
Air mix door motor		—	
Connector	Terminal		
M55	1	Ground	12 V

Is the inspection result normal?

YES >> GO TO 3.
NO >> Repair harness or connector.

3. CHECK SIGNAL FOR AIR MIX DOOR MOTOR

Confirm A/C LAN signal between air mix door motor harness connector and ground using an oscilloscope.

(+)		(–)	Voltage
Air mix door motor		—	
Connector	Terminal		
M55	3	Ground	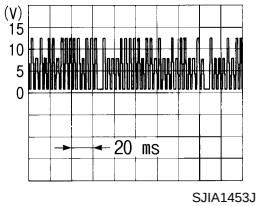

Is the inspection result normal?

YES >> GO TO 4.
NO >> Repair harness or connector.

4. CHECK AIR MIX DOOR MOTOR GROUND CIRCUIT

1. Turn ignition switch OFF.
2. Disconnect air mix door motor connector.
3. Check continuity between air mix door motor harness connector and ground.

Air mix door motor		—	Continuity
Connector	Terminal		
M55	2	Ground	Existed

Is the inspection result normal?

YES >> Replace air mix door motor.
NO >> Repair harness or connector.

5. CHECK INSTALLATION OF AIR MIX DOOR MOTOR

Check air mix door motor is properly installed. Refer to XX-XX, "*****".

Is it installed normally?

YES >> INSPECTION END
NO >> Repair or replace air mix door motor.

MODE DOOR MOTOR

Diagnosis Procedure

INFOID:0000000006024039

1. PERFORM SELF-DIAGNOSIS

Perform self-diagnosis function. Refer to HAC-22, "Diagnosis Description".

Is the inspection result normal?

YES >> GO TO 5.
NO >> GO TO 2.

2. CHECK POWER SUPPLY FOR MODE DOOR MOTOR

Check voltage between mode door motor harness connector and ground.

(+)		(–)	Voltage (Approx.)
Mode door motor		—	
Connector	Terminal		
M56	1	Ground	12 V

Is the inspection result normal?

YES >> GO TO 3.
NO >> Repair harness or connector.

3. CHECK SIGNAL FOR MODE DOOR MOTOR

Confirm A/C LAN signal between mode door motor harness connector and ground using an oscilloscope.

(+)		(–)	Voltage
Mode door motor		—	
Connector	Terminal		
M56	3	Ground	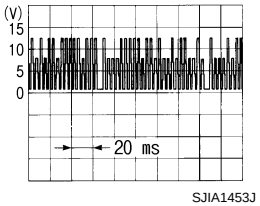

Is the inspection result normal?

YES >> GO TO 4.
NO >> Repair harness or connector.

4. CHECK MODE DOOR MOTOR GROUND CIRCUIT

1. Turn ignition switch OFF.
2. Disconnect mode door motor connector.
3. Check continuity between mode door motor harness connector and ground.

Mode door motor		—	Continuity
Connector	Terminal		
M56	2	Ground	Existed

Is the inspection result normal?

YES >> Replace mode door motor.
NO >> Repair harness or connector.

5. CHECK MODE DOOR CONTROL LINKAGE

Check mode door control linkage is properly installed. Refer to XX-XX, "*****".

Is it installed normally?

YES >> INSPECTION END
NO >> Repair or adjust control linkage.

INTAKE DOOR MOTOR

Diagnosis Procedure

INFOID:0000000006024042

1. PERFORM SELF-DIAGNOSIS

Perform self-diagnosis function. Refer to HAC-22, "Diagnosis Description".

Is the inspection result normal?

YES >> GO TO 5.
NO >> GO TO 2.

2. CHECK POWER SUPPLY FOR INTAKE DOOR MOTOR

Check voltage between intake door motor harness connector and ground.

(+)		(–)	Voltage (Approx.)
Intake door motor		—	
Connector	Terminal		
M54	1	Ground	12 V

Is the inspection result normal?

YES >> GO TO 3.
NO >> Repair harness or connector.

3. CHECK SIGNAL FOR INTAKE DOOR MOTOR

Confirm A/C LAN signal between intake door motor harness connector and ground using an oscilloscope.

(+)		(–)	Voltage
Intake door motor		—	
Connector	Terminal		
M54	3	Ground	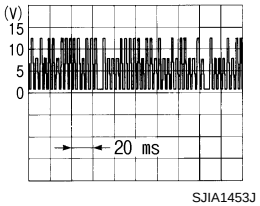

Is the inspection result normal?

YES >> GO TO 4.
NO >> Repair harness or connector.

4. CHECK INTAKE DOOR MOTOR GROUND CIRCUIT

1. Turn ignition switch OFF.
2. Disconnect intake door motor connector.
3. Check continuity between intake door motor harness connector and ground.

Intake door motor		—	Continuity
Connector	Terminal		
M54	2	Ground	Existed

Is the inspection result normal?

YES >> Replace intake door motor.
NO >> Repair harness or connector.

5. CHECK INTAKE DOOR CONTROL LINKAGE

Check intake door control linkage is properly installed. Refer to XX-XX, "*****".

Is it installed normally?

YES >> INSPECTION END
NO >> Repair or adjust control linkage.

BLOWER MOTOR

Component Function Check

INFOID:0000000006024045

1. CHECK OPERATION

1. Warm up the engine.
2. Operate the fan control switch. Check that the fan speed and indicator unit are switched for all fan speeds.

Does it operate normally?

YES >> INSPECTION END
NO >> Perform the diagnosis for the blower motor. Refer to HAC-57, "Diagnosis Procedure".

Diagnosis Procedure

INFOID:0000000006024046

1. CHECK FUSE

Check 15A fuses [Nos. 14 and 16, located in the fuse block (J/B)].

NOTE:
Refer to XX-XX, "*****".

Is inspection result normal?

YES >> GO TO 2.
NO >> Replace the corresponding fuse.

2. CHECK POWER SUPPLY OF BLOWER MOTOR

1. Turn the ignition switch OFF.
2. Disconnect the blower motor connector.
3. Turn the ignition switch ON.
4. Check voltage between blower motor harness connector and the ground.

(+)		(–)	Voltage (Approx.)
Blower motor		—	
Connector	Terminal		
M39	1	Ground	Battery voltage

Is the inspection result normal?

YES >> GO TO 4.
NO >> GO TO 3.

3. CHECK BLOWER MOTOR RELAY

1. Turn the ignition switch OFF.
2. Check the blower motor relay. Refer to HAC-58, "Component Inspection".

Is inspection result normal?

YES >> Repair the harness or connector between blower motor and fuse.
NO >> Replace the blower motor relay.

4. CHECK VOLTAGE BETWEEN FAN CONTROL AMP. AND GROUND

1. Connect the blower motor connector.
2. Disconnect the fan control amp. connector.
3. Turn the ignition switch ON.
4. Check voltage between fan control amp. harness connector and the ground.

(+)		(–)	Voltage (Approx.)
Blower motor		—	
Connector	Terminal		
M81	1	Ground	Battery voltage

Is inspection result normal?

YES >> GO TO 6.

NO >> GO TO 5.

5. CHECK CONTINUITY BETWEEN BLOWER MOTOR AND FAN CONTROL AMP.

1. Turn the ignition switch OFF.
2. Disconnect the blower motor connector.
3. Check continuity between blower motor harness connector and fan control amp. harness connector.

Blower motor		Fan control amp.		Continuity
Connector	Terminal	Connector	Terminal	
M39	2	M81	1	Existed

Is the inspection result normal?

YES >> Replace the blower motor.
NO >> Repair the harnesses or connectors.

6. CHECK CONTINUITY BETWEEN FAN CONTROL AMP. AND GROUND

Check continuity between fan control amp. harness connector and the ground.

Blower motor		—	Continuity
Connector	Terminal		
M81	3	Ground	Existed

Is inspection result normal?

YES >> GO TO 7.
NO >> Repair the harnesses or connectors.

7. CHECK A/C AUTO AMP. OUTPUT SIGNAL

1. Connect the blower motor connector and the fan control amp. connector.
2. Turn the ignition switch ON.
3. Set fan control to 1st speed.
4. Check voltage between A/C auto amp. harness connector and ground.

(+)		(–)	Voltage (Approx.)
A/C auto amp.			
Connector	Terminal		
M50	30	Ground	2.5

Is the inspection result normal?

YES >> Replace A/C auto amp.
NO >> Replace fan control amp.

Component Inspection

INFOID:0000000006024047

BLOWER MOTOR

1. CHECK BLOWER MOTOR

1. Remove the blower motor. Refer to XX-XX, "*****".
2. Check that there is not any mixing foreign object in the blower motor.

Is the inspection result normal?

YES >> GO TO 2.
NO >> Replace the blower motor.

2. CHECK BLOWER MOTOR

Check that there is not breakage or damage in the blower motor.

Is the inspection result normal?

YES >> GO TO 3.
NO >> Replace the blower motor.

3. CHECK BLOWER MOTOR

Check that the blower motor turns smoothly.

Is the inspection result normal?

YES >> INSPECTION END
NO >> Replace the blower motor.

BLOWER MOTOR RELAY

1. CHECK BLOWER MOTOR

1. Remove the blower motor relay. Refer to XX-XX, "*****".
2. Check the continuity between the blower motor relay terminal 3 and 5 when the voltage is supplied between terminal 1 and 2.

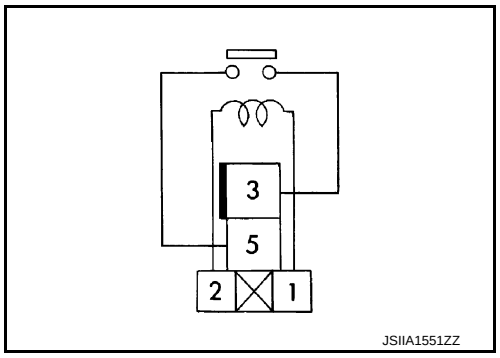

Blower motor relay		Voltage	Continuity
Terminal			
3	5	ON	Existed
		OFF	Not existed

Is the inspection result normal?

YES >> INSPECTION END
NO >> Replace the blower motor relay.

MAGNET CLUTCH

Component Function Check

INFOID:0000000006024049

1.CHECK MAGNET CLUTCH OPERATION

Perform auto active test of IPDM E/R. Refer to XX-XX, "*****" (WITH I-KEY) or XX-XX, "*****" (WITHOUT I-KEY).

Does it operate normally?

YES >> INSPECTION END
NO >> Go to diagnosis procedure. Refer to HAC-60, "Diagnosis Procedure".

Diagnosis Procedure

INFOID:0000000006024050

1.CHECK MAGNET CLUTCH

1. Turn the ignition switch OFF.
2. Disconnect the magnet clutch connector.
3. Directly apply the battery voltage to the magnet clutch. Check for operation visually and by sound.

Does it operate normally?

YES >> GO TO 2.
NO >> Replace the compressor.

2.CHECK MAGNET CLUTCH CIRCUIT CONTINUITY

1. Turn the ignition switch OFF.
2. Disconnect the IPDM E/R connector.
3. Check continuity between magnet clutch harness connector and IPDM E/R harness connector.

IPDM E/R		Magnet clutch		Continuity
Connector	Terminal	Connector	Terminal	
E14	64	F17	1	Existed

Is the inspection result normal?

YES >> GO TO 3.
NO >> Repair the harnesses and connectors.

3.CHECK FUSE

Check 10A fuse (No. 43, located in the IPDM E/R).

NOTE:
Refer to XX-XX, "*****".

Is the inspection result normal?

YES >> Replace the IPDM E/R.
NO >> Replace the fuse after repairing the applicable circuit.

A/C ON SIGNAL

Component Function Check

INFOID:0000000006024051

1. CHECK A/C ON SIGNAL

With CONSULT-III
1. Turn the ignition switch ON.
2. Select the “COMP REQ SIG” in “DATA MONITOR”.
3. Check A/C ON signal when the A/C switch is operated.

Monitor item	Condition		Status
COMP REQ SIG	A/C control	A/C system ON (Indicator ON)	On
		A/C system OFF (Indicator OFF)	Off

Is inspection result normal?

YES >> INSPECTION END
NO >> Refer to HAC-61, "Diagnosis Procedure".

Diagnosis Procedure

INFOID:0000000006024052

1. CHECK A/C SWITCH SIGNAL

1. Turn the ignition switch ON.
2. Check output waveform between A/C auto amp. harness connector and the ground with using oscilloscope.

(+)		(–)	Condition	Output waveform
A/C auto amp.		—		
Connector	Terminal			
M50	13	Ground	A/C switch ON	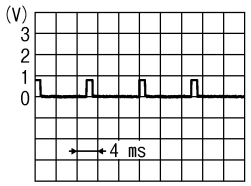

ZJIA1036J

Is inspection result normal?

YES >> GO TO 2.
NO >> Replace the A/C auto amp.

2. CHECK CONTINUITY BETWEEN A/C AUTO AMP. AND BCM

1. Turn the ignition switch OFF.
2. Disconnect the A/C auto amp. connector.
3. Disconnect the BCM connector.
4. Check continuity between A/C auto amp. harness connector and BCM harness connector.

A/C auto amp.		BCM		Continuity
Connector	Terminal	Connector	Terminal	
M50	13	M65 (WITHOUT I-KEY) M68 (WITH I-KEY)	27	Existed

Is inspection result normal?

YES >> GO TO 3.
NO >> Repair the harnesses or connectors.

3. CHECK THE CONTINUITY BETWEEN A/C AUTO AMP. AND GROUND

Check continuity between A/C auto amp. harness connector and ground.

A/C auto amp.		—	Continuity
Connector	Terminal		
M50	13	Ground	Not existed

Is inspection result normal?

YES >> Replace the BCM. Refer to XX-XX, "*****" (WITH I-KEY) or XX-XX, "*****" (WITHOUT I-KEY).
NO >> Repair the harnesses or connectors.

BLOWER FAN ON SIGNAL

Component Function Check

INFOID:0000000006024053

1. CHECK BLOWER FAN ON SIGNAL

With CONSULT-III
1. Turn the ignition switch ON.
2. Select the “FAN REQ SIG” in “DATA MONITOR”
3. Check the fan ON signal when the fan control switch is operated.

Monitor item	Condition		Status
FAN REQ SIG	Fan control switch	OFF position	Off
		Except OFF position	On

Is inspection result normal?

YES >> INSPECTION END
NO >> Refer to HAC-63, "Diagnosis Procedure".

Diagnosis Procedure

INFOID:0000000006024054

1. CHECK BLOWER FAN ON SIGNAL

1. Turn the ignition switch ON.
2. Check output waveform between A/C auto amp. and ground with using the oscilloscope.

(+)		(–)	Condition	Output waveform
A/C auto amp.		—		
Connector	Terminal			
M50	12	Ground	• Ignition switch ON • Fan speed: Manual 1st	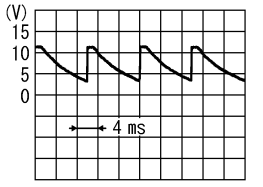 SJIA1425J

Is inspection result normal?

YES >> GO TO 2.
NO >> Replace the A/C auto amp.

2. CHECK CONTINUITY BETWEEN A/C AUTO AMP. AND BCM

1. Turn the ignition switch OFF.
2. Disconnect the A/C auto amp. connector.
3. Disconnect the BCM connector.
4. Check continuity A/C auto amp. harness connector and BCM harness connector.

A/C auto amp.		BCM		Continuity
Connector	Terminal	Connector	Terminal	
M50	12	M65 (WITHOUT I-KEY) M68 (WITH I-KEY)	28	Existed

Is inspection result normal?

YES >> GO TO 3.
NO >> Repair the harnesses or connectors.

3. CHECK CONTINUITY BETWEEN A/C AUTO AMP. AND GROUND

Check continuity between A/C auto amp. harness connector and ground.

A/C auto amp.		—	Continuity
Connector	Terminal		
M50	12	Ground	Not existed

Is inspection result normal?

YES >> Replace the BCM. Refer to XX-XX, "*****" (WITH I-KEY) or XX-XX, "*****" (WITHOUT I-KEY).
NO >> Repair the harnesses or connectors.

POWER SUPPLY AND GROUND CIRCUIT

A/C AUTO AMP.

A/C AUTO AMP. : Diagnosis Procedure

INFOID:0000000006024055

1. CHECK FUSE

Check 10A fuses [Nos. 3, 13 and 15, located in the fuse block (J/B)].

NOTE:

Refer to XX-XX, "*****".

Is the inspection result normal?

YES >> GO TO 2.

NO >> Replace the fuse after repairing the applicable circuit.

2. CHECK A/C AUTO AMP. POWER SUPPLY CIRCUIT-1

1. Turn the ignition switch OFF.
2. Disconnect the A/C auto amp. connector.
3. Check voltage between A/C auto amp. harness connector and the ground.

(+)		(–)	Voltage		
A/C auto amp.		—	Ignition switch position		
Connector	Terminal		OFF	ACC	ON
M50	1	Ground	Battery voltage	Battery voltage	Battery voltage
	2		Approx. 0 V	Approx. 0 V	Battery voltage

Is the inspection result normal?

YES >> GO TO 3.

NO >> Repair the harnesses or connectors.

3. CHECK A/C AUTO AMP. POWER SUPPLY CIRCUIT-2

Check voltage A/C auto amp. harness connector and the ground.

(+)		(–)	Voltage		
A/C auto amp.		—	Ignition switch position		
Connector	Terminal		OFF	ACC	ON
M50	9	Ground	Approx. 0 V	Approx. 0 V	Battery voltage

Is inspection result normal?

YES >> GO TO 4.

NO >> GO TO 5.

4. CHECK A/C AUTO AMP. CIRCUIT CONTINUITY

1. Turn the ignition switch OFF.
2. Check continuity between A/C auto amp. harness connector and ground.

A/C auto amp.		—	Continuity
Connector	Terminal		
M50	21	Ground	Existed
	23		

Is the inspection result normal?

YES >> INSPECTION END

NO >> Repair the harnesses or connectors.

5. CHECK BLOWER MOTOR RELAY POWER SUPPLY

1. Turn the ignition switch OFF.

2. Disconnect the blower motor relay from the fuse block (J/B). Refer to XX-XX, "*****".
3. Turn the ignition switch ON.
4. Check voltage between the ground and the connector on the fuse block side where blower motor relay was installed. Refer to XX-XX, "*****".

(+)	(–)	Voltage (Approx.)
Fuse block (J/B)	—	
1	Ground	Battery voltage
3		

Is inspection result normal?

YES >> GO TO 6.
NO >> Repair the power supply circuit. Refer to XX-XX, "*****".

6. CHECK BLOWER MOTOR RELAY

Perform the blower motor component inspection. Refer to HAC-58, "Component Inspection".

Is inspection result normal?

YES >> Repair the harness or connector between blower motor relay and A/C auto amp.
NO >> Replace blower motor relay.

A/C AUTO AMP.

Component Function Check

INFOID:0000000006024059

1. CHECK OPERATION

1. Confirm that “AUTO” is indicated on the display by operating the AUTO switch.
2. Operate the temperature control switch. Check that the fan speed or discharge air changes (the discharge air temperature or fan speed varies depending on the ambient temperature, in-vehicle temperature, and set temperature).

Does it operate normally?

YES >> INSPECTION END
NO >> Perform the diagnosis for the A/C auto amp. Refer to HAC-67, "Diagnosis Procedure".

Diagnosis Procedure

INFOID:0000000006024060

1. CHECK A/C AUTO AMP. POWER SUPPLY CIRCUIT AND GROUND CIRCUIT

Check A/C auto amp. power supply circuit and ground circuit. Refer to HAC-65, "A/C AUTO AMP. : Diagnosis Procedure".

Is the inspection result normal?

YES >> INSPECTION END
NO >> Repair or replace parts depending on the inspection results.

SYMPTOM DIAGNOSIS

AUTOMATIC AIR CONDITIONER SYSTEM

Diagnosis Chart By Symptom

INFOID:0000000006024072

CAUTION:
Perform the self-diagnoses with on board diagnosis and CONSULT-III before performing the symptom diagnosis. If any malfunction result or DTC is detected, perform the corresponding diagnosis.

Symptom		Corresponding malfunction part	Check item/Reference
A/C system does not activate.		• Power supply circuit of A/C system • A/C control (built-in A/C auto amp.)	HAC-65, "A/C AUTO AMP. : Diagnosis Procedure"
A/C system cannot be controlled.			
Blower motor operation is malfunctioning.		• Blower motor • Power supply system of blower motor • The circuit between blower motor and A/C auto amp. • A/C auto amp.	HAC-57, "Diagnosis Procedure"
Magnet clutch does not operate.		• Magnet clutch • The circuit between magnet clutch and IPDM E/R • IPDM E/R (A/C relay) • The circuit between ECM and refrigerant pressure sensor • Refrigerant pressure sensor • CAN communication line • A/C auto amp.	HAC-60, "Diagnosis Procedure"
• Insufficient cooling • No cool air comes out. (Air flow volume is normal.)		• Magnet clutch control system • Drive belt slipping • Cooler cycle • Air leakage from each duct • Temperature setting trimmer	HAC-69, "Diagnosis Procedure"
• Insufficient heating • No warm air comes out. (Air flow volume is normal.)		• Engine cooling system • Heater hose • Heater core • Air leakage from each duct • Temperature setting trimmer	HAC-71, "Diagnosis Procedure"
Noise is heard when the A/C system operates.	During compressor operation	Cooler cycle	XX-XX, "*****"
	During blower motor operation	• Mixing any foreign object in blower motor • Blower motor fan breakage • Blower motor rotation inferiority	HAC-58, "Component Inspection"
• Memory function dose not operates. • Setting temperature dose not memorize.		• Power supply system of A/C auto amp. • A/C auto amp.	HAC-74, "Inspection Procedure"

INSUFFICIENT COOLING

Description

INFOID:0000000006024073

Symptom
- Insufficient cooling
- No cool air comes out. (Air flow volume is normal.)

Diagnosis Procedure

INFOID:0000000006024074

CAUTION:
Perform the self-diagnoses with on board diagnosis and CONSULT-III before performing symptom diagnosis. If any malfunction result or DTC is detected, perform the corresponding diagnosis.

1. CHECK MAGNET CLUTCH OPERATION

1. Turn the ignition switch ON.
2. Operate the fan control switch.
3. Press the A/C switch.
4. Check that the indicator of the A/C switch turns ON. Check visually and by sound that the compressor operates.
5. Press the A/C switch again.
6. Check that the indicator of the A/C switch turns OFF. Check that the compressor stops.

Is the inspection result normal?

YES >> GO TO 2.
NO >> Perform the diagnosis of “COMPRESSOR DOSE NOT OPERATE” in “SYMPTOM DIAGNOSIS”. Refer to HAC-72, "Diagnosis Procedure".

2. CHECK DRIVE BELT

Check tension of the drive belt. Refer to XX-XX, "*****".

Is the inspection result normal?

YES >> GO TO 3.
NO >> Adjust or replace drive belt depending on the inspection results.

3. CHECK REFRIGERANT CYCLE PRESSURE

Connect the recovery/recycling recharging equipment to the vehicle and perform the pressure inspection with the gauge. Refer to XX-XX, "*****".

Is the inspection result normal?

YES >> GO TO 4.
NO >> Repair or replace the parts depending on the inspection results.

4. CHECK AIR LEAKAGE FROM EACH DUCT

Check duct and nozzle, etc. of the air conditioner system for leakage.

Is the inspection result normal?

YES >> GO TO 5.
NO >> Repair or replace parts depending on the inspection results.

5. CHECK AMBIENT TEMPERATURE DISPLAY

Check that there is not much difference between actual ambient temperature and indicated temperature on information display in combination meter.

NOTE:
Actual ambient temperature is sensor recognition temperature of on board self-diagnosis STEP-5.

Is the inspection result normal?

YES >> GO TO 6.
NO >> Perform the diagnosis for the A/C auto amp. connection recognition signal. Refer to XX-XX, "*****".

6. CHECK SETTING OF TEMPERATURE SETTING TRIMMER

1. Check the setting value of temperature setting trimmer. Refer to HAC-41, "Temperature Setting Trimmer".

2. Check that the temperature setting trimmer is set to “+ direction”.
   NOTE:
   The control temperature can be set with the setting of the temperature setting trimmer.
3. Set the difference between the set temperature and control temperature to “0”.

Is inspection result normal?

YES >> INSPECTION END
NO >> Replace the A/C auto amp.

INSUFFICIENT HEATING

Description

INFOID:0000000006024075

Symptom
- Insufficient heating
- No warm air comes out. (Air flow volume is normal.)

Diagnosis Procedure

INFOID:0000000006024076

CAUTION:
Perform the self-diagnoses with on board diagnosis and CONSULT-III before performing symptom diagnosis. If any malfunction result or DTC is detected, perform the corresponding diagnosis.

1. CHECK COOLING SYSTEM

1. Check the engine coolant level and check for leakage. Refer to XX-XX, "*****".
2. Check the radiator cap. Refer to XX-XX, "*****".
3. Check the water flow sounds of the engine coolant. Refer to XX-XX, "*****".

Is the inspection result normal?

YES >> GO TO 2.
NO >> Refill the engine coolant and repair or replace the parts depending on the inspection results.

2. CHECK HEATER HOSE

Check the installation of heater hose by visually or touching.

Is the inspection result normal?

YES >> GO TO 3.
NO >> Repair or replace parts depending on the inspection results.

3. CHECK HEATER CORE

1. Check the temperature of inlet hose and outlet hose of heater core.
2. Check that the inlet side of heater core is hot and the outlet side is slightly lower than/almost equal to the inlet side.
   CAUTION:
   Always perform the temperature inspection in a short period of time because the engine coolant temperature is very hot.

Is the inspection result normal?

YES >> GO TO 4.
NO >> Replace the heater core. Refer to XX-XX, "*****".

4. CHECK AIR LEAKAGE FROM EACH DUCT

Check duct and nozzle, etc. of the air conditioner system for air leakage.

Is the inspection result normal?

YES >> GO TO 5.
NO >> Repair or replace parts depending on the inspection results.

5. CHECK SETTING OF TEMPERATURE SETTING TRIMMER

1. Check the setting value of temperature setting trimmer. Refer to HAC-41, "Temperature Setting Trimmer".
2. Check that the temperature setting trimmer is set to “– direction”.
   NOTE:
   The control temperature can be set by the temperature setting trimmer.
3. Set the difference between the set temperature and control temperature to “0”.

Are the symptoms solved?

YES >> INSPECTION END
NO >> Replace the A/C auto amp.

COMPRESSOR DOSE DOT OPERATE

Description

INFOID:0000000006024077

SYMPTOM

Compressor dose not operate.

Diagnosis Procedure

INFOID:0000000006024078

CAUTION:

- **Perform the self-diagnoses with on board diagnosis and CONSULT-III before performing symptom diagnosis. If any malfunction result or DTC is detected, perform the corresponding diagnosis.**
- **Check that the refrigerant is enclosed in cooler cycle normally. If the refrigerant amount is shortage from proper amount, perform the inspection of refrigerant leakage.**

1. CHECK MAGNET CLUTCH OPERATION

Check the magnet clutch. Refer to HAC-60, "Component Function Check".

Does it operate normally?

YES >> GO TO 2.
NO >> Repair or replace the malfunctioning parts.

2. CHECK REFRIGERANT PRESSURE SENSOR

Check the refrigerant pressure sensor. Refer to XX-XX, "*****".

Is the inspection result normal?

YES >> GO TO 3.
NO >> Repair or replace the malfunctioning parts.

3. CHECK BCM INPUT SIGNAL

With CONSULT-III
Check the “COMP REQ SIG” or “FAN REQ SW” in “DATA MONITOR” of BCM.

Monitor item	Condition	Status
COMP REQ SIG	A/C switch: OFF	Off
	A/C switch: ON	On
FAN REQ SW	Fan control switch: OFF	Off
	Fan control switch: ON	On

Is the inspection result normal?

YES >> GO TO 4.
NO >> GO TO 5.

4. CHECK BCM OUTPUT SIGNAL

With CONSULT-III
Check the “A/C ON SIG” or “FAN ON SIG” in “A/C RELAY SIG” of ECM.

Monitor item	Condition	Status
COMP REQ SIG	A/C switch: OFF	Off
	A/C switch: ON	On
FAN REQ SW	Fan control switch: OFF	Off
	Fan control switch: ON	On

Is the inspection result normal?

YES >> Replace the IPDM E/R. Refer to XX-XX, "*****" (WITH I-KEY) or XX-XX, "*****" (WITHOUT I-KEY).
NO >> Replace the BCM. Refer to XX-XX, "*****" (WITH I-KEY) or XX-XX, "*****" (WITHOUT I-KEY).

5. CHECK A/C ON SIGNAL

Check the A/C ON signal. Refer to HAC-61, "Component Function Check".

Is inspection result normal?

YES >> GO TO 6.
NO >> Repair or replace the malfunctioning parts.

6. CHECK BLOWER FAN ON SIGNAL

Check the blower fan ON signal. Refer to HAC-63, "Component Function Check".

Is the inspection result normal?

YES >> Replace the A/C auto amp.
NO >> Repair or replace the malfunctioning parts

MEMORY FUNCTION DOES NOT OPERATE

Description

INFOID:0000000006024079

SYMPTOM

- Memory function dose not operate normally.
- The setting is not maintained (It returns to initial condition).

Inspection Procedure

INFOID:0000000006024080

1. CHECK MEMORY FUNCTION

1. Start the engine.
2. Set the temperature to 32°C (90°F) by operating the temperature control switch.
3. Press OFF switch.
4. Turn the ignition switch OFF.
5. Turn the ignition switch ON.
6. Press AUTO switch.
7. Check that the set temperature is maintained.

Is the inspection result normal?

YES >> INSPECTION END
NO >> GO TO 2.

2. CHECK POWER SUPPLY AND GROUND CIRCUIT OF A/C AUTO AMP.

Check power supply and ground circuit of A/C auto amp. Refer to HAC-67, "Diagnosis Procedure".

Is the inspection result normal?

YES >> Replace the A/C auto amp.
NO >> Repair or replace the malfunctioning parts.

REMOVAL AND INSTALLATION

A/C CONTROL (A/C AUTO AMP.)

Removal and Installation

INFOID:0000000006024084

REMOVAL

1. Remove A/C finisher. Refer to IP-13, "Removal and Installation".
2. Remove mounting screws and then remove A/C control from A/C finisher.

INSTALLATION

Install in the reverse order of removal.

AMBIENT SENSOR

Removal and Installation

INFOID:0000000006024086

REMOVAL

1. Remove the bumper fascia. Refer to EXT-11, "Removal and Installation".
2. Disengage the pawl, and then remove ambient sensor from bracket.
3. Disconnect ambient sensor connector, and then remove the ambient sensor.

INSTALLATION

Install in the reverse order of removal.

IN-VEHICLE SENSOR

Removal and Installation

INFOID:0000000006024088

REMOVAL

1. Remove instrument lower finisher RH. Refer to IP-13, "Removal and Installation".
2. Remove mounting screw, and then remove in-vehicle sensor from instrument lower finisher RH.

INSTALLATION

Install in the reverse order of removal.

SUNLOAD SENSOR

Removal and Installation

INFOID:0000000006024090

REMOVAL

1. Insert the appropriate tool into the clearance between sunload sensor and instrument panel assembly to pull out sunload sensor upward.
2. Disconnect sunload sensor connector to remove sunload sensor.

INSTALLATION

Installation is basically the reverse order of removal.

INTAKE SENSOR

Exploded View

INFOID:0000000006024091

Refer to HA-39, "Exploded View".

Removal and Installation

INFOID:0000000006024092

REMOVAL

1. Remove the evaporator assembly. Refer to HA-43, "EVAPORATOR : Removal and Installation".
2. Remove the intake sensor from evaporator.

INSTALLATION

Note the following items, and then install in the order of removal.

CAUTION:

- **Replace O-rings with new ones. Then apply the compressor oil to them when installing.**
- **Mark the mounting position of intake sensor bracket prior to removal so that the reinstalled sensor can be located in the same position.**
- **Never rotate the bracket insertion part when removing and installing the intake sensor.**
- **Check for leakages when recharging refrigerant. Refer to HA-18, "Leak Test".**

REFRIGERANT PRESSURE SENSOR

Exploded View

INFOID:0000000006024093

Refer to HA-36, "Exploded View".

Removal and Installation

INFOID:0000000006024094

CAUTION:
Perform lubricant return operation before each refrigeration system disassembly. However, if a large amount of refrigerant or lubricant is detected, never perform lubricant return operation. Refer to HA-22, "Perform Lubricant Return Operation".

REMOVAL

1. Remove refrigerant pressure sensor. Refer to HA-37, "REFRIGERANT PRESSURE SENSOR : Removal and Installation".

INSTALLATION

Note the following items, and then install in the reverse order of removal.

CAUTION:
- **Replace O-ring with new one. Then apply compressor oil to them when installing.**
- **Check for leakages when recharging refrigerant. Refer to HA-18, "Leak Test".**

POWER TRANSISTOR

Exploded View

INFOID:0000000006024095

Refer to VTL-7, "Exploded View"

Removal and Installation

INFOID:0000000006024096

REMOVAL

1. Disconnect power transister connector.
2. Remove mounting screws, and then remove power transister.

INSTALLATION

Install in the reverse order of removal.

DOOR MOTOR

Exploded View

INFOID:0000000006024097

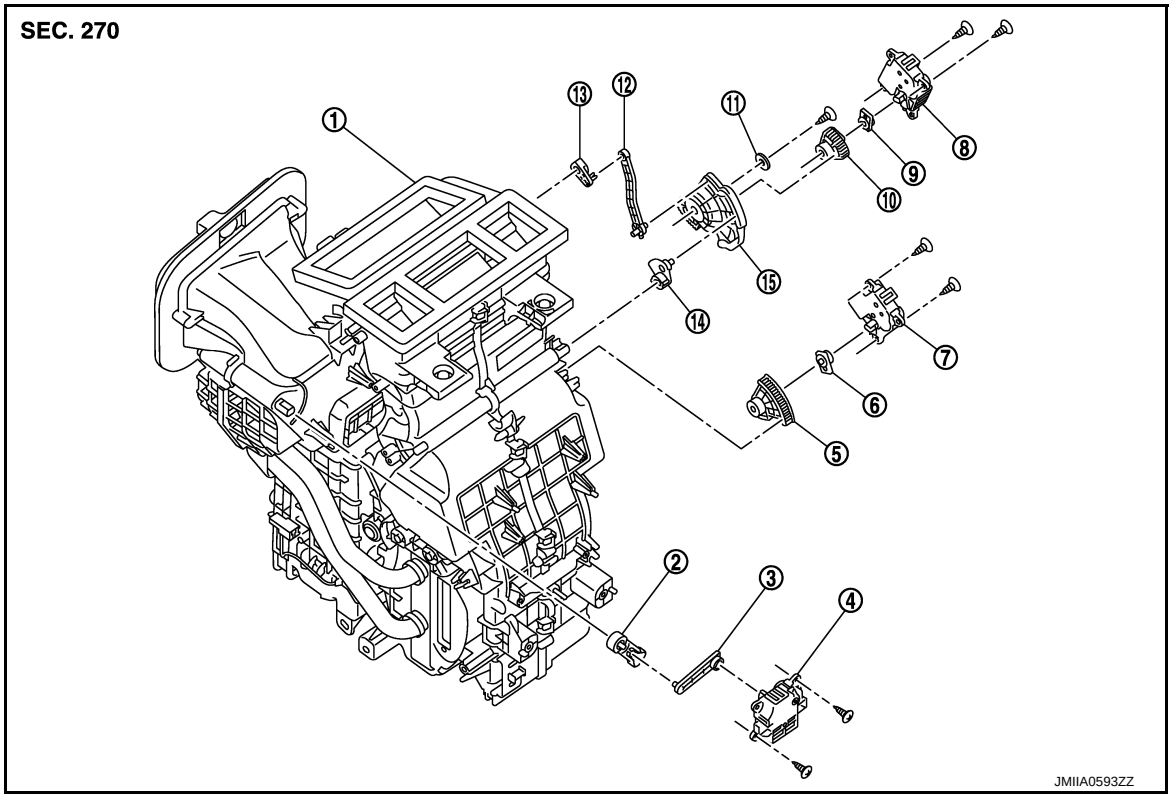

1. A/C unit assembly	2. Intake door lever	3. Intake door motor lever
4. Intake door motor	5. Air mix door link	6. Air mix door lever
7. Air mix door motor	8. Mode door motor	9. Mode door lever
10. Mode door link	11. Plate	12. Ventilator door rod
13. Ventilator door lever	14. Foot door lever	15. Main link

INTAKE DOOR MOTOR

INTAKE DOOR MOTOR : Removal and Installation

INFOID:0000000006024098

REMOVAL

1. Remove front passenger air bag module or instrument finisher D. Refer to IP-13, "Removal and Installation".
2. Remove mounting screws, and then remove intake door motor.
3. Disconnect intake door motor connector.

INSTALLATION

Install in the reverse order of removal.

MODE DOOR MOTOR

MODE DOOR MOTOR : Removal and Installation

INFOID:0000000006024099

REMOVAL

1. Remove A/C unit assembly. Refer to HA-42, "A/C UNIT ASSEMBLY : Removal and Installation".
2. Remove mounting screws, and then remove mode door motor.
3. Disconnect mode door motor connector.

INSTALLATION

Install in the reverse order of removal.

AIR MIX DOOR MOTOR

AIR MIX DOOR MOTOR : Removal and Installation

INFOID:0000000006024100

REMOVAL

1. Remove foot duct LH. Refer to VTL-6, "FOOT DUCT : Removal and Installation".
2. Remove mounting screws, and then remove air mix door motor.
3. Disconnect air mix door motor connector.

INSTALLATION

Install in the reverse order of removal.

PRECAUTION

PRECAUTIONS

Precaution for Supplemental Restraint System (SRS) "AIR BAG" and "SEAT BELT PRE-TENSIONER"

INFOID:0000000006024147

The Supplemental Restraint System such as “AIR BAG” and “SEAT BELT PRE-TENSIONER”, used along with a front seat belt, helps to reduce the risk or severity of injury to the driver and front passenger for certain types of collision. This system includes seat belt switch inputs and dual stage front air bag modules. The SRS system uses the seat belt switches to determine the front air bag deployment, and may only deploy one front air bag, depending on the severity of a collision and whether the front occupants are belted or unbelted.
Information necessary to service the system safely is included in the “SRS AIR BAG” and “SEAT BELT” of this Service Manual.

WARNING:

- **To avoid rendering the SRS inoperative, which could increase the risk of personal injury or death in the event of a collision that would result in air bag inflation, all maintenance must be performed by an authorized NISSAN/INFINITI dealer.**
- **Improper maintenance, including incorrect removal and installation of the SRS, can lead to personal injury caused by unintentional activation of the system. For removal of Spiral Cable and Air Bag Module, see the “SRS AIR BAG”.**
- **Do not use electrical test equipment on any circuit related to the SRS unless instructed to in this Service Manual. SRS wiring harnesses can be identified by yellow and/or orange harnesses or harness connectors.**

PRECAUTIONS WHEN USING POWER TOOLS (AIR OR ELECTRIC) AND HAMMERS

WARNING:

- **When working near the Air Bag Diagnosis Sensor Unit or other Air Bag System sensors with the ignition ON or engine running, DO NOT use air or electric power tools or strike near the sensor(s) with a hammer. Heavy vibration could activate the sensor(s) and deploy the air bag(s), possibly causing serious injury.**
- **When using air or electric power tools or hammers, always switch the ignition OFF, disconnect the battery, and wait at least 3 minutes before performing any service.**

Precaution Necessary for Steering Wheel Rotation after Battery Disconnect

INFOID:0000000006024148

NOTE:

- Before removing and installing any control units, first turn the push-button ignition switch to the LOCK position, then disconnect both battery cables.
- After finishing work, confirm that all control unit connectors are connected properly, then re-connect both battery cables.
- Always use CONSULT-III to perform self-diagnosis as a part of each function inspection after finishing work. If a DTC is detected, perform trouble diagnosis according to self-diagnosis results.

For vehicle with steering lock unit, if the battery is disconnected or discharged, the steering wheel will lock and cannot be turned.
If turning the steering wheel is required with the battery disconnected or discharged, follow the operation procedure below before starting the repair operation.

OPERATION PROCEDURE

1. Connect both battery cables.
   NOTE:
   Supply power using jumper cables if battery is discharged.
2. Turn the push-button ignition switch to ACC position.
   (At this time, the steering lock will be released.)
3. Disconnect both battery cables. The steering lock will remain released with both battery cables disconnected and the steering wheel can be turned.
4. Perform the necessary repair operation.

5. When the repair work is completed, re-connect both battery cables. With the brake pedal released, turn the push-button ignition switch from ACC position to ON position, then to LOCK position. (The steering wheel will lock when the push-button ignition switch is turned to LOCK position.)
6. Perform self-diagnosis check of all control units using CONSULT-III.

SYSTEM DESCRIPTION

COMPONENT PARTS

MANUAL AIR CONDITIONING SYSTEM

MANUAL AIR CONDITIONING SYSTEM : Component Part Location

INFOID:0000000006024104

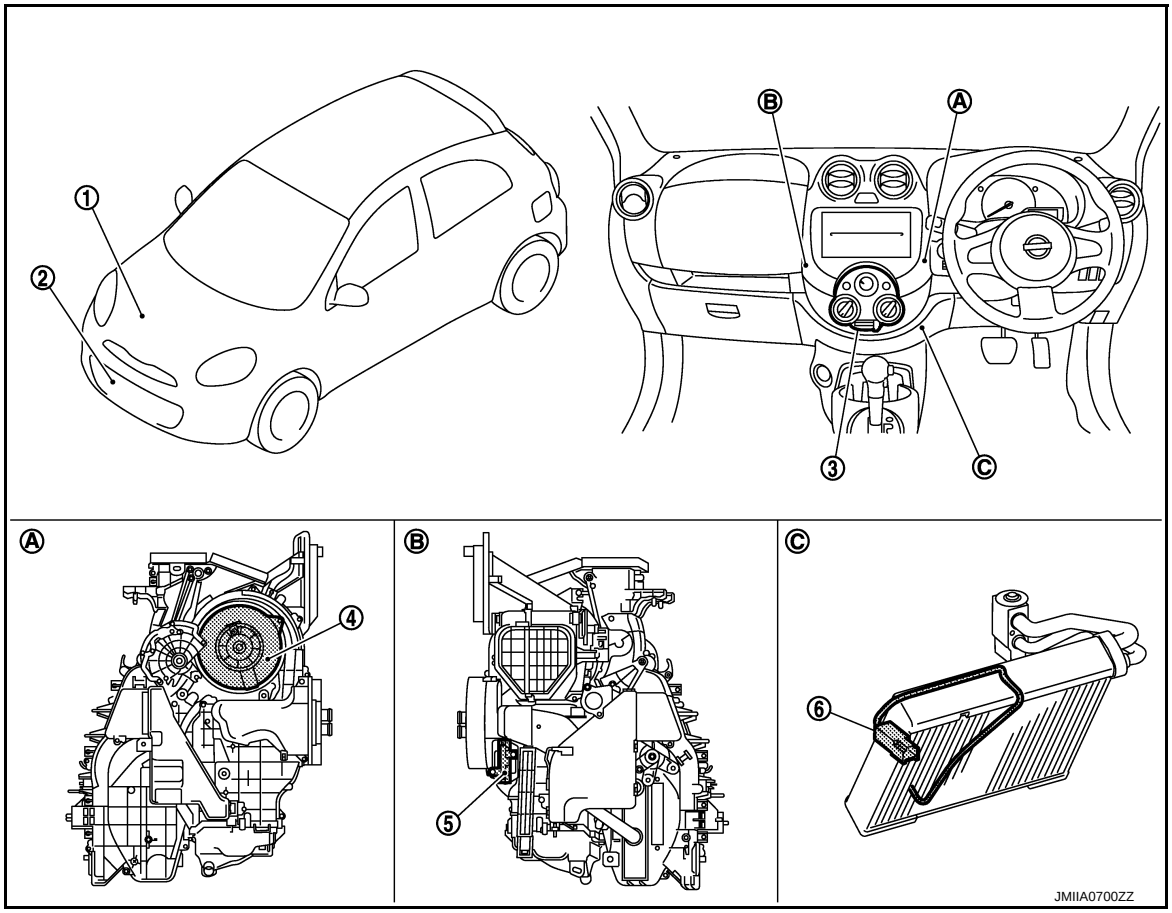

1. Magnet clutch
2. Refrigerant pressure sensor
3. A/C control
4. Blower motor
5. Blower fan resistor
6. Thermo control amp.

A. Located in the right side of A/C unit assembly
B. Located in the left side of A/C unit assembly
C. Located on evaporator

MANUAL AIR CONDITIONING SYSTEM : Component Description

INFOID:0000000006024105

Component	Reference/Function
Magnet clutch	HAC-87, "COMPRESSOR : Magnet Clutch"
Refrigerant pressure sensor	XX-XX, "*****"
A/C control	Controls the air conditioner function.
Blower motor	HAC-87, "A/C UNIT ASSEMBLY : Blower Motor"
Blower fan resistor	HAC-87, "A/C UNIT ASSEMBLY : Blower Motor"
Thermo control amp.	HAC-87, "A/C UNIT ASSEMBLY : Thermo Control Amp."

A/C UNIT ASSEMBLY

A/C UNIT ASSEMBLY : Blower Fan Resistor

INFOID:0000000006043969

- Compact and lightweight resistor is adopted with outstanding ventilation.
- Temperature fuse is installed to protects the blower motor circuit.

⇦ : Vehicle front

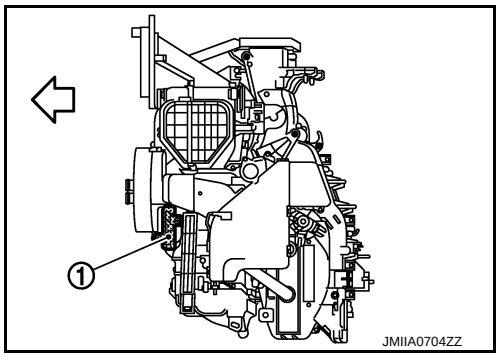

A/C UNIT ASSEMBLY : Blower Motor

INFOID:0000000006024119

- The blower motor (1) is installed in the RH side of A/C unit assembly.
- The blower motor adopts the forcible air cooling system and one-touch installation system without any screws.

⇦ : Vehicle front

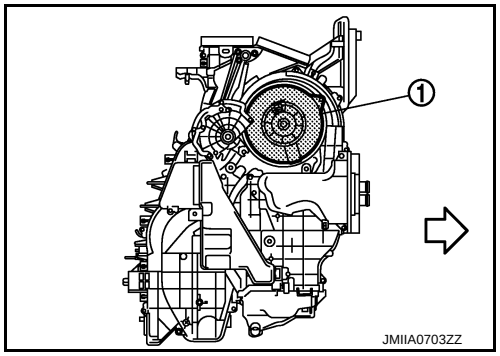

A/C UNIT ASSEMBLY : Thermo Control Amp.

INFOID:0000000006024116

COMPONENT DESCRIPTION

- Thermo control amp. (1) is composed of thermistor and amplifier. Thermistor is installed on evaporator, and amplifier is attached to foot duct (left).
- When the thermistor detecting temperature which passing through evaporator is extremely low, thermo control amp. sends the thermo control amp. OFF signal to BCM, and stops the compressor.

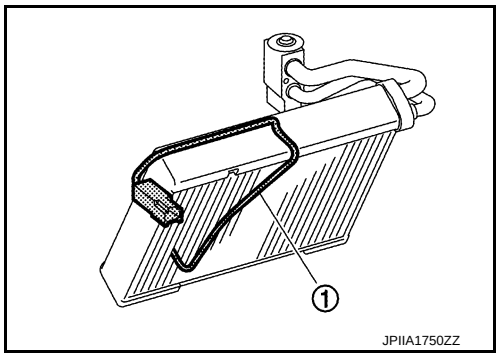

OPERATING RATE CONTROL

- Thermo control amp. detects the positions of air temperature control dial and MODE dial.
- Thermo control amp. corrects the stopping temperature of A/C compressor depending on the condition of A/C operation, and prevents too much heating by turning thermo control amp. ON ⇔ OFF.

COMPRESSOR

COMPRESSOR : Magnet Clutch

INFOID:0000000006024122

- The magnet clutch is the device that drives the compressor with the signal from IPDM E/R.
- Compressor is driven by the magnet clutch which is charged magnetic force by electrified.
- IPDM E/R controls magnet clutch by turning the built in A/C relay to ON ⇔ OFF according to ECM request.

SYSTEM

System Diagram

INFOID:0000000006024106

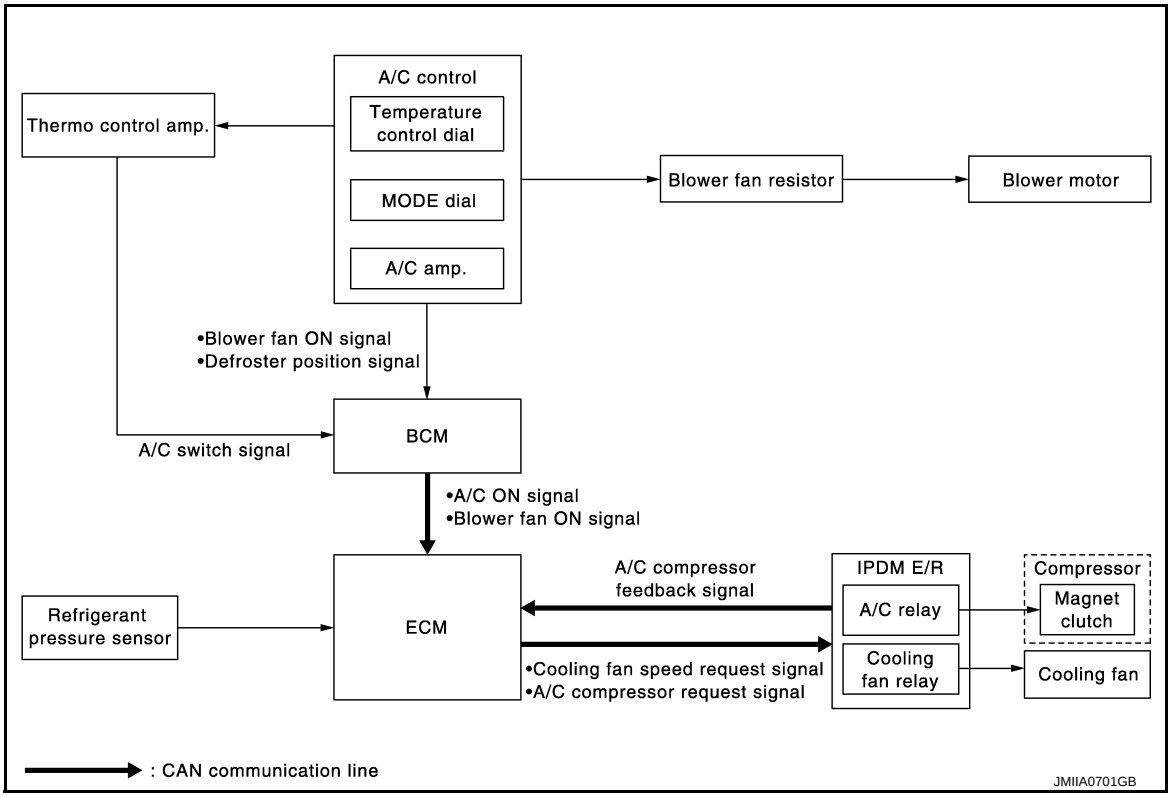

System Description

INFOID:0000000006043972

- Manual air conditioner system is controlled by each function of BCM, ECM or IPDM E/R.

Control by BCM
- Compressor control

Control by ECM
- Compressor control
- Cooling fan control. Refer to XX-XX, "*****".
- Air conditioner cut control. Refer to XX-XX, "*****".

Control by IPDM E/R
- Relay control. Refer to XX-XX, "*****".
- Cooling fan control. Refer to XX-XX, "*****".
- Fan speed of blower fan motor is changed by the combination of fan switch operation and blower fan resistor control.

Compressor Control

INFOID:0000000006043973

DESCRIPTION

- BCM transmits the A/C ON signal and blower fan ON signal to ECM via CAN communication line only when the compressor operational condition is satisfied, and A/C indicator is turned ON.
  NOTE:
  Compressor operational condition
  - Thermo control amp. signal ON
  - Blower fan signal ON
  - A/C switch signal ON
- ECM judges the conditions of each sensor (Refrigerant pressure sensor signal, accelerator position signal, etc.), and transmits the A/C compressor request signal to IPDM E/R via CAN communication line.
- By receiving the A/C compressor request signal from ECM, IPDM E/R turns the A/C relay to ON, and activates the compressor.

COMPRESSOR PROTECTION CONTROL AT PRESSURE MALFUNCTION

The high-pressure side value that is detected by refrigerant pressure sensor is as per the following state, ECM requests IPDM E/R to turn A/C relay OFF and stop the compressor.

- 3.12 MPa (31.8 kg/cm^2, 452 psi) or more (When the engine speed is less than 1,500 rpm)
- 2.74 MPa (27.9 kg/cm^2, 397 psi) or more (When the engine speed is 1,500 rpm or more)
- 0.14 MPa (1.4 kg/cm^2, 20 psi) or less

LOW TEMPERATURE PROTECTION CONTROL

- When the thermo control amp. detects that evaporator surface temperature is 2°C (36°F) or less, thermo control amp. signal becomes OFF, and stops the compressor.
- When the air temperature returns to 3.5°C (38°F) or more, the compressor is activated.

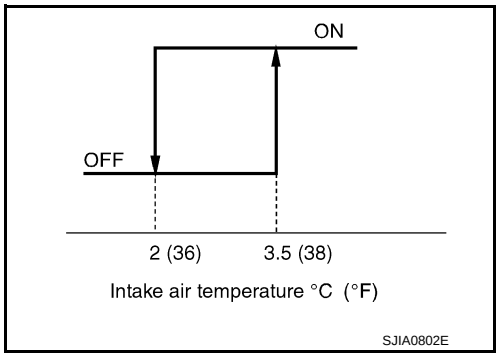

OPERATING RATE CONTROL

- Thermo control amp. detects the positions of air temperature control dial and MODE dial.
- Thermo control amp. corrects the stopping temperature of A/C compressor depending on the condition of A/C operation, and prevents too much heating by turning thermo control amp. ON ⇔ OFF.

AIR CONDITIONER CUT CONTROL

When the engine condition is high load, ECM makes the A/C relay to OFF, and stops the compressor. Refer to XX-XX, "*****".

Door Control

INFOID:0000000006024107

SWITCHES AND THEIR CONTROL FUNCTIONS

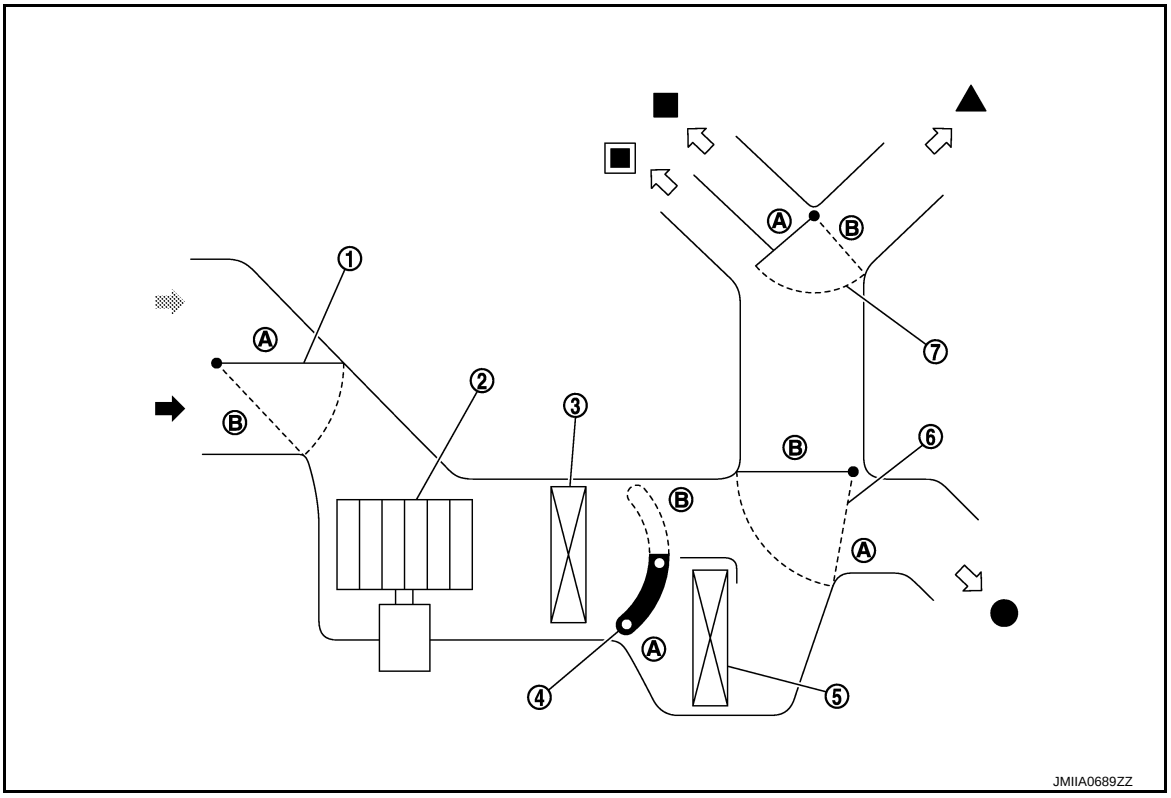

1. Intake door
2. Blower motor
3. Evaporator
4. Air mix door
5. Heater core
6. Foot door
7. Ventilator and defroster door

Fresh air intake
Recirculation air
Defroster
Center ventilator
Side ventilator
Foot

Switch/Dial position		Door position			
		Ventilator and defroster door	Foot door	Intake door	Air mix door
MODE dial		B	A	—	—
			A – B		
		A	B		
			A – B		
			A		
Air intake lever		—	—	B	
				A	
Temperature control dial	Full cold			—	A
	Full hot				B

AIR DISTRIBUTION

Discharge air flow				
Mode position indication	Air outlet/distribution			
	Center ventilator	Side ventilator	Foot	Defroster
	50%	50%	—	—
	30%	30%	40%	—
	7%	7%	66%	20%
	7%	7%	51%	35%
	—	22%	—	78%

OPERATION

Switch Name and Function

INFOID:0000000006043971

CONTROLLER

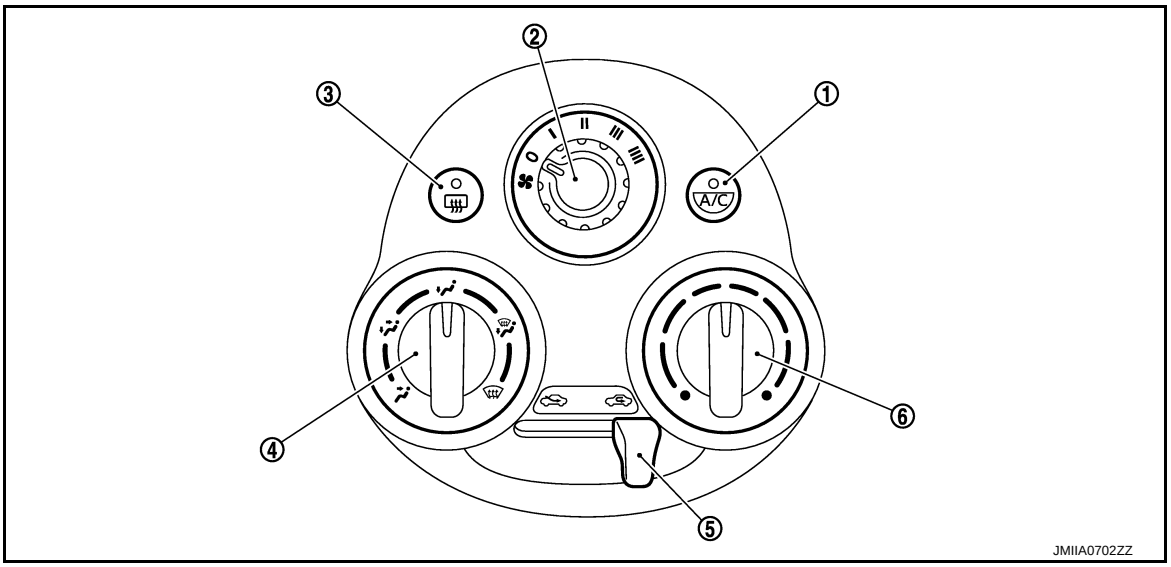

1. A/C switch
2. Fan control dial
3. Rear window defogger switch
4. MODE dial
5. Air intake lever
6. Temperature control dial

SWITCH OPERATION

A/C switch	The compressor control (switch indicator) is turned ON ⇔ OFF each time by pressing this switch while the blower motor is activated. **NOTE:** when mode position is D/F or DEF, A/C switch is turned ON forcibly.
Fan control dial	Fan speed can be adjusted within a range from 1st to 4th.
Rear window defogger switch	• Rear window defogger (switch indicator) is turned ON ⇔ OFF each time by pressing this switch. • Rear window defogger system details, Refer to XX-XX, "*****".
MODE dial	• Mode position is selected to an optimal position by operating this dial. • When DEF or D/F is selected while blower motor is activated, the air conditioner will automatically turn on and the air inlet becomes fresh air intake.
Air intake lever	• Recirculation (REC) position: Interior air is recirculated inside the vehicle. • Fresh (FRE) position: Outside air is drawn into the passenger compartment.
Temperature control dial	The setting temperature can be selected to an optimum temperature by operating this dial.

DIAGNOSIS SYSTEM (BCM)

COMMON ITEM

COMMON ITEM : CONSULT-III Function (BCM - COMMON ITEM)

INFOID:0000000006024110

APPLICATION ITEM

CONSULT-III can display each diagnostic item using the diagnostic test modes shown following.

Diagnosis mode	Function description
ECU Identification	BCM part number is displayed.
Self-Diagnostic Result	Displays the diagnosis results judged by BCM. Refer to XX-XX, "*****".
Data Monitor	BCM input/output signals are displayed.
Active Test	The signals used to activate each device are forcibly supplied from BCM.
Work Support	Changes the setting for each system function.
Configuration	• Read and save the vehicle specification. • Write the vehicle specification when replacing BCM.
CAN Diag Support Monitor	Monitors the reception status of CAN communication viewed from BCM.

SYSTEM APPLICATION

BCM can perform the following functions for each system.

NOTE:

It can perform the diagnosis modes except the following for all sub system selection items.

×: Applicable item

System	CONSULT-III sub system selection item	Diagnosis mode		
		WORK SUPPORT	DATA MONITOR	ACTIVE TEST
Door lock	DOOR LOCK	×	×	×
Rear window defogger	REAR DEFOGGER		×	×
Warning chime	BUZZER		×	×
Interior room lamp control	INT LAMP	×	×	×
Remote keyless entry system	MULTI REMOTE ENT	×	×	×
Exterior lamp	HEAD LAMP	×	×	×
Wiper and washer	WIPER	×	×	×
Turn signal and hazard warning lamps	FLASHER		×	×
Air conditioner	AIR CONDITONER		×	
—	INTELLIGENT KEY*			
Combination switch	COMB SW		×	
—	BCM	×		
Immobilizer	IMMU		×	×
Interior room lamp battery saver	BATTERY SAVER	×	×	×
Back door open	TRUNK		×	×
Vehicle security system	THEFT ALM	×	×	×
RAP system	RETAINED PWR	×	×	×
Signal buffer system	SIGNAL BUFFER		×	×
—	FUEL LID*			
—	TPMS*			
Panic alarm system	PANIC ALARM			×

*: This item is displayed, but is not function.

AIR CONDITIONER

AIR CONDITIONER : CONSULT-III Function

INFOID:0000000006024111

DATA MONITOR

Display Item List

Monitor Item [Unit]		Contents
IGN SW	[On/Off]	Displays ignition switch position status as judged form ignition switch signal.
FAN ON SIG	[On/Off]	Displays the blower fan status as judged form blower fan motor switch signal.
AIR COND SW	[On/Off]	Displays [COMP (On)/COMP (Off)] status as judged form air conditioner switch signal.
THERMO AMP	[On/Off]	Displays the thermo control amp. status as judged form thermo control amp. signal.
FR DEF SW	[On/Off]	Displays the DEF status as judged from defroster position switch signal.

ECU DIAGNOSIS INFORMATION

ECM, BCM

List of ECU Reference

INFOID:0000000006043965

ECU		Reference
ECM	HR TYPE 1	XX-XX, "*****"
		XX-XX, "*****"
		XX-XX, "*****"
		XX-XX, "*****"
	HR TYPE 2	Dummy cross-reference("XX-XX")
		Dummy cross-reference("XX-XX")
		Dummy cross-reference("XX-XX")
		Dummy cross-reference("XX-XX")
	HR TYPE 3	Dummy cross-reference("XX-XX")
		Dummy cross-reference("XX-XX")
		Dummy cross-reference("XX-XX")
		Dummy cross-reference("XX-XX")
	HR16DE (WITHOUT EURO-OBD)	Dummy cross-reference("XX-XX")
		Dummy cross-reference("XX-XX")
		XX-XX, "*****"
		XX-XX, "*****"
BCM	WITH INTELLIGENT KEY SYSTEM	BCS-18, "Reference Value"
		BCS-37, "Fail-safe"
		BCS-39, "DTC_Inspection_Priority_Chart"
		BCS-40, "DTC_Index"
	WITHOUT INTELLIGENT KEY SYSTEM	BCS-72, "Reference Value"
		BCS-85, "Fail-safe"
		BCS-85, "DTC_Inspection_Priority_Chart"
		BCS-86, "DTC_Index"

WIRING DIAGRAM

MANUAL AIR CONDITIONING SYSTEM

Wiring Diagram

INFOID:0000000006024135

For connector terminal arrangements, harness layouts, and alphabets in a ⬡ (option abbreviation; if not described in wiring diagram), refer to GI-12, "Connector Information".

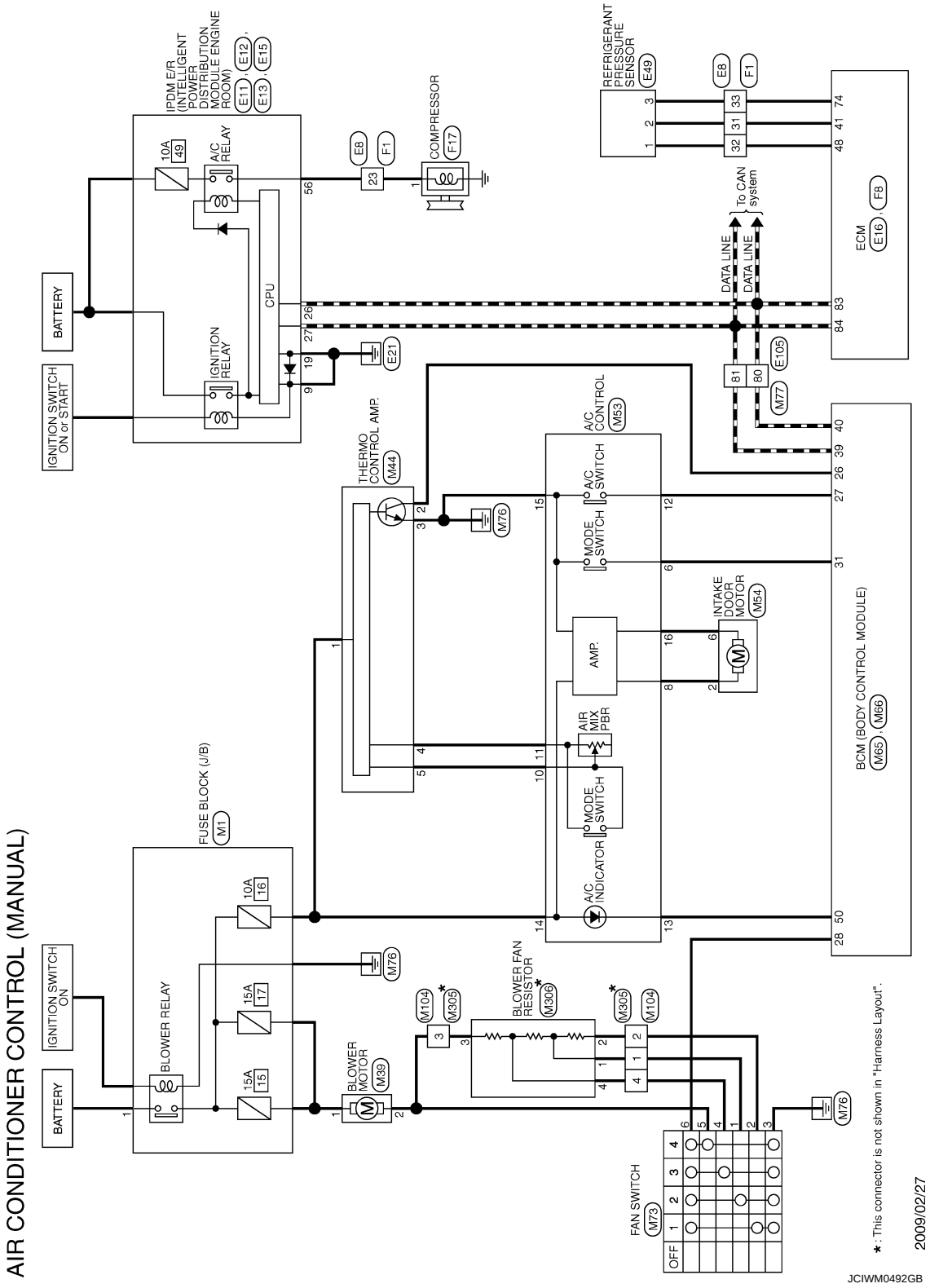

AIR CONDITIONER CONTROL (MANUAL)

Connector No.	E8
Connector Name	WIRE TO WIRE
Connector Type	SAA36MB-RS10-SJZ2

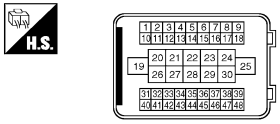

Terminal No.	Color of Wire	Signal Name [Specification]
23	SB	–
31	G	–
32	O	–
33	W	–

Connector No.	E11
Connector Name	IPDM E/R (INTELLIGENT POWER DISTRIBUTION MODULE ENGINE ROOM)
Connector Type	M06FB-LC

Terminal No.	Color of Wire	Signal Name [Specification]
9	B/W	–

Connector No.	E12
Connector Name	IPDM E/R (INTELLIGENT POWER DISTRIBUTION MODULE ENGINE ROOM)
Connector Type	NS08FBR-CS

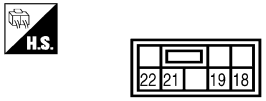

Terminal No.	Color of Wire	Signal Name [Specification]
19	B/W	–

Connector No.	E13
Connector Name	IPDM E/R (INTELLIGENT POWER DISTRIBUTION MODULE ENGINE ROOM)
Connector Type	TH12FW-NH

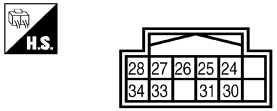

Terminal No.	Color of Wire	Signal Name [Specification]
26	P	–
27	L	–

Connector No.	E15
Connector Name	IPDM E/R (INTELLIGENT POWER DISTRIBUTION MODULE ENGINE ROOM)
Connector Type	NS16FW-CS

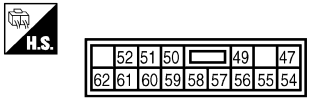

Terminal No.	Color of Wire	Signal Name [Specification]
56	SB	–

Connector No.	E16
Connector Name	ECM
Connector Type	RH24FB-RZ8-L-RH

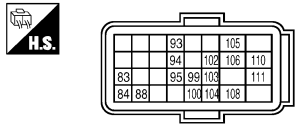

Terminal No.	Color of Wire	Signal Name [Specification]
83	L	CAN-L
84	P	CAN-H

Connector No.	E49
Connector Name	REFRIGERANT PRESSURE SENSOR
Connector Type	RK03FB

Terminal No.	Color of Wire	Signal Name [Specification]
1	O	–
2	G	–
3	W	–

Connector No.	E105
Connector Name	WIRE TO WIRE
Connector Type	TH80MW-CS16-TM4

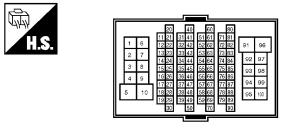

Terminal No.	Color of Wire	Signal Name [Specification]
80	P	–
81	L	–

BASIC INSPECTION

DIAGNOSIS AND REPAIR WORKFLOW

Work Flow

INFOID:0000000006024101

OVERALL SEQUENCE

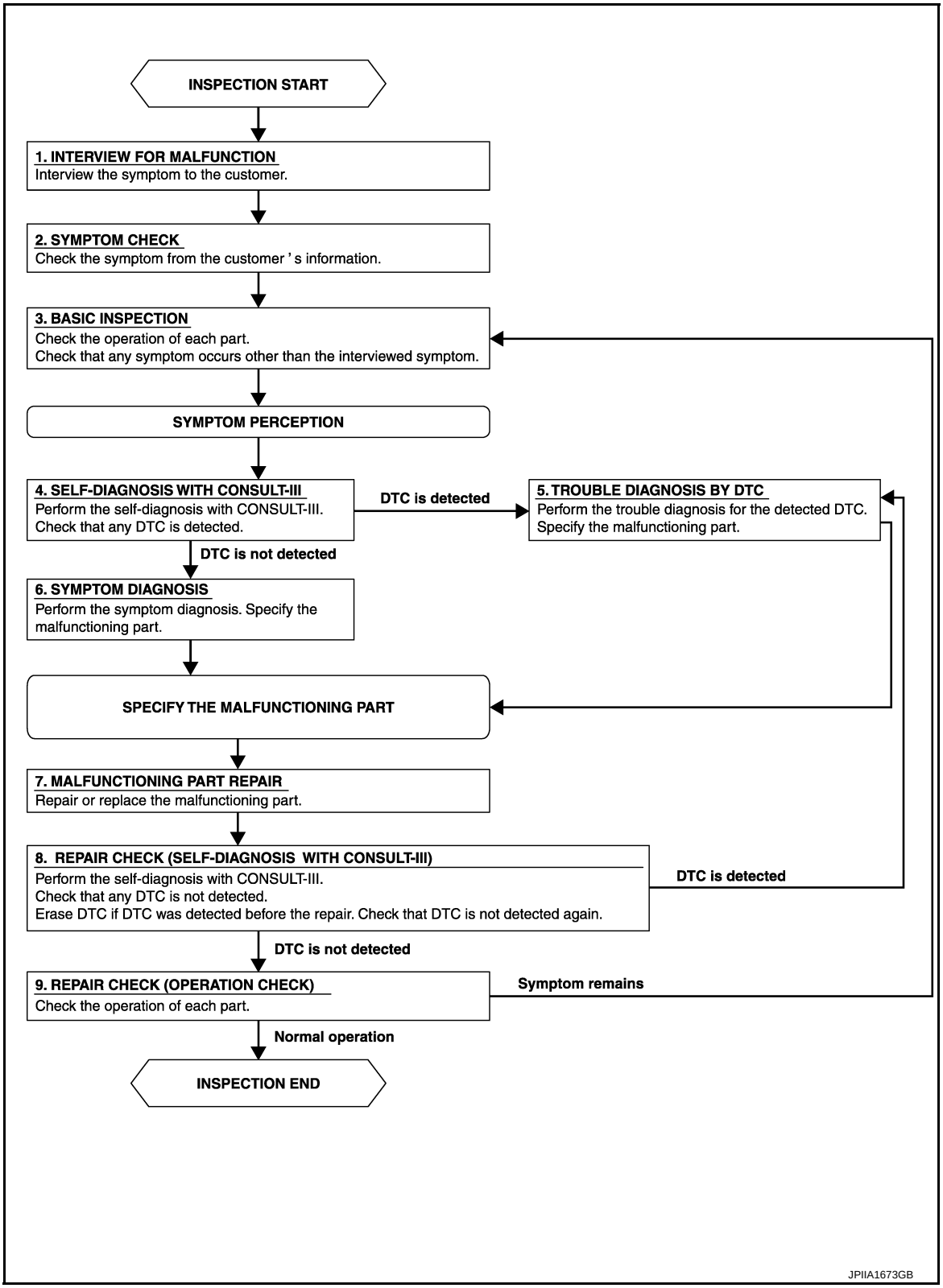

DETAILED FLOW

1. INTERVIEW FOR MALFUNCTION

Interview the symptom to the customer.

>> GO TO 2.

2. SYMPTOM CHECK

Check the symptom from the customer's information.

>> GO TO 3.

3. BASIC INSPECTION

Check the operation of each part. Check that any symptom occurs other than the interviewed symptom.

>> GO TO 4.

4. SELF-DIAGNOSIS WITH CONSULT-III

Perform the self-diagnosis with CONSULT-III. Check that any DTC is detected.

Is any DTC detected?

YES >> GO TO 5.
NO >> GO TO 6.

5. TROUBLE DIAGNOSIS BY DTC

Perform the trouble diagnosis for the detected DTC. Specify the malfunctioning part.

>> GO TO 6.

6. SYMPTOM DIAGNOSIS

Perform the symptom diagnosis. Specify the malfunctioning part.

>> GO TO 7.

7. MALFUNCTION PART REPAIR

Repair or replace the malfunctioning part.

>> GO TO 8.

8. REPAIR CHECK (SELF-DIAGNOSIS WITH CONSULT-III)

Perform the self-diagnoses with CONSULT-III. Check that any DTC is not detected. Erase DTC if DTC is detected before the repair. Check that DTC is not detected again.

Is any or malfunction result or DTC detected?

YES >> If DTC is detected, GO TO 5.
NO >> GO TO 9.

9. REPAIR CHECK (OPERATION CHECK)

Check the operation of each part.

Does it operate normally?

YES >> INSPECTION END
NO >> GO TO 3.

OPERATION INSPECTION

Description & Inspection

INFOID:0000000006024102

DESCRIPTION

The purpose of the operational check is to check that the individual system operates normally.

Check condition : Engine running at normal operating temperature.

INSPECTION PROCEDURE

1. CHECK BLOWER MOTOR

1. Start the engine.
2. Operate the fan control dial. Check that the fan speed changes. Check the operation for all fan speeds.
3. Leave blower on maximum speed.

Is the inspection result normal?

YES >> GO TO 2.
NO >> Blower motor system malfunction. Refer to HAC-101, "Diagnosis Procedure".

2. CHECK DISCHARGE AIR

1. Operate MODE dial to each position.
2. Check that the air outlets change according to each indicated air outlet by placing a hand in front of the outlets. Refer to XX-XX, "*****".

Is the inspection result normal?

YES >> GO TO 3.
NO >> Replace the mode door cable.

3. CHECK INTAKE AIR

1. Set air intake lever to REC position.
2. Operate air intake lever to FRE position.
3. Listen for intake door position change (you should hear blower sound change slightly).

Is the inspection result normal?

YES >> GO TO 4.
NO >> Replace the intake door cable.

4. CHECK A/C SWITCH

1. Press the A/C switch.
2. Check that the indicator of the A/C switch turns ON. Check visually and by sound that the compressor operates.
3. Press the A/C switch again.
4. Check that the indicator of the A/C switch turns OFF. Check that the compressor stops.

Is the inspection result normal?

YES >> GO TO 5.
NO >> Magnet clutch system malfunction. Refer to HAC-104, "Diagnosis Procedure".

5. CHECK TEMPERATURE DECREASE

1. Operate the compressor.
2. Turn the temperature control dial to full cold position.
3. Check that the cool air blows from the outlets.

Is the inspection result normal?

YES >> GO TO 6.
NO >> Insufficient cooling. Refer to HAC-111, "Diagnosis Procedure".

6. CHECK TEMPERATURE INCREASE

1. Turn temperature control dial to full hot position after warming up the engine.
2. Check that warm air blows from outlets.

Is the inspection result normal?

YES >> INSPECTION END
NO >> Insufficient heating. Refer to HAC-112, "Diagnosis Procedure".

DTC/CIRCUIT DIAGNOSIS

BLOWER MOTOR

Diagnosis Procedure

INFOID:0000000006024120

1. CHECK FUSE

Check 15A fuses [Nos. 14 and 16, located in the fuse block (J/B)].
NOTE:
Refer to XX-XX, "*****".

Is the inspection result normal?

YES >> GO TO 2.
NO >> Replace fuse after repairing the applicable circuit.

2. CHECK POWER SUPPLY FOR BLOWER MOTOR

1. Turn the ignition switch OFF.
2. Disconnect the blower motor connector.
3. Turn the ignition switch ON.
4. Check voltage between blower motor harness connector and the ground.

(+)		(–)	Voltage (Approx.)
Blower motor		—	
Connector	Terminal		
M39	1	Ground	Battery voltage

Is the inspection result normal?

YES >> GO TO 3.
NO >> GO TO 4.

3. CHECK BLOWER RELAY

1. Turn the ignition switch OFF.
2. Perform the component inspection of blower relay. Refer to HAC-102, "Component Inspection".

Is the inspection result normal?

YES >> Replace the harness or connector between blower motor and fuse.
NO >> Replace the blower relay.

4. CHECK A/C CONTROL GROUND CIRCUIT

1. Turn the ignition switch OFF.
2. Disconnect the A/C control connector.
3. Check continuity between A/C control harness connector and the ground.

A/C control		—	Continuity
Connector	Terminal		
M53	6	Ground	Existed

Is the inspection result normal?

YES >> GO TO 5.
NO >> Repair the harness or connector.

5. CHECK CONTINUITY BETWEEN A/C CONTROL AND BLOWER MOTOR

Check continuity A/C control harness connector and blower motor harness connector.

A/C control		Blower motor		Continuity
Connector	Terminal	Connector	Terminal	
M53	1	M39	2	Existed

Is the inspection result normal?

YES >> GO TO 6.
NO >> Repair the harness or connector.

6. CHECK VOLTAGE BETWEEN BLOWER FAN RESISTOR AND GROUND

1. Disconnect the blower fan resistor connector.
2. Turn the ignition switch ON.
3. Check voltage between blower fan resistor harness connector and the ground.

(+)		(–)	Voltage (Approx.)
Blower fan resistor		—	
Connector	Terminal		
M104	1	Ground	12 V

Is the inspection result normal?

YES >> GO TO 7.
NO >> Repair the harness or connector between blower fan resistor and blower motor.

7. CHECK BLOWER FAN RESISTOR

1. Turn the ignition switch OFF.
2. Perform the component inspection of blower fan resistor. Refer to HAC-102, "Component Inspection".

Is the inspection result normal?

YES >> GO TO 8.
NO >> Replace the blower fan resistor.

8. CHECK CIRCUIT CONTINUITY BETWEEN A/C CONTROL AND BLOWER FAN RESISTOR

Check continuity between A/C control harness connector and blower fan resistor.

A/C control		Blower fan resistor		Continuity
Connector	Terminal	Connector	Terminal	
M53	2	M104	2	Existed
	3		3	
	4		4	

Is the inspection result normal?

YES >> Replace A/C control.
NO >> Repair the harness or connector.

Component Inspection

INFOID:0000000006024121

BLOWER MOTOR

1. CHECK BLOWER MOTOR

1. Remove the blower motor. Refer to XX-XX, "*****".
2. Check that there is not any mixing foreign object in the blower motor.

Is the inspection result normal?

YES >> GO TO 2.
NO >> Replace the blower motor.

2. CHECK BLOWER MOTOR

Check that there is not breakage or damage in the blower motor.

Is the inspection result normal?

YES >> GO TO 3.
NO >> Replace the blower motor.

3. CHECK BLOWER MOTOR

Check that the blower motor turns smoothly.

Is the inspection result normal?

YES >> INSPECTION END
NO >> Replace the blower motor.

BLOWER RELAY

1. CHECK BLOWER RELAY

1. Remove the blower relay. Refer to XX-XX, "*****".
2. Check the continuity between the blower relay terminal 3 and 5 when the voltage is supplied between terminal 1 and 2.

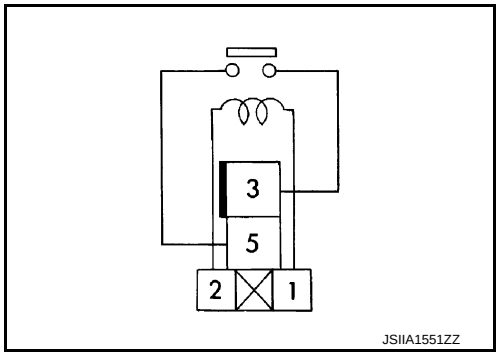

Blower relay		Voltage	Continuity
Terminal			
3	5	ON	Existed
		OFF	Not existed

Is the inspection result normal?

YES >> INSPECTION END
NO >> Replace the blower relay.

BLOWER FAN RESISTOR

1. CHECK BLOWER MOTOR

1. Turn the ignition switch OFF.
2. Disconnect the blower fan resistor connector.
3. Check the resistance between blower fan resistor terminals. Refer to the applicable table for the normal value.

Blower fan resistor		Resistance: Ω (Approx.)
Terminal		
1	2	0.43
	3	1.03
	4	3

Is the inspection result normal?

YES >> INSPECTION END
NO >> Replace the blower fan resistor.

MAGNET CLUTCH

Component Function Check

INFOID:0000000006024123

1. PERFORM AUTO ACTIVE TEST

Perform IPDM E/R auto active test. Refer to XX-XX, "*****".

Does the magnet clutch operate?

YES >> INSPECTION END
NO >> Refer to HAC-104, "Diagnosis Procedure".

Diagnosis Procedure

INFOID:0000000006024124

1. CHECK MAGNET CLUTCH

1. Turn the ignition switch OFF.
2. Disconnect the magnet clutch connector.
3. Directly apply the battery voltage to the magnet clutch. Check for operation visually and by sound.

Does it operate normally?

YES >> GO TO 2.
NO >> Replace the compressor.

2. CHECK MAGNET CLUTCH CIRCUIT CONTINUITY

1. Turn the ignition switch OFF.
2. Disconnect the IPDM E/R connector.
3. Check continuity between magnet clutch harness connector and IPDM E/R harness connector.

IPDM E/R		Magnet clutch		Continuity
Connector	Terminal	Connector	Terminal	
E14	64	F17	1	Existed

Is the inspection result normal?

YES >> GO TO 3.
NO >> Repair the harnesses and connectors.

3. CHECK FUSE

Check 10A fuse (No. 43, located in the IPDM E/R).

NOTE:
Refer to XX-XX, "*****".

Is the inspection result normal?

YES >> Replace the IPDM E/R.
NO >> Replace the fuse after repairing the applicable circuit.

A/C SWITCH

Description

INFOID:0000000006024125

- Each signal is sent to BCM by pressing the A/C switch.
- BCM judges the recognition that A/C switch is ON or OFF according to input switch signal.

Component Function Check

INFOID:0000000006024126

1. CHECK A/C SWITCH SIGNAL

With CONSULT-III
1. Turn the ignition switch ON.
2. Select the “AIR COND SW” on “DATA MONITOR” in BCM.
3. Check the A/C switch signal when A/C switch is operated.

Monitor item	Condition		Status
AIR COND SW	A/C switch	While pushing	On
		While not pushing	Off

Is inspection result normal?

YES >> INSPECTION END
NO >> Refer to HAC-105, "Diagnosis Procedure".

Diagnosis Procedure

INFOID:0000000006024127

1. CHECK FUSE

Check 10A fuse [NO. 15, located in the fuse block (J/B)].
NOTE:
Refer to XX-XX, "*****".

Is inspection result normal?

YES >> GO TO 2.
NO >> Replace fuse after repairing the applicable circuit.

2. CHECK THERMO CONTROL AMP. POWER SUPPLY CIRCUIT

1. Turn the ignition switch OFF.
2. Disconnect the thermo control amp. connector.
3. Turn the ignition switch ON.
4. Check voltage between thermo control amp. harness connector and the ground.

(+)		(–)	Voltage (Approx.)
Thermo control amp.		—	
Connector	Terminal		
M44	1	Ground	Battery voltage

Is inspection result normal?

YES >> GO TO 3.
NO >> Repair the harness or connector between thermo control amp. and fuse.

3. CHECK A/C SWITCH SIGNAL OUTPUT

1. Turn the ignition switch OFF.
2. Disconnect the A/C control connector.
3. Turn the ignition switch ON.
4. Check output waveform between A/C switch harness connector and the ground with using oscilloscope.

(+)		(–)	Output waveform
A/C control		—	
Connector	Terminal		
M53	14	Ground	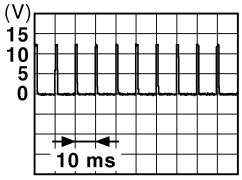 JPMIA0012GB Approx. 1.0 ～ 1.5 V

Is inspection result normal?

YES >> GO TO 4.
NO >> GO TO 5.

4. CHECK CONTINUITY A/C CONTROL GROUND CIRCUIT

1. Turn the ignition switch OFF.
2. Check continuity between A/C control harness connector and the ground.

A/C control		—	Continuity
Connector	Terminal		
M53	6	Ground	Existed

Is inspection result normal?

YES >> Replace the A/C switch (A/C control).
NO >> Repair the harness or connector.

5. CHECK CONTINUITY BETWEEN A/C CONTROL AND THERMO CONTROL AMP.

1. Turn the ignition switch OFF.
2. Disconnect the thermo control amp. connector.
3. Check continuity between A/C control harness connector and thermo control amp. harness connector.

A/C control		Thermo control amp.		Continuity
Connector	Terminal	Connector	Terminal	
M53	14	M44	2	Existed

Is inspection result normal?

YES >> GO TO 6.
NO >> Repair the harness or connector.

6. CHECK CONTINUITY BETWEEN THERMO CONTROL AMP. AND BCM

Check continuity between thermo control amp. harness connector and BCM harness connector.

Thermo control amp.		BCM		Continuity
Connector	Terminal	Connector	Terminal	
M44	3	M65	27	Existed

Is inspection result normal?

YES >> GO TO 7.
NO >> Repair the harness or connector.

7. CHECK CONTINUITY BETWEEN A/C CONTROL AND GROUND

Check continuity between A/C control harness connector and the ground.

A/C control		—	Continuity
Connector	Terminal		
M53	12	Ground	Not existed

Is inspection result normal?

YES >> Replace the BCM. Refer to XX-XX, "*****".
NO >> Repair the harness or connector.

BLOWER FAN ON SIGNAL

Component Function Check

INFOID:0000000006024133

1. CHECK BLOWER FAN ON SIGNAL

With CONSULT-III
1. Turn the ignition switch ON.
2. Select the “FAN ON SIG” on “DATA MONITOR” in BCM.
3. Check the fan ON signal when the fan control dial is operated.

Monitor item	Condition		Status
FAN ON SIG	Fan control dial	OFF position	Off
		Except OFF position	On

Is inspection result normal?

YES >> INSPECTION END
NO >> Refer to HAC-108, "Diagnosis Procedure".

Diagnosis Procedure

INFOID:0000000006024134

1. CHECK BLOWER FAN ON SIGNAL OUTPUT

1. Turn the ignition switch OFF.
2. Disconnect the A/C control connector.
3. Turn the ignition switch ON.
4. Check output waveform between A/C control harness connector and the ground with using oscilloscope.

(+)		(–)	Output waveform
A/C control		—	
Connector	Terminal		
M53	5	Ground	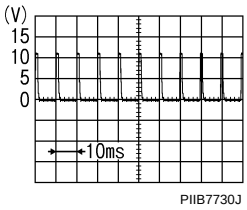 Approx. 1.5 ～ 2.0 V

Is inspection result normal?

YES >> Replace the A/C control.
NO >> GO TO 2.

2. CHECK CONTINUITY BETWEEN A/C CONTROL AND BCM

1. Turn the ignition switch OFF.
2. Disconnect the BCM connector.
3. Check continuity between A/C control harness connector and BCM harness connector.

A/C control		BCM		Continuity
Connector	Terminal	Connector	Terminal	
M53	5	M65	28	Existed

Is inspection result normal?

YES >> GO TO 3.
NO >> Repair the harness or connector.

3. CHECK CONTINUITY BETWEEN A/C CONTROL AND GROUND

Check continuity between A/C control harness connector and the ground.

A/C control		—	Continuity
Connector	Terminal		
M53	5	Ground	Not existed

Is inspection result normal?

YES >> Replace the BCM. Refer to XX-XX, "*****".
NO >> Repair the harness or connector.

SYMPTOM DIAGNOSIS

MANUAL AIR CONDITIONER SYSTEM

Diagnosis Chart By Symptom

INFOID:0000000006024140

CAUTION:
Perform the self-diagnosis with CONSULT-III before performing the symptom diagnosis. If any malfunction result or DTC is detected, perform the corresponding diagnosis.

Symptom		Corresponding malfunction part	Check item/Reference
Blower motor operation is malfunctioning.		• Blower motor • Power supply system of blower motor • The circuit between blower motor and fan switch. • The circuit between blower motor and blower fan resistor. • Blower fan resistor. • Fan switch (A/C control).	HAC-101, "Diagnosis Procedure"
A/C indicator dose not indicate. (Compressor is normal)		• A/C indicator (A/C control) • The circuit between A/C control and BCM • BCM	XX-XX, "*****"
Magnet clutch does not operate. (Compressor is normal)		• Magnet clutch • The circuit between magnet clutch and IPDM E/R • IPDM E/R (A/C relay) • The circuit between ECM and refrigerant pressure sensor • Refrigerant pressure sensor • CAN communication line • A/C switch • Blower fan ON signal • Thermo control amp. • BCM	HAC-113, "Diagnosis Procedure"
• Insufficient cooling • No cool air comes out. (Air flow volume is normal.)		• Magnet clutch control system • Drive belt slipping • Cooler cycle • Air leakage from each duct	HAC-111, "Diagnosis Procedure"
• Insufficient heating • No warm air comes out. (Air flow volume is normal.)		• Engine cooling system • Heater hose • Heater core • Air leakage from each duct	HAC-112, "Diagnosis Procedure"
Noise is heard when the A/C system operates.	During compressor operation	Cooler cycle	XX-XX, "*****"
	During blower motor operation	• Mixing any foreign object in blower motor • Blower motor fan breakage • Blower motor rotation inferiority	HAC-102, "Component Inspection"
Air inlet dose not change.		• A/C control • Intake door cable • Intake door	Check the intake door installation and door operation
Discharge air temperature dose not change.		• A/C control • Air mix door cable • Air mix door	Check the air mix door installation and door operation
Air outlet dose not change.		• A/C control • Mode door cable • Mode door	Check the mode door installation and door operation

INSUFFICIENT COOLING

Description

INFOID:0000000006024141

Symptom
- Insufficient cooling
- No cool air comes out. (Air flow volume is normal.)

Diagnosis Procedure

INFOID:0000000006024142

CAUTION:
Perform the self-diagnosis with CONSULT-III before performing symptom diagnosis. If any malfunction result or DTC is detected, perform the corresponding diagnosis.

1. CHECK MAGNET CLUTCH OPERATION

1. Turn the ignition switch ON.
2. Turn the fan control dial ON.
3. Press the A/C switch.
4. Check that the indicator of the A/C switch turns ON. Check visually and by sound that the compressor operates.
5. Press the A/C switch again.
6. Check that the indicator of the A/C switch turns OFF. Check that the compressor stops.

Is the inspection result normal?

YES >> GO TO 2.
NO >> Perform the diagnosis of “COMPRESSOR DOSE NOT OPERATE” in “SYMPTOM DIAGNOSIS”. Refer to HAC-113, "Diagnosis Procedure".

2. CHECK DRIVE BELT

Check tension of the drive belt. Refer to XX-XX, "*****".

Is the inspection result normal?

YES >> GO TO 3.
NO >> Adjust or replace drive belt depending on the inspection results.

3. CHECK REFRIGERANT CYCLE PRESSURE

Connect the recovery/recycling recharging equipment to the vehicle and perform the pressure inspection with the gauge. Refer to XX-XX, "*****".

Is the inspection result normal?

YES >> GO TO 4.
NO >> Repair or replace parts depending on the inspection results.

4. CHECK AIR LEAKAGE FROM EACH DUCT

Check duct and nozzle, etc. of the air conditioner system for leakage.

Is the inspection result normal?

YES >> Check the air mix door cable installation and air mix door operation.
NO >> Repair or replace parts depending on the inspection results.

INSUFFICIENT HEATING

Description

INFOID:0000000006024143

Symptom
- Insufficient heating
- No warm air comes out. (Air flow volume is normal.)

Diagnosis Procedure

INFOID:0000000006024144

CAUTION:
Perform the self-diagnosis with CONSULT-III before performing symptom diagnosis. If any malfunction result or DTC is detected, perform the corresponding diagnosis.

1. CHECK COOLING SYSTEM

1. Check the engine coolant level and check for leakage. Refer to XX-XX, "*****".
2. Check the radiator cap. Refer to XX-XX, "*****".
3. Check the water flow sounds of the engine coolant. Refer to XX-XX, "*****".

Is the inspection result normal?

YES >> GO TO 2.
NO >> Refill the engine coolant and repair or replace the parts depending on the inspection results.

2. CHECK HEATER HOSE

Check the installation of heater hose by visually or touching.

Is the inspection result normal?

YES >> GO TO 3.
NO >> Repair or replace parts depending on the inspection results.

3. CHECK HEATER CORE

1. Check the temperature of inlet hose and outlet hose of heater core.
2. Check that the inlet side of heater core is hot and the outlet side is slightly lower than/almost equal to the inlet side.
   CAUTION:
   Always perform the temperature inspection in a short period of time because the engine coolant temperature is very hot.

Is the inspection result normal?

YES >> GO TO 4.
NO >> Replace the heater core. Refer to XX-XX, "*****".

4. CHECK AIR LEAKAGE FROM EACH DUCT

Check duct and nozzle, etc. of the air conditioner system for air leakage.

Is the inspection result normal?

YES >> Check the air mix door cable installation and air mix door operation.
NO >> Repair or replace parts depending on the inspection results.

COMPRESSOR DOSE DOT OPERATE

Description

INFOID:0000000006024145

SYMPTOM

Compressor dose not operate.

Diagnosis Procedure

INFOID:0000000006024146

CAUTION:

- **Perform the self-diagnosis with CONSULT-III before performing symptom diagnosis. If any malfunction result or DTC is detected, perform the corresponding diagnosis.**
- **Check that the refrigerant is enclosed in cooler cycle normally. If the refrigerant amount is shortage from proper amount, perform the inspection of refrigerant leakage**

1. CHECK A/C INDICATOR

1. Turn the ignition switch ON.
2. Operate the blower motor.
3. Check that A/C indicator is turned ON when pressing the A/C switch.
4. Check that A/C indicator is turned OFF when pressing the A/C switch again.

Is inspection result normal?

YES >> GO TO 2.
NO >> GO TO 5.

2. CHECK MAGNET CLUTCH OPERATION

Check the magnet clutch. Refer to HAC-104, "Component Function Check".

Does it operate normally?

YES >> GO TO 3.
NO >> Repair or replace the malfunctioning parts.

3. CHECK REFRIGERANT PRESSURE SENSOR

Check the refrigerant pressure sensor. Refer to XX-XX, "*****".

Is the inspection result normal?

YES >> GO TO 4.
NO >> Repair or replace the malfunctioning parts.

4. CHECK BCM OUTPUT SIGNAL

With CONSULT-III

Check the “A/C ON SIG” or “FAN ON SIG” or “A/C RELAY SIG” in ECM.

Monitor item	Condition	Status
COMP REQ SIG	A/C switch: OFF	Off
	A/C switch: ON	On
FAN REQ SW	Fan control dial: OFF	Off
	Fan control dial: ON	On

Is the inspection result normal?

YES >> Replace the IPDM E/R. Refer to XX-XX, "*****".
NO >> Replace the BCM. Refer to XX-XX, "*****".

5. CHECK A/C SWITCH

Check the A/C switch. Refer to HAC-105, "Diagnosis Procedure".

Is inspection result normal?

YES >> GO TO 6.
NO >> Repair or replace the malfunctioning parts.

6. CHECK BLOWER FAN ON SIGNAL

Check the blower fan ON signal. Refer to HAC-108, "Diagnosis Procedure".

Is the inspection result normal?

YES >> GO TO 7.
NO >> Repair or replace the malfunctioning parts

7. CHECK THERMO CONTROL AMP.

Check the thermo control amp. Refer to XX-XX, "*****".

Is the inspection result normal?

YES >> Replace the BCM. Refer to XX-XX, "*****".
NO >> Repair or replace the malfunctioning parts

REMOVAL AND INSTALLATION

A/C CONTROL

Exploded View

INFOID:0000000006024149

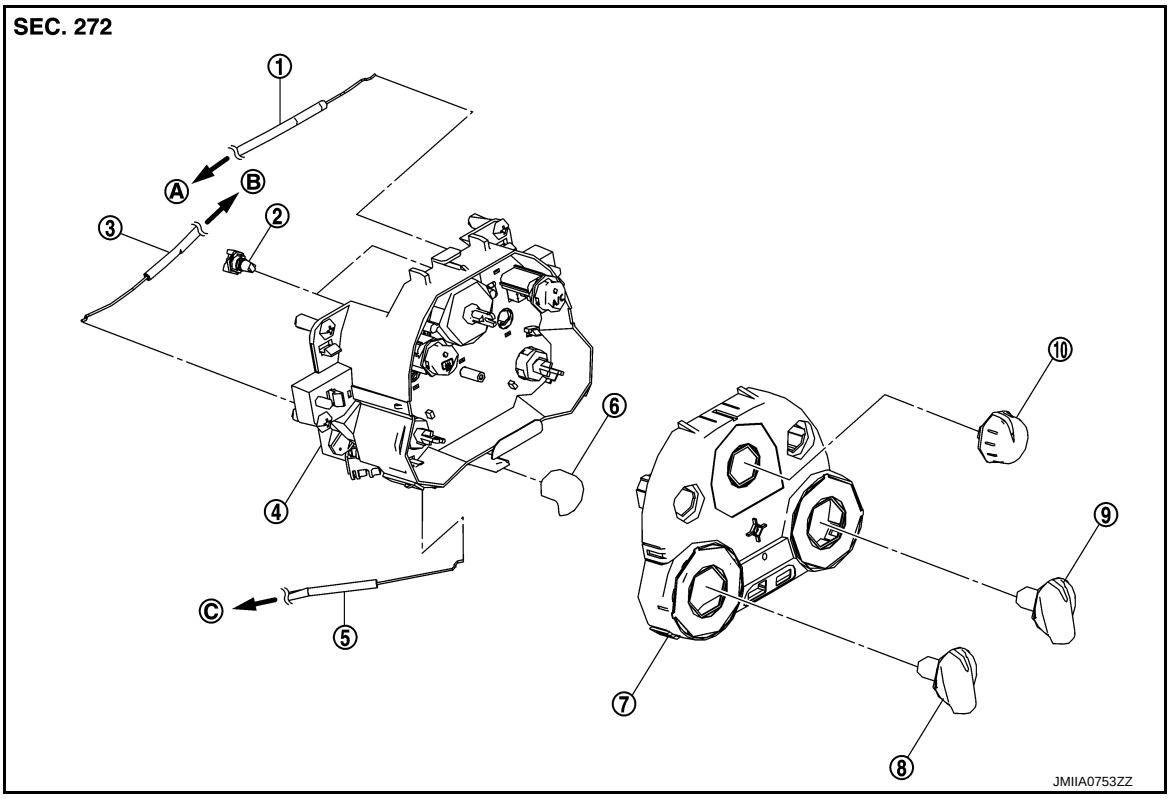

1.	Mode door cable	2.	Illumination bulb	3.	Air mix door cable
4.	A/C control	5.	Intake door cable	6.	Intake door lever knob
7.	A/C control finisher	8.	Mode dial	9.	Temperature dial
10.	Fan control dial				
A.	To mode door link	B.	To air mix door link	C.	Intake door link

Removal and Installation

INFOID:0000000006024150

REMOVAL

1. Remove A/C finisher. Refer to IP-13, "Removal and Installation".
2. Remove the air mix door cable from the A/C unit assembly. Refer to HAC-120, "AIR MIX DOOR CABLE : Removal and Installation".
3. Remove the mode door cable from the A/C unit assembly. Refer to HAC-120, "MODE DOOR CABLE : Removal and Installation".
4. Remove the intake door cable from the A/C unit assembly. Refer to HAC-119, "INTAKE DOOR CABLE : Removal and Installation".
5. Remove each door cable and harness connector the A/C control.

INSTALLATION

Install in the reverse order of removal.

THERMO CONTROL AMPLIFIER

Exploded View

INFOID:0000000006024151

Refer to HA-39, "Exploded View".

Removal and Installation

INFOID:0000000006024152

REMOVAL

1. Remove the evaporator. Refer to HA-43, "EVAPORATOR : Removal and Installation".
2. Remove the thermo control amp. from the evaporator.

INSTALLATION

Note the following items, and then install in the reverse order of removal.

CAUTION:

- **Replace O-ring with new one. Then apply compressor oil to them when installing.**
- **When install the thermo control amp., set the same position before replacement.**
- **When remove the thermo control amp., never turn the bracket which is equipped the top of the thermo control amp.**
- **Check for the leakages when recharging refrigerant. Refer to HA-18, "Leak Test".**

REFRIGERANT PRESSURE SENSOR

Exploded View

INFOID:0000000006057678

Refer to HA-36, "Exploded View".

Removal and Installation

INFOID:0000000006057679

CAUTION:
Perform lubricant return operation before each refrigeration system disassembly. However, if a large amount of refrigerant or lubricant is detected, never perform lubricant return operation. Refer to HA-22, "Perform Lubricant Return Operation".

REMOVAL

1. Remove refrigerant pressure sensor. Refer to HA-37, "REFRIGERANT PRESSURE SENSOR : Removal and Installation".

INSTALLATION

Note the following items, and then install in the reverse order of removal.

CAUTION:
- **Replace O-ring with new one. Then apply compressor oil to them when installing.**
- **Check for leakages when recharging refrigerant. Refer to HA-18, "Leak Test".**

BLOWER FAN RESISTOR

Exploded View

INFOID:0000000006024155

Refer to VTL-7, "Exploded View"

Removal and Installation

INFOID:0000000006024156

REMOVAL

1. Remove instrument panel assembly. Refer to IP-13, "Removal and Installation".
2. Disconnect blower fan resistor connector.
3. Remove mounting screws, and then remove blower fan resistor.

INSTALLATION

Install in the reverse order of removal.

DOOR CABLE

Exploded View

INFOID:0000000006024159

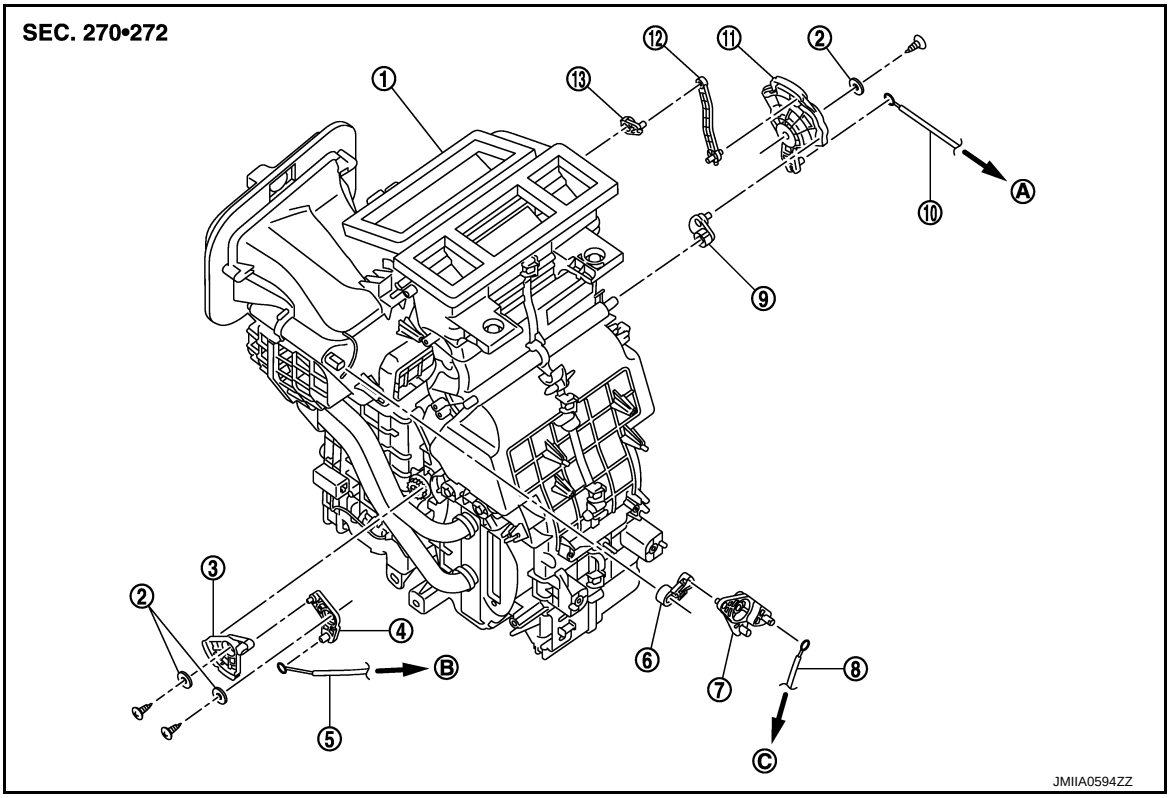

1. A/C unit assembly
2. Plate
3. Air mix door link 2
4. Air mix door link 1
5. Air mix door cable
6. Intake door lever
7. Intake door link
8. Intake door cable
9. Foot door lever
10. Mode door cable
11. Main link
12. Ventilator door rod
13. Ventilator door lever

A. To A/C control

INTAKE DOOR CABLE

INTAKE DOOR CABLE : Removal and Installation

INFOID:0000000006057457

REMOVAL

1. Remove front passenger air bag module or instrument finisher D. Refer to IP-13, "Removal and Installation".
2. Disconnect intake door cable from A/C control.
3. Disconnect intake door cable from A/C unit assembly, and then remove intake door cable.

INSTALLATION

Install in the reverse order of removal.

INTAKE DOOR CABLE : Adjustment

INFOID:0000000006057458

1. Remove front passenger air bag module or instrument finisher D. Refer to IP-13, "Removal and Installation".

2. Disconnect intake door cable (1) from clamp (A).
3. Set intake door lever to REC position.
4. Push intake door link (2) in the direction shown by the arrow, and then carefully pulling outer cable to A/C control side, and connect clamp.

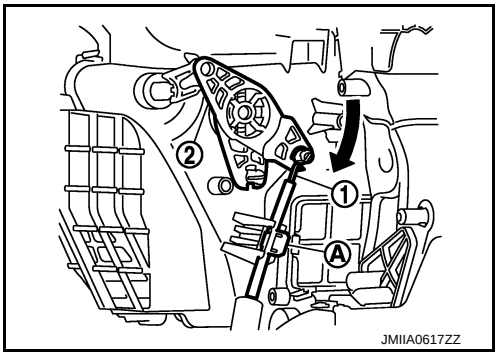

5. Operate intake door lever to insure that inner cable moves smoothly.
   CAUTION:
   When clamping the outer cable, never move the inner cable.

MODE DOOR CABLE

MODE DOOR CABLE : Removal and Installation

INFOID:0000000006057459

REMOVAL

1. Remove A/C unit assembly. Refer to HA-42, "A/C UNIT ASSEMBLY : Removal and Installation".
2. Disconnect mode door cable from A/C control.
3. Disconnect mode door cable from A/C unit assembly, and then remove mode door cable.

INSTALLATION

Install in the reverse order of removal.

MODE DOOR CABLE : Adjustment

INFOID:0000000006057460

1. Remove A/C unit assembly. Refer to HA-42, "A/C UNIT ASSEMBLY : Removal and Installation".
2. Disconnect mode door cable (1) from clamp (A).
3. Set mode dial to VENT position.
4. Push main link (2) in the direction shown by the arrow, and then carefully pulling outer cable to A/C control side, and connect clamp.

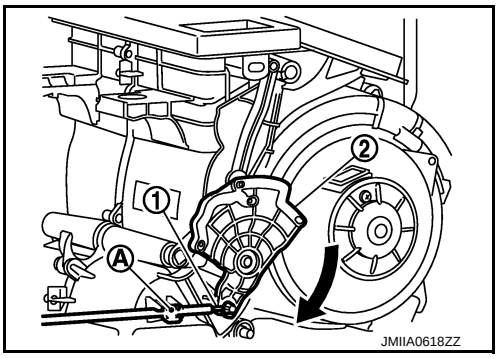

5. Operate mode dial to insure that inner cable moves smoothly.
   CAUTION:
   When clamping the outer cable, never move the inner cable.

AIR MIX DOOR CABLE

AIR MIX DOOR CABLE : Removal and Installation

INFOID:0000000006057461

REMOVAL

1. Remove foot duct LH. Refer to VTL-6, "FOOT DUCT : Removal and Installation".
2. Disconnect air mix door cable from A/C control.
3. Disconnect air mix door cable from A/C unit assembly, and then remove air mix door cable.

INSTALLATION

Install in the reverse order of removal.

AIR MIX DOOR CABLE : Adjustment

INFOID:0000000006057462

1. Remove instrument passenger cover. Refer to IP-13, "Removal and Installation".
2. Disconnect air mix door cable (1) from clamp (A).
3. Set temperature control dial to full cold position.
4. Push air mix door link (2) in the direction shown by the arrow, and then carefully pulling outer cable to A/C control side, and connect clamp.

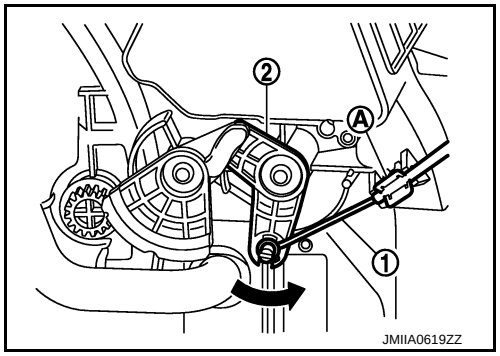

5. Operate temperature control dial to insure that inner cable moves smoothly.
   CAUTION:
   When clamping the outer cable, never move the inner cable.

PRECAUTION

PRECAUTIONS

Precaution for Supplemental Restraint System (SRS) "AIR BAG" and "SEAT BELT PRE-TENSIONER"

INFOID:0000000006024190

The Supplemental Restraint System such as “AIR BAG” and “SEAT BELT PRE-TENSIONER”, used along with a front seat belt, helps to reduce the risk or severity of injury to the driver and front passenger for certain types of collision. This system includes seat belt switch inputs and dual stage front air bag modules. The SRS system uses the seat belt switches to determine the front air bag deployment, and may only deploy one front air bag, depending on the severity of a collision and whether the front occupants are belted or unbelted.
Information necessary to service the system safely is included in the “SRS AIR BAG” and “SEAT BELT” of this Service Manual.

WARNING:

- **To avoid rendering the SRS inoperative, which could increase the risk of personal injury or death in the event of a collision that would result in air bag inflation, all maintenance must be performed by an authorized NISSAN/INFINITI dealer.**
- **Improper maintenance, including incorrect removal and installation of the SRS, can lead to personal injury caused by unintentional activation of the system. For removal of Spiral Cable and Air Bag Module, see the “SRS AIR BAG”.**
- **Do not use electrical test equipment on any circuit related to the SRS unless instructed to in this Service Manual. SRS wiring harnesses can be identified by yellow and/or orange harnesses or harness connectors.**

PRECAUTIONS WHEN USING POWER TOOLS (AIR OR ELECTRIC) AND HAMMERS

WARNING:

- **When working near the Air Bag Diagnosis Sensor Unit or other Air Bag System sensors with the ignition ON or engine running, DO NOT use air or electric power tools or strike near the sensor(s) with a hammer. Heavy vibration could activate the sensor(s) and deploy the air bag(s), possibly causing serious injury.**
- **When using air or electric power tools or hammers, always switch the ignition OFF, disconnect the battery, and wait at least 3 minutes before performing any service.**

Precaution Necessary for Steering Wheel Rotation after Battery Disconnect

INFOID:0000000006024191

NOTE:

- Before removing and installing any control units, first turn the push-button ignition switch to the LOCK position, then disconnect both battery cables.
- After finishing work, confirm that all control unit connectors are connected properly, then re-connect both battery cables.
- Always use CONSULT-III to perform self-diagnosis as a part of each function inspection after finishing work. If a DTC is detected, perform trouble diagnosis according to self-diagnosis results.

For vehicle with steering lock unit, if the battery is disconnected or discharged, the steering wheel will lock and cannot be turned.
If turning the steering wheel is required with the battery disconnected or discharged, follow the operation procedure below before starting the repair operation.

OPERATION PROCEDURE

1. Connect both battery cables.
   NOTE:
   Supply power using jumper cables if battery is discharged.
2. Turn the push-button ignition switch to ACC position.
   (At this time, the steering lock will be released.)
3. Disconnect both battery cables. The steering lock will remain released with both battery cables disconnected and the steering wheel can be turned.
4. Perform the necessary repair operation.

5. When the repair work is completed, re-connect both battery cables. With the brake pedal released, turn the push-button ignition switch from ACC position to ON position, then to LOCK position. (The steering wheel will lock when the push-button ignition switch is turned to LOCK position.)
6. Perform self-diagnosis check of all control units using CONSULT-III.

SYSTEM DESCRIPTION

COMPONENT PARTS

HEATER AND VENTILATION CONTROL SYSTEM

HEATER AND VENTILATION CONTROL SYSTEM : Component Part Location

INFOID:0000000006024166

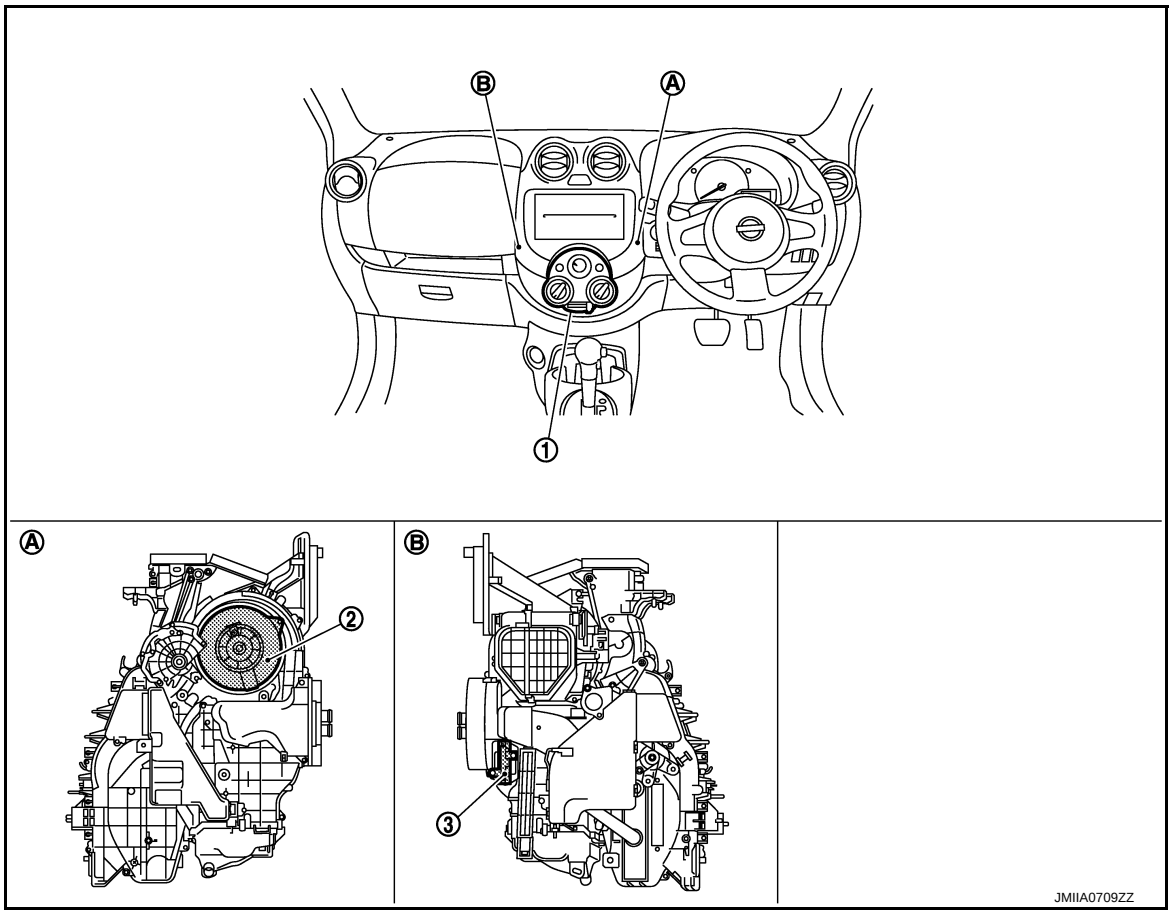

1. Heater control
2. Blower motor
3. Blower fan resistor

A. Located in the right side of heater unit assembly
B. Located in the left side of heater unit assembly

HEATER AND VENTILATION CONTROL SYSTEM : Component Description

INFOID:0000000006024167

Component	Reference/Function
Heater control	Controls the heater control function.
Blower motor	XX-XX, "*****"
Blower fan resistor	XX-XX, "*****"

HEATER AND VENTILATION UNIT ASSEMBLY

HEATER AND VENTILATION UNIT ASSEMBLY : Blower Fan Resistor

INFOID:0000000006043975

- Compact and lightweight resistor is adopted with outstanding ventilation.
- Temperature fuse is installed to protects the blower motor circuit.

⇦ : Vehicle front

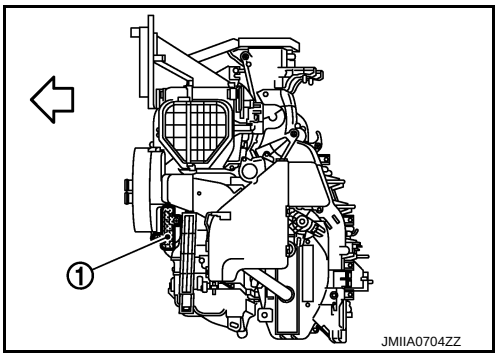

HEATER AND VENTILATION UNIT ASSEMBLY : Blower Motor

INFOID:0000000006043976

- The blower motor (1) is installed in the RH side of A/C unit assembly.
- The blower motor adopts the forcible air cooling system and one-touch installation system without any screws.

⇦ : Vehicle front

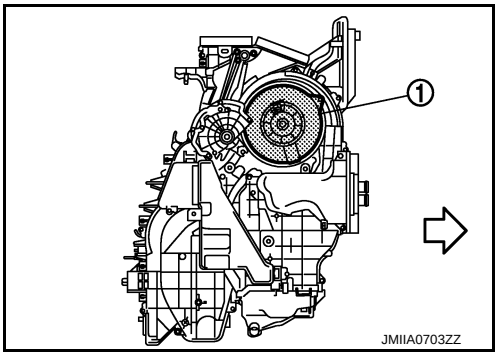

SYSTEM

System Diagram

INFOID:0000000006024164

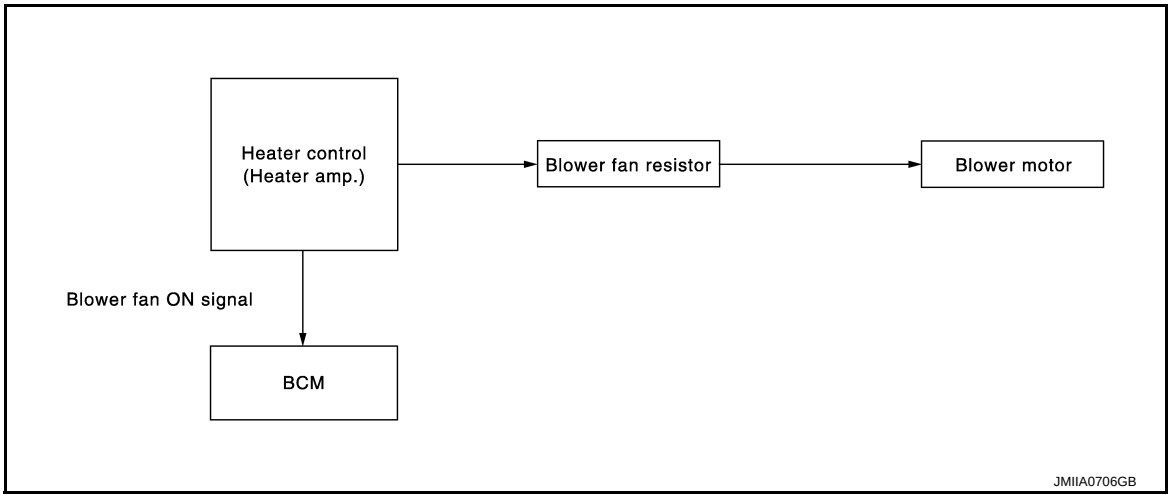

System Description

INFOID:0000000006024165

SYSTEM DESCRIPTION

- Heater system is controlled by each function of BCM and heater amp.
- Fan speed of blower fan motor is changed by the combination of fan switch operation and blower fan resistor control.

SWITCHES AND THEIR CONTROL FUNCTIONS

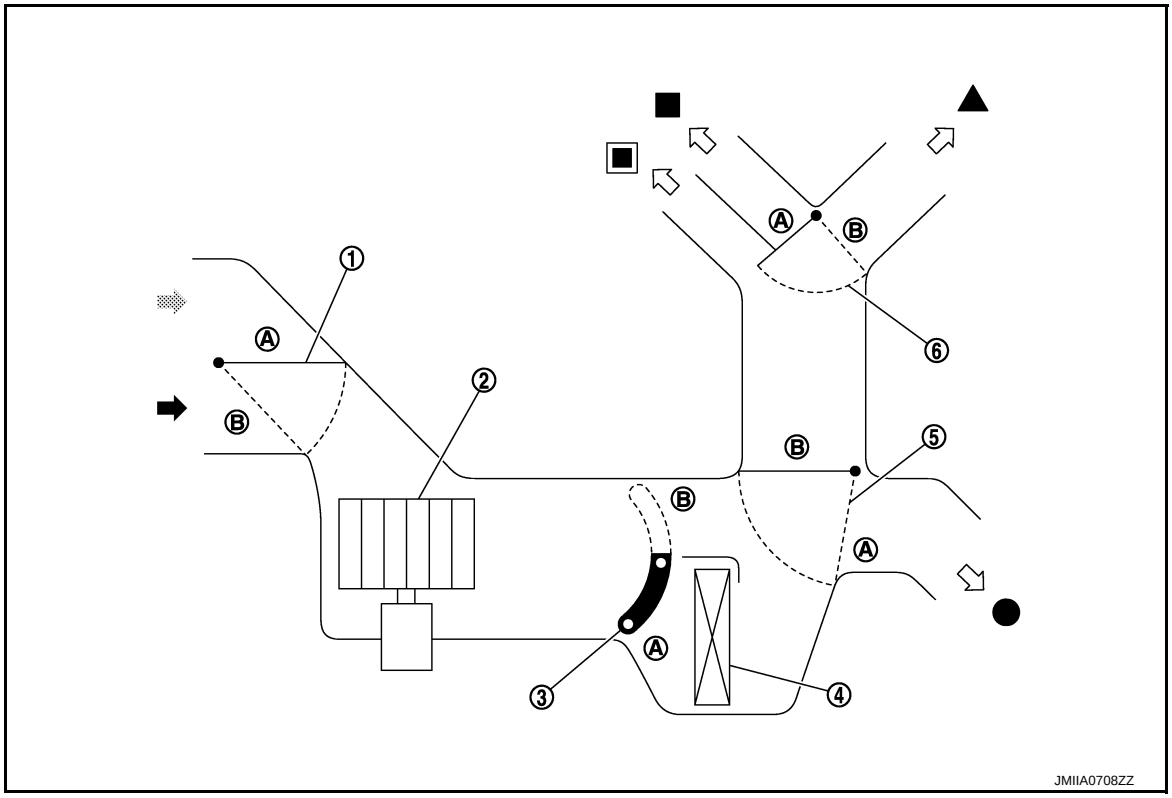

1. Intake door
2. Blower motor
3. Air mix door
4. Heater core*
5. Foot door
6. Ventilator and defroster door

Fresh air intake | Recirculation air | Defroster
Center ventilator | Side ventilator | Foot

*: Manual heater models

Switch/Dial position		Door position			
		Ventilator and defroster door	Foot door	Intake door	Air mix door
MODE dial		B	A	—	—
			A – B		
		A	B		
			A – B		
			A		
Air intake lever		—	—	B	
				A	
Temperature control dial*	Full cold			—	A
	Full hot				B

*: Manual heater models

AIR DISTRIBUTION

Discharge air flow				
Mode position indication	Air outlet/distribution			
	Center ventilator	Side ventilator	Foot	Defroster
	50%	50%	—	—
	30%	30%	40%	—
	7%	7%	66%	20%
	7%	7%	51%	35%
	—	22%	—	78%

OPERATION

Switch Name and Function

INFOID:0000000006043977

CONTROLLER

Heater Control

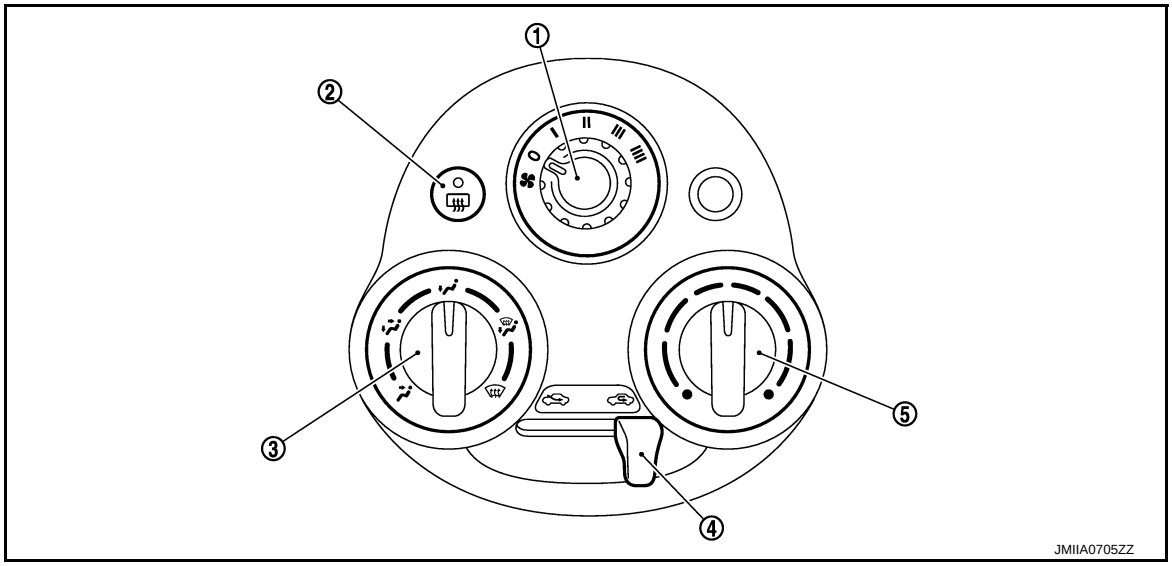

1. Fan control dial
2. Rear window defogger switch
3. MODE dial
4. Air intake lever
5. Temperature control dial

Ventilation Control

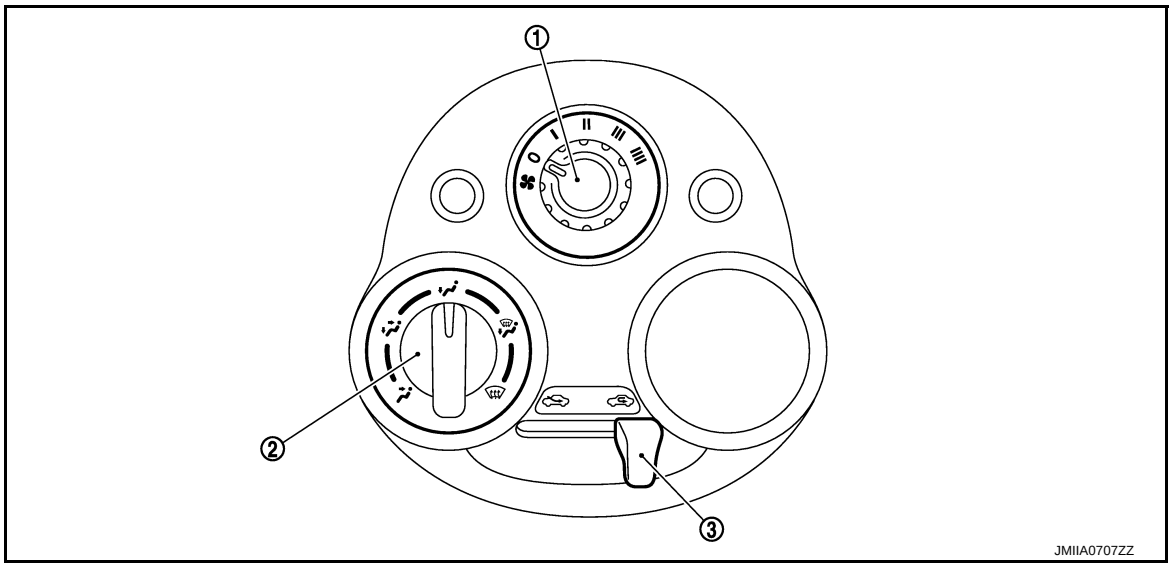

1. Fan control dial
2. MODE dial
3. Air intake lever

SWITCH OPERATION

Fan control dial	Fan speed can be adjusted within a range from 1st to 4th.
Rear window defogger switch	• Rear window defogger (switch indicator) is turned ON ⇔ OFF each time by pressing this switch. • Rear window defogger system details, Refer to XX-XX, "*****".
MODE dial	• Mode position is selected to an optimal position by operating this dial. • When DEF or D/F is selected while blower motor is activated, air inlet becomes fresh air intake.

Intake switch	• The air inlet changed ON ⇔ OFF each time by pressing this switch. - REC indicator ON: Recirculation - REC indicator OFF: Fresh air intake **NOTE:** When mode position is D/F or DEF, air inlet is set to FRE forcibly.
Temperature control dial	The setting temperature can be selected to an optimum temperature by operating this dial.

DIAGNOSIS SYSTEM (BCM)

COMMON ITEM

COMMON ITEM : CONSULT-III Function (BCM - COMMON ITEM)

INFOID:0000000006024168

APPLICATION ITEM

CONSULT-III can display each diagnostic item using the diagnostic test modes shown following.

Diagnosis mode	Function description
ECU Identification	BCM part number is displayed.
Self-Diagnostic Result	Displays the diagnosis results judged by BCM. Refer to XX-XX, "*****".
Data Monitor	BCM input/output signals are displayed.
Active Test	The signals used to activate each device are forcibly supplied from BCM.
Work Support	Changes the setting for each system function.
Configuration	• Read and save the vehicle specification. • Write the vehicle specification when replacing BCM.
CAN Diag Support Monitor	Monitors the reception status of CAN communication viewed from BCM.

SYSTEM APPLICATION

BCM can perform the following functions for each system.

NOTE:

It can perform the diagnosis modes except the following for all sub system selection items.

×: Applicable item

System	CONSULT-III sub system selection item	Diagnosis mode		
		WORK SUPPORT	DATA MONITOR	ACTIVE TEST
Door lock	DOOR LOCK	×	×	×
Rear window defogger	REAR DEFOGGER		×	×
Warning chime	BUZZER		×	×
Interior room lamp control	INT LAMP	×	×	×
Remote keyless entry system	MULTI REMOTE ENT	×	×	×
Exterior lamp	HEAD LAMP	×	×	×
Wiper and washer	WIPER	×	×	×
Turn signal and hazard warning lamps	FLASHER		×	×
Air conditioner	AIR CONDITONER		×	
—	INTELLIGENT KEY*			
Combination switch	COMB SW		×	
—	BCM	×		
Immobilizer	IMMU		×	×
Interior room lamp battery saver	BATTERY SAVER	×	×	×
Back door open	TRUNK		×	×
Vehicle security system	THEFT ALM	×	×	×
RAP system	RETAINED PWR	×	×	×
Signal buffer system	SIGNAL BUFFER		×	×
—	FUEL LID*			
—	TPMS*			
Panic alarm system	PANIC ALARM			×

*: This item is displayed, but is not function.

AIR CONDITIONER

AIR CONDITIONER : CONSULT-III Function

INFOID:0000000006024169

DATA MONITOR

Display Item List

Monitor Item [Unit]		Contents
IGN SW	[On/Off]	Displays ignition switch position status as judged form ignition switch signal.
FAN ON SIG	[On/Off]	Displays the blower fan status as judged form blower fan motor switch signal.
FR DEF SW	[On/Off]	Displays the DEF status as judged from defroster position switch signal.

ECU DIAGNOSIS INFORMATION

BCM

List of ECU Reference

INFOID:0000000006043966

ECU		Reference
BCM	WITH INTELLIGENT KEY SYSTEM	BCS-18, "Reference Value"
		BCS-37, "Fail-safe"
		BCS-39, "DTC Inspection Priority Chart"
		BCS-40, "DTC Index"
	WITHOUT INTELLIGENT KEY SYSTEM	BCS-72, "Reference Value"
		BCS-85, "Fail-safe"
		BCS-85, "DTC Inspection Priority Chart"
		BCS-86, "DTC Index"

WIRING DIAGRAM

HEATER AND VENTILATION CONTROL SYSTEM

Wiring Diagram

INFOID:0000000006024182

For connector terminal arrangements, harness layouts, and alphabets in a ⬡ (option abbreviation; if not described in wiring diagram), refer to GI-12, "Connector Information".

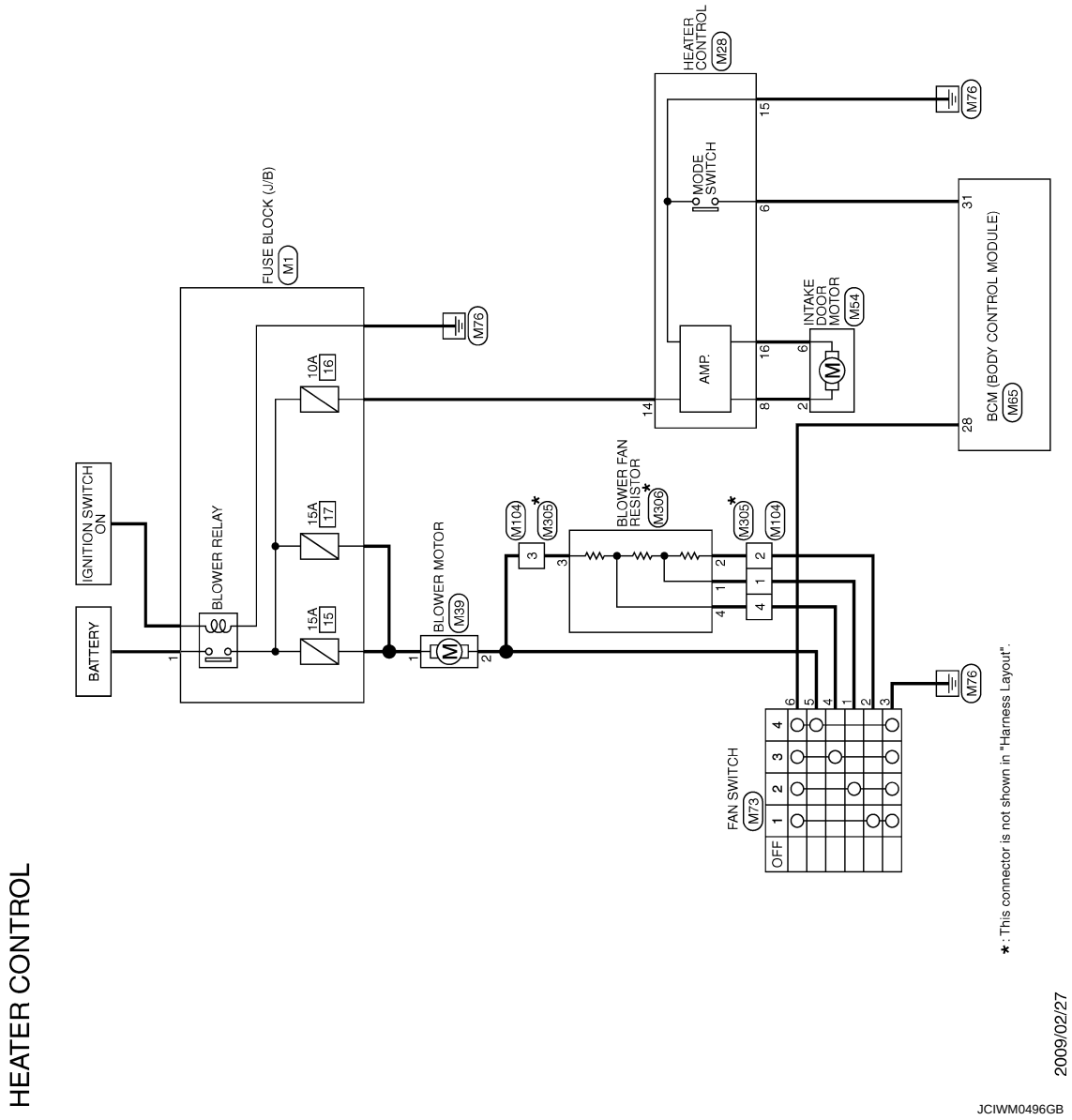

HEATER CONTROL

Connector No.	M1
Connector Name	FUSE BLOCK (J/B)
Connector Type	–

Terminal No.	Color of Wire	Signal Name [Specification]
1	W	–

Connector No.	M28
Connector Name	HEATER CONTROL
Connector Type	TH16FW-NH

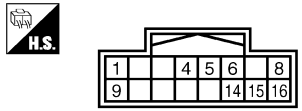

Terminal No.	Color of Wire	Signal Name [Specification]
6	G/Y	–
8	G	–
14	Y	–
15	B	–
16	L	–

Connector No.	M39
Connector Name	BLOWER MOTOR
Connector Type	TM02FW

Terminal No.	Color of Wire	Signal Name [Specification]
1	Y	BLOWER MOTOR POWER SUPPLY
2	L	SENSOR GROUND[Except with auto A/C]

Connector No.	M54
Connector Name	INTAKE DOOR MOTOR
Connector Type	98193-0001

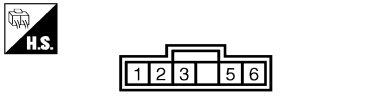

Terminal No.	Color of Wire	Signal Name [Specification]
2	G	INTAKE DOOR MOTOR PBR F/B SIGNAL[Except with auto A/C]
6	L	FRE DRIVE SIGNAL

Connector No.	M65
Connector Name	BCM (BODY CONTROL MODULE) (WITHOUT INTELLIGENT KEY)
Connector Type	TH40FW-NH

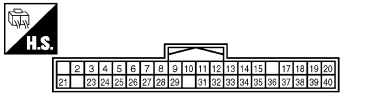

Terminal No.	Color of Wire	Signal Name [Specification]
28	G/W	BLOWER FAN SW
31	G/Y	FR DEFROSTER SW

Connector No.	M73
Connector Name	FAN SWITCH
Connector Type	M06FW-LC

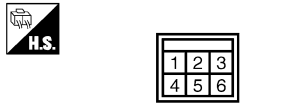

Terminal No.	Color of Wire	Signal Name [Specification]
1	R	–
2	W	–
3	B	–
4	Y	–
5	L	–
6	G/W	–

Connector No.	M104
Connector Name	WIRE TO WIRE
Connector Type	M04FW-LC

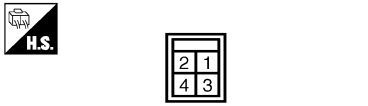

Terminal No.	Color of Wire	Signal Name [Specification]
1	R	–
2	W	–
3	L	–
4	Y	–

Connector No.	M305
Connector Name	WIRE TO WIRE
Connector Type	M04MW

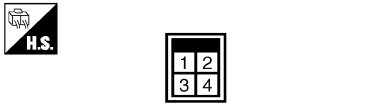

Terminal No.	Color of Wire	Signal Name [Specification]
1	G	–
2	Y	–
3	R	–
4	L	–

JCIWM0497GB

HEATER CONTROL

Connector No.	M306
Connector Name	BLOWER FAN RESISTOR
Connector Type	TM04FW-1V

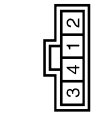

Terminal No.	Color of Wire	Signal Name [Specification]
1	G	–
2	Y	–
3	R	–
4	L	–

JCIWM0498GB

BASIC INSPECTION

DIAGNOSIS AND REPAIR WORKFLOW

Work Flow

INFOID:0000000006024162

OVERALL SEQUENCE

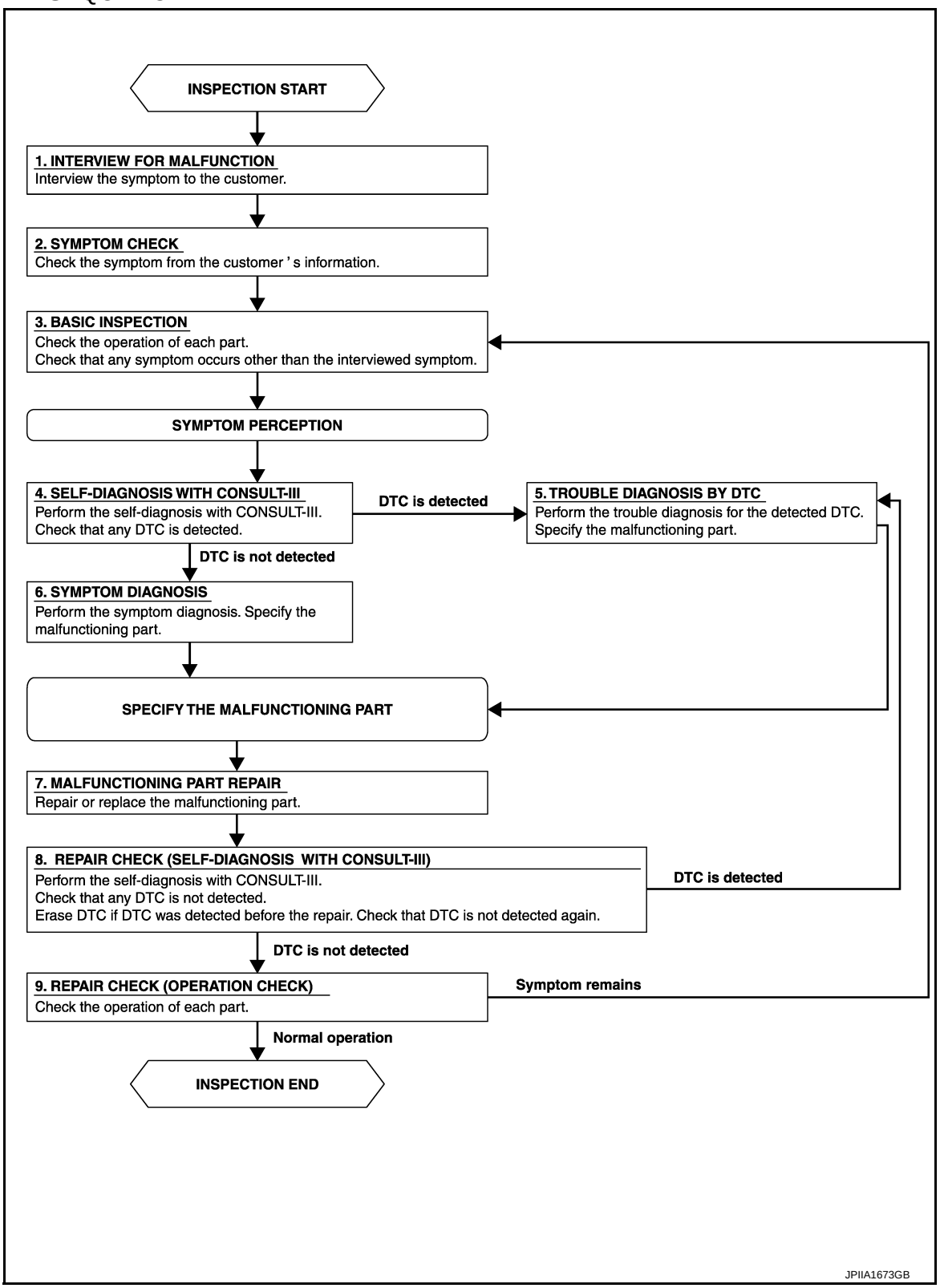

DETAILED FLOW

1. INTERVIEW FOR MALFUNCTION

Interview the symptom to the customer.

>> GO TO 2.

2. SYMPTOM CHECK

Check the symptom from the customer's information.

>> GO TO 3.

3. BASIC INSPECTION

Check the operation of each part. Check that any symptom occurs other than the interviewed symptom.

>> GO TO 4.

4. SELF-DIAGNOSIS WITH CONSULT-III

Perform the self-diagnosis with CONSULT-III. Check that any DTC is detected.

Is any DTC detected?

YES >> GO TO 5.
NO >> GO TO 6.

5. TROUBLE DIAGNOSIS BY DTC

Perform the trouble diagnosis for the detected DTC. Specify the malfunctioning part.

>> GO TO 6.

6. SYMPTOM DIAGNOSIS

Perform the symptom diagnosis. Specify the malfunctioning part.

>> GO TO 7.

7. MALFUNCTION PART REPAIR

Repair or replace the malfunctioning part.

>> GO TO 8.

8. REPAIR CHECK (SELF-DIAGNOSIS WITH CONSULT-III)

Perform the self-diagnoses with CONSULT-III. Check that any DTC is not detected. Erase DTC if DTC is detected before the repair. Check that DTC is not detected again.

Is any or malfunction result or DTC detected?

YES >> If DTC is detected, GO TO 5.
NO >> GO TO 9.

9. REPAIR CHECK (OPERATION CHECK)

Check the operation of each part.

Does it operate normally?

YES >> INSPECTION END
NO >> GO TO 3.

OPERATION INSPECTION

Description & Inspection

INFOID:0000000006024163

DESCRIPTION

The purpose of the operational check is to check that the individual system operates normally.

Check condition : Engine running at normal operating temperature.

INSPECTION PROCEDURE

1. CHECK BLOWER MOTOR

1. Start the engine.
2. Operate the fan control dial. Check that the fan speed changes. Check the operation for all fan speeds.
3. Leave blower on maximum speed.

Is the inspection result normal?

YES >> GO TO 2.
NO >> Blower motor system malfunction. Refer to HAC-139, "Diagnosis Procedure".

2. CHECK DISCHARGE AIR

1. Operate MODE dial to each position.
2. Check that the air outlets change according to each indicated air outlet by placing a hand in front of the outlets. Refer to XX-XX, "*****".

Is the inspection result normal?

YES >> GO TO 3.
NO >> Replace the mode door cable.

3. CHECK INTAKE AIR

1. Press intake switch to set the air outlet to recirculation.
2. The intake switch indicator turns ON.
3. Listen to intake sound and confirm air inlets change.
4. Press intake switch again to set the air outlet to fresh air intake.
5. The intake switch indicator turns OFF.
6. Listen to intake sound and confirm air inlets change.

Is the inspection result normal?

YES >> GO TO 4.
NO >> Intake door system malfunction. Refer to XX-XX, "*****".

4. CHECK TEMPERATURE INCREASE

1. Turn temperature control dial to full hot position after warming up the engine.
2. Check that warm air blows from outlets.

Is the inspection result normal?

YES >> INSPECTION END
NO >> Insufficient heating. Refer to HAC-145, "Diagnosis Procedure".

DTC/CIRCUIT DIAGNOSIS

BLOWER MOTOR

Diagnosis Procedure

INFOID:0000000006024175

1. CHECK FUSE

Check 15A fuses [Nos. 14 and 16, located in the fuse block (J/B)].
NOTE:
Refer to XX-XX, "*****".

Is the inspection result normal?

YES >> GO TO 2.
NO >> Replace fuse after repairing the applicable circuit.

2. CHECK POWER SUPPLY FOR BLOWER MOTOR

1. Turn the ignition switch OFF.
2. Disconnect the blower motor connector.
3. Turn the ignition switch ON.
4. Check voltage between blower motor harness connector and the ground.

(+)		(–)	Voltage (Approx.)
Blower motor		—	
Connector	Terminal		
M39	1	Ground	Battery voltage

Is the inspection result normal?

YES >> GO TO 3.
NO >> GO TO 4.

3. CHECK BLOWER RELAY

1. Turn the ignition switch OFF.
2. Perform the component inspection of blower motor relay. Refer to HAC-140, "Component Inspection".

Is the inspection result normal?

YES >> Replace the harness or connector between blower motor and fuse.
NO >> Replace the blower relay.

4. CHECK HEATER CONTROL GROUND CIRCUIT

1. Turn ignition switch OFF.
2. Disconnect the heater control connector.
3. Check continuity between heater control harness connector and the ground.

Heater control		—	Continuity
Connector	Terminal		
M28	6	Ground	Existed

Is the inspection result normal?

YES >> GO TO 5.
NO >> Repair the harness or connector.

5. CHECK CONTINUITY BETWEEN HEATER CONTROL AND BLOWER MOTOR

Check continuity the heater control harness connector and blower motor harness connector.

Heater control		Blower motor		Continuity
Connector	Terminal	Connector	Terminal	
M28	1	M39	2	Existed

Is the inspection result normal?

YES >> GO TO 6.
NO >> Repair the harness or connector.

6. CHECK VOLTAGE BETWEEN BLOWER FAN RESISTOR AND GROUND

1. Disconnect the blower fan resistor connector.
2. Turn the ignition switch ON.
3. Check voltage between blower fan resistor harness connector and the ground.

(+)		(–)	Voltage (Approx.)
Blower fan resistor		—	
Connector	Terminal		
M104	1	Ground	12 V

Is the inspection result normal?

YES >> GO TO 7.
NO >> Repair the harness or connector between blower fan resistor and blower motor.

7. CHECK BLOWER FAN RESISTOR

1. Turn the ignition switch OFF.
2. Perform the component inspection of blower fan resistor. Refer to HAC-140, "Component Inspection".

Is the inspection result normal?

YES >> GO TO 8.
NO >> Replace the blower fan resistor.

8. CHECK CIRCUIT CONTINUITY BETWEEN HEATER CONTROL AND BLOWER FAN RESISTOR

Check continuity between heater control harness connector and blower fan resistor.

Heater control		Blower fan resistor		Continuity
Connector	Terminal	Connector	Terminal	
M28	2	M104	2	Existed
	3		3	
	4		4	

Is the inspection result normal?

YES >> Replace heater control.
NO >> Repair the harness or connector.

Component Inspection

INFOID:0000000006024176

BLOWER MOTOR

1. CHECK BLOWER MOTOR

1. Remove the blower motor. Refer to XX-XX, "*****".
2. Check that there is not any mixing foreign object in the blower motor.

Is the inspection result normal?

YES >> GO TO 2.
NO >> Replace the blower motor.

2. CHECK BLOWER MOTOR

Check that there is not breakage or damage in the blower motor.

Is the inspection result normal?

YES >> GO TO 3.
NO >> Replace the blower motor.

3. CHECK BLOWER MOTOR

Check that the blower motor turns smoothly.

Is the inspection result normal?

YES >> INSPECTION END
NO >> Replace the blower motor.

BLOWER RELAY

1. CHECK MOTOR RELAY

1. Remove the blower relay. Refer to XX-XX, "*****".
2. Check the continuity between the blower relay terminal 3 and 5 when the voltage is supplied between terminal 1 and 2.

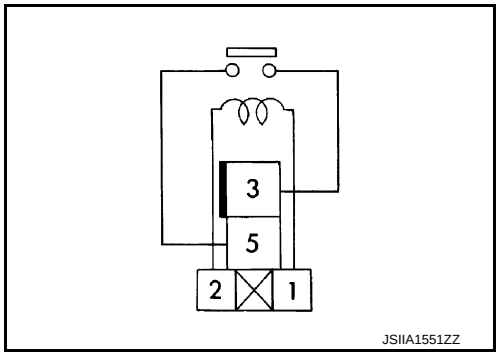

Blower relay		Voltage	Continuity
Terminal			
3	5	ON	Existed
		OFF	Not existed

Is the inspection result normal?

YES >> INSPECTION END
NO >> Replace the blower relay.

BLOWER FAN RESISTOR

1. CHECK BLOWER MOTOR

1. Turn the ignition switch OFF.
2. Disconnect the blower fan resistor connector.
3. Check the resistance between the blower fan resistor terminals. Refer to the applicable table for the normal value.

Blower fan resistor		Resistance: Ω (Approx.)
Terminal		
1	2	0.43
	3	1.03
	4	3

Is the inspection result normal?

YES >> INSPECTION END
NO >> Replace the blower fan resistor.

BLOWER FAN ON SIGNAL

Component Function Check

INFOID:0000000006024180

1. CHECK BLOWER FAN ON SIGNAL

With CONSULT-III
1. Turn the ignition switch ON.
2. Select the “FAN ON SIG” on “DATA MONITOR” in BCM.
3. Check the fan ON signal when the fan control dial is operated.

Monitor item	Condition		Status
FAN ON SIG	Fan control dial	OFF position	Off
		Except OFF position	On

Is inspection result normal?

YES >> INSPECTION END
NO >> Refer to HAC-142, "Diagnosis Procedure".

Diagnosis Procedure

INFOID:0000000006024181

1. CHECK BLOWER FAN ON SIGNAL OUTPUT

1. Turn the ignition switch OFF.
2. Disconnect the heater control connector.
3. Turn the ignition switch ON.
4. Check output waveform between heater control harness connector and the ground with using oscilloscope.

(+)		(–)	Output waveform
Heater control		—	
Connector	Terminal		
M28	5	Ground	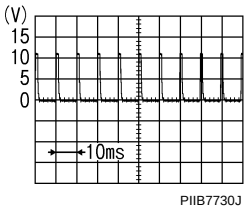 Approx. 1.5 ～ 2.0 V

Is inspection result normal?

YES >> Replace the heater control.
NO >> GO TO 2.

2. CHECK CONTINUITY BETWEEN HEATER CONTROL AND BCM

1. Turn the ignition switch OFF.
2. Disconnect the BCM connector.
3. Check continuity between heater control harness connector and BCM harness connector.

Heater control		BCM		Continuity
Connector	Terminal	Connector	Terminal	
M28	5	M65	28	Existed

Is inspection result normal?

YES >> GO TO 3.
NO >> Repair the harness or connector.

3. CHECK CONTINUITY BETWEEN HEATER CONTROL AND GROUND

Check continuity between heater control harness connector and the ground.

Heater control		—	Continuity
Connector	Terminal		
M28		Ground	Not existed

Is inspection result normal?

YES >> Replace the BCM. Refer to XX-XX, "*****".
NO >> Repair the harness or connector.

SYMPTOM DIAGNOSIS

HEATER AND VENTILATION CONTROL SYSTEM

Diagnosis Chart By Symptom

INFOID:0000000006024187

CAUTION:
Perform the self-diagnosis with CONSULT-III before performing the symptom diagnosis. If any malfunction result or DTC is detected, perform the corresponding diagnosis.

Symptom	Corresponding malfunction part	Check item/Reference
Blower motor operation is malfunctioning.	• Blower motor • Power supply system of blower motor • The circuit between blower motor and fan switch. • The circuit between blower motor and blower fan resistor. • Blower fan resistor. • Fan switch (Heater control).	HAC-139, "Diagnosis Procedure"
• Insufficient heating* • No warm air comes out. (Air flow volume is normal.)*	• Engine cooling system • Heater hose • Heater core • Air leakage from each duct	HAC-145, "Diagnosis Procedure"
Noise is heard when the heater system operates.	• Mixing any foreign object in blower motor • Blower motor fan breakage • Blower motor rotation inferiority	HAC-140, "Component Inspection"
Air inlet dose not change.	• Heater control • Intake door cable • Intake door	Check the intake door installation and door operation
Discharge air temperature dose not change.*	• Heater control • Air mix door cable • Air mix door	Check the air mix door installation and door operation
Air outlet dose not change.	• Heater control • Mode door cable • Mode door	Check the mode door installation and door operation

*: Manual heater models

INSUFFICIENT HEATING

Description

INFOID:0000000006024188

Symptom
- Insufficient heating
- No warm air comes out. (Air flow volume is normal.)

Diagnosis Procedure

INFOID:0000000006024189

CAUTION:
Perform the self-diagnosis with CONSULT-III before performing symptom diagnosis. If any malfunction result or DTC is detected, perform the corresponding diagnosis.

1. CHECK COOLING SYSTEM

1. Check the engine coolant level and check for leakage. Refer to XX-XX, "*****".
2. Check the radiator cap. Refer to XX-XX, "*****".
3. Check the water flow sounds of the engine coolant. Refer to XX-XX, "*****".

Is the inspection result normal?

YES >> GO TO 2.
NO >> Refill the engine coolant and repair or replace the parts depending on the inspection results.

2. CHECK HEATER HOSE

Check the installation of heater hose by visually or touching.

Is the inspection result normal?

YES >> GO TO 3.
NO >> Repair or replace parts depending on the inspection results.

3. CHECK HEATER CORE

1. Check the temperature of inlet hose and outlet hose of heater core.
2. Check that the inlet side of heater core is hot and the outlet side is slightly lower than/almost equal to the inlet side.
   CAUTION:
   Always perform the temperature inspection in a short period of time because the engine coolant temperature is very hot.

Is the inspection result normal?

YES >> GO TO 4.
NO >> Replace the heater core. Refer to XX-XX, "*****".

4. CHECK AIR LEAKAGE FROM EACH DUCT

Check duct and nozzle, etc. of the air conditioner system for air leakage.

Is the inspection result normal?

YES >> Check the air mix door cable installation and air mix door operation.
NO >> Repair or replace parts depending on the inspection results.

REMOVAL AND INSTALLATION

HEATER CONTROL

Exploded View

INFOID:0000000006024192

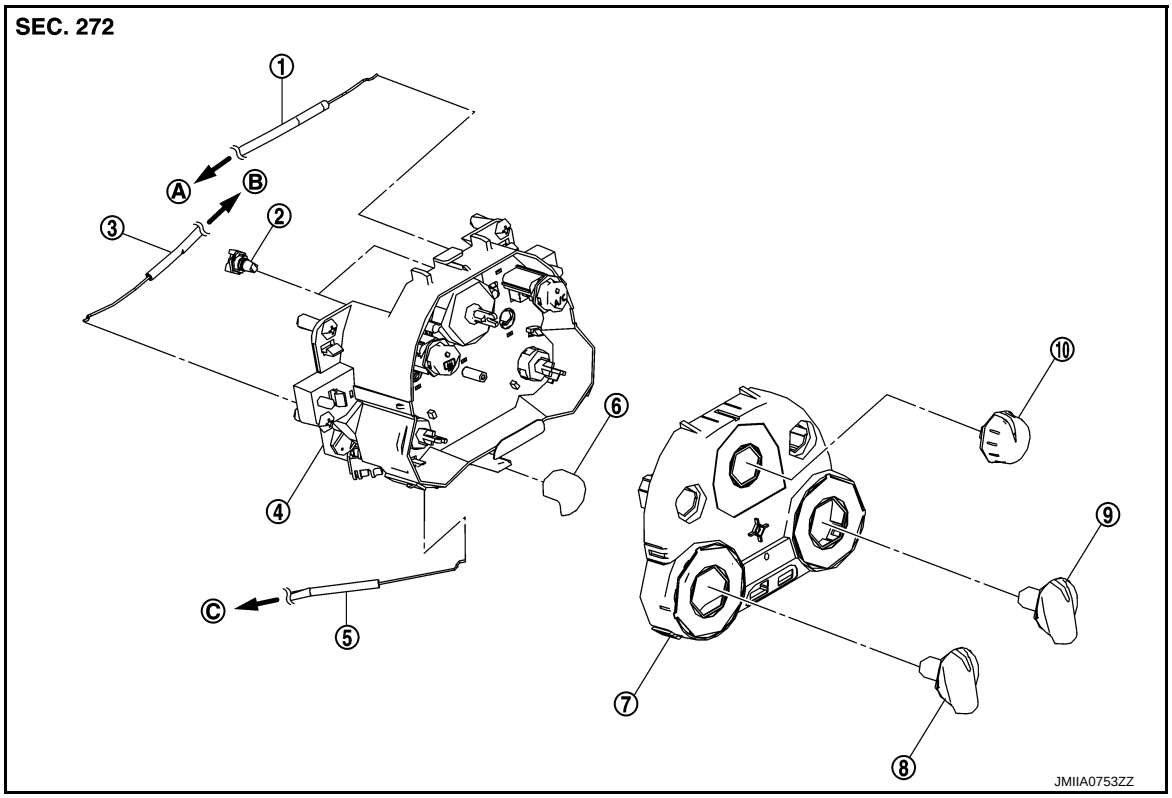

1.	Air mix door cable (with heater models)	2.	Illumination bulb	3.	Mode door cable
4.	A/C control	5.	Intake door cable	6.	Knob
7.	A/C finisher	8.	Mode dial	9.	Temperature dial (with heater models)
10.	Fan control dial				
A.	To mode door link	B.	To air mix door link	C.	Intake door link

Removal and Installation

INFOID:0000000006024193

REMOVAL

1. Remove A/C finisher. Refer to XX-XX, "*****".
2. Remove the heater control mounting screws.
3. Remove the air mix door cable from the A/C unit assembly. Refer to XX-XX, "*****".
4. Remove the mode door cable from the A/C unit assembly. Refer to XX-XX, "*****".
5. Disconnect harness connector.
6. Remove the A/C control.

INSTALLATION

Installation is basically the reverse order of removal.

BLOWER FAN RESISTOR

Exploded View

INFOID:0000000006024194

Refer to VTL-7, "Exploded View"

Removal and Installation

INFOID:0000000006057680

REMOVAL

1. Remove instrument panel assembly. Refer to IP-13, "Removal and Installation".
2. Disconnect blower fan resistor connector.
3. Remove mounting screws, and then remove blower fan resistor.

INSTALLATION

Install in the reverse order of removal.

DOOR CABLE

Exploded View

INFOID:0000000006069124

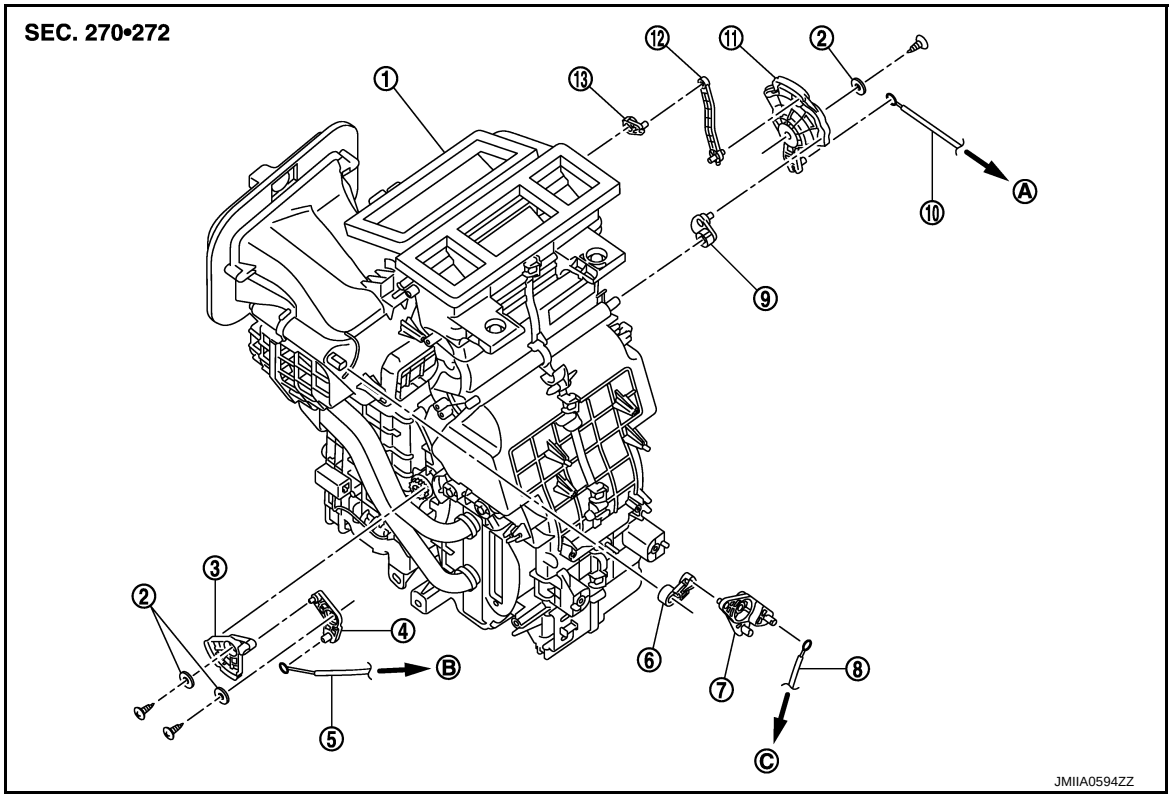

1. Heater unit assembly (with heater) Ventilation unit assembly (with ventilation	2. Plate	3. Air mix door link 2 (with heater)
4. Air mix door link 1 (with heatert)	5. Air mix door cable (with heater)	6. Intake door lever
7. Intake door link	8. Intake door cable	9. Foot door lever
10. Mode door cable	11. Main link	12. Ventilator door rod
13. Ventilator door lever		
A. To A/C control		

INTAKE DOOR CABLE

INTAKE DOOR CABLE : Removal and Installation

INFOID:0000000006057681

REMOVAL

1. Remove front passenger air bag module or instrument finisher D. Refer to IP-13, "Removal and Installation".
2. Disconnect intake door cable from A/C control.
3. Disconnect intake door cable from A/C unit assembly, and then remove intake door cable.

INSTALLATION

Install in the reverse order of removal.

INTAKE DOOR CABLE : Adjustment

INFOID:0000000006057682

1. Remove front passenger air bag module or instrument finisher D. Refer to IP-13, "Removal and Installation".

2. Disconnect intake door cable (1) from clamp (A).
3. Set intake door lever to REC position.
4. Push intake door link (2) in the direction shown by the arrow, and then carefully pulling outer cable to A/C control side, and connect clamp.

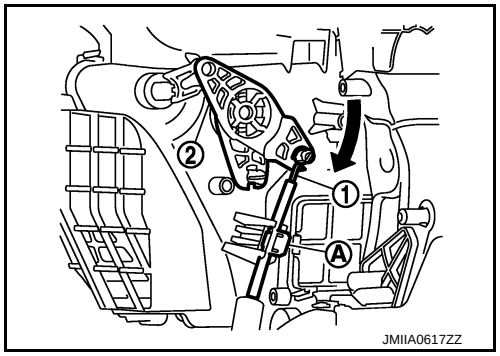

5. Operate intake door lever to insure that inner cable moves smoothly.
   CAUTION:
   When clamping the outer cable, never move the inner cable.

MODE DOOR CABLE

MODE DOOR CABLE : Removal and Installation

INFOID:0000000006057683

REMOVAL

1. Remove A/C unit assembly. Refer to HA-42, "A/C UNIT ASSEMBLY : Removal and Installation".
2. Disconnect mode door cable from A/C control.
3. Disconnect mode door cable from A/C unit assembly, and then remove mode door cable.

INSTALLATION

Install in the reverse order of removal.

MODE DOOR CABLE : Adjustment

INFOID:0000000006057684

1. Remove A/C unit assembly. Refer to HA-42, "A/C UNIT ASSEMBLY : Removal and Installation".
2. Disconnect mode door cable (1) from clamp (A).
3. Set mode dial to VENT position.
4. Push main link (2) in the direction shown by the arrow, and then carefully pulling outer cable to A/C control side, and connect clamp.

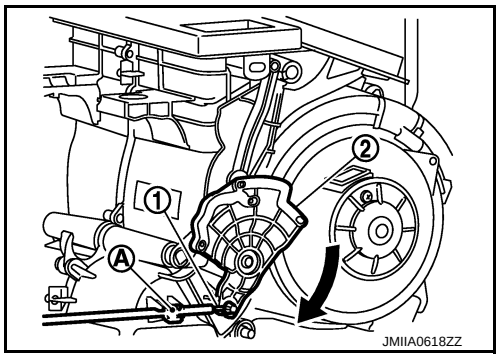

5. Operate mode dial to insure that inner cable moves smoothly.
   CAUTION:
   When clamping the outer cable, never move the inner cable.

AIR MIX DOOR CABLE

AIR MIX DOOR CABLE : Removal and Installation

INFOID:0000000006057685

REMOVAL

1. Remove foot duct LH. Refer to VTL-6, "FOOT DUCT : Removal and Installation".
2. Disconnect air mix door cable from A/C control.
3. Disconnect air mix door cable from A/C unit assembly, and then remove air mix door cable.

INSTALLATION

Install in the reverse order of removal.

AIR MIX DOOR CABLE : Adjustment

INFOID:0000000006057686

1. Remove instrument passenger cover. Refer to IP-13, "Removal and Installation".
2. Disconnect air mix door cable (1) from clamp (A).
3. Set temperature control dial to full cold position.
4. Push air mix door link (2) in the direction shown by the arrow, and then carefully pulling outer cable to A/C control side, and connect clamp.

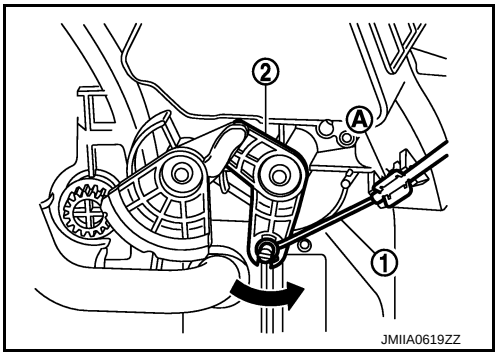

5. Operate temperature control dial to insure that inner cable moves smoothly.
   CAUTION:
   When clamping the outer cable, never move the inner cable.

SECTION HRN

HORN

CONTENTS

PRECAUTION 2

PRECAUTIONS 2
Precaution for Supplemental Restraint System (SRS) "AIR BAG" and "SEAT BELT PRE-TENSIONER" 2

WIRING DIAGRAM 3

HORN 3
Wiring Diagram 3

REMOVAL AND INSTALLATION 4

HORN 4
Exploded View 4
Removal and Installation 4

PRECAUTION

PRECAUTIONS

Precaution for Supplemental Restraint System (SRS) "AIR BAG" and "SEAT BELT PRE-TENSIONER"

INFOID:0000000005984311

The Supplemental Restraint System such as “AIR BAG” and “SEAT BELT PRE-TENSIONER”, used along with a front seat belt, helps to reduce the risk or severity of injury to the driver and front passenger for certain types of collision. Information necessary to service the system safely is included in the “SRS AIR BAG” and “SEAT BELT” of this Service Manual.

WARNING:

- **To avoid rendering the SRS inoperative, which could increase the risk of personal injury or death in the event of a collision which would result in air bag inflation, all maintenance must be performed by an authorized NISSAN/INFINITI dealer.**
- **Improper maintenance, including incorrect removal and installation of the SRS, can lead to personal injury caused by unintentional activation of the system. For removal of Spiral Cable and Air Bag Module, see the “SRS AIR BAG”.**
- **Do not use electrical test equipment on any circuit related to the SRS unless instructed to in this Service Manual. SRS wiring harnesses can be identified by yellow and/or orange harnesses or harness connectors.**

PRECAUTIONS WHEN USING POWER TOOLS (AIR OR ELECTRIC) AND HAMMERS

WARNING:

- **When working near the Air Bag Diagnosis Sensor Unit or other Air Bag System sensors with the ignition ON or engine running, DO NOT use air or electric power tools or strike near the sensor(s) with a hammer. Heavy vibration could activate the sensor(s) and deploy the air bag(s), possibly causing serious injury.**
- **When using air or electric power tools or hammers, always switch the ignition OFF, disconnect the battery, and wait at least 3 minutes before performing any service.**

WIRING DIAGRAM

HORN

Wiring Diagram

INFOID:0000000005984309

For connector terminal arrangements, harness layouts, and alphabets in a ⬡ (option abbreviation; if not described in wiring diagram), refer to GI-12, "Connector Information".

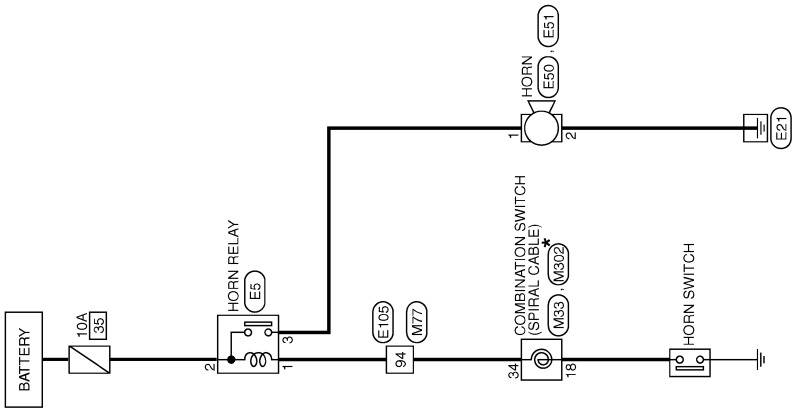

*: This connector is not shown in "Harness Layout".

HORN

2009/02/27

JCLWM3546GB

REMOVAL AND INSTALLATION

HORN

Exploded View

INFOID:0000000005984708

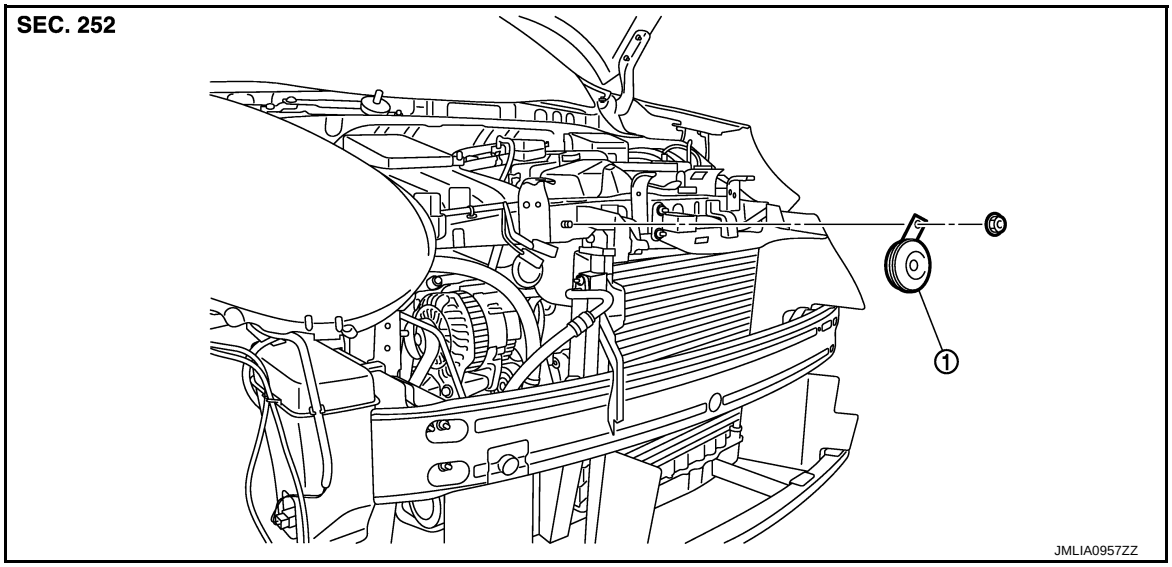

1. Horn

Removal and Installation

INFOID:0000000005984310

REMOVAL

1. Disconnect the horn connector.
2. Remove the horn mounting nut, and remove the horn from the vehicle.

INSTALLATION

Install in the reverse order of removal.

SECTION INL
INTERIOR LIGHTING SYSTEM

CONTENTS

PRECAUTION 3

PRECAUTIONS 3
Precaution for Supplemental Restraint System (SRS) "AIR BAG" and "SEAT BELT PRE-TENSIONER" 3
Precaution Necessary for Steering Wheel Rotation after Battery Disconnect 3

SYSTEM DESCRIPTION 5

COMPONENT PARTS 5
Component Parts Location 5
Component Description 5

SYSTEM 7

INTERIOR ROOM LAMP CONTROL SYSTEM (WITH INTELLIGENT KEY SYSTEM) 7
INTERIOR ROOM LAMP CONTROL SYSTEM (WITH INTELLIGENT KEY SYSTEM) : System Diagram 7
INTERIOR ROOM LAMP CONTROL SYSTEM (WITH INTELLIGENT KEY SYSTEM) : System Description 7

INTERIOR ROOM LAMP CONTROL SYSTEM (WITHOUT INTELLIGENT KEY SYSTEM) 8
INTERIOR ROOM LAMP CONTROL SYSTEM (WITHOUT INTELLIGENT KEY SYSTEM) : System Diagram 8
INTERIOR ROOM LAMP CONTROL SYSTEM (WITHOUT INTELLIGENT KEY SYSTEM) : System Description 9

INTERIOR ROOM LAMP BATTERY SAVER SYSTEM 10
INTERIOR ROOM LAMP BATTERY SAVER SYSTEM : System Diagram 10
INTERIOR ROOM LAMP BATTERY SAVER SYSTEM : System Description 10

ILLUMINATION CONTROL SYSTEM 11
ILLUMINATION CONTROL SYSTEM : System Diagram 11
ILLUMINATION CONTROL SYSTEM : System Description 11

DIAGNOSIS SYSTEM (BCM) (WITH INTELLIGENT KEY SYSTEM) 13

COMMON ITEM 13
COMMON ITEM : CONSULT-III Function (BCM - COMMON ITEM) 13

INT LAMP 14
INT LAMP : CONSULT-III Function (BCM - INT LAMP) 15

BATTERY SAVER 16
BATTERY SAVER : CONSULT-III Function (BCM - BATTERY SAVER) 16

DIAGNOSIS SYSTEM (BCM) (WITHOUT INTELLIGENT KEY SYSTEM) 18

COMMON ITEM 18
COMMON ITEM : CONSULT-III Function (BCM - COMMON ITEM) 18

INT LAMP 18
INT LAMP : CONSULT-III Function (BCM - INT LAMP) 19

BATTERY SAVER 20
BATTERY SAVER : CONSULT-III Function (BCM - BATTERY SAVER) 20

ECU DIAGNOSIS INFORMATION 22

BCM 22

WITH INTELLIGENT KEY 22
WITH INTELLIGENT KEY : List of ECU Reference 22

WITHOUT INTELLIGENT KEY 22
WITHOUT INTELLIGENT KEY : List of ECU Reference 22

WIRING DIAGRAM 23

INTERIOR ROOM LAMP CONTROL SYSTEM ... 23
Wiring Diagram 23

ILLUMINATION 25
Wiring Diagram 25

BASIC INSPECTION 28

DIAGNOSIS AND REPAIR WORKFLOW 28
Work Flow 28

DTC/CIRCUIT DIAGNOSIS 30

INTERIOR ROOM LAMP CONTROL CIRCUIT ... 30
Description 30
Component Function Check 30
Diagnosis Procedure 30

PUSH-BUTTON IGNITION SWITCH ILLUMINATION CIRCUIT 32
Component Function Check 32
Diagnosis Procedure 32

SYMPTOM DIAGNOSIS 34

INTERIOR LIGHTING SYSTEM SYMPTOMS... 34
Symptom Table 34

REMOVAL AND INSTALLATION 35

MAP LAMP 35
Exploded View 35
Removal and Installation 35
Replacement 35

SERVICE DATA AND SPECIFICATIONS (SDS) 37

SERVICE DATA AND SPECIFICATIONS (SDS) 37
Bulb Specifications 37

PRECAUTION

PRECAUTIONS

Precaution for Supplemental Restraint System (SRS) "AIR BAG" and "SEAT BELT PRE-TENSIONER"

INFOID:0000000006030889

The Supplemental Restraint System such as “AIR BAG” and “SEAT BELT PRE-TENSIONER”, used along with a front seat belt, helps to reduce the risk or severity of injury to the driver and front passenger for certain types of collision. This system includes seat belt switch inputs and dual stage front air bag modules. The SRS system uses the seat belt switches to determine the front air bag deployment, and may only deploy one front air bag, depending on the severity of a collision and whether the front occupants are belted or unbelted.
Information necessary to service the system safely is included in the “SRS AIR BAG” and “SEAT BELT” of this Service Manual.

WARNING:

- **To avoid rendering the SRS inoperative, which could increase the risk of personal injury or death in the event of a collision that would result in air bag inflation, all maintenance must be performed by an authorized NISSAN/INFINITI dealer.**
- **Improper maintenance, including incorrect removal and installation of the SRS, can lead to personal injury caused by unintentional activation of the system. For removal of Spiral Cable and Air Bag Module, see the “SRS AIR BAG”.**
- **Do not use electrical test equipment on any circuit related to the SRS unless instructed to in this Service Manual. SRS wiring harnesses can be identified by yellow and/or orange harnesses or harness connectors.**

PRECAUTIONS WHEN USING POWER TOOLS (AIR OR ELECTRIC) AND HAMMERS

WARNING:

- **When working near the Air Bag Diagnosis Sensor Unit or other Air Bag System sensors with the ignition ON or engine running, DO NOT use air or electric power tools or strike near the sensor(s) with a hammer. Heavy vibration could activate the sensor(s) and deploy the air bag(s), possibly causing serious injury.**
- **When using air or electric power tools or hammers, always switch the ignition OFF, disconnect the battery, and wait at least 3 minutes before performing any service.**

Precaution Necessary for Steering Wheel Rotation after Battery Disconnect

INFOID:0000000006030890

NOTE:

- Before removing and installing any control units, first turn the push-button ignition switch to the LOCK position, then disconnect both battery cables.
- After finishing work, confirm that all control unit connectors are connected properly, then re-connect both battery cables.
- Always use CONSULT-III to perform self-diagnosis as a part of each function inspection after finishing work. If a DTC is detected, perform trouble diagnosis according to self-diagnosis results.

For vehicle with steering lock unit, if the battery is disconnected or discharged, the steering wheel will lock and cannot be turned.
If turning the steering wheel is required with the battery disconnected or discharged, follow the operation procedure below before starting the repair operation.

OPERATION PROCEDURE

1. Connect both battery cables.
   NOTE:
   Supply power using jumper cables if battery is discharged.
2. Turn the push-button ignition switch to ACC position.
   (At this time, the steering lock will be released.)
3. Disconnect both battery cables. The steering lock will remain released with both battery cables disconnected and the steering wheel can be turned.
4. Perform the necessary repair operation.

5. When the repair work is completed, re-connect both battery cables. With the brake pedal released, turn the push-button ignition switch from ACC position to ON position, then to LOCK position. (The steering wheel will lock when the push-button ignition switch is turned to LOCK position.)
6. Perform self-diagnosis check of all control units using CONSULT-III.

SYSTEM DESCRIPTION

COMPONENT PARTS

Component Parts Location

INFOID:0000000006030891

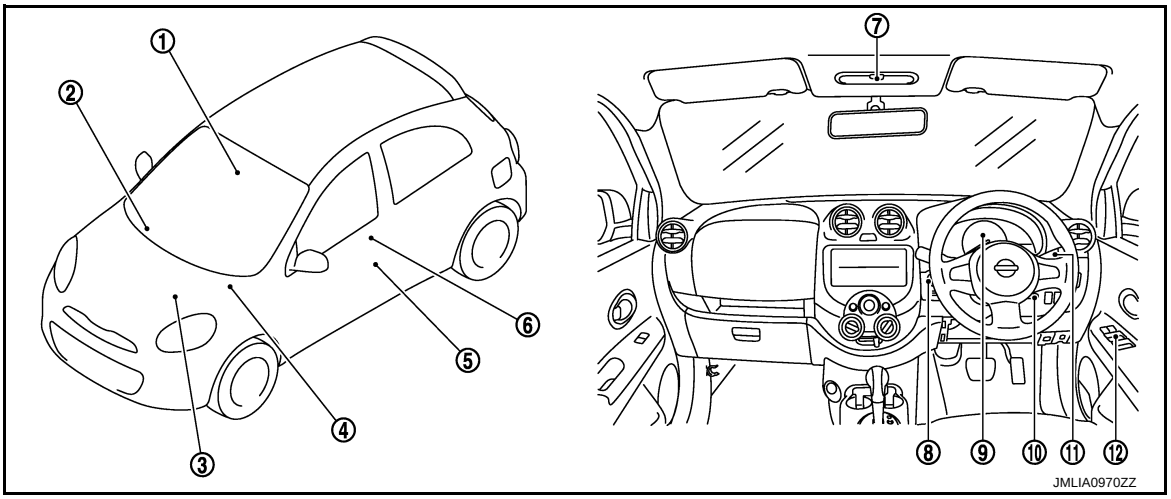

1. Front door lock assembly (driver side) (Unlock sensor, door key cylinder switch*1)
2. Remote keyless entry receiver*2 Refer to DLK-11, "DOOR LOCK SYSTEM : Component Parts Location".
3. IPDM E/R Refer to PCS-5, "Component Parts Location".
4. BCM Refer to BCS-5, "BODY CONTROL SYSTEM : Component Parts Location".
5. Front door switch (passenger side)
6. Door request switch*3
7. Map lamp/room lamp
8. Push switch*3
9. Combination meter
10. Key switch*4
11. Combination switch
12. Door lock and unlock switch

*1: For Thailand

*2: With remote keyless entry function

*3: With Intelligent Key

*4: Without Intelligent Key

Component Description

INFOID:0000000006030892

Part	Description
BCM	Controls the interior lighting system.
IPDM E/R	Controls the integrated relay according to the request signal from BCM (via CAN communication).
Remote keyless entry receiver*1	Receives the lock/unlock signal from Keyfob.
Combination meter	Illuminates the meter illumination according to the request signal from BCM (via CAN communication).
Combination switch (Lighting & turn signal switch)	Refer to BCS-9, "COMBINATION SWITCH READING SYSTEM : System Description".
• Door lock and unlock switch • Door request switch*2 • Door key cylinder switch*3	Inputs the lock/unlock signal to BCM.
Door switch	Inputs the door switch signal to BCM.
Unlock sensor	Detects door lock condition of driver side door.

< SYSTEM DESCRIPTION >

Part	Description
Push-button ignition switch*2 (Push switch)	Inputs the push switch signal to BCM.
Key switch*4	Inputs the key switch signal to BCM.

*1: With remote keyless entry function

*2: With Intelligent Key

*3:For Thailand

*4: Without Intelligent Key

SYSTEM

INTERIOR ROOM LAMP CONTROL SYSTEM (WITH INTELLIGENT KEY SYSTEM)

INTERIOR ROOM LAMP CONTROL SYSTEM (WITH INTELLIGENT KEY SYSTEM) : System Diagram

INFOID:0000000006030897

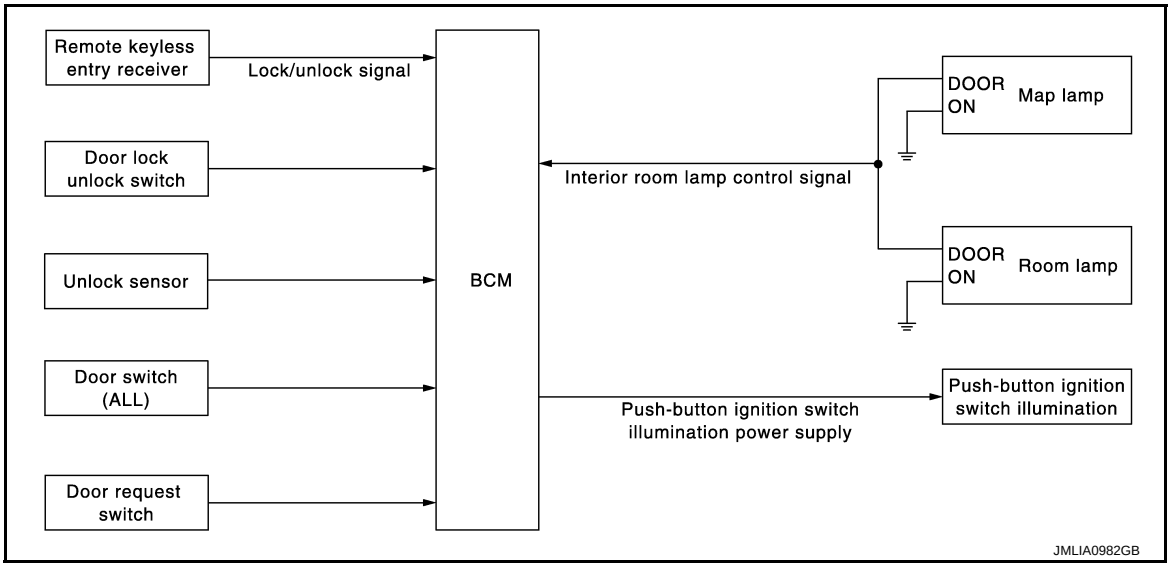

INTERIOR ROOM LAMP CONTROL SYSTEM (WITH INTELLIGENT KEY SYSTEM) : System Description

INFOID:0000000006030898

OUTLINE

- Interior room lamps* are controlled by interior room lamp timer control function of BCM.
  *: Map lamp and room lamp (when applicable lamp switch is in DOOR position).
- Push-button ignition switch illumination is controlled by the push-button ignition switch illumination control function of BCM.

INTERIOR ROOM LAMP TIMER CONTROL

Interior Room Lamp Timer Basic Operation

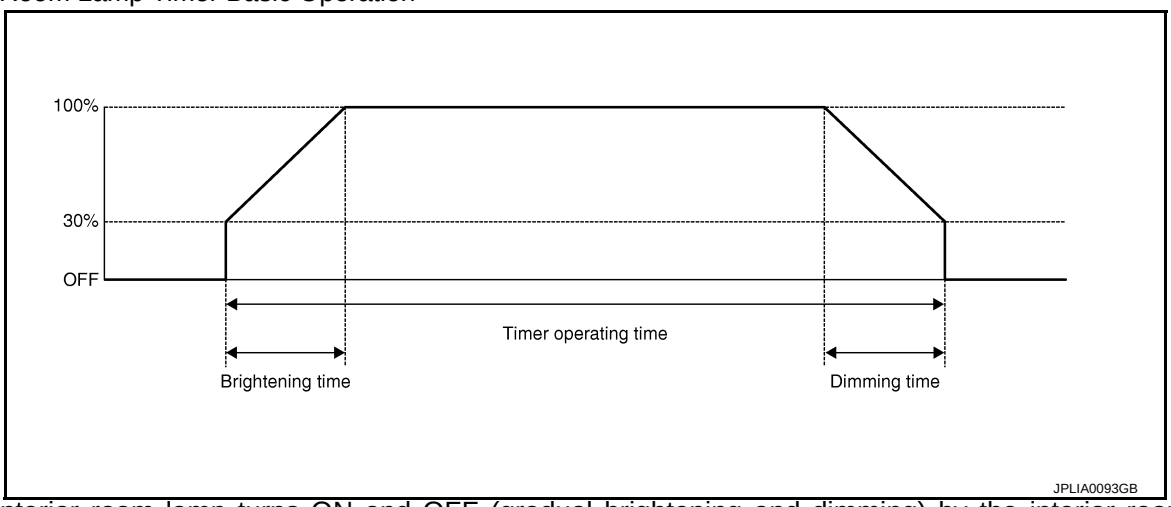

- The interior room lamp turns ON and OFF (gradual brightening and dimming) by the interior room lamp timer.
- BCM judges the vehicle condition with the following items. It activates the interior room lamp timer.
- Push-button Ignition switch status
- Door switch signal (except back door)

- Door lock/unlock signal (Remote keyless entry receiver, each door request switch, door lock and unlock switch, unlock sensor)

NOTE:
Each function of interior room lamp timer can be set by CONSULT-III. Refer to INL-15, "INT LAMP : CONSULT-III Function (BCM - INT LAMP)".

Interior Room Lamp ON Operation

- BCM always turns the interior room lamp ON when any door opens excepting back door.
- BCM activates the interior room timer in any of the following conditions to turn the interior room lamp ON for a period of time.
  - Status of all doors excepting back door changes from open to close
  - Ignition switch is turned ON → OFF
  - Door unlock signal is detected when all doors close excepting back door with ignition switch OFF

NOTE:
Restart the timer if new condition is input during the timer operating time.

Interior Room Lamp OFF Operation

BCM stops the timer in any of the following conditions to turn the interior room lamp OFF.

- The timer operating time is expired
- Ignition switch is turned OFF → ACC/ON
- Door lock signal is detected with all doors close excepting back door.

PUSH-BUTTON IGNITION SWITCH ILLUMINATION CONTROL

Push-button Ignition Switch Illumination Basic Operation

BCM provides the power supply to turn the push-button ignition switch illumination ON

Push-button Ignition Switch Illumination ON Operation

BCM turns the push-button ignition switch illumination ON in the following conditions.

- Ignition switch ON
- Any of the following conditions with ignition switch OFF/ACC
  - Engine start permission is entered
  - Driver side door is LOCK → UNLOCK
  - Driver side door is open

Push-button Ignition Switch Illumination OFF Operation

BCM turns the push-button ignition switch illumination OFF in any of the following conditions.

- The push-button ignition switch illumination ON conditions do not satisfy.
- Any of the following conditions with ignition switch OFF.
  - The push-button ignition switch illumination ON conditions do not change (15 seconds after the ignition switch OFF)
  - Driver side door is UNLOCK → LOCK

INTERIOR ROOM LAMP CONTROL SYSTEM (WITHOUT INTELLIGENT KEY SYSTEM)

INTERIOR ROOM LAMP CONTROL SYSTEM (WITHOUT INTELLIGENT KEY SYS-

TEM) : System Diagram

INFOID:0000000006031469

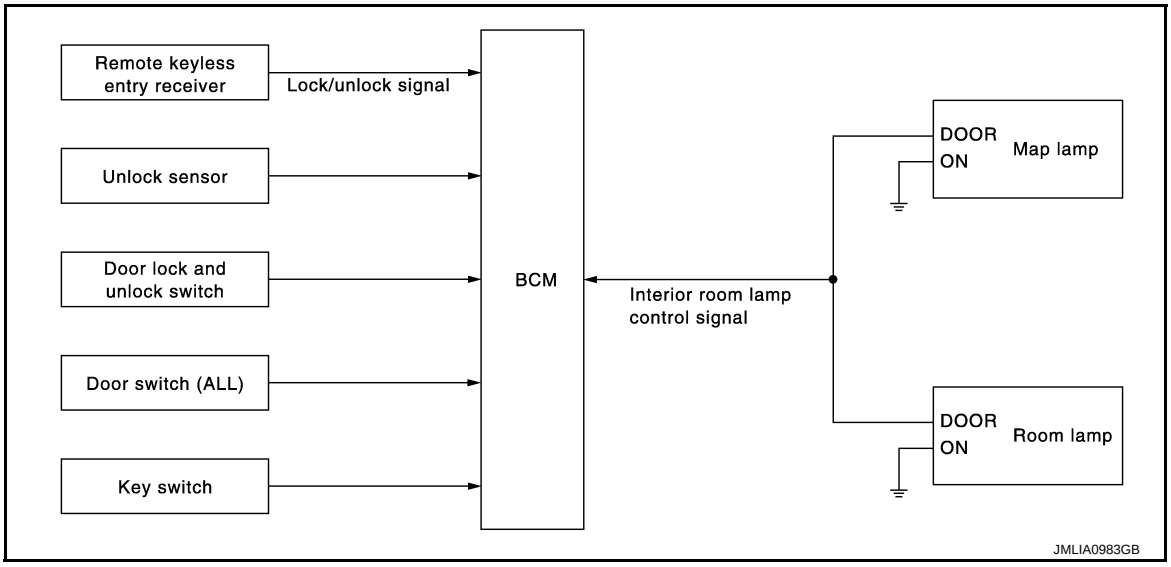

INTERIOR ROOM LAMP CONTROL SYSTEM (WITHOUT INTELLIGENT KEY SYSTEM) : System Description

INFOID:0000000006031470

OUTLINE

Interior room lamps* are controlled by interior room lamp timer control function of BCM.
*: Map lamp and room lamp (when applicable lamp switch is in DOOR position).

INTERIOR ROOM LAMP TIMER CONTROL

Interior Room Lamp Timer Basic Operation

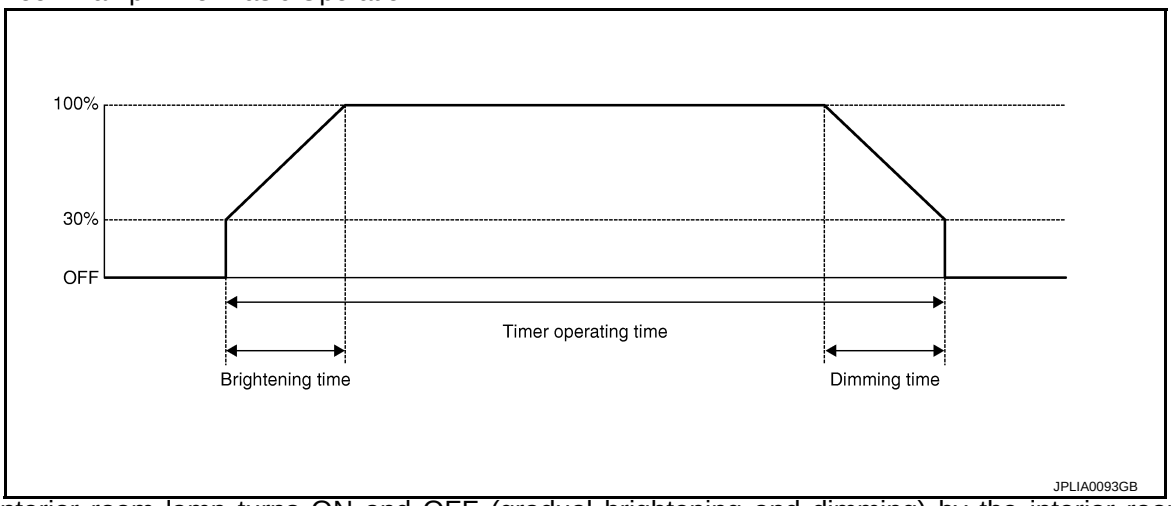

- The interior room lamp turns ON and OFF (gradual brightening and dimming) by the interior room lamp timer.
- BCM judges the vehicle condition with the following items. It activates the interior room lamp timer.
- Ignition switch status
- Door switch signal (except back door)
- Door lock/unlock signal (remote keyless entry receiver*1, door lock and unlock switch, unlock sensor*2, door key cylinder switch signal*3
- Key switch signal

*1: With remote keyless entry function
*2: Except for Thailand
*3: For Thailand

NOTE:

Each function of interior room lamp timer can be set by CONSULT-III. Refer to INL-15, "INT LAMP : CONSULT-III Function (BCM - INT LAMP)".

Interior Room Lamp ON Operation
- BCM always turns the interior room lamp ON when any door opens excepting back door.
- BCM activates the interior room timer in any of the following conditions to turn the interior room lamp ON for a period of time.
- Status of all doors excepting back door changes from open to close
- Key switch is turned ON → OFF
- Door unlock signal by remote keyless entry receiver is detected and all doors are closed*1
- Door unlock signal (unlock sensor*2, door lock and unlock switch) is detected, when ignition key is removed from ignition key cylinder and all doors are closed
- Door unlock signal by door key cylinder switch is detected and all doors are closed*3

NOTE:
Restart the timer if new condition is input during the timer operating time.

Interior Room Lamp OFF Operation
BCM stops the timer in any of the following conditions to turn the interior room lamp OFF
- The timer operating time expired
- Ignition switch position is ON
- Door lock signal (remote keyless entry receiver, door lock and unlock switch, unlock sensor*2, door key cylinder switch*3) is detected

*1: With remote keyless entry function
*2: Except for Thailand
*3: For Thailand

INTERIOR ROOM LAMP BATTERY SAVER SYSTEM

INTERIOR ROOM LAMP BATTERY SAVER SYSTEM : System Diagram

INFOID:0000000006032272

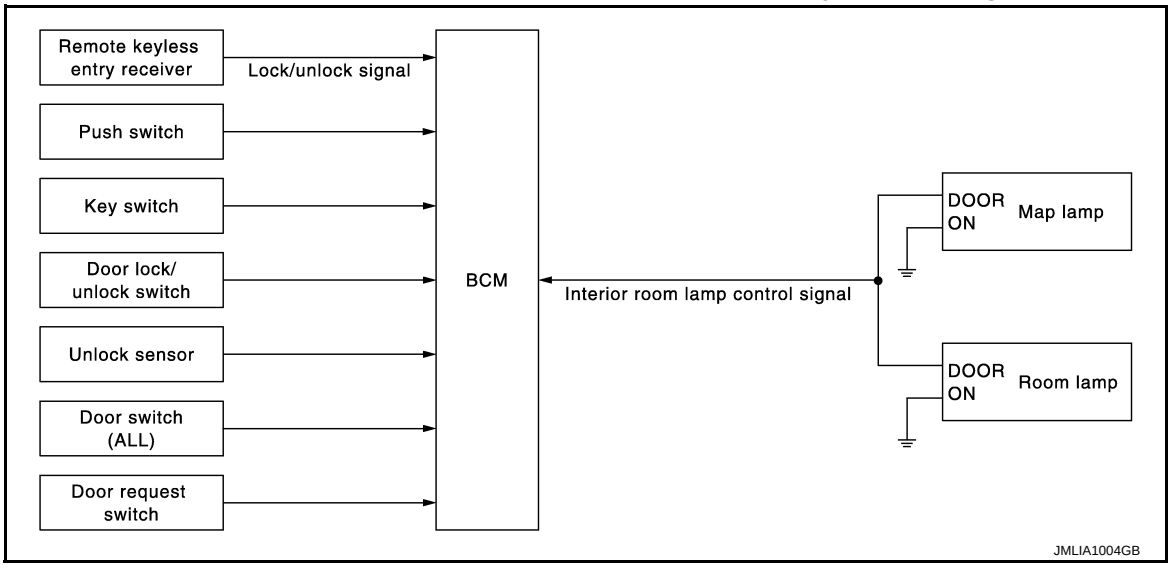

INTERIOR ROOM LAMP BATTERY SAVER SYSTEM : System Description

INFOID:0000000006030900

OUTLINE
- Interior room lamp battery saver is controlled by BCM.
- BCM turns applicable lamps OFF in order to prevent battery discharge caused by illumination of applicable lamp while any door is not fully closed.

Applicable lamps
- Map lamp
- Room lamp

INTERIOR ROOM LAMP BATTERY SAVER FUNCTION

- When the ignition switch is turned OFF and any door excepting back door is opened, BCM operates timer and turns interior room lamp OFF after a certain period of time.
- BCM restart the timer when any of the following signals changes while operating the timer.
- Door switch signal (except back door)
- Door unlock signal (remote keyless entry receiver*1, each door request switch*2, door lock and unlock switch, unlock sensor*4, door key cylinder switch*5)
- Key switch signal*3
- Push-button ignition switch signal*2

*1: With remote keyless entry function
*2: With Intelligent Key
*3: Without Intelligent Key
*4: Except for Thailand
*5: For Thailand

NOTE:
Each function of interior room lamp battery saver can be set by CONSULT-III. Refer to INL-16, "BATTERY SAVER : CONSULT-III Function (BCM - BATTERY SAVER)" (with Intelligent Key), INL-20, "BATTERY SAVER : CONSULT-III Function (BCM - BATTERY SAVER)" (without Intelligent Key).

ILLUMINATION CONTROL SYSTEM

ILLUMINATION CONTROL SYSTEM : System Diagram

INFOID:0000000006030901

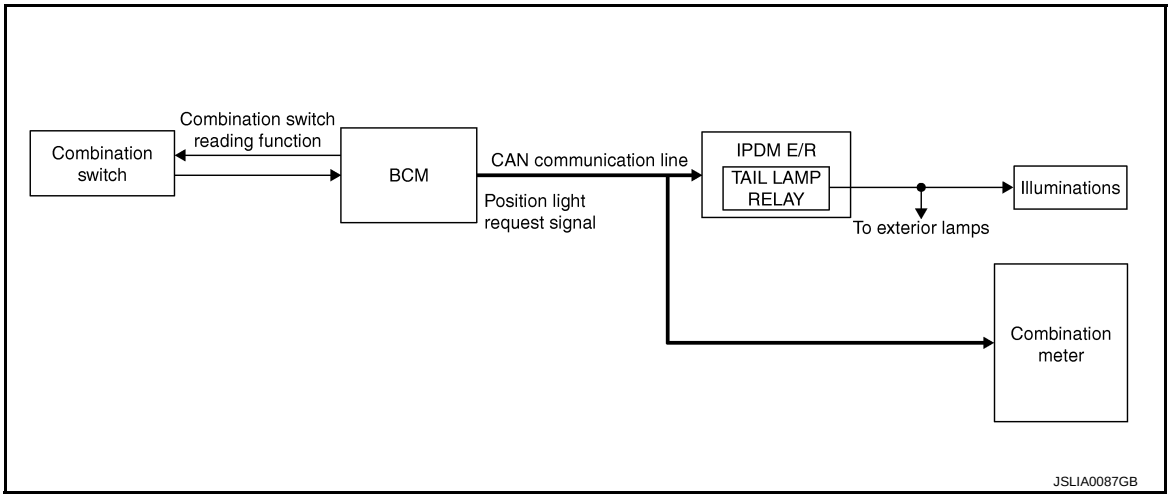

ILLUMINATION CONTROL SYSTEM : System Description

INFOID:0000000006030902

OUTLINE

Each illumination lamp is controlled by each function of BCM and IPDM E/R.

Control by BCM
- Combination switch reading function
- Headlamp control function

Control by IPDM E/R
- Relay control function

ILLUMINATION CONTROL

- BCM detects the combination switch condition by the combination switch reading function.
- BCM transmits position light request signal to IPDM E/R and combination meter according to tail lamp ON condition.

Tail lamp ON condition
- Lighting switch 1ST
- Lighting switch 2ND
- IPDM E/R turns the integrated tail lamp relay ON according to position light request signal. It provides the power supply to each illumination lamp.

< SYSTEM DESCRIPTION >

- Combination meter illuminates the meter illumination according to position light request signal.

DIAGNOSIS SYSTEM (BCM) (WITH INTELLIGENT KEY SYSTEM) COMMON ITEM

COMMON ITEM : CONSULT-III Function (BCM - COMMON ITEM)

INFOID:0000000006067177

APPLICATION ITEM

CONSULT-III performs the following functions via CAN communication with BCM.

Diagnosis mode	Function Description
Work Support	Changes the setting for each system function.
Self Diagnostic Result	Displays the diagnosis results judged by BCM.
CAN Diag Support Monitor	Monitors the reception status of CAN communication viewed from BCM. Refer to CONSULT-III operation manual.
Data Monitor	The BCM input/output signals are displayed.
Active Test	The signals used to activate each device are forcibly supplied from BCM.
Ecu Identification	The BCM part number is displayed.
Configuration	• Read and save the vehicle specification. • Write the vehicle specification when replacing BCM.

SYSTEM APPLICATION

BCM can perform the following functions for each system.

NOTE:

It can perform the diagnosis modes except the following for all sub system selection items.

×: Applicable item

System	Sub system selection item	Diagnosis mode		
		Work Support	Data Monitor	Active Test
Door lock	DOOR LOCK	×	×	×
Rear window defogger	REAR DEFOGGER		×	×
Warning chime	BUZZER		×	×
Interior room lamp timer	INT LAMP	×	×	×
Exterior lamp	HEAD LAMP	×	×	×
Wiper and washer	WIPER	×	×	×
Turn signal and hazard warning lamps	FLASHER	×	×	×
Automatic air conditioner	AIR CONDITONER		×	×
• Intelligent Key system • Engine start system	INTELLIGENT KEY	×	×	×
Combination switch	COMB SW		×	
Body control system	BCM	×		
NATS	IMMU	×	×	×
Interior room lamp battery saver	BATTERY SAVER	×	×	×
Back door	TRUNK		×	
—	THEFT ALM*	×	×	×
—	RETAINED PWR*		×	
Signal buffer system	SIGNAL BUFFER		×	×

*: This item is displayed, but is not used.

FREEZE FRAME DATA (FFD)

The BCM records the following vehicle condition at the time a particular DTC is detected, and displays on CONSULT-III.

CONSULT screen item	Indication/Unit	Description	
Vehicle Speed	km/h	Vehicle speed of the moment a particular DTC is detected	
Odo/Trip Meter	km	Total mileage (Odometer value) of the moment a particular DTC is detected	
Vehicle Condition	SLEEP>LOCK	Power position status of the moment a particular DTC is detected	While turning BCM status from low power consumption mode to normal mode (Power supply position is “LOCK”)
	SLEEP>OFF		While turning BCM status from low power consumption mode to normal mode (Power supply position is “OFF”.)
	LOCK>ACC		While turning power supply position from “LOCK” to “ACC”
	ACC>ON		While turning power supply position from “ACC” to “IGN”
	RUN>ACC		While turning power supply position from “RUN” to “ACC” (Vehicle is stopping and selector lever is except P position.)
	CRANK>RUN		While turning power supply position from “CRANKING” to “RUN” (From cranking up the engine to run it)
	RUN>URGENT		While turning power supply position from “RUN“ to “ACC” (Emergency stop operation)
	ACC>OFF		While turning power supply position from “ACC” to “OFF”
	OFF>LOCK		While turning power supply position from “OFF” to “LOCK”
	OFF>ACC		While turning power supply position from “OFF” to “ACC”
	ON>CRANK		While turning power supply position from “IGN” to “CRANKING”
	OFF>SLEEP		While turning BCM status from normal mode (Power supply position is “OFF”.) to low power consumption mode
	LOCK>SLEEP		While turning BCM status from normal mode (Power supply position is “LOCK”.) to low power consumption mode
	LOCK		Power supply position is “LOCK” (Ignition switch OFF with steering is locked.)
	OFF		Power supply position is “OFF” (Ignition switch OFF with steering is unlocked.)
	ACC		Power supply position is “ACC” (Ignition switch ACC)
	ON		Power supply position is “IGN” (Ignition switch ON with engine stopped)
	ENGINE RUN		Power supply position is “RUN” (Ignition switch ON with engine running)
	CRANKING		Power supply position is “CRANKING” (At engine cranking)
IGN Counter	0 - 39	The number of times that ignition switch is turned ON after DTC is detected • The number is 0 when a malfunction is detected now. • The number increases like 1 → 2 → 3...38 → 39 after returning to the normal condition whenever ignition switch OFF → ON. • The number is fixed to 39 until the self-diagnosis results are erased if it is over 39.	

INT LAMP

INT LAMP : CONSULT-III Function (BCM - INT LAMP)

INFOID:0000000006030904

WORK SUPPORT

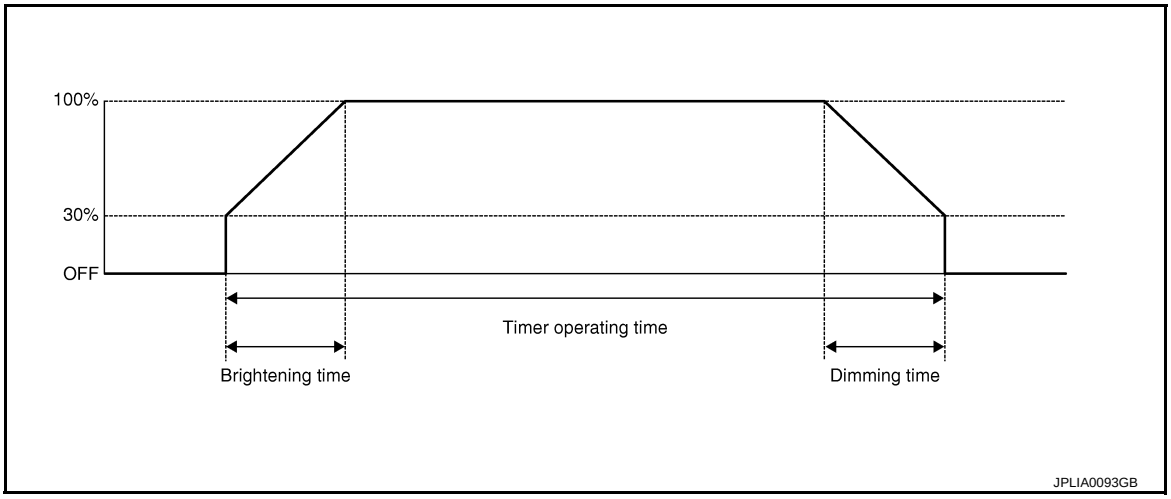

Service item	Setting item	Setting	
ROOM LAMP TIMER SET	MODE 2	7.5 sec.	Sets the interior room lamp ON time. (Timer operating time)
	MODE 3*	15 sec.	
	MODE 4	30 sec.	
SET I/L D-UNLCK INTCON	On*	With the interior room lamp timer function	
	Off	Without the interior room lamp timer function	
ROOM LAMP ON TIME SET	MODE 1	0.5 sec.	Sets the interior room lamp gradual brightening time.
	MODE 2*	1 sec.	
	MODE 3	2 sec.	
	MODE 4	3 sec.	
	MODE 5	0 sec.	
ROOM LAMP OFF TIME SET	MODE 1	0.5 sec.	Sets the interior room lamp gradual dimming time.
	MODE 2*	1 sec.	
	MODE 3	2 sec.	
	MODE 4	3 sec.	
	MODE 5	0 sec.	
R LAMP TIMER LOGIC SET	MODE 1*	Interior room lamp timer activates with synchronizing all doors.	
	MODE 2	Interior room lamp timer activates with synchronizing the driver door only.	

*: Factory setting

DATA MONITOR

Monitor item [Unit]	Description
REQ SW-DR [On/Off]	The switch status input from request switch (driver side)
REQ SW-AS [On/Off]	The switch status input from request switch (passenger side)
REQ SW-RR [On/Off]	**NOTE:** The item is indicated, but not monitored.
REQ SW-RL [On/Off]	

Monitor item [Unit]	Description
PUSH SW [On/Off]	Push switch status received from Intelligent Key unit by CAN communication
UNLK SEN -DR [On/Off]	Driver door unlock status input from unlock sensor
DOOR SW-DR [On/Off]	The switch status input from front door switch (driver side)
DOOR SW-AS [On/Off]	The switch status input from front door switch (passenger side)
DOOR SW-RR [On/Off]	The switch status input from rear door switch RH
DOOR SW- RL [On/Off]	The switch status input from rear door switch LH
DOOR SW- BK [On/Off]	The switch status input from back door switch
CDL LOCK SW [On/Off]	Lock switch status input from door lock and unlock switch
CDL UNLOCK SW [On/Off]	Unlock switch status input from door lock and unlock switch
TRNK/HAT MNTR [On/Off]	**NOTE:** The item is indicated, but not monitored
KEY CYL LK-SW [On/Off]	**NOTE:** The item is indicated, but not monitored
KEY CYL UN-SW [On/Off]	**NOTE:** The item is indicated, but not monitored
RKE-LOCK [On/Off]	Lock signal status received from remote keyless entry receiver
RKE-UNLOCK [On/Off]	Unlock signal status received from remote keyless entry receiver

ACTIVE TEST

Test item	Operation	Description
INT LAMP	On	Outputs the interior room lamp control signal to turn the interior room lamps ON. [Map lamp, room lamp (when applicable lamps switch is in DOOR position.)]
	Off	Stops the interior room lamp control signal to turn the interior room lamps.

BATTERY SAVER

BATTERY SAVER : CONSULT-III Function (BCM - BATTERY SAVER)

INFOID:0000000006030905

WORK SUPPORT

Service item	Setting item	Setting	
ROOM LAMP TIMER SET	MODE 1*	30 min.	Sets the interior room lamp battery saver timer operating time.
	MODE 2	60 min.	
BATTERY SAVER SET	On*	With the exterior lamp battery saver function	
	Off	Without the exterior lamp battery saver function	
ROOM LAMP BAT SAV SET	On*	With the interior room lamp battery saver function	
	Off	Without the interior room lamp battery saver function	

*:Factory setting

DATA MONITOR

Monitor item [Unit]	Description
REQ SW-DR [On/Off]	The switch status input from request switch (driver side)
REQ SW-AS [On/Off]	The switch status input from front request switch (passenger side)
REQ SW-RR [On/Off]	**NOTE:** The item is indicated, but not monitored.
REQ SW-RL [On/Off]	
PUSH SW [On/Off]	Push switch status received from Intelligent Key unit by CAN communication
UNLK SEN-DR [On/Off]	Driver door unlock status input from unlock sensor
DOOR SW-DR [On/Off]	The switch status input from front door switch (driver side)
DOOR SW-AS [On/Off]	The switch status input from front door switch (passenger side)
DOOR SW-RR [On/Off]	The switch status input from rear door switch RH
DOOR SW- RL [On/Off]	The switch status input from rear door switch LH
DOOR SW- BK [On/Off]	The switch status input from back door switch
CDL LOCK SW [On/Off]	Lock switch status input from door lock and unlock switch
CDL UNLOCK SW [On/Off]	Unlock switch status input from door lock and unlock switch
TRNK/HAT MNTR [On/Off]	**NOTE:** The item is indicated, but not monitored
KEY CYL LK-SW [On/Off]	**NOTE:** The item is indicated, but not monitored
KEY CYL UN-SW [On/Off]	**NOTE:** The item is indicated, but not monitored
RKE-LOCK [On/Off]	Lock signal status received from remote keyless entry receiver
RKE-UNLOCK [On/Off]	Unlock signal status received from remote keyless entry receiver

DIAGNOSIS SYSTEM (BCM) (WITHOUT INTELLIGENT KEY SYSTEM) COMMON ITEM

COMMON ITEM : CONSULT-III Function (BCM - COMMON ITEM)

INFOID:0000000006067176

APPLICATION ITEM

CONSULT-III performs the following functions via CAN communication with BCM.

Diagnosis mode	Function Description
Work Support	Changes the setting for each system function.
Self Diagnostic Result	Displays the diagnosis results judged by BCM.
CAN Diag Support Monitor	Monitors the reception status of CAN communication viewed from BCM. Refer to CONSULT-III operation manual.
Data Monitor	The BCM input/output signals are displayed.
Active Test	The signals used to activate each device are forcibly supplied from BCM.
Ecu Identification	The BCM part number is displayed.
Configuration	• Read and save the vehicle specification. • Write the vehicle specification when replacing BCM.

SYSTEM APPLICATION

BCM can perform the following functions for each system.

NOTE:

It can perform the diagnosis modes except the following for all sub system selection items.

×: Applicable item

System	Sub system selection item	Diagnosis mode		
		Work Support	Data Monitor	Active Test
Door lock	DOOR LOCK		×	×
Rear window defogger	REAR DEFOGGER		×	×
Warning chime	BUZZER		×	×
Interior room lamp control	INT LAMP	×	×	×
Remote keyless entry system	MULTI REMOTE ENT	×	×	×
Exterior lamp	HEAD LAMP	×	×	×
Wiper and washer	WIPER	×	×	×
Turn signal and hazard warning lamps	FLASHER		×	×
• Automatic air conditioner • Manual air conditioner	AIR CONDITONER		×	
Combination switch	COMB SW		×	
Body control system	BCM	×		
NATS	IMMU	×*1		×
Interior room lamp battery saver	BATTERY SAVER	×	×	×
Back door	TRUNK		×	
—	THEFT ALM*2		×	×
—	RETAINED PWR*2			
Signal buffer system	SIGNAL BUFFER		×	×
Panic alarm	PANIC ALARM			×

- *1: For models without NATS this mode is not used.
- *2: This item is displayed, but is not used.

INT LAMP

INT LAMP : CONSULT-III Function (BCM - INT LAMP)

INFOID:0000000006030907

WORK SUPPORT

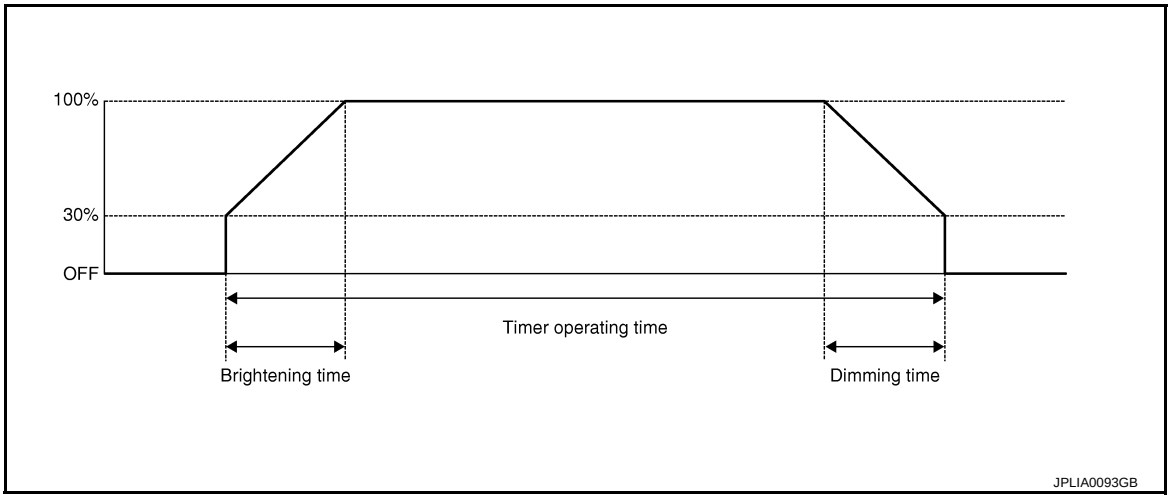

Service item	Setting item	Setting	
ROOM LAMP TIMER SET	MODE 1	0 sec.	Sets the interior room lamp ON time. (Timer operating time)
	MODE 2	7.5 sec.	
	MODE 3*	15 sec.	
	MODE 4	30 sec.	
SET I/L D-UNLCK INTCON	On*	With the interior room lamp timer function	
	Off	Without the interior room lamp timer function	
ROOM LAMP ON TIME SET	MODE 1	0.5 sec.	Sets the interior room lamp gradual brightening time.
	MODE 2*	1 sec.	
	MODE 3	2 sec.	
	MODE 4	3 sec.	
	MODE 5	4 sec.	
	MODE 6	5 sec.	
	MODE 7	0 sec.	
ROOM LAMP OFF TIME SET	MODE 1	0.5 sec.	Sets the interior room lamp gradual dimming time.
	MODE 2*	1 sec.	
	MODE 3	2 sec.	
	MODE 4	3 sec.	
	MODE 5	4 sec.	
	MODE 6	5 sec.	
	MODE 7	0 sec.	
R LAMP TIMER LOGIC SET	MODE 1*	Interior room lamp timer activates with synchronizing all doors.	
	MODE 2	Interior room lamp timer activates with synchronizing the driver door only.	

*: Factory setting

DATA MONITOR

Monitor item [Unit]	Description
IGN ON SW [On/Off]	The switch status input from request switch (driver side)
KEY ON SW [On/Off]	The switch status input from request switch (passenger side)
DOOR SW-DR [On/Off]	The switch status input from front door switch (driver side)
DOOR SW-AS [On/Off]	The switch status input from front door switch (passenger side)
DOOR SW-RR [On/Off]	The switch status input from rear door switch RH
DOOR SW- RL [On/Off]	The switch status input from rear door switch LH
BACK DOOR SW [On/Off]	The switch status input from back door switch
LOCK STATUS [On/Off]	The switch status input from door lock status switch (driver side)
CDL LOCK SW [On/Off]	Lock switch status input from door lock and unlock switch
CDL UNLOCK SW [On/Off]	Unlock switch status input from door lock and unlock switch
KEYLESS LOCK*1 [On/Off]	Lock signal status received from remote keyless entry receiver
KEYLESS UNLOCK*1 [On/Off]	Unlock signal status received from remote keyless entry receiver
TRNK/HAT MNTR [On/Off]	**NOTE:** The item is indicated, but not monitored
KEY CYL LK-SW*2 [On/Off]	Lock signal status input from door key cylinder switch
KEY CYL UN-SW*2 [On/Off]	Unlock signal status input from door key cylinder switch
ACC SW [On/Off]	Ignition switch (ACC) status judges from ACC signal (ACC power supply)

*1: With remote keyless entry function

*2: For Thailand

ACTIVE TEST

Test item	Operation	Description
INT LAMP	On	Outputs the interior room lamp control signal to turn the interior room lamps ON. [Map lamp, room lamp (when applicable lamps switch is in DOOR position.)]
	Off	Stops the interior room lamp control signal to turn the interior room lamps.

BATTERY SAVER

BATTERY SAVER : CONSULT-III Function (BCM - BATTERY SAVER)

INFOID:0000000006030908

WORK SUPPORT

Service item	Setting item	Setting	
ROOM LAMP TIMER SET	MODE 1*	30 min.	Sets the interior room lamp battery saver timer operating time.
	MODE 2	60 min.	

Service item	Setting item	Setting
BATTERY SAVER SET	On*	With the exterior lamp battery saver function
	Off	Without the exterior lamp battery saver function
ROOM LAMP BAT SAV SET	On*	With the interior room lamp battery saver function
	Off	Without the interior room lamp battery saver function

*:Factory setting

DATA MONITOR

Monitor item [Unit]	Description
IGN ON SW [On/Off]	The switch status input from request switch (driver side)
KEY ON SW [On/Off]	The switch status input from request switch (passenger side)
DOOR SW-DR [On/Off]	The switch status input from front door switch (driver side)
DOOR SW-AS [On/Off]	The switch status input from front door switch (passenger side)
DOOR SW-RR [On/Off]	The switch status input from rear door switch RH
DOOR SW- RL [On/Off]	The switch status input from rear door switch LH
BACK DOOR SW [On/Off]	The switch status input from back door switch
LOCK STATUS [On/Off]	The switch status input from door lock status switch (driver side)
CDL LOCK SW [On/Off]	Lock switch status input from door lock and unlock switch
CDL UNLOCK SW [On/Off]	Unlock switch status input from door lock and unlock switch
KEYLESS LOCK*1 [On/Off]	Lock signal status received from remote keyless entry receiver
KEYLESS UNLOCK*1 [On/Off]	Unlock signal status received from remote keyless entry receiver
TRNK/HAT MNTR [On/Off]	**NOTE:** The item is indicated, but not monitored
KEY CYL LK-SW*2 [On/Off]	Lock signal status input from door key cylinder switch
KEY CYL UN-SW*2 [On/Off]	Unlock signal status input from door key cylinder switch
ACC SW [On/Off]	Ignition switch (ACC) status judges from ACC signal (ACC power supply)

*1: With remote keyless entry function

*2: For Thailand

ECU DIAGNOSIS INFORMATION

BCM

WITH INTELLIGENT KEY

WITH INTELLIGENT KEY : List of ECU Reference

INFOID:0000000006030909

ECU	Reference
BCM	BCS-18, "Reference Value"
	BCS-37, "Fail-safe"
	BCS-39, "DTC Inspection Priority Chart"
	BCS-40, "DTC Index"

WITHOUT INTELLIGENT KEY

WITHOUT INTELLIGENT KEY : List of ECU Reference

INFOID:0000000006067187

ECU	Reference
BCM	BCS-72, "Reference Value"
	BCS-85, "Fail-safe"
	BCS-85, "DTC Inspection Priority Chart"
	BCS-86, "DTC Index"

WIRING DIAGRAM

INTERIOR ROOM LAMP CONTROL SYSTEM

Wiring Diagram

INFOID:0000000006030910

For connector terminal arrangements, harness layouts, and alphabets in a ⬡ (option abbreviation; if not described in wiring diagram), refer toGI-12, "Connector Information".

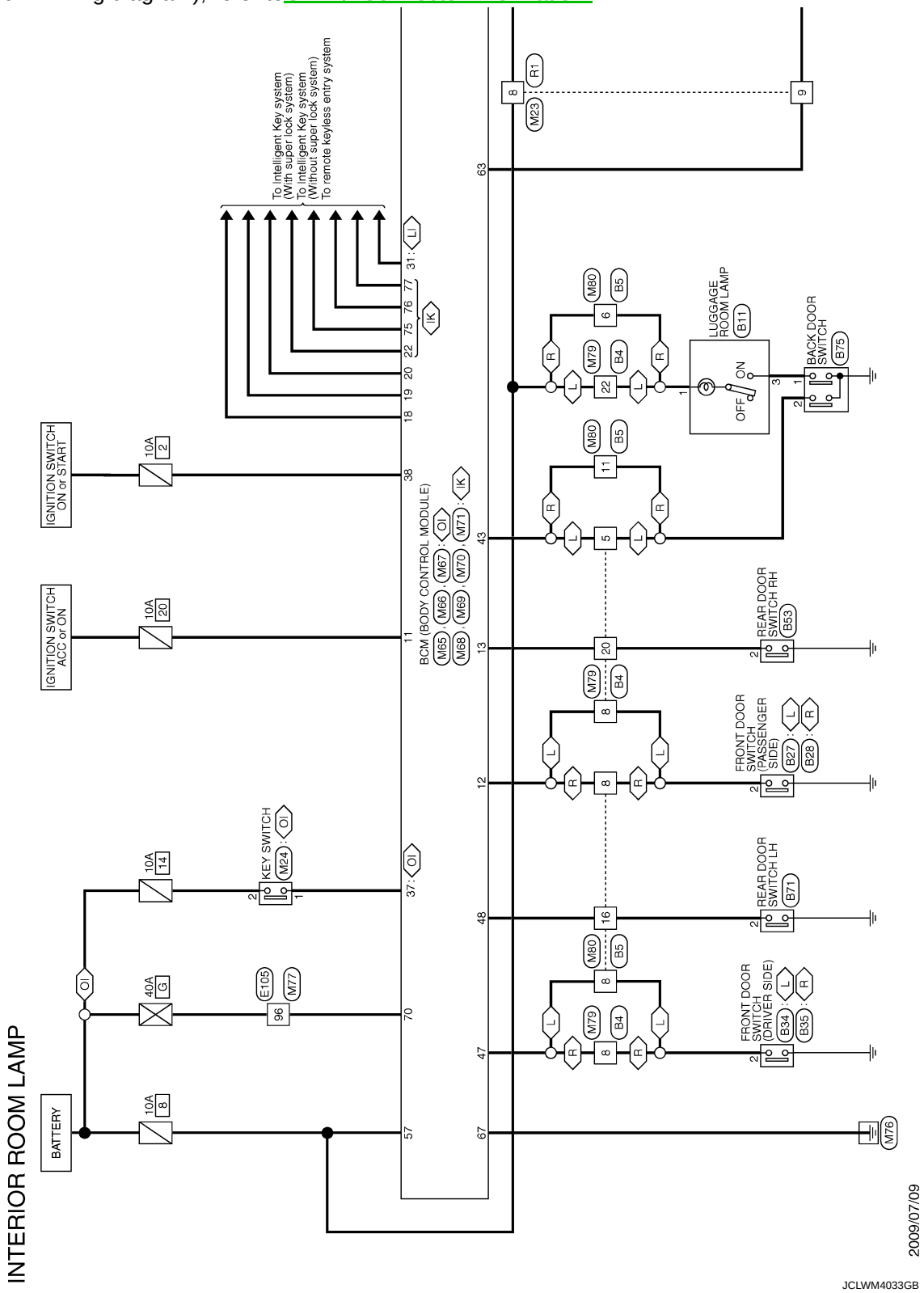

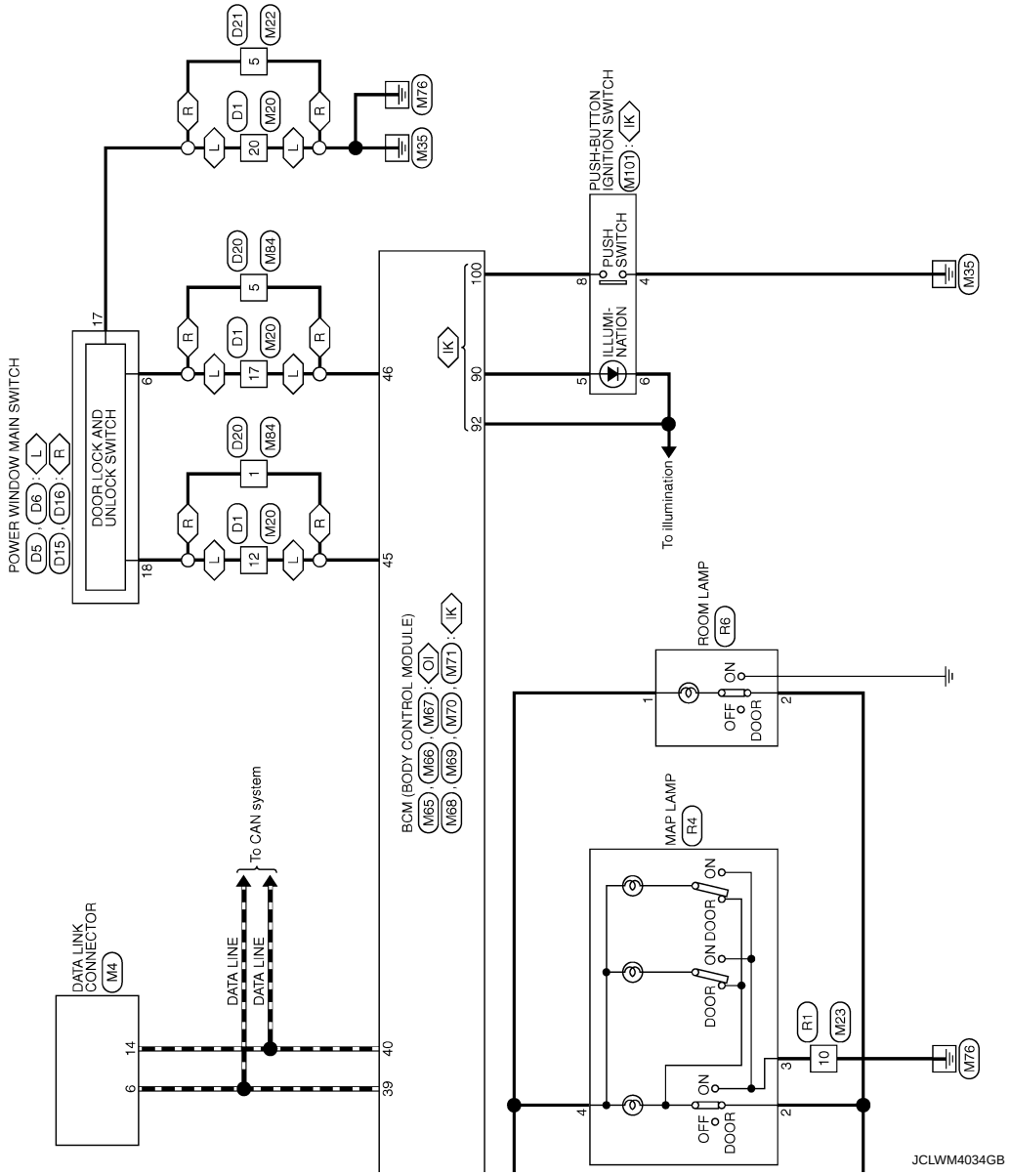
POWER WINDOW MAIN SWITCH
D5, D15, D6, D16 : L, R
DOOR LOCK AND UNLOCK SWITCH
17
18
6
R
L
D1
M20
12
1
D20
M84
17
5
20
D21
M22
M76
M35
46
45
IK
100
90
92
PUSH-BUTTON IGNITION SWITCH
M101 : IK
PUSH SWITCH
ILLUMI-NATION
8
4
5
6
To illumination
BCM (BODY CONTROL MODULE)
M65, M66, M67 : OI
M68, M69, M70, M71 : IK
ROOM LAMP
R6
OFF
DOOR
ON
1
2
MAP LAMP
R4
DOOR
ON
3
4
R1
M23
10
DATA LINK CONNECTOR
M4
14
6
39
40
DATA LINE
To CAN system
JCLWM4034GB

ILLUMINATION

Wiring Diagram

INFOID:0000000006030911

For connector terminal arrangements, harness layouts, and alphabets in a ⬡ (option abbreviation; if not described in wiring diagram), refer to GI-12, "Connector Information".

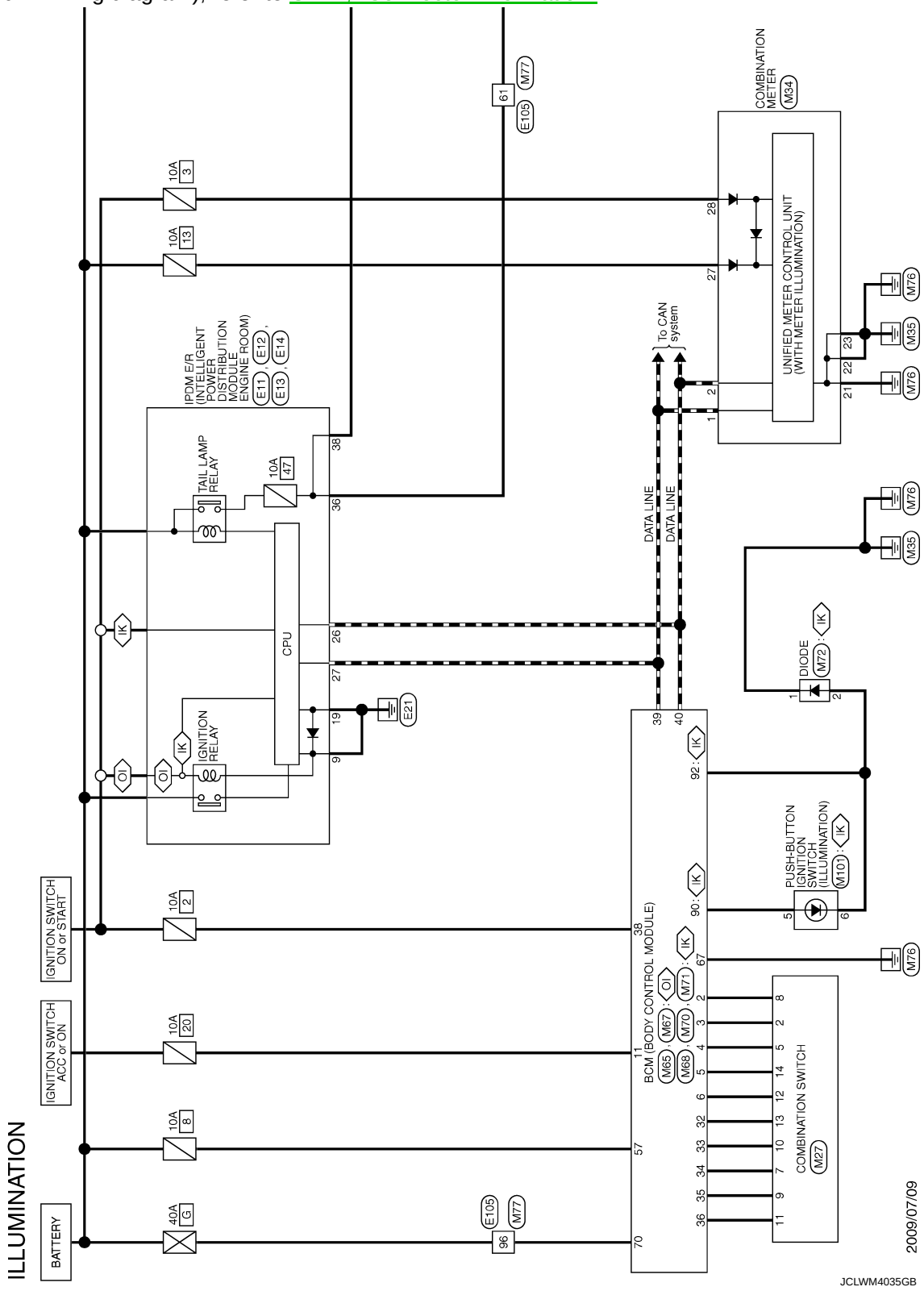

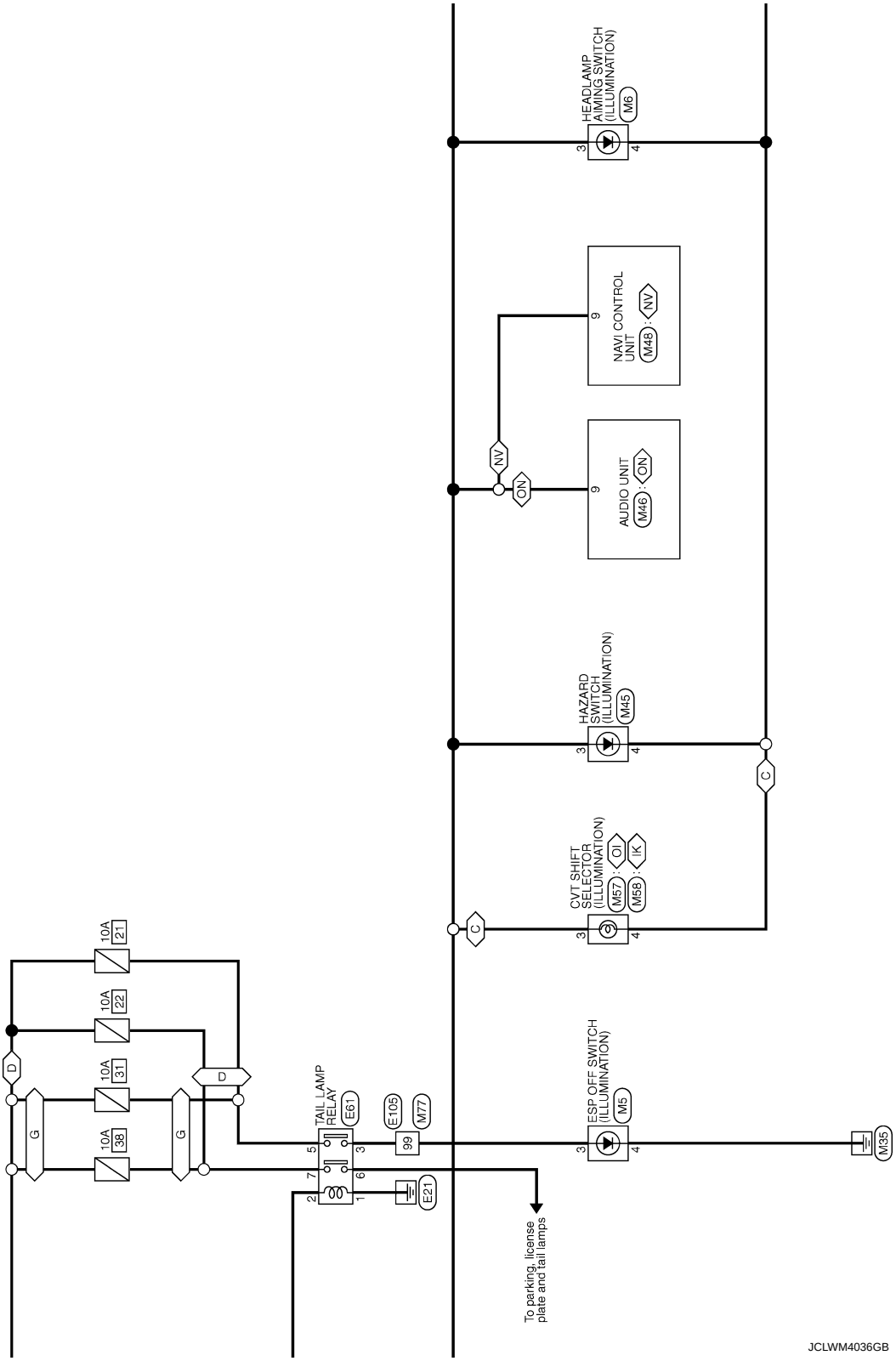
10A 21
10A 22
10A 31
10A 38
D
G
TAIL LAMP RELAY
E61
E105
M77
99
E21
To parking, license plate and tail lamps
CVT SHIFT SELECTOR (ILLUMINATION)
M57 : OI
M58 : IK
C
HAZARD SWITCH (ILLUMINATION)
M45
AUDIO UNIT
M46 : ON
NV
ON
NAVI CONTROL UNIT
M48 : NV
HEADLAMP AIMING SWITCH (ILLUMINATION)
M6
ESP OFF SWITCH (ILLUMINATION)
M5
M35
JCLWM4036GB

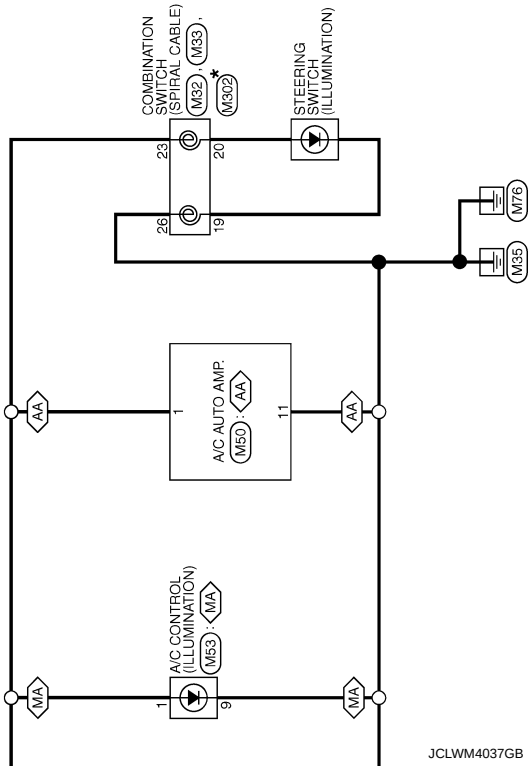

* : This connector is not shown in "Harness Layout".

BASIC INSPECTION

DIAGNOSIS AND REPAIR WORKFLOW

Work Flow

INFOID:0000000006030912

OVERALL SEQUENCE

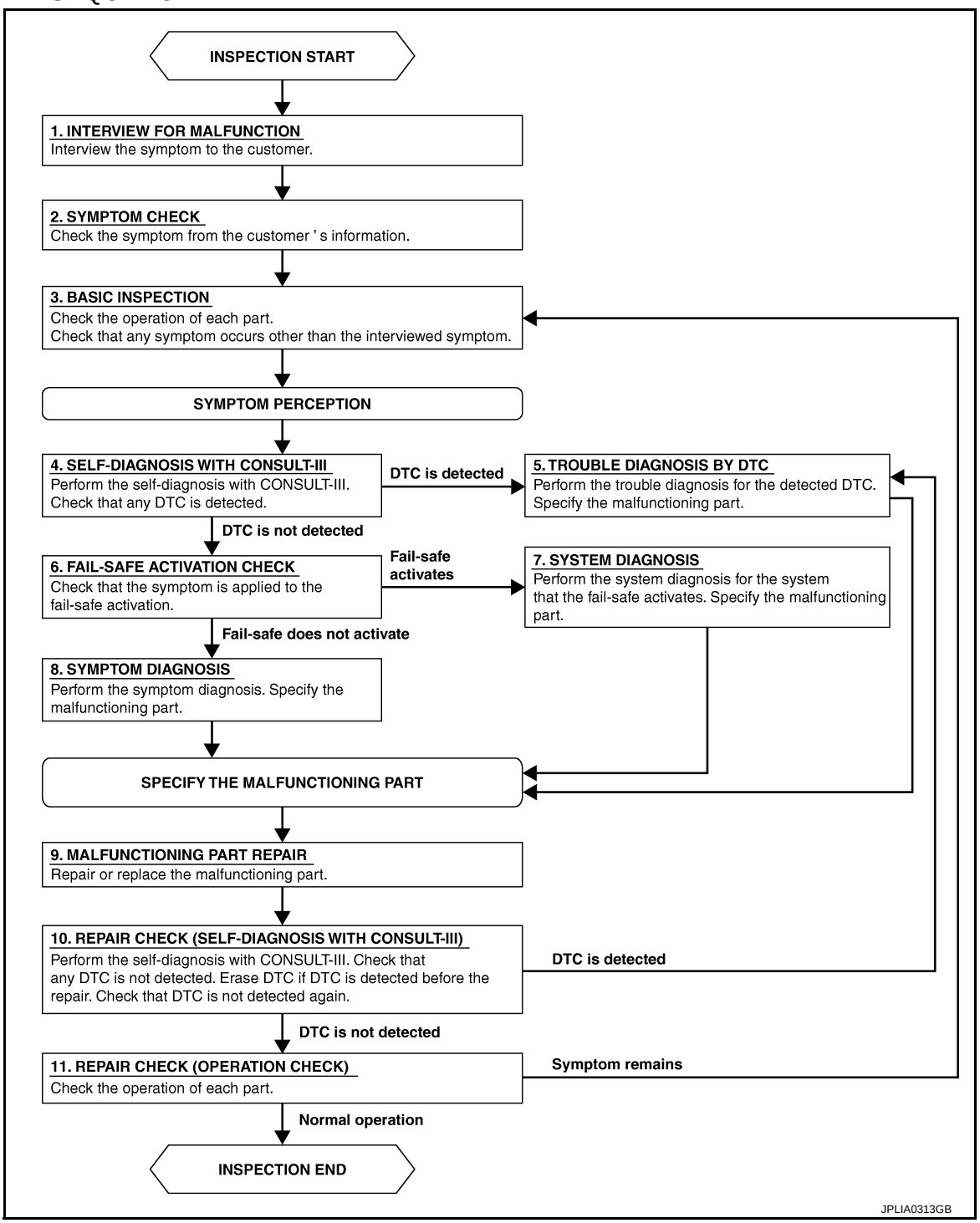

DETAILED FLOW

1.INTERVIEW FOR MALFUNCTION

Interview the symptom to the customer.

>> GO TO 2.

2. SYMPTOM CHECK

Check the symptom from the customer's information.

>> GO TO 3.

3. BASIC INSPECTION

Check the operation of each part. Check that any symptom occurs other than the interviewed symptom.

>> GO TO 4.

4. SELF-DIAGNOSIS WITH CONSULT-III

Perform the self-diagnosis with CONSULT-III. Check that any DTC is detected.

Is any DTC detected?

YES >> GO TO 5.
NO >> GO TO 6.

5. TROUBLE DIAGNOSIS BY DTC

Perform the trouble diagnosis for the detected DTC. Specify the malfunctioning part.

>> GO TO 9.

6. FAIL-SAFE ACTIVATION CHECK

Check that the symptom is applied to the fail-safe activation.

Does the fail-safe activate?

YES >> GO TO 7.
NO >> GO TO 8.

7. SYSTEM DIAGNOSIS

Perform the system diagnosis for the system that the fail-safe activates. Specify the malfunctioning part.

>> GO TO 9.

8. SYMPTOM DIAGNOSIS

Perform the symptom diagnosis. Specify the malfunctioning part.

>> GO TO 9.

9. MALFUNCTION PART REPAIR

Repair or replace the malfunctioning part.

>> GO TO 10.

10. REPAIR CHECK (SELF-DIAGNOSIS WITH CONSULT-III)

Perform the self-diagnosis with CONSULT-III. Check that any DTC is not detected. Erase DTC if DTC is detected before the repair. Check that DTC is not detected again.

Is any DTC detected?

YES >> GO TO 5.
NO >> GO TO 11.

11. REPAIR CHECK (OPERATION CHECK)

Check the operation of each part.

Does it operate normally?

YES >> INSPECTION END
NO >> GO TO 3.

DTC/CIRCUIT DIAGNOSIS

INTERIOR ROOM LAMP CONTROL CIRCUIT

Description

INFOID:0000000006043804

Controls each interior room lamp (ground side) by PWM signal.
NOTE:
PWM signal control period is approximately 250 Hz (in the gradual brightening/dimming).

Component Function Check

INFOID:0000000006043805

CAUTION:
Before performing the diagnosis, check that the following are normal.
- **Interior room lamp power supply**
- **Map lamp bulb**
- **Room lamp bulb**

1. CHECK INTERIOR ROOM LAMP CONTROL FUNCTION

CONSULT-III ACTIVE TEST
1. Switch the map lamp switch or room lamp switch to DOOR.
2. Turn ignition switch ON.
3. Select “INT LAMP” of BCM (INT LAMP) active test item.
4. With operating the test items, check that each interior room lamp turns ON/OFF (gradual brightening/dimming).

On : Interior room lamp gradual brightening
Off : Interior room lamp gradual dimming

Does the interior room lamp turns ON/OFF (gradual brightening/dimming)?

YES >> Interior room lamp control circuit is normal.
NO >> Refer to INL-30, "Diagnosis Procedure".

Diagnosis Procedure

INFOID:0000000006043806

1. CHECK INTERIOR ROOM LAMP CONTROL OUTPUT

CONSULT-III ACTIVE TEST
1. Turn ignition switch OFF.
2. Remove all the bulbs of map lamp and room lamp.
3. Turn ignition switch ON.
4. Select “INT LAMP” of BCM (INT LAMP) active test item.
5. With operating the test item, check continuity between BCM harness connector and ground.

BCM		Ground	Test item		Continuity
Connector	Terminal				
M67/M70*	63		INT LAMP	On	Existed
				Off	Not existed

*: With Intelligent KEY

Is the inspection result normal?

YES >> GO TO 2.
Fixed ON>>GO TO 3.
Fixed OFF>>Replace BCM. Refer to BCS-57, "Removal and Installation" (With intelligent Key), BCS-99, "Removal and Installation" (Without intelligent Key).

2. CHECK INTERIOR ROOM LAMP CONTROL OPEN CIRCUIT

1. Turn ignition switch OFF.
2. Disconnect BCM connector and map lamp connector or room lamp connector.

3. Check continuity between BCM harness connector and map lamp harness connector or room lamp harness connector.

With map lamp

BCM		Map lamp		Continuity
Connector	Terminal	Connector	Terminal	
M67/M70*	63	R4	2	Existed

Without map lamp

BCM		Room lamp		Continuity
Connector	Terminal	Connector	Terminal	
M67/M70*	63	R6	2	Existed

*: With Intelligent KEY

Is the inspection result normal?

YES >> Check that map lamp or room lamp has no internal open circuit.
NO >> Repair or replace harnesses.

3. CHECK INTERIOR ROOM LAMP CONTROL SHORT CIRCUIT-1

1. Turn ignition switch OFF.
2. Disconnect BCM connector.
3. Check continuity between BCM harness connector and ground.

BCM		Ground	Continuity
Connector	Terminal		
M67/M70	63		Not existed

Is the inspection result normal?

YES >> Replace BCM. Refer to BCS-57, "Removal and Installation" (With intelligent Key), BCS-99, "Removal and Installation" (Without intelligent Key).
NO >> GO TO 4.

4. CHECK INTERIOR ROOM LAMP CONTROL SHORT CIRCUIT-1

1. Disconnect room lamp connector or map lamp connector.
2. Check continuity between BCM harness connector and ground.

BCM		Ground	Continuity
Connector	Terminal		
M67/M70	63		Not existed

Is the inspection result normal?

YES >> Check that map lamp or room lamp has no internal short circuit.
NO >> Repair or replace harnesses.

PUSH-BUTTON IGNITION SWITCH ILLUMINATION CIRCUIT

Component Function Check

INFOID:0000000006043808

1. CHECK PUSH-BUTTON IGNITION SWITCH ILLUMINATION OPERATION

CONSULT-III ACTIVE TEST
1. Turn the ignition switch ON.
2. Select “ENGINE SW ILLUMI” of BCM (INTELLIGENT KEY) active test item.
3. With operating the test items, check that the push-button ignition switch illumination turns ON/OFF.

On : Push-button ignition switch illumination ON
Off : Push-button ignition switch illumination OFF

Does the push-button ignition switch illumination turn ON/OFF?

YES >> Push-button ignition switch illumination circuit is normal.
NO >> Refer to INL-32, "Diagnosis Procedure".

Diagnosis Procedure

INFOID:0000000006043809

1. CHECK PUSH-BUTTON IGNITION SWITCH ILLUMINATION POWER SUPPLY OUTPUT

1. Turn the ignition switch OFF.
2. Disconnect push-button ignition switch connector.
3. Check voltage between push-button ignition switch harness connector and ground.

(+)		(–)	Condition		Voltage (Approx.)
Push-button ignition switch					
Connector	Terminal				
M101	5	Ground	Push-button ignition switch illumination	ON	12 V
				OFF	0 V

Is the inspection result normal?

YES >> GO TO 4.
NO >> GO TO 2.

2. CHECK PUSH-BUTTON IGNITION SWITCH ILLUMINATION POWER SUPPLY OPEN CIRCUIT

1. Disconnect BCM connector.
2. Check continuity between BCM harness connector and the push-button ignition switch harness connector.

BCM		Push-button ignition switch		Continuity
Connector	Terminal	Connector	Terminal	
M71	90	M101	5	Existed

Is the inspection result normal?

YES >> GO TO 3.
NO >> Repair or replace harnesses.

3. CHECK PUSH-BUTTON IGNITION SWITCH ILLUMINATION POWER SUPPLY SHORT CIRCUIT

Check continuity between BCM harness connector and ground.

BCM		Ground	Continuity
Connector	Terminal		
M71	90		Not existed

Is the inspection result normal?

YES >> Replace BCM. Refer to BCS-57, "Removal and Installation" (With intelligent Key), BCS-99, "Removal and Installation" (Without intelligent Key).
NO >> Repair or replace harnesses.

4. CHECK PUSH-BUTTON IGNITION SWITCH ILLUMINATION GROUND CIRCUIT

Check continuity between push-button ignition switch harness connector and ground.

Push-button ignition switch		Ground	Continuity
Connector	Terminal		
M101	6		Existed

Is the inspection result normal?

YES >> Replace push-button ignition switch.
NO >> Repair or replace harnesses.

SYMPTOM DIAGNOSIS

INTERIOR LIGHTING SYSTEM SYMPTOMS

Symptom Table

INFOID:0000000006030919

CAUTION:
Perform the self-diagnosis with CONSULT-III before the symptom diagnosis. Perform the trouble diagnosis if any DTC is detected.

Symptom	Possible cause	Inspection item
• Interior room lamp does not turn ON even though the door is open. (It turns ON when turning the interior room lamp ON.) • Interior room lamp does not turn OFF even though the door is closed.	• Harness between BCM and each door switch • Harness between BCM and each interior room lamp • BCM	Door switch circuit Refer to DLK-58(with Intelligent Key), XX-XX, "*****"(without Intelligent Key).
		Interior room lamp control circuit Refer to INL-30.
Interior room lamp timer does not activate. (It turns ON/ OFF when the door opens/closes.)	—	Check the interior room lamp setting. Refer to INL-15.
Push-button ignition switch illumination does not illuminate.	• Harness between BCM and push-button ignition switch • Harness between push-button ignition switch and ground • Push-button ignition switch • BCM	Push-button ignition switch illumination circuit Refer to INL-32.
Interior room lamp battery saver does not activate.	—	Check the interior room lamp battery saver setting. Refer to INL-16.

REMOVAL AND INSTALLATION

MAP LAMP

Exploded View

INFOID:0000000006030920

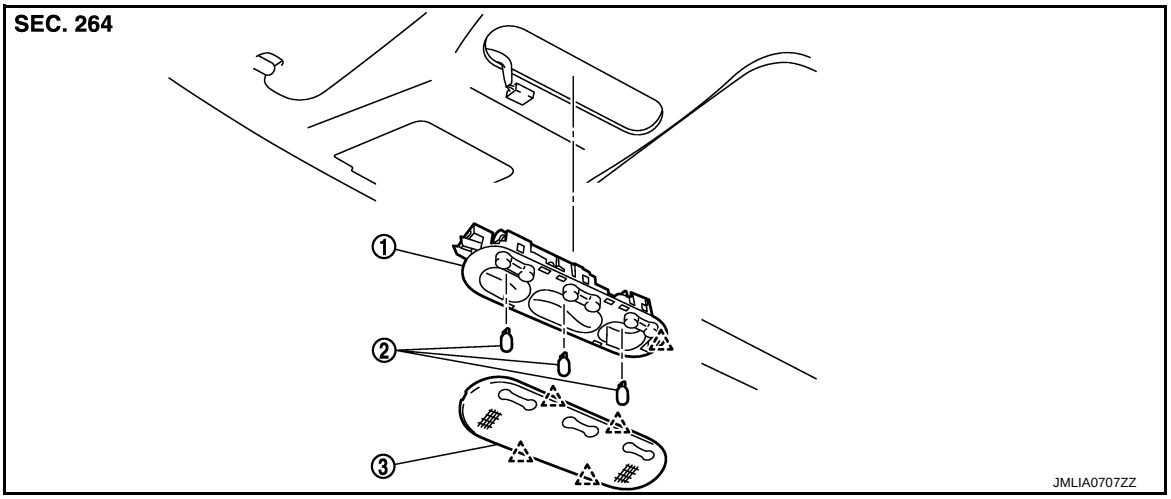

1. Map lamp bulb housing
2. Bulb
3. Lens

: Pawl

Removal and Installation

INFOID:0000000006030921

CAUTION:
Disconnect the battery negative terminal or the fuse.

REMOVAL

1. Insert any appropriate tool into the gap between the map lamp bulb housing to the headlining. And press the pawl and then pull the map lamp .

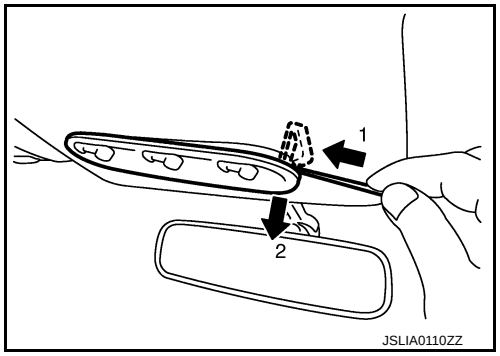

2. Disconnect the connector.

INSTALLATION

Install in the reverse order of removal.

Replacement

INFOID:0000000006030922

CAUTION:
- **Disconnect the battery negative terminal or the fuse.**
- **Never touch the glass of bulb directly by hand. Keep grease and other oily matters away from it.**
- **Never touch bulb by hand while it is lit or right after being turned off.**
- **Never leave bulb out of lamp reflector for a long time because dust, moisture smoke, etc. may affect the performance of lamp. When replacing bulb, be sure to replace it with new one.**

MAP LAMP BULB

1. Remove the map lamp.
2. Remove the lens.
3. Remove the bulb.

SERVICE DATA AND SPECIFICATIONS (SDS)

SERVICE DATA AND SPECIFICATIONS (SDS)

Bulb Specifications

INFOID:0000000006030931

Item	Type	Wattage (W)
Map lamp	W5W	5
Vanity mirror	—	2
Room lamp	—	10
Luggage room lamp	—	5
Push-button ignition switch illumination*	LED	—

*:Only with Intelligent Key

SECTION INT
INTERIOR

CONTENTS

PRECAUTION 3

PRECAUTIONS 3
Precaution for Supplemental Restraint System (SRS) "AIR BAG" and "SEAT BELT PRE-TENSIONER" 3
Precaution Necessary for Steering Wheel Rotation after Battery Disconnect 3
Precaution for Procedure without Cowl Top Cover..... 4
Precaution for Work 4

PREPARATION 5

PREPARATION 5
Commercial Service Tools 5

CLIP LIST 6
Clip List 6

SYMPTOM DIAGNOSIS 7

SQUEAK AND RATTLE TROUBLE DIAGNOSES 7
Work Flow 7
Inspection Procedure 9
Diagnostic Worksheet 11

REMOVAL AND INSTALLATION 13

FRONT DOOR FINISHER 13
Exploded View 13
Removal and Installation 14

REAR DOOR FINISHER 17
Exploded View 17
Removal and Installation 18

BODY SIDE TRIM 21
Exploded View 21

DASH SIDE FINISHER 21
DASH SIDE FINISHER : Removal and Installation 21

FRONT PILLAR GARNISH 22
FRONT PILLAR GARNISH : Removal and Installation 22

KICKING PLATE INNER 22
KICKING PLATE INNER : Removal and Installation 22

BODY SIDE WELT 23
BODY SIDE WELT : Removal and Installation 23

CENTER PILLAR LOWER GARNISH 23
CENTER PILLAR LOWER GARNISH : Removal and Installation 23

CENTER PILLAR UPPER GARNISH 24
CENTER PILLAR UPPER GARNISH : Removal and Installation 24

FLOOR TRIM 26
Exploded View 26
Removal and Installation 26

HEADLINING 28
Exploded View 28
Removal and Installation 28

LUGGAGE FLOOR TRIM 30
Exploded View 30

LUGGAGE REAR PLATE 30
LUGGAGE REAR PLATE : Removal and Installation 30

LUGGAGE SIDE UPPER FINISHER 31
LUGGAGE SIDE UPPER FINISHER : Removal and Installation 31

LUGGAGE SIDE LOWER FRONT FINISHER 31
LUGGAGE SIDE LOWER FRONT FINISHER : Removal and Installation 31

LUGGAGE SIDE LOWER FINISHER 32

LUGGAGE SIDE LOWER FINISHER : Removal and Installation 32

BACK DOOR TRIM 33

Exploded View 33

Removal and Installation 33

PRECAUTION

PRECAUTIONS

Precaution for Supplemental Restraint System (SRS) "AIR BAG" and "SEAT BELT PRE-TENSIONER"

INFOID:0000000006054191

The Supplemental Restraint System such as “AIR BAG” and “SEAT BELT PRE-TENSIONER”, used along with a front seat belt, helps to reduce the risk or severity of injury to the driver and front passenger for certain types of collision. Information necessary to service the system safely is included in the “SRS AIR BAG” and “SEAT BELT” of this Service Manual.

WARNING:

- **To avoid rendering the SRS inoperative, which could increase the risk of personal injury or death in the event of a collision which would result in air bag inflation, all maintenance must be performed by an authorized NISSAN/INFINITI dealer.**
- **Improper maintenance, including incorrect removal and installation of the SRS, can lead to personal injury caused by unintentional activation of the system. For removal of Spiral Cable and Air Bag Module, see the “SRS AIR BAG”.**
- **Do not use electrical test equipment on any circuit related to the SRS unless instructed to in this Service Manual. SRS wiring harnesses can be identified by yellow and/or orange harnesses or harness connectors.**

PRECAUTIONS WHEN USING POWER TOOLS (AIR OR ELECTRIC) AND HAMMERS

WARNING:

- **When working near the Air Bag Diagnosis Sensor Unit or other Air Bag System sensors with the ignition ON or engine running, DO NOT use air or electric power tools or strike near the sensor(s) with a hammer. Heavy vibration could activate the sensor(s) and deploy the air bag(s), possibly causing serious injury.**
- **When using air or electric power tools or hammers, always switch the ignition OFF, disconnect the battery, and wait at least 3 minutes before performing any service.**

Precaution Necessary for Steering Wheel Rotation after Battery Disconnect

INFOID:0000000006054192

NOTE:

- Before removing and installing any control units, first turn the push-button ignition switch to the LOCK position, then disconnect both battery cables.
- After finishing work, confirm that all control unit connectors are connected properly, then re-connect both battery cables.
- Always use CONSULT-III to perform self-diagnosis as a part of each function inspection after finishing work. If a DTC is detected, perform trouble diagnosis according to self-diagnosis results.

For vehicle with steering lock unit, if the battery is disconnected or discharged, the steering wheel will lock and cannot be turned.

If turning the steering wheel is required with the battery disconnected or discharged, follow the operation procedure below before starting the repair operation.

OPERATION PROCEDURE

1. Connect both battery cables.
   NOTE:
   Supply power using jumper cables if battery is discharged.
2. Turn the push-button ignition switch to ACC position.
   (At this time, the steering lock will be released.)
3. Disconnect both battery cables. The steering lock will remain released with both battery cables disconnected and the steering wheel can be turned.
4. Perform the necessary repair operation.
5. When the repair work is completed, re-connect both battery cables. With the brake pedal released, turn the push-button ignition switch from ACC position to ON position, then to LOCK position. (The steering wheel will lock when the push-button ignition switch is turned to LOCK position.)
6. Perform self-diagnosis check of all control units using CONSULT-III.

Precaution for Procedure without Cowl Top Cover

INFOID:0000000006054193

When performing the procedure after removing cowl top cover, cover the lower end of windshield with urethane, etc.

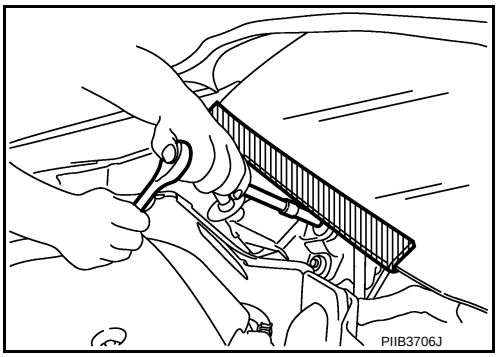

Precaution for Work

INFOID:0000000006046515

- After removing and installing the opening/closing parts, be sure to carry out fitting adjustments to check their operation.
- Check the lubrication level, damage, and wear of each part. If necessary, grease or replace it.

PREPARATION

PREPARATION

Commercial Service Tools

INFOID:0000000006046516

Tool name		Description
Engine ear	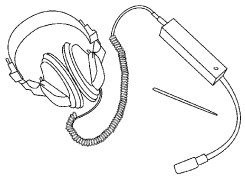 SIIA0995E	Locates the noise
Remover tool	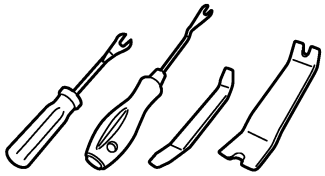 JMKIA3050ZZ	Removes clips, pawls and metal clips
Power tool	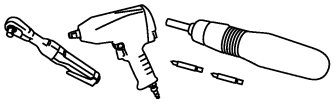 PIIB1407E	

CLIP LIST

Clip List

INFOID:0000000006054194

Shapes	Removal & Installation	Shapes	Removal & Installation
	Removal: Remove by bending up with flat-bladed screwdrivers or clip remover.	Clip A Clip B	**Removal:** Finisher Clip A Flat-bladed screwdriver Clip B
	Removal: Remove with a clip remover.	Clip A Clip B (Grommet)	**Removal:** Flat-bladed screwdriver Finisher Body panel Clip A Clip B (Grommet)
	Removal: Push center pin to catching position. (Do not remove center pin by hitting it.) Push **Installation:** Push		**Removal:** Holder portion of clip must be spread out to remove rod.
	Removal: Remove by bending up with flat-bladed screwdrivers or clip remover. Clip Finisher		**Removal:** 1. Screw out with a Phillips screwdriver. 2. Remove female portion with flat-bladed screwdriver.
	Removal:		**Removal:** Rotate 45° to remove. **Removal:** **Installation:**
	Removal:		**Removal:**

JMJIA3734GB

SYMPTOM DIAGNOSIS

SQUEAK AND RATTLE TROUBLE DIAGNOSES

Work Flow

INFOID:0000000006054196

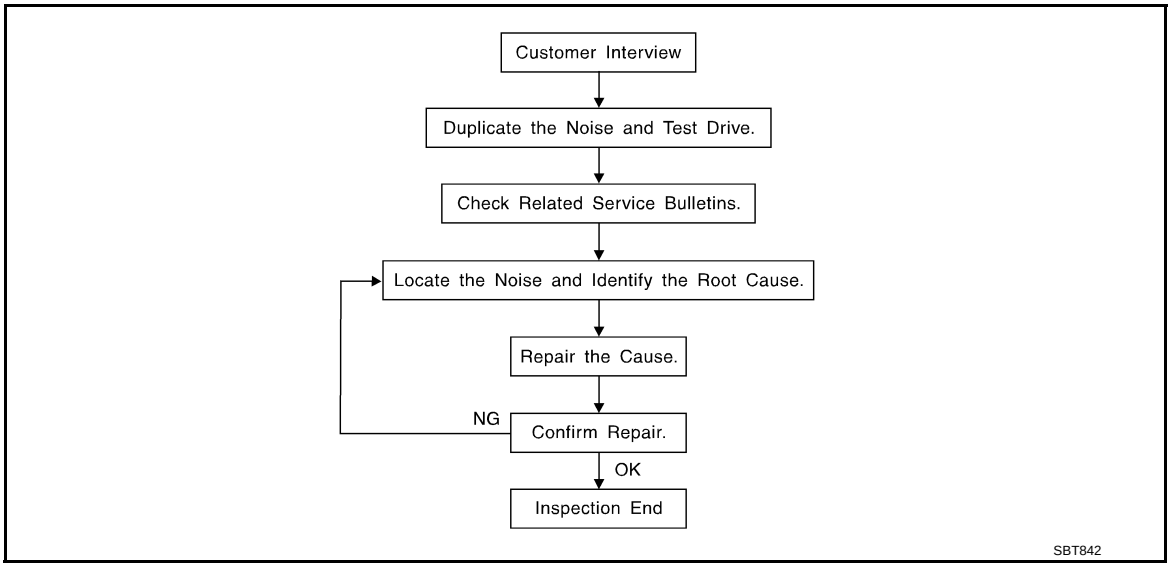

CUSTOMER INTERVIEW

Interview the customer if possible, to determine the conditions that exist when the noise occurs. Use the Diagnostic Worksheet during the interview to document the facts and conditions when the noise occurs and any of the customer's comments; refer to INT-11, "Diagnostic Worksheet". This information is necessary to duplicate the conditions that exist when the noise occurs.

- The customer may not be able to provide a detailed description or the location of the noise. Attempt to obtain all the facts and conditions that exist when the noise occurs (or does not occur).
- If there is more than one noise in the vehicle, be sure to diagnose and repair the noise that the customer is concerned about. This can be accomplished by a test drive with the customer.
- After identifying the type of noise, isolate the noise in terms of its characteristics. The noise characteristics are provided so the customer, service adviser and technician are all speaking the same language when defining the noise.
- Squeak – (Like tennis shoes on a clean floor)
  Squeak characteristics include the light contact/fast movement/brought on by road conditions/hard surfaces = higher pitch noise/softer surfaces = lower pitch noises/edge to surface = chirping
- Creak – (Like walking on an old wooden floor)
  Creak characteristics include firm contact/slow movement/twisting with a rotational movement/pitch dependent on materials/often brought on by activity.
- Rattle – (Like shaking a baby rattle)
  Rattle characteristics include the fast repeated contact/vibration or similar movement/loose parts/missing clip or fastener/incorrect clearance.
- Knock – (Like a knock on a door)
  Knock characteristics include hollow sounding/sometimes repeating/often brought on by driver action.
- Tick – (Like a clock second hand)
  Tick characteristics include gentle contacting of light materials/loose components/can be caused by driver action or road conditions.
- Thump – (Heavy, muffled knock noise)
  Thump characteristics include softer knock/dead sound often brought on by activity.
- Buzz – (Like a bumble bee)
  Buzz characteristics include high frequency rattle/firm contact.
- Often the degree of acceptable noise level will vary depending upon the person. A noise that a technician may judge as acceptable may be very irritating to the customer.
- Weather conditions, especially humidity and temperature, may have a great effect on noise level.

DUPLICATE THE NOISE AND TEST DRIVE

If possible, drive the vehicle with the customer until the noise is duplicated. Note any additional information on the Diagnostic Worksheet regarding the conditions or location of the noise. This information can be used to duplicate the same conditions when the repair is reconfirmed.
If the noise can be duplicated easily during the test drive, to help identify the source of the noise, try to duplicate the noise with the vehicle stopped by doing one or all of the following:
1) Close a door.
2) Tap or push/pull around the area where the noise appears to be coming from.
3) Rev the engine.
4) Use a floor jack to recreate vehicle “twist”.
5) At idle, apply engine load (electrical load, half-clutch on M/T model, drive position on A/T model).
6) Raise the vehicle on a hoist and hit a tire with a rubber hammer.

- Drive the vehicle and attempt to duplicate the conditions the customer states exist when the noise occurs.
- If it is difficult to duplicate the noise, drive the vehicle slowly on an undulating or rough road to stress the vehicle body.

LOCATE THE NOISE AND IDENTIFY THE ROOT CAUSE

1. Narrow down the noise to a general area. To help pinpoint the source of the noise, use a listening tool (Engine Ear or mechanics stethoscope).
2. Narrow down the noise to a more specific area and identify the cause of the noise by:

- Removing the components in the area that is are suspected to be the cause of the noise.
  Do not use too much force when removing clips and fasteners, otherwise clips and fastener can be broken or lost during the repair, resulting in the creation of new noise.
- Tapping or pushing/pulling the component that is are suspected to be the cause of the noise.
  Do not tap or push/pull the component with excessive force, otherwise the noise will be eliminated only temporarily.
- Feeling for a vibration by hand by touching the component(s) that is are suspected to be the cause of the noise.
- Placing a piece of paper between components that is are suspected to be the cause of the noise.
- Looking for loose components and contact marks.
  Refer to INT-9, "Inspection Procedure".

REPAIR THE CAUSE

- If the cause is a loose component, tighten the component securely.
- If the cause is insufficient clearance between components:
- Separate components by repositioning or loosening and retightening the component, if possible.
- Insulate components with a suitable insulator such as urethane pads, foam blocks, felt cloth tape or urethane tape. These insulators are available through the authorized Nissan Parts Department.

CAUTION:
Never use excessive force as many components are constructed of plastic and may be damaged.
NOTE:

- URETHANE PADS
  Insulates connectors, harness, etc.
- INSULATOR (Foam blocks)
  Insulates components from contact. Can be used to fill space behind a panel.
- INSULATOR (Light foam block)
- FELT CLOTHTAPE
  Used to insulate where movement does not occur. Ideal for instrument panel applications.
  The following materials, not available through NISSAN Parts Department, can also be used to repair squeaks and rattles.
- UHMW(TEFLON) TAPE
  Insulates where slight movement is present. Ideal for instrument panel applications.
- SILICONE GREASE
  Used in place of UHMW tape that is be visible or does not fit.
  Note: Will only last a few months.
- SILICONE SPRAY
  Used when grease cannot be applied.
- DUCT TAPE
  Used to eliminate movement.

CONFIRM THE REPAIR

Confirm that the cause of a noise is repaired by test driving the vehicle. Operate the vehicle under the same conditions as when the noise originally occurred. Refer to the notes on the Diagnostic Worksheet.

Inspection Procedure

INFOID:0000000006054197

Refer to Table of Contents for specific component removal and installation information.

INSTRUMENT PANEL

Most incidents are caused by contact and movement between:

1. Cluster lid A and instrument panel
2. Acrylic lens and combination meter housing
3. Instrument panel to front pillar garnish
4. Instrument panel to windshield
5. Instrument panel mounting pins
6. Wiring harnesses behind the combination meter
7. A/C defroster duct and duct joint

These incidents can usually be located by tapping or moving the components to duplicate the noise or by pressing on the components while driving to stop the noise. Most of these incidents can be repaired by applying felt cloth tape or silicon spray (in hard to reach areas). Urethane pads can be used to insulate wiring harness.

CAUTION:

Never use silicone spray to isolate a squeak or rattle. If the area is saturated with silicone, the recheck of repair becomes impossible.

CENTER CONSOLE

Components to pay attention to include:

1. Shifter assembly cover to finisher
2. A/C control unit and cluster lid C
3. Wiring harnesses behind audio and A/C control unit

The instrument panel repair and isolation procedures also apply to the center console.

DOORS

Pay attention to the following:

1. Finisher and inner panel making a slapping noise
2. Inside handle escutcheon to door finisher
3. Wiring harnesses tapping
4. Door striker out of alignment causing a popping noise on starts and stops

Tapping or moving the components or pressing on them while driving to duplicate the conditions can isolate many of these incidents. The areas can usually be insulated with felt cloth tape or insulator foam blocks to repair the noise.

TRUNK

Trunk noises are often caused by a loose jack or loose items put into the trunk by the customer.
In addition look for the following:

1. Trunk lid dumpers out of adjustment
2. Trunk lid striker out of adjustment
3. Trunk lid torsion bars knocking together
4. A loose license plate or bracket

Most of these incidents can be repaired by adjusting, securing or insulating the item(s) or component(s) causing the noise.

SUNROOF/HEADLINING

Noises in the sunroof/headlining area can often be traced to one of the following:

1. Sunroof lid, rail, linkage or seals making a rattle or light knocking noise
2. Sunvisor shaft shaking in the holder
3. Front or rear windshield touching headlining and squeaking

Again, pressing on the components to stop the noise while duplicating the conditions can isolate most of these incidents. Repairs usually consist of insulating with felt cloth tape.

SEATS

When isolating seat noise it is important to note the position the seat is in and the load placed on the seat when the noise occurs. These conditions should be duplicated when verifying and isolating the cause of the noise.
Cause of seat noise include:

1. Headrest rods and holder
2. A squeak between the seat pad cushion and frame
3. Rear seatback lock and bracket

These noises can be isolated by moving or pressing on the suspected components while duplicating the conditions under which the noise occurs. Most of these incidents can be repaired by repositioning the component or applying urethane tape to the contact area.

UNDERHOOD

Some interior noise may be caused by components under the hood or on the engine wall. The noise is then transmitted into the passenger compartment.
Causes of transmitted underhood noise include:

1. Any component mounted to the engine wall
2. Components that pass through the engine wall
3. Engine wall mounts and connectors
4. Loose radiator mounting pins
5. Hood bumpers out of adjustment
6. Hood striker out of adjustment

These noises can be difficult to isolate since they cannot be reached from the interior of the vehicle. The best method is to secure, move or insulate one component at a time and test drive the vehicle. Also, engine RPM or load can be changed to isolate the noise. Repairs can usually be made by moving, adjusting, securing, or insulating the component causing the noise.

Diagnostic Worksheet

INFOID:0000000006054198

INFINITI.

SQUEAK & RATTLE DIAGNOSTIC WORKSHEET

Dear Infiniti Customer:
We are concerned about your satisfaction with your Infiniti vehicle. Repairing a squeak or rattle sometimes can be very difficult. To help us fix your Infiniti right the first time, please take a moment to note the area of the vehicle where the squeak or rattle occurs and under what conditions. You may be asked to take a test drive with a service consultant or technician to ensure we confirm the noise you are hearing.

I. WHERE DOES THE NOISE COME FROM? (circle the area of the vehicle)
The illustrations are for reference only, and may not reflect the actual configuration of your vehicle.

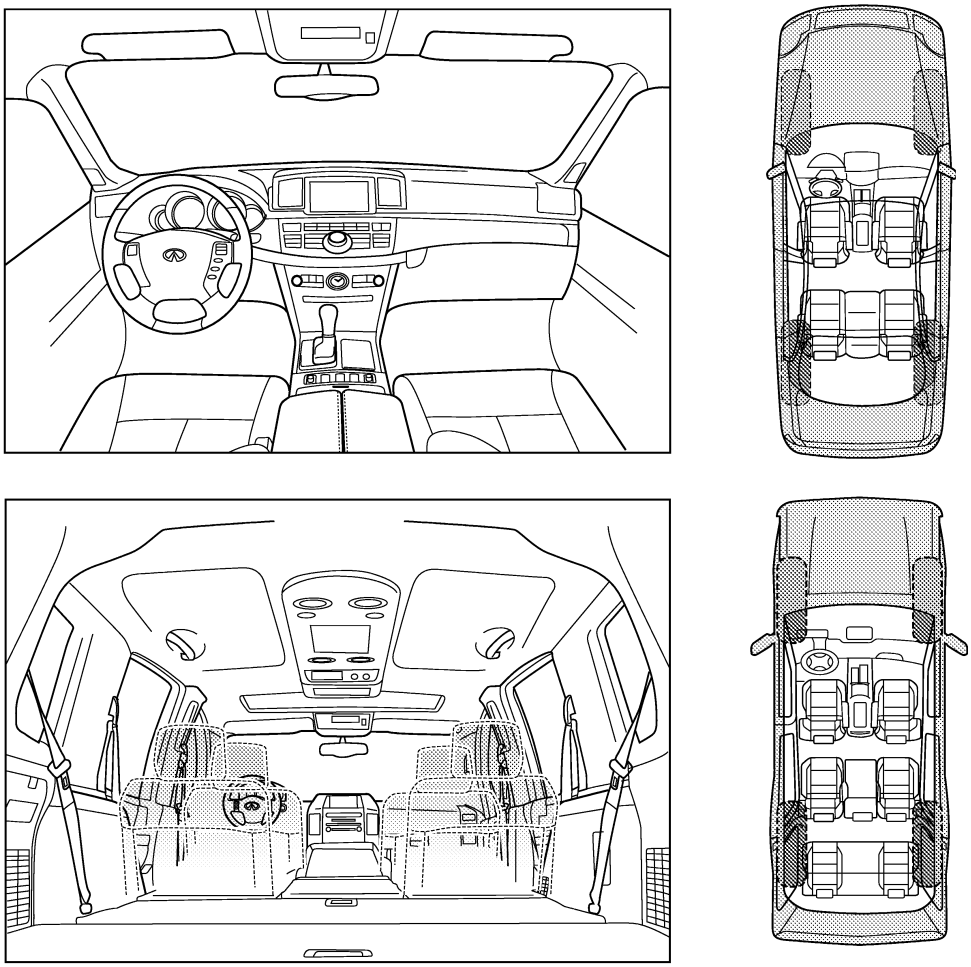

Continue to page 2 of the worksheet and briefly describe the location of the noise or rattle. In addition, please indicate the conditions which are present when the noise occurs.

PIIB8741E

SQUEAK & RATTLE DIAGNOSTIC WORKSHEET - page 2

Briefly describe the location where the noise occurs:

_____

_____

II. WHEN DOES IT OCCUR? (please check the boxes that apply)

- ☐ anytime
- ☐ 1st time in the morning
- ☐ only when it is cold outside
- ☐ only when it is hot outside
- ☐ after sitting out in the rain
- ☐ when it is raining or wet
- ☐ dry or dusty conditions
- ☐ other:

III. WHEN DRIVING:

- ☐ through driveways
- ☐ over rough roads
- ☐ over speed bumps
- ☐ only about ____ mph
- ☐ on acceleration
- ☐ coming to a stop
- ☐ on turns: left, right or either (circle)
- ☐ with passengers or cargo
- ☐ other: _____
- ☐ after driving _____ miles or _____ minutes

IV. WHAT TYPE OF NOISE

- ☐ squeak (like tennis shoes on a clean floor)
- ☐ creak (like walking on an old wooden floor)
- ☐ rattle (like shaking a baby rattle)
- ☐ knock (like a knock at the door)
- ☐ tick (like a clock second hand)
- ☐ thump (heavy, muffled knock noise)
- ☐ buzz (like a bumble bee)

TO BE COMPLETED BY DEALERSHIP PERSONNEL

Test Drive Notes:

_____

_____

_____

	YES	NO	Initials of person performing
Vehicle test driven with customer	☐	☐	_____
- Noise verified on test drive	☐	☐	_____
- Noise source located and repaired	☐	☐	_____
- Follow up test drive performed to confirm repair	☐	☐	_____

VIN: _____ Customer Name: _____

W.O.# _____ Date: _____

This form must be attached to Work Order

PIIB8742E

REMOVAL AND INSTALLATION

FRONT DOOR FINISHER

Exploded View

INFOID:0000000006046520

Power window models

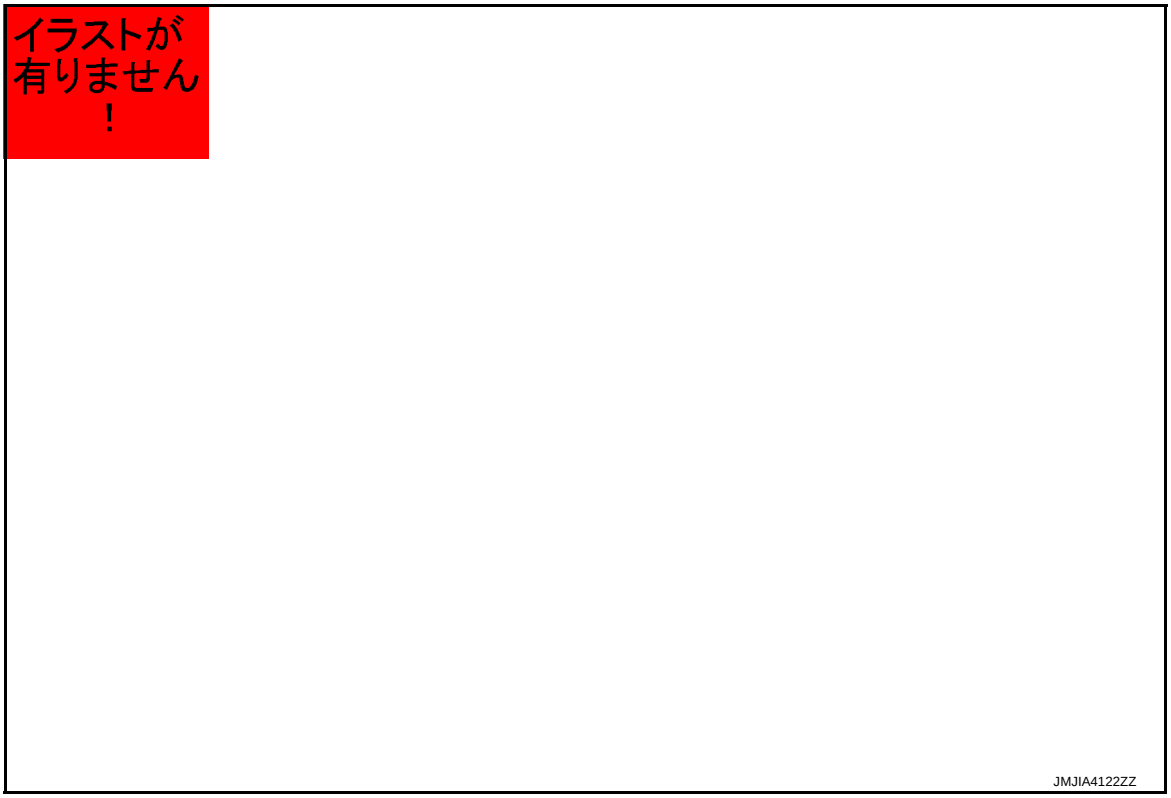

1. Front door panel
2. Front door inside handle
3. Power window main switch finisher
4. Front door finisher
5. Power window main switch finisher bracket

: Clip

: Pawl

: Metal clip

Manual window models

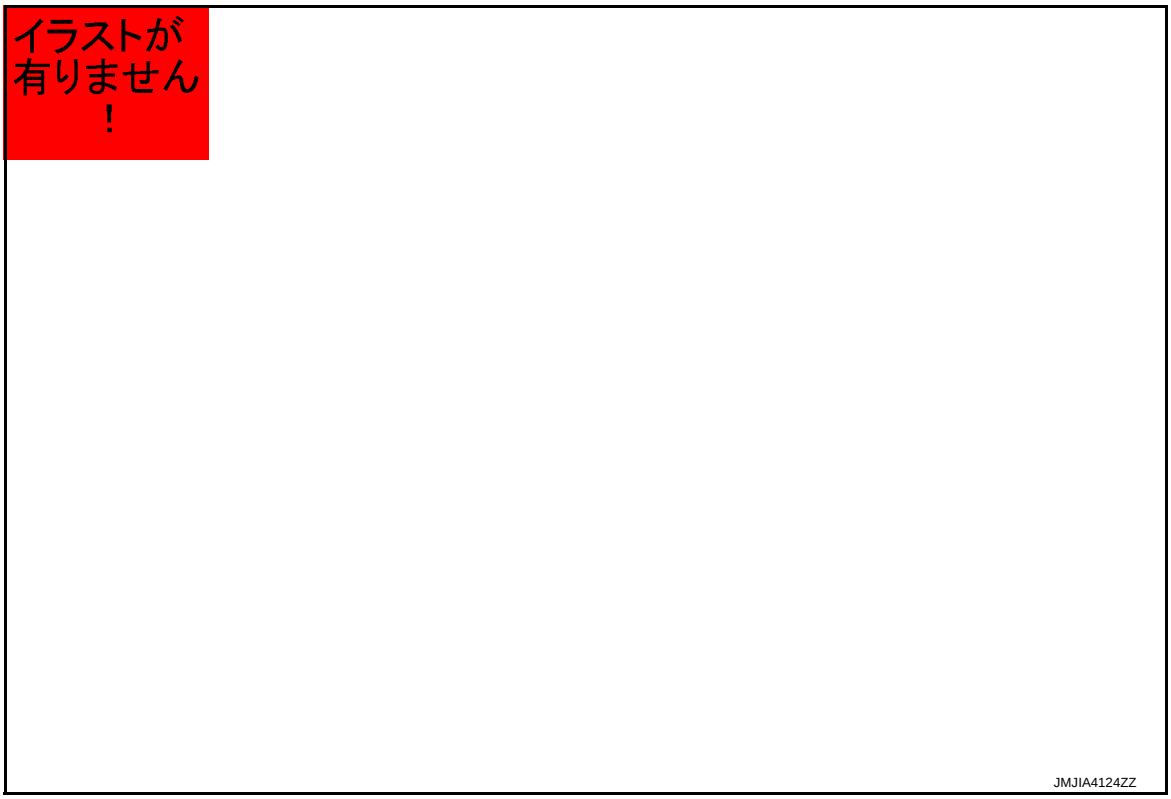

1. Front door panel
2. Front door inside handle
3. Power window main switch finisher
4. Front door finisher
5. Power window main switch finisher bracket

: Clip

: Pawl

: Metal clip

Removal and Installation

INFOID:0000000006046521

CAUTION:
When removing, always use a remover tool that is made of plastic.

REMOVAL

Power window models

1. Fully open door window.
2. Remove door mirror corner cover. Refer to MIR-35, "DOOR MIRROR ASSEMBLY : Removal and Installation".
3. Remove power window switch finisher fixing TORX screw with a screwdriver (A).

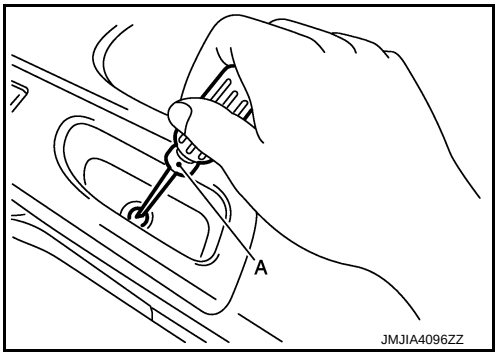

4. Insert a remover tool (A) between power window switch finisher (1) and front door finisher (2) to disengage fixing pawls.
CAUTION:
Apply protective tape (B) to the front door finisher to protect from damage.

:Pawl

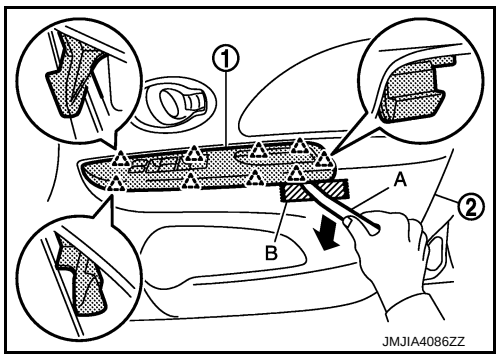

5. Remove power window switch finisher, and then disconnect power window switch harness connector.

6. Remove front door finisher fixing screw.

7. Insert remover tool (A) between front door panel (1) and front door finisher (2) to disengage the fixing clips and metal clips.
CAUTION:
Insert remover tool into part shown in the figure.
(Between clips and door panel).

: Clip

: Metal clip

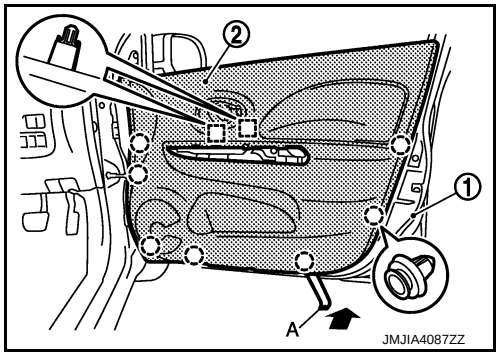

8. Remove front door finisher from front door panel.

Manual window models

1. Fully open door window.
2. Remove door mirror corner cover. Refer to MIR-35, "DOOR MIRROR ASSEMBLY : Removal and Installation".
3. Remove regulator handle.
NOTE:
Insert hook and pick tool (A) between regulator handle (1) and regulator sealer to remove snap pin (2).

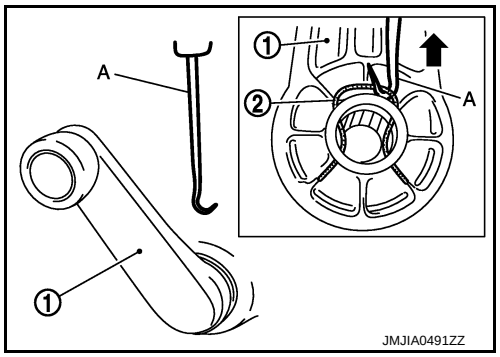

4. Remove door pull handle fixing TORX screw with a screwdriver (A).

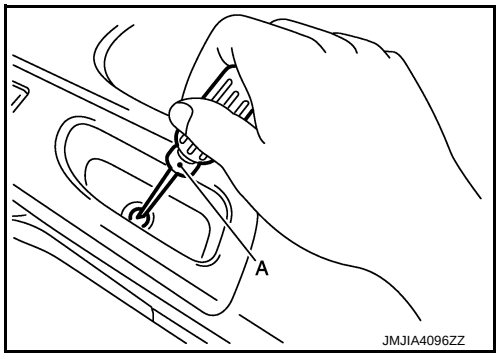

5. Insert a remover tool (A) between door pull handle (1) and front door finisher (2) to disengage fixing pawls and then remove door pull handle.
   CAUTION:
   Apply protective tape (B) to the front door finisher to protect from damage.

   △ :Pawl

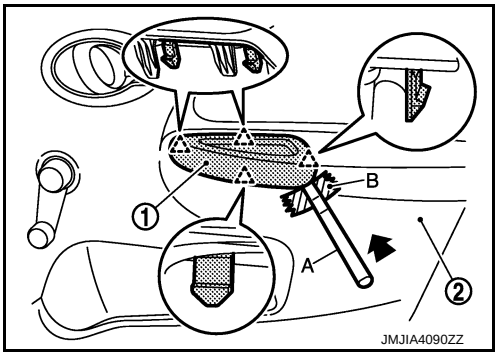

6. Remove front door finisher fixing screw.

7. Insert remover tool (A) between front door panel (1) and front door finisher (2) to disengage the fixing clips and metal clips.
   CAUTION:
   Insert remover tool into part shown in the figure.
   (Between clips and door panel).

   : Clip
   : Metal clip

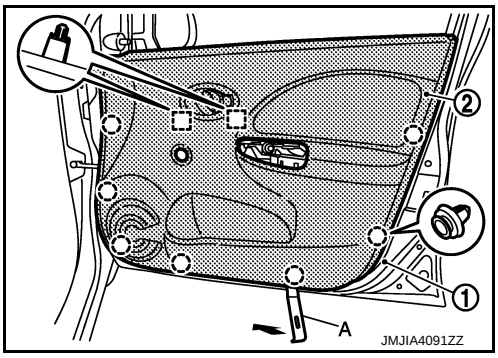

8. Remove front door finisher from front door panel.

INSTALLATION

Note the following item,and nstall in the reverse order of removal.

CAUTION:

When installing front door finisher, check that all clips and metal clips are securely fitted in door panel hole on body, and then press them in.

REAR DOOR FINISHER

Exploded View

INFOID:0000000006046522

Power window models

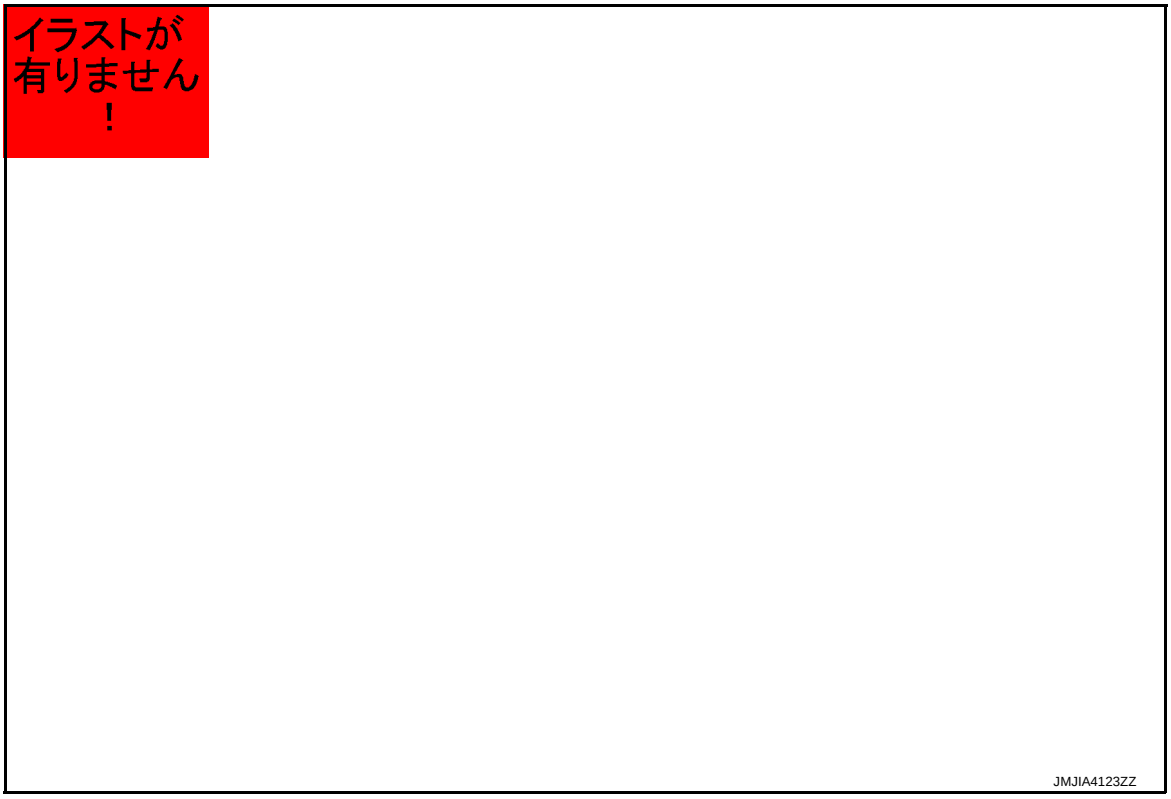

1. Rear door panel
2. Rear door inside handle
3. Power window switch finisher
4. Hook cover
5. Rear door finisher
6. Power window switch finisher bracket

: Clip

: Pawl

: Metal clip

Manual window models

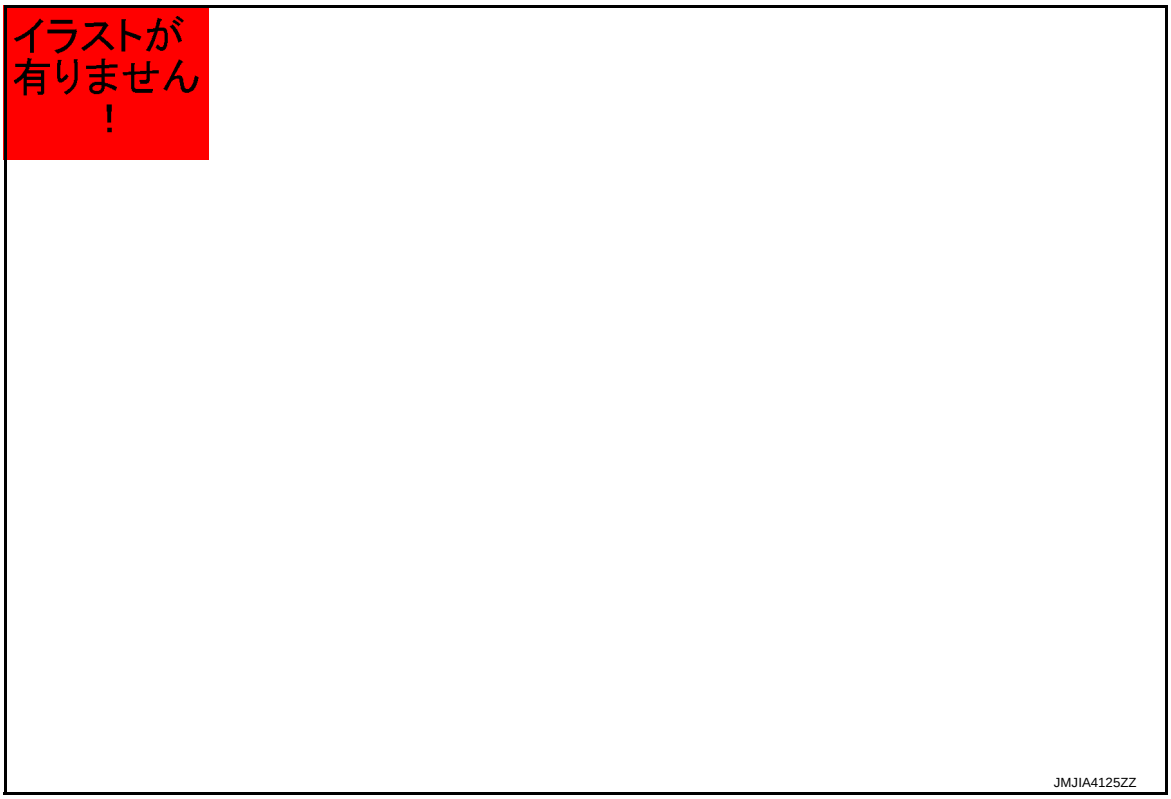

1. Rear door panel
2. Rear door inside handle
3. Power window switch finisher
4. Hook cover
5. Rear door finisher
6. Power window switch finisher bracket

: Clip

: Pawl

: Metal clip

Removal and Installation

INFOID:0000000006046523

CAUTION:
When removing, always use a remover tool that is made of plastic.

REMOVAL

Power window models

1. Fully open door window.
2. Remove power window switch finisher fixing TORX screw with a screwdriver.

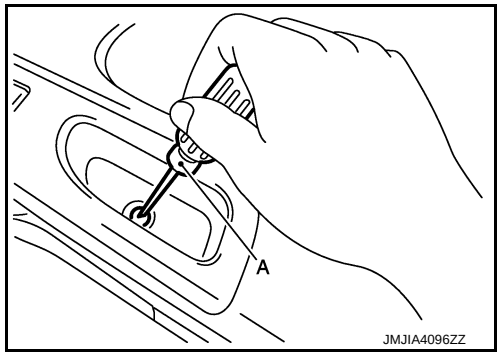

3. Insert a remover tool (A) between power window switch finisher (1) and rear door finisher (2) to disengage fixing pawls.
CAUTION:
Apply protective tape (B) to the rear door finisher to protect from damage.

: Pawl

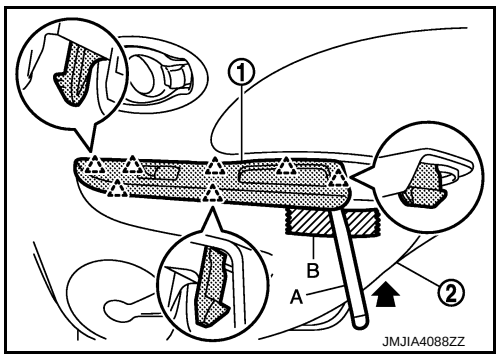

4. Remove power window switch finisher, and then disconnect power window switch harness connector.

5. Remove rear door finisher fixing screw.

6. Insert a remover tool (A) between rear door panel (1) and rear door finisher (2) to disengage fixing clips and metal clips.
CAUTION:
Insert remover tool into part shown in the figure.
(Between clips and door panel).

: Clip

: Metal clip

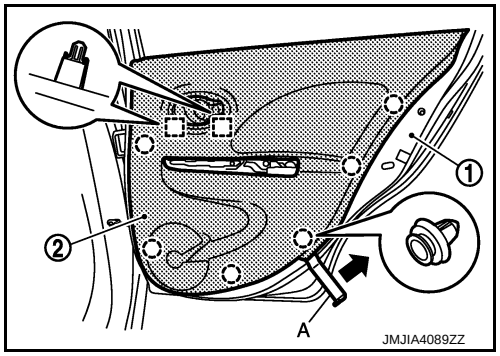

7. Remove rear door finisher from rear door panel.

Manual window models

1. Fully open door window.
2. Remove regulator handle.
NOTE:
Insert hook and pick tool (A) between regulator handle (1) and regulator sealer to remove sanp pin (2).

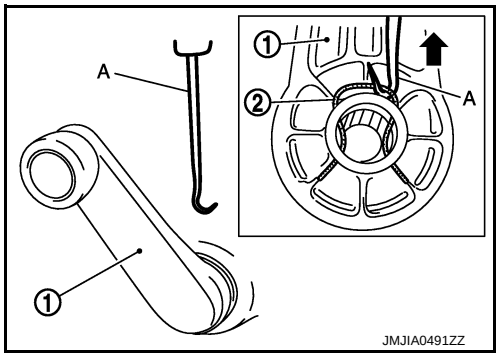

3. Remove door pull handle fixing TORX screw with a screwdriver.

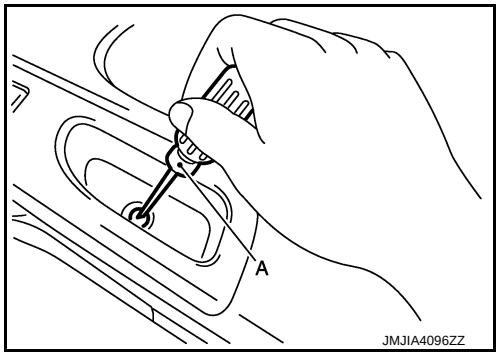

4. Insert a remover tool (A) between door pull handle (1) and rear door finisher (2) to disengage fixing pawls and then remove door pull handle.
   CAUTION:
   Apply protective tape (B) to the rear door finisher to protect from damage.

   : Pawl

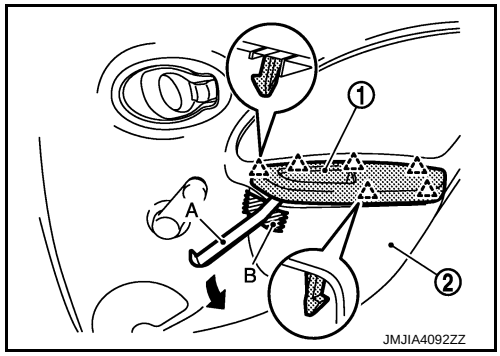

5. Remove rear door finisher fixing screw.

6. Insert a remover tool (A) between rear door panel (1) and rear door finisher (2) to disengage fixing clips and metal clips.
   CAUTION:
   Insert remover tool into part shown in the figure.
   (Between clips and door panel).

   : Clip

   : Metal clip

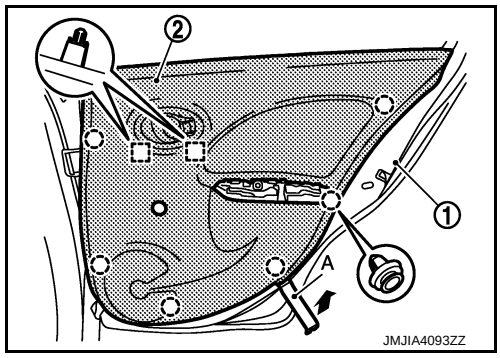

7. Remove rear door finisher from rear door panel.

INSTALLATION

Note the following item, and install in the reverse order of removal.

CAUTION:

When installing door finisher, check that all clips and metal clips are securely fitted in holes on body, and then press them in.

BODY SIDE TRIM

Exploded View

INFOID:0000000006046524

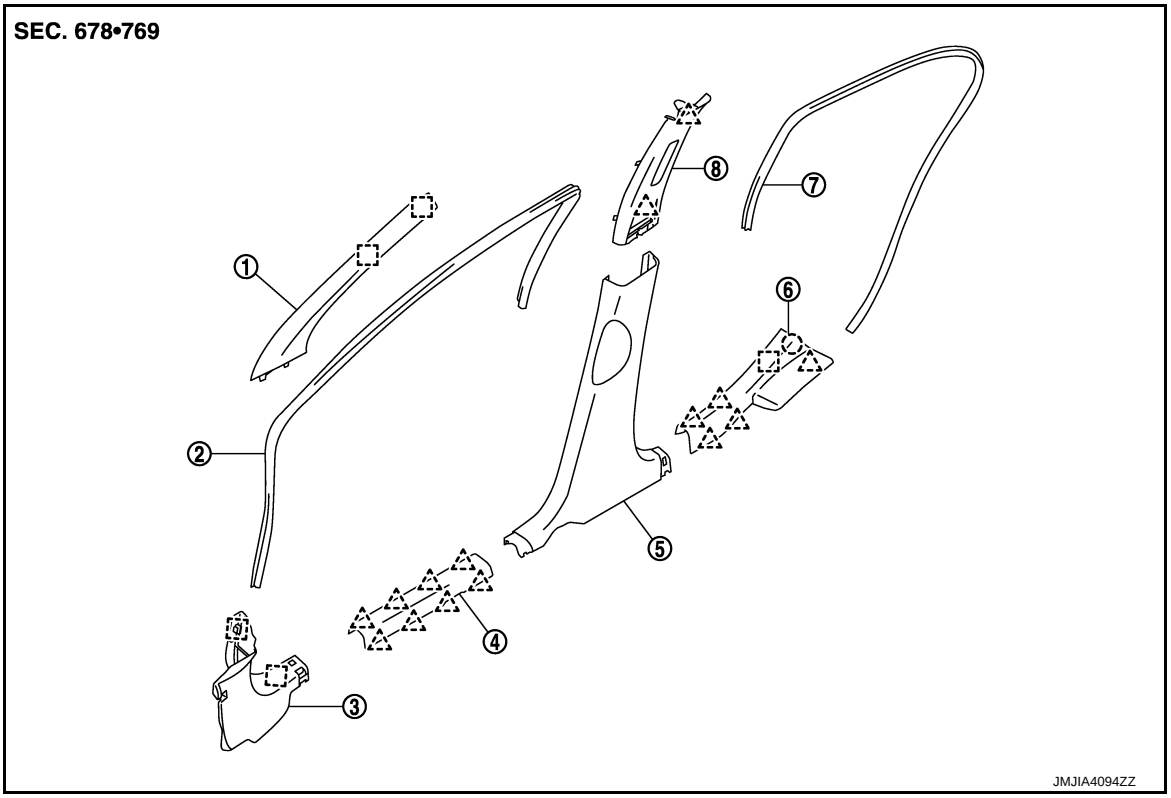

1. Front pillar garnish
2. Front body side welt
3. Dash side finisher
4. Front kicking plate inner
5. Center pillar lower garnish
6. Rear kicking plate inner
7. Rear body side welt
8. Center pillar upper garnish

: Clip

: Pawl

: Metal clip

DASH SIDE FINISHER

DASH SIDE FINISHER : Removal and Installation

INFOID:0000000006046553

CAUTION:
- **When removing, always use a remover tool that is made of plastic.**
- **Never damage the body.**

REMOVAL

1. Remove front kicking plate. Refer to INT-22, "KICKING PLATE INNER : Removal and Installation".

2. Disengage dash side finisher fixing metal clips, and then remove dash side finisher.

: Metal clip

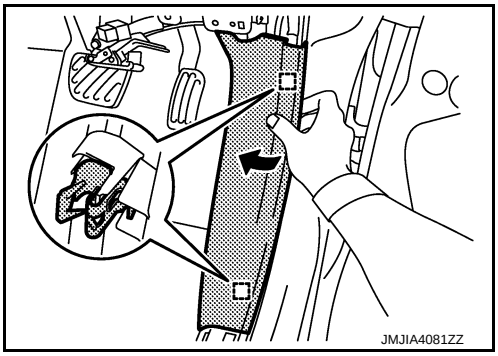

INSTALLATION

Note the following item, and install in the reverse order of removal.

CAUTION:

When installing, check that all clips are securely fitted in panel holes on body, and then press them in.

FRONT PILLAR GARNISH

FRONT PILLAR GARNISH : Removal and Installation

INFOID:0000000006046552

CAUTION:

- **When removing, always use a remover tool that is made of plastic.**
- **Never damage the body.**

REMOVAL

1. Release front pillar portion of front body side welt.
2. Disengage front pillar garnish fixing metal clips with remover tool (A), and then remove front pillar garnish.

: Metal clip

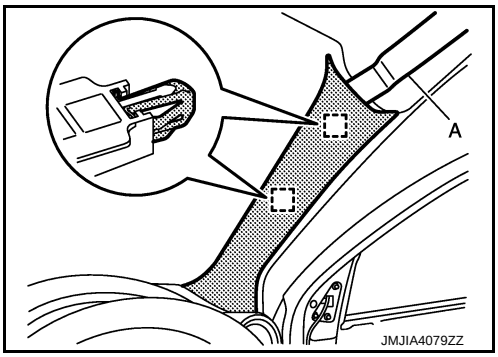

INSTALLATION

Note the following item, and install in the reverse order of removal.

CAUTION:

When installing, check that all metal clips are securely fitted in panel holes on body, and then press them in.

KICKING PLATE INNER

KICKING PLATE INNER : Removal and Installation

INFOID:0000000006046554

CAUTION:

Never damage the body.

REMOVAL

FRONT KICKNG PLATE INNER

1. Pull up front kicking plate inner to disengage fixing pawls.
2. Remove front kicking plate inner from body panel.

: Pawl

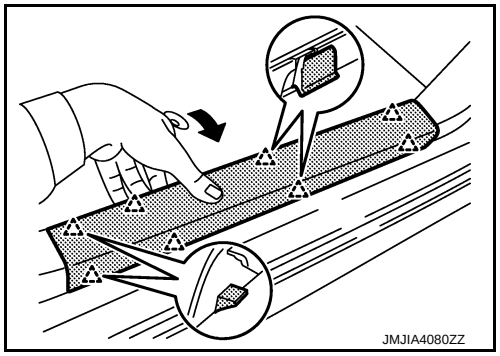

REAR KICKING PLATE INNER

1. Pull up rear kicking plate inner to disengage fixing clip, pawls and metal clip.
2. Remove rear kicking plate inner from body panel.

: Clip
: Pawl
: Metal clip

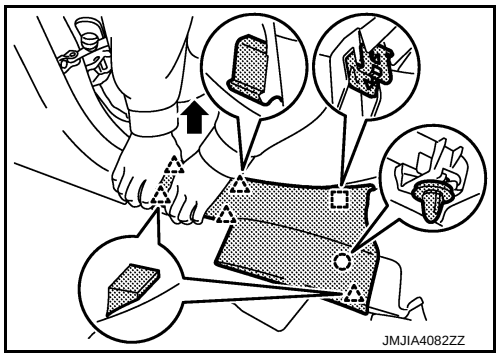

INSTALLATION

Note the following item, and install in the reverse order of removal.

CAUTION:

When installing, check that all clip, pawls and metal clip are securely fitted in panel holes on body, and then press them in.

BODY SIDE WELT

BODY SIDE WELT : Removal and Installation

INFOID:0000000006046555

CAUTION:

Never damage the body.

REMOVAL

FRONT BODY SIDE WELT

1. Remove front kicking plate inner. Refer to INT-22, "KICKING PLATE INNER : Removal and Installation".
2. Remove dash side finisher. Refer to INT-21, "DASH SIDE FINISHER : Removal and Installation".
3. Remove center pillar lower garnish. Refer to INT-23, "CENTER PILLAR LOWER GARNISH : Removal and Installation".
4. Remove front body side welt.

REAR BODY SIDE WELT

1. Remove rear kicking plate inner. Refer to INT-22, "KICKING PLATE INNER : Removal and Installation".
2. Remove center pillar lower garnish. Refer to INT-23, "CENTER PILLAR LOWER GARNISH : Removal and Installation".
3. Remove rear body side welt.

INSTALLATION

Install in the reverse order of removal.

CENTER PILLAR LOWER GARNISH

CENTER PILLAR LOWER GARNISH : Removal and Installation

INFOID:0000000006046556

CAUTION:

Never damage the body.

REMOVAL

1. Slide front seat assembly to the front most.
2. Remove front kicking plate inner and rear kicking plate inner. Refer to INT-22, "KICKING PLATE INNER : Removal and Installation".
3. Spread center pillar lower garnish where it is engaged to body side panel, disengage vehicle front side disengage vehicle rear side.

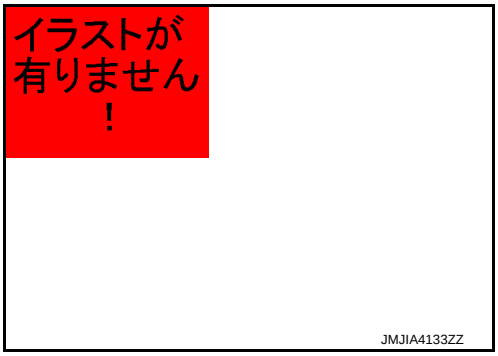

4. Remove center pillar lower garnish from body panel.

INSTALLATION

Install in the reverse order of removal.

CENTER PILLAR UPPER GARNISH

CENTER PILLAR UPPER GARNISH : Removal and Installation

INFOID:0000000006046557

CAUTION:

- **When removing, always use a remover tool that is made of plastic.**
- **Never damage the body.**

REMOVAL

CENTER PILLAR UPPER GARNISH

1. Remove front seat belt outer anchor bolt. Refer to SB-6, "SEAT BELT RETRACTOR : Exploded View".
2. Remove center pillar lower garnish. Refer to INT-23, "CENTER PILLAR LOWER GARNISH : Removal and Installation".
3. Remove front body side welt and rear body side welt. Refer to INT-23, "BODY SIDE WELT : Removal and Installation".
4. Disengage center pillar upper garnish lower side fixing pawl with a remover tool (A).

   : Pawl

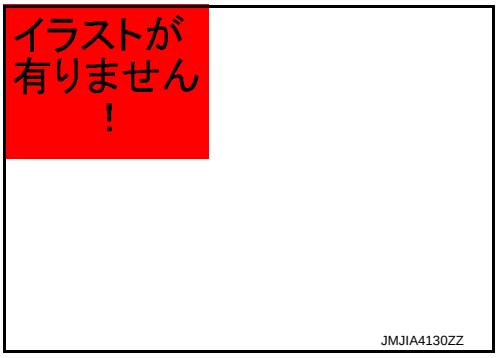

5. Pull center pillar upper garnish (1) from inside passenger room, disengage center pillar upper garnish upper side fixing pawl as shown in the figure below, and then remove center pillar upper garnish from center pillar panel (2).

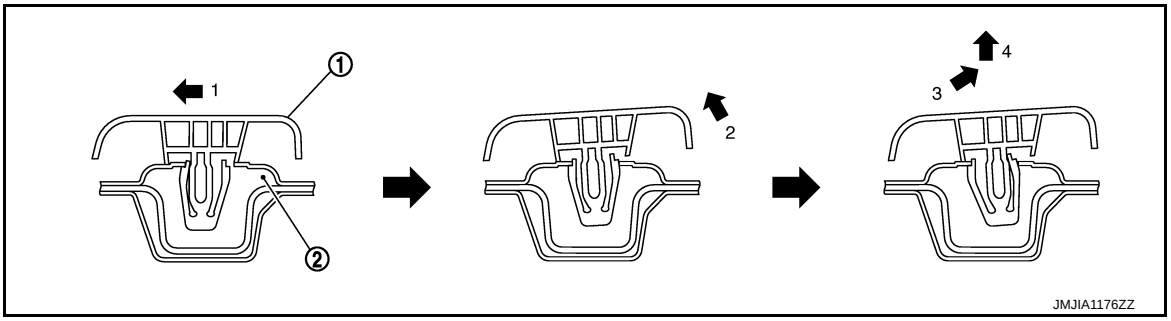

INSTALLATION

Note the following item, and then install in the reverse order of removal.

CAUTION:

When installing, check that pawls and are securely fitted in panel holes on body, and then press them in.

FLOOR TRIM

Exploded View

INFOID:0000000006046526

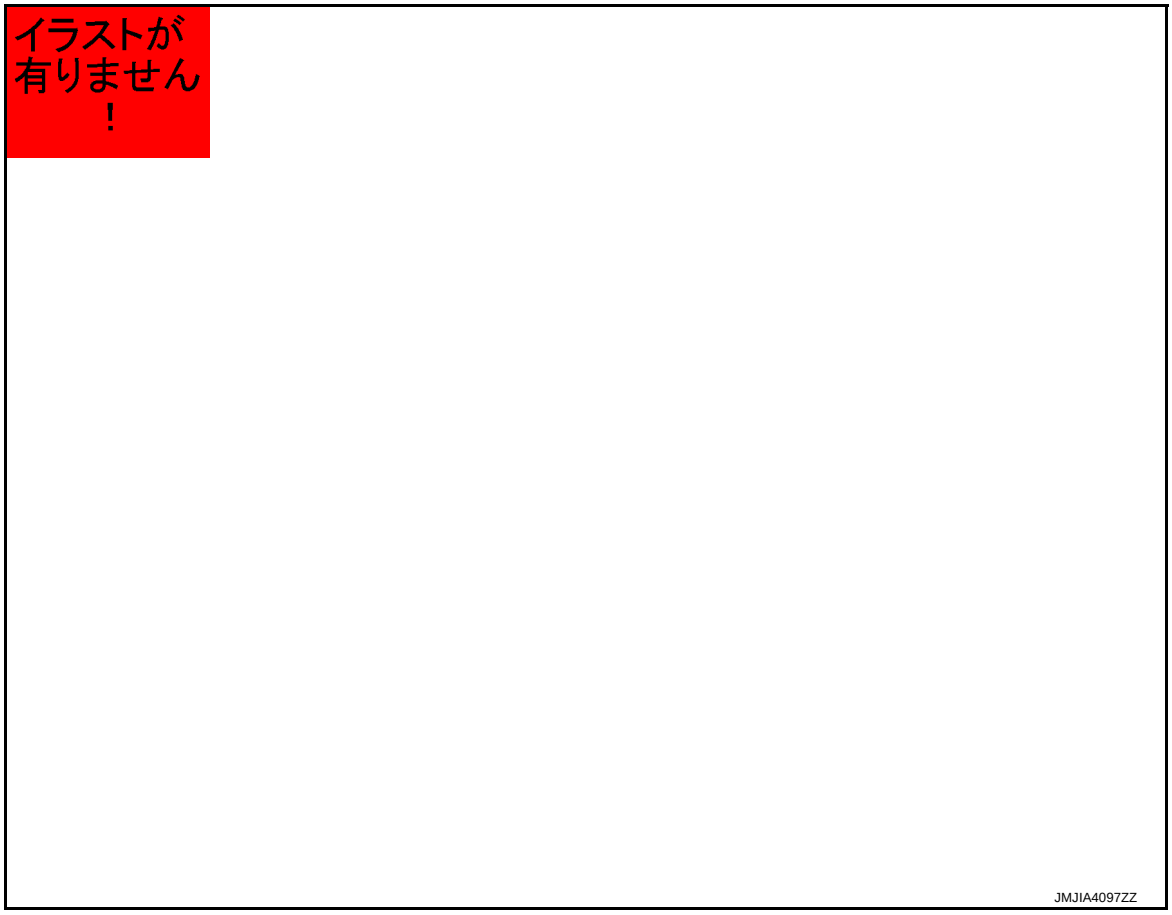

1. Floor carpet assembly
2. Floor hook
3. Front floor spacer RH
4. Front floor spacer LH
5. Rear floor spacer LH
6. Luggage floor spacer front
7. Luggage floor spacer rear
8. Tool box
9. Tool box cover
10. Rear floor spacer RH

⇦ : Vehicle front

Removal and Installation

INFOID:0000000006046527

REMOVAL

1. Remove front seat assembly (LH/RH). Refer to SE-15, "Removal and Installation".
2. Remove rear seat cushion and seatback assembly. Refer to SE-19, "Removal and Installation".
3. Remove instrument panel assembly and center console assembly. Refer to IP-13, "Removal and Installation".
4. Remove A/C unit assembly. Refer to HA-42, "A/C UNIT ASSEMBLY : Removal and Installation".
5. Disconnect harness connector from diagnosis sensor unit. Refer to SR-29, "Exploded View"
6. Remove shift control assembly. Refer to TM-15, "Removal and Installation".
7. Remove parking brake lever assembly. Refer to PB-3, "Removal and Installation".
8. Remove front kicking plate inner and rear kicking plate inner (LH/RH). Refer to INT-22, "KICKING PLATE INNER : Removal and Installation"
9. Remove dash side finisher (LH/RH). Refer to INT-21, "DASH SIDE FINISHER : Removal and Installation".
10. Remove front seat belt outer anchor bolt. Refer to SE-12, "Exploded View".

11. Remove center pillar lower garnish (LH/RH). Refer to INT-23, "CENTER PILLAR LOWER GARNISH : Removal and Installation".
12. Disengage clip of floor hook (1) with remover tool (A).

: Clip

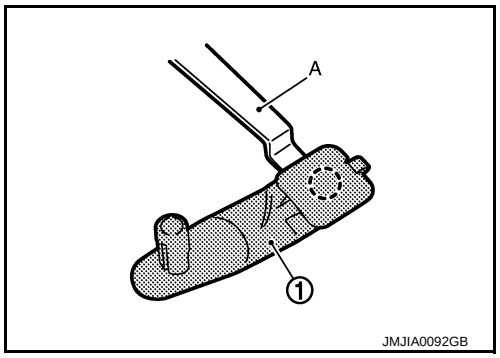

13. Disengage floor trim fixing clip (A) and then remove floor trim.

: Vehicle front

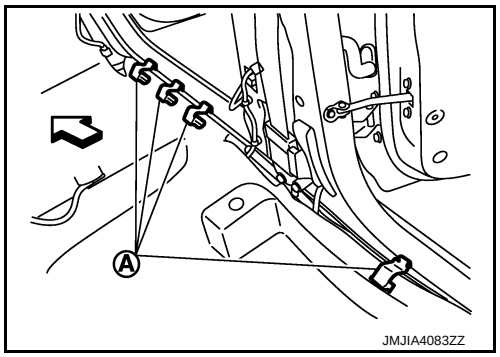

INSTALLATION

Install in the reverse order of removal.

HEADLINING

Exploded View

INFOID:0000000006054248

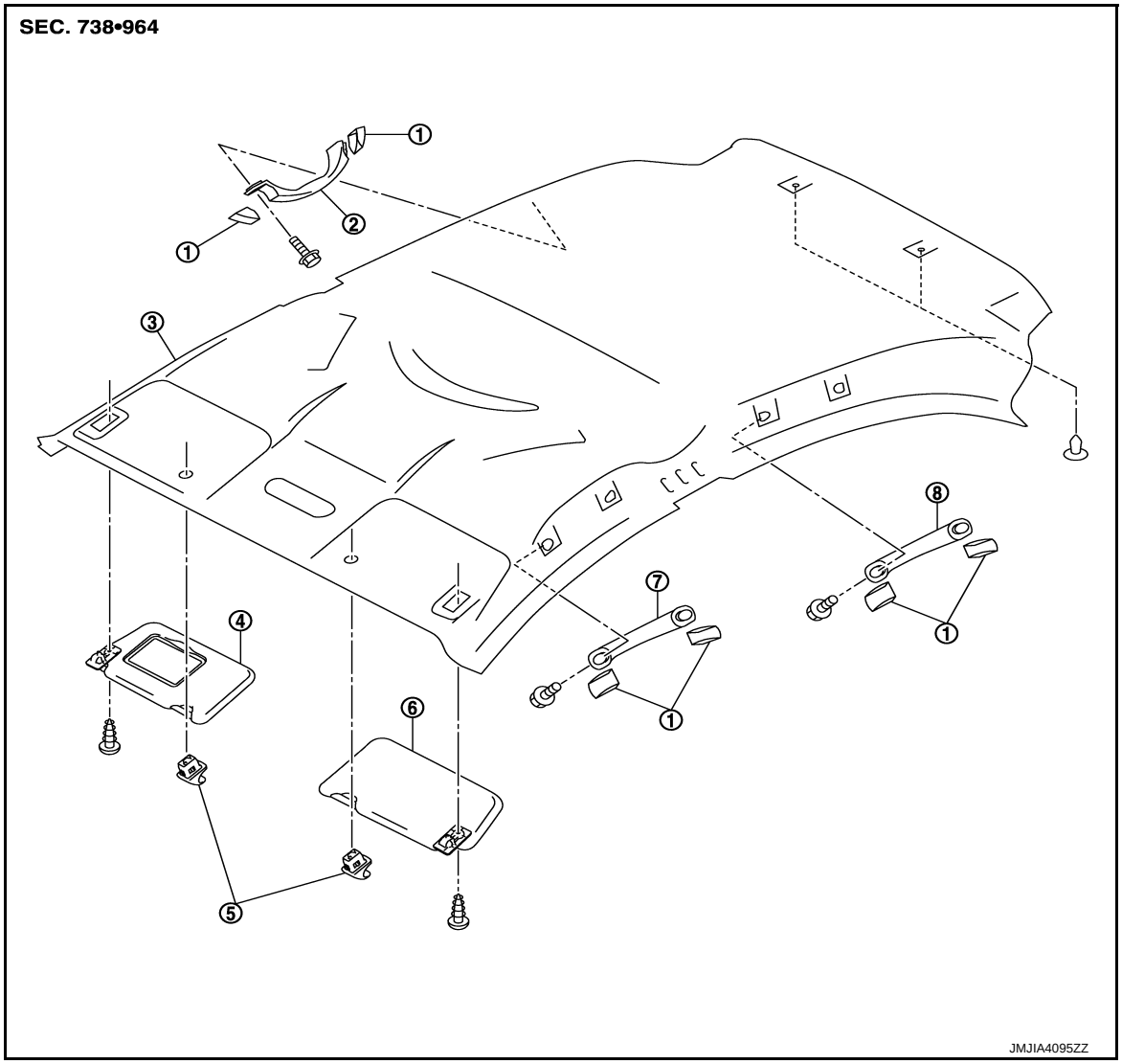

1. Assist grip cap
2. Rear assist grip (RH)
3. Headlining assembly
4. Inside mirror cover Sunvisor assembly (RH)
5. Sunvisor holder (LH/RH)
6. Sunvisor assembly (LH)
7. Front assist grip (LH)
8. Rear assist grip (LH)

Removal and Installation

INFOID:0000000006054249

REMOVAL

1. Remove front kicking plate inner (LH/RH) and rear kicking plate inner (LH/RH). Refer to INT-22, "KICKING PLATE INNER : Removal and Installation".
2. Remove center pillar lower garnish (LH/RH). Refer to INT-23, "CENTER PILLAR LOWER GARNISH : Removal and Installation".
3. Remove front body side welt (LH/RH) and rear body side welt (LH/RH). Refer to INT-23, "BODY SIDE WELT : Removal and Installation".
4. Remove luggage side upper finisher (LH/RH). Refer to INT-31, "LUGGAGE SIDE UPPER FINISHER : Removal and Installation".

5. Remove center pillar upper garnish (LH/RH). Refer to INT-24, "CENTER PILLAR UPPER GARNISH : Removal and Installation".
6. Remove front pillar garnish (LH/RH). Refer to INT-22, "FRONT PILLAR GARNISH : Removal and Installation".
7. Remove all assist grip.
   - Lift assist grip cap while sliding and disengage assist grip cap and assist grip.
   - Remove mounting bolts.
   - Pull out the assist grip to remove.

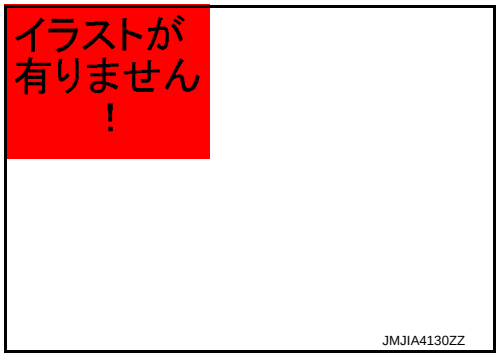

8. Remove sunvisor assembly fixing screws, and then remove sunvisor assembly (LH/RH).
9. Rotate the sunvisor holder (LH/RH) at approximately 90 degrees and then pull it down to remove.

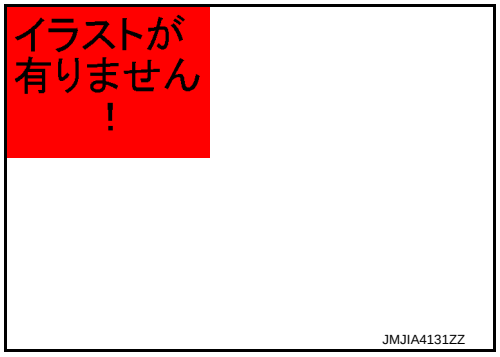

10. Remove map lamp assembly. Refer to INL-35, "Removal and Installation".
11. Remove headlining clips located at the rear side with a remover tool.
12. Remove headlining assembly through the back door.
    CAUTION:
    - **When removing headlining, 2 workers are required.**
    - **Be careful not to scratch or damage any part of the body while taking out the headlining.**
    - **Never bend headlining when removing.**

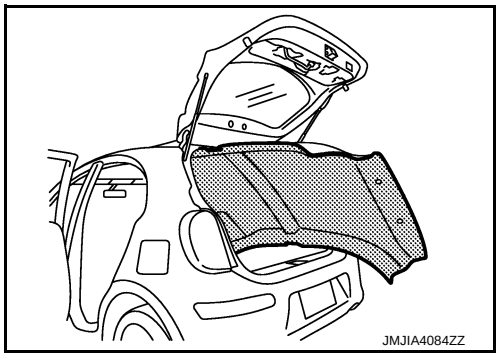

INSTALLATION

Note the following item, and install in the reverse order of removal.

CAUTION:
- **Never bend headlining when installing.**
- **When installing, start by installing both sunvisor holders and headlining clips in order to keep the headlining in position.**

LUGGAGE FLOOR TRIM

Exploded View

INFOID:0000000006046532

1. Luggage side upper finisher LH
2. Luggage side lower finisher clip (LH/RH)
3. Luggage side lower finisher LH
4. Luggage side lower finisher lid (LH/RH)
5. Luggage rear plate
6. Rope hook
7. Luggage room lamp
8. Luggage side lower finisher RH
9. Luggage side upper finisher RH
10. Tonneau cover

: Clip

: Pawl

: Metal clip

: Vehicle front

LUGGAGE REAR PLATE

LUGGAGE REAR PLATE : Removal and Installation

INFOID:0000000006046533

REMOVAL

1. Fully open back door.
2. Insert a remover tool (A) between luggage rear plate and back door panel to disengage fixing pawls, and then remove luggage rear plate.
   CAUTION:
   Apply protective tape (B) to the back door panel to protect from damage.

   : Pawl

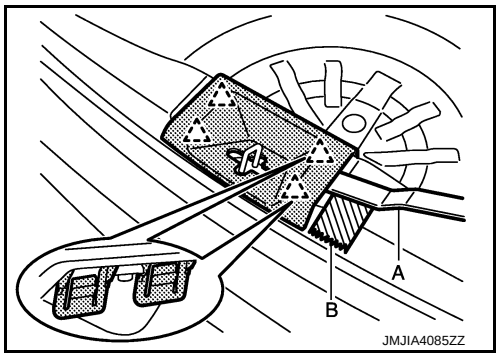

INSTALLATION

Note the following item, and install in the reverse order of removal.

CAUTION:

When installing, check that pawls are securely fitted into panel holes on body, and then press them in.

LUGGAGE SIDE UPPER FINISHER

LUGGAGE SIDE UPPER FINISHER : Removal and Installation

INFOID:0000000006059089

REMOVAL

1. Remove rear parcel shelf finisher.
2. Remove back door weather-strip.
3. Remove rear seat belt outer anchor bolt (LH/RH). Refer to SB-11, "SEAT BELT RETRACTOR : Exploded View".
4. Insert a remover tool between luggage side upper finisher and body panel to disengage clips, pawls and metal clips and then remove luggage side upper finisher.

   : Clip

   : Pawl

   : Metal clip

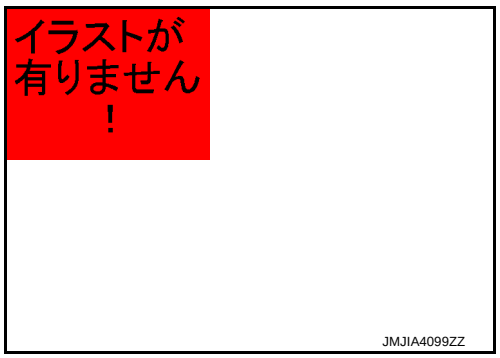

INSTALLATION

Note the following item, and install in the reverse order of removal.

CAUTION:

When installing, check that clips, pawls and metal clips are securely fitted into panel holes on body, and then press them in.

LUGGAGE SIDE LOWER FRONT FINISHER

LUGGAGE SIDE LOWER FRONT FINISHER : Removal and Installation

INFOID:0000000006059090

REMOVAL

1. Remove rear seat cushion and rear seatback. Refer to SE-19, "Removal and Installation".
2. Remove rear kicking plate inner (LH/RH). Refer toINT-22, "KICKING PLATE INNER : Removal and Installation".
3. Remove rear body side welt (LH/RH). Refer to INT-23, "BODY SIDE WELT : Removal and Installation".

4. Insert a remover tool (A) between luggage side lower front finisher and body side panel to disengage fixing clips, and then remove luggage side lower front finisher.

   : Clip

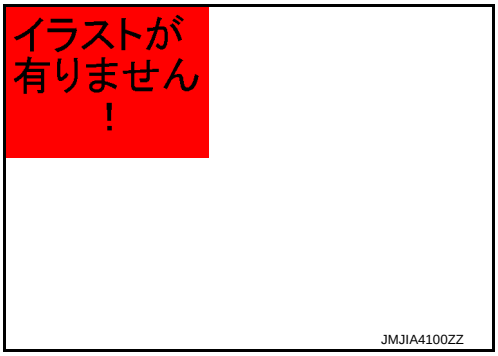

INSTALLATION

Note the following item, and install in the reverse order of removal.

CAUTION:

When installing, check that clips, pawls and metal clips are securely fitted into panel holes on body, and then press them in.

LUGGAGE SIDE LOWER FINISHER

LUGGAGE SIDE LOWER FINISHER : Removal and Installation

INFOID:0000000006059091

REMOVAL

1. Remove rear seat cushion and rear seat back. Refer to SE-19, "Removal and Installation".
2. Remove rear kicking plate inner (LH/RH). Refer to INT-22, "KICKING PLATE INNER : Removal and Installation".
3. Remove rear body side welt (LH/RH). Refer to INT-23, "BODY SIDE WELT : Removal and Installation".
4. Remove luggage side upper finisher (LH/RH). Refer to INT-31, "LUGGAGE SIDE UPPER FINISHER : Removal and Installation".
5. Remove luggage side lower front finisher (LH/RH). Refer to INT-31, "LUGGAGE SIDE LOWER FRONT FINISHER : Removal and Installation".
6. Disengage fixing clips, and then remove luggage side lower finisher (LH/RH).

INSTALLATION

Note the following item, and install in the reverse order of removal.

CAUTION:

When installing, check that clips, are securely fitted into panel holes on body, and then press them in.

BACK DOOR TRIM

Exploded View

INFOID:0000000006046534

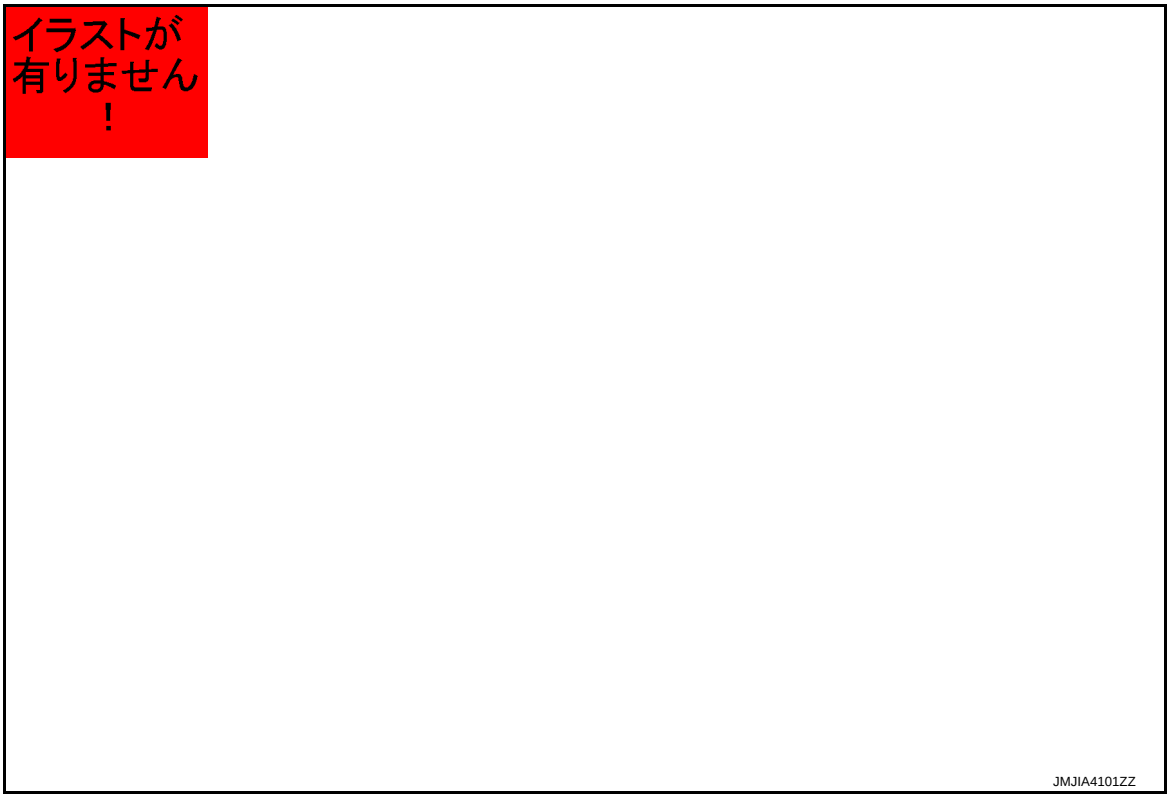

1. Back door finisher upper
2. Back door finisher lower
3. Back door panel
4. Back door finisher lower (with Bose)

: Clip

Removal and Installation

INFOID:0000000006046535

REMOVAL

Insert a remover tool between fixing clip and back door finisher to disengage each fixing clip and then remove back door finisher.

: Clip

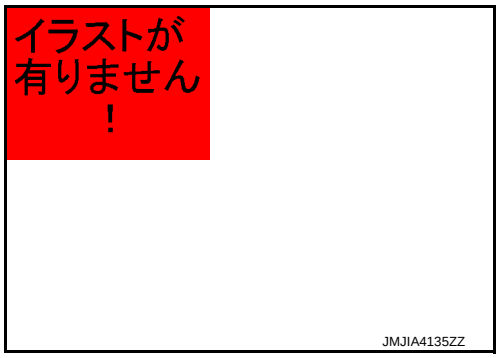

INSTALLATION

Note the following item, and install in the reverse order of removal.

CAUTION:

When installing, check that clips are securely fitted in panel holes on body, and then press them in.

SECTION IP
INSTRUMENT PANEL

CONTENTS

PRECAUTION 2

PRECAUTIONS 2
Precaution for Supplemental Restraint System (SRS) "AIR BAG" and "SEAT BELT PRE-TENSIONER" 2
Precaution Necessary for Steering Wheel Rotation After Battery Disconnect 2
Precaution 3

PREPARATION 4

PREPARATION 4
Commercial Service Tools 4

CLIP LIST 5
Clip List 5

SYMPTOM DIAGNOSIS 6

SQUEAK AND RATTLE TROUBLE DIAGNOSES 6
Work Flow 6
Inspection Procedure 8
Diagnostic Worksheet 10

REMOVAL AND INSTALLATION 12

INSTRUMENT PANEL ASSEMBLY 12
Exploded View 12
Removal and Installation 13

CENTER CONSOLE ASSEMBLY 21
Exploded View 21
Removal and Installation 21

PRECAUTION

PRECAUTIONS

Precaution for Supplemental Restraint System (SRS) "AIR BAG" and "SEAT BELT PRE-TENSIONER"

INFOID:0000000005891474

The Supplemental Restraint System such as “AIR BAG” and “SEAT BELT PRE-TENSIONER”, used along with a front seat belt, helps to reduce the risk or severity of injury to the driver and front passenger for certain types of collision. Information necessary to service the system safely is included in the “SRS AIR BAG” and “SEAT BELT” of this Service Manual.

WARNING:

- **To avoid rendering the SRS inoperative, which could increase the risk of personal injury or death in the event of a collision which would result in air bag inflation, all maintenance must be performed by an authorized NISSAN/INFINITI dealer.**
- **Improper maintenance, including incorrect removal and installation of the SRS, can lead to personal injury caused by unintentional activation of the system. For removal of Spiral Cable and Air Bag Module, see the “SRS AIR BAG”.**
- **Do not use electrical test equipment on any circuit related to the SRS unless instructed to in this Service Manual. SRS wiring harnesses can be identified by yellow and/or orange harnesses or harness connectors.**

PRECAUTIONS WHEN USING POWER TOOLS (AIR OR ELECTRIC) AND HAMMERS

WARNING:

- **When working near the Air Bag Diagnosis Sensor Unit or other Air Bag System sensors with the ignition ON or engine running, DO NOT use air or electric power tools or strike near the sensor(s) with a hammer. Heavy vibration could activate the sensor(s) and deploy the air bag(s), possibly causing serious injury.**
- **When using air or electric power tools or hammers, always switch the ignition OFF, disconnect the battery, and wait at least 3 minutes before performing any service.**

Precaution Necessary for Steering Wheel Rotation After Battery Disconnect

INFOID:0000000005891475

NOTE:

- This Procedure is applied only to models with Intelligent Key system and NATS (NISSAN ANTI-THEFT SYSTEM).
- Remove and install all control units after disconnecting both battery cables with the ignition knob in the ″LOCK″ position.
- Always use CONSULT-III to perform self-diagnosis as a part of each function inspection after finishing work. If DTC is detected, perform trouble diagnosis according to self-diagnostic results.

For models equipped with the Intelligent Key system and NATS, an electrically controlled steering lock mechanism is adopted on the key cylinder.
For this reason, if the battery is disconnected or if the battery is discharged, the steering wheel will lock and steering wheel rotation will become impossible.
If steering wheel rotation is required when battery power is interrupted, follow the procedure below before starting the repair operation.

OPERATION PROCEDURE

1. Connect both battery cables.
   NOTE:
   Supply power using jumper cables if battery is discharged.
2. Use the Intelligent Key or mechanical key to turn the ignition switch to the ″ACC″ position. At this time, the steering lock will be released.
3. Disconnect both battery cables. The steering lock will remain released and the steering wheel can be rotated.
4. Perform the necessary repair operation.
5. When the repair work is completed, return the ignition switch to the ″LOCK″ position before connecting the battery cables. (At this time, the steering lock mechanism will engage.)
6. Perform a self-diagnosis check of all control units using CONSULT-III.

Precaution

INFOID:0000000005891476

- Disconnect both battery cables in advance.
- Disconnect air bag system line in advance.
- Never tamper with or force air bag lid open, as this may adversely affect air bag performance.
- Be careful not to scratch pad and other parts.
- When removing or disassembling any part, be careful not to damage or deform it. Protect parts, which may get in the way with a shop cloth.
- When removing parts with a screwdriver or other tool, cover the tool surface by vinyl tape to protect parts.
- Keep removed parts protected with a shop cloth.
- If a clip is deformed or damaged, replace it.
- If an unreusable part is removed, replace it with a new one.
- Tighten bolts and nuts firmly to the specified torque.
- After reassembly has been completed, make sure each part functions correctly.
- Remove stains in the following way.

Water-soluble stains:
Dip a soft cloth in warm water, and then squeeze it tightly. After wiping the stain, wipe with a soft dry cloth.
Oil stain:
Dissolve a synthetic detergent in warm water (density of 2 to 3%), dip the cloth, then clean off the stain with the cloth. Next, dip the cloth in fresh water and squeeze it tightly. Then clean off the detergent completely. Then wipe the area with a soft dry cloth.

- Never use any organic solvent, such as thinner or benzine.

PREPARATION

PREPARATION

Commercial Service Tools

INFOID:0000000005891477

Tool name		Description
Engine ear	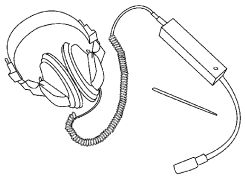 SIIA0995E	Locates the noise
Remover tool	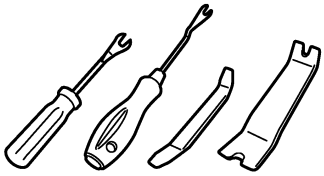 JMKIA3050ZZ	Removes clips, pawls, and metal clips

CLIP LIST

Clip List

INFOID:0000000005891478

Shapes	Removal & Installation
	Removal: Remove by bending up with flat-bladed screwdrivers or clip remover.
	Removal: Remove with a clip remover.
	Removal: Push center pin to catching position. (Do not remove center pin by hitting it.) Push **Installation:** Push
	Removal: Remove by bending up with flat-bladed screwdrivers or clip remover. Clip Finisher
	Removal:
	Removal:

Shapes	Removal & Installation
Clip A Clip B	**Removal:** Finisher Clip A Flat-bladed screwdriver Clip B
Clip A Clip B (Grommet)	**Removal:** Flat-bladed screwdriver Finisher Body panel Clip A Clip B (Grommet)
	Removal: Holder portion of clip must be spread out to remove rod.
	Removal: 1. Screw out with a Phillips screwdriver. 2. Remove female portion with flat-bladed screwdriver.
	Removal: Rotate 45° to remove. **Removal:** **Installation:**
	Removal:

JMJIA3734GB

SYMPTOM DIAGNOSIS

SQUEAK AND RATTLE TROUBLE DIAGNOSES

Work Flow

INFOID:0000000005891479

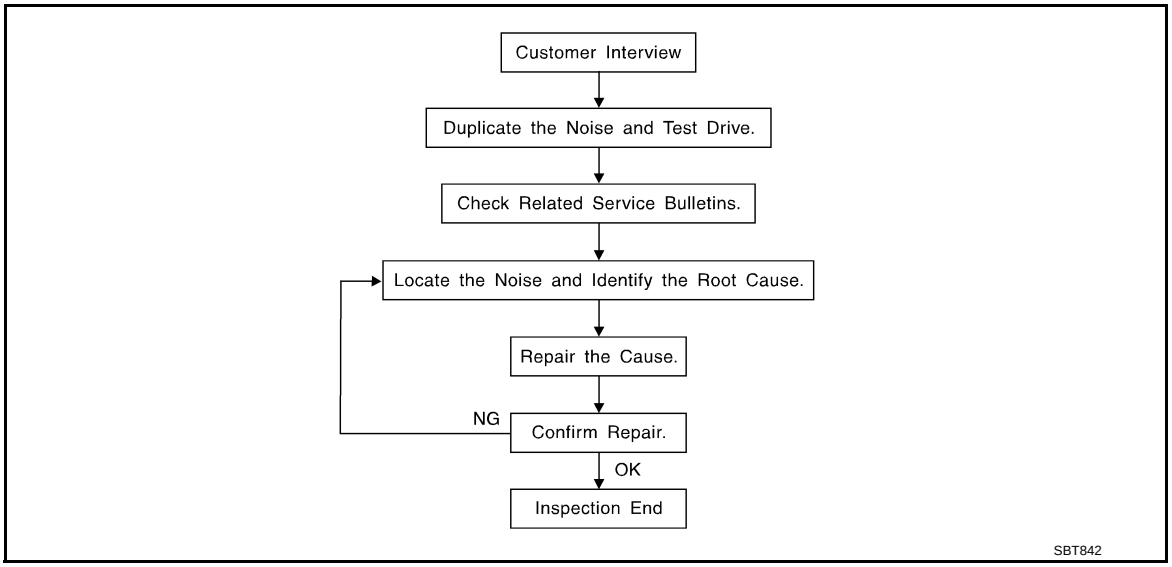

CUSTOMER INTERVIEW

Interview the customer if possible, to determine the conditions that exist when the noise occurs. Use the Diagnostic Worksheet during the interview to document the facts and conditions when the noise occurs and any of the customer's comments; refer to IP-10, "Diagnostic Worksheet". This information is necessary to duplicate the conditions that exist when the noise occurs.

- The customer may not be able to provide a detailed description or the location of the noise. Attempt to obtain all the facts and conditions that exist when the noise occurs (or does not occur).
- If there is more than one noise in the vehicle, be sure to diagnose and repair the noise that the customer is concerned about. This can be accomplished by a test drive with the customer.
- After identifying the type of noise, isolate the noise in terms of its characteristics. The noise characteristics are provided so the customer, service adviser and technician are all speaking the same language when defining the noise.
- Squeak – (Like tennis shoes on a clean floor)
  Squeak characteristics include the light contact/fast movement/brought on by road conditions/hard surfaces = higher pitch noise/softer surfaces = lower pitch noises/edge to surface = chirping
- Creak – (Like walking on an old wooden floor)
  Creak characteristics include firm contact/slow movement/twisting with a rotational movement/pitch dependent on materials/often brought on by activity.
- Rattle – (Like shaking a baby rattle)
  Rattle characteristics include the fast repeated contact/vibration or similar movement/loose parts/missing clip or fastener/incorrect clearance.
- Knock – (Like a knock on a door)
  Knock characteristics include hollow sounding/sometimes repeating/often brought on by driver action.
- Tick – (Like a clock second hand)
  Tick characteristics include gentle contacting of light materials/loose components/can be caused by driver action or road conditions.
- Thump – (Heavy, muffled knock noise)
  Thump characteristics include softer knock/dead sound often brought on by activity.
- Buzz – (Like a bumble bee)
  Buzz characteristics include high frequency rattle/firm contact.
- Often the degree of acceptable noise level will vary depending upon the person. A noise that a technician may judge as acceptable may be very irritating to the customer.
- Weather conditions, especially humidity and temperature, may have a great effect on noise level.

DUPLICATE THE NOISE AND TEST DRIVE

If possible, drive the vehicle with the customer until the noise is duplicated. Note any additional information on the Diagnostic Worksheet regarding the conditions or location of the noise. This information can be used to duplicate the same conditions when the repair is reconfirmed.
If the noise can be duplicated easily during the test drive, to help identify the source of the noise, try to duplicate the noise with the vehicle stopped by doing one or all of the following:
1) Close a door.
2) Tap or push/pull around the area where the noise appears to be coming from.
3) Rev the engine.
4) Use a floor jack to recreate vehicle “twist”.
5) At idle, apply engine load (electrical load, half-clutch on M/T model, drive position on A/T model).
6) Raise the vehicle on a hoist and hit a tire with a rubber hammer.

- Drive the vehicle and attempt to duplicate the conditions the customer states exist when the noise occurs.
- If it is difficult to duplicate the noise, drive the vehicle slowly on an undulating or rough road to stress the vehicle body.

LOCATE THE NOISE AND IDENTIFY THE ROOT CAUSE

1. Narrow down the noise to a general area. To help pinpoint the source of the noise, use a listening tool (Engine Ear or mechanics stethoscope).
2. Narrow down the noise to a more specific area and identify the cause of the noise by:

- Removing the components in the area that is are suspected to be the cause of the noise.
  Do not use too much force when removing clips and fasteners, otherwise clips and fastener can be broken or lost during the repair, resulting in the creation of new noise.
- Tapping or pushing/pulling the component that is are suspected to be the cause of the noise.
  Do not tap or push/pull the component with excessive force, otherwise the noise will be eliminated only temporarily.
- Feeling for a vibration by hand by touching the component(s) that is are suspected to be the cause of the noise.
- Placing a piece of paper between components that is are suspected to be the cause of the noise.
- Looking for loose components and contact marks.
  Refer to IP-8, "Inspection Procedure".

REPAIR THE CAUSE

- If the cause is a loose component, tighten the component securely.
- If the cause is insufficient clearance between components:
- Separate components by repositioning or loosening and retightening the component, if possible.
- Insulate components with a suitable insulator such as urethane pads, foam blocks, felt cloth tape or urethane tape. These insulators are available through the authorized Nissan Parts Department.

CAUTION:
Never use excessive force as many components are constructed of plastic and may be damaged.
NOTE:

- URETHANE PADS
  Insulates connectors, harness, etc.
- INSULATOR (Foam blocks)
  Insulates components from contact. Can be used to fill space behind a panel.
- INSULATOR (Light foam block)
- FELT CLOTHTAPE
  Used to insulate where movement does not occur. Ideal for instrument panel applications.
  The following materials, not available through NISSAN Parts Department, can also be used to repair squeaks and rattles.
- UHMW(TEFLON) TAPE
  Insulates where slight movement is present. Ideal for instrument panel applications.
- SILICONE GREASE
  Used in place of UHMW tape that is be visible or does not fit.
  Note: Will only last a few months.
- SILICONE SPRAY
  Used when grease cannot be applied.
- DUCT TAPE
  Used to eliminate movement.

CONFIRM THE REPAIR

Confirm that the cause of a noise is repaired by test driving the vehicle. Operate the vehicle under the same conditions as when the noise originally occurred. Refer to the notes on the Diagnostic Worksheet.

Inspection Procedure

INFOID:0000000005891480

Refer to Table of Contents for specific component removal and installation information.

INSTRUMENT PANEL

Most incidents are caused by contact and movement between:

1. Cluster lid A and instrument panel
2. Acrylic lens and combination meter housing
3. Instrument panel to front pillar garnish
4. Instrument panel to windshield
5. Instrument panel mounting pins
6. Wiring harnesses behind the combination meter
7. A/C defroster duct and duct joint

These incidents can usually be located by tapping or moving the components to duplicate the noise or by pressing on the components while driving to stop the noise. Most of these incidents can be repaired by applying felt cloth tape or silicon spray (in hard to reach areas). Urethane pads can be used to insulate wiring harness.

CAUTION:

Never use silicone spray to isolate a squeak or rattle. If the area is saturated with silicone, the recheck of repair becomes impossible.

CENTER CONSOLE

Components to pay attention to include:

1. Shifter assembly cover to finisher
2. A/C control unit and cluster lid C
3. Wiring harnesses behind audio and A/C control unit

The instrument panel repair and isolation procedures also apply to the center console.

DOORS

Pay attention to the following:

1. Finisher and inner panel making a slapping noise
2. Inside handle escutcheon to door finisher
3. Wiring harnesses tapping
4. Door striker out of alignment causing a popping noise on starts and stops

Tapping or moving the components or pressing on them while driving to duplicate the conditions can isolate many of these incidents. The areas can usually be insulated with felt cloth tape or insulator foam blocks to repair the noise.

TRUNK

Trunk noises are often caused by a loose jack or loose items put into the trunk by the customer.
In addition look for the following:

1. Trunk lid dumpers out of adjustment
2. Trunk lid striker out of adjustment
3. Trunk lid torsion bars knocking together
4. A loose license plate or bracket

Most of these incidents can be repaired by adjusting, securing or insulating the item(s) or component(s) causing the noise.

SUNROOF/HEADLINING

Noises in the sunroof/headlining area can often be traced to one of the following:

1. Sunroof lid, rail, linkage or seals making a rattle or light knocking noise
2. Sunvisor shaft shaking in the holder
3. Front or rear windshield touching headlining and squeaking

Again, pressing on the components to stop the noise while duplicating the conditions can isolate most of these incidents. Repairs usually consist of insulating with felt cloth tape.

SEATS

When isolating seat noise it is important to note the position the seat is in and the load placed on the seat when the noise occurs. These conditions should be duplicated when verifying and isolating the cause of the noise.

Cause of seat noise include:

1. Headrest rods and holder
2. A squeak between the seat pad cushion and frame
3. Rear seatback lock and bracket

These noises can be isolated by moving or pressing on the suspected components while duplicating the conditions under which the noise occurs. Most of these incidents can be repaired by repositioning the component or applying urethane tape to the contact area.

UNDERHOOD

Some interior noise may be caused by components under the hood or on the engine wall. The noise is then transmitted into the passenger compartment.

Causes of transmitted underhood noise include:

1. Any component mounted to the engine wall
2. Components that pass through the engine wall
3. Engine wall mounts and connectors
4. Loose radiator mounting pins
5. Hood bumpers out of adjustment
6. Hood striker out of adjustment

These noises can be difficult to isolate since they cannot be reached from the interior of the vehicle. The best method is to secure, move or insulate one component at a time and test drive the vehicle. Also, engine RPM or load can be changed to isolate the noise. Repairs can usually be made by moving, adjusting, securing, or insulating the component causing the noise.

Diagnostic Worksheet

INFOID:0000000005891481

SQUEAK & RATTLE DIAGNOSTIC WORKSHEET

Dear Nissan Customer:
We are concerned about your satisfaction with your Nissan vehicle. Repairing a squeak or rattle sometimes can be very difficult. To help us fix your Nissan right the first time, please take a moment to note the area of the vehicle where the squeak or rattle occurs and under what conditions. You may be asked to take a test drive with a service advisor or technician to ensure we confirm the noise you are hearing.

I. WHERE DOES THE NOISE COME FROM? (circle the area of the vehicle)
The illustrations are for reference only, and may not reflect the actual configuration of your vehicle.

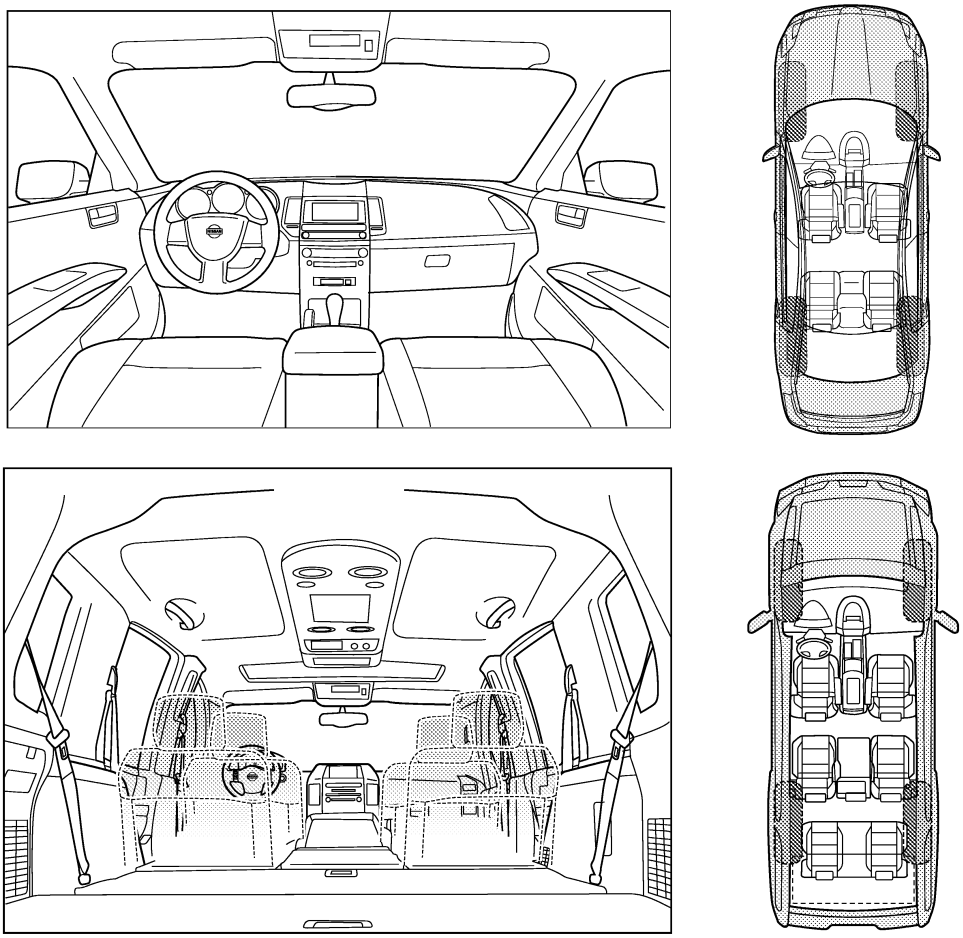

Continue to page 2 of the worksheet and briefly describe the location of the noise or rattle. In addition, please indicate the conditions which are present when the noise occurs.

PIIB8740E

SQUEAK & RATTLE DIAGNOSTIC WORKSHEET - page 2

Briefly describe the location where the noise occurs:

_____

_____

II. WHEN DOES IT OCCUR? (please check the boxes that apply)

- ☐ anytime
- ☐ 1st time in the morning
- ☐ only when it is cold outside
- ☐ only when it is hot outside
- ☐ after sitting out in the rain
- ☐ when it is raining or wet
- ☐ dry or dusty conditions
- ☐ other:

III. WHEN DRIVING:

- ☐ through driveways
- ☐ over rough roads
- ☐ over speed bumps
- ☐ only about ____ mph
- ☐ on acceleration
- ☐ coming to a stop
- ☐ on turns: left, right or either (circle)
- ☐ with passengers or cargo
- ☐ other: _____
- ☐ after driving _____ miles or _____ minutes

IV. WHAT TYPE OF NOISE

- ☐ squeak (like tennis shoes on a clean floor)
- ☐ creak (like walking on an old wooden floor)
- ☐ rattle (like shaking a baby rattle)
- ☐ knock (like a knock at the door)
- ☐ tick (like a clock second hand)
- ☐ thump (heavy, muffled knock noise)
- ☐ buzz (like a bumble bee)

TO BE COMPLETED BY DEALERSHIP PERSONNEL

Test Drive Notes:

_____

_____

_____

	YES	NO	Initials of person performing
Vehicle test driven with customer	☐	☐	_____
- Noise verified on test drive	☐	☐	_____
- Noise source located and repaired	☐	☐	_____
- Follow up test drive performed to confirm repair	☐	☐	_____

VIN: _____ Customer Name: _____

W.O.# _____ Date: _____

This form must be attached to Work Order

PIIB8742E

REMOVAL AND INSTALLATION

INSTRUMENT PANEL ASSEMBLY

Exploded View

INFOID:0000000006022703

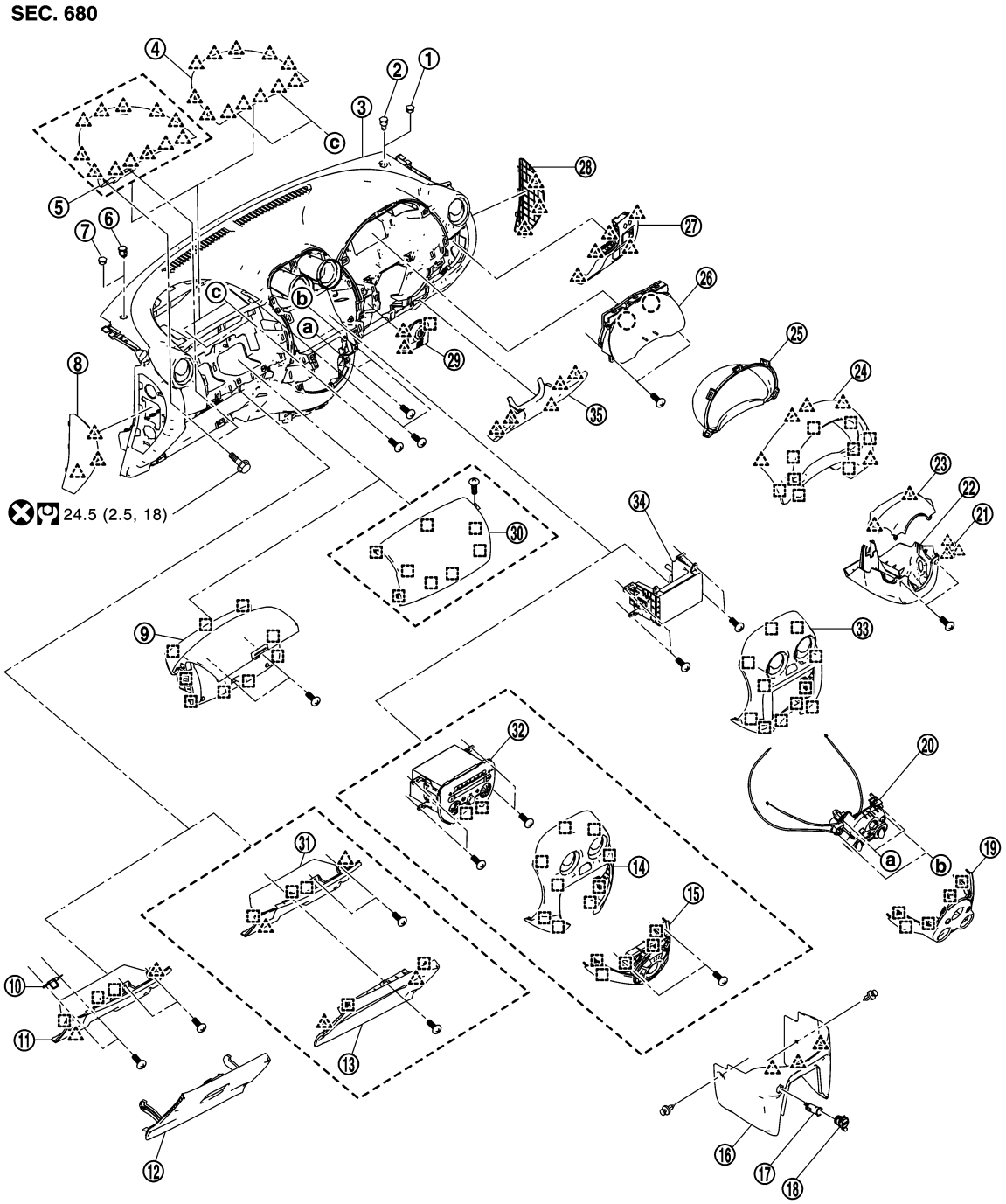

1. Switch panel B
2. Optical sensor
3. Instrument panel assembly
4. Instrument finisher D
5. Passenger air bag module
6. Sunload sensor
7. Switch panel A
8. Instrument side finisher LH
9. Glove upper box assembly
10. Glove box striker
11. Glove box cover
12. Glove box lid
13. Glove box escutcheon
14. Cluster lid C
15. A/C control (with Auto A/C)
16. Instrument lower center panel
17. Inner case
18. Socket knob
19. A/C finisher
20. A/C control (with Manual A/C)
21. Steering lock escutcheon
22. Steering column lower cover
23. Steering column upper cover
24. Instrument finisher A
25. Cluster lid A
26. Combination meter
27. Switch panel
28. Instrument side finisher RH
29. Instrument finisher E
30. Instrument finisher B
31. Glove box cover
32. Audio unit
33. Cluster lid C
34. Instrument pocket
35. Instrument lower panel RH

: Clip

: Pawl

: Metal clip

Refer to GI-4, "Components" for symbols in the figure.

Removal and Installation

INFOID:0000000006022704

WORK STEP

When removing instrument panel assembly, combination meter, and audio unit take steps as per the order shown in the following chart.

PARTS	INSTRUMENT PANEL ASSEMBLY	COMBINATION METER	AUDIO UNIT
Center console assembly	[1]		
Instrument lower center panel	[2]		
Driver air bag module	[3]		
Steering wheel	[4]		
Steering column cover	[5]	[1] Steering column upper cover	
Spiral cable	[6]		
Combination switch	[7]		
Instrument finisher A (Cluster lid A)	[8]	[2]	
Combination meter	[9]	[3]	
Cluster lid C	[10]		[1]
Audio unit or instrument pocket	[11]		[2]
A/C control (with Auto A/C) or A/C finisher (with Manual A/C)	[12]		
A/C control fixing screws (with Manual A/C)	[13]		
Instrument lower panel RH	[14]		
Switch panel	[15]		
Instrument finisher E	[16]		
Data link connector	[17]		
Hood & fuel opener lever	[18]		
Front body side welt RH	[19]		
Front pillar garnish RH	[20]		
Instrument side finisher RH	[21]		

Optical sensor (with Auto light)	[22]		
Sunload sensor (with Auto A/C)	[23]		
Glove box lid or Glove box escutcheon	[24]		
Glove upper box assembly or Instrument finisher B	[25]		
Glove box cover	[26]		
Instrument finisher D or Passenger air bag module	[27]		
Front body side welt LH	[28]		
Front pillar garnish LH	[29]		
Instrument side finisher LH	[30]		
Instrument panel assembly	[31]		

[ ]: Number indicates step in removal procedures.

WARNING:
Before servicing, turn ignition switch OFF, disconnect battery negative terminal and wait 3 minutes or more.
CAUTION:
When removing, always use a remover tool that is made of plastic.

REMOVAL

1. Remove center console assembly.
   1. Shift selector lever knob in “N” position. (A/T models)
   2. Remove shift knob. (M/T models)
   3. Release the parking brake lever by turning the adjusting nut with a deep socket wrench and loosening the cable. Refer to PB-2, "Inspection and Adjustment".
   4. Remove center console assembly fixing clips (A).

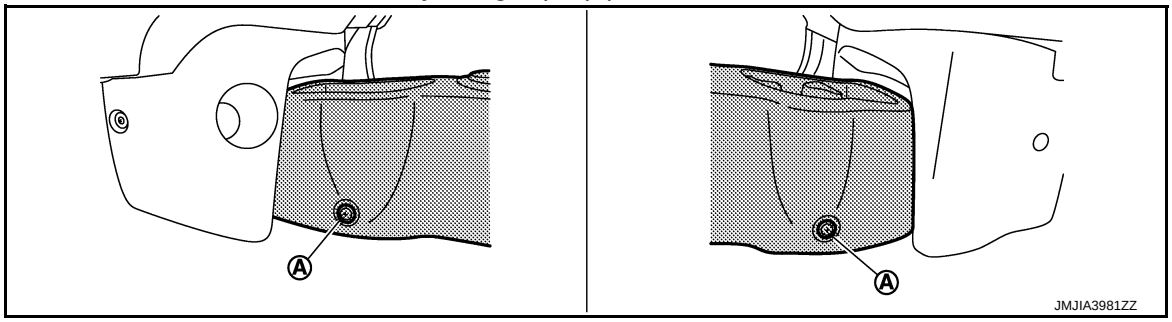

   5. Pull up center console assembly to disengage the clips.

      : Clip

   6. Disconnect harness connectors. (with Switches)

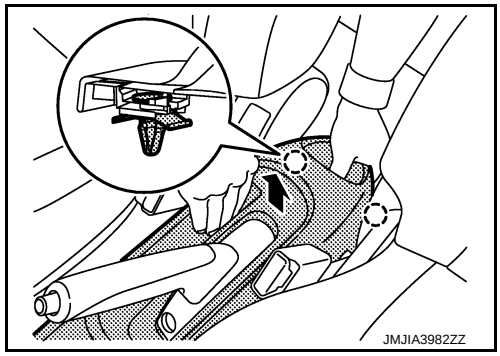

   7. Slide front seat RH to the rearmost position and operate to the fully reclining status.
   8. Slide front seat LH to the frontmost position and tilt seatback to the fully forward status.

9. Lift up rear portion of center console assembly while rotating and remove center console assembly.

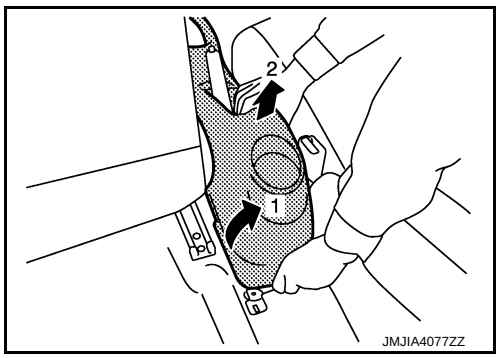

2. Remove instrument lower center panel.
   1. Put front seat to rearmost position.
   2. Remove instrument lower center panel fixing clips (A).

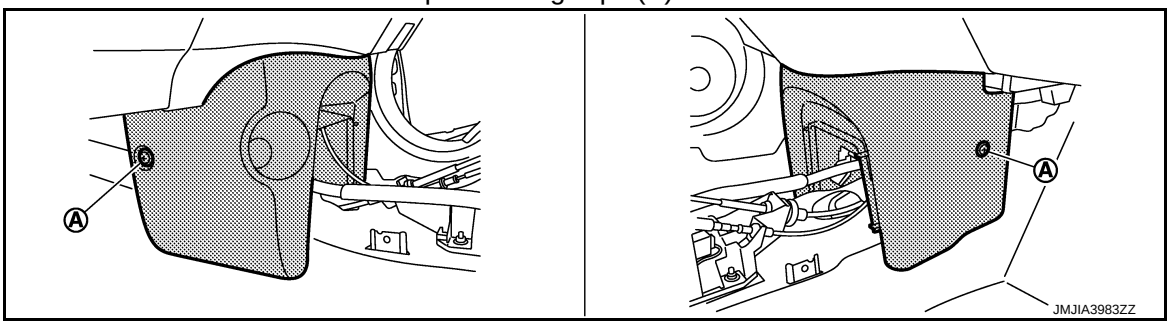

   3. Pull back instrument lower center panel, and then disengage the pawls.
   4. Disconnect harness connectors. (with Power socket)

△ : Pawl

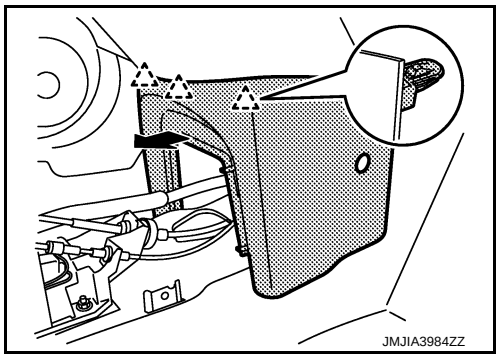

3. Remove driver air bag module. Refer to SR-13, "Removal and Installation".
4. Remove steering wheel. Refer to ST-9, "Removal and Installation".
5. Remove steering column covers.
   1. Remove steering column cover fixing screws (A).
   2. Place the tilt to the lowest level.
   3. Pull up steering column upper cover (1), and then disengage steering column upper cove fixing pawls.
   4. Remove steering column upper cover.
   5. Pull down the steering column lower cover (2), and then remove the steering column lower cover.

△ : Pawl

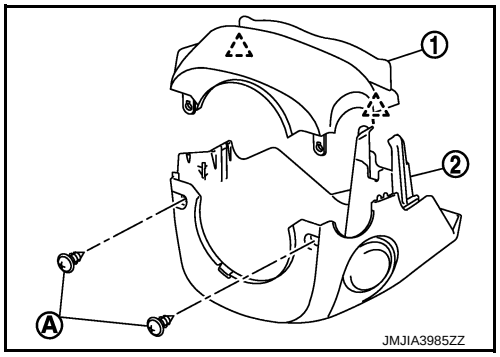

6. Remove spiral cable. Refer to SR-16, "Removal and Installation".
7. Remove combination switch. Refer to BCS-58, "Removal and Installation".

8. Remove instrument finisher A.

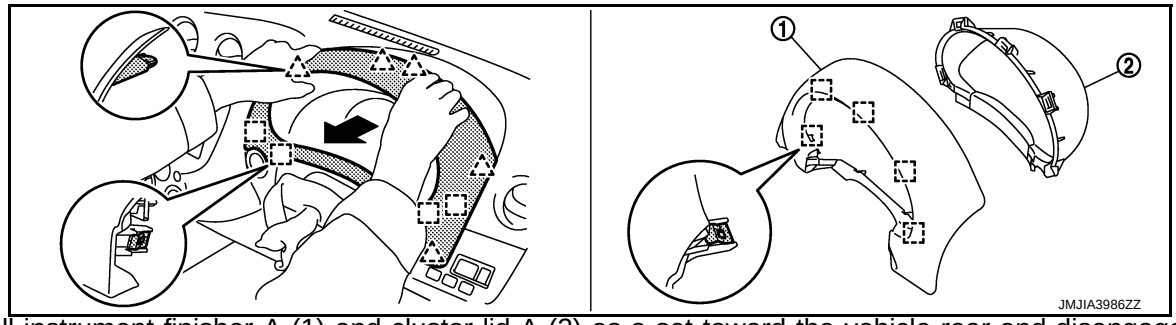

Pull instrument finisher A (1) and cluster lid A (2) as a set toward the vehicle rear and disengage pawls and metal clips.

△ : Pawl

⬚ : Metal clip

9. Remove combination meter. Refer to MWI-51, "Removal and Installation".
10. Remove cluster lid C.

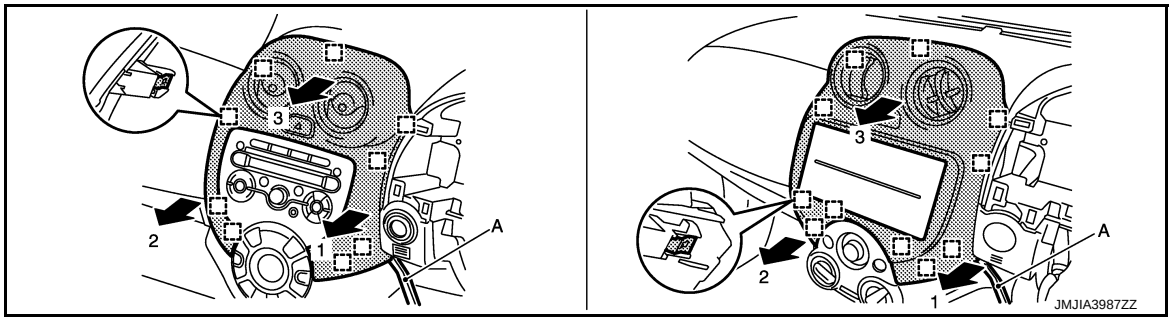

Cluster lid C (with Auto A/C) Cluster lid C (with Manual A/C)

⬚ : Metal clip

1. Insert a remover tool (A) between cluster lid C and instrument panel assembly, and then disengage metal clips of lower side.
2. Pull back cluster lid C, and then disengage metal clips of upper side.
3. Disconnect harness connectors.

11. Remove audio unit or instrument pocket.
    - Audio unit: Refer to AV-16, "Removal and Installation".
    - Instrument pocket
    - Remove instrument pocket fixing screws.
    - Pull back instrument pocket.
    - Remove harness connector and antenna.
12. Remove A/C controller (with Auto A/C) or A/C finisher (with Manual A/C).

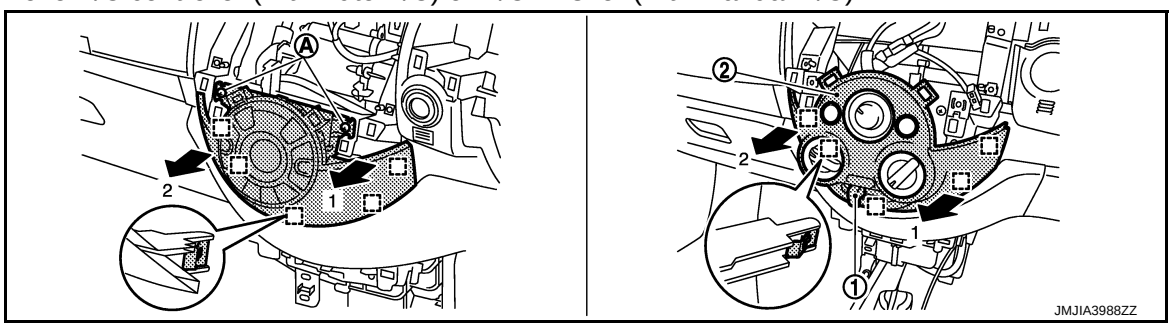

A/C controller (with Auto A/C) A/C finisher (with Manual A/C)

⬚ : Metal clip

- A/C controller (with Auto A/C): Refer to HAC-75, "Removal and Installation".

- Remove screws (A).
- Pull back A/C controller, and then disengage metal clips.
- Disconnect harness connector.

• A/C finisher (with Manual A/C)

- Remove intake door lever knob (1). Refer to HAC-115, "Removal and Installation".
- Pull back A/C finisher (2), and then disengage metal clips.

13. Remove A/C control fixing screws (with Manual A/C). Refer to HAC-115, "Exploded View".
14. Remove instrument lower panel RH.
    Pull back the instrument lower panel RH, and then disengage the pawls.

    : Pawl

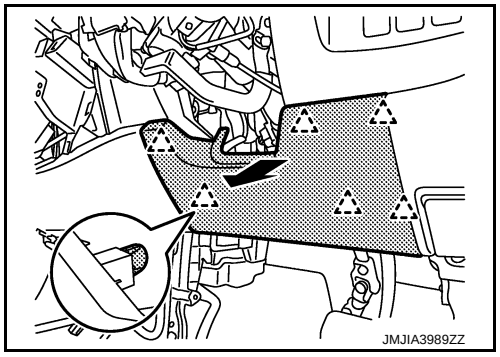

15. Remove switch panel.
    1. Insert a remover tool (A) between switch panel and instrument panel assembly, and then disengage pawls.
    2. Pull back switch panel.
    3. Disconnect harness connectors.

    : Pawl

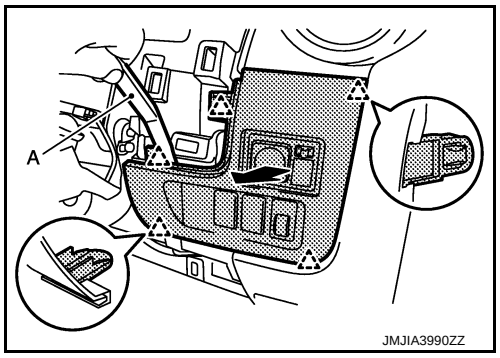

16. Remove instrument finisher E.
    1. Insert a remover tool (A) between instrument finisher E and instrument panel assembly, and then disengage pawls and metal clip.
    2. Pull back instrument finisher E.
    3. Disconnect harness connectors. (with Intelligent key or Auto A/C)

    : Pawl

    : Metal clip

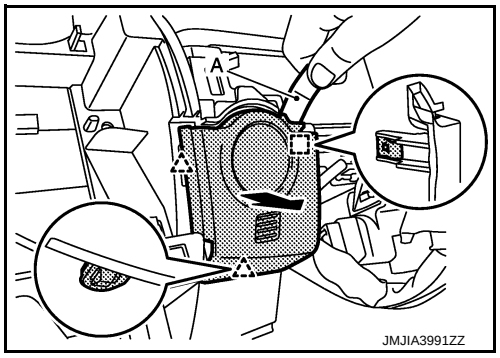

17. Remove data link connector from instrument panel assembly. Refer to GI-41, "Description".
18. Remove hood and fuel lid opener lever mounting bolts. Refer to DLK-131, "Exploded View".
19. Remove front body side welt RH. Refer to INT-23, "BODY SIDE WELT : Removal and Installation".
20. Remove front pillar garnish RH. Refer to INT-22, "FRONT PILLAR GARNISH : Removal and Installation".
21. Remove instrument side finisher RH.
    1. Insert a remover tool (A) between instrument side finisher RH and instrument lower panel RH, and then disengage pawls.
    2. Pull the instrument side finisher RH crosswise.

    : Pawl

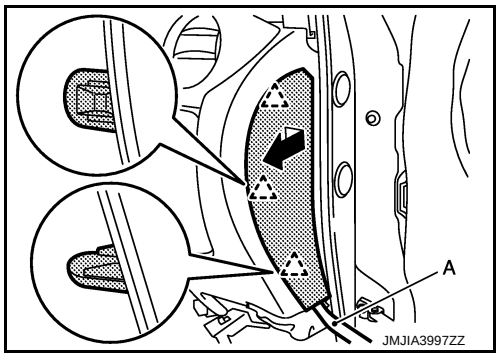

22. Remove optical sensor (with Auto light system) Refer to XX-XX, "*****".
23. Remove sunload sensor (with Auto A/C). Refer to HAC-78, "Removal and Installation".
24. Remove glove box lid or glove box escutcheon.

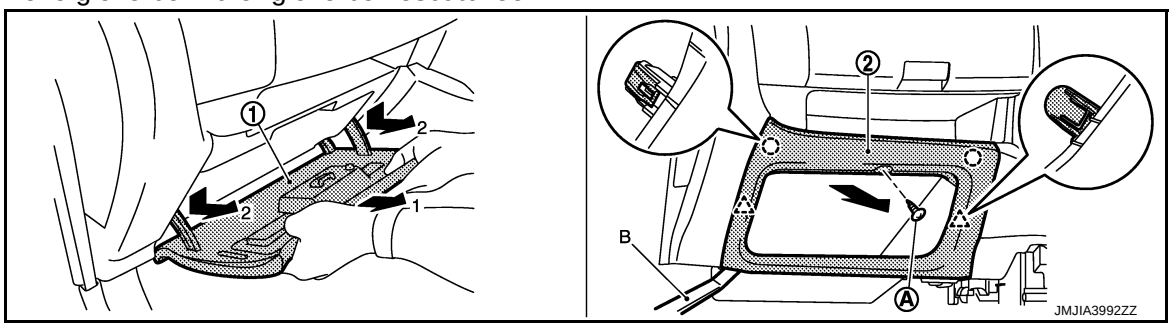

Glove box lid

Glove box escutcheon

: Clip

: Pawl

- Glove box lid
- Open the glove box lid (1).
- Pull the glove box lid toward vehicle upper, and then disengage the joint from the instrument panel assembly.
- Glove box escutcheon
- Remove glove box escutcheon fixing screws (A).
- Insert a remover tool (B) between glove box escutcheon and instrument panel assembly, and then disengage clips and pawls.
- Pull back glove box escutcheon.

25. Remove glove upper box assembly or instrument finisher B.

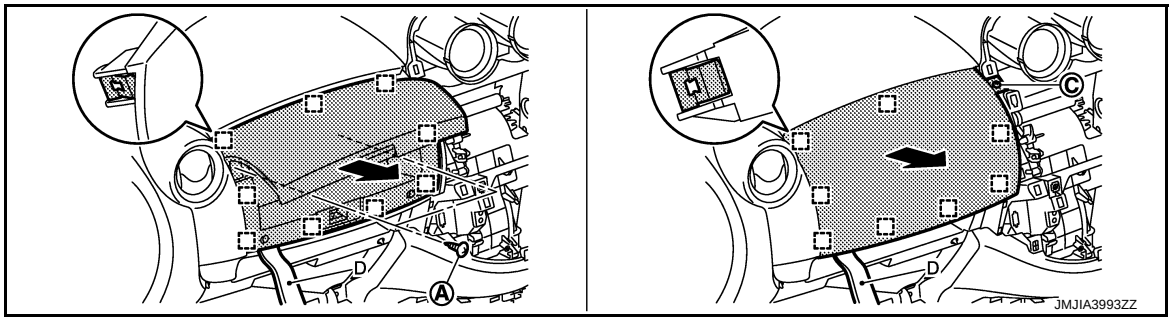

Glove upper box assembly (with Glove box lid)

Instrument finisher B (without Glove box lid)

: Metal clip

- Glove upper box assembly
- Remove glove upper box assembly fixing screws (A).
- Insert a remover tool (D) between glove upper box assembly and glove box cover, and then disengage metal clips.
- Pull back glove upper box assembly.
- Instrument finisher B
- Remove instrument finisher B fixing screws (C).
- Insert a remover tool (D) between glove upper box assembly and glove box cover, and then disengage metal clips.
- Pull back glove upper box assembly.

26. Remove glove box cover.
    1. Remove glove box cover fixing screws (A).
    2. Pull back glove box cover, and disengage pawl and metal clips.

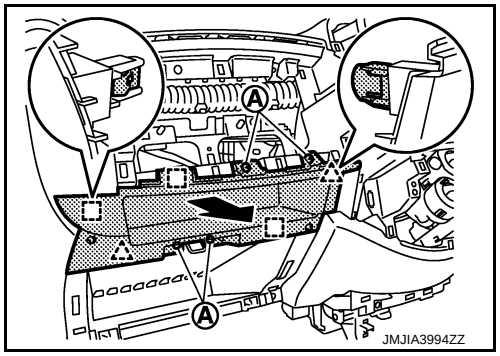

: Pawl

: Metal clip

NOTE:
For models with glove box lid, glove cover is tightened together to glove box striker.

27. Remove Instrument finisher D or front passenger air bag module.
    - Instrument finisher D
    - Remove instrument finisher D fixing screws (A).
    - Lift up instrument finisher D, and then disengage pawls.

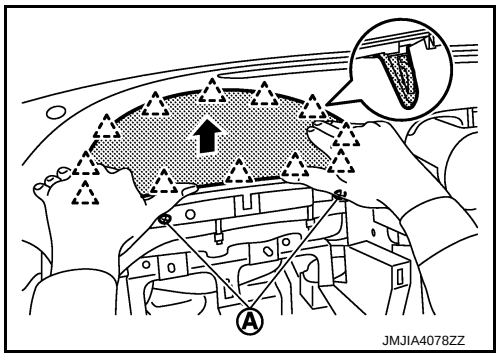

: Pawl

- Front passenger air bag module: Refer to SR-19, "Removal and Installation".

28. Remove front body side welt LH. Refer to INT-23, "BODY SIDE WELT : Removal and Installation".
29. Remove front pillar garnish LH. Refer to INT-22, "FRONT PILLAR GARNISH : Removal and Installation".
30. Remove instrument side finisher LH.
    1. Insert a remover tool (A) between instrument side finisher LH and instrument lower panel LH, and then disengage pawls.
    2. Pull the instrument side finisher LH direction of the arrow.

CAUTION:
Apply protective tape on the part to protect from damage.

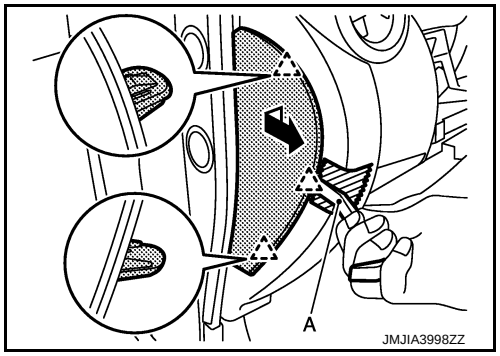

: Pawl

31. Remove instrument panel assembly.

1. Remove instrument panel assembly mounting screws (A).

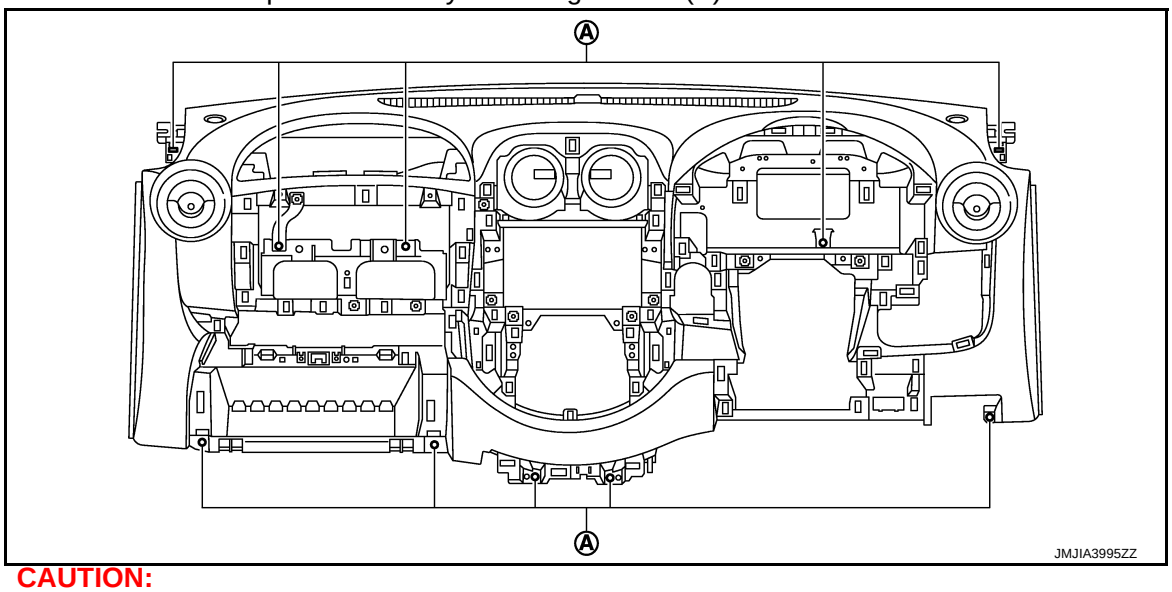

CAUTION:
Cover tool with a shop cloth to prevent windshield glass from being damaged.

2. Disengage harness (A) and harness (B) of front pillar LH and RH portions from instrument panel assembly.

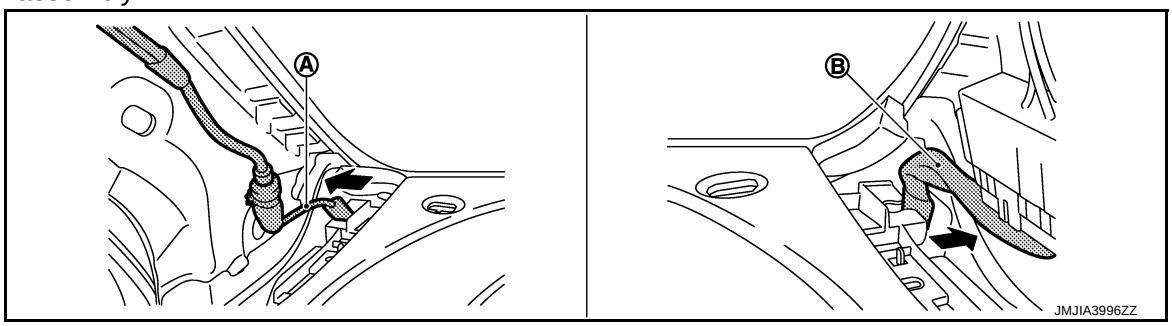

3. Remove instrument panel from passenger door opening portion.
CAUTION:
- **Cover A/T shift selector upper surface with a shop cloth to prevent it from being damaged.**
- **When removing instrument panel assembly, 2 workers are required to prevent it from dropping.**

32. Remove the following parts after removing instrument panel assembly.
- Side ventilator grille LH/RH: Refer to VTL-5, "SIDE VENTILATOR GRILLE : Removal and Installation".
- Center ventilator duct LH/RH: Refer to VTL-6, "CENTER VENTILATOR DUCT : Removal and Installation".

INSTALLATION

Install in the reverse order of removal.

CENTER CONSOLE ASSEMBLY

Exploded View

INFOID:0000000006022705

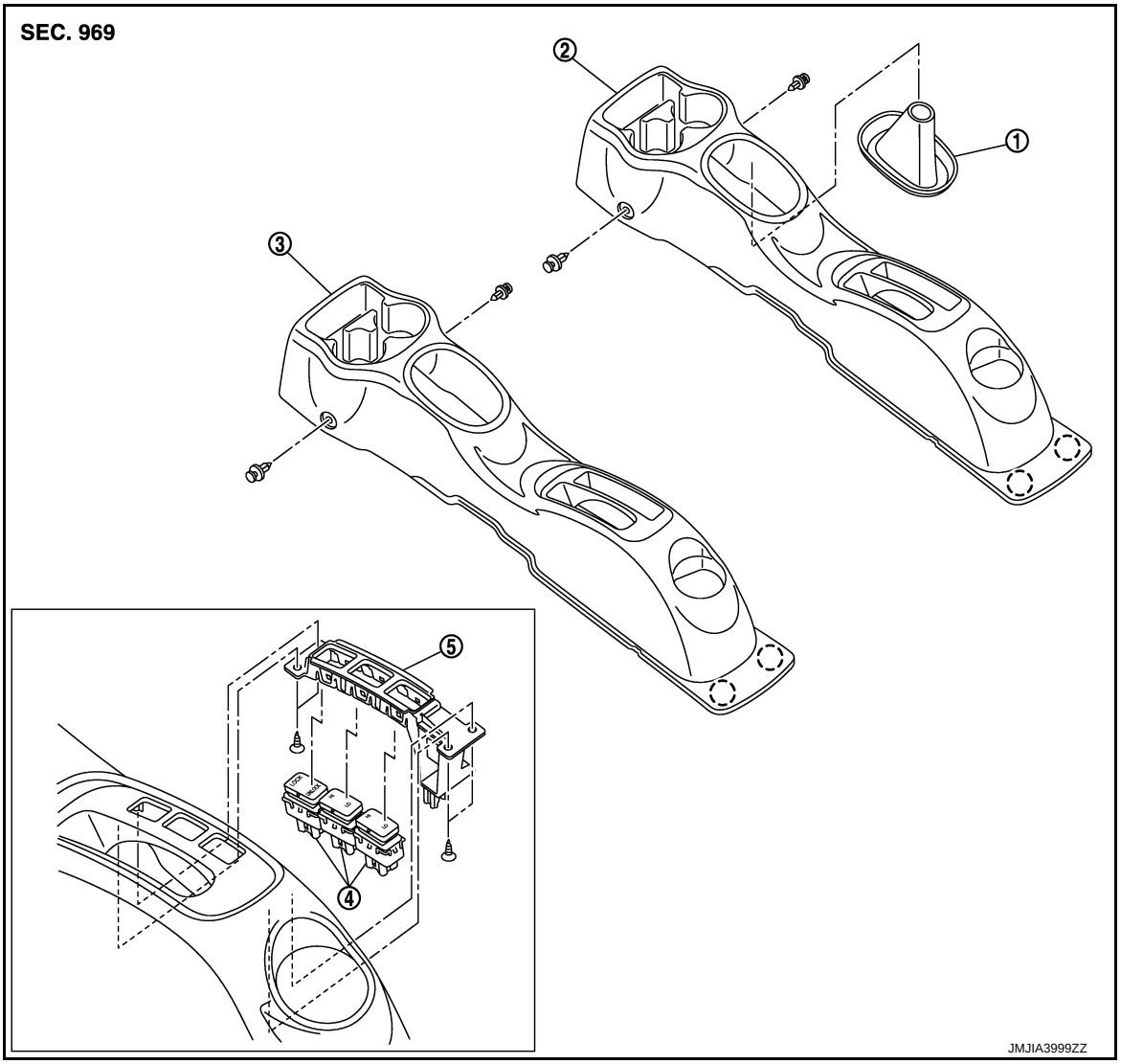

1. Console boot
2. Center console assembly (M/T models)
3. Center console assembly (A/T models)
4. Switches
5. Console switch bracket

◌ : Clip

Removal and Installation

INFOID:0000000006044252

CAUTION:
When removing, always use a remover tool that is made of plastic.

REMOVAL

1. Shift selector lever knob in “N” position. (A/T models)
2. Remove shift knob. (M/T models)
3. Release the parking brake lever by turning the adjusting nut with a deep socket wrench and loosening the cable. Refer to PB-2, "Inspection and Adjustment".

4. Remove center console assembly fixing clips (A).

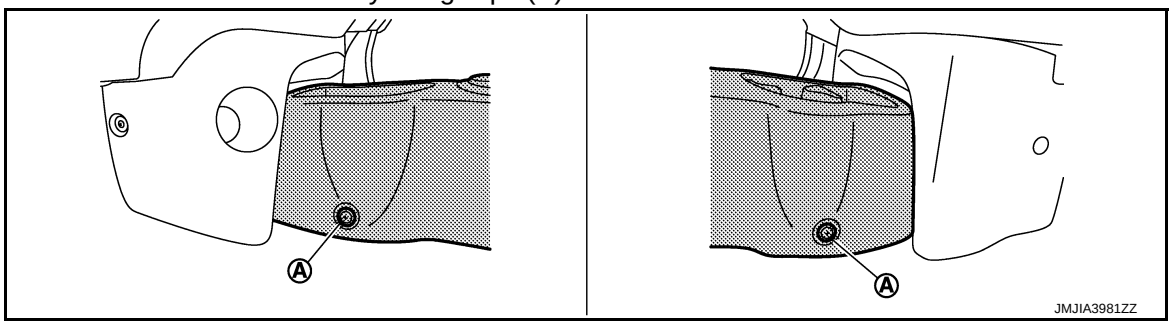

5. Pull up center console assembly to disengage the clips.

: Clip

6. Disconnect harness connectors. (with Switches)

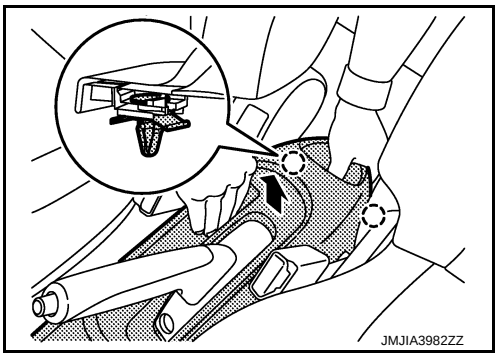

7. Slide front seat RH to the rearmost position and operate to the fully reclining status.
8. Slide front seat LH to the frontmost position and tilt seatback to the fully forward status.
9. Lift up rear portion of center console assembly while rotating and remove center console assembly.

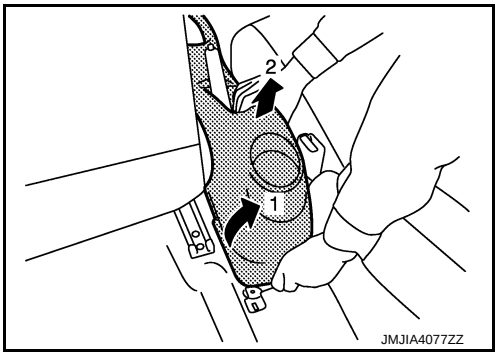

INSTALLATION

Install in the reverse order of removal.

SECTION LAN

LAN SYSTEM

CONTENTS

CAN FUNDAMENTAL

PRECAUTION 3

PRECAUTIONS 3
- Precautions for Trouble Diagnosis 3
- Precautions for Harness Repair 3

SYSTEM DESCRIPTION 4

SYSTEM 4

CAN COMMUNICATION SYSTEM 4
- CAN COMMUNICATION SYSTEM : System Description 4
- CAN COMMUNICATION SYSTEM : System Diagram 4
- CAN COMMUNICATION SYSTEM : CAN Communication Control Circuit 5

DIAG ON CAN 5
- DIAG ON CAN : Description 5
- DIAG ON CAN : System Diagram 6

TROUBLE DIAGNOSIS 7
- Condition of Error Detection 7
- Symptom When Error Occurs in CAN Communication System 7
- CAN Diagnosis with CONSULT-III 10
- Self-Diagnosis 11
- CAN Diagnostic Support Monitor 11
- How to Use CAN Communication Signal Chart 13

BASIC INSPECTION 14

DIAGNOSIS AND REPAIR WORKFLOW 14
- Trouble Diagnosis Flow Chart 14
- Trouble Diagnosis Procedure 14

CAN

HOW TO USE THIS MANUAL 19

HOW TO USE THIS SECTION 19
- Caution 19
- Abbreviation List 19

PRECAUTION 20

PRECAUTIONS 20
- Precaution for Supplemental Restraint System (SRS) "AIR BAG" and "SEAT BELT PRE-TENSIONER" 20
- Precautions for Trouble Diagnosis 20
- Precautions for Harness Repair 20

SYSTEM DESCRIPTION 22

COMPONENT PARTS 22
- Component Parts Location 22

SYSTEM 23

CAN COMMUNICATION SYSTEM 23
- CAN COMMUNICATION SYSTEM : CAN System Specification Chart 23
- CAN COMMUNICATION SYSTEM : CAN Communication Signal Chart 23

WIRING DIAGRAM 26

CAN SYSTEM 26
- Wiring Diagram 26

BASIC INSPECTION 27

DIAGNOSIS AND REPAIR WORKFLOW 27
- Interview Sheet 27

DTC/CIRCUIT DIAGNOSIS 28

MALFUNCTION AREA CHART 28
- Main Line 28
- Branch Line 28
- Short Circuit 28

MAIN LINE BETWEEN IPDM-E AND DLC CIRCUIT 29
Diagnosis Procedure 29

ECM BRANCH LINE CIRCUIT 30
Diagnosis Procedure 30

ABS BRANCH LINE CIRCUIT 31
Diagnosis Procedure 31

IPDM-E BRANCH LINE CIRCUIT 32
Diagnosis Procedure 32

TCM BRANCH LINE CIRCUIT 33
Diagnosis Procedure 33

DLC BRANCH LINE CIRCUIT 34
Diagnosis Procedure 34

EPS BRANCH LINE CIRCUIT 35
Diagnosis Procedure 35

M&A BRANCH LINE CIRCUIT 36
Diagnosis Procedure 36

BCM BRANCH LINE CIRCUIT 37
Diagnosis Procedure 37

CAN COMMUNICATION CIRCUIT 38
Diagnosis Procedure 38

CAN SYSTEM (TYPE 2)

DTC/CIRCUIT DIAGNOSIS 40

MAIN LINE BETWEEN IPDM-E AND DLC CIRCUIT 40
Diagnosis Procedure 40

ECM BRANCH LINE CIRCUIT 41
Diagnosis Procedure 41

IPDM-E BRANCH LINE CIRCUIT 42
Diagnosis Procedure 42

DLC BRANCH LINE CIRCUIT 43
Diagnosis Procedure 43

EPS BRANCH LINE CIRCUIT 44
Diagnosis Procedure 44

M&A BRANCH LINE CIRCUIT 45
Diagnosis Procedure 45

BCM BRANCH LINE CIRCUIT 46
Diagnosis Procedure 46

CAN COMMUNICATION CIRCUIT 47
Diagnosis Procedure 47

CAN SYSTEM (TYPE 3)

DTC/CIRCUIT DIAGNOSIS 49

MAIN LINE BETWEEN IPDM-E AND DLC CIRCUIT 49
Diagnosis Procedure 49

ECM BRANCH LINE CIRCUIT 50
Diagnosis Procedure 50

IPDM-E BRANCH LINE CIRCUIT 51
Diagnosis Procedure 51

TCM BRANCH LINE CIRCUIT 52
Diagnosis Procedure 52

DLC BRANCH LINE CIRCUIT 53
Diagnosis Procedure 53

EPS BRANCH LINE CIRCUIT 54
Diagnosis Procedure 54

M&A BRANCH LINE CIRCUIT 55
Diagnosis Procedure 55

BCM BRANCH LINE CIRCUIT 56
Diagnosis Procedure 56

CAN COMMUNICATION CIRCUIT 57
Diagnosis Procedure 57

CAN SYSTEM (TYPE 4)

DTC/CIRCUIT DIAGNOSIS 59

MAIN LINE BETWEEN IPDM-E AND DLC CIRCUIT 59
Diagnosis Procedure 59

ECM BRANCH LINE CIRCUIT 60
Diagnosis Procedure 60

ABS BRANCH LINE CIRCUIT 61
Diagnosis Procedure 61

IPDM-E BRANCH LINE CIRCUIT 62
Diagnosis Procedure 62

TCM BRANCH LINE CIRCUIT 63
Diagnosis Procedure 63

DLC BRANCH LINE CIRCUIT 64
Diagnosis Procedure 64

EPS BRANCH LINE CIRCUIT 65
Diagnosis Procedure 65

M&A BRANCH LINE CIRCUIT 66
Diagnosis Procedure 66

BCM BRANCH LINE CIRCUIT 67
Diagnosis Procedure 67

CAN COMMUNICATION CIRCUIT 68
Diagnosis Procedure 68

PRECAUTION

PRECAUTIONS

Precautions for Trouble Diagnosis

INFOID:0000000005908877

CAUTION:
- **Never apply 7.0 V or more to the measurement terminal.**
- **Use a tester with open terminal voltage of 7.0 V or less.**
- **Turn the ignition switch OFF and disconnect the battery cable from the negative terminal when checking the harness.**

Precautions for Harness Repair

INFOID:0000000005908878

- Solder the repaired area and wrap tape around the soldered area.
  NOTE:
  A fray of twisted lines must be within 110 mm (4.33 in).

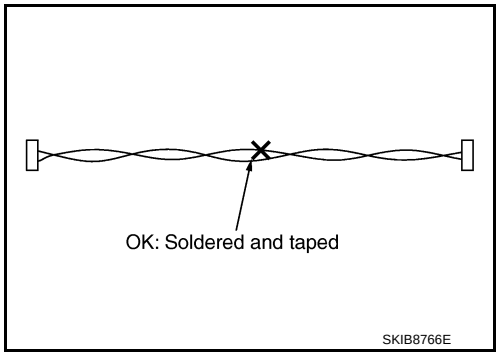

- Bypass connection is never allowed at the repaired area.
  NOTE:
  Bypass connection may cause CAN communication error. The spliced wire becomes separated and the characteristics of twisted line are lost.

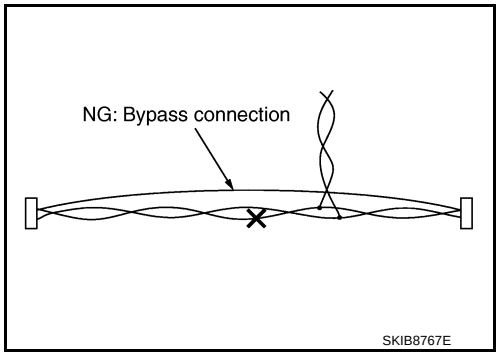

- Replace the applicable harness as an assembly if error is detected on the shield lines of CAN communication line.

SYSTEM DESCRIPTION

SYSTEM

CAN COMMUNICATION SYSTEM

CAN COMMUNICATION SYSTEM : System Description

INFOID:0000000005908879

- CAN communication is a multiplex communication system. This enables the system to transmit and receive large quantities of data at high speed by connecting control units with two communication lines (CAN-H and CAN-L).
- Control units on the CAN network transmit signals using the CAN communication control circuit. They receive only necessary signals from other control units to operate various functions.
- CAN communication lines adopt twisted-pair line style (two lines twisted) for noise immunity.

CAN COMMUNICATION SYSTEM : System Diagram

INFOID:0000000005908880

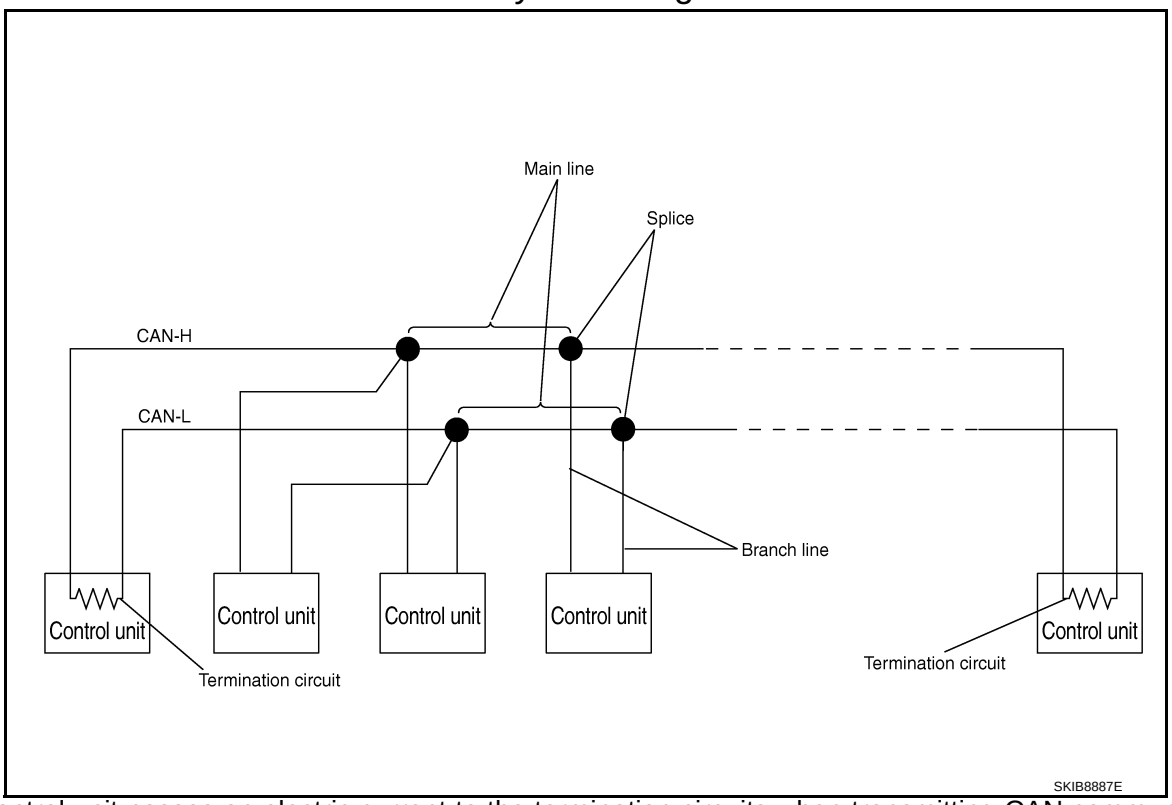

Each control unit passes an electric current to the termination circuits when transmitting CAN communication signal. The termination circuits produce an electrical potential difference between CAN-H and CAN-L. CAN communication system transmits and receives CAN communication signals by the potential difference.

Component	Description
Main line	CAN communication line between splices
Branch line	CAN communication line between splice and a control unit
Splice	A point connecting a branch line with a main line
Termination circuit	Refer to LAN-5, "CAN COMMUNICATION SYSTEM : CAN Communication Control Circuit".

CAN COMMUNICATION SYSTEM : CAN Communication Control Circuit

INFOID:0000000005908881

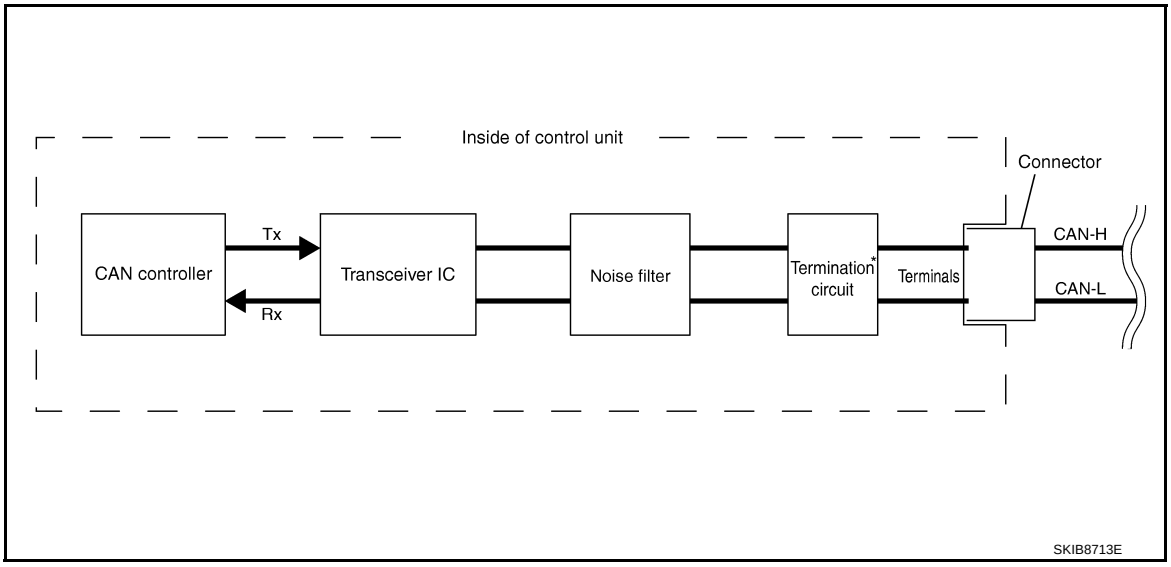

Component	System description
CAN controller	It controls CAN communication signal transmission and reception, error detection, etc.
Transceiver IC	It converts digital signal into CAN communication signal, and CAN communication signal into digital signal.
Noise filter	It eliminates noise of CAN communication signal.
Termination circuit* (Resistance of approx. 120 Ω)	It produces potential difference.

*: These are the only control units wired with both ends of CAN communication system.

DIAG ON CAN

DIAG ON CAN : Description

INFOID:0000000005908882

“Diag on CAN” is a diagnosis using CAN communication instead of previous DDL1 and DDL2 communication lines, between control units and diagnosis unit.

DIAG ON CAN : System Diagram

INFOID:0000000005908883

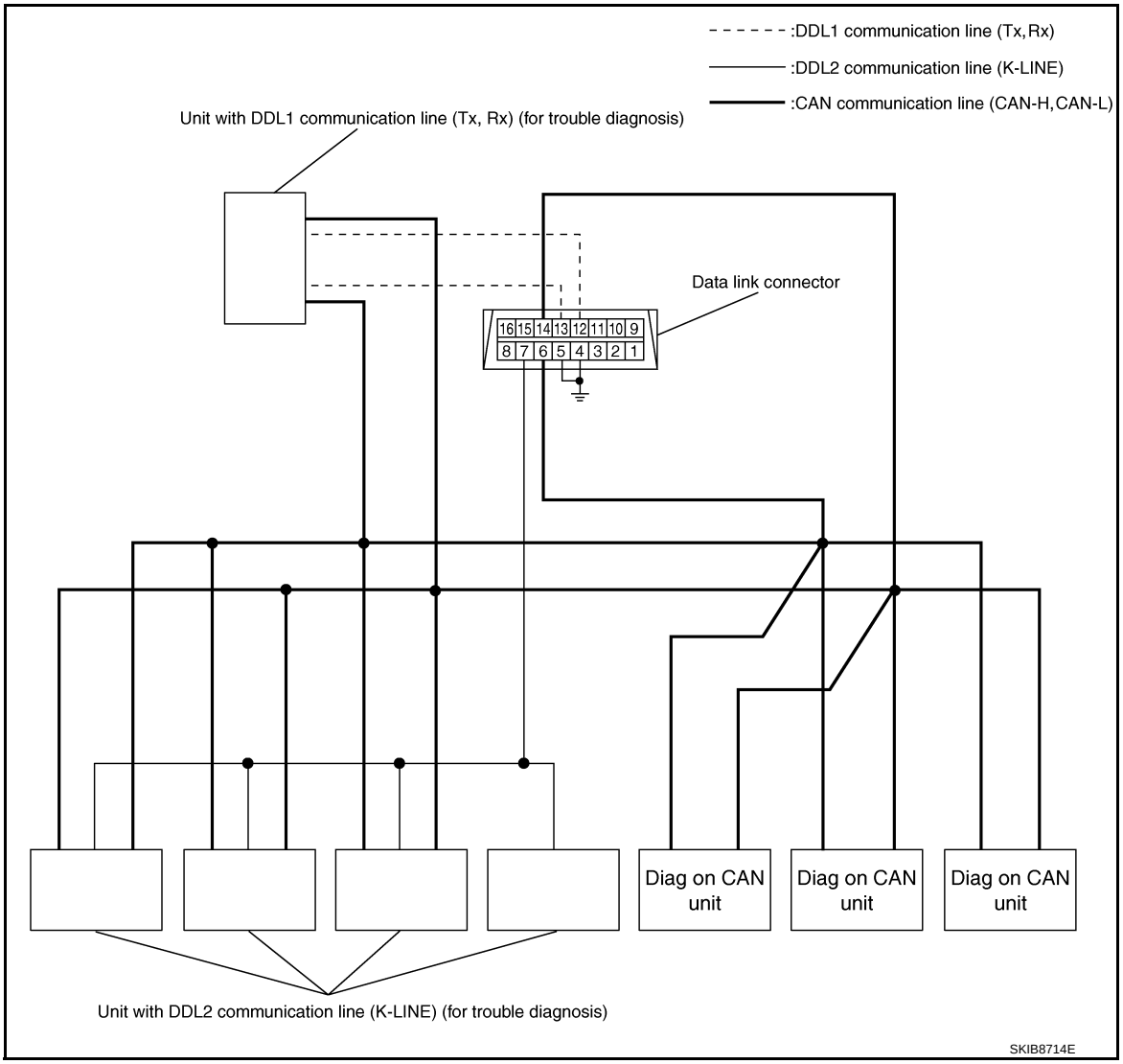

Name	Harness	Description
DDL1	Tx Rx	It is used for trouble diagnosis. (CAN-H and CAN-L are used for controlling)
DDL2	K-LINE	It is used for trouble diagnosis. (CAN-H and CAN-L are used for controlling)
Diag on CAN	CAN-H CAN-L	It is used for trouble diagnosis and control.

TROUBLE DIAGNOSIS

Condition of Error Detection

INFOID:0000000005908884

DTC of CAN communication is indicated on SELF-DIAG RESULTS on CONSULT-III if a CAN communication signal is not transmitted or received between units for 2 seconds or more.

NOTE:

DTCs of CAN communication are as follows:

- U0101
- U0140
- U0164
- U1000
- U1001

CAN COMMUNICATION SYSTEM ERROR

- CAN communication line open (CAN-H, CAN-L, or both)
- CAN communication line short (ground, between CAN communication lines, other harnesses)
- Error of CAN communication control circuit of the unit connected to CAN communication line

WHEN DTC OF CAN COMMUNICATION IS INDICATED EVEN THOUGH CAN COMMUNICATION SYSTEM IS NORMAL

- Removal/installation of parts: Error may be detected when removing and installing CAN communication unit and related parts while turning the ignition switch ON. (A DTC except for CAN communication may be detected.)
- Fuse blown out (removed): CAN communication of the unit may cease.
- Voltage drop: Error may be detected if voltage drops due to discharged battery when turning the ignition switch ON (Depending on the control unit which carries out CAN communication).
- Error may be detected if the power supply circuit of the control unit, which carries out CAN communication, malfunctions (Depending on the control unit which carries out CAN communication).
- Error may be detected if reprogramming is not completed normally.

CAUTION:

CAN communication system is normal if DTC of CAN communication is indicated on SELF-DIAG RESULTS of CONSULT-III under the above conditions. Erase the memory of the self-diagnosis of each unit.

Symptom When Error Occurs in CAN Communication System

INFOID:0000000005908885

In CAN communication system, multiple units mutually transmit and receive signals. Each unit cannot transmit and receive signals if any error occurs on CAN communication line. Under this condition, multiple control units related to the root cause malfunction or go into fail-safe mode.

ERROR EXAMPLE

NOTE:

- Each vehicle differs in symptom of each unit under fail-safe mode and CAN communication line wiring.
- Refer to LAN-19, "Abbreviation List" for the unit abbreviation.

Example: TCM branch line open circuit

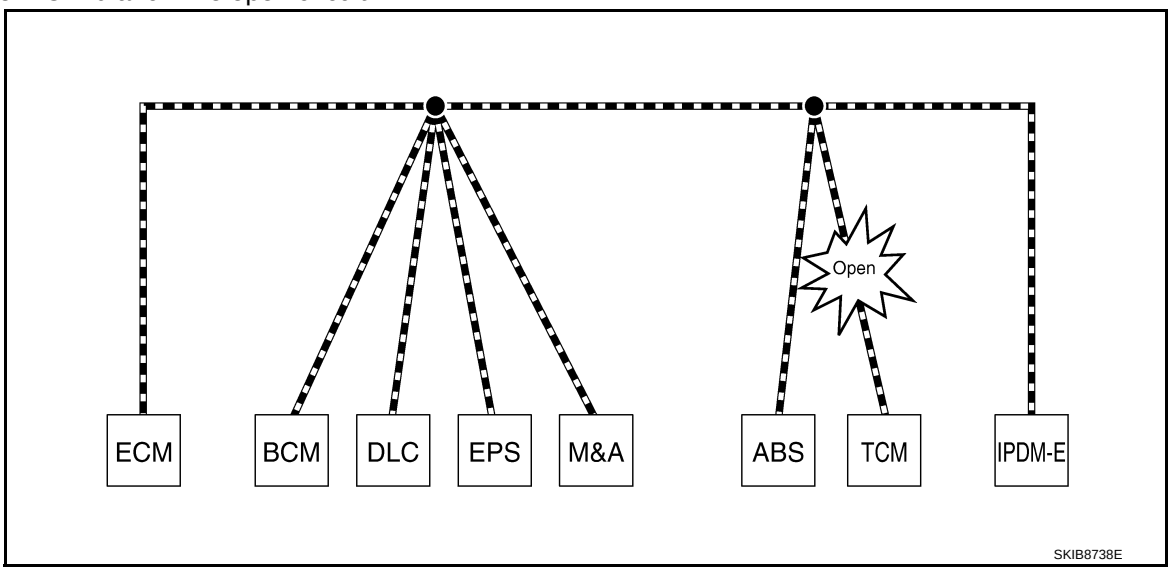

Unit name	Symptom
ECM	Engine torque limiting is affected, and shift harshness increases.
BCM	Reverse warning chime does not sound.
EPS control unit	Normal operation.
Combination meter	• Shift position indicator and OD OFF indicator turn OFF. • Warning lamps turn ON.
ABS actuator and electric unit (control unit)	Normal operation.
TCM	No impact on operation.
IPDM E/R	Normal operation.

Example: Data link connector branch line open circuit

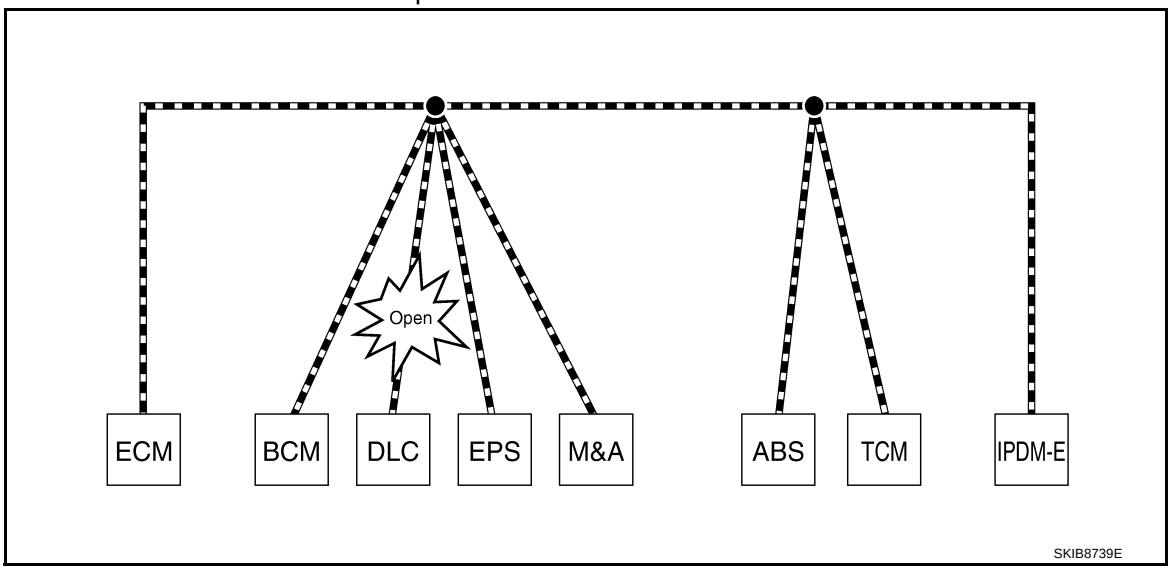

Unit name	Symptom
ECM	Normal operation.
BCM	
EPS control unit	
Combination meter	
ABS actuator and electric unit (control unit)	
TCM	
IPDM E/R	

NOTE:
- When data link connector branch line is open, transmission and reception of CAN communication signals are not affected. Therefore, no symptoms occur. However, be sure to repair malfunctioning circuit.
- The model (all units on CAN communication system are Diag on CAN) cannot perform CAN diagnosis with CONSULT-III if the following error occurs. The error is judged by the symptom.

Error	Difference of symptom
Data link connector branch line open circuit	Normal operation.
CAN-H, CAN-L harness short-circuit	Most of the units which are connected to the CAN communication system enter fail-safe mode or are deactivated.

Example: Main Line Between Data Link Connector and ABS Actuator and Electric Unit (Control Unit) Open Circuit

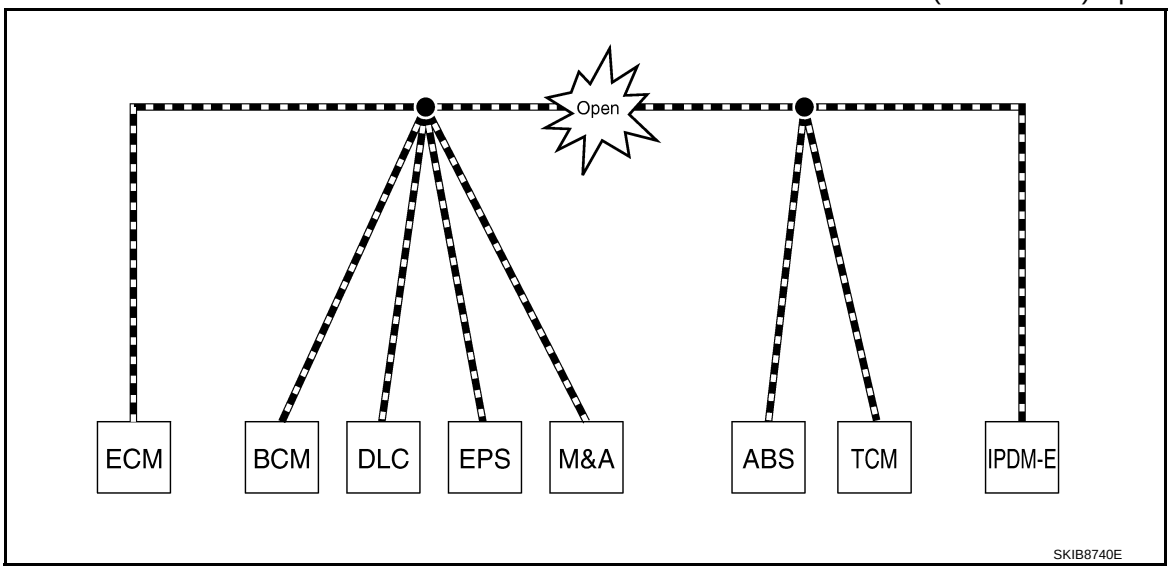

Unit name	Symptom
ECM	Engine torque limiting is affected, and shift harshness increases.
BCM	• Reverse warning chime does not sound. • The front wiper moves under continuous operation mode even though the front wiper switch being in the intermittent position.
EPS control unit	The steering effort increases.
Combination meter	• The shift position indicator and OD OFF indicator turn OFF. • The speedometer is inoperative. • The odo/trip meter stops.
ABS actuator and electric unit (control unit)	Normal operation.
TCM	No impact on operation.
IPDM E/R	When the ignition switch is ON, • The headlamps (Lo) turn ON. • The cooling fan continues to rotate.

Example: CAN-H, CAN-L Harness Short Circuit

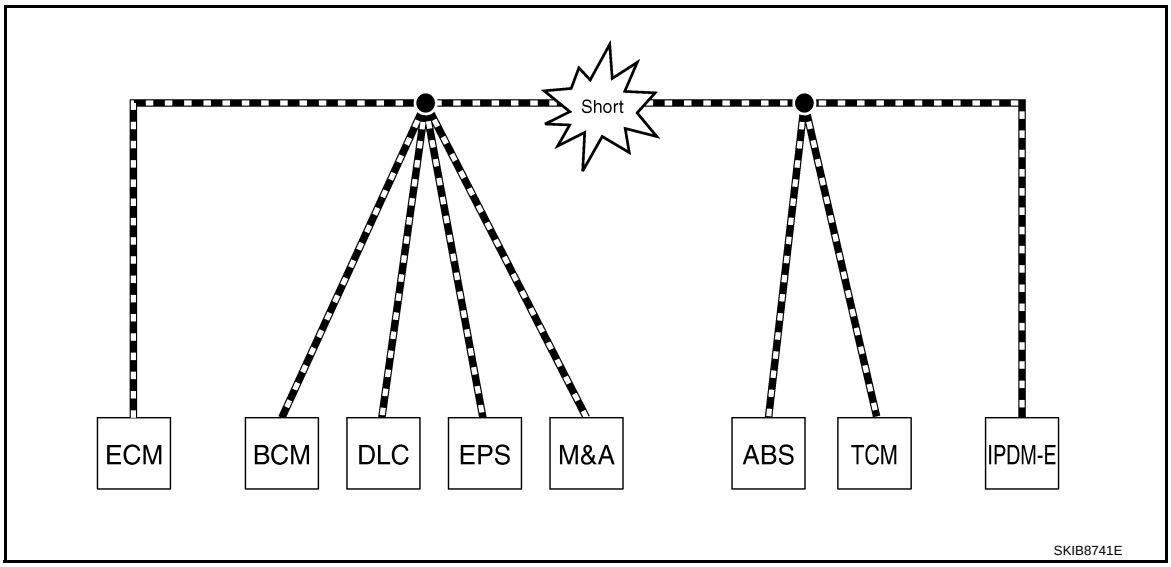

Unit name	Symptom
ECM	• Engine torque limiting is affected, and shift harshness increases. • Engine speed drops.
BCM	• Reverse warning chime does not sound. • The front wiper moves under continuous operation mode even though the front wiper switch being in the intermittent position. • The room lamp does not turn ON. • The engine does not start (if an error or malfunction occurs while turning the ignition switch OFF.) • The steering lock does not release (if an error or malfunction occurs while turning the ignition switch OFF.)
EPS control unit	The steering effort increases.
Combination meter	• The tachometer and the speedometer do not move. • Warning lamps turn ON. • Indicator lamps do not turn ON.
ABS actuator and electric unit (control unit)	Normal operation.
TCM	No impact on operation.
IPDM E/R	When the ignition switch is ON, • The headlamps (Lo) turn ON. • The cooling fan continues to rotate.

CAN Diagnosis with CONSULT-III

INFOID:0000000005908886

CAN diagnosis on CONSULT-III extracts the root cause by receiving the following information.
- Response to the system call
- Control unit diagnosis information
- Self-diagnosis
- CAN diagnostic support monitor

Self-Diagnosis

INFOID:0000000005908887

DTC	Self-diagnosis item (CONSULT-III indication)	DTC detection condition		Inspection/Action
U0101	LOST COMM (TCM)	When ECM is not transmitting or receiving CAN communication signal of OBD (emission-related diagnosis) from TCM for 2 seconds or more.		Start the inspection. Refer to the applicable section of the indicated control unit.
U0140	LOST COMM (BCM)	When ECM is not transmitting or receiving CAN communication signal of OBD (emission-related diagnosis) from BCM for 2 seconds or more.		
U0164	LOST COMM (HVAC)	When ECM is not transmitting or receiving CAN communication signal of OBD (emission-related diagnosis) from A/C auto amp. or unified meter and A/C amp. for 2 seconds or more.		
U1000	CAN COMM CIRCUIT	ECM	When ECM is not transmitting or receiving CAN communication signal of OBD (emission-related diagnosis) for 2 seconds or more.	
		Except for ECM	When a control unit (except for ECM) is not transmitting or receiving CAN communication signal for 2 seconds or more.	
U1001	CAN COMM CIRCUIT	When ECM is not transmitting or receiving CAN communication signal other than OBD (emission-related diagnosis) for 2 seconds or more.		
U1002	SYSTEM COMM	When a control unit is not transmitting or receiving CAN communication signal for 2 seconds or less.		
U1010	CONTROL UNIT(CAN)	When an error is detected during the initial diagnosis for CAN controller of each control unit.		Replace the control unit indicating “U1010” or “P0607”.
P0607	ECM			

CAN Diagnostic Support Monitor

INFOID:0000000005908888

MONITOR ITEM (CONSULT-III)

Example: CAN DIAG SUPPORT MNTR indication

Without PAST

ECM	PRSNT	PAST
INITIAL DIAG	OK	
TRANSMIT DIAG	OK	
TCM	OK	
VDC/TCS/ABS	UNKWN	
METER/M&A	OK	
ICC	UNKWN	
BCM/SEC	OK	
IPDM E/R	OK	

With PAST

ECM	PRSNT	PAST
TRANSMIT DIAG	OK	OK
VDC/TCS/ABS	-	-
METER/M&A	OK	OK
BCM/SEC	OK	OK
ICC	-	-
HVAC	-	-
TCM	OK	OK
EPS	-	-
IPDM E/R	OK	OK
e4WD	-	-
AWD/4WD	OK	OK

JSMIA0015GB

Without PAST

Item	PRSNT	Description
Initial diagnosis	OK	Normal at present
	NG	Control unit error (Except for some control units)

Item	PRSNT	Description
Transmission diagnosis	OK	Normal at present
	UNKWN	Unable to transmit signals for 2 seconds or more.
		Diagnosis not performed
Control unit name (Reception diagnosis)	OK	Normal at present
	UNKWN	Unable to receive signals for 2 seconds or more.
		Diagnosis not performed
		No control unit for receiving signals. (No applicable optional parts)

With PAST

Item	PRSNT	PAST	Description
Transmission diagnosis	OK	OK	Normal at present and in the past
		1 – 39	Normal at present, but unable to transmit signals for 2 seconds or more in the past. (The number indicates the number of ignition switch cycles from OFF to ON.)
	UNKWN	0	Unable to transmit signals for 2 seconds or more at present.
Control unit name (Reception diagnosis)	OK	OK	Normal at present and in the past
		1 – 39	Normal at present, but unable to receive signals for 2 seconds or more in the past. (The number indicates the number of ignition switch cycles from OFF to ON.)
	UNKWN	0	Unable to receive signals for 2 seconds or more at present.
	–	–	Diagnosis not performed.
			No control unit for receiving signals. (No applicable optional parts)

MONITOR ITEM (ON-BOARD DIAGNOSIS)

NOTE:

For some models, CAN communication diagnosis result is received from the vehicle monitor.

Example: Vehicle Display

Item	Result indicated	Error counter	Description
CAN_COMM (Initial diagnosis)	OK	0	Normal at present
	NG	1 – 50	Control unit error (The number indicates how many times diagnosis has been run.)
CAN_CIRC_1 (Transmission diagnosis)	OK	0	Normal at present
	UNKWN	1 – 50	Unable to transmit for 2 seconds or more at present. (The number indicates how many times diagnosis has been run.)
CAN_CIRC_2 – 9 (Reception diagnosis of each unit)	OK	0	Normal at present
	UNKWN	1 – 50	Unable to transmit for 2 seconds or more at present. (The number indicates how many times diagnosis has been run.)
			Diagnosis not performed.
			No control unit for receiving signals. (No applicable optional parts)

How to Use CAN Communication Signal Chart

INFOID:0000000005908889

The CAN communication signal chart lists the signals needed for trouble diagnosis. It is useful for detecting the root cause by finding a signal related to the symptom, and by checking transmission and reception unit.

Example: Tachometer does not move even though the engine rotates.

T: Transmit R: Receive

Signal name/Connecting unit	ECM	BCM	M&A	STRG	ABS	IPDM-E
A/C compressor feedback signal	T		R			
A/C compressor request signal	T					R
Accelerator pedal position signal	T				R	
Cooling fan motor operation signal	T					R
Engine coolant temperature signal	T		R			
Engine speed signal	T		R		R	
Fuel consumption monitor signal	T		R			
Malfunction indicator lamp signal	T		R			
A/C switch signal	R	T				
Ignition switch signal		T				R
Sleep/wake up signal		T	R			R

No communication between ECM and M&A.

It indicates that an error occurs between ECM and M&A (Shaded area).

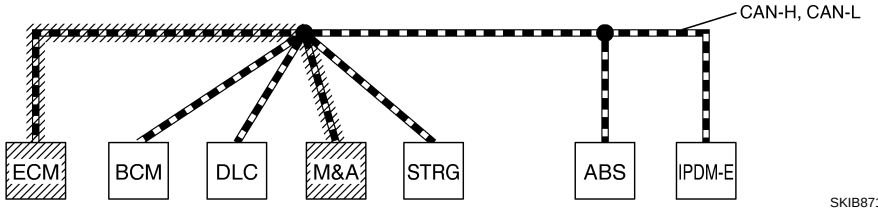

SKIB8715E

BASIC INSPECTION

DIAGNOSIS AND REPAIR WORKFLOW

Trouble Diagnosis Flow Chart

INFOID:0000000005908890

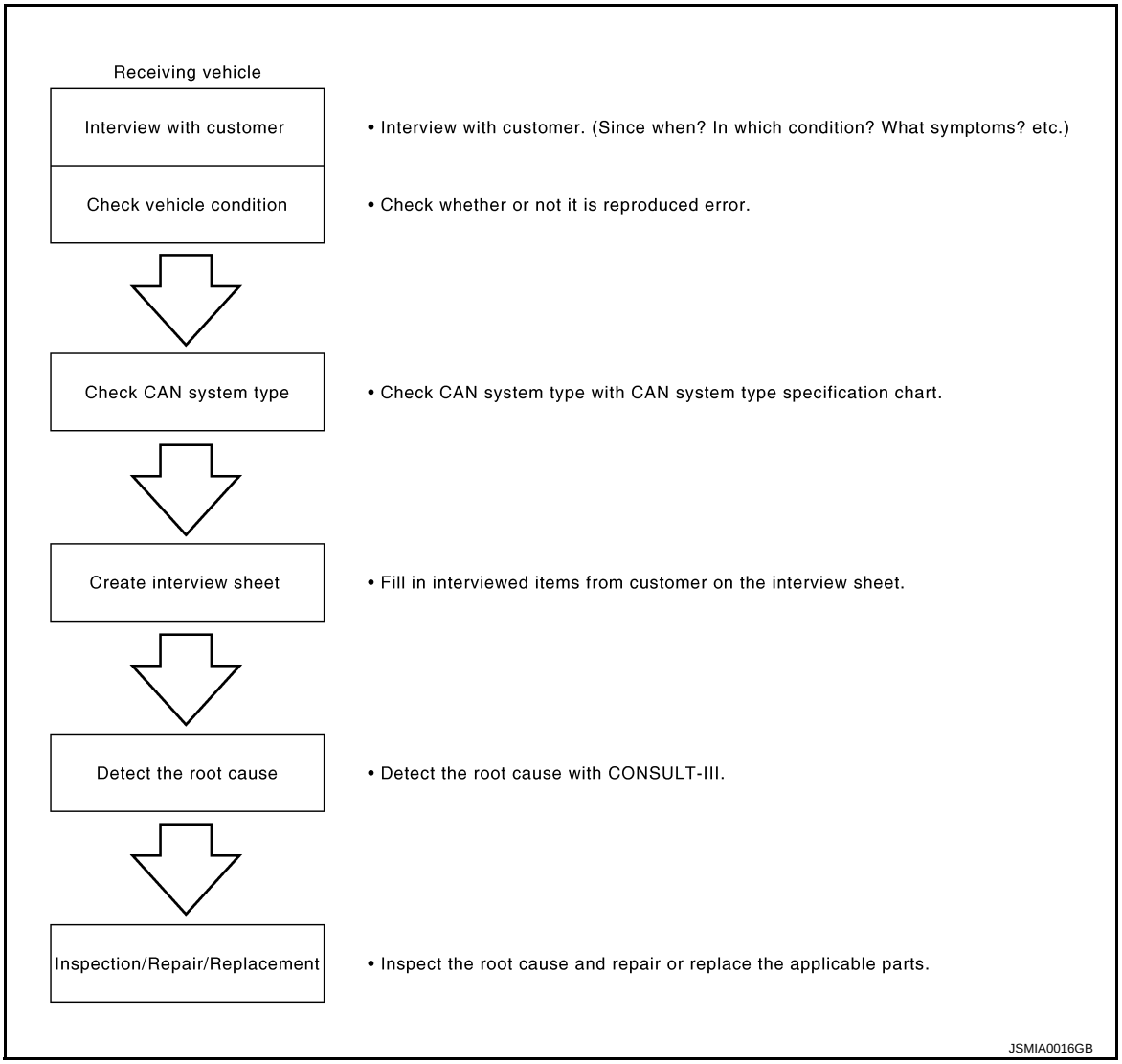

Trouble Diagnosis Procedure

INFOID:0000000005908891

INTERVIEW WITH CUSTOMER

Interview with the customer is important to detect the root cause of CAN communication system errors and to understand vehicle condition and symptoms for proper trouble diagnosis.

Points in interview
- What: Parts name, system name
- When: Date, Frequency
- Where: Road condition, Place
- In what condition: Driving condition/environment
- Result: Symptom

NOTE:
- Check normal units as well as error symptoms.
- Example: Circuit between ECM and the combination meter is judged normal if the customer indicates tachometer functions normally.
- When a CAN communication system error is present, multiple control units may malfunction or go into fail-safe mode.

- Indication of the combination meter is important to detect the root cause because it is the most obvious to the customer, and it performs CAN communication with many units.

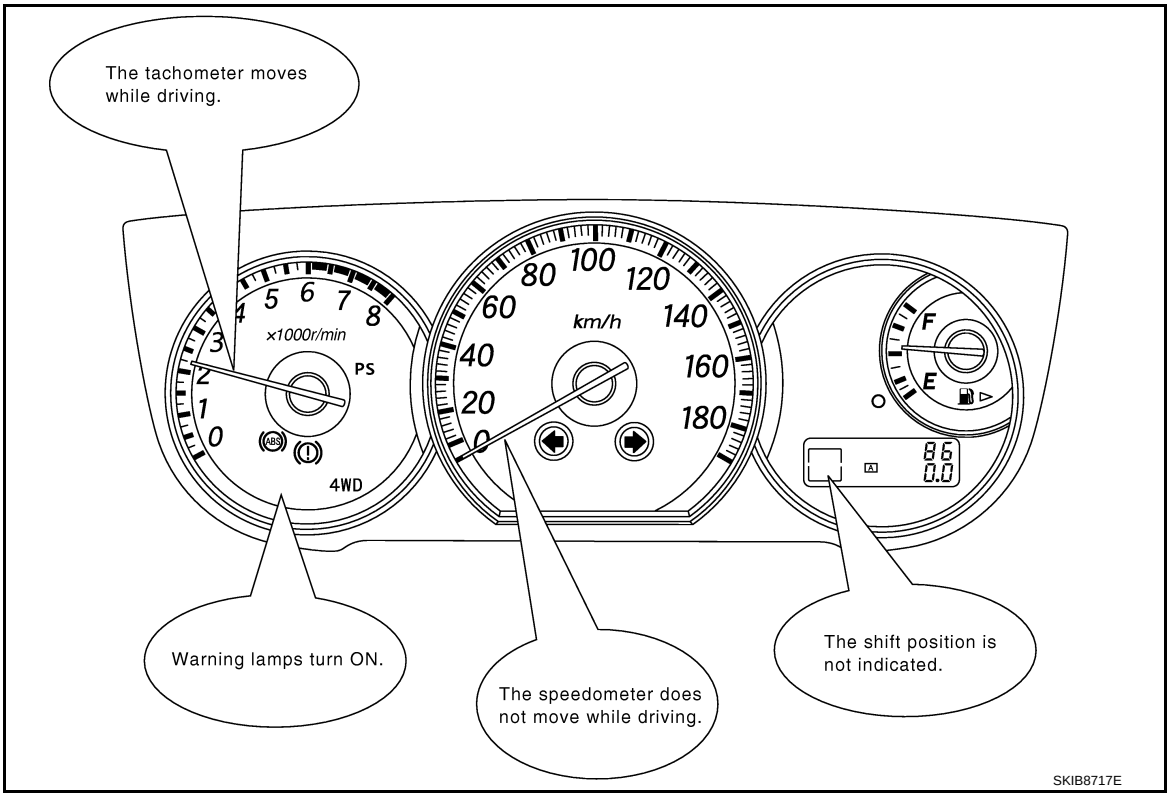

INSPECTION OF VEHICLE CONDITION

Check whether the symptom is reproduced or not.

NOTE:

Do not turn the ignition switch OFF or disconnect the battery cable while reproducing the error. The error may temporarily correct itself, making it difficult to determine the root cause.

CHECK OF CAN SYSTEM TYPE (HOW TO USE CAN SYSTEM TYPE SPECIFICATION CHART)

Determine CAN system type based on vehicle equipment.

NOTE:

- This chart is used if CONSULT-III does not automatically recognize CAN system type.
- There are two styles for CAN system type specification charts. Depending on the number of available system types, either style A or style B may be used.

CAN System Type Specification Chart (Style A)

NOTE:

CAN system type is easily checked with the vehicle equipment identification information shown in the chart.

Example:
Vehicle is equipped as follows: Wagon, AWD, VQ35DE, CVT, VDC, and Intelligent Key system. (shows an example of CAN system type.)

CAN System Specification Chart
Determine CAN system type from the following specification chart.

Body type	Wagon					
Axle	2WD				AWD	
Engine	QR25DE		VQ35DE			
Transmission	A/T		CVT			
Brake control	ABS				VDC	
Intelligent Key system		×		×		×
CAN system type	1	2	3	4	5	6
CAN communication signal chart	XX-XX. “TYPE 1/TYPE 2”		XX-XX. “TYPE 3/TYPE 4”		XX-XX. “TYPE 5/TYPE 6”	

×: Applicable

Check the vehicle equipment with the vehicle identification number plate.

Check the vehicle equipment.

The number indicates the CAN system type of the vehicle.

VEHICLE EQUIPMENT IDENTIFICATION INFORMATION
NOTE:
Check CAN system type from the vehicle shape and equipment.

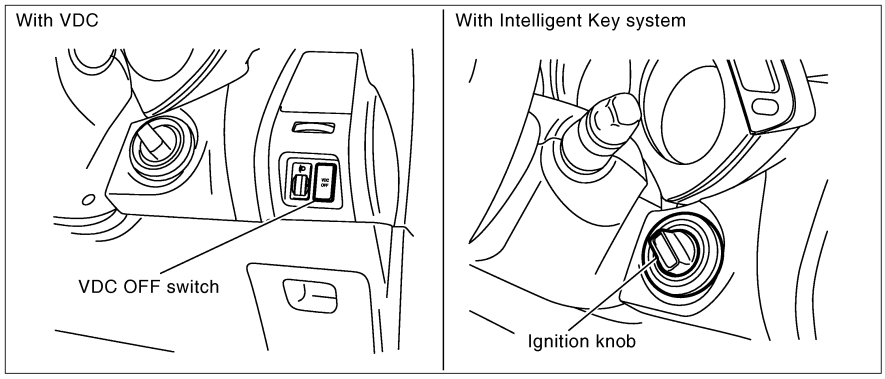

In the above example,
- Checking VDC OFF switch leads to judge whether or not VDC is equipped.
- Checking the ignition knob leads to judge whether or not Intelligent Key system is equipped.

For the above case, CAN system type is “6”.

JSMIA0017GB

CAN System Type Specification Chart (Style B)
NOTE:

CAN system type is easily checked with the vehicle equipment identification information shown in the chart.

Example:
Vehicle is equipped as follows: Sedan, 2WD, MR20DE, CVT, ABS, Active AFS, Intelligent Key system, Navigation system and Automatic drive positioner. (◯ shows an example of CAN system type.)

CAN System Specification Chart
Refer to the specification as shown in the chart.

Body type	Sedan		
Axle	2WD		AWD
Engine	HR15DE	MR20DE	HR15DE
Transmission	A/T	CVT	A/T
Brake control	ABS		
Specification chart	XX.XX. "SPECIFICATION CHART A"	XX.XX. "SPECIFICATION CHART B"	XX.XX. "SPECIFICATION CHART C"

Check the vehicle equipment with the vehicle identification number plate.
Check the vehicle equipment.
Select the applicable vehicle equipment. Refer to the specification chart.

×: Applicable

SPECIFICATION CHART B
Determine CAN system type from the following specification chart.

Body type	Sedan											
Axle	2WD											
Engine	MR20DE											
Transmission	CVT											
Brake control	ABS											
Active AFS		×			×	×			×	×		×
Intelligent Key system			×		×		×	×	×	×	×	×
Navigation system				×		×	×		×		×	×
Automatic drive positioner								×		×	×	×
CAN system type	9	10	11	12	13	14	15	16	17	18	19	20
CAN communication signal chart	XX.XX. "TYPE 9/TYPE 10/TYPE 11/TYPE 12/TYPE 13/TYPE 14/TYPE 15/TYPE 16/TYPE 17/TYPE 18/TYPE 19/TYPE 20"											

Check the vehicle equipment.
The number indicates the CAN system type of the vehicle.

×: Applicable

VEHICLE EQUIPMENT IDENTIFICATION INFORMATION
NOTE:
Check CAN system type from the vehicle shape and equipment.

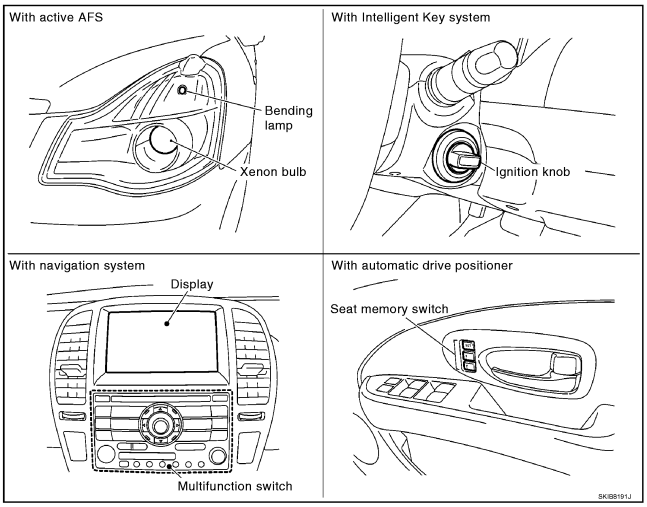

In the above example,
- Checking Xenon bulb and bending lamp lead to judge whether or not Active AFS is equipped.
- Checking the ignition knob leads to judge whether or not Intelligent Key system is equipped.
- Checking display and multifunction switch lead to judge whether or not Navigation system is equipped.
- Checking seat memory switch leads to judge whether or not Automatic drive positioner is equipped.

For the above case, CAN system type is "20".

JSMIA0018GB

CREATE INTERVIEW SHEET

Fill out the symptom described by the customer, vehicle condition, and CAN system type on the interview sheet.

Interview Sheet (Example)

CAN Communication System Diagnosis Interview Sheet

Date received: 3, Feb. 2006

Type: DBA-KG11

VIN No.: KG11-005040

Model: BDRARGZ397EDA-E-J-

First registration: 10, Jan. 2001

Mileage: 62,140

CAN system type: Type 19

Symptom (Results from interview with customer)

- Headlamps suddenly turn ON while driving the vehicle.
- The engine does not restart after stopping the vehicle and turning the ignition switch OFF.
- The cooling fan continues rotating while turning the ignition switch ON.

Condition at inspection

Error Symptom: (Present) / Past

The engine does not start.
While turning the ignition switch ON,
- The headlamps (Lo) turn ON, and the cooling fan continues rotating.
- The interior lamp does not turn ON.

JSMIA0019GB

DETECT THE ROOT CAUSE

CAN diagnosis function of CONSULT-III detects the root cause.

HOW TO USE THIS MANUAL

HOW TO USE THIS SECTION

Caution

INFOID:0000000005908893

- This section describes information peculiar to a vehicle and inspection procedures.
- For trouble diagnosis procedure, refer to LAN-14, "Trouble Diagnosis Procedure".

Abbreviation List

INFOID:0000000005908894

Unit name abbreviations in CONSULT-III CAN diagnosis and in this section are as per the following list.

Abbreviation	Unit name
ABS	ABS actuator and electric unit (control unit)
BCM	BCM
DLC	Data link connector
ECM	ECM
EPS	EPS control unit
IPDM-E	IPDM E/R
M&A	Combination meter
TCM	TCM

PRECAUTION

PRECAUTIONS

Precaution for Supplemental Restraint System (SRS) "AIR BAG" and "SEAT BELT PRE-TENSIONER"

INFOID:0000000005908895

The Supplemental Restraint System such as “AIR BAG” and “SEAT BELT PRE-TENSIONER”, used along with a front seat belt, helps to reduce the risk or severity of injury to the driver and front passenger for certain types of collision. Information necessary to service the system safely is included in the “SRS AIR BAG” and “SEAT BELT” of this Service Manual.

WARNING:

- **To avoid rendering the SRS inoperative, which could increase the risk of personal injury or death in the event of a collision which would result in air bag inflation, all maintenance must be performed by an authorized NISSAN/INFINITI dealer.**
- **Improper maintenance, including incorrect removal and installation of the SRS, can lead to personal injury caused by unintentional activation of the system. For removal of Spiral Cable and Air Bag Module, see the “SRS AIR BAG”.**
- **Do not use electrical test equipment on any circuit related to the SRS unless instructed to in this Service Manual. SRS wiring harnesses can be identified by yellow and/or orange harnesses or harness connectors.**

PRECAUTIONS WHEN USING POWER TOOLS (AIR OR ELECTRIC) AND HAMMERS

WARNING:

- **When working near the Air Bag Diagnosis Sensor Unit or other Air Bag System sensors with the ignition ON or engine running, DO NOT use air or electric power tools or strike near the sensor(s) with a hammer. Heavy vibration could activate the sensor(s) and deploy the air bag(s), possibly causing serious injury.**
- **When using air or electric power tools or hammers, always switch the ignition OFF, disconnect the battery, and wait at least 3 minutes before performing any service.**

Precautions for Trouble Diagnosis

INFOID:0000000005908896

CAUTION:

- **Never apply 7.0 V or more to the measurement terminal.**
- **Use a tester with open terminal voltage of 7.0 V or less.**
- **Turn the ignition switch OFF and disconnect the battery cable from the negative terminal when checking the harness.**

Precautions for Harness Repair

INFOID:0000000005908897

- Solder the repaired area and wrap tape around the soldered area.
  NOTE:
  A fray of twisted lines must be within 110 mm (4.33 in).

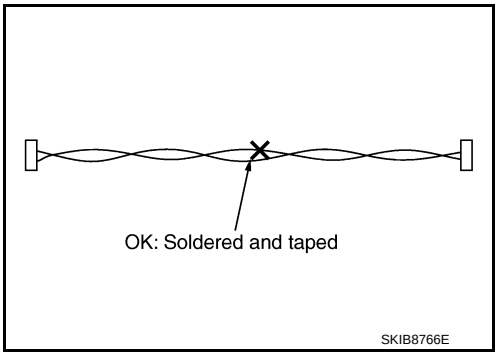

- Bypass connection is never allowed at the repaired area.
  NOTE:
  Bypass connection may cause CAN communication error. The spliced wire becomes separated and the characteristics of twisted line are lost.

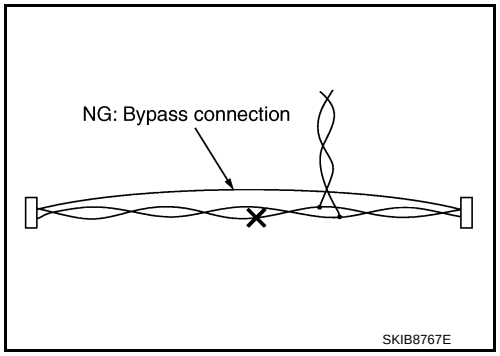

- Replace the applicable harness as an assembly if error is detected on the shield lines of CAN communication line.

SYSTEM DESCRIPTION

COMPONENT PARTS

Component Parts Location

INFOID:0000000005908898

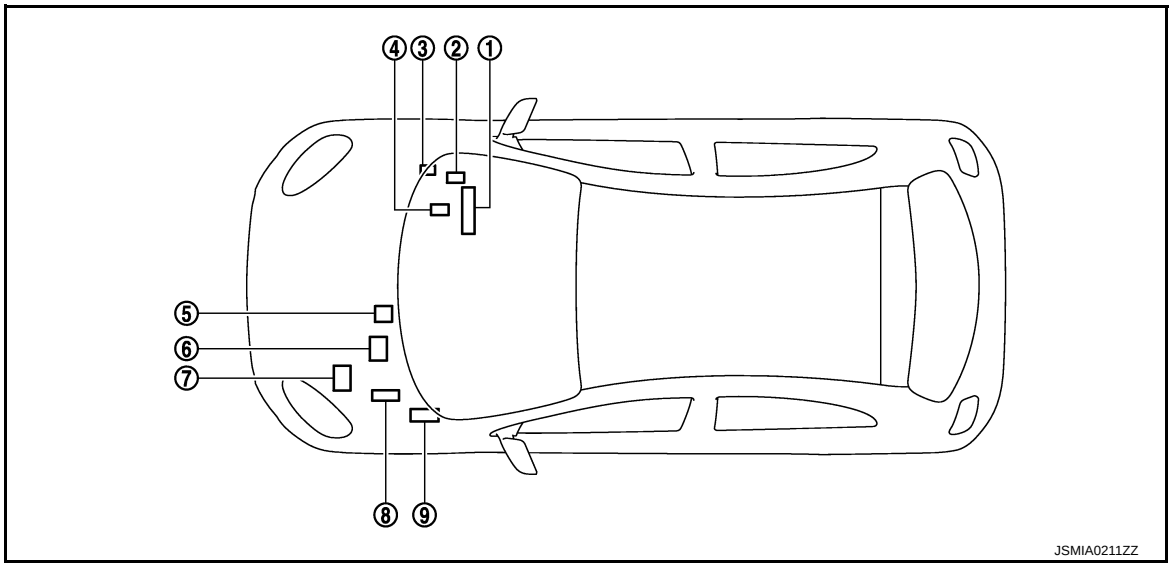

1.	Combination meter	2.	Data link connector	3.	Not applicable
4.	EPS control unit	5.	ABS actuator and electric unit (control unit)	6.	IPDM E/R
7.	TCM	8.	ECM	9.	BCM

SYSTEM

CAN COMMUNICATION SYSTEM

CAN COMMUNICATION SYSTEM : CAN System Specification Chart

INFOID:0000000005908899

Determine CAN system type from the following specification chart.
NOTE:
Refer to LAN-14, "Trouble Diagnosis Procedure" for how to use CAN system specification chart.

Body type	5-door Hatchback		
Axle	2WD		
Engine	HR12DE		
Transmission	M/T	A/T	
Brake control	—		ABS
CAN system type	2	3	4
CAN communication unit			
ECM	×	×	×
ABS actuator and electric unit (control unit)			×
IPDM E/R	×	×	×
TCM		×	×
Data link connector	×	×	×
EPS control unit	×	×	×
Combination meter	×	×	×
BCM	×	×	×

×: Applicable

VEHICLE EQUIPMENT IDENTIFICATION INFORMATION

NOTE:
Check CAN system type from the vehicle shape and equipment.

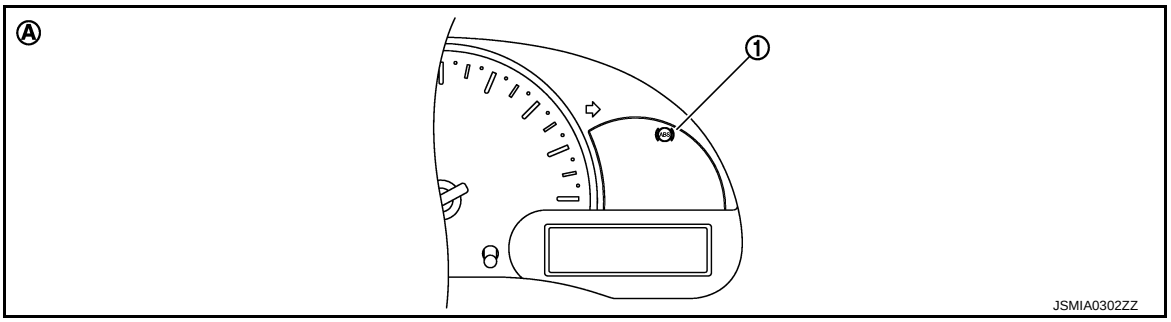

1. ABS warning lamp

A. With ABS

CAN COMMUNICATION SYSTEM : CAN Communication Signal Chart

INFOID:0000000005908900

Refer to LAN-13, "How to Use CAN Communication Signal Chart" for how to use CAN communication signal chart.
NOTE:
Refer to LAN-19, "Abbreviation List" for the abbreviations of the connecting units.

T: Transmit R: Receive

Signal name	ECM	ABS	IPDM-E	TCM	EPS	M&A	BCM
A/C compressor request signal	T		R				
Accelerator pedal position signal	T			R			
Closed throttle position signal	T			R			
Cooling fan speed request signal	T		R				
Engine and CVT integrated control signal	T			R			
	R			T			
Engine coolant temperature signal	T					R	
Engine speed signal	T			R		R	
Engine status signal	T				R		
Fuel consumption monitor signal	T					R	
Malfunctioning indicator lamp signal	T					R	
Power generation command value signal*1	T		R				
ABS warning lamp signal		T				R	
Brake warning lamp signal		T				R	
Vehicle speed signal (ABS)		T		R	R	R	R
Detention switch signal			T				R
Front wiper stop position signal			T				R
High beam status signal	R		T				
Ignition switch ON signal			T				R
			R				T
Interlock/PNP switch signal			T				R
			R				T
Low beam status signal	R		T				
Oil pressure switch signal			T				R
						R	T
Push-button ignition switch status signal			T				R
Rear window defogger control signal*2			R				T
	R		T				
Sleep-ready signal						T	R
			T				R
Starter control relay signal			T				R
			R				T
Starter relay status signal			T				R
			R				T
Steering lock relay signal			T				R
			R				T
OD OFF indicator signal				T		R	
Shift position signal				T			R
Vehicle speed signal (TCM)*3				T		R	
EPS operation signal	R				T		
EPS warning lamp signal					T	R	
Odometer signal						T	R

Signal name	ECM	ABS	IPDM-E	TCM	EPS	M&A	BCM
Overdrive control switch signal				R		T	
Vehicle speed signal (Meter)	R		R		R	T	R
Wake up signal						T	R
A/C ON signal	R						T
Blower fan ON signal	R						T
Buzzer output signal						R	T
Door switch signal			R			R	T
Engine start operation indicator lamp signal						R	T
Front fog light request signal			R			R	T
Front wiper request signal			R				T
High beam request signal			R			R	T
Key warning lamp signal						R	T
Low beam request signal			R				T
Position light request signal			R			R	T
Shift P warning lamp signal						R	T
Sleep wake up signal			R			R	T
Steering lock unit status signal			R				T
Stop lamp switch signal				R			T
Theft warning horn request signal			R				T
Turn indicator signal						R	T

*1: With battery current sensor (with battery temperature sensor)
*2: With rear window defogger
*3: A/T models without ABS

WIRING DIAGRAM

CAN SYSTEM

Wiring Diagram

INFOID:0000000005908903

For connector terminal arrangements, harness layouts, and alphabets in a ⬡ (option abbreviation; if not described in wiring diagram), refer to XX-XX, "*****".

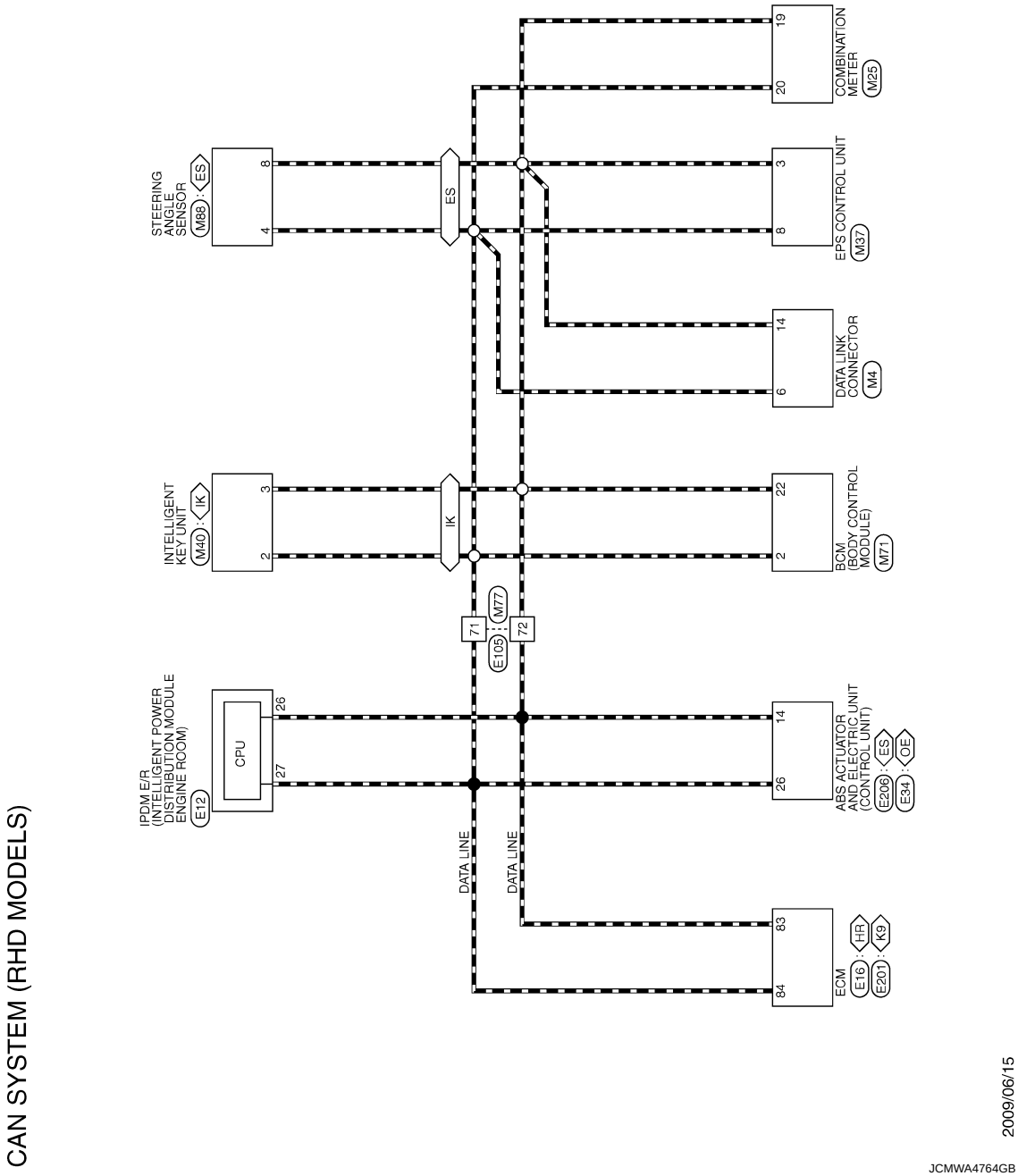

BASIC INSPECTION

DIAGNOSIS AND REPAIR WORKFLOW

Interview Sheet

INFOID:0000000005908904

CAN Communication System Diagnosis Interview Sheet

Date received:

Type: VIN No.:

Model:

First registration: Mileage:

CAN system type:

Symptom (Results from interview with customer)

Condition at inspection

Error symptom : Present / Past

SKIB8898E

DTC/CIRCUIT DIAGNOSIS

MALFUNCTION AREA CHART

Main Line

INFOID:0000000005908821

Malfunction area	Reference
Main line between IPDM E/R and data link connector	LAN-29, "Diagnosis Procedure"

Branch Line

INFOID:0000000005908822

Malfunction area	Reference
ECM branch line circuit	LAN-30, "Diagnosis Procedure"
ABS actuator and electric unit (control unit) branch line circuit	LAN-31, "Diagnosis Procedure"
IPDM E/R branch line circuit	LAN-32, "Diagnosis Procedure"
TCM branch line circuit	LAN-33, "Diagnosis Procedure"
Data link connector branch line circuit	LAN-34, "Diagnosis Procedure"
EPS control unit branch line circuit	LAN-35, "Diagnosis Procedure"
Combination meter branch line circuit	LAN-36, "Diagnosis Procedure"
BCM branch line circuit	LAN-37, "Diagnosis Procedure"

Short Circuit

INFOID:0000000005908823

Malfunction area	Reference
CAN communication circuit	LAN-38, "Diagnosis Procedure"

MAIN LINE BETWEEN IPDM-E AND DLC CIRCUIT

Diagnosis Procedure

INFOID:0000000005908847

1. CHECK CONNECTOR

1. Turn the ignition switch OFF.
2. Disconnect the battery cable from the negative terminal.
3. Check the following terminals and connectors for damage, bend and loose connection (connector side and harness side).

- Harness connector E105
- Harness connector M77

Is the inspection result normal?

YES >> GO TO 2.
NO >> Repair the terminal and connector.

2. CHECK HARNESS CONTINUITY (OPEN CIRCUIT)

1. Disconnect the following harness connectors.

- IPDM E/R
- Harness connectors E105 and M77

2. Check the continuity between the IPDM E/R harness connector and the harness connector.

IPDM E/R harness connector		Harness connector		Continuity
Connector No.	Terminal No.	Connector No.	Terminal No.	
E10	12	E105	80	Existed
	11		81	Existed

Is the inspection result normal?

YES >> GO TO 3.
NO >> Repair the main line between the IPDM E/R and the harness connector E105.

3. CHECK HARNESS CONTINUITY (OPEN CIRCUIT)

Check the continuity between the harness connector and the data link connector.

Harness connector		Data link connector		Continuity
Connector No.	Terminal No.	Connector No.	Terminal No.	
M77	80	M4	6	Existed
	81		14	Existed

Is the inspection result normal?

YES (Present error)>>Check CAN system type decision again.
YES (Past error)>>Error was detected in the main line between the IPDM E/R and the data link connector.
NO >> Repair the main line between the harness connector M77 and the data link connector.

ECM BRANCH LINE CIRCUIT

Diagnosis Procedure

INFOID:0000000005908848

1.CHECK CONNECTOR

1. Turn the ignition switch OFF.
2. Disconnect the battery cable from the negative terminal.
3. Check the terminals and connectors of the ECM for damage, bend and loose connection (unit side and connector side).

Is the inspection result normal?

YES >> GO TO 2.
NO >> Repair the terminal and connector.

2.CHECK HARNESS FOR OPEN CIRCUIT

1. Disconnect the connector of ECM.
2. Check the resistance between the ECM harness connector terminals.

- With D-Jetronic engine

ECM harness connector			Resistance (Ω)
Connector No.	Terminal No.		
E16	52	51	Approx. 108 – 132

- With L-Jetronic engine

ECM harness connector			Resistance (Ω)
Connector No.	Terminal No.		
E18	84	83	Approx. 108 – 132

Is the measurement value within the specification?

YES >> GO TO 3.
NO >> Repair the ECM branch line.

3.CHECK POWER SUPPLY AND GROUND CIRCUIT

Check the power supply and the ground circuit of the ECM. Refer to the following.

NOTE:

Check the vehicle type to confirm the service information. Refer to EC-9, "How to Check Vehicle Type".

- HR12DE (TYPE 1): EC-123, "Diagnosis Procedure"
- HR12DE (TYPE 2): EC-396, "Diagnosis Procedure"

Is the inspection result normal?

YES (Present error)>>Replace the ECM. Refer to the following.
- HR12DE (TYPE 1): EC-103, "Work Procedure"
- HR12DE (TYPE 2): EC-376, "Work Procedure"

YES (Past error)>>Error was detected in the ECM branch line.
NO >> Repair the power supply and the ground circuit.

ABS BRANCH LINE CIRCUIT

Diagnosis Procedure

INFOID:0000000005908849

1. CHECK CONNECTOR

1. Turn the ignition switch OFF.
2. Disconnect the battery cable from the negative terminal.
3. Check the terminals and connectors of the ABS actuator and electric unit (control unit) for damage, bend and loose connection (unit side and connector side).

Is the inspection result normal?

YES >> GO TO 2.
NO >> Repair the terminal and connector.

2. CHECK HARNESS FOR OPEN CIRCUIT

1. Disconnect the connector of ABS actuator and electric unit (control unit).
2. Check the resistance between the ABS actuator and electric unit (control unit) harness connector terminals.

ABS actuator and electric unit (control unit) harness connector			Resistance (Ω)
Connector No.	Terminal No.		
E34	26	14	Approx. 54 – 66

Is the measurement value within the specification?

YES >> GO TO 3.
NO >> Repair the ABS actuator and electric unit (control unit) branch line.

3. CHECK POWER SUPPLY AND GROUND CIRCUIT

Check the power supply and the ground circuit of the ABS actuator and electric unit (control unit). Refer to BRC-2, "Wiring Diagram".

Is the inspection result normal?

YES (Present error)>>Replace the ABS actuator and electric unit (control unit).
YES (Past error)>>Error was detected in the ABS actuator and electric unit (control unit) branch line.
NO >> Repair the power supply and the ground circuit.

IPDM-E BRANCH LINE CIRCUIT

Diagnosis Procedure

INFOID:0000000005908850

1.CHECK CONNECTOR

1. Turn the ignition switch OFF.
2. Disconnect the battery cable from the negative terminal.
3. Check the terminals and connectors of the IPDM E/R for damage, bend and loose connection (unit side and connector side).

Is the inspection result normal?

YES >> GO TO 2.
NO >> Repair the terminal and connector.

2.CHECK HARNESS FOR OPEN CIRCUIT

1. Disconnect the connector of IPDM E/R.
2. Check the resistance between the IPDM E/R harness connector terminals.

IPDM E/R harness connector			Resistance (Ω)
Connector No.	Terminal No.		
E10	12	11	Approx. 54 – 66

Is the measurement value within the specification?

YES >> GO TO 3.
NO >> Repair the IPDM E/R branch line.

3.CHECK POWER SUPPLY AND GROUND CIRCUIT

Check the power supply and the ground circuit of the IPDM E/R. Refer to the following.
- Models with Intelligent Key: PCS-27, "Diagnosis Procedure"
- Models without Intelligent Key: PCS-51, "Diagnosis Procedure"

Is the inspection result normal?

YES (Present error)>>Replace the IPDM E/R. Refer to the following.
- Models with Intelligent Key: PCS-28, "Removal and Installation"
- Models without Intelligent Key: PCS-52, "Removal and Installation"

YES (Past error)>>Error was detected in the IPDM E/R branch line.
NO >> Repair the power supply and the ground circuit.

TCM BRANCH LINE CIRCUIT

Diagnosis Procedure

INFOID:0000000005908851

1. CHECK CONNECTOR

1. Turn the ignition switch OFF.
2. Disconnect the battery cable from the negative terminal.
3. Check the following terminals and connectors for damage, bend and loose connection (unit side and connector side).

- TCM
- Harness connector F46
- Harness connector E6

Is the inspection result normal?

YES >> GO TO 2.
NO >> Repair the terminal and connector.

2. CHECK HARNESS FOR OPEN CIRCUIT

1. Disconnect the connector of TCM.
2. Check the resistance between the TCM harness connector terminals.

TCM harness connector			Resistance (Ω)
Connector No.	Terminal No.		
F18	33	23	Approx. 54 – 66

Is the measurement value within the specification?

YES >> GO TO 3.
NO >> Repair the TCM branch line.

3. CHECK POWER SUPPLY AND GROUND CIRCUIT

Check the power supply and the ground circuit of the TCM.

Is the inspection result normal?

YES (Present error)>>Replace the TCM.
YES (Past error)>>Error was detected in the TCM branch line.
NO >> Repair the power supply and the ground circuit.

DLC BRANCH LINE CIRCUIT

Diagnosis Procedure

INFOID:0000000005908853

1.CHECK CONNECTOR

1. Turn the ignition switch OFF.
2. Disconnect the battery cable from the negative terminal.
3. Check the terminals and connectors of the data link connector for damage, bend and loose connection (connector side and harness side).

Is the inspection result normal?

YES >> GO TO 2.
NO >> Repair the terminal and connector.

2.CHECK HARNESS FOR OPEN CIRCUIT

Check the resistance between the data link connector terminals.

Data link connector			Resistance (Ω)
Connector No.	Terminal No.		
M4	6	14	Approx. 54 – 66

Is the measurement value within the specification?

YES (Present error)>>Check CAN system type decision again.
YES (Past error)>>Error was detected in the data link connector branch line circuit.
NO >> Repair the data link connector branch line.

EPS BRANCH LINE CIRCUIT

Diagnosis Procedure

INFOID:0000000005908854

1. CHECK CONNECTOR

1. Turn the ignition switch OFF.
2. Disconnect the battery cable from the negative terminal.
3. Check the terminals and connectors of the EPS control unit for damage, bend and loose connection (unit side and connector side).

Is the inspection result normal?

YES >> GO TO 2.
NO >> Repair the terminal and connector.

2. CHECK HARNESS FOR OPEN CIRCUIT

1. Disconnect the connector of EPS control unit.
2. Check the resistance between the EPS control unit harness connector terminals.

EPS control unit harness connector			Resistance (Ω)
Connector No.	Terminal No.		
M37	8	3	Approx. 54 – 66

Is the measurement value within the specification?

YES >> GO TO 3.
NO >> Repair the EPS control unit branch line.

3. CHECK POWER SUPPLY AND GROUND CIRCUIT

Check the power supply and the ground circuit of the EPS control unit. Refer to STC-19, "Diagnosis Procedure".

Is the inspection result normal?

YES (Present error)>>Replace the EPS control unit. Refer to STC-34, "Removal and Installation".
YES (Past error)>>Error was detected in the EPS control unit branch line.
NO >> Repair the power supply and the ground circuit.

M&A BRANCH LINE CIRCUIT

Diagnosis Procedure

INFOID:0000000005908855

1.CHECK CONNECTOR

1. Turn the ignition switch OFF.
2. Disconnect the battery cable from the negative terminal.
3. Check the terminals and connectors of the combination meter for damage, bend and loose connection (unit side and connector side).

Is the inspection result normal?

YES >> GO TO 2.
NO >> Repair the terminal and connector.

2.CHECK HARNESS FOR OPEN CIRCUIT

1. Disconnect the connector of combination meter.
2. Check the resistance between the combination meter harness connector terminals.

Combination meter harness connector			Resistance (Ω)
Connector No.	Terminal No.		
M34	8	10	Approx. 54 – 66

Is the measurement value within the specification?

YES >> GO TO 3.
NO >> Repair the combination meter branch line.

3.CHECK POWER SUPPLY AND GROUND CIRCUIT

Check the power supply and the ground circuit of the combination meter. Refer to MWI-40, "COMBINATION METER : Diagnosis Procedure".

Is the inspection result normal?

YES (Present error)>>Replace the combination meter. Refer to MWI-51, "Removal and Installation".
YES (Past error)>>Error was detected in the combination meter branch line.
NO >> Repair the power supply and the ground circuit.

BCM BRANCH LINE CIRCUIT

Diagnosis Procedure

INFOID:0000000005908857

1. CHECK CONNECTOR

1. Turn the ignition switch OFF.
2. Disconnect the battery cable from the negative terminal.
3. Check the terminals and connectors of the BCM for damage, bend and loose connection (unit side and connector side).

Is the inspection result normal?

YES >> GO TO 2.
NO >> Repair the terminal and connector.

2. CHECK HARNESS FOR OPEN CIRCUIT

1. Disconnect the connector of BCM.
2. Check the resistance between the BCM harness connector terminals.

- Models with Intelligent Key system

BCM harness connector			Resistance (Ω)
Connector No.	Terminal No.		
M68	39	40	Approx. 108 – 132

- Models without Intelligent Key system

BCM harness connector			Resistance (Ω)
Connector No.	Terminal No.		
M65	39	40	Approx. 108 – 132

Is the measurement value within the specification?

YES >> GO TO 3.
NO >> Repair the BCM branch line.

3. CHECK POWER SUPPLY AND GROUND CIRCUIT

Check the power supply and the ground circuit of the BCM. Refer to the following.
- Models with Intelligent Key system: BCS-51, "Diagnosis Procedure"
- Models without Intelligent Key system: BCS-93, "Diagnosis Procedure"

Is the inspection result normal?

YES (Present error)>>Replace the BCM. Refer to the following.
- Models with Intelligent Key system: BCS-57, "Removal and Installation"
- Models without Intelligent Key system: BCS-99, "Removal and Installation"

YES (Past error)>>Error was detected in the BCM branch line.
NO >> Repair the power supply and the ground circuit.

CAN COMMUNICATION CIRCUIT

Diagnosis Procedure

INFOID:0000000005908858

1.CONNECTOR INSPECTION

1. Turn the ignition switch OFF.
2. Disconnect the battery cable from the negative terminal.
3. Disconnect all the unit connectors on CAN communication system.
4. Check terminals and connectors for damage, bend and loose connection.

Is the inspection result normal?

YES >> GO TO 2.
NO >> Repair the terminal and connector.

2.CHECK HARNESS CONTINUITY (SHORT CIRCUIT)

Check the continuity between the data link connector terminals.

Data link connector			Continuity
Connector No.	Terminal No.		
M4	6	14	Not existed

Is the inspection result normal?

YES >> GO TO 3.
NO >> Check the harness and repair the root cause.

3.CHECK HARNESS CONTINUITY (SHORT CIRCUIT)

Check the continuity between the data link connector and the ground.

Data link connector		Ground	Continuity
Connector No.	Terminal No.		
M4	6		Not existed
	14		Not existed

Is the inspection result normal?

YES >> GO TO 4.
NO >> Check the harness and repair the root cause.

4.CHECK ECM AND BCM TERMINATION CIRCUIT

1. Remove the ECM and the BCM.
2. Check the resistance between the ECM terminals.

- With L-Jetronic engine

ECM		Resistance (Ω)
Terminal No.		
52	51	Approx. 108 – 132

- With D-Jetronic engine

ECM		Resistance (Ω)
Terminal No.		
84	83	Approx. 108 – 132

3. Check the resistance between the BCM terminals.

BCM		Resistance (Ω)
Terminal No.		
39	40	Approx. 108 – 132

Is the measurement value within the specification?

YES >> GO TO 5.
NO >> Replace the ECM and/or the BCM.

5. CHECK SYMPTOM

Connect all the connectors. Check if the symptoms described in the “Symptom (Results from interview with customer)” are reproduced.

Inspection result

Reproduced>>GO TO 6.
Non-reproduced>>Start the diagnosis again. Follow the trouble diagnosis procedure when past error is detected.

6. CHECK UNIT REPRODUCTION

Perform the reproduction test as per the following procedure for each unit.

1. Turn the ignition switch OFF.
2. Disconnect the battery cable from the negative terminal.
3. Disconnect one of the unit connectors of CAN communication system.
   NOTE:
   ECM and BCM have a termination circuit. Check other units first.
4. Connect the battery cable to the negative terminal. Check if the symptoms described in the “Symptom (Results from interview with customer)” are reproduced.
   NOTE:
   Although unit-related error symptoms occur, do not confuse them with other symptoms.

Inspection result

Reproduced>>Connect the connector. Check other units as per the above procedure.
Non-reproduced>>Replace the unit whose connector was disconnected.

DTC/CIRCUIT DIAGNOSIS

MAIN LINE BETWEEN IPDM-E AND DLC CIRCUIT

Diagnosis Procedure

INFOID:0000000006044379

1.CHECK CONNECTOR

1. Turn the ignition switch OFF.
2. Disconnect the battery cable from the negative terminal.
3. Check the following terminals and connectors for damage, bend and loose connection (connector side and harness side).

- Harness connector E105
- Harness connector M77

Is the inspection result normal?

YES >> GO TO 2.
NO >> Repair the terminal and connector.

2.CHECK HARNESS CONTINUITY (OPEN CIRCUIT)

1. Disconnect the following harness connectors.

- IPDM E/R
- Harness connectors E105 and M77

2. Check the continuity between the IPDM E/R harness connector and the harness connector.

IPDM E/R harness connector		Harness connector		Continuity
Connector No.	Terminal No.	Connector No.	Terminal No.	
E10	12	E105	80	Existed
	11		81	Existed

Is the inspection result normal?

YES >> GO TO 3.
NO >> Repair the main line between the IPDM E/R and the harness connector E105.

3.CHECK HARNESS CONTINUITY (OPEN CIRCUIT)

Check the continuity between the harness connector and the data link connector.

Harness connector		Data link connector		Continuity
Connector No.	Terminal No.	Connector No.	Terminal No.	
M77	80	M4	6	Existed
	81		14	Existed

Is the inspection result normal?

YES (Present error)>>Check CAN system type decision again.
YES (Past error)>>Error was detected in the main line between the IPDM E/R and the data link connector.
NO >> Repair the main line between the harness connector M77 and the data link connector.

ECM BRANCH LINE CIRCUIT

Diagnosis Procedure

INFOID:0000000006044380

1. CHECK CONNECTOR

1. Turn the ignition switch OFF.
2. Disconnect the battery cable from the negative terminal.
3. Check the terminals and connectors of the ECM for damage, bend and loose connection (unit side and connector side).

Is the inspection result normal?

YES >> GO TO 2.
NO >> Repair the terminal and connector.

2. CHECK HARNESS FOR OPEN CIRCUIT

1. Disconnect the connector of ECM.
2. Check the resistance between the ECM harness connector terminals.

- With D-Jetronic engine

ECM harness connector			Resistance (Ω)
Connector No.	Terminal No.		
E16	52	51	Approx. 108 – 132

- With L-Jetronic engine

ECM harness connector			Resistance (Ω)
Connector No.	Terminal No.		
E18	84	83	Approx. 108 – 132

Is the measurement value within the specification?

YES >> GO TO 3.
NO >> Repair the ECM branch line.

3. CHECK POWER SUPPLY AND GROUND CIRCUIT

Check the power supply and the ground circuit of the ECM. Refer to the following.

NOTE:

Check the vehicle type to confirm the service information. Refer to EC-9, "How to Check Vehicle Type".

- HR12DE (TYPE 1): EC-123, "Diagnosis Procedure"
- HR12DE (TYPE 2): EC-396, "Diagnosis Procedure"

Is the inspection result normal?

YES (Present error)>>Replace the ECM. Refer to the following.
- HR12DE (TYPE 1): EC-103, "Work Procedure"
- HR12DE (TYPE 2): EC-376, "Work Procedure"

YES (Past error)>>Error was detected in the ECM branch line.
NO >> Repair the power supply and the ground circuit.

IPDM-E BRANCH LINE CIRCUIT

Diagnosis Procedure

INFOID:0000000006044382

1.CHECK CONNECTOR

1. Turn the ignition switch OFF.
2. Disconnect the battery cable from the negative terminal.
3. Check the terminals and connectors of the IPDM E/R for damage, bend and loose connection (unit side and connector side).

Is the inspection result normal?

YES >> GO TO 2.
NO >> Repair the terminal and connector.

2.CHECK HARNESS FOR OPEN CIRCUIT

1. Disconnect the connector of IPDM E/R.
2. Check the resistance between the IPDM E/R harness connector terminals.

IPDM E/R harness connector			Resistance (Ω)
Connector No.	Terminal No.		
E10	12	11	Approx. 54 – 66

Is the measurement value within the specification?

YES >> GO TO 3.
NO >> Repair the IPDM E/R branch line.

3.CHECK POWER SUPPLY AND GROUND CIRCUIT

Check the power supply and the ground circuit of the IPDM E/R. Refer to the following.
- Models with Intelligent Key: PCS-27, "Diagnosis Procedure"
- Models without Intelligent Key: PCS-51, "Diagnosis Procedure"

Is the inspection result normal?

YES (Present error)>>Replace the IPDM E/R. Refer to the following.
- Models with Intelligent Key: PCS-28, "Removal and Installation"
- Models without Intelligent Key: PCS-52, "Removal and Installation"

YES (Past error)>>Error was detected in the IPDM E/R branch line.
NO >> Repair the power supply and the ground circuit.

DLC BRANCH LINE CIRCUIT

Diagnosis Procedure

INFOID:0000000006044385

1. CHECK CONNECTOR

1. Turn the ignition switch OFF.
2. Disconnect the battery cable from the negative terminal.
3. Check the terminals and connectors of the data link connector for damage, bend and loose connection (connector side and harness side).

Is the inspection result normal?

YES >> GO TO 2.
NO >> Repair the terminal and connector.

2. CHECK HARNESS FOR OPEN CIRCUIT

Check the resistance between the data link connector terminals.

Data link connector			Resistance (Ω)
Connector No.	Terminal No.		
M4	6	14	Approx. 54 – 66

Is the measurement value within the specification?

YES (Present error)>>Check CAN system type decision again.
YES (Past error)>>Error was detected in the data link connector branch line circuit.
NO >> Repair the data link connector branch line.

EPS BRANCH LINE CIRCUIT

Diagnosis Procedure

INFOID:0000000006044386

1.CHECK CONNECTOR

1. Turn the ignition switch OFF.
2. Disconnect the battery cable from the negative terminal.
3. Check the terminals and connectors of the EPS control unit for damage, bend and loose connection (unit side and connector side).

Is the inspection result normal?

YES >> GO TO 2.
NO >> Repair the terminal and connector.

2.CHECK HARNESS FOR OPEN CIRCUIT

1. Disconnect the connector of EPS control unit.
2. Check the resistance between the EPS control unit harness connector terminals.

EPS control unit harness connector			Resistance (Ω)
Connector No.	Terminal No.		
M37	8	3	Approx. 54 – 66

Is the measurement value within the specification?

YES >> GO TO 3.
NO >> Repair the EPS control unit branch line.

3.CHECK POWER SUPPLY AND GROUND CIRCUIT

Check the power supply and the ground circuit of the EPS control unit. Refer to STC-19, "Diagnosis Procedure".

Is the inspection result normal?

YES (Present error)>>Replace the EPS control unit. Refer to STC-34, "Removal and Installation".
YES (Past error)>>Error was detected in the EPS control unit branch line.
NO >> Repair the power supply and the ground circuit.

M&A BRANCH LINE CIRCUIT

Diagnosis Procedure

INFOID:0000000006044387

1. CHECK CONNECTOR

1. Turn the ignition switch OFF.
2. Disconnect the battery cable from the negative terminal.
3. Check the terminals and connectors of the combination meter for damage, bend and loose connection (unit side and connector side).

Is the inspection result normal?

YES >> GO TO 2.
NO >> Repair the terminal and connector.

2. CHECK HARNESS FOR OPEN CIRCUIT

1. Disconnect the connector of combination meter.
2. Check the resistance between the combination meter harness connector terminals.

Combination meter harness connector			Resistance (Ω)
Connector No.	Terminal No.		
M34	8	10	Approx. 54 – 66

Is the measurement value within the specification?

YES >> GO TO 3.
NO >> Repair the combination meter branch line.

3. CHECK POWER SUPPLY AND GROUND CIRCUIT

Check the power supply and the ground circuit of the combination meter. Refer to MWI-40, "COMBINATION METER : Diagnosis Procedure".

Is the inspection result normal?

YES (Present error)>>Replace the combination meter. Refer to MWI-51, "Removal and Installation".
YES (Past error)>>Error was detected in the combination meter branch line.
NO >> Repair the power supply and the ground circuit.

BCM BRANCH LINE CIRCUIT

Diagnosis Procedure

INFOID:0000000006044389

1.CHECK CONNECTOR

1. Turn the ignition switch OFF.
2. Disconnect the battery cable from the negative terminal.
3. Check the terminals and connectors of the BCM for damage, bend and loose connection (unit side and connector side).

Is the inspection result normal?

YES >> GO TO 2.
NO >> Repair the terminal and connector.

2.CHECK HARNESS FOR OPEN CIRCUIT

1. Disconnect the connector of BCM.
2. Check the resistance between the BCM harness connector terminals.

- Models with Intelligent Key system

BCM harness connector			Resistance (Ω)
Connector No.	Terminal No.		
M68	39	40	Approx. 108 – 132

- Models without Intelligent Key system

BCM harness connector			Resistance (Ω)
Connector No.	Terminal No.		
M65	39	40	Approx. 108 – 132

Is the measurement value within the specification?

YES >> GO TO 3.
NO >> Repair the BCM branch line.

3.CHECK POWER SUPPLY AND GROUND CIRCUIT

Check the power supply and the ground circuit of the BCM. Refer to the following.
- Models with Intelligent Key system: BCS-51, "Diagnosis Procedure"
- Models without Intelligent Key system: BCS-93, "Diagnosis Procedure"

Is the inspection result normal?

YES (Present error)>>Replace the BCM. Refer to the following.
- Models with Intelligent Key system: BCS-57, "Removal and Installation"
- Models without Intelligent Key system: BCS-99, "Removal and Installation"

YES (Past error)>>Error was detected in the BCM branch line.
NO >> Repair the power supply and the ground circuit.

CAN COMMUNICATION CIRCUIT

Diagnosis Procedure

INFOID:0000000006044390

1. CONNECTOR INSPECTION

1. Turn the ignition switch OFF.
2. Disconnect the battery cable from the negative terminal.
3. Disconnect all the unit connectors on CAN communication system.
4. Check terminals and connectors for damage, bend and loose connection.

Is the inspection result normal?

YES >> GO TO 2.
NO >> Repair the terminal and connector.

2. CHECK HARNESS CONTINUITY (SHORT CIRCUIT)

Check the continuity between the data link connector terminals.

Data link connector			Continuity
Connector No.	Terminal No.		
M4	6	14	Not existed

Is the inspection result normal?

YES >> GO TO 3.
NO >> Check the harness and repair the root cause.

3. CHECK HARNESS CONTINUITY (SHORT CIRCUIT)

Check the continuity between the data link connector and the ground.

Data link connector		Ground	Continuity
Connector No.	Terminal No.		
M4	6		Not existed
	14		Not existed

Is the inspection result normal?

YES >> GO TO 4.
NO >> Check the harness and repair the root cause.

4. CHECK ECM AND BCM TERMINATION CIRCUIT

1. Remove the ECM and the BCM.
2. Check the resistance between the ECM terminals.

- With L-Jetronic engine

ECM		Resistance (Ω)
Terminal No.		
52	51	Approx. 108 – 132

- With D-Jetronic engine

ECM		Resistance (Ω)
Terminal No.		
84	83	Approx. 108 – 132

3. Check the resistance between the BCM terminals.

BCM		Resistance (Ω)
Terminal No.		
39	40	Approx. 108 – 132

Is the measurement value within the specification?

YES >> GO TO 5.
NO >> Replace the ECM and/or the BCM.

5. CHECK SYMPTOM

Connect all the connectors. Check if the symptoms described in the “Symptom (Results from interview with customer)” are reproduced.

Inspection result

Reproduced>>GO TO 6.
Non-reproduced>>Start the diagnosis again. Follow the trouble diagnosis procedure when past error is detected.

6. CHECK UNIT REPRODUCTION

Perform the reproduction test as per the following procedure for each unit.

1. Turn the ignition switch OFF.
2. Disconnect the battery cable from the negative terminal.
3. Disconnect one of the unit connectors of CAN communication system.
   NOTE:
   ECM and BCM have a termination circuit. Check other units first.
4. Connect the battery cable to the negative terminal. Check if the symptoms described in the “Symptom (Results from interview with customer)” are reproduced.
   NOTE:
   Although unit-related error symptoms occur, do not confuse them with other symptoms.

Inspection result

Reproduced>>Connect the connector. Check other units as per the above procedure.
Non-reproduced>>Replace the unit whose connector was disconnected.

DTC/CIRCUIT DIAGNOSIS

MAIN LINE BETWEEN IPDM-E AND DLC CIRCUIT

Diagnosis Procedure

INFOID:0000000006044410

1. CHECK CONNECTOR

1. Turn the ignition switch OFF.
2. Disconnect the battery cable from the negative terminal.
3. Check the following terminals and connectors for damage, bend and loose connection (connector side and harness side).

- Harness connector E105
- Harness connector M77

Is the inspection result normal?

YES >> GO TO 2.
NO >> Repair the terminal and connector.

2. CHECK HARNESS CONTINUITY (OPEN CIRCUIT)

1. Disconnect the following harness connectors.

- IPDM E/R
- Harness connectors E105 and M77

2. Check the continuity between the IPDM E/R harness connector and the harness connector.

IPDM E/R harness connector		Harness connector		Continuity
Connector No.	Terminal No.	Connector No.	Terminal No.	
E10	12	E105	80	Existed
	11		81	Existed

Is the inspection result normal?

YES >> GO TO 3.
NO >> Repair the main line between the IPDM E/R and the harness connector E105.

3. CHECK HARNESS CONTINUITY (OPEN CIRCUIT)

Check the continuity between the harness connector and the data link connector.

Harness connector		Data link connector		Continuity
Connector No.	Terminal No.	Connector No.	Terminal No.	
M77	80	M4	6	Existed
	81		14	Existed

Is the inspection result normal?

YES (Present error)>>Check CAN system type decision again.
YES (Past error)>>Error was detected in the main line between the IPDM E/R and the data link connector.
NO >> Repair the main line between the harness connector M77 and the data link connector.

ECM BRANCH LINE CIRCUIT

Diagnosis Procedure

INFOID:0000000006044411

1.CHECK CONNECTOR

1. Turn the ignition switch OFF.
2. Disconnect the battery cable from the negative terminal.
3. Check the terminals and connectors of the ECM for damage, bend and loose connection (unit side and connector side).

Is the inspection result normal?

YES >> GO TO 2.
NO >> Repair the terminal and connector.

2.CHECK HARNESS FOR OPEN CIRCUIT

1. Disconnect the connector of ECM.
2. Check the resistance between the ECM harness connector terminals.

- With D-Jetronic engine

ECM harness connector			Resistance (Ω)
Connector No.	Terminal No.		
E16	52	51	Approx. 108 – 132

- With L-Jetronic engine

ECM harness connector			Resistance (Ω)
Connector No.	Terminal No.		
E18	84	83	Approx. 108 – 132

Is the measurement value within the specification?

YES >> GO TO 3.
NO >> Repair the ECM branch line.

3.CHECK POWER SUPPLY AND GROUND CIRCUIT

Check the power supply and the ground circuit of the ECM. Refer to the following.

NOTE:

Check the vehicle type to confirm the service information. Refer to EC-9, "How to Check Vehicle Type".

- HR12DE (TYPE 1): EC-123, "Diagnosis Procedure"
- HR12DE (TYPE 2): EC-396, "Diagnosis Procedure"

Is the inspection result normal?

YES (Present error)>>Replace the ECM. Refer to the following.
- HR12DE (TYPE 1): EC-103, "Work Procedure"
- HR12DE (TYPE 2): EC-376, "Work Procedure"

YES (Past error)>>Error was detected in the ECM branch line.
NO >> Repair the power supply and the ground circuit.

IPDM-E BRANCH LINE CIRCUIT

Diagnosis Procedure

INFOID:0000000006044413

1.CHECK CONNECTOR

1. Turn the ignition switch OFF.
2. Disconnect the battery cable from the negative terminal.
3. Check the terminals and connectors of the IPDM E/R for damage, bend and loose connection (unit side and connector side).

Is the inspection result normal?

YES >> GO TO 2.
NO >> Repair the terminal and connector.

2.CHECK HARNESS FOR OPEN CIRCUIT

1. Disconnect the connector of IPDM E/R.
2. Check the resistance between the IPDM E/R harness connector terminals.

IPDM E/R harness connector			Resistance (Ω)
Connector No.	Terminal No.		
E10	12	11	Approx. 54 – 66

Is the measurement value within the specification?

YES >> GO TO 3.
NO >> Repair the IPDM E/R branch line.

3.CHECK POWER SUPPLY AND GROUND CIRCUIT

Check the power supply and the ground circuit of the IPDM E/R. Refer to the following.
- Models with Intelligent Key: PCS-27, "Diagnosis Procedure"
- Models without Intelligent Key: PCS-51, "Diagnosis Procedure"

Is the inspection result normal?

YES (Present error)>>Replace the IPDM E/R. Refer to the following.
- Models with Intelligent Key: PCS-28, "Removal and Installation"
- Models without Intelligent Key: PCS-52, "Removal and Installation"

YES (Past error)>>Error was detected in the IPDM E/R branch line.
NO >> Repair the power supply and the ground circuit.

TCM BRANCH LINE CIRCUIT

Diagnosis Procedure

INFOID:0000000006044414

1.CHECK CONNECTOR

1. Turn the ignition switch OFF.
2. Disconnect the battery cable from the negative terminal.
3. Check the following terminals and connectors for damage, bend and loose connection (unit side and connector side).

- TCM
- Harness connector F46
- Harness connector E6

Is the inspection result normal?

YES >> GO TO 2.
NO >> Repair the terminal and connector.

2.CHECK HARNESS FOR OPEN CIRCUIT

1. Disconnect the connector of TCM.
2. Check the resistance between the TCM harness connector terminals.

TCM harness connector			Resistance (Ω)
Connector No.	Terminal No.		
F18	33	23	Approx. 54 – 66

Is the measurement value within the specification?

YES >> GO TO 3.
NO >> Repair the TCM branch line.

3.CHECK POWER SUPPLY AND GROUND CIRCUIT

Check the power supply and the ground circuit of the TCM.

Is the inspection result normal?

YES (Present error)>>Replace the TCM.
YES (Past error)>>Error was detected in the TCM branch line.
NO >> Repair the power supply and the ground circuit.

DLC BRANCH LINE CIRCUIT

Diagnosis Procedure

INFOID:0000000006044416

1. CHECK CONNECTOR

1. Turn the ignition switch OFF.
2. Disconnect the battery cable from the negative terminal.
3. Check the terminals and connectors of the data link connector for damage, bend and loose connection (connector side and harness side).

Is the inspection result normal?

YES >> GO TO 2.
NO >> Repair the terminal and connector.

2. CHECK HARNESS FOR OPEN CIRCUIT

Check the resistance between the data link connector terminals.

Data link connector			Resistance (Ω)
Connector No.	Terminal No.		
M4	6	14	Approx. 54 – 66

Is the measurement value within the specification?

YES (Present error)>>Check CAN system type decision again.
YES (Past error)>>Error was detected in the data link connector branch line circuit.
NO >> Repair the data link connector branch line.

EPS BRANCH LINE CIRCUIT

Diagnosis Procedure

INFOID:0000000006044417

1.CHECK CONNECTOR

1. Turn the ignition switch OFF.
2. Disconnect the battery cable from the negative terminal.
3. Check the terminals and connectors of the EPS control unit for damage, bend and loose connection (unit side and connector side).

Is the inspection result normal?

YES >> GO TO 2.
NO >> Repair the terminal and connector.

2.CHECK HARNESS FOR OPEN CIRCUIT

1. Disconnect the connector of EPS control unit.
2. Check the resistance between the EPS control unit harness connector terminals.

EPS control unit harness connector			Resistance (Ω)
Connector No.	Terminal No.		
M37	8	3	Approx. 54 – 66

Is the measurement value within the specification?

YES >> GO TO 3.
NO >> Repair the EPS control unit branch line.

3.CHECK POWER SUPPLY AND GROUND CIRCUIT

Check the power supply and the ground circuit of the EPS control unit. Refer to STC-19, "Diagnosis Procedure".

Is the inspection result normal?

YES (Present error)>>Replace the EPS control unit. Refer to STC-34, "Removal and Installation".
YES (Past error)>>Error was detected in the EPS control unit branch line.
NO >> Repair the power supply and the ground circuit.

M&A BRANCH LINE CIRCUIT

Diagnosis Procedure

INFOID:0000000006044418

1. CHECK CONNECTOR

1. Turn the ignition switch OFF.
2. Disconnect the battery cable from the negative terminal.
3. Check the terminals and connectors of the combination meter for damage, bend and loose connection (unit side and connector side).

Is the inspection result normal?

YES >> GO TO 2.
NO >> Repair the terminal and connector.

2. CHECK HARNESS FOR OPEN CIRCUIT

1. Disconnect the connector of combination meter.
2. Check the resistance between the combination meter harness connector terminals.

Combination meter harness connector			Resistance (Ω)
Connector No.	Terminal No.		
M34	8	10	Approx. 54 – 66

Is the measurement value within the specification?

YES >> GO TO 3.
NO >> Repair the combination meter branch line.

3. CHECK POWER SUPPLY AND GROUND CIRCUIT

Check the power supply and the ground circuit of the combination meter. Refer to MWI-40, "COMBINATION METER : Diagnosis Procedure".

Is the inspection result normal?

YES (Present error)>>Replace the combination meter. Refer to MWI-51, "Removal and Installation".
YES (Past error)>>Error was detected in the combination meter branch line.
NO >> Repair the power supply and the ground circuit.

BCM BRANCH LINE CIRCUIT

Diagnosis Procedure

INFOID:0000000006044420

1.CHECK CONNECTOR

1. Turn the ignition switch OFF.
2. Disconnect the battery cable from the negative terminal.
3. Check the terminals and connectors of the BCM for damage, bend and loose connection (unit side and connector side).

Is the inspection result normal?

YES >> GO TO 2.
NO >> Repair the terminal and connector.

2.CHECK HARNESS FOR OPEN CIRCUIT

1. Disconnect the connector of BCM.
2. Check the resistance between the BCM harness connector terminals.

- Models with Intelligent Key system

BCM harness connector			Resistance (Ω)
Connector No.	Terminal No.		
M68	39	40	Approx. 108 – 132

- Models without Intelligent Key system

BCM harness connector			Resistance (Ω)
Connector No.	Terminal No.		
M65	39	40	Approx. 108 – 132

Is the measurement value within the specification?

YES >> GO TO 3.
NO >> Repair the BCM branch line.

3.CHECK POWER SUPPLY AND GROUND CIRCUIT

Check the power supply and the ground circuit of the BCM. Refer to the following.

- Models with Intelligent Key system: BCS-51, "Diagnosis Procedure"
- Models without Intelligent Key system: BCS-93, "Diagnosis Procedure"

Is the inspection result normal?

YES (Present error)>>Replace the BCM. Refer to the following.
- Models with Intelligent Key system: BCS-57, "Removal and Installation"
- Models without Intelligent Key system: BCS-99, "Removal and Installation"

YES (Past error)>>Error was detected in the BCM branch line.
NO >> Repair the power supply and the ground circuit.

CAN COMMUNICATION CIRCUIT

Diagnosis Procedure

INFOID:0000000006044421

1. CONNECTOR INSPECTION

1. Turn the ignition switch OFF.
2. Disconnect the battery cable from the negative terminal.
3. Disconnect all the unit connectors on CAN communication system.
4. Check terminals and connectors for damage, bend and loose connection.

Is the inspection result normal?

YES >> GO TO 2.
NO >> Repair the terminal and connector.

2. CHECK HARNESS CONTINUITY (SHORT CIRCUIT)

Check the continuity between the data link connector terminals.

Data link connector			Continuity
Connector No.	Terminal No.		
M4	6	14	Not existed

Is the inspection result normal?

YES >> GO TO 3.
NO >> Check the harness and repair the root cause.

3. CHECK HARNESS CONTINUITY (SHORT CIRCUIT)

Check the continuity between the data link connector and the ground.

Data link connector		Ground	Continuity
Connector No.	Terminal No.		
M4	6		Not existed
	14		Not existed

Is the inspection result normal?

YES >> GO TO 4.
NO >> Check the harness and repair the root cause.

4. CHECK ECM AND BCM TERMINATION CIRCUIT

1. Remove the ECM and the BCM.
2. Check the resistance between the ECM terminals.

- With L-Jetronic engine

ECM		Resistance (Ω)
Terminal No.		
52	51	Approx. 108 – 132

- With D-Jetronic engine

ECM		Resistance (Ω)
Terminal No.		
84	83	Approx. 108 – 132

3. Check the resistance between the BCM terminals.

BCM		Resistance (Ω)
Terminal No.		
39	40	Approx. 108 – 132

Is the measurement value within the specification?

YES >> GO TO 5.
NO >> Replace the ECM and/or the BCM.

5. CHECK SYMPTOM

Connect all the connectors. Check if the symptoms described in the “Symptom (Results from interview with customer)” are reproduced.

Inspection result

Reproduced>>GO TO 6.
Non-reproduced>>Start the diagnosis again. Follow the trouble diagnosis procedure when past error is detected.

6. CHECK UNIT REPRODUCTION

Perform the reproduction test as per the following procedure for each unit.

1. Turn the ignition switch OFF.
2. Disconnect the battery cable from the negative terminal.
3. Disconnect one of the unit connectors of CAN communication system.
   NOTE:
   ECM and BCM have a termination circuit. Check other units first.
4. Connect the battery cable to the negative terminal. Check if the symptoms described in the “Symptom (Results from interview with customer)” are reproduced.
   NOTE:
   Although unit-related error symptoms occur, do not confuse them with other symptoms.

Inspection result

Reproduced>>Connect the connector. Check other units as per the above procedure.
Non-reproduced>>Replace the unit whose connector was disconnected.

DTC/CIRCUIT DIAGNOSIS

MAIN LINE BETWEEN IPDM-E AND DLC CIRCUIT

Diagnosis Procedure

INFOID:0000000006044441

1. CHECK CONNECTOR

1. Turn the ignition switch OFF.
2. Disconnect the battery cable from the negative terminal.
3. Check the following terminals and connectors for damage, bend and loose connection (connector side and harness side).

- Harness connector E105
- Harness connector M77

Is the inspection result normal?

YES >> GO TO 2.
NO >> Repair the terminal and connector.

2. CHECK HARNESS CONTINUITY (OPEN CIRCUIT)

1. Disconnect the following harness connectors.

- IPDM E/R
- Harness connectors E105 and M77

2. Check the continuity between the IPDM E/R harness connector and the harness connector.

IPDM E/R harness connector		Harness connector		Continuity
Connector No.	Terminal No.	Connector No.	Terminal No.	
E10	12	E105	80	Existed
	11		81	Existed

Is the inspection result normal?

YES >> GO TO 3.
NO >> Repair the main line between the IPDM E/R and the harness connector E105.

3. CHECK HARNESS CONTINUITY (OPEN CIRCUIT)

Check the continuity between the harness connector and the data link connector.

Harness connector		Data link connector		Continuity
Connector No.	Terminal No.	Connector No.	Terminal No.	
M77	80	M4	6	Existed
	81		14	Existed

Is the inspection result normal?

YES (Present error)>>Check CAN system type decision again.
YES (Past error)>>Error was detected in the main line between the IPDM E/R and the data link connector.
NO >> Repair the main line between the harness connector M77 and the data link connector.

ECM BRANCH LINE CIRCUIT

Diagnosis Procedure

INFOID:0000000006044442

1.CHECK CONNECTOR

1. Turn the ignition switch OFF.
2. Disconnect the battery cable from the negative terminal.
3. Check the terminals and connectors of the ECM for damage, bend and loose connection (unit side and connector side).

Is the inspection result normal?

YES >> GO TO 2.
NO >> Repair the terminal and connector.

2.CHECK HARNESS FOR OPEN CIRCUIT

1. Disconnect the connector of ECM.
2. Check the resistance between the ECM harness connector terminals.

- With D-Jetronic engine

ECM harness connector			Resistance (Ω)
Connector No.	Terminal No.		
E16	52	51	Approx. 108 – 132

- With L-Jetronic engine

ECM harness connector			Resistance (Ω)
Connector No.	Terminal No.		
E18	84	83	Approx. 108 – 132

Is the measurement value within the specification?

YES >> GO TO 3.
NO >> Repair the ECM branch line.

3.CHECK POWER SUPPLY AND GROUND CIRCUIT

Check the power supply and the ground circuit of the ECM. Refer to the following.

NOTE:

Check the vehicle type to confirm the service information. Refer to EC-9, "How to Check Vehicle Type".

- HR12DE (TYPE 1): EC-123, "Diagnosis Procedure"
- HR12DE (TYPE 2): EC-396, "Diagnosis Procedure"

Is the inspection result normal?

YES (Present error)>>Replace the ECM. Refer to the following.
- HR12DE (TYPE 1): EC-103, "Work Procedure"
- HR12DE (TYPE 2): EC-376, "Work Procedure"

YES (Past error)>>Error was detected in the ECM branch line.
NO >> Repair the power supply and the ground circuit.

ABS BRANCH LINE CIRCUIT

Diagnosis Procedure

INFOID:0000000006044443

1. CHECK CONNECTOR

1. Turn the ignition switch OFF.
2. Disconnect the battery cable from the negative terminal.
3. Check the terminals and connectors of the ABS actuator and electric unit (control unit) for damage, bend and loose connection (unit side and connector side).

Is the inspection result normal?

YES >> GO TO 2.
NO >> Repair the terminal and connector.

2. CHECK HARNESS FOR OPEN CIRCUIT

1. Disconnect the connector of ABS actuator and electric unit (control unit).
2. Check the resistance between the ABS actuator and electric unit (control unit) harness connector terminals.

ABS actuator and electric unit (control unit) harness connector			Resistance (Ω)
Connector No.	Terminal No.		
E34	26	14	Approx. 54 – 66

Is the measurement value within the specification?

YES >> GO TO 3.
NO >> Repair the ABS actuator and electric unit (control unit) branch line.

3. CHECK POWER SUPPLY AND GROUND CIRCUIT

Check the power supply and the ground circuit of the ABS actuator and electric unit (control unit). Refer to BRC-2, "Wiring Diagram".

Is the inspection result normal?

YES (Present error)>>Replace the ABS actuator and electric unit (control unit).
YES (Past error)>>Error was detected in the ABS actuator and electric unit (control unit) branch line.
NO >> Repair the power supply and the ground circuit.

IPDM-E BRANCH LINE CIRCUIT

Diagnosis Procedure

INFOID:0000000006044444

1.CHECK CONNECTOR

1. Turn the ignition switch OFF.
2. Disconnect the battery cable from the negative terminal.
3. Check the terminals and connectors of the IPDM E/R for damage, bend and loose connection (unit side and connector side).

Is the inspection result normal?

YES >> GO TO 2.
NO >> Repair the terminal and connector.

2.CHECK HARNESS FOR OPEN CIRCUIT

1. Disconnect the connector of IPDM E/R.
2. Check the resistance between the IPDM E/R harness connector terminals.

IPDM E/R harness connector			Resistance (Ω)
Connector No.	Terminal No.		
E10	12	11	Approx. 54 – 66

Is the measurement value within the specification?

YES >> GO TO 3.
NO >> Repair the IPDM E/R branch line.

3.CHECK POWER SUPPLY AND GROUND CIRCUIT

Check the power supply and the ground circuit of the IPDM E/R. Refer to the following.
- Models with Intelligent Key: PCS-27, "Diagnosis Procedure"
- Models without Intelligent Key: PCS-51, "Diagnosis Procedure"

Is the inspection result normal?

YES (Present error)>>Replace the IPDM E/R. Refer to the following.
- Models with Intelligent Key: PCS-28, "Removal and Installation"
- Models without Intelligent Key: PCS-52, "Removal and Installation"

YES (Past error)>>Error was detected in the IPDM E/R branch line.
NO >> Repair the power supply and the ground circuit.

TCM BRANCH LINE CIRCUIT

Diagnosis Procedure

INFOID:0000000006044445

1.CHECK CONNECTOR

1. Turn the ignition switch OFF.
2. Disconnect the battery cable from the negative terminal.
3. Check the following terminals and connectors for damage, bend and loose connection (unit side and connector side).

- TCM
- Harness connector F46
- Harness connector E6

Is the inspection result normal?

YES >> GO TO 2.
NO >> Repair the terminal and connector.

2.CHECK HARNESS FOR OPEN CIRCUIT

1. Disconnect the connector of TCM.
2. Check the resistance between the TCM harness connector terminals.

TCM harness connector			Resistance (Ω)
Connector No.	Terminal No.		
F18	33	23	Approx. 54 – 66

Is the measurement value within the specification?

YES >> GO TO 3.
NO >> Repair the TCM branch line.

3.CHECK POWER SUPPLY AND GROUND CIRCUIT

Check the power supply and the ground circuit of the TCM.

Is the inspection result normal?

YES (Present error)>>Replace the TCM.
YES (Past error)>>Error was detected in the TCM branch line.
NO >> Repair the power supply and the ground circuit.

DLC BRANCH LINE CIRCUIT

Diagnosis Procedure

INFOID:0000000006044447

1.CHECK CONNECTOR

1. Turn the ignition switch OFF.
2. Disconnect the battery cable from the negative terminal.
3. Check the terminals and connectors of the data link connector for damage, bend and loose connection (connector side and harness side).

Is the inspection result normal?

YES >> GO TO 2.
NO >> Repair the terminal and connector.

2.CHECK HARNESS FOR OPEN CIRCUIT

Check the resistance between the data link connector terminals.

Data link connector			Resistance (Ω)
Connector No.	Terminal No.		
M4	6	14	Approx. 54 – 66

Is the measurement value within the specification?

YES (Present error)>>Check CAN system type decision again.
YES (Past error)>>Error was detected in the data link connector branch line circuit.
NO >> Repair the data link connector branch line.

EPS BRANCH LINE CIRCUIT

Diagnosis Procedure

INFOID:0000000006044448

1. CHECK CONNECTOR

1. Turn the ignition switch OFF.
2. Disconnect the battery cable from the negative terminal.
3. Check the terminals and connectors of the EPS control unit for damage, bend and loose connection (unit side and connector side).

Is the inspection result normal?

YES >> GO TO 2.
NO >> Repair the terminal and connector.

2. CHECK HARNESS FOR OPEN CIRCUIT

1. Disconnect the connector of EPS control unit.
2. Check the resistance between the EPS control unit harness connector terminals.

EPS control unit harness connector			Resistance (Ω)
Connector No.	Terminal No.		
M37	8	3	Approx. 54 – 66

Is the measurement value within the specification?

YES >> GO TO 3.
NO >> Repair the EPS control unit branch line.

3. CHECK POWER SUPPLY AND GROUND CIRCUIT

Check the power supply and the ground circuit of the EPS control unit. Refer to STC-19, "Diagnosis Procedure".

Is the inspection result normal?

YES (Present error)>>Replace the EPS control unit. Refer to STC-34, "Removal and Installation".
YES (Past error)>>Error was detected in the EPS control unit branch line.
NO >> Repair the power supply and the ground circuit.

M&A BRANCH LINE CIRCUIT

Diagnosis Procedure

INFOID:0000000006044449

1.CHECK CONNECTOR

1. Turn the ignition switch OFF.
2. Disconnect the battery cable from the negative terminal.
3. Check the terminals and connectors of the combination meter for damage, bend and loose connection (unit side and connector side).

Is the inspection result normal?

YES >> GO TO 2.
NO >> Repair the terminal and connector.

2.CHECK HARNESS FOR OPEN CIRCUIT

1. Disconnect the connector of combination meter.
2. Check the resistance between the combination meter harness connector terminals.

Combination meter harness connector			Resistance (Ω)
Connector No.	Terminal No.		
M34	8	10	Approx. 54 – 66

Is the measurement value within the specification?

YES >> GO TO 3.
NO >> Repair the combination meter branch line.

3.CHECK POWER SUPPLY AND GROUND CIRCUIT

Check the power supply and the ground circuit of the combination meter. Refer to MWI-40, "COMBINATION METER : Diagnosis Procedure".

Is the inspection result normal?

YES (Present error)>>Replace the combination meter. Refer to MWI-51, "Removal and Installation".
YES (Past error)>>Error was detected in the combination meter branch line.
NO >> Repair the power supply and the ground circuit.

BCM BRANCH LINE CIRCUIT

Diagnosis Procedure

INFOID:0000000006044451

1. CHECK CONNECTOR

1. Turn the ignition switch OFF.
2. Disconnect the battery cable from the negative terminal.
3. Check the terminals and connectors of the BCM for damage, bend and loose connection (unit side and connector side).

Is the inspection result normal?

YES >> GO TO 2.
NO >> Repair the terminal and connector.

2. CHECK HARNESS FOR OPEN CIRCUIT

1. Disconnect the connector of BCM.
2. Check the resistance between the BCM harness connector terminals.

- Models with Intelligent Key system

BCM harness connector			Resistance (Ω)
Connector No.	Terminal No.		
M68	39	40	Approx. 108 – 132

- Models without Intelligent Key system

BCM harness connector			Resistance (Ω)
Connector No.	Terminal No.		
M65	39	40	Approx. 108 – 132

Is the measurement value within the specification?

YES >> GO TO 3.
NO >> Repair the BCM branch line.

3. CHECK POWER SUPPLY AND GROUND CIRCUIT

Check the power supply and the ground circuit of the BCM. Refer to the following.
- Models with Intelligent Key system: BCS-51, "Diagnosis Procedure"
- Models without Intelligent Key system: BCS-93, "Diagnosis Procedure"

Is the inspection result normal?

YES (Present error)>>Replace the BCM. Refer to the following.
- Models with Intelligent Key system: BCS-57, "Removal and Installation"
- Models without Intelligent Key system: BCS-99, "Removal and Installation"

YES (Past error)>>Error was detected in the BCM branch line.
NO >> Repair the power supply and the ground circuit.

CAN COMMUNICATION CIRCUIT

Diagnosis Procedure

INFOID:0000000006044452

1.CONNECTOR INSPECTION

1. Turn the ignition switch OFF.
2. Disconnect the battery cable from the negative terminal.
3. Disconnect all the unit connectors on CAN communication system.
4. Check terminals and connectors for damage, bend and loose connection.

Is the inspection result normal?

YES >> GO TO 2.
NO >> Repair the terminal and connector.

2.CHECK HARNESS CONTINUITY (SHORT CIRCUIT)

Check the continuity between the data link connector terminals.

Data link connector			Continuity
Connector No.	Terminal No.		
M4	6	14	Not existed

Is the inspection result normal?

YES >> GO TO 3.
NO >> Check the harness and repair the root cause.

3.CHECK HARNESS CONTINUITY (SHORT CIRCUIT)

Check the continuity between the data link connector and the ground.

Data link connector		Ground	Continuity
Connector No.	Terminal No.		
M4	6		Not existed
	14		Not existed

Is the inspection result normal?

YES >> GO TO 4.
NO >> Check the harness and repair the root cause.

4.CHECK ECM AND BCM TERMINATION CIRCUIT

1. Remove the ECM and the BCM.
2. Check the resistance between the ECM terminals.

- With L-Jetronic engine

ECM		Resistance (Ω)
Terminal No.		
52	51	Approx. 108 – 132

- With D-Jetronic engine

ECM		Resistance (Ω)
Terminal No.		
84	83	Approx. 108 – 132

3. Check the resistance between the BCM terminals.

BCM		Resistance (Ω)
Terminal No.		
39	40	Approx. 108 – 132

Is the measurement value within the specification?

YES >> GO TO 5.
NO >> Replace the ECM and/or the BCM.

5. CHECK SYMPTOM

Connect all the connectors. Check if the symptoms described in the “Symptom (Results from interview with customer)” are reproduced.

Inspection result

Reproduced>>GO TO 6.
Non-reproduced>>Start the diagnosis again. Follow the trouble diagnosis procedure when past error is detected.

6. CHECK UNIT REPRODUCTION

Perform the reproduction test as per the following procedure for each unit.

1. Turn the ignition switch OFF.
2. Disconnect the battery cable from the negative terminal.
3. Disconnect one of the unit connectors of CAN communication system.
   NOTE:
   ECM and BCM have a termination circuit. Check other units first.
4. Connect the battery cable to the negative terminal. Check if the symptoms described in the “Symptom (Results from interview with customer)” are reproduced.
   NOTE:
   Although unit-related error symptoms occur, do not confuse them with other symptoms.

Inspection result

Reproduced>>Connect the connector. Check other units as per the above procedure.
Non-reproduced>>Replace the unit whose connector was disconnected.

SECTION LU
ENGINE LUBRICATION SYSTEM

CONTENTS

HR12DE

PRECAUTION 2

PRECAUTIONS 2
Liquid Gasket 2

PREPARATION 4

PREPARATION 4
Special Service Tools 4
Commercial Service Tools 4

SYSTEM DESCRIPTION 6

DESCRIPTION 6
Engine Lubrication System 6
Engine Lubrication System Schematic 6

PERIODIC MAINTENANCE 7

ENGINE OIL 7
Inspection 7
Draining 8
Refilling 8

OIL FILTER 10
Removal and Installation 10
Inspection 10

REMOVAL AND INSTALLATION 11

OIL PUMP 11
Exploded View 11
Removal and Installation 11
Inspection 12

SERVICE DATA AND SPECIFICATIONS (SDS) 13

SERVICE DATA AND SPECIFICATIONS (SDS) 13
Periodical Maintenance Specification 13
Engine Oil Pressure 13

PRECAUTION

PRECAUTIONS

Liquid Gasket

INFOID:0000000005988437

REMOVAL OF LIQUID GASKET SEALING

- After removing mounting nuts and bolts, separate the mating surface using the seal cutter [SST: KV10111100] (A) and remove old liquid gasket sealing.
  CAUTION:
  Be careful not to damage the mating surfaces.
- Tap the seal cutter [SST: KV10111100] to insert it (B), and then slide it (C) by tapping on the side as shown in the figure.
- In areas where the seal cutter [SST: KV10111100] is difficult to use, lightly tap the parts using a plastic hammer to remove it.
  CAUTION:
  If for some unavoidable reason tool such as a screwdriver is used, be careful not to damage the mating surfaces.

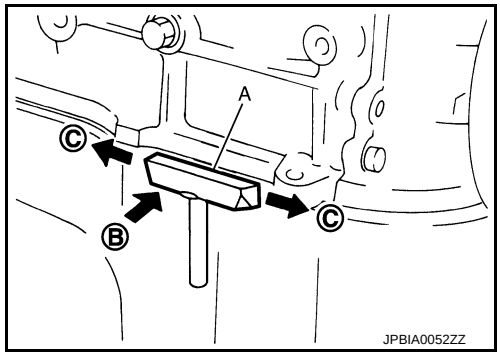

LIQUID GASKET APPLICATION PROCEDURE

1. Using a scraper (A), remove old liquid gasket adhering to the liquid gasket application surface and the mating surface.
   - Remove liquid gasket completely from the groove of the liquid gasket application surface, mounting bolts, and bolt holes.
2. Wipe the liquid gasket application surface and the mating surface with white gasoline (lighting and heating use) to remove adhering moisture, grease and foreign materials.

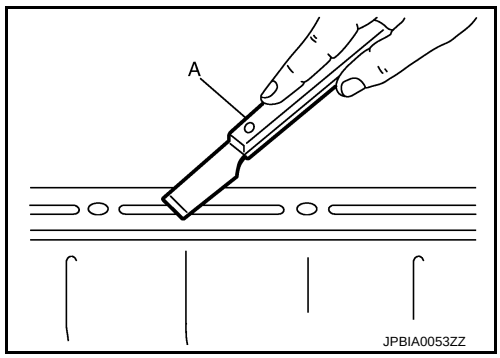

3. Attach liquid gasket tube to the tube presser (commercial service tool).
   Use Genuine Liquid gasket or equivalent.
4. Apply liquid gasket without gaps to the specified location according to the specified dimensions.
   - If there is a groove for liquid gasket application, apply liquid gasket to the groove.

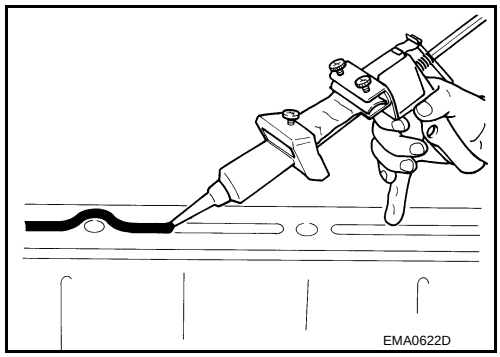

   - As for bolt holes (B), normally apply liquid gasket inside the holes. Occasionally, it should be applied outside the holes. Check to read the text of this manual.

     A : Groove

     ⇦ : Inside

   - Within five minutes of liquid gasket application, install the mating component.
   - If liquid gasket protrudes, wipe it off immediately.
   - Do not retighten mounting bolts or nuts after the installation.
   - After 30 minutes or more have passed from the installation, fill engine oil and engine coolant.

   CAUTION:

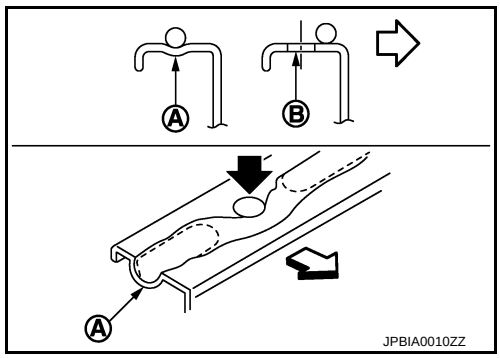

If there are specific instructions in this manual, observe them.

PREPARATION

PREPARATION

Special Service Tools

INFOID:0000000005988438

Tool number Tool name	Description
KV10111100 Seat cutter 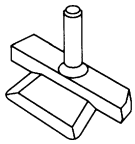 NT046	Removing oil pan (lower) etc.
ST25051001 Oil pressure gauge 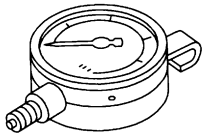 NT050	Measuring oil pressure **Maximum measuring range: 2,452 kPa (25 kg/cm^2, 356 psi)**
ST25052000 Hose 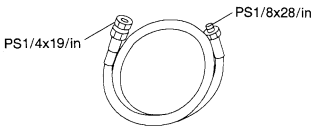 S-NT559	Adapting oil pressure gauge to cylinder block
KV10115801 Oil filter wrench 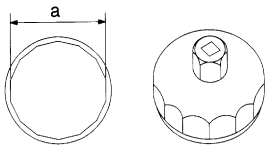 S-NT375	Removing and installing oil filter **a: 64.3 mm (2.531 in)**

Commercial Service Tools

INFOID:0000000005988439

Tool name	Description
Deep socket 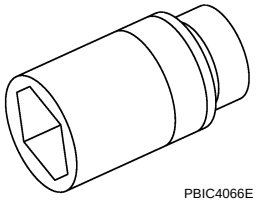 PBIC4066E	Removing and installing oil pressure switch **27 mm (1.06 in)**
Tube presser 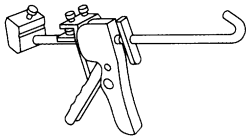 NT052	Pressing the tube of liquid gasket

SYSTEM DESCRIPTION

DESCRIPTION

Engine Lubrication System

INFOID:0000000005988440

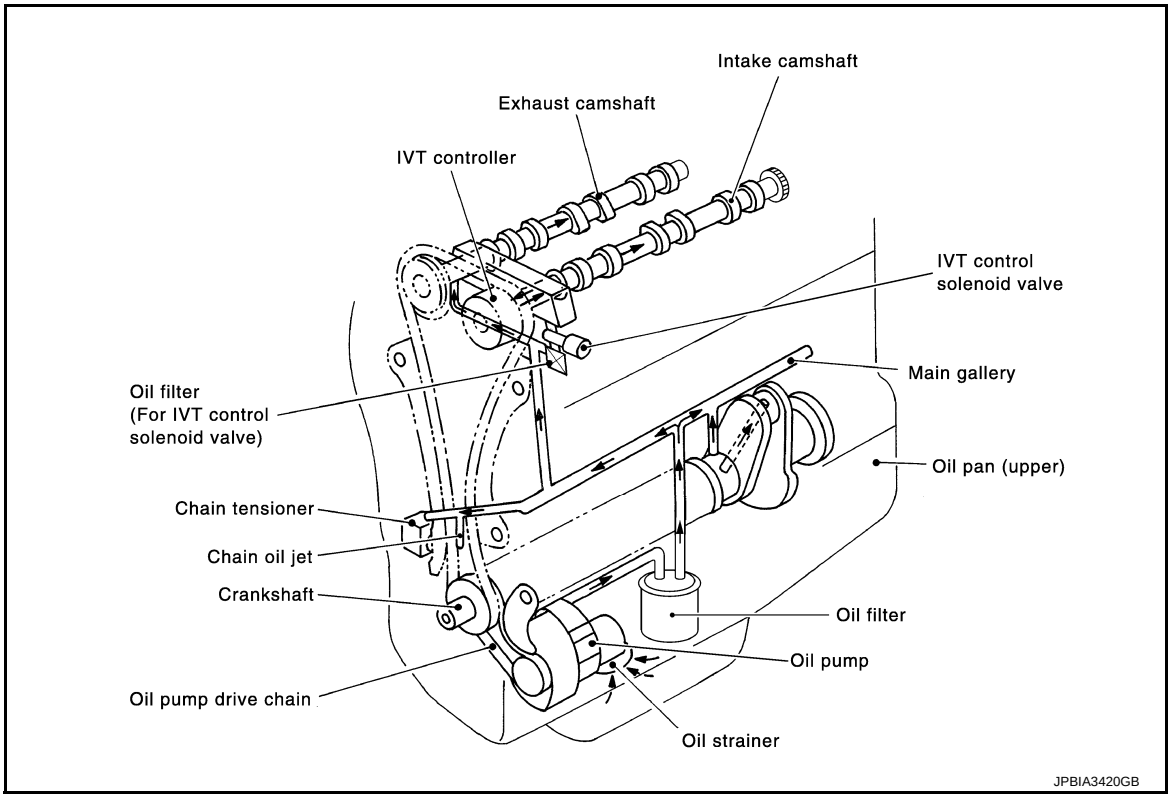

Engine Lubrication System Schematic

INFOID:0000000005988441

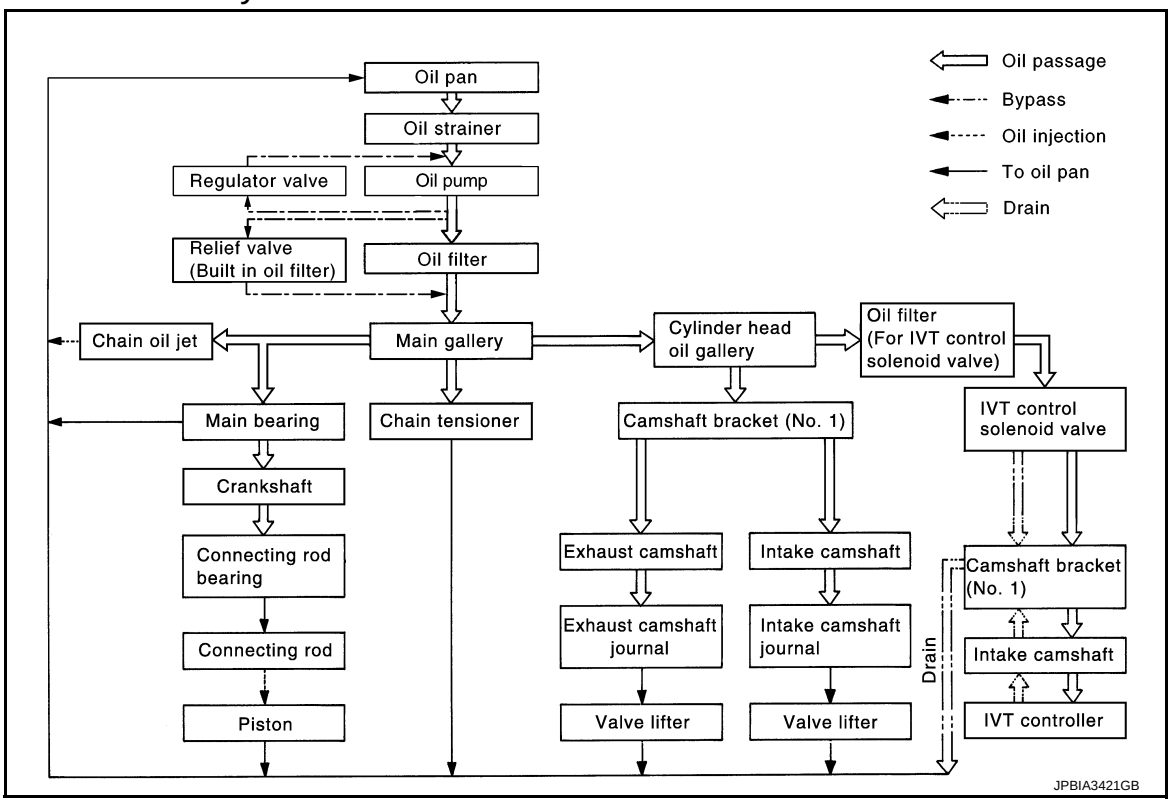

PERIODIC MAINTENANCE

ENGINE OIL

Inspection

INFOID:0000000005988442

ENGINE OIL LEVEL

NOTE:
Before starting engine, put vehicle horizontally and check the engine oil level. If engine is already started, stop it and allow 10 minutes before checking.

1. Pull out oil level gauge and wipe it clean.
2. Insert oil level gauge and check that the engine oil level is within the range (A) shown in the figure.
3. If it is out of range, adjust it.

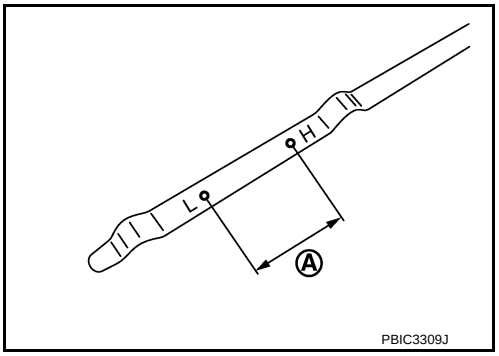

ENGINE OIL APPEARANCE

- Check engine oil for white turbidity or heavy contamination.
- If engine oil becomes turbid and white, it is highly probable that it is contaminated with engine coolant. Repair or replace damaged parts.

ENGINE OIL LEAKAGE

Check for engine oil leakage around the following area.

- Oil pan (upper and lower)
- Oil pan drain plug
- Oil pressure switch
- Oil filter
- Intake valve timing control solenoid valve
- Front cover
- Mating surface between cylinder head and camshaft bracket
- Mating surface between cylinder block and cylinder head
- Mating surface between cylinder head and rocker cover
- Crankshaft oil seals (front and rear)

OIL PRESSURE CHECK

WARNING:

- **Be careful not to get burned, as engine oil may be hot.**
- **When checking engine oil pressure, shift position should be “Parking position”, and apply parking brake securely.**

1. Check engine oil level.
2. Disconnect harness connector at oil pressure switch (1), and remove oil pressure switch using a deep socket (commercial service tool).
   CAUTION:
   Never drop or shock oil pressure switch.

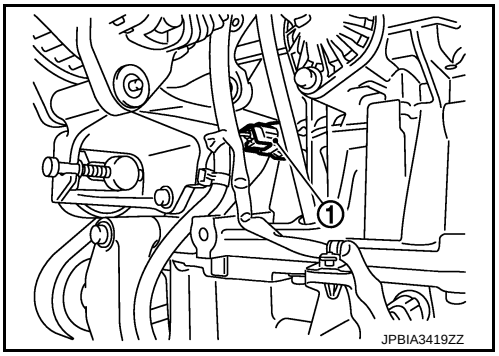

3. Install oil pressure gauge [SST: ST25051001] (A) and hose [SST: ST25052000] (B).

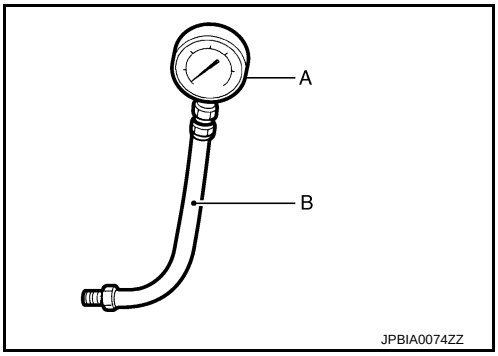

4. Start engine and warm it up to normal operating temperature.
5. Check oil pressure with engine running under no-load.
   NOTE:
   When engine oil temperature is low, engine oil pressure becomes high.

   Engine oil pressure : Refer to LU-13, "Engine Oil Pressure".

   If difference is extreme, check oil passage and oil pump for oil leakage.
6. After the inspections, install oil pressure switch as follows:

a. Remove old liquid gasket adhering to oil pressure switch and engine.
b. Apply liquid gasket and tighten oil pressure switch to specification.
   Use Genuine Liquid Gasket or equivalent.

   Tightening torque : Refer to EM-34, "Exploded View".

c. Check engine oil level.
d. After warming up engine, check that there is no leakage of engine oil with running engine.

Draining

INFOID:0000000005988443

WARNING:
- **Be careful not to get burned, as engine oil may be hot.**
- **Prolonged and repeated contact with used engine oil may cause skin cancer. Try to avoid direct skin contact with used engine oil. If skin contact is made, wash thoroughly with soap or hand cleaner as soon as possible.**

1. Warm up the engine, and check for engine oil leakage from engine components. Refer to LU-7, "Inspection".
2. Stop the engine and wait for 10 minutes.
3. Loosen oil filler cap.
4. Remove drain plug and then drain engine oil.

Refilling

INFOID:0000000005988444

1. Install drain plug with new drain plug washer. Refer to EM-34, "Exploded View".
   CAUTION:
   Be sure to clean drain plug and install with new drain plug washer.

   Tightening torque : Refer to EM-34, "Exploded View".
2. Refill with new engine oil.
   Engine oil specification and viscosity: Refer to MA-8, "Fluids and Lubricants".

   Engine oil capacity : Refer to LU-13, "Periodical Maintenance Specification".

   CAUTION:
   - **The refill capacity depends on the engine oil temperature and drain time. Use these specifications for reference only.**

- **Always use oil level gauge to determine the proper amount of engine oil in the engine.**

3. Warm up engine and check area around drain plug and oil filter for engine oil leakage.
4. Stop engine and wait for 10 minutes.
5. Check the engine oil level. Refer to LU-7, "Inspection".

OIL FILTER

Removal and Installation

INFOID:0000000005988445

REMOVAL

1. Using oil filter wrench [SST: KV10115801] (A), remove oil filter.

   ⇦ : Vehicle front

   CAUTION:
   - **Oil filter is provided with relief valve. Use genuine NISSAN oil filter or equivalent.**
   - **Be careful not to get burned when engine and engine oil may be hot.**
   - **When removing, prepare a shop cloth to absorb any engine oil leakage or spillage.**
   - **Completely wipe off any engine oil that adheres to engine and vehicle.**

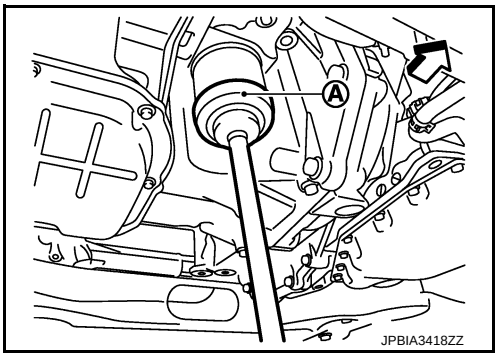

INSTALLATION

1. Remove foreign materials adhering to the oil filter installation surface.
2. Apply new engine oil to the oil seal contact surface of new oil filter.

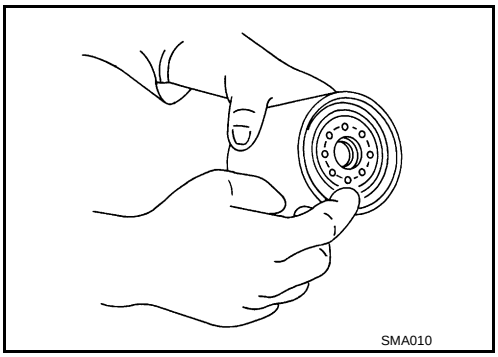

3. Screw oil filter manually until it touches the installation surface, then tighten it by 2/3 turn (A). Or tighten to specification.

   Oil filter:

   : 17.7 N·m (1.8 kg-m, 13 ft-lb)

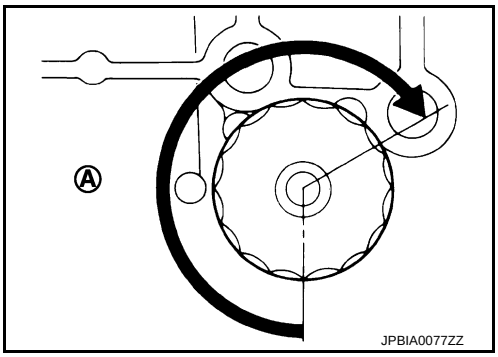

Inspection

INFOID:0000000005988446

INSPECTION AFTER INSTALLATION

1. Check the engine oil level. Refer to LU-7, "Inspection".
2. Start the engine, and check that there is no leakage of engine oil.
3. Stop the engine and wait for 10 minutes.
4. Check the engine oil level, and adjust the level. Refer to LU-7, "Inspection".

REMOVAL AND INSTALLATION

OIL PUMP

Exploded View

INFOID:0000000006038873

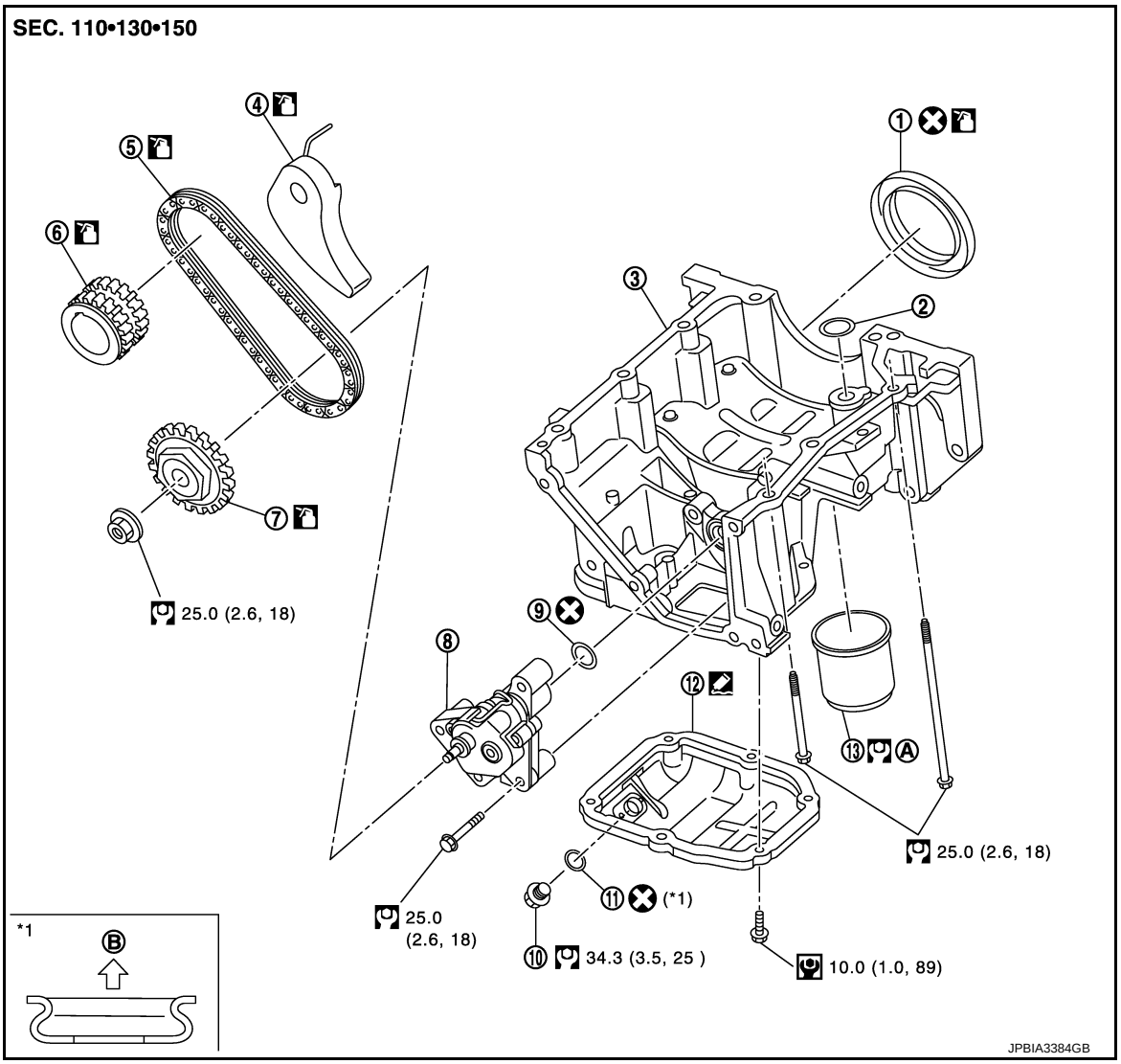

1.	Rear oil seal	2.	O-ring	3.	Oil pan (upper)
4.	Oil pump chain	5.	Oil pump drive chain	6.	Crankshaft sprocket
7.	Oil pump sprocket	8.	Oil pump	9.	O-ring
10.	Drain plug	11.	Drain plug washer	12.	Oil pan (lower)
13.	Oil pan filter				
A.	Tightening must be done following the installation procedure. Refer to LU-10, "Inspection"	B.	Oil pan side		

Refer to GI-4, "Components" for symbols in the figure.

Removal and Installation

INFOID:0000000006038874

REMOVAL

1. Drain engine oil. Refer to LU-8, "Draining".
2. Remove timing chain and oil pump drive chain. Refer to EM.

3. Remove oil pump.

INSTALLATION

Install in the reverse order of removal.

Inspection

INFOID:0000000006038875

INSPECTION AFTER INSTALLATION

1. Check the engine oil level. Refer to LU-7, "Inspection".
2. Start the engine, and check that there is no leakage of engine oil.
3. Stop the engine and wait for 10 minutes.
4. Check the engine oil level, and adjust the level. Refer to LU-7, "Inspection".

SERVICE DATA AND SPECIFICATIONS (SDS)

SERVICE DATA AND SPECIFICATIONS (SDS)

Periodical Maintenance Specification

INFOID:0000000005988447

ENGINE OIL CAPACITY (APPROXIMATE)

Unit: ℓ (US qt, Imp qt)

Drain and refill	With oil filter change	3.0 (3-1/8, 2-5/8)
	Without oil filter change	2.8 (3, 2-4/8)
Dry engine (Overhaul)		3.5 (3-6/8, 3-1/8)

Engine Oil Pressure

INFOID:0000000005988448

Unit: kPa (kg/cm^2, psi)

Engine speed	Approximate discharge pressure*
Idle speed	60 (0.61, 9)
2,000 rpm	270 (2.8, 39)

*: Engine oil temperature at 80°C (176°F)

SECTION MA
MAINTENANCE

CONTENTS

PREPARATION 3

PREPARATION 3
Special Service Tool 3
Commercial Service Tool 3

PERIODIC MAINTENANCE 4

GENERAL MAINTENANCE 4
General Maintenance 4

PERIODIC MAINTENANCE 5
Periodic Maintenance 5

RECOMMENDED FLUIDS AND LUBRICANTS 8
Fluids and Lubricants 8
SAE Viscosity Number 8
Engine Coolant Mixture Ratio 9

ENGINE MAINTENANCE 10

DRIVE BELT 10
DRIVE BELT : Checking 10
DRIVE BELT : Tension Adjustment 10

ENGINE COOLANT 11
ENGINE COOLANT : Inspection 11
ENGINE COOLANT : Draining 11
ENGINE COOLANT : Refilling 12
ENGINE COOLANT : Flushing 13

RESERVOIR TANK CAP 14
RESERVOIR TANK CAP : Inspection 14

RADIATOR 14
RADIATOR : Inspection 15

FUEL LINES 15
FUEL LINES : Inspection 15

AIR CLEANER FILTER 15
AIR CLEANER FILTER : Removal and Installation 15

ENGINE OIL 15
ENGINE OIL : Draining 15
ENGINE OIL : Refilling 16

OIL FILTER 16
OIL FILTER : Removal and Installation 16
OIL FILTER : Inspection 17

SPARK PLUG 17
SPARK PLUG : Removal and Installation 17
SPARK PLUG : Inspection 17

EVAP VAPOR LINES 18
EVAP VAPOR LINES : Inspection 18

CHASSIS MAINTENANCE 19

EXHAUST SYSTEM 19
EXHAUST SYSTEM : Inspection 19

CLUTCH FLUID 19
CLUTCH FLUID : Inspection 19
CLUTCH FLUID : Draining 19
CLUTCH FLUID : Refilling 20

GEAR OIL 21
GEAR OIL : Inspection 21
GEAR OIL : Draining 21
GEAR OIL : Refilling 22

WHEELS (BONDING WEIGHT TYPE) 22
WHEELS (BONDING WEIGHT TYPE) : Tire rotation 22

BRAKE FLUID LEVEL AND LEAKS 22
BRAKE FLUID LEVEL AND LEAKS : Inspection 22

BRAKE LINES AND CABLES 22
BRAKE LINES AND CABLES : Inspection 23

BRAKE FLUID 23
BRAKE FLUID : Changing 23

DISC BRAKE 23

DISC BRAKE : Inspection 23
DISC BRAKE : Front Disc Brake 24

DRUM BRAKE 24
DRUM BRAKE : Inspection 24
DRUM BRAKE : Rear Drum Brake 25

STEERING GEAR AND LINKAGE 25
STEERING GEAR AND LINKAGE : Inspection 25

AXLE AND SUSPENSION PARTS 25
AXLE AND SUSPENSION PARTS : Inspection 25

DRIVE SHAFT 25
DRIVE SHAFT : Inspection 26

BODY MAINTENANCE 27

LOCKS, HINGES AND HOOD LATCH 27
LOCKS, HINGES AND HOOD LATCH : Lubricating 27

SEAT BELT, BUCKLES, RETRACTORS, ANCHORS AND ADJUSTERS 27
SEAT BELT, BUCKLES, RETRACTORS, ANCHORS AND ADJUSTERS : Inspection 27

BODY CORROSION 27
BODY CORROSION : Checking Body Corrosion... 27

SERVICE DATA AND SPECIFICATIONS (SDS) 29

SERVICE DATA AND SPECIFICATIONS (SDS) 29

DRIVE BELT 29
DRIVE BELT : Drive Belt 29

ENGINE COOLANT 29
ENGINE COOLANT : Periodical Maintenance Specification 29

ENGINE OIL 29
ENGINE OIL : Periodical Maintenance Specification 29

SPARK PLUG 29
SPARK PLUG : Spark Plug 29

ROAD WHEEL 30
ROAD WHEEL : Road Wheel 30

PREPARATION

PREPARATION

Special Service Tool

INFOID:0000000005943088

Tool number Tool name	Description
KV10115801 Oil filter wrench 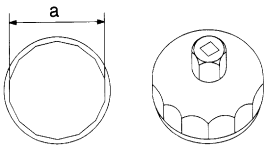 S-NT375	Removing and installing oil filter **a: 64.3 mm (2.531 in)**

Commercial Service Tool

INFOID:0000000005943089

Tool name	Description
Power tool 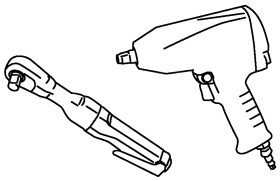 PBIC0190E	Loosening nuts and bolts
Spark plug wrench 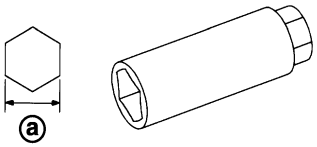 JPBIA0399ZZ	Removing and installing spark plug **a: 14 mm (0.55 in)**
Radiator cap tester 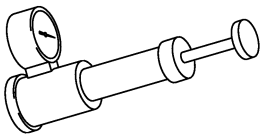 PBIC1982E	Checking radiator and reservoir tank cap
Radiator cap tester adapter 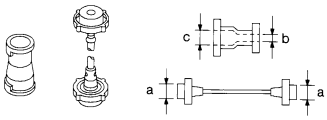 S-NT564	Adapting radiator cap tester to reservoir tank cap and water outlet (front) filler neck **a: 28 (1.10) dia.** **b: 31.4 (1.236) dia.** **c: 41.3 (1.626) dia.** Unit: mm (in)

PERIODIC MAINTENANCE

GENERAL MAINTENANCE

General Maintenance

INFOID:0000000006034667

General maintenance includes those items which should be checked during the normal day-to-day operation of the vehicle. They are essential if the vehicle is to continue operating properly. The owners can perform the checks and inspections themselves or they can have their NISSAN dealers do them.

OUTSIDE THE VEHICLE

The maintenance items listed here should be performed from time to time, unless otherwise specified.

Item		Reference page
Tires	Check the pressure with a gauge often and always prior to long distance trips. Adjust the pressure in all tires, including the spare, to the pressure specified. Check carefully for damage, cuts or excessive wear.	WT-6
Windshield wiper blades	Check for cracks or wear if not functioning correctly.	—
Doors and engine hood	Check that all doors and the engine hood operate smoothly as well as the back door, trunk lid and glass hatch. Also make sure that all latches lock securely. Lubricate if necessary. Make sure that the secondary latch keeps the hood from opening when the primary latch is released. When driving in areas using road salt or other corrosive materials, check for lubrication frequently.	MA-27
Tire rotation	Tires should be rotated every 10,000 km (6,000 miles).	MA-22

INSIDE THE VEHICLE

The maintenance items listed here should be checked on a regular basis, such as when performing periodic maintenance, cleaning the vehicle, etc.

Item		Reference page
Lamps	Make sure that the headlamps, stop lamps, tail lamps, turn signal lamps, and other lamps are all operating properly and installed securely. Also check headlamp aim.	—
Warning lamps and chimes	Make sure that all warning lamps and chimes are operating properly.	—
Steering wheel	Check that it has the specified play. Check for changes in the steering conditions, such as excessive free play, hard steering or strange noises. **Free play: Less than 35 mm (1.38 in)**	—
Seat belts	Check that all parts of the seat belt system (e.g. buckles, anchors, adjusters and retractors) operate properly and smoothly, and are installed securely. Check the belt webbing for cuts, fraying, wear or damage.	MA-27

UNDER THE HOOD AND VEHICLE

The maintenance items listed here should be checked periodically e.g. each time you check the engine oil or refuel.

Item		Reference page
Windshield washer fluid	Check that there is adequate fluid in the tank.	—
Engine coolant level	Check the coolant level when the engine is cold.	MA-11
Engine oil level	Check the level after parking the vehicle (on a level ground) and turning off the engine.	LU-7
Brake and clutch fluid levels	Make sure that the brake and clutch fluid levels are between the “MAX” and “MIN” lines on the reservoir.	MA-19 MA-22
Battery	Check the fluid level in each cell. It should be between the “MAX” and “MIN” lines.	PG-130

PERIODIC MAINTENANCE

Periodic Maintenance

INFOID:0000000006034668

The following tables show the normal maintenance schedule. Depending upon weather and atmospheric conditions, varying road surfaces, individual driving habits and vehicle usage, additional or more frequent maintenance may be required.

Periodic maintenance beyond the last period shown on the tables requires similar maintenance.

ENGINE AND EMISSION CONTROL MAINTENANCE

Abbreviations: I = Inspect and correct or replace as necessary, R = Replace, E = Check and correct the engine coolant mixture ratio.

MAINTENANCE OPERATION		MAINTENANCE INTERVAL								Reference page
Perform either at number of kilometers (miles) or months, whichever comes first.	km x 1,000 (Miles x 1,000) Months	10 (6) 6	20 (12) 12	30 (18) 18	40 (24) 24	50 (30) 30	60 (36) 36	70 (42) 42	80 (48) 48	
Underhood and under vehicle										
Intake & exhaust valve clearance	See NOTE (1)									EM-11
Drive belts	See NOTE (2)				I				I	MA-10
Engine oil (Use recommended oil.)★		R	R	R	R	R	R	R	R	MA-15
Engine oil filter (Use genuine NISSAN engine oil filter or equivalent)★		R	R	R	R	R	R	R	R	MA-16
Engine coolant (Use Genuine NISSAN Engine Coolant or equivalent in its quality.)	See NOTE (3)				E				R	MA-11
Cooling system			I		I		I		I	MA-11 MA-14 MA-15
Fuel lines					I				I	MA-15
Air cleaner filter (Dry paper type)★		Clean every 5,000 km (3,000 miles)								MA-15
					R				R	
Air cleaner filter (Viscous paper type)★					R				R	MA-15
Fuel filter (In-tank type)	See NOTE (4)									—
Spark plugs (Platinum-tipped type)		Replace every 100,000km (60,000 miles)								MA-17
Spark plugs (Nickel-tipped type)		Replace every 40,000 km (24,000 miles)								MA-17
EVAP vapor lines (With carbon canister)					I				I	MA-18

NOTE:

- **Maintenance items with "★" should be performed more frequently according to "Maintenance Under Severe Driving Conditions".**
- (1) Periodic maintenance is not required. However, if valve noise increases, check valve clearance.
- (2) Replace the drive belts if found damaged.
- (3) Use Genuine NISSAN Engine Coolant or equivalent in its quality, in order to avoid possible aluminum corrosion within the engine cooling system caused by the use of non-genuine engine coolant. First replace at 80,000 km (48,000 miles)/48 months, then every 40,000 km (24,000 miles)/24 months. Perform "E" (Checking the mixture ratio and correcting the mixture ratio if necessary) at the middle of replacement interval.
- (4) Maintenance-free item.

CHASSIS AND BODY MAINTENANCE

Abbreviations: I = Inspect and correct or replace as necessary, R = Replace, L = Lubricate.

MAINTENANCE OPERATION		MAINTENANCE INTERVAL								Reference page
Perform either at number of kilometers (miles) or months, whichever comes first.	km x 1,000 (Miles x 1,000) Months	10 (6) 6	20 (12) 12	30 (18) 18	40 (24) 24	50 (30) 30	60 (36) 36	70 (42) 42	80 (48) 48	
Underhood and under vehicle										
Brake and clutch fluid (For level & leaks)		I	I	I	I	I	I	I	I	MA-23 MA-19
Brake fluid★					R				R	MA-23
Brake booster vacuum hoses, connections & check valve					I				I	BR-12
Manual transaxle gear oil (For level and leaks)		I	I	I	I	I	I	I	I	MA-21
Brake, clutch & exhaust system		I	I	I	I	I	I	I	I	MA-23 MA-19 MA-25
Steering gear & linkage, axle & suspension parts, & front drive shafts★			I		I		I		I	MA-25 MA-25 MA-26
Outside and inside										
Wheel alignment (If necessary, rotate & balance wheels)			I		I		I		I	FSU-7 RSU-5 MA-22
Brake pads, rotors & other brake components★		I	I	I	I	I	I	I	I	MA-23 BR-13 BR-13
Brake linings, drums & other brake components★			I		I		I		I	MA-24 BR-15 BR-15
Locks, hinges & hood latch★		L	L	L	L	L	L	L	L	MA-27
Seat belts, buckles, retractors, anchors & adjuster			I		I		I		I	MA-27
Foot brake, parking brake & clutch (For free play, stroke & operation)		I	I	I	I	I	I	I	I	BR-7 PB-2 CL-6

NOTE:

Maintenance items with "★" should be performed more frequently according to "Maintenance Under Severe Driving Conditions".

MAINTENANCE UNDER SEVERE DRIVING CONDITIONS

The maintenance intervals shown on the preceding pages are for normal operating conditions. If the vehicle is mainly operated under severe driving conditions as shown below, more frequent maintenance must be performed on the following items as shown in the table.

Severe driving conditions

A — Driving under dusty conditions
B — Driving repeatedly short distances
C — Towing a trailer or caravan
D — Extensive idling
E —Driving in extremely adverse weather conditions or in areas where ambient temperatures are either extremely low or extremely high
F — Driving in high humidity or mountainous areas
G — Driving in areas using salt or other corrosive materials
H — Driving on rough and/or muddy roads or in the desert
I — Driving with frequent use of braking or in mountainous areas

Maintenance operation: Inspect = Inspect and correct or replace as necessary.

Driving condition									Maintenance item	Maintenance operation	Maintenance interval	Reference page
A	.	.	.	.	.	.	.	.	Air cleaner filter	Replace	More frequently	MA-15
A	B	C	D	.	.	.	.	.	Engine oil	Replace	Every 5,000 km (3,000 miles) or 3 months	MA-15
A	B	C	D	.	.	.	.	.	Engine oil filter	Replace	Every 5,000 km (3,000 miles) or 3 months	MA-16
.	.	.	.	.	F	.	.	.	Brake fluid	Replace	Every 20,000 km (12,000 miles) or 12 months	MA-23
.	.	.	.	.	.	G	H	.	Steering gear & linkage, axle & suspension parts, & front drive shafts	Inspect	Every 10,000 km (6,000 miles) or 6 months	MA-25 MA-25 MA-26
A	.	C	.	.	.	G	H	I	Brake pads, rotors & other brake components	Inspect	Every 5,000 km (3,000 miles) or 3 months	MA-23 BR-13 BR-13
A	.	C	.	.	.	G	H	I	Brake linings, drums & other brake components	Inspect	Every 10,000 km (6,000 miles) or 6 months	MA-24 BR-15 BR-15
.	.	.	.	.	.	G	.	.	Locks, hinges & hood latch	Lubricate	Every 5,000 km (3,000 miles) or 3 months	MA-27

RECOMMENDED FLUIDS AND LUBRICANTS

Fluids and Lubricants

INFOID:0000000006034669

		Capacity (Approximate)		Recommended Fluids/Lubricants
		Liter	Imp measure	
Engine oil Drain and refill	With oil filter change	3.0	3-1/8 qt	Genuine NISSAN engine oil*1 API SL*1 ILSAC grade GF-3
	Without oil filter change	2.8	3 qt	
Dry engine (engine overhaul)		3.5	3-6/8 qt	
Cooling system (with reservoir)	With EGR control valve	5.7	6 qt	Genuine NISSAN Engine Coolant or equivalent in its quality*2
	Without EGR control valve	5.5	5-6/8 qt	
Reservoir tank		0.7	5/8 qt	
Manual transaxle fluid (MTF)		2.6	4-5/8 pt	Genuine NISSAN Manual Transmission Fluid (MTF) HQ Multi 75W-85 or equivalent*3
Brake and clutch fluid		—	—	Genuine NISSAN Brake Fluid, or equivalent DOT 3 (US FMVSS No. 116)
Multi-purpose grease		—	—	NLGI No. 2 (Lithium soap base)

*1: For further details, see “SAE Viscosity Number”.

*2: Use Genuine NISSAN Engine Coolant or equivalent in its quality, in order to avoid possible aluminum corrosion within the engine cooling system caused by the use of non-genuine engine coolant.

Note that any repairs for the incidents within the engine cooling system while using non-genuine engine coolant may not be covered by the warranty even if such incidents occurred during the warranty period.

*3: If Genuine NISSAN gear oil is not available, API GL-4, Viscosity SAE 75W-85 may be used as a temporary replacement. However, use Genuine NISSAN gear oil as soon as it is available.

SAE Viscosity Number

INFOID:0000000006034670

GASOLINE ENGINE

- 0W-20 is preferable.
  If 0W-20 is not available, select the viscosity, from the chart, that is suitable for outside temperature range.

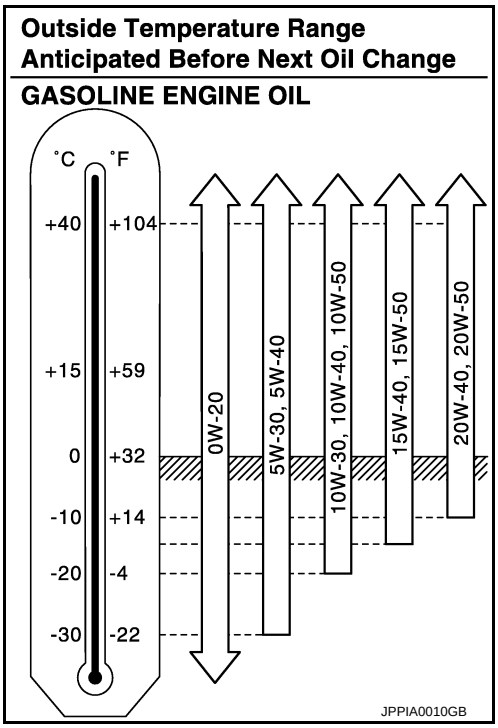

Engine Coolant Mixture Ratio

INFOID:0000000006034671

The engine cooling system is filled at the factory with a high-quality, year-round and extended life engine coolant. The high quality engine coolant contains the specific solutions effective for the anti-corrosion and the anti-freeze function. Therefore, additional cooling system additives are not necessary.

Outside temperature down to		Composition	
°C	°F	Engine coolant (Concent-rated)	Demineralized water or distilled water
–15	5	30%	70%
–35	–30	50%	50%

SMA089D

CAUTION:

- **When adding or replacing coolant, be sure to use only a Genuine NISSAN Engine Coolant or equivalent in its quality with the proper mixture ratio. See the examples shown in the figure.**

The use of other types of engine coolant may damage your cooling system.

- When checking the engine coolant mixture ratio by the coolant hydrometer, use the chart below to correct your hydrometer reading (specific gravity) according to coolant temperature.

Mixed coolant specific gravity

Unit: specific gravity

Engine coolant mixture ratio	Coolant temperature °C (°F)			
	15 (59)	25 (77)	35 (95)	45 (113)
30%	1.046 - 1.050	1.042 - 1.046	1.038 - 1.042	1.033 - 1.038
50%	1.076 - 1.080	1.070 - 1.076	1.065 - 1.071	1.059 - 1.065

WARNING:

Never remove the radiator cap when the engine is hot. Serious burns could be caused by high pressure fluid escaping from the radiator. Wait until the engine and radiator cool down.

ENGINE MAINTENANCE

DRIVE BELT

DRIVE BELT : Checking

INFOID:0000000006057327

- Inspection should be done only when engine is cold or over 30 minutes after the engine is stopped.

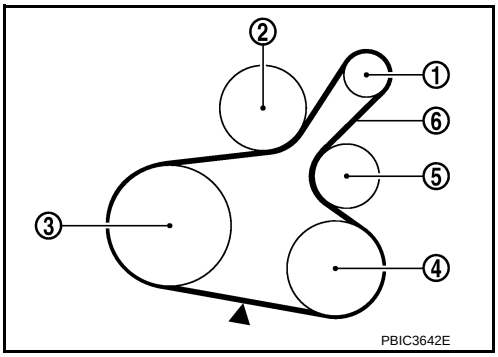

1 : Alternator
2 : Water pump
3 : Crankshaft pulley
4 : A/C compressor (With A/C models)
: Idler pulley (Without A/C models)
5 : Idler pulley
6 : Drive belt

- Visually check belts for wear, damage, and cracks on inside and edges.
- Turn crankshaft pulley two time clockwise, and check tension on all pulleys is equal before doing the test.
- When measuring deflection, apply 98 N (10 kg, 22 lb) at the (▼) marked point.
- Measure the belt tension and frequency with acoustic tension gauge (commercial service tool) at the (▼) marked point.

CAUTION:
- **When the tension and frequency are measured, the acoustic tension gauge should be used.**
- **When checking immediately after installation, first adjust it to the specified value. Then, after turning crankshaft two turns or more, readjust to the specified value to avoid variation in deflection between pulleys.**

Belt Deflection/Belt Tension and Frequency: Refer to EM-92, "Drive Belt".

DRIVE BELT : Tension Adjustment

INFOID:0000000006057328

Location	Location of adjuster and tightening method
Drive belt	Adjusting bolt on idler pulley

CAUTION:
- **When belt is replaced with new one, adjust belt tension to the value for “New belt”, because new belt will not fully seat in the pulley groove.**
- **When tension of the belt being used exceeds “Limit”, adjust it to the value for “After adjusted”.**
- **When installing a belt, check it is correctly engaged with the pulley groove.**
- **Never allow oil or engine coolant to get on the belt.**
- **Never twist or bend the belt strongly.**

1. Remove front fender protector (RH). Refer to EXT-17, "FENDER PROTECTOR : Exploded View".
2. Loosen the idler pulley lock nut (A) from the tightening position with the specified torque by 45 degrees.

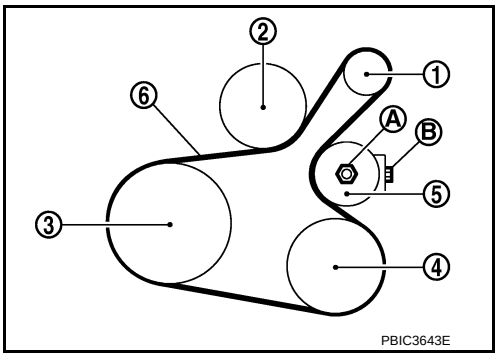

1 : Alternator
2 : Water pump
3 : Crankshaft pulley
4 : A/C compressor (with A/C models)
: Idler pulley (without A/C models)
5 : Idler pulley
6 : Drive belt

CAUTION:
- **When the lock nut is loosened excessively, the idler pulley tilts and the correct tension adjustment cannot be performed. Never loosen it excessively (more than 45 degrees).**

- **Put a matching mark on the lock nut (A), and check turning angle with a protractor. Never visually check the tightening angle.**

3. Adjust the belt tension by turning the adjusting bolt (B). Refer to MA-10, "DRIVE BELT : Checking".
   CAUTION:
   - **When checking immediately after installation, first adjust it to the specified value. Then, after turning crankshaft two turns or more, readjust to the specified value to avoid variation in deflection between pulleys.**
   - **When the tension adjustment is performed, the lock nut should be in the condition at step“ 2”. If the tension adjustment is performed when the lock nut is loosened more than the standard, the idler pulley tilts and the correct tension adjustment cannot be performed.**
4. Tighten the lock nut.

   : 34.8 N·m (3.5 kg-m, 26 ft-lb)

ENGINE COOLANT

ENGINE COOLANT : Inspection

INFOID:0000000006057336

LEVEL

- Check that the reservoir tank engine coolant level is within the “MIN” to “MAX” when the engine is cool.

  A : MAX
  B : MIN

- Adjust the engine coolant level if necessary.

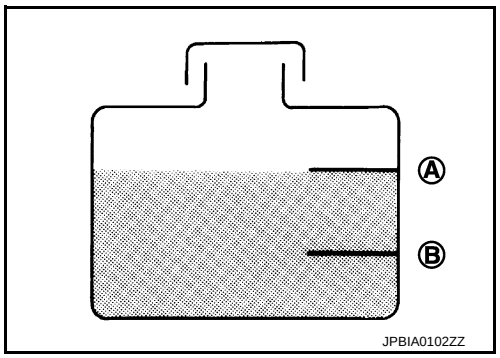

LEAKAGE

- To check for leakage, apply pressure to the cooling system with the radiator cap tester (commercial service tool) (A) and the radiator cap tester adapter (commercial service tool) (B).

  Testing pressure: Refer to CO-26, "Radiator".

  WARNING:
  Never remove radiator cap when engine is hot. Serious burns may occur from high-pressure engine coolant escaping from radiator.
  CAUTION:
  Higher test pressure than specified may cause radiator damage.
  NOTE:
  In a case that engine coolant decreases, replenish radiator with engine coolant.

- If anything is found, repair or replace damaged parts.

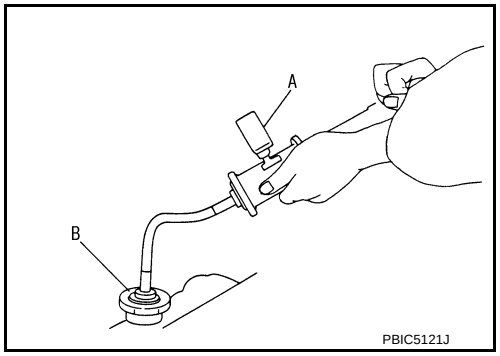

ENGINE COOLANT : Draining

INFOID:0000000006057337

WARNING:
- **Never remove radiator cap when engine is hot. Serious burns may occur from high-pressure engine coolant escaping from radiator.**
- **Wrap a thick cloth around the radiator cap. Slowly turn it a quarter of a turn to release built-up pressure. Then turn it all the way.**

1. Open radiator drain plug (A) at the bottom of radiator, and then remove radiator cap.

   ⇦ : Vehicle front

   CAUTION:
   Perform this step when engine is cold.
   - When draining all of engine coolant in the system, open water drain plugs on cylinder block. Refer to EM.

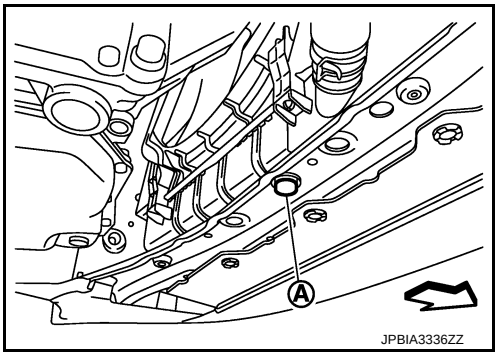

2. Remove reservoir tank if necessary, and drain engine coolant and clean reservoir tank before installing. Refer to CO-14, "Exploded View".
3. Check drained engine coolant for contaminants such as rust, corrosion or discoloration. If contaminated, flush the engine cooling system. Refer to CO-11, "Flushing".

ENGINE COOLANT : Refilling

INFOID:0000000006057338

1. Install reservoir tank if removed and radiator drain plug.
   CAUTION:
   Be sure to clean drain plug and install with new O-ring.

   Radiator drain plug : Refer to CO-14, "Exploded View".

   - If water drain plugs on cylinder block are removed, close and tighten them. Refer to EM.
2. Check that each hose clamp has been firmly tightened.
3. Remove air duct inlet and air cleaner assembly. Refer to EM-24, "Removal and Installation".
4. Disconnect heater hose (1) at position (⬅) in the figure.

   ⇦ : Vehicle front

   - Enhance heater hose as high as possible.

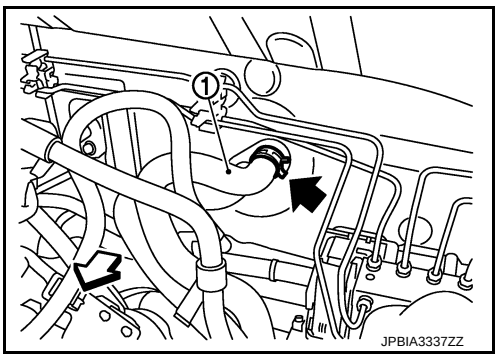

5. Fill radiator (1) to specified level.
   CAUTION:
   Never adhere the engine coolant to electronic equipments (alternator etc.).
   - **Pour coolant slowly of less than 2 ℓ (2-1/8 US qt, 1-3/4 Imp qt) a minute to allow air in system to escape.**
   - **When engine coolant overflows disconnected heater hose, connect heater hose, and continue filling the engine coolant.**
   - **Use Genuine NISSAN Engine Coolant or equivalent in its quality mixed with water (distilled or demineralized). Refer to MA-8, "Fluids and Lubricants".**

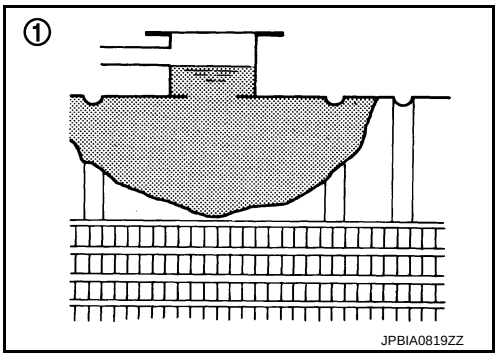

   Engine coolant capacity
   (With reservoir tank at “MAX” level)

   Refer to CO-26, "Periodical Maintenance Specification".

6. Refill reservoir tank to “MAX” level line with engine coolant.

A : MAX
B : MIN

Reservoir tank engine coolant capacity
(At “MAX” level)
Refer to CO-26, "Periodical Maintenance Specification".

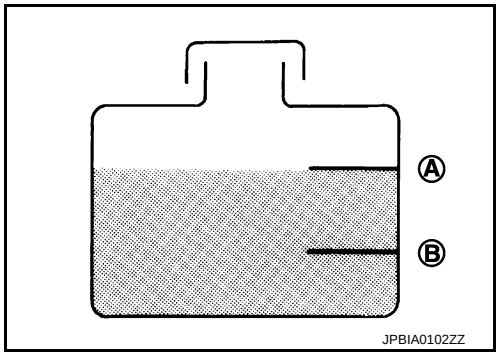

7. Install air duct (between air cleaner case and electric throttle control actuator). Refer to EM-24, "Removal and Installation".
8. Install radiator cap.
9. Warm up engine until opening thermostat. Standard for warming-up time is approximately 10 minutes at 3,000 rpm.
   - Check thermostat opening condition by touching radiator hose (lower) to see a flow of warm water.

   CAUTION:
   Watch water temperature gauge so as not to overheat engine.
10. Stop the engine and cool down to less than approximately 50°C (122°F).
    - Cool down using fan to reduce the time.
    - If necessary, refill radiator up to filler neck with engine coolant.

    CAUTION:
    Never adhere the engine coolant to electronic equipments (alternator etc.).
11. Refill reservoir tank to “MAX” level line with engine coolant.
12. Repeat steps 5 through 10 two or more times with radiator cap installed until engine coolant level no longer drops.
13. Check cooling system for leakage with engine running.
14. Warm up the engine, and check for sound of engine coolant flow while running engine from idle up to 3,000 rpm with heater temperature controller set at several position between “COOL” and “WARM”.
    - Sound may be noticeable at heater unit.
15. Repeat step 14 three times.
16. If sound is heard, bleed air from cooling system by repeating step 5 through 10 until reservoir tank level no longer drops.

ENGINE COOLANT : Flushing

INFOID:0000000006057339

1. Install reservoir tank if removed and radiator drain plug.

   CAUTION:
   Be sure to clean drain plug and install with new O-ring.

   Radiator drain plug : Refer to CO-14, "Exploded View".

   - If water drain plugs on cylinder block are removed, close and tighten them. Refer to EM.
2. Remove air duct inlet and air cleaner case assembly. Refer to EM-24, "Removal and Installation".
3. Disconnect heater hose (1) at position (⬅) in the figure.

   ⇦ : Vehicle front

   - Enhance heater as high as possible.

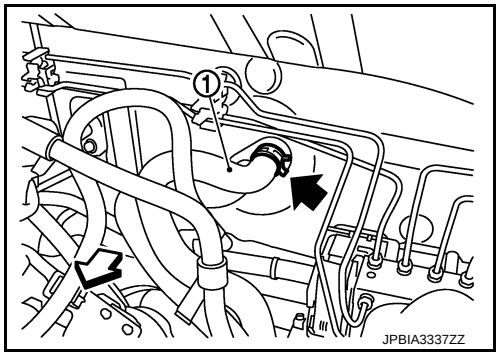

4. Fill radiator and reservoir tank with water and reinstall radiator cap.
   - When engine coolant over flows disconnected heater hose, connect heater hose, and continue filling the engine coolant.
5. Install air duct (between air cleaner case and electric throttle control actuator). Refer to EM-24, "Removal and Installation".
6. Run the engine and warm it up to normal operating temperature.
7. Rev the engine two or three times under no-load.
8. Stop the engine and wait until it cools down.
9. Drain water from the system. Refer to CO-9, "Draining".
10. Repeat steps 1 through 9 until clear water begins to drain from radiator.

RESERVOIR TANK CAP

RESERVOIR TANK CAP : Inspection

INFOID:0000000006057340

- Check valve seat (A) of radiator cap.

B : Metal plunger

- Check that valve seat is swollen to the extent that the edge of the plunger cannot be seen when watching it vertically from the top.
- Check that valve seat has no soil and damage.

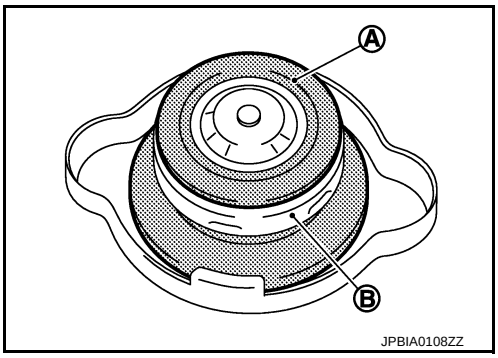

- Pull negative-pressure valve to open it, and that it close completely when released.
- Check that there is no dirt or damage on the valve seat of radiator cap negative-pressure valve.
- Check that there are no unusualness in the opening and closing conditions of negative-pressure valve.

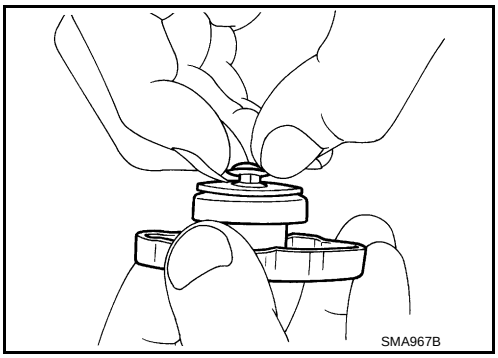

- Check radiator cap relief pressure.

Standard and Limit : Refer to CO-26, "Radiator".

- When connecting radiator cap to the radiator cap tester (commercial service tool) (A) and the radiator cap tester adapter (commercial service tool) (B), apply engine coolant to the cap seal surface.

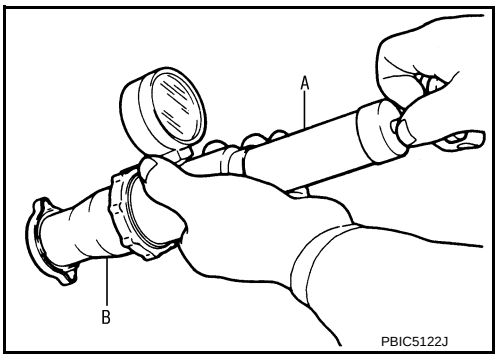

- Replace radiator cap if there is an unusualness related to the above three.

CAUTION:

When installing radiator cap, thoroughly wipe out the radiator filler neck to remove any waxy residue or foreign material.

RADIATOR

RADIATOR : Inspection

INFOID:0000000006057341

Check radiator for mud or clogging. If necessary, clean radiator as follows.

CAUTION:

- **Be careful not to bend or damage radiator fins.**
- **When radiator is cleaned without removal, remove all surrounding parts such as radiator cooling fan assembly and horns. Then tape harness and harness connectors to prevent water from entering.**

1. Apply water by hose to the back side of the radiator core vertically downward.
2. Apply water again to all radiator core surfaces once per minute.
3. Stop washing if any stains no longer flow out from radiator.
4. Blow air into the back side of radiator core vertically downward.
   - Use compressed air lower than 490 kPa (4.9 bar, 5 kg/cm^2, 71 psi) and keep distance more than 30 cm (11.81 in).
5. Blow air again into all the radiator core surfaces once per minute until no water sprays out.

FUEL LINES

FUEL LINES : Inspection

INFOID:0000000006057342

Inspect fuel lines, fuel filler cap, and fuel tank for improper attachment, leakage, cracks, damage, loose connections, chafing or deterioration.

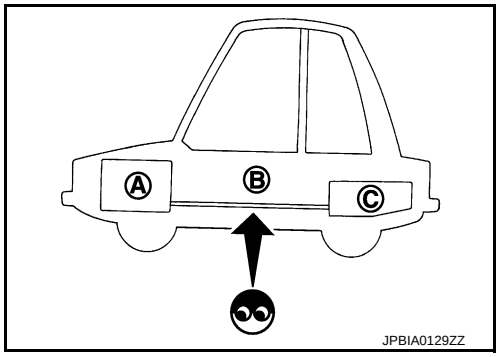

A : Engine
B : Fuel line
C : Fuel tank

If necessary, repair or replace damaged parts.

AIR CLEANER FILTER

AIR CLEANER FILTER : Removal and Installation

INFOID:0000000006057329

REMOVAL

1. Remove air duct (inlet).
2. Remove air cleaner body assembly (2) with air cleaner filter (1).

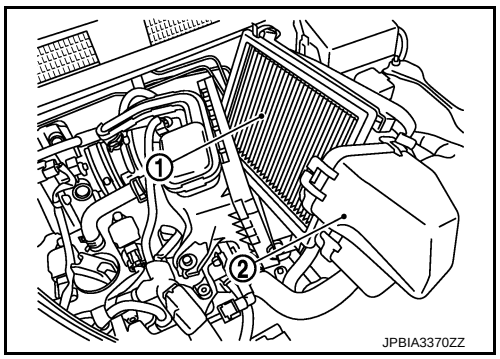

INSTALLATION

Install in the reverse order of removal.

ENGINE OIL

ENGINE OIL : Draining

INFOID:0000000006057332

WARNING:

- **Be careful not to get burned, as engine oil may be hot.**

- **Prolonged and repeated contact with used engine oil may cause skin cancer. Try to avoid direct skin contact with used engine oil. If skin contact is made, wash thoroughly with soap or hand cleaner as soon as possible.**

1. Warm up the engine, and check for engine oil leakage from engine components. Refer to LU-7, "Inspection".
2. Stop the engine and wait for 10 minutes.
3. Loosen oil filler cap.
4. Remove drain plug and then drain engine oil.

ENGINE OIL : Refilling

INFOID:0000000006057333

1. Install drain plug with new drain plug washer. Refer to EM-34, "Exploded View".
   CAUTION:
   Be sure to clean drain plug and install with new drain plug washer.

   Tightening torque : Refer to EM-34, "Exploded View".

2. Refill with new engine oil.
   Engine oil specification and viscosity: Refer to MA-8, "Fluids and Lubricants".

   Engine oil capacity : Refer to LU-13, "Periodical Maintenance Specification".

   CAUTION:
   - **The refill capacity depends on the engine oil temperature and drain time. Use these specifications for reference only.**
   - **Always use oil level gauge to determine the proper amount of engine oil in the engine.**
3. Warm up engine and check area around drain plug and oil filter for engine oil leakage.
4. Stop engine and wait for 10 minutes.
5. Check the engine oil level. Refer to LU-7, "Inspection".

OIL FILTER

OIL FILTER : Removal and Installation

INFOID:0000000006057334

REMOVAL

1. Using oil filter wrench [SST: KV10115801] (A), remove oil filter.

   ⇦ : Vehicle front

   CAUTION:
   - **Oil filter is provided with relief valve. Use genuine NISSAN oil filter or equivalent.**
   - **Be careful not to get burned when engine and engine oil may be hot.**
   - **When removing, prepare a shop cloth to absorb any engine oil leakage or spillage.**
   - **Completely wipe off any engine oil that adheres to engine and vehicle.**

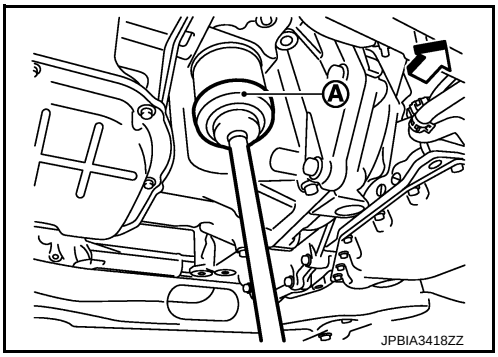

INSTALLATION

1. Remove foreign materials adhering to the oil filter installation surface.

2. Apply new engine oil to the oil seal contact surface of new oil filter.

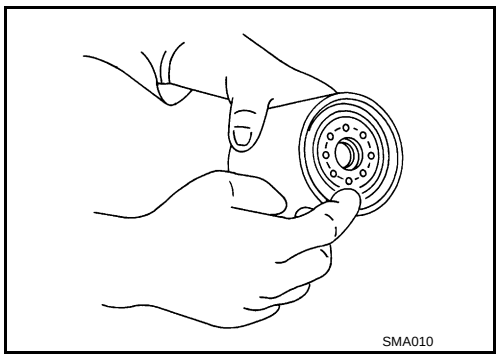

3. Screw oil filter manually until it touches the installation surface, then tighten it by 2/3 turn (A). Or tighten to specification.

Oil filter:

: 17.7 N·m (1.8 kg-m, 13 ft-lb)

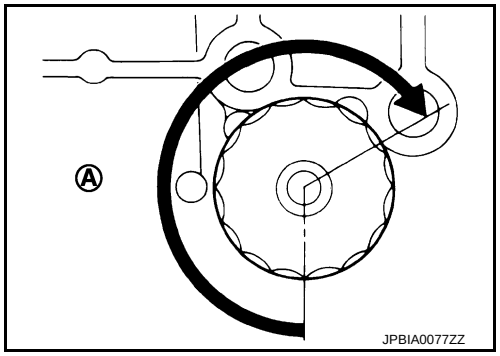

OIL FILTER : Inspection

INFOID:0000000006057335

INSPECTION AFTER INSTALLATION

1. Check the engine oil level. Refer to LU-7, "Inspection".
2. Start the engine, and check that there is no leakage of engine oil.
3. Stop the engine and wait for 10 minutes.
4. Check the engine oil level, and adjust the level. Refer to LU-7, "Inspection".

SPARK PLUG

SPARK PLUG : Removal and Installation

INFOID:0000000006057330

REMOVAL

1. Remove ignition coil. Refer to EM-41, "Exploded View".
2. Remove spark plug with a spark plug wrench (commercial service tool).

a : 14 mm (0.55 in)

CAUTION:
Never drop or shock spark plug.

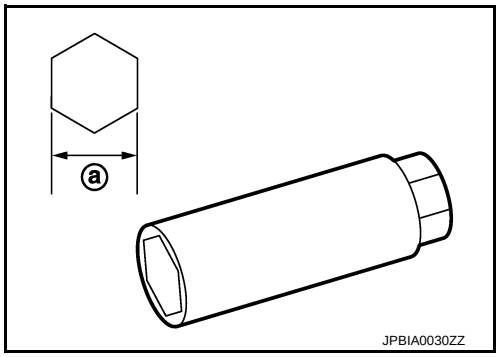

INSTALLATION

Install in the reverse order of removal.

SPARK PLUG : Inspection

INFOID:0000000006057331

INSPECTION AFTER REMOVAL

Use the standard type spark plug for normal condition.

Spark plug (Standard type) **: Refer to EM-93, "Spark Plug".**

CAUTION:
- **Never drop or shock spark plug.**
- **Never use a wire brush for cleaning.**
- **If plug tip is covered with carbon, spark plug cleaner may be used.**

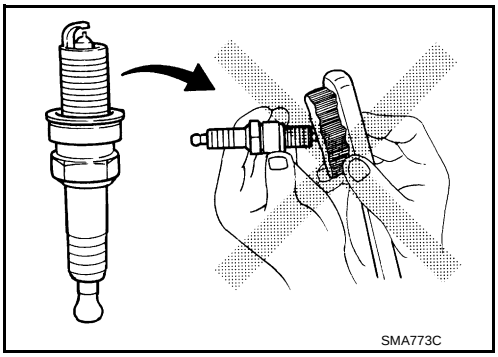

Cleaner air pressure	**: Less than 588 kPa (6 kg/cm^2, 85 psi)**
Cleaning time	**: Less than 20 seconds**

EVAP VAPOR LINES

EVAP VAPOR LINES : Inspection

INFOID:0000000005943112

1. Visually inspect EVAP vapor lines for improper attachment and for cracks, damage, loose connections, chafing and deterioration.
2. Inspect fuel tank filler cap vacuum relief valve for clogging, sticking, etc.
   Refer to XX-XX, "***".**

CHASSIS MAINTENANCE

EXHAUST SYSTEM

EXHAUST SYSTEM : Inspection

INFOID:0000000006057353

Check exhaust pipes, muffler, and mounting for improper attachment, leakage, cracks, damage or deterioration.
- If anything is found, repair or replace damaged parts.

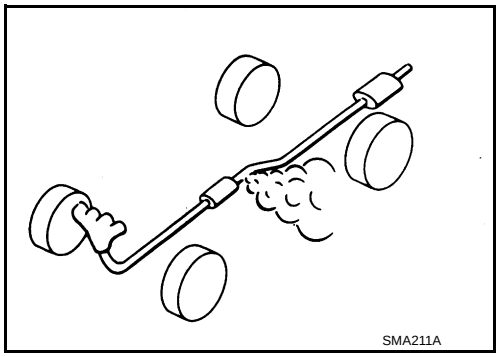

CLUTCH FLUID

CLUTCH FLUID : Inspection

INFOID:0000000006057355

FLUID LEAKAGE

- Check clutch line for cracks, deterioration or other damage. Replace any damaged parts.
- Check for fluid leakage by fully depressing clutch pedal while engine is running.

CAUTION:
If leakage occurs around joints, reinstall the joints or, if necessary, replace damaged parts.

FLUID LEVEL

- Check that the fluid level in the reservoir tank is within the specified range (MAX – MIN lines).
- Visually check for any clutch fluid leakage around the reservoir tank.
- Check the clutch system for any leakage if the fluid level is extremely low (lower than MIN).

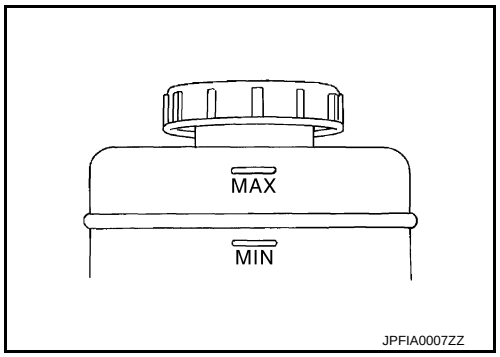

CLUTCH FLUID : Draining

INFOID:0000000006057356

CAUTION:
Keep painted surface on the body or other parts free of clutch fluid. If it spills, wipe up immediately and wash the affected area with water.

1. Connect a transparent vinyl hose to air bleeder of bleeding connector (1).

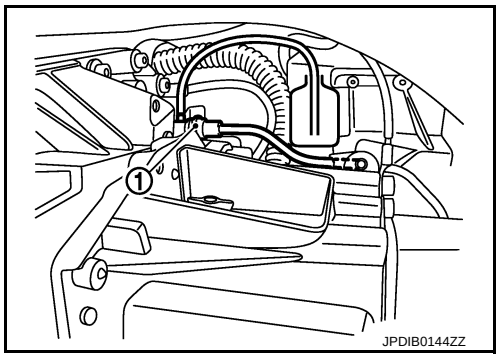

2. Press the lock pin (1) into the bleeding connector (2), and maintain the position.

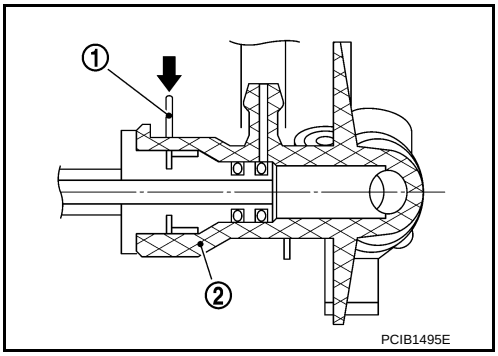

3. Slide clutch tube (1) in the direction of the arrow as shown in the figure.

   2 : Bleeding connector

   Dimension "A" : 5 mm (0.20 in)

4. Depress clutch pedal to gradually discharge clutch fluid.
   CAUTION:
   Since the inside of clutch tube is under hydraulic pressure, hold the tube to prevent it from getting disconnected.

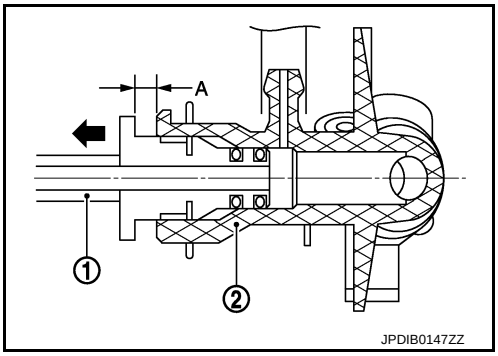

CLUTCH FLUID : Refilling

INFOID:0000000006057357

CAUTION:
Keep painted surface on the body or other parts free of clutch fluid. If it spills, wipe up immediately and wash the affected area with water.

1. Check that there is no foreign material in reservoir tank and then fill with new clutch fluid.
   CAUTION:
   Never reuse drained clutch fluid.
2. Connect a transparent vinyl hose to air bleeder of bleeding connector (1).

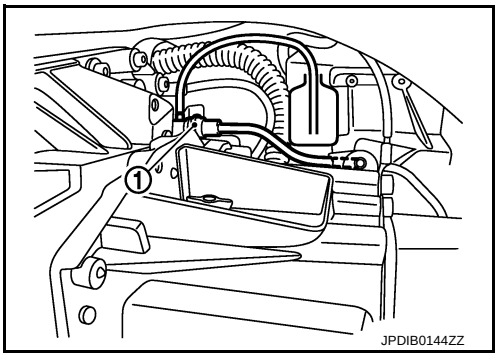

3. Press the lock pin (1) into the bleeding connector (2), and maintain the position.

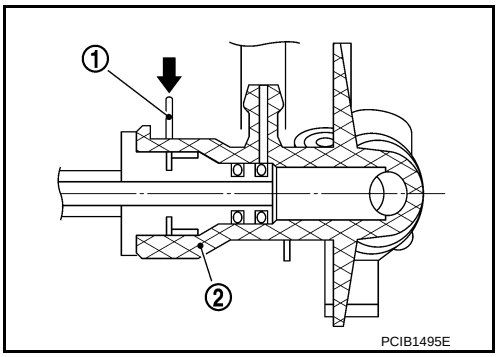

4. Slide clutch tube (1) in the direction of the arrow as shown in the figure.

   2 : Bleeding connector

   Dimension "A" : 5 mm (0.20 in)

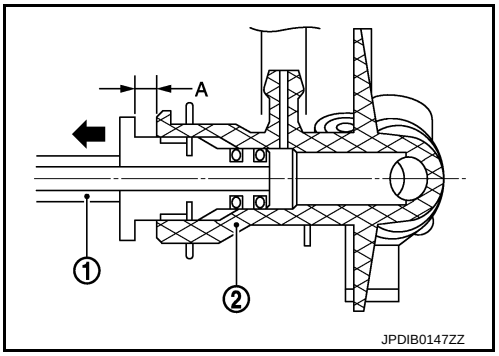

5. Slowly depress clutch pedal to the full stroke position and then release the pedal.
   CAUTION:
   Since the inside of clutch tube is under hydraulic pressure, hold the tube to prevent it from getting disconnected.
6. Repeat step 5 at intervals of 2 or 3 seconds until new clutch fluid is discharged.
   CAUTION:
   Monitor clutch fluid level in reservoir tank so as not to empty the tank.
7. Return clutch tube and lock pin in their original positions while clutch pedal is depressed.
8. Perform the air bleeding. Refer to CL-9, "Air Bleeding Procedure".

GEAR OIL

GEAR OIL : Inspection

INFOID:0000000006057364

OIL LEAKAGE

Make sure that gear oil is not leaking from transaxle or around it.

OIL LEVEL

1. Remove filler plug (1) and gasket from transaxle case.
2. Check the oil level from filler plug mounting hole as shown in the figure.
   CAUTION:
   Never start engine while checking oil level.
3. Set a gasket on filler plug and then install it to transaxle case.
   CAUTION:
   Never reuse gasket.
4. Tighten filler plug to the specified torque. Refer to TM-21, "Exploded View".

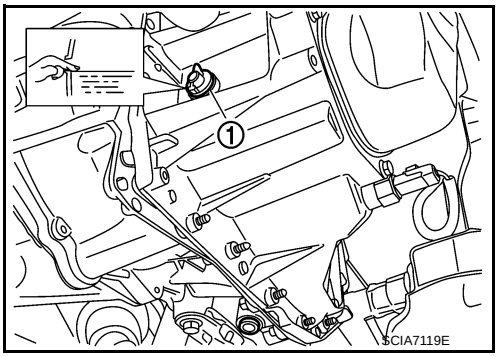

GEAR OIL : Draining

INFOID:0000000006057365

1. Start engine and let it run to warm up transaxle.
2. Stop engine. Remove drain plug (1) and gasket, using a socket [Commercial service tool] and then drain gear oil.
3. Set a gasket on drain plug and install it to clutch housing, using a socket [Commercial service tool].
   CAUTION:
   Never reuse gasket.
4. Tighten drain plug to the specified torque. Refer to TM-21, "Exploded View".

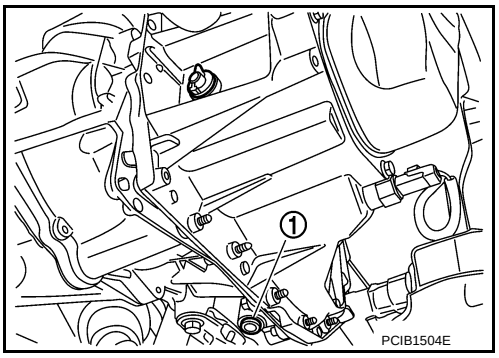

GEAR OIL : Refilling

INFOID:0000000006057366

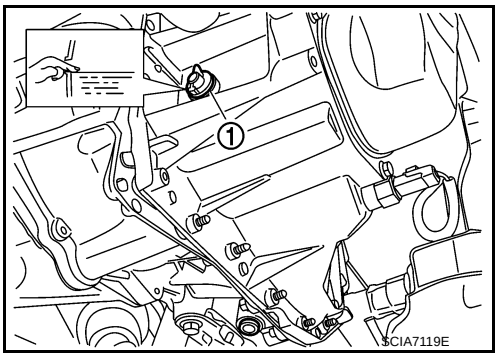

1. Remove filler plug (1) and gasket from transaxle case.
2. Fill with new gear oil until oil level reaches the specified limit at filler plug mounting hole as shown in the figure.

   Oil grade and viscosity : Refer to XX-XX, "***".**

   Oil capacity : Refer to TM-49, "General Specification".
3. After refilling gear oil, check the oil level. Refer to MA-21, "GEAR OIL : Inspection".
4. Set a gasket on filler plug and then install it to transaxle case.
   CAUTION:
   Never reuse gasket.
5. Tighten filler plug to the specified torque. Refer to TM-21, "Exploded View".

WHEELS (BONDING WEIGHT TYPE)

WHEELS (BONDING WEIGHT TYPE) : Tire rotation

INFOID:0000000006057367

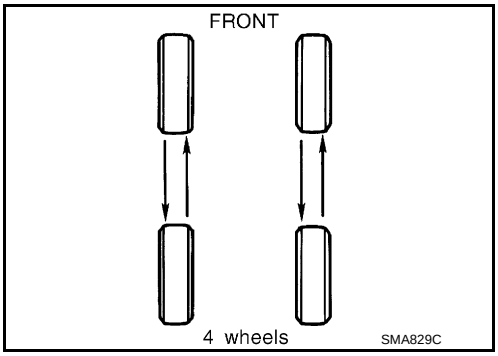

- Follow the maintenance schedule for tire rotation service intervals. Refer to XX-XX, "*****".
- When installing the wheel, tighten wheel nuts to the specified torque.
  CAUTION:
  - **When installing wheels, tighten them diagonally by dividing the work two to three times in order to prevent the wheels from developing any distortion.**
  - **Be careful not to tighten wheel nut at torque exceeding the criteria for preventing strain of disc rotor.**
  - **Use NISSAN genuine wheel nuts for aluminum wheels.**

Wheel nuts tighting torque : Refer to WT-4, "Exploded View".

BRAKE FLUID LEVEL AND LEAKS

BRAKE FLUID LEVEL AND LEAKS : Inspection

INFOID:0000000005943128

- If fluid level is extremely low, check brake system for leaks.

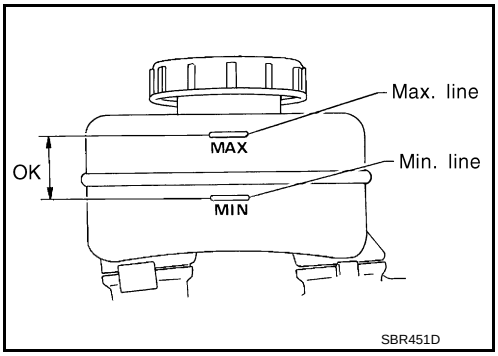

BRAKE LINES AND CABLES

BRAKE LINES AND CABLES : Inspection

INFOID:0000000005943129

- Check brake fluid lines and parking brake cables for improper attachment, leaks, chafing, abrasions, deterioration, etc.

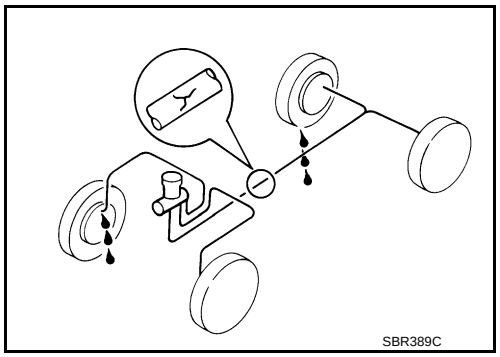

BRAKE FLUID

BRAKE FLUID : Changing

INFOID:0000000005943130

1. Drain brake fluid from each bleed valve.
2. Refill until new brake fluid comes out from each bleed valve.
   Use same procedure as in bleeding hydraulic system to refill brake fluid.
   Refer to XX-XX, "*****".
   - Refill with recommended brake fluid.
     Refer to XX-XX, "*****".
   - Never reuse drained brake fluid.
   - Be careful not to splash brake fluid on painted areas.

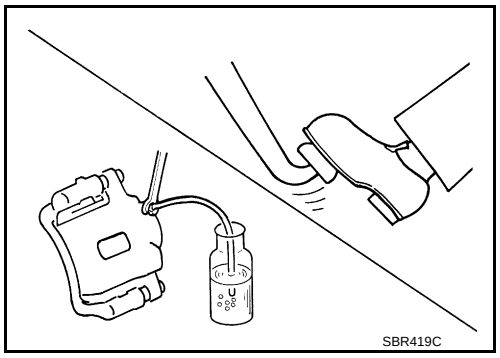

DISC BRAKE

DISC BRAKE : Inspection

INFOID:0000000005943131

DISC ROTOR

Check condition, wear, and damage.

CALIPER

- Check for leakage.

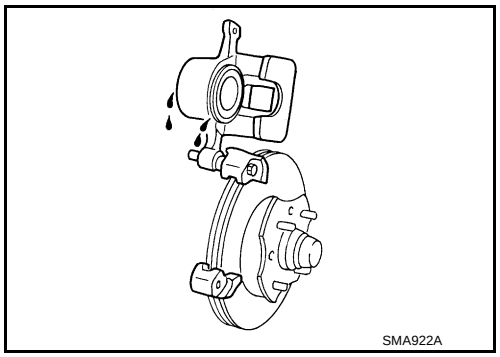

BRAKE PAD

- Check for wear or damage.

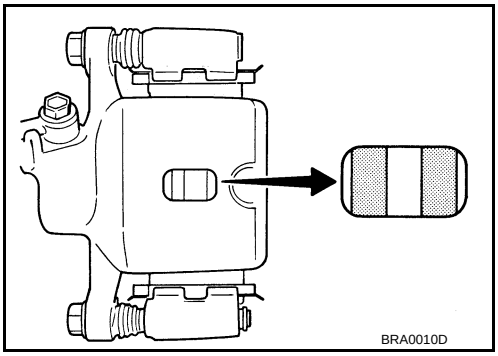

DISC BRAKE : Front Disc Brake

INFOID:0000000006057377

Unit: mm (in)

Item		Limit
Brake pad	Wear thickness	2.0 (0.079)
Disc rotor	Wear thickness	20.0 (0.787)
	Thickness variation (measured at 8 positions)	0.008 (0.0003)
	Runout (with it attached to the vehicle)	0.055 (0.0022)

DRUM BRAKE

DRUM BRAKE : Inspection

INFOID:0000000006057379

DRUM

Check condition, wear, and damage.

WHEEL CYLINDER

- Check for leakage.

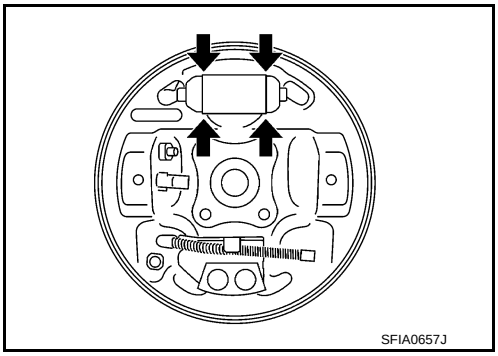

LINING

- Check for lining thickness.

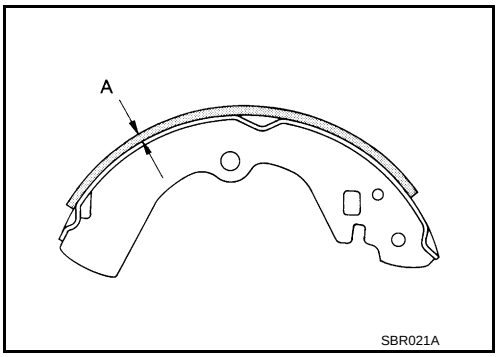

DRUM BRAKE : Rear Drum Brake

INFOID:0000000006057378

Unit: mm (in)

Item		Limit
Brake lining	Wear thickness	1.5 (0.059)
Brake drum	Wear inner diameter	181.0 (7.13)

STEERING GEAR AND LINKAGE

STEERING GEAR AND LINKAGE : Inspection

INFOID:0000000005943134

STEERING GEAR

- Check gear housing and boots for looseness, damage and grease leakage.
- Check connection with steering column for looseness.

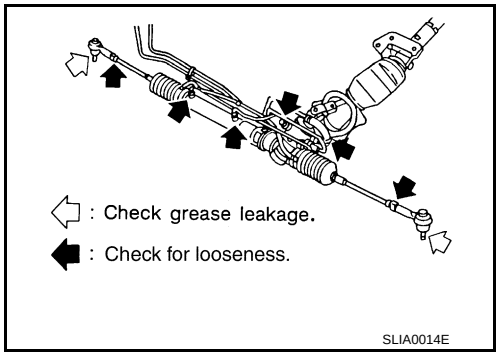

STEERING LINKAGE

Check ball joint, dust cover and other component parts for looseness, wear, damage and grease leakage.

AXLE AND SUSPENSION PARTS

AXLE AND SUSPENSION PARTS : Inspection

INFOID:0000000005943136

Check front and rear axle and suspension parts for excessive play, cracks, wear or other damage.

- Shake each wheel to check for excessive play.
- Check wheel bearings for smooth operation.
- Check axle and suspension nuts and bolts for looseness.
- Check strut (shock absorber) for oil leakage or other damage.
- Check suspension ball joint for grease leakage and ball joint dust cover for cracks or other damage.

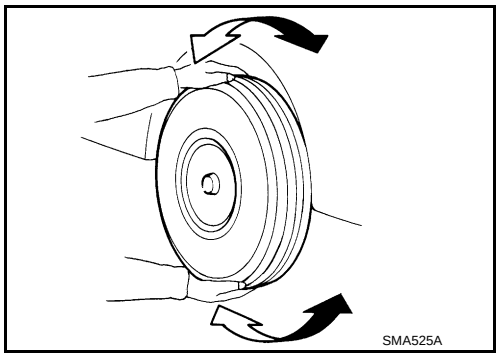

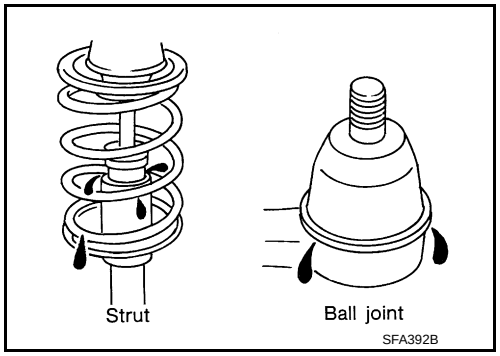

DRIVE SHAFT

DRIVE SHAFT : Inspection

INFOID:0000000005943137

Check boot and drive shaft for cracks, wear, damage and grease leakage.

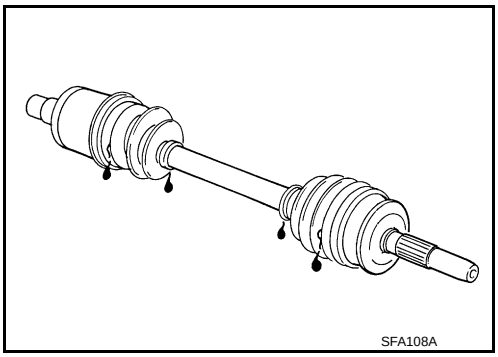

BODY MAINTENANCE

LOCKS, HINGES AND HOOD LATCH

LOCKS, HINGES AND HOOD LATCH : Lubricating

INFOID:0000000005943138

PART	WITH INTELLIGENT KEY SYSTEM	WITHOUT INTELLIGENT KEY SYSTEM
Hood	Refer to DLK-111, "Exploded View".	Refer to XX-XX, "*****".
Hood lock	Refer to DLK-131, "Exploded View".	Refer to XX-XX, "*****".
Front door	Refer to DLK-117, "Exploded View".	Refer to XX-XX, "*****".
Front door lock	Refer to DLK-133, "Exploded View".	Refer to XX-XX, "*****".
Rear door	Refer to DLK-121, "Exploded View".	Refer to XX-XX, "*****".
Rear door lock	Refer to DLK-136, "Exploded View".	Refer to XX-XX, "*****".
Back door	Refer to DLK-125, "Exploded View".	Refer to XX-XX, "*****".
Back door lock	Refer to DLK-139, "Exploded View".	Refer to XX-XX, "*****".

SEAT BELT, BUCKLES, RETRACTORS, ANCHORS AND ADJUSTERS

SEAT BELT, BUCKLES, RETRACTORS, ANCHORS AND ADJUSTERS : Inspection

INFOID:0000000005943139

For front seat belt illustration. Refer to XX-XX, "*****".
For rear seat belt illustration. Refer to XX-XX, "*****".

CAUTION:

- **After any collision, inspect all seat belt assemblies, including retractors and other attached hardwares (I.e. anchor bolt, guide rail set). Nissan recommends to replace all seat belt assemblies in use during a collision, unless not damaged and properly operating after minor collision.**
  Also inspect seat belt assemblies not in use during a collision, and replace if damaged or improperly operating.
  Seat belt pre-tensioner should be replaced even if the seat belts are not in use during a frontal collision where the driver and passenger air bags are deployed.
- **If any component of seat belt assembly is questionable, do not repair.**
  Replace as seat belt assembly.
- **If webbing is cut, frayed, or damaged, replace belt assembly.**
- **Never oil tongue and buckle.**
- **Use a genuine NISSAN seat belt assembly.**

For details, refer to XX-XX, "*****", XX-XX, "*****" in SB section.

- Check anchors for loose mounting
- Check belts for damage
- Check retractor for smooth operation
- Check function of buckles and tongues when buckled and released

BODY CORROSION

BODY CORROSION : Checking Body Corrosion

INFOID:0000000005943140

Visually check body panels for collision damage (scratches, chipping, rubbing, etc.) or damage to the anti-corrosion materials. In particular, check the following locations.

HEMMED PANELS

Hood front end, door lower end, trunk lid rear end, etc.

PANEL JOINT

Side sill of rear fender and center pillar, rear wheel housing of rear fender, around strut tower in engine compartment, etc.

PANEL EDGE

Trunk lid opening, sunroof opening, fender wheel-arch flange, fuel filler lid flange, around holes in panel, etc.

PARTS CONTACT

Waist moulding, windshield moulding, bumper, etc.

PROTECTORS

Damage or condition of mudguard, fender protector, chipping protector, etc.

ANTI-CORROSION MATERIALS

Damage or separation of anti-corrosion materials under the body.

DRAIN HOLES

Condition of drain holes at door and side sill. When repairing corroded areas, refer to the Corrosion Repair Manual.

SERVICE DATA AND SPECIFICATIONS (SDS)

SERVICE DATA AND SPECIFICATIONS (SDS)

DRIVE BELT

DRIVE BELT : Drive Belt

INFOID:0000000006069235

DRIVE BELT

Belt Deflection

Location		Deflection adjustment *		Unit: mm (in)
		Used belt		New belt
		Limit	After adjusted	
Drive belt	With A/C	10.9 (0.32)	5.1 - 5.6 (0.19 - 0.21)	4.3 - 4.7 (0.16 - 0.17)
	Without A/C	9.8	4.6 - 5.0	3.9 - 4.2
Applied pushing force		98 N (10 kg, 22 lb)		

*: When engine is cold.

Belt Tension and Frequency

Location	Tension adjustment *		Unit: N (kg, lb)	Frequency adjustment *		Unit: Hz
	Used belt		New belt	Used belt		New belt
	Limit	After adjusted		Limit	After adjusted	
Drive belt	330 (51.0, 112)	876 - 964 (89.4 - 98.3, 197 - 217)	1064 - 1152 (108.5 - 117.5, 239 - 259)	133	217 - 227	239 - 248

*: When engine is cold.

ENGINE COOLANT

ENGINE COOLANT : Periodical Maintenance Specification

INFOID:0000000006069238

ENGINE COOLANT CAPACITY (APPROXIMATE)

Unit: ℓ (US qt, Imp qt)

Engine coolant capacity (With reservoir tank at “MAX” level)	A/T models	5.5 (5-6/8, 4-7/8)
	M/T models (without EGR control valve)	
	M/T models (with EGR control valve)	5.7 (6, 5)
Reservoir tank engine coolant capacity (At “MAX” level)		0.7 (3/4, 5/8)

ENGINE OIL

ENGINE OIL : Periodical Maintenance Specification

INFOID:0000000006069237

ENGINE OIL CAPACITY (APPROXIMATE)

Unit: ℓ (US qt, Imp qt)

Drain and refill	With oil filter change	3.0 (3-1/8, 2-5/8)
	Without oil filter change	2.8 (3, 2-4/8)
Dry engine (Overhaul)		3.5 (3-6/8, 3-1/8)

SPARK PLUG

SPARK PLUG : Spark Plug

INFOID:0000000006069236

SPARK PLUG (PLATINUM-TIPPED TYPE)

With EGR control valve

Unit: mm (in)

Make		DENSO
Standard type		FXE20MR11
Spark plug gap	Standard	1.1 (0.043)

Without EGR control valve

Unit: mm (in)

Make		FEDEMO
Standard type		REA12MC4
Spark plug gap	Standard	1.1 (0.043)

ROAD WHEEL

ROAD WHEEL : Road Wheel

INFOID:0000000006069240

ALUMINUM WHEEL

Item		Limit
Radial runout	Lateral deflection	Less than 0.3 mm (0.012 in)
	Vertical deflection	
Allowable unbalance	Dynamic (At flange)	Less than 10 g (0.35 oz) (one side)
	Static (At flange)	Less than 20 g (0.70 oz)

STEEL WHEEL

Item		Limit
Radial runout	Lateral deflection	Less than 0.8 mm (0.031 in)
	Vertical deflection	Less than 0.5 mm (0.020 in)
Allowable unbalance	Dynamic (At flange)	Less than 10 g (0.35 oz) (one side)
	Static (At flange)	Less than 20 g (0.70 oz)

STEEL WHEEL (FOR EMERGENCY USE)

Item		Limit
Radial runout	Lateral deflection	Less than 0.8 mm (0.031 in)
	Vertical deflection	Less than 0.5 mm (0.020 in)
Allowable unbalance	Dynamic (At flange)	Less than 10 g (0.35 oz) (one side)
	Static (At flange)	Less than 20 g (0.70 oz)

SECTION MIR

MIRRORS

CONTENTS

PRECAUTION 3

PRECAUTIONS 3
Precaution for Supplemental Restraint System (SRS) "AIR BAG" and "SEAT BELT PRE-TENSIONER" 3
Precaution Necessary for Steering Wheel Rotation after Battery Disconnect 3

PREPARATION 5

PREPARATION 5
Commercial Service Tools 5

SYSTEM DESCRIPTION 6

COMPONENT PARTS 6

DOOR MIRROR SYSTEM 6
DOOR MIRROR SYSTEM : Component Description 6

AUTO RETRACTABLE DOOR MIRROR SYSTEM 6
AUTO RETRACTABLE DOOR MIRROR SYSTEM : Component Parts Location 6
AUTO RETRACTABLE DOOR MIRROR SYSTEM : Component Description 7

SYSTEM 8

AUTO RETRACTABLE DOOR MIRROR SYSTEM 8
AUTO RETRACTABLE DOOR MIRROR SYSTEM : System Diagram 8
AUTO RETRACTABLE DOOR MIRROR SYSTEM : System Description 8

DIAGNOSIS SYSTEM (BCM) 9

COMMON ITEM 9
COMMON ITEM : CONSULT-III Function (BCM - COMMON ITEM) 9

INTELLIGENT KEY 10
INTELLIGENT KEY : CONSULT-III Function (BCM - INTELLIGENT KEY) 10

ECU DIAGNOSIS INFORMATION 14

BCM (BODY CONTROL MODULE) 14
List of ECU Reference 14

WIRING DIAGRAM 15

DOOR MIRROR SYSTEM 15
Wiring Diagram 15

BASIC INSPECTION 16

DIAGNOSIS AND REPAIR WORK FLOW 16
Work Flow 16

DTC/CIRCUIT DIAGNOSIS 17

DOOR MIRROR REMOTE CONTROL SWITCH (MIRROR SWITCH/CHANGEOVER SWITCH) 17
Component Inspection 17

DOOR MIRROR REMOTE CONTROL SWITCH (OPEN/CLOSE SWITCH) 18
Component Inspection 18

POWER SUPPLY AND GROUND CIRCUIT 19

DOOR MIRROR REMOTE CONTROL SWITCH (OPEN/CLOSE SWITCH) 19
DOOR MIRROR REMOTE CONTROL SWITCH (OPEN/CLOSE SWITCH) : Diagnosis Procedure 19

AUTO RETRACTABLE DOOR MIRROR CIRCUIT 20
Component Function Check 20
Diagnosis Procedure 20
Component Inspection 21

DOOR MIRROR (OPEN/CLOSE MOTOR) 22

Component Function Check 22
Diagnosis Procedure 22
Component Inspection 23

SYMPTOM DIAGNOSIS 25

ELECTRIC FOLDABLE DOOR MIRROR DOES NOT OPERATE 25
Diagnosis Procedure 25

AUTO RETRACTABLE DOOR MIRROR DOES NOT OPERATE 26
Diagnosis Procedure 26

SQUEAK AND RATTLE TROUBLE DIAGNOSES 27
Work Flow 27
Inspection Procedure 29
Diagnostic Worksheet 31

REMOVAL AND INSTALLATION 33

INSIDE MIRROR 33
Exploded View 33
Removal and Installation 33

OUTSIDE MIRROR 35
Exploded View 35

DOOR MIRROR ASSEMBLY 35
DOOR MIRROR ASSEMBLY : Removal and Installation 35

GLASS MIRROR 36
GLASS MIRROR : Disassembly and Assembly 36

DOOR MIRROR COVER 37
DOOR MIRROR COVER : Disassembly and Assembly 37

DOOR MIRROR REMOTE CONTROL SWITCH 38
Removal and Installation 38

PRECAUTION

PRECAUTIONS

Precaution for Supplemental Restraint System (SRS) "AIR BAG" and "SEAT BELT PRE-TENSIONER"

INFOID:0000000006007910

The Supplemental Restraint System such as “AIR BAG” and “SEAT BELT PRE-TENSIONER”, used along with a front seat belt, helps to reduce the risk or severity of injury to the driver and front passenger for certain types of collision. This system includes seat belt switch inputs and dual stage front air bag modules. The SRS system uses the seat belt switches to determine the front air bag deployment, and may only deploy one front air bag, depending on the severity of a collision and whether the front occupants are belted or unbelted.
Information necessary to service the system safely is included in the “SRS AIR BAG” and “SEAT BELT” of this Service Manual.

WARNING:

- **To avoid rendering the SRS inoperative, which could increase the risk of personal injury or death in the event of a collision that would result in air bag inflation, all maintenance must be performed by an authorized NISSAN/INFINITI dealer.**
- **Improper maintenance, including incorrect removal and installation of the SRS, can lead to personal injury caused by unintentional activation of the system. For removal of Spiral Cable and Air Bag Module, see the “SRS AIR BAG”.**
- **Do not use electrical test equipment on any circuit related to the SRS unless instructed to in this Service Manual. SRS wiring harnesses can be identified by yellow and/or orange harnesses or harness connectors.**

PRECAUTIONS WHEN USING POWER TOOLS (AIR OR ELECTRIC) AND HAMMERS

WARNING:

- **When working near the Air Bag Diagnosis Sensor Unit or other Air Bag System sensors with the ignition ON or engine running, DO NOT use air or electric power tools or strike near the sensor(s) with a hammer. Heavy vibration could activate the sensor(s) and deploy the air bag(s), possibly causing serious injury.**
- **When using air or electric power tools or hammers, always switch the ignition OFF, disconnect the battery, and wait at least 3 minutes before performing any service.**

Precaution Necessary for Steering Wheel Rotation after Battery Disconnect

INFOID:0000000006007911

NOTE:

- Before removing and installing any control units, first turn the push-button ignition switch to the LOCK position, then disconnect both battery cables.
- After finishing work, confirm that all control unit connectors are connected properly, then re-connect both battery cables.
- Always use CONSULT-III to perform self-diagnosis as a part of each function inspection after finishing work. If a DTC is detected, perform trouble diagnosis according to self-diagnosis results.

For vehicle with steering lock unit, if the battery is disconnected or discharged, the steering wheel will lock and cannot be turned.
If turning the steering wheel is required with the battery disconnected or discharged, follow the operation procedure below before starting the repair operation.

OPERATION PROCEDURE

1. Connect both battery cables.
   NOTE:
   Supply power using jumper cables if battery is discharged.
2. Turn the push-button ignition switch to ACC position.
   (At this time, the steering lock will be released.)
3. Disconnect both battery cables. The steering lock will remain released with both battery cables disconnected and the steering wheel can be turned.
4. Perform the necessary repair operation.

5. When the repair work is completed, re-connect both battery cables. With the brake pedal released, turn the push-button ignition switch from ACC position to ON position, then to LOCK position. (The steering wheel will lock when the push-button ignition switch is turned to LOCK position.)
6. Perform self-diagnosis check of all control units using CONSULT-III.

PREPARATION

PREPARATION

Commercial Service Tools

INFOID:0000000006007912

Tool name		Description
Remover tool	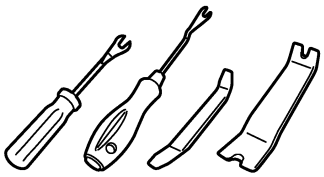 JMKIA3050ZZ	Removes the clips, pawls and metal clips

SYSTEM DESCRIPTION

COMPONENT PARTS

DOOR MIRROR SYSTEM

DOOR MIRROR SYSTEM : Component Description

INFOID:0000000006007936

Component		Function
Door mirror remote control switch	Mirror switch	It supplies power to mirror motor through mirror switch and changeover switch.
	Changeover switch	It transmits the LH/RH control of door mirror that supplies power.
Door mirror	Door mirror motor	It makes mirror face operate from side to side and up and down via integrated motor.

AUTO RETRACTABLE DOOR MIRROR SYSTEM

AUTO RETRACTABLE DOOR MIRROR SYSTEM : Component Parts Location

INFOID:0000000006021975

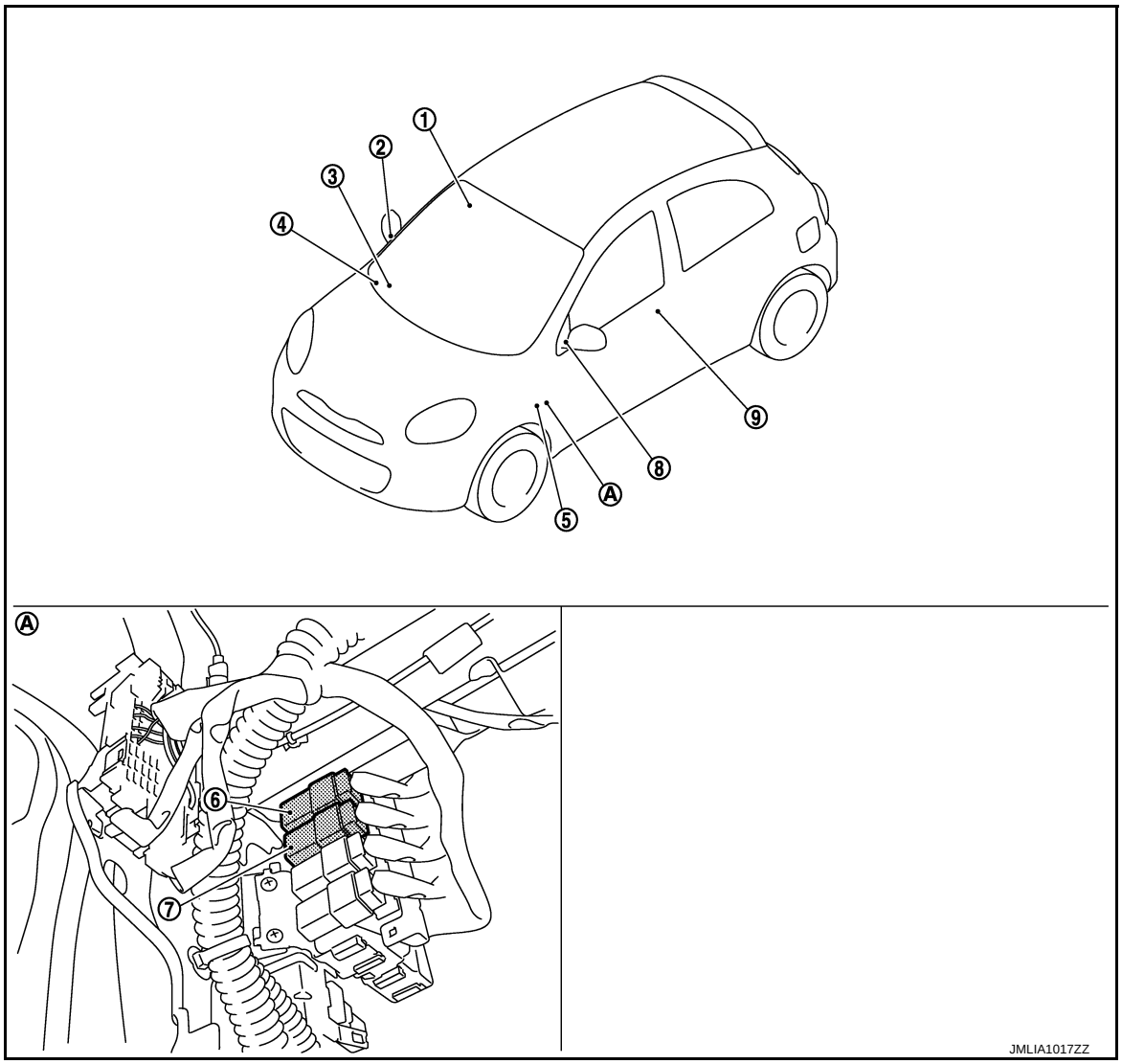

1. Door request switch (driver side)
2. Door mirror (driver side)
3. Remote keyless entry receiver
4. door mirror remote control switch
5. BCM
   Refer to BCS-5, "BODY CONTROL SYSTEM : Component Parts Location"
6. door mirror close relay
7. door mirror open relay
8. door mirror open relay
9. door mirror close relay

A. View with instrument lower panel RH removed

AUTO RETRACTABLE DOOR MIRROR SYSTEM : Component Description

INFOID:0000000006021976

Item	Function
BCM	Auto retractable door mirror system is operated when door lock signal is received from Intelligent Key or door request switch.
Remote keyless entry receiver	Receives intelligent Key operation and transmits to BCM
Door request switch	Transmits door lock/unlock operation to BCM
Door mirror remote control switch (open/close switch)	• Door mirror is retracted by open/close switch. • Auto retractable door mirror function operates for AUTO side only.
Door mirror (open/close motor)	Door mirror is retracted by open/close switch.
Door mirror open relay	• Power supply is supplied to motor when door mirror is closing. • This is the ground circuit when auto retractable door mirror is operating.
Door mirror close relay	• Power supply is supplied to motor when door mirror is opening. • Power supply is supplied to motor when auto retractable door mirror is operating.

SYSTEM

AUTO RETRACTABLE DOOR MIRROR SYSTEM

AUTO RETRACTABLE DOOR MIRROR SYSTEM : System Diagram

INFOID:0000000006021979

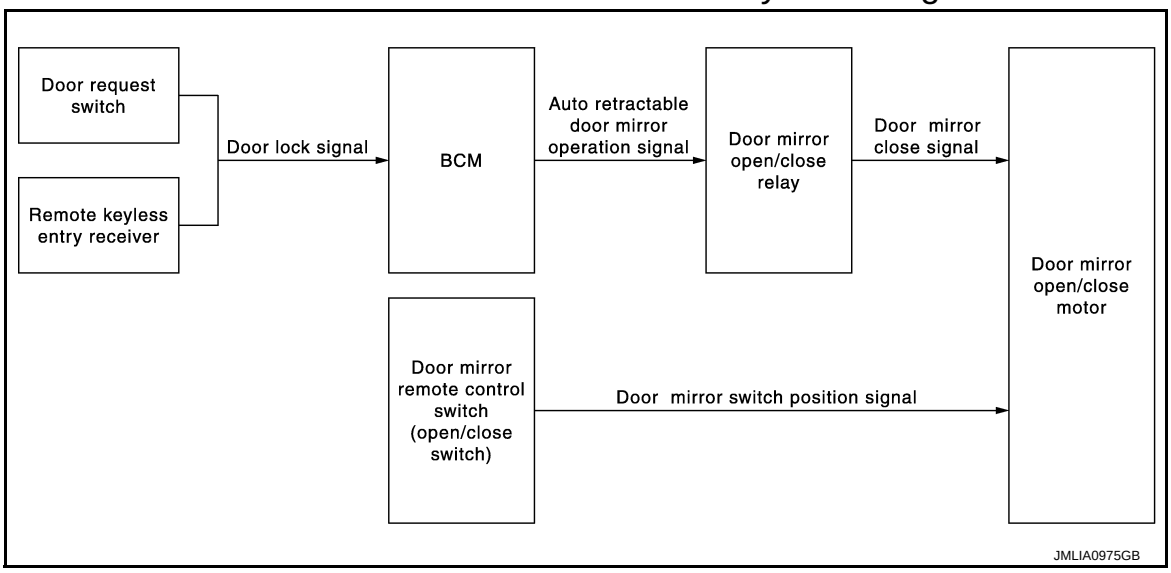

AUTO RETRACTABLE DOOR MIRROR SYSTEM : System Description

INFOID:0000000006021980

BCM retracts door mirror when door lock signal is received from Intelligent Key or door request switch.

OPERATION CONDITION

The system operates under the following conditions.

- Ignition switch: OFF
- Open/Close switch: AUTO

1. Press lock button of Intelligent Key or door request switch when the system is in operation condition.
2. Door mirror open/close relay turns ON for approximately 6 seconds. Door mirror is retracted.

NOTE:

- Auto retractable door mirror system is not operated when BCM detects door lock signal from power window main switch of door key cylinder switch.
- ON/OFF of auto retractable door mirror system can be set on “WORK SUPPORT” of “BCM” using CONSULT-III. Refer to MIR-10, "INTELLIGENT KEY : CONSULT-III Function (BCM - INTELLIGENT KEY)".

DIAGNOSIS SYSTEM (BCM)

COMMON ITEM

COMMON ITEM : CONSULT-III Function (BCM - COMMON ITEM)

INFOID:0000000006046390

APPLICATION ITEM

CONSULT-III performs the following functions via CAN communication with BCM.

Diagnosis mode	Function Description
Work Support	Changes the setting for each system function.
Self Diagnostic Result	Displays the diagnosis results judged by BCM.
CAN Diag Support Monitor	Monitors the reception status of CAN communication viewed from BCM. Refer to CONSULT-III operation manual.
Data Monitor	The BCM input/output signals are displayed.
Active Test	The signals used to activate each device are forcibly supplied from BCM.
Ecu Identification	The BCM part number is displayed.
Configuration	• Read and save the vehicle specification. • Write the vehicle specification when replacing BCM.

SYSTEM APPLICATION

BCM can perform the following functions for each system.

NOTE:

It can perform the diagnosis modes except the following for all sub system selection items.

×: Applicable item

System	Sub system selection item	Diagnosis mode		
		Work Support	Data Monitor	Active Test
Door lock	DOOR LOCK	×	×	×
Rear window defogger	REAR DEFOGGER		×	×
Warning chime	BUZZER		×	×
Interior room lamp timer	INT LAMP	×	×	×
Exterior lamp	HEAD LAMP	×	×	×
Wiper and washer	WIPER	×	×	×
Turn signal and hazard warning lamps	FLASHER	×	×	×
Automatic air conditioner	AIR CONDITONER		×	×
• Intelligent Key system • Engine start system	INTELLIGENT KEY	×	×	×
Combination switch	COMB SW		×	
Body control system	BCM	×		
NVIS - NATS	IMMU	×	×	×
Interior room lamp battery saver	BATTERY SAVER	×	×	×
Back door	TRUNK		×	
Vehicle security system	THEFT ALM	×	×	×
RAP system	RETAINED PWR		×	
Signal buffer system	SIGNAL BUFFER		×	×
TPMS	TPMS (AIR PRESSURE MONITOR)	×	×	×

FREEZE FRAME DATA (FFD)

The BCM records the following vehicle condition at the time a particular DTC is detected, and displays on CONSULT-III.

CONSULT screen item	Indication/Unit	Description	
Vehicle Speed	km/h	Vehicle speed of the moment a particular DTC is detected	
Odo/Trip Meter	km	Total mileage (Odometer value) of the moment a particular DTC is detected	
Vehicle Condition	SLEEP>LOCK	Power position status of the moment a particular DTC is detected	While turning BCM status from low power consumption mode to normal mode (Power supply position is “LOCK”)
	SLEEP>OFF		While turning BCM status from low power consumption mode to normal mode (Power supply position is “OFF”.)
	LOCK>ACC		While turning power supply position from “LOCK” to “ACC”
	ACC>ON		While turning power supply position from “ACC” to “IGN”
	RUN>ACC		While turning power supply position from “RUN” to “ACC” (Vehicle is stopping and selector lever is except P position.)
	CRANK>RUN		While turning power supply position from “CRANKING” to “RUN” (From cranking up the engine to run it)
	RUN>URGENT		While turning power supply position from “RUN“ to “ACC” (Emergency stop operation)
	ACC>OFF		While turning power supply position from “ACC” to “OFF”
	OFF>LOCK		While turning power supply position from “OFF” to “LOCK”
	OFF>ACC		While turning power supply position from “OFF” to “ACC”
	ON>CRANK		While turning power supply position from “IGN” to “CRANKING”
	OFF>SLEEP		While turning BCM status from normal mode (Power supply position is “OFF”.) to low power consumption mode
	LOCK>SLEEP		While turning BCM status from normal mode (Power supply position is “LOCK”.) to low power consumption mode
	LOCK		Power supply position is “LOCK” (Ignition switch OFF with steering is locked.)
	OFF		Power supply position is “OFF” (Ignition switch OFF with steering is unlocked.)
	ACC		Power supply position is “ACC” (Ignition switch ACC)
	ON		Power supply position is “IGN” (Ignition switch ON with engine stopped)
	ENGINE RUN		Power supply position is “RUN” (Ignition switch ON with engine running)
	CRANKING		Power supply position is “CRANKING” (At engine cranking)
IGN Counter	0 - 39	The number of times that ignition switch is turned ON after DTC is detected • The number is 0 when a malfunction is detected now. • The number increases like 1 → 2 → 3...38 → 39 after returning to the normal condition whenever ignition switch OFF → ON. • The number is fixed to 39 until the self-diagnosis results are erased if it is over 39.	

INTELLIGENT KEY

INTELLIGENT KEY : CONSULT-III Function (BCM - INTELLIGENT KEY)

INFOID:0000000006046389

WORK SUPPORT

Monitor item	Description
INSIDE ANT DIAGNOSIS	This function allows inside key antenna self-diagnosis
LOCK/UNLOCK BY I-KEY	Door lock/unlock function by door request switch mode can be changed to operation in this mode • On: Operate • Off: Non-operation

Monitor item	Description
ENGINE START BY I-KEY	Engine start function mode can be changed to operation with this mode • On: Operate • Off: Non-operation
TRUNK/GLASS HATCH OPEN	**NOTE:** This item is indicated, but not used
PANIC ALARM SET	Panic alarm button pressing time on Intelligent Key remote control button can be selected from the following with this mode • MODE 1: 0.5 sec • MODE 2: Non-operation • MODE 3: 1.5 sec
TRUNK OPEN DELAY	**NOTE:** This item is indicated, but not used
LO- BATT OF KEY FOB WARN	Intelligent Key low battery warning mode can be changed to operation with this mode • On: Operate • Off: Non-operation
ANTI KEY LOCK IN FUNCTI	Key reminder function mode can be changed to operation with this mode • On: Operate • Off: Non-operation
HAZARD ANSWER BACK	Hazard reminder function mode by door request switch and Intelligent Key button can be selected from the following with this mode • Lock Only: Door lock operation only • Unlock Only: Door unlock operation only • Lock/Unlock: Lock and unlock operation • Off: Non-operation
ANS BACK I-KEY LOCK	Buzzer reminder function (lock operation) mode by door request switch can be selected from the following with this mode • Horn Chirp: Sound horn • Buzzer: Sound Intelligent Key warning buzzer • Off: Non-operation
ANS BACK I-KEY UNLOCK	Buzzer reminder function (unlock operation) mode by door request switch can be changed to operation with this mode • On: Operate • Off: Non-operation
SHORT CRANKING OUTPUT	Starter motor can operate during the times below • 70 msec • 100 msec • 200 msec
CONFIRM KEY FOB ID	It can be checked whether Intelligent Key ID code is registered or not in this mode
AUTO LOCK SET	Auto door lock operation time can be changed in this mode • MODE 1: OFF • MODE 2: 30 sec. • MODE 3: 1 minute • MODE 4: 2 minutes • MODE 5: 3 minutes • MODE 6: 4 minutes • MODE 7: 5 minutes
ANSWER BACK FUNCTION	Buzzer reminder function mode by Intelligent Key button can be selected from the following with this mode • On: Operate • Off: Non-operation
TAKE OUT FROM WIN WARN SET	**NOTE:** This item is indicated, but not used
RETRACTABLE MIRROR SET	Auto retractable door mirror function mode can be changed to operation with this mode • On: Operate • Off: Non-operation

DATA MONITOR

Monitor Item	Condition
REQ SW -DR	Indicates [On/Off] condition of door request switch (driver side)
REQ SW -AS	Indicates [On/Off] condition of door request switch (passenger side)
REQ SW -BD/TR	Indicates [On/Off] condition of back door request switch
PUSH SW	Indicates [On/Off] condition of push-button ignition switch
CLUTCH SW	**NOTE:** This item is indicated, but not monitored
BRAKE SW 1	Indicates [On/Off] condition of stop lamp switch
BRAKE SW 2	Indicates [On/Off]* condition of stop lamp switch power supply
DETE/CANCL SW	Indicates [On/Off] condition of P position
SFT PN/N SW	Indicates [On/Off] condition of P or N position
S/L -LOCK	Indicates [On/Off] condition of steering lock unit (LOCK)
S/L -UNLOCK	Indicates [On/Off] condition of steering lock unit (UNLOCK)
S/L RELAY -F/B	Indicates [On/Off] condition of steering lock relay
UNLK SEN -DR	Indicates [On/Off] condition of driver door UNLOCK status
PUSH SW -IPDM	Indicates [On/Off] condition of push-button ignition switch
IGN RLY1 -F/B	Indicates [On/Off] condition of ignition relay 1
DETE SW -IPDM	Indicates [On/Off] condition of P position
SFT PN -IPDM	Indicates [On/Off] condition of P or N position
SFT P -MET	Indicates [On/Off] condition of P position
SFT N -MET	Indicates [On/Off] condition of N position
ENGINE STATE	Indicates [Stop/Stall/Crank/Run] condition of engine states
S/L LOCK-IPDM	Indicates [On/Off] condition of steering lock unit (LOCK)
S/L UNLK-IPDM	Indicates [On/Off] condition of steering lock unit (UNLOCK)
S/L RELAY-REQ	Indicates [On/Off] condition of steering lock relay
VEH SPEED 1	Display the vehicle speed signal received from combination meter by numerical value [Km/h]
VEH SPEED 2	Display the vehicle speed signal received from ABS or VDC or TCM by numerical value [Km/h]
DOOR STAT-DR	Indicates [LOCK/READY/UNLK] condition of driver side door status
DOOR STAT-AS	Indicates [LOCK/READY/UNLK] condition of passenger side door status
ID OK FLAG	Indicates [Set/Reset] condition of key ID
PRMT ENG STRT	Indicates [Set/Reset] condition of engine start possibility
PRMT RKE STRT	**NOTE:** This item is indicated, but not monitored
TRNK/HAT MNTR	**NOTE:** This item is indicated, but not monitored
RKE OPE COUN1	When remote keyless entry receiver receives the signal transmitted while operating on Intelligent Key, the numerical value start changing
RKE OPE COUN2	**NOTE:** This item is indicated, but not monitored
RKE-LOCK	Indicates [On/Off] condition of LOCK signal from Intelligent Key
RKE-UNLOCK	Indicates [On/Off] condition of UNLOCK signal from Intelligent Key
RKE-TR/BD	**NOTE:** This item is indicated, but not monitored
RKE-PANIC	Indicates [On/Off] condition of PANIC button of Intelligent Key
RKE-MODE CHG	Indicates [On/Off] condition of MODE CHANGE signal from Intelligent Key

*: OFF is displayed when brake pedal is depressed while brake switch power supply is OFF.

ACTIVE TEST

Test item	Description
OUTSIDE BUZZER	This test is able to check Intelligent Key warning buzzer operation • On: Operate • Off: Non-operation
INSIDE BUZZER	This test is able to check warning chime in combination meter operation • Take Out: Take away warning chime sounds when CONSULT-III screen is touched • Key: Key warning chime sounds when CONSULT-III screen is touched • Knob: OFF position warning chime sounds when CONSULT-III screen is touched • Off: Non-operation
INDICATOR	This test is able to check warning lamp operation • KEY ON: “KEY” Warning lamp illuminates when CONSULT-III screen is touched • KEY IND: “KEY” Warning lamp blinks when CONSULT-III screen is touched • Off: Non-operation
INT LAMP	This test is able to check interior room lamp operation • On: Operate • Off: Non-operation
LCD	This test is able to check meter display information • B&P N: Engine start information indicate when CONSULT-III screen is touched • B&P I: Engine start information indicate when CONSULT-III screen is touched • ID NG: This item is displayed, but cannot be monitored • ROTAT: This item is displayed, but cannot be monitored • SFT P: Shift P warning lamp indicate when CONSULT-III screen is touched • INSRT: This item is displayed, but cannot be monitored • BATT: Key warning lamp indicator when CONSULT-III screen is touched • NO KY: Key warning lamp indicator when CONSULT-III screen is touched • OUTKEY: Engine start information indicate when CONSULT-III screen is touched • LK WN: Engine start information indicate when CONSULT-III screen is touched
FLASHER	This test is able to check security hazard lamp operation The hazard lamps are activated after “LH/RH/Off” on CONSULT-III screen is touched
P RANGE	This test is able to check AT shift selector power supply • On: Operate • Off: Non-operation
ENGINE SW ILLUMI	This test is able to check push-ignition switch illumination operation Push-ignition switch illumination illuminates when “ON” on CONSULT-III screen is touched
PUSH SWITCH INDICATOR	This test is able to check LOCK indicator in push-ignition switch operation LOCK indicator in push-ignition switch illuminates when “ON” on CONSULT-III screen is touched
TRUNK/BACK DOOR	**NOTE:** This item is indicated, but not tested
RETRACTABLE MIRROR	This test is able to check auto retractable door mirror operation • On: Operate • Off: Non-operation

ECU DIAGNOSIS INFORMATION

BCM (BODY CONTROL MODULE)

List of ECU Reference

INFOID:0000000006023378

ECU	Reference
BCM	BCS-18, "Reference Value"
	BCS-37, "Fail-safe"
	BCS-39, "DTC Inspection Priority Chart"
	BCS-40, "DTC Index"

WIRING DIAGRAM

DOOR MIRROR SYSTEM

Wiring Diagram

INFOID:0000000006007915

For connector terminal arrangements, harness layouts, and alphabets in a ⬡ (option abbreviation; if not described in wiring diagram), refer to GI-12, "Connector Information".

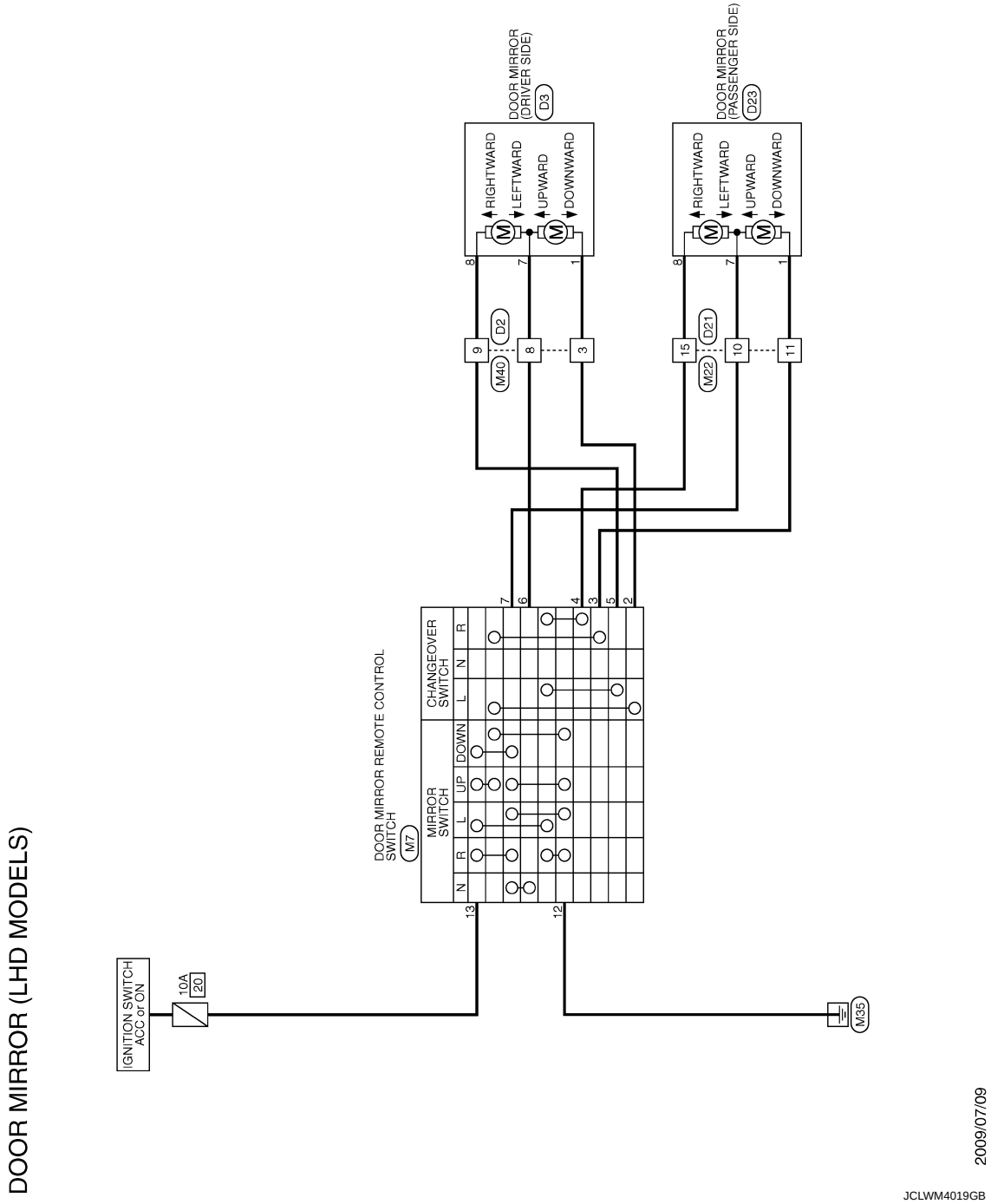

BASIC INSPECTION

DIAGNOSIS AND REPAIR WORK FLOW

Work Flow

INFOID:0000000006046392

DETAILED FLOW

1. OBTAIN INFORMATION ABOUT SYMPTOM

Interview the customer to obtain as much malfunction information (conditions and environment when the malfunction occurred) as possible when the customer brings the vehicle in.

>> GO TO 2.

2. REPRODUCE THE MALFUNCTION INFORMATION

Check the malfunction on the vehicle that the customer describes.
Inspect the relation of the symptoms and the condition when the symptoms occur.

>> GO TO 3.

3. IDENTIFY THE MALFUNCTIONING SYSTEM WITH “SYMPTOM DIAGNOSIS”

Use “Symptom diagnosis” from the symptom inspection result in step 2. Then identify where to start the diagnosis based on possible causes and symptoms.

>> GO TO 4.

4. IDENTIFY MALFUNCTIONING PARTS WITH “COMPONENT DIAGNOSIS”

Perform the diagnosis with “Component diagnosis” of the applicable system.

>> GO TO 5.

5. REPAIR OR REPLACE THE MALFUNCTIONING PARTS

Repair or replace the specified malfunctioning parts.

>> GO TO 6.

6. FINAL CHECK

Check that malfunctions are not reproduced when obtaining the malfunction information from the customer, referring to the symptom inspection result in step 2.

Is the malfunctioning part repaired or replaced?

YES >> Trouble diagnosis is completed.
NO >> GO TO 3.

DTC/CIRCUIT DIAGNOSIS

DOOR MIRROR REMOTE CONTROL SWITCH (MIRROR SWITCH/ CHANGEOVER SWITCH)

Component Inspection

INFOID:0000000006007917

1. CHECK MIRROR SWITCH & CHANGEOVER SWITCH

1. Turn ignition switch OFF.
2. Disconnect door mirror remote control switch connector.
3. Check door mirror remote control switch.

[Door mirror (driver side)]

Door mirror remote control switch			Mirror switch condition	Continuity
Connector	Terminal			
M7	13	7	RIGHT	Existed
	12	4		
	13	4	LEFT	
	12	7		
	13	3	UP	
	12	7		
	13	7	DOWN	
	12	3		

[Door mirror (passenger side)]

Door mirror remote control switch			Mirror switch condition	Continuity
Connector	Terminal			
M7	13	6	RIGHT	Existed
	12	5		
	13	5	LEFT	
	12	6		
	13	2	UP	
	12	6		
	13	6	DOWN	
	12	2		

Is the inspection result normal?

YES >> INSPECTION END.
NO >> Replace door mirror remote control switch.Refer to MIR-38, "Removal and Installation".

DOOR MIRROR REMOTE CONTROL SWITCH (OPEN/CLOSE SWITCH)

Component Inspection

INFOID:0000000006021973

1.CHECK OPEN/CLOSE SWITCH

1. Turn ignition switch OFF.
2. Disconnect door mirror remote control switch connector.
3. Check door mirror remote control switch.

Door mirror remote control switch			Mirror switch condition	Continuity
Connector	Terminal			
M7	13	9	AUTO/OPEN	Existed
	12	11		
	13	11	CLOSE	
	12	9		

Is the inspection result normal?

YES >> INSPECTION END.
NO >> Replace door mirror remote control switch.Refer to MIR-38, "Removal and Installation".

POWER SUPPLY AND GROUND CIRCUIT
DOOR MIRROR REMOTE CONTROL SWITCH (OPEN/CLOSE SWITCH)

DOOR MIRROR REMOTE CONTROL SWITCH (OPEN/CLOSE SWITCH) : Diagnosis Procedure

INFOID:0000000006021965

1.CHECK FUSE

Check that the following fuse are not fusing.

Signal name	Fuse No.
IGN power supply	19 (10A)

Is the fuse fusing?

YES >> Replace the blown fuse after repairing the affected circuit if a fuse are blown.
NO >> GO TO 2.

2.CHECK DOOR MIRROR REMOTE CONTROL SWITCH POWER SUPPLY

1. Turn ignition switch OFF.
2. Disconnect door mirror remote control switch connector.
3. Turn ignition switch ON.
4. Check voltage between door mirror remote control switch harness connector and ground.

(+)		(–)	Voltage (V) (Approx.)
Door mirror remote control switch			
Connector	Terminal		
M7	13	Ground	Battery voltage

Is the inspection result normal?

YES >> GO TO 3.
NO >> Repair or replace harness or connector.

3.CHECK DOOR MIRROR REMOTE CONTROL SWITCH GROUND CIRCUIT

1. Turn ignition switch OFF.
2. Check continuity between door mirror remote control switch harness connector and ground.

Door mirror remote control switch		Ground	Continuity
Connector	Terminal		
M7	12		Existed

Is the inspection result normal?

YES >> INSPECTION END
NO >> Repair or replace harness or connector.

AUTO RETRACTABLE DOOR MIRROR CIRCUIT

Component Function Check

INFOID:0000000006059498

1.CHECK FUNCTION

Check that auto retractable door mirror operate normally in “RETRACTABLE MIRROR” on “ACTIVE TEST” of “BCM” using CONSULT-III.

Is the inspection result normal?

YES >> Auto retractable door mirror system is OK.
NO >> Refer to MIR-20, "Diagnosis Procedure"

Diagnosis Procedure

INFOID:0000000006021962

1.CHECK FUSE

Check that the following fuse are not fusing.

Signal name	Fuse No.
Battery power supply	13(10A)

Is the fuse fusing?

YES >> Replace the blown fuse after repairing the affected circuit if a fuse are blown.
NO >> GO TO 2.

2.CHECK DOOR MIRROR OPEN/CLOSE RELAY POWER SUPPLY

1. Turn ignition switch OFF.
2. Disconnect door mirror open/close relay connector.
3. Check voltage between door mirror open/close relay harness connector and ground.

(+)		(–)	Voltage (V) (Approx.)
Door mirror open/close relay			
Connector	Terminal		
M86	2	Ground	Battery voltage
M87	2		
	5		

Is the inspection result normal?

YES >> GO TO 3.
NO >> Repair or replace harness or connector.

3.CHECK AUTO RETRACTABLE DOOR MIRROR CIRCUIT

1. Disconnect BCM connector.
2. Check continuity between door mirror open/close relay harness connector and BCM harness connector.

Door mirror open/close relay		BCM		Continuity
Connector	Terminal	Connector	Terminal	
M86	1	M71	74	Existed
M87	1			

3. Check continuity between BCM harness connector and ground.

BCM		Ground	Continuity
Connector	Terminal		
M71	74		Not existed

Is the inspection result normal?

YES >> GO TO 4.
NO >> Repair or replace harness or connector.

4. CHECK DOOR MIRROR OPEN/CLOSE RELAY

Check door mirror open/close relay.
Refer to MIR-21, "Component Inspection"

Is the inspection result normal?

YES >> GO TO 5.
NO >> Repair or replace harness or connector.

5. CHECK INTERMITTENT INCIDENT

Refer to GI-33, "Intermittent Incident"

>> INSPECTION END

Component Inspection

INFOID:0000000006021963

1. CHECK DOOR MIRROR OPEN/CLOSE RELAY

1. Turn ignition switch OFF.
2. Remove door mirror open/close relay.
3. Check the continuity between door mirror open/close relay terminals under the following conditions.

Terminal		Condition	Continuity
4	3	No current supply	Existed
		12 V direct current supply between terminals 1 and 2.	Not existed
5		12 V direct current supply between terminals 1 and 2.	Existed
		No current supply	Not existed

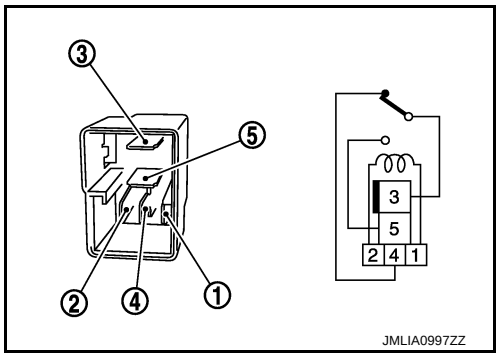

Is the inspection result normal?

YES >> INSPECTION END.
NO >> Replace door mirror open/close relay.

DOOR MIRROR (OPEN/CLOSE MOTOR)

Component Function Check

INFOID:0000000006021971

1.CHECK DOOR MIRROR RETRACT FUNCTION

Operate open/close switch. Check that door mirror operates normally.

Is the inspection result normal?

YES >> Door mirror (open/close motor) circuit is OK.
NO >> Refer to MIR-22, "Diagnosis Procedure".

Diagnosis Procedure

INFOID:0000000006022700

1.CHECK DOOR MIRROR MOTOR INPUT SIGNAL

1. Turn ignition switch OFF.
2. Disconnect door mirror connector.
3. Turn ignition switch ON.
4. Check voltage between door mirror connector and ground.

(+)		(–)	Condition		Voltage (V) (Approx.)
Door mirror					
Connector	Terminal				
D23 (Driver side)	5	Ground	Door mirror remote control switch (open/close switch)	AUTO/OPEN	Battery voltage
				Other than above	0
	6			Close	Battery voltage
				Other than above	0
D3 (Passenger side)	5			AUTO/OPEN	Battery voltage
				Other than above	0
	6			Close	Battery voltage
				Other than above	0

Is the inspection result normal?

YES >> GO TO 3.
NO >> GO TO 2.

2.CHECK HARNESS CONTINUITY-1

1. Turn ignition switch OFF.
2. Disconnect door mirror (driver side) connector and door mirror (passenger side) connector and door mirror open/close relay connector.
3. Check continuity between door mirror harness connector and door mirror open/close relay harness connector.

door mirror		Door mirror open/close relay		Continuity
Connector	Terminal	Connector	Terminal	
D23 (Driver side)	5	M86	3	Existed
	6	M87		
D3 (Passenger side)	5	M86		
	6	M87		

4. Check continuity between door mirror harness connector and ground.

door mirror		Ground	Continuity
Connector	Terminal		
D23 (Driver side)	5		Not existed
D3 (Passenger side)			

Is the inspection result normal?

YES >> GO TO 3.
NO >> Repair or replace harness.

3. CHECK HARNESS CONTINUITY-2

1. Turn ignition switch OFF.
2. Disconnect door mirror remote control switch connector and door mirror open/close relay connector.
3. Check continuity between door mirror remote control switch harness connector and door mirror open/close relay harness connector.

door mirror remote control switch		Door mirror open/close relay		Continuity
Connector	Terminal	Connector	Terminal	
M7	9	M86	4	Existed
	11		5	
		M87	4	

4. Check continuity between door mirror remote control switch harness connector and ground.

door mirror remote control switch		Ground	Continuity
Connector	Terminal		
M7	9		Not existed
	11		

Is the inspection result normal?

YES >> GO TO 4.
NO >> Repair or replace harness.

4. CHECK DOOR MIRROR MOTOR

Check door mirror motor.
Refer to MIR-23, "Component Inspection".

Is the inspection result normal?

YES >> GO TO 5.
NO >> Replace door mirror. Refer to MIR-35, "DOOR MIRROR ASSEMBLY : Removal and Installation".

5. CHECK DOOR MIRROR OPEN/CLOSE RELAY

Check door mirror open/close relay.
Refer to MIR-23, "Component Inspection".

Is the inspection result normal?

YES >> GO TO 6.
NO >> Replace door mirror open/close relay. Refer to IP-13, "Removal and Installation".

6. CHECK INTERMITTENT INCIDENT

Refer to GI-33, "Intermittent Incident".

>> INSPECTION END

Component Inspection

INFOID:0000000006022701

1. CHECK DOOR MIRROR MOTOR

1. Turn ignition switch OFF.
2. Disconnect door mirror connector.

3. Apply 12V to each power supply terminal of door mirror motor.

Door mirror			Operational direction
Connector	Terminal		
	(+)	(–)	
D23 (Driver side)	5	6	AUTO/OPEN
	6	5	CLOSE
D3 (Passenger side)	5	6	AUTO/OPEN
	6	5	CLOSE

Is the inspection result normal?

YES >> INSPECTION END
NO >> Replace door mirror. Refer to MIR-35, "DOOR MIRROR ASSEMBLY : Removal and Installation".

SYMPTOM DIAGNOSIS

ELECTRIC FOLDABLE DOOR MIRROR DOES NOT OPERATE

Diagnosis Procedure

INFOID:0000000006021974

1. CHECK POWER SUPPLY AND GROUND CIRCUIT

Check door mirror remote control switch power supply and ground circuit.
Refer to MIR-19, "DOOR MIRROR REMOTE CONTROL SWITCH (OPEN/CLOSE SWITCH) : Diagnosis Procedure".

Is the inspection result normal?

YES >> GO TO 2.
NO >> Repair or replace the malfunctioning parts.

2. CHECK DOOR MIRROR REMOTE CONTROL SWITCH (OPEN/CLOSE SWITCH)

Check door mirror remote control switch (open/close switch).
Refer to MIR-18, "Component Inspection".

Is the inspection result normal?

YES >> GO TO 3.
NO >> Repair or replace the malfunctioning parts.

3. CHECK DOOR MIRROR (OPEN/CLOSE MOTOR) CIRCUIT

Check door mirror (open/close motor) circuit.
Refer to MIR-22, "Component Function Check".

Is the inspection result normal?

YES >> GO TO 4.
NO >> Repair or replace the malfunctioning parts.

4. CONFIRM THE OPERATION

Confirm the operation again.

Is the inspection result normal?

YES >> Check intermittent incident. Refer to GI-33, "Intermittent Incident".
NO >> GO TO 1.

AUTO RETRACTABLE DOOR MIRROR DOES NOT OPERATE

Diagnosis Procedure

INFOID:0000000006021885

1. CHECK INTELLIGENT KEY AND DOOR REQUEST SWITCH

1. Check operation of Intelligent Key and door request switch.
   Refer to DLK-15, "DOOR LOCK FUNCTION : System Description".
2. Check the operation.

Is the inspection result normal?

YES >> Intelligent Key and door request switch are normal.
NO >> GO TO 2.

2. CHECK DOOR MIRROR (OPEN/CLOSE MOTOR) CIRCUIT

Check door mirror (open/close motor) circuit.
Refer to MIR-22, "Component_Function_Check".

Is the inspection result normal?

YES >> GO TO 3.
NO >> Repair or replace the malfunctioning parts.

3. CHECK AUTO RETRACTABLE DOOR MIRROR CIRCUIT

Check climate controlled seat switch.
Refer to MIR-20, "Component Function Check".

Is the inspection result normal?

YES >> GO TO 4.
NO >> Repair or replace the malfunctioning parts.

4. CONFIRM THE OPERATION

Confirm the operation again.

Is the inspection result normal?

YES >> Check intermittent incident. Refer to GI-33, "Intermittent Incident".
NO >> GO TO 1.

SQUEAK AND RATTLE TROUBLE DIAGNOSES

Work Flow

INFOID:0000000006007919

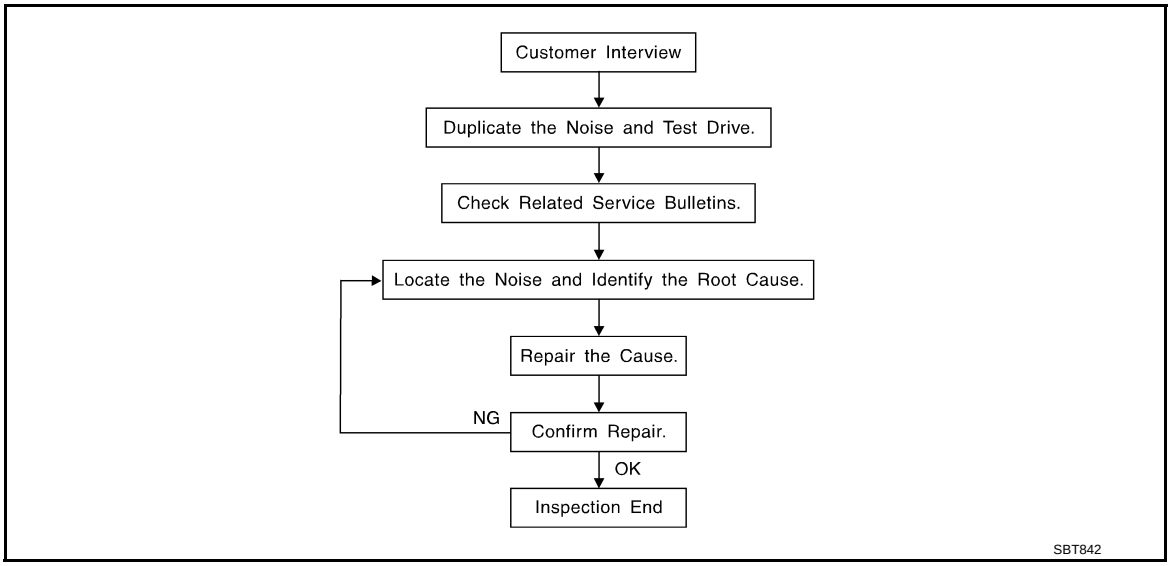

CUSTOMER INTERVIEW

Interview the customer if possible, to determine the conditions that exist when the noise occurs. Use the Diagnostic Worksheet during the interview to document the facts and conditions when the noise occurs and any of the customer's comments; refer to MIR-31, "Diagnostic Worksheet". This information is necessary to duplicate the conditions that exist when the noise occurs.

- The customer may not be able to provide a detailed description or the location of the noise. Attempt to obtain all the facts and conditions that exist when the noise occurs (or does not occur).
- If there is more than one noise in the vehicle, be sure to diagnose and repair the noise that the customer is concerned about. This can be accomplished by a test drive with the customer.
- After identifying the type of noise, isolate the noise in terms of its characteristics. The noise characteristics are provided so the customer, service adviser and technician are all speaking the same language when defining the noise.
- Squeak – (Like tennis shoes on a clean floor)
  Squeak characteristics include the light contact/fast movement/brought on by road conditions/hard surfaces = higher pitch noise/softer surfaces = lower pitch noises/edge to surface = chirping
- Creak – (Like walking on an old wooden floor)
  Creak characteristics include firm contact/slow movement/twisting with a rotational movement/pitch dependent on materials/often brought on by activity.
- Rattle – (Like shaking a baby rattle)
  Rattle characteristics include the fast repeated contact/vibration or similar movement/loose parts/missing clip or fastener/incorrect clearance.
- Knock – (Like a knock on a door)
  Knock characteristics include hollow sounding/sometimes repeating/often brought on by driver action.
- Tick – (Like a clock second hand)
  Tick characteristics include gentle contacting of light materials/loose components/can be caused by driver action or road conditions.
- Thump – (Heavy, muffled knock noise)
  Thump characteristics include softer knock/dead sound often brought on by activity.
- Buzz – (Like a bumble bee)
  Buzz characteristics include high frequency rattle/firm contact.
- Often the degree of acceptable noise level will vary depending upon the person. A noise that a technician may judge as acceptable may be very irritating to the customer.
- Weather conditions, especially humidity and temperature, may have a great effect on noise level.

DUPLICATE THE NOISE AND TEST DRIVE

If possible, drive the vehicle with the customer until the noise is duplicated. Note any additional information on the Diagnostic Worksheet regarding the conditions or location of the noise. This information can be used to duplicate the same conditions when the repair is reconfirmed.

If the noise can be duplicated easily during the test drive, to help identify the source of the noise, try to duplicate the noise with the vehicle stopped by doing one or all of the following:

1) Close a door.
2) Tap or push/pull around the area where the noise appears to be coming from.
3) Rev the engine.
4) Use a floor jack to recreate vehicle “twist”.
5) At idle, apply engine load (electrical load, half-clutch on M/T model, drive position on A/T model).
6) Raise the vehicle on a hoist and hit a tire with a rubber hammer.

- Drive the vehicle and attempt to duplicate the conditions the customer states exist when the noise occurs.
- If it is difficult to duplicate the noise, drive the vehicle slowly on an undulating or rough road to stress the vehicle body.

LOCATE THE NOISE AND IDENTIFY THE ROOT CAUSE

1. Narrow down the noise to a general area. To help pinpoint the source of the noise, use a listening tool (Engine Ear or mechanics stethoscope).
2. Narrow down the noise to a more specific area and identify the cause of the noise by:

- Removing the components in the area that is are suspected to be the cause of the noise.
  Do not use too much force when removing clips and fasteners, otherwise clips and fastener can be broken or lost during the repair, resulting in the creation of new noise.
- Tapping or pushing/pulling the component that is are suspected to be the cause of the noise.
  Do not tap or push/pull the component with excessive force, otherwise the noise will be eliminated only temporarily.
- Feeling for a vibration by hand by touching the component(s) that is are suspected to be the cause of the noise.
- Placing a piece of paper between components that is are suspected to be the cause of the noise.
- Looking for loose components and contact marks.
  Refer to MIR-29, "Inspection Procedure".

REPAIR THE CAUSE

- If the cause is a loose component, tighten the component securely.
- If the cause is insufficient clearance between components:

- Separate components by repositioning or loosening and retightening the component, if possible.
- Insulate components with a suitable insulator such as urethane pads, foam blocks, felt cloth tape or urethane tape. These insulators are available through the authorized Nissan Parts Department.

CAUTION:

Never use excessive force as many components are constructed of plastic and may be damaged.

NOTE:

- URETHANE PADS
  Insulates connectors, harness, etc.
- INSULATOR (Foam blocks)
  Insulates components from contact. Can be used to fill space behind a panel.
- INSULATOR (Light foam block)
- FELT CLOTHTAPE
  Used to insulate where movement does not occur. Ideal for instrument panel applications.
  The following materials, not available through NISSAN Parts Department, can also be used to repair squeaks and rattles.
- UHMW(TEFLON) TAPE
  Insulates where slight movement is present. Ideal for instrument panel applications.
- SILICONE GREASE
  Used in place of UHMW tape that is be visible or does not fit.
  Note: Will only last a few months.
- SILICONE SPRAY
  Used when grease cannot be applied.
- DUCT TAPE
  Used to eliminate movement.

CONFIRM THE REPAIR

Confirm that the cause of a noise is repaired by test driving the vehicle. Operate the vehicle under the same conditions as when the noise originally occurred. Refer to the notes on the Diagnostic Worksheet.

Inspection Procedure

INFOID:0000000006007920

Refer to Table of Contents for specific component removal and installation information.

INSTRUMENT PANEL

Most incidents are caused by contact and movement between:

1. Cluster lid A and instrument panel
2. Acrylic lens and combination meter housing
3. Instrument panel to front pillar garnish
4. Instrument panel to windshield
5. Instrument panel mounting pins
6. Wiring harnesses behind the combination meter
7. A/C defroster duct and duct joint

These incidents can usually be located by tapping or moving the components to duplicate the noise or by pressing on the components while driving to stop the noise. Most of these incidents can be repaired by applying felt cloth tape or silicon spray (in hard to reach areas). Urethane pads can be used to insulate wiring harness.

CAUTION:

Never use silicone spray to isolate a squeak or rattle. If the area is saturated with silicone, the recheck of repair becomes impossible.

CENTER CONSOLE

Components to pay attention to include:

1. Shifter assembly cover to finisher
2. A/C control unit and cluster lid C
3. Wiring harnesses behind audio and A/C control unit

The instrument panel repair and isolation procedures also apply to the center console.

DOORS

Pay attention to the following:

1. Finisher and inner panel making a slapping noise
2. Inside handle escutcheon to door finisher
3. Wiring harnesses tapping
4. Door striker out of alignment causing a popping noise on starts and stops

Tapping or moving the components or pressing on them while driving to duplicate the conditions can isolate many of these incidents. The areas can usually be insulated with felt cloth tape or insulator foam blocks to repair the noise.

TRUNK

Trunk noises are often caused by a loose jack or loose items put into the trunk by the customer.
In addition look for the following:

1. Trunk lid dumpers out of adjustment
2. Trunk lid striker out of adjustment
3. Trunk lid torsion bars knocking together
4. A loose license plate or bracket

Most of these incidents can be repaired by adjusting, securing or insulating the item(s) or component(s) causing the noise.

SUNROOF/HEADLINING

Noises in the sunroof/headlining area can often be traced to one of the following:

1. Sunroof lid, rail, linkage or seals making a rattle or light knocking noise
2. Sunvisor shaft shaking in the holder
3. Front or rear windshield touching headlining and squeaking

Again, pressing on the components to stop the noise while duplicating the conditions can isolate most of these incidents. Repairs usually consist of insulating with felt cloth tape.

SEATS

When isolating seat noise it is important to note the position the seat is in and the load placed on the seat when the noise occurs. These conditions should be duplicated when verifying and isolating the cause of the noise.

Cause of seat noise include:

1. Headrest rods and holder
2. A squeak between the seat pad cushion and frame
3. Rear seatback lock and bracket

These noises can be isolated by moving or pressing on the suspected components while duplicating the conditions under which the noise occurs. Most of these incidents can be repaired by repositioning the component or applying urethane tape to the contact area.

UNDERHOOD

Some interior noise may be caused by components under the hood or on the engine wall. The noise is then transmitted into the passenger compartment.

Causes of transmitted underhood noise include:

1. Any component mounted to the engine wall
2. Components that pass through the engine wall
3. Engine wall mounts and connectors
4. Loose radiator mounting pins
5. Hood bumpers out of adjustment
6. Hood striker out of adjustment

These noises can be difficult to isolate since they cannot be reached from the interior of the vehicle. The best method is to secure, move or insulate one component at a time and test drive the vehicle. Also, engine RPM or load can be changed to isolate the noise. Repairs can usually be made by moving, adjusting, securing, or insulating the component causing the noise.

Diagnostic Worksheet

INFOID:0000000006007921

SQUEAK & RATTLE DIAGNOSTIC WORKSHEET

Dear Nissan Customer:
We are concerned about your satisfaction with your Nissan vehicle. Repairing a squeak or rattle sometimes can be very difficult. To help us fix your Nissan right the first time, please take a moment to note the area of the vehicle where the squeak or rattle occurs and under what conditions. You may be asked to take a test drive with a service advisor or technician to ensure we confirm the noise you are hearing.

I. WHERE DOES THE NOISE COME FROM? (circle the area of the vehicle)
The illustrations are for reference only, and may not reflect the actual configuration of your vehicle.

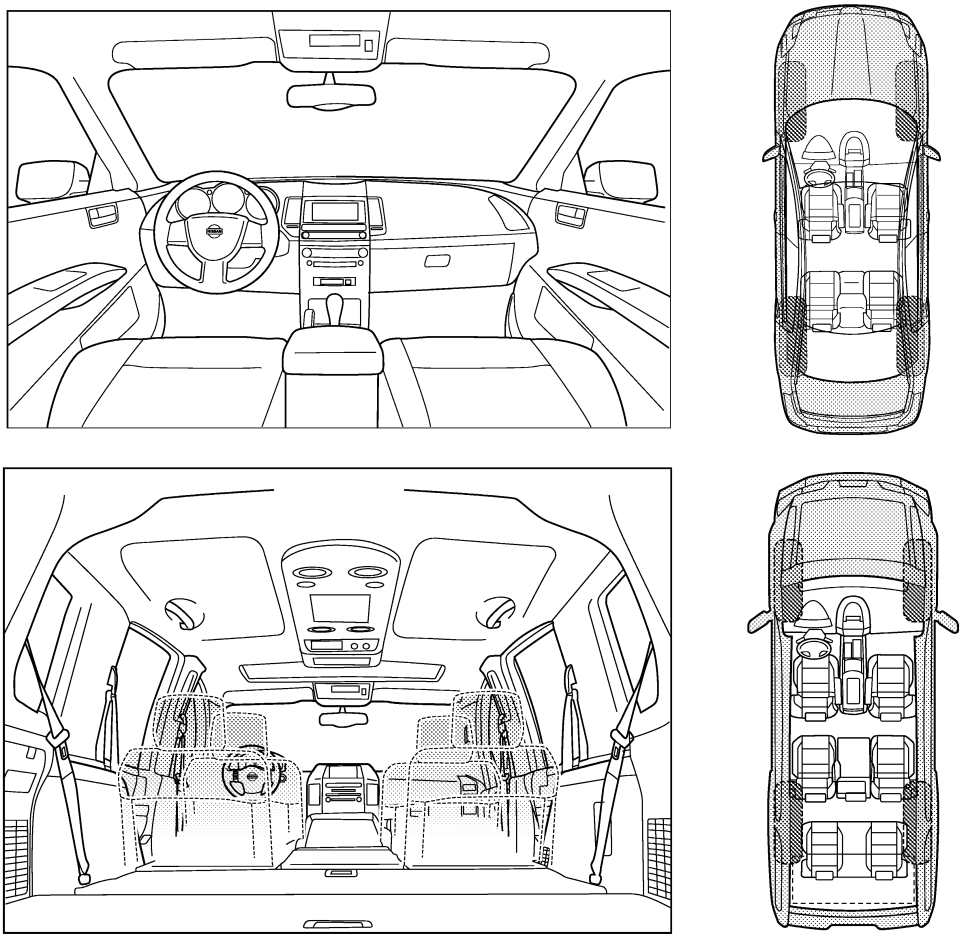

Continue to page 2 of the worksheet and briefly describe the location of the noise or rattle. In addition, please indicate the conditions which are present when the noise occurs.

PIIB8740E

SQUEAK & RATTLE DIAGNOSTIC WORKSHEET - page 2

Briefly describe the location where the noise occurs:

_____

_____

II. WHEN DOES IT OCCUR? (please check the boxes that apply)

- ☐ anytime
- ☐ 1st time in the morning
- ☐ only when it is cold outside
- ☐ only when it is hot outside
- ☐ after sitting out in the rain
- ☐ when it is raining or wet
- ☐ dry or dusty conditions
- ☐ other:

III. WHEN DRIVING:

- ☐ through driveways
- ☐ over rough roads
- ☐ over speed bumps
- ☐ only about ____ mph
- ☐ on acceleration
- ☐ coming to a stop
- ☐ on turns: left, right or either (circle)
- ☐ with passengers or cargo
- ☐ other: _____
- ☐ after driving _____ miles or _____ minutes

IV. WHAT TYPE OF NOISE

- ☐ squeak (like tennis shoes on a clean floor)
- ☐ creak (like walking on an old wooden floor)
- ☐ rattle (like shaking a baby rattle)
- ☐ knock (like a knock at the door)
- ☐ tick (like a clock second hand)
- ☐ thump (heavy, muffled knock noise)
- ☐ buzz (like a bumble bee)

TO BE COMPLETED BY DEALERSHIP PERSONNEL

Test Drive Notes:

_____

_____

_____

	YES	NO	Initials of person performing
Vehicle test driven with customer	☐	☐	_____
- Noise verified on test drive	☐	☐	_____
- Noise source located and repaired	☐	☐	_____
- Follow up test drive performed to confirm repair	☐	☐	_____

VIN: _____ Customer Name: _____

W.O.# _____ Date: _____

This form must be attached to Work Order

PIIB8742E

REMOVAL AND INSTALLATION

INSIDE MIRROR

Exploded View

INFOID:0000000006059675

Auto anti-dazzling Type

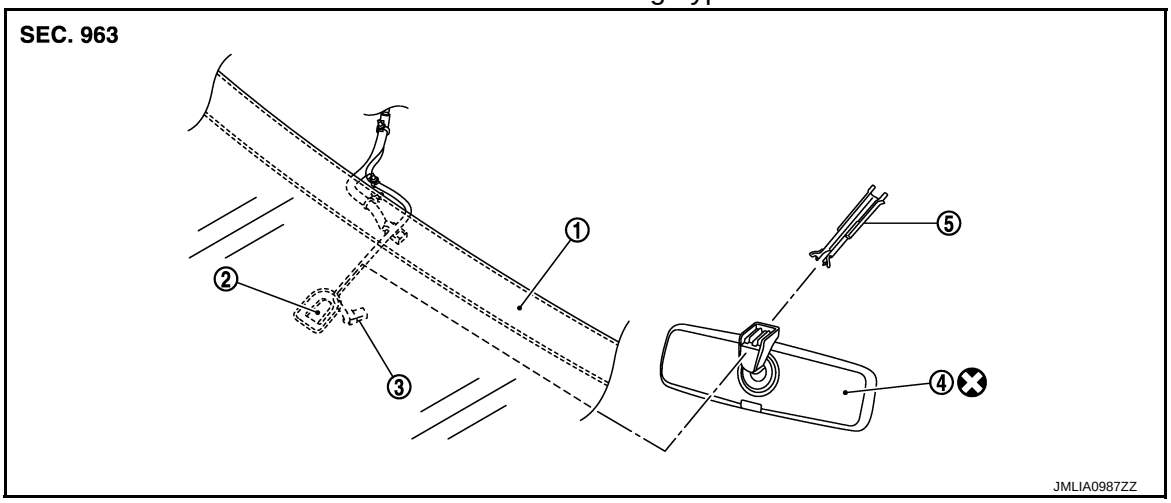

1. Windshield glass
2. Mirror base
3. Harness connector
4. Inside mirror
5. Inside mirror cover

⊗ : Do not reuse

Manual anti-dazzling Type

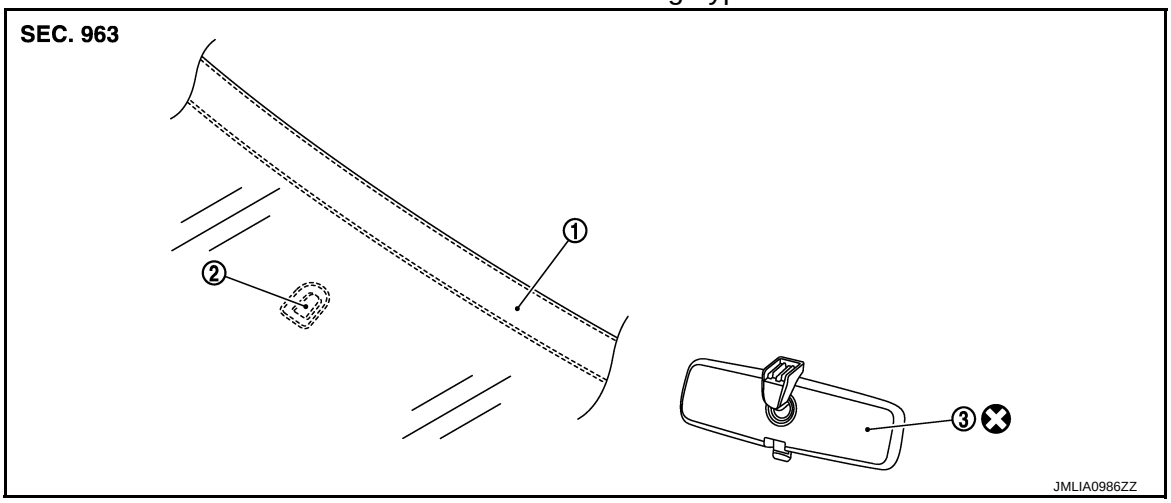

1. Windshield glass
2. Mirror base
3. Inside mirror

⊗ : Do not reuse

Removal and Installation

INFOID:0000000006059674

AUTO ANTI-DAZZLING TYPE

Removal

1. Remove inside mirror cover.
2. Disconnect harness connector from inside mirror.
3. Slide inside mirror upward to remove.

Installation

< REMOVAL AND INSTALLATION >

Install in the reverse order of removal.

MANUAL ANTI-DAZZLING TYPE

Removal
Slide inside mirror upward to remove.

Installation
Install in the reverse order of removal.

OUTSIDE MIRROR

Exploded View

INFOID:0000000006007924

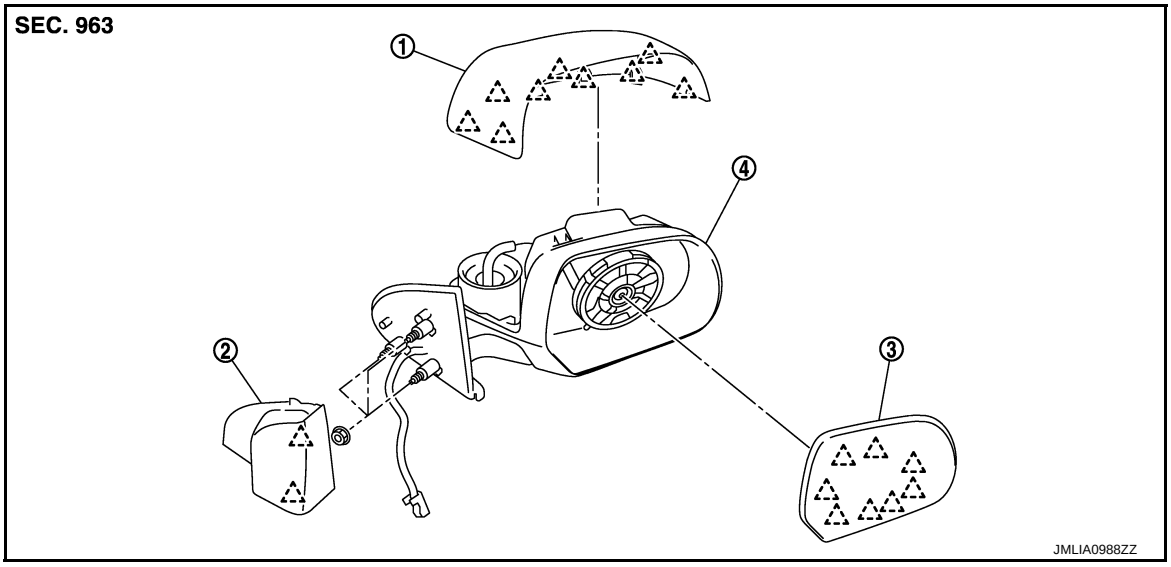

1. Door mirror cover
2. Door mirror corner cover
3. Glass mirror
4. Door mirror assembly

: Pawl

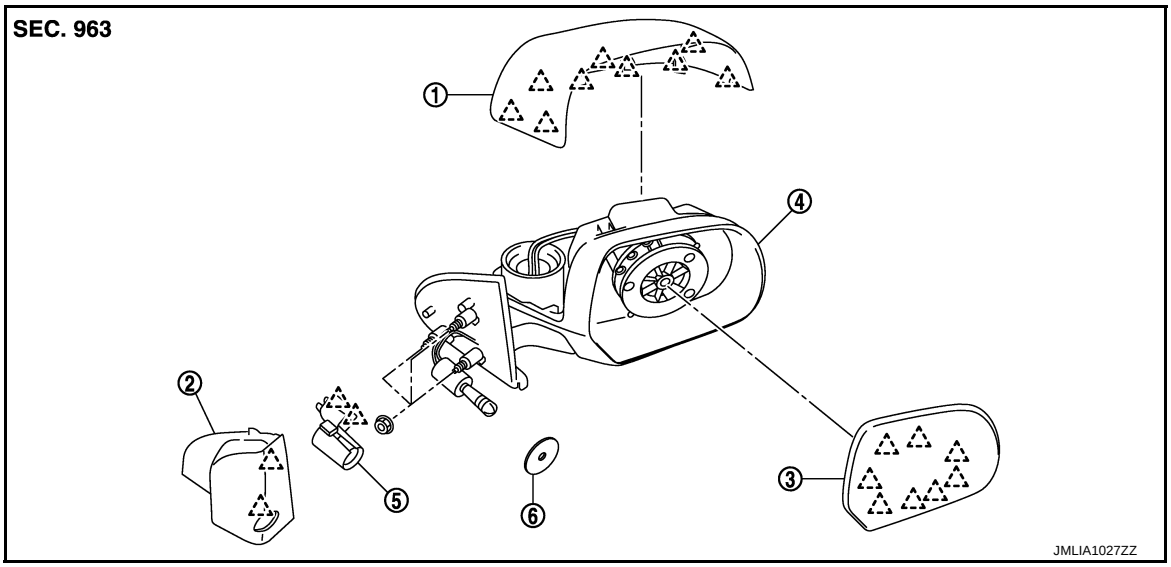

1. Door mirror cover
2. Door mirror corner cover
3. Glass mirror
4. Door mirror assembly
5. Manual controller lever
6. Grommet

: Pawl

DOOR MIRROR ASSEMBLY

DOOR MIRROR ASSEMBLY : Removal and Installation

INFOID:0000000006007925

REMOVAL

POWER WINDOW MIRROR

1. Remove door mirror corner cover with a remover tool.

: Pawl

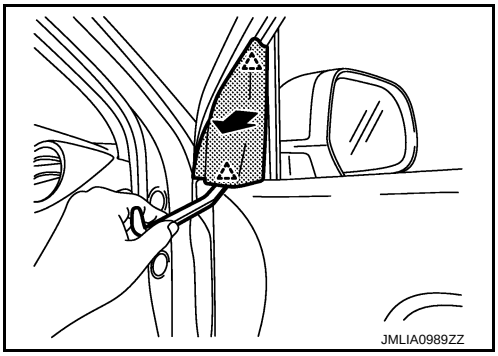

2. Remove front door finisher. Refer to INT-14, "Removal and Installation".
3. Disconnect door mirror harness connector.
4. Remove door mirror mounting nuts, and remove door mirror assembly.

INSTALLATION
Install in the reverse order of removal.

REMOVAL

MANUAL MIRROR

1. Remove door mirror corner cover with a remover tool.
2. Disengage manual controller lever fixing pawls and remove.
3. Remove door mirror mounting nuts, and remove door mirror assembly.

INSTALLATION
Install in the reverse order of removal.

GLASS MIRROR

GLASS MIRROR : Disassembly and Assembly

INFOID:0000000006007927

DISASSEMBLY

1. Place the glass mirror upward.
2. Put a strip of protective tape (B) on housing assembly.
3. Insert a small flat-bladed screwdriver (A) into the recess at lower side between glass mirror (1) and actuator (2), and push up pawls to remove glass mirror lower side.
   NOTE:
   Insert a small flat-bladed screwdriver into recesses, and push up while rotating (twisting) to make work easier.

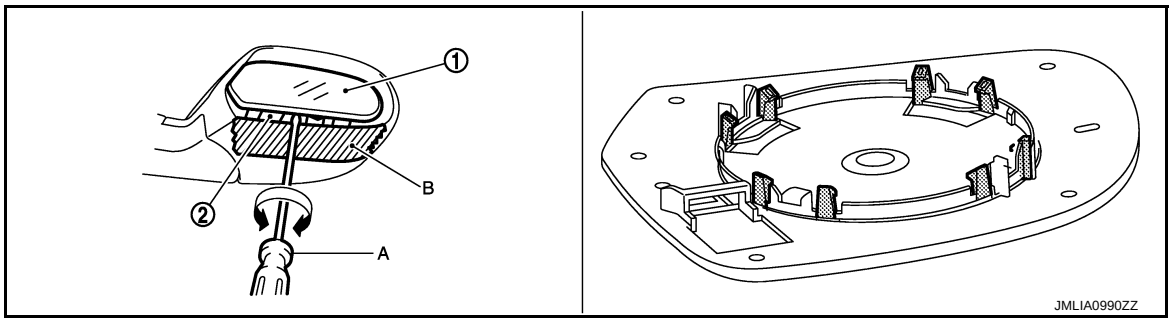

4. Insert a small flat-bladed screwdriver at (LH/RH) side between glass mirror and actuator, and push up pawls to remove glass mirror LH/RH side.
   NOTE:
   Insert a small flat-bladed screwdriver into recesses, and push up while rotating (twisting) to make work easier.

ASSEMBLY

Assemble in the reverse order of disassembly.

CAUTION:

After installation, visually check that pawls are securely engaged.

DOOR MIRROR COVER

DOOR MIRROR COVER : Disassembly and Assembly

INFOID:0000000006007929

DISASSEMBLY

1. Remove the glass mirror. Refer to MIR-36, "GLASS MIRROR : Disassembly and Assembly".
2. Remove the pawls with a remover tool (A), and disassemble the door mirror cover (1) from the mirror assembly.

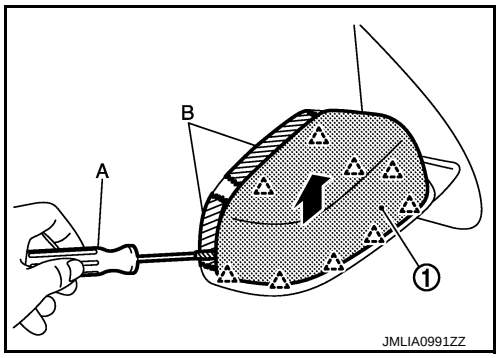

: Pawl

B : Protective tape

ASSEMBLY

Assemble in the reverse order of disassembly.

CAUTION:

After installation, visually check that pawls are securely engaged.

DOOR MIRROR REMOTE CONTROL SWITCH

Removal and Installation

INFOID:0000000006007931

REMOVAL

1. Remove the switch panel. Refer to IP-13, "Removal and Installation"
2. Remove door mirror remote control switch from switch panel using flat-bladed screwdriver.

INSTALLATION

Install in the reverse order of removal.

SECTION MWI

METER, WARNING LAMP & INDICATOR

CONTENTS

PRECAUTION 3

PRECAUTIONS 3
- Precaution for Supplemental Restraint System (SRS) "AIR BAG" and "SEAT BELT PRE-TENSIONER" 3
- Precaution for Battery Service 3

SYSTEM DESCRIPTION 4

COMPONENT PARTS 4
- Component Parts Location 4
- Component Description 5

SYSTEM 6

METER SYSTEM 6
- METER SYSTEM : System Diagram 6
- METER SYSTEM : System Description 6
- METER SYSTEM : Fail-Safe 7

SPEEDOMETER 8
- SPEEDOMETER : System Diagram 8
- SPEEDOMETER : System Description 9

TACHOMETER 9
- TACHOMETER : System Diagram 9
- TACHOMETER : System Description 9

HIGH WATER TEMPERATURE WARNING LAMP 9
- HIGH WATER TEMPERATURE WARNING LAMP : System Diagram 9
- HIGH WATER TEMPERATURE WARNING LAMP : System Description 9

OIL PRESSURE WARNING LAMP 10
- OIL PRESSURE WARNING LAMP : System Diagram 10
- OIL PRESSURE WARNING LAMP : System Description 10

METER ILLUMINATION CONTROL 10
- METER ILLUMINATION CONTROL : System Diagram 11
- METER ILLUMINATION CONTROL : System Description 11

INFORMATION DISPLAY 11
- INFORMATION DISPLAY : System Diagram 11
- INFORMATION DISPLAY : System Description 11

OPERATION 16
- Switch Name and Function 16

DIAGNOSIS SYSTEM (COMBINATION METER) 17
- On Board Diagnosis Function 17
- CONSULT-III Function 18

ECU DIAGNOSIS INFORMATION 22

COMBINATION METER 22
- Reference Value 22
- Fail-Safe 26
- DTC Index 27

IPDM E/R (INTELLIGENT POWER DISTRIBUTION MODULE ENGINE ROOM) 28
- List of ECU Reference 28

WIRING DIAGRAM 29

METER SYSTEM 29

LHD 29
- LHD : Wiring Diagram 29

RHD 30
- RHD : Wiring Diagram 31

BASIC INSPECTION 33

DIAGNOSIS AND REPAIR WORKFLOW 33
- Work flow 33

DTC/CIRCUIT DIAGNOSIS 35

U1000 CAN COMM CIRCUIT 35
Description 35
DTC Logic 35
Diagnosis Procedure 35

U1010 CONTROL UNIT (CAN) 36
Description 36
DTC Logic 36
Diagnosis Procedure 36

B2205 VEHICLE SPEED 37
Description 37
DTC Logic 37
Diagnosis Procedure 37

B2267 ENGINE SPEED 38
Description 38
DTC Logic 38
Diagnosis Procedure 38

B2268 WATER TEMP 39
Description 39
DTC Logic 39
Diagnosis Procedure 39

POWER SUPPLY AND GROUND CIRCUIT 40

COMBINATION METER 40
COMBINATION METER : Diagnosis Procedure ... 40

SPEED SENSOR SIGNAL CIRCUIT (M/T MODELS) 41
Diagnosis Procedure 41
Component Inspection 42

FUEL LEVEL SENSOR SIGNAL CIRCUIT 43
Component Function Check 43
Diagnosis Procedure 43
Component Inspection 44

OIL PRESSURE SWITCH SIGNAL CIRCUIT ... 45
Component Function Check 45
Diagnosis Procedure 45
Component Inspection 45

SYMPTOM DIAGNOSIS 47

THE FUEL GAUGE INDICATOR DOES NOT OPERATE 47
Description 47
Diagnosis Procedure 47

THE OIL PRESSURE WARNING LAMP DOES NOT TURN ON 48
Description 48
Diagnosis Procedure 48

THE OIL PRESSURE WARNING LAMP DOES NOT TURN OFF 49
Description 49
Diagnosis Procedure 49

NORMAL OPERATING CONDITION 50

INFORMATION DISPLAY 50
INFORMATION DISPLAY : Description 50

REMOVAL AND INSTALLATION 51

COMBINATION METER 51
Exploded View 51
Removal and Installation 51
Disassembly and Assembly 51

PRECAUTION

PRECAUTIONS

Precaution for Supplemental Restraint System (SRS) "AIR BAG" and "SEAT BELT PRE-TENSIONER"

INFOID:0000000005904848

The Supplemental Restraint System such as “AIR BAG” and “SEAT BELT PRE-TENSIONER”, used along with a front seat belt, helps to reduce the risk or severity of injury to the driver and front passenger for certain types of collision. Information necessary to service the system safely is included in the “SRS AIR BAG” and “SEAT BELT” of this Service Manual.

WARNING:

- **To avoid rendering the SRS inoperative, which could increase the risk of personal injury or death in the event of a collision which would result in air bag inflation, all maintenance must be performed by an authorized NISSAN/INFINITI dealer.**
- **Improper maintenance, including incorrect removal and installation of the SRS, can lead to personal injury caused by unintentional activation of the system. For removal of Spiral Cable and Air Bag Module, see the “SRS AIR BAG”.**
- **Do not use electrical test equipment on any circuit related to the SRS unless instructed to in this Service Manual. SRS wiring harnesses can be identified by yellow and/or orange harnesses or harness connectors.**

PRECAUTIONS WHEN USING POWER TOOLS (AIR OR ELECTRIC) AND HAMMERS

WARNING:

- **When working near the Air Bag Diagnosis Sensor Unit or other Air Bag System sensors with the ignition ON or engine running, DO NOT use air or electric power tools or strike near the sensor(s) with a hammer. Heavy vibration could activate the sensor(s) and deploy the air bag(s), possibly causing serious injury.**
- **When using air or electric power tools or hammers, always switch the ignition OFF, disconnect the battery, and wait at least 3 minutes before performing any service.**

Precaution for Battery Service

INFOID:0000000005904849

Before disconnecting the battery, lower both the driver and passenger windows. This will prevent any interference between the window edge and the vehicle when the door is opened/closed. During normal operation, the window slightly raises and lowers automatically to prevent any window to vehicle interference. The automatic window function will not work with the battery disconnected.

SYSTEM DESCRIPTION

COMPONENT PARTS

Component Parts Location

INFOID:0000000005883847

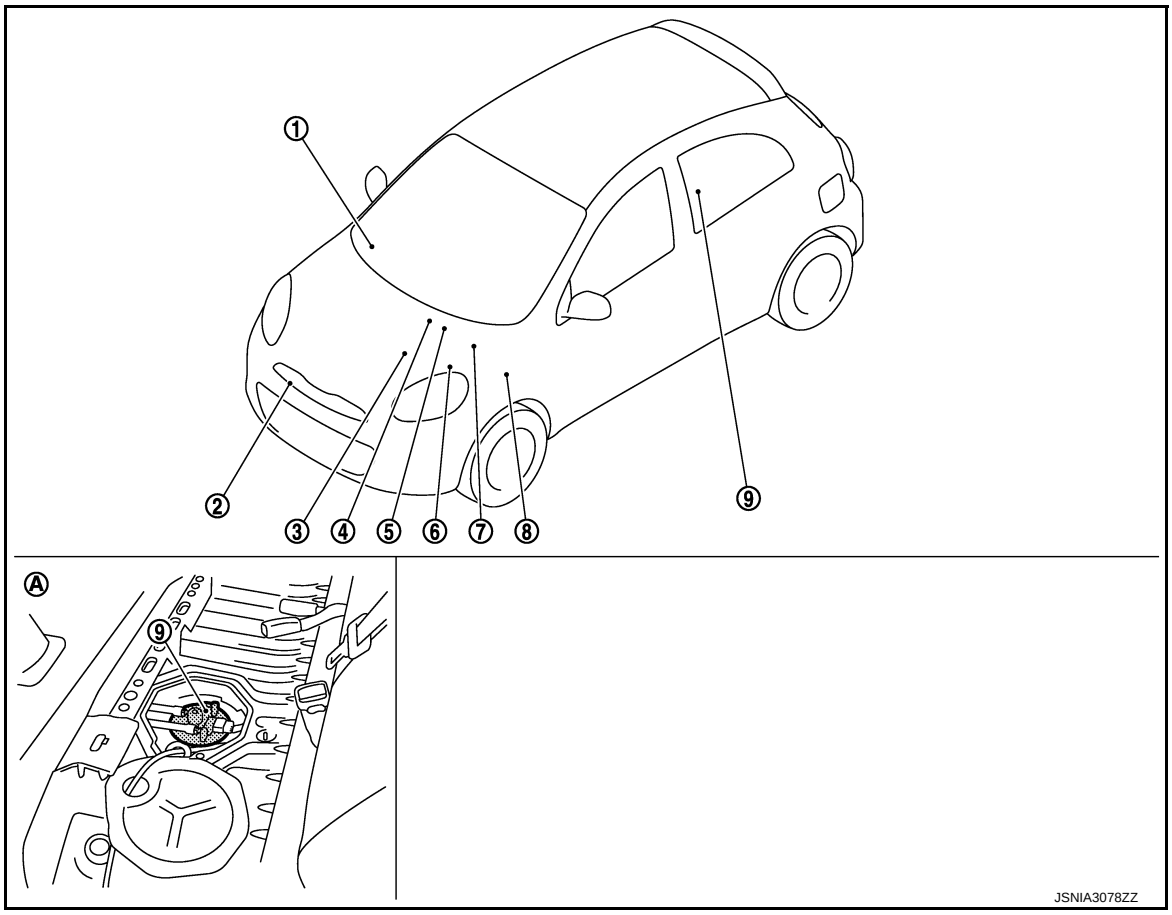

1. Combination meter
2. Oil pressure switch
   Refer to EM-85, "Exploded View".
3. Vehicle speed sensor
   Refer to XX-XX, "*****".
4. ABS actuator and electric unit (control unit)
   Refer to XX-XX, "*****".
5. IPDM E/R
   Refer to PCS-5, "Component Parts Location" (with intelligent key models) or PCS-30, "Component Parts Location" (without intelligent key models).
6. TCM
   Refer to XX-XX, "*****".
7. ECM
   Refer to Dummy cross-reference("XX-XX").
8. BCM
   Refer to BCS-5, "BODY CONTROL SYSTEM : Component Parts Location" (with intelligent key models) or BCS-60, "BODY CONTROL SYSTEM : Component Parts Location" (without intelligent key models).
9. Fuel level sensor unit

A. Under of rear seat

Component Description

INFOID:0000000005883848

Unit	Description
Combination meter	Controls the following with the signals received from each unit via CAN communication and the signals from switches and sensors. • Speedometer • Tachometer • Warning lamps • Indicator lamps • Meter illumination control • Information display
ABS actuator and electric unit (control unit) (Models with ABS)	Transmits the vehicle speed signal to the combination meter via CAN communication.
Vehicle speed sensor (M/T models)	Transmits the vehicle speed sensor signal to the combination meter.
TCM (A/T models)	• Transmits the shift position signal to the combination meter via CAN communication. • Transmits the vehicle speed signal to the combination meter via CAN communication. (A/T models without ABS)
Fuel level sensor unit	Transmits the fuel level sensor signal to the combination meter.
ECM	Transmits the following signals to the combination meter via CAN communication. • Engine speed signal • Engine coolant temperature signal • Fuel consumption monitor signal
IPDM E/R	IPDM E/R reads the ON/OFF signals of the oil pressure switch and transmits the oil pressure switch signal to the BCM via CAN communication.
Oil pressure switch	Transmits the oil pressure switch signal to the IPDM E/R via CAN communication.
BCM	Transmits the following signals to the combination meter via CAN communication. • Oil pressure switch signal • Position light request signal • Door switch signal

SYSTEM
METER SYSTEM

METER SYSTEM : System Diagram

INFOID:0000000005883849

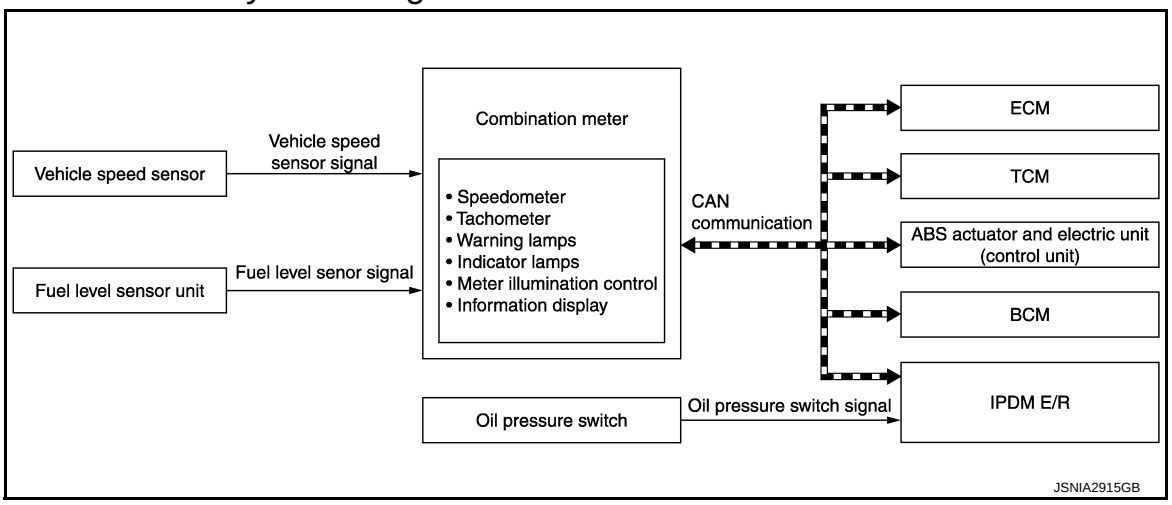

METER SYSTEM : System Description

INFOID:0000000005883850

COMBINATION METER

- The combination meter receives the information required to control the operation of each gauge, indicator/warning lamp, and information display via CAN communication from each unit, each switch, and sensor.
- The combination meter incorporates a trip computer that displays, warnings and information on the information display according to the information received from various units.
- The combination meter incorporates a buzzer function that sounds an audible alarm with the integrated buzzer device. Refer to WCS-6, "WARNING CHIME SYSTEM : System Description" for further details.
- The combination meter incorporates a diagnosis function that allows the technician to perform diagnoses with CONSULT-III.
- The combination meter integrates the meter circuit check function and the segment check function that checks the information display operation.

METER CONTROL FUNCTION LIST

System		Description	Reference
Measuring instruments	Speedometer	Indicates vehicle speed.	MWI-9, "SPEEDOMETER : System Description"
	Tachometer (with tachometer)	Indicates engine speed.	MWI-9, "TACHOMETER : System Description"
Warning lamp/ indicator lamp	High water temperature warning lamp	Turns ON when engine coolant reaches a high temperature.	MWI-9, "HIGH WATER TEMPERATURE WARNING LAMP : System Description"
	Oil pressure warning lamp	The warning lamp turns ON or turns OFF, according to engine hydraulic pressure.	MWI-10, "OIL PRESSURE WARNING LAMP : System Description"
Meter illumination control	Meter illumination control function	Turns ON/OFF according to the combination switch (lighting switch).	MWI-11, "METER ILLUMINATION CONTROL : System Description"

System			Description	Reference
Information display	Gauge and Meter	Fuel gauge	Displays fuel level.	MWI-11, "INFORMATION DISPLAY : System Description"
		Odo/trip meter	Displays vehicle distance.	
	Shift position indicator (A/T models)		Displays shift position.	
	Trip computer	Current fuel consumption	Displays current fuel consumption.	
		Average fuel consumption	Displays average fuel consumption.	
		Distance to empty	Displays distance to empty.	
	Interrupt indication	Low fuel warning	Displays low fuel warning.	
	Clock		Displays time.	

ARRANGEMENT OF COMBINATION METER

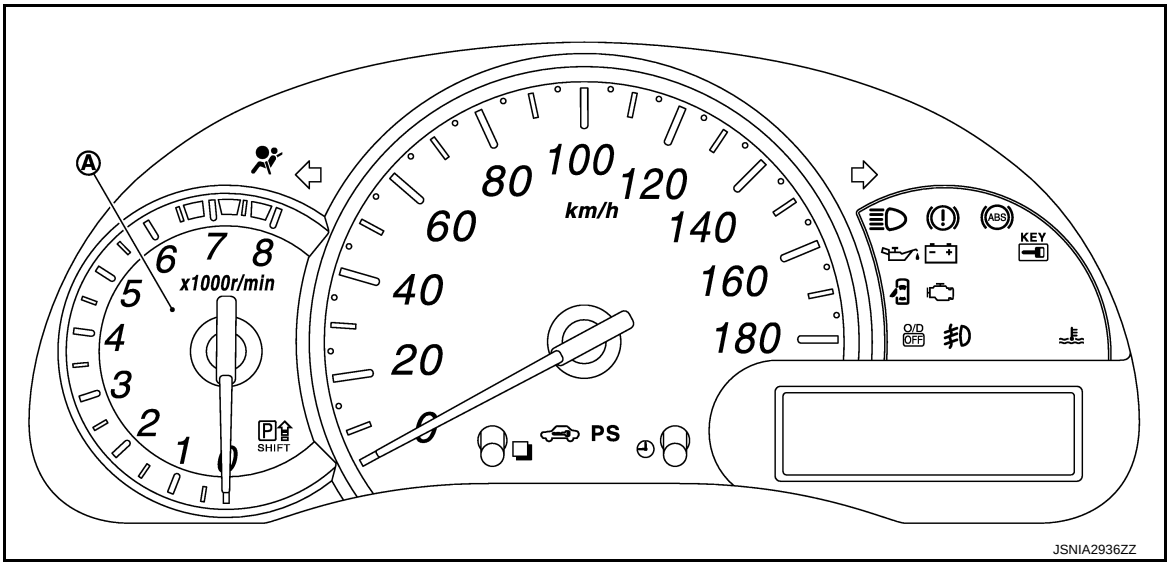

A. With tachometer

METER SYSTEM : Fail-Safe

INFOID:0000000005883851

FAIL-SAFE

The combination meter activates the fail-safe control if CAN communication with each unit is malfunctioning.

Function		Specifications
Speedometer (A/T models)		Reset to zero by suspending communication.
Tachometer		
Illumination control		When suspending communication, changes to nighttime mode.
Information display	Shift position indicator	The indicator turns OFF by suspending communication.
	Instantaneous fuel consumption	• When reception time of an abnormal signal is 2 seconds or less, the last received datum is used for calculation to indicate the result. • When reception time of an abnormal signal is more than two seconds, the last result calculated during normal condition is indicated.
	Average fuel consumption	
	Possible driving distance	
	Engine start operation indicator	The indicator turns OFF by suspending communication.

Function		Specifications
Buzzer		The buzzer turns off by suspending communication.
Warning lamp/indicator lamp	ABS warning lamp	The lamp turns ON by suspending communication.
	EPS warning lamp	
	Brake warning lamp (With ABS)	
	High water temperature warning lamp	The lamp turns OFF by suspending communication.
	Malfunction indicator lamp	
	High beam indicator lamp	
	Turn signal indicator lamp	
	Front fog lamp indicator lamp	
	Door warning lamp	
	Shift P warning lamp	
	Key warning lamp	
	Oil pressure warning lamp	
	OD OFF indicator lamp	

SPEEDOMETER

SPEEDOMETER : System Diagram

INFOID:0000000005883852

MODELS WITH ABS

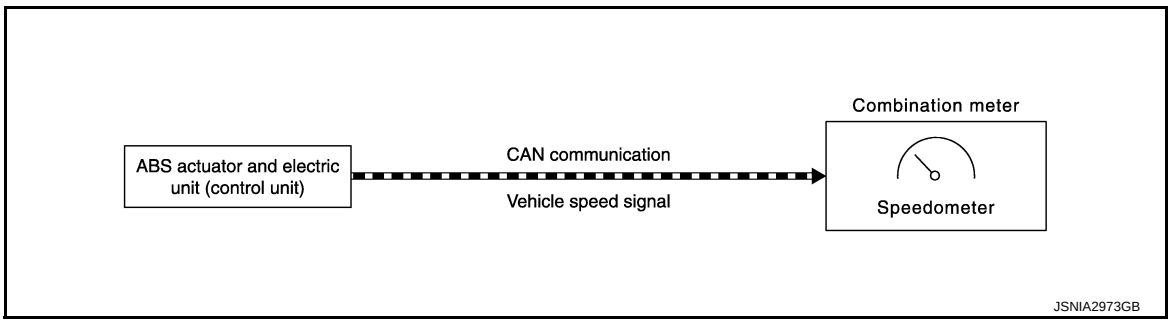

A/T MODELS WITHOUT ABS

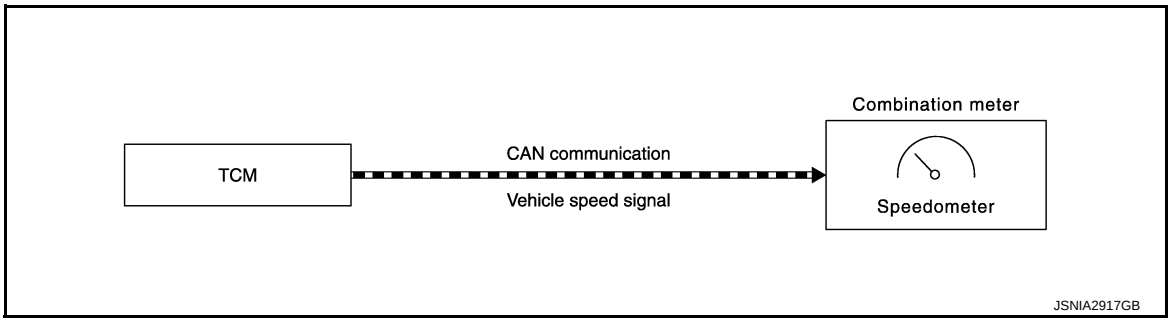

M/T MODELS

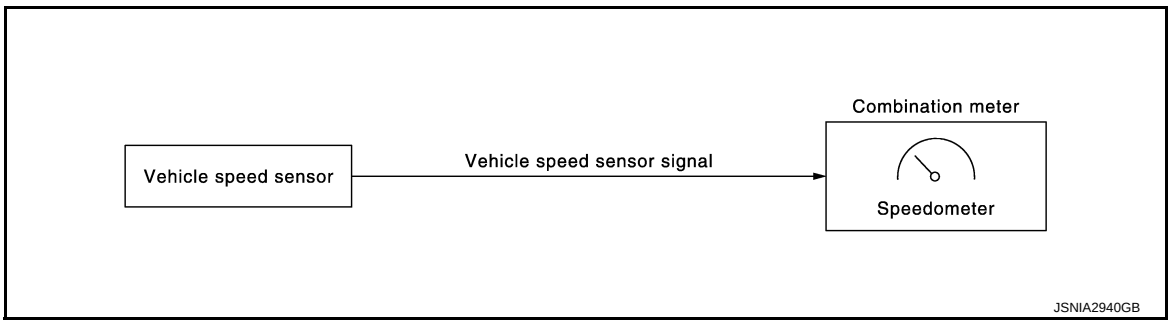

SPEEDOMETER : System Description

INFOID:0000000005883853

MODELS WITH ABS

- The ABS actuator and electric unit (control unit) transmits a vehicle speed signal to the combination meter via CAN communication.
- The combination meter indicates a vehicle speed to the speedometer, based on the vehicle speed signal received from the ABS actuator and electric unit.

A/T MODELS WITHOUT ABS

- TCM transmits a vehicle speed signal to the combination meter via CAN communication.
- The combination meter indicates a vehicle speed to the speedometer, based on the vehicle speed signal received from TCM.

M/T MODELS

- The vehicle speed sensor transmits a vehicle speed sensor signal to the combination meter.
- The combination meter indicates a vehicle speed to the speedometer, based on the vehicle speed sensor signal received from vehicle speed sensor.

TACHOMETER

TACHOMETER : System Diagram

INFOID:0000000005883854

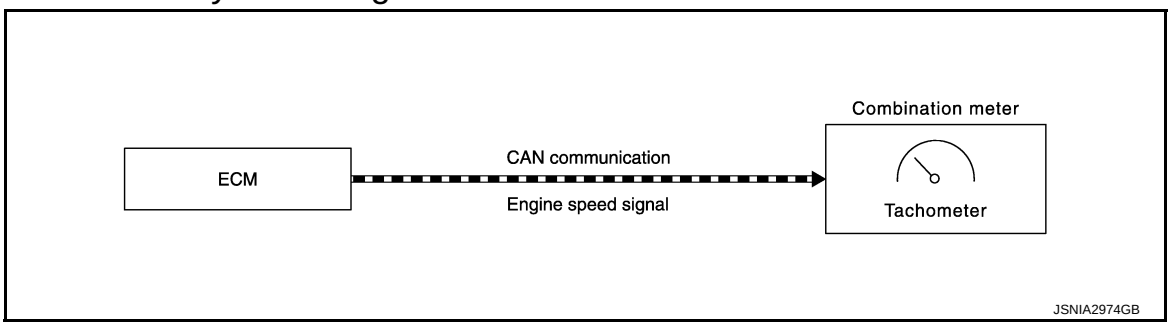

TACHOMETER : System Description

INFOID:0000000005883855

- ECM converts the pulse signal provided by the crankshaft position sensor to an engine speed signal and transmits it to the combination meter via CAN communication.
- The combination meter indicates the engine speed to the tachometer according to the engine speed signal received via CAN communication.

HIGH WATER TEMPERATURE WARNING LAMP

HIGH WATER TEMPERATURE WARNING LAMP : System Diagram

INFOID:0000000005885479

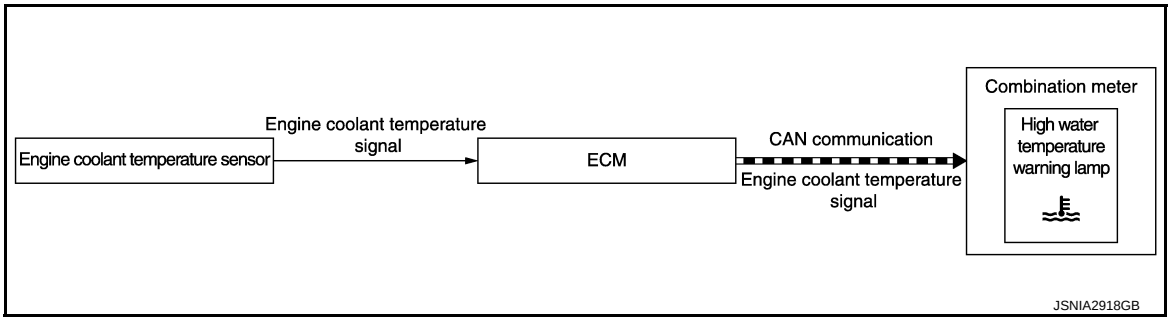

HIGH WATER TEMPERATURE WARNING LAMP : System Description

INFOID:0000000005885480

- ECM reads the engine coolant temperature signal from the engine coolant temperature sensor and transmits the signal to the combination meter via CAN communication.
- The combination meter turns ON/OFF the high water temperature warning lamp when receiving an engine coolant temperature signal via CAN communication.

TIMING CHART

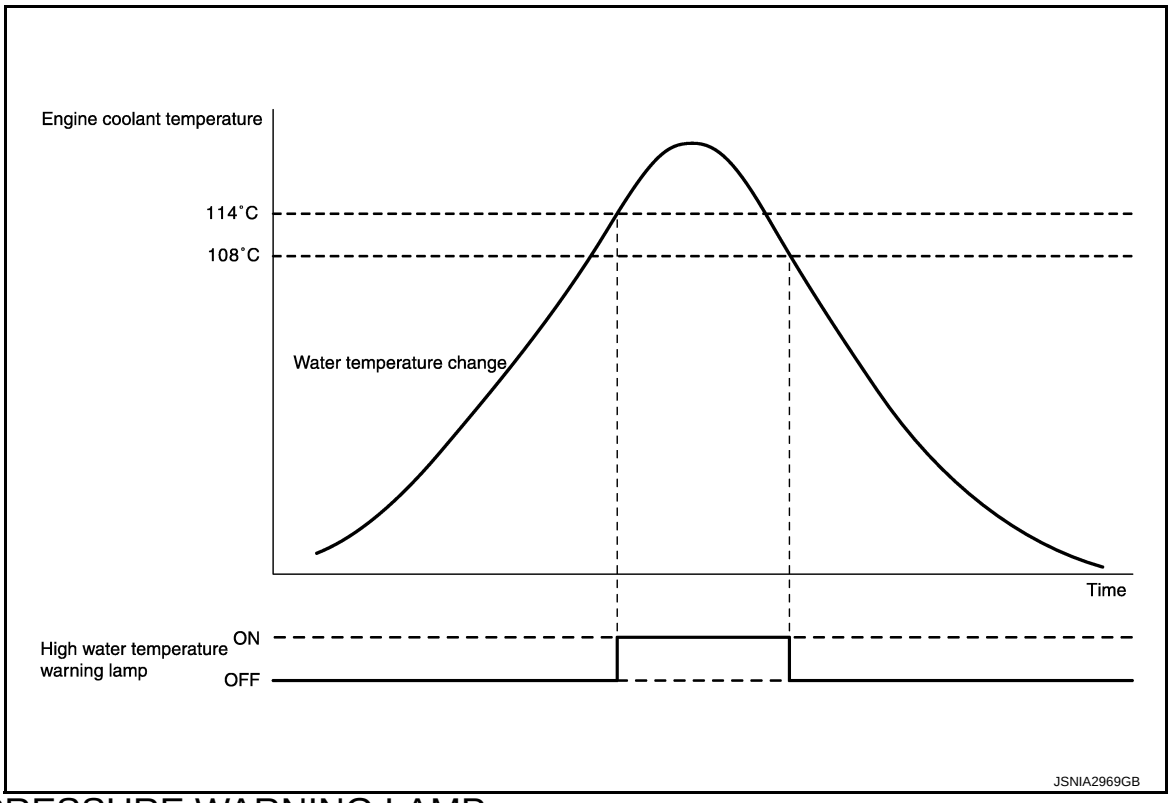

OIL PRESSURE WARNING LAMP

OIL PRESSURE WARNING LAMP : System Diagram

INFOID:0000000005883858

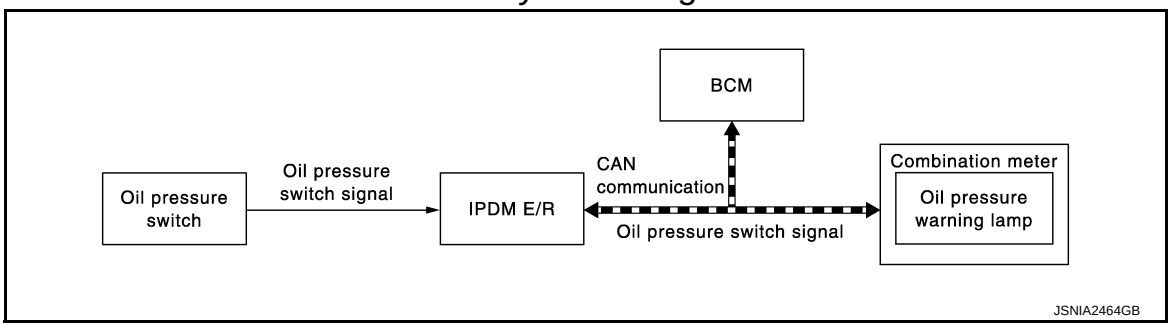

OIL PRESSURE WARNING LAMP : System Description

INFOID:0000000005883859

- IPDM E/R reads the ON/OFF signals from the oil pressure switch and transmits the oil pressure switch signal to the BCM via CAN communication.
- BCM transmits oil pressure switch signal to the combination meter via CAN communication.
- The combination meter turns the oil pressure warning lamp ON (at the time of a reduction in hydraulic pressure)/OFF (except at the time of a reduction in hydraulic pressure) according to the oil pressure switch signal received via CAN communication.

METER ILLUMINATION CONTROL

METER ILLUMINATION CONTROL : System Diagram

INFOID:0000000005884498

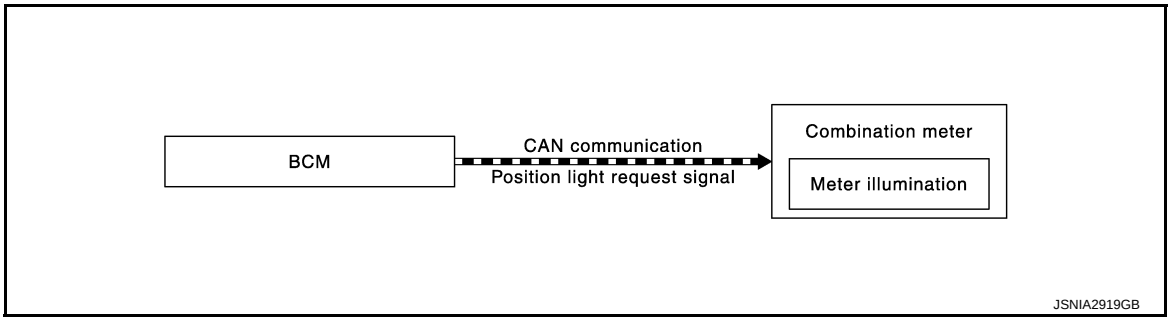

METER ILLUMINATION CONTROL : System Description

INFOID:0000000005884499

METER ILLUMINATION CONTROL FUNCTION

- The combination meter receives a position light request signal from BCM via CAN communication and controls meter illumination.
- The combination meter turns ON meter illumination when the following conditions are satisfied.

Condition	
Combination switch (Lighting switch)	1st or 2nd position

- The combination meter turns OFF meter illumination when the following conditions are satisfied.

Condition	
Combination switch (Lighting switch)	OFF

SIGNAL PATH

Signal name	Signal path
Position light request signal	Combination switch (Lighting switch) → BCM —CAN→ Combination meter

INFORMATION DISPLAY

INFORMATION DISPLAY : System Diagram

INFOID:0000000005883866

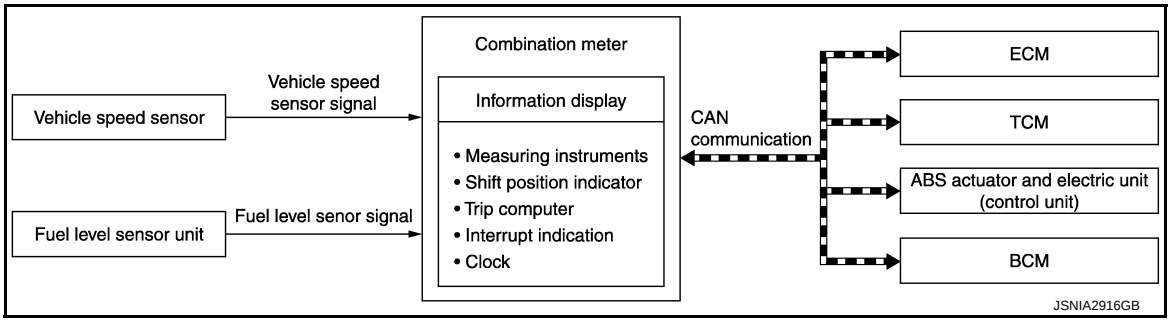

INFORMATION DISPLAY : System Description

INFOID:0000000005883867

DESCRIPTION

- The combination meter receives signals necessary for controlling the operation of the information display from each unit and sensor.
- The combination meter incorporates a trip computer that displays the warning/information according to the information received from each unit and sensor.

- The combination meter shows the following functions on the information display.
- Measuring instruments
- Shift position indicator
- Trip computer
- Interrupt indication
- Clock

FUEL GAUGE

The combination meter converts a resistance value of the fuel level sensor unit into voltage to show fuel remaining quantity on the information display.

Refuel Control

- When the ignition switch is turned from OFF to ON or when all the following operating conditions are satisfied, fuel gauge indication speed becomes faster than usual.

Operation condition	
Ignition switch	ON
Vehicle speed	0 km/h
Variations in fuel remaining amount	9 ℓ (2 Imp gal) or more

- The combination meter judges refuel control, according to the signals below:

MODELS WITH ABS

Signal name	Signal path
Ignition signal	—
Vehicle speed signal	ABS actuator and electric unit (control unit) $\xrightarrow{\text{CAN}}$ Combination meter
Fuel level sensor signal	Fuel level sensor $\longrightarrow$ Combination meter

A/T MODELS WITHOUT ABS

Signal name	Signal path
Ignition signal	—
Vehicle speed signal	TCM $\xrightarrow{\text{CAN}}$ Combination meter
Fuel level sensor signal	Fuel level sensor $\longrightarrow$ Combination meter

M/T MODELS

Signal name	Signal path
Ignition signal	—
Vehicle speed sensor signal	Vehicle speed sensor $\longrightarrow$ Combination meter
Fuel level sensor signal	Fuel level sensor $\longrightarrow$ Combination meter

ODO/TRIP METER

The combination meter calculates mileage, based on the following signals and displays the mileage on the information display.

Models With ABS

Signal name	Signal path
Ignition signal	—
Vehicle speed signal	ABS actuator and electric unit (control unit) $\xrightarrow{\text{CAN}}$ Combination meter

A/T Models Without ABS

Signal name	Signal path
Ignition signal	—
Vehicle speed signal	TCM $\xrightarrow{\text{CAN}}$ Combination meter

M/T Models

Signal name	Signal path
Ignition signal	—
Vehicle speed sensor signal	Vehicle speed sensor $\longrightarrow$ Combination meter

SHIFT POSITION INDICATOR

- TCM transmits a shift position signal to the combination meter via CAN communication.
- The combination meter displays a shift position on the vehicle information display when receiving a shift position signal from TCM.

TRIP COMPUTER

Current Fuel Consumption

The combination meter calculates current fuel consumption based on the following signals, and the calculated value is displayed on the information display.

MODELS WITH ABS

Signal name	Signal path
Fuel consumption monitor signal	ECM $\xrightarrow{\text{CAN}}$ Combination meter
Vehicle speed signal	ABS actuator and electric unit (control unit) $\xrightarrow{\text{CAN}}$ Combination meter

A/T MODELS WITHOUT ABS

Signal name	Signal path
Fuel consumption monitor signal	ECM $\xrightarrow{\text{CAN}}$ Combination meter
Vehicle speed signal	TCM $\xrightarrow{\text{CAN}}$ Combination meter

M/T MODELS

Signal name	Signal path
Fuel consumption monitor signal	ECM $\xrightarrow{\text{CAN}}$ Combination meter
Vehicle speed sensor signal	Vehicle speed sensor $\longrightarrow$ Combination meter

NOTE:

- Current fuel consumption on the information display is updated approximately every 0.5 seconds.
- Current fuel consumption on the information display shows 0 l/100km (0 mpg) when vehicle speed is 0 km/h (0 MPH).

Average Fuel Consumption

The combination meter calculates average fuel consumption based on the following signals, and the calculated value is displayed on the information display.

MODELS WITH ABS

Signal name	Signal path
Fuel consumption monitor signal	ECM —CAN→ Combination meter
Vehicle speed signal	ABS actuator and electric unit (control unit) —CAN→ Combination meter

A/T MODELS WITHOUT ABS

Signal name	Signal path
Fuel consumption monitor signal	ECM —CAN→ Combination meter
Vehicle speed signal	TCM —CAN→ Combination meter

M/T MODELS

Signal name	Signal path
Fuel consumption monitor signal	ECM —CAN→ Combination meter
Vehicle speed sensor signal	Vehicle speed sensor → Combination meter

NOTE:
- Average fuel consumption on the information display is updated approximately every 30 seconds.
- Soon after a reset or when the ignition switch is turned ON right after battery removal and installation, "–––" is displayed until after a travel of 30 seconds and approximately 500 m (0.31 mile).

Distance To Empty
The combination meter calculates distance to empty based on the following signals, and the calculated value is displayed on the information display.

MODELS WITH ABS

Signal name	Signal path
Fuel level sensor signal	Fuel level sensor unit → Combination meter
Fuel consumption monitor signal	ECM —CAN→ Combination meter
Vehicle speed signal	ABS actuator and electric unit (control unit) —CAN→ Combination meter

A/T MODELS WITHOUT ABS

Signal name	Signal path
Fuel level sensor signal	Fuel level sensor unit → Combination meter
Fuel consumption monitor signal	ECM —CAN→ Combination meter
Vehicle speed signal	TCM —CAN→ Combination meter

M/T MODELS

Signal name	Signal path
Fuel level sensor signal	Fuel level sensor unit → Combination meter
Fuel consumption monitor signal	ECM —CAN→ Combination meter
Vehicle speed sensor signal	Vehicle speed sensor → Combination meter

NOTE:

- Distance to empty on the information display is updated approximately every 30 seconds.
- When the ignition switch is turned from OFF to ON, "–––" is displayed until after a travel of approximately 500 m (0.31 mile).
- The indicated values may not match each other when refueling with the ignition switch ON. Refer to MWI-50, "INFORMATION DISPLAY : Description".

INTERRUPT INDICATION

Low Fuel Warning

- The combination meter displays a possible cruising distance by an interrupt and blinks the indications of the fuel gauge and the possible cruising distance when all the following conditions are satisfied.

Operating condition	
Ignition switch	ON
Fuel remaining quantity	Approximately 9.5 ℓ (2-1/8 Imp gal) or less [1.5 ℓ (3/8 Imp gal) fuel residues included]Dummy cross-reference("XX-XX")

- The combination meter judges showing/hiding of "low fuel warning", according to the signals below:

Signal name	Signal path
Ignition signal	—
Fuel level sensor signal	Fuel level sensor unit → Combination meter

CLOCK

The combination meter displays time on the vehicle information display.

OPERATION

Switch Name and Function

INFOID:0000000005883868

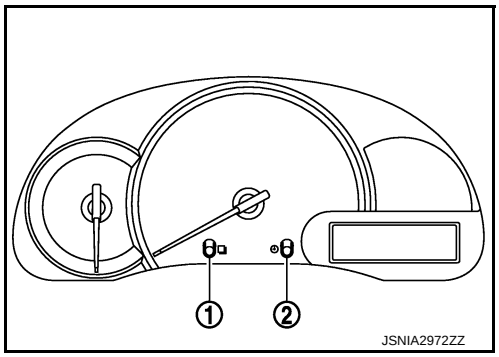

Switch name	Operation	Description
Meter control switch (1)	Press	• Trip meter A or Trip meter B can be reset. • The information display screen can be switched. • The value of the average fuel consumption can be reset. • The combination meter can be switched to Self-diagnosis mode.
Clock switch (2)	Press	Time can be adjusted.

DIAGNOSIS SYSTEM (COMBINATION METER)

On Board Diagnosis Function

INFOID:0000000005883869

ON BOARD DIAGNOSIS ITEM

- Information display operation can be checked in self-diagnosis mode.
- Speedometer and tachometer (with tachometer models) can be checked in self-diagnosis mode.

METHOD OF STARTING

1. Turn the ignition switch ON while pressing and holding the meter control switch (1) for 0.8 seconds or more.

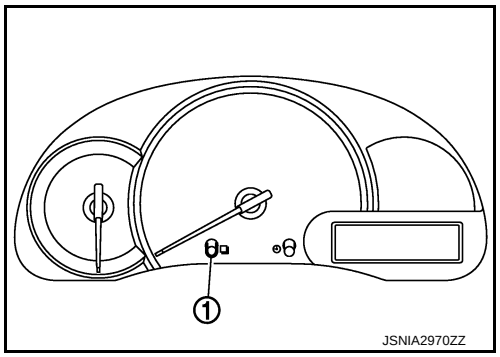

2. Press the meter control switch at least 3 times. (Within 7 seconds after the ignition switch is turned ON.)
3. The combination meter is turned to self-diagnosis mode.
   - Speedometer and tachometer (with tachometer models) return to zero, simultaneously.
   - All segments of the information display are displayed.

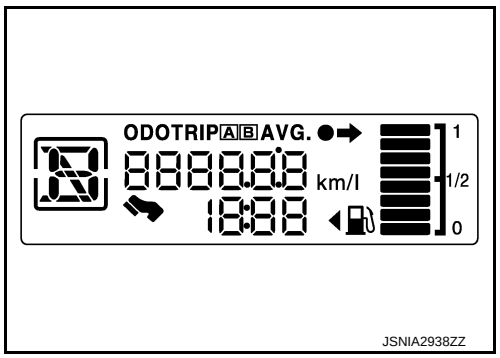

NOTE:
- Check combination meter power supply and ground circuit when the self-diagnosis mode of the combination meter does not start. Replace combination meter if power supply and ground circuit are normal.
- If any of the segments are not displayed, replace combination meter.

4. Each meter activates by pressing the meter control switch.

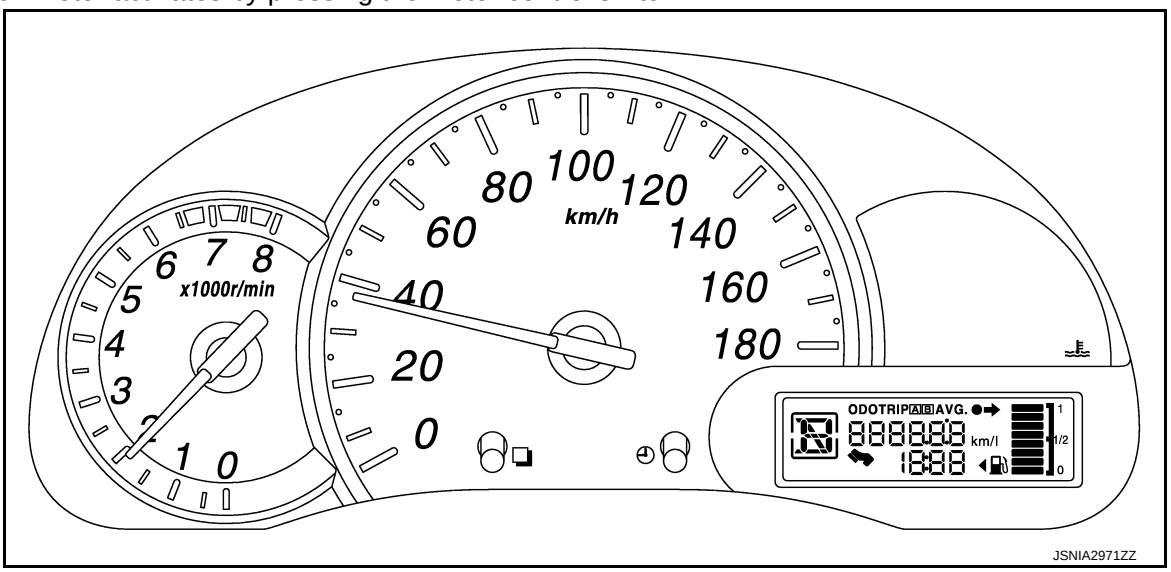

NOTE:
- If any of the meters or gauges is not activated, replace combination meter.
- The figure is reference.

CONSULT-III Function

INFOID:0000000005883870

APPLICATION ITEMS

CONSULT-III can perform the following diagnosis modes via CAN communication and the combination meter.

System	Diagnosis mode	Description
METER/M&A	Self Diagnostic Result	The combination meter checks the conditions and displays memorized errors.
	Data Monitor	Displays the combination meter input/output data in real time.
	Special function	Lighting history of the warning lamp and indicator lamp can be checked.

SELF DIAG RESULT

Refer to MWI-27, "DTC Index".

DATA MONITOR

Display Item List

X: Applicable

Display item [Unit]	MAIN SIGNALS	Description
SPEED METER [km/h]	X	• Value of vehicle speed signal received from ABS actuator and electric unit (control unit) via CAN communication. (Models with ABS) **NOTE:** 655.35 is displayed when the malfunction signal is received. • Value of vehicle speed signal received from TCM via CAN communication. (A/T models without ABS) **NOTE:** 655.35 is displayed when the malfunction signal is received. • Value of vehicle speed sensor signal received from vehicle speed sensor. (M/T models)
SPEED OUTPUT [km/h]	X	Vehicle speed signal value transmitted to other units via CAN communication. **NOTE:** 655.35 is displayed when the malfunction signal is received.
ODO OUTPUT [km/h or mph]		Odometer signal value transmitted to other units via CAN communication.
TACHO METER [rpm]	X	Value of the engine speed signal received from ECM via CAN communication. **NOTE:** 8191.875 is displayed when the malfunction signal is received.
FUEL METER [L]	X	Fuel level indicated on combination meter.
W TEMP METER [°C]	X	Value of engine coolant temperature signal is received from ECM via CAN communication. **NOTE:** 215 is displayed when the malfunction signal is input.
ABS W/L [On/Off]		Status of ABS warning lamp detected from ABS warning lamp signal is received from ABS actuator and electric unit (control unit) via CAN communication.
BRAKE W/L [On/Off]		Status of brake warning lamp detected from brake warning lamp signal is received from ABS actuator and electric unit (control unit) via CAN communication. **NOTE:** Displays “Off” if the brake warning lamp is illuminated when the valve check starts, the parking brake switch is turned ON or the brake fluid level switch is turned ON.
DOOR W/L [On/Off]		Status of door warning detected from door switch signal received from BCM via CAN communication.
HI-BEAM IND [On/Off]		Status of high beam indicator lamp detected from high beam request signal is received from BCM via CAN communication.

Display item [Unit]	MAIN SIGNALS	Description
TURN IND [On/Off]		Status of turn indicator lamp detected from turn indicator signal is received from BCM via CAN communication.
FR FOG IND [On/Off]		Status of front fog lamp indicator lamp detected from front fog light request signal is received from BCM via CAN communication.
OIL W/L [On/Off]		Status of oil pressure warning lamp detected from oil pressure switch signal is received from BCM via CAN communication.
MIL [On/Off]		Status of malfunction indicator lamp detected from malfunctioning indicator lamp signal is received from ECM via CAN communication.
GLOW IND [Off]		This item is displayed, but cannot be monitored.
C-ENG2 W/L [Off]		This item is displayed, but cannot be monitored.
CRUISE IND [Off]		This item is displayed, but cannot be monitored.
SET IND [Off]		This item is displayed, but cannot be monitored.
O/D OFF IND [On/Off]		Status of OD OFF indicator lamp detected from OD OFF indicator lamp signal is received from TCM via CAN communication.
FUEL W/L [On/Off]		Low-fuel warning status detected by the identified fuel level.
KEY G/Y W/L [On/Off]		Status of KEY warning lamp (Green/Yellow) detected from KEY warning lamp signal is received from BCM via CAN communication.
EPS W/L [On/Off]		Status of EPS warning lamp detected from EPS warning lamp signal is received from EPS control unit via CAN communication.
e-4WD W/L [Off]		This item is displayed, but cannot be monitored.
DPF W/L [Off]		This item is displayed, but cannot be monitored.
FILTER W/L [Off]		This item is displayed, but cannot be monitored.
LCD [B&P N, B&P I, SFT P, NO KY]		Status of engine start operation indicator, shift P warning lamp and KEY warning lamp, detected from engine start operation indicator signal, shift P warning lamp signal and KEY warning lamp signal are received from BCM via CAN communication.
SHIFT IND [P, R, N, D, 2, 1]		Status of shift position, detected from shift position signal received from TCM via CAN communication.
O/D OFF SW [On/Off]		Status of over drive control switch.
COMP F/B SIG [On/Off]		A/C compressor activation condition that ECM judges according to the engine coolant temperature and the acceleration degree.
PKB SW [On/Off]		Status of parking brake switch.
BUCKLE SW [On/Off]		This item is displayed, but cannot be monitored.
BRAKE SW [On/Off]		This item is displayed, but cannot be monitored.
BRAKE OIL SW [On/Off]		Status of brake fluid level switch.
DISTANCE [km]		Value of possible driving distance calculated by combination meter.

Display item [Unit]	MAIN SIGNALS	Description
FUEL LOW SIG [On/Off]		Status of fuel level low warning signal to output to AV control unit via CAN communication.
BUZZER [On/Off]	X	Buzzer status (in the combination meter) is detected from the buzzer output signal received from each unit via CAN communication and the warning output condition of the combination meter.

NOTE:

Some items are not available according to vehicle specification.

SPECIAL FUNCTION

Special menu

Display item	Description
W/L ON HISTORY	Lighting history of warning lamp and indicator lamp can be checked.

W/L ON HISTORY

- Stores histories when warning/indicator lamp is turned on.
- “W/L ON HISTORY” indicates the “TIME” when the warning/ indicator lamp is turned on.
- The “TIME” above is:
  - 0: The condition that the warning/indicator lamp has been turned on 1 or more times after starting the engine and waiting for 30 seconds.
  - 1 - 39: The number of times the engine was restarted after the 0 condition.
  - NO W/L ON HISTORY: Stores NO (0) turning on history of warning/indicator lamp.

NOTE:

- W/L ON HISTORY is not stored for approximately 30 seconds after the engine starts.
- Brake warning lamp does not store any history when the parking brake is applied or the brake fluid level gets low.

Display Item

Display item	Description
ABS W/L	Lighting history of ABS warning lamp.
VDC/TCS IND	This item is displayed, but cannot be monitored.
SLIP IND	This item is displayed, but cannot be monitored.
BRAKE W/L	Lighting history of brake warning lamp. (With ABS)
DOOR W/L	Lighting history of door warning lamp.
TRUNK/GLAS-H	This item is displayed, but cannot be monitored.
OIL W/L	Lighting history of oil pressure warning lamp.
C-ENG W/L	Lighting history of malfunction indicator lamp.
C-ENG2 W/L	This item is displayed, but cannot be monitored.
CRUISE IND	This item is displayed, but cannot be monitored.
SET IND	This item is displayed, but cannot be monitored.
CRUISE W/L	This item is displayed, but cannot be monitored.
BA W/L	This item is displayed, but cannot be monitored.
O/D OFF IND	Lighting history of OD OFF indicator lamp.
ATC/T-AMT W/L	This item is displayed, but cannot be monitored.
ATF TEMP W/L	This item is displayed, but cannot be monitored.
CVT IND	This item is displayed, but cannot be monitored.
SPORT IND	This item is displayed, but cannot be monitored.
4WD W/L	This item is displayed, but cannot be monitored.
FUEL W/L	Lighting history of low fuel level warning lamp.

Display item	Description
WASHER W/L	This item is displayed, but cannot be monitored.
AIR PRES W/L	This item is displayed, but cannot be monitored.
KEY G/Y W/L	Lighting history of KEY warning lamp (Green/Yellow).
KEY R W/L	This item is displayed, but cannot be monitored.
KEY KNOB W/L	This item is displayed, but cannot be monitored.
EPS W/L	Lighting history of EPS warning lamp.
e-4WD	This item is displayed, but cannot be monitored.
AFS OFF IND	This item is displayed, but cannot be monitored.
4WAS/RAS W/L	This item is displayed, but cannot be monitored.
HDC W/L	This item is displayed, but cannot be monitored.
SYS FAIL W/L	This item is displayed, but cannot be monitored.
SFT POSI W/L	This item is displayed, but cannot be monitored.
HV BAT W/L	This item is displayed, but cannot be monitored.
HEV BRAKE W/L	This item is displayed, but cannot be monitored.
SFT OPER W/L	This item is displayed, but cannot be monitored.
LANE W/L	This item is displayed, but cannot be monitored.
CHAGE W/L	This item is displayed, but cannot be monitored.
OIL LEV LOW	This item is displayed, but cannot be monitored.
DPF W/L	This item is displayed, but cannot be monitored.
TRAILER IND	This item is displayed, but cannot be monitored.
RUN FLAT W/L	This item is displayed, but cannot be monitored.
E-SUS W/L	This item is displayed, but cannot be monitored.
LAUNCH CNT W/L	This item is displayed, but cannot be monitored.
BRAKE PAD W/L	This item is displayed, but cannot be monitored.

ECU DIAGNOSIS INFORMATION

COMBINATION METER

Reference Value

INFOID:0000000005883871

VALUES ON THE DIAGNOSIS TOOL

Monitor Item	Condition		Value/Status
SPEED METER [km/h]	Ignition switch ON	While driving	Equivalent to speedometer reading **NOTE:** 655.35 is displayed when the malfunction signal is received (A/T models)
SPEED OUTPUT [km/h]	Ignition switch ON	While driving	Equivalent to speedometer reading **NOTE:** 655.35 is displayed when the malfunction signal is received (A/T models)
ODO OUTPUT [km/h or mph]	Ignition switch ON	—	Equivalent to odometer reading in combination meter
TACHO METER [rpm]	Ignition switch ON	Engine running	Equivalent to tachometer reading **NOTE:** 8191.875 is displayed when the malfunction signal is received
FUEL METER [L]	Ignition switch ON	—	Values according to fuel level
W TEMP METER [°C]	Ignition switch ON	—	Values according to engine coolant temperature **NOTE:** 215 is displayed when the malfunction signal is input
ABS W/L	Ignition switch ON	ABS warning lamp ON	On
		ABS warning lamp OFF	Off
BRAKE W/L	Ignition switch ON	Brake warning lamp ON	On
		Brake warning lamp OFF	Off
DOOR W/L	Ignition switch ON	Door warning lamp ON	On
		Door warning lamp OFF	Off
HI-BEAM IND	Ignition switch ON	High-beam indicator lamp ON	On
		High-beam indicator lamp OFF	Off
TURN IND	Ignition switch ON	Turn signal indicator lamp ON	On
		Turn signal indicator lamp OFF	Off
FR FOG IND	Ignition switch ON	Front fog lamp indicator lamp ON	On
		Front fog lamp indicator lamp OFF	Off
OIL W/L	Ignition switch ON	Oil pressure warning lamp ON	On
		Oil pressure warning lamp OFF	Off
MIL	Ignition switch ON	Malfunction indicator lamp ON	On
		Malfunction indicator lamp OFF	Off
GLOW IND	Ignition switch ON	This item is displayed, but cannot be monitored.	Off
C-ENG2 W/L	Ignition switch ON	This item is displayed, but cannot be monitored.	Off
CRUISE IND	Ignition switch ON	This item is displayed, but cannot be monitored.	Off

Monitor Item	Condition		Value/Status
SET IND	Ignition switch ON	This item is displayed, but cannot be monitored.	Off
O/D OFF IND	Ignition switch ON	OD OFF indicator lamp ON	On
		OD OFF indicator lamp OFF	Off
FUEL W/L	Ignition switch ON	Low fuel warning displayed Dummy cross-reference("XX-XX")	On
		Low fuel warning not displayed Dummy cross-reference("XX-XX")	Off
KEY G/Y W/L	Ignition switch ON	KEY warning lamp (Green/Yellow) ON	On
		KEY warning lamp (Green/Yellow) OFF	Off
EPS W/L	Ignition switch ON	EPS warning lamp ON	On
		EPS warning lamp OFF	Off
e-4WD W/L	Ignition switch ON	This item is displayed, but cannot be monitored.	Off
DPF W/L	Ignition switch ON	This item is displayed, but cannot be monitored.	Off
FILTER W/L	Ignition switch ON	This item is displayed, but cannot be monitored.	Off
LCD	Ignition switch LOCK or ACC	Engine start operation indicator ON Dummy cross-reference("XX-XX")	B&P N
	Ignition switch ON	Engine start operation indicator ON Dummy cross-reference("XX-XX")	B&P I
	Ignition switch LOCK	Shift P warning lamp ON	SFT P
	Ignition switch ON	KEY warning lamp blinking	NO KY
SHIFT IND	Ignition switch ON	Shift position indicator P display	P
		Shift position indicator R display	R
		Shift position indicator N display	N
		Shift position indicator D display	D
		Shift position indicator 2 display	2
		Shift position indicator 1 display	1
O/D OFF SW	Ignition switch ON	While pressing the overdrive control switch	On
		Other than the above	Off
COMP F/B SIG	Ignition switch ON	A/C compressor activation condition	On
		A/C compressor deactivation condition	Off
PKB SW	Ignition switch ON	Parking brake switch ON	On
		Parking brake switch OFF	Off
BUCKLE SW	Ignition switch ON	Seat belt (driver side) not fastened	On
		Seat belt (driver side) fastened	Off
BRAKE SW	Ignition switch ON	This item is displayed, but cannot be monitored.	Off
BRAKE OIL SW	Ignition switch ON	Brake fluid level switch ON	On
		Brake fluid level switch OFF	Off
DISTANCE [km]	Ignition switch ON	—	Possible driving distance calculated by combination meter

Monitor Item	Condition		Value/Status
FUEL LOW SIG	Ignition switch ON	Low fuel warning displayed Dummy cross-reference("XX-XX")	On
		Low fuel warning not displayed Dummy cross-reference("XX-XX")	Off
BUZZER	Ignition switch ON	Buzzer ON	On
		Buzzer OFF	Off

NOTE:

Some items are not available according to vehicle specification.

TERMINAL LAYOUT

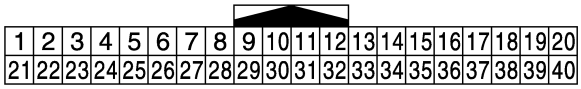

JPNIA0968GB

PHYSICAL VALUES

Terminal No. (Wire color)		Description		Condition		Value (Approx.)
+	–	Signal name	Input/ Output			
1 (R)	Ground	Battery power supply	Input	Ignition switch OFF	—	Battery voltage
3 (GR)	Ground	Ignition signal	Input	Ignition switch ON	—	Battery voltage
4 (W)	26 (GR)	Fuel level sensor signal	Input	Ignition switch ON	—	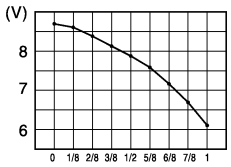 JSNIA2927ZZ

Terminal No. (Wire color)		Description		Condition		Value (Approx.)
+	–	Signal name	Input/ Output			
6 (L)	25 (B)	Vehicle speed sensor signal	Input	Ignition switch ON	Speedometer operated [When vehicle speed is approx. 20 km/h (12.5 MPH)]	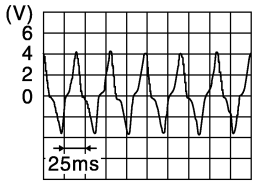 JSNIA3084ZZ
					Speedometer operated [When vehicle speed is approx. 40 km/h (25 MPH)]	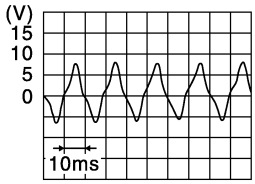 JSNIA3085ZZ
					Speedometer operated [When vehicle speed is approx. 60 km/h (37.5 MPH)]	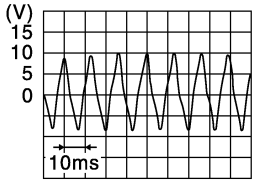 JSNIA3086ZZ
8 (L)	—	CAN-H	—	—	—	—
10 (P)	—	CAN-L	—	—	—	—
14 (G)	Ground	Engine coolant temperature signal	Output	Ignition switch ON	Engine idling [Approximately 20°C (68°F)]	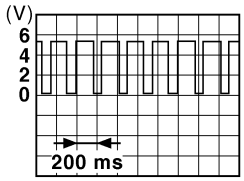 PKID0590E
					Engine idling [Approximately 80°C (176°F)]	0 V 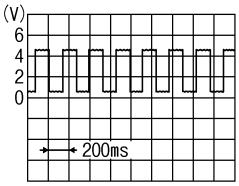 SKIB3651J
15* (GR)	—	—	—	—	—	—
21 (B)	Ground	Ground	—	Ignition switch ON	—	0 V
22 (B)	Ground	Ground	—	Ignition switch ON	—	0 V

Terminal No. (Wire color)		Description		Condition		Value (Approx.)
+	–	Signal name	Input/ Output			
23 (B/W)	Ground	Ground	—	Ignition switch ON	—	0 V
28 (P)	Ground	Overdrive control switch signal	Input	Ignition switch ON	While pressing the overdrive control switch.	0 V
					Other than the above	12 V
31 (G)	Ground	Security signal	Input	Ignition switch ON	Security warning lamp ON	0 V
					Security warning lamp OFF	12 V
32 (V)	Ground	Air bag signal	Input	Ignition switch ON	Air bag warning lamp ON	6 V
					Air bag warning lamp OFF	0 V
35 (Y)	Ground	Alternator signal	Input	Ignition switch ON	Charge warning lamp ON	2 V
					Charge warning lamp OFF	12 V
36 (LG)	Ground	Brake fluid level switch signal	Input	Ignition switch ON	Brake fluid level is normal	12 V
					Brake fluid level is less than low level	0 V
37 (SB)	Ground	Parking brake switch signal	Input	Ignition switch ON	Parking brake applied.	0 V
					Parking brake released.	12 V

*: This harness is not used.

Fail-Safe

INFOID:0000000005883872

FAIL-SAFE

The combination meter activates the fail-safe control if CAN communication with each unit is malfunctioning.

Function		Specifications
Speedometer (A/T models)		Reset to zero by suspending communication.
Tachometer		
Illumination control		When suspending communication, changes to nighttime mode.
Information display	Shift position indicator	The indicator turns OFF by suspending communication.
	Instantaneous fuel consumption	• When reception time of an abnormal signal is 2 seconds or less, the last received datum is used for calculation to indicate the result. • When reception time of an abnormal signal is more than two seconds, the last result calculated during normal condition is indicated.
	Average fuel consumption	
	Possible driving distance	
	Engine start operation indicator	The indicator turns OFF by suspending communication.
Buzzer		The buzzer turns off by suspending communication.

Function		Specifications
Warning lamp/indicator lamp	ABS warning lamp	The lamp turns ON by suspending communication.
	EPS warning lamp	
	Brake warning lamp (With ABS)	
	High water temperature warning lamp	The lamp turns OFF by suspending communication.
	Malfunction indicator lamp	
	High beam indicator lamp	
	Turn signal indicator lamp	
	Front fog lamp indicator lamp	
	Door warning lamp	
	Shift P warning lamp	
	Key warning lamp	
	Oil pressure warning lamp	
	OD OFF indicator lamp	

DTC Index

INFOID:0000000005883873

Display contents of CONSULT-III	Diagnostic item is detected when...	Refer to
CAN COMM CIRCUIT [U1000]	When combination meter is not transmitting or receiving CAN communication signal for 2 seconds or more.	MWI-35, "Diagnosis Procedure"
CONTROL UNIT (CAN) [U1010]	When detecting error during the initial diagnosis of the CAN controller of combination meter.	XX-XX, "*****"
VEHICLE SPEED [B2205]	The abnormal vehicle speed signal is input from the ABS actuator and electric unit (control unit) for 2 seconds or more.	MWI-37, "Diagnosis Procedure"
ENGINE SPEED [B2267]	If ECM continuously transmits abnormal engine speed signals for 2 seconds or more.	MWI-38, "Diagnosis Procedure"
WATER TEMP [B2268]	If ECM continuously transmits abnormal engine coolant temperature signals for 60 seconds or more.	MWI-39, "Diagnosis Procedure"

IPDM E/R (INTELLIGENT POWER DISTRIBUTION MODULE ENGINE ROOM)

List of ECU Reference

INFOID:0000000005883874

ECU		Reference
IPDM E/R	With intelligent key models	PCS-15, "Reference Value"
		PCS-20, "Fail-Safe"
		PCS-45, "DTC Index"
	Without intelligent key models	PCS-40, "Reference Value"
		PCS-44, "Fail-Safe"
		PCS-45, "DTC Index"

WIRING DIAGRAM

METER SYSTEM

LHD

LHD : Wiring Diagram

INFOID:0000000005883875

For connector terminal arrangements, harness layouts, and alphabets in a ⬡ (option abbreviation; if not described in wiring diagram), refer to GI-12, "Connector Information".

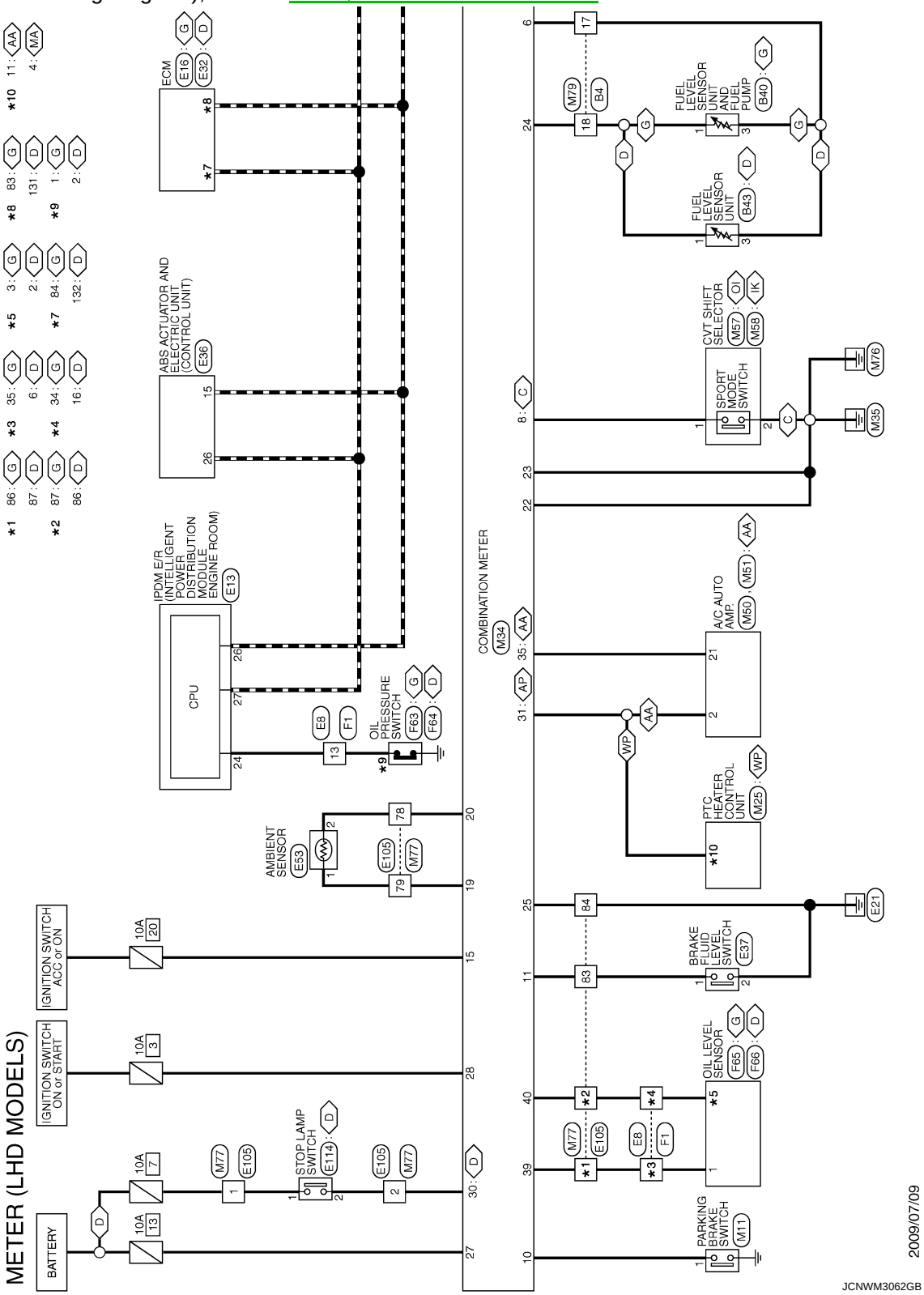

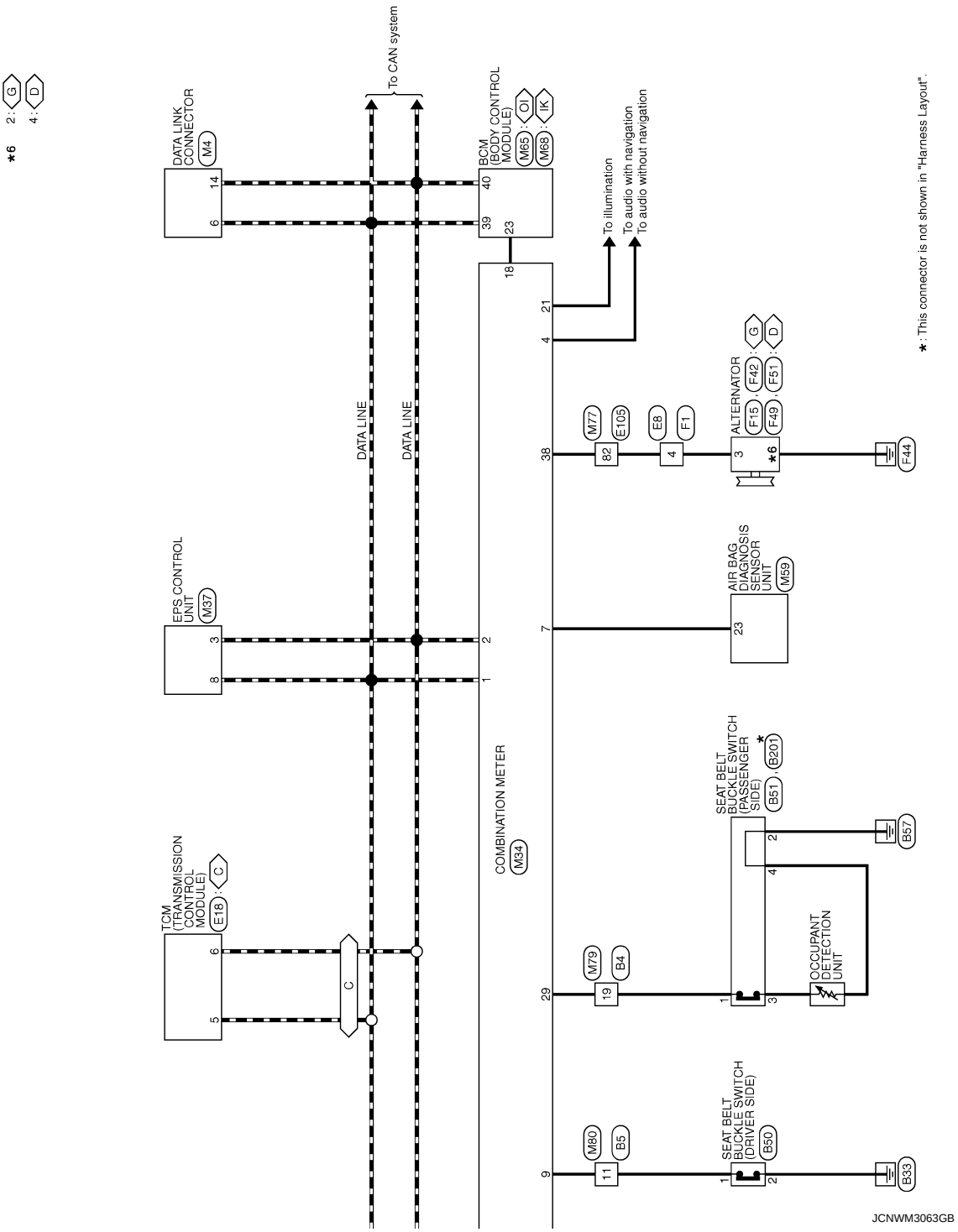
*6 2: G 4: D
DATA LINK CONNECTOR
M4
14
6
To CAN system
BCM (BODY CONTROL MODULE)
M65 : OI
M68 : IK
40
39
23
18
To illumination
To audio with navigation
To audio without navigation
21
4
38
DATA LINE
DATA LINE
M77
82
E105
E8
4
F1
ALTERNATOR
F15
F49
F42 : G
F51 : D
3
*6
F44
*: This connector is not shown in "Harness Layout".
EPS CONTROL UNIT
M37
3
8
2
1
7
AIR BAG DIAGNOSIS SENSOR UNIT
M59
23
COMBINATION METER
M34
SEAT BELT BUCKLE SWITCH (PASSENGER SIDE)
B51 : B201 *
2
4
B57
OCCUPANT DETECTION UNIT
TCM (TRANSMISSION CONTROL MODULE)
E18 : C
6
5
C
M79
B4
19
29
1
3
M80
B5
11
9
SEAT BELT BUCKLE SWITCH (DRIVER SIDE)
B50
2
B33
JCNWM3063GB

RHD

RHD : Wiring Diagram

INFOID:0000000005883876

For connector terminal arrangements, harness layouts, and alphabets in a ⬡ (option abbreviation; if not described in wiring diagram), refer to GI-12, "Connector Information".

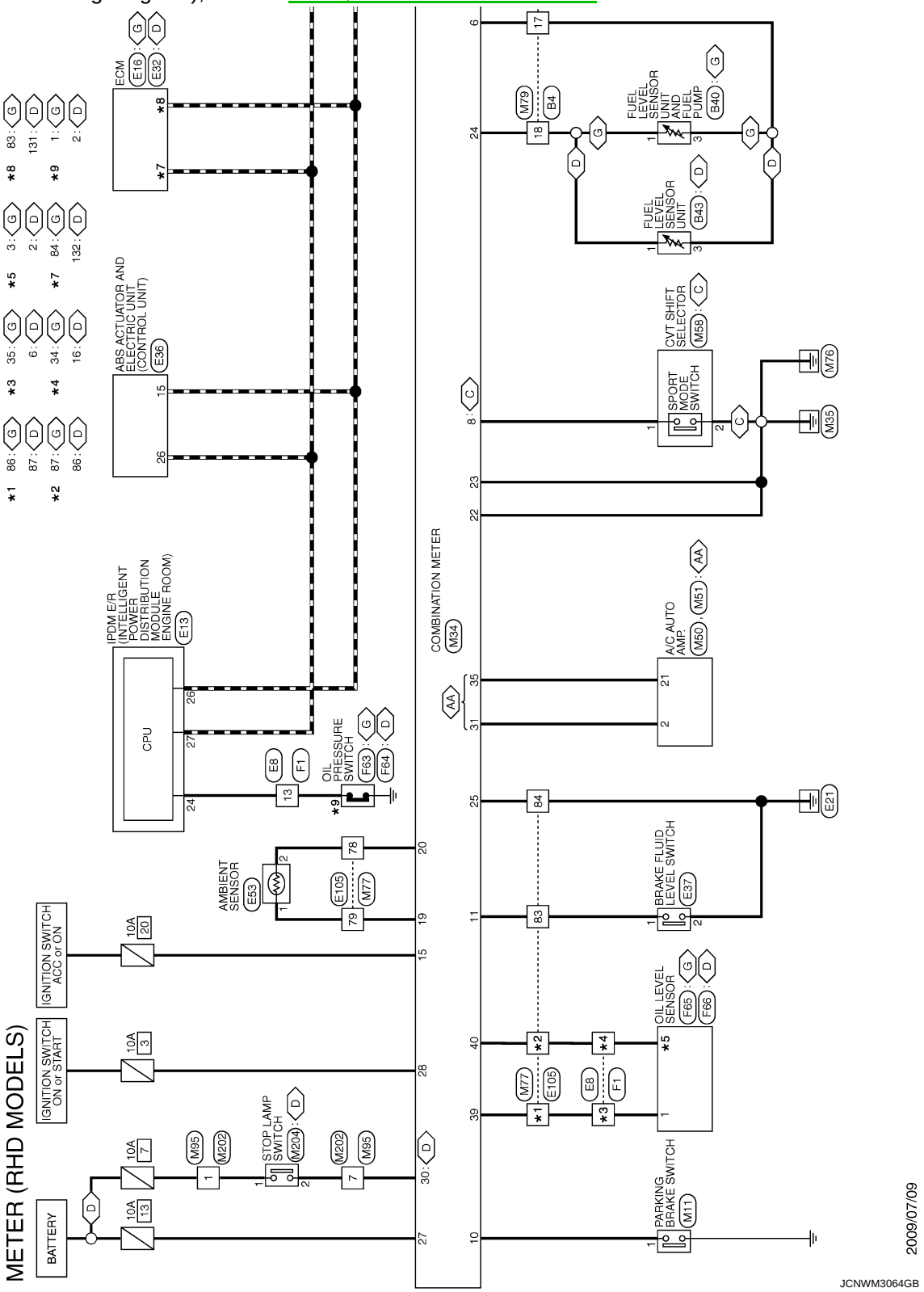

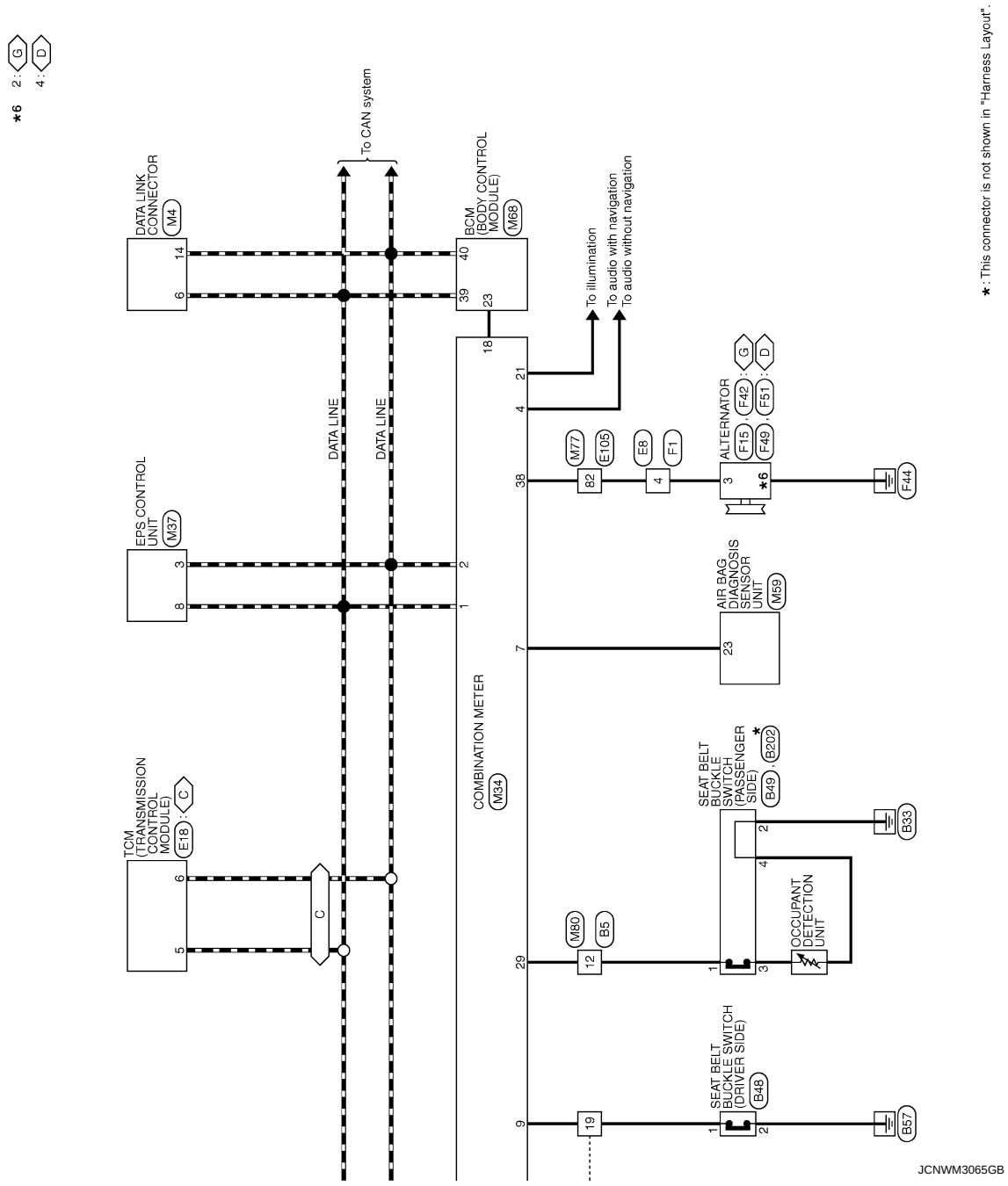

* : This connector is not shown in "Harness Layout".

BASIC INSPECTION

DIAGNOSIS AND REPAIR WORKFLOW

Work flow

INFOID:0000000005883877

OVERALL SEQUENCE

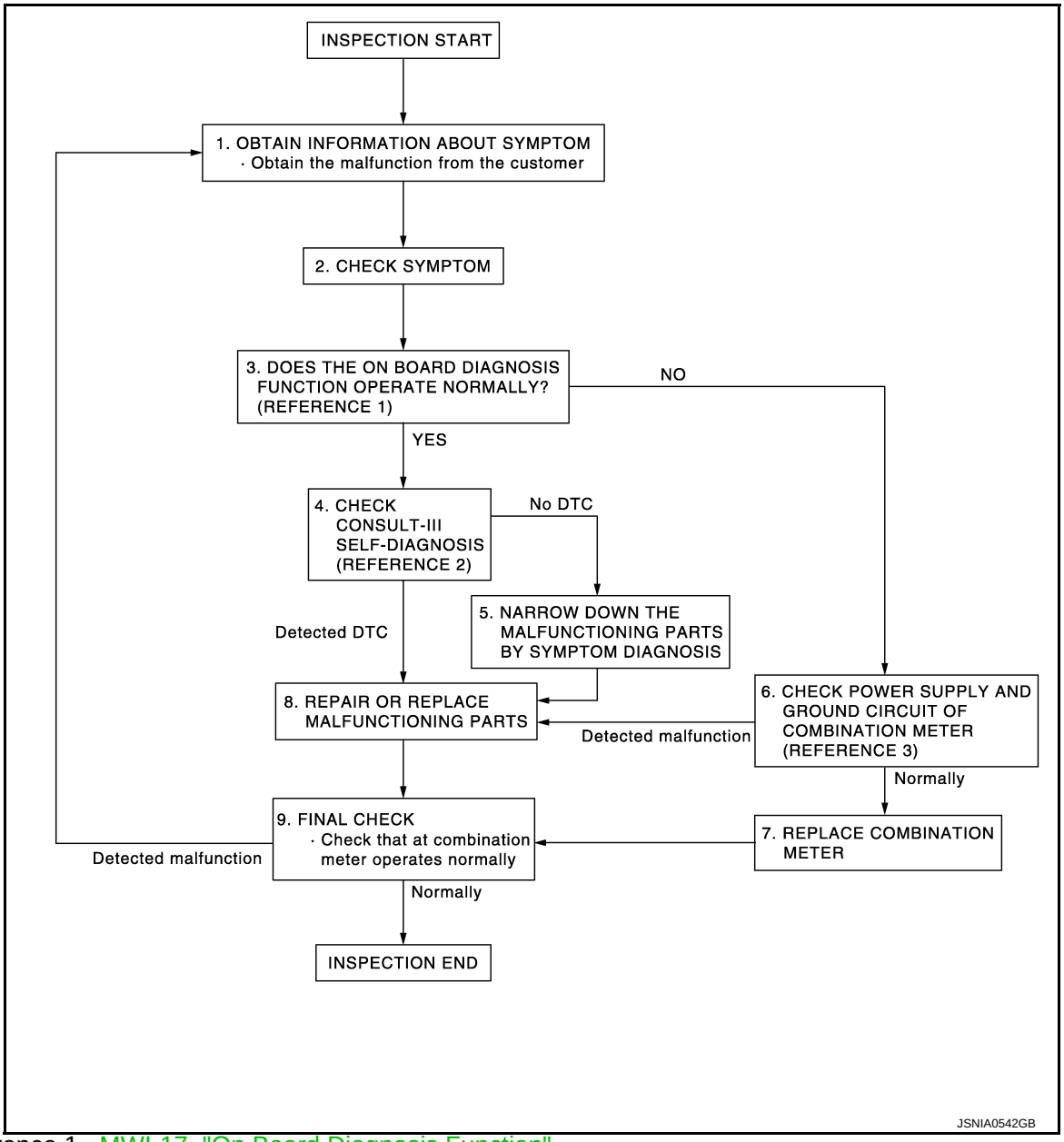

- Reference 1···MWI-17, "On Board Diagnosis Function".
- Reference 2···MWI-27, "DTC Index".
- Reference 3···MWI-40, "COMBINATION METER : Diagnosis Procedure".

DETAILED FLOW

1. OBTAIN INFORMATION ABOUT SYMPTOM

Interview the customer to obtain as much information as possible about the conditions and environment under which the malfunction occurred.

>> GO TO 2.

2. CHECK SYMPTOM

- Check the symptom based on the information obtained from the customer.
- Check that any other malfunctions are present.

>> GO TO 3.

3. CHECK ON BOARD DIAGNOSIS OPERATION

Check that the on board diagnosis function operates. Refer to MWI-17, "On Board Diagnosis Function".

Does the on board diagnosis function operate normally?

YES >> GO TO 4.
NO >> GO TO 6.

4. CHECK CONSULT-III SELF-DIAGNOSIS RESULTS

Connect CONSULT-III and perform self-diagnosis. Refer to MWI-18, "CONSULT-III Function".

Are self-diagnosis results normal?

YES >> GO TO 5.
NO >> GO TO 8.

5. NARROW DOWN THE MALFUNCTIONING PARTS BY SYMPTOM DIAGNOSIS

Perform symptom diagnosis and narrow down the malfunctioning parts.

>> GO TO 8.

6. CHECK COMBINATION METER POWER SUPPLY AND GROUND CIRCUITS

Check combination meter power supply and ground circuits. Refer to MWI-40, "COMBINATION METER : Diagnosis Procedure".

Is inspection result OK?

YES >> GO TO 7.
NO >> GO TO 8.

7. REPLACE COMBINATION METER

Replace combination meter.

>> GO TO 9.

8. REPAIR OR REPLACE MALFUNCTIONING PARTS

Repair or replace the malfunctioning parts.

NOTE:

If DTC is displayed, erase DTC after repair or replace malfunctioning parts.

>> GO TO 9.

9. FINAL CHECK

Check that the combination meter operates normally.

Do they operate normally?

YES >> INSPECTION END
NO >> GO TO 1.

DTC/CIRCUIT DIAGNOSIS

U1000 CAN COMM CIRCUIT

Description

INFOID:0000000005883878

CAN (Controller Area Network) is a serial communication system for real time application. It is an on-vehicle multiplex communication system with high data communication speed and excellent error detectability. Many electronic control units are equipped onto vehicles, and each control unit shares information and links with other control units during operation (not independent). In CAN communication, control units are connected with two communication lines (CAN-H line, CAN-L line) allowing a high rate of information transmission with less wiring. Each control unit transmits/receives data but selectively reads required data only.
CAN Communication Signal Chart. Refer to LAN-23, "CAN COMMUNICATION SYSTEM : CAN Communication Signal Chart".

DTC Logic

INFOID:0000000005883879

DTC DETECTION LOGIC

DTC	Display contents of CONSULT-III	Diagnostic item is detected when...	Probable malfunction location
U1000	CAN COMM CIRCUIT	When combination meter is not transmitting or receiving CAN communication signal for 2 seconds or more.	CAN communication system

Diagnosis Procedure

INFOID:0000000005883880

1. PERFORM SELF DIAGNOSTIC

1. Turn ignition switch ON and wait for 2 seconds or more.
2. Check “Self Diagnostic Result” of “METER/M&A”.

Is “CAN COMM CIRCUIT” displayed?

YES >> Refer to LAN-14, "Trouble Diagnosis Flow Chart".
NO >> Refer to GI-33, "Intermittent Incident".

U1010 CONTROL UNIT (CAN)

Description

INFOID:0000000006059760

Initial diagnosis of combination meter.

DTC Logic

INFOID:0000000006059761

DTC DETECTION LOGIC

DTC	Display contents of CONSULT-III	Diagnostic item is detected when...	Probable malfunction location
U1010	CONTROL UNIT (CAN)	When detecting error during the initial diagnosis of the CAN controller of combination meter.	Combination meter

Diagnosis Procedure

INFOID:0000000006059762

1. REPLACE COMBINATION METER

When DTC “U1010” is detected, replace combination meter.

>> INSPECTION END

B2205 VEHICLE SPEED

Description

INFOID:0000000005883884

- Vehicle speed signal is transmitted from ABS actuator and electric unit (control unit) via CAN communication to combination meter. (Models with ABS)
- Vehicle speed signal is transmitted from TCM via CAN communication to combination meter. (A/T models without ABS)

DTC Logic

INFOID:0000000005883885

DTC DETECTION LOGIC

DTC	Display contents of CONSULT-III	Diagnostic item is detected when...	Probable malfunction location
B2205	VEHICLE SPEED	• An abnormal vehicle speed signal is input from ABS actuator and electric unit (control unit) for 2 seconds or more (Models with ABS) • An abnormal vehicle speed signal is input from TCM for 2 seconds or more (A/T models without ABS)	Models with ABS • Wheel sensor • ABS actuator and electric unit (control unit) A/T models without ABS • Output speed sensor • TCM

Diagnosis Procedure

INFOID:0000000005883886

MODELS WITH ABS

1. PERFORM SELF-DIAGNOSIS OF ABS ACTUATOR AND ELECTRIC UNIT (CONTROL UNIT)

Perform “Self Diagnostic Result” of ABS actuator and electric unit (control unit), and repair or replace malfunctioning parts.

>> Refer to XX-XX, "*****".

A/T MODELS WITHOUT ABS

1. PERFORM SELF-DIAGNOSIS OF TCM

Perform “Self Diagnostic Result” of TCM, and repair or replace malfunctioning parts.

>>

B2267 ENGINE SPEED

Description

INFOID:0000000005883887

The engine speed signal is transmitted from ECM to the combination meter via CAN communication.

DTC Logic

INFOID:0000000005883888

DTC DETECTION LOGIC

DTC	Display contents of CONSULT-III	Diagnostic item is detected when...	Probable malfunction location
B2267	ENGINE SPEED	ECM continuously transmits abnormal engine speed signals for 2 seconds or more	• Crankshaft position sensor (POS) • ECM

Diagnosis Procedure

INFOID:0000000005883889

1.PERFORM SELF-DIAGNOSIS OF ECM

Perform “Self Diagnostic Result” of ECM, and repair or replace malfunctioning parts.

>> Refer to XX-XX, "*****".

B2268 WATER TEMP

Description

INFOID:0000000005883890

The engine coolant temperature signal is transmitted from ECM to the combination meter via CAN communication.

DTC Logic

INFOID:0000000005883891

DTC DETECTION LOGIC

DTC	Display contents of CONSULT-III	Diagnostic item is detected when...	Probable malfunction location
B2268	WATER TEMP	ECM continuously transmits abnormal engine coolant temperature signals for 60 seconds or more	• Engine coolant temperature sensor • ECM

Diagnosis Procedure

INFOID:0000000005883892

1. PERFORM SELF-DIAGNOSIS OF ECM

Perform “Self Diagnosis Result” of ECM, and repair or replace malfunctioning parts.

>> Refer to XX-XX, "*****".

POWER SUPPLY AND GROUND CIRCUIT
COMBINATION METER

COMBINATION METER : Diagnosis Procedure

INFOID:0000000005883897

1.CHECK FUSE

Check for blown fuses.

Power source	Fuse No.
Battery	11
Ignition switch ON or START	5

Is the inspection result normal?

YES >> GO TO 2.
NO >> Be sure to eliminate cause of malfunction before installing new fuse.

2.CHECK POWER SUPPLY CIRCUIT

Check voltage between combination meter harness connector and ground.

Terminals			Ignition switch position	Voltage (Approx.)
(+)		(–)		
Combination meter		Ground		
Connector	Terminal			
M34	21		OFF	Battery voltage
	22		ON	

Is the inspection result normal?

YES >> GO TO 3.
NO >> Check harness between combination meter and fuse.

3.CHECK GROUND CIRCUIT

1. Turn ignition switch OFF.
2. Disconnect combination meter connector.
3. Check continuity between combination meter harness connector and ground.

Combination meter		Ground	Continuity
Connector	Terminal		
M34	21		Existed
	22		

Is the inspection result normal?

YES >> INSPECTION END
NO >> Repair harness or connector.

SPEED SENSOR SIGNAL CIRCUIT (M/T MODELS)

Diagnosis Procedure

INFOID:0000000005883941

1. CHECK COMBINATION METER INPUT SIGNAL

1. Turn ignition switch ON.
2. Check voltage between combination meter harness connector and ground.

Terminals				Condition		Voltage (Approx.)
(+)		(–)				
Combination meter						
Connector	Terminal	Connector	Terminal			
M34	6	M34	25	Ignition switch ON	Speedometer operated [When vehicle speed is approx. 20 km/h (12.5 MPH)]	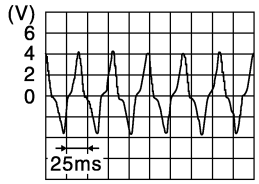 JSNIA3084ZZ
					Speedometer operated [When vehicle speed is approx. 40 km/h (25 MPH)]	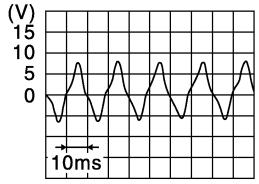 JSNIA3085ZZ
					Speedometer operated [When vehicle speed is approx. 60 km/h (37.5 MPH)]	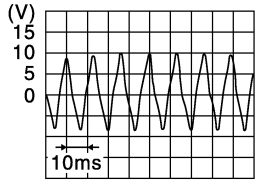 JSNIA3086ZZ

Is the inspection result normal?

YES >> GO TO 2.
NO >> Replace combination meter. Refer to MWI-51, "Removal and Installation".

2. CHECK VEHICLE SPEED SENSOR CIRCUIT

1. Turn ignition switch OFF.
2. Disconnect combination meter connector and vehicle speed sensor connector.
3. Check continuity between combination meter harness connector and vehicle speed sensor harness connector.

Combination meter		Vehicle speed sensor		Continuity
Connector	Terminal	Connector	Terminal	
M34	6	F55	1	Existed

4. Check continuity between combination meter harness connector and ground.

Combination meter		Ground	Continuity
Connector	Terminal		
M34	6		Not existed

Is the inspection result normal?

YES >> GO TO 3.
NO >> Repair harness or connector.

3. CHECK VEHICLE SPEED SENSOR GROUND CIRCUIT

Check continuity between vehicle speed sensor harness connector and combination meter harness connector.

Vehicle speed sensor		Combination meter		Continuity
Connector	Terminal	Connector	Terminal	
F55	2	M34	25	Existed

Is the inspection result normal?

YES >> INSPECTION END
NO >> Repair harness or connector.

Component Inspection

INFOID:0000000005883942

1. REMOVE VEHICLE SPEED SENSOR

Remove vehicle speed sensor. Refer to XX-XX, "*****".

>> GO TO 2.

2. CHECK VEHICLE SPEED SENSOR

Check the resistance between vehicle speed sensor terminals.

Terminals		Resistance (Ω) (Approx.)
Vehicle speed sensor		
1	2	280

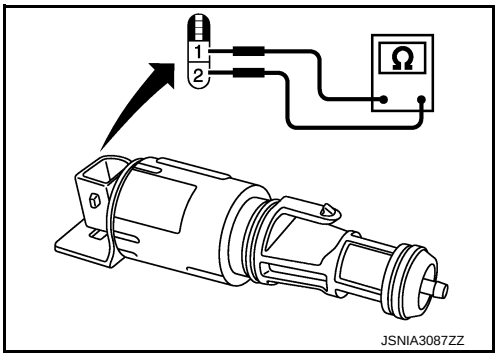

Is inspection result OK?

YES >> INSPECTION END
NO >> Replace vehicle speed sensor. Refer to XX-XX, "*****".

FUEL LEVEL SENSOR SIGNAL CIRCUIT

Component Function Check

INFOID:0000000005883898

1. CHECK COMBINATION METER OUTPUT SIGNAL

Select the “Data Monitor” for the “METER/M&A” and compare the “FUEL METER” monitor value with the fuel gauge reading on the combination meter.

Fuel gauge indication position	Reference value of data monitor [L]
1	Approx. 44.8
6/8	Approx. 35.2
4/8	Approx. 22.4
2/8	Approx. 10.4
1/8	Approx. 4.8
0	Approx. 2.5

Does monitor value match fuel gauge reading?

YES >> INSPECTION END
NO >> Replace combination meter. Refer to MWI-51, "Removal and Installation".

Diagnosis Procedure

INFOID:0000000005883899

1. CHECK COMBINATION METER INPUT SIGNAL

1. Turn ignition switch ON.
2. Check voltage between combination meter harness connector and ground.

Terminals			Voltage (Approx.)
(+)		(–)	
Combination meter			
Connector	Terminal		
M34	4	Ground	

Does it match fuel gauge reading?

YES >> GO TO 2.
NO >> Replace the combination meter. Refer to MWI-51, "Removal and Installation".

2. CHECK FUEL LEVEL SENSOR CIRCUIT

1. Turn ignition switch OFF.
2. Disconnect combination meter connector and fuel level sensor unit connector.
3. Check continuity between combination meter harness connector and fuel level sensor unit harness connector.

Combination meter		Fuel level sensor unit		Continuity
Connector	Terminal	Connector	Terminal	
M34	4	B40	2	Existed

4. Check continuity between combination meter harness connector and ground.

Combination meter		Ground	Continuity
Connector	Terminal		
M34	4		Not existed

Is the inspection result normal?

YES >> GO TO 3.
NO >> Repair harness or connector.

3. CHECK FUEL LEVEL SENSOR GROUND CIRCUIT

Check continuity between fuel level sensor unit harness connector and combination meter harness connector.

Fuel level sensor unit		Combination meter		Continuity
Connector	Terminal	Connector	Terminal	
B40	5	M34	24	Existed

Is the inspection result normal?

YES >> INSPECTION END
NO >> Repair harness or connector.

Component Inspection

INFOID:0000000005883900

1. REMOVE FUEL LEVEL SENSOR UNIT

Remove the fuel level sensor unit. Refer to FL-5, "Removal and Installation".

>> GO TO 2.

2. CHECK FUEL LEVEL SENSOR UNIT

Check the resistance between fuel level sensor unit and fuel pump.

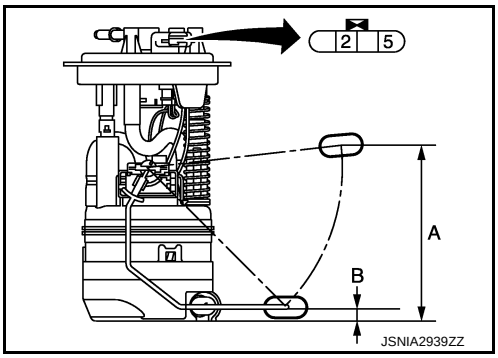

Terminals		Condition	Resistance (Ω) (Approx.)	Height [mm (in)]
Fuel level sensor unit				
2	5	Full* (A)	5.0	165.7 (6.5)
		Empty* (B)	81.5	21.1 (0.83)

*: When float rod is contact with stopper.

Is inspection result OK?

YES >> INSPECTION END
NO >> Replace fuel level sensor unit and fuel pump. Refer to FL-5, "Removal and Installation".

OIL PRESSURE SWITCH SIGNAL CIRCUIT

Component Function Check

INFOID:0000000005883901

1. CHECK COMBINATION METER INPUT SIGNAL

Select the “Data Monitor” for the “METER/M&A” and check the “OIL W/L” monitor value.

“OIL W/L”	
Ignition switch ON	: On
Engine running	: Off

>> INSPECTION END

Diagnosis Procedure

INFOID:0000000005883902

1. CHECK OIL PRESSURE SWITCH CIRCUIT

1. Turn ignition switch OFF.
2. Disconnect IPDM E/R connector and oil pressure switch connector.
3. Check continuity between IPDM E/R harness connector and oil pressure switch harness connector.

Terminals				Continuity
(+)		(–)		
IPDM E/R		Oil pressure switch		
Connector	Terminal	Connector	Terminal	
F113	42	F63	1	Existed

4. Check continuity between IPDM E/R harness connector and ground.

Terminals			Continuity
(+)		(–)	
IPDM E/R		Ground	
Connector	Terminal		
F113	42		Not existed

Is the inspection result normal?

YES >> INSPECTION END
NO >> Repair harness or connector.

Component Inspection

INFOID:0000000005883903

1. CHECK OIL PRESSURE SWITCH

Check continuity between oil pressure switch and ground.

Condition	Continuity
Engine stopped	Existed
Engine running	Not existed

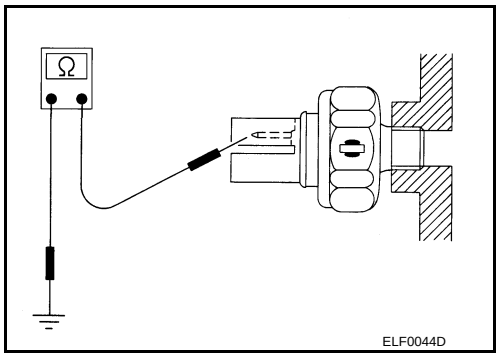

Is the inspection result normal?

YES >> INSPECTION END

NO >> Replace oil pressure switch. Refer to EM-85, "Exploded View".

SYMPTOM DIAGNOSIS

THE FUEL GAUGE INDICATOR DOES NOT OPERATE

Description

INFOID:0000000005883913

Fuel gauge will not indicate from a certain position.

Diagnosis Procedure

INFOID:0000000005883914

1. CHECK COMBINATION METER OUTPUT SIGNAL

1. Connect CONSULT-III.
2. Select the “Data Monitor” for the “METER/M&A” and compare the “FUEL METER” monitor value with the fuel gauge reading on the combination meter. Refer to MWI-43, "Component Function Check".

Does monitor value match fuel gauge reading?

YES >> GO TO 2.
NO >> Replace combination meter. Refer to MWI-51, "Removal and Installation".

2. CHECK FUEL LEVEL SENSOR SIGNAL CIRCUIT

Check the fuel level sensor signal circuit. Refer to MWI-43, "Diagnosis Procedure".

Is the inspection result normal?

YES >> GO TO 3.
NO >> Repair harness or connector.

3. CHECK FUEL LEVEL SENSOR UNIT

Perform a unit check for the fuel level sensor unit. Refer to MWI-44, "Component Inspection".

Is the inspection result normal?

YES >> GO TO 4.
NO >> Replace fuel level sensor unit. Refer to FL-5, "Removal and Installation".

4. CHECK FLOAT INTERFERENCE

Check that the float arm interferes with or binds to other components in the fuel tank.

Is the inspection result normal?

YES >> Replace combination meter. Refer to MWI-51, "Removal and Installation".
NO >> Repair or replace malfunctioning parts.

THE OIL PRESSURE WARNING LAMP DOES NOT TURN ON

Description

INFOID:0000000005883915

The oil pressure warning lamp stays off when the ignition switch is turned ON.

Diagnosis Procedure

INFOID:0000000005883916

1.CHECK OIL PRESSURE WARNING LAMP

Perform auto active test. Refer to PCS-11, "Diagnosis Description" (with intelligent key) or PCS-36, "Diagnosis Description" (without intelligent key).

Is oil pressure warning lamp blinking?

YES >> GO TO 2.
NO >> GO TO 4.

2.CHECK OIL PRESSURE SWITCH SIGNAL CIRCUIT

Check the oil pressure switch signal circuit. Refer to MWI-45, "Diagnosis Procedure".

Is the inspection result normal?

YES >> GO TO 3.
NO >> Repair harness or connector.

3.CHECK OIL PRESSURE SWITCH

Perform a unit check for the oil pressure switch. Refer to MWI-45, "Component Inspection".

Is the inspection result normal?

YES >> Replace IPDM E/R.
NO >> Replace oil pressure switch.

4.CHECK COMBINATION METER INPUT SIGNAL

Connect CONSULT-III and perform an input signal check for the combination meter. Refer to MWI-45, "Component Function Check".

Is the inspection result normal?

YES >> Replace combination meter. Refer to MWI-51, "Removal and Installation".
NO >> Replace IPDM E/R. Refer to PCS-28, "Removal and Installation" (with intelligent key) or PCS-52, "Removal and Installation" (without intelligent key).

THE OIL PRESSURE WARNING LAMP DOES NOT TURN OFF

Description

INFOID:0000000005883917

The oil pressure warning lamp remains illuminated while the engine is running (normal oil pressure).

Diagnosis Procedure

INFOID:0000000005883918

1. CHECK OIL PRESSURE WARNING LAMP

Perform auto active test. Refer to PCS-11, "Diagnosis Description" (with intelligent key) or PCS-36, "Diagnosis Description" (without intelligent key).

Is oil pressure warning lamp blinking?

YES >> GO TO 2.
NO >> GO TO 5.

2. CHECK IPDM E/R OUTPUT VOLTAGE

1. Turn ignition switch OFF.
2. Disconnect the oil pressure switch connector.
3. Turn ignition switch ON.
4. Check voltage between the oil pressure switch harness connector terminal and ground.

Terminals			Voltage (Approx.)
(+)		(–)	
Oil pressure switch		Ground	
Connector	Terminal		
F63	1		12 V

Is the inspection result normal?

YES >> GO TO 3.
NO >> GO TO 4.

3. CHECK OIL PRESSURE SWITCH

Perform a unit check for the oil pressure switch. Refer to MWI-45, "Component Inspection".

Is the inspection result normal?

YES >> Replace IPDM E/R. Refer to PCS-28, "Removal and Installation" (with intelligent key) or PCS-52, "Removal and Installation" (without intelligent key).
NO >> Replace oil pressure switch.

4. CHECK OIL PRESSURE SWITCH SIGNAL CIRCUIT

Check the oil pressure switch signal circuit. Refer to MWI-45, "Diagnosis Procedure".

Is the inspection result normal?

YES >> GO TO 5.
NO >> Repair harness or connector.

5. CHECK COMBINATION METER INPUT SIGNAL

Connect CONSULT-III and perform an input signal check for the combination meter. Refer to MWI-45, "Component Function Check".

Is the inspection result normal?

YES >> Replace combination meter. Refer to MWI-51, "Removal and Installation".
NO >> Replace IPDM E/R. Refer to PCS-28, "Removal and Installation" (with intelligent key) or PCS-52, "Removal and Installation" (without intelligent key).

NORMAL OPERATING CONDITION

INFORMATION DISPLAY

INFORMATION DISPLAY : Description

INFOID:0000000005883923

POSSIBLE DRIVING DISTANCE

The calculated possible driving distance may differ from the actual distance to empty if the refueling amount is approximately 9 ℓ (2 Imp gal) or less. This is because the refuel control (moves the fuel gauge needle quicker than normal judging that the driver is refueling the vehicle) is not performing.

REMOVAL AND INSTALLATION

COMBINATION METER

Exploded View

INFOID:0000000005883924

REMOVAL

Refer to IP-12, "Exploded View".

DISASSEMBLY

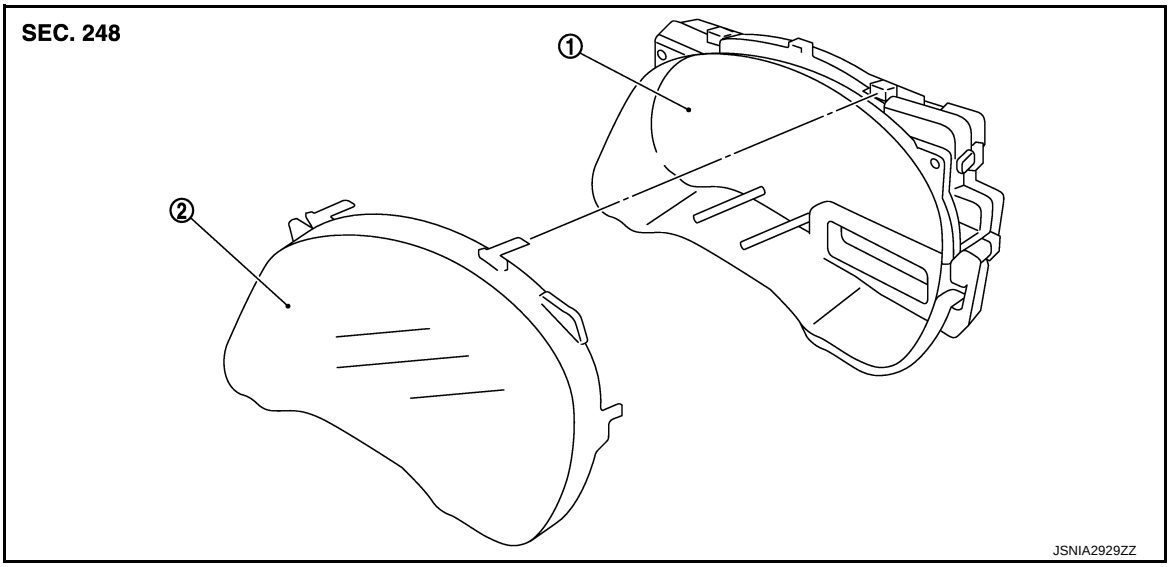

1. Unified meter control unit
2. Front cover

Removal and Installation

INFOID:0000000005883925

REMOVAL

1. Remove the cluster lid A. Refer to IP-13, "Removal and Installation".
2. Remove screws, connector, and clips, and then remove combination meter.Dummy cross-reference("XX-XX")

INSTALLATION

Install in the reverse order of removal.

Disassembly and Assembly

INFOID:0000000005883926

DISASSEMBLY

Disengage the tabs to separate front cover.

ASSEMBLY

Assemble in the reverse order of disassembly.

SECTION PB
PARKING BRAKE SYSTEM

CONTENTS

PERIODIC MAINTENANCE **2**

PARKING BRAKE SYSTEM **2**
Inspection and Adjustment 2

REMOVAL AND INSTALLATION **3**

PARKING BRAKE CONTROL **3**
Exploded View 3
Removal and Installation 3
Adjustment 4

SERVICE DATA AND SPECIFICATIONS (SDS) **5**

SERVICE DATA AND SPECIFICATIONS (SDS) **5**
Parking Brake Control 5

PERIODIC MAINTENANCE

PARKING BRAKE SYSTEM

Inspection and Adjustment

INFOID:0000000006037609

INSPECTION

Lever Stroke

1. Operate the parking brake lever with a force of 196 N (20 kg, 44 lb). Check that the lever stroke is within the specified number of notches. (Check it by listening to the clicks of the ratchet.)

Number of notches **: Refer to PB-5, "Parking Brake Control".**

2. When parking brake warning lamp turns ON, check that the lever stroke is within the specified number of notches. (Check it by listening to the clicks of the ratchet.)

Number of notches **: Refer to PB-5, "Parking Brake Control".**

Inspect Components

- Check each component for installation condition such as looseness.
- Check the parking brake lever assembly for bend, damage and cracks. Replace if necessary.
- Check the cables and equalizer for wear, damage and cracks. Replace if necessary.
- Check the parking brake switch, and replace it if necessary. Refer to BRC-5, "Component Inspection".

ADJUSTMENT

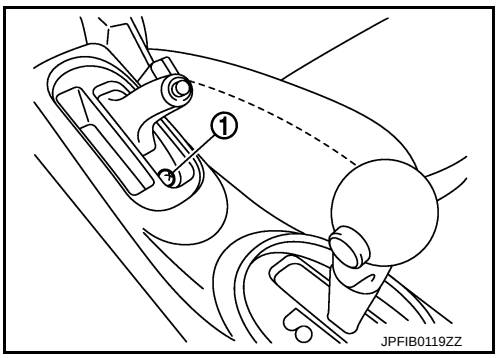

1. Pull parking brake lever until a socket wrench can be inserted to adjusting nut.
2. Turning the adjusting nut with a socket wrench and loosening the front cable.
3. Depress the brake pedal with a force of 196 N (20 kg, 44 lb) about 10 times and adjust the brake shoe clearance.
   CAUTION:
   Make sure to securely operate the brake pedal.
4. Check a drag of rear drum brake. Refer to BR-41, "Inspection and Adjustment".
5. Adjust the cable with the following procedure.

a. Operate and maintain the parking brake lever with a 400 N (41 kg, 90 lb) for 30 minutes or more.

b. Adjust the parking brake lever stroke by turning the adjusting nut with a socket wrench.
   CAUTION:
   Never reuse the adjusting nut if the nut is removed.

c. Operate the parking brake lever with a force of 196 N (20 kg, 44lb). Check that the lever stroke is within the specified number of notches. (Check it by listening to the clicks of the ratchet.)

Number of notches **: Refer to PB-5, "Parking Brake Control".**

d. Rotate the brake drum with the parking brake lever released and check that there is no drag. Refer to BR-41, "Inspection and Adjustment".

REMOVAL AND INSTALLATION

PARKING BRAKE CONTROL

Exploded View

INFOID:0000000006037610

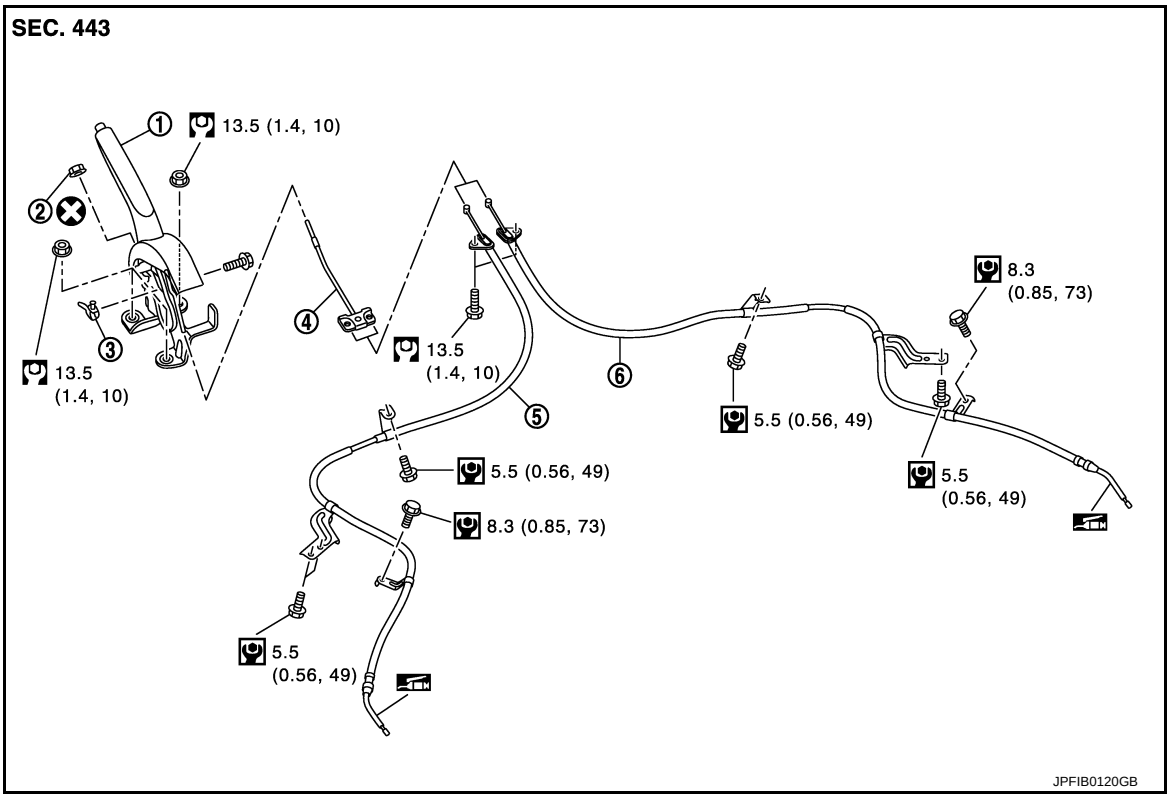

1.	Parking brake lever assembly	2.	Adjusting nut	3.	Parking brake switch
4.	Front cable	5.	Rear cable (LH)	6.	Rear cable (RH)

: Apply multi-purpose grease.

Refer to GI-4, "Components" for symbols not described on the above.

Removal and Installation

INFOID:0000000006037611

REMOVAL

1. Remove rear tires.
2. Remove the center console assembly. Refer to IP-21, "Removal and Installation".
3. Disconnect the parking brake switch harness connector.
4. Remove adjusting nut and loosen front cable.
5. Separate the rear cable from the front cable.
6. Remove the parking brake lever assembly and front cable.
7. Remove the front cable from parking brake lever assembly.
8. Remove the parking brake switch from parking brake lever assembly.
9. Remove brake shoe, and remove rear cable from brake shoe. Refer to BR-39, "Removal and Installation".
10. Remove rear cable mounting bolts, and remove rear cable.

INSTALLATION

Note the following, install in the reverse order of the removal.

- Never reuse adjusting nut.

Adjustment

INFOID:0000000006037612

ADJUSTMENT AFTER INSTALLATION

Adjust the parking brake lever stroke. Refer to PB-2, "Inspection and Adjustment".

SERVICE DATA AND SPECIFICATIONS (SDS)

SERVICE DATA AND SPECIFICATIONS (SDS)

Parking Brake Control

INFOID:0000000006037613

Item	Standard
Number of notches [under force of 196 N (20 kg, 44 lb)]	9 – 10 notches
Number of notches when parking brake warning lamp turns ON	1 notch

SECTION PCS
POWER CONTROL SYSTEM

CONTENTS

IPDM E/R (WITH I-KEY)

PRECAUTION 4

PRECAUTIONS 4
Precaution for Supplemental Restraint System (SRS) "AIR BAG" and "SEAT BELT PRE-TENSIONER" 4

SYSTEM DESCRIPTION 5

COMPONENT PARTS 5
Component Parts Location 5

SYSTEM 6

RELAY CONTROL SYSTEM 6
RELAY CONTROL SYSTEM : System Diagram 6
RELAY CONTROL SYSTEM : System Description 6
RELAY CONTROL SYSTEM : Fail-Safe 7

POWER CONTROL SYSTEM 8
POWER CONTROL SYSTEM : System Diagram 9
POWER CONTROL SYSTEM : System Description 9

SIGNAL BUFFER SYSTEM 9
SIGNAL BUFFER SYSTEM : System Diagram 9
SIGNAL BUFFER SYSTEM : System Description 9

POWER CONSUMPTION CONTROL SYSTEM 9
POWER CONSUMPTION CONTROL SYSTEM : System Diagram 9
POWER CONSUMPTION CONTROL SYSTEM : System Description 10

DIAGNOSIS SYSTEM (IPDM E/R) 11
Diagnosis Description 11
CONSULT-III Function (IPDM E/R) 13

ECU DIAGNOSIS INFORMATION 15

IPDM E/R 15
Reference Value 15
Fail-Safe 20
DTC Index 22

WIRING DIAGRAM 23

IPDM E/R 23
Wiring Diagram 23

DTC/CIRCUIT DIAGNOSIS 24

U1000 CAN COMM CIRCUIT 24
Description 24
DTC Logic 24
Diagnosis Procedure 24

B2098 IGNITION RELAY ON STUCK 25
Description 25
DTC Logic 25
Diagnosis Procedure 25

B2099 IGNITION RELAY OFF STUCK 26
Description 26
DTC Logic 26
Diagnosis Procedure 26

POWER SUPPLY AND GROUND CIRCUIT 27
Diagnosis Procedure 27

REMOVAL AND INSTALLATION 28

IPDM E/R 28
Exploded View 28
Removal and Installation 28

IPDM E/R (WITHOUT I-KEY)

PRECAUTION 29

PRECAUTIONS 29
Precaution for Supplemental Restraint System (SRS) "AIR BAG" and "SEAT BELT PRE-TENSIONER" 29

SYSTEM DESCRIPTION 30

COMPONENT PARTS 30
Component Parts Location 30

SYSTEM 31

RELAY CONTROL SYSTEM 31
RELAY CONTROL SYSTEM : System Diagram ... 31
RELAY CONTROL SYSTEM : System Description 31
RELAY CONTROL SYSTEM : Fail-Safe 32

POWER CONTROL SYSTEM 33
POWER CONTROL SYSTEM : System Diagram... 33
POWER CONTROL SYSTEM : System Description 33

SIGNAL BUFFER SYSTEM 34
SIGNAL BUFFER SYSTEM : System Diagram 34
SIGNAL BUFFER SYSTEM : System Description.. 34

POWER CONSUMPTION CONTROL SYSTEM 34
POWER CONSUMPTION CONTROL SYSTEM : System Diagram 34
POWER CONSUMPTION CONTROL SYSTEM : System Description 34

DIAGNOSIS SYSTEM (IPDM E/R) 36
Diagnosis Description 36
CONSULT-III Function (IPDM E/R) 38

ECU DIAGNOSIS INFORMATION 40

IPDM E/R 40
Reference Value 40
Fail-Safe 44
DTC Index 45

WIRING DIAGRAM 47

IPDM E/R 47
Wiring Diagram 47

DTC/CIRCUIT DIAGNOSIS 48

U1000 CAN COMM CIRCUIT 48
Description 48
DTC Logic 48
Diagnosis Procedure 48

B2098 IGNITION RELAY ON STUCK 49
Description 49
DTC Logic 49
Diagnosis Procedure 49

B2099 IGNITION RELAY OFF STUCK 50
Description 50
DTC Logic 50
Diagnosis Procedure 50

POWER SUPPLY AND GROUND CIRCUIT 51
Diagnosis Procedure 51

REMOVAL AND INSTALLATION 52

IPDM E/R 52
Exploded View 52
Removal and Installation 52

POWER DISTRIBUTION SYSTEM

PRECAUTION 53

PRECAUTIONS 53
Precaution for Supplemental Restraint System (SRS) "AIR BAG" and "SEAT BELT PRE-TENSIONER" 53
Precaution Necessary for Steering Wheel Rotation after Battery Disconnect 53

SYSTEM DESCRIPTION 55

COMPONENT PARTS 55
Component Parts Location 55
Component Description 55
BCM 55
Ignition Relay 55
Accessory Relay 56
Blower Relay 56
Push-Button Ignition Switch 56

SYSTEM 57
System Diagram 57
System Description 57
Fail-safe 58

DIAGNOSIS SYSTEM (BCM) 61

COMMON ITEM 61
COMMON ITEM : CONSULT-III Function (BCM - COMMON ITEM) 61

INTELLIGENT KEY 62
INTELLIGENT KEY : CONSULT-III Function (BCM - INTELLIGENT KEY) 62

ECU DIAGNOSIS INFORMATION 66

BCM 66
List of ECU Reference 66

WIRING DIAGRAM 67

POWER DISTRIBUTION SYSTEM 67
Wiring Diagram 67

BASIC INSPECTION 68

DIAGNOSIS AND REPAIR WORK FLOW 68
Work Flow 68

DTC/CIRCUIT DIAGNOSIS 71

B2553 IGNITION RELAY 71
DTC Logic 71
Diagnosis Procedure 71

Component Inspection 72

B2614 ACC RELAY CIRCUIT 73
DTC Logic 73
Diagnosis Procedure 73
Component Inspection 74

B2615 BLOWER RELAY CIRCUIT 75
DTC Logic 75
Diagnosis Procedure 75
Component Inspection 76

B2616 IGNITION RELAY CIRCUIT 77
DTC Logic 77
Diagnosis Procedure 77
Component Inspection 78

B2618 BCM 79
DTC Logic 79
Diagnosis Procedure 79

B261A PUSH-BUTTON IGNITION SWITCH 80
DTC Logic 80
Diagnosis Procedure 80

B26F1 IGNITION RELAY 82
DTC Logic 82
Diagnosis Procedure 82

B26F2 IGNITION RELAY 84
DTC Logic 84
Diagnosis Procedure 84

B26F6 BCM 86
DTC Logic 86
Diagnosis Procedure 86

PUSH-BUTTON IGNITION SWITCH 87
Component Function Check 87
Diagnosis Procedure 87
Component Inspection 88

PUSH-BUTTON IGNITION SWITCH POSITION INDICATOR 90
Description 90
Component Function Check 90
Diagnosis Procedure 90

SYMPTOM DIAGNOSIS 92

PUSH-BUTTON IGNITION SWITCH DOES NOT OPERATE 92
Description 92
Diagnosis Procedure 92

PUSH-BUTTON IGNITION SWITCH POSITION INDICATOR DOES NOT ILLUMINATE ... 93
Description 93
Diagnosis Procedure 93

REMOVAL AND INSTALLATION 94

PUSH-BUTTON IGNITION SWITCH 94
Exploded View 94
Removal and Installation 94

PRECAUTION

PRECAUTIONS

Precaution for Supplemental Restraint System (SRS) "AIR BAG" and "SEAT BELT PRE-TENSIONER"

INFOID:0000000005984312

The Supplemental Restraint System such as “AIR BAG” and “SEAT BELT PRE-TENSIONER”, used along with a front seat belt, helps to reduce the risk or severity of injury to the driver and front passenger for certain types of collision. Information necessary to service the system safely is included in the “SRS AIR BAG” and “SEAT BELT” of this Service Manual.

WARNING:

- **To avoid rendering the SRS inoperative, which could increase the risk of personal injury or death in the event of a collision which would result in air bag inflation, all maintenance must be performed by an authorized NISSAN/INFINITI dealer.**
- **Improper maintenance, including incorrect removal and installation of the SRS, can lead to personal injury caused by unintentional activation of the system. For removal of Spiral Cable and Air Bag Module, see the “SRS AIR BAG”.**
- **Do not use electrical test equipment on any circuit related to the SRS unless instructed to in this Service Manual. SRS wiring harnesses can be identified by yellow and/or orange harnesses or harness connectors.**

PRECAUTIONS WHEN USING POWER TOOLS (AIR OR ELECTRIC) AND HAMMERS

WARNING:

- **When working near the Air Bag Diagnosis Sensor Unit or other Air Bag System sensors with the ignition ON or engine running, DO NOT use air or electric power tools or strike near the sensor(s) with a hammer. Heavy vibration could activate the sensor(s) and deploy the air bag(s), possibly causing serious injury.**
- **When using air or electric power tools or hammers, always switch the ignition OFF, disconnect the battery, and wait at least 3 minutes before performing any service.**

SYSTEM DESCRIPTION

COMPONENT PARTS

Component Parts Location

INFOID:0000000005914112

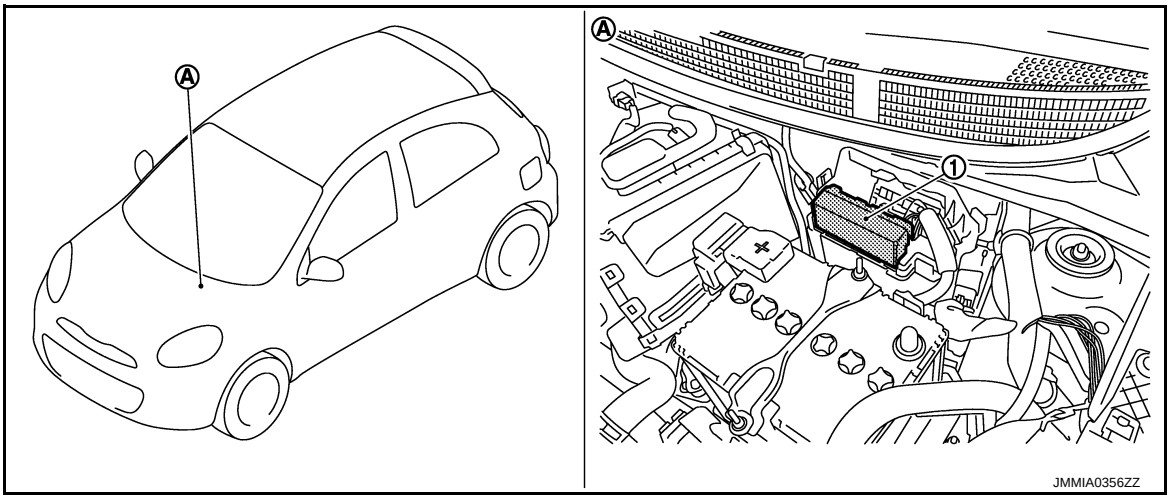

1. IPDM E/R
A. Engine room

SYSTEM

RELAY CONTROL SYSTEM

RELAY CONTROL SYSTEM : System Diagram

INFOID:0000000005914113

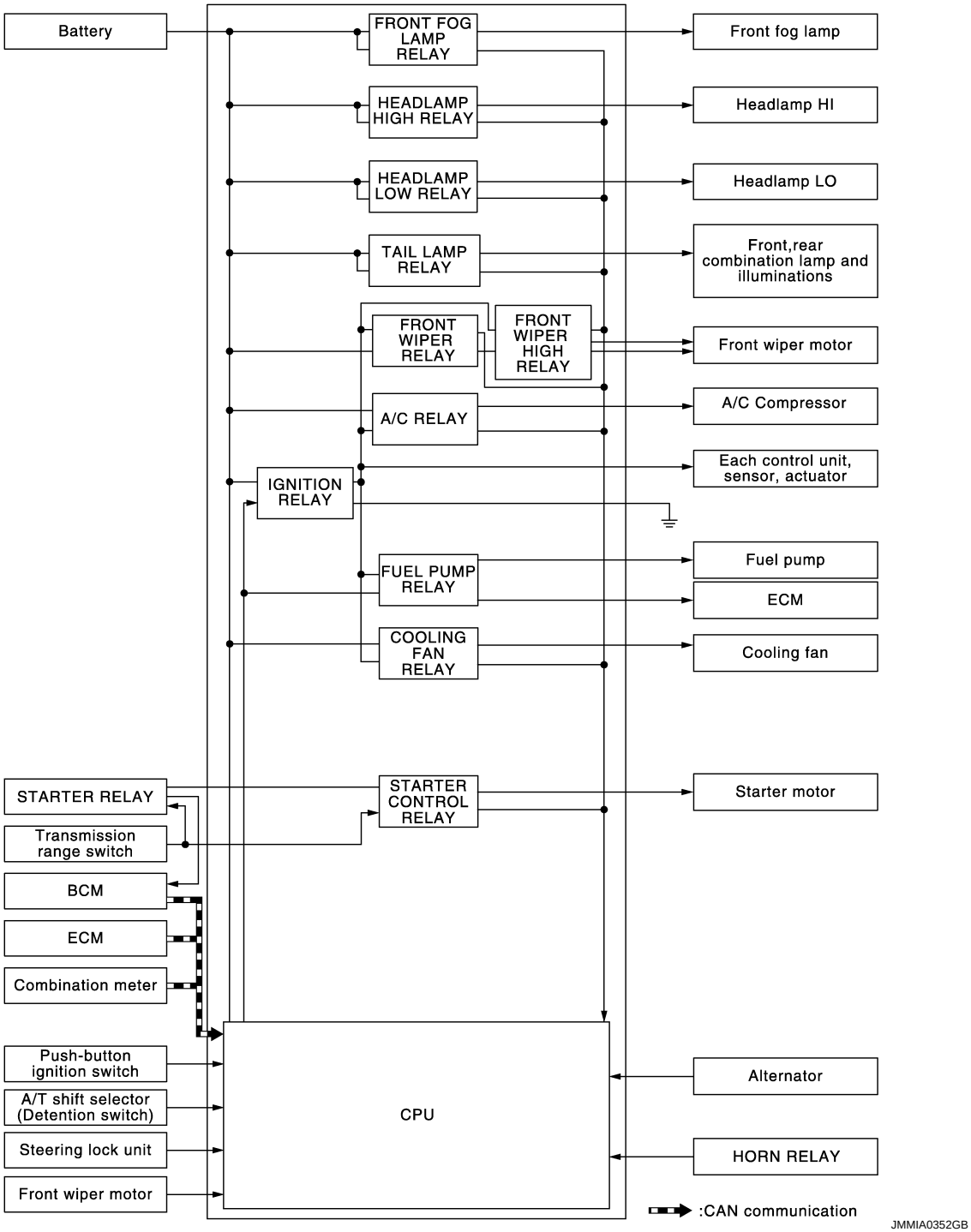

RELAY CONTROL SYSTEM : System Description

INFOID:0000000005914114

IPDM E/R activates the internal control circuit to perform the relay ON-OFF control according to the input signals from various sensors and the request signals received from control units via CAN communication.

CAUTION:

IPDM E/R integrated relays cannot be removed.

Control relay	Input/output	Transmit unit	Control part	Reference page
• Headlamp low relay • Headlamp high relay	• Low beam request signal • High beam request signal	BCM (CAN)	• Headlamp low • Headlamp high	EXL-7
Front fog lamp relay	Front fog lamp request signal	BCM (CAN)	Front fog lamp	EXL-8
Tail lamp relay	Position light request signal	BCM (CAN)	• Parking lamp • License plate lamp • Tail lamp	EXL-9
			Illuminations	INL-7
• Front wiper relay • Front wiper high relay	Front wiper request signal	BCM (CAN)	Front wiper motor	WW-6
	Front wiper stop position signal	Front wiper motor		
Horn relay	Theft warning horn request signal	BCM (CAN)	Horn	DLK-17 (with panic alarm function)
Starter control relay	Starter control relay signal	BCM (CAN)	Starter motor	SEC-10
	Starter relay control signal			
	Steering lock unit condition signal	Steering lock unit		
	Transmission range switch signal	Transmission range switch		
Steering lock relay	Steering lock relay signal	BCM (CAN)	Steering lock unit	SEC-10
	Steering lock unit condition signal	Steering lock unit		
	A/T shift selector (Detention switch)	A/T shift selector (Detention switch)		
Cooling fan relay	Cooling fan speed request signal	ECM (CAN)	Cooling fan	EC-343
A/C relay	A/C compressor request signal	ECM (CAN)	A/C compressor (Magnet clutch)	HAC-13
Ignition relay	Ignition switch ON signal	BCM (CAN)	Each control unit, sensor, actuator and relay (Ignition power supply)	PCS-25
	Vehicle speed signal (Meter)	Combination meter (CAN)		
	Push-button ignition switch signal	Push-button ignition switch		

RELAY CONTROL SYSTEM : Fail-Safe

INFOID:0000000005984314

CAN COMMUNICATION CONTROL

When CAN communication with ECM and BCM is impossible, IPDM E/R performs fail-safe control. After CAN communication recovers normally, it also returns to normal control.

If No CAN Communication Is Available With ECM

Control part	Fail-safe operation
Cooling fan	• The cooling fan relay turn ON when the ignition switch is turned ON (Cooling fan HI operation) • The cooling fan relay turn OFF when the ignition switch is turned OFF
A/C compressor	A/C relay OFF
Alternator	Outputs the power generation command signal (PWM signal) 0%

If No CAN Communication Is Available With BCM

Control part	Fail-safe operation
Headlamp	• Turns ON the headlamp low relay when the ignition switch is turned ON • Turns OFF the headlamp low relay when the ignition switch is turned OFF • Headlamp high relay OFF
• Parking lamps • License plate lamps • Illuminations • Tail lamps	• Turns ON the tail lamp relay when the ignition switch is turned ON • Turns OFF the tail lamp relay when the ignition switch is turned OFF
Front wiper motor	• The status just before activation of fail-safe control is maintained until the ignition switch is turned OFF while the front wiper is operating at LO or HI speed. • The wiper is operated at LO speed until the ignition switch is turned OFF if the fail-safe control is activated while the front wiper is set in the INT mode and the front wiper motor is operating. • Returns automatically wiper to stop position when ignition switch is turned ON if fail-safe control is activated while front wiper motor is operated and wiper stop in the other position than stop position.
Front fog lamps	Front fog lamp relay OFF
Horn	Horn OFF
Ignition relay	The status just before activation of fail-safe is maintained.
Starter motor	Starter control relay OFF
Steering lock unit	Steering lock relay OFF

IGNITION RELAY MALFUNCTION DETECTION FUNCTION

- IPDM E/R monitors the voltage at the contact circuit and excitation coil circuit of the ignition relay inside it.
- IPDM E/R judges the ignition relay error if the voltage differs between the contact circuit and the excitation coil circuit.
- If the ignition relay cannot turn OFF due to contact seizure, it activates the tail lamp relay for 10 minutes to alert the user to the ignition relay malfunction when the ignition switch is turned OFF.

Voltage judgment		IPDM E/R judgment	Operation
Ignition relay contact side	Ignition relay excitation coil side		
ON	ON	Ignition relay ON normal	—
OFF	OFF	Ignition relay OFF normal	—
ON	OFF	Ignition relay ON stuck	• Detects DTC “B2098: IGN RELAY ON” • Turns ON the tail lamp relay for 10 minutes
OFF	ON	Ignition relay OFF stuck	Detects DTC “B2099: IGN RELAY OFF”

FRONT WIPER PROTECTION FUNCTION

IPDM E/R detects front wiper stop position by a front wiper stop position signal.
When a front wiper stop position signal is in the conditions listed below, IPDM E/R stops power supply to wiper after repeating a front wiper 10 seconds activation and 20 seconds stop.

Ignition switch	Front wiper switch	Front wiper stop position signal
ON	OFF	The front wiper stop position signal (stop position) cannot be input for 10 seconds.
	ON	The front wiper stop position signal does not change for 10 seconds.

NOTE:
This operation status can be confirmed on the IPDM E/R “Data Monitor” that displays “BLOCK” for the item “WIP PROT” while the wiper is stopped.

STARTER MOTOR PROTECTION FUNCTION

IPDM E/R turns OFF the starter control relay to protect the starter motor when the starter control relay remains active for 90 seconds.

POWER CONTROL SYSTEM

POWER CONTROL SYSTEM : System Diagram

INFOID:0000000006036745

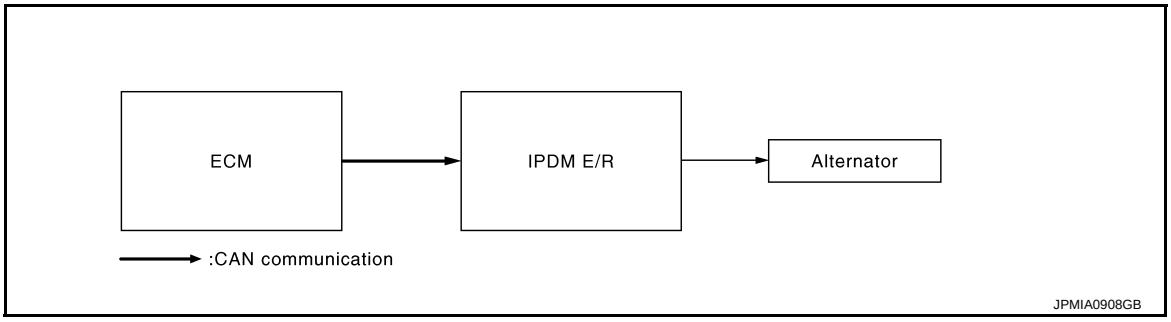

POWER CONTROL SYSTEM : System Description

INFOID:0000000006036746

ALTERNATOR CONTROL

IPDM E/R outputs power generation command signal (PWM signal) to the alternator according to the status of the power generation command value signal received from ECM via CAN communication. Refer to CHG-8, "POWER GENERATION VOLTAGE VARIABLE CONTROL SYSTEM : System Diagram".

SIGNAL BUFFER SYSTEM

SIGNAL BUFFER SYSTEM : System Diagram

INFOID:0000000005914116

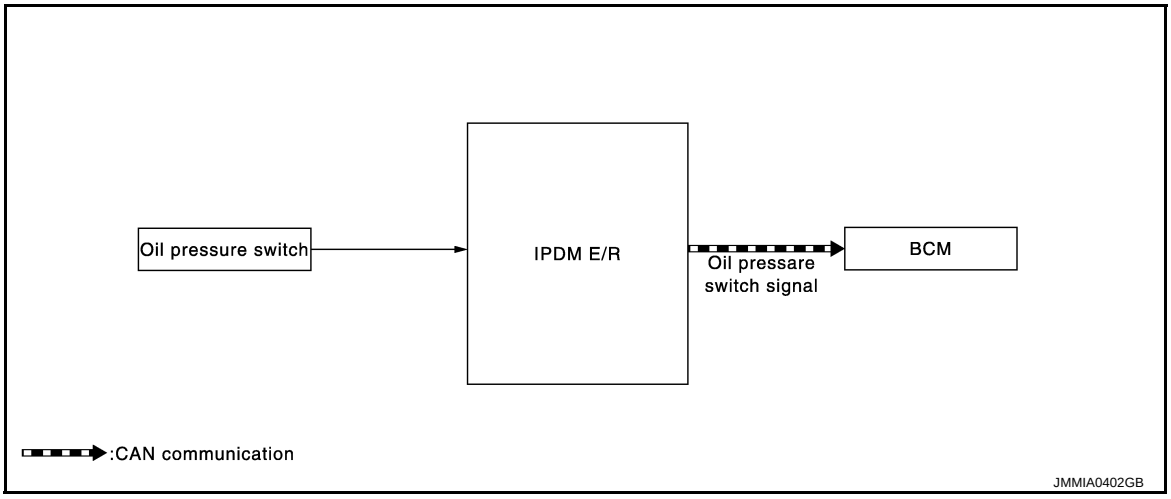

SIGNAL BUFFER SYSTEM : System Description

INFOID:0000000005914117

IPDM E/R reads the status of the oil pressure switch and transmits the oil pressure switch signal to BCM via CAN communication. Refer to MWI-10, "OIL PRESSURE WARNING LAMP : System Diagram".

POWER CONSUMPTION CONTROL SYSTEM

POWER CONSUMPTION CONTROL SYSTEM : System Diagram

INFOID:0000000006053650

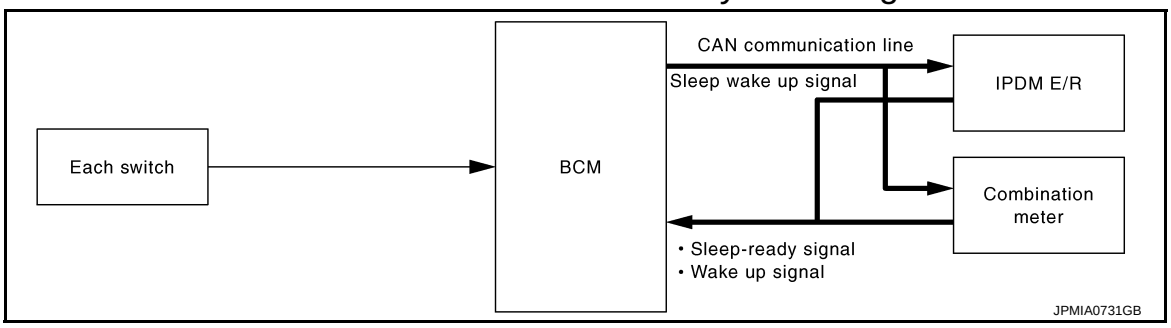

POWER CONSUMPTION CONTROL SYSTEM : System Description

INFOID:0000000005914119

OUTLINE

- IPDM E/R incorporates a power consumption control function that reduces the power consumption according to the vehicle status.
- IPDM E/R changes its status (control mode) with the sleep wake up signal received from BCM via CAN communication.

Normal mode (wake-up)
- CAN communication is normally performed with other control units.
- Individual unit control by IPDM E/R is normally performed.

Low power consumption mode (sleep)
- Low power consumption control is active.
- CAN transmission is stopped.

SLEEP MODE ACTIVATION

- IPDM E/R judges that the sleep-ready conditions are fulfilled when the ignition switch is OFF and none of the conditions below are present. Then it transmits a sleep-ready signal (ready) to BCM via CAN communication.
- Outputting signals to actuators
- Switches or relays operating
- Output requests are being received from control units via CAN communication.
- IPDM E/R stops CAN communication and enters the low power consumption mode when it receives a sleep wake up signal (sleep) from BCM and the sleep-ready conditions are fulfilled.

WAKE-UP OPERATION

- IPDM E/R changes from the low power consumption mode to the normal mode when it receives a sleep wake-up signal (wake up) from BCM or any of the following conditions is fulfilled. In addition, it transmits a sleep-ready signal (not-ready) to BCM via CAN communication to report the CAN communication start.
- Ignition switch ON
- An output request is received from a control unit via CAN communication.

DIAGNOSIS SYSTEM (IPDM E/R)

Diagnosis Description

INFOID:0000000005914120

AUTO ACTIVE TEST

Description

In auto active test, the IPDM E/R sends a drive signal to the following systems to check their operation.

- Oil pressure warning lamp
- Front wiper (LO, HI)
- Parking lamps
- License plate lamps
- Tail lamps
- Front fog lamps
- Headlamps (LO, HI)
- A/C compressor (magnet clutch)
- Cooling fan

Operation Procedure

CAUTION:

Never perform auto active test in the following conditions.

- **Engine is running**
- **CONSULT-III is connected**

1. Close the hood and lift the wiper arms from the windshield. (Prevent windshield damage due to wiper operation)
   NOTE:
   When auto active test is performed with hood opened, sprinkle water on windshield beforehand.
2. Turn the ignition switch OFF.
3. Turn the ignition switch ON, and within 20 seconds, press the driver door switch 10 times. Then turn the ignition switch OFF.
   CAUTION:
   Close passenger door.
4. Turn the ignition switch ON within 10 seconds. After that the horn sounds once and the auto active test starts.
   CAUTION:
   Engine starts when ignition switch is turned ON while brake pedal is depressed.
5. The oil pressure warning lamp starts blinking when the auto active test starts.
6. After a series of the following operations is repeated 3 times, auto active test is completed.

NOTE:

- When auto active test has to be cancelled halfway through test, turn the ignition switch OFF.
- When auto active test is not activated, door switch may be the cause. Check door switch. Refer to DLK-58, "Component Function Check".

Inspection in Auto Active Test

When auto active test is actuated, the following operation sequence is repeated 3 times.

Operation sequence	Inspection location	Operation
1	Oil pressure warning lamp	Blinks continuously during operation of auto active test
2	Front wiper	LO for 5 seconds → HI for 5 seconds
3	• Parking lamps • License plate lamps • Tail lamps • Front fog lamps	10 seconds
4	Headlamps	LO for 10 seconds →HI ON ⇔ OFF 5 times
5	A/C compressor (magnet clutch)	ON ⇔ OFF 5 times
6	Cooling fan	LO for 5 seconds → MID for 3 seconds → HI for 2 seconds

Concept of Auto Active Test

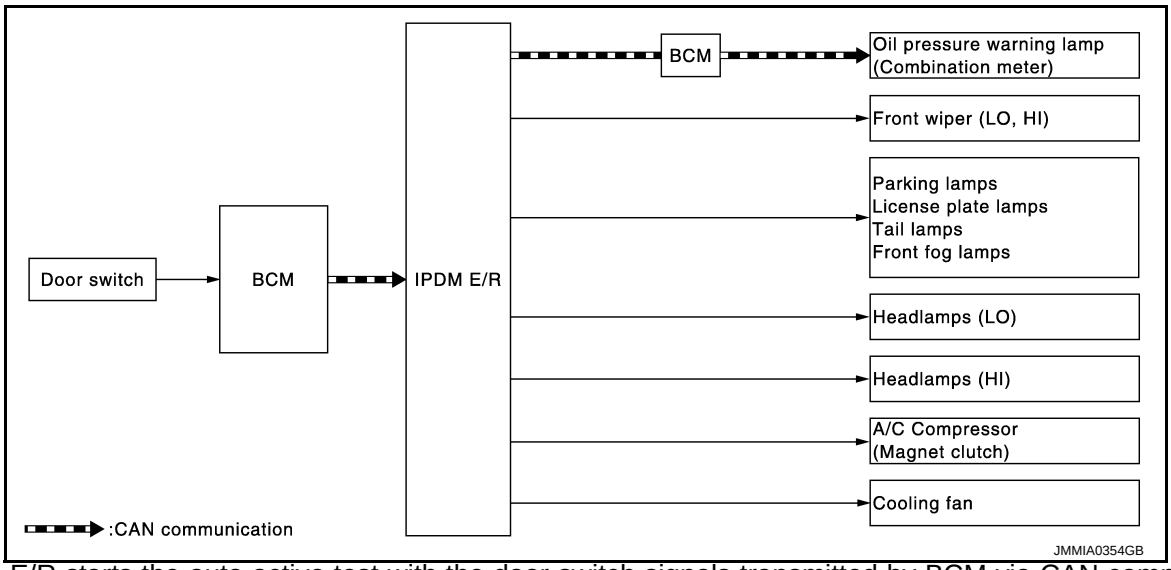

- IPDM E/R starts the auto active test with the door switch signals transmitted by BCM via CAN communication. Therefore, the CAN communication line between IPDM E/R and BCM is considered normal if the auto active test starts successfully.
- The auto active test facilitates troubleshooting if any systems controlled by IPDM E/R cannot be operated.

Diagnosis Chart in Auto Active Test

Symptom	Inspection contents		Possible cause
Any of the following components do not operate • Parking lamps • License plate lamps • Tail lamps • Front fog lamps • Headlamps (HI, LO) • Front wiper (HI, LO)	Perform auto active test. Does the applicable system operate?	YES	BCM signal input circuit
		NO	• Lamp or motor • Lamp or motor ground circuit • Harness or connector between IPDM E/R and applicable system • IPDM E/R
A/C compressor does not operate	Perform auto active test. Does the magnet clutch operate?	YES	• BCM signal input circuit • CAN communication signal between BCM and ECM • CAN communication signal between ECM and IPDM E/R
		NO	• Magnet clutch • Harness or connector between IPDM E/R and magnet clutch • IPDM E/R
Oil pressure warning lamp does not operate	Perform auto active test. Does the oil pressure warning lamp blink?	YES	• Harness or connector between IPDM E/R and oil pressure switch • Oil pressure switch • IPDM E/R
		NO	• CAN communication signal between IPDM E/R and BCM • CAN communication signal between BCM and combination meter • Combination meter
Cooling fan does not operate	Perform auto active test. Does the cooling fan operate?	YES	• ECM signal input circuit • CAN communication signal between ECM and IPDM E/R
		NO	• Cooling fan motor • Harness or connector between IPDM E/R and cooling fan motor • IPDM E/R

CONSULT-III Function (IPDM E/R)

INFOID:0000000005914121

APPLICATION ITEM

CONSULT-III performs the following functions via CAN communication with IPDM E/R.

Diagnosis mode	Description
Ecu Identification	Allows confirmation of IPDM E/R part number.
Self Diagnostic Result	Displays the diagnosis results judged by IPDM E/R.
Data Monitor	Displays the real-time input/output data from IPDM E/R input/output data.
Active Test	IPDM E/R can provide a drive signal to electronic components to check their operations.
CAN Diag Support Monitor	The results of transmit/receive diagnosis of CAN communication can be read.

SELF DIAGNOSTIC RESULT

Refer to PCS-22, "DTC Index".

DATA MONITOR

Monitor item

Monitor Item [Unit]	MAIN SIG-NALS	Description
MOTOR FAN REQ [1/2/3/4]	×	Displays the value of the cooling fan speed request signal received from ECM via CAN communication.
AC COMP REQ [Off/On]	×	Displays the status of the A/C compressor request signal received from ECM via CAN communication.
TAIL&CLR REQ [Off/On]	×	Displays the status of the position light request signal received from BCM via CAN communication.
HL LO REQ [Off/On]	×	Displays the status of the low beam request signal received from BCM via CAN communication.
HL HI REQ [Off/On]	×	Displays the status of the high beam request signal received from BCM via CAN communication.
FR FOG REQ [Off/On]	×	Displays the status of the front fog light request signal received from BCM via CAN communication.
FR WIP REQ [Stop/1LOW/Low/Hi]	×	Displays the status of the front wiper request signal received from BCM via CAN communication.
WIP AUTO STOP [STOP P/ACT P]	×	Displays the status of the front wiper stop position signal judged by IPDM E/R.
WIP PROT [Off/BLOCK]	×	Displays the status of the front wiper fail-safe operation judged by IPDM E/R.
IGN RLY1 -REQ [Off/On]		Displays the status of the ignition switch ON signal received from BCM via CAN communication.
IGN RLY [Off/On]	×	Displays the status of the ignition relay judged by IPDM E/R.
PUSH SW [Off/On]		Displays the status of the push-button ignition switch judged by IPDM E/R.
INTER/NP SW [Off/On]		Displays the status of the shift position judged by IPDM E/R.
ST RLY CONT [Off/On]		Displays the status of the starter relay status signal received from BCM via CAN communication.
IHBT RLY -REQ [Off/On]		Displays the status of the starter control relay signal received from BCM via CAN communication.
ST/INHI RLY [Off/ ST ON/INHI ON/UNKWN]		Displays the status of the starter relay and starter control relay judged by IPDM E/R.
DETENT SW [Off/On]		Displays the status of the A/T shift selector (detention switch) judged by IPDM E/R.

Monitor Item [Unit]	MAIN SIGNALS	Description
S/L RLY -REQ [Off/On]		Displays the status of the steering lock relay signal received from BCM via CAN communication.
S/L STATE [LOCK/UNLK/UNKWN]		Displays the status of the steering lock judged by IPDM E/R.
DTRL REQ [Off/On]		**NOTE:** This item is indicated, but not monitored.
OIL P SW [Open/Close]		Displays the status of the oil pressure switch judged by IPDM E/R.
HOOD SW [Off/On]		**NOTE:** This item is indicated, but not monitored
HL WASHER REQ [Off/On]		**NOTE:** This item is indicated, but not monitored.
THFT HRN REQ [Off/On]		Displays the status of the theft warning horn request signal received from BCM via CAN communication.
HORN CHIRP [Off/On]		**NOTE:** This item is indicated, but not monitored.

ACTIVE TEST

Test item

Test item	Operation	Description
CORNERING LAMP	LH	**NOTE:** This item is indicated, but cannot be tested.
	RH	
HORN	On	Operates horn relay for 20 ms.
FRONT WIPER	Off	OFF
	Lo	Operates the front wiper relay.
	Hi	Operates the front wiper relay and front wiper high relay.
MOTOR FAN	1	OFF
	2	Operates the cooling fan relay (LO operation).
	3	Operates the cooling fan relay (MID operation).
	4	Operates the cooling fan relay (HI operation).
HEAD LAMP WASHER	Off	**NOTE:** This item is indicated, but cannot be tested.
EXTERNAL LAMPS	Off	OFF
	TAIL	Operates the tail lamp relay.
	Lo	Operates the headlamp low relay.
	Hi	Operates the headlamp low relay and ON/OFF the headlamp high relay at 1 second intervals.
	Fog	Operates the front fog lamp relay.

ECU DIAGNOSIS INFORMATION

IPDM E/R

Reference Value

INFOID:0000000005914122

VALUES ON THE DIAGNOSIS TOOL

Monitor Item	Condition		Value/Status
MOTOR FAN REQ	Engine idle speed	Changes depending on engine coolant temperature, air conditioner operation status, vehicle speed, etc.	1/2/3/4
AC COMP REQ	Engine running	A/C switch OFF	Off
		A/C switch ON (Compressor is operating)	On
TAIL&CLR REQ	Lighting switch OFF		Off
	Lighting switch 1ST, 2ND or AUTO (Light is illuminated)		On
HL LO REQ	Lighting switch OFF		Off
	Lighting switch 2ND or AUTO (Light is illuminated)		On
HL HI REQ	Lighting switch 2ND or AUTO (Light is illuminated)	Lighting switch other than HI and PASS	Off
		Lighting switch HI or PASS	On
FR FOG REQ	Lighting switch 2ND or AUTO (Light is illuminated)	Front fog lamp switch OFF	Off
		Front fog lamp switch ON	On
FR WIP REQ	Ignition switch ON	Front wiper switch OFF	Stop
		Front wiper switch INT	1LOW
		Front wiper switch LO	Low
		Front wiper switch HI	Hi
WIP AUTO STOP	Ignition switch ON	Front wiper stop position	STOP P
		Any position other than front wiper stop position	ACT P
WIP PROT	Ignition switch ON	Front wiper operates normally.	Off
		Front wiper stops at fail-safe operation.	BLOCK
IGN RLY1 -REQ	Ignition switch OFF or ACC		Off
	Ignition switch ON		On
IGN RLY	Ignition switch OFF or ACC		Off
	Ignition switch ON		On
PUSH SW	Release the push-button ignition switch		Off
	Press the push-button ignition switch		On
INTER/NP SW	Ignition switch ON	Selector lever in any position other than P or N	Off
		Selector lever in P or N position	On
ST RLY CONT	Ignition switch ON		Off
	At engine cranking		On
IHBT RLY -REQ	Ignition switch ON		Off
	At engine cranking		On

Monitor Item	Condition		Value/Status
ST/INHI RLY	Ignition switch ON		Off
	At engine cranking		INHI ON → ST ON
	The status of starter relay or starter control relay cannot be recognized by the battery voltage malfunction, etc. when the starter relay is ON and the starter control relay is OFF.		UNKWN
DETENT SW	Ignition switch ON	• Pull the selector lever with selector lever in P position. • Selector lever in any position other than P.	Off
	Release the selector lever with selector lever in P position.		On
S/L RLY -REQ	None of the conditions below are present.		Off
	• Open the driver door after the ignition switch is turned OFF (for a few seconds). • Press the push-button ignition switch when the steering lock is activated.		On
S/L STATE	Steering lock is locked.		LOCK
	Steering lock is unlocked.		UNLK
	[DTC: B210A] is detected.		UNKWN
DTRL REQ	**NOTE:** This item is indicated, but not monitored.		Off
OIL P SW	Ignition switch OFF, ACC or engine running		Open
	Ignition switch ON		Close
HOOD SW	**NOTE:** This item is indicated, but not monitored.		Off
HL WASHER REQ	**NOTE:** This item is indicated, but not monitored.		Off
THFT HRN REQ	Not operation		Off
	Panic alarm is activated		On
HORN CHIRP	**NOTE:** This item is indicated, but not monitored.		Off

TERMINAL LAYOUT

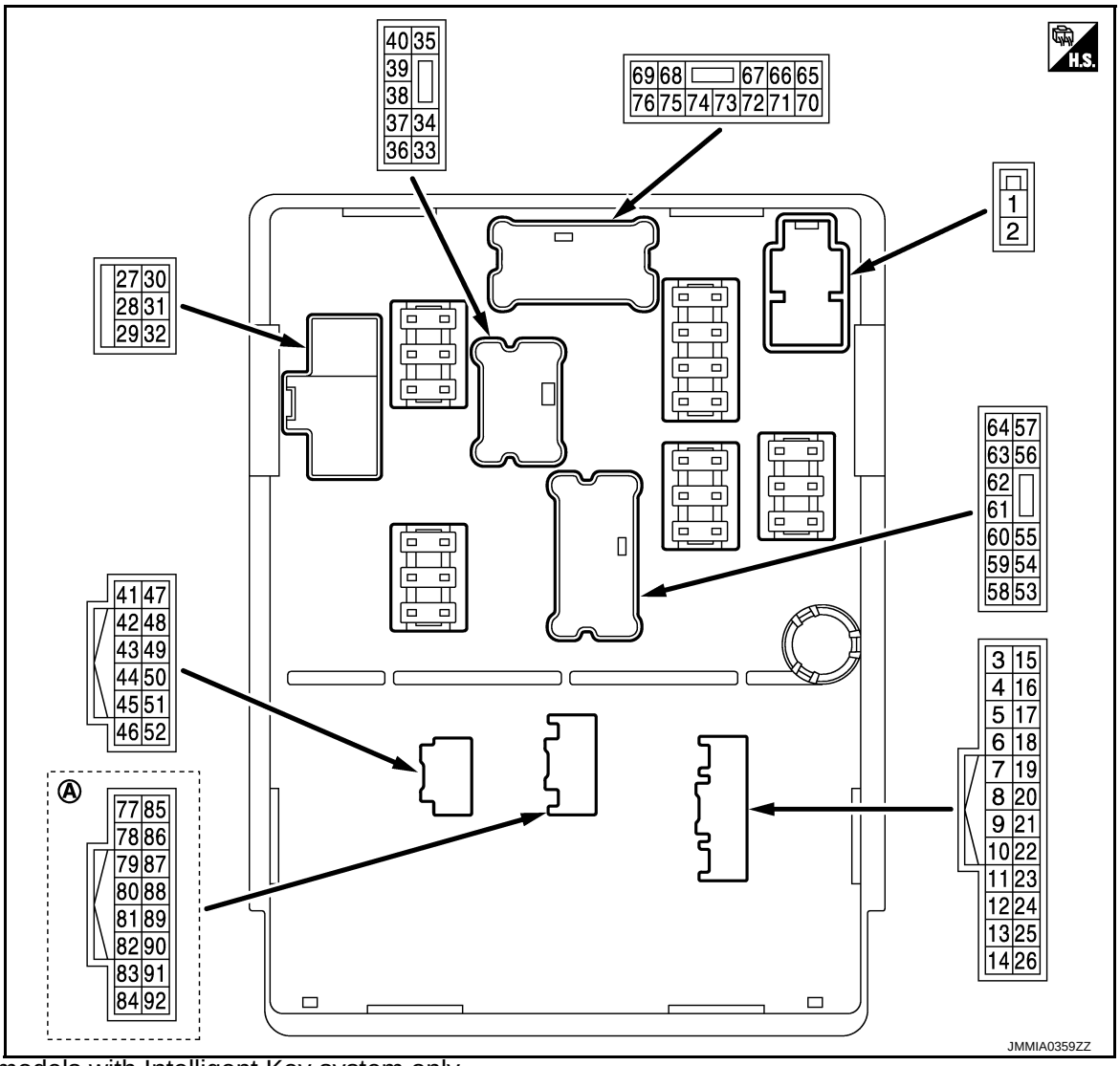

A: For models with Intelligent Key system only

PHYSICAL VALUES

Terminal NO. (Wire color)		Description		Condition		Value (Approx.)
+	–	Signal name	Input/ Output			
1 (R)	Ground	Battery power supply	Input	Ignition switch OFF		Battery voltage
2 (Y)	Ground	Battery power supply	Input	Ignition switch OFF		Battery voltage
10 (B)	Ground	Ground	—	Ignition switch ON		0 V
11 (P)	Ground	CAN-L	Input/ Output	—		—
12 (L)	Ground	CAN-H	Input/ Output	—		—
21 (P)	Ground	Front fog lamp relay control	Output	Lighting switch 2ND	Front fog lamp switch OFF	Battery voltage
					Front fog lamp switch ON	0 V

Terminal NO. (Wire color)		Description		Condition		Value (Approx.)
+	–	Signal name	Input/ Output			
23 (SB)	Ground	Horn relay control	Output	The horn is deactivated		Battery voltage
				The horn is activated		0 V
24 (V)	Ground	Front wiper stop position	Input	Ignition switch ON	Front wiper stop position	0 V
					Any position other than front wiper stop position	Battery voltage
27 (SB)	Ground	Ignition relay power supply	Output	Ignition switch OFF		0 V
				Ignition switch ON		Battery voltage
30 (R)	Ground	Starter motor	Output	Ignition switch ON		0 V
				At engine cranking		Battery voltage
31 (P)	Ground	Cooling fan relay power supply	Output	Cooling fan OFF		0 V
				Cooling fan operated		Battery voltage
32 (G)	Ground	Battery power supply	Input	Ignition switch OFF		Battery voltage
33 (BR)	Ground	Fuel pump	Output	• Approximately 1 second after turning the ignition switch ON • Engine running		0 - 1.5 V
				Approximately 1 second or more after turning the ignition switch ON		Battery voltage
35 (G)	Ground	ECM relay power supply	Output	Ignition switch OFF (More than a few seconds after turning ignition switch OFF)		0 V
				• Ignition switch ON • Ignition switch OFF (For a few seconds after turning ignition switch OFF)		Battery voltage
38 (L)	Ground	Headlamp LO (LH)	Output	Ignition switch ON	Lighting switch OFF	0 V
					Lighting switch 2ND	Battery voltage
39 (LG)	Ground	Starter relay	Output	Ignition switch ON		0 V
				At engine cranking		Battery voltage
40 (P)	Ground	Headlamp LO (RH)	Output	Ignition switch ON	Lighting switch OFF	0 V
					Lighting switch 2ND	Battery voltage
42 (LG)	Ground	Oil pressure switch	Input	Ignition switch ON	Engine stopped	0 V
					Engine running	Battery voltage
43 (GR)	Ground	Fuel pump relay control	Output	• Approximately 1 second after turning the ignition switch ON • Engine running		0 - 1.0 V
				Approximately 1 second or more after turning the ignition switch ON		Battery voltage
47 (R/W)	Ground	ECM power supply	Output	Ignition switch OFF (More than a few seconds after turning ignition switch OFF)		0 V
				• Ignition switch ON • Ignition switch OFF (For a few seconds after turning ignition switch OFF)		Battery voltage

Terminal NO. (Wire color)		Description		Condition		Value (Approx.)
+	–	Signal name	Input/ Output			
50 (P)	Ground	ECM relay control	Output	Ignition switch OFF (More than a few seconds after turning ignition switch OFF)		0 - 1.0 V
				• Ignition switch ON • Ignition switch OFF (For a few seconds after turning ignition switch OFF)		Battery voltage
53 (LG)	Ground	Front wiper LO	Output	Ignition switch ON	Front wiper switch OFF	0 V
					Front wiper switch LO	Battery voltage
54 (GR)	Ground	Front wiper HI	Output	Ignition switch ON	Front wiper switch OFF	0 V
					Front wiper switch HI	Battery voltage
55 (B)	Ground	Ground	—	Ignition switch ON		0 V
56 (BR)	Ground	ABS actuator and electric unit (control unit) power supply	Output	Ignition switch OFF		Battery voltage
57 (R)	Ground	TCM power supply	Output	Ignition switch OFF		Battery voltage
58 (P)	Ground	Illuminations	Output	Ignition switch ON	Lighting switch OFF	0 V
					Lighting switch 1ST	Battery voltage
59 (R)	Ground	Tail lamp	Output	Ignition switch ON	Lighting switch OFF	0 V
					Lighting switch 1ST	Battery voltage
61 (G)	Ground	Headlamp HI (LH)	Output	Ignition switch ON	Lighting switch OFF	0 V
					• Lighting switch HI • Lighting switch PASS	Battery voltage
63 (Y)	Ground	Headlamp HI (RH)	Output	Ignition switch ON	Lighting switch OFF	0 V
					• Lighting switch HI • Lighting switch PASS	Battery voltage
64 (V)	Ground	A/C relay power supply	Output	Engine running	A/C switch OFF	0 V
					A/C switch ON (A/C compressor is operating)	Battery voltage
65 (L/W)	Ground	Throttle control motor relay power supply	Output	Ignition switch OFF (More than a few seconds after turning ignition switch OFF)		0 V
				• Ignition switch ON • Ignition switch OFF (For a few seconds after turning ignition switch OFF)		Battery voltage
68 (G/W)	Ground	Throttle control motor relay control	Output	Ignition switch ON → OFF		0 – 1.0 V ↓ Battery voltage ↓ 0 V
				Ignition switch ON		0 – 1.0 V
70 (Y)	Ground	Ignition relay power supply	Output	Ignition switch OFF		0 V
				Ignition switch ON		Battery voltage
71 (BR)	Ground	ECM power supply	Output	Ignition switch OFF		Battery voltage

Terminal NO. (Wire color)		Description		Condition		Value (Approx.)
+	–	Signal name	Input/ Output			
72 (SB)	Ground	ECM power supply	Output	Ignition switch OFF (More than a few seconds after turning ignition switch OFF)		0 V
				• Ignition switch ON • Ignition switch OFF (For a few seconds after turning ignition switch OFF)		Battery voltage
75 (R)	Ground	ECM relay power supply	Output	Ignition switch OFF (More than a few seconds after turning ignition switch OFF)		0 V
				• Ignition switch ON • Ignition switch OFF (For a few seconds after turning ignition switch OFF)		Battery voltage
76 (BR)	Ground	Transmission range switch	Input	Select lever in any position other than P or N (Ignition switch ON)		0 V
				Select lever P or N (Ignition switch ON)		Battery voltage
80 (R)	Ground	A/T shift selector (Detention switch)	Input	Ignition switch ON	Select lever P	0 V
					Select lever in any position other than P	Battery voltage
81 (SB)	Ground	Push-button ignition switch	Input	Press the push-button ignition switch		0 V
				Release the push-button ignition switch		Battery voltage
82 (SB)	Ground	Steering lock relay control	Output	Steering lock is unlocked		Battery voltage
				Steering lock is locked		0 V
87 (BG)	Ground	Steering lock unit power supply	Output	Ignition switch OFF	A few seconds after opening the driver door	Battery voltage
				Ignition switch LOCK	Press the push-button ignition switch	Battery voltage
				Ignition switch ACC or ON		0 V
88 (GR)	Ground	Steering lock unit condition-1	Input	Steering lock is unlocked		Battery voltage
				Steering lock is locked		0 V
89 (P)	Ground	Steering lock unit condition-2	Input	Steering lock is unlocked		0 V
				Steering lock is locked		Battery voltage
90 (L)	Ground	Ignition relay power supply	Input	Ignition switch OFF or ACC		Battery voltage
				Ignition switch ON		0 V

Fail-Safe

INFOID:0000000005914123

CAN COMMUNICATION CONTROL

When CAN communication with ECM and BCM is impossible, IPDM E/R performs fail-safe control. After CAN communication recovers normally, it also returns to normal control.

If No CAN Communication Is Available With ECM

Control part	Fail-safe operation
Cooling fan	• The cooling fan relay turn ON when the ignition switch is turned ON (Cooling fan HI operation) • The cooling fan relay turn OFF when the ignition switch is turned OFF
A/C compressor	A/C relay OFF
Alternator	Outputs the power generation command signal (PWM signal) 0%

If No CAN Communication Is Available With BCM

Control part	Fail-safe operation
Headlamp	• Turns ON the headlamp low relay when the ignition switch is turned ON • Turns OFF the headlamp low relay when the ignition switch is turned OFF • Headlamp high relay OFF
• Parking lamps • License plate lamps • Illuminations • Tail lamps	• Turns ON the tail lamp relay when the ignition switch is turned ON • Turns OFF the tail lamp relay when the ignition switch is turned OFF
Front wiper motor	• The status just before activation of fail-safe control is maintained until the ignition switch is turned OFF while the front wiper is operating at LO or HI speed. • The wiper is operated at LO speed until the ignition switch is turned OFF if the fail-safe control is activated while the front wiper is set in the INT mode and the front wiper motor is operating. • Returns automatically wiper to stop position when ignition switch is turned ON if fail-safe control is activated while front wiper motor is operated and wiper stop in the other position than stop position.
Front fog lamps	Front fog lamp relay OFF
Horn	Horn OFF
Ignition relay	The status just before activation of fail-safe is maintained.
Starter motor	Starter control relay OFF
Steering lock unit	Steering lock relay OFF

IGNITION RELAY MALFUNCTION DETECTION FUNCTION

- IPDM E/R monitors the voltage at the contact circuit and excitation coil circuit of the ignition relay inside it.
- IPDM E/R judges the ignition relay error if the voltage differs between the contact circuit and the excitation coil circuit.
- If the ignition relay cannot turn OFF due to contact seizure, it activates the tail lamp relay for 10 minutes to alert the user to the ignition relay malfunction when the ignition switch is turned OFF.

Voltage judgment		IPDM E/R judgment	Operation
Ignition relay contact side	Ignition relay excitation coil side		
ON	ON	Ignition relay ON normal	—
OFF	OFF	Ignition relay OFF normal	—
ON	OFF	Ignition relay ON stuck	• Detects DTC “B2098: IGN RELAY ON” • Turns ON the tail lamp relay for 10 minutes
OFF	ON	Ignition relay OFF stuck	Detects DTC “B2099: IGN RELAY OFF”

FRONT WIPER PROTECTION FUNCTION

IPDM E/R detects front wiper stop position by a front wiper stop position signal.
When a front wiper stop position signal is in the conditions listed below, IPDM E/R stops power supply to wiper after repeating a front wiper 10 seconds activation and 20 seconds stop.

Ignition switch	Front wiper switch	Front wiper stop position signal
ON	OFF	The front wiper stop position signal (stop position) cannot be input for 10 seconds.
	ON	The front wiper stop position signal does not change for 10 seconds.

NOTE:

This operation status can be confirmed on the IPDM E/R “Data Monitor” that displays “BLOCK” for the item “WIP PROT” while the wiper is stopped.

STARTER MOTOR PROTECTION FUNCTION

IPDM E/R turns OFF the starter control relay to protect the starter motor when the starter control relay remains active for 90 seconds.

DTC Index

INFOID:0000000005914124

NOTE:
- The details of time display are as follows.
- CRNT: A malfunction is detected now.
- PAST: A malfunction was detected in the past.
- IGN counter is displayed on FFD (Freeze Frame data).
- The number is 0 when is detected now.
- The number increases like 1 → 2 ··· 38 → 39 after returning to the normal condition whenever IGN OFF → ON.
- The number is fixed to 39 until the self-diagnosis results are erased if it is over 39.

×: Applicable

CONSULT display	Fail-safe	Refer to
No DTC is detected. further testing may be required.	—	—
U1000: CAN COMM CIRCUIT	×	PCS-24
B2098: IGN RELAY ON	×	PCS-25
B2099: IGN RELAY OFF	—	PCS-26
B2108: S/L RELAY ON	—	SEC-104
B2109: S/L RELAY OFF	—	SEC-106
B210A: S/L STATE SW	—	SEC-109
B210B: PNP RELAY ON	—	SEC-111
B210C: PNP RELAY OFF	—	SEC-112
B210D: STARTER RELAY ON	—	SEC-113
B210E: STARTER RELAY OFF	—	SEC-115
B210F: INTRLCK/PNP SW ON	—	SEC-118
B2110: INTRLCK/PNP SW OFF	—	SEC-120

WIRING DIAGRAM

IPDM E/R

Wiring Diagram

INFOID:0000000005914125

For connector terminal arrangements, harness layouts, and alphabets in a ⬡ (option abbreviation; if not described in wiring diagram), refer to GI-12, "Connector Information".

配線図待ち

DTC/CIRCUIT DIAGNOSIS

U1000 CAN COMM CIRCUIT

Description

INFOID:0000000005914126

CAN (Controller Area Network) is a serial communication line for real time applications. It is an on-vehicle multiplex communication line with high data communication speed and excellent error detection ability. Modern vehicle is equipped with many electronic control unit, and each control unit shares information and links with other control units during operation (not independent). In CAN communication, control units are connected with 2 communication lines (CAN-H line, CAN-L line) allowing a high rate of information transmission with less wiring. Each control unit transmits/receives data but selectively reads required data only.
CAN Communication Signal Chart. Refer to LAN-23, "CAN COMMUNICATION SYSTEM : CAN Communication Signal Chart".

DTC Logic

INFOID:0000000005914127

DTC DETECTION LOGIC

DTC	CONSULT-III display description	DTC Detection Condition	Possible cause
U1000	CAN COMM CIRCUIT	When IPDM E/R cannot communicate CAN communication signal continuously for 2 seconds or more	CAN communication system

Diagnosis Procedure

INFOID:0000000005914128

1. PERFORM SELF DIAGNOSTIC

1. Turn the ignition switch ON and wait for 2 seconds or more.
2. Check “Self Diagnostic Result” of IPDM E/R.

Is DTC “U1000” displayed?

YES >> Refer to LAN-14, "Trouble Diagnosis Flow Chart".
NO >> Refer to GI-33, "Intermittent Incident".

B2098 IGNITION RELAY ON STUCK

Description

INFOID:0000000005914129

- IPDM E/R operates the ignition relay when it receives an ignition switch ON signal from BCM via CAN communication.
- Turn the ignition relay OFF by pressing the push-button ignition switch once when the vehicle speed is 4 km/h (2.5 MPH) or less.
- Turn the ignition relay OFF with the following operation when the vehicle speed is more than 4 km/h (2.5 MPH) or when an abnormal condition occurs in CAN communication from the combination meter (Emergency OFF)

- Press and hold the push-button ignition switch for 2 seconds or more.
- Press the push-button ignition switch 3 times within 1.5 seconds.

NOTE:
The ignition relay does not turn ON for 3 seconds after emergency OFF even if the push-button ignition switch is pressed.

DTC Logic

INFOID:0000000005914130

DTC DETECTION LOGIC

DTC	CONSULT-III display description	DTC Detection Condition	Possible causes
B2098	IGN RELAY ON	The ignition relay ON is detected for 1 second at ignition switch OFF (CPU monitors the status at the contact and excitation coil circuits of the ignition relay inside it)	Ignition relay malfunction

Diagnosis Procedure

INFOID:0000000005914131

1. PERFORM SELF DIAGNOSIS

1. Turn the ignition switch ON.
2. Erase “Self Diagnostic Result” of IPDM E/R.
3. Turn the ignition switch OFF, and wait for 1 second or more.
4. Turn the ignition switch ON. Check “Self Diagnostic Result” again.

Is DTC “B2098” displayed?

YES >> Replace IPDM E/R. Refer to PCS-28, "Removal and Installation".
NO >> Refer to GI-33, "Intermittent Incident".

B2099 IGNITION RELAY OFF STUCK

Description

INFOID:0000000005914132

- IPDM E/R operates the ignition relay when it receives an ignition switch ON signal from BCM via CAN communication.
- Turn the ignition relay OFF by pressing the push-button ignition switch once when the vehicle speed is 4 km/h (2.5 MPH) or less.
- Turn the ignition relay OFF with the following operation when the vehicle speed is more than 4 km/h (2.5 MPH) or when an abnormal condition occurs in CAN communication from the combination meter (Emergency OFF)

- Press and hold the push-button ignition switch for 2 seconds or more.
- Press the push-button ignition switch 3 times within 1.5 seconds.

NOTE:
The ignition relay does not turn ON for 3 seconds after emergency OFF even if the push-button ignition switch is pressed.

DTC Logic

INFOID:0000000005914133

DTC DETECTION LOGIC

DTC	CONSULT-III display description	DTC Detection Condition	Possible causes
B2099	IGN RELAY OFF	The ignition relay OFF is detected for 1 second at ignition switch ON (CPU monitors the status at the contact and excitation coil circuits of the ignition relay inside it)	Ignition relay malfunction

NOTE:
When IPDM E/R power supply voltage is low (Approx. 7 - 8 V for about 1 second), the “DTC: B2099” may be detected.

Diagnosis Procedure

INFOID:0000000005914134

1. PERFORM SELF DIAGNOSIS

1. Turn the ignition switch ON.
2. Erase “Self Diagnostic Result”.
3. Turn the ignition switch OFF.
4. Turn the ignition switch ON. Check “Self Diagnostic Result” again.

Is DTC “B2099” displayed?

YES >> Replace IPDM E/R. Refer to PCS-28, "Removal and Installation".
NO >> Refer to GI-33, "Intermittent Incident".

POWER SUPPLY AND GROUND CIRCUIT

Diagnosis Procedure

INFOID:0000000005914135

1. CHECK FUSES AND FUSIBLE LINK

Check that the following IPDM E/R fuses or fusible links are not blown.

Signal name	Fuses and fusible link No.
Battery power supply	C (80 A)
	D (60 A)
	F (40 A)

Is the fuse fusing?

YES >> Replace the blown fuse or fusible link after repairing the affected circuit if a fuse or fusible link is blown.
NO >> GO TO 2.

2. CHECK POWER SUPPLY CIRCUIT

1. Turn the ignition switch OFF.
2. Disconnect IPDM E/R connector.
3. Check voltage between IPDM E/R harness connector and the ground.

(+)		(–)	Voltage (Approx.)
IPDM E/R			
Connector	Terminal		
E9	1	Ground	Battery voltage
	2		
E11	32		

Is the measurement value normal?

YES >> GO TO 3.
NO >> Repair the harness or connector.

3. CHECK GROUND CIRCUIT

Check continuity between IPDM E/R harness connectors and the ground.

IPDM E/R		Ground	Continuity
Connector	Terminal		
E10	10		Existed
E14	55		

Does continuity exist?

YES >> INSPECTION END
NO >> Repair the harness or connector.

REMOVAL AND INSTALLATION

IPDM E/R

Exploded View

INFOID:0000000005914136

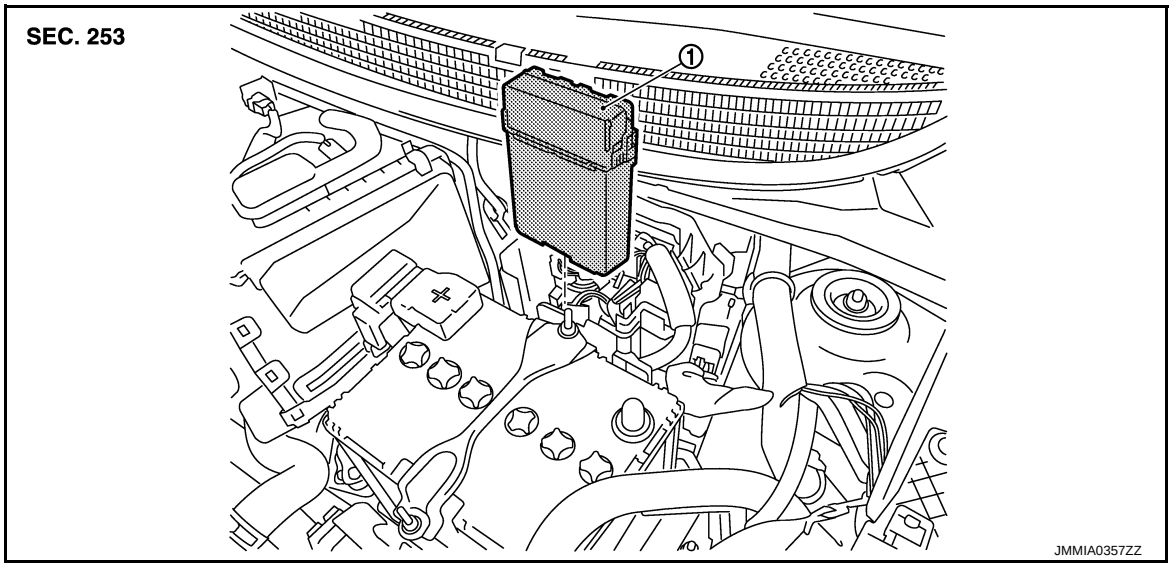

1. IPDM E/R

Removal and Installation

INFOID:0000000005914137

CAUTION:
IPDM E/R integrated relays are not serviceable parts, and must not be removed from the unit.

REMOVAL

1. Disconnect the battery cable from the negative terminal.
2. Remove the IPDM E/R (1) while disengaging both pawls (A) by spreading them.
3. Disconnect the harness connector and then remove the IPDM E/R.

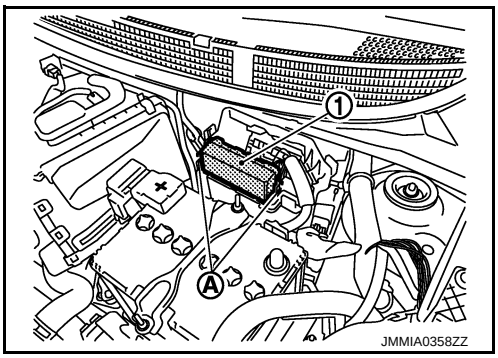

INSTALLATION
Install in the reverse order of removal.

PRECAUTION

PRECAUTIONS

Precaution for Supplemental Restraint System (SRS) "AIR BAG" and "SEAT BELT PRE-TENSIONER"

INFOID:0000000005984313

The Supplemental Restraint System such as “AIR BAG” and “SEAT BELT PRE-TENSIONER”, used along with a front seat belt, helps to reduce the risk or severity of injury to the driver and front passenger for certain types of collision. Information necessary to service the system safely is included in the “SRS AIR BAG” and “SEAT BELT” of this Service Manual.

WARNING:

- **To avoid rendering the SRS inoperative, which could increase the risk of personal injury or death in the event of a collision which would result in air bag inflation, all maintenance must be performed by an authorized NISSAN/INFINITI dealer.**
- **Improper maintenance, including incorrect removal and installation of the SRS, can lead to personal injury caused by unintentional activation of the system. For removal of Spiral Cable and Air Bag Module, see the “SRS AIR BAG”.**
- **Do not use electrical test equipment on any circuit related to the SRS unless instructed to in this Service Manual. SRS wiring harnesses can be identified by yellow and/or orange harnesses or harness connectors.**

PRECAUTIONS WHEN USING POWER TOOLS (AIR OR ELECTRIC) AND HAMMERS

WARNING:

- **When working near the Air Bag Diagnosis Sensor Unit or other Air Bag System sensors with the ignition ON or engine running, DO NOT use air or electric power tools or strike near the sensor(s) with a hammer. Heavy vibration could activate the sensor(s) and deploy the air bag(s), possibly causing serious injury.**
- **When using air or electric power tools or hammers, always switch the ignition OFF, disconnect the battery, and wait at least 3 minutes before performing any service.**

SYSTEM DESCRIPTION

COMPONENT PARTS

Component Parts Location

INFOID:0000000005994060

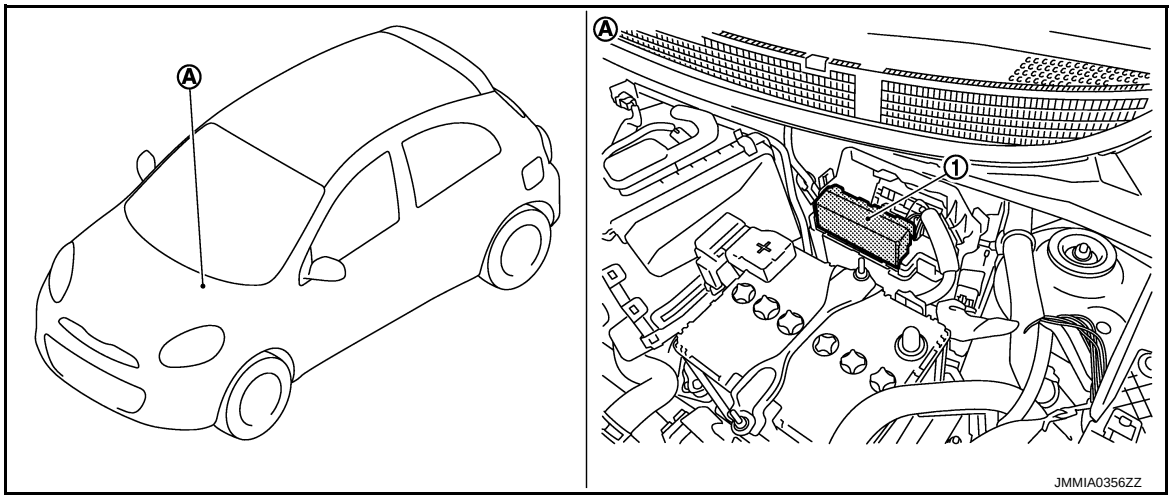

1. IPDM E/R

A. Engine room

SYSTEM

RELAY CONTROL SYSTEM

RELAY CONTROL SYSTEM : System Diagram

INFOID:0000000005914140

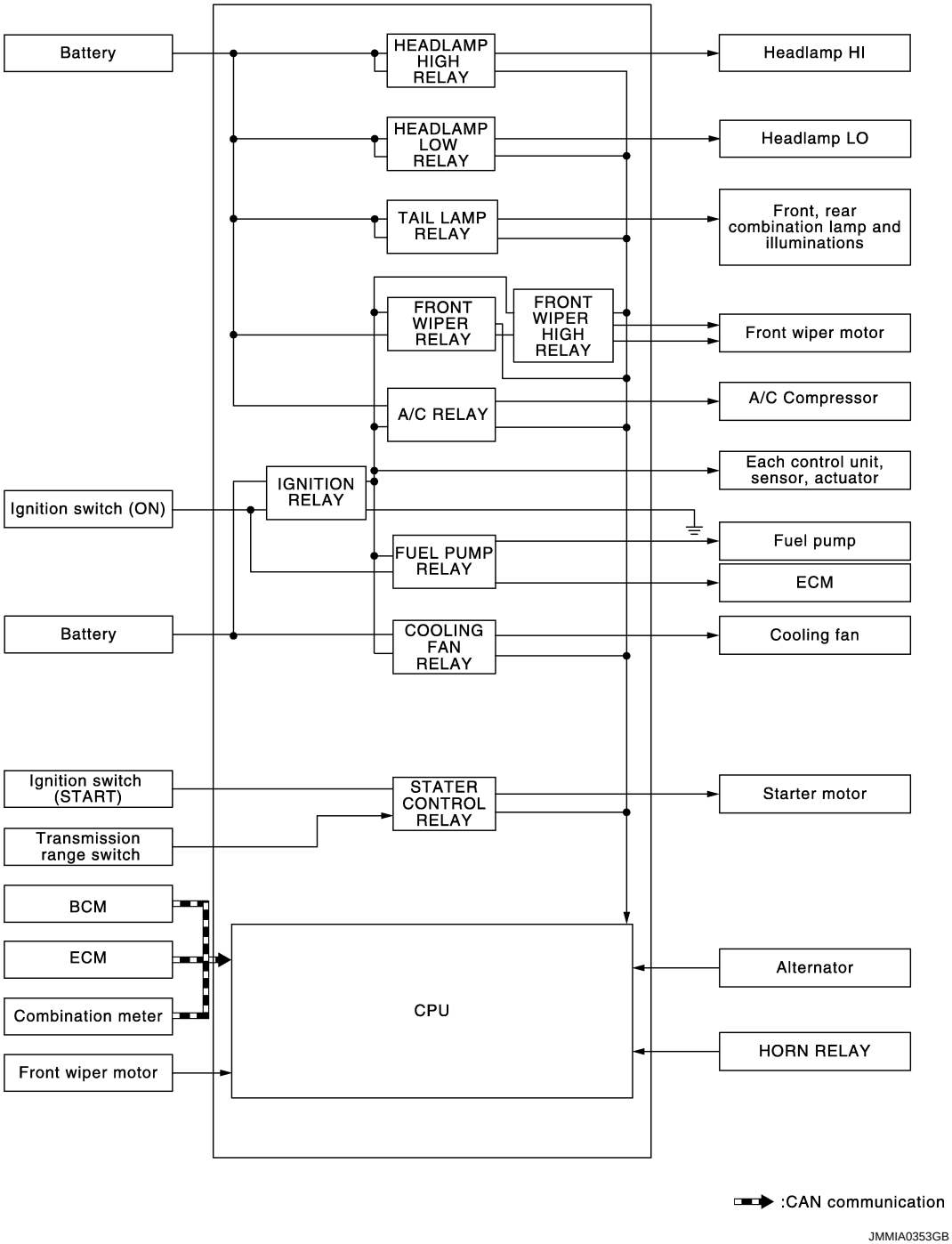

RELAY CONTROL SYSTEM : System Description

INFOID:0000000005914141

IPDM E/R activates the internal control circuit to perform the relay ON-OFF control according to the input signals from various sensors and the request signals received from control units via CAN communication.

CAUTION:

IPDM E/R integrated relays cannot be removed.

Control relay	Input/output	Transmit unit	Control part	Reference page
• Headlamp low relay • Headlamp high relay	• Low beam request signal • High beam request signal	BCM (CAN)	• Headlamp low • Headlamp high	EXL-7
Tail lamp relay	Position light request signal	BCM (CAN)	• Parking lamp • License plate lamp • Tail lamp	EXL-9
			Illuminations	INL-8
• Front wiper relay • Front wiper high relay	Front wiper request signal	BCM (CAN)	Front wiper motor	WW-6
	Front wiper stop position signal	Front wiper motor		
Horn relay	Theft warning horn request signal	BCM (CAN)	Horn	DLK-155 (with panic alarm function)
Starter control relay	Starter control relay signal	BCM (CAN)	Starter motor	—
Cooling fan relay	Cooling fan speed request signal	ECM (CAN)	Cooling fan	• EC-38 [HR12DE (TYPE 1)] • EC-343 [HR12DE (TYPE 2)]
A/C relay	A/C compressor request signal	ECM (CAN)	A/C compressor (Magnet clutch)	HAC-13
Ignition relay	Ignition switch ON signal	Ignition switch	Each control unit, sensor, actuator and relay (Ignition power supply)	PCS-49

RELAY CONTROL SYSTEM : Fail-Safe

INFOID:0000000005984315

CAN COMMUNICATION CONTROL

When CAN communication with ECM and BCM is impossible, IPDM E/R performs fail-safe control. After CAN communication recovers normally, it also returns to normal control.

If No CAN Communication Is Available With ECM

Control part	Fail-safe operation
Cooling fan	• The cooling fan relay turn ON when the ignition switch is turned ON (Cooling fan HI operation) • The cooling fan relay turn OFF when the ignition switch is turned OFF
A/C compressor	A/C relay OFF
Alternator	Outputs the power generation command signal (PWM signal) 0%

If No CAN Communication Is Available With BCM

Control part	Fail-safe operation
Headlamp	• Turns ON the headlamp low relay when the ignition switch is turned ON • Turns OFF the headlamp low relay when the ignition switch is turned OFF • Headlamp high relay OFF
• Parking lamps • License plate lamps • Illuminations • Tail lamps	• Turns ON the tail lamp relay when the ignition switch is turned ON • Turns OFF the tail lamp relay when the ignition switch is turned OFF

Control part	Fail-safe operation
Front wiper motor	• The status just before activation of fail-safe control is maintained until the ignition switch is turned OFF while the front wiper is operating at LO or HI speed. • The wiper is operated at LO speed until the ignition switch is turned OFF if the fail-safe control is activated while the front wiper is set in the INT mode and the front wiper motor is operating. • Returns automatically wiper to stop position when ignition switch is turned ON if fail-safe control is activated while front wiper motor is operated and wiper stop in the other position than stop position.
Horn	Horn OFF

IGNITION RELAY MALFUNCTION DETECTION FUNCTION

- IPDM E/R monitors the voltage at the contact circuit of the ignition relay inside and ignition switch status from BCM via CAN communication.
- IPDM E/R judges the ignition relay error if the voltage differs between the contact circuit and the ignition switch status from BCM via CAN communication.
- If the ignition relay cannot turn OFF due to contact seizure, it activates the tail lamp relay for 10 minutes to alert the user to the ignition relay malfunction when the ignition switch is turned OFF.

Voltage judgment		IPDM E/R judgment	Operation
Ignition relay contact side	Ignition switch status from BCM		
ON	ON	Ignition relay ON normal	—
OFF	OFF	Ignition relay OFF normal	—
ON	OFF	Ignition relay ON stuck	• Detects DTC “B2098: IGN RELAY ON” • Turns ON the tail lamp relay for 10 minutes
OFF	ON	Ignition relay OFF stuck	Detects DTC “B2099: IGN RELAY OFF”

FRONT WIPER PROTECTION FUNCTION

IPDM E/R detects front wiper stop position by a front wiper stop position signal.
When a front wiper stop position signal is in the conditions listed below, IPDM E/R stops power supply to wiper after repeating a front wiper 10 seconds activation and 20 seconds stop.

Ignition switch	Front wiper switch	Front wiper stop position signal
ON	OFF	The front wiper stop position signal (stop position) cannot be input for 10 seconds.
	ON	The front wiper stop position signal does not change for 10 seconds.

NOTE:
This operation status can be confirmed on the IPDM E/R “Data Monitor” that displays “BLOCK” for the item “WIP PROT” while the wiper is stopped.

POWER CONTROL SYSTEM

POWER CONTROL SYSTEM : System Diagram

INFOID:0000000006036747

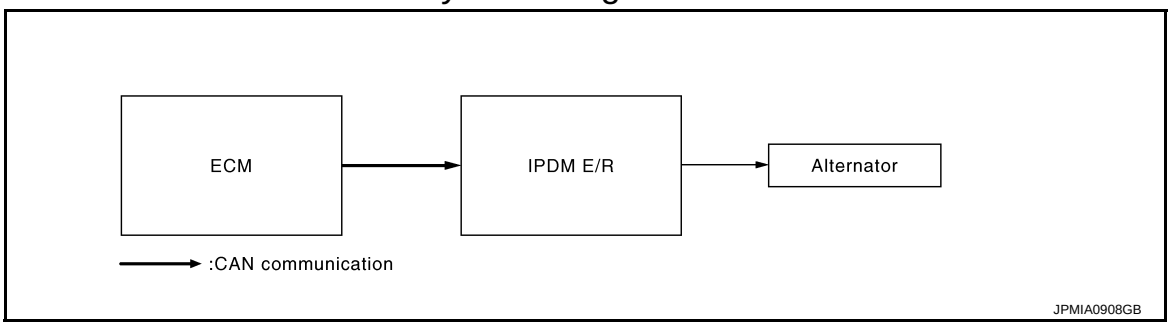

POWER CONTROL SYSTEM : System Description

INFOID:0000000006036748

ALTERNATOR CONTROL

IPDM E/R outputs power generation command signal (PWM signal) to the alternator according to the status of the power generation command value signal received from ECM via CAN communication. Refer to CHG-8, "POWER GENERATION VOLTAGE VARIABLE CONTROL SYSTEM : System Diagram".

SIGNAL BUFFER SYSTEM

SIGNAL BUFFER SYSTEM : System Diagram

INFOID:0000000005914143

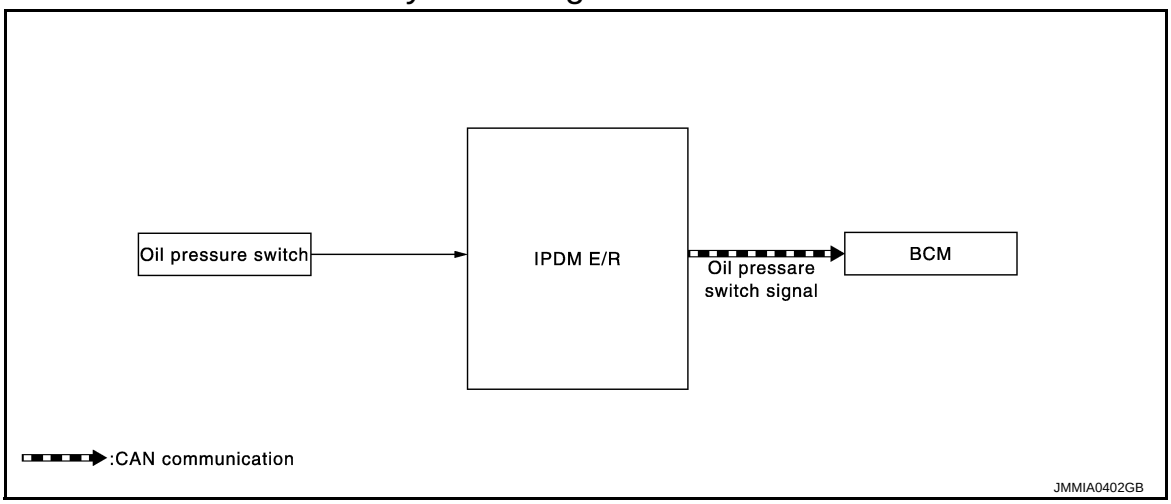

SIGNAL BUFFER SYSTEM : System Description

INFOID:0000000005914144

IPDM E/R reads the status of the oil pressure switch and transmits the oil pressure switch signal to BCM via CAN communication. Refer to MWI-10, "OIL PRESSURE WARNING LAMP : System Diagram".

POWER CONSUMPTION CONTROL SYSTEM

POWER CONSUMPTION CONTROL SYSTEM : System Diagram

INFOID:0000000006053651

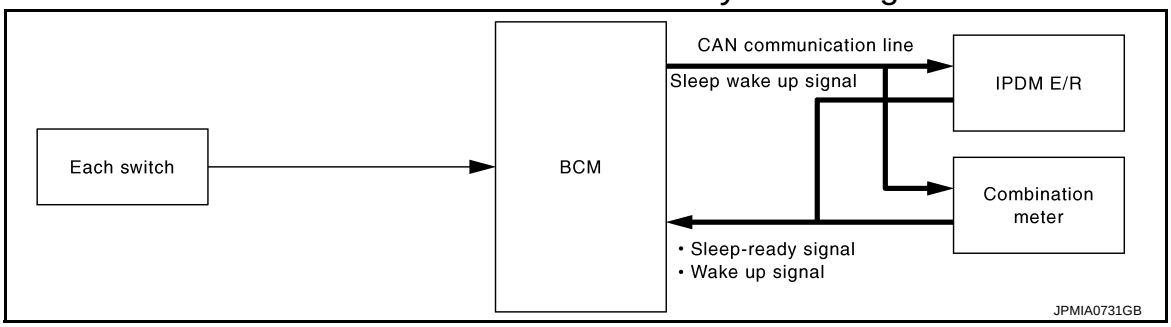

POWER CONSUMPTION CONTROL SYSTEM : System Description

INFOID:0000000005914146

OUTLINE

- IPDM E/R incorporates a power consumption control function that reduces the power consumption according to the vehicle status.
- IPDM E/R changes its status (control mode) with the sleep wake up signal received from BCM via CAN communication.

Normal mode (wake-up)
- CAN communication is normally performed with other control units.
- Individual unit control by IPDM E/R is normally performed.

Low power consumption mode (sleep)
- Low power consumption control is active.
- CAN transmission is stopped.

SLEEP MODE ACTIVATION

- IPDM E/R judges that the sleep-ready conditions are fulfilled when the ignition switch is OFF and none of the conditions below are present. Then it transmits a sleep-ready signal (ready) to BCM via CAN communication.
  - Outputting signals to actuators
  - Switches or relays operating
  - Output requests are being received from control units via CAN communication.
- IPDM E/R stops CAN communication and enters the low power consumption mode when it receives a sleep wake up signal (sleep) from BCM and the sleep-ready conditions are fulfilled.

WAKE-UP OPERATION

- IPDM E/R changes from the low power consumption mode to the normal mode when it receives a sleep wake-up signal (wake up) from BCM or any of the following conditions is fulfilled. In addition, it transmits a sleep-ready signal (not-ready) to BCM via CAN communication to report the CAN communication start.
  - Ignition switch ON
  - An output request is received from a control unit via CAN communication.

DIAGNOSIS SYSTEM (IPDM E/R)

Diagnosis Description

INFOID:0000000005914147

AUTO ACTIVE TEST

Description

In auto active test, the IPDM E/R sends a drive signal to the following systems to check their operation.

- Oil pressure warning lamp
- Front wiper (LO, HI)
- Parking lamps
- License plate lamps
- Tail lamps
- Headlamps (LO, HI)
- A/C compressor (magnet clutch)
- Cooling fan

Operation Procedure

CAUTION:

Never perform auto active test in the following conditions.

- **Engine is running**
- **CONSULT-III is connected**

1. Close the hood and lift the wiper arms from the windshield. (Prevent windshield damage due to wiper operation)
   NOTE:
   When auto active test is performed with hood opened, sprinkle water on windshield beforehand.
2. Turn the ignition switch OFF.
3. Turn the ignition switch ON, and within 20 seconds, press the driver door switch 10 times. Then turn the ignition switch OFF.
   CAUTION:
   Close passenger door.
4. Turn the ignition switch ON within 10 seconds. After that the horn sounds once and the auto active test starts.
   CAUTION:
   Engine starts when ignition switch is turned ON while brake pedal is depressed.
5. The oil pressure warning lamp starts blinking when the auto active test starts.
6. After a series of the following operations is repeated 3 times, auto active test is completed.

NOTE:

- When auto active test has to be cancelled halfway through test, turn the ignition switch OFF.
- When auto active test is not activated, door switch may be the cause. Check door switch. Refer to XX-XX, "*****".

Inspection in Auto Active Test

When auto active test is actuated, the following operation sequence is repeated 3 times.

Operation sequence	Inspection location	Operation
1	Oil pressure warning lamp	Blinks continuously during operation of auto active test
2	Front wiper	LO for 5 seconds → HI for 5 seconds
3	• Parking lamps • License plate lamps • Tail lamps	10 seconds
4	Headlamps	LO for 10 seconds →HI ON ⇔ OFF 5 times
5	A/C compressor (magnet clutch)	ON ⇔ OFF 5 times
6	Cooling fan	LO for 5 seconds → MID for 3 seconds → HI for 2 seconds

Concept of Auto Active Test

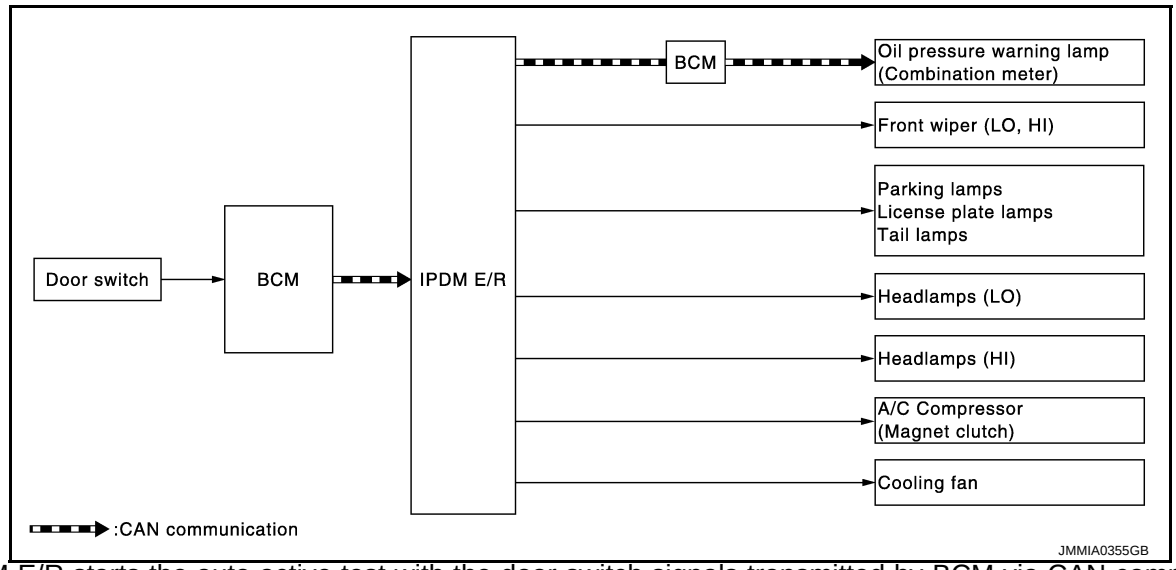

- IPDM E/R starts the auto active test with the door switch signals transmitted by BCM via CAN communication. Therefore, the CAN communication line between IPDM E/R and BCM is considered normal if the auto active test starts successfully.
- The auto active test facilitates troubleshooting if any systems controlled by IPDM E/R cannot be operated.

Diagnosis chart in auto active test mode

Symptom	Inspection contents		Possible cause
Any of the following components do not operate • Parking lamps • License plate lamps • Tail lamps • Headlamps (HI, LO) • Front wiper (HI, LO)	Perform auto active test. Does the applicable system operate?	YES	BCM signal input circuit
		NO	• Lamp or motor • Lamp or motor ground circuit • Harness or connector between IPDM E/R and applicable system • IPDM E/R
A/C compressor does not operate	Perform auto active test. Does the magnet clutch operate?	YES	• BCM signal input circuit • CAN communication signal between BCM and ECM • CAN communication signal between ECM and IPDM E/R
		NO	• Magnet clutch • Harness or connector between IPDM E/R and magnet clutch • IPDM E/R
Oil pressure warning lamp does not operate	Perform auto active test. Does the oil pressure warning lamp blink?	YES	• Harness or connector between IPDM E/R and oil pressure switch • Oil pressure switch • IPDM E/R
		NO	• CAN communication signal between IPDM E/R and BCM • CAN communication signal between BCM and combination meter • Combination meter
Cooling fan does not operate	Perform auto active test. Does the cooling fan operate?	YES	• ECM signal input circuit • CAN communication signal between ECM and IPDM E/R
		NO	• Cooling fan motor • Harness or connector between IPDM E/R and cooling fan motor • IPDM E/R

CONSULT-III Function (IPDM E/R)

INFOID:0000000005914148

APPLICATION ITEM

CONSULT-III performs the following functions via CAN communication with IPDM E/R.

Diagnosis mode	Description
Ecu Identification	Allows confirmation of IPDM E/R part number.
Self Diagnostic Result	Displays the diagnosis results judged by IPDM E/R.
Data Monitor	Displays the real-time input/output data from IPDM E/R input/output data.
Active Test	IPDM E/R can provide a drive signal to electronic components to check their operations.
CAN Diag Support Monitor	The results of transmit/receive diagnosis of CAN communication can be read.

SELF DIAGNOSTIC RESULT

Refer to PCS-45, "DTC Index".

DATA MONITOR

Monitor item

Monitor Item [Unit]	MAIN SIGNALS	Description
MOTOR FAN REQ [1/2/3/4]	×	Displays the value of the cooling fan speed request signal received from ECM via CAN communication.
AC COMP REQ [Off/On]	×	Displays the status of the A/C compressor request signal received from ECM via CAN communication.
TAIL&CLR REQ [Off/On]	×	Displays the status of the position light request signal received from BCM via CAN communication.
HL LO REQ [Off/On]	×	Displays the status of the low beam request signal received from BCM via CAN communication.
HL HI REQ [Off/On]	×	Displays the status of the high beam request signal received from BCM via CAN communication.
FR FOG REQ [Off/On]	×	**NOTE:** This item is indicated, but not monitored.
FR WIP REQ [Stop/1LOW/Low/Hi]	×	Displays the status of the front wiper request signal received from BCM via CAN communication.
WIP AUTO STOP [STOP P/ACT P]	×	Displays the status of the front wiper stop position signal judged by IPDM E/R.
WIP PROT [Off/BLOCK]	×	Displays the status of the front wiper fail-safe operation judged by IPDM E/R.
IGN RLY [Off/On]	×	Displays the status of the ignition relay judged by IPDM E/R.
INTER/NP SW [Off/On]		Displays the status of the shift position judged by IPDM E/R.
ST RLY REQ [Off/On]		Displays the status of the starter control relay signal received from BCM via CAN communication.
DTRL REQ [Off/On]		**NOTE:** This item is indicated, but not monitored.
OIL P SW [Open/Close]		Displays the status of the oil pressure switch judged by IPDM E/R.
HOOD SW [Off/On]		**NOTE:** This item is indicated, but not monitored.
HL WASHER REQ [Off/On]		**NOTE:** This item is indicated, but not monitored.
THFT HRN REQ [Off/On]		Displays the status of the theft warning horn request signal received from BCM via CAN communication.

Monitor Item [Unit]	MAIN SIGNALS	Description
HORN CHIRP [Off/On]		**NOTE:** This item is indicated, but not monitored.
CRNRNG LMP REQ [Off/On]		**NOTE:** This item is indicated, but not monitored.

ACTIVE TEST

Test item

Test item	Operation	Description
CORNERING LAMP	LH	**NOTE:** This item is indicated, but cannot be tested.
	RH	
HORN	On	Operates horn relay for 20 ms.
FRONT WIPER	Off	OFF
	Lo	Operates the front wiper relay.
	Hi	Operates the front wiper relay and front wiper high relay.
MOTOR FAN	1	OFF
	2	Operates the cooling fan relay (LO operation).
	3	Operates the cooling fan relay (MID operation).
	4	Operates the cooling fan relay (HI operation).
HEAD LAMP WASHER	Off	**NOTE:** This item is indicated, but cannot be tested.
EXTERNAL LAMPS	Off	OFF
	TAIL	Operates the tail lamp relay.
	Lo	Operates the headlamp low relay.
	Hi	Operates the headlamp low relay and ON/OFF the headlamp high relay at 1 second intervals.
	Fog	**NOTE:** This item is indicated, but cannot be tested.

ECU DIAGNOSIS INFORMATION

IPDM E/R

Reference Value

INFOID:0000000005914149

VALUES ON THE DIAGNOSIS TOOL

Monitor Item	Condition		Value/Status
MOTOR FAN REQ	Engine idle speed	Changes depending on engine coolant temperature, air conditioner operation status, vehicle speed, etc.	1/2/3/4
AC COMP REQ	Engine running	A/C switch OFF	Off
		A/C switch ON (Compressor is operating)	On
TAIL&CLR REQ	Lighting switch OFF		Off
	Lighting switch 1ST, 2ND or AUTO (Light is illuminated)		On
HL LO REQ	Lighting switch OFF		Off
	Lighting switch 2ND or AUTO (Light is illuminated)		On
HL HI REQ	Lighting switch 2ND or AUTO (Light is illuminated)	Lighting switch other than HI and PASS	Off
		Lighting switch HI or PASS	On
FR FOG REQ	**NOTE:** This item is indicated, but not monitored.		Off
FR WIP REQ	Ignition switch ON	Front wiper switch OFF	Stop
		Front wiper switch INT	1LOW
		Front wiper switch LO	Low
		Front wiper switch HI	Hi
WIP AUTO STOP	Ignition switch ON	Front wiper stop position	STOP P
		Any position other than front wiper stop position	ACT P
WIP PROT	Ignition switch ON	Front wiper operates normally.	Off
		Front wiper stops at fail-safe operation.	BLOCK
IGN RLY	Ignition switch OFF or ACC		Off
	Ignition switch ON		On
INTER/NP SW	Ignition switch ON	Selector lever in any position other than P or N (A/T models)	Off
		Selector lever in P or N position (A/T models)	On
	Ignition switch OFF or ACC (M/T models)		Off
	Ignition switch ON (M/T models)		On
ST RLY REQ	Ignition switch OFF or ACC		Off
	Ignition switch ON		On
DTRL REQ	**NOTE:** This item is indicated, but not monitored.		Off
OIL P SW	Ignition switch OFF, ACC or engine running		Open
	Ignition switch ON		Close
HOOD SW	**NOTE:** This item is indicated, but not monitored.		Off

Monitor Item	Condition	Value/Status
HL WASHER REQ	**NOTE:** This item is indicated, but not monitored	Off
THFT HRN REQ	**NOTE:** This item is indicated, but not monitored.	Off
HORN CHIRP	**NOTE:** This item is indicated, but not monitored	Off
CRNRNG LMP REQ	**NOTE:** This item is indicated, but not monitored	Off

TERMINAL LAYOUT

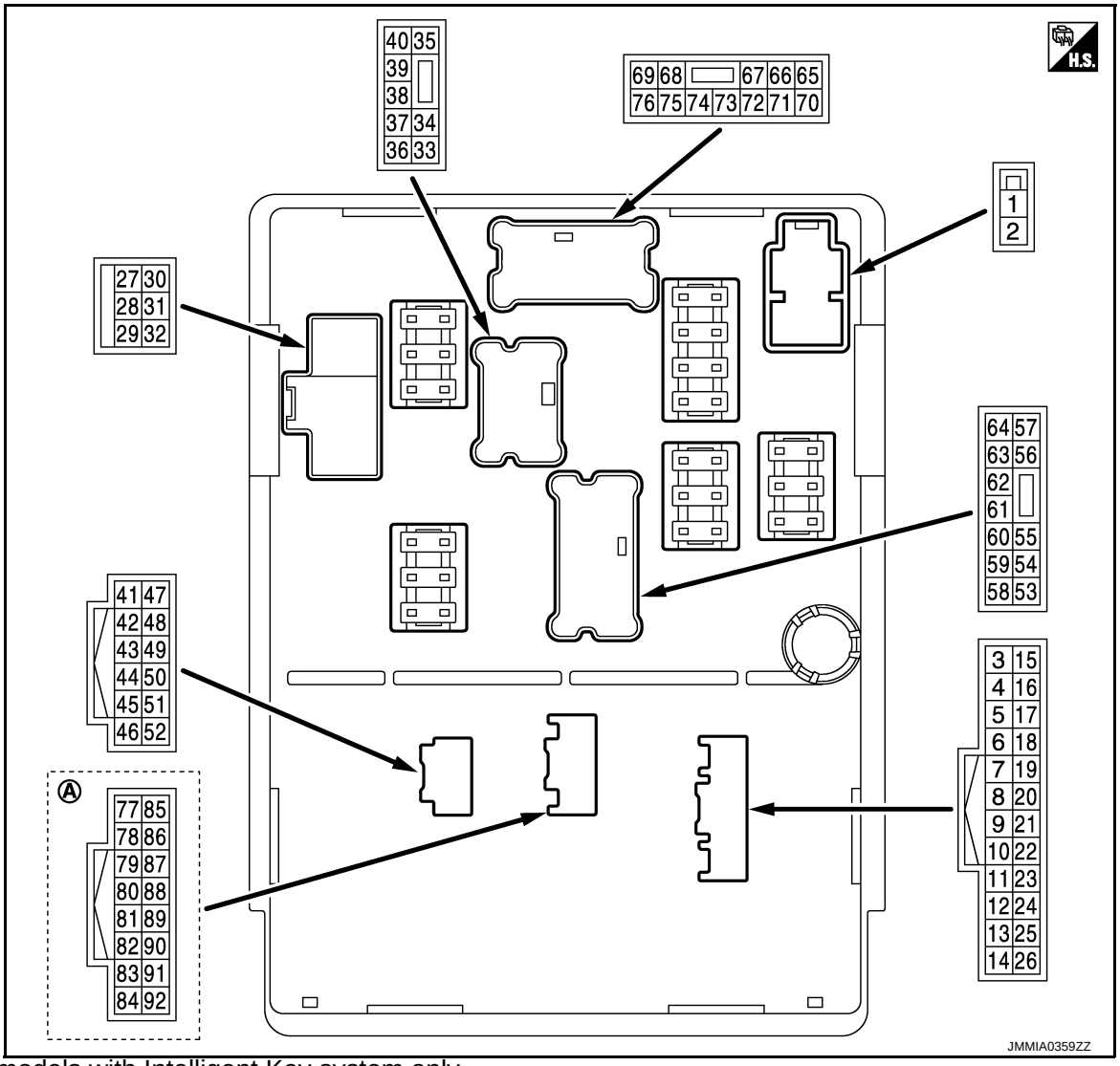

A: For models with Intelligent Key system only

PHYSICAL VALUES

Terminal NO. (Wire color)		Description		Condition	Value (Approx.)
+	–	Signal name	Input/ Output		
1 (R)	Ground	Battery power supply	Input	Ignition switch OFF	Battery voltage
2 (Y)	Ground	Battery power supply	Input	Ignition switch OFF	Battery voltage

Terminal NO. (Wire color)		Description		Condition		Value (Approx.)
+	–	Signal name	Input/ Output			
10 (B)	Ground	Ground	—	Ignition switch ON		0 V
11 (P)	Ground	CAN-L	Input/ Output	—		—
12 (L)	Ground	CAN-H	Input/ Output	—		—
21 (P)	—	Front fog lamp relay control	—	—		—
23 (SB)	Ground	Horn relay control	Output	The horn is deactivated		Battery voltage
				The horn is activated		0 V
24 (V)	Ground	Front wiper stop position	Input	Ignition switch ON	Front wiper stop position	0 V
					Any position other than front wiper stop position	Battery voltage
27 (W)	Ground	Ignition relay power supply	Output	Ignition switch ON		0 V
				At engine cranking		Battery voltage
30 (R)	Ground	Starter motor	Output	Ignition switch ON		0 V
				At engine cranking		Battery voltage
31 (P)	Ground	Cooling fan relay power supply	Output	Cooling fan OFF		0 V
				Cooling fan operated		Battery voltage
32 (G)	Ground	Battery power supply	Output	Ignition switch OFF		0 V
				Ignition switch ON		Battery voltage
33 (BR)	Ground	Fuel pump	Output	• Approximately 1 second after turning the ignition switch ON • Engine running		0 - 1.5 V
				Approximately 1 second or more after turning the ignition switch ON		Battery voltage
34 (L)	Ground	Ignition relay power supply	Output	Ignition switch OFF		0 V
				Ignition switch ON		Battery voltage
35 (G)	Ground	ECM relay power supply	Output	Ignition switch OFF (More than a few seconds after turning ignition switch OFF)		0 V
				• Ignition switch ON • Ignition switch OFF (For a few seconds after turning ignition switch OFF)		Battery voltage
38 (L)	Ground	Headlamp LO (LH)	Output	Ignition switch ON	Lighting switch OFF	0 V
					Lighting switch 2ND	Battery voltage
40 (P)	Ground	Headlamp LO (RH)	Output	Ignition switch ON	Lighting switch OFF	0 V
					Lighting switch 2ND	Battery voltage
42 (LG)	Ground	Oil pressure switch	Input	Ignition switch ON	Engine stopped	0 V
					Engine running	Battery voltage
43 (GR)	Ground	Fuel pump relay control	Output	• Approximately 1 second after turning the ignition switch ON • Engine running		0 - 1.0 V
				Approximately 1 second or more after turning the ignition switch ON		Battery voltage

Terminal NO. (Wire color)		Description		Condition		Value (Approx.)
+	–	Signal name	Input/ Output			
47 (R/W)	Ground	ECM power supply	Output	Ignition switch OFF (More than a few seconds after turning ignition switch OFF)		0 V
				• Ignition switch ON • Ignition switch OFF (For a few seconds after turning ignition switch OFF)		Battery voltage
48*1 (O)	Ground	Alternator control	Output	Ignition switch OFF or ACC		0 V
				Ignition switch ON		6 V
50 (P)	Ground	ECM relay control	Output	Ignition switch OFF (More than a few seconds after turning ignition switch OFF)		0 - 1.0 V
				• Ignition switch ON • Ignition switch OFF (For a few seconds after turning ignition switch OFF)		Battery voltage
53 (LG)	Ground	Front wiper LO	Output	Ignition switch ON	Front wiper switch OFF	0 V
					Front wiper switch LO	Battery voltage
54 (GR)	Ground	Front wiper HI	Output	Ignition switch ON	Front wiper switch OFF	0 V
					Front wiper switch HI	Battery voltage
55 (B)	Ground	Ground	—	Ignition switch ON		0 V
56 (BR)	Ground	ABS actuator and electric unit (control unit) power supply	Output	Ignition switch OFF		Battery voltage
57 (R)	Ground	TCM power supply	Output	Ignition switch OFF		Battery voltage
58 (P)	Ground	Illuminations	Output	Ignition switch ON	Lighting switch OFF	0 V
					Lighting switch 1ST	Battery voltage
59 (R)	Ground	Tail lamp	Output	Ignition switch ON	Lighting switch OFF	0 V
					Lighting switch 1ST	Battery voltage
61 (G)	Ground	Headlamp HI (LH)	Output	Ignition switch ON	Lighting switch OFF	0 V
					• Lighting switch HI • Lighting switch PASS	Battery voltage
63 (Y)	Ground	Headlamp HI (RH)	Output	Ignition switch ON	Lighting switch OFF	0 V
					• Lighting switch HI • Lighting switch PASS	Battery voltage
64 (V)	Ground	A/C relay power supply	Output	Engine running	A/C switch OFF	0 V
					A/C switch ON (A/C compressor is operating)	Battery voltage
65 (L/W)	Ground	Throttle control motor relay power supply	Output	Ignition switch OFF (More than a few seconds after turning ignition switch OFF)		0 V
				• Ignition switch ON • Ignition switch OFF (For a few seconds after turning ignition switch OFF)		Battery voltage

Terminal NO. (Wire color)		Description		Condition	Value (Approx.)
+	–	Signal name	Input/ Output		
68 (G/W)	Ground	Throttle control motor relay control	Output	Ignition switch ON → OFF	0 – 1.0 V ↓ Battery voltage ↓ 0 V
				Ignition switch ON	0 – 1.0 V
70 (Y)	Ground	Ignition relay power supply	Output	Ignition switch OFF	0 V
				Ignition switch ON	Battery voltage
71 (BR)	Ground	ECM power supply	Output	Ignition switch OFF	Battery voltage
72 (SB)	Ground	ECM power supply	Output	Ignition switch OFF (More than a few seconds after turning ignition switch OFF)	0 V
				• Ignition switch ON • Ignition switch OFF (For a few seconds after turning ignition switch OFF)	Battery voltage
75 (L)*1 (R)*2	Ground	ECM relay power supply	Output	Ignition switch OFF (More than a few seconds after turning ignition switch OFF)	0 V
				• Ignition switch ON • Ignition switch OFF (For a few seconds after turning ignition switch OFF)	Battery voltage
76 (BR)	Ground	Transmission range switch	Input	Select lever in any position other than P or N (Ignition switch ON)	0 V
				Select lever P or N (Ignition switch ON)	Battery voltage

*1: L-Jetronic engine models

*2: D-Jetronic engine models

Fail-Safe

INFOID:0000000005914150

CAN COMMUNICATION CONTROL

When CAN communication with ECM and BCM is impossible, IPDM E/R performs fail-safe control. After CAN communication recovers normally, it also returns to normal control.

If No CAN Communication Is Available With ECM

Control part	Fail-safe operation
Cooling fan	• The cooling fan relay turn ON when the ignition switch is turned ON (Cooling fan HI operation) • The cooling fan relay turn OFF when the ignition switch is turned OFF
A/C compressor	A/C relay OFF
Alternator	Outputs the power generation command signal (PWM signal) 0%

If No CAN Communication Is Available With BCM

Control part	Fail-safe operation
Headlamp	• Turns ON the headlamp low relay when the ignition switch is turned ON • Turns OFF the headlamp low relay when the ignition switch is turned OFF • Headlamp high relay OFF
• Parking lamps • License plate lamps • Illuminations • Tail lamps	• Turns ON the tail lamp relay when the ignition switch is turned ON • Turns OFF the tail lamp relay when the ignition switch is turned OFF
Front wiper motor	• The status just before activation of fail-safe control is maintained until the ignition switch is turned OFF while the front wiper is operating at LO or HI speed. • The wiper is operated at LO speed until the ignition switch is turned OFF if the fail-safe control is activated while the front wiper is set in the INT mode and the front wiper motor is operating. • Returns automatically wiper to stop position when ignition switch is turned ON if fail-safe control is activated while front wiper motor is operated and wiper stop in the other position than stop position.
Horn	Horn OFF

IGNITION RELAY MALFUNCTION DETECTION FUNCTION

- IPDM E/R monitors the voltage at the contact circuit of the ignition relay inside and ignition switch status from BCM via CAN communication.
- IPDM E/R judges the ignition relay error if the voltage differs between the contact circuit and the ignition switch status from BCM via CAN communication.
- If the ignition relay cannot turn OFF due to contact seizure, it activates the tail lamp relay for 10 minutes to alert the user to the ignition relay malfunction when the ignition switch is turned OFF.

Voltage judgment		IPDM E/R judgment	Operation
Ignition relay contact side	Ignition switch status from BCM		
ON	ON	Ignition relay ON normal	—
OFF	OFF	Ignition relay OFF normal	—
ON	OFF	Ignition relay ON stuck	• Detects DTC “B2098: IGN RELAY ON” • Turns ON the tail lamp relay for 10 minutes
OFF	ON	Ignition relay OFF stuck	Detects DTC “B2099: IGN RELAY OFF”

FRONT WIPER PROTECTION FUNCTION

IPDM E/R detects front wiper stop position by a front wiper stop position signal.
When a front wiper stop position signal is in the conditions listed below, IPDM E/R stops power supply to wiper after repeating a front wiper 10 seconds activation and 20 seconds stop.

Ignition switch	Front wiper switch	Front wiper stop position signal
ON	OFF	The front wiper stop position signal (stop position) cannot be input for 10 seconds.
	ON	The front wiper stop position signal does not change for 10 seconds.

NOTE:
This operation status can be confirmed on the IPDM E/R “Data Monitor” that displays “BLOCK” for the item “WIP PROT” while the wiper is stopped.

DTC Index

INFOID:0000000005914151

NOTE:
- The details of time display are as follows.
- CRNT: A malfunction is detected now.
- PAST: A malfunction was detected in the past.
- IGN counter is displayed on FFD (Freeze Frame data).
- The number is 0 when is detected now.
- The number increases like 1 → 2 ··· 38 → 39 after returning to the normal condition whenever IGN OFF → ON.

- The number is fixed to 39 until the self-diagnosis results are erased if it is over 39.

×: Applicable

CONSULT display	Fail-safe	Refer to
No DTC is detected. further testing may be required.	—	—
U1000: CAN COMM CIRCUIT	×	PCS-24
B2098: IGN RELAY ON	×	PCS-25
B2099: IGN RELAY OFF	—	PCS-50

WIRING DIAGRAM

IPDM E/R

Wiring Diagram

INFOID:0000000005914152

For connector terminal arrangements, harness layouts, and alphabets in a ⬭ (option abbreviation; if not described in wiring diagram), refer to GI-12, "Connector Information".

配線図待ち

DTC/CIRCUIT DIAGNOSIS

U1000 CAN COMM CIRCUIT

Description

INFOID:0000000006025255

CAN (Controller Area Network) is a serial communication line for real time applications. It is an on-vehicle multiplex communication line with high data communication speed and excellent error detection ability. Modern vehicle is equipped with many electronic control unit, and each control unit shares information and links with other control units during operation (not independent). In CAN communication, control units are connected with 2 communication lines (CAN-H line, CAN-L line) allowing a high rate of information transmission with less wiring. Each control unit transmits/receives data but selectively reads required data only.
CAN Communication Signal Chart. Refer to LAN-23, "CAN COMMUNICATION SYSTEM : CAN Communication Signal Chart".

DTC Logic

INFOID:0000000006025256

DTC DETECTION LOGIC

DTC	CONSULT-III display description	DTC Detection Condition	Possible cause
U1000	CAN COMM CIRCUIT	When IPDM E/R cannot communicate CAN communication signal continuously for 2 seconds or more	CAN communication system

Diagnosis Procedure

INFOID:0000000006025257

1. PERFORM SELF DIAGNOSTIC

1. Turn the ignition switch ON and wait for 2 seconds or more.
2. Check “Self Diagnostic Result” of IPDM E/R.

Is DTC “U1000” displayed?

YES >> Refer to LAN-14, "Trouble Diagnosis Flow Chart".
NO >> Refer to GI-33, "Intermittent Incident".

B2098 IGNITION RELAY ON STUCK

Description

INFOID:0000000006025268

The ignition relay integrated in IPDM E/R is operated with ignition switch ON signal from the ignition switch.

DTC Logic

INFOID:0000000006025259

DTC DETECTION LOGIC

DTC	CONSULT-III display description	DTC Detection Condition	Possible causes
B2098	IGN RELAY ON	The ignition relay ON is detected for 1 second at ignition switch OFF (CPU monitors the status at the contact and excitation coil circuits of the ignition relay inside it)	Ignition relay malfunction

Diagnosis Procedure

INFOID:0000000006025260

1. PERFORM SELF DIAGNOSIS

1. Turn the ignition switch ON.
2. Erase “Self Diagnostic Result” of IPDM E/R.
3. Turn the ignition switch OFF, and wait for 1 second or more.
4. Turn the ignition switch ON. Check “Self Diagnostic Result” again.

Is DTC “B2098” displayed?

YES >> Replace IPDM E/R. Refer to PCS-28, "Removal and Installation".
NO >> Refer to GI-33, "Intermittent Incident".

B2099 IGNITION RELAY OFF STUCK

Description

INFOID:0000000006025269

The ignition relay integrated in IPDM E/R is operated with ignition switch ON signal from the ignition switch.

DTC Logic

INFOID:0000000006025262

DTC DETECTION LOGIC

DTC	CONSULT-III display description	DTC Detection Condition	Possible causes
B2099	IGN RELAY OFF	The ignition relay OFF is detected for 1 second at ignition switch ON (CPU monitors the status at the contact and excitation coil circuits of the ignition relay inside it)	Ignition relay malfunction

NOTE:

When IPDM E/R power supply voltage is low (Approx. 7 - 8 V for about 1 second), the “DTC: B2099” may be detected.

Diagnosis Procedure

INFOID:0000000006025263

1. PERFORM SELF DIAGNOSIS

1. Turn the ignition switch ON.
2. Erase “Self Diagnostic Result”.
3. Turn the ignition switch OFF.
4. Turn the ignition switch ON. Check “Self Diagnostic Result” again.

Is DTC “B2099” displayed?

YES >> Replace IPDM E/R. Refer to PCS-28, "Removal and Installation".
NO >> Refer to GI-33, "Intermittent Incident".

POWER SUPPLY AND GROUND CIRCUIT

Diagnosis Procedure

INFOID:0000000006025264

1. CHECK FUSES AND FUSIBLE LINK

Check that the following IPDM E/R fuses or fusible links are not blown.

Signal name	Fuses and fusible link No.
Battery power supply	C (80 A)
	D (60 A)
	F (40 A)

Is the fuse fusing?

YES >> Replace the blown fuse or fusible link after repairing the affected circuit if a fuse or fusible link is blown.
NO >> GO TO 2.

2. CHECK POWER SUPPLY CIRCUIT

1. Turn the ignition switch OFF.
2. Disconnect IPDM E/R connector.
3. Check voltage between IPDM E/R harness connector and the ground.

(+)		(–)	Voltage (Approx.)
IPDM E/R			
Connector	Terminal		
E9	1	Ground	Battery voltage
	2		
E11	32		

Is the measurement value normal?

YES >> GO TO 3.
NO >> Repair the harness or connector.

3. CHECK GROUND CIRCUIT

Check continuity between IPDM E/R harness connectors and the ground.

IPDM E/R		Ground	Continuity
Connector	Terminal		
E10	10		Existed
E14	55		

Does continuity exist?

YES >> INSPECTION END
NO >> Repair the harness or connector.

REMOVAL AND INSTALLATION

IPDM E/R

Exploded View

INFOID:0000000005984316

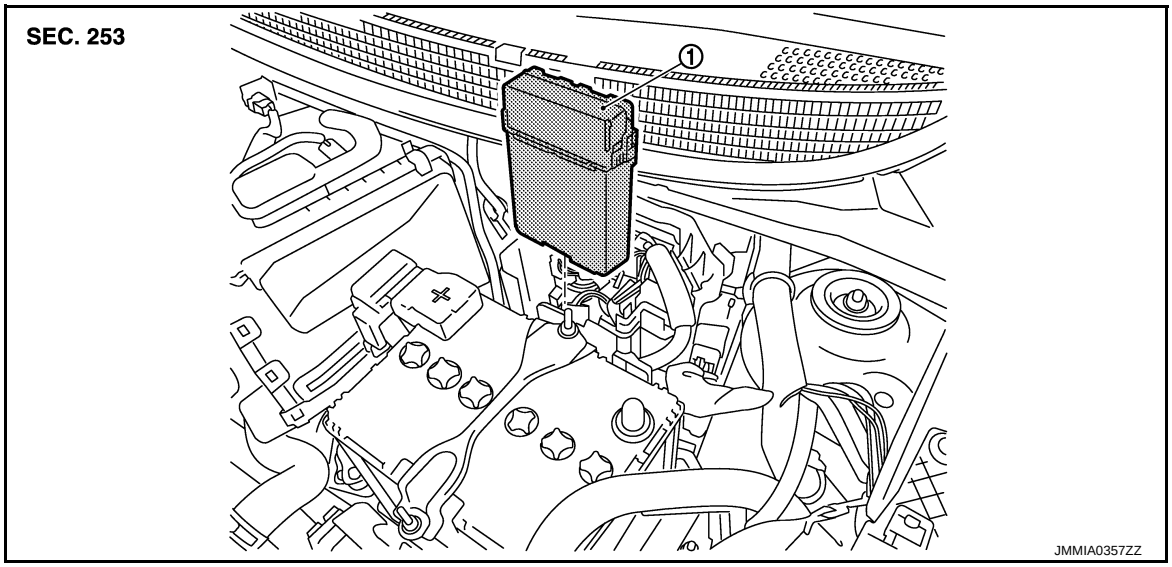

1. IPDM E/R

Removal and Installation

INFOID:0000000005984317

CAUTION:
IPDM E/R integrated relays are not serviceable parts, and must not be removed from the unit.

REMOVAL

1. Disconnect the battery cable from the negative terminal.
2. Remove the IPDM E/R (1) while disengaging both pawls (A) by spreading them.
3. Disconnect the harness connector and then remove the IPDM E/R.

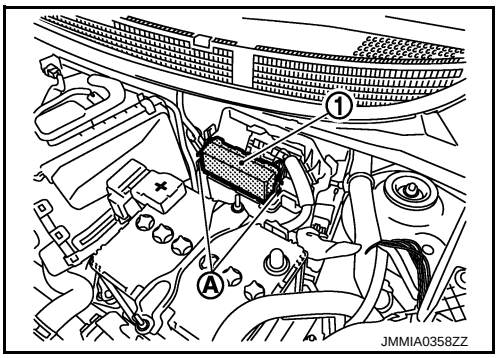

INSTALLATION
Install in the reverse order of removal.

PRECAUTION

PRECAUTIONS

Precaution for Supplemental Restraint System (SRS) "AIR BAG" and "SEAT BELT PRE-TENSIONER"

INFOID:0000000005998896

The Supplemental Restraint System such as “AIR BAG” and “SEAT BELT PRE-TENSIONER”, used along with a front seat belt, helps to reduce the risk or severity of injury to the driver and front passenger for certain types of collision. This system includes seat belt switch inputs and dual stage front air bag modules. The SRS system uses the seat belt switches to determine the front air bag deployment, and may only deploy one front air bag, depending on the severity of a collision and whether the front occupants are belted or unbelted.
Information necessary to service the system safely is included in the “SRS AIR BAG” and “SEAT BELT” of this Service Manual.

WARNING:
- **To avoid rendering the SRS inoperative, which could increase the risk of personal injury or death in the event of a collision that would result in air bag inflation, all maintenance must be performed by an authorized NISSAN/INFINITI dealer.**
- **Improper maintenance, including incorrect removal and installation of the SRS, can lead to personal injury caused by unintentional activation of the system. For removal of Spiral Cable and Air Bag Module, see the “SRS AIR BAG”.**
- **Do not use electrical test equipment on any circuit related to the SRS unless instructed to in this Service Manual. SRS wiring harnesses can be identified by yellow and/or orange harnesses or harness connectors.**

PRECAUTIONS WHEN USING POWER TOOLS (AIR OR ELECTRIC) AND HAMMERS

WARNING:
- **When working near the Air Bag Diagnosis Sensor Unit or other Air Bag System sensors with the ignition ON or engine running, DO NOT use air or electric power tools or strike near the sensor(s) with a hammer. Heavy vibration could activate the sensor(s) and deploy the air bag(s), possibly causing serious injury.**
- **When using air or electric power tools or hammers, always switch the ignition OFF, disconnect the battery, and wait at least 3 minutes before performing any service.**

Precaution Necessary for Steering Wheel Rotation after Battery Disconnect

INFOID:0000000005998897

NOTE:
- Before removing and installing any control units, first turn the push-button ignition switch to the LOCK position, then disconnect both battery cables.
- After finishing work, confirm that all control unit connectors are connected properly, then re-connect both battery cables.
- Always use CONSULT-III to perform self-diagnosis as a part of each function inspection after finishing work. If a DTC is detected, perform trouble diagnosis according to self-diagnosis results.

For vehicle with steering lock unit, if the battery is disconnected or discharged, the steering wheel will lock and cannot be turned.
If turning the steering wheel is required with the battery disconnected or discharged, follow the operation procedure below before starting the repair operation.

OPERATION PROCEDURE

1. Connect both battery cables.
   NOTE:
   Supply power using jumper cables if battery is discharged.
2. Turn the push-button ignition switch to ACC position.
   (At this time, the steering lock will be released.)
3. Disconnect both battery cables. The steering lock will remain released with both battery cables disconnected and the steering wheel can be turned.
4. Perform the necessary repair operation.

5. When the repair work is completed, re-connect both battery cables. With the brake pedal released, turn the push-button ignition switch from ACC position to ON position, then to LOCK position. (The steering wheel will lock when the push-button ignition switch is turned to LOCK position.)
6. Perform self-diagnosis check of all control units using CONSULT-III.

SYSTEM DESCRIPTION

COMPONENT PARTS

Component Parts Location

INFOID:0000000005998898

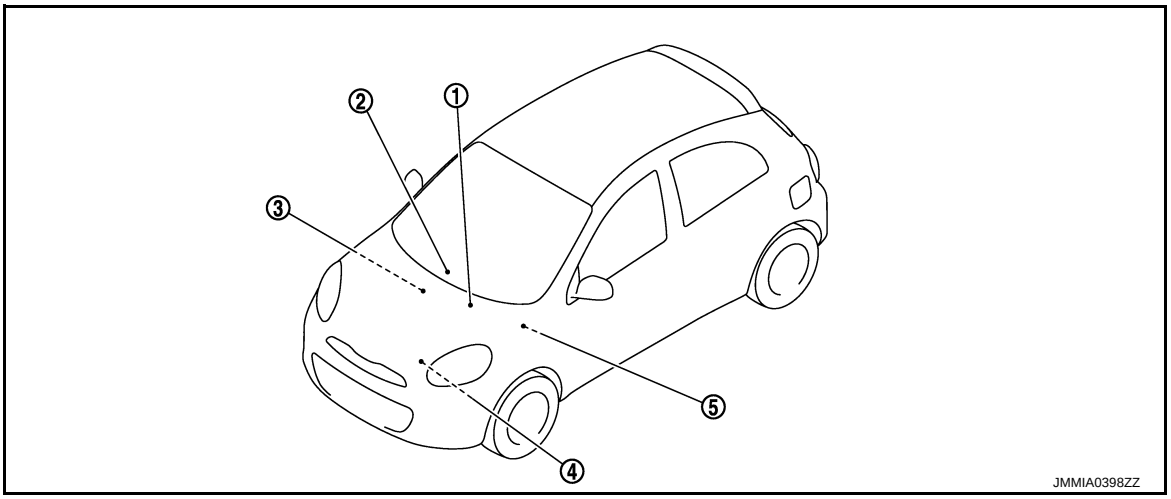

1. IPDM E/R
   Refer to PCS-5, "Component Parts Location"
2. Push-button ignition switch
3. Stop lamp switch
4. Transmission range switch
   Refer to TM section.
5. BCM
   Refer to BCS-5, "BODY CONTROL SYSTEM : Component Parts Location"

Component Description

INFOID:0000000005998899

BCM	Reference
IPDM E/R	PCS-6
Ignition relay (Built-in IPDM E/R)	PCS-55
Ignition relay	
Accessory relay	PCS-56
Blower relay	PCS-56
Stop lamp switch	SEC-10
Transmission range switch	SEC-10
Push-button ignition switch	SEC-10

BCM

INFOID:0000000005998900

BCM controls the various electrical components and simultaneously supplies power according to the power supply position.
BCM checks the power supply position internally.

Ignition Relay

INFOID:0000000005998901

BCM turns ON the following relays to ignition power supply to each ECU when the ignition switch is turned ON.
- Ignition relay
- Ignition relay (inside IPDM E/R)
- Blower relay

BCM checks any ignition relay ON request for consistency with the actual ignition relay operation status.

Accessory Relay

INFOID:0000000005998902

BCM controls the various electrical components and simultaneously supplies power according to the power supply position.
BCM checks the power supply position internally.

Blower Relay

INFOID:0000000005998903

BCM turns ON the following relays to ignition power supply to each ECU when the ignition switch is turned ON.
- Ignition relay
- Ignition relay (inside IPDM E/R)
- Blower relay

BCM checks any blower relay ON request for consistency with the actual blower relay operation status.

Push-Button Ignition Switch

INFOID:0000000005998904

BCM transmits the change in the power supply position with the push-button ignition switch to IPDM E/R via CAN communication line. IPDM E/R transmits the power supply position status via CAN communication line to BCM.

SYSTEM

System Diagram

INFOID:0000000005998905

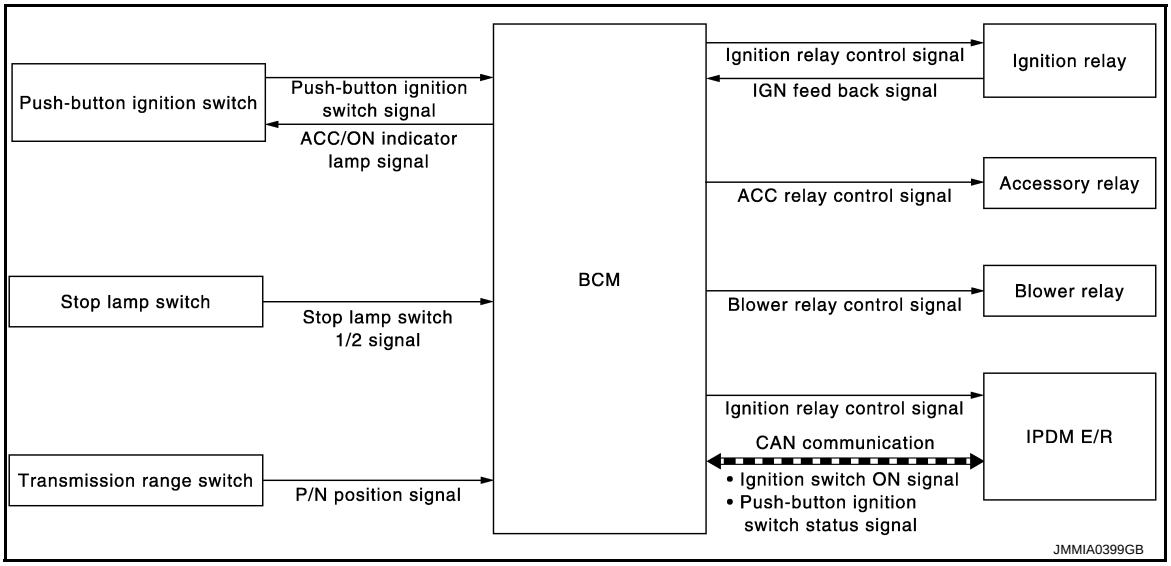

System Description

INFOID:0000000005998906

SYSTEM DESCRIPTION

- PDS (POWER DISTRIBUTION SYSTEM) is the system that BCM controls with the operation of the push-button ignition switch and performs the power distribution to each power circuit. This system is used instead of the mechanical power supply changing mechanism with the operation of the conventional key cylinder.
- The push-button ignition switch can be operated when Intelligent Key is in the following condition. Refer to Engine Start Function for details.
- Intelligent Key is in the detection area of the interior antenna.
- Intelligent Key backside is contacted to push-button ignition switch.
- The push-button ignition switch operation is input to BCM as a signal. BCM changes the power supply position according to the status and operates the following relays to supply power to each power circuit.
- Ignition relay (inside IPDM E/R)
- Ignition relay
- Accessory relay
- Blower relay

NOTE:
The push-button ignition switch operation changes due to the conditions of brake pedal, selector lever and vehicle speed.

- The power supply position can be confirmed with the lighting of the indicators near the push-button ignition switch.

BATTERY SAVER SYSTEM

When all the following conditions are met for 60 minutes, the battery saver system will cut off the power supply to prevent battery discharge.

- The ignition switch is in the ACC position
- All doors are closed
- Selector lever is in the P position

Reset Condition of Battery Saver System

In order to prevent the battery from discharging, the battery saver system will cut off the power supply when all doors are closed, the selector lever is on P position and the ignition switch is left on ACC position for 60 minutes. If any of the following conditions are met the battery saver system is released and the steering will change automatically to lock position from OFF position.

- Opening any door
- Operating with door request switch on door lock
- Operating with Intelligent Key on door lock

Press push-button ignition switch and ignition switch will change to ACC position from OFF position.

STEERING LOCK OPERATION

Steering is locked by steering lock unit when ignition switch is in the OFF position, selector lever is in the P position and any of the following conditions are met.

- Opening door
- Closing door
- Door is locked with door request switch
- Door is locked with Intelligent Key

POWER SUPPLY POSITION CHANGE TABLE BY PUSH-BUTTON IGNITION SWITCH OPERATION

The power supply position changing operation can be performed with the following operations.

NOTE:

- When an Intelligent Key is within the detection area of inside key antenna and when Intelligent Key backside is contacted to push-button ignition switch, it is equivalent to the operations below.
- When starting the engine, the BCM monitors under the engine start conditions,
- Brake pedal operating condition
- Selector lever position
- Vehicle speed

Vehicle speed: less than 4 km/h (2.5 MPH)

Power supply position	Engine start/stop condition		Push-button ignition switch operation frequency
	Selector lever position	Brake pedal operation condition	
LOCK → ACC	—	Not depressed	1
LOCK → ACC → ON	—	Not depressed	2
LOCK → ACC → ON → OFF	—	Not depressed	3
LOCK → START ACC → START ON → START	P or N position	Depressed	1
Engine is running → OFF	—	—	1

Vehicle speed: 4 km/h (2.5 MPH) or more

Power supply position	Engine start/stop condition		Push-button ignition switch operation frequency
	Selector lever position	Brake pedal operation condition	
Engine is running → ACC	—	—	Emergency stop operation
Engine stall return operation while driving	N position	Not depressed	1

Emergency stop operation

- Press and hold the push-button ignition switch for 2 seconds or more.
- Press the push-button ignition switch 3 times or more within 1.5 seconds.

Fail-safe

INFOID:0000000006046551

FAIL-SAFE CONTROL BY DTC

BCM performs fail-safe control when any DTC are detected.

Display contents of CONSULT	Fail-safe	Cancellation
B2013: ID DISCORD BCM-S/L	Inhibit engine cranking	When communication between BCM and steering lock unit are communicated normally.
B2014: CHAIN OF S/L-BCM	Inhibit engine cranking	When communication between BCM and steering lock unit are communicated normally.
B2192: ID DISCORD BCM-ECM	Inhibit engine cranking	Erase DTC
B2193: CHAIN OF BCM-ECM	Inhibit engine cranking	Erase DTC
B2195: ANTI-SCANNING	Inhibit engine cranking	Ignition switch ON → OFF
B2198: NATS ANTENNA AMP	Inhibit engine cranking	Erase DTC

Display contents of CONSULT	Fail-safe	Cancellation
B2557: VEHICLE SPEED	Inhibit steering lock	When the following CAN signal status (vehicle speed signal) becomes consistent • Vehicle speed signal (ABS) • Vehicle speed signal (Meter)
B2601: SHIFT POSITION	Inhibit steering lock	500 ms after the following signal reception status becomes consistent • Selector lever P position switch signal • P range signal (CAN)
B2602: SHIFT POSITION	Inhibit steering lock	5 seconds after the following BCM recognition conditions are fulfilled • Ignition switch is in the ON position • Selector lever P position switch signal: Except P position (12 V) • Vehicle speed: 4 km/h (2.5 MPH) or more
B2603: SHIFT POSI STATUS	Inhibit steering lock	500 ms after any of the following BCM recognition conditions are fulfilled • Status 1 - Ignition switch is in the ON position - Selector lever P position switch signal: Except P position (12 V) - Selector lever P/N position signal: Except P and N positions (0 V) • Status 2 - Ignition switch is in the ON position - Selector lever P position switch signal: P position (0 V) - Selector lever P/N position signal: P or N positions (12 V)
B2604: PNP/CLUTCH SW	Inhibit steering lock	500 ms after any of the following BCM recognition conditions are fulfilled • Status 1 - Ignition switch is in the ON position - Selector lever P/N position signal: P or N position (12 V) - Shift position signal (CAN): P or N position • Status 2 - Ignition switch is in the ON position - Selector lever P/N position signal: Except P and N positions (0 V) - Shift position signal (CAN): Except P and N position
B2605: PNP/CLUTCH SW	Inhibit steering lock	500 ms after any of the following BCM recognition conditions are fulfilled • Status 1 - Power position: IGN - Selector lever P/N position signal: Except P and N positions (0 V) - Interlock/PNP switch signal (CAN): OFF • Status 2 - Ignition switch is in the ON position - Selector lever P/N position signal: P or N position (12 V) - Interlock/PNP switch signal (CAN): ON
B2608: STARTER RELAY	Inhibit engine cranking	500 ms after the following signal communication status becomes consistent • Starter motor relay control signal • Starter relay status signal (CAN)
B2609: S/L STATUS	• Inhibit engine cranking • Inhibit steering lock	When the following steering lock conditions agree • BCM steering lock control status • Steering lock condition No. 1 signal status • Steering lock condition No. 2 signal status
B260B: STEERING LOCK UNIT	Inhibit steering lock	Erase DTC
B260D: STEERING LOCK UNIT	Inhibit steering lock	Erase DTC
B260F: ENG STATE SIG LOST	Inhibit engine cranking	When any of the following conditions are fulfilled • Power position changes to ACC • Receives engine status signal (CAN)
B2612: S/L STATUS	• Inhibit engine cranking • Inhibit steering lock	When any of the following conditions are fulfilled • Steering lock unit status signal (CAN) is received normally • The BCM steering lock control status matches the steering lock status recognized by the steering lock unit status signal (CAN from IPDM E/R)
B2619: BCM	Inhibit engine cranking	1 second after the steering lock unit power supply output control inside BCM becomes normal

Display contents of CONSULT	Fail-safe	Cancellation
B26EF: STRG LCK RELAY OFF	Inhibit engine cranking	When the following conditions are fulfilled • Steering lock relay signal (CAN): ON • Steering lock unit status signal (CAN): ON
B26F0: STRG LCK RELAY ON	Inhibit engine cranking	When the following conditions are fulfilled • Steering lock relay signal (CAN): OFF • Steering lock unit status signal (CAN): OFF
B26F1: IGN RELAY OFF	Inhibit engine cranking	When the following conditions are fulfilled • Ignition switch ON signal (CAN: Transmitted from BCM): ON • Ignition switch ON signal (CAN: Transmitted from IPDM E/R): ON
B26F2: IGN RELAY ON	Inhibit engine cranking	When the following conditions are fulfilled • Ignition switch ON signal (CAN: Transmitted from BCM): OFF • Ignition switch ON signal (CAN: Transmitted from IPDM E/R): OFF
B26F3: START CONT RLY ON	Inhibit engine cranking	When the following conditions are fulfilled • Starter control relay signal (CAN: Transmitted from BCM): OFF • Starter control relay signal (CAN: Transmitted from IPDM E/R): OFF
B26F4: START CONT RLY OFF	Inhibit engine cranking	When the following conditions are fulfilled • Starter control relay signal (CAN: Transmitted from BCM): ON • Starter control relay signal (CAN: Transmitted from IPDM E/R): ON
B26F7: BCM	Inhibit engine cranking by Intelligent Key system	When room antenna and luggage room antenna functions normally
U0415: VEHICLE SPEED	Inhibit steering lock	When vehicle speed signal (Meter) (CAN) is received normally

REAR WIPER MOTOR PROTECTION

BCM detects the rear wiper stopping position according to the rear wiper stop position signal.
When the rear wiper stop position signal does not change for more than 5 seconds while driving the rear wiper, BCM stops power supply to protect the rear wiper motor.

Condition of cancellation

1. More than 1 minute is passed after the rear wiper stop.
2. Turn rear wiper switch OFF.
3. Operate the rear wiper switch or rear washer switch.

DIAGNOSIS SYSTEM (BCM)

COMMON ITEM

COMMON ITEM : CONSULT-III Function (BCM - COMMON ITEM)

INFOID:0000000006069268

APPLICATION ITEM

CONSULT-III performs the following functions via CAN communication with BCM.

Diagnosis mode	Function Description
Work Support	Changes the setting for each system function.
Self Diagnostic Result	Displays the diagnosis results judged by BCM.
CAN Diag Support Monitor	Monitors the reception status of CAN communication viewed from BCM. Refer to CONSULT-III operation manual.
Data Monitor	The BCM input/output signals are displayed.
Active Test	The signals used to activate each device are forcibly supplied from BCM.
Ecu Identification	The BCM part number is displayed.
Configuration	• Read and save the vehicle specification. • Write the vehicle specification when replacing BCM.

SYSTEM APPLICATION

BCM can perform the following functions for each system.

NOTE:

It can perform the diagnosis modes except the following for all sub system selection items.

×: Applicable item

System	Sub system selection item	Diagnosis mode		
		Work Support	Data Monitor	Active Test
Door lock	DOOR LOCK	×	×	×
Rear window defogger	REAR DEFOGGER		×	×
Warning chime	BUZZER		×	×
Interior room lamp timer	INT LAMP	×	×	×
Exterior lamp	HEAD LAMP	×	×	×
Wiper and washer	WIPER	×	×	×
Turn signal and hazard warning lamps	FLASHER	×	×	×
Automatic air conditioner	AIR CONDITONER		×	×
• Intelligent Key system • Engine start system	INTELLIGENT KEY	×	×	×
Combination switch	COMB SW		×	
Body control system	BCM	×		
NATS	IMMU	×	×	×
Interior room lamp battery saver	BATTERY SAVER	×	×	×
Back door	TRUNK		×	
—	THEFT ALM*	×	×	×
—	RETAINED PWR*		×	
Signal buffer system	SIGNAL BUFFER		×	×

*: This item is displayed, but is not used.

FREEZE FRAME DATA (FFD)

The BCM records the following vehicle condition at the time a particular DTC is detected, and displays on CONSULT-III.

CONSULT screen item	Indication/Unit	Description	
Vehicle Speed	km/h	Vehicle speed of the moment a particular DTC is detected	
Odo/Trip Meter	km	Total mileage (Odometer value) of the moment a particular DTC is detected	
Vehicle Condition	SLEEP>LOCK	Power position status of the moment a particular DTC is detected	While turning BCM status from low power consumption mode to normal mode (Power supply position is “LOCK”)
	SLEEP>OFF		While turning BCM status from low power consumption mode to normal mode (Power supply position is “OFF”.)
	LOCK>ACC		While turning power supply position from “LOCK” to “ACC”
	ACC>ON		While turning power supply position from “ACC” to “IGN”
	RUN>ACC		While turning power supply position from “RUN” to “ACC” (Vehicle is stopping and selector lever is except P position.)
	CRANK>RUN		While turning power supply position from “CRANKING” to “RUN” (From cranking up the engine to run it)
	RUN>URGENT		While turning power supply position from “RUN“ to “ACC” (Emergency stop operation)
	ACC>OFF		While turning power supply position from “ACC” to “OFF”
	OFF>LOCK		While turning power supply position from “OFF” to “LOCK”
	OFF>ACC		While turning power supply position from “OFF” to “ACC”
	ON>CRANK		While turning power supply position from “IGN” to “CRANKING”
	OFF>SLEEP		While turning BCM status from normal mode (Power supply position is “OFF”.) to low power consumption mode
	LOCK>SLEEP		While turning BCM status from normal mode (Power supply position is “LOCK”.) to low power consumption mode
	LOCK		Power supply position is “LOCK” (Ignition switch OFF with steering is locked.)
	OFF		Power supply position is “OFF” (Ignition switch OFF with steering is unlocked.)
	ACC		Power supply position is “ACC” (Ignition switch ACC)
	ON		Power supply position is “IGN” (Ignition switch ON with engine stopped)
	ENGINE RUN		Power supply position is “RUN” (Ignition switch ON with engine running)
	CRANKING		Power supply position is “CRANKING” (At engine cranking)
IGN Counter	0 - 39	The number of times that ignition switch is turned ON after DTC is detected • The number is 0 when a malfunction is detected now. • The number increases like 1 → 2 → 3...38 → 39 after returning to the normal condition whenever ignition switch OFF → ON. • The number is fixed to 39 until the self-diagnosis results are erased if it is over 39.	

INTELLIGENT KEY

INTELLIGENT KEY : CONSULT-III Function (BCM - INTELLIGENT KEY)

INFOID:0000000006069269

WORK SUPPORT

Monitor item	Description
INSIDE ANT DIAGNOSIS	This function allows inside key antenna self-diagnosis
LOCK/UNLOCK BY I-KEY	Door lock/unlock function by door request switch mode can be changed to operation in this mode • On: Operate • Off: Non-operation

Monitor item	Description
ENGINE START BY I-KEY	Engine start function mode can be changed to operation with this mode • On: Operate • Off: Non-operation
TRUNK/GLASS HATCH OPEN	**NOTE:** This item is indicated, but not used
PANIC ALARM SET	Panic alarm button pressing time on Intelligent Key remote control button can be selected from the following with this mode • MODE 1: 0.5 sec • MODE 2: Non-operation • MODE 3: 1.5 sec
TRUNK OPEN DELAY	**NOTE:** This item is indicated, but not used
LO- BATT OF KEY FOB WARN	Intelligent Key low battery warning mode can be changed to operation with this mode • On: Operate • Off: Non-operation
ANTI KEY LOCK IN FUNCTI	Key reminder function mode can be changed to operation with this mode • On: Operate • Off: Non-operation
HAZARD ANSWER BACK	Hazard reminder function mode by door request switch and Intelligent Key button can be selected from the following with this mode • Lock Only: Door lock operation only • Unlock Only: Door unlock operation only • Lock/Unlock: Lock and unlock operation • Off: Non-operation
ANS BACK I-KEY LOCK	Buzzer reminder function (lock operation) mode by door request switch can be selected from the following with this mode • Horn Chirp: Sound horn • Buzzer: Sound Intelligent Key warning buzzer • Off: Non-operation
ANS BACK I-KEY UNLOCK	Buzzer reminder function (unlock operation) mode by door request switch can be changed to operation with this mode • On: Operate • Off: Non-operation
SHORT CRANKING OUTPUT	Starter motor can operate during the times below • 70 msec • 100 msec • 200 msec
CONFIRM KEY FOB ID	It can be checked whether Intelligent Key ID code is registered or not in this mode
AUTO LOCK SET	Auto door lock operation time can be changed in this mode • MODE 1: OFF • MODE 2: 30 sec. • MODE 3: 1 minute • MODE 4: 2 minutes • MODE 5: 3 minutes • MODE 6: 4 minutes • MODE 7: 5 minutes
ANSWER BACK FUNCTION	Buzzer reminder function mode by Intelligent Key button can be selected from the following with this mode • On: Operate • Off: Non-operation
TAKE OUT FROM WIN WARN SET	**NOTE:** This item is indicated, but not used
RETRACTABLE MIRROR SET	Auto retractable door mirror function mode can be changed to operation with this mode • On: Operate • Off: Non-operation

DATA MONITOR

Monitor Item	Condition
REQ SW -DR	Indicates [On/Off] condition of door request switch (driver side)
REQ SW -AS	Indicates [On/Off] condition of door request switch (passenger side)
REQ SW -BD/TR	Indicates [On/Off] condition of back door request switch
PUSH SW	Indicates [On/Off] condition of push-button ignition switch
CLUTCH SW	**NOTE:** This item is indicated, but not monitored
BRAKE SW 1	Indicates [On/Off] condition of stop lamp switch
BRAKE SW 2	Indicates [On/Off]* condition of stop lamp switch power supply
DETE/CANCL SW	Indicates [On/Off] condition of P position
SFT PN/N SW	Indicates [On/Off] condition of P or N position
S/L -LOCK	Indicates [On/Off] condition of steering lock unit (LOCK)
S/L -UNLOCK	Indicates [On/Off] condition of steering lock unit (UNLOCK)
S/L RELAY -F/B	Indicates [On/Off] condition of steering lock relay
UNLK SEN -DR	Indicates [On/Off] condition of driver door UNLOCK status
PUSH SW -IPDM	Indicates [On/Off] condition of push-button ignition switch
IGN RLY1 -F/B	Indicates [On/Off] condition of ignition relay 1
DETE SW -IPDM	Indicates [On/Off] condition of P position
SFT PN -IPDM	Indicates [On/Off] condition of P or N position
SFT P -MET	Indicates [On/Off] condition of P position
SFT N -MET	Indicates [On/Off] condition of N position
ENGINE STATE	Indicates [Stop/Stall/Crank/Run] condition of engine states
S/L LOCK-IPDM	Indicates [On/Off] condition of steering lock unit (LOCK)
S/L UNLK-IPDM	Indicates [On/Off] condition of steering lock unit (UNLOCK)
S/L RELAY-REQ	Indicates [On/Off] condition of steering lock relay
VEH SPEED 1	Display the vehicle speed signal received from combination meter by numerical value [Km/h]
VEH SPEED 2	Display the vehicle speed signal received from ABS or VDC or TCM by numerical value [Km/h]
DOOR STAT-DR	Indicates [LOCK/READY/UNLK] condition of driver side door status
DOOR STAT-AS	Indicates [LOCK/READY/UNLK] condition of passenger side door status
ID OK FLAG	Indicates [Set/Reset] condition of key ID
PRMT ENG STRT	Indicates [Set/Reset] condition of engine start possibility
PRMT RKE STRT	**NOTE:** This item is indicated, but not monitored
TRNK/HAT MNTR	**NOTE:** This item is indicated, but not monitored
RKE OPE COUN1	When remote keyless entry receiver receives the signal transmitted while operating on Intelligent Key, the numerical value start changing
RKE OPE COUN2	**NOTE:** This item is indicated, but not monitored
RKE-LOCK	Indicates [On/Off] condition of LOCK signal from Intelligent Key
RKE-UNLOCK	Indicates [On/Off] condition of UNLOCK signal from Intelligent Key
RKE-TR/BD	**NOTE:** This item is indicated, but not monitored
RKE-PANIC	Indicates [On/Off] condition of PANIC button of Intelligent Key
RKE-MODE CHG	Indicates [On/Off] condition of MODE CHANGE signal from Intelligent Key

*: OFF is displayed when brake pedal is depressed while brake switch power supply is OFF.

ACTIVE TEST

Test item	Description
OUTSIDE BUZZER	This test is able to check Intelligent Key warning buzzer operation • On: Operate • Off: Non-operation
INSIDE BUZZER	This test is able to check warning chime in combination meter operation • Take Out: Take away warning chime sounds when CONSULT-III screen is touched • Key: Key warning chime sounds when CONSULT-III screen is touched • Knob: OFF position warning chime sounds when CONSULT-III screen is touched • Off: Non-operation
INDICATOR	This test is able to check warning lamp operation • KEY ON: “KEY” Warning lamp illuminates when CONSULT-III screen is touched • KEY IND: “KEY” Warning lamp blinks when CONSULT-III screen is touched • Off: Non-operation
INT LAMP	This test is able to check interior room lamp operation • On: Operate • Off: Non-operation
LCD	This test is able to check meter display information • B&P N: Engine start information indicate when CONSULT-III screen is touched • B&P I: Engine start information indicate when CONSULT-III screen is touched • ID NG: This item is displayed, but cannot be monitored • ROTAT: This item is displayed, but cannot be monitored • SFT P: Shift P warning lamp indicate when CONSULT-III screen is touched • INSRT: This item is displayed, but cannot be monitored • BATT: Key warning lamp indicator when CONSULT-III screen is touched • NO KY: Key warning lamp indicator when CONSULT-III screen is touched • OUTKEY: Engine start information indicate when CONSULT-III screen is touched • LK WN: Engine start information indicate when CONSULT-III screen is touched
FLASHER	This test is able to check security hazard lamp operation The hazard lamps are activated after “LH/RH/Off” on CONSULT-III screen is touched
P RANGE	This test is able to check AT shift selector power supply • On: Operate • Off: Non-operation
ENGINE SW ILLUMI	This test is able to check push-ignition switch illumination operation Push-ignition switch illumination illuminates when “ON” on CONSULT-III screen is touched
PUSH SWITCH INDICATOR	This test is able to check LOCK indicator in push-ignition switch operation LOCK indicator in push-ignition switch illuminates when “ON” on CONSULT-III screen is touched
TRUNK/BACK DOOR	**NOTE:** This item is indicated, but not tested
RETRACTABLE MIRROR	This test is able to check auto retractable door mirror operation • On: Operate • Off: Non-operation

ECU DIAGNOSIS INFORMATION

BCM

List of ECU Reference

INFOID:0000000005998910

ECU	Reference
BCM	BCS-18, "Reference Value"
	BCS-37, "Fail-safe"
	BCS-39, "DTC Inspection Priority Chart"
	BCS-40, "DTC Index"

WIRING DIAGRAM

POWER DISTRIBUTION SYSTEM

Wiring Diagram

INFOID:0000000005998911

For connector terminal arrangements, harness layouts, and alphabets in a ⬭ (option abbreviation; if not described in wiring diagram), refer to GI-12, "Connector Information".
回路図待ち。。。

BASIC INSPECTION

DIAGNOSIS AND REPAIR WORK FLOW

Work Flow

INFOID:0000000005998913

OVERALL SEQUENCE

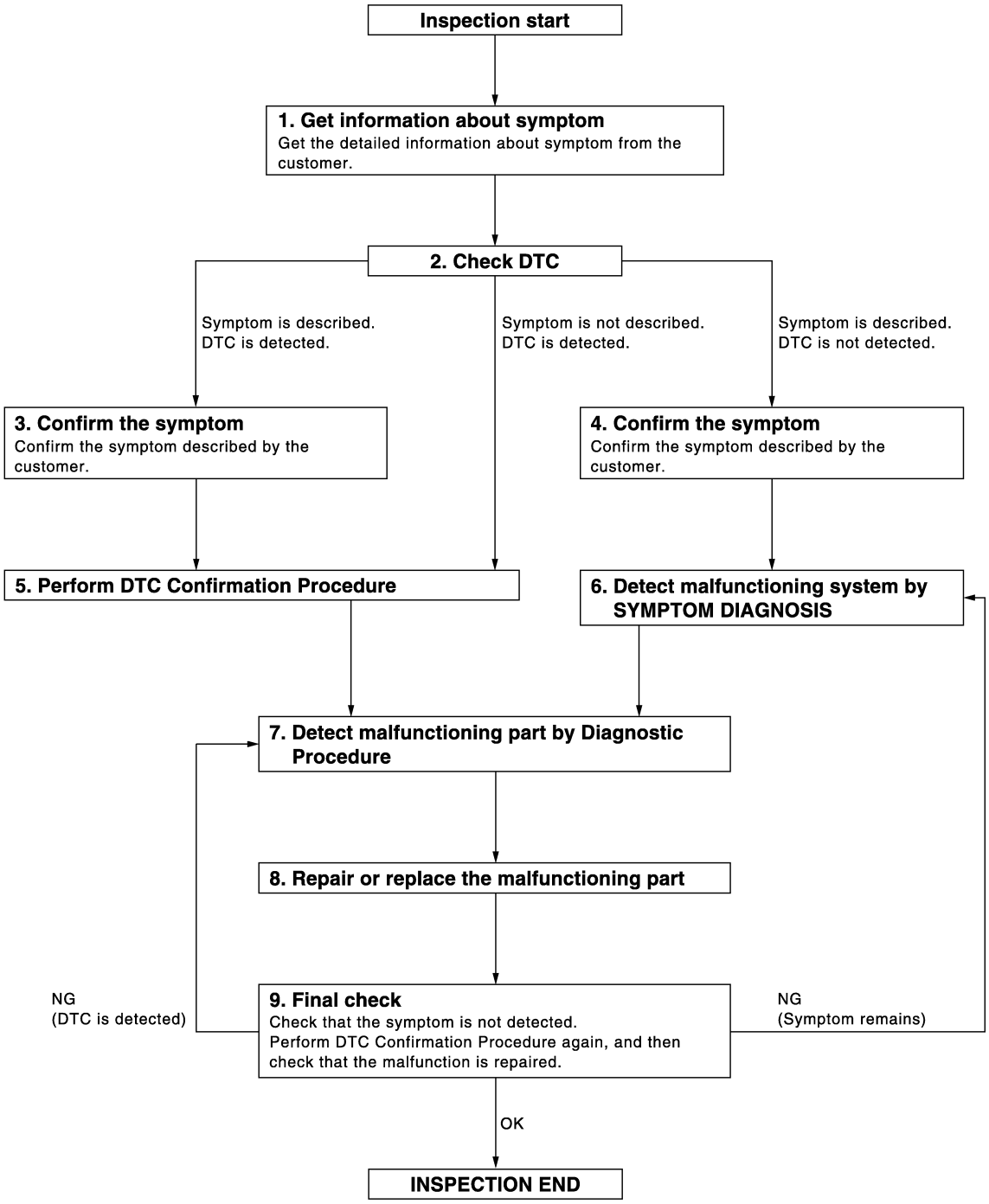

JMKIA3449GB

DETAILED FLOW

1. GET INFORMATION ABOUT SYMPTOM

Get detailed information from the customer about the symptom (the condition and the environment when the incident/malfunction occurs).

>> GO TO 2.

2. CHECK DTC

1. Check DTC for BCM and IPDM E/R.
2. Perform the following procedure if DTC is displayed.
- Record DTC and freeze frame data (Print them out with CONSULT-III.)
- Erase DTC.
- Study the relationship between the cause detected by DTC and the symptom described by the customer.
3. Check related service bulletins for information.

Are any symptoms described and any DTC detected?

Symptom is described, DTC is displayed>>GO TO 3.
Symptom is described, DTC is not displayed>>GO TO 4.
Symptom is not described, DTC is displayed>>GO TO 5.

3. CONFIRM THE SYMPTOM

Confirm the symptom described by the customer.
Connect CONSULT-III to the vehicle in the “DATA MONITOR” mode and check real time diagnosis results.
Verify relation between the symptom and the condition when the symptom is detected.

>> GO TO 5.

4. CONFIRM THE SYMPTOM

Confirm the symptom described by the customer.
Connect CONSULT-III to the vehicle in the “DATA MONITOR ” mode and check real time diagnosis results.
Verify relation between the symptom and the condition when the symptom is detected.

>> GO TO 6.

5. PERFORM DTC CONFIRMATION PROCEDURE

Perform DTC Confirmation Procedure for the displayed DTC, and then check that DTC is detected again.
At this time, always connect CONSULT-III to the vehicle, and check diagnostic results in real time.
If two or more DTCs are detected, refer to BCS-39, "DTC Inspection Priority Chart", and determine trouble diagnosis order.

NOTE:
Perform Component Function Check if DTC Confirmation Procedure is not included in Service Manual. This simplified check procedure is an effective alternative, although DTC cannot be detected during this check.
If the result of Component Function Check is NG, it is the same as the detection of DTC by DTC Confirmation Procedure.

Is DTC detected?

YES >> GO TO 7.
NO >> Refer to GI-33, "Intermittent Incident".

6. DETECT MALFUNCTIONING SYSTEM BY SYMPTOM DIAGNOSIS

Detect malfunctioning system according to SYMPTOM DIAGNOSIS based on the confirmed symptom in step 4, and determine the trouble diagnosis order based on possible causes and symptom.

>> GO TO 7.

7. DETECT MALFUNCTIONING PART BY DIAGNOSTIC PROCEDURE

Inspect according to Diagnostic Procedure of the system.

NOTE:
The Diagnostic Procedure described based on open circuit inspection. A short circuit inspection is also required for the circuit check in the Diagnostic Procedure.

Is malfunctioning part detected?

YES >> GO TO 8.
NO >> Check voltage of related BCM terminals using CONSULT-III.

8. REPAIR OR REPLACE THE MALFUNCTIONING PART

1. Repair or replace the malfunctioning part.
2. Reconnect parts or connectors disconnected during Diagnostic Procedure again after repair and replacement.
3. Check DTC. If DTC is displayed, erase it.

>> GO TO 9.

9. FINAL CHECK

When DTC was detected in step 2, perform DTC Confirmation Procedure or Component Function Check again, and then check that the malfunction is repaired securely.
When symptom was described by the customer, refer to confirmed symptom in step 3 or 4, and check that the symptom is not detected.

Does the symptom reappear?

YES (DTC is detected)>>GO TO 7.
YES (Symptom remains)>>GO TO 6.
NO >> INSPECTION END

DTC/CIRCUIT DIAGNOSIS

B2553 IGNITION RELAY

DTC Logic

INFOID:0000000005998914

DTC DETECTION LOGIC

DTC No.	Trouble diagnosis name	DTC detecting condition	Possible cause
B2553	IGNITION RELAY	BCM detects a difference of signal for 2 seconds or more between the following items. • Ignition relay ON/OFF operation • Ignition relay feedback.	• Harness or connectors (ignition relay feedback circuit is open or short) • BCM • Fuse

DTC CONFIRMATION PROCEDURE

1. PERFORM DTC CONFIRMATION PROCEDURE

1. Turn ignition switch ON under the following conditions, and wait for 2 seconds or more.
- Selector lever is in the P or N position
- Do not depress brake pedal
2. Check “Self-diagnosis result” with CONSULT-III.

Is DTC detected?

YES >> Go to PCS-71, "Diagnosis Procedure".
NO >> INSPECTION END

Diagnosis Procedure

INFOID:0000000005998915

1. CHECK FUSE

Check that the following fuse is not blown.

Signal name	Fuse
Ignition power supply	6

Is the fuse fusing?

YES >> Replace the blown fuse after repairing the affected circuit if a fuse is blown.
NO >> GO TO 2.

2. CHECK IGNITION RELAY FEEDBACK INPUT SIGNAL

1. Turn ignition switch OFF.
2. Disconnect BCM connector.
3. Check voltage between BCM harness connector and ground.

(+)		(–)	Condition		Voltage (V) (Approx.)
BCM					
Connector	Terminal				
M68	38	Ground	Ignition switch	OFF or ACC	0
				ON	Battery voltage

Is the inspection result normal?

YES >> Replace BCM. Refer to BCS-57, "Removal and Installation".
NO >> GO TO 3.

3. CHECK IGNITION RELAY FEEDBACK CIRCUIT

1. Disconnect ignition relay connector.
2. Check continuity between BCM harness connector and ignition relay harness connector.

BCM		Ignition relay	Continuity
Connector	Terminal	Terminal	
M68	38	3	Existed

3. Check continuity between BCM harness connector and ground.

BCM		Ground	Continuity
Connector	Terminal		
M68	38		Not existed

Is the inspection result normal?

YES >> GO TO 4.
NO >> Repair or replace harness.

4. CHECK IGNITION RELAY

Refer to PCS-72, "Component Inspection".

Is the inspection result normal?

YES >> GO TO 5.
NO >> Replace ignition relay.

5. CHECK INTERMITTENT INCIDENT

Refer to GI-33, "Intermittent Incident".

>> INSPECTION END

Component Inspection

INFOID:0000000005998916

1. CHECK IGNITION RELAY

1. Turn ignition switch OFF.
2. Remove ignition relay.
3. Check the continuity between ignition relay terminals.

Terminals	Condition	Continuity
3 and 5	12 V direct current supply between terminals 1 and 2	Existed
	No current supply	Not existed

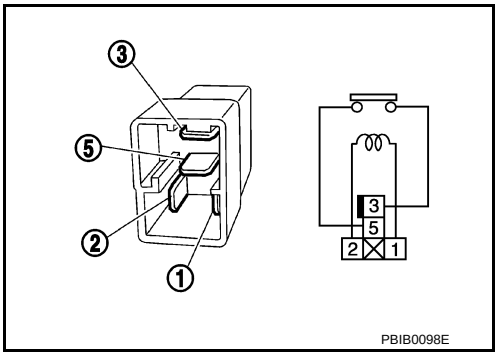

Is the inspection result normal?

YES >> INSPECTION END
NO >> Replace ignition relay.

B2614 ACC RELAY CIRCUIT

DTC Logic

INFOID:0000000005998917

DTC DETECTION LOGIC

DTC No.	Trouble diagnosis name	DTC detecting condition	Possible cause
B2614	BCM	An immediate operation of accessory relay is requested by BCM, but there is no response for more than 2 second.	• Harness or connectors (Accessory relay circuit is open or shorted) • BCM • Accessory relay

DTC CONFIRMATION PROCEDURE

1.PERFORM DTC CONFIRMATION PROCEDURE

1. Turn the power supply position to ACC under the following conditions, and wait for 2 second or more.
- Selector lever is in the P position
- Do not depress brake pedal
2. Check “Self-diagnosis result” with CONSULT-III.

Is DTC detected?

YES >> Go to PCS-73, "Diagnosis Procedure".
NO >> INSPECTION END

Diagnosis Procedure

INFOID:0000000005998918

1.CHECK ACCESSORY RELAY POWER SUPPLY-1

1. Turn ignition switch OFF.
2. Disconnect accessory relay.
3. Check voltage between accessory relay harness connector and ground.

(+) Accessory relay Terminal	(–)	Condition		Voltage (V) (Approx.)
1	Ground	Ignition switch	OFF	0
			ACC or ON	12

Is the inspection result normal?

YES >> GO TO 3.
NO >> GO TO 2.

2.CHECK ACCESSORY RELAY POWER SUPPLY CIRCUIT

1. Turn ignition switch OFF.
2. Disconnect BCM connector.
3. Check continuity between accessory relay harness connector and BCM harness connector.

Accessory relay	BCM		Continuity
Terminal	Connector	Terminal	
1	M71	96	Existed

4. Check continuity between accessory relay harness connector and ground.

Accessory relay	Ground	Continuity
Terminal		
1		Not existed

Is the inspection result normal?

YES >> Replace BCM. Refer to BCS-58, "Removal and Installation".
NO >> Repair or replace harness.

3. CHECK ACCESSORY RELAY GROUND CIRCUIT

1. Turn ignition switch OFF.
2. Check continuity between accessory relay harness connector and ground.

Accessory relay	Ground	Continuity
Terminal		
2		Existed

Is the inspection result normal?

YES >> GO TO 4.
NO >> Repair accessory relay ground circuit.

4. CHECK ACCESSORY RELAY POWER SUPPLY CIRCUIT-2

1. Turn ignition switch ACC.
2. Check voltage between accessory relay harness connector and ground.

(+)	(–)	Voltage (V) (Approx.)
Accessory relay		
Terminal		
5	Ground	Battery voltage

Is the inspection result normal?

YES >> GO TO 5.
NO >> Check continuity open or short between accessory relay and battery.

5. CHECK ACCESSORY RELAY

Refer to PCS-74, "Component Inspection".

Is the inspection result normal?

YES >> GO TO 6.
NO >> Replace accessory relay.

6. CHECK INTERMITTENT INCIDENT

Refer to GI-33, "Intermittent Incident".

>> INSPECTION END

Component Inspection

INFOID:0000000005998919

1. CHECK ACCESSORY RELAY

1. Turn ignition switch OFF.
2. Remove accessory relay.
3. Check the continuity between accessory relay terminals.

Terminals	Condition	Continuity
3 and 5	12 V direct current supply between terminals 1 and 2	Existed
	No current supply	Not existed

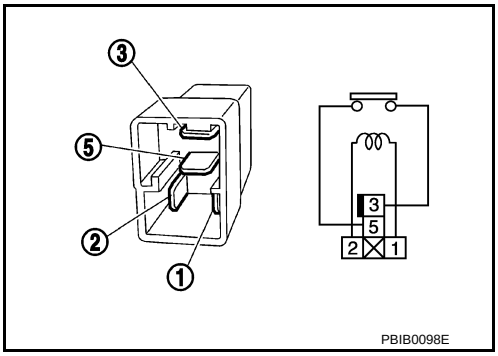

Is the inspection result normal?

YES >> INSPECTION END
NO >> Replace accessory relay

B2615 BLOWER RELAY CIRCUIT

DTC Logic

INFOID:0000000005998920

DTC DETECTION LOGIC

DTC No.	Trouble diagnosis name	DTC detecting condition	Possible cause
B2615	BCM	BCM detects a difference of signal for 1 second or more between the following items. • Blower relay ON/OFF request • Blower relay feedback	• Harness or connectors (Blower relay circuit is open or shorted) • BCM • Blower relay

DTC CONFIRMATION PROCEDURE

1. PERFORM DTC CONFIRMATION PROCEDURE

1. Turn ignition switch ON under the following conditions, and wait for 1 second or more.
- Selector lever is in the P position
- Do not depress brake pedal
2. Check “Self-diagnosis result” with CONSULT-III.

Is DTC detected?

YES >> Go to PCS-75, "Diagnosis Procedure".
NO >> INSPECTION END

Diagnosis Procedure

INFOID:0000000005998921

1. CHECK BLOWER RELAY POWER SUPPLY

1. Turn ignition switch OFF.
2. Disconnect blower relay.
3. Check voltage between blower relay harness connector and ground.

(+) Blower relay Terminal	(–)	Condition		Voltage (V) (Approx.)
1	Ground	Ignition switch	OFF or ACC	0
			ON	Battery voltage

Is the inspection result normal?

YES >> GO TO 3.
NO >> GO TO 2.

2. CHECK BLOWER RELAY POWER SUPPLY CIRCUIT

1. Turn ignition switch OFF.
2. Disconnect BCM connector.
3. Check continuity between blower relay harness connector and BCM harness connector.

Blower relay	BCM		Continuity
Terminal	Connector	Terminal	
1	M71	106	Existed

4. Check continuity between blower relay harness connector and ground.

Blower relay	Ground	Continuity
Terminal		
1		Not existed

Is the inspection result normal?

YES >> GO TO 6.
NO >> Repair or replace harness.

3. CHECK BLOWER RELAY GROUND CIRCUIT

1. Turn ignition switch OFF.
2. Check continuity between blower relay harness connector and ground.

Blower relay	Ground	Continuity
Terminal		
2		Existed

Is the inspection result normal?

YES >> GO TO 4.
NO >> Repair blower relay ground circuit.

4. CHECK BLOWER RELAY POWER SUPPLY CIRCUIT-2

1. Turn ignition switch ON or ACC.
2. Check voltage between blower relay harness connector and ground.

(+)	(–)	Voltage (V) (Approx.)
Blower relay		
Terminal		
5	Ground	Battery voltage

Is the inspection result normal?

YES >> GO TO 5.
NO >> Check continuity open or short between blower relay and battery.

5. CHECK BLOWER RELAY

Refer to PCS-76, "Component Inspection".

Is the inspection result normal?

YES >> GO TO 6.
NO >> Replace blower relay.

6. CHECK INTERMITTENT INCIDENT

Refer to GI-33, "Intermittent Incident".

>> INSPECTION END

Component Inspection

INFOID:0000000005998922

1. CHECK BLOWER RELAY

1. Turn ignition switch OFF.
2. Remove blower relay.
3. Check the continuity between blower relay terminals.

Terminals	Condition	Continuity
3 and 5	12 V direct current supply between terminals 1 and 2	Existed
	No current supply	Not existed

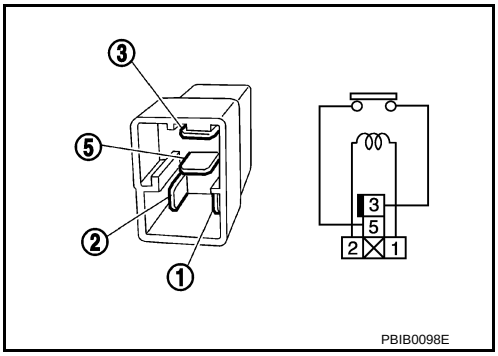

Is the inspection result normal?

YES >> INSPECTION END
NO >> Replace blower relay

B2616 IGNITION RELAY CIRCUIT

DTC Logic

INFOID:0000000005998923

DTC DETECTION LOGIC

DTC No.	Trouble diagnosis name	DTC detecting condition	Possible cause
B2616	BCM	An immediate operation of ignition relay is requested by BCM, but there is no response for more than 1 second	• Harness or connectors (Ignition relay circuit is open or shorted) • BCM • Ignition relay

DTC CONFIRMATION PROCEDURE

1. PERFORM DTC CONFIRMATION PROCEDURE

1. Turn ignition switch ON under the following conditions, and wait for 1 second or more.
- Selector lever is in the P position
- Do not depress brake pedal
2. Check “Self-diagnosis result” with CONSULT-III.

Is DTC detected?

YES >> Go to PCS-77, "Diagnosis Procedure".
NO >> INSPECTION END

Diagnosis Procedure

INFOID:0000000005998924

1. CHECK IGNITION RELAY POWER SUPPLY

1. Turn ignition switch OFF.
2. Disconnect ignition relay.
3. Check voltage between ignition relay harness connector and ground.

(+) Ignition relay Terminal	(–)	Condition		Voltage (V) (Approx.)
2	Ground	Ignition switch	OFF or ACC	0
			ON	Battery voltage

Is the inspection result normal?

YES >> GO TO 3.
NO >> GO TO 2.

2. CHECK IGNITION RELAY POWER SUPPLY CIRCUIT

1. Turn ignition switch OFF.
2. Disconnect BCM connector.
3. Check continuity between ignition relay harness connector and BCM harness connector.

Ignition relay	BCM		Continuity
Terminal	Connector	Terminal	
2	M71	99	Existed

4. Check continuity between ignition relay harness connector and ground.

Ignition relay	Ground	Continuity
Terminal		
2		Not existed

Is the inspection result normal?

YES >> Replace BCM. Refer to BCS-57, "Removal and Installation".
NO >> Repair or replace harness.

3. CHECK IGNITION RELAY GROUND CIRCUIT

1. Turn ignition switch OFF.
2. Check continuity between ignition relay harness connector and ground.

Ignition relay	Ground	Continuity
Terminal		
1		Existed

Is the inspection result normal?

YES >> GO TO 4.
NO >> Repair ignition relay ground circuit.

4. CHECK IGNITION RELAY POWER SUPPLY CIRCUIT-2

1. Turn ignition switch ON.
2. Check voltage between ignition relay harness connector and ground.

(+)	(–)	Voltage (V) (Approx.)
Ignition relay		
Terminal		
5	Ground	Battery voltage

Is the inspection result normal?

YES >> GO TO 5.
NO >> Check continuity open or short between ignition relay and battery.

5. CHECK IGNITION RELAY

Refer to PCS-78, "Component Inspection".

Is the inspection result normal?

YES >> GO TO 6.
NO >> Replace ignition relay.

6. CHECK INTERMITTENT INCIDENT

Refer to GI-33, "Intermittent Incident".

>> INSPECTION END

Component Inspection

INFOID:0000000005998925

1. CHECK IGNITION RELAY

1. Turn ignition switch OFF.
2. Remove ignition relay.
3. Check the continuity between ignition relay terminals.

Terminals	Condition	Continuity
3 and 5	12 V direct current supply between terminals 1 and 2	Existed
	No current supply	Not existed

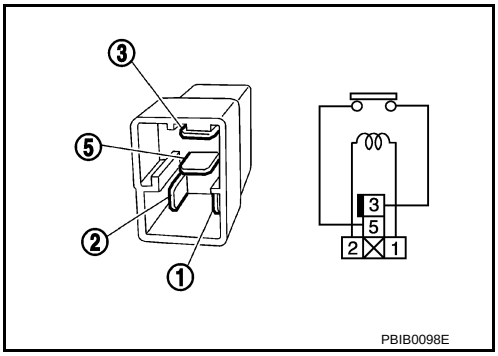

Is the inspection result normal?

YES >> INSPECTION END
NO >> Replace Ignition relay

B2618 BCM

DTC Logic

INFOID:0000000005998926

DTC DETECTION LOGIC

NOTE:

- If DTC B2618 is displayed with DTC U1000, first perform the trouble diagnosis for DTC U1000. Refer to BCS-47, "DTC Logic".
- If DTC B2618 is displayed with DTC U1010, first perform the trouble diagnosis for DTC U1010. Refer to BCS-48, "DTC Logic".

DTC No.	Trouble diagnosis name	DTC detecting condition	Possible cause
B2618	BCM	An immediate operation of ignition relay (IPDM E/R) is requested by BCM, but there is no response for more than 1 second	BCM

DTC CONFIRMATION PROCEDURE

1. PERFORM DTC CONFIRMATION PROCEDURE

1. Turn ignition switch ON under the following conditions, and wait for 1 second or more.
- Selector lever is in the P or N position
- Do not depress brake pedal
2. Check “Self-diagnosis result” with CONSULT-III.

Is DTC detected?

YES >> Go to PCS-79, "Diagnosis Procedure".
NO >> INSPECTION END

Diagnosis Procedure

INFOID:0000000005998927

1. INSPECTION START

1. Turn ignition switch ON.
2. Select “Self-diagnosis result” mode with CONSULT-III.
3. Touch “ERASE”.
4. Perform DTC Confirmation Procedure.
   See PCS-79, "DTC Logic".

Is the 1st trip DTC B2618 displayed again?

YES >> Replace BCM. Refer to BCS-57, "Removal and Installation"
NO >> INSPECTION END

B261A PUSH-BUTTON IGNITION SWITCH

DTC Logic

INFOID:0000000005998928

DTC DETECTION LOGIC

NOTE:

- If DTC B261A is displayed with DTC U1000, first perform the trouble diagnosis for DTC U1000. Refer to BCS-47, "DTC Logic".
- If DTC B261A is displayed with DTC U1010, first perform the trouble diagnosis for DTC U1010. Refer to BCS-48, "DTC Logic".

DTC No.	Trouble diagnosis name	DTC detecting condition	Possible cause
B261A	PUSH-BTN IGN SW	BCM detects a difference of signal for 1 second or more between the following items. • Push-button ignition switch signal • Push-button ignition switch status siganl (CAN)	• Harness or connectors (Push-button ignition switch circuit is open or shorted.) • BCM • IPDM E/R

DTC CONFIRMATION PROCEDURE

1. PERFORM DTC CONFIRMATION PROCEDURE

1. Press the push-button ignition switch under the following conditions, and wait for 1 second or more.
- Selector lever is in the P or N position
- Do not depress brake pedal
2. Check “Self-diagnosis result” with CONSULT-III.

Is DTC detected?

YES >> Go to PCS-80, "Diagnosis Procedure".
NO >> INSPECTION END

Diagnosis Procedure

INFOID:0000000005998929

1. CHECK IGNITION SWITCH OUTPUT SIGNAL (PUSH-BUTTON IGNITION SWITCH)

1. Disconnect push-button ignition switch connector and IPDM E/R connector.
2. Check voltage between push-button ignition switch harness connector and ground.

(+)		(–)	Voltage (V) (Approx.)
Push-button ignition switch			
Connector	Terminal		
M101	8	Ground	12

Is the inspection result normal?

YES >> GO TO 3.
NO >> GO TO 2.

2. CHECK PUSH-BUTTON IGNITION SWITCH CIRCUIT (BCM)

1. Disconnect BCM connector.
2. Check continuity between BCM harness connector and push-button ignition switch harness connector.

BCM		Push-button ignition switch		Continuity
Connector	Terminal	Connector	Terminal	
M71	100	M101	8	Existed

3. Check continuity between push-button ignition switch harness connector and ground.

Push-button ignition switch		Ground	Continuity
Connector	Terminal		
M101	8		Not existed

Is the inspection result normal?

YES >> Replace BCM. Refer to BCS-57, "Removal and Installation".
NO >> Repair or replace harness.

3. CHECK IGNITION SWITCH OUTPUT SIGNAL (IPDM E/R)

Check voltage between IPDM E/R harness connector and ground.

(+)		(–)	Voltage (V) (Approx.)
IPDM E/R			
Connector	Terminal		
E17	81	Ground	12

Is the inspection result normal?

YES >> Replace IPDM E/R. Refer to PCS-28, "Removal and Installation".
NO >> GO TO 4.

4. CHECK PUSH-BUTTON IGNITION SWITCH CIRCUIT (IPDM E/R)

1. Disconnect IPDM E/R connector.
2. Check continuity between IPDM E/R harness connector and push-button ignition switch harness connector.

IPDM E/R		Push-button ignition switch		Continuity
Connector	Terminal	Connector	Terminal	
E17	81	M101	8	Existed

3. Check continuity between push-button ignition switch harness connector and ground.

Push-button ignition switch		Ground	Continuity
Connector	Terminal		
M101	8		Not existed

Is the inspection result normal?

YES >> GO TO 5.
NO >> Repair or replace harness.

5. CHECK INTERMITTENT INCIDENT

Refer to GI-33, "Intermittent Incident".

>> INSPECTION END

B26F1 IGNITION RELAY

DTC Logic

INFOID:0000000006046425

DTC DETECTION LOGIC

DTC No.	Trouble diagnosis name	DTC detecting condition	Possible cause
B26F1	IGN RELAY OFF	BCM transmits the ignition relay control signal (ON: 0 V) or ignition switch ON signal (ON) (CAN), but does not receives ignition switch ON signal (ON) (CAN) from IPDM E/R.	• Harness or connectors (ignition relay circuit is open) • BCM • IPDM E/R

DTC CONFIRMATION PROCEDURE

1.PERFORM DTC CONFIRMATION PROCEDURE

1. Turn ignition switch ON under the following conditions, and wait for 2 seconds or more.
- Selector lever is in the P or N position
- Do not depress brake pedal
2. Check “Self-diagnosis result” with CONSULT-III.

Is DTC detected?

YES >> Go to PCS-82, "Diagnosis Procedure".
NO >> INSPECTION END

Diagnosis Procedure

INFOID:0000000006046426

1.CHECK IPDM E/R SELF-DIAGNOSTIC RESULT

1. Turn ignition switch ON.
2. Erase the DTC of IPDM E/R.
3. Turn ignition switch OFF.
4. Turn ignition switch ON and check the DTC again.

Is DTC detected?

YES >> Repair or replace the malfunctioning part. Refer to PCS-22, "DTC Index".
NO >> GO TO 2.

2.CHECK IGNITION RELAY (IPDM E/R) CONTROL SIGNAL

Check voltage between BCM harness connector and ground.

(+)		(–)	Condition		Voltage (V) (Approx.)
BCM					
Connector	Terminal				
M71	98	Ground	Ignition switch	ON	0

Is the inspection result normal?

YES >> GO TO 3.
NO >> Replace BCM. Refer to BCS-57, "Removal and Installation".

3.CHECK IGNITION RELAY (IPDM E/R) CONTROL SIGNAL CIRCUIT

1. Turn ignition switch OFF.
2. Disconnect BCM and IPDM connectors.
3. Check continuity between BCM harness connector and IPDM E/R harness connector.

BCM		IPDM E/R		Continuity
Connector	Terminal	Connector	Terminal	
M71	98	E17	68	Existed

Is the inspection result normal?

YES >> Replace IPDM E/R.

NO >> Repair or replace harness.

B26F2 IGNITION RELAY

DTC Logic

INFOID:0000000006046427

DTC DETECTION LOGIC

DTC No.	Trouble diagnosis name	DTC detecting condition	Possible cause
B26F2	IGN RELAY ON	BCM transmits the ignition relay control signal (OFF: 12 V) or ignition switch ON signal (OFF) (CAN), but does not receives ignition switch ON signal (OFF) (CAN) from IPDM E/R.	• Harness or connectors (ignition relay circuit is short) • BCM • IPDM E/R

DTC CONFIRMATION PROCEDURE

1.PERFORM DTC CONFIRMATION PROCEDURE

1. Turn ignition switch ON under the following conditions, and wait for 2 seconds or more.
- Selector lever is in the P or N position
- Do not depress brake pedal
2. Check “Self-diagnosis result” with CONSULT-III.

Is DTC detected?

YES >> Go to PCS-84, "Diagnosis Procedure".
NO >> INSPECTION END

Diagnosis Procedure

INFOID:0000000006046428

1.CHECK IPDM E/R SELF-DIAGNOSTIC RESULT

1. Turn ignition switch ON.
2. Erase the DTC of IPDM E/R.
3. Turn ignition switch OFF.
4. Turn ignition switch ON and check the DTC again.

Is DTC detected?

YES >> Repair or replace the malfunctioning part. Refer to PCS-22, "DTC Index".
NO >> GO TO 2.

2.CHECK IGNITION RELAY (IPDM E/R) CONTROL SIGNAL

1. Turn ignition switch OFF.
2. Check voltage between IPDM E/R harness connector and ground.

(+)		(–)	Condition		Voltage (V) (Approx.)
IPDM E/R					
Connector	Terminal				
E17	90	Ground	Ignition switch	OFF or ACC	12

Is the inspection result normal?

YES >> Replace IPDM E/R.
NO >> GO TO 3.

3.CHECK IGNITION RELAY (IPDM E/R) CONTROL SIGNAL CIRCUIT - 1

1. Disconnect BCM and IPDM E/R connectors.
2. Check continuity between IPDM E/R harness connector and ground.

IPDM E/R		Ground	Continuity
Connector	Terminal		
E17	90		Not existed

Is the inspection result normal?

YES >> GO TO 4.

NO >> Repair or replace harness.

4. CHECK IGNITION RELAY (IPDM E/R) CONTROL SIGNAL CIRCUIT - 2

1. Connect IPDM E/R connectors.
2. Check voltage between IPDM E/R harness connector and ground.

(+)		(–)	Condition		Voltage (V) (Approx.)
IPDM E/R					
Connector	Terminal				
E17	90	Ground	Ignition switch	OFF or ACC	12

Is the inspection result normal?

YES >> Replace BCM. Refer to BCS-57, "Removal and Installation".
NO >> Replace IPDM E/R.

B26F6 BCM

DTC Logic

INFOID:0000000005998936

DTC DETECTION LOGIC

NOTE:

- If DTC B26F6 is displayed with DTC U1000, first perform the trouble diagnosis for DTC U1000. Refer to BCS-47, "DTC Logic".
- If DTC B26F6 is displayed with DTC U1010, first perform the trouble diagnosis for DTC U1010. Refer to BCS-48, "DTC Logic".

DTC No.	Trouble diagnosis name	DTC detecting condition	Possible cause
B26F6	BCM	Ignition relay ON signal is not transmitted from IPDM E/R when BCM turns ignition relay ON.	BCM

DTC CONFIRMATION PROCEDURE

1. PERFORM DTC CONFIRMATION PROCEDURE

1. Turn ignition switch ON under the following conditions, and wait for 1 second or more.
- Selector lever is in the P or N position
- Do not depress brake pedal
2. Check “Self-diagnosis result” with CONSULT-III.

Is DTC detected?

YES >> Go to PCS-86, "Diagnosis Procedure".
NO >> INSPECTION END

Diagnosis Procedure

INFOID:0000000005998937

1. INSPECTION START

1. Turn ignition switch ON.
2. Select “Self-diagnosis result” mode with CONSULT-III.
3. Touch “ERASE”.
4. Perform DTC Confirmation Procedure.
   See PCS-86, "DTC Logic".

Is DTC detected?

YES >> Replace BCM. Refer to BCS-57, "Removal and Installation"
NO >> INSPECTION END

PUSH-BUTTON IGNITION SWITCH

Component Function Check

INFOID:0000000005998939

1. CHECK FUNCTION

1. Select “PUSH SW” in “Data Monitor” mode with CONSULT-III.
2. Check the push-button ignition switch signal under the following conditions.

Test item	Condition	Status
PUSH SW	Push-button ignition switch is pressed	ON
	Push-button ignition switch is not pressed	OFF

Is the indication normal?

YES >> INSPECTION END.
NO >> Go to PCS-87, "Diagnosis Procedure".

Diagnosis Procedure

INFOID:0000000005998940

1. CHECK PUSH-BUTTON IGNITION SWITCH OUTPUT SIGNAL 1

1. Turn ignition switch OFF.
2. Disconnect push-button ignition switch connector and IPDM E/R connector.
3. Check voltage between push-button ignition switch harness connector and ground.

(+)		(–)	Voltage (V) (Approx.)
Push-button ignition switch			
Connector	Terminal		
M101	8	Ground	Battery voltage

Is the inspection result normal?

YES >> GO TO 3.
NO >> GO TO 2.

2. CHECK PUSH-BUTTON IGNITION SWITCH CIRCUIT 1

1. Disconnect BCM connector.
2. Check continuity between BCM harness connector and push-button ignition switch harness connector.

BCM		Push-button ignition switch		Continuity
Connector	Terminal	Connector	Terminal	
M71	100	M101	8	Existed

3. Check continuity between BCM harness connector and ground.

BCM		Ground	Continuity
Connector	Terminal		
M71	100		Not existed

Is the inspection result normal?

YES >> Replace BCM. Refer to BCS-57, "Removal and Installation".
NO >> Repair or replace harness.

3. CHECK PUSH-BUTTON IGNITION SWITCH OUTPUT SIGNAL 2

Check voltage between IPDM E/R harness connector and ground.

(+)		(–)	Voltage (V) (Approx.)
IPDM E/R			
Connector	Terminal		
E17	81	Ground	Battery voltage

Is the inspection result normal?

YES >> GO TO 5.
NO >> GO TO 4.

4. CHECK PUSH-BUTTON IGNITION SWITCH CIRCUIT 2

1. Disconnect BCM connector.
2. Check continuity between IPDM E/R harness connector and push-button ignition switch harness connector.

IPDM E/R		Push-button ignition switch		Continuity
Connector	Terminal	Connector	Terminal	
E17	81	M101	8	Existed

3. Check continuity between IPDM E/R harness connector and ground.

IPDM E/R		Ground	Continuity
Connector	Terminal		
E17	81		Not existed

Is the inspection result normal?

YES >> Replace IPDM E/R. Refer to PCS-28, "Removal and Installation".
NO >> Repair or replace harness.

5. CHECK PUSH-BUTTON IGNITION SWITCH GROUND CIRCUIT

Check continuity between push-button ignition switch harness connector and ground.

Push-button ignition switch		Ground	Continuity
Connector	Terminal		
M101	4		Existed

Is the inspection result normal?

YES >> GO TO 6.
NO >> Repair or replace harness.

6. CHECK PUSH-BUTTON IGNITION SWITCH

Refer to PCS-88, "Component Inspection".

Is the inspection result normal?

YES >> GO TO 7.
NO >> Replace push-button ignition switch.

7. CHECK INTERMITTENT INCIDENT

Refer to GI-33, "Intermittent Incident".

>> INSPECTION END

Component Inspection

INFOID:0000000005998941

1. CHECK PUSH-BUTTON IGNITION SWITCH

1. Turn ignition switch OFF.
2. Disconnect push-button ignition switch connector.
3. Check continuity between push-button ignition switch terminals.

Push-button ignition switch		Condition	Continuity
Terminal			
4	8	Pressed	Existed
		Not pressed	Not existed

Is the inspection result normal?

YES >> INSPECTION END
NO >> Replace push-button ignition switch.

PUSH-BUTTON IGNITION SWITCH POSITION INDICATOR

Description

INFOID:0000000005998942

Push-button ignition switch changes the power supply position.
BCM maintains the power supply position status.
BCM changes the power supply position with the operation of the push-button ignition switch.

Component Function Check

INFOID:0000000005998943

1.CHECK FUNCTION

Check push-button ignition switch (“PUSH SWITCH INDICATOR”) in Active Test Mode with CONSULT-III.

Test item		Description	
PUSH SWITCH INDICATOR	ON	Position indicator	Illuminates
	OFF		Does not illuminate

Is the inspection result normal?

YES >> INSPECTION END
NO >> Refer to PCS-90, "Diagnosis Procedure".

Diagnosis Procedure

INFOID:0000000005998944

1.CHECK PUSH-BUTTON IGNITION SWITCH INPUT SIGNAL

1. Turn ignition switch OFF.
2. Disconnect push-button ignition switch connector.
3. Check voltage between push-button ignition switch harness connector and ground.

(+)		(–)	Voltage (V) (Approx.)
Push-button ignition switch			
Connector	Terminal		
M101	3	Ground	Battery voltage

Is the inspection normal?

YES >> GO TO 2.
NO-1 >> Check 10 A fuse [No.7, located in fuse block (J/B)].
NO-2 >> Check harness for open or short between push-button ignition switch and fuse.

2.CHECK BCM INPUT

1. Connect push-button ignition switch connector.
2. Disconnect BCM connector.
3. Check voltage between BCM connector and ground.

(+)		(–)	Voltage (V) (Approx.)
BCM			
Connector	Terminal		
M71	91	Ground	Battery voltage

Is the inspection normal?

YES >> Replace BCM. Refer to BCS-57, "Removal and Installation".
NO >> GO TO 3.

3.CHECK PUSH-BUTTON IGNITION SWITCH CIRCUIT

1. Disconnect push-button ignition switch connector.
2. Check continuity between BCM harness connector and push-button ignition switch harness connector.

BCM		Push-button ignition switch		Continuity
Connector	Terminal	Connector	Terminal	
M71	91	M101	7	Existed

3. Check continuity between BCM harness connector and ground.

BCM		Ground	Continuity
Connector	Terminal		
M71	91		Not existed

Is the inspection normal?

YES >> Replace push-button ignition switch.
NO >> Repair or replace harness.

SYMPTOM DIAGNOSIS

PUSH-BUTTON IGNITION SWITCH DOES NOT OPERATE

Description

INFOID:0000000005998945

Check that vehicle is under the condition shown in “Conditions of vehicle” before starting diagnosis, and check each symptom.

NOTE:

The engine start function, door lock function, power distribution system, and NATS-IVIS/NVIS in the Intelligent Key system are closely related to each other regarding control. The vehicle security function can operate only when the door lock and power distribution system are operating normally.

Conditions of Vehicle (Operating Conditions)

- “ENGINE START BY I-KEY” in “WORK SUPPORT” is ON when setting on CONSULT-III.
- One or more of Intelligent Keys with registered Intelligent Key ID is in the vehicle.

Diagnosis Procedure

INFOID:0000000005998946

1. PERFORM WORK SUPPORT

Perform “INSIDE ANT DIAGNOSIS” on Work Support of “INTELLIGENT KEY”.
Refer to XX-XX, "*****".

>> GO TO 2.

2. PERFORM SELF-DIAGNOSIS RESULT

Perform Self-Diagnosis Result of “BCM”.

Is DTC detected?

YES >> Refer to BCS-40, "DTC Index".
NO >> GO TO 3.

3. CHECK PUSH-BUTTON IGNITION SWITCH

Check push-button ignition switch.
Refer to PCS-87, "Component Function Check".

Is the operation normal?

YES >> GO TO 4.
NO >> Repair or replace malfunctioning parts.

4. CONFIRM THE OPERATION

Confirm the operation again.

Is the inspection normal?

YES >> Check intermittent incident. Refer to GI-33, "Intermittent Incident".
NO >> GO TO 1.

PUSH-BUTTON IGNITION SWITCH POSITION INDICATOR DOES NOT ILLUMINATE

Description

INFOID:0000000005998947

- Before performing the diagnosis in the following table, check “Work Flow”. Refer to PCS-68, "Work Flow".
- Check that vehicle is under the condition shown in “Conditions of vehicle” before starting diagnosis, and check each symptom.

Conditions of Vehicle (Operating Conditions)

- “ENGINE START BY I-KEY” in “WORK SUPPORT” is ON when setting on CONSULT-III.
- One or more of Intelligent Keys with registered Intelligent Key ID is in the vehicle.

Diagnosis Procedure

INFOID:0000000005998948

1. CHECK PUSH-BUTTON IGNITION SWITCH INDICATOR

Check push-button ignition switch indicator.
Refer to PCS-90, "Component Function Check".

Is the inspection result normal?

YES >> GO TO 2.
NO >> Repair or replace the malfunctioning parts.

2. CONFIRM THE OPERATION

Confirm the operation again.

Is the result normal?

YES >> Check intermittent incident. Refer to GI-33, "Intermittent Incident".
NO >> GO TO 1.

REMOVAL AND INSTALLATION

PUSH-BUTTON IGNITION SWITCH

Exploded View

INFOID:0000000006044505

Refer to IP-12, "Exploded View".

Removal and Installation

INFOID:0000000006044506

REMOVAL

1. Remove the cluster lid A. Refer to IP-13, "Removal and Installation".
2. Disengage the push-button ignition switch fixing pawl and then remove push-button ignition switch.

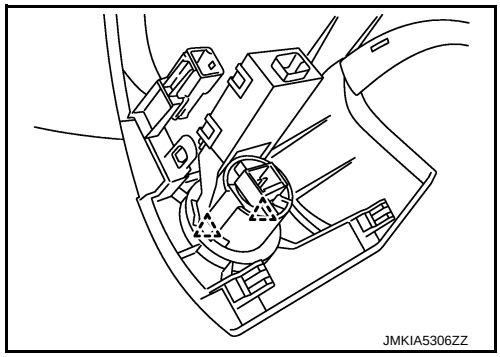

: Pawl

INSTALLATION

Install in the reverse order of removal.

SECTION PG

POWER SUPPLY, GROUND & CIRCUIT ELEMENTS

CONTENTS

PRECAUTION 3

PRECAUTIONS 3
Precaution for Supplemental Restraint System (SRS) "AIR BAG" and "SEAT BELT PRE-TENSIONER" 3

SYSTEM DESCRIPTION 4

COMPONENT PARTS 4
Circuit Breaker 4
Battery 4
Harness Connector 4
Standardized Relay 7

WIRING DIAGRAM 10

POWER SUPPLY ROUTING CIRCUIT 10
Wiring Diagram - BATTERY POWER SUPPLY - 10
Wiring Diagram - BATTERY POWER SUPPLY FUSIBLE LINK No. H - 13
Wiring Diagram - BATTERY POWER SUPPLY FUSE No. 13 - 14
Wiring Diagram - BATTERY POWER SUPPLY FUSE No. 46 - 15
Wiring Diagram - BATTERY POWER SUPPLY FUSE No. 49 - 16
Wiring Diagram - ACCESSORY POWER SUPPLY - 17
Wiring Diagram - ACCESSORY POWER SUPPLY FUSE No. 19 - 18
Wiring Diagram - IGNITION POWER SUPPLY - 19
Wiring Diagram - IGNITION POWER SUPPLY FUSE No. 3 - 22
Wiring Diagram - IGNITION POWER SUPPLY FUSE No. 6 - 24
Wiring Diagram - IGNITION POWER SUPPLY FUSE No. 15 - 25
Wiring Diagram - IGNITION POWER SUPPLY FUSE No. 48 - 26
Wiring Diagram - IGNITION POWER SUPPLY FUSE No. 51 - 27
Wiring Diagram - IGNITION POWER SUPPLY FUSE No. 52 - 29

OPTION HARNESS 30
Wiring Diagram 30

FUSE BLOCK - JUNCTION BOX (J/B) 31
Fuse, Connector and Terminal Arrangement 31

FUSE, FUSIBLE LINK AND RELAY BOX 32
Fuse and Fusible Link Arrangement 32

IPDM E/R (INTELLIGENT POWER DISTRIBUTION MODULE ENGINE ROOM) 33
Fuse, Connector and Terminal Arrangement 33

HARNESS LAYOUT 34
How To Read Harness Layout 34
Outline 35
Engine Room Harness 36
Engine Control Harness 38
Main Harness 39
Body Harness 40
Door Harness 42
Room Lamp Harness 47

CONNECTOR INFORMATION 48
How to Read Connector Type 48
B Body Harness 49
D Door Harness 77
E Engine Room Harness 83
F Engine Control Harness 96
M Main Harness 103
R Room Lamp Harness 128

BASIC INSPECTION 130

BATTERY INSPECTION 130
How to Handle Battery 130
Work Procedure 132

FUSE INSPECTION 137
How To Check 137

FUSIBLE LINK INSPECTION 138
How To Check 138

BATTERY CHARGING CHART 139
Slow Charge 139
Standard Charge 140
Quick Charge 141

REMOVAL AND INSTALLATION 143

BATTERY 143
Exploded View 143
Removal and Installation 143

BATTERY TERMINAL WITH FUSIBLE LINK..144
Exploded View 144
Removal and Installation 144

SERVICE DATA AND SPECIFICATIONS (SDS) 145

SERVICE DATA AND SPECIFICATIONS (SDS) 145
Battery 145

PRECAUTION

PRECAUTIONS

Precaution for Supplemental Restraint System (SRS) "AIR BAG" and "SEAT BELT PRE-TENSIONER"

INFOID:0000000005911806

The Supplemental Restraint System such as “AIR BAG” and “SEAT BELT PRE-TENSIONER”, used along with a front seat belt, helps to reduce the risk or severity of injury to the driver and front passenger for certain types of collision. Information necessary to service the system safely is included in the “SRS AIR BAG” and “SEAT BELT” of this Service Manual.

WARNING:

- **To avoid rendering the SRS inoperative, which could increase the risk of personal injury or death in the event of a collision which would result in air bag inflation, all maintenance must be performed by an authorized NISSAN/INFINITI dealer.**
- **Improper maintenance, including incorrect removal and installation of the SRS, can lead to personal injury caused by unintentional activation of the system. For removal of Spiral Cable and Air Bag Module, see the “SRS AIR BAG”.**
- **Do not use electrical test equipment on any circuit related to the SRS unless instructed to in this Service Manual. SRS wiring harnesses can be identified by yellow and/or orange harnesses or harness connectors.**

PRECAUTIONS WHEN USING POWER TOOLS (AIR OR ELECTRIC) AND HAMMERS

WARNING:

- **When working near the Air Bag Diagnosis Sensor Unit or other Air Bag System sensors with the ignition ON or engine running, DO NOT use air or electric power tools or strike near the sensor(s) with a hammer. Heavy vibration could activate the sensor(s) and deploy the air bag(s), possibly causing serious injury.**
- **When using air or electric power tools or hammers, always switch the ignition OFF, disconnect the battery, and wait at least 3 minutes before performing any service.**

SYSTEM DESCRIPTION

COMPONENT PARTS

Circuit Breaker

INFOID:0000000005911811

The PTC thermistor generates heat in response to current flow. The temperature (and resistance) of the thermistor element varies with current flow. Excessive current flow will cause the element's temperature to rise. When the temperature reaches a specified level, the electrical resistance will rise sharply to control the circuit current.
Reduced current flow will cause the element to cool. Resistance falls accordingly and normal circuit current flow is allowed to resume.

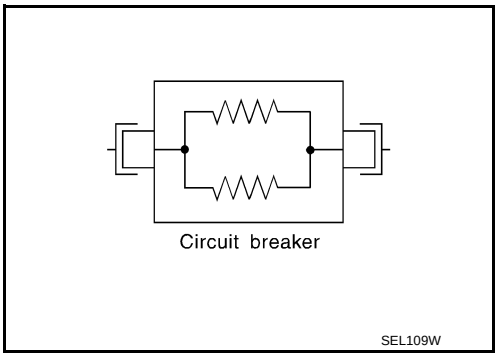

Battery

INFOID:0000000005911812

Application		Type 1	Type 2
Type		34B19L	46B19L
20 hour rate capacity	[V – Ah]	12 – 30	12 – 45
Cold cranking current (For reference value)	[A]	272	325

NOTE:
For the battery type application, refer to the following list.
- Type 1
- For Pakistan without rear wiper
- For Thailand (M/T models)
- Type 2
- Except for Pakistan without rear wiper
- Except for Thailand (M/T models)

Harness Connector

INFOID:0000000005911813

HARNESS CONNECTOR (TAB-LOCKING TYPE)

- The tab-locking type connectors help prevent accidental looseness or disconnection.
- The tab-locking type connectors are disconnected by pushing or lifting the locking tab(s). Refer to the figure below.

CAUTION:
Never pull the harness or wires when disconnecting the connector.

[Example]

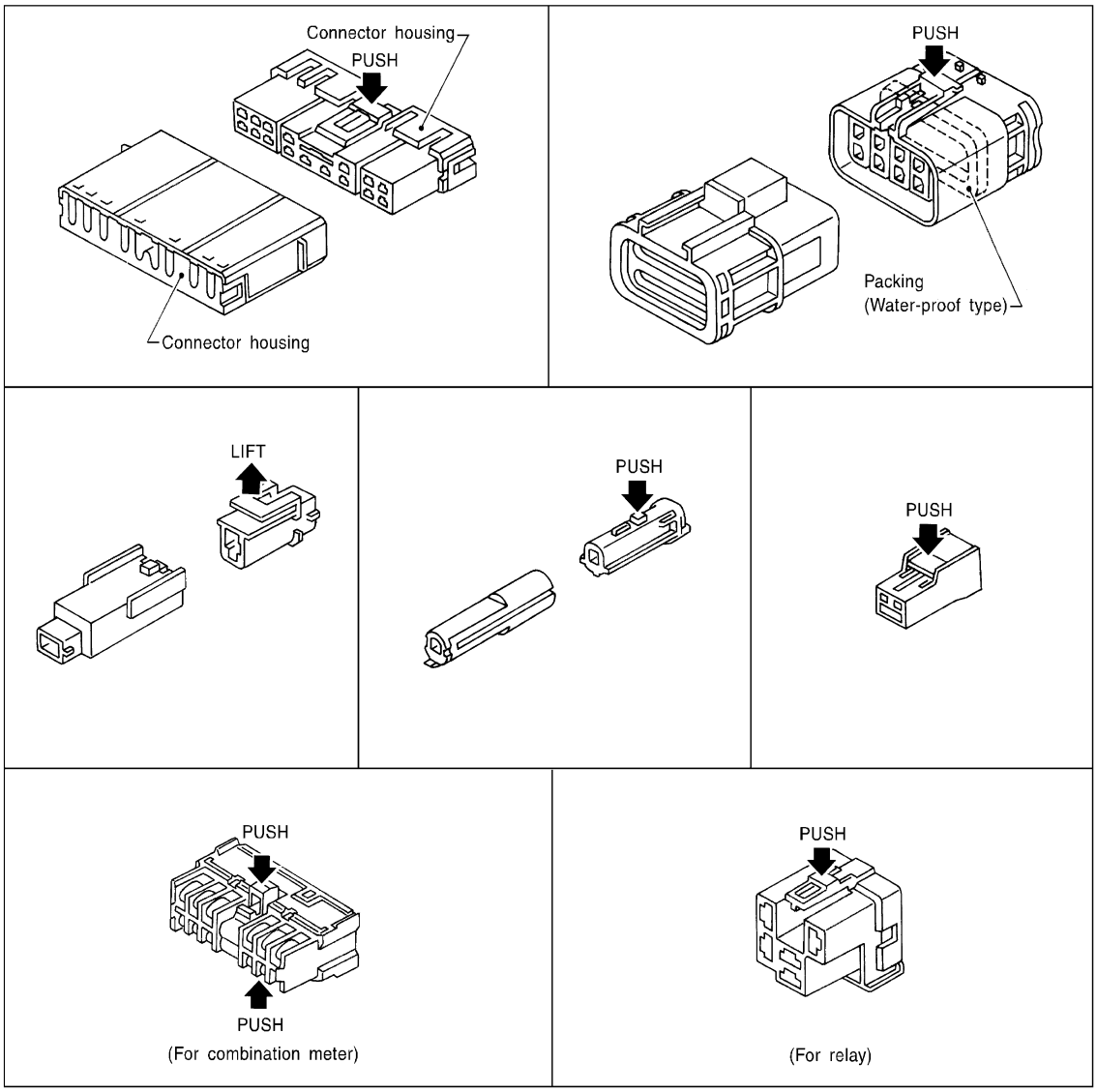

SEL769DA

HARNESS CONNECTOR (SLIDE-LOCKING TYPE)

- A new style slide-locking type connector is used on certain systems and components, especially those related to OBD.
- The slide-locking type connectors help prevent incomplete locking and accidental looseness or disconnection.
- The slide-locking type connectors are disconnected by pushing or pulling the slider. Refer to the figure below.

CAUTION:

- **Never pull the harness or wires when disconnecting the connector.**
- **Be careful not to damage the connector support bracket when disconnecting the connector.**

[Example]

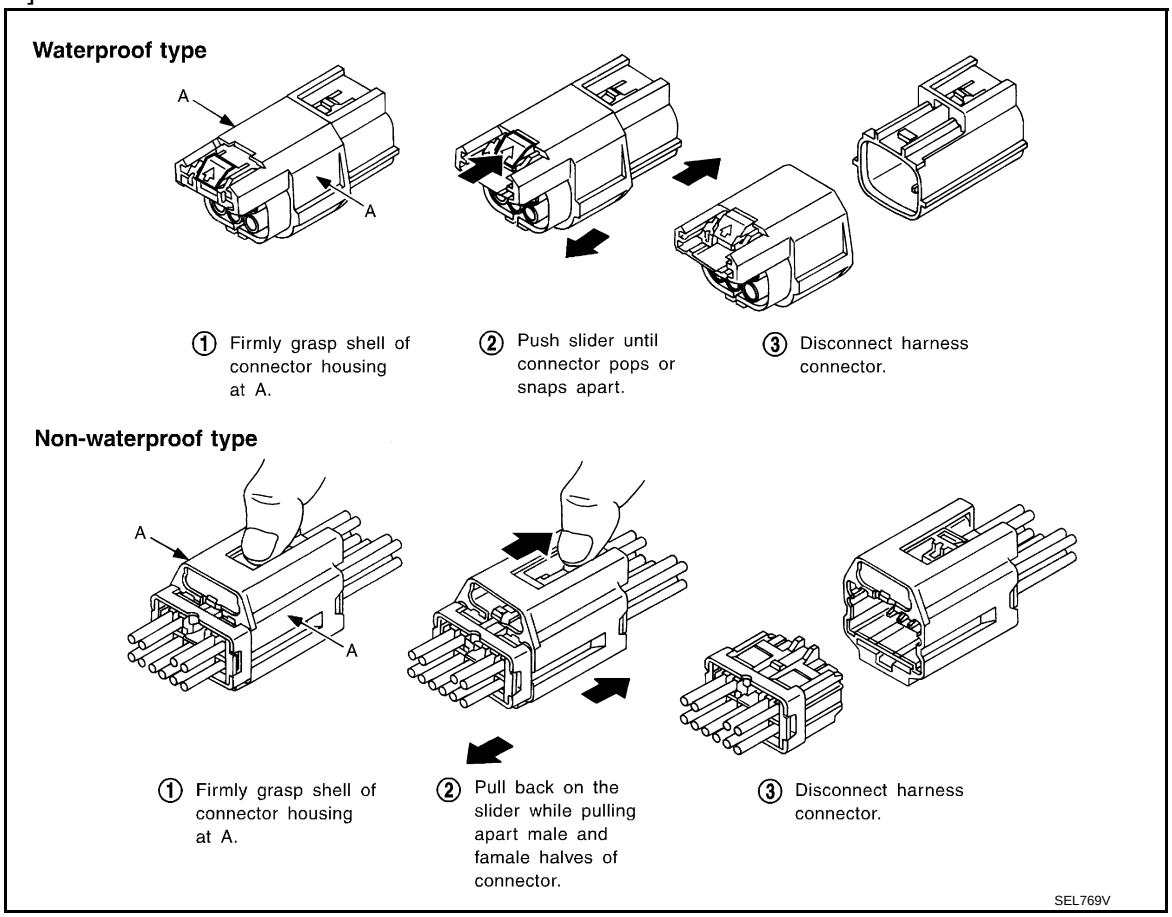

HARNESS CONNECTOR (LEVER LOCKING TYPE)

- Lever locking type harness connectors are used on certain control units and control modules such as ECM, ABS actuator and electric unit (control unit), etc.
- Lever locking type harness connectors are also used on super multiple junction (SMJ) connectors.
- Always confirm the lever is fully locked in place by moving the lever as far as it will go to ensure full connection.

CAUTION:

Always confirm the lever is fully released (loosened) before attempting to disconnect or connect these connectors to avoid damage to the connector housing or terminals.

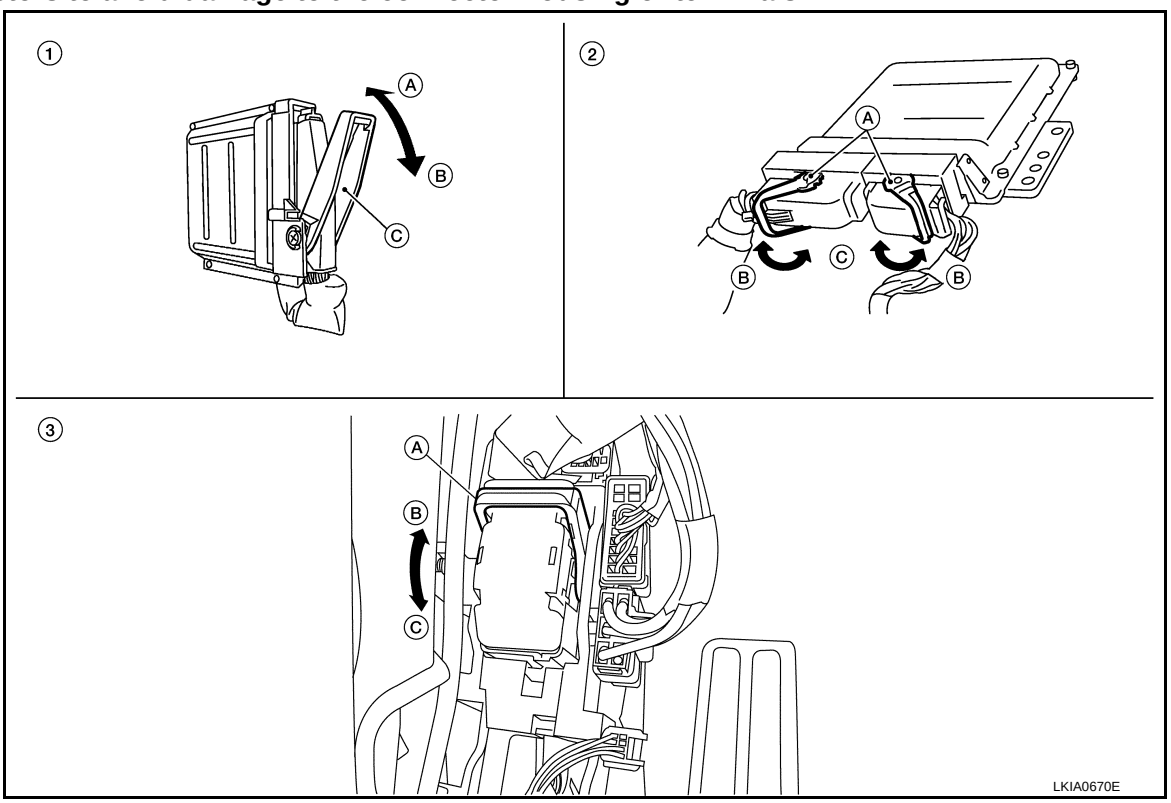

1. Control unit with single lever
   A. Fasten
   B. Loosen
   C. Lever
2. Control unit with dual levers
   A. Levers
   B. Fasten
   C. Loosen
3. SMJ connector
   A. Lever
   B. Fasten
   C. Loosen

Standardized Relay

INFOID:0000000005911814

NORMAL OPEN, NORMAL CLOSED AND MIXED TYPE RELAYS

Relays can mainly be divided into three types: normal open, normal closed and mixed type relays.

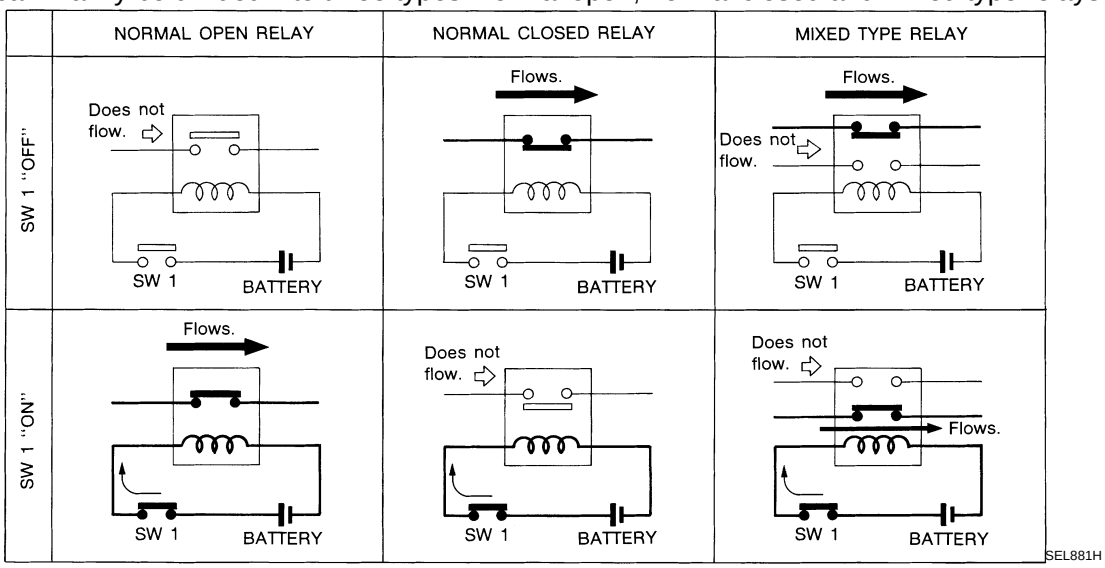

TYPE OF STANDARDIZED RELAYS

1M ····· 1 Make
2M ····· 2 Make
1T ····· 1 Transfer
1M·1B ····· 1 Make 1 Break

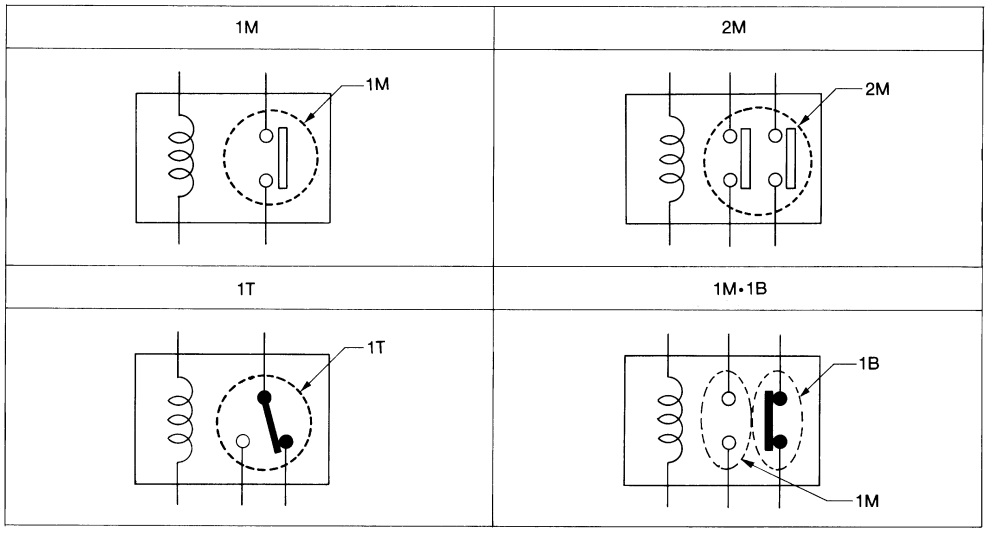

SEL882H

Type	Outer view	Circuit	Connector symbol and connection	Case color
1T	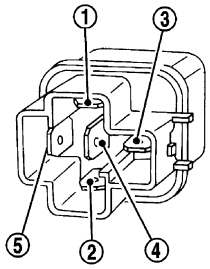	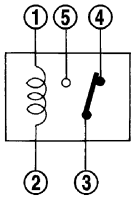	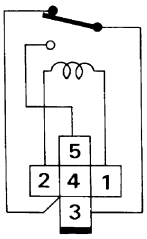	BLACK
2M	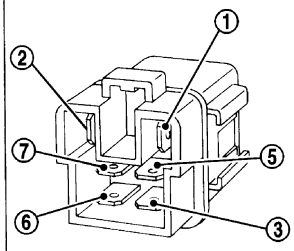	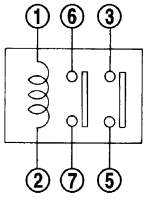	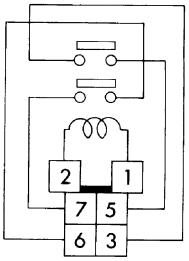	BROWN
1M•1B	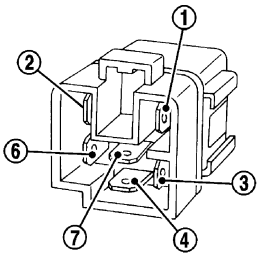	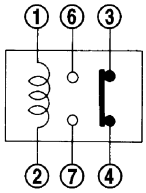	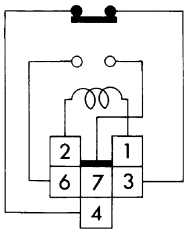	GRAY
1M	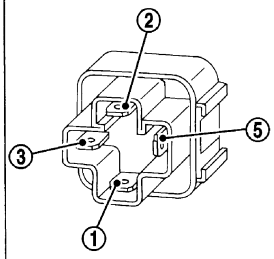 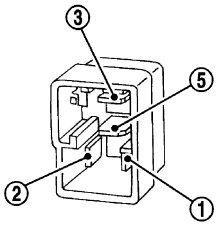	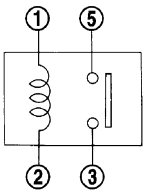	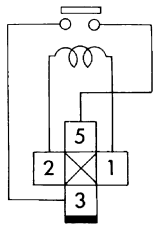 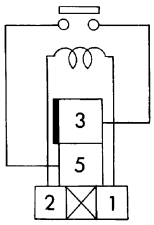	BLUE

The arrangement of terminal numbers on the actual relays may differ from those shown above.

SEL188W

WIRING DIAGRAM

POWER SUPPLY ROUTING CIRCUIT

Wiring Diagram - BATTERY POWER SUPPLY -

INFOID:0000000005911833

For connector terminal arrangements, harness layouts, and alphabets in a ⬡ (option abbreviation; if not described in wiring diagram), refer to XX-XX, "*****".

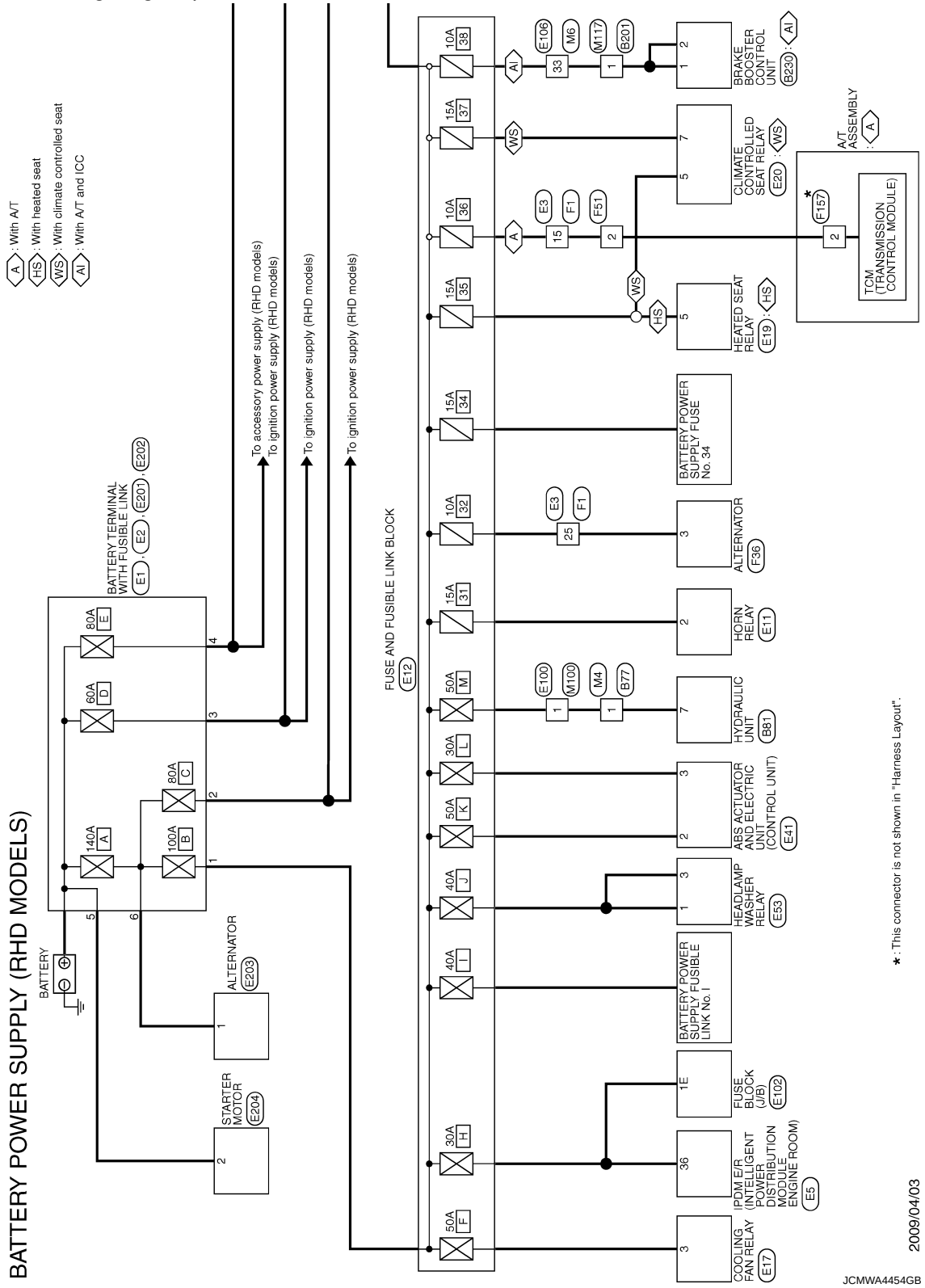

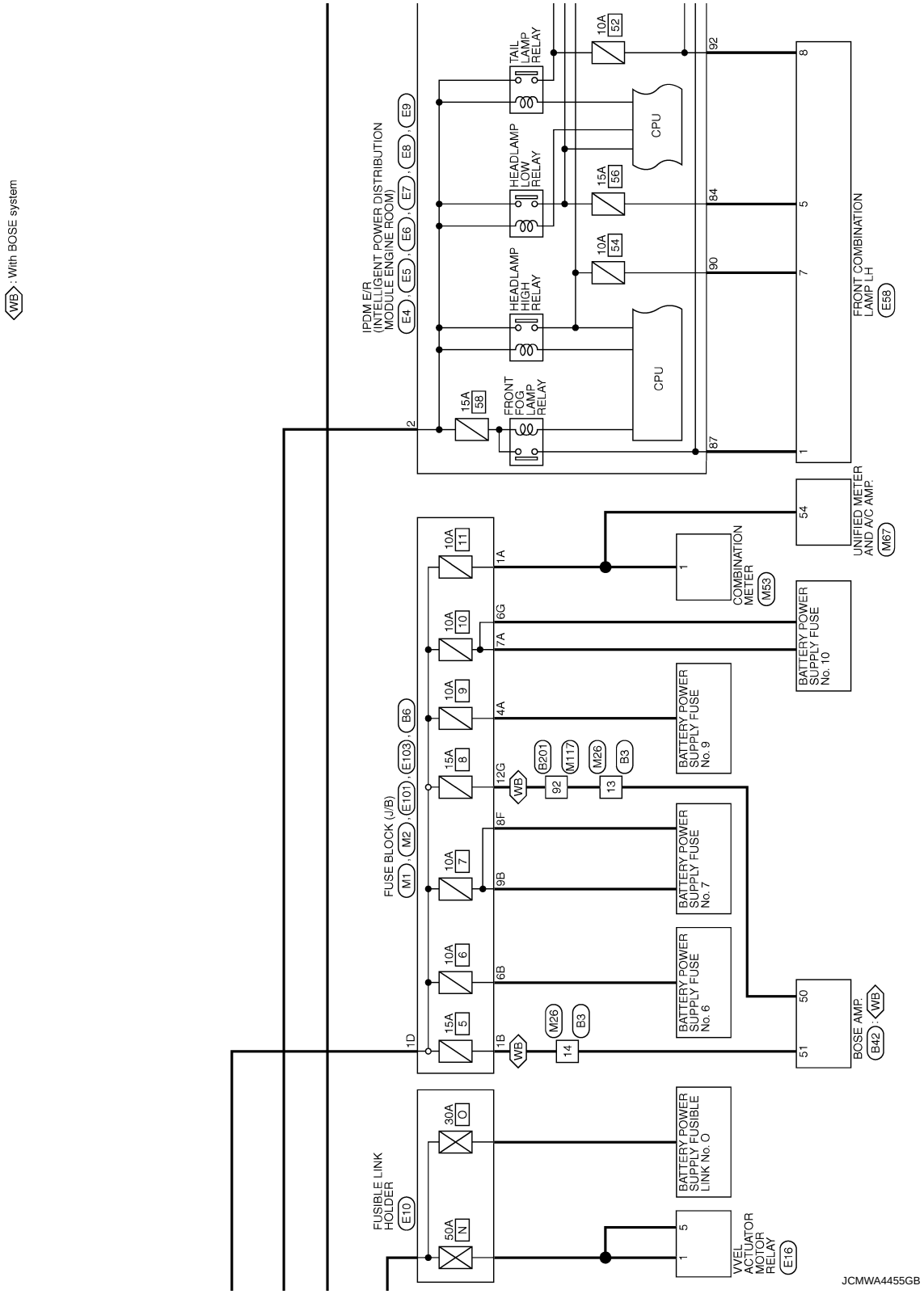
WB : With BOSE system
IPDM E/R
(INTELLIGENT POWER DISTRIBUTION MODULE ENGINE ROOM)
E4 , E5 , E6 , E7 , E8 , E9
15A 58
FRONT FOG LAMP RELAY
HEADLAMP HIGH RELAY
HEADLAMP LOW RELAY
TAIL LAMP RELAY
10A 54
15A 56
10A 52
CPU
CPU
FRONT COMBINATION LAMP LH
E58
UNIFIED METER AND A/C AMP.
M67
COMBINATION METER
M53
BATTERY POWER SUPPLY FUSE No. 10
BATTERY POWER SUPPLY FUSE No. 9
BATTERY POWER SUPPLY FUSE No. 7
BATTERY POWER SUPPLY FUSE No. 6
BATTERY POWER SUPPLY FUSIBLE LINK No. O
FUSE BLOCK (J/B)
M1 , M2 , E101 , E103 , B6
10A 11
10A 10
10A 9
15A 8
10A 7
10A 6
15A 5
B201
M117
M26
B3
BOSE AMP.
B42
FUSIBLE LINK HOLDER
E10
30A O
50A N
VVEL ACTUATOR MOTOR RELAY
E16
JCMWA4455GB

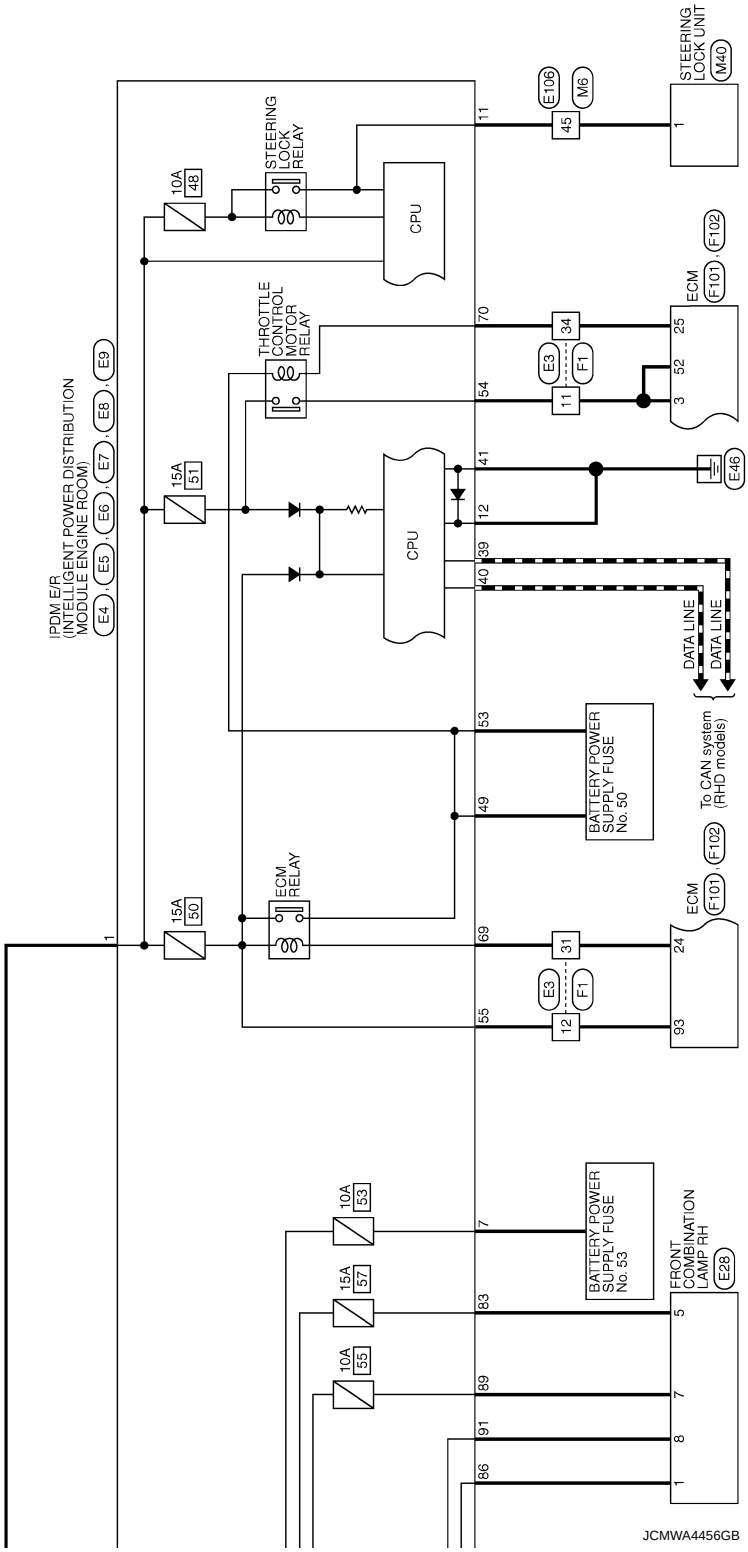
IPDM E/R
(INTELLIGENT POWER DISTRIBUTION MODULE ENGINE ROOM)
E4
E5
E6
E7
E8
E9
1
10A
48
STEERING LOCK RELAY
CPU
THROTTLE CONTROL MOTOR RELAY
15A
51
CPU
15A
50
ECM RELAY
10A
53
15A
57
10A
55
11
70
54
41
12
39
40
53
49
69
55
7
83
89
91
86
45
E106
M6
STEERING LOCK UNIT
M40
34
E3
F1
11
ECM
F101
F102
25
52
3
E46
DATA LINE
DATA LINE
BATTERY POWER SUPPLY FUSE No. 50
To CAN system (RHD models)
31
E3
F1
12
ECM
F101
F102
24
93
BATTERY POWER SUPPLY FUSE No. 53
FRONT COMBINATION LAMP RH
E28
5
7
8
1
JCMWA4456GB

Wiring Diagram - BATTERY POWER SUPPLY FUSIBLE LINK No. H -

INFOID:0000000005911834

For connector terminal arrangements, harness layouts, and alphabets in a ⬡ (option abbreviation; if not described in wiring diagram), refer to XX-XX, "*****".

BATTERY POWER SUPPLY FUSIBLE LINK No. I (RHD MODELS)

PM : With automatic drive positioner
OP : Without automatic drive positioner

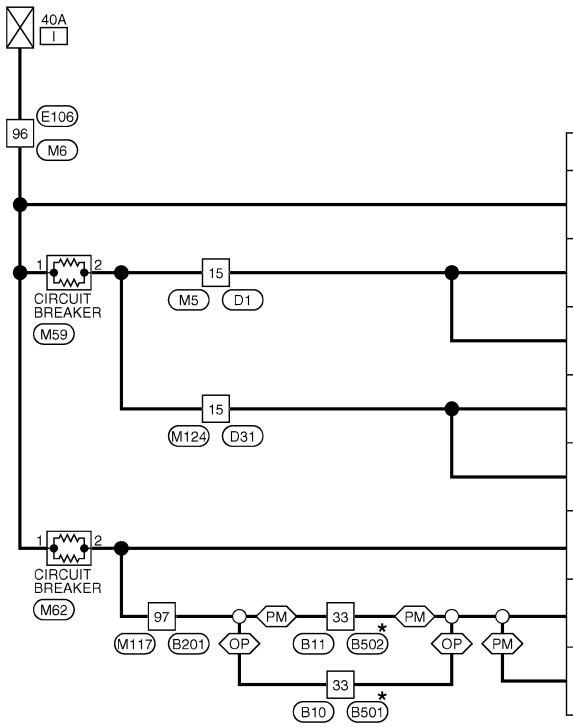

Connector No.	Terminal No.	Connect to
M118	1	BCM (BODY CONTROL MODULE)
D8	9	POWER WINDOW MAIN SWITCH
D20	1	DRIVER SIDE POWER WINDOW MOTOR
D38	9	POWER WINDOW SUB-SWITCH
D39	1	PASSENGER SIDE POWER WINDOW MOTOR
M52	39	AUTOMATIC DRIVE POSITIONER CONTROL UNIT
B504*	33	DRIVER SEAT CONTROL UNIT
B505*	33	LUMBAR SUPPORT SWITCH

★: This connector is not shown in "Harness Layout".

2009/04/03

JCMWA4464GB

Wiring Diagram - BATTERY POWER SUPPLY FUSE No. 13 -

INFOID:0000000005911836

For connector terminal arrangements, harness layouts, and alphabets in a ⬭ (option abbreviation; if not described in wiring diagram), refer to XX-XX, "*****".

BATTERY POWER SUPPLY FUSE No. 6 (RHD MODELS)

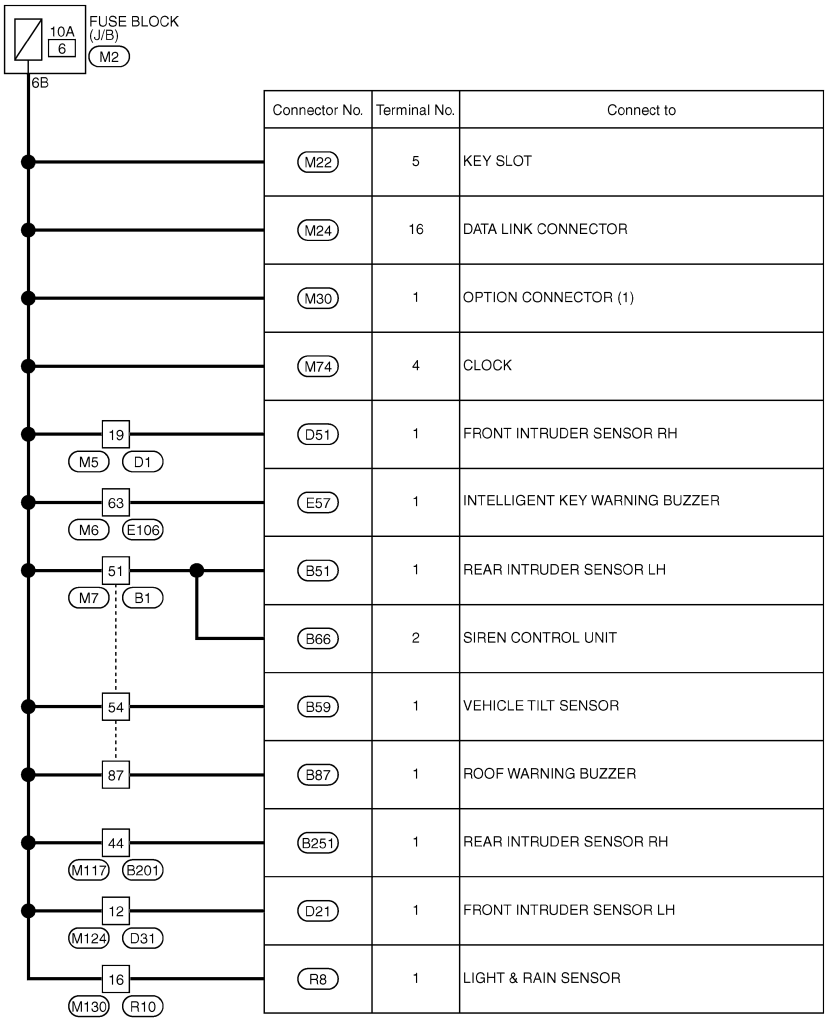

Connector No.	Terminal No.	Connect to
M22	5	KEY SLOT
M24	16	DATA LINK CONNECTOR
M30	1	OPTION CONNECTOR (1)
M74	4	CLOCK
D51	1	FRONT INTRUDER SENSOR RH
E57	1	INTELLIGENT KEY WARNING BUZZER
B51	1	REAR INTRUDER SENSOR LH
B66	2	SIREN CONTROL UNIT
B59	1	VEHICLE TILT SENSOR
B87	1	ROOF WARNING BUZZER
B251	1	REAR INTRUDER SENSOR RH
D21	1	FRONT INTRUDER SENSOR LH
R8	1	LIGHT & RAIN SENSOR

Wiring Diagram - BATTERY POWER SUPPLY FUSE No. 46 -

INFOID:0000000005911837

For connector terminal arrangements, harness layouts, and alphabets in a ⬡ (option abbreviation; if not described in wiring diagram), refer to XX-XX, "*****".

BATTERY POWER SUPPLY FUSE No. 7 (RHD MODELS)

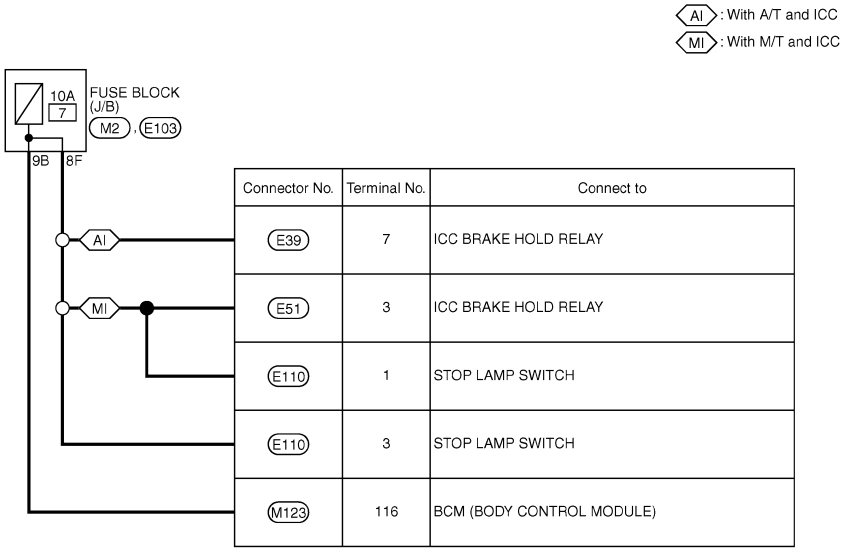

Connector No.	Terminal No.	Connect to
E39	7	ICC BRAKE HOLD RELAY
E51	3	ICC BRAKE HOLD RELAY
E110	1	STOP LAMP SWITCH
E110	3	STOP LAMP SWITCH
M123	116	BCM (BODY CONTROL MODULE)

Wiring Diagram - BATTERY POWER SUPPLY FUSE No. 49 -

INFOID:0000000005911838

For connector terminal arrangements, harness layouts, and alphabets in a ⬡ (option abbreviation; if not described in wiring diagram), refer to XX-XX, "*****".

BATTERY POWER SUPPLY FUSE No. 9 (RHD MODELS)

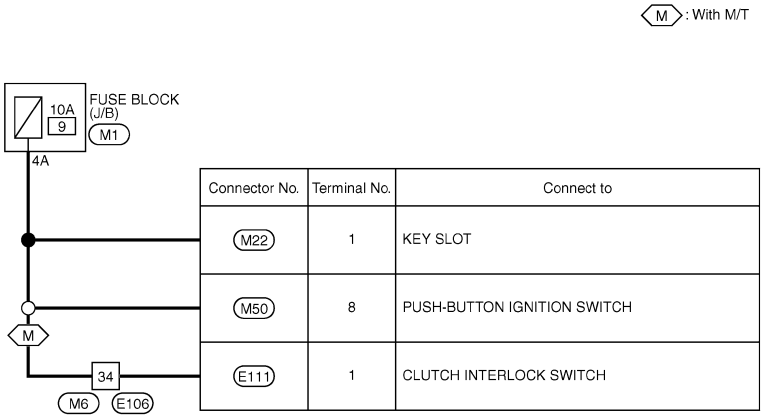

Connector No.	Terminal No.	Connect to
M22	1	KEY SLOT
M50	8	PUSH-BUTTON IGNITION SWITCH
E111	1	CLUTCH INTERLOCK SWITCH

Wiring Diagram - ACCESSORY POWER SUPPLY -

INFOID:0000000005911843

For connector terminal arrangements, harness layouts, and alphabets in a ⬡ (option abbreviation; if not described in wiring diagram), refer to XX-XX, "*****".

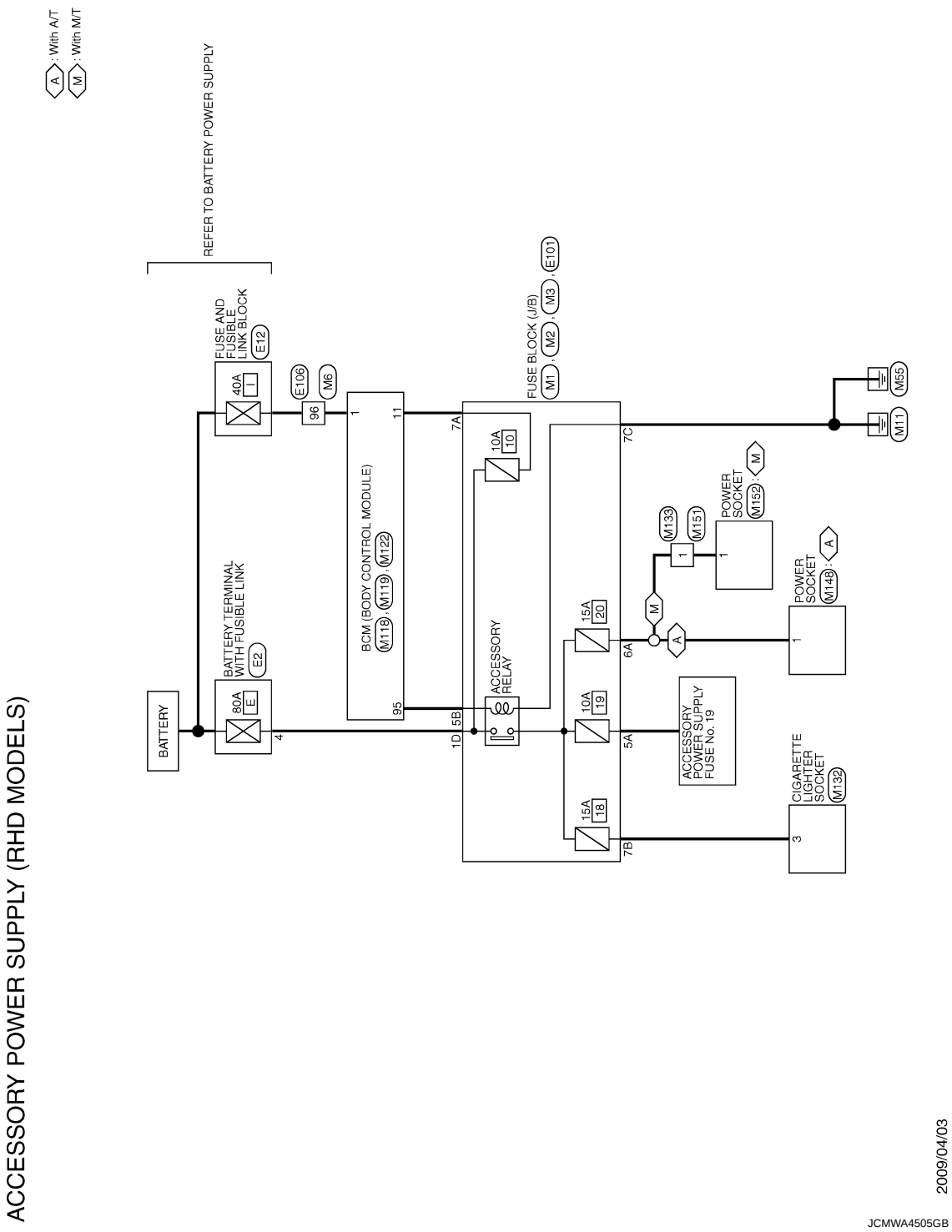

Wiring Diagram - ACCESSORY POWER SUPPLY FUSE No. 19 -

INFOID:0000000005911844

For connector terminal arrangements, harness layouts, and alphabets in a ⬡ (option abbreviation; if not described in wiring diagram), refer to XX-XX, "*****".

ACCESSORY POWER SUPPLY FUSE No. 19 (RHD MODELS)

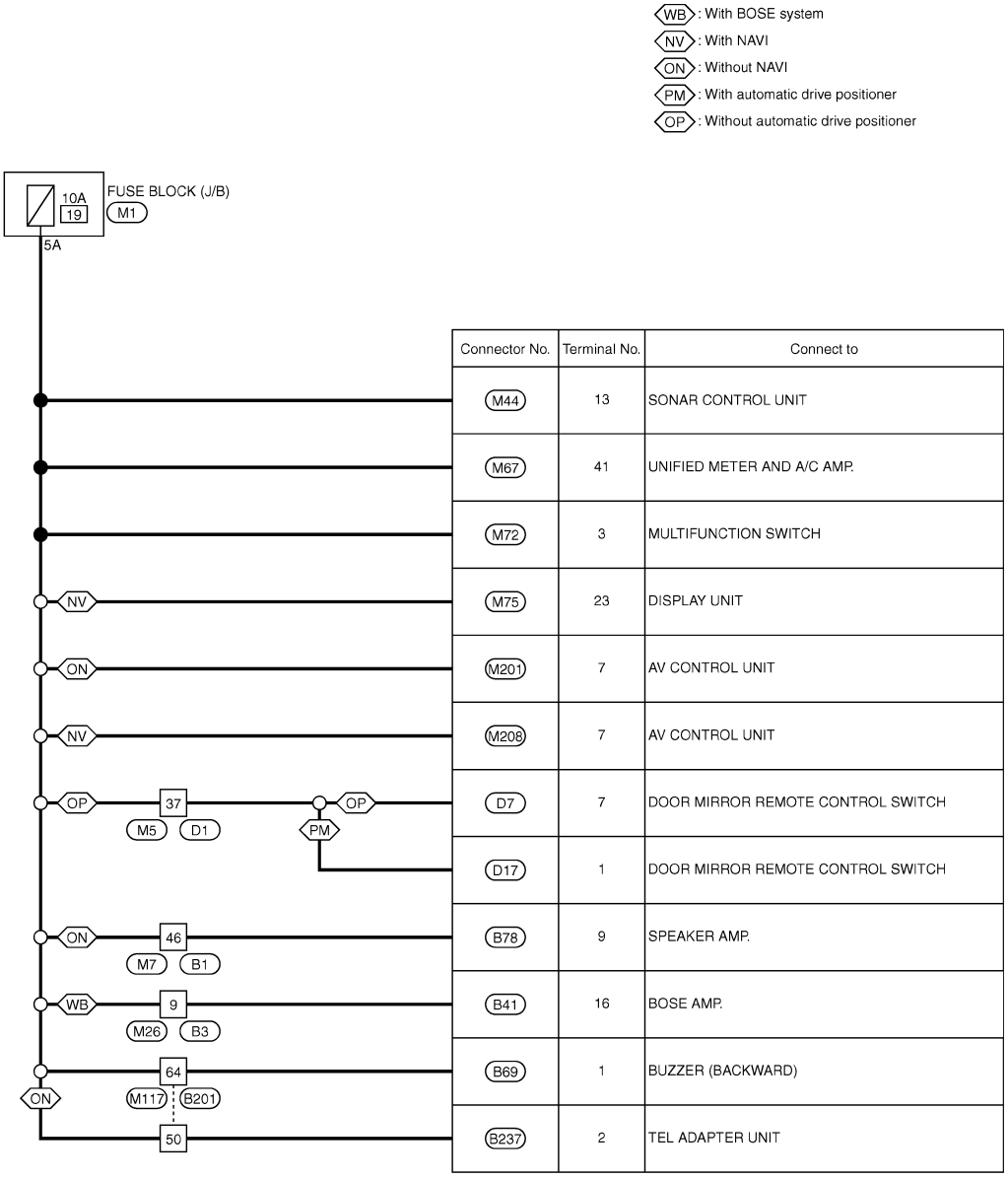

Connector No.	Terminal No.	Connect to
M44	13	SONAR CONTROL UNIT
M67	41	UNIFIED METER AND A/C AMP.
M72	3	MULTIFUNCTION SWITCH
M75	23	DISPLAY UNIT
M201	7	AV CONTROL UNIT
M208	7	AV CONTROL UNIT
D7	7	DOOR MIRROR REMOTE CONTROL SWITCH
D17	1	DOOR MIRROR REMOTE CONTROL SWITCH
B78	9	SPEAKER AMP.
B41	16	BOSE AMP.
B69	1	BUZZER (BACKWARD)
B237	2	TEL ADAPTER UNIT

2009/04/03

JCMWA4508GB

Wiring Diagram - IGNITION POWER SUPPLY -

INFOID:0000000005911845

For connector terminal arrangements, harness layouts, and alphabets in a ⬡ (option abbreviation; if not described in wiring diagram), refer to XX-XX, "*****".

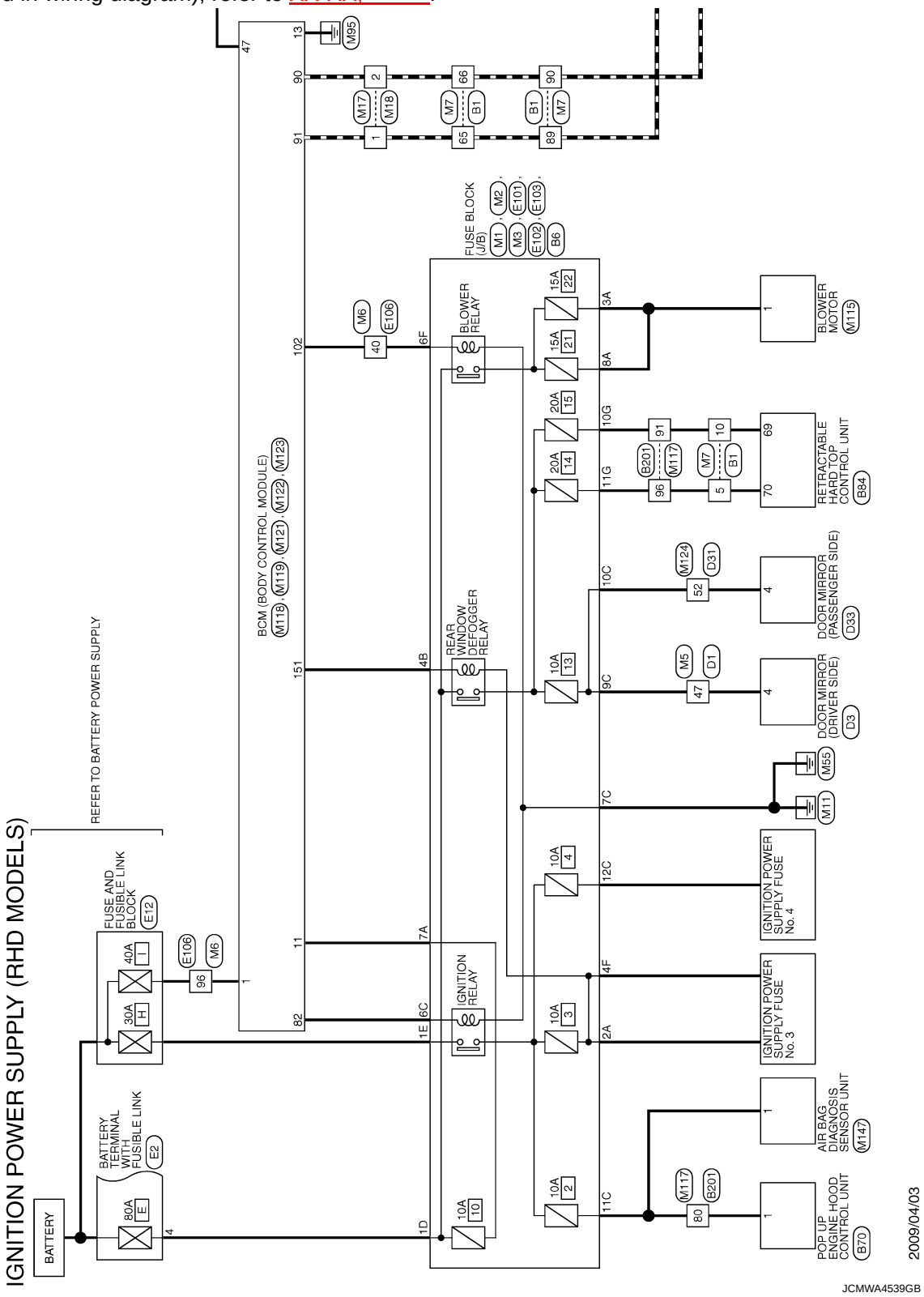

< WIRING DIAGRAM >

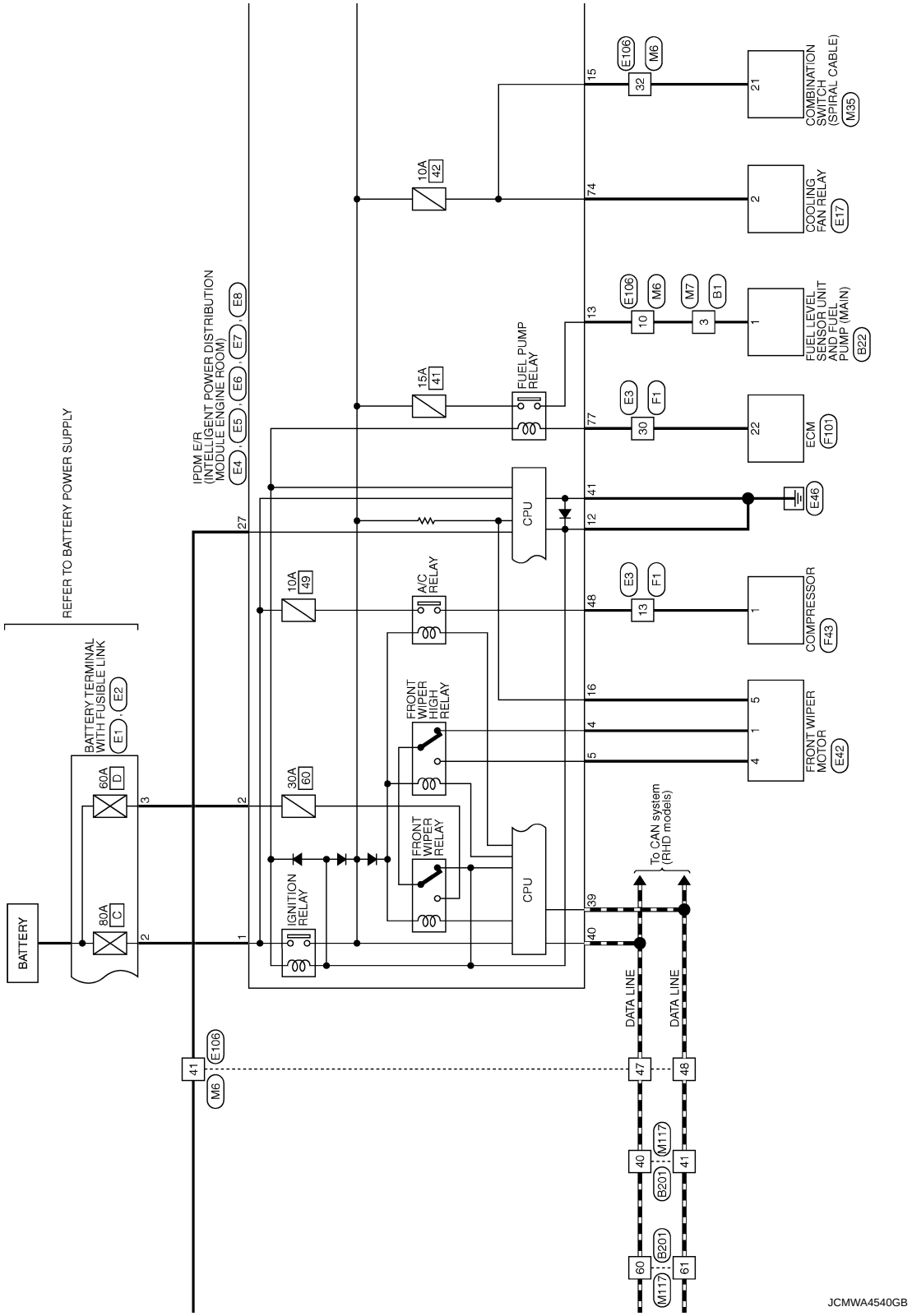

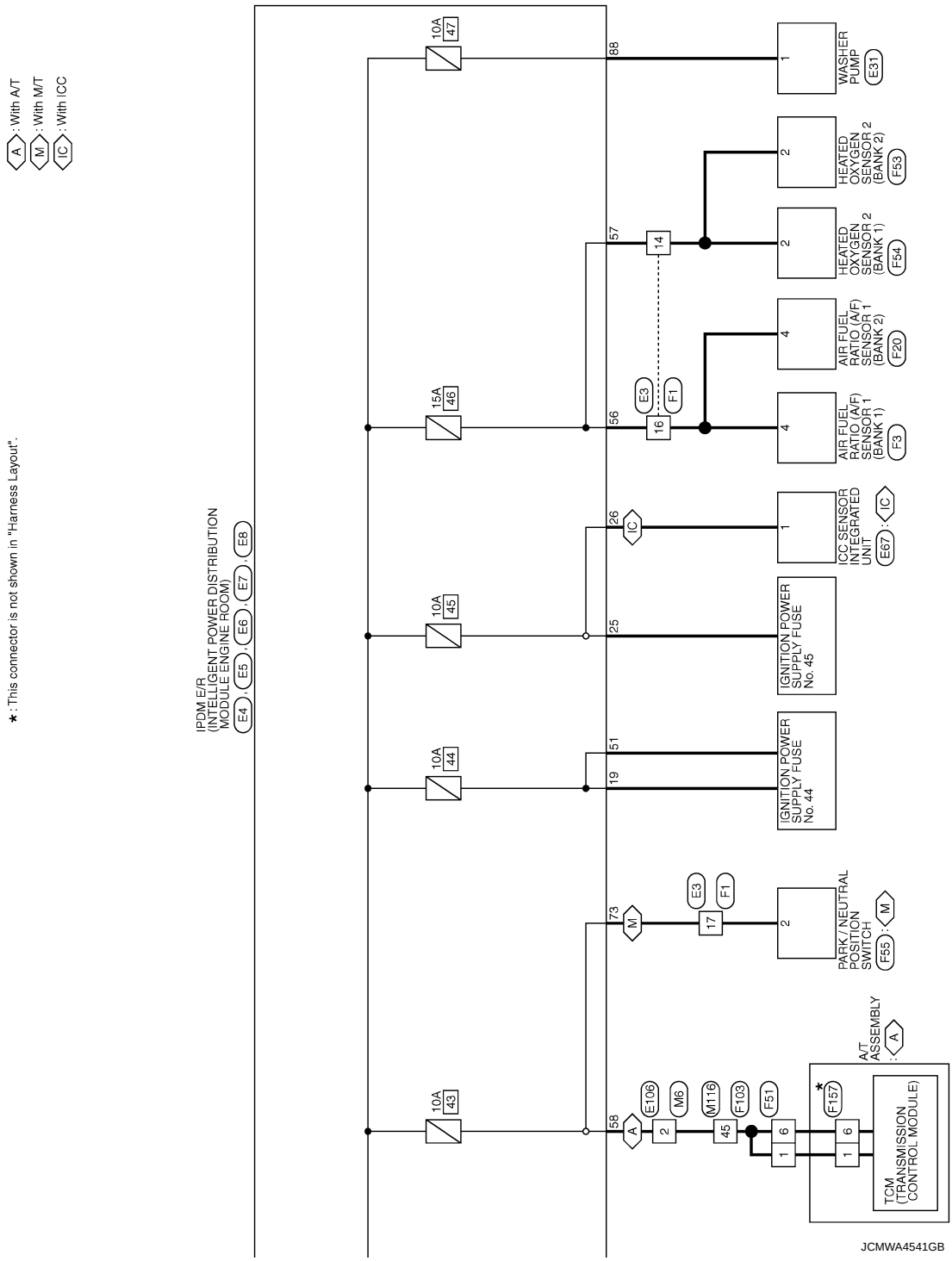
A : With A/T
M : With M/T
IC : With ICC
* : This connector is not shown in "Harness Layout".
IPDM E/R
(INTELLIGENT POWER DISTRIBUTION MODULE ENGINE ROOM)
E4 E5 E6 E7 E8
10A 43
10A 44
10A 45
15A 46
10A 47
58
73
19
51
25
26
56
57
88
E106
M6
M116
F103
F51
F157
TCM
(TRANSMISSION CONTROL MODULE)
A/T ASSEMBLY
PARK/ NEUTRAL POSITION SWITCH
F55
E3
F1
IGNITION POWER SUPPLY FUSE No. 44
IGNITION POWER SUPPLY FUSE No. 45
ICC SENSOR INTEGRATED UNIT
E67
AIR FUEL RATIO (A/F) SENSOR 1 (BANK 1)
F3
AIR FUEL RATIO (A/F) SENSOR 1 (BANK 2)
F20
HEATED OXYGEN SENSOR 2 (BANK 1)
F54
HEATED OXYGEN SENSOR 2 (BANK 2)
F53
WASHER PUMP
E31
JCMWA4541GB

Wiring Diagram - IGNITION POWER SUPPLY FUSE No. 3 -

INFOID:0000000005911846

For connector terminal arrangements, harness layouts, and alphabets in a ⬡ (option abbreviation; if not described in wiring diagram), refer to XX-XX, "*****".

IGNITION POWER SUPPLY FUSE No. 3 (RHD MODELS)

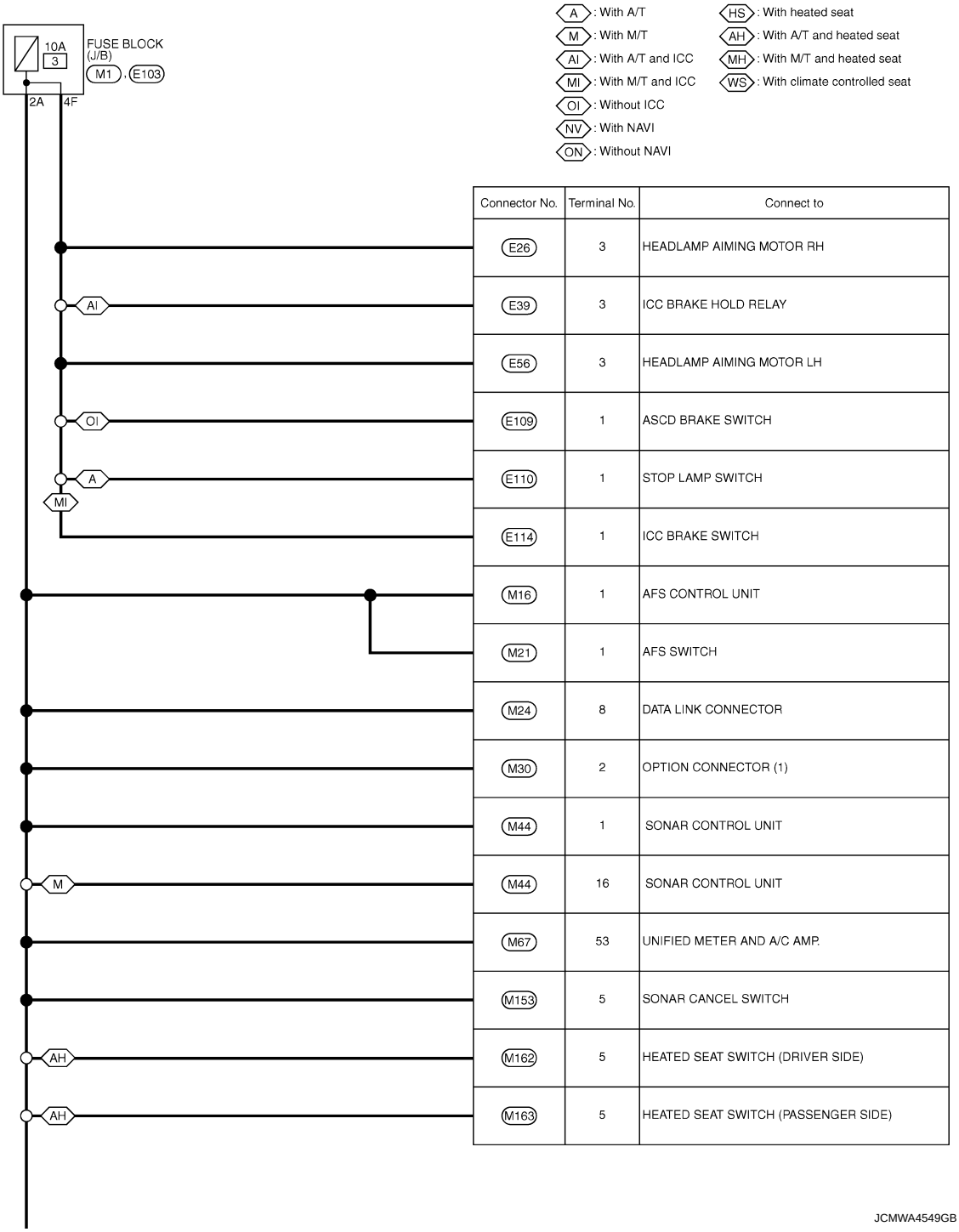

Connector No.	Terminal No.	Connect to
E26	3	HEADLAMP AIMING MOTOR RH
E39	3	ICC BRAKE HOLD RELAY
E56	3	HEADLAMP AIMING MOTOR LH
E109	1	ASCD BRAKE SWITCH
E110	1	STOP LAMP SWITCH
E114	1	ICC BRAKE SWITCH
M16	1	AFS CONTROL UNIT
M21	1	AFS SWITCH
M24	8	DATA LINK CONNECTOR
M30	2	OPTION CONNECTOR (1)
M44	1	SONAR CONTROL UNIT
M44	16	SONAR CONTROL UNIT
M67	53	UNIFIED METER AND A/C AMP.
M153	5	SONAR CANCEL SWITCH
M162	5	HEATED SEAT SWITCH (DRIVER SIDE)
M163	5	HEATED SEAT SWITCH (PASSENGER SIDE)

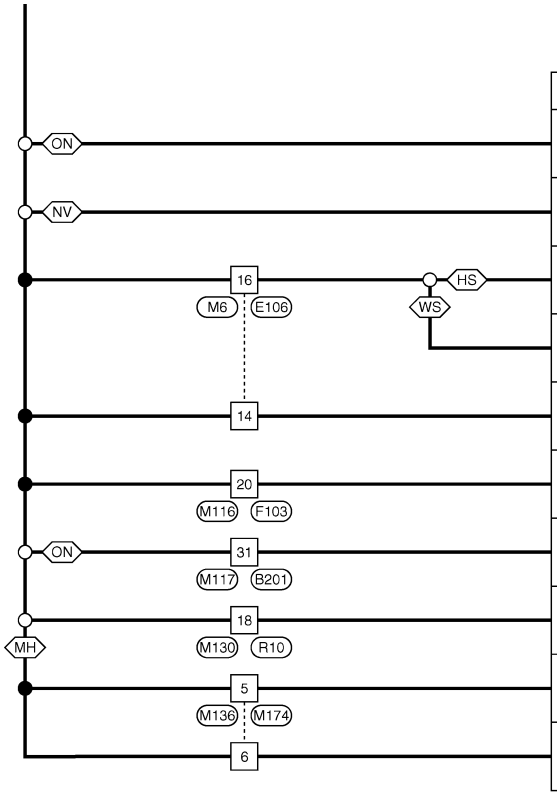

Connector No.	Terminal No.	Connect to
M204	95	AV CONTROL UNIT
M210	80	AV CONTROL UNIT
E19	2	HEATED SEAT RELAY
E20	2	CLIMATE CONTROLLED SEAT RELAY
E120	1	GAS SENSOR
F44	2	COMPRESSOR
B237	3	TEL ADAPTER UNIT
R4	7	AUTO ANTI-DAZZLING INSIDE MIRROR
M172	5	HEATED SEAT SWITCH (DRIVER SIDE)
M173	5	HEATED SEAT SWITCH (PASSENGER SIDE)

2009/04/03

JCMWA4550GB

Wiring Diagram - IGNITION POWER SUPPLY FUSE No. 6 -

INFOID:0000000005911847

For connector terminal arrangements, harness layouts, and alphabets in a ⬡ (option abbreviation; if not described in wiring diagram), refer to XX-XX, "*****".

IGNITION POWER SUPPLY FUSE No. 4 (RHD MODELS)

A : With A/T
M : With M/T

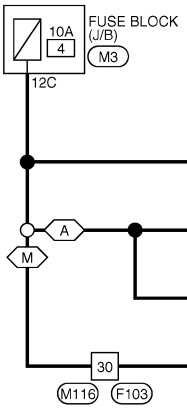

Connector No.	Terminal No.	Connect to
M53	21	COMBINATION METER
M69	1	BACK-UP LAMP RELAY
M69	3	BACK-UP LAMP RELAY
F56	1	BACK-UP LAMP SWITCH

2009/04/03

JCMWA4556GB

Wiring Diagram - IGNITION POWER SUPPLY FUSE No. 15 -

INFOID:0000000005911848

For connector terminal arrangements, harness layouts, and alphabets in a ⬭ (option abbreviation; if not described in wiring diagram), refer to XX-XX, "*****".

IGNITION POWER SUPPLY FUSE No. 44 (RHD MODELS)

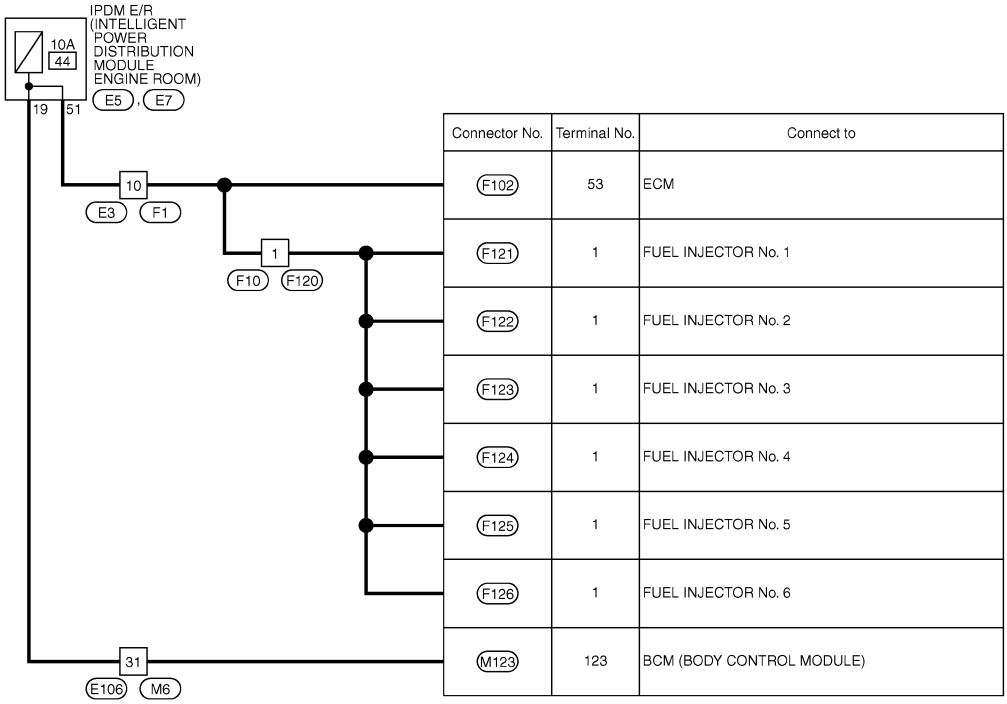

Connector No.	Terminal No.	Connect to
F102	53	ECM
F121	1	FUEL INJECTOR No. 1
F122	1	FUEL INJECTOR No. 2
F123	1	FUEL INJECTOR No. 3
F124	1	FUEL INJECTOR No. 4
F125	1	FUEL INJECTOR No. 5
F126	1	FUEL INJECTOR No. 6
M123	123	BCM (BODY CONTROL MODULE)

Wiring Diagram - IGNITION POWER SUPPLY FUSE No. 48 -

INFOID:0000000005911849

For connector terminal arrangements, harness layouts, and alphabets in a ⬡ (option abbreviation; if not described in wiring diagram), refer to XX-XX, "*****".

IGNITION POWER SUPPLY FUSE No. 45 (RHD MODELS)

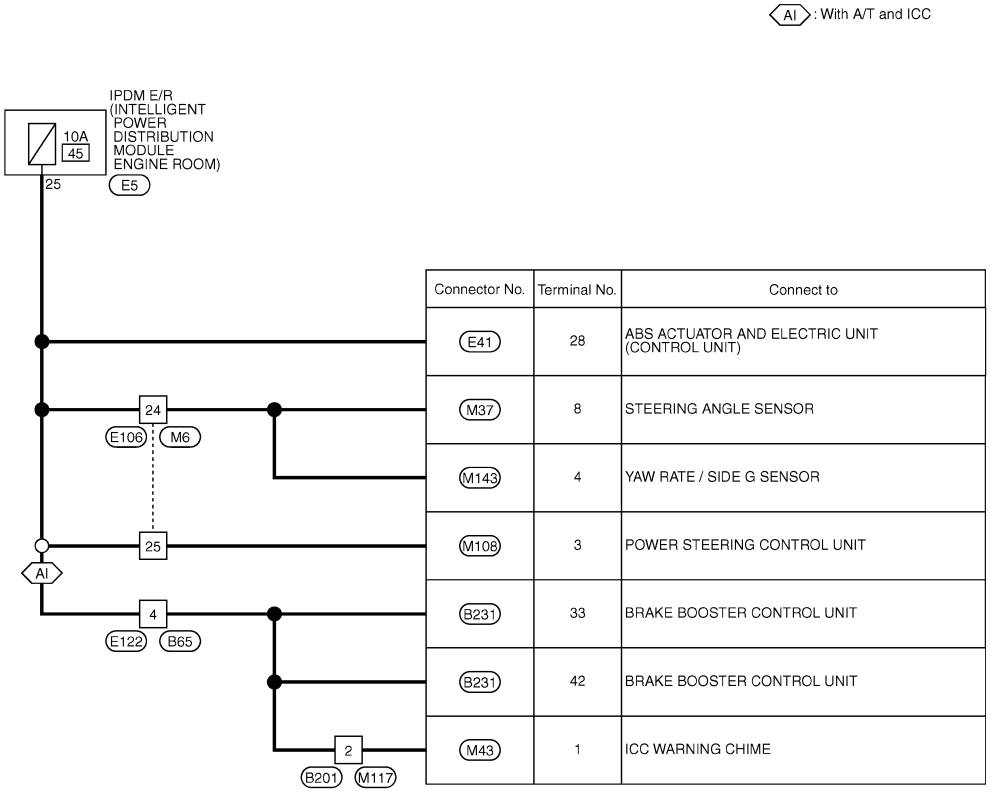

Connector No.	Terminal No.	Connect to
E41	28	ABS ACTUATOR AND ELECTRIC UNIT (CONTROL UNIT)
M37	8	STEERING ANGLE SENSOR
M143	4	YAW RATE / SIDE G SENSOR
M108	3	POWER STEERING CONTROL UNIT
B231	33	BRAKE BOOSTER CONTROL UNIT
B231	42	BRAKE BOOSTER CONTROL UNIT
M43	1	ICC WARNING CHIME

2009/04/03

JCMWA4561GB

Wiring Diagram - IGNITION POWER SUPPLY FUSE No. 51 -

INFOID:0000000006022784

For connector terminal arrangements, harness layouts, and alphabets in a ⬡ (option abbreviation; if not described in wiring diagram), refer to XX-XX, "*****".

IGNITION POWER SUPPLY FUSE No. 3 (RHD MODELS)

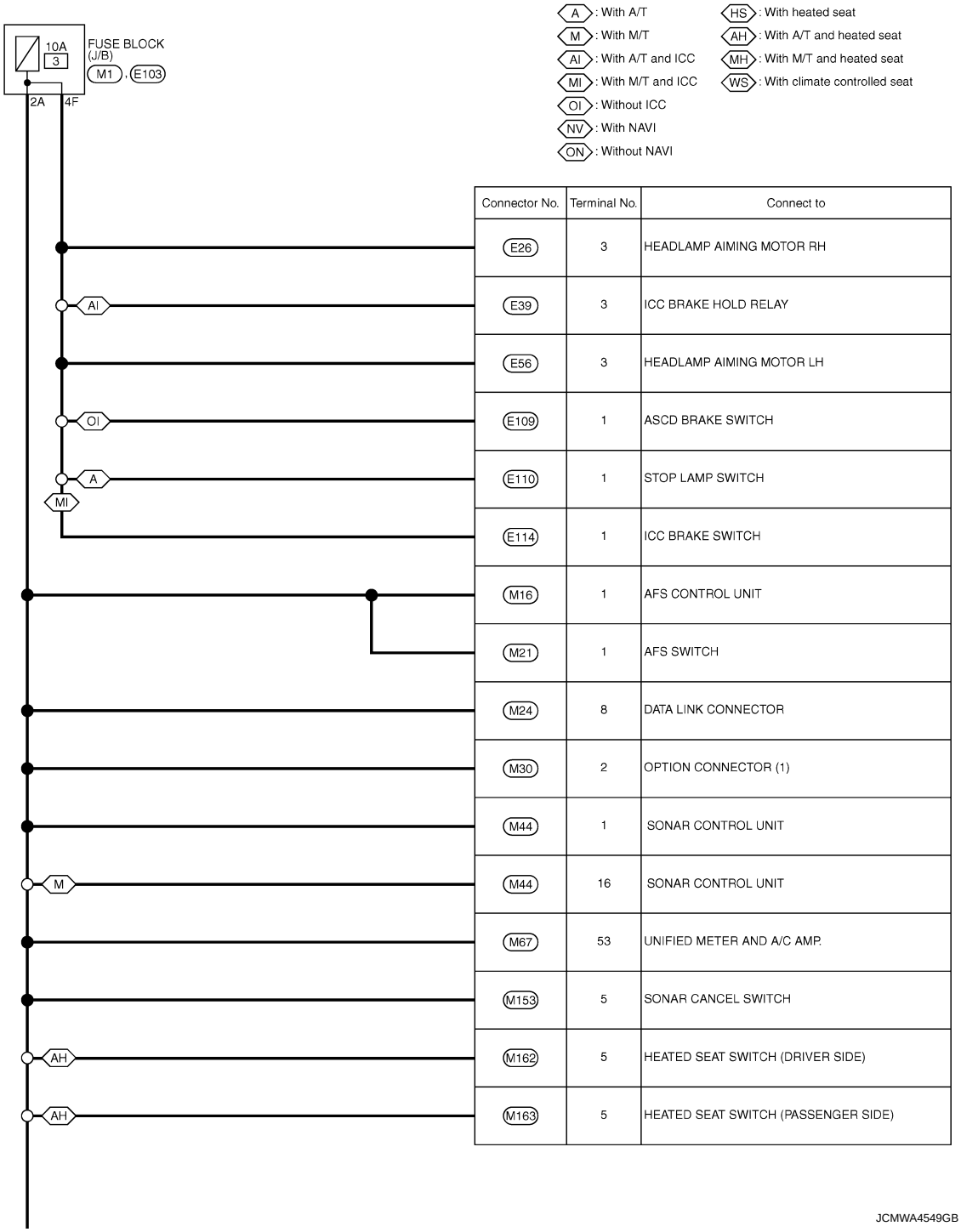

Connector No.	Terminal No.	Connect to
E26	3	HEADLAMP AIMING MOTOR RH
E39	3	ICC BRAKE HOLD RELAY
E56	3	HEADLAMP AIMING MOTOR LH
E109	1	ASCD BRAKE SWITCH
E110	1	STOP LAMP SWITCH
E114	1	ICC BRAKE SWITCH
M16	1	AFS CONTROL UNIT
M21	1	AFS SWITCH
M24	8	DATA LINK CONNECTOR
M30	2	OPTION CONNECTOR (1)
M44	1	SONAR CONTROL UNIT
M44	16	SONAR CONTROL UNIT
M67	53	UNIFIED METER AND A/C AMP.
M153	5	SONAR CANCEL SWITCH
M162	5	HEATED SEAT SWITCH (DRIVER SIDE)
M163	5	HEATED SEAT SWITCH (PASSENGER SIDE)

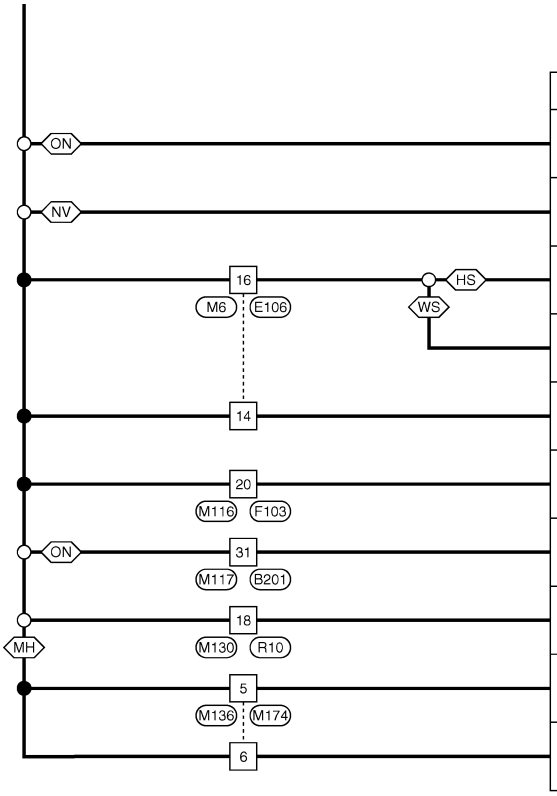

Connector No.	Terminal No.	Connect to
M204	95	AV CONTROL UNIT
M210	80	AV CONTROL UNIT
E19	2	HEATED SEAT RELAY
E20	2	CLIMATE CONTROLLED SEAT RELAY
E120	1	GAS SENSOR
F44	2	COMPRESSOR
B237	3	TEL ADAPTER UNIT
R4	7	AUTO ANTI-DAZZLING INSIDE MIRROR
M172	5	HEATED SEAT SWITCH (DRIVER SIDE)
M173	5	HEATED SEAT SWITCH (PASSENGER SIDE)

2009/04/03

JCMWA4550GB

Wiring Diagram - IGNITION POWER SUPPLY FUSE No. 52 -

INFOID:0000000006022785

For connector terminal arrangements, harness layouts, and alphabets in a ⬡ (option abbreviation; if not described in wiring diagram), refer to XX-XX, "*****".

IGNITION POWER SUPPLY FUSE No. 4 (RHD MODELS)

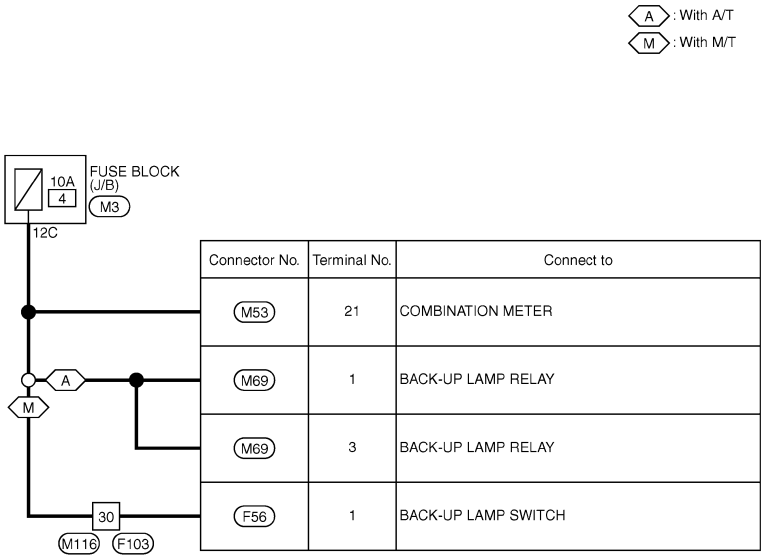

Connector No.	Terminal No.	Connect to
M53	21	COMBINATION METER
M69	1	BACK-UP LAMP RELAY
M69	3	BACK-UP LAMP RELAY
F56	1	BACK-UP LAMP SWITCH

2009/04/03

JCMWA4556GB

OPTION HARNESS

Wiring Diagram

INFOID:0000000005911850

For connector terminal arrangements, harness layouts, and alphabets in a ⬡ (option abbreviation; if not described in wiring diagram), refer to XX-XX, "*****".

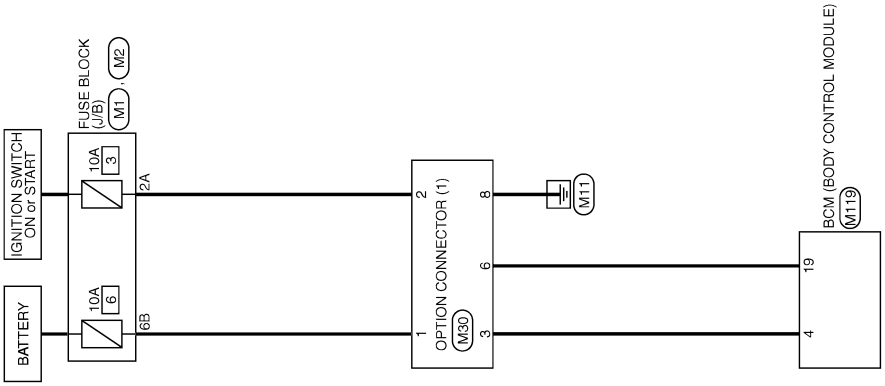

OPTION HARNESS

2009/04/03

JCMWA4407GB

FUSE BLOCK - JUNCTION BOX (J/B)

Fuse, Connector and Terminal Arrangement

INFOID:0000000005911851

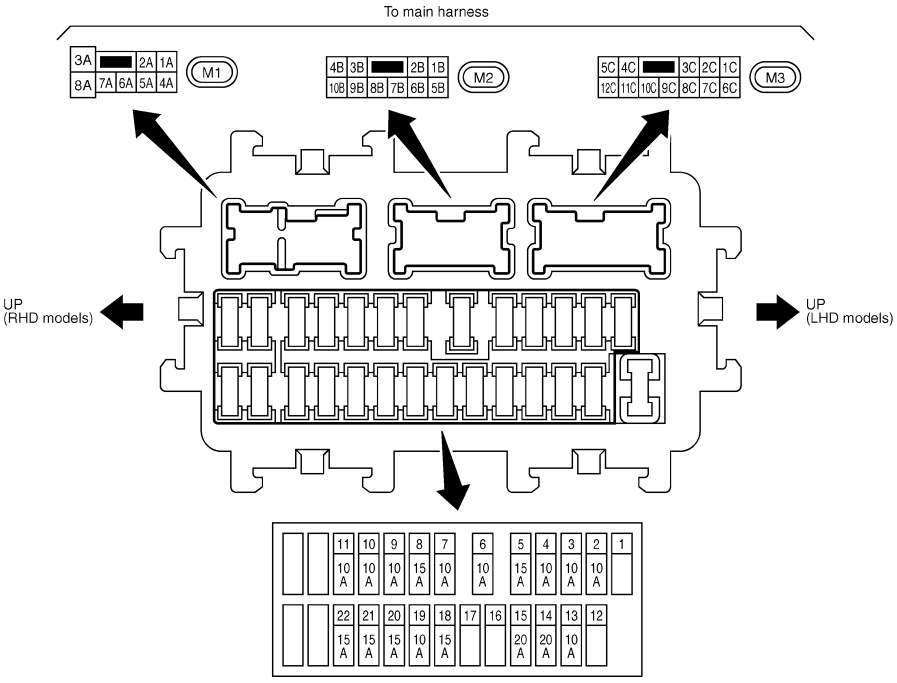

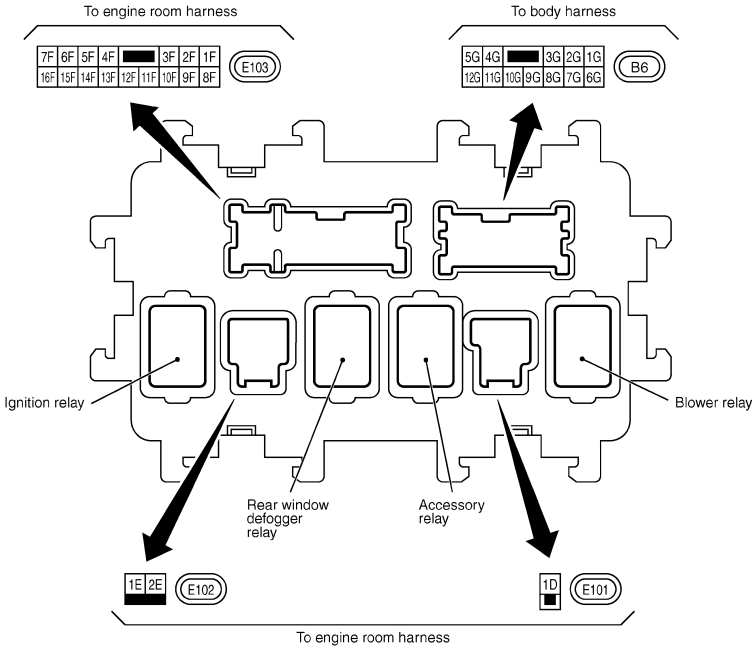

2009/04/03

JCMWA4564GB

FUSE, FUSIBLE LINK AND RELAY BOX

Fuse and Fusible Link Arrangement

INFOID:0000000005911852

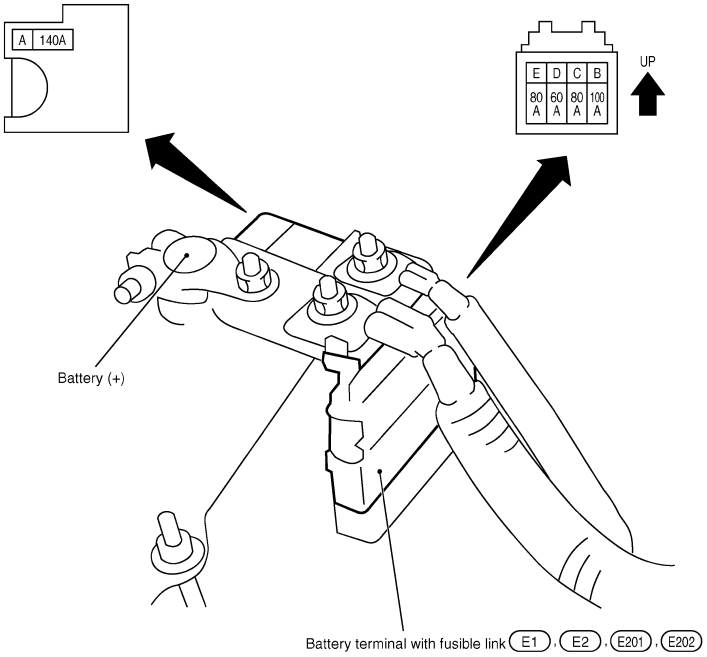

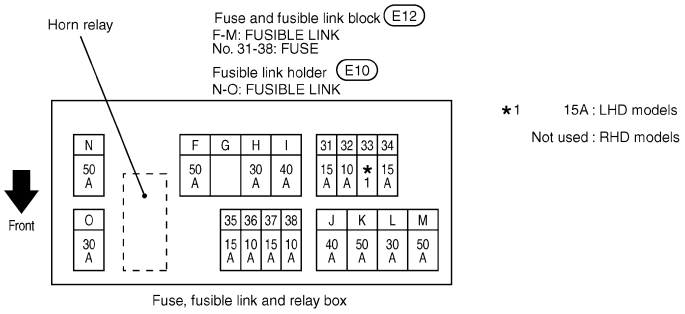

Fuse, fusible link and relay box

IPDM E/R (INTELLIGENT POWER DISTRIBUTION MODULE ENGINE ROOM)

Fuse, Connector and Terminal Arrangement

INFOID:0000000005911853

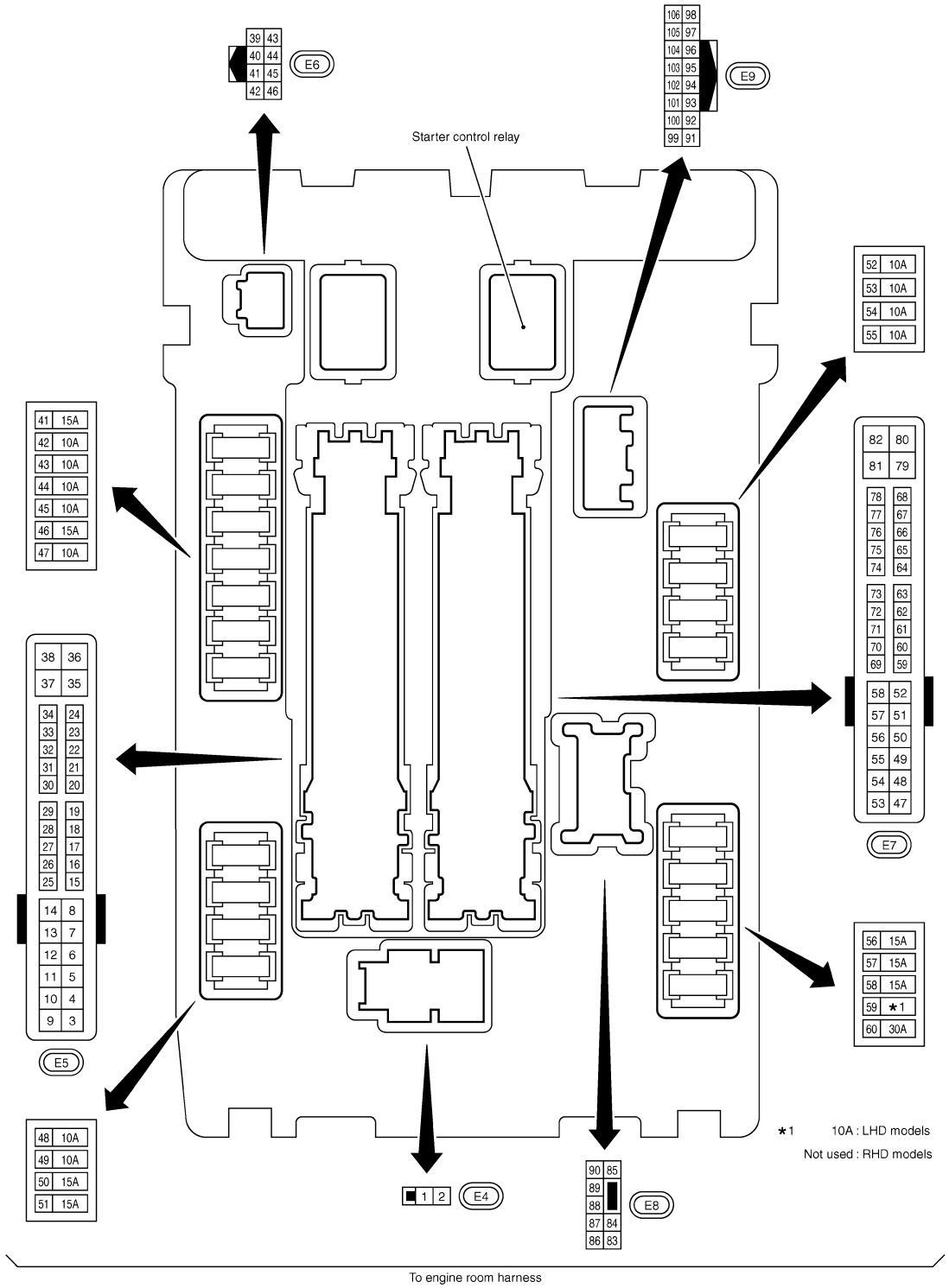

2009/04/03

JCMWA4566GB

HARNESS LAYOUT

How To Read Harness Layout

INFOID:0000000006044187

Main symbols of connector (in Harness Layout) are indicated in the below.

Connector type	Water proof type		Standard type	
	Male	Female	Male	Female
Connector symbol				
Ground terminal etc.	—			

JPMIA0114GB

Outline

INFOID:0000000006044203

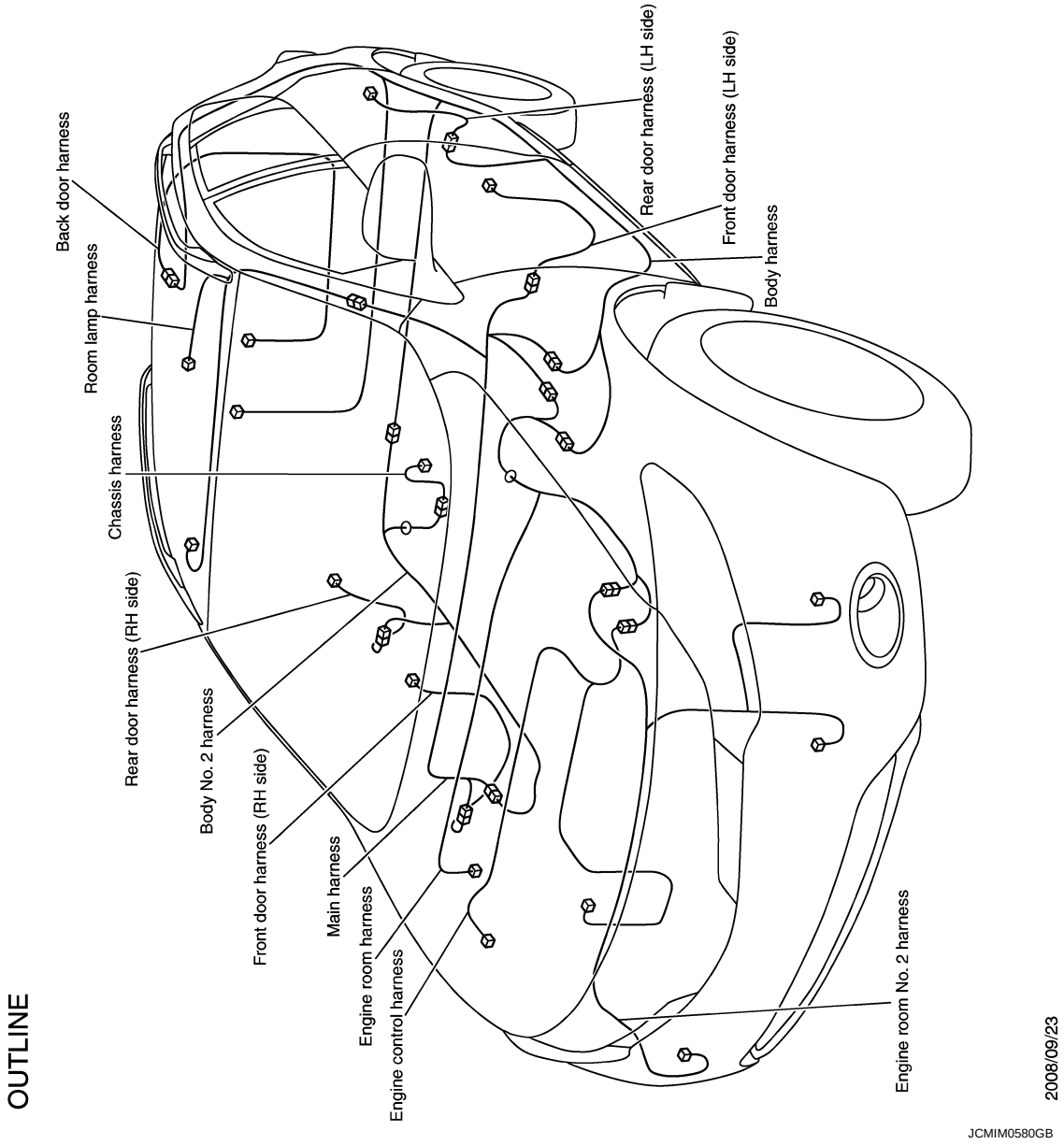

Engine Room Harness

INFOID:0000000006044188

ENGINE COMPARTMENT

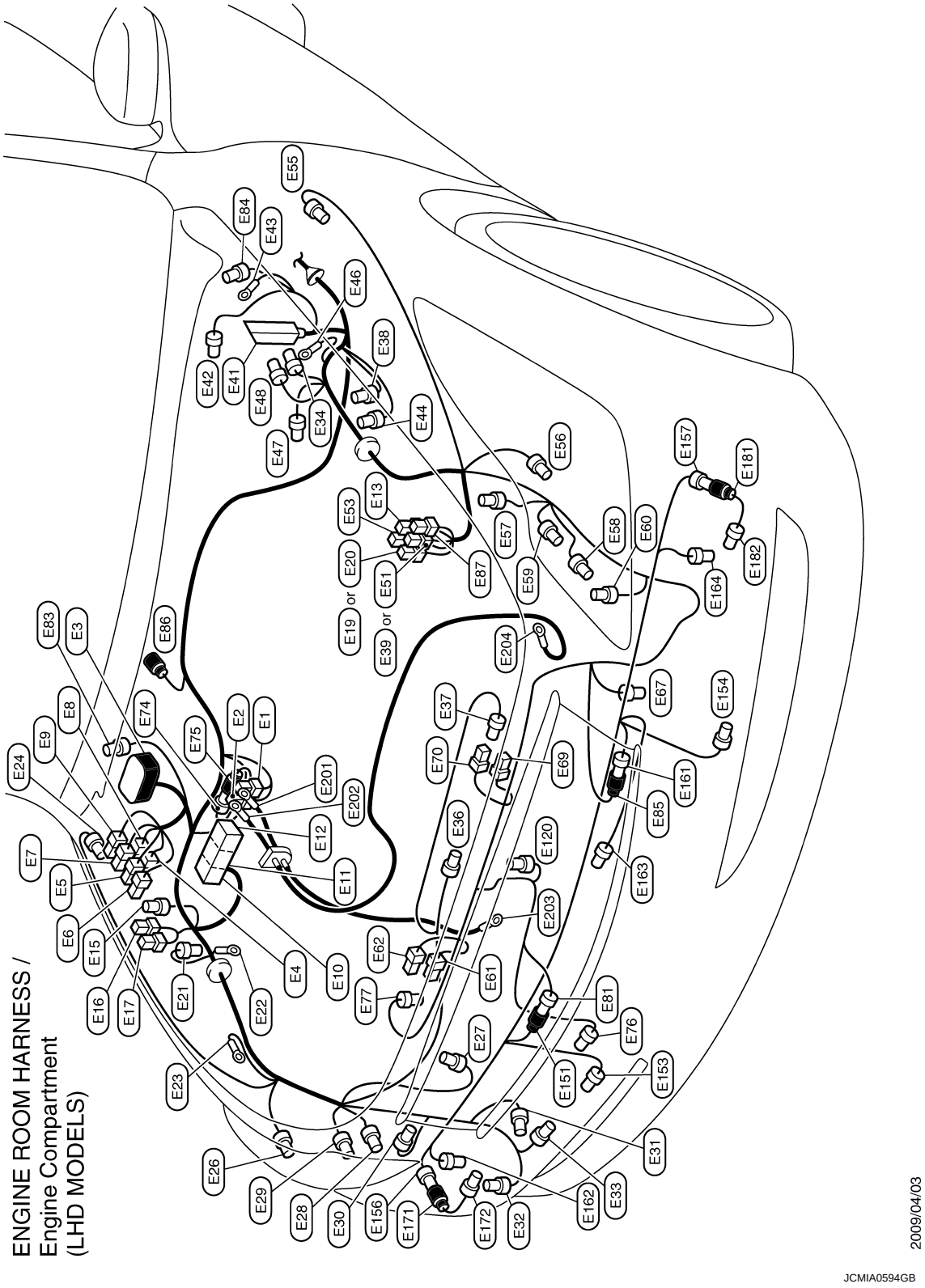

Passenger Compartment (LHD MODELS)

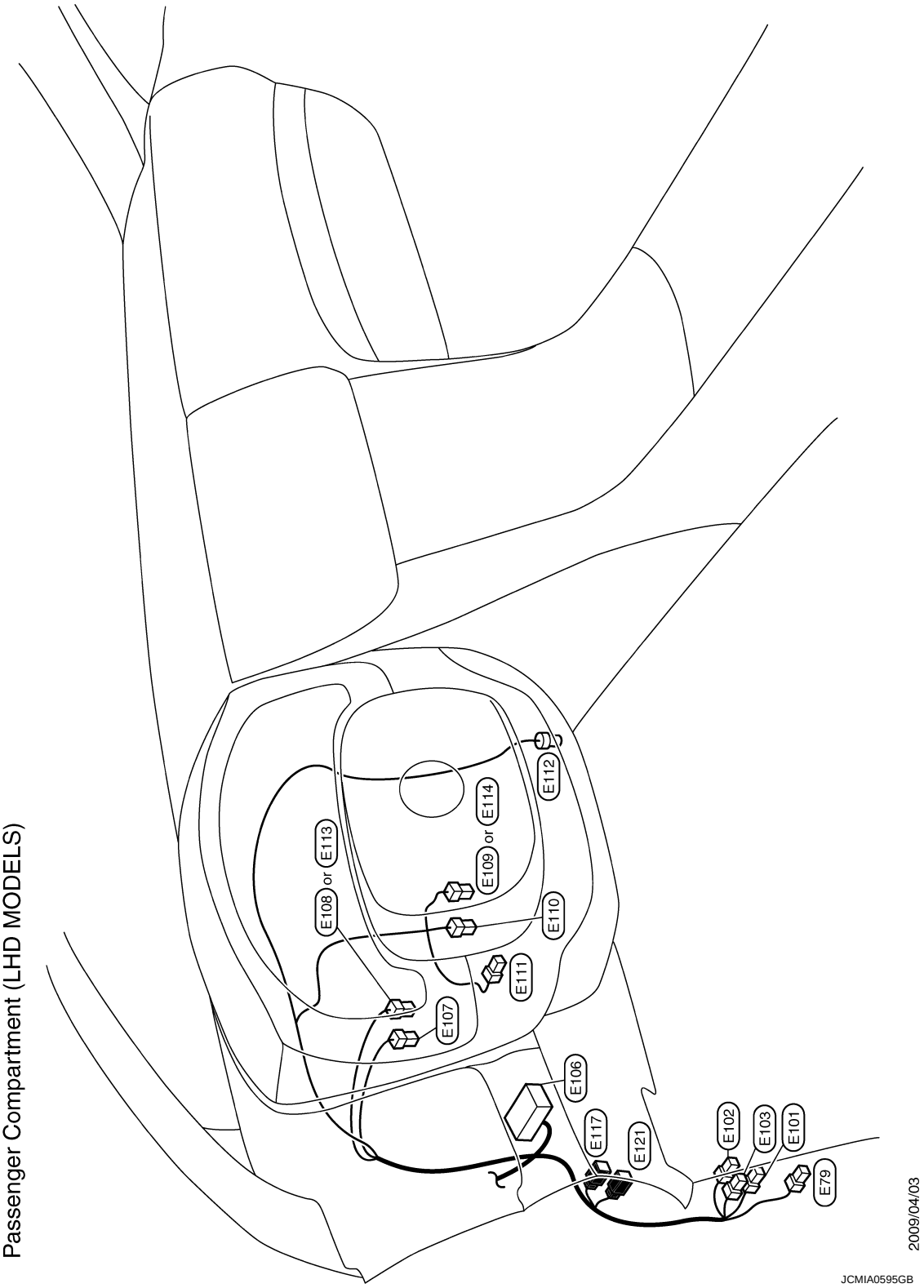

Engine Control Harness

INFOID:0000000006044189

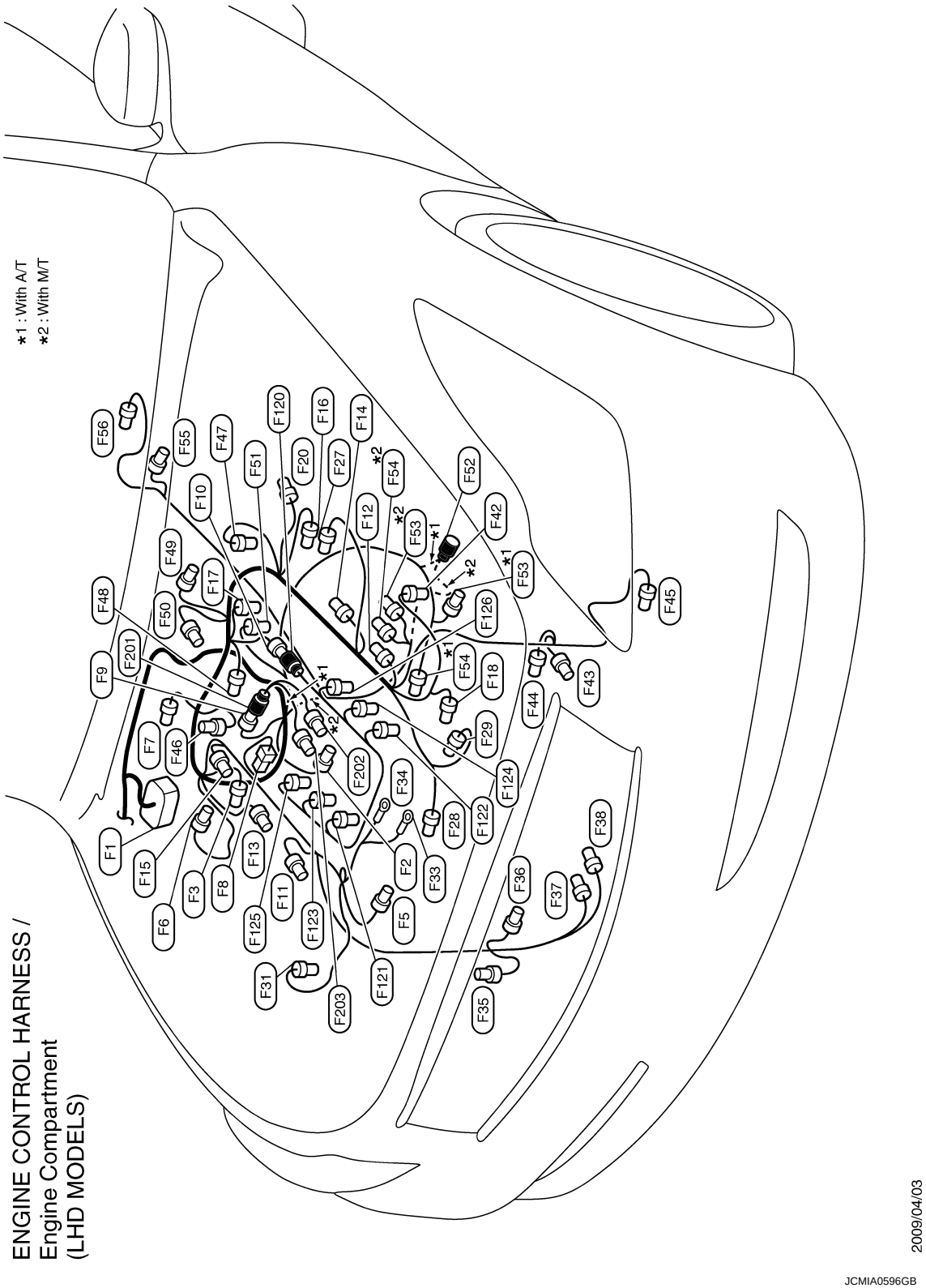

Main Harness

INFOID:0000000006044190

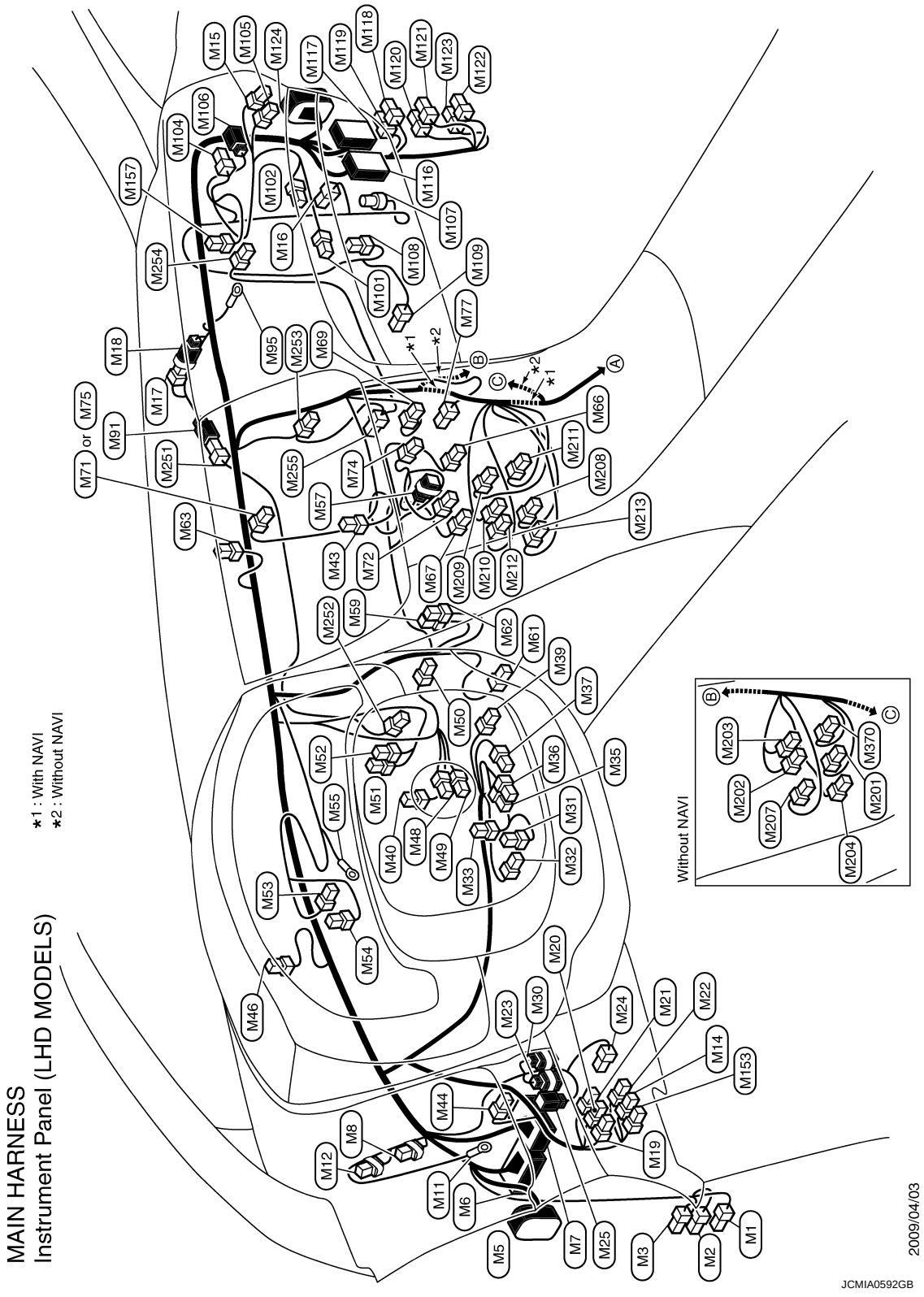

Body Harness

INFOID:0000000006044191

RH SIDE

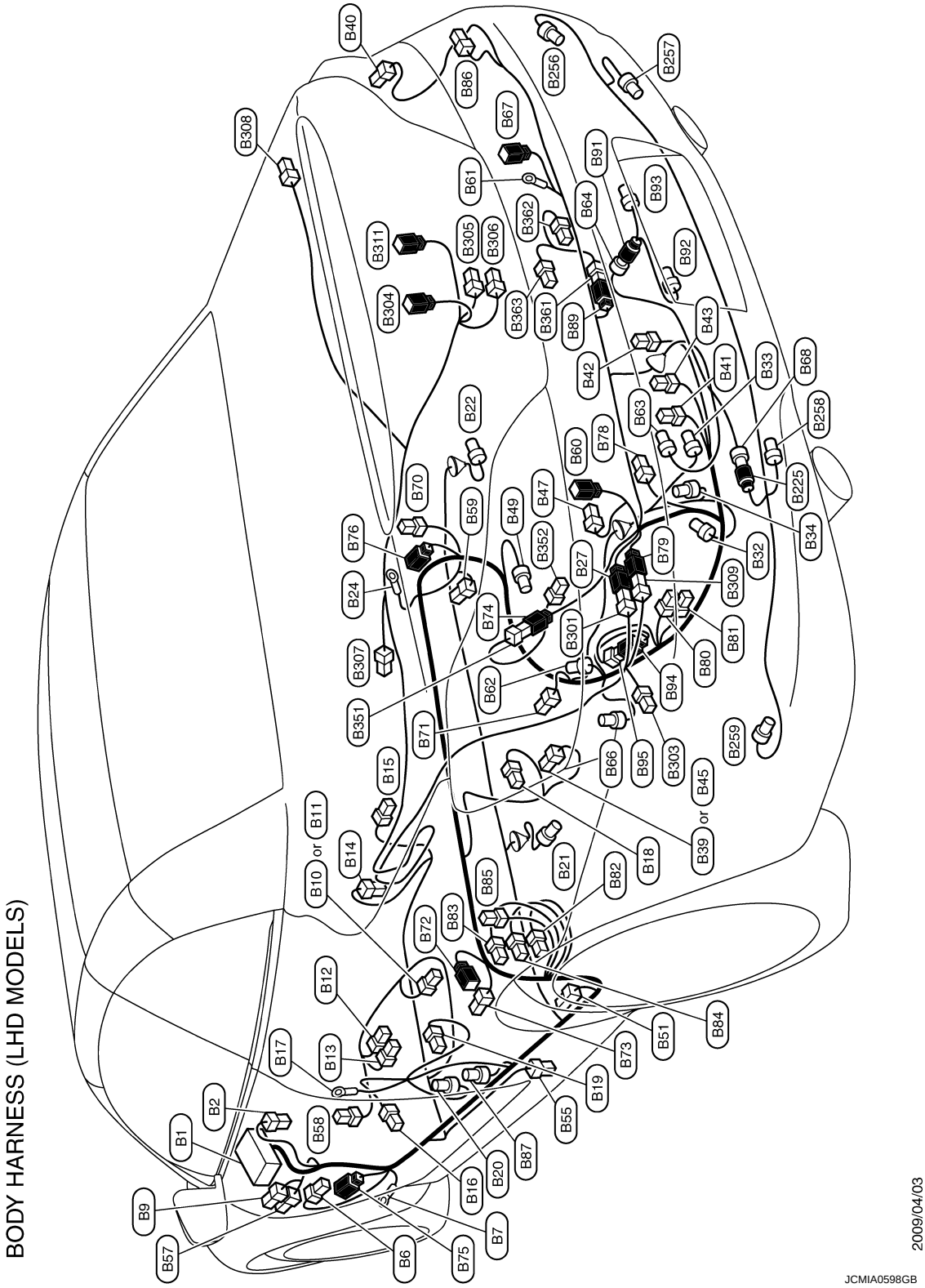

LH SIDE

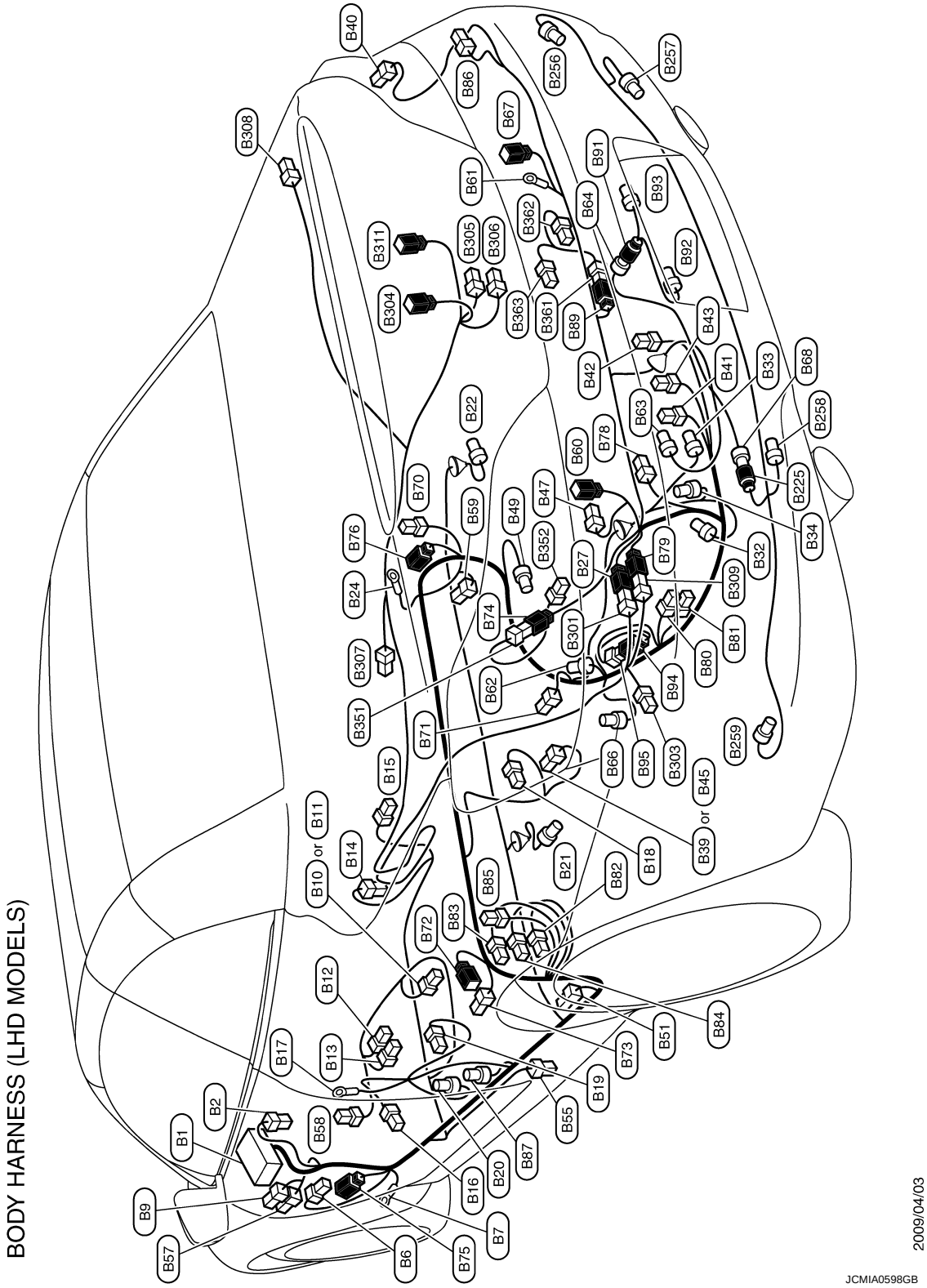
BODY HARNESS (LHD MODELS)
B40
B86
B256
B257
B308
B67
B91
B61
B93
B64
B362
B311
B305
B306
B92
B304
B363
B361
B89
B43
B42
B41
B33
B68
B22
B63
B258
B60
B78
B70
B225
B59
B49
B47
B34
B76
B352
B27
B79
B32
B309
B24
B74
B301
B81
B80
B307
B62
B94
B351
B71
B259
B66
B95
B303
B45
B15
B39
or
B11
B18
B14
B10
or
B21
B82
B85
B72
B83
B12
B84
B51
B73
B17
B13
B19
B2
B55
B58
B1
B87
B20
B16
B9
B7
B57
B6
B75
2009/04/03
JCMIA0598GB

Door Harness

INFOID:0000000006044193

FRONT DOOR HARNESS (RH SIDE)

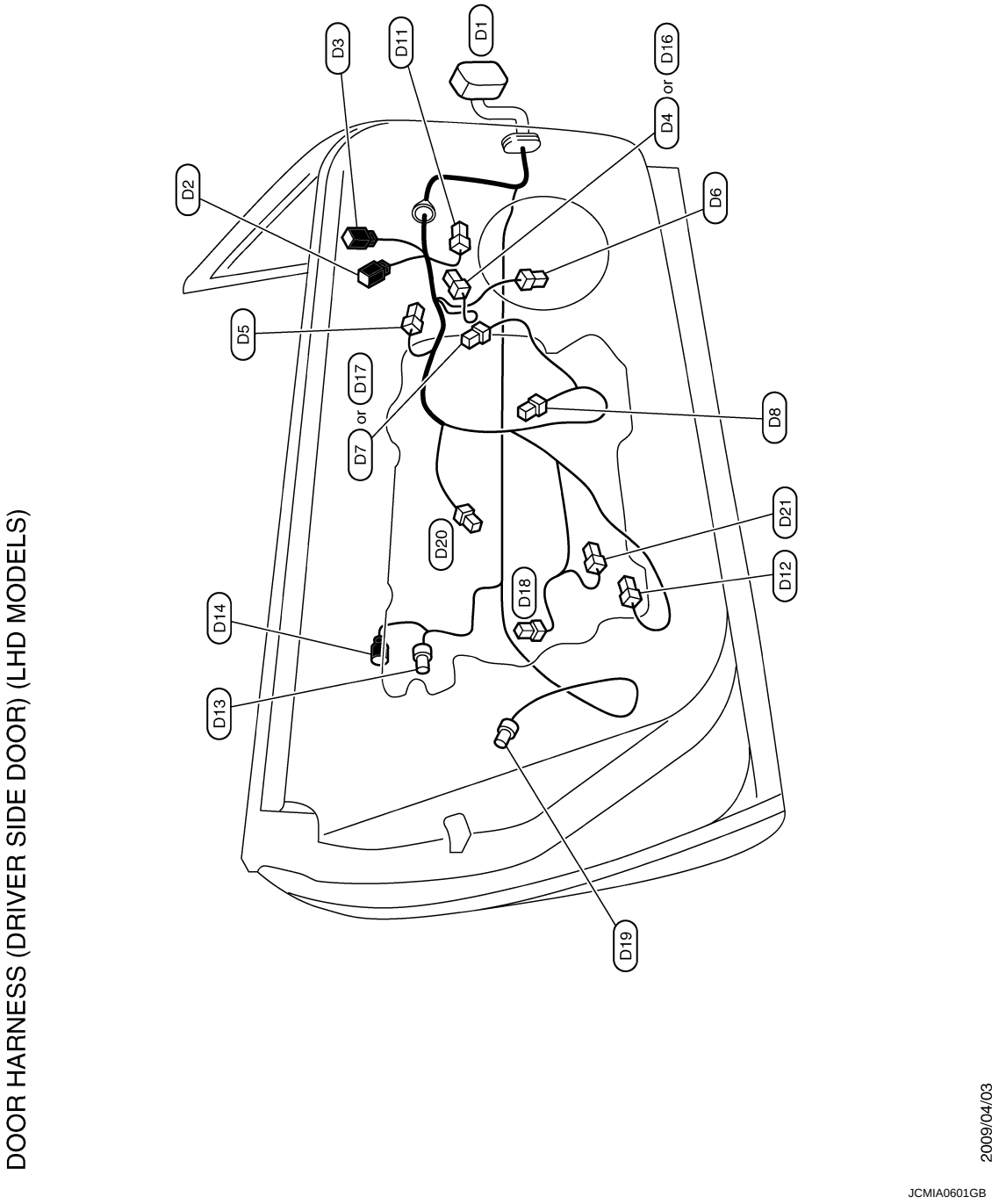

DOOR HARNESS (DRIVER SIDE DOOR) (LHD MODELS)

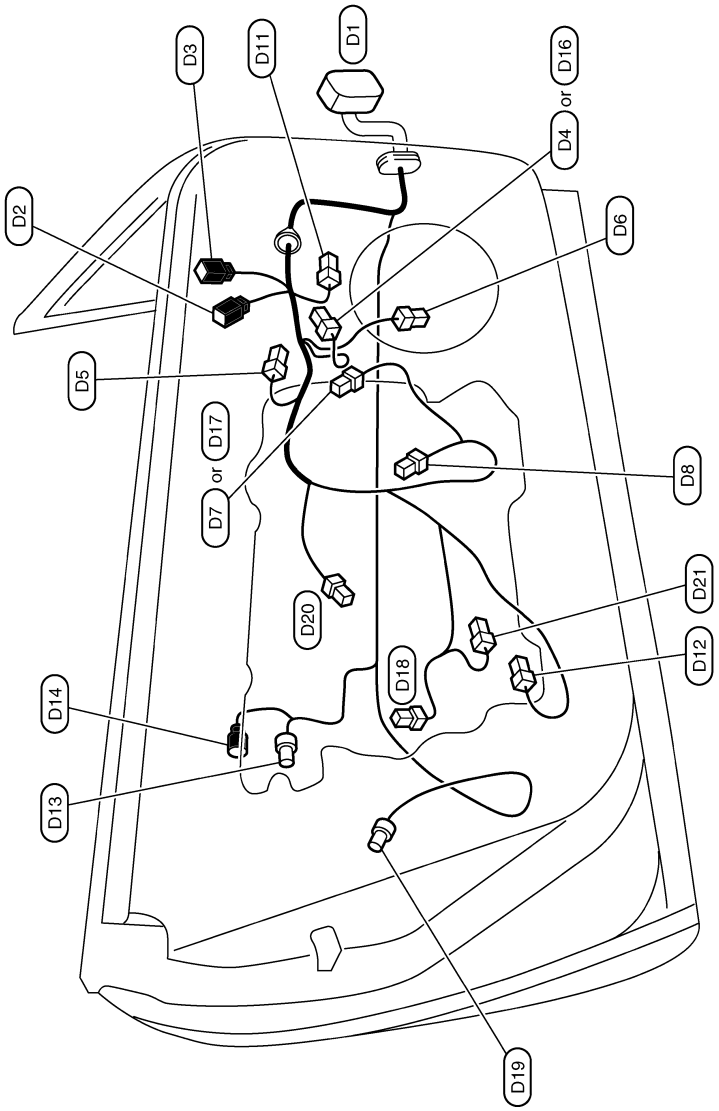

2009/04/03

JCMIA0601GB

DOOR HARNESS (DRIVER SIDE DOOR) (LHD MODELS)

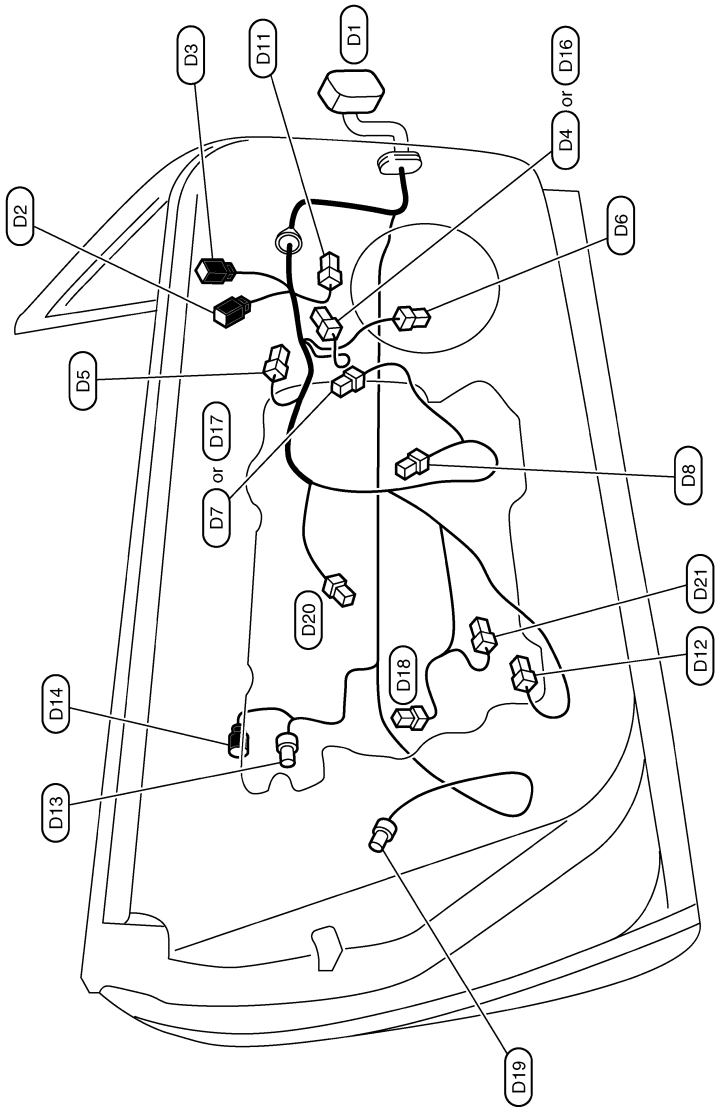

2009/04/03

JCMIA0601GB

DOOR HARNESS (DRIVER SIDE DOOR) (LHD MODELS)

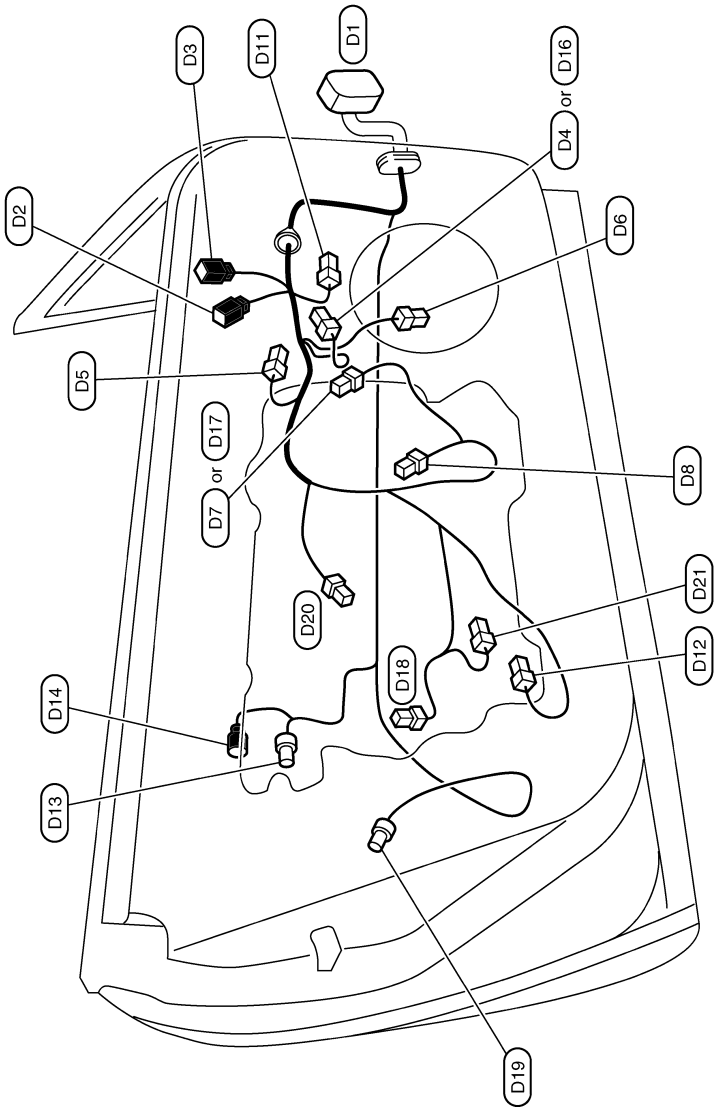

2009/04/03

JCMIA0601GB

DOOR HARNESS (DRIVER SIDE DOOR) (LHD MODELS)

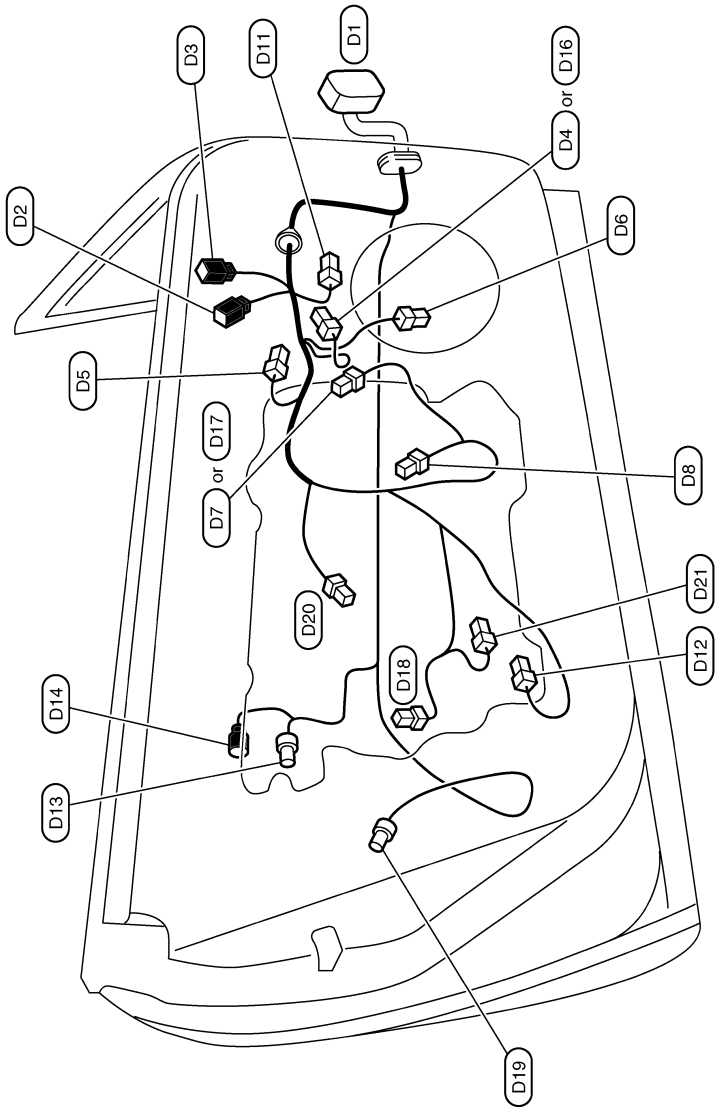

2009/04/03

JCMIA0601GB

Room Lamp Harness

INFOID:0000000006044194

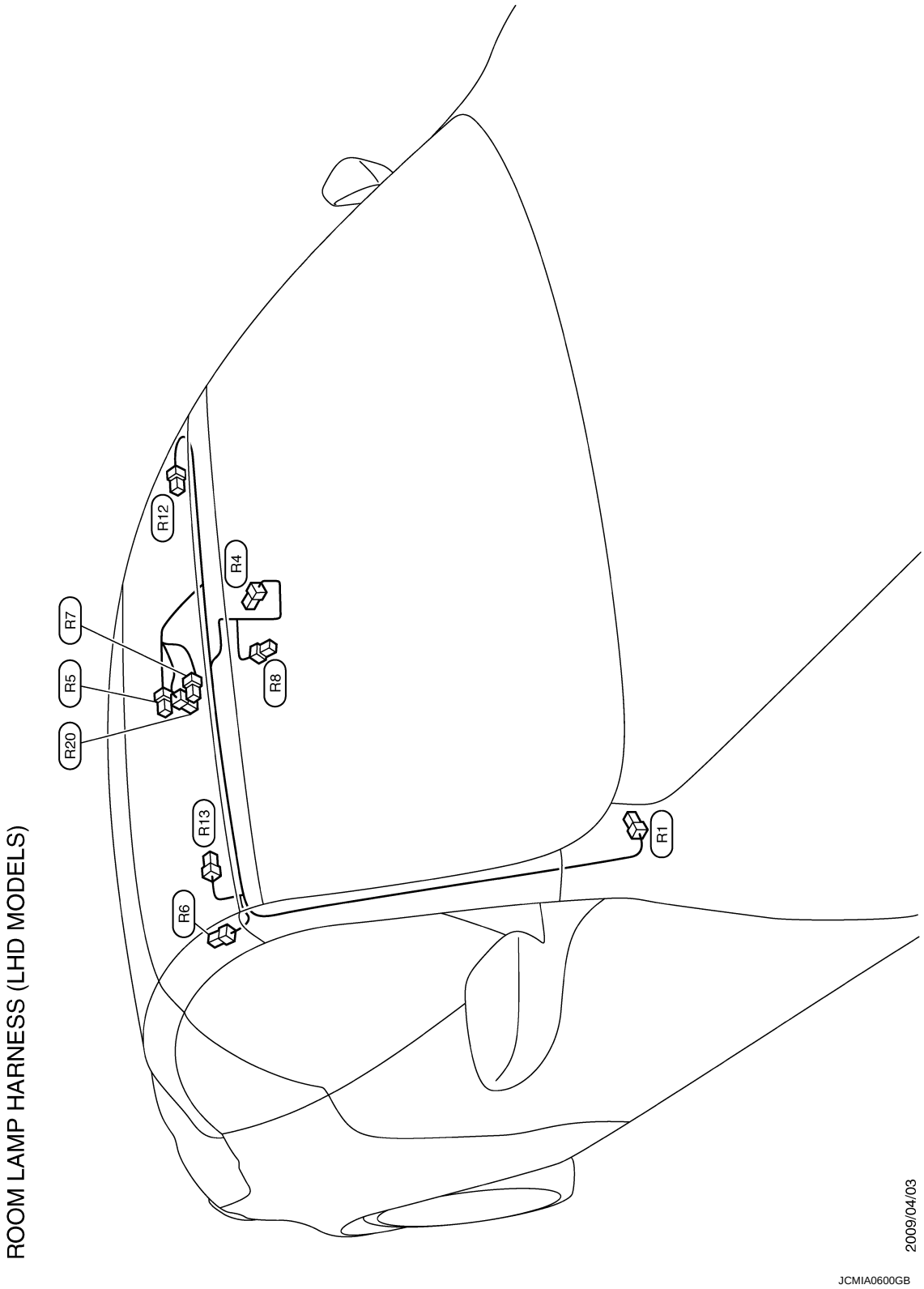

CONNECTOR INFORMATION

How to Read Connector Type

INFOID:0000000006044195

1 : Connector model
2 : Cavity
3 : Male (M) and female (F) terminals
4 : Connector color
5 : Special type

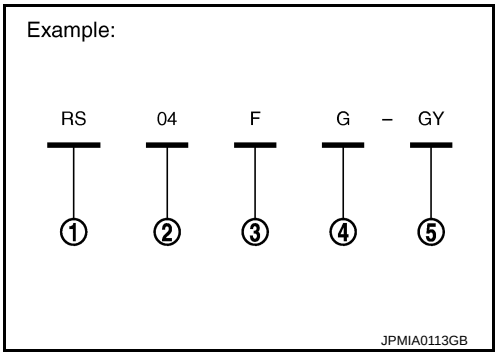

CONNECTOR INFORMATION

INFOID:0000000006044196

BODY HARNESS

Connector No.	B1
Connector Name	WIRE TO WIRE
Connector Type	TH80FW-CS16-TM4

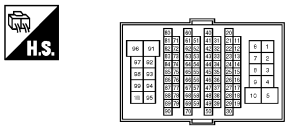

Terminal No.	Color of Wire	Signal Name [Specification]
1	LG	– [LHD models]
1	BR	– [RHD models]
2	BG	– [LHD models]
2	R	– [RHD models]
3	R	– [LHD models]
3	BG	– [RHD models]
4	V	– [LHD models]
4	SB	– [RHD models]
5	W	– [LHD models]
5	P	– [RHD models]
6	B	– [LHD models]
6	V	– [RHD models]
7	W	– [LHD models]
7	LG	– [RHD models]
8	G	–
9	G	– [LHD models]
9	B	– [RHD models]
10	G	–
11	BG	– [LHD models]
11	BR	– [RHD models]
12	SHIELD	– [LHD models]
12	W	– [RHD models]
13	Y	– [LHD models]
13	R	– [RHD models]
14	L	–
15	R	– [LHD models]
15	Y	– [RHD models]
16	W	– [LHD models]
16	SHIELD	– [RHD models]
17	BR	– [LHD models]
17	SB	– [RHD models]
18	V	–
19	B	–
20	V	–
21	R	–
22	L	–
23	W	– [LHD models]
23	BG	– [RHD models]
24	SB	– [LHD models]
24	W	– [RHD models]
25	BR	– [LHD models]
25	P	– [RHD models]
26	LG	– [LHD models]
26	GR	– [RHD models]
27	Y	– [LHD models]
27	G	– [RHD models]
28	R	– [LHD models]
28	BR	– [RHD models]
29	V	– [LHD models]
29	P	– [RHD models]
30	BG	–
31	SHIELD	– [LHD models with BOSE system]
31	BG	– [LHD models without BOSE system]
31	V	– [RHD models]
32	G	– [LHD models]
32	SB	– [RHD models]
33	R	– [LHD models]
33	SHIELD	– [RHD models]
34	BG	– [LHD models]
34	P	– [RHD models]
35	GR	– [LHD models]
35	L	– [RHD models]
36	BR	– [LHD models]
36	SHIELD	– [RHD models]
37	P	– [LHD models with climate controlled seat]
37	Y	– [LHD models without climate controlled seat]
37	R	– [RHD models]
38	V	– [LHD models with climate controlled seat]
38	GR	– [LHD models without climate controlled seat]
38	G	– [RHD models]
39	SHIELD	–
40	SHIELD	– [LHD models with BOSE system]
40	V	– [LHD models without BOSE system or RHD models with BOSE system]
40	LG	– [RHD models without BOSE system]
41	L	– [LHD models with BOSE system]
41	SB	– [LHD models without BOSE system]
41	P	– [RHD models with BOSE system]
41	Y	– [RHD models without BOSE system]
42	P	– [LHD models with BOSE system]
42	W	– [LHD models without BOSE system]
42	BR	– [RHD models]
43	SHIELD	– [LHD models with BOSE system]
43	BR	– [LHD models without BOSE system]
43	GR	– [RHD models with BOSE system]
43	R	– [RHD models without BOSE system]
44	SB	– [LHD models with BOSE system]
44	B	– [LHD models without BOSE system]
44	BG	– [RHD models with BOSE system]
44	L	– [RHD models without BOSE system]
45	V	– [LHD models]
45	SB	– [RHD models with BOSE system]
45	W	– [RHD models without BOSE system]
46	W	– [LHD models]
46	LG	– [RHD models with BOSE system]
46	V	– [RHD models without BOSE system]
47	SB	– [Except RHD models without BOSE system]
47	GR	– [RHD models without BOSE system]
48	LG	– [Except RHD models without BOSE system]
48	BG	– [RHD models without BOSE system]
49	LG	– [LHD models with BOSE system]
49	Y	– [LHD models without BOSE system]
49	B	– [RHD models]
50	SB	– [With BOSE system]
50	LG	– [Without BOSE system]
51	SB	– [LHD models]
51	R	– [RHD models]
52	G	– [LHD models]
52	BR	– [RHD models]
53	LG	– [LHD models]
53	W	– [RHD models]
54	BR	– [LHD models]
54	SB	– [RHD models]
55	Y	– [LHD models]
55	P	– [RHD models]
56	W	– [LHD models]
56	Y	– [RHD models]
57	V	– [LHD models]
57	B	– [RHD models]
58	R	– [LHD models]
58	W	– [RHD models]
59	L	– [LHD models]
59	SB	– [RHD models]
60	R	– [LHD models]
60	G	– [RHD models]
61	BG	– [LHD models]
61	V	– [RHD models]
62	B	– [For the Middle East and China]
62	SB	– [LHD models for Europe except for Russia]
62	Y	– [RHD models]
63	L	– [LHD models]
63	GR	– [RHD models]
64	P	– [LHD models]
64	B	– [RHD models]
65	B	– [LHD models]
65	L	– [RHD models]
66	SB	– [LHD models]
66	P	– [RHD models]
67	P	– [LHD models]
67	LG	– [RHD models]
68	L	– [LHD models]
68	R	– [RHD models]
69	P	– [LHD models]
69	V	– [RHD models]
70	L	– [LHD models]
70	R	– [RHD models]
71	SB	– [LHD models]
71	P	– [RHD models]
72	BG	–
73	GR	–
74	Y	–
75	R	–
76	BR	–
77	W	–
78	P	–
79	G	–
80	G	– [LHD models]
80	GR	– [RHD models]
81	V	– [LHD models]
81	SB	– [RHD models]
82	R	– [LHD models]
82	Y	– [RHD models]
83	BR	– [LHD models]
83	L	– [RHD models]
84	G	–
85	L	– [LHD models]
85	BR	– [RHD models]
86	Y	– [LHD models]
86	V	– [RHD models]
87	GR	– [LHD models]
87	W	– [RHD models]
88	LG	–
89	B	– [LHD models]
89	L	– [RHD models]
90	W	– [LHD models]
90	P	– [RHD models]
92	LG	– [LHD models]
92	GR	– [RHD models]
93	BG	– [LHD models]
93	P	– [RHD models]
94	P	– [LHD models]
94	W	– [RHD models]
95	GR	– [LHD models]
95	SB	– [RHD models]
96	GR	–
97	SB	– [LHD models]
97	LG	– [RHD models]
98	LG	–
99	Y	–
100	Y/B	–

BODY HARNESS

Connector No.	B2
Connector Name	WIRE TO WIRE
Connector Type	NS16FW-CS

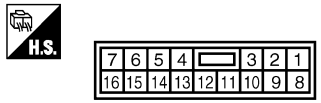

Terminal No.	Color of Wire	Signal Name [Specification]
1	L	–
2	W	–
3	V	–
4	LG	–
5	BG	–
6	P	–
7	B	–
11	LG	–
12	BG	–
13	GR	–
14	R	–
15	G	–
16	W	–

Connector No.	B3
Connector Name	WIRE TO WIRE
Connector Type	NS16MBR-CS

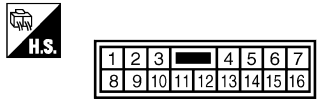

Terminal No.	Color of Wire	Signal Name [Specification]
1	GR	–
2	BG	–
3	V	–
4	LG	–
5	L	–
6	P	–
7	B	–
9	SB	–
10	R	–
11	G	–
12	W	–
13	Y	–
14	GR	–
15	BG	–
16	LG	–

Connector No.	B6
Connector Name	FUSE BLOCK (J/B)
Connector Type	NS12FBR-CS

Terminal No.	Color of Wire	Signal Name [Specification]
4G	R	–
5G	LG	–
6G	G	– [LHD models]
6G	LG	– [RHD models]
10G	P	– [LHD models]
10G	G	– [RHD models]
11G	G	– [LHD models]
11G	P	– [RHD models]
12G	Y	–

Connector No.	B9
Connector Name	WIRE TO WIRE
Connector Type	M06FW-LC

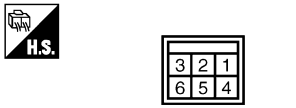

Terminal No.	Color of Wire	Signal Name [Specification]
1	Y	–
3	GR	–
4	LG	–
5	BR	–
6	BG	–

Connector No.	B10
Connector Name	WIRE TO WIRE
Connector Type	NS12FW-CS

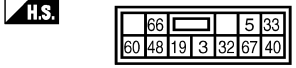

Terminal No.	Color of Wire	Signal Name [Specification]
3	L	–
5	V	–
19	P	–
32	B	–
33	SB	– [LHD models]
33	BG	– [RHD models]
40	G	– [LHD models]
40	LG	– [RHD models]
48	B	–
60	BG	– [LHD models]
60	BR	– [RHD models]
66	Y	– [LHD models]
66	SB	– [RHD models]
67	GR	– [LHD models]
67	R	– [RHD models]

Connector No.	B11
Connector Name	WIRE TO WIRE
Connector Type	NS16FW-CS

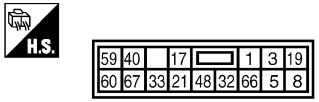

Terminal No.	Color of Wire	Signal Name [Specification]
1	G	– [LHD models]
1	LG	– [RHD models]
3	L	–
5	V	–
17	LG	– [LHD models]
17	G	– [RHD models]
19	P	–
21	Y	– [LHD models]
21	R	– [RHD models]
32	B	–
33	SB	– [LHD models]
33	BG	– [RHD models]
40	BR	–
48	B	–

Connector No.	B12
Connector Name	SIDE AIR BAG MODULE LH
Connector Type	TK02FY-EX-1V

Terminal No.	Color of Wire	Signal Name [Specification]
1	Y	–
2	Y	–

Connector No.	B13
Connector Name	SEAT BELT BUCKLE SWITCH (DRIVER SIDE)
Connector Type	A03FW

Terminal No.	Color of Wire	Signal Name [Specification]
1	W	–
2	B	–

JCMWM6676GB

CONNECTOR INFORMATION

BODY HARNESS

Connector No.	B14
Connector Name	PARKING BRAKE SWITCH
Connector Type	P01FB-A

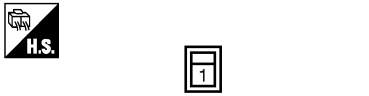

Terminal No.	Color of Wire	Signal Name [Specification]
1	V	–

Connector No.	B15
Connector Name	AIR BAG DIAGNOSIS SENSOR UNIT
Connector Type	NH22FY-2V-EX

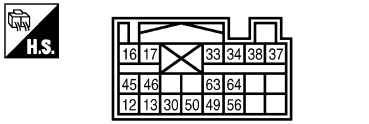

Terminal No.	Color of Wire	Signal Name [Specification]
12	Y	PLH1(+)
13	Y	PLH1(–)
16	Y	PLH2(+)
17	Y	PLH2(–)
30	SB	LH BUCKLE SW INPUT
33	Y	SLH(+)
34	Y	SLH(–)
37	Y/B	CLH(+)
38	Y	CLH(–)
49	P	SATELLITE LH(+)
50	L	SATELLITE LH(–)
56	SHIELD	GND
63	Y	ELH(+)
64	Y/B	ELH(–)

Connector No.	B16
Connector Name	DRIVER SIDE DOOR SWITCH
Connector Type	A03FW

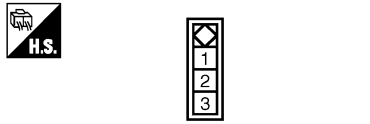

Terminal No.	Color of Wire	Signal Name [Specification]
2	SB	– [LHD models]
2	V	– [RHD models]

Connector No.	B18
Connector Name	DOOR-MOUNTED CURTAIN AIR BAG MODULE LH
Connector Type	TK02FY-EX-1V

Terminal No.	Color of Wire	Signal Name [Specification]
1	Y	–
2	Y/B	–

Connector No.	B19
Connector Name	SEAT BELT PRE-TENSIONER LH
Connector Type	ACB02FY

Terminal No.	Color of Wire	Signal Name [Specification]
1	Y	–
2	Y	–

Connector No.	B20
Connector Name	SATELLITE SENSOR LH
Connector Type	HK02FY-1V-EX-LC

Terminal No.	Color of Wire	Signal Name [Specification]
1	P	–
2	L	–

Connector No.	B21
Connector Name	FUEL LEVEL SENSOR UNIT (SUB)
Connector Type	E02FGY-RS

Terminal No.	Color of Wire	Signal Name [Specification]
1	B	–
2	W	–

Connector No.	B22
Connector Name	FUEL LEVEL SENSOR UNIT AND FUEL PUMP (MAIN)
Connector Type	E05FGY-RS

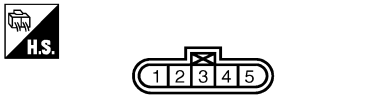

Terminal No.	Color of Wire	Signal Name [Specification]
1	L	– [LHD models]
1	BG	– [RHD models]
2	W	–
3	B	–
4	R	– [LHD models]
4	GR	– [RHD models]
5	SB	– [LHD models]
5	Y	– [RHD models]

Connector No.	B23
Connector Name	DRIVER SIDE DOOR SWITCH
Connector Type	A03FW

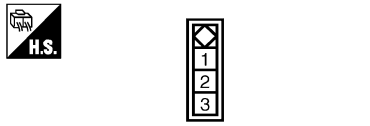

Terminal No.	Color of Wire	Signal Name [Specification]
2	SB	–
3	B	–

JCMWM6677GB

CONNECTOR INFORMATION

BODY HARNESS

Connector No.	B27
Connector Name	WIRE TO WIRE
Connector Type	NS16MW-CS

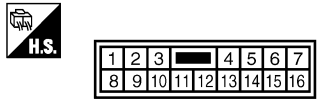

Terminal No.	Color of Wire	Signal Name [Specification]
1	BG	– [LHD models]
1	B	– [RHD models]
2	P	–
3	G	–
4	W	–
5	R	–
6	P	–
7	GR	– [LHD models]
7	BR	– [RHD models]
10	LG	–
11	B	–
12	B	–
13	V	–
14	SB	– [LHD models]
14	L	– [RHD models]
15	L	– [LHD models]
15	SB	– [RHD models]
16	V	– [LHD models]
16	GR	– [RHD models]

Connector No.	B32
Connector Name	HEIGHT SENSOR
Connector Type	RH03FB

Terminal No.	Color of Wire	Signal Name [Specification]
1	BG	– [LHD models]
1	V	– [RHD models]
2	SB	–
3	GR	– [LHD models]
3	B	– [RHD models]

Connector No.	B33
Connector Name	REAR WHEEL SENSOR RH
Connector Type	AAZ02FB1

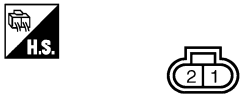

Terminal No.	Color of Wire	Signal Name [Specification]
1	BR	–
2	LG	– [LHD models]
2	R	– [RHD models]

Connector No.	B34
Connector Name	REAR WHEEL SENSOR LH
Connector Type	AAZ02FB2

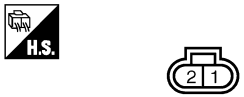

Terminal No.	Color of Wire	Signal Name [Specification]
1	BG	–
2	GR	– [LHD models]
2	P	– [RHD models]

Connector No.	B39
Connector Name	REAR SPEAKER LH
Connector Type	NS02FW-CS

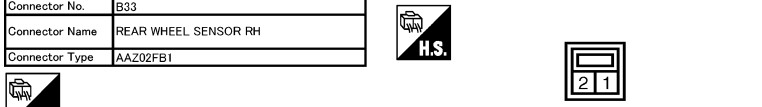

Terminal No.	Color of Wire	Signal Name [Specification]
1	LG	–
2	Y	–

Connector No.	B40
Connector Name	FUEL LID LOCK ACTUATOR
Connector Type	M04FW-LC

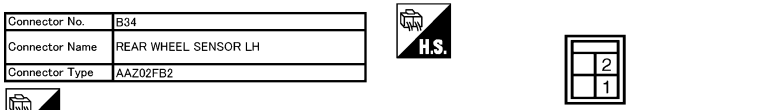

Terminal No.	Color of Wire	Signal Name [Specification]
1	R	– [LHD models]
1	G	– [RHD models]
2	V	–

Connector No.	B41
Connector Name	BOSE AMP.
Connector Type	TH40FW-NH

Terminal No.	Color of Wire	Signal Name [Specification]
9	L	SOUND SIGNAL LH (–)
10	G	SOUND SIGNAL RH (–)
11	G	MICROPHONE SIGNAL (–) [LHD models]
11	BR	MICROPHONE SIGNAL (–) [RHD models]
12	SB	VOICE GUIDANCE SIGNAL (–)
14	LG	AV COMM (L)
15	LG	AV COMM (L)
16	W	ACC [LHD models]
16	SB	ACC [RHD models]
29	P	SOUND SIGNAL LH (+)
30	R	SOUND SIGNAL RH (+)
31	Y	MICROPHONE SIGNAL (+)
32	V	VOICE GUIDANCE SIGNAL (+)
33	SHIELD	SHIELD
34	SB	AV COMM (H)
35	SB	AV COMM (H)
40	V	ROOF STATUS SIGNAL (AUDIO) [LHD models]
40	W	ROOF STATUS SIGNAL (AUDIO) [RHD models]

Connector No.	B42
Connector Name	BOSE AMP.
Connector Type	SGA12FBR-SJA2

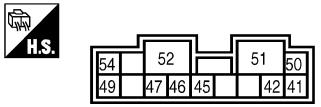

Terminal No.	Color of Wire	Signal Name [Specification]
41	B	SOUND SIGNAL DOOR WOOFER LH (+)
42	W	SOUND SIGNAL DOOR WOOFER LH (–)
45	G	SOUND SIGNAL DOOR WOOFER RH (+)
46	R	SOUND SIGNAL DOOR WOOFER RH (–)
47	B	GND
49	P	SOUND SIGNAL REAR WOOFER LH (–)
50	Y	BATTERY
51	GR	BATTERY
52	B	GND
54	L	SOUND SIGNAL REAR WOOFER LH (+)

JCMWM6678GB

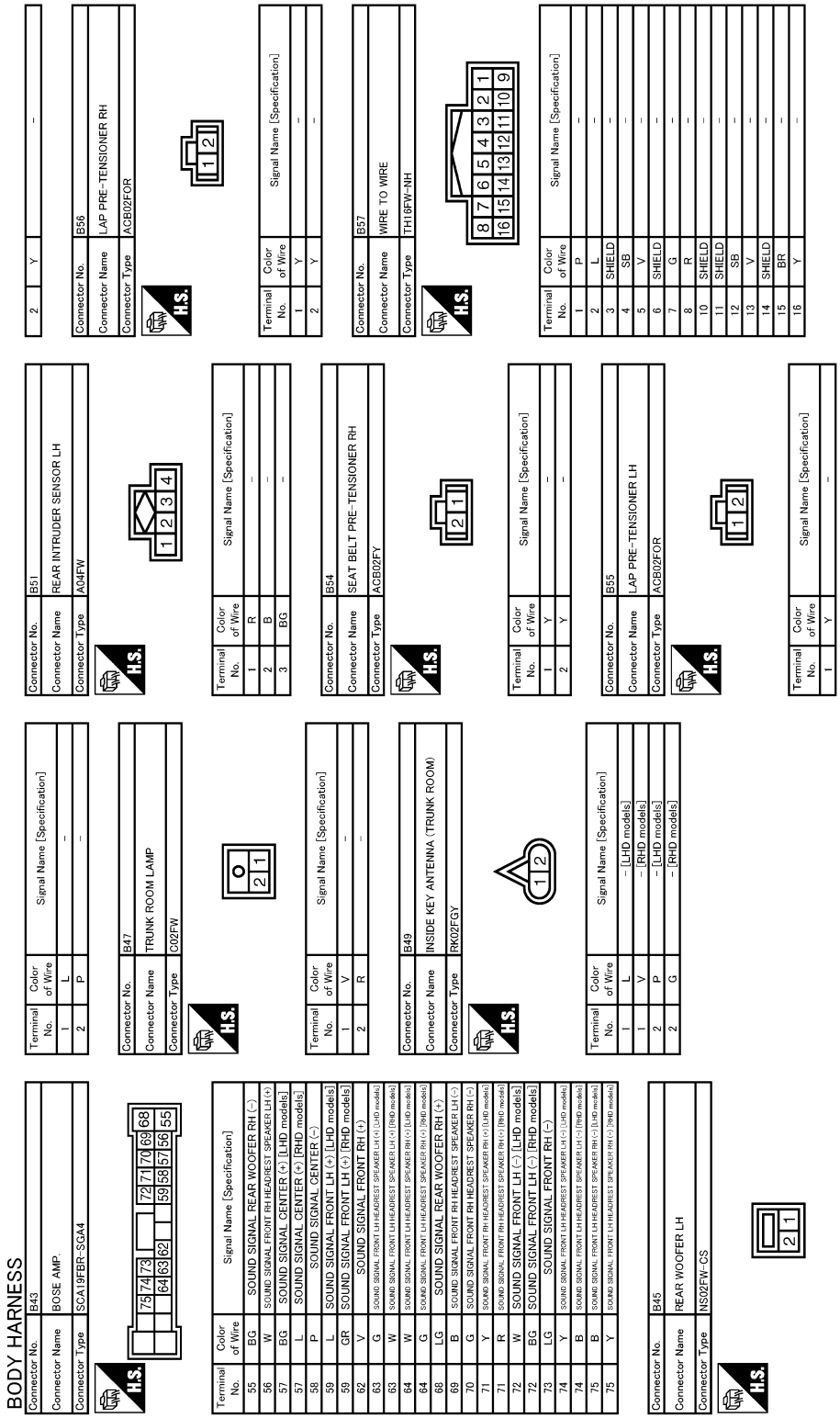

JCMWM6679GB

BODY HARNESS

Connector No.	B58
Connector Name	WIRE TO WIRE
Connector Type	NS16FBR-CS

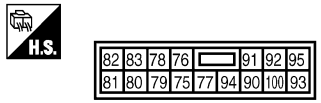

Terminal No.	Color of Wire	Signal Name [Specification]
75	G	– [LHD models]
75	W	– [RHD models]
76	Y	– [LHD models]
76	B	– [RHD models]
77	SHIELD	–
78	W	– [LHD models]
78	Y	– [RHD models]
79	B	– [LHD models]
79	G	– [RHD models]
80	SHIELD	–
81	Y	–
82	G	–
83	SHIELD	–
90	B	–
91	P	– [LHD models]
91	L	– [RHD models]
92	V	– [LHD models]
92	G	– [RHD models]
93	G	– [LHD models]
93	W	– [RHD models]
94	BG	– [LHD models]
94	SB	– [RHD models]
95	GR	– [LHD models]
95	V	– [RHD models]
100	BR	– [LHD models]
100	LG	– [RHD models]

Connector No.	B59
Connector Name	VEHICLE TILT SENSOR
Connector Type	A04FW

Terminal No.	Color of Wire	Signal Name [Specification]
1	P	– [LHD models]
1	SB	– [RHD models]
2	B	–
4	BG	–

Connector No.	B60
Connector Name	REAR COMBINATION LAMP LH
Connector Type	NS06MW-CS

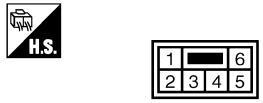

Terminal No.	Color of Wire	Signal Name [Specification]
1	G	–
2	R	– [Except LHD models for Europe]
2	L	– [LHD models for Europe]
3	B	–
4	LG	– [LHD models]
4	L	– [RHD models]
5	W	–
6	BG	–

Connector No.	B62
Connector Name	G SENSOR
Connector Type	HS03FB-2V

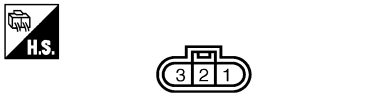

Terminal No.	Color of Wire	Signal Name [Specification]
1	W	OUTPUT
2	B	GND
3	LG	POWER [LHD models]
3	Y	POWER [RHD models]

Connector No.	B63
Connector Name	OUTSIDE KEY ANTENNA (REAR BUMPER)
Connector Type	RK02FGY

Terminal No.	Color of Wire	Signal Name [Specification]
1	BR	– [LHD models]
1	G	– [RHD models]
2	SB	– [LHD models]
2	BR	– [RHD models]

Connector No.	B64
Connector Name	WIRE TO WIRE
Connector Type	RK02FGY

Terminal No.	Color of Wire	Signal Name [Specification]
1	R	–
2	B	–

Connector No.	B65
Connector Name	WIRE TO WIRE
Connector Type	NS12MW-CS

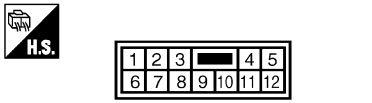

Terminal No.	Color of Wire	Signal Name [Specification]
1	L	–
2	Y	–
3	BR	–
4	G	–
5	P	–
6	GR	–
7	W	–
8	R	–
9	LG	–
10	BG	–
11	SB	–
12	V	–

CONNECTOR INFORMATION

BODY HARNESS

Connector No.	B66
Connector Name	SIREN CONTROL UNIT
Connector Type	RH06FB

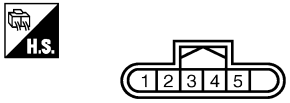

Terminal No.	Color of Wire	Signal Name [Specification]
1	W	–
2	R	–
3	BR	–
4	BG	–
5	B	–

Connector No.	B67
Connector Name	REAR COMBINATION LAMP RH
Connector Type	NS06MW-CS

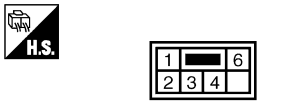

Terminal No.	Color of Wire	Signal Name [Specification]
1	LG	–
2	R	–
3	B	–
4	Y	– [LHD models]
4	GR	– [RHD models]
6	BG	– [LHD models]
6	P	– [RHD models]

Connector No.	B68
Connector Name	WIRE TO WIRE
Connector Type	RK06FGY

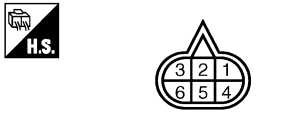

Terminal No.	Color of Wire	Signal Name [Specification]
1	R	–
2	W	–
3	BR	–
5	Y	–
6	L	–

Connector No.	B69
Connector Name	BUZZER (BACKWARD)
Connector Type	RK02FBR

Terminal No.	Color of Wire	Signal Name [Specification]
1	G	– [LHD models]
1	BR	– [RHD models]
2	GR	–

Connector No.	B70
Connector Name	POP UP ENGINE HOOD CONTROL UNIT
Connector Type	TK20FY-EX-SC

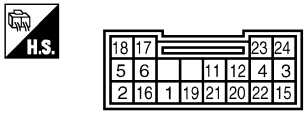

Terminal No.	Color of Wire	Signal Name [Specification]
1	LG	IGN
2	B	GND
3	Y	ACTUATOR FRH+
4	BR	ACTUATOR FRH–
5	V	ACTUATOR FLH+
6	SB	ACTUATOR FLH–
11	R	BMPR SENS1+
12	G	BMPR SENS1–
15	BG	PPS W/L
16	B	SHIELD GND SENS
17	L	BMPR SENS3+
18	P	BMPR SENS3–
19	GR	SHIELD GND ACTR
20	L	V-CAN-H
21	P	V-CAN-L
22	W	K-LINE
23	SB	BMPR SENS2–
24	V	BMPR SENS2+

Connector No.	B71
Connector Name	WIRE TO WIRE
Connector Type	NS16FBR-CS

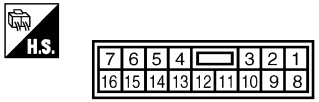

Terminal No.	Color of Wire	Signal Name [Specification]
1	R	–
2	W	–
3	SB	–
5	GR	–
6	BG	– [LHD models]
6	V	– [RHD models]
7	R	–
8	Y	–
10	LG	– [LHD models]
10	Y	– [RHD models]
12	P	–
14	W	–
16	BR	–

Connector No.	B72
Connector Name	WIRE TO WIRE
Connector Type	NS02MW-CS

Terminal No.	Color of Wire	Signal Name [Specification]
1	BG	–
2	LG	–

Connector No.	B73
Connector Name	WIRE TO WIRE
Connector Type	NS16FGY-CS

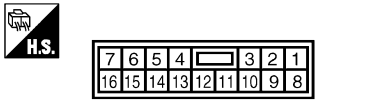

Terminal No.	Color of Wire	Signal Name [Specification]
1	V	–
2	G	–
3	BG	– [LHD models]
3	SB	– [RHD models]
4	Y	–
5	R	–
6	P	–
7	B	–
12	B	–
13	B	–
14	BR	–
15	W	–
16	GR	–

JCMWM6681GB

CONNECTOR INFORMATION

BODY HARNESS

Connector No.	B74
Connector Name	WIRE TO WIRE
Connector Type	TH04MW-NH

Terminal No.	Color of Wire	Signal Name [Specification]
3	B	–
4	L	–

Connector No.	B75
Connector Name	WIRE TO WIRE
Connector Type	M02MW-LC

Terminal No.	Color of Wire	Signal Name [Specification]
1	L	–
2	Y	–

Connector No.	B76
Connector Name	WIRE TO WIRE
Connector Type	TH16MW-NH

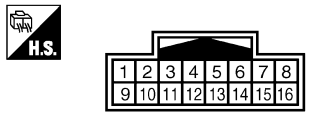

Terminal No.	Color of Wire	Signal Name [Specification]
1	V	–
3	BG	– [LHD models]
3	SHIELD	– [RHD models]
4	LG	– [LHD models]
4	Y	– [RHD models]
5	SB	– [LHD models]
5	BR	– [RHD models]
6	SHIELD	–
7	B	–
8	W	–
9	W	–
10	SHIELD	–
11	B	–
12	W	–
13	R	–
14	SHIELD	–
15	G	–
16	Y	– [LHD models]
16	R	– [RHD models]

Connector No.	B77
Connector Name	WIRE TO WIRE
Connector Type	M02MW-LC

Terminal No.	Color of Wire	Signal Name [Specification]
1	Y	–
2	Y	–

Connector No.	B78
Connector Name	SPEAKER AMP.
Connector Type	NS10FW-CS

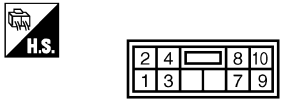

Terminal No.	Color of Wire	Signal Name [Specification]
1	W	SOUND SIGNAL FRONT LH (–)
2	BG	SOUND SIGNAL FRONT LH (+) [LHD models]
2	L	SOUND SIGNAL FRONT LH (+) [RHD models]
3	SB	SOUND SIGNAL FRONT RH (–) [LHD models]
3	R	SOUND SIGNAL FRONT RH (–) [RHD models]
4	V	SOUND SIGNAL FRONT RH (+) [LHD models]
4	BR	SOUND SIGNAL FRONT RH (+) [RHD models]
7	B	GND
8	R	SOUND SIGNAL CENTER (–) [LHD models]
8	BG	SOUND SIGNAL CENTER (–) [RHD models]
9	G	ACC [LHD models]
9	V	ACC [RHD models]
10	BR	SOUND SIGNAL CENTER (+) [LHD models]
10	GR	SOUND SIGNAL CENTER (+) [RHD models]

Connector No.	B79
Connector Name	WIRE TO WIRE
Connector Type	TH08MW-NH

Terminal No.	Color of Wire	Signal Name [Specification]
1	R	–
2	W	–
3	B	–
4	SHIELD	–

Connector No.	B80
Connector Name	HYDRAULIC UNIT
Connector Type	NS16FW-CS

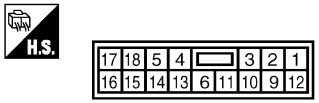

Terminal No.	Color of Wire	Signal Name [Specification]
1	P	–
2	L	– [LHD models]
2	SB	– [RHD models]
3	BR	–
4	Y	–
5	W	–
6	R	–
9	SB	– [LHD models]
9	BG	– [RHD models]
10	LG	–
11	BG	– [LHD models]
11	V	– [RHD models]
12	V	– [LHD models]
12	GR	– [RHD models]
13	GR	– [LHD models]
13	BR	– [RHD models]
14	G	–
15	L	–
16	BG	–
17	P	–
18	BR	– [LHD models]
18	V	– [RHD models]

Connector No.	B81
Connector Name	HYDRAULIC UNIT
Connector Type	L02FB-MC

Terminal No.	Color of Wire	Signal Name [Specification]
7	Y	–
8	B	–

JCMWM6682GB

CONNECTOR INFORMATION

BODY HARNESS

Connector No.	B82
Connector Name	RETRACTABLE HARD TOP CONTROL UNIT
Connector Type	TH40FW-NH

Terminal No.	Color of Wire	Signal Name [Specification]
1	G	ROOF OPEN/CLOSE SWITCH (OPEN)
2	BR	ROOF OPEN/CLOSE SWITCH (CLOSE)
3	B	FLIPPER DOOR LIMIT SWITCH GND
4	L	TONNEAU BOARD SWITCH
5	SB	TRUNK ROOM LAMP SWITCH
6	L	ROOF LATCH LIMIT SWITCH
7	W	FLIPPER DOOR LIMIT SWITCH (UP)
8	G	FLIPPER DOOR LIMIT SWITCH (DOWN)
11	W	RETAINED ACC POWER [LHD models]
11	LG	RETAINED ACC POWER [RHD models]
12	Y	REVERSE SIGNAL
13	BG	PARCEL SHELF STATUS SENSOR POWER SUPPLY
14	P	TRUNK LINK SENSOR SIGNAL (LH)
15	SB	TRUNK LINK SENSOR SIGNAL (RH)
16	GR	ROOF LATCH STAUS SENSOR SIGNAL
17	G	ROOF LATCH LOCK SENSOR SIGNAL
18	LG	TRUNK STATUS SENSOR SIGNAL
22	V	ROOF STATUS SENSOR POWER SUPPLY
23	B	ROOF STATUS SENSOR GND
24	GR	PARCEL SHELF STATUS SENSOR SIGNAL (DRAW)
25	R	PARCEL SHELF STATUS SENSOR SIGNAL (ROTATION)
26	P	ROOF STATUS SENSOR SIGNAL
27	Y	TRUNK LID OPEN REQUEST SIGNAL
28	BG	FLIPPER DOOR RELAY GND
29	V	LOCAL COMMUNICATION (BCM)
30	GR	LOCAL COMMUNICATION (POWER WINDOW)
31	L	CAN-H
32	P	CAN-L
33	V	ROOF STATUS SIGNAL (AUDIO) [LHD models]
33	W	ROOF STATUS SIGNAL (AUDIO) [RHD models]
34	R	ROOF STATUS SIGNAL (TRUNK)
35	B	ROOF WARNING BUZZER
36	Y	HYDRAULIC MOTOR RELAY GND (RH)
37	W	HYDRAULIC MOTOR RELAY GND (LH)
38	BR	HYDRAULIC MOTOR RELAY POWER SUPPLY

Connector No.	B83
Connector Name	RETRACTABLE HARD TOP CONTROL UNIT
Connector Type	NS16FBR-CS

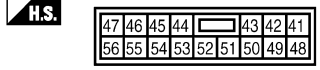

Terminal No.	Color of Wire	Signal Name [Specification]
41	SB	PARCEL SHELF MOTOR RELAY GND (UP)
42	W	PARCEL SHELF MOTOR RELAY GND (DOWN)
43	BR	HYDRAULIC PUMP POWER SUPPLY RELAY [LHD models]
43	V	HYDRAULIC PUMP POWER SUPPLY RELAY [RHD models]
44	R	MOTOR PARCEL SHELF (HORIZONAL)
45	BR	MOTOR PARCEL SHELF (VERTICAL)
46	G	FLIPPER DOOR RELAY POWER SUPPLY (UP)
47	L	FLIPPER DOOR RELAY POWER SUPPLY (DOWN)
48	R	ROOF LATCH MOTOR (OPEN)
49	Y	ROOF LATCH MOTOR (CLOSE)
51	SB	TRUNK OPENER ACTUATOR [LHD models]
51	L	TRUNK OPENER ACTUATOR [RHD models]
52	V	TRUNK OPENER ACTUATOR GND
53	BG	REAR POWER WINDOW MOTOR LH (UP)
54	LG	REAR POWER WINDOW MOTOR LH (DOWN)
55	GR	REAR POWER WINDOW MOTOR RH (UP)
56	P	REAR POWER WINDOW MOTOR RH (DOWN)

Connector No.	B84
Connector Name	RETRACTABLE HARD TOP CONTROL UNIT
Connector Type	NS16FW-CS

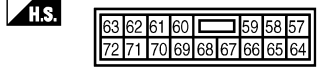

Terminal No.	Color of Wire	Signal Name [Specification]
57	Y	BAT
58	Y	BAT
59	Y	BAT
60	B	GND
61	B	GND
62	GR	BAT (POWER WINDOW) [LHD models]
62	SB	BAT (POWER WINDOW) [RHD models]
63	Y	BAT (POWER WINDOW)
64	B	GND (POWER WINDOW)
65	B	GND (POWER WINDOW)
66	P	SWITCHING VALVE 1
67	SB	SWITCHING VALVE 2 [LHD models]
67	BG	SWITCHING VALVE 2 [RHD models]
68	L	SWITCHING VALVE GND [LHD models]
68	SB	SWITCHING VALVE GND [RHD models]
69	G	REAR WINDOW DEF IN 2
70	P	REAR WINDOW DEF IN 1
71	BR	REAR WINDOW DEF OUT1
72	W	REAR WINDOW DEF OUT2

Connector No.	B85
Connector Name	TRUNK CLOSURE SUB-CONTROL UNIT
Connector Type	NS08FW-CS

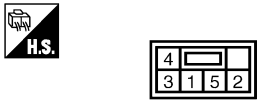

Terminal No.	Color of Wire	Signal Name [Specification]
1	Y	BAT
2	SB	TRUNK ROOM LAMP SWITCH
3	P	CLOSURE CONTROL SIGNAL
4	B	GND
5	R	TRUNK MODE SIGNAL

Connector No.	B86
Connector Name	TRUNK LINK SENSOR RH
Connector Type	TH04FW-NH

Terminal No.	Color of Wire	Signal Name [Specification]
1	SB	–
2	BG	–

Connector No.	B87
Connector Name	ROOF WARNING BUZZER
Connector Type	RK02FBR

Terminal No.	Color of Wire	Signal Name [Specification]
1	R	– [LHD models]
1	W	– [RHD models]
2	B	–

Connector No.	B88
Connector Name	REAR SEAT BELT BUCKLE SWITCH (LH)
Connector Type	TK02MW

Terminal No.	Color of Wire	Signal Name [Specification]
1	LG	–
2	B	–

JCMWM6683GB

BODY HARNESS

Connector No.	B89
Connector Name	WIRE TO WIRE
Connector Type	NS06MW-CS

H.S.

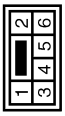

Terminal No.	Color of Wire	Signal Name [Specification]
3	B	–
4	P	–
5	B	–
6	Y	–

Connector No.	B90
Connector Name	REAR SEAT BELT BUCKLE SWITCH (RH)
Connector Type	TK02MW

H.S.

Terminal No.	Color of Wire	Signal Name [Specification]
1	SB	–
2	B	–

Connector No.	B91
Connector Name	WIRE TO WIRE
Connector Type	RK02MGY

H.S.

Terminal No.	Color of Wire	Signal Name [Specification]
1	–	–
2	–	–

Connector No.	B92
Connector Name	LICENSE PLATE LAMP LH
Connector Type	RV02FBR

H.S.

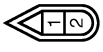

Terminal No.	Color of Wire	Signal Name [Specification]
1	–	–
2	–	–

Connector No.	B93
Connector Name	LICENSE PLATE LAMP RH
Connector Type	RV02FBR

H.S.

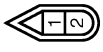

Terminal No.	Color of Wire	Signal Name [Specification]
1	–	–
2	–	–

Connector No.	B94
Connector Name	WIRE TO WIRE
Connector Type	M01MW-LC

H.S.

Terminal No.	Color of Wire	Signal Name [Specification]
1	Y	–

Connector No.	B95
Connector Name	WIRE TO WIRE
Connector Type	M01FW-LC

H.S.

Terminal No.	Color of Wire	Signal Name [Specification]
1	Y	–

JCMWM6684GB

CONNECTOR INFORMATION

BODY HARNESS

Connector No.	B201
Connector Name	WIRE TO WIRE
Connector Type	TH80FW-CS16-TM4

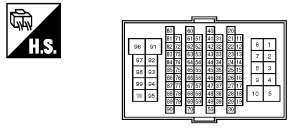

Terminal No.	Color of Wire	Signal Name [Specification]
1	W	–
2	G	–
3	B	– [For the Middle East and China]
3	Y	– [LHD models for Europe except for Russia]
3	LG	– [RHD models]
4	BR	–
6	R	– [For Russia and the Middle East, China]
6	LG	– [LHD models for Europe except for Russia]
6	L	– [RHD models]
7	B	– [LHD models with climate controlled seat]
7	G	– [LHD models without climate controlled seat]
7	P	– [RHD models]
8	BG	– [LHD models]
8	V	– [RHD models]
9	GR	– [LHD models]
9	R	– [RHD models]
12	BR	–
13	R	–
20	LG	–
21	BR	– [LHD models]
21	V	– [RHD models]
22	G	–
23	L	–
24	BG	– [LHD models]
24	SB	– [RHD models]
25	V	–
26	SB	–
27	GR	–
28	G	–
31	SHIELD	– [LHD models]
31	W	– [RHD models]
32	L	– [LHD models]
32	G	– [RHD models]
33	P	– [LHD models]
33	SHIELD	– [RHD models]
34	SB	– [LHD models]
34	R	– [RHD models]
35	V	–
36	Y	–
37	G	–
38	SHIELD	–
39	BG	–
40	GR	– [LHD models]
40	L	– [RHD models]
41	LG	– [LHD models]
41	P	– [RHD models]
42	BG	–
43	B	– [For the Middle East and China]
43	R	– [LHD models for Europe except for Russia]
43	BR	– [RHD models]
44	R	– [RHD models and for the Middle East, China]
44	SHIELD	– [LHD models for Europe except for Russia]
45	W	– [For the Middle East and China]
45	G	– [LHD models for Europe except for Russia]
45	V	– [RHD models]
46	SHIELD	– [LHD models]
46	SB	– [RHD models]
47	G	– [LHD models]
47	L	– [RHD models]
48	Y	– [LHD models]
48	P	– [RHD models]
49	SHIELD	– [LHD models]
49	GR	– [RHD models]
50	P	– [LHD models]
50	LG	– [RHD models]
51	SB	– [LHD models]
51	BR	– [RHD models with automatic drive positioner]
51	R	– [RHD models without automatic drive positioner]
52	LG	– [Except RHD models without automatic drive positioner]
52	SB	– [RHD models without automatic drive positioner]
53	L	– [LHD models]
53	G	– [RHD models]
54	G	– [LHD models]
54	R	– [RHD models]
55	GR	–
57	G	–
58	R	–
60	L	–
61	BG	– [LHD models]
61	P	– [RHD models]
62	GR	– [LHD models]
62	W	– [RHD models]
63	BR	– [LHD models]
63	GR	– [RHD models]
64	V	– [LHD models]
64	BR	– [RHD models]
65	SB	– [LHD models]
65	V	– [RHD models]
66	Y	–
67	L	–
68	P	–
71	GR	–
72	G	–
73	G	–
80	SB	– [LHD models]
80	LG	– [RHD models]
81	V	– [LHD models]
81	BG	– [RHD models]
82	BR	– [LHD models]
82	W	– [RHD models]
83	R	–
84	LG	–
85	BG	–
86	W	–
87	G	–
88	P	–
89	L	–
91	GR	– [LHD models]
91	G	– [RHD models]
92	Y	– [Except LHD models with BOSE system]
92	P	– [LHD models with BOSE system]
93	L	– [LHD models]
93	B	– [RHD models with climate controlled seat]
93	BR	– [RHD models without climate controlled seat]
94	SB	–
95	V	– [LHD models]
95	W	– [RHD models]
96	P	–
97	L	– [LHD models with BOSE system]
97	LG	– [LHD models without BOSE system]
97	BG	– [RHD models]
98	Y/B	–
99	Y	–
78	Y	– [LHD models]
78	G	– [RHD models]
79	G	– [LHD models]
79	Y	– [RHD models]
80	SHIELD	–
90	B	–
91	L	– [LHD models]
91	P	– [RHD models]
92	G	– [LHD models]
92	V	– [RHD models]
93	W	– [LHD models]
93	LG	– [RHD models]
94	SB	– [LHD models]
94	BG	– [RHD models]
95	GR	–
100	LG	– [LHD models]
100	BR	– [RHD models]

Connector No.	B209
Connector Name	WIRE TO WIRE
Connector Type	NS16FBR-CS

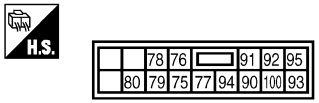

Terminal No.	Color of Wire	Signal Name [Specification]
75	W	–
76	B	–
77	SHIELD	–

Connector No.	B211
Connector Name	WIRE TO WIRE
Connector Type	NS12FW-CS

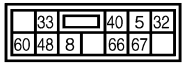

Terminal No.	Color of Wire	Signal Name [Specification]
5	LG	– [LHD models]
5	R	– [RHD models]
8	V	– [LHD models]
8	P	– [RHD models]
32	B	–
33	L	– [LHD models]
33	W	– [RHD models]
40	SB	– [LHD models]
40	BG	– [RHD models]
48	B	–
60	G	– [LHD models]
60	SB	– [RHD models]
66	GR	– [LHD models]
66	Y	– [RHD models]
67	BG	– [LHD models]
67	GR	– [RHD models]

JCMWM6685GB

BODY HARNESS

Connector No.	B212
Connector Name	SIDE AIR BAG MODULE RH
Connector Type	TK02FY-EX-1V

H.S.

Terminal No.	Color of Wire	Signal Name [Specification]
1	Y	–
2	Y	–

Connector No.	B213
Connector Name	SEAT BELT BUCKLE SWITCH (PASSENGER SIDE)
Connector Type	A03FW

H.S.

Terminal No.	Color of Wire	Signal Name [Specification]
1	LG	–
2	B	–
3	LG	– [LHD models]
3	R	– [RHD models]

Connector No.	B214
Connector Name	OCCUPANT CLASSIFICATION SYSTEM CONTROL UNIT
Connector Type	TH08FW-NH

H.S.

Terminal No.	Color of Wire	Signal Name [Specification]
2	V	– [LHD models]
2	P	– [RHD models]

2	V	COMMUNICATION
4	R	IGN
5	B	GND

Connector No.	B215
Connector Name	AIR BAG DIAGNOSIS SENSOR UNIT
Connector Type	NH22FY-1V-EX

H.S.

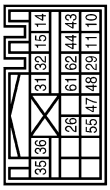

Terminal No.	Color of Wire	Signal Name [Specification]
10	Y	PRH1(+)
11	Y	PRH1(–)
14	Y	PRH2(+)
15	Y	PRH2(–)
26	V	ODS INPUT
29	LG	RH BUCKLE SW INPUT
31	Y	SRH(+)
32	Y	SRH(–)
35	Y/B	GRH(+)
36	Y	GRH(–)
47	G	SATELLITE RH(+)
48	R	SATELLITE RH(–)
55	SHIELD	GND
61	Y	ERH(+)
62	Y/B	ERH(–)

Connector No.	B216
Connector Name	PASSENGER SIDE DOOR SWITCH
Connector Type	A03FW

H.S.

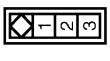

Terminal No.	Color of Wire	Signal Name [Specification]
2	V	– [LHD models]
2	P	– [RHD models]

Connector No.	B218
Connector Name	DOOR-MOUNTED CURTAIN AIR BAG MODULE RH
Connector Type	TK02FY-EX-1V

H.S.

Terminal No.	Color of Wire	Signal Name [Specification]
1	Y	–
2	Y/B	–

Connector No.	B219
Connector Name	SEAT BELT PRE-TENSIONER RH
Connector Type	ACB02FY

H.S.

Terminal No.	Color of Wire	Signal Name [Specification]
1	Y	–
2	Y	–

Connector No.	B220
Connector Name	SATELLITE SENSOR RH
Connector Type	HK02FY-1V-EX-LG

H.S.

Terminal No.	Color of Wire	Signal Name [Specification]
1	G	–
2	R	–

Connector No.	B221
Connector Name	WIRE TO WIRE
Connector Type	TH12FW-NH

H.S.

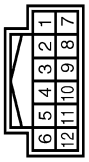

Terminal No.	Color of Wire	Signal Name [Specification]
2	SHIELD	–
3	P	–
4	LG	–
5	SB	–
6	BR	–
9	SHIELD	–
10	W	–
11	SHIELD	–
12	W	–

Connector No.	B223
Connector Name	PASSENGER SIDE DOOR SWITCH
Connector Type	A03FW

H.S.

Terminal No.	Color of Wire	Signal Name [Specification]
2	V	–
3	B	–

JCMWM6686GB

CONNECTOR INFORMATION

BODY HARNESS

Connector No.	B226
Connector Name	NAVI CONTROL UNIT
Connector Type	TH16FW-NH

H.S.

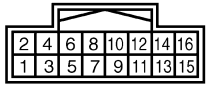

Terminal No.	Color of Wire	Signal Name [Specification]
1	SB	BATTERY
2	B	GND
3	V	ACC
8	L	PARKING BRAKE
9	BR	REVERSE
10	BG	VEHICLE SPEED (8-PULSE)
13	V	AV COMM (H)
14	SB	AV COMM (L)
15	G	AV COMM (H)
16	R	AV COMM (L)

Connector No.	B227
Connector Name	NAVI CONTROL UNIT
Connector Type	TH32FW-NH

H.S.

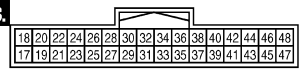

Terminal No.	Color of Wire	Signal Name [Specification]
19	BR	RGB (R: RED) SIGNAL
20	SB	RGB (G: GREEN) SIGNAL
21	LG	RGB (B: BLUE) SIGNAL
22	P	RGB GND
23	W	RGB SYNC
24	GR	RGB SYNC GND
28	L	VOICE GUIDANCE (+)
29	SHIELD	SHIELD
30	P	VOICE GUIDANCE (−)
33	Y	TEL VOICE SIGNAL (+)
34	SHIELD	SHIELD
35	G	TEL VOICE SIGNAL (−)
39	W	MICROPHONE VCC
40	SHIELD	SHIELD
41	B	MICROPHONE SIGNAL
42	R	MICROPHONE GND

Connector No.	B230
Connector Name	BRAKE BOOSTER CONTROL UNIT
Connector Type	TK24FW

H.S.

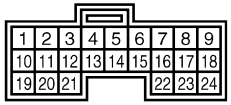

Terminal No.	Color of Wire	Signal Name [Specification]
1	W	BATTERY
2	W	BATTERY
5	L	ITS COMM-L
6	SB	RELEASE SW PWR
8	R	BRAKE PRESSURE SEN PWR
10	Y	BOOSTER SOL PWR
12	BR	BOOSTER SOL GND
14	P	ITS COMM-H
15	V	RELEASE SW (NC)
17	LG	BRAKE PRESSURE SEN SIGNAL
19	B	GND
20	B	GND
21	G	CHIME SIGNAL [LHD models]
21	LG	CHIME SIGNAL [RHD models]
22	BR	RELEASE SW (NO) [LHD models]
22	W	RELEASE SW (NO) [RHD models]
24	BG	BRAKE PRESSURE SEN GND

Connector No.	B231
Connector Name	BRAKE BOOSTER CONTROL UNIT
Connector Type	TK24FGY

H.S.

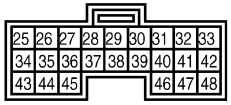

Terminal No.	Color of Wire	Signal Name [Specification]
33	G	IGNITION
42	G	IGNITION
46	B	GND
47	GR	BRAKE HOLD RLY DRIVE SIGNAL

Connector No.	B233
Connector Name	SEAT BELT BUCKLE SWITCH (PASSENGER SIDE)
Connector Type	A03FW

H.S.

Terminal No.	Color of Wire	Signal Name [Specification]
1	LG	−
2	B	−

Connector No.	B237
Connector Name	TEL ADAPTER UNIT
Connector Type	TH32FW-NH

H.S.

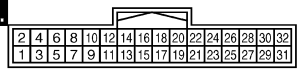

Terminal No.	Color of Wire	Signal Name [Specification]
1	GR	BATTERY
2	LG	ACC
3	BG	IGNITION [LHD models]
3	W	IGNITION [RHD models]
4	B	GND
5	SHIELD	SHIELD
7	R	MICROPHONE SIGNAL [LHD models]
7	G	MICROPHONE SIGNAL [RHD models]
8	SHIELD	MICROPHONE GND
9	Y	TEL VOICE SIGNAL (+)
10	G	TEL VOICE SIGNAL (−)
14	B	GND
16	P	ROOF STATUS SIGNAL
21	B	CONTROL SIGNAL
23	B	CONTROL SIGNAL
27	B	CONTROL SIGNAL
28	P	VEHICLE SPEED (8-PULSE) [LHD models]
28	BG	VEHICLE SPEED (8-PULSE) [RHD models]
29	G	MICROPHONE VCC [LHD models]
29	R	MICROPHONE VCC [RHD models]

Connector No.	B238
Connector Name	TEL ADAPTER UNIT
Connector Type	TH08FW-NH

H.S.

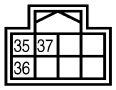

Terminal No.	Color of Wire	Signal Name [Specification]
35	L	AV COMM (H)
36	P	AV COMM (L)

Connector No.	B239
Connector Name	REAR SPEAKER RH
Connector Type	NS02FW-CS

H.S.

Terminal No.	Color of Wire	Signal Name [Specification]
1	LG	− [LHD models]
1	L	− [RHD models]
2	Y	− [LHD models]
2	P	− [RHD models]

JCMWM6687GB

BODY HARNESS

Connector No.	B241
Connector Name	CAMERA CONTROL UNIT
Connector Type	TH32FW-NH

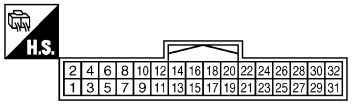

Terminal No.	Color of Wire	Signal Name [Specification]
5	SHIELD	SHIELD
6	B	CAMERA IMAGE SIGNAL
7	W	GND
8	R	CAMERA ON SIGNAL
11	SHIELD	SHIELD
12	W	CAMERA IMAGE SIGNAL
14	GR	CAMERA CONNECTION RECOGNITION SIGNAL
17	P	AV COMM (L)
18	L	AV COMM (H)
19	R	AV COMM (L)
20	G	AV COMM (H)
22	GR	REVERSE
23	L	SENSOR SIGNAL 1
24	BR	SENSOR SIGNAL 2
25	BG	SENSOR SIGNAL 3
26	V	VEHICLE SPEED (8-PULSE)
30	SB	ACC
31	B	GND
32	Y	BATTERY

Connector No.	B245
Connector Name	WIRE TO WIRE
Connector Type	NS02MW-CS

Terminal No.	Color of Wire	Signal Name [Specification]
1	GR	– [LHD models]
1	V	– [RHD models]
2	P	– [LHD models]
2	R	– [RHD models]

Connector No.	B246
Connector Name	WIRE TO WIRE
Connector Type	TH16FW-NH

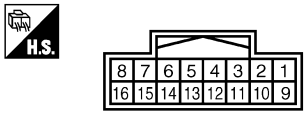

Terminal No.	Color of Wire	Signal Name [Specification]
1	P	–
3	GR	– [LHD models]
3	SHIELD	– [RHD models]
4	P	– [LHD models]
4	Y	– [RHD models]
5	L	– [LHD models]
5	G	– [RHD models]
6	SHIELD	–
7	B	–
8	W	–
9	P	–
10	SHIELD	–
11	B	–
12	W	–
13	R	–
14	SHIELD	–
15	G	–
16	Y	–

Connector No.	B247
Connector Name	REAR WOOFER RH
Connector Type	NS02FW-CS

Terminal No.	Color of Wire	Signal Name [Specification]
1	L	–
2	P	–

Connector No.	B248
Connector Name	SEAT BELT PRE-TENSIONER LH
Connector Type	ACB02FY

Terminal No.	Color of Wire	Signal Name [Specification]
1	Y	–
2	Y	–

Connector No.	B249
Connector Name	WIRE TO WIRE
Connector Type	TH04FW-NH

Terminal No.	Color of Wire	Signal Name [Specification]
1	R	–
2	W	–
3	B	–
4	SHIELD	–

Connector No.	B251
Connector Name	REAR INTRUDER SENSOR RH
Connector Type	A04FW

Terminal No.	Color of Wire	Signal Name [Specification]
1	R	–
2	B	–
3	BR	–

Connector No.	B255
Connector Name	WIRE TO WIRE
Connector Type	RK06MGY

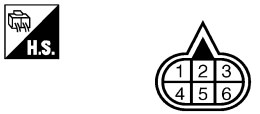

Terminal No.	Color of Wire	Signal Name [Specification]
1	R	–
2	W	–
3	B	–
5	Y	–
6	G	–

CONNECTOR INFORMATION

BODY HARNESS

Connector No.	B256
Connector Name	CORNER SENSOR REAR RH
Connector Type	YDX02FB

Terminal No.	Color of Wire	Signal Name [Specification]
1	B	–
2	Y	–

Connector No.	B257
Connector Name	CENTER SENSOR REAR RH
Connector Type	YDX02FB

Terminal No.	Color of Wire	Signal Name [Specification]
1	R	–
2	Y	–

Connector No.	B258
Connector Name	CENTER SENSOR REARA LH
Connector Type	YDX02FB

Terminal No.	Color of Wire	Signal Name [Specification]
1	G	–
2	Y	–

Connector No.	B259
Connector Name	CORNER SENSOR REAR LH
Connector Type	YDX02FB

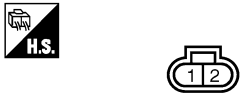

Terminal No.	Color of Wire	Signal Name [Specification]
1	W	–
2	Y	–

Connector No.	B301
Connector Name	WIRE TO WIRE
Connector Type	NS16FW-CS

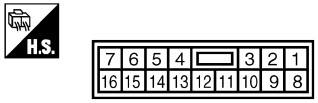

Terminal No.	Color of Wire	Signal Name [Specification]
1	R	– [LHD models]
1	B	– [RHD models]
2	GR	–
3	G	–
4	W	–
5	Y	–
6	P	–
7	P	–
10	LG	– [LHD models]
10	W	– [RHD models]
11	B	–
12	B	–
13	V	–
14	BR	– [LHD models]
14	Y	– [RHD models]
15	L	–
16	Y	–

Connector No.	B303
Connector Name	TRUNK LINK SENSOR LH
Connector Type	TH04FW-NH

Terminal No.	Color of Wire	Signal Name [Specification]
1	GR	–
2	R	– [LHD models]
2	B	– [RHD models]

Connector No.	B304
Connector Name	HIGH-MOUNTED STOP LAMP (ON THE REAR PARCEL SHELF)
Connector Type	TK02MBR-P

Terminal No.	Color of Wire	Signal Name [Specification]
1	LG	– [LHD models]
1	W	– [RHD models]
2	B	–

Connector No.	B305
Connector Name	TRUNK LID OPENER ACTUATOR
Connector Type	M02FB-LC

Terminal No.	Color of Wire	Signal Name [Specification]
1	V	V–
2	BR	V+ [LHD models]
2	Y	V+ [RHD models]

Connector No.	B306
Connector Name	TRUNK ROOM LAMP SWITCH
Connector Type	A02FW

Terminal No.	Color of Wire	Signal Name [Specification]
1	V	SIG– [LHD models]
1	L	SIG– [RHD models]
2	L	SIG+

Connector No.	B307
Connector Name	FLIPPER DOOR (LH)
Connector Type	NS06FBR-CS

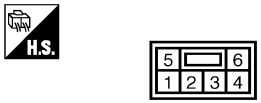

Terminal No.	Color of Wire	Signal Name [Specification]
1	V	SWITCH FD UP
2	W	SWITCH FD UP 1
3	Y	SWITCH FD DOWN
4	G	SWITCH FD DOWN 1
5	BR	MOTOR FD UP
6	L	MOTOR FD DOWN

JCMWM6689GB

BODY HARNESS

Connector No.	B308
Connector Name	FLIPPER DOOR (RH)
Connector Type	NS06FW-CS

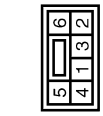

Terminal No.	Color of Wire	Signal Name [Specification]
1	V	SWITCH FD UP 1
2	Y	SWITCH FD DOWN 1
3	B	SWITCH FD GND COMBINED
5	BR	MOTOR FD UP
6	L	MOTOR FD DOWN

Connector No.	B309
Connector Name	WIRE TO WIRE
Connector Type	TH08FW-NH

Terminal No.	Color of Wire	Signal Name [Specification]
1	R	–
2	W	–
3	Y	–
4	SHIELD	–

Connector No.	B311
Connector Name	REAR VIEW CAMERA
Connector Type	TH04MW-NH

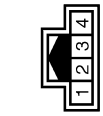

Terminal No.	Color of Wire	Signal Name [Specification]
1	R	CAMERA POWER SUPPLY
2	W	CAMERA GND
3	Y	CAMERA IMAGE SIGNAL
4	SHIELD	SHIELD

Connector No.	B351
Connector Name	WIRE TO WIRE
Connector Type	TH04FW-NH

Terminal No.	Color of Wire	Signal Name [Specification]
3	B	–
4	G	–

Connector No.	B352
Connector Name	TONNEAU BOARD SWITCH
Connector Type	A03FW

Terminal No.	Color of Wire	Signal Name [Specification]
1	G	–
3	B	–

Connector No.	B361
Connector Name	WIRE TO WIRE
Connector Type	NS08FW-CS

Terminal No.	Color of Wire	Signal Name [Specification]
3	B	–
4	P	–
5	B	–
6	Y	–

Connector No.	B362
Connector Name	STRIKER SWITCH
Connector Type	RV02FGY

Terminal No.	Color of Wire	Signal Name [Specification]
1	B	SIG–
2	GR	SIG+

Connector No.	B363
Connector Name	TRUNK CLOSURE CONTROL UNIT
Connector Type	NS04FW-CS

Terminal No.	Color of Wire	Signal Name [Specification]
1	P	TRUNK ROOM LAMP SW SIG
2	Y	POWER
3	GR	STRIKER SW SIG
4	B	GND

Connector No.	B364
Connector Name	TRUNK CLOSURE CONTROL UNIT
Connector Type	NS02FW-CS

Terminal No.	Color of Wire	Signal Name [Specification]
5	B	CLOSURE MOTOR GND
6	BR	CLOSURE MOTOR POWER

JCMWM6690GB

CONNECTOR INFORMATION

BODY HARNESS

Connector No.	B471
Connector Name	TEL ADAPTER UNIT
Connector Type	GT16C-1S-HU

Terminal No.	Color of Wire	Signal Name [Specification]
33	–	TEL ANTENNA
34	SHIELD	SHIELD

Connector No.	B472
Connector Name	NAVI CONTROL UNIT
Connector Type	GT5-1S-HU

Terminal No.	Color of Wire	Signal Name [Specification]
49	–	GPS ANTENNA
50	SHIELD	SHIELD

Connector No.	B473
Connector Name	NAVI CONTROL UNIT
Connector Type	GT16C-1S-HU

Terminal No.	Color of Wire	Signal Name [Specification]
51	–	TEL ANTENNA
52	SHIELD	SHIELD

Connector No.	B474
Connector Name	TEL ANTENNA
Connector Type	GT16C-1PP-HU

Terminal No.	Color of Wire	Signal Name [Specification]
1	–	–
2	SHIELD	–

Connector No.	B475
Connector Name	WIRE TO WIRE
Connector Type	GT13SS-1/1S-HU

Terminal No.	Color of Wire	Signal Name [Specification]
1	–	–
2	–	–

Connector No.	B477
Connector Name	ANTENNA BASE
Connector Type	GT13SSN-1/1PP-HU

Terminal No.	Color of Wire	Signal Name [Specification]
1	–	ANTENNA AMP. ON SIGNAL
2	–	AM-FM MAIN

Connector No.	B478
Connector Name	WIRE TO WIRE
Connector Type	GT13SS-1/1S-HU

Terminal No.	Color of Wire	Signal Name [Specification]
1	–	–
2	–	–

Connector No.	B479
Connector Name	WIRE TO WIRE
Connector Type	GT16C-1S-HU

Terminal No.	Color of Wire	Signal Name [Specification]
1	–	–
2	–	–

Connector No.	B480
Connector Name	WIRE TO WIRE
Connector Type	GT13SSN-1/1PP-HU

Terminal No.	Color of Wire	Signal Name [Specification]
1	–	–
2	–	–

Connector No.	B485
Connector Name	WIRE TO WIRE
Connector Type	GT13SS-1/1S-HU

Terminal No.	Color of Wire	Signal Name [Specification]
1	–	–
2	–	–

Connector No.	B486
Connector Name	ANTENNA AMP.
Connector Type	GT13SC-2/1S-HU

Terminal No.	Color of Wire	Signal Name [Specification]
1	–	ANTENNA AMP. ON SIGNAL
2	–	FM SUB
3	–	AM-FM MAIN

Connector No.	B487
Connector Name	ANTENNA AMP.
Connector Type	GT13SS-1/1S-HU

Terminal No.	Color of Wire	Signal Name [Specification]
5	–	RMA

JCMWM6691GB

CONNECTOR INFORMATION

BODY HARNESS

Connector No.	B488
Connector Name	NAVI CONTROL UNIT
Connector Type	GT13-1S-HU

Terminal No.	Color of Wire	Signal Name [Specification]
53	–	FM MAIN
54	–	SHIELD

Connector No.	B501
Connector Name	WIRE TO WIRE
Connector Type	NS12MW-CS

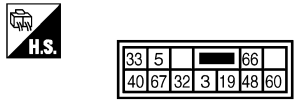

Terminal No.	Color of Wire	Signal Name [Specification]
3	R/Y	–
5	L	–
19	V	–
32	B/W	–
33	R	–
40	R/W	–
48	B	–
60	Y	–
66	B/Y	– [LHD models]
66	B	– [RHD models]
67	W	–

Connector No.	B502
Connector Name	WIRE TO WIRE
Connector Type	NS16MW-CS

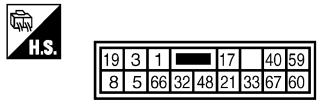

Terminal No.	Color of Wire	Signal Name [Specification]
1	L/W	–
3	R/Y	–
5	L	–
17	Y/R	–
19	V	–
21	L/Y	–
32	B/W	–
33	R	–
40	R/W	–
48	B	–

Connector No.	B503
Connector Name	DRIVER SEAT CONTROL UNIT
Connector Type	TH32FW

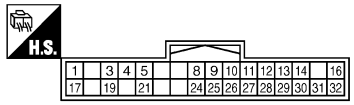

Terminal No.	Color of Wire	Signal Name [Specification]
1	L/W	RX
3	R/Y	CAN-H
4	O/B	SLIDING LIMIT SW
5	L	BUCKLE SW
8	L/Y	P RANGE SW
9	W/G	PULSE (RECLINING)
10	P/B	PULSE (RR LIFTING)
11	BR	SLIDING SW (BACKWARD)
12	SB	RECLINING SW (BACKWARD)
13	LG/R	FRONT LIFTING SW (DOWNWARD)
14	G/B	REAR LIFTING SW (DOWNWARD)
16	O	VCC
17	Y/R	TX
19	V	CAN-L
21	L/Y	P RANGE SW
24	R	PULSE (SLIDING)
25	Y/B	PULSE (FR LIFTING)
26	Y	SLIDING SW (FORWARD)
27	R/G	RECLINING SW (FORWARD)
28	W/B	FRONT LIFTING SW (UPWARD)
29	P/L	REAR LIFTING SW (UPWARD)
30	P	POWER WALK-IN SW
31	GR	SENSOR GND
32	B/W	GND (SIGNAL)

Connector No.	B504
Connector Name	DRIVER SEAT CONTROL UNIT
Connector Type	NS16FW-CS

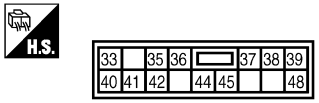

Terminal No.	Color of Wire	Signal Name [Specification]
33	R	BAT (C/B)
35	W/R	SLIDING MOTOR (FORWARD)
36	G/Y	RECLINING MOTOR (FORWARD)
37	G/W	FRONT LIFTING MOTOR (DOWNWARD)
38	L/Y	REAR LIFTING MOTOR (UPWARD)
39	R/B	REAR LIFTING MOTOR (BACKWARD)
40	R/W	BAT (FUSE)
41	Y/G	FORWARD SW
42	W	SLIDING MOTOR (BACKWARD)
44	P	RECLINING MOTOR (BACKWARD)
45	L/R	FRONT LIFTING MOTOR (UPWARD)
48	B	GND (POWER)

Connector No.	B505
Connector Name	LUMBAR SUPPORT SWITCH
Connector Type	NS04FW-CS

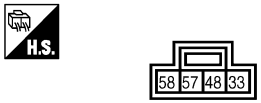

Terminal No.	Color of Wire	Signal Name [Specification]
33	R	–
48	B	–
57	W	–
58	L	–

Connector No.	B506
Connector Name	LUMBAR SUPPORT MOTOR
Connector Type	C02FW

Terminal No.	Color of Wire	Signal Name [Specification]
57	W	–
58	L	–

CONNECTOR INFORMATION

BODY HARNESS

Connector No.	B510
Connector Name	POWER SEAT SWITCH (DRIVER SIDE)
Connector Type	NS10FW-CS

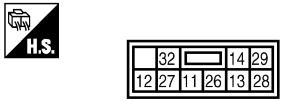

Terminal No.	Color of Wire	Signal Name [Specification]
11	BR	–
12	SB	–
13	LG/R	–
14	G/B	–
26	Y	–
27	R/G	–
28	W/B	–
29	P/L	–
32	B/W	–

Connector No.	B511
Connector Name	POWER SEAT SWITCH (DRIVER SIDE)
Connector Type	NS10FW-CS

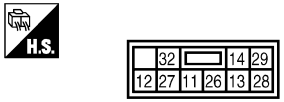

Terminal No.	Color of Wire	Signal Name [Specification]
11	BR	–
12	SB	–
13	LG/R	–
14	G/B	–
26	Y	–
27	R/G	–
28	W/B	–
29	P/L	–
32	B/W	–

Connector No.	B512
Connector Name	FORWARD SWITCH (DRIVER SIDE)
Connector Type	S02FW

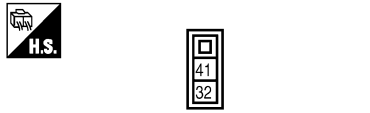

Terminal No.	Color of Wire	Signal Name [Specification]
32	B/W	–
41	Y/G	–

Connector No.	B513
Connector Name	POWER WALK-IN SWITCH (DRIVER SIDE)
Connector Type	TK02FBR

Terminal No.	Color of Wire	Signal Name [Specification]
30	P	–
32	B/W	–

Connector No.	B514
Connector Name	SLIDING LIMIT SWITCH (DRIVER SIDE)
Connector Type	TK02MBR-P

Terminal No.	Color of Wire	Signal Name [Specification]
4	O/B	–
32	B/W	–

Connector No.	B516
Connector Name	LUMBAR SUPPORT MOTOR
Connector Type	C02FW

Terminal No.	Color of Wire	Signal Name [Specification]
57	W	–
58	L	–

Connector No.	B517
Connector Name	SEAT CUSHION HEATER (DRIVER SIDE)
Connector Type	S04FW

Terminal No.	Color of Wire	Signal Name [Specification]
48	B	–
66	B/Y	– [LHD models]
66	B	– [RHD models]
68	R/W	–
69	R	–

Connector No.	B518
Connector Name	HEATED SEAT CONTROL UNIT (DRIVER SIDE)
Connector Type	174923-1

Terminal No.	Color of Wire	Signal Name [Specification]
48	B	GROUND
60	Y	IGN POWER SUPPLY
66	B/Y	HEATED SEAT OPERATION SIGNAL [LHD models]
66	B	HEATED SEAT OPERATION SIGNAL [RHD models]
67	W	HEATED SEAT SWITCH SIGNAL
68	R/W	HEATER UNIT POWER SUPPLY
69	R	HEAT SENSOR SIGNAL

Connector No.	B519
Connector Name	SLIDING MOTOR (DRIVER SIDE)
Connector Type	6098-0239

Terminal No.	Color of Wire	Signal Name [Specification]
35	W/R	–
42	W	–

Connector No.	B521
Connector Name	POWER SEAT SWITCH (DRIVER SIDE)
Connector Type	NS10FW-CS

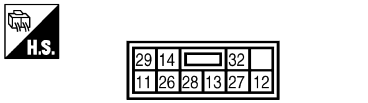

Terminal No.	Color of Wire	Signal Name [Specification]
11	BR	–
12	SB	–
13	LG/R	–
14	G/B	–
26	Y	–
27	R/G	–
28	W/B	–
29	P/L	–
32	B/W	–

JCMWM6693GB

BODY HARNESS

Connector No.	B523
Connector Name	RECLINING MOTOR (DRIVER SIDE)
Connector Type	NS06FW-CS

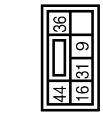

Terminal No.	Color of Wire	Signal Name [Specification]
9	W/G	–
16	O	–
31	GR	–
36	G/Y	–
44	P	–

Connector No.	B524
Connector Name	RECLINING MOTOR (DRIVER SIDE)
Connector Type	NS02FW-CS

Terminal No.	Color of Wire	Signal Name [Specification]
36	G/Y	–
44	P	–

Connector No.	B525
Connector Name	SLIDING MOTOR (DRIVER SIDE)
Connector Type	6098-0239

Terminal No.	Color of Wire	Signal Name [Specification]
35	W/R	–
42	W	–

Connector No.	B526
Connector Name	SLIDING SENSOR (DRIVER SIDE)
Connector Type	6098-0241

Terminal No.	Color of Wire	Signal Name [Specification]
16	O	–
24	R	–
31	GR	–

Connector No.	B527
Connector Name	LIFTING MOTOR (FRONT) (DRIVER SIDE)
Connector Type	NS06FW-CS

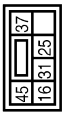

Terminal No.	Color of Wire	Signal Name [Specification]
16	O	–
25	Y/B	–
31	GR	–
37	G/W	–
45	L/R	–

Connector No.	B528
Connector Name	LIFTING MOTOR (FRONT) (DRIVER SIDE)
Connector Type	NS02FW-CS

Terminal No.	Color of Wire	Signal Name [Specification]
37	G/W	–
45	L/R	–

Connector No.	B529
Connector Name	LIFTING MOTOR (REAR) (DRIVER SIDE)
Connector Type	NS06FBR-CS

Terminal No.	Color of Wire	Signal Name [Specification]
10	P/B	–
16	O	–
31	GR	–
38	L/Y	–
39	R/B	–

Connector No.	B530
Connector Name	LIFTING MOTOR (REAR) (DRIVER SIDE)
Connector Type	NS02FW-CS

Terminal No.	Color of Wire	Signal Name [Specification]
38	L/Y	–
39	R/B	–

Connector No.	B541
Connector Name	WIRE TO WIRE
Connector Type	M02FW-LC

Terminal No.	Color of Wire	Signal Name [Specification]
1	–	–
2	–	–

Connector No.	B542
Connector Name	WIRE TO WIRE
Connector Type	M02MW-LC

Terminal No.	Color of Wire	Signal Name [Specification]
1	–	–
2	–	–

JCMWM6694GB

CONNECTOR INFORMATION

BODY HARNESS

Connector No.	B551
Connector Name	WIRE TO WIRE
Connector Type	NS12MW-CS

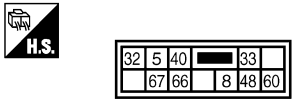

Terminal No.	Color of Wire	Signal Name [Specification]
5	L	–
8	LG	–
32	B/W	–
33	R	–
40	R/W	–
48	B	–
60	Y	–
66	B	–
67	W	–

Connector No.	B552
Connector Name	PASSENGER SEAT CONTROL UNIT
Connector Type	TH32FW

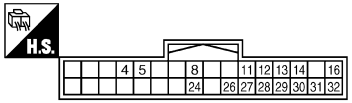

Terminal No.	Color of Wire	Signal Name [Specification]
4	O/B	SLIDING LIMIT SW
5	L	BUCKLE SW
8	LG	DOOR SW
11	BR	SLIDING SW (BACKWARD)
12	SB	RECLINING SW (BACKWARD)
13	LG/R	FRONT LIFTING SW (DOWNWARD)
14	G/B	REAR LIFTING SW (DOWNWARD)
16	O	POWER SUPPLY FOR SENSOR
24	R	SLIDE PULSE
26	Y	SLIDING SW (FORWARD)
27	R/G	RECLINING SW (FORWARD)
28	W/B	FRONT LIFTING SW (UPWARD)
29	P/L	REAR LIFTING SW (UPWARD)
30	P	POWER WALK-IN SW
31	GR	GND FOR SENSOR
32	B/W	GND (SENSOR)

Connector No.	B553
Connector Name	PASSENGER SEAT CONTROL UNIT
Connector Type	NS16FW-CS

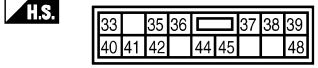

Terminal No.	Color of Wire	Signal Name [Specification]
33	R	BAT (C/B)
35	W/R	SLIDING MOTOR (FORWARD)
36	W/L	RECLINING MOTOR (FORWARD) [With climate controlled seat]
36	G/Y	RECLINING MOTOR (FORWARD) [Without climate controlled seat]
37	LG/R	FRONT LIFTING MOTOR (DOWNWARD) [With climate controlled seat]
37	G/W	FRONT LIFTING MOTOR (DOWNWARD) [Without climate controlled seat]
38	P/L	REAR LIFTING MOTOR (UPWARD) [With climate controlled seat]
38	L/Y	REAR LIFTING MOTOR (UPWARD) [Without climate controlled seat]
39	G/B	REAR LIFTING MOTOR (DOWNWARD) [With climate controlled seat]
39	R/B	REAR LIFTING MOTOR (DOWNWARD) [Without climate controlled seat]
40	R/W	BAT (FUSE)
41	Y/G	FORWARD SW
42	W	SLIDING MOTOR (BACKWARD)
44	L	RECLINING MOTOR (BACKWARD) [With climate controlled seat]
44	P	RECLINING MOTOR (BACKWARD) [Without climate controlled seat]
45	W/B	FRONT LIFTING MOTOR (UPWARD) [With climate controlled seat]
45	L/R	FRONT LIFTING MOTOR (UPWARD) [Without climate controlled seat]
48	B	GND (POWER)

Connector No.	B554
Connector Name	POWER SEAT SWITCH (PASSENGER SIDE)
Connector Type	NS10FW-CS

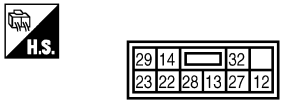

Terminal No.	Color of Wire	Signal Name [Specification]
12	SB	–
13	LG/R	–
14	G/B	–
22	W/G	–
23	O/L	–
27	R/G	–
28	W/B	–
29	P/L	–
32	B/W	–

Connector No.	B556
Connector Name	FORWARD SWITCH (PASSENGER SIDE)
Connector Type	S02FW

Terminal No.	Color of Wire	Signal Name [Specification]
32	B/W	–
41	Y/G	–

Connector No.	B557
Connector Name	POWER WALK-IN SWITCH (PASSENGER SIDE)
Connector Type	TK02FBR

Terminal No.	Color of Wire	Signal Name [Specification]
30	P	–
32	B/W	–

Connector No.	B558
Connector Name	SLIDING LIMIT SWITCH (PASSENGER SIDE)
Connector Type	TK02MBR-P

Terminal No.	Color of Wire	Signal Name [Specification]
4	O/B	–
32	B/W	–

Connector No.	B561
Connector Name	SLIDING SWITCH (SEATBACK) (PASSENGER SIDE)
Connector Type	A06FW

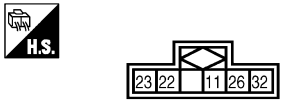

Terminal No.	Color of Wire	Signal Name [Specification]
11	BR	–
22	W/G	–
23	O/L	–
26	Y	–
32	B/W	–

JCMWM6695GB

CONNECTOR INFORMATION

BODY HARNESS

Connector No.	B566
Connector Name	RECLINING MOTOR (PASSENGER SIDE)
Connector Type	NS02FW-CS

Terminal No.	Color of Wire	Signal Name [Specification]
36	W/L	– [With climate controlled seat]
36	G/Y	– [Without climate controlled seat]
44	L	– [With climate controlled seat]
44	P	– [Without climate controlled seat]

Connector No.	B567
Connector Name	SLIDING MOTOR (PASSENGER SIDE)
Connector Type	6098-0239

Terminal No.	Color of Wire	Signal Name [Specification]
35	W/R	–
42	W	–

Connector No.	B568
Connector Name	SLIDING SENSOR (PASSENGER SIDE)
Connector Type	6098-0241

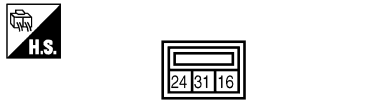

Terminal No.	Color of Wire	Signal Name [Specification]
16	O	–
24	R	–
31	GR	–

Connector No.	B569
Connector Name	LIFTING MOTOR (FRONT) (PASSENGER SIDE)
Connector Type	NS02FW-CS

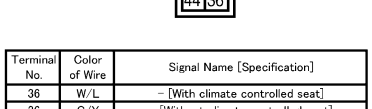

Terminal No.	Color of Wire	Signal Name [Specification]
37	LG/R	– [With climate controlled seat]
37	G/W	– [Without climate controlled seat]
45	W/B	– [With climate controlled seat]
45	L/R	– [Without climate controlled seat]

Connector No.	B570
Connector Name	LIFTING MOTOR (REAR) (PASSENGER SIDE)
Connector Type	NS02FW-CS

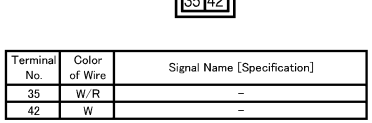

Terminal No.	Color of Wire	Signal Name [Specification]
38	P/L	– [With climate controlled seat]
38	L/Y	– [Without climate controlled seat]
39	G/B	– [With climate controlled seat]
39	R/B	– [Without climate controlled seat]

Connector No.	B572
Connector Name	POWER SEAT SWITCH (PASSENGER SIDE)
Connector Type	NS10FW-CS

Terminal No.	Color of Wire	Signal Name [Specification]
12	SB	–
13	LG/R	–
14	G/B	–
22	W/G	–
23	O/L	–
27	R/G	–
28	W/B	–
29	P/L	–
32	B/W	–

Connector No.	B573
Connector Name	SLIDING MOTOR (PASSENGER SIDE)
Connector Type	6098-0239

Terminal No.	Color of Wire	Signal Name [Specification]
35	W/R	–
42	W	–

Connector No.	B574
Connector Name	SEAT CUSHION HEATER (PASSENGER SIDE)
Connector Type	S04FW

Terminal No.	Color of Wire	Signal Name [Specification]
48	B	–
66	B	–
68	R/W	–
69	R	–

Connector No.	B575
Connector Name	HEATED SEAT CONTROL UNIT (PASSENGER SIDE)
Connector Type	174923-1

Terminal No.	Color of Wire	Signal Name [Specification]
48	B	GROUND
60	Y	IGN POWER SUPPLY
66	B	HEATED SEAT OPERATION SIGNAL
67	W	HEATED SEAT SWITCH SIGNAL
68	R/W	HEATER UNIT POWER SUPPLY
69	R	HEAT SENSOR SIGNAL

CONNECTOR INFORMATION

BODY HARNESS

Connector No.	B581
Connector Name	WIRE TO WIRE
Connector Type	M02FW-LC

Terminal No.	Color of Wire	Signal Name [Specification]
1	–	–
2	–	–

Connector No.	B582
Connector Name	WIRE TO WIRE
Connector Type	M02MW-LC

Terminal No.	Color of Wire	Signal Name [Specification]
1	–	–
2	–	–

Connector No.	B601
Connector Name	WIRE TO WIRE
Connector Type	NS16MBR-CS

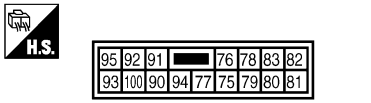

Terminal No.	Color of Wire	Signal Name [Specification]
75	P	–
76	L	–
77	B/Y	–
78	R	–
79	G	–
80	B/W	–
81	B	–
82	W	–
83	B/R	–
90	L	–
91	W/B	– [For Russia and the Middle East, China]
91	Y	– [For Europe except for Russia]
92	W	–
93	Y	– [For Russia and the Middle East, China]
93	W/B	– [For Europe except for Russia]
94	W/R	–
95	R/L	–
100	GR	–

Connector No.	B602
Connector Name	SEATBACK THERMAL ELECTRIC DEVICE (DRIVER SIDE)
Connector Type	6098-2163

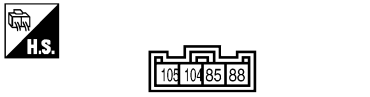

Terminal No.	Color of Wire	Signal Name [Specification]
85	G	–
88	G/R	–
104	V/W	–
105	LG	–

Connector No.	B603
Connector Name	SEAT CUSHION THERMAL ELECTRIC DEVICE (DRIVER SIDE)
Connector Type	6098-2163

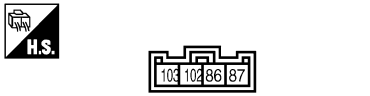

Terminal No.	Color of Wire	Signal Name [Specification]
86	G/W	–
87	G/B	–
102	V	–
103	BR	–

Connector No.	B604
Connector Name	CLIMATE CONTROLLED SEATBACK BLOWER MOTOR (DRIVER SIDE)
Connector Type	7283-5830-90

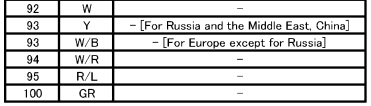

Terminal No.	Color of Wire	Signal Name [Specification]
96	R/W	–
98	L	–
99	L/W	–

Connector No.	B605
Connector Name	CLIMATE CONTROLLED SEAT CUSHION BLOWER MOTOR (DRIVER SIDE)
Connector Type	7283-5830-90

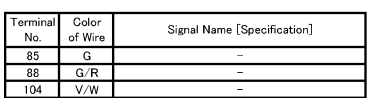

Terminal No.	Color of Wire	Signal Name [Specification]
97	R	–
98	L	–
101	GR/R	–

Connector No.	B606
Connector Name	CLIMATE CONTROLLED SEAT CONTROL UNIT (DRIVER SIDE)
Connector Type	Delphi: 15332141

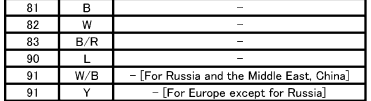

Terminal No.	Color of Wire	Signal Name [Specification]
85	G	–
86	G/W	–
87	G/B	–
88	G/R	–
89	R	–
90	L	–

Connector No.	B607
Connector Name	CLIMATE CONTROLLED SEAT CONTROL UNIT (DRIVER SIDE)
Connector Type	Delphi: 15406141

Terminal No.	Color of Wire	Signal Name [Specification]
91	Y	–
92	W	–
93	W/B	–
94	W/R	–

JCMWM6697GB

CONNECTOR INFORMATION

BODY HARNESS

Connector No.	B608
Connector Name	CLIMATE CONTROLLED SEAT CONTROL UNIT (DRIVER SIDE)
Connector Type	Delphi: 15394150

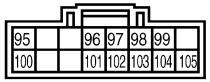

Terminal No.	Color of Wire	Signal Name [Specification]
95	R/L	–
96	R/W	–
97	R	–
98	L	–
99	L/W	–
100	GR	–
101	GR/R	–
102	V	–
103	BR	–
104	V/W	–
105	LG	–

Connector No.	B609
Connector Name	WIRE TO WIRE
Connector Type	NS16MW-CS

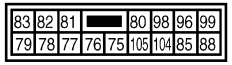

Terminal No.	Color of Wire	Signal Name [Specification]
75	P	–
76	L	–
77	B/Y	–
78	R	–
79	G	–
80	B/W	–
81	B	–
82	W	–
83	B/R	–
85	G	–
88	G/R	–
96	R/W	–
98	L	–
99	L/W	–
104	V/W	–
105	LG	–

Connector No.	B610
Connector Name	WIRE TO WIRE
Connector Type	NS16FW-CS

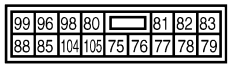

Terminal No.	Color of Wire	Signal Name [Specification]
75	P	–
76	L	–
77	B/Y	–
78	R	–
79	G	–
80	B/W	–
81	B	–
82	W	–
83	B/R	–
85	G	–
88	G/R	–
96	R/W	–
98	L	–
99	L/W	–
104	V/W	–
105	LG	–

Connector No.	B611
Connector Name	WIRE TO WIRE
Connector Type	NS12MBR-CS

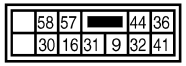

Terminal No.	Color of Wire	Signal Name [Specification]
9	W/G	–
16	O	–
30	P	–
31	GR	–
32	B/W	–
36	G/Y	–
41	Y/G	–
44	P	–
57	W	–
58	L	–

Connector No.	B612
Connector Name	WIRE TO WIRE
Connector Type	NS12FBR-CS

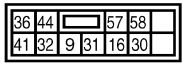

Terminal No.	Color of Wire	Signal Name [Specification]
9	W/G	–
16	O	–
30	P	–
31	GR	–
32	B/W	–
36	G/Y	–
41	Y/G	–
44	P	–
57	W	–
58	L	–

Connector No.	B613
Connector Name	WIRE TO WIRE
Connector Type	A06MW

Terminal No.	Color of Wire	Signal Name [Specification]
75	P	–
76	L	–
78	R	–
79	G	–
81	B	–
82	W	–

Connector No.	B614
Connector Name	WIRE TO WIRE
Connector Type	A06FW

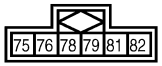

Terminal No.	Color of Wire	Signal Name [Specification]
75	–	–
76	–	–
78	–	–
79	–	–
81	–	–
82	–	–

Connector No.	B615
Connector Name	DRIVER HEADREST SPEAKER LH
Connector Type	TK02FGY

Terminal No.	Color of Wire	Signal Name [Specification]
75	–	–
76	–	–

JCMWM6698GB

CONNECTOR INFORMATION

BODY HARNESS

Connector No.	B616
Connector Name	DRIVER HEADREST SPEAKER RH
Connector Type	TK02FW

Terminal No.	Color of Wire	Signal Name [Specification]
78	–	–
79	–	–

Connector No.	B617
Connector Name	MICROPHONE (FOR AudiopilotTM)
Connector Type	TK02FBR

Terminal No.	Color of Wire	Signal Name [Specification]
81	–	–
82	–	–

Connector No.	B621
Connector Name	WIRE TO WIRE
Connector Type	NS16MBR-CS

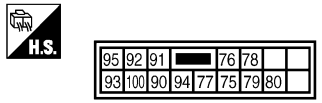

Terminal No.	Color of Wire	Signal Name [Specification]
75	P	–
76	L	–
77	B/Y	–
78	R	–
79	G	–
80	B/W	–
90	L	–
91	W/B	– [For Russia and the Middle East, China]
91	Y	– [For Europe except for Russia]
92	W	–
93	Y	– [For Russia and the Middle East, China]
93	W/B	– [For Europe except for Russia]
94	W/R	–
95	R/L	–
100	GR	–

Connector No.	B622
Connector Name	SEATBACK THERMAL ELECTRIC DEVICE (PASSENGER SIDE)
Connector Type	6098-2163

Terminal No.	Color of Wire	Signal Name [Specification]
85	G	–
88	G/R	–
104	V/W	–
105	LG	–

Connector No.	B623
Connector Name	SEAT CUSHION THERMAL ELECTRIC DEVICE (PASSENGER SIDE)
Connector Type	6098-2163

Terminal No.	Color of Wire	Signal Name [Specification]
86	G/W	–
87	G/B	–
102	V	–
103	BR	–

Connector No.	B624
Connector Name	CLIMATE CONTROLLED SEATBACK BLOWER MOTOR (PASSENGER SIDE)
Connector Type	7283-5830-90

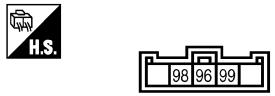

Terminal No.	Color of Wire	Signal Name [Specification]
96	R/W	–
98	L	–
99	L/W	–

Connector No.	B625
Connector Name	CLIMATE CONTROLLED SEAT CUSHION BLOWER MOTOR (PASSENGER SIDE)
Connector Type	7283-5830-90

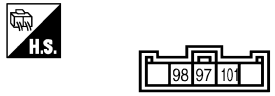

Terminal No.	Color of Wire	Signal Name [Specification]
97	R	–
98	L	–
101	GR/R	–

Connector No.	B626
Connector Name	CLIMATE CONTROLLED SEAT CONTROL UNIT (PASSENGER SIDE)
Connector Type	Delphi: 15332141

Terminal No.	Color of Wire	Signal Name [Specification]
85	G	–
86	G/W	–
87	G/B	–
88	G/R	–
89	R	–
90	L	–

Connector No.	B627
Connector Name	CLIMATE CONTROLLED SEAT CONTROL UNIT (PASSENGER SIDE)
Connector Type	Delphi: 15406141

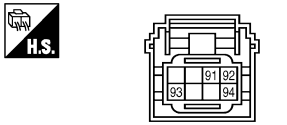

Terminal No.	Color of Wire	Signal Name [Specification]
91	Y	–
92	W	–
93	W/B	–
94	W/R	–

JCMWM6699GB

CONNECTOR INFORMATION

BODY HARNESS

Connector No.	B628
Connector Name	CLIMATE CONTROLLED SEAT CONTROL UNIT (PASSENGER SIDE)
Connector Type	Delphi: 15394150

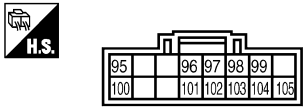

Terminal No.	Color of Wire	Signal Name [Specification]
95	R/L	–
96	R/W	–
97	R	–
98	L	–
99	L/W	–
100	GR	–
101	GR/R	–
102	V	–
103	BR	–
104	V/W	–
105	LG	–

Connector No.	B629
Connector Name	WIRE TO WIRE
Connector Type	TK02MGY

Terminal No.	Color of Wire	Signal Name [Specification]
75	P	–
76	L	–

Connector No.	B630
Connector Name	WIRE TO WIRE
Connector Type	TK02MW

Terminal No.	Color of Wire	Signal Name [Specification]
78	R	–
79	G	–

Connector No.	B631
Connector Name	WIRE TO WIRE
Connector Type	NS10MW-CS

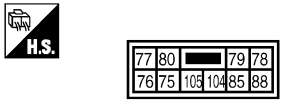

Terminal No.	Color of Wire	Signal Name [Specification]
75	P	–
76	L	–
77	B/Y	–
78	R	–
79	G	–
80	B/W	–
85	G	–
88	G/R	–
104	V/W	–
105	LG	–

Connector No.	B632
Connector Name	WIRE TO WIRE
Connector Type	NS10FW-CS

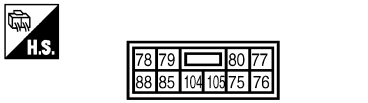

Terminal No.	Color of Wire	Signal Name [Specification]
75	P	–
76	L	–
77	B/Y	–
78	R	–
79	G	–
80	B/W	–
85	G	–
88	G/R	–
104	V/W	–
105	LG	–

Connector No.	B633
Connector Name	WIRE TO WIRE
Connector Type	NS12MBR-CS

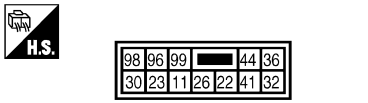

Terminal No.	Color of Wire	Signal Name [Specification]
11	BR	–
22	W/G	–
23	O/L	–
26	Y	–
30	P	–
32	B/W	–
36	W/L	–
41	Y/G	–
44	L	–
96	R/W	–
98	L	–
99	L/W	–

Connector No.	B634
Connector Name	WIRE TO WIRE
Connector Type	NS12FBR-CS

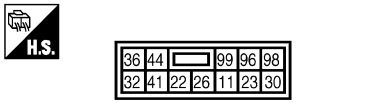

Terminal No.	Color of Wire	Signal Name [Specification]
11	BR	–
22	W/G	–
23	O/L	–
26	Y	–
30	P	–
32	B/W	–
36	W/L	–
41	Y/G	–
44	L	–
96	R/W	–
98	L	–
99	L/W	–

Connector No.	B635
Connector Name	WIRE TO WIRE
Connector Type	TK02FGY

Terminal No.	Color of Wire	Signal Name [Specification]
75	–	–
76	–	–

CONNECTOR INFORMATION

BODY HARNESS

Connector No.	B636
Connector Name	WIRE TO WIRE
Connector Type	TK02FW

Terminal No.	Color of Wire	Signal Name [Specification]
78	–	–
79	–	–

Connector No.	B637
Connector Name	PASSENGER HEADREST SPEAKER LH
Connector Type	TK02FGY

Terminal No.	Color of Wire	Signal Name [Specification]
75	–	–
76	–	–

Connector No.	B638
Connector Name	PASSENGER HEADREST SPEAKER RH
Connector Type	TK02FW

Terminal No.	Color of Wire	Signal Name [Specification]
78	–	–
79	–	–

Connector No.	B652
Connector Name	WIRE TO WIRE
Connector Type	NS16MBR-CS

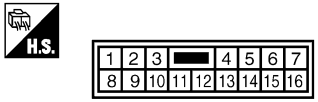

Terminal No.	Color of Wire	Signal Name [Specification]
1	–	–
2	–	–
3	–	–
5	–	–
6	–	–
7	–	–
8	–	–
10	–	–
12	–	–
14	–	–
16	–	–

Connector No.	B653
Connector Name	WIRE TO WIRE
Connector Type	NS02FW-CS

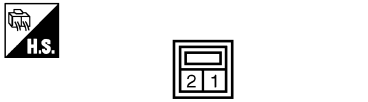

Terminal No.	Color of Wire	Signal Name [Specification]
1	–	–
2	–	–

Connector No.	B654
Connector Name	WIRE TO WIRE
Connector Type	NS16MGY-CS

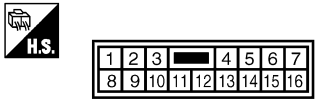

Terminal No.	Color of Wire	Signal Name [Specification]
1	–	–
2	–	–
3	–	–
4	–	–
5	–	–
6	–	–
7	–	–
12	–	–
13	–	–
14	–	–
15	–	–
16	–	–

Connector No.	B655
Connector Name	WIRE TO WIRE
Connector Type	NS02FW-CS

Terminal No.	Color of Wire	Signal Name [Specification]
1	–	–
2	–	–

Connector No.	B656
Connector Name	ROOF STATUS SENSOR
Connector Type	I-968700-I

Terminal No.	Color of Wire	Signal Name [Specification]
1	–	–
2	–	–
3	–	–

Connector No.	B657
Connector Name	ROOF LATCH ASSEMBLY
Connector Type	NS06FW-CS

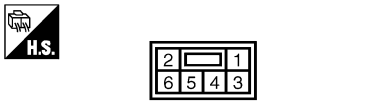

Terminal No.	Color of Wire	Signal Name [Specification]
1	–	–
2	–	–
4	–	–
5	–	–
6	–	–

JCMWM6701GB

BODY HARNESS

Connector No.	B658
Connector Name	REAR DEFOGGER
Connector Type	P01FB-A

H.S.

1

Terminal No.	Color of Wire	Signal Name [Specification]
1	–	–

Connector No.	B659
Connector Name	REAR DEFOGGER
Connector Type	P01FB-A

H.S.

2

Terminal No.	Color of Wire	Signal Name [Specification]
2	–	–

Connector No.	B701
Connector Name	OCCUPANT DETECTION SWITCH
Connector Type	6098-2220

H.S.

4 5

Terminal No.	Color of Wire	Signal Name [Specification]
4	–	–
5	–	–

JCMWM6702GB

CONNECTOR INFORMATION

INFOID:0000000000604198

DOOR HARNESS

Connector No.	D1
Connector Name	WIRE TO WIRE
Connector Type	TH40FW-CS15-S

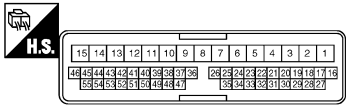

Terminal No.	Color of Wire	Signal Name [Specification]
2	O	– [LHD models]
2	R	– [RHD models]
3	GR	– [LHD models]
3	G	– [RHD models]
4	BR	– [LHD models]
4	W	– [RHD models]
5	P	– [LHD models with A/T]
5	B	– [LHD models with M/T]
5	L	– [RHD models]
6	SB	– [LHD models]
6	B	– [RHD models]
7	R	– [LHD models]
7	BR	– [RHD models]
8	G	– [LHD models]
8	P	– [RHD models]
9	P	– [LHD models]
9	LG	– [RHD models]
10	LG	– [LHD models]
10	BG	– [RHD models]
11	W	– [LHD models]
11	L	– [RHD models]
12	L	– [LHD models]
12	SB	– [RHD models]
13	B	–
14	V	– [LHD models]
14	GR	– [RHD models]
15	Y	–
16	Y/B	–
17	Y	–
19	SB	–
20	V	– [LHD models]
20	Y	– [RHD models]
21	R	– [LHD models]
21	G	– [RHD models]
22	P	–
23	O	– [LHD models]
23	BG	– [RHD models]
24	Y	– [LHD models]
24	BR	– [RHD models]
25	SB	–
26	GR	–
27	GR	–
28	LG	–
29	G	–
30	Y	–
31	W	–
32	BR	– [LHD models]
32	V	– [RHD models]
33	L	– [LHD models]
33	W	– [RHD models]
34	R	–
35	V	– [LHD models]
35	L	– [RHD models]
36	BR	–
37	V	– [RHD models]
38	O	– [LHD models]
38	R	– [RHD models]
39	GR	– [LHD models]
39	W	– [RHD models]
40	G	– [LHD models]
40	LG	– [RHD models]
41	Y	– [LHD models]
41	L	– [RHD models]
42	LG	– [LHD models]
42	BR	– [RHD models]
43	BR	– [LHD models]
43	Y	– [RHD models]
44	V	– [LHD models]
44	G	– [RHD models]
45	P	–
46	W	– [LHD models]
46	GR	– [RHD models]
47	V	– [LHD models]
47	L	– [RHD models]
48	P	– [LHD models]
48	G	– [RHD models]
49	W	– [LHD models]
49	GR	– [RHD models]
50	SB	– [LHD models]
50	BG	– [RHD models]
51	R	– [LHD models]
51	W	– [RHD models]
52	L	– [LHD models]
52	P	– [RHD models]
53	V	–
54	R	–

Connector No.	D2
Connector Name	TWEETER LH
Connector Type	TK02MBR-P

Terminal No.	Color of Wire	Signal Name [Specification]
1	L	–
2	W	–

Connector No.	D3
Connector Name	DOOR MIRROR (DRIVER SIDE)
Connector Type	TH12MW-NH

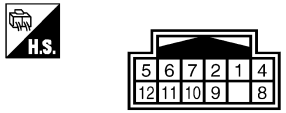

Terminal No.	Color of Wire	Signal Name [Specification]
1	SB	– [Except LHD models without automatic drive positioner]
1	P	– [LHD models without automatic drive positioner]
2	O	– [LHD models with automatic drive positioner]
2	SB	– [LHD models without automatic drive positioner]
2	Y	– [RHD models]
4	L	–
5	O	– [LHD models with automatic drive positioner]
5	W	– [LHD models without automatic drive positioner]
5	BG	– [RHD models]
6	GR	– [Except LHD models without automatic drive positioner]
6	BR	– [LHD models without automatic drive positioner]
7	G	– [Except LHD models without automatic drive positioner]
7	V	– [LHD models without automatic drive positioner]
8	B	–
9	P	–
10	BR	– [LHD models]
10	R	– [RHD models]
11	W	–
12	V	–

Connector No.	D4
Connector Name	TWEETER LH
Connector Type	TK02FBR

Terminal No.	Color of Wire	Signal Name [Specification]
1	L	–
2	W	–

Connector No.	D5
Connector Name	SEAT MEMORY SWITCH
Connector Type	A08FW

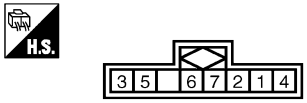

Terminal No.	Color of Wire	Signal Name [Specification]
1	SB	–
2	Y	– [LHD models]
2	BR	– [RHD models]
3	GR	–
4	B	–
5	R	– [LHD models]
5	G	– [RHD models]
6	O	– [LHD models]
6	BG	– [RHD models]
7	P	–

JCMWM6703GB

DOOR HARNESS

Connector No.	D6
Connector Name	DOOR SPEAKER LH
Connector Type	NS02FW-CS

Terminal No.	Color of Wire	Signal Name [Specification]
1	L	–
2	W	–

Connector No.	D7
Connector Name	DOOR MIRROR REMOTE CONTROL SWITCH
Connector Type	TK16FW

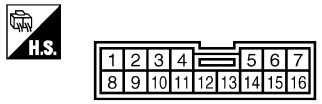

Terminal No.	Color of Wire	Signal Name [Specification]
1	B	–
2	Y	– [LHD models]
2	SB	– [RHD models]
3	P	– [LHD models]
3	W	– [RHD models]
5	LG	– [LHD models]
5	Y	– [RHD models]
6	SB	– [LHD models]
6	LG	– [RHD models]
7	V	–
8	B	–
9	R	–
10	V	– [LHD models]
10	Y	– [RHD models]
12	G	–
13	GR	–
14	BR	– [LHD models]
14	L	– [RHD models]
15	O	– [LHD models]
15	BG	– [RHD models]
16	W	– [LHD models]
16	BR	– [RHD models]

Connector No.	D8
Connector Name	POWER WINDOW MAIN SWITCH
Connector Type	NS16FW-CS

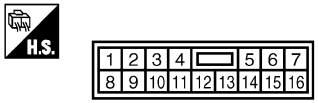

Terminal No.	Color of Wire	Signal Name [Specification]
1	G	–
2	SB	–
4	P	–
7	V	– [LHD models]
7	GR	– [RHD models]
8	B	–
9	Y	–
11	O	– [LHD models]
11	BG	– [RHD models]
12	R	–
13	W	–
15	BR	–

Connector No.	D10
Connector Name	DRIVER SIDE POWER WINDOW MOTOR
Connector Type	FHB06FGY-Z

Terminal No.	Color of Wire	Signal Name [Specification]
1	G	–
2	R	–
3	BR	–
4	O	–
5	W	–
6	L	–

Connector No.	D11
Connector Name	DOOR WOOFER LH
Connector Type	NS02FW-CS

Terminal No.	Color of Wire	Signal Name [Specification]
1	G	–
2	R	–

Connector No.	D12
Connector Name	STEP LAMP (DRIVER SIDE)
Connector Type	TB02FW

Terminal No.	Color of Wire	Signal Name [Specification]
1	R	– [LHD models]
1	L	– [RHD models]
2	SB	– [LHD models]
2	R	– [RHD models]

Connector No.	D13
Connector Name	OUTSIDE HANDLE LH (REQUEST SWITCH)
Connector Type	RK02FL

Terminal No.	Color of Wire	Signal Name [Specification]
1	W	–
2	B	–

Connector No.	D14
Connector Name	OUTSIDE HANDLE LH (OUTSIDE KEY ANTENNA)
Connector Type	RK02MGY

Terminal No.	Color of Wire	Signal Name [Specification]
1	P	–
2	V	–

Connector No.	D15
Connector Name	DRIVER SIDE DOOR LOCK ASSEMBLY
Connector Type	E06FGY-RS

Terminal No.	Color of Wire	Signal Name [Specification]
1	LG	–
2	P	–
3	L	–

JCMWM6704GB

CONNECTOR INFORMATION

DOOR HARNESS

Connector No.	D16
Connector Name	DOOR SQUAWKER LH
Connector Type	TK02FBR

Terminal No.	Color of Wire	Signal Name [Specification]
1	L	–
2	W	–

Connector No.	D17
Connector Name	DOOR MIRROR REMOTE CONTROL SWITCH
Connector Type	TK16FBR

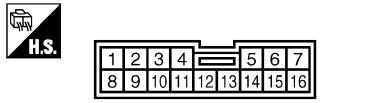

Terminal No.	Color of Wire	Signal Name [Specification]
1	V	–
2	Y	–
3	O	– [LHD models]
3	LG	– [RHD models]
4	BR	–
5	LG	– [LHD models]
5	SB	– [RHD models]
6	SB	– [LHD models]
6	W	– [RHD models]
7	B	–
8	B	– [Except LHD models with A/T]
8	P	– [LHD models with A/T]
9	R	–
10	GR	–
11	LG	– [LHD models]
11	P	– [RHD models]
12	G	–
13	W	– [LHD models]
13	L	– [RHD models]
15	Y	–

Connector No.	D18
Connector Name	POP-UP ROLL BAR LH
Connector Type	ACB02FY

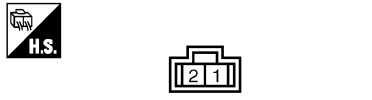

Terminal No.	Color of Wire	Signal Name [Specification]
1	Y/B	–
2	Y	–

Connector No.	D19
Connector Name	DRIVER SIDE DOOR LOCK ASSEMBLY
Connector Type	FEA04FB-FHA2-LC

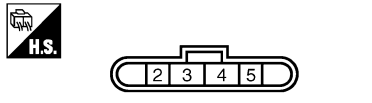

Terminal No.	Color of Wire	Signal Name [Specification]
2	P	–
3	LG	–
4	L	–
5	B	–

Connector No.	D20
Connector Name	DRIVER SIDE POWER WINDOW MOTOR
Connector Type	YEA06FGY-YHA2

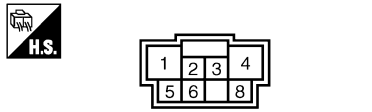

Terminal No.	Color of Wire	Signal Name [Specification]
1	Y	–
2	W	–
3	P	–
4	B	–
5	O	– [LHD models]
5	BG	– [RHD models]
6	R	–
8	G	–

Connector No.	D21
Connector Name	FRONT INTRUDER SENSOR LH
Connector Type	A04FW

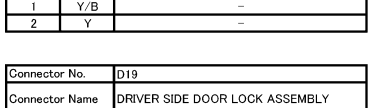

Terminal No.	Color of Wire	Signal Name [Specification]
1	O	– [LHD models]
1	BG	– [RHD models]
2	B	–
3	GR	– [LHD models]
3	SB	– [RHD models]

Connector No.	D22
Connector Name	DRIVER SIDE DOOR LOCK ASSEMBLY
Connector Type	FEA04FB-FHA2-LC

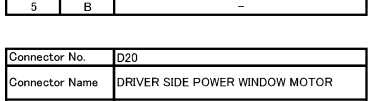

Terminal No.	Color of Wire	Signal Name [Specification]
2	B	–
3	L	–
4	LG	–
5	BG	–
6	P	–

Connector No.	D28
Connector Name	POWER WINDOW MAIN SWITCH
Connector Type	NS16FW-CS

Terminal No.	Color of Wire	Signal Name [Specification]
2	G	–
5	BR	–
8	L	–
9	W	–
10	SB	–
11	BR	–
13	R	–
14	V	–
15	O	–

Connector No.	D29
Connector Name	POWER WINDOW MAIN SWITCH
Connector Type	NS03FW-CS

Terminal No.	Color of Wire	Signal Name [Specification]
17	B	–
19	Y	–

JCMWM6705GB

CONNECTOR INFORMATION

DOOR HARNESS

Connector No.	D31
Connector Name	WIRE TO WIRE
Connector Type	TH40FW-CS15-S

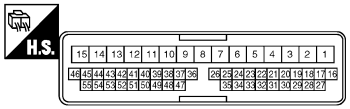

Terminal No.	Color of Wire	Signal Name [Specification]
3	V	–
4	GR	– [LHD models]
4	R	– [RHD models]
5	G	–
6	BR	– [LHD models]
6	W	– [RHD models]
7	R	– [LHD models]
7	L	– [RHD models]
8	G	– [LHD models]
8	V	– [RHD models]
9	P	–
10	LG	–
11	W	– [LHD models]
11	Y	– [RHD models]
12	L	– [LHD models]
12	BG	– [RHD models]
13	B	–
14	Y	– [LHD models]
14	GR	– [RHD models]
15	W	– [LHD models]
15	BR	– [RHD models]
16	Y/B	–
17	Y	–
34	Y	–
35	Y/B	–
36	SB	–
38	O	– [LHD models]
38	LG	– [RHD models]
39	GR	– [LHD models]
39	R	– [RHD models]
40	G	– [LHD models]
40	BG	– [RHD models]
41	Y	– [LHD models]
41	GR	– [RHD models]
42	LG	– [LHD models]
42	G	– [RHD models]
43	BR	–
44	V	–
45	P	–
46	W	–
47	V	–
48	P	–
49	W	–
50	SB	– [LHD models]
50	Y	– [RHD models]
51	R	– [LHD models]
51	SB	– [RHD models]
52	L	–
53	O	– [LHD models]
53	BG	– [RHD models]
54	GR	–
55	G	–

Connector No.	D32
Connector Name	TWEETER RH
Connector Type	TK02MBR-P

Terminal No.	Color of Wire	Signal Name [Specification]
1	L	–
2	W	–

Connector No.	D33
Connector Name	DOOR MIRROR (PASSENGER SIDE)
Connector Type	TH12MW-NH

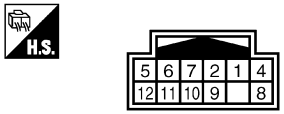

Terminal No.	Color of Wire	Signal Name [Specification]
1	LG	– [LHD models with automatic drive positioner]
1	Y	– [LHD models without automatic drive positioner]
1	R	– [RHD models]
2	LG	– [Except LHD models with automatic drive positioner]
2	Y	– [LHD models with automatic drive positioner]
4	L	–
5	O	– [LHD models with automatic drive positioner]
5	GR	– [LHD models without automatic drive positioner]
5	BG	– [RHD models]
6	GR	– [Except LHD models without automatic drive positioner]
6	G	– [LHD models without automatic drive positioner]
7	G	– [Except LHD models without automatic drive positioner]
7	O	– [LHD models without automatic drive positioner]
8	B	–
9	P	–
10	BR	–
11	W	–
12	V	–

Connector No.	D34
Connector Name	TWEETER RH
Connector Type	TK02FBR

Terminal No.	Color of Wire	Signal Name [Specification]
1	L	–
2	W	–

Connector No.	D36
Connector Name	DOOR SPEAKER RH
Connector Type	NS02FW-CS

Terminal No.	Color of Wire	Signal Name [Specification]
1	L	–
2	W	–

Connector No.	D38
Connector Name	POWER WINDOW SUB-SWITCH
Connector Type	NS16FW-CS

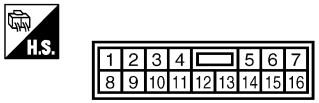

Terminal No.	Color of Wire	Signal Name [Specification]
1	SB	–
2	BR	– [LHD models]
2	Y	– [RHD models]
8	B	–
9	W	– [LHD models]
9	BR	– [RHD models]
10	P	–
11	O	– [LHD models]
11	BG	– [RHD models]
12	R	–
14	G	–
15	Y	– [LHD models]
15	GR	– [RHD models]

Connector No.	D39
Connector Name	PASSENGER SIDE POWER WINDOW MOTOR
Connector Type	YEA06FGY-YHA2

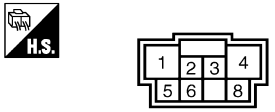

Terminal No.	Color of Wire	Signal Name [Specification]
1	W	–
2	G	–
3	P	–
4	B	–
5	O	– [LHD models]
5	BG	– [RHD models]
6	R	–
8	SB	–

CONNECTOR INFORMATION

DOOR HARNESS

Connector No.	D40
Connector Name	PASSENGER SIDE POWER WINDOW MOTOR
Connector Type	FHB06FGY-Z

Terminal No.	Color of Wire	Signal Name [Specification]
1	G	–
2	R	–
3	V	–
4	O	–
5	SB	–
6	L	–

Connector No.	D41
Connector Name	DOOR WOOFER RH
Connector Type	NS02FW-CS

Terminal No.	Color of Wire	Signal Name [Specification]
1	G	–
2	R	–

Connector No.	D42
Connector Name	STEP LAMP (PASSENGER SIDE)
Connector Type	TB02FW

Terminal No.	Color of Wire	Signal Name [Specification]
1	R	– [LHD models]
1	SB	– [RHD models]
2	SB	– [LHD models]
2	Y	– [RHD models]

Connector No.	D43
Connector Name	OUTSIDE HANDLE RH (REQUEST SWITCH)
Connector Type	RK02FL

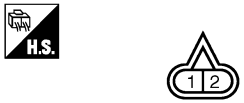

Terminal No.	Color of Wire	Signal Name [Specification]
1	W	– [LHD models]
1	BR	– [RHD models]
2	B	–

Connector No.	D44
Connector Name	OUTSIDE HANDLE RH (OUTSIDE KEY ANTENNA)
Connector Type	RK02MGY

Terminal No.	Color of Wire	Signal Name [Specification]
1	P	– [LHD models]
1	W	– [RHD models]
2	V	–

Connector No.	D45
Connector Name	PASSENGER SIDE DOOR LOCK ASSEMBLY
Connector Type	E06FGY-RS

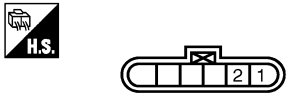

Terminal No.	Color of Wire	Signal Name [Specification]
1	P	–
2	LG	–

Connector No.	D46
Connector Name	DOOR SQUAWKER RH
Connector Type	TK02FBR

Terminal No.	Color of Wire	Signal Name [Specification]
1	L	–
2	W	–

Connector No.	D48
Connector Name	POP-UP ROLL BAR RH
Connector Type	ACB02FY

Terminal No.	Color of Wire	Signal Name [Specification]
1	Y/B	–
2	Y	–

Connector No.	D49
Connector Name	PASSENGER SIDE DOOR LOCK ASSEMBLY
Connector Type	FEA04FB-FHA2-LC

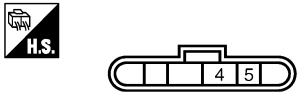

Terminal No.	Color of Wire	Signal Name [Specification]
4	LG	–
5	P	–

Connector No.	D51
Connector Name	FRONT INTRUDER SENSOR RH
Connector Type	A04FW

Terminal No.	Color of Wire	Signal Name [Specification]
1	V	– [LHD models]
1	SB	– [RHD models]
2	B	–
3	GR	– [LHD models]
3	Y	– [RHD models]

JCMWM6707GB

DOOR HARNESS

Connector No.	D52
Connector Name	PASSENGER SIDE DOOR LOCK ASSEMBLY
Connector Type	FEA04FB-FHA2-LC

H.S.

Terminal No.	Color of Wire	Signal Name [Specification]
1	V	–
2	LG	–
3	P	–

Connector No.	D58
Connector Name	POWER WINDOW SUB-SWITCH
Connector Type	NS16FW-CS

H.S.

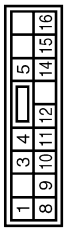

Terminal No.	Color of Wire	Signal Name [Specification]
3	G	–
4	O	–
8	L	–
9	V	–
10	W	–
11	B	–
12	R	–
14	BR	–
15	SB	–
16	Y	–

JCMWM6708GB

CONNECTOR INFORMATION

INFOID:0000000006044199

ENGINE ROOM HARNESS

Connector No.	E1
Connector Name	BATTERY TERMINAL WITH FUSIBLE LINK
Connector Type	L02FBR-MC

Terminal No.	Color of Wire	Signal Name [Specification]
1	R	–
2	W	–

Connector No.	E2
Connector Name	BATTERY TERMINAL WITH FUSIBLE LINK
Connector Type	L02FGY-MC

Terminal No.	Color of Wire	Signal Name [Specification]
3	L	–
4	R	–

Connector No.	E3
Connector Name	WIRE TO WIRE
Connector Type	SAA36MB-RS8-SHZ8

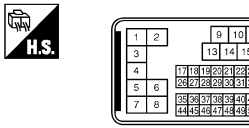

Terminal No.	Color of Wire	Signal Name [Specification]
1	L/Y	–
2	SHIELD	–
3	L/B	–
4	SHIELD	–
5	BR	–
7	G	–
8	W	–
9	W	–
10	Y	–
11	P	–
12	SB	–
13	BR	– [LHD models]
13	L	– [RHD models]
14	G	–
15	R	–
16	LG	–
17	P	–
18	Y	–
19	BG	–
20	B	–
21	SB	–
22	W	–
23	L	–
24	G	–
25	V	– [LHD models]
25	LG	– [RHD models]
26	R	–
27	GR	–
28	V	–
29	P	–
30	R	–
31	BR	–
32	Y	–
33	G	–
34	BG	–
37	SHIELD	–
38	L	–
39	P	–
40	R	–
41	W	–
42	LG	–
43	G	–
46	SHIELD	–
47	W	–
48	BR	–
49	G	–
50	B	–
51	SB	–
52	R	–

Connector No.	E4
Connector Name	IPDM E/R (INTELLIGENT POWER DISTRIBUTION MODULE ENGINE ROOM)
Connector Type	L02FB-MC

Terminal No.	Color of Wire	Signal Name [Specification]
1	W	–
2	L	–

Connector No.	E5
Connector Name	IPDM E/R (INTELLIGENT POWER DISTRIBUTION MODULE ENGINE ROOM)
Connector Type	TH20FW-CS12-M4-1V

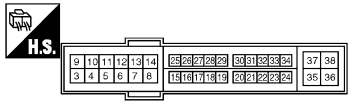

Terminal No.	Color of Wire	Signal Name [Specification]
4	V	–
5	L	–
6	SB	–
7	R	–
11	BR	–
12	B/W	–
13	Y	–
15	BR	– [LHD models]
15	W	– [RHD models]
16	LG	–
17	Y	–
19	W	– [LHD models]
19	GR	– [RHD models]
25	G	–
26	R	–
27	BG	–
28	L	–
30	GR	–
32	V	–
33	P	–
36	G	– [LHD models]
36	V	– [RHD models]

Connector No.	E6
Connector Name	IPDM E/R (INTELLIGENT POWER DISTRIBUTION MODULE ENGINE ROOM)
Connector Type	TH08FW-NH

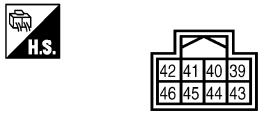

Terminal No.	Color of Wire	Signal Name [Specification]
39	P	–
40	L	–
41	B/W	–
42	Y	– [LHD models]
42	LG	– [RHD models]
43	SB	– [LHD models]
43	R	– [RHD models]
44	LG	– [LHD models]
44	W	– [RHD models]
45	G	–
46	W	– [LHD models]
46	Y	– [RHD models]

JCMWM6709GB

CONNECTOR INFORMATION

ENGINE ROOM HARNESS

Connector No.	E7
Connector Name	IPDM E/R (INTELLIGENT POWER DISTRIBUTION MODULE ENGINE ROOM)
Connector Type	TH20FW-CS12-M4

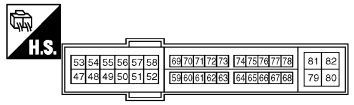

Terminal No.	Color of Wire	Signal Name [Specification]
48	BR	– [LHD models]
48	L	– [RHD models]
49	BG	–
51	Y	–
53	W	–
54	P	–
55	SB	–
56	LG	–
57	G	–
58	GR	–
69	BR	–
70	BG	–
72	GR	–
73	P	–
74	G	–
75	SB	–
76	Y	–
77	R	–
80	W	–

Connector No.	E8
Connector Name	IPDM E/R (INTELLIGENT POWER DISTRIBUTION MODULE ENGINE ROOM)
Connector Type	NS08FW-CS

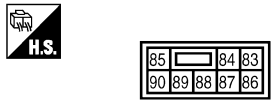

Terminal No.	Color of Wire	Signal Name [Specification]
83	R	– [LHD models]
83	Y	– [RHD models]
84	P	–
86	W	–
87	L	–
88	G	–
89	BR	–
90	LG	– [LHD models]
90	R	– [RHD models]

Connector No.	E9
Connector Name	IPDM E/R (INTELLIGENT POWER DISTRIBUTION MODULE ENGINE ROOM)
Connector Type	TH16FW-NH

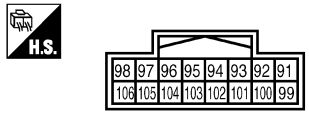

Terminal No.	Color of Wire	Signal Name [Specification]
91	P	– [LHD models]
91	R	– [RHD models]
92	BG	– [For the Middle East and China]
92	L	– [LHD models for Europe]
92	P	– [RHD models]
97	V	–
104	LG	–
105	L	–

Connector No.	E11
Connector Name	HORN RELAY 1
Connector Type	24381 7990A

Terminal No.	Color of Wire	Signal Name [Specification]
1	LG	–
2	SB	–
3	Y	–

Connector No.	E14
Connector Name	VVEL CONTROL MODULE
Connector Type	RH18FB-AJZ8-LH

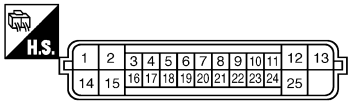

Terminal No.	Color of Wire	Signal Name [Specification]
1	W	VMOT L
2	L/B	MOTOR L 1
3	G	VEL/S-R1
4	W	AGND1
5	R	VEL/S-L1
6	B	AGND3
7	SB	AVCC3
8	BG	VB
9	LG	AVCC1
11	G	CAN H
12	G	MOTOR R 1
13	W	V-MOT (R)
14	B/W	PGND L
15	L/Y	MOTOR L 2
16	R	VEL S-R2
17	L	AGND2
18	G	VEL S-L2
19	W	AGND4
20	BR	AVCC4
21	V	ABORT
22	P	AVCC2
23	Y	M-RLY
24	L	CAN L
25	BR	MOTOR R 2

Connector No.	E15
Connector Name	VVEL CONTROL MODULE
Connector Type	RH18FB-AJZ8-RH

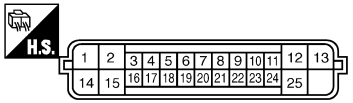

Terminal No.	Color of Wire	Signal Name [Specification]
1	W	VMOT L
2	L/B	MOTOR L 1
3	G	VEL/S-R1
4	W	AGND1
5	R	VEL/S-L1
6	B	AGND3
7	SB	AVCC3
8	BG	VB
9	LG	AVCC1
11	G	CAN H
12	G	MOTOR R 1
13	W	V-MOT (R)
14	B/W	PGND L
15	L/Y	MOTOR L 2
16	R	VEL S-R2
17	L	AGND2
18	G	VEL S-L2
19	W	AGND4
20	BR	AVCC4
21	V	ABORT
22	P	AVCC2
23	Y	M-RLY
24	L	CAN L
25	BR	MOTOR R 2

Connector No.	E16
Connector Name	VVEL ACTUATOR MOTOR RELAY
Connector Type	24347 9F900

Terminal No.	Color of Wire	Signal Name [Specification]
1	R	–
2	Y	–
3	W	–
5	R	–

ENGINE ROOM HARNESS

Connector No.	E17
Connector Name	COOLING FAN RELAY
Connector Type	24347 9F900

H.S.

Terminal No.	Color of Wire	Signal Name [Specification]
1	Y	– [LHD models]
1	LG	– [RHD models]
2	G	–
3	Y	– [LHD models]
3	P	– [RHD models]
5	R	–

Connector No.	E18
Connector Name	HORN RELAY 2
Connector Type	M03FW-R-LC

H.S.

Terminal No.	Color of Wire	Signal Name [Specification]
1	P	–
2	Y	–
3	G	–

Connector No.	E20
Connector Name	CLIMATE CONTROLLED SEAT RELAY
Connector Type	M06FBR-R-LC

H.S.

Terminal No.	Color of Wire	Signal Name [Specification]
1	B	–
2	W	–
3	G	–
5	BR	–
6	L	–
7	BG	–

Connector No.	E21
Connector Name	BATTERY CURRENT SENSOR
Connector Type	RH03FB

H.S.

Terminal No.	Color of Wire	Signal Name [Specification]
1	P	–
2	W	–
3	G	–

Connector No.	E24
Connector Name	SIDE TURN SIGNAL LAMP RH
Connector Type	HS02FLGY

H.S.

Terminal No.	Color of Wire	Signal Name [Specification]
1	V	–
2	B	–

Connector No.	E25
Connector Name	DAYTIME RUNNING LIGHT RELAY
Connector Type	M06FBR-R-LC

H.S.

Terminal No.	Color of Wire	Signal Name [Specification]
1	L	–
2	SB	–
3	BG	–
5	P	–
6	R	–
7	W	–

Connector No.	E26
Connector Name	HEADLAMP AIMING MOTOR RH
Connector Type	RK03FB

H.S.

Terminal No.	Color of Wire	Signal Name [Specification]
1	B	– [LHD models]
1	Y	– [RHD models]
2	W	– [LHD models]
2	LG	– [RHD models]

Connector No.	E27
Connector Name	FRONT WHEEL SENSOR RH
Connector Type	AAZ02FB1

H.S.

Terminal No.	Color of Wire	Signal Name [Specification]
1	SB	–
2	B	–
3	G	–

Connector No.	E28
Connector Name	FRONT COMBINATION LAMP RH
Connector Type	RS08FB-PR

H.S.

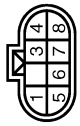

Terminal No.	Color of Wire	Signal Name [Specification]
1	W	–
3	B	–
4	B/W	–
5	R	– [LHD models]
5	Y	– [RHD models]
6	LG	– [LHD models]
6	V	– [RHD models]
7	BR	–
8	P	– [LHD models]
8	R	– [RHD models]

JCMWM6711GB

CONNECTOR INFORMATION

ENGINE ROOM HARNESS

Connector No.	E29
Connector Name	HEADLAMP SWIVEL ACTUATOR RH
Connector Type	RS08FGY-PR

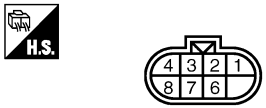

Terminal No.	Color of Wire	Signal Name [Specification]
1	LG	– [LHD models]
1	BR	– [RHD models]
2	Y	–
3	W	–
4	G	–
6	L	– [LHD models]
6	V	– [RHD models]
7	B	–
8	R	–

Connector No.	E30
Connector Name	HOOD SWITCH
Connector Type	RH02FB

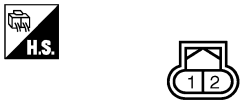

Terminal No.	Color of Wire	Signal Name [Specification]
1	B	–
2	LG	–

Connector No.	E31
Connector Name	WASHER PUMP
Connector Type	E02FGY-RS

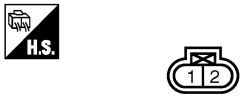

Terminal No.	Color of Wire	Signal Name [Specification]
1	G	–
2	BR	– [LHD models]
2	SB	– [RHD models]

Connector No.	E32
Connector Name	WASHER LEVEL SWITCH
Connector Type	Z02FBR

Terminal No.	Color of Wire	Signal Name [Specification]
1	LG	–
2	B	–

Connector No.	E33
Connector Name	HEADLAMP WASHER PUMP
Connector Type	RS02FGY

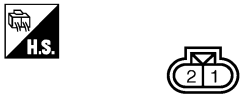

Terminal No.	Color of Wire	Signal Name [Specification]
1	GR	–
2	B/W	– [LHD models]
2	B	– [RHD models]

Connector No.	E34
Connector Name	BRAKE BOOSTER
Connector Type	RV06FGY

Terminal No.	Color of Wire	Signal Name [Specification]
1	SB	–
2	P	–
3	V	–
4	Y	–
6	BR	–

Connector No.	E36
Connector Name	CRASH ZONE SENSOR
Connector Type	HK02FY-1V-EX-LC

Terminal No.	Color of Wire	Signal Name [Specification]
1	P	–
2	L	–

Connector No.	E37
Connector Name	COOLING FAN CONTROL MODULE
Connector Type	SJZ01FGY-SNZ2

Terminal No.	Color of Wire	Signal Name [Specification]
1	B	–
2	V	–
3	R	–

Connector No.	E38
Connector Name	BRAKE PRESSURE SENSOR
Connector Type	AAZ03FB2

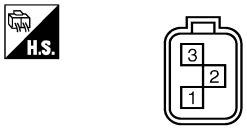

Terminal No.	Color of Wire	Signal Name [Specification]
1	BG	–
2	L	–
3	R	–

CONNECTOR INFORMATION

ENGINE ROOM HARNESS

Connector No.	E39
Connector Name	ICC BRAKE HOLD RELAY
Connector Type	M06FGY-R-US

Terminal No.	Color of Wire	Signal Name [Specification]
1	GR	–
2	B	–
3	G	–
4	SB	–
6	P	–
7	R	–

Connector No.	E41
Connector Name	ABS ACTUATOR AND ELECTRIC UNIT (CONTROL UNIT)
Connector Type	BAA42FB-AHZ4-LH

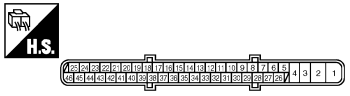

Terminal No.	Color of Wire	Signal Name [Specification]
1	B	GND
2	L	UBMR [LHD models]
2	Y	UBMR [RHD models]
3	R	UBVR [LHD models]
3	LG	UBVR [RHD models]
4	B	GND
5	Y	DS FL
6	BG	DP RL
7	BR	DP RR
9	B	DP FR [LHD models]
9	Y	DP FR [RHD models]
10	W	DS FR [LHD models]
10	LG	DS FR [RHD models]
11	V	DIAG-K
12	W	VAC
14	P	CAN-L
15	SHIELD	GND
19	O	UST
25	Y	BUS-L
26	LG	DP FL
27	GR	DS RL [LHD models]
27	P	DS RL [RHD models]
28	G	UZ
29	P	DS RR [LHD models]
29	R	DS RR [RHD models]
30	SB	BLS
31	R	ESP OFF SWITCH [LHD models]
31	GR	ESP OFF SWITCH [RHD models]
35	L	CAN-H
45	B	BUS-H

Connector No.	E42
Connector Name	FRONT WIPER MOTOR
Connector Type	HS05FGY

Terminal No.	Color of Wire	Signal Name [Specification]
1	V	–
2	B/W	–
4	L	–
5	LG	–

Connector No.	E44
Connector Name	VACUUM SENSOR
Connector Type	YEZ03FDGY

Terminal No.	Color of Wire	Signal Name [Specification]
1	W	–
2	SHIELD	–
3	O	–

Connector No.	E47
Connector Name	BRAKE FLUID LEVEL SWITCH
Connector Type	YV02FGY

Terminal No.	Color of Wire	Signal Name [Specification]
1	W	– [LHD models]
1	P	– [RHD models]
2	B	–

Connector No.	E48
Connector Name	BRAKE BOOSTER PRESSURE SENSOR
Connector Type	RH03FB

Terminal No.	Color of Wire	Signal Name [Specification]
1	Y	–
2	BG	–
3	B	–

Connector No.	E51
Connector Name	ICC BRAKE HOLD RELAY
Connector Type	MS02FL-M2-LC

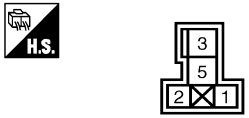

Terminal No.	Color of Wire	Signal Name [Specification]
1	B	–
2	V	–
3	R	–
5	P	–

Connector No.	E52
Connector Name	SHIFT LOCK RELAY
Connector Type	MS02FL-M2-LC

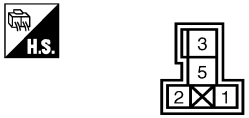

Terminal No.	Color of Wire	Signal Name [Specification]
1	GR	–
2	P	–
3	W	–
5	Y	–

JCMWM6713GB

ENGINE ROOM HARNESS

Connector No.	E53
Connector Name	HEADLAMP WASHER RELAY
Connector Type	MS02FL-M2-LC

H.S.

Terminal No.	Color of Wire	Signal Name [Specification]
1	L	–
2	Y	–
3	L	–
5	GR	–

Connector No.	E55
Connector Name	SIDE TURN SIGNAL LAMP LH
Connector Type	HS02FLGY

H.S.

Terminal No.	Color of Wire	Signal Name [Specification]
1	G	–
2	B	–

Connector No.	E56
Connector Name	HEADLAMP AIMING MOTOR LH
Connector Type	RK03FB

H.S.

Terminal No.	Color of Wire	Signal Name [Specification]
1	B	–
2	G	–
3	B	–

1	BG	–
2	B	–
3	G	–

Connector No.	E57
Connector Name	INTELLIGENT KEY WARNING BUZZER
Connector Type	RK03FBR

H.S.

Terminal No.	Color of Wire	Signal Name [Specification]
1	LG	–
3	SB	–

Connector No.	E58
Connector Name	FRONT COMBINATION LAMP LH
Connector Type	RS08FB-PR

H.S.

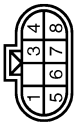

Terminal No.	Color of Wire	Signal Name [Specification]
1	L	–
3	B	–
4	B/W	–
5	P	–
6	GR	– [LHD models]
6	W	– [RHD models]
7	LG	– [LHD models]
7	R	– [RHD models]
8	BG	– [LHD models]
8	G	– [RHD models]

Connector No.	E59
Connector Name	HEADLAMP SWIVEL ACTUATOR LH
Connector Type	RS08FGY-PR

H.S.

Terminal No.	Color of Wire	Signal Name [Specification]
1	BR	– [LHD models]
1	L	– [RHD models]
2	V	–
3	W	–
4	R	–
6	BG	– [LHD models]
6	R	– [RHD models]
7	B	–
8	G	–

Connector No.	E60
Connector Name	FRONT WHEEL SENSOR LH
Connector Type	AAZ02FB1

H.S.

Terminal No.	Color of Wire	Signal Name [Specification]
1	LG	–
2	Y	–

Connector No.	E61
Connector Name	HORN (HIGH)
Connector Type	P01FB-A

H.S.

Terminal No.	Color of Wire	Signal Name [Specification]
1	Y	–

Connector No.	E62
Connector Name	HORN (HIGH)
Connector Type	P01FB-A

H.S.

Terminal No.	Color of Wire	Signal Name [Specification]
2	B	–

JCMWM6714GB

ENGINE ROOM HARNESS

Connector No.	E67
Connector Name	ICC SENSOR INTEGRATED UNIT
Connector Type	RS06FB-PR

H.S.

Terminal No.	Color of Wire	Signal Name [Specification]
1	R	IGNITION
2	V	[BAM] [ICC] [A/T] DRIVE SIGNAL [For Europe except for Russia with A/T and ICC], for Russia with ICC
2	SB	ITS COMM-H [LHD models for Europe except for Russia with A/T and ICC]
2	W	ITS COMM-H [RHD models for Europe with A/T and ICC]
3	L	CAN-H
4	B	GND
5	V	ITS COMM-L [LHD models]
5	LG	ITS COMM-L [RHD models]
6	P	CAN-L

Connector No.	E69
Connector Name	HORN (LOW)
Connector Type	P01FB-A

H.S.

Terminal No.	Color of Wire	Signal Name [Specification]
1	Y	–

Connector No.	E70
Connector Name	HORN (LOW)
Connector Type	P01FB-A

H.S.

Terminal No.	Color of Wire	Signal Name [Specification]
2	B	–

Connector No.	E74
Connector Name	WIRE TO WIRE
Connector Type	RH02FB

H.S.

Terminal No.	Color of Wire	Signal Name [Specification]
1	SHIELD	–
2	SHIELD	–

Connector No.	E75
Connector Name	WIRE TO WIRE
Connector Type	RH02MB

H.S.

Terminal No.	Color of Wire	Signal Name [Specification]
1	B	–
2	B	– [LHD models]
2	B/W	– [RHD models]

Connector No.	E76
Connector Name	AMBIENT SENSOR
Connector Type	RS02FB

H.S.

Terminal No.	Color of Wire	Signal Name [Specification]
1	G	–
2	P	–

Connector No.	E77
Connector Name	REFRIGERANT PRESSURE SENSOR
Connector Type	RK03FB

H.S.

Terminal No.	Color of Wire	Signal Name [Specification]
1	V	–
2	L	–
3	BG	–

Connector No.	E79
Connector Name	WIRE TO WIRE
Connector Type	M02FW-LC

H.S.

Terminal No.	Color of Wire	Signal Name [Specification]
1	Y	–

2	LG	–

Connector No.	E81
Connector Name	WIRE TO WIRE
Connector Type	RK08FB

H.S.

Terminal No.	Color of Wire	Signal Name [Specification]
1	W	–
2	L	–
3	R	–
4	Y	–
8	BR	–

Connector No.	E83
Connector Name	POP UP ENGINE HOOD ACTUATOR RH
Connector Type	HK02FY-3V-EX

H.S.

Terminal No.	Color of Wire	Signal Name [Specification]
1	R	ACTUATOR FRH+
2	G	ACTUATOR FRH−

JCMWM6715GB

ENGINE ROOM HARNESS

Connector No.	E84
Connector Name	POP UP ENGINE HOOD ACTUATOR LH
Connector Type	HK02FY-3V-EX

H.S.

Terminal No.	Color of Wire	Signal Name [Specification]
1	V	ACTUATOR FLH+
2	LG	ACTUATOR FLH-

Connector No.	E85
Connector Name	WIRE TO WIRE
Connector Type	RS06MG-DGY

H.S.

Terminal No.	Color of Wire	Signal Name [Specification]
1	BR	–
2	W	–
3	B	–
4	P	–
5	L	–
6	Y	–

Connector No.	E86
Connector Name	WIPER DEICER
Connector Type	X02MB

H.S.

Terminal No.	Color of Wire	Signal Name [Specification]
1	W	–
2	B/W	–

Connector No.	E87
Connector Name	WIPER DEICER RELAY
Connector Type	MS02FL-M2-LC

H.S.

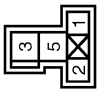

Terminal No.	Color of Wire	Signal Name [Specification]
1	G	–
2	B	–
3	LG	–
5	W	–

Connector No.	E100
Connector Name	WIRE TO WIRE
Connector Type	M02MW-LC

H.S.

Terminal No.	Color of Wire	Signal Name [Specification]
1	Y	–
2	LG	–

Connector No.	E101
Connector Name	FUSE BLOCK (J/B)
Connector Type	L01FW-MC

H.S.

Terminal No.	Color of Wire	Signal Name [Specification]
1D	R	–

Connector No.	E102
Connector Name	FUSE BLOCK (J/B)
Connector Type	M02FB-LC

H.S.

Terminal No.	Color of Wire	Signal Name [Specification]
1E	G	– [LHD models]
1E	V	– [RHD models]

Connector No.	E103
Connector Name	FUSE BLOCK (J/B)
Connector Type	NS10FW-CS

H.S.

Terminal No.	Color of Wire	Signal Name [Specification]
1F	SB	–
2F	V	– [LHD models]
2F	W	– [RHD models]

4F	G	–
6F	BG	– [LHD models]
6F	BR	– [RHD models]
8F	L	–
9F	R	–

JCMWM6716GB

CONNECTOR INFORMATION

ENGINE ROOM HARNESS

Connector No.	E106
Connector Name	WIRE TO WIRE
Connector Type	TH80FW-CS16-TM4

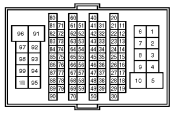

Terminal No.	Color of Wire	Signal Name [Specification]
1	GR	–
2	BG	– [LHD models]
2	V	– [RHD models]
3	BG	–
4	B/W	– [For the Middle East and China]
4	R	– [LHD models for Europe]
5	G	–
6	BR	– [Except LHD models without climate controlled seat]
6	BG	– [LHD models without climate controlled seat]
7	LG	– [LHD models]
7	SB	– [RHD models]
8	G	– [For the Middle East and China]
8	W	– [LHD models for Europe except for Russia]
8	V	– [RHD models]
9	W	–
10	L	– [Except with A/T and daytime running light system]
10	R	– [With A/T and daytime running light system]
11	V	– [LHD models]
11	P	– [RHD models]
12	R	– [LHD models]
12	LG	– [RHD models]
13	L	–
14	GR	–
15	P	–
16	W	–
17	V	–
18	BG	–
19	GR	–
20	LG	– [LHD models]
20	SB	– [RHD models]
21	SB	– [LHD models]
21	W	– [RHD models]
22	W	– [LHD models]
22	B	– [RHD models]
23	B	– [LHD models]
23	G	– [RHD models]
24	G	– [LHD models]
24	R	– [RHD models]
25	R	– [LHD models]
25	SHIELD	– [RHD models]
26	SHIELD	– [LHD models]
26	Y	– [RHD models]
27	Y	– [LHD models]
27	BR	– [RHD models]
28	LG	– [LHD models]
28	V	– [RHD models]
29	L	–
31	L	–
32	BG	–
33	P	–
34	V	–
35	BR	–
36	W	– [LHD models]
36	Y	– [RHD models]
37	Y	– [LHD models]
37	G	– [RHD models]
38	R	– [LHD models]
38	P	– [RHD models]
39	B	– [LHD models]
39	R	– [RHD models]
40	G	– [LHD models]
40	GR	– [RHD models]
41	W	– [LHD models]
41	BR	– [RHD models]
42	LG	– [LHD models]
42	R	– [RHD models]
43	SB	– [LHD models]
43	LG	– [RHD models]
44	GR	– [LHD models]
44	V	– [RHD models]
45	BG	– [LHD models]
45	GR	– [RHD models]
46	LG	– [LHD models]
46	W	– [RHD models]
47	V	– [LHD models]
47	G	– [RHD models]
48	P	– [LHD models]
48	SB	– [RHD models]
49	L	–
50	BR	–
51	Y	–
52	BR	– [LHD models]
52	GR	– [RHD models]
53	SB	– [LHD models]
53	B	– [RHD models]
54	V	–
55	P	– [LHD models]
55	L	– [RHD models]
56	R	–
57	L	–
58	BG	–
60	Y	– [LHD models]
60	P	– [RHD models]
61	R	– [LHD models]
61	BG	– [RHD models]
62	L	– [LHD models]
62	BR	– [RHD models]
63	W	– [LHD models]
63	R	– [RHD models]
64	BR	– [LHD models]
64	L	– [RHD models]
65	SHIELD	– [LHD models]
65	P	– [RHD models]
66	LG	– [LHD models]
66	GR	– [RHD models]
67	SB	–
68	G	–
69	V	–
70	SB	–
71	BG	–
72	W	–
73	B	–
74	R	–
75	G	–
76	SHIELD	–
77	V	–
78	BR	– [LHD models]
78	L	– [RHD models]
79	BG	– [LHD models]
79	R	– [RHD models]
80	W	– [LHD models]
80	P	– [RHD models]
81	P	– [LHD models]
81	G	– [RHD models]
82	G	– [LHD models]
82	V	– [RHD models]
83	V	– [LHD models]
83	L	– [RHD models]
84	L	– [LHD models]
84	BG	– [RHD models]
85	BG	– [LHD models]
85	LG	– [RHD models]
86	LG	– [LHD models]
86	SB	– [RHD models]
87	Y	– [LHD models]
87	BR	– [RHD models]
88	GR	– [LHD models]
88	G	– [RHD models]
89	W	– [LHD models]
89	SB	– [RHD models]
90	W	– [For the Middle East and China]
90	GR	– [LHD models for Europe except for Russia]
90	Y	– [RHD models]
91	G	–
92	B	– [LHD models]
92	Y	– [RHD models]
93	GR	– [LHD models]
93	BG	– [RHD models]
94	L	– [LHD models]
94	GR	– [RHD models]
95	Y	– [LHD models]
95	P	– [RHD models]
96	G	–
97	BR	–
98	SHIELD	–
99	L	–
100	P	–

Connector No.	E107
Connector Name	PARKING BRAKE SWITCH
Connector Type	TB01FW

Terminal No.	Color of Wire	Signal Name [Specification]
1	BG	– [LHD models]
1	V	– [RHD models]

Connector No.	E108
Connector Name	ASCD CLUTCH SWITCH
Connector Type	S02FL

Terminal No.	Color of Wire	Signal Name [Specification]
1	R	–
2	B	–

JCMWM6717GB

ENGINE ROOM HARNESS

Connector No.	E109
Connector Name	ASCD BRAKE SWITCH
Connector Type	S02FL

H.S.

Terminal No.	Color of Wire	Signal Name [Specification]
1	G	–
2	V	– [LHD models]
2	Y	– [RHD models]

Connector No.	E110
Connector Name	STOP LAMP SWITCH
Connector Type	M04FW-LC

H.S.

Terminal No.	Color of Wire	Signal Name [Specification]
1	Y	[Except LHD models for Europe except for Russia with M/T or Russia with ICC]
1	L	[LHD models for Europe except for Russia with M/T or Russia with ICC]
1	LG	– [RHD models with M/T]
2	SB	– [Except LHD models without shift lock relay]
2	W	– [LHD models without shift lock relay]
3	L	–
4	V	– [LHD models]
4	W	– [RHD models]

Connector No.	E111
Connector Name	CLUTCH INTERLOCK SWITCH
Connector Type	S02FL

H.S.

Terminal No.	Color of Wire	Signal Name [Specification]
1	G	–
2	GR	–

Connector No.	E112
Connector Name	ACCELERATOR PEDAL POSITION SENSOR
Connector Type	RH06FB

H.S.

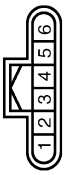

Terminal No.	Color of Wire	Signal Name [Specification]
1	P	–
2	V	–
3	R	–
4	W	–
5	L	–
6	GR	–

Connector No.	E113
Connector Name	ICC CLUTCH SWITCH
Connector Type	S02FL

H.S.

Terminal No.	Color of Wire	Signal Name [Specification]
1	P	–
2	L	–
3	SHIELD	–
4	Y	–
5	BR	–
6	SHIELD	–
7	W	–
8	B	–
10	SHIELD	–
11	SHIELD	–
12	LG	–
13	V	–
14	SHIELD	–
15	G	–
16	R	–

Connector No.	E114
Connector Name	ICC BRAKE SWITCH
Connector Type	S02FL

H.S.

Terminal No.	Color of Wire	Signal Name [Specification]
1	R	–
2	B	–

Terminal No.	Color of Wire	Signal Name [Specification]
1	SB	– [Except LHD models for Europe except for Russia with M/T or Russia with ICC]
1	G	– [LHD models for Europe except for Russia with M/T or Russia with ICC]
2	V	– [LHD models]
2	Y	– [RHD models]

Connector No.	E117
Connector Name	WIRE TO WIRE
Connector Type	M06MW-LC

H.S.

Terminal No.	Color of Wire	Signal Name [Specification]
1	Y	–
3	GR	–
4	P	–
5	BR	–
6	BG	–

Connector No.	E120
Connector Name	GAS SENSOR
Connector Type	RH03FB

H.S.

Terminal No.	Color of Wire	Signal Name [Specification]
1	Y	POWER [LHD models]
1	BR	POWER [RHD models]
2	B	GND
3	LG	GAS SENSOR SIGNAL [LHD models]
3	G	GAS SENSOR SIGNAL [RHD models]

Connector No.	E121
Connector Name	WIRE TO WIRE
Connector Type	TH16MW-NH

H.S.

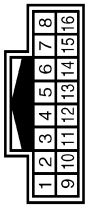

Terminal No.	Color of Wire	Signal Name [Specification]
1	P	–
2	L	–
3	SHIELD	–
4	Y	–
5	BR	–
6	SHIELD	–
7	W	–
8	B	–
10	SHIELD	–
11	SHIELD	–
12	LG	–
13	V	–
14	SHIELD	–
15	G	–
16	R	–

JCMWM6718GB

ENGINE ROOM HARNESS

Connector No.	E122
Connector Name	WIRE TO WIRE
Connector Type	NS12FW-CS

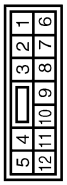

Terminal No.	Color of Wire	Signal Name [Specification]
1	LG	–
2	Y	–
3	BR	–
4	G	–
5	W	–
6	GR	–
7	P	–
8	R	–
9	L	–
10	BG	–
11	SB	–
12	V	–

Connector No.	E124
Connector Name	WIRE TO WIRE
Connector Type	TH08MW-NH

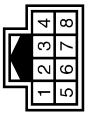

Terminal No.	Color of Wire	Signal Name [Specification]
1	W	–
2	L	–
3	R	–
4	Y	–
7	SHIELD	–
8	BR	–

Connector No.	E151
Connector Name	WIRE TO WIRE
Connector Type	RK08MB

Terminal No.	Color of Wire	Signal Name [Specification]
1	Y	–
2	G	–
3	R	–
4	W	–
8	B	–

Connector No.	E152
Connector Name	CORNER SENSOR FRONT RH
Connector Type	YDX02FB

Terminal No.	Color of Wire	Signal Name [Specification]
1	W	–
2	B	–

Connector No.	E153
Connector Name	CENTER SENSOR FRONT RH
Connector Type	YDX02FB

Terminal No.	Color of Wire	Signal Name [Specification]
1	G	–
2	B	–

Connector No.	E154
Connector Name	CENTER SENSOR FRONT LH
Connector Type	YDX02FB

Terminal No.	Color of Wire	Signal Name [Specification]
1	Y	–
2	B	–

Connector No.	E155
Connector Name	CORNER SENSOR FRONT LH
Connector Type	YDX02FB

Terminal No.	Color of Wire	Signal Name [Specification]
1	R	–
2	B	–

Connector No.	E156
Connector Name	WIRE TO WIRE
Connector Type	RS02FGY

Terminal No.	Color of Wire	Signal Name [Specification]
1	B	–
2	W	–

Connector No.	E157
Connector Name	WIRE TO WIRE
Connector Type	RS02FGY

Terminal No.	Color of Wire	Signal Name [Specification]
1	B	–
2	R	–

JCMWM6719GB

CONNECTOR INFORMATION

ENGINE ROOM HARNESS

Connector No.	E161
Connector Name	WIRE TO WIRE
Connector Type	RS06FG-DGY

Terminal No.	Color of Wire	Signal Name [Specification]
1	BR	–
2	G	–
3	R	–
4	P	–
5	L	–
6	Y	–

Connector No.	E162
Connector Name	BUMPER SENSOR RH
Connector Type	HK02FY-1V-EX-LC

Terminal No.	Color of Wire	Signal Name [Specification]
1	G	–
2	R	–

Connector No.	E163
Connector Name	BUMPER SENSOR CENTER
Connector Type	HK02FY-1V-EX-LC

Terminal No.	Color of Wire	Signal Name [Specification]
1	Y	–
2	BR	–

Connector No.	E164
Connector Name	BUMPER SENSOR LH
Connector Type	HK02FY-1V-EX-LC

Terminal No.	Color of Wire	Signal Name [Specification]
1	P	–
2	L	–

Connector No.	E171
Connector Name	WIRE TO WIRE
Connector Type	RS02MGY

Terminal No.	Color of Wire	Signal Name [Specification]
1	B	–
2	W	–

Connector No.	E172
Connector Name	CORNER SENSOR FRONT RH
Connector Type	YDX02FB

Terminal No.	Color of Wire	Signal Name [Specification]
1	W	–
2	B	–

Connector No.	E181
Connector Name	WIRE TO WIRE
Connector Type	RS02MGY

Terminal No.	Color of Wire	Signal Name [Specification]
1	B	–
2	R	–

Connector No.	E182
Connector Name	CORNER SENSOR FRONT LH
Connector Type	YDX02FB

Terminal No.	Color of Wire	Signal Name [Specification]
1	R	–
2	B	–

Connector No.	E201
Connector Name	BATTERY TERMINAL WITH FUSIBLE LINK
Connector Type	24340 79908

Terminal No.	Color of Wire	Signal Name [Specification]
5	B/Y	–

Connector No.	E202
Connector Name	BATTERY TERMINAL WITH FUSIBLE LINK
Connector Type	24340 79905

Terminal No.	Color of Wire	Signal Name [Specification]
6	B/GR	–

Connector No.	E203
Connector Name	ALTERNATOR
Connector Type	24340 65F45

Terminal No.	Color of Wire	Signal Name [Specification]
1	B/GR	B

JCMWM6720GB

ENGINE ROOM HARNESS

Connector No.	E204
Connector Name	STARTER MOTOR
Connector Type	24348 51E61

H.S.

2

Terminal No.	Color of Wire	Signal Name [Specification]
2	B/Y	–

Connector No.	E301
Connector Name	COOLING FAN CONTROL MODULE
Connector Type	6188-0259

H.S.

4 5

Terminal No.	Color of Wire	Signal Name [Specification]
4	–	–
5	–	–

Connector No.	E302
Connector Name	COOLING FAN CONTROL MODULE
Connector Type	6188-0259

H.S.

6 7

Terminal No.	Color of Wire	Signal Name [Specification]
6	–	–
7	–	–

JCMWM6721GB

F Engine Control Harness

INFOID:0000000006044200

ENGINE CONTROL HARNESS

Connector No.	F1
Connector Name	WIRE TO WIRE
Connector Type	SAA36FB-RS8-SH28

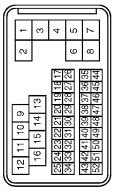

Terminal No.	Color of Wire	Signal Name [Specification]
1	L/Y	–
2	SHIELD	–
3	L/B	–
4	SHIELD	–
5	BR	–
7	G	–
8	W	–
9	W	–
10	G	–
11	R	–
12	P	–
13	L	–
14	LG	–
15	R	–
16	Y	–
17	W	–
18	LG	–
19	P	–
20	O	– [LHD models]
20	BG	– [RHD models]
21	BR	–
22	G	–
23	Y	–
24	LG	–
25	V	–
26	R	–
27	GR	–
28	BR	–
29	L	–
30	R	–
31	P	–
32	W	–
33	SB	–
34	O	–
37	SHIELD	– [For Europe]
37	B	– [For the Middle East and China]
38	W	–
39	Y	–
40	G	–
41	B	–
42	GR	–
43	R	–
46	SHIELD	–
47	W/L	–
48	LG	–
49	O/L	–
50	L/Y	–
51	W	–
52	L/G	–

Connector No.	F2
Connector Name	CRANKSHAFT POSITION SENSOR (POS)
Connector Type	RH03FB

Terminal No.	Color of Wire	Signal Name [Specification]
1	R	–
2	Y	–
3	W	–

Connector No.	F3
Connector Name	AIR FUEL RATIO (A/F) SENSOR 1 (BANK 1)
Connector Type	AFZ04FDGY

Terminal No.	Color of Wire	Signal Name [Specification]
1	L	–
2	R	–
3	W	–
4	Y	–

Connector No.	F5
Connector Name	CAMSHAFT POSITION SENSOR (PHASE) (BANK 1)
Connector Type	RH03FB

Terminal No.	Color of Wire	Signal Name [Specification]
1	G	–
2	P	–
3	O	–

Connector No.	F6
Connector Name	ELECTRIC THROTTLE CONTROL ACTUATOR (BANK 1)
Connector Type	RH06FB

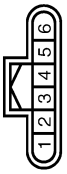

Terminal No.	Color of Wire	Signal Name [Specification]
1	G	MOTOR1–1
2	BR	MOTOR1–2
3	R	GND–A (TPS)
4	Y	TPS1–1
5	B	TPS2–1
6	L	AVCC–TPS

Connector No.	F7
Connector Name	EVAP CANISTER PURGE VOLUME CONTROL SOLENOID VALVE
Connector Type	E02FL-RS-LGY

Terminal No.	Color of Wire	Signal Name [Specification]
1	R	–
2	GR	–

Connector No.	F8
Connector Name	CONDENSER
Connector Type	M02FW-LC

Terminal No.	Color of Wire	Signal Name [Specification]
1	W	–
2	B	–

JCMWM6722GB

ENGINE CONTROL HARNESS

Connector No.	F9
Connector Name	WIRE TO WIRE
Connector Type	RS04FL-B

H.S.

Terminal No.	Color of Wire	Signal Name [Specification]
1	W	–
2	SHIELD	–
3	W	–
4	SHIELD	–

Connector No.	F10
Connector Name	WIRE TO WIRE
Connector Type	RH08FB

H.S.

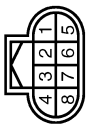

Terminal No.	Color of Wire	Signal Name [Specification]
1	G	–
2	GR	–
3	BR	–
4	R	–
5	O	–
6	W	–
7	V	–

Connector No.	F11
Connector Name	IGNITION COIL No. 1 (WITH POWER TRANSISTOR)
Connector Type	E03FGY-RS

H.S.

Terminal No.	Color of Wire	Signal Name [Specification]
1	Y	–
2	B	–
3	W	–

Connector No.	F12
Connector Name	IGNITION COIL No. 2 (WITH POWER TRANSISTOR)
Connector Type	E03FGY-RS

H.S.

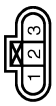

Terminal No.	Color of Wire	Signal Name [Specification]
1	G	–
2	B	–
3	W	–

Connector No.	F13
Connector Name	IGNITION COIL No. 3 (WITH POWER TRANSISTOR)
Connector Type	E03FGY-RS

H.S.

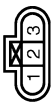

Terminal No.	Color of Wire	Signal Name [Specification]
1	L	–
2	B	–
3	W	–

Connector No.	F14
Connector Name	IGNITION COIL No. 4 (WITH POWER TRANSISTOR)
Connector Type	E03FGY-RS

H.S.

Terminal No.	Color of Wire	Signal Name [Specification]
1	GR	–
2	B	–
3	W	–

Connector No.	F15
Connector Name	IGNITION COIL No. 5 (WITH POWER TRANSISTOR)
Connector Type	E03FGY-RS

H.S.

Terminal No.	Color of Wire	Signal Name [Specification]
1	V	–
2	B	–
3	W	–

Connector No.	F16
Connector Name	IGNITION COIL No. 6 (WITH POWER TRANSISTOR)
Connector Type	E03FGY-RS

H.S.

Terminal No.	Color of Wire	Signal Name [Specification]
1	SB	–
2	B	–
3	W	–

Connector No.	F17
Connector Name	ENGINE COOLANT TEMPERATURE SENSOR
Connector Type	E02FGY-RS

H.S.

Terminal No.	Color of Wire	Signal Name [Specification]
1	Y	–
2	B	–

Terminal No.	Color of Wire	Signal Name [Specification]

JCMWM6723GB

ENGINE CONTROL HARNESS

Connector No.	F18
Connector Name	CAMSHAFT POSITION SENSOR (PHASE) (BANK 2)
Connector Type	RH03FB

H.S.

Terminal No.	Color of Wire	Signal Name [Specification]
1	SB	–
2	G	–
3	L	–

Connector No.	F20
Connector Name	AIR FUEL RATIO (A/F) SENSOR 1 (BANK 2)
Connector Type	AFZ04FDGY

H.S.

Terminal No.	Color of Wire	Signal Name [Specification]
1	LG	–
2	V	–
3	W	–
4	Y	–

Connector No.	F27
Connector Name	ELECTRIC THROTTLE CONTROL ACTUATOR (BANK 2)
Connector Type	RH06FB

H.S.

Terminal No.	Color of Wire	Signal Name [Specification]
1	G	–
2	R	–
3	W	–
4	B	–
5	GR	–
6	V	–

Connector No.	F28
Connector Name	INTAKE VALVE TIMING CONTROL SOLENOID VALVE (BANK 1)
Connector Type	E02FG-RS-LGY

H.S.

Terminal No.	Color of Wire	Signal Name [Specification]
1	W	–
2	R	–

Connector No.	F29
Connector Name	INTAKE VALVE TIMING CONTROL SOLENOID VALVE (BANK 2)
Connector Type	E02FG-RS-LGY

H.S.

Terminal No.	Color of Wire	Signal Name [Specification]
1	G	–
2	R	–

Connector No.	F31
Connector Name	MASS AIR FLOW SENSOR (BANK 1)
Connector Type	RH06FB

H.S.

Terminal No.	Color of Wire	Signal Name [Specification]
1	B	–
2	P	–
3	SB	–
4	LG	–
5	Y	–

Connector No.	F35
Connector Name	POWER STEERING PRESSURE SENSOR
Connector Type	RK03FB

H.S.

Terminal No.	Color of Wire	Signal Name [Specification]
1	LG	–
2	Y	–
3	R	–

Connector No.	F36
Connector Name	ALTERNATOR
Connector Type	HS03FB

H.S.

Terminal No.	Color of Wire	Signal Name [Specification]
2	G	–
3	V	–
4	W	–

Connector No.	F37
Connector Name	OIL PRESSURE SWITCH
Connector Type	E01FGY-RS-AR

H.S.

Terminal No.	Color of Wire	Signal Name [Specification]
1	BR	–

Connector No.	F38
Connector Name	ENGINE OIL TEMPERATURE SENSOR
Connector Type	E02FGY-RS

H.S.

Terminal No.	Color of Wire	Signal Name [Specification]
1	G	–
2	B	–

JCMWM6724GB

ENGINE CONTROL HARNESS

Connector No.	F42
Connector Name	MASS AIR FLOW SENSOR (BANK 2)
Connector Type	RH06FB

H.S.

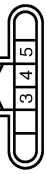

Terminal No.	Color of Wire	Signal Name [Specification]
3	BR	–
4	Y	–
5	GR	–

Connector No.	F43
Connector Name	COMPRESSOR
Connector Type	RS01FB

H.S.

Terminal No.	Color of Wire	Signal Name [Specification]
1	L	–

Connector No.	F44
Connector Name	COMPRESSOR
Connector Type	RK02FGY

H.S.

Terminal No.	Color of Wire	Signal Name [Specification]
2	Y	–
3	O	– [LHD models]
3	BG	– [RHD models]

Connector No.	F45
Connector Name	POWER STEERING SOLENOID VALVE
Connector Type	RS02FBR-DGY

H.S.

Terminal No.	Color of Wire	Signal Name [Specification]
1	LG	–
2	B	–

Connector No.	F46
Connector Name	VVEL CONTROL SHAFT POSITION SENSOR (BANK 1)
Connector Type	RH06FB

H.S.

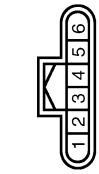

Terminal No.	Color of Wire	Signal Name [Specification]
1	R	–
2	B	–
3	GR	–
4	G	–
5	W	–
6	Y	–

Connector No.	F47
Connector Name	VVEL CONTROL SHAFT POSITION SENSOR (BANK 2)
Connector Type	RH06FB

H.S.

Terminal No.	Color of Wire	Signal Name [Specification]
1	L/G	–
2	L/Y	–
3	W	–
4	O/L	–
5	W/L	–
6	LG	–

Connector No.	F48
Connector Name	VVEL ACTUATOR MOTOR (BANK 1)
Connector Type	X02FB

H.S.

Terminal No.	Color of Wire	Signal Name [Specification]
1	G	–
2	BR	–

Connector No.	F49
Connector Name	VVEL ACTUATOR MOTOR (BANK 2)
Connector Type	X02FB

H.S.

Terminal No.	Color of Wire	Signal Name [Specification]
1	Y	–
2	R	–
3	L	–
4	V	–
5	B	–
6	Y	– [For Russia and the Middle East, China]
6	G	– [For Europe except for Russia]
7	R	–
8	P	–
9	GR	–
10	B	–

Terminal No.	Color of Wire	Signal Name [Specification]
1	L/B	–
2	L/Y	–

Connector No.	F50
Connector Name	MANIFOLD ABSOLUTE PRESSURE (MAP) SENSOR
Connector Type	RH03FB

H.S.

Terminal No.	Color of Wire	Signal Name [Specification]
1	L	–
2	O	–
3	W	–

Connector No.	F51
Connector Name	A/T ASSEMBLY
Connector Type	RK10FG-DGY

H.S.

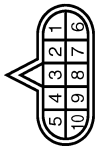

JCMWM6725GB

CONNECTOR INFORMATION

ENGINE CONTROL HARNESS

Connector No.	F52
Connector Name	STARTER MOTOR
Connector Type	X01MGY

Terminal No.	Color of Wire	Signal Name [Specification]
1	W	–

Connector No.	F53
Connector Name	HEATED OXYGEN SENSOR 2 (BANK 2)
Connector Type	AFZ04FB

Terminal No.	Color of Wire	Signal Name [Specification]
1	B	–
2	LG	–
3	SB	–
4	O	–

Connector No.	F54
Connector Name	HEATED OXYGEN SENSOR 2 (BANK 1)
Connector Type	AFZ04FB

Terminal No.	Color of Wire	Signal Name [Specification]
1	B	–
2	R	–
3	P	–
4	W	–

Connector No.	F55
Connector Name	PARK / NEUTRAL POSITION SWITCH
Connector Type	RK02FB

Terminal No.	Color of Wire	Signal Name [Specification]
1	BR	–
2	W	–

Connector No.	F56
Connector Name	BACK-UP LAMP SWITCH
Connector Type	RK02FB

Terminal No.	Color of Wire	Signal Name [Specification]
1	R	– [LHD models]
1	G	– [RHD models]
2	O	– [LHD models]
2	BG	– [RHD models]

Connector No.	F101
Connector Name	ECM
Connector Type	RH40FB-RZ8-L-LH-Z

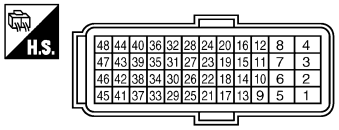

Terminal No.	Color of Wire	Signal Name [Specification]
1	W	AFH1/O2HF1
2	G	MOTOR1-B1
3	R	VMOT1-B1
4	BR	MOTOR2-B1
5	W	AFH2/O2HF2
8	B	GND
11	GR	IGN#4
12	L	IGN#3
15	V	IGN#5
16	G	IGN#2
17	P	O2HR1
18	W	CVTC#1
19	SB	IGN#6
20	Y	IGN#1
21	GR	EVAP
22	R	FPR
24	P	SSOFF
25	O	MOTRLY1-B1
28	BR	ABORT
29	G	CVTC#2
30	Y	TPS1-B1
31	R	TPS1-B2
33	SB	O2HR2
34	B	TPS2-B1
35	W	TPS2-B2
36	O	GNDA/INTPRES/MVPRES [LHD models]
36	BG	GNDA/INTPRES/MVPRES [RHD models]
37	W	POS
38	O	INTPRES1
39	P	MVPRES
40	R	GNDA-TPS-B1
41	R	CLUTCH L
43	G	AVCC-TPS-B2
44	L	AVCC-TPS-B1
45	LG	AVCC2/INTPRESS/MVPRES
46	R	AVCC2-POS
47	Y	GND-POS
48	B	GNDA-TPS-B2

CONNECTOR INFORMATION

ENGINE CONTROL HARNESS

Connector No.	F102
Connector Name	ECM
Connector Type	RH40FBR-RZ8-L-LH-Z

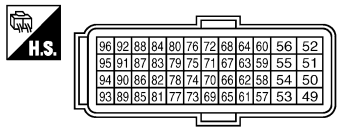

Terminal No.	Color of Wire	Signal Name [Specification]
49	GR	MOTOR2-B2
50	V	MOTOR1-B2
52	R	VMOT-B2
53	W	IGNSW
54	Y	ENG CAN-L1
55	LG	ENG CAN-H1
57	L	AF+1/O2SF1
59	O	PHASE#1
60	G	AVCC-PHS1-E-PHS1/PS
61	R	AF-1
63	L	PHASE#2
64	SB	AVCC-PHS-E-PHS2/CU
65	LG	AF+2/O2SF2
66	V	AF-2
67	P	TA1
68	LG	GNDA QA1/TA1
69	W	KNK2
71	Y	TW
72	SHIELD	GNDA-KNK
73	W	KNK1
76	W	O2SR1
77	SB	QA1+
78	G	TO1
79	BR	QA2+
80	O	O2SR2
81	R	INJ#3
82	V	INJ#6
84	B	GNDA O2S-TW-TO
85	BR	INJ#2
86	W	INJ#5
87	Y	PSPRES
89	GR	INJ#1
90	O	INJ#4
91	SB	CURSEN
92	G	GNDA-PHASE#2
93	P	BATT
94	Y	GNDA-QA2/TA2
95	G	GNDA-CURSEN
96	P	GNDA-PHASE#1/PS

Connector No.	F103
Connector Name	WIRE TO WIRE
Connector Type	TK36FW-NS10

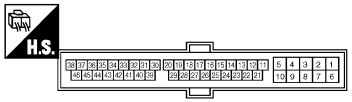

Terminal No.	Color of Wire	Signal Name [Specification]
2	G	–
4	R	–
5	B	–
9	Y	–
10	GR	–
19	O	– [LHD models]
19	BG	– [RHD models]
20	Y	–
28	B	–
29	LG	–
30	R	– [LHD models]
30	G	– [RHD models]
31	R	–
41	O	– [LHD models]
41	BG	– [RHD models]
42	BR	–
43	P	–
44	L	–
45	Y	– [For Russia and the Middle East, China]
45	G	– [For Europe except for Russia]
46	V	–

Connector No.	F120
Connector Name	WIRE TO WIRE
Connector Type	RH08MB

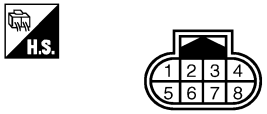

Terminal No.	Color of Wire	Signal Name [Specification]
1	G	– [For Europe]
1	W	– [For the Middle East and China]
2	GR	– [For Europe]
2	R	– [For the Middle East and China]
3	BR	– [For Europe]
3	R	– [For the Middle East and China]
4	R	–
5	R	– [For the Middle East and China]
5	O	– [LHD models for Europe]
5	BG	– [RHD models]
6	W	–
7	V	–

Connector No.	F121
Connector Name	FUEL INJECTOR No. 1
Connector Type	HS02FGY

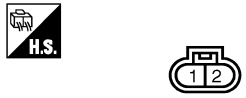

Terminal No.	Color of Wire	Signal Name [Specification]
1	G	– [For Europe]
1	W	– [For the Middle East and China]
2	GR	– [For Europe]
2	R	– [For the Middle East and China]

Connector No.	F122
Connector Name	FUEL INJECTOR No. 2
Connector Type	HS02FGY

Terminal No.	Color of Wire	Signal Name [Specification]
1	G	– [For Europe]
1	W	– [For the Middle East and China]
2	BR	– [For Europe]
2	R	– [For the Middle East and China]

Connector No.	F123
Connector Name	FUEL INJECTOR No. 3
Connector Type	HS02FGY

Terminal No.	Color of Wire	Signal Name [Specification]
1	G	– [For Europe]
1	W	– [For the Middle East and China]
2	R	–

Connector No.	F124
Connector Name	FUEL INJECTOR No. 4
Connector Type	HS02FGY

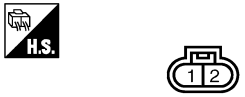

Terminal No.	Color of Wire	Signal Name [Specification]
1	G	– [For Europe]
1	W	– [For the Middle East and China]
2	R	– [For the Middle East and China]
2	O	– [LHD models for Europe]
2	BG	– [RHD models]

JCMWM6727GB

CONNECTOR INFORMATION

ENGINE CONTROL HARNESS

Connector No.	F125
Connector Name	FUEL INJECTOR No. 5
Connector Type	HS02FGY

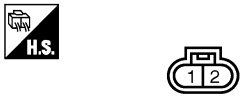

Terminal No.	Color of Wire	Signal Name [Specification]
1	G	– [For Europe]
1	W	– [For the Middle East and China]
2	W	–

Connector No.	F126
Connector Name	FUEL INJECTOR No. 6
Connector Type	HS02FGY

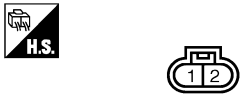

Terminal No.	Color of Wire	Signal Name [Specification]
1	G	– [For Europe]
1	W	– [For the Middle East and China]
2	V	–

Connector No.	F157
Connector Name	TCM (TRANSMISSION CONTROL MODULE)
Connector Type	SP10FG

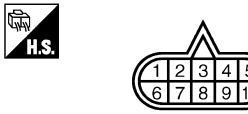

Terminal No.	Color of Wire	Signal Name [Specification]
1	W	VIGN
2	B	BATT
3	R	CAN-H
4	O	K-LINE
5	G	GND
6	GR	VIGN
7	L	REV LAMP RLY
8	BR	CAN-L
9	Y	STARTER RLY
10	W/B	GND

Connector No.	F201
Connector Name	WIRE TO WIRE
Connector Type	RS04ML-B

Terminal No.	Color of Wire	Signal Name [Specification]
1	W	–
2	SHIELD	–
3	W	–
4	SHIELD	–

Connector No.	F202
Connector Name	KNOCK SENSOR (BANK 2)
Connector Type	E02FG-RS-LGY

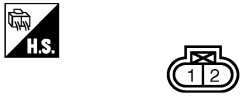

Terminal No.	Color of Wire	Signal Name [Specification]
1	W	–
2	SHIELD	–

Connector No.	F203
Connector Name	KNOCK SENSOR (BANK 1)
Connector Type	E02FG-RS-LGY

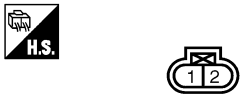

Terminal No.	Color of Wire	Signal Name [Specification]
1	W	–
2	SHIELD	–

JCMWM6728GB

CONNECTOR INFORMATION

INFOID:0000000006044201

MAIN HARNESS

Connector No.	M1
Connector Name	FUSE BLOCK (J/B)
Connector Type	NS06FW-M2

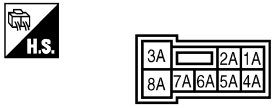

Terminal No.	Color of Wire	Signal Name [Specification]
1A	V	– [LHD models]
1A	Y	– [RHD models]
2A	G	–
3A	L	–
4A	P	–
5A	BR	– [LHD models]
5A	V	– [RHD models]
6A	Y	–
7A	GR	– [LHD models]
7A	R	– [RHD models]
8A	L	–

Connector No.	M2
Connector Name	FUSE BLOCK (J/B)
Connector Type	NS10FW-CS

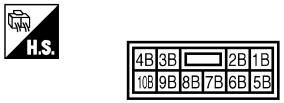

Terminal No.	Color of Wire	Signal Name [Specification]
1B	R	–
3B	P	– [LHD models]
3B	LG	– [RHD models]
4B	G	–
5B	BG	–
6B	Y	–
7B	P	– [LHD models]
7B	R	– [RHD models]
8B	R	–
9B	SB	–

Connector No.	M3
Connector Name	FUSE BLOCK (J/B)
Connector Type	NS12FW-CS

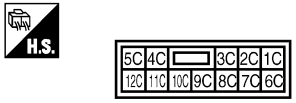

Terminal No.	Color of Wire	Signal Name [Specification]
6C	R	–
7C	B	–
9C	BG	– [LHD models]
9C	L	– [RHD models]
10C	L	– [LHD models]
10C	GR	– [RHD models]
11C	LG	–
12C	R	–

Connector No.	M4
Connector Name	WIRE TO WIRE
Connector Type	M02FW-LC

Terminal No.	Color of Wire	Signal Name [Specification]
1	Y	–
2	Y	–

Connector No.	M5
Connector Name	WIRE TO WIRE
Connector Type	TH40MW-CS15

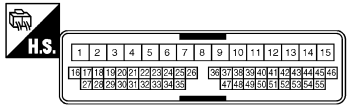

Terminal No.	Color of Wire	Signal Name [Specification]
2	R	–
3	G	–
4	R	– [Except RHD models with automatic drive positioner]
4	SB	– [RHD models with automatic drive positioner]
5	B	– [LHD models]
5	BR	– [RHD models]
6	BG	– [LHD models]
6	B	– [RHD models]
7	W	– [LHD models]
7	P	– [RHD models]
8	B	– [LHD models]
8	P	– [RHD models]
9	G	– [LHD models]
9	V	– [RHD models]
10	V	– [LHD models]
10	L	– [RHD models]
11	W	– [LHD models]
11	SB	– [RHD models]
12	L	– [LHD models]
12	Y	– [RHD models]
13	B	–
14	GR	–
15	Y	–
16	Y/B	–
17	Y	–
19	R	–
20	BG	– [LHD models]
20	P	– [RHD models]
21	W	– [LHD models]
21	R	– [RHD models]
22	P	–
23	BG	–
24	V	–
25	BR	– [LHD models]
25	L	– [RHD models]
26	R	–
27	P	–
28	LG	–
29	SB	–
30	G	–
31	V	–
32	BR	– [LHD models]
32	V	– [RHD models]
33	GR	– [LHD models]
33	LG	– [RHD models]
34	G	– [LHD models]
34	Y	– [RHD models]
35	L	– [LHD models]
35	SB	– [RHD models]
36	R	–
37	BG	– [RHD models]
38	G	– [LHD models with automatic drive positioner]
38	L	– [LHD models without automatic drive positioner]
38	SB	– [RHD models]
39	BR	– [LHD models with automatic drive positioner]
39	L	– [LHD models without automatic drive positioner]
39	G	– [RHD models]
40	Y	– [LHD models]
40	R	– [RHD models]
41	BR	– [LHD models with automatic drive positioner]
41	G	– [LHD models without automatic drive positioner]
41	V	– [RHD models with automatic drive positioner]
41	L	– [RHD models without automatic drive positioner]
42	R	– [LHD models]
42	BR	– [RHD models with automatic drive positioner]
42	L	– [RHD models without automatic drive positioner]
43	G	– [LHD models]
43	Y	– [RHD models]
44	Y	– [LHD models]
44	L	– [RHD models]
45	GR	– [LHD models]
45	LG	– [RHD models]
46	BR	– [LHD models]
46	L	– [RHD models]
47	V	– [LHD models]
47	L	– [RHD models]
48	LG	– [LHD models]
48	Y	– [RHD models]
49	P	– [LHD models]
49	G	– [RHD models]
50	SB	– [LHD models]
50	W	– [RHD models]
51	GR	– [LHD models]
51	W	– [RHD models]
52	L	– [LHD models]
52	R	– [RHD models]
53	Y	–
54	L	–

CONNECTOR INFORMATION

MAIN HARNESS

Connector No.	M6
Connector Name	WIRE TO WIRE
Connector Type	TH80MW-CS16-TM4

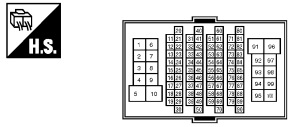

Terminal No.	Color of Wire	Signal Name [Specification]
1	BG	–
2	BG	– [LHD models]
2	V	– [RHD models]
3	R	–
4	G	– [For the Middle East and China]
4	L	– [LHD models for Europe]
5	G	–
6	BR	–
7	BR	– [LHD models]
7	P	– [RHD models]
8	Y	– [For the Middle East and China]
8	W	– [LHD models for Europe except for Russia]
8	BR	– [RHD models]
9	GR	–
10	R	–
11	GR	– [LHD models]
11	W	– [RHD models]
12	R	– [LHD models]
12	L	– [RHD models]
13	L	–
14	G	–
15	P	–
16	W	–
17	BR	–
18	V	–
19	BG	–
20	L	– [LHD models]
20	SB	– [RHD models]
21	SB	– [LHD models]
21	B	– [RHD models]
22	G	– [LHD models]
22	W	– [RHD models]
23	L	– [LHD models]
23	G	– [RHD models]
24	W	– [LHD models]
24	R	– [RHD models]
25	R	– [LHD models]
25	SHIELD	– [RHD models]
26	SHIELD	– [LHD models]
26	Y	– [RHD models]
27	Y	– [LHD models]
27	W	– [RHD models]
28	GR	– [LHD models]
28	W	– [RHD models]
29	P	–
31	L	– [LHD models]
31	V	– [RHD models]
32	Y	–
33	GR	– [LHD models]
33	BG	– [RHD models]
34	P	– [LHD models]
34	W	– [RHD models]
35	BR	–
36	BR	– [LHD models]
36	R	– [RHD models]
37	Y	– [LHD models]
37	G	– [RHD models]
38	LG	– [LHD models]
38	R	– [RHD models]
39	SB	– [LHD models]
39	R	– [RHD models]
40	G	– [LHD models]
40	W	– [RHD models]
41	W	– [LHD models]
41	BG	– [RHD models]
42	LG	– [LHD models]
42	R	– [RHD models]
43	P	– [LHD models]
43	G	– [RHD models]
44	GR	– [LHD models with A/T]
44	R	– [LHD models with M/T]
44	V	– [RHD models]
45	BG	– [LHD models]
45	W	– [RHD models]
46	G	– [LHD models]
46	W	– [RHD models]
47	P	– [LHD models]
47	G	– [RHD models]
48	P	– [LHD models]
48	G	– [RHD models]
49	L	–
50	W	–
51	Y	–
52	BR	– [LHD models]
52	R	– [RHD models]
53	SB	– [LHD models]
53	W	– [RHD models]
54	V	–
55	P	– [LHD models]
55	L	– [RHD models]
56	R	–
57	L	–
58	BG	–
60	W	– [LHD models]
60	P	– [RHD models]
61	R	– [LHD models]
61	BG	– [RHD models]
62	G	– [LHD models]
62	BR	– [RHD models]
63	Y	– [LHD models]
63	R	– [RHD models]
64	B	– [LHD models]
64	L	– [RHD models]
65	SHIELD	– [LHD models]
65	P	– [RHD models]
66	Y	– [LHD models]
66	GR	– [RHD models with A/T]
66	R	– [RHD models with M/T]
67	G	–
68	L	–
69	L	–
70	P	–
71	BG	–
72	G	– [LHD models]
72	B	– [RHD models]
73	B	– [LHD models]
73	G	– [RHD models]
74	W	– [LHD models]
74	R	– [RHD models]
75	R	– [LHD models]
75	W	– [RHD models]
76	SHIELD	–
77	V	–
78	LG	– [LHD models]
78	L	– [RHD models]
79	BR	– [LHD models]
79	R	– [RHD models]
80	SB	– [LHD models]
80	P	– [RHD models]
81	R	– [LHD models]
81	P	– [RHD models]
82	V	–
83	W	– [LHD models]
83	L	– [RHD models]
84	L	– [LHD models]
84	BG	– [RHD models]
85	BG	– [LHD models]
85	Y	– [RHD models]
86	G	– [LHD models]
86	L	– [RHD models]
87	V	– [LHD models]
87	Y	– [RHD models]
88	B	– [LHD models]
88	G	– [RHD models]
89	SB	– [LHD models]
89	R	– [RHD models]
90	G	– [For the Middle East and China]
90	GR	– [LHD models for Europe except for Russia]
90	BR	– [RHD models]
91	W	–
92	B	– [LHD models]
92	Y	– [RHD models]
93	G	– [LHD models]
93	R	– [RHD models]
94	L	– [LHD models]
94	LG	– [RHD models]
95	BR	– [LHD models]
95	Y	– [RHD models]
96	W	–
97	P	–
98	SHIELD	–
99	V	–
100	SB	–

CONNECTOR INFORMATION

MAIN HARNESS

Connector No.	M7
Connector Name	WIRE TO WIRE
Connector Type	TH80MW-CS16-TM4

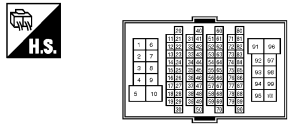

Terminal No.	Color of Wire	Signal Name [Specification]
1	R	– [LHD models]
1	BR	– [RHD models]
2	Y	– [LHD models]
2	R	– [RHD models]
3	G	– [LHD models]
3	Y	– [RHD models]
4	V	– [LHD models]
4	Y	– [RHD models]
5	L	– [LHD models]
5	R	– [RHD models]
6	B	– [LHD models]
6	V	– [RHD models]
7	V	– [LHD models]
7	L	– [RHD models]
8	G	–
9	L	– [LHD models]
9	B	– [RHD models]
10	G	–
11	BG	– [LHD models]
11	L	– [RHD models]
12	SHIELD	– [LHD models]
12	LG	– [RHD models]
13	V	– [LHD models]
13	GR	– [RHD models]
14	BR	–
15	GR	– [LHD models]
15	V	– [RHD models]
16	LG	– [LHD models]
16	SHIELD	– [RHD models]
17	L	– [LHD models]
17	SB	– [RHD models]
18	V	–
19	B	–
20	G	–
21	P	–
22	Y	–
23	SB	– [LHD models]
23	BG	– [RHD models]
24	B	– [LHD models]
24	SB	– [RHD models]
25	W	– [LHD models]
25	BG	– [RHD models]
26	Y	– [LHD models]
26	V	– [RHD models]
27	V	– [LHD models]
27	W	– [RHD models]
28	P	– [LHD models]
28	B	– [RHD models]
29	V	– [LHD models]
29	P	– [RHD models]
30	BG	–
31	SHIELD	– [LHD models with BOSE system]
31	L	– [LHD models without BOSE system]
31	BR	– [RHD models]
32	G	– [LHD models with BOSE system]
32	L	– [LHD models without BOSE system]
32	Y	– [RHD models]
33	R	– [LHD models with BOSE system]
33	V	– [LHD models without BOSE system]
33	SHIELD	– [RHD models]
34	BG	– [LHD models]
34	P	– [RHD models]
35	GR	– [LHD models]
35	L	– [RHD models]
36	BR	– [LHD models]
36	SHIELD	– [RHD models]
37	P	– [LHD models with climate controlled seat]
37	L	– [LHD models without climate controlled seat]
37	R	– [RHD models]
38	V	– [LHD models with climate controlled seat]
38	GR	– [LHD models without climate controlled seat]
38	G	– [RHD models]
39	SHIELD	–
40	SHIELD	– [LHD models with BOSE system]
40	BR	– [LHD models without BOSE system]
40	V	– [RHD models with BOSE system]
40	LG	– [RHD models without BOSE system]
41	L	– [LHD models with BOSE system]
41	GR	– [LHD models without BOSE system]
41	P	– [RHD models with BOSE system]
41	Y	– [RHD models without BOSE system]
42	P	– [LHD models with BOSE system]
42	W	– [LHD models without BOSE system]
42	BR	– [RHD models]
43	SHIELD	– [LHD models with BOSE system]
43	LG	– [LHD models without BOSE system]
43	GR	– [RHD models with BOSE system]
43	R	– [RHD models without BOSE system]
44	Y	– [LHD models with BOSE system]
44	B	– [LHD models without BOSE system]
44	BG	– [RHD models with BOSE system]
44	L	– [RHD models without BOSE system]
45	BR	– [LHD models]
45	SB	– [RHD models with BOSE system]
45	W	– [RHD models without BOSE system]
46	SB	– [LHD models]
46	LG	– [RHD models with BOSE system]
46	R	– [RHD models without BOSE system]
47	SB	– [Except RHD models without BOSE system]
47	LG	– [RHD models without BOSE system]
48	LG	– [Except RHD models without BOSE system]
48	V	– [RHD models without BOSE system]
49	LG	– [LHD models with BOSE system]
49	SB	– [LHD models without BOSE system]
49	B	– [RHD models]
50	SB	– [With BOSE system]
50	LG	– [Without BOSE system]
51	R	–
52	V	– [LHD models]
52	G	– [RHD models]
53	P	– [LHD models]
53	W	– [RHD models]
54	BR	– [LHD models]
54	R	– [RHD models]
55	Y	– [LHD models with A/T]
55	BG	– [LHD models with M/T]
55	P	– [RHD models]
56	L	– [For Russia and the Middle East, China]
56	GR	– [LHD models for Europe except for Russia]
56	R	– [RHD models]
57	V	– [LHD models]
57	B	– [RHD models]
58	R	– [LHD models]
58	W	– [RHD models]
59	L	– [LHD models]
59	SB	– [RHD models]
60	LG	– [LHD models]
60	SB	– [RHD models]
61	BG	– [LHD models]
61	V	– [RHD models]
62	B	– [For the Middle East and China]
62	SB	– [LHD models for Europe except for Russia]
62	Y	– [RHD models]
63	V	– [LHD models]
63	W	– [RHD models]
64	SB	– [LHD models]
64	B	– [RHD models]
65	BR	– [LHD models]
65	L	– [RHD models]
66	Y	– [LHD models]
66	P	– [RHD models]
67	P	– [LHD models]
67	LG	– [RHD models]
68	L	– [LHD models]
68	R	– [RHD models]
69	P	– [LHD models]
69	V	– [RHD models]
70	L	– [LHD models]
70	R	– [RHD models]
71	SB	– [LHD models]
71	LG	– [RHD models]
72	W	– [LHD models]
72	BG	– [RHD models]
73	B	– [LHD models]
73	GR	– [RHD models]
74	L	–
75	R	–
76	G	–
77	W	–
78	R	–
79	G	–
80	G	– [LHD models]
80	GR	– [RHD models]
81	LG	– [LHD models]
81	G	– [RHD models]
82	Y	–
83	BR	– [LHD models]
83	L	– [RHD models]
84	V	–
85	L	– [LHD models]
85	BR	– [RHD models]
86	Y	– [LHD models]
86	V	– [RHD models]
87	GR	– [LHD models]
87	L	– [RHD models]
88	R	– [LHD models]
88	LG	– [RHD models]
89	B	– [LHD models]
89	L	– [RHD models]
90	W	– [LHD models]
90	P	– [RHD models]
92	BG	– [LHD models]
92	GR	– [RHD models]
93	G	– [LHD models]
93	P	– [RHD models]
94	P	– [LHD models]
94	W	– [RHD models]
95	GR	– [LHD models]
95	G	– [RHD models]
96	Y	–
97	SB	– [LHD models]
97	L	– [RHD models]
98	BG	–
99	Y	–

JCMWM6731GB

CONNECTOR INFORMATION

MAIN HARNESS

100	Y/B	–

Connector No.	M8
Connector Name	RESISTOR
Connector Type	M02FBR-LC

Terminal No.	Color of Wire	Signal Name [Specification]
1	BG	– [LHD models]
1	L	– [RHD models]
2	B	–

Connector No.	M9
Connector Name	DIODE
Connector Type	24335 C9900

Terminal No.	Color of Wire	Signal Name [Specification]
1	R	–
2	W	–

Connector No.	M14
Connector Name	SENSOR CANCEL SWITCH
Connector Type	TK06FGY

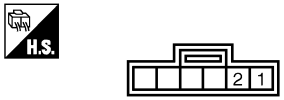

Terminal No.	Color of Wire	Signal Name [Specification]
1	Y	–
2	B	–

Connector No.	M15
Connector Name	FRONT PASSENGER AIR BAG OFF SWITCH
Connector Type	CAA06FBR

Terminal No.	Color of Wire	Signal Name [Specification]
3	B	–
5	V	–
6	R	–

Connector No.	M16
Connector Name	AFS CONTROL UNIT
Connector Type	TH40FW-NH

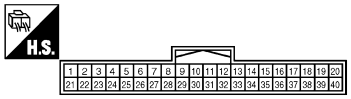

Terminal No.	Color of Wire	Signal Name [Specification]
1	R	IGN [LHD models]
1	Y	IGN [RHD models]
2	P	PSG-R [LHD models]
2	W	PSG-R [RHD models]
4	Y	PSV-R
6	W	HSV-R [LHD models]
6	V	HSV-R [RHD models]
7	P	CAN-L
8	B	HSG-R
9	GR	PS-R [LHD models]
9	W	PS-R [RHD models]
11	R	SMR-1 (–)
13	L	SMR-2 (–) [LHD models]
13	W	SMR-2 (–) [RHD models]
15	G	SML-1 (+) [LHD models]
15	B	SML-1 (+) [RHD models]
17	W	SML-2 (+) [LHD models]
17	R	SML-2 (+) [RHD models]
19	SB	AMDS-R
24	V	PSV-L
25	GR	GND [LHD models]
25	B	GND [RHD models]
27	BR	PSG-L [LHD models]
27	R	PSG-L [RHD models]
28	SB	HS-R
29	LG	PS-L [LHD models]
29	L	PS-L [RHD models]
30	L	CAN-H
32	G	SMR-2 (+) [LHD models]
32	B	SMR-2 (+) [RHD models]
34	W	SMR-1 (+) [LHD models]
34	G	SMR-1 (+) [RHD models]
36	R	SML-2 (–) [LHD models]
36	W	SML-2 (–) [RHD models]
37	BG	REV [LHD models]
37	LG	REV [RHD models]
38	B	SML-1 (–) [LHD models]
38	G	SML-1 (–) [RHD models]
40	BG	AMDS-L

Connector No.	M17
Connector Name	WIRE TO WIRE
Connector Type	TK02FW

Terminal No.	Color of Wire	Signal Name [Specification]
1	L	–
2	P	–

Connector No.	M18
Connector Name	WIRE TO WIRE
Connector Type	TK02MW

Terminal No.	Color of Wire	Signal Name [Specification]
1	L	–
2	P	–

Connector No.	M19
Connector Name	ESP OFF SWITCH
Connector Type	TK06FGY

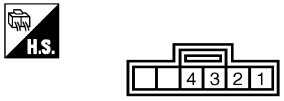

Terminal No.	Color of Wire	Signal Name [Specification]
1	LG	– [LHD models]
1	R	– [RHD models]
2	B	–
3	SB	– [LHD models]
3	R	– [RHD models]
4	W	–

MAIN HARNESS

Connector No.	M20
Connector Name	TRUNK LID OPENER SWITCH
Connector Type	TK04FW

H.S.

Terminal No.	Color of Wire	Signal Name [Specification]
1	GR	–
2	BR	–
3	LG	–
4	R	–

Connector No.	M22
Connector Name	KEY SLOT
Connector Type	TH12FW-NH

H.S.

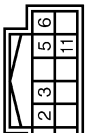

Terminal No.	Color of Wire	Signal Name [Specification]
1	V	BAT [LHD models]
1	LG	BAT [RHD models]
2	GR	CLOCK
3	W	DATA
5	Y	ILL BAT [LHD models]
5	P	ILL BAT [RHD models]
6	LG	ILL [LHD models]
6	L	ILL [RHD models]
7	B	GND
11	SB	KEY SWITCH SIGNAL

Connector No.	M23
Connector Name	TIRE PRESSURE WARNING CHECK SWITCH
Connector Type	TK02FW

H.S.

Terminal No.	Color of Wire	Signal Name [Specification]
1	W	–

Connector No.	M24
Connector Name	DATA LINK CONNECTOR
Connector Type	BD16FW-P

H.S.

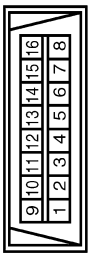

Terminal No.	Color of Wire	Signal Name [Specification]
3	LG	–
4	B	–
5	BR	– [LHD models]
5	B	– [RHD models]
6	L	–
7	V	–
8	G	–
11	SB	–
14	P	–
16	R	– [LHD models]
16	BG	– [RHD models]

Connector No.	M25
Connector Name	WIRE TO WIRE
Connector Type	NS16MW-CS

H.S.

Terminal No.	Color of Wire	Signal Name [Specification]
1	L	–
2	W	–
3	BR	–
4	SB	–
5	Y	–
6	LG	–
7	B	–
11	L	–
12	P	–
13	R	–
14	R	–
15	G	–
16	W	–

Connector No.	M26
Connector Name	WIRE TO WIRE
Connector Type	NS16FBR-CS

H.S.

Terminal No.	Color of Wire	Signal Name [Specification]
1	L	–
2	W	–
3	BR	–
4	SB	–
5	Y	–
5	LG	–
6	B	–
7	B	–
9	P	–
10	R	–

Connector No.	M28
Connector Name	ROOF OPEN / CLOSE SWITCH
Connector Type	TK06FW-1V

H.S.

Terminal No.	Color of Wire	Signal Name [Specification]
1	B	–
3	V	–
4	BR	–
5	R	–
6	GR	–

Connector No.	M29
Connector Name	WIRE TO WIRE
Connector Type	TH04MW-NH

H.S.

Terminal No.	Color of Wire	Signal Name [Specification]
1	R	–
2	W	–
3	W	–
4	SHIELD	–

JCMWM6733GB

CONNECTOR INFORMATION

MAIN HARNESS

Connector No.	M30
Connector Name	OPTION CONNECTOR (1)
Connector Type	TH08MW-NH

Terminal No.	Color of Wire	Signal Name [Specification]
1	Y	–
2	G	– [LHD models]
2	GR	– [RHD models]
3	G	–
6	V	–
8	B	–

Connector No.	M31
Connector Name	TILT & TELESCOPIC SWITCH
Connector Type	TK06FGY

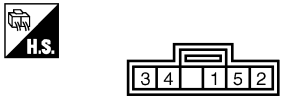

Terminal No.	Color of Wire	Signal Name [Specification]
1	B	–
2	GR	– [LHD models]
2	P	– [RHD models]
3	G	–
4	Y	–
5	BR	– [LHD models]
5	LG	– [RHD models]

Connector No.	M32
Connector Name	PADDLE SHIFTER (SHIFT-DOWN)
Connector Type	A03FW

Terminal No.	Color of Wire	Signal Name [Specification]
1	W	–
3	G	–

Connector No.	M33
Connector Name	COMBINATION SWITCH
Connector Type	TH16FW-NH

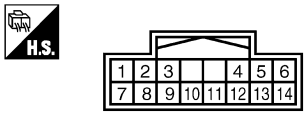

Terminal No.	Color of Wire	Signal Name [Specification]
1	P	FR WASHER(–)
2	SB	OUTPUT 4
5	L	OUTPUT 3
6	B	GND
7	BG	INPUT 3
8	BR	OUTPUT 5
9	W	INPUT 2
10	R	INPUT 4
11	LG	INPUT 1
12	V	OUTPUT 1
13	Y	INPUT 5
14	G	OUTPUT 2

Connector No.	M35
Connector Name	COMBINATION SWITCH (SPIRAL CABLE)
Connector Type	TK06FY-EX-1V

Terminal No.	Color of Wire	Signal Name [Specification]
21	W	–
22	R	– [Except RHD models with ICC]
22	LG	– [RHD models with ICC]
23	R	–
28	Y	–
29	Y	–
30	Y	–

Connector No.	M36
Connector Name	COMBINATION SWITCH (SPIRAL CABLE)
Connector Type	TK08FGY-1V

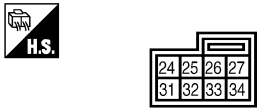

Terminal No.	Color of Wire	Signal Name [Specification]
24	P	–
25	SB	–
26	BR	– [LHD models]
26	B	– [RHD models]
27	L	–
31	L	–
32	Y	–
33	B	–
34	LG	– [LHD models]
34	G	– [RHD models]

Connector No.	M37
Connector Name	STEERING ANGLE SENSOR
Connector Type	TH08FW-NH

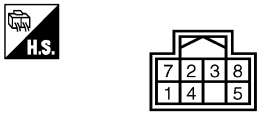

Terminal No.	Color of Wire	Signal Name [Specification]
1	L	CAN-H
2	P	CAN-L
3	L	SENSOR1
4	BR	SENSOR2
5	BG	SENSOR3
7	B	GND
8	G	IGN

Connector No.	M39
Connector Name	PADDLE SHIFTER (SHIFT-UP)
Connector Type	A04FW

Terminal No.	Color of Wire	Signal Name [Specification]
1	P	– [LHD models]
1	W	– [RHD models]
3	BG	–

CONNECTOR INFORMATION

MAIN HARNESS

Connector No.	M40
Connector Name	STEERING LOCK UNIT
Connector Type	TH08FW-NH

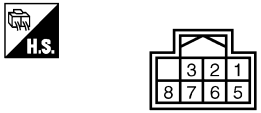

Terminal No.	Color of Wire	Signal Name [Specification]
1	BR	S/L 12V (MECHANICAL)
2	Y	S/L (K LINE)
3	L	S/L CONDITION1
5	B	GND
6	B	GND
7	W	S/L 12V(CPU)
8	SB	S/L CONDITION2 [LHD models]
8	P	S/L CONDITION2 [RHD models]

Connector No.	M43
Connector Name	ICC WARNING CHIME
Connector Type	A03FW

Terminal No.	Color of Wire	Signal Name [Specification]
1	G	–
3	W	–

Connector No.	M44
Connector Name	SONAR CONTROL UNIT
Connector Type	TH24FW-NH

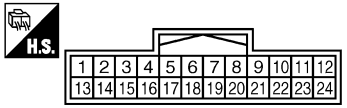

Terminal No.	Color of Wire	Signal Name [Specification]
1	G	IGN
2	SB	CANCEL SW
3	R	CORNER SENSOR FRONT LH
4	W	CORNER SENSOR FRONT RH
5	LG	CORNER SENSOR REAR LH
6	L	CORNER SENSOR REAR RH
7	BR	CENTER SENSOR REAR LH
8	GR	CENTER SENSOR REAR RH
9	Y	CENTER SENSOR FRONT LH
10	G	CENTER SENSOR FRONT RH
11	BR	CANCEL SW INDICATOR
12	B	SENSOR GND
13	LG	ACC [For Europe]
13	LG	IGN [For china and The Middle East]
15	L	VEHICLE SPEED SIGNAL
16	P	P range [A/T models]
16	P	IGN [M/T models]
17	BG	REVERSE
18	V	K LINE
19	SB	AV COMM (H)
20	LG	AV COMM (L)
23	LG	BUZZER
24	GR	GND

Connector No.	M46
Connector Name	SUNLOAD SENSOR
Connector Type	K02FB

Terminal No.	Color of Wire	Signal Name [Specification]
1	BG	–
2	SB	–

Connector No.	M48
Connector Name	TILT & TELESCOPIC SENSOR
Connector Type	TK04FW

Terminal No.	Color of Wire	Signal Name [Specification]
1	W	–
2	P	– [LHD models]
2	R	– [RHD models]
3	BG	–
4	Y	–

Connector No.	M49
Connector Name	TILT & TELESCOPIC MOTOR
Connector Type	NS04FW-CS

Terminal No.	Color of Wire	Signal Name [Specification]
1	G	–
2	GR	–
3	BG	–
4	L	–

Connector No.	M50
Connector Name	PUSH-BUTTON IGNITION SWITCH
Connector Type	TK08FBR

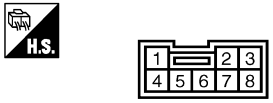

Terminal No.	Color of Wire	Signal Name [Specification]
1	B	– [LHD models]
1	GR	– [RHD models]
2	W	– [LHD models]
2	B	– [RHD models]
3	Y	– [LHD models]
3	L	– [RHD models]
4	BR	–
5	LG	–
6	BG	–
7	V	– [LHD models]
7	Y	– [RHD models]
8	P	–

JCMWM6735GB

CONNECTOR INFORMATION

MAIN HARNESS

Connector No.	M51
Connector Name	AUTOMATIC DRIVE POSITIONER CONTROL UNIT
Connector Type	TH32FW-NH

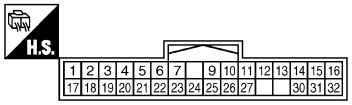

Terminal No.	Color of Wire	Signal Name [Specification]
1	Y	TILT SW (UPWARD)
2	LG	MIRROR SELECT SW (RH)
3	G	MIRROR SW (UPWARD) [LHD models]
3	Y	MIRROR SW (UPWARD) [RHD models]
4	V	MIRROR SW (LEFTWARD)
5	R	MIRROR SENSOR (RH VERTICAL)
6	GR	MIRROR SENSOR (LH VERTICAL) [LHD models]
6	L	MIRROR SENSOR (LH VERTICAL) [RHD models]
7	BG	TILT SENSOR
9	BR	ADDRESS1 [LHD models]
9	L	ADDRESS1 [RHD models]
10	V	TX (UART) [LHD models]
10	G	TX (UART) [RHD models]
11	GR	TELESCOPIC SW (FRONTWARD) [LHD models]
11	P	TELESCOPIC SW (FRONTWARD) [RHD models]
12	BG	IND1
13	P	IND2
14	W	MIRROR MOTOR (RH VERTICAL)
15	BG	MIRROR MOTOR (RH HORIZONTAL) [LHD models]
15	G	MIRROR MOTOR (RH HORIZONTAL) [RHD models]
16	Y	MIRROR MOTOR (LH COMMON)
17	BR	TILT SW (DOWNWARD) [LHD models]
17	LG	TILT SW (DOWNWARD) [RHD models]
18	P	MIRROR SELECT SW (LH) [LHD models]
18	L	MIRROR SELECT SW (LH) [RHD models]
19	SB	MIRROR SW (DOWNWARD) [LHD models]
19	L	MIRROR SW (DOWNWARD) [RHD models]
20	BR	MIRROR SW (RIGHTWARD)
21	L	MIRROR SENSOR (RH HORIZONTAL)
22	G	MIRROR SENSOR (LH HORIZONTAL)
23	P	TELESCOPIC SENSOR [LHD models]
23	R	TELESCOPIC SENSOR [RHD models]
24	R	SET SW
25	V	ADDRESS2
26	P	RX (UART) [LHD models]
26	LG	RX (UART) [RHD models]
27	G	TELESCOPIC SW (BACKWARD)
30	SB	MIRROR MOTOR (RH COMMON) [LHD models]
30	Y	MIRROR MOTOR (RH COMMON) [RHD models]
31	G	MIRROR MOTOR (LH VERTICAL) [LHD models]
31	L	MIRROR MOTOR (LH VERTICAL) [RHD models]
32	BR	MIRROR MOTOR (LH HORIZONTAL) [LHD models]
32	L	MIRROR MOTOR (LH HORIZONTAL) [RHD models]

Connector No.	M52
Connector Name	AUTOMATIC DRIVE POSITIONER CONTROL UNIT
Connector Type	NS16FW-CS

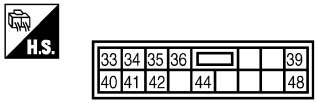

Terminal No.	Color of Wire	Signal Name [Specification]
33	W	POWER SUPPLY (SENSOR) [Except LHD models with automatic drive positioner]
33	BR	POWER SUPPLY (SENSOR) [LHD models with automatic drive positioner]
34	R	BAT (FUSE)
35	L	TILT MOTOR (UPWARD)
36	GR	TELESCOPIC MOTOR (FORWARD)
39	BR	BAT (C/B) [LHD models]
39	W	BAT (C/B) [RHD models]
40	B	GND (SIGNAL)
41	Y	GND (SENSOR)
42	BG	TILT MOTOR (DOWNWARD)
44	G	TELESCOPIC MOTOR (BACKWARD)
48	B	GND (POWER)

Connector No.	M53
Connector Name	COMBINATION METER
Connector Type	SAB40FW

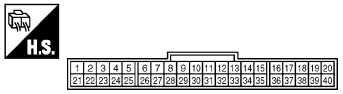

Terminal No.	Color of Wire	Signal Name [Specification]
1	V	BATTERY POWER SUPPLY [LHD models]
1	Y	BATTERY POWER SUPPLY [RHD models]
2	LG	COMMUNICATION SIGNAL (METER->AMP.) [LHD models]
2	G	COMMUNICATION SIGNAL (METER->AMP.) [RHD models]
3	GR	COMMUNICATION SIGNAL (AMP.->METER) [LHD models]
3	R	COMMUNICATION SIGNAL (AMP.->METER) [RHD models]
5	B	GROUND
6	W	ALTERNATOR SIGNAL
7	LG	AIR BAG SIGNAL
10	R	SECURITY SIGNAL
14	Y	POP UP ENGINE HOOD SIGNAL
15	B	GROUND
16	B	METER CONTROL SWITCH GROUND
18	GR	ILL GND [LHD models]
18	B	ILL GND [RHD models]
19	B	ILL GND
20	R	ILL
21	R	IGNITION POWER SUPPLY
22	B	GROUND
24	SB	COMMUNICATION SIGNAL (LCD->AMP.) [LHD models]
24	BR	COMMUNICATION SIGNAL (LCD->AMP.) [RHD models]
25	B	COMMUNICATION SIGNAL (AMP.->LCD) [LHD models]
25	GR	COMMUNICATION SIGNAL (AMP.->LCD) [RHD models]
26	R	VEHICLE SPEED SIGNAL (8-PULSE) [LHD models]
26	V	VEHICLE SPEED SIGNAL (8-PULSE) [RHD models]
27	V	PARKING BRAKE SWITCH SIGNAL
28	SB	BRAKE FLUID LEVEL SWITCH SIGNAL [LHD models]
28	W	BRAKE FLUID LEVEL SWITCH SIGNAL [RHD models]
29	L	SEAT BELT BUCKLE SWITCH SIGNAL (DRIVER SIDE)
30	G	SEAT BELT BUCKLE SWITCH SIGNAL (PASSENGER SIDE)
31	L	WASHER LEVEL SWITCH SIGNAL
33	R	ILLUMINATION CONTROL SIGNAL
36	LG	SELECT SWITCH SIGNAL
37	SB	ENTER SWITCH SIGNAL
38	L	TRIP A/B RESET SWITCH SIGNAL
39	P	ILLUMINATION CONTROL SWITCH (-)
40	BG	ILLUMINATION CONTROL SWITCH (+)

Connector No.	M54
Connector Name	METER CONTROL SWITCH
Connector Type	TH12FW-NH

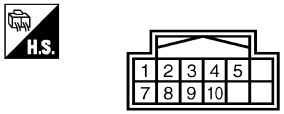

Terminal No.	Color of Wire	Signal Name [Specification]
1	SB	-
2	LG	-
3	B	-
4	R	-
5	L	-
7	B	-
8	GR	- [LHD models]
8	B	- [RHD models]
9	BG	-
10	P	-

Connector No.	M56
Connector Name	ACCELERATOR PEDAL POSITION SENSOR
Connector Type	RH06FB

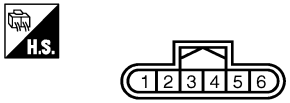

Terminal No.	Color of Wire	Signal Name [Specification]
1	P	-
2	V	-
3	R	-
4	W	-
5	L	-
6	GR	-

Connector No.	M57
Connector Name	DOOR LOCK STATUS INDICATOR
Connector Type	TH04MW-NH

Terminal No.	Color of Wire	Signal Name [Specification]
1	V	-
4	B	-

CONNECTOR INFORMATION

MAIN HARNESS

Connector No.	M58
Connector Name	HEADLAMP WASHER SWITCH
Connector Type	TK08FGY

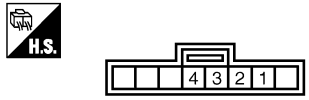

Terminal No.	Color of Wire	Signal Name [Specification]
1	G	–
2	B	–
3	R	–
4	B	–

Connector No.	M59
Connector Name	CIRCUIT BREAKER
Connector Type	M02FW-LC

Terminal No.	Color of Wire	Signal Name [Specification]
1	Y	– [LHD models]
1	G	– [RHD models]
2	Y	–

Connector No.	M61
Connector Name	IN-VEHICLE SENSOR
Connector Type	A02FW

Terminal No.	Color of Wire	Signal Name [Specification]
1	LG	–
2	L	– [LHD models]
2	R	– [RHD models]

Connector No.	M62
Connector Name	CIRCUIT BREAKER
Connector Type	M02FW-LC

Terminal No.	Color of Wire	Signal Name [Specification]
1	W	–
2	SB	–

Connector No.	M63
Connector Name	CENTER SPEAKER
Connector Type	TK02FBR

Terminal No.	Color of Wire	Signal Name [Specification]
1	Y	– [With BOSE system]
1	LG	– [Without BOSE system]
2	LG	– [With BOSE system]
2	V	– [Without BOSE system]

Connector No.	M66
Connector Name	UNIFIED METER AND A/C AMP.
Connector Type	TH40FW-NH

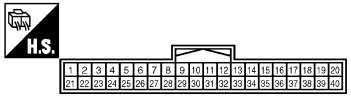

Terminal No.	Color of Wire	Signal Name [Specification]
4	G	STOP LAMP SWITCH SIGNAL [LHD models]
4	P	STOP LAMP SWITCH SIGNAL [RHD models]
5	L	MANUAL MODE SHIFT UP SIGNAL
6	BG	PADDLE SHIFTER UP SIGNAL
7	GR	COMMUNICATION SIGNAL (AMP.->METER) [LHD models]
7	R	COMMUNICATION SIGNAL (AMP.->METER) [RHD models]
8	L	VEHICLE SPEED SIGNAL OUTPUT (2-PULSE)
9	SB	SEAT BELT BUCKLE SWITCH SIGNAL (DRIVER SIDE) [With plasmacluster]
9	GR	SEAT BELT BUCKLE SWITCH SIGNAL (DRIVER SIDE) [Without plasmacluster]
10	W	MANUAL MODE SIGNAL
11	G	NON-MANUAL MODE SIGNAL
12	LG	SEAT BELT BUCKLE SWITCH SIGNAL (PASSENGER SIDE)
14	SB	COMMUNICATION SIGNAL (LCD->AMP.) [LHD models]
14	BR	COMMUNICATION SIGNAL (LCD->AMP.) [RHD models]
20	G	ION ON / OFF SIGNAL
25	V	MANUAL MODE SHIFT DOWN SIGNAL
26	G	PADDLE SHIFTER DOWN SIGNAL
27	LG	COMMUNICATION SIGNAL (METER->AMP.) [LHD models]
27	G	COMMUNICATION SIGNAL (METER->AMP.) [RHD models]
28	R	VEHICLE SPEED SIGNAL OUTPUT (8-PULSE) [LHD models]
28	V	VEHICLE SPEED SIGNAL OUTPUT (8-PULSE) [RHD models]
30	V	PARKING BRAKE SWITCH SIGNAL
32	BG	REAR SEAT BELT BUCKLE SWITCH (LH)
33	SB	REAR SEAT BELT BUCKLE SWITCH (RH)
34	B	COMMUNICATION SIGNAL (AMP.->LCD) [LHD models]
34	GR	COMMUNICATION SIGNAL (AMP.->LCD) [RHD models]
38	P	BLOWER MOTOR CONTROL SIGNAL [LHD models]
38	L	BLOWER MOTOR CONTROL SIGNAL [RHD models]

Connector No.	M67
Connector Name	UNIFIED METER AND A/C AMP.
Connector Type	TH32FW-NH

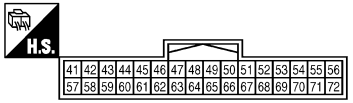

Terminal No.	Color of Wire	Signal Name [Specification]
41	BR	ACC POWER SUPPLY [LHD models]
41	V	ACC POWER SUPPLY [RHD models]
42	BR	FUEL LEVEL SENSOR SIGNAL [LHD models]
42	B	FUEL LEVEL SENSOR SIGNAL [RHD models]
43	R	INTAKE SENSOR SIGNAL
44	LG	IN-VEHICLE SENSOR SIGNAL
45	V	AMBIENT SENSOR SIGNAL [LHD models]
45	P	AMBIENT SENSOR SIGNAL [RHD models]
46	BG	SUNLOAD SENSOR SIGNAL
47	G	GAS SENSOR SIGNAL
53	W	IGNITION POWER SUPPLY [LHD models]
53	Y	IGNITION POWER SUPPLY [RHD models]
54	BG	BATTERY POWER SUPPLY [LHD models]
54	Y	BATTERY POWER SUPPLY [RHD models]
55	B	GROUND
56	L	CAN-H
57	LG	BRAKE FLUID LEVEL SWITCH SIGNAL [LHD models]
57	BR	BRAKE FLUID LEVEL SWITCH SIGNAL [RHD models]
58	Y	FUEL LEVEL SENSOR SIGNAL GROUND
59	GR	INTAKE SENSOR GROUND [LHD models]
59	Y	INTAKE SENSOR GROUND [RHD models]
60	L	IN-VEHICLE SENSOR GROUND [LHD models]
60	R	IN-VEHICLE SENSOR GROUND [RHD models]
61	R	AMBIENT SENSOR GROUND [LHD models]
61	P	AMBIENT SENSOR GROUND [RHD models]
62	SB	SUNLOAD SENSOR GROUND
63	L	ION CONTROL MODE OUTPUT SIGNAL
65	BG	ECV SIGNAL
69	L	A/C LAN SIGNAL
70	R	EACH DOOR MOTOR POWER SUPPLY [LHD models]
70	L	EACH DOOR MOTOR POWER SUPPLY [RHD models]
71	GR	GROUND
72	P	CAN-L

CONNECTOR INFORMATION

MAIN HARNESS

Connector No.	M69
Connector Name	BACK-UP LAMP RELAY
Connector Type	MS02FL-M2-LC

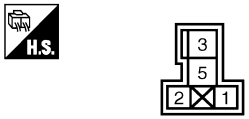

Terminal No.	Color of Wire	Signal Name [Specification]
1	R	–
2	W	– [LHD models]
2	SB	– [RHD models]
3	LG	– [LHD models]
3	R	– [RHD models]
5	BG	–

Connector No.	M70
Connector Name	HEATED SEAT RELAY
Connector Type	MS02FL-M2-LC

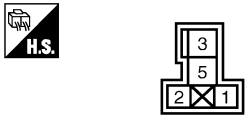

Terminal No.	Color of Wire	Signal Name [Specification]
1	B	–
2	GR	–
3	G	–
5	BR	–

Connector No.	M71
Connector Name	DISPLAY UNIT
Connector Type	TH24FW-NH

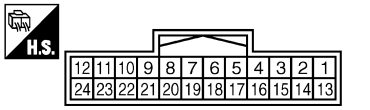

Terminal No.	Color of Wire	Signal Name [Specification]
1	B	GND
2	Y	INVERTER VCC
3	BG	SIGNAL VCC
4	V	COMPOSITE IMAGE GND
5	SHIELD	SHIELD
6	L	RGB (G:GREEN) SIGNAL
7	SHIELD	SHIELD
8	R	HP
9	B	RGB AREA (YS) SIGNAL
11	P	COMM (CONT->DISP)
13	BR	INVERTER GND
14	LG	SIGNAL GND
15	SB	COMPOSITE IMAGE SIGNAL
17	G	RGB (R:RED) SIGNAL
18	P	RGB (B:BLUE) SIGNAL
19	W	RGB SYNC
20	G	VP
21	SHIELD	SHIELD
22	L	COMM (DISP->CONT)
23	SHIELD	SHIELD

Connector No.	M72
Connector Name	MULTIFUNCTION SWITCH
Connector Type	TH16FW-NH

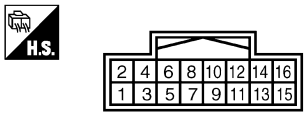

Terminal No.	Color of Wire	Signal Name [Specification]
1	B	GND
3	L	ACC
4	BG	ILL [For Europe]
4	R	ILL [For the Middle East and China]
5	V	ILL CONT
6	SB	AV COMM (H)
8	LG	AV COMM (L)
9	BR	SW GND
14	SB	DISK EJECT SIGNAL
16	G	HAZARD ON

Connector No.	M73
Connector Name	PASSENGER AIR BAG OFF INDICATOR
Connector Type	TH04MW-NH

Terminal No.	Color of Wire	Signal Name [Specification]
1	R	–
4	B	–

Connector No.	M74
Connector Name	CLOCK
Connector Type	TH04FW-NH

Terminal No.	Color of Wire	Signal Name [Specification]
1	B	ILLUMINATION (–) [LHD models]
1	P	ILLUMINATION (–) [RHD models]
2	L	ILLUMINATION (+)
3	B	GND
4	Y	BAT

Connector No.	M75
Connector Name	DISPLAY UNIT
Connector Type	TH24FW-NH

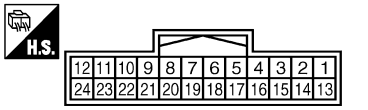

Terminal No.	Color of Wire	Signal Name [Specification]
1	B	GND
2	Y	BATTERY
3	LG	ACC
4	Y	COMPOSITE SYNCHRONIZING SIGNAL GROUND
5	V	COMPOSITE IMAGE SIGNAL GND
6	L	RGB (G:GREEN) SIGNAL [For the Middle East and China]
6	SHIELD	SHIELD [For Europe]
7	SHIELD	SHIELD [For the Middle East and China]
7	SHIELD	SHIELD [For Europe]
8	W	CAMERA IMAGE SIGNAL [For Europe]
8	R	HP [For the Middle East and China]
9	L	COMM (DISP->CONT) [For Europe]
9	B	RGB AREA (YS) SIGNAL [For the Middle East and China]
10	P	COMM (CONT->DISP)
11	Y	BATTERY [For Europe]
11	P	COMM (CONT->DISP) [For the Middle East and China]
12	B	GND
13	B	GND
15	SB	COMPOSITE IMAGE SIGNAL
16	BR	COMPOSITE SYNCHRONIZING SIGNAL
17	G	RGB (R: RED) SIGNAL
18	L	COMPOSITE IMAGE SIGNAL [For Europe]
18	P	RGB (B:BLUE) SIGNAL [For the Middle East and China]
19	P	COMPOSITE IMAGE GND [For Europe]
19	W	RGB SYNC [For the Middle East and China]
20	G	VP
21	SHIELD	SHIELD
22	L	COMM (DISP->CONT) [For the Middle East and China]
22	SHIELD	SHIELD [For Europe]
23	LG	ACC [LHD models for Europe]
23	R	ACC [RHD models]
23	SHIELD	SHIELD [For the Middle East and China]

MAIN HARNESS

Connector No.	M77
Connector Name	INTAKE SENSOR
Connector Type	TK04FW

Terminal No.	Color of Wire	Signal Name [Specification]
1	R	–
2	GR	– [LHD models]
2	Y	– [RHD models]

Connector No.	M81
Connector Name	AV CONTROL UNIT
Connector Type	TH18FW-CS2

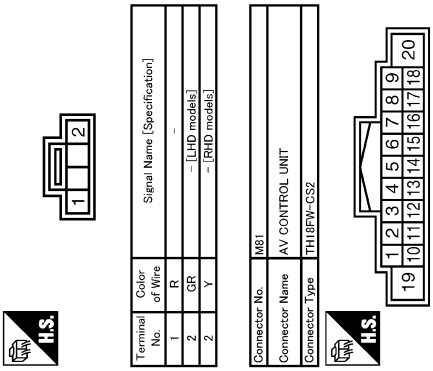

Terminal No.	Color of Wire	Signal Name [Specification]
6	P	STRG SW A
7	V	ACC
8	B	GROUND
9	R	ILLUMINATION
15	B	STRG SW GND
16	L	STRG SW B
17	B	GROUND
19	BR	BATTERY
20	B	GND

Connector No.	M83
Connector Name	AV CONTROL UNIT
Connector Type	TH24FW-NH

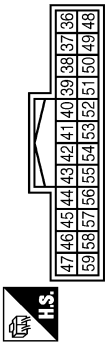

Terminal No.	Color of Wire	Signal Name [Specification]
36	SB	COMPOSITE IMAGE SIGNAL
37	V	COMPOSITE IMAGE GND
38	P	RGB (B: BLUE) SIGNAL
39	L	RGB (G: GREEN) SIGNAL
40	G	RGB (R: RED) SIGNAL
41	W	RGB SYNC
42	SHIELD	SHIELD
43	B	RGB AREA (YS) SIGNAL
44	L	COMM (DISP–>CONT)
45	R	HP
48	BR	COMPOSITE SYNCHRONIZING SIGNAL
49	Y	COMPOSITE SYNCHRONIZING SIGNAL GROUND
50	SHIELD	SHIELD
55	SHIELD	SHIELD
56	P	COMM (CONT–>DISP)
57	G	VP

Connector No.	M84
Connector Name	AV CONTROL UNIT
Connector Type	TH16FW-NH

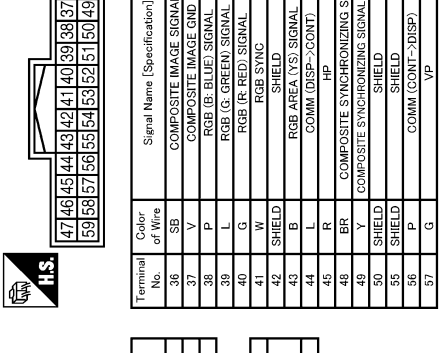

Terminal No.	Color of Wire	Signal Name [Specification]
60	L	RGB SYNC
61	SHIELD	RGB SYNC GND
62	W	RGB (B:BLUE) SIGNAL
63	R	RGB (R:RED) SIGNAL
64	SHIELD	SHIELD
65	W	CAMERA IMAGE SIGNAL

66	G	AUX IMAGE SIGNAL
68	W	CAMERA CONNECTION RECOGNITION SIGNAL
70	B	RGB GND
71	G	RGB (G:GREEN) SIGNAL
73	B	SHIELD
74	R	AUX IMAGE GND

Connector No.	M85
Connector Name	AV CONTROL UNIT
Connector Type	TH32FW-NH

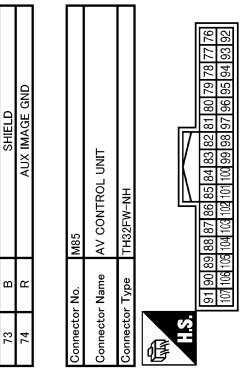

Terminal No.	Color of Wire	Signal Name [Specification]
78	BR	SW GND
79	P	TEL VOICE SIGNAL (–)
80	L	TEL VOICE SIGNAL (+)
81	SHIELD	SHIELD
84	SHIELD	SHIELD
85	B	GND
86	L	CAN–H
87	P	CAN–L
88	SB	AV COMM (H)
89	LG	AV COMM (L)
90	SB	AV COMM (H)
91	LG	AV COMM (L)
95	R	AUX AUDIO SIGNAL RH (+)
96	W	AUX AUDIO SIGNAL LH (+)
97	B	AUX AUDIO SIGNAL GND
101	P	VOICE GUIDANCE (–)
102	L	VOICE GUIDANCE (+)
103	SB	DISK EJECT SIGNAL
104	G	IGNITION
105	BG	REVERSE
106	SB	PARKING BRAKE
107	GR	VEHICLE SPEED (8–PULSE)

Connector No.	M86
Connector Name	AV CONTROL UNIT
Connector Type	TH12FW-NH

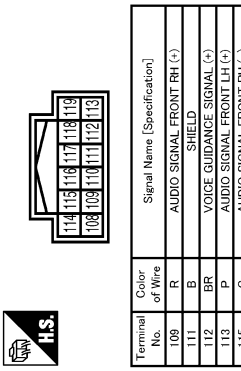

Terminal No.	Color of Wire	Signal Name [Specification]
109	R	AUDIO SIGNAL FRONT RH (+)
111	B	SHIELD
112	BR	VOICE GUIDANCE SIGNAL (+)
113	P	AUDIO SIGNAL FRONT LH (+)
115	G	AUDIO SIGNAL FRONT RH (–)
118	Y	VOICE GUIDANCE SIGNAL (–)
119	L	AUDIO SIGNAL FRONT LH (–)

Connector No.	M90
Connector Name	USB CONNECTER
Connector Type	HAA04FG

Terminal No.	Color of Wire	Signal Name [Specification]
1	W	–
2	L	–
3	G	–
4	R	–
5	SHIELD	–

JCMWM6739GB

MAIN HARNESS

Connector No.	M91
Connector Name	WIRE TO WIRE
Connector Type	A03MW-P

H.S.

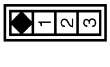

Terminal No.	Color of Wire	Signal Name [Specification]
1	R	– [LHD models]
1	L	– [RHD models]
2	B	–
3	L	–

Connector No.	M94
Connector Name	OPTICAL SENSOR
Connector Type	TK03FW

H.S.

Terminal No.	Color of Wire	Signal Name [Specification]
1	Y	POWER
2	G	OUTPUT
3	B	GND

Connector No.	M98
Connector Name	IONIZER
Connector Type	TH04FW-NH

H.S.

Terminal No.	Color of Wire	Signal Name [Specification]
1	Y	IGN
2	L	ION MODE
3	B	GND
4	G	ION ON / OFF

Connector No.	M100
Connector Name	WIRE TO WIRE
Connector Type	M02FW-LC

H.S.

Terminal No.	Color of Wire	Signal Name [Specification]
1	Y	–
2	Y	–

Connector No.	M101
Connector Name	TIRE PRESSURE RECEIVER
Connector Type	TK04FW

H.S.

Terminal No.	Color of Wire	Signal Name [Specification]
1	V	GND [LHD models]
1	P	GND [RHD models]
2	L	SIGNAL
4	BR	BATTERY [LHD models]
4	V	BATTERY [RHD models]

Connector No.	M102
Connector Name	GLOVE BOX LAMP
Connector Type	A02FW

H.S.

Terminal No.	Color of Wire	Signal Name [Specification]
1	R	–
2	B	–

Connector No.	M104
Connector Name	REMOTE KEYLESS ENTRY RECEIVER
Connector Type	JAB04FB

H.S.

Terminal No.	Color of Wire	Signal Name [Specification]
1	BG	GND
2	Y	SIGNAL OUTPUT
4	LG	BATTERY

Connector No.	M105
Connector Name	TRUNK LID OPENER CANCEL SWITCH
Connector Type	S02FW

H.S.

Terminal No.	Color of Wire	Signal Name [Specification]
1	BG	–

2	B	–

Connector No.	M106
Connector Name	WIRE TO WIRE
Connector Type	NH10MW-CS10

H.S.

Terminal No.	Color of Wire	Signal Name [Specification]
1	B	–
2	BR	–
3	Y	–
4	W	– [For the Middle East and China]
4	G	– [LHD models for Europe]
5	B	– [For the Middle East and China]
5	SHIELD	– [LHD models for Europe]
6	R	–
7	B	–
8	L	–
9	R	–
10	SB	–
11	V	–
12	LG	–
13	R	–
18	B	–
19	P	–

JCMWM6740GB

CONNECTOR INFORMATION

MAIN HARNESS

Connector No.	M107
Connector Name	ECM
Connector Type	RH24FGY-RZ8-R-LH-Z

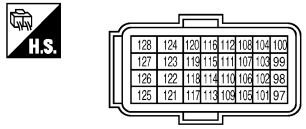

Terminal No.	Color of Wire	Signal Name [Specification]
97	R	APS1
98	P	APS2
99	L	AVCC1-APS1
100	W	GNDA-APS1
101	SB	ASCDSW
103	G	AVCC2-APS2 [LHD models]
103	GR	AVCC2-APS2 [RHD models]
104	GR	GND-APS2 [LHD models]
104	V	GND-APS2 [RHD models]
105	L	PDPRESS
106	LG	TF [LHD models]
106	W	TF [RHD models]
107	BG	AVCC-PDPRES
108	Y	GND ASCDSW
109	G	NEUT-H
110	BR	TACHO [LHD models]
110	V	TACHO [RHD models]
111	R	AVCC1-GSEN
112	W	GNDA-PDPRES [LHD models]
112	V	GNDA-PDPRES [RHD models]
113	P	VEHCAN-LI
114	L	VEHCAN-HI
115	L	CCSW
116	B	GNDA-GSEN
117	V	KLINE
118	R	SLSW [Except RHD models with ICC]
118	LG	SLSW [RHD models with ICC]
119	W	G-SEN
122	P	BRAKE
123	B	GND
124	B	GND
125	R	VBR
126	BR	BNCSW
127	B	GND
128	B	GND

Connector No.	M108
Connector Name	POWER STEERING CONTROL UNIT
Connector Type	TH12FW-NH

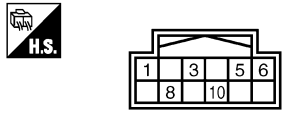

Terminal No.	Color of Wire	Signal Name [Specification]
1	LG	SOL
3	G	VIGN
5	GR	SOL GND [LHD models]
5	B	SOL GND [RHD models]
6	B	GND
8	L	VSP
10	BR	TACHO [LHD models]
10	V	TACHO [RHD models]

Connector No.	M109
Connector Name	BLOWER MOTOR
Connector Type	NS03FW-M3

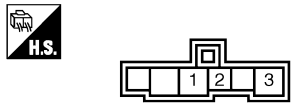

Terminal No.	Color of Wire	Signal Name [Specification]
1	L	–
2	P	–
3	B	–

Connector No.	M113
Connector Name	WIRE TO WIRE
Connector Type	CP06FGY

Terminal No.	Color of Wire	Signal Name [Specification]
1	W	–
2	G	–
5	L	–
6	R	–
7	SHIELD	–

Connector No.	M115
Connector Name	BLOWER MOTOR
Connector Type	NS03FW-M3

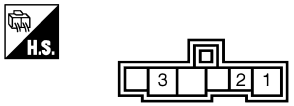

Terminal No.	Color of Wire	Signal Name [Specification]
1	L	–
2	L	–
3	B	–

Connector No.	M116
Connector Name	WIRE TO WIRE
Connector Type	TK36MW-NS10

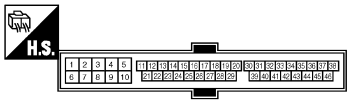

Terminal No.	Color of Wire	Signal Name [Specification]
2	W	–
4	R	–
5	B	–
9	R	– [LHD models]
9	G	– [RHD models]
10	R	– [LHD models]
10	G	– [RHD models]
19	BG	–
20	Y	–
28	GR	– [LHD models]
28	B	– [RHD models]
29	LG	–
30	LG	– [LHD models]
30	R	– [RHD models]
31	W	– [LHD models]
31	SB	– [RHD models]
41	BG	–
42	G	–
43	P	–
44	L	–
45	G	– [LHD models]
45	LG	– [RHD models]
46	Y	– [For Russia and the Middle East, China]
46	V	– [For Europe except for Russia]

JCMWM6741GB

CONNECTOR INFORMATION

MAIN HARNESS

Connector No.	M117
Connector Name	WIRE TO WIRE
Connector Type	TH80MW-CS16-TM4

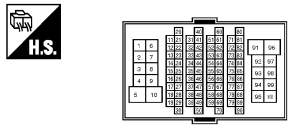

Terminal No.	Color of Wire	Signal Name [Specification]
1	Y	– [For the Middle East and China]
1	V	– [LHD models for Europe]
1	W	– [RHD models]
2	G	–
3	B	– [For the Middle East and China]
3	Y	– [LHD models for Europe except for Russia]
3	W	– [RHD models]
4	BR	–
6	R	– [For Russia and the Middle East, China]
6	LG	– [LHD models for Europe except for Russia]
6	L	– [RHD models]
7	G	– [Except LHD models for Europe with climate controlled seat and RHD models]
7	B	– [LHD models for Europe with climate controlled seat]
7	P	– [RHD models]
8	SB	– [LHD models]
8	GR	– [RHD models]
9	GR	– [LHD models]
9	P	– [RHD models]
12	BR	–
13	R	–
20	BG	–
21	R	– [LHD models]
21	Y	– [RHD models]
22	G	–
23	V	– [LHD models]
23	L	– [RHD models]
24	BG	– [LHD models]
24	SB	– [RHD models]
25	SB	–
26	LG	–
27	LG	–
28	R	–
31	SHIELD	– [LHD models]
31	LG	– [RHD models]
32	L	– [LHD models]
32	G	– [RHD models]
33	P	– [LHD models]
33	SHIELD	– [RHD models]
34	Y	– [LHD models]
34	R	– [RHD models]
35	V	–
36	L	–
37	P	–
38	SHIELD	–
39	SB	–
40	Y	– [LHD models]
40	L	– [RHD models]
41	G	– [LHD models]
41	P	– [RHD models]
42	LG	–
43	R	– [LHD models]
43	BR	– [RHD models]
44	B	– [For the Middle East and China]
44	SHIELD	– [LHD models for Europe except for Russia]
44	R	– [RHD models]
45	W	– [For the Middle East and China]
45	G	– [LHD models for Europe except for Russia]
45	SB	– [RHD models]
46	SHIELD	– [LHD models]
46	LG	– [RHD models]
47	P	– [LHD models]
47	SB	– [RHD models]
48	L	– [LHD models]
48	LG	– [RHD models]
49	SHIELD	– [LHD models]
49	Y	– [RHD models]
50	V	– [LHD models]
50	G	– [RHD models]
51	SB	– [Except RHD models with automatic drive positioner]
51	BR	– [RHD models with automatic drive positioner]
52	BG	– [LHD models]
52	LG	– [RHD models with automatic drive positioner]
52	GR	– [RHD models without automatic drive positioner]
53	L	– [LHD models]
53	G	– [RHD models]
54	G	– [LHD models]
54	R	– [RHD models with A/T]
54	Y	– [RHD models with M/T]
55	Y	–
57	SB	–
58	LG	–
60	L	–
61	BG	– [LHD models]
61	P	– [RHD models]
62	W	– [LHD models]
62	GR	– [RHD models]
63	BR	– [LHD models]
63	LG	– [RHD models]
64	P	– [LHD models]
64	R	– [RHD models]
65	SB	– [LHD models]
65	R	– [RHD models]
66	Y	–
67	SB	–
68	LG	–
71	GR	–
72	G	–
73	G	–
80	SB	– [LHD models]
80	R	– [RHD models]
81	V	– [LHD models]
81	Y	– [RHD models]
82	P	– [LHD models]
82	V	– [RHD models]
83	R	–
84	L	–
85	BG	–
86	W	–
87	W	–
88	P	–
89	L	–
91	GR	– [LHD models]
91	G	– [RHD models]
92	P	– [LHD models]
92	Y	– [RHD models]
93	W	– [LHD models]
93	B	– [RHD models with climate controlled seat]
93	G	– [RHD models without climate controlled seat]
94	BG	–
95	BG	– [LHD models]
95	Y	– [RHD models]
96	P	– [LHD models]
96	R	– [RHD models]
97	L	– [LHD models]
97	SB	– [RHD models]
98	Y/B	–
99	Y	–

Connector No.	M118
Connector Name	BCM (BODY CONTROL MODULE)
Connector Type	M03FB-LC

Terminal No.	Color of Wire	Signal Name [Specification]
1	W	BAT (F/L)
2	Y	POWER WINDOW POWER SUPPLY(BAT)
3	BG	POWER WINDOW POWER SUPPLY (RAP) [LHD models]
3	Y	POWER WINDOW POWER SUPPLY (RAP) [RHD models]

Connector No.	M119
Connector Name	BCM (BODY CONTROL MODULE)
Connector Type	NS16FW-CS

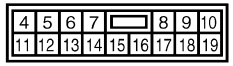

Terminal No.	Color of Wire	Signal Name [Specification]
4	LG	INTERIOR ROOM LAMP POWER SUPPLY
5	P	SUPER LOCK OUTPUT [RHD models]
5	–	PASSENGER DOOR UNLOCK OUTPUT [For the Middle East and China]
7	SB	STEP LAMP [LHD models]
7	Y	STEP LAMP [RHD models]
8	V	ALL DOOR, FUEL LID LOCK OUTPUT
9	G	DRIVER DOOR, FUEL LID UNLOCK OUTPUT [LHD models]
9	L	DRIVER DOOR, FUEL LID UNLOCK OUTPUT [RHD models]
10	P	PASSENGER DOOR UNLOCK OUTPUT [LHD models for Europe]
10	SB	PASSENGER DOOR UNLOCK OUTPUT [RHD models]
11	GR	BAT (FUSE) [LHD models]
11	R	BAT (FUSE) [RHD models]
13	B	GND
14	W	PUSH-BUTTON IGNITION SW ILL GND [For the middle East]
14	–	– [For China]
15	BG	ACC IND
17	BR	TURN SIGNAL RH (FRONT)
18	BG	TURN SIGNAL LH (FRONT) [LHD models]
18	GR	TURN SIGNAL LH (FRONT) [RHD models]
19	V	ROOM LAMP TIMER CONTROL

CONNECTOR INFORMATION

MAIN HARNESS

Connector No.	M120
Connector Name	BCM (BODY CONTROL MODULE)
Connector Type	NS12FW-CS

Terminal No.	Color of Wire	Signal Name [Specification]
20	V	TURN SIGNAL RH (REAR)
23	Y	TRUNK LID OPEN OUTPUT
24	BG	REAR FOG OUTPUT
25	Y	TURN SIGNAL LH (REAR)
30	P	TRUNK ROOM LAMP

Connector No.	M121
Connector Name	BCM (BODY CONTROL MODULE)
Connector Type	TH40FGY-NH

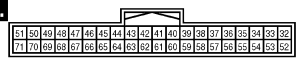

Terminal No.	Color of Wire	Signal Name [Specification]
34	SB	TRUNK ROOM ANT-
35	V	TRUNK ROOM ANT+
38	B	REAR BUMPER ANT-
39	W	REAR BUMPER ANT+
47	Y	IGN RELAY (IPDM E/R) CONT
50	G	TRUNK ROOM LAMP SW
52	BR	STARTER RELAY CONT [LHD models]
52	R	STARTER RELAY CONT [RHD models]
61	SB	TRUNK LID OPENER REQUEST SW
64	G	I-KEY WARN BUZZER (ENG ROOM) [LHD models]
64	L	I-KEY WARN BUZZER (ENG ROOM) [RHD models]
67	GR	TRUNK LID OPENER SW

Connector No.	M122
Connector Name	BCM (BODY CONTROL MODULE)
Connector Type	TH40FB-NH

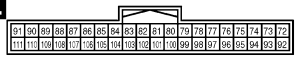

Terminal No.	Color of Wire	Signal Name [Specification]
72	R	ROOM ANT2-
73	G	ROOM ANT2+
74	SB	PASSENGER DOOR ANT-
75	BR	PASSENGER DOOR ANT+
76	V	DRIVER DOOR ANT-
77	LG	DRIVER DOOR ANT+
78	Y	ROOM ANT1-
79	BR	ROOM ANT1+
80	GR	NATS ANTENNA AMP.
81	W	NATS ANTENNA AMP.
82	R	IGN RELAY (F/B) CONT
83	Y	KEYLESS ENTRY RECEIVER COMM
85	G	ALARM LINK
86	BR	DONGLE LINK
87	Y	COMBI SW INPUT 5
88	BG	COMBI SW INPUT 3
89	BR	PUSH SW
90	P	CAN-L
91	L	CAN-H
92	LG	KEY SLOT ILL [LHD models]
92	L	KEY SLOT ILL [RHD models]
93	V	ON IND [LHD models]
93	Y	ON IND [RHD models]
95	BG	ACC RELAY CONT
96	GR	A/T SHIFT SELECTOR POWER SUPPLY [LHD models]
96	Y	A/T SHIFT SELECTOR POWER SUPPLY [RHD models]
97	L	S/L CONDITION 1
98	SB	S/L CONDITION 2 [LHD models]
98	P	S/L CONDITION 2 [RHD models]
99	R	SHIFT P
100	Y	PASSENGER DOOR REQUEST SW
101	P	DRIVER DOOR REQUEST SW
102	BG	BLOWER FAN MOTOR RELAY CONT
103	LG	KEYLESS ENTRY RECEIVER POWER SUPPLY
105	V	DOOR LOCK STATUS IND
106	W	S/L UNIT POWER SUPPLY
107	LG	COMBI SW INPUT 1
108	R	COMBI SW INPUT 4
109	W	COMBI SW INPUT 2
110	G	HAZARD SW
111	Y	S/L UNIT COMM

Connector No.	M123
Connector Name	BCM (BODY CONTROL MODULE)
Connector Type	TH40FG-NH

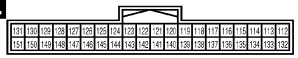

Terminal No.	Color of Wire	Signal Name [Specification]
112	BR	L&R SENSOR SERIAL LINK [LHD models]
112	R	L&R SENSOR SERIAL LINK [RHD models]
113	G	OPTICAL SENSOR
114	R	CLUTCH INTERLOCK SW
115	G	SHOCK SENSOR SIGNAL
116	SB	STOP LAMP SW 1
117	Y	AIR BAG
118	BR	STOP LAMP SW 2
119	GR	DR DOOR UNLOCK SENSOR [LHD models]
119	SB	DR DOOR UNLOCK SENSOR [RHD models]
120	BG	BACK UP LAMP SW
121	SB	KEY SLOT SW
123	W	IGN F/B
124	BG	PASSENGER DOOR SW [LHD models]
124	LG	PASSENGER DOOR SW [RHD models]
127	G	H/L WASHER SW
129	BG	TRUNK LID OPENER CANCEL SW
132	LG	P/W SW & RHT C/U COMM [LHD models]
132	V	P/W SW & RHT C/U COMM [RHD models]
133	Y	PUSH-BUTTON IGNITION SW ILL POWER [LHD models]
133	L	PUSH-BUTTON IGNITION SW ILL POWER [RHD models]
134	LG	LOCK IND
137	BG	RECEIVER/SENSOR GND
138	Y	RECEIVER/SENSOR POWER SUPPLY [For Russia and the Middle East, China]
138	BR	RECEIVER/SENSOR POWER SUPPLY [LHD models for Europe except for Russia]
138	V	RECEIVER/SENSOR POWER SUPPLY [RHD models]
139	L	TIRE PRESSURE RECEIVER COMM
140	G	PARK/NEUTRAL POSITION SW [LHD models with M/T]
140	BR	PARK/NEUTRAL POSITION SW [RHD models with M/T]
140	GR	SHIFT N/P [With A/T]
141	R	SECURITY INDICATOR LAMP
142	BR	COMBI SW OUTPUT 5
143	V	COMBI SW OUTPUT 1
144	G	COMBI SW OUTPUT 2
145	L	COMBI SW OUTPUT 3
146	SB	COMBI SW OUTPUT 4
149	W	TIRE PRESSURE WARN CHECK SW
150	R	DRIVER DOOR SW
151	G	REAR WINDOW DEFOGGER RELAY CONT

JCMWM6743GB

MAIN HARNESS

Connector No.	M124
Connector Name	WIRE TO WIRE
Connector Type	TH40MW-CS15

H.S.

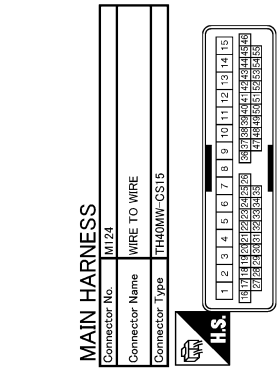

Terminal No.	Color of Wire	Signal Name [Specification]
3	R	–
4	P	– [LHD models]
4	W	– [RHD models]
5	B	–
6	BG	– [LHD models]
6	W	– [RHD models]
7	R	– [LHD models]
7	L	– [RHD models]
8	G	– [LHD models]
8	W	– [RHD models]
9	P	–
10	V	– [LHD models]
10	SB	– [RHD models]
11	SB	– [LHD models with BOSE system]
11	GR	– [LHD models without BOSE system]
11	LG	– [RHD models]
12	BR	– [LHD models]
12	R	– [RHD models]
13	B	–
14	G	– [LHD models]
14	GR	– [RHD models]
15	W	– [LHD models]
15	BG	– [RHD models]
16	Y/B	–
17	Y	–
34	Y	–
35	Y/B	–
36	P	–
38	W	– [LHD models]
38	R	– [RHD models]
39	BG	– [LHD models]
39	G	– [RHD models]
40	SB	– [LHD models]
40	L	– [RHD models]
41	BR	– [LHD models with automatic drive positioner]
41	G	– [LHD models without automatic drive positioner]
41	L	– [RHD models]
42	R	– [LHD models]
42	Y	– [RHD models]
43	L	– [LHD models]
43	G	– [RHD models]
44	Y	–
45	R	– [LHD models]
45	L	– [RHD models]
46	W	–
47	SB	–
48	BR	–
49	Y	–
50	P	– [LHD models]
50	Y	– [RHD models]
51	LG	– [LHD models]
51	BG	– [RHD models]
52	BG	– [LHD models]
52	GR	– [RHD models]
53	Y	– [LHD models]
53	L	– [RHD models]
54	L	–
55	L	– [LHD models]
55	Y	– [RHD models]

Connector No.	M130
Connector Name	WIRE TO WIRE
Connector Type	NH10FW-CS10

H.S.

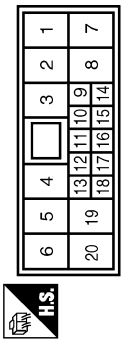

Terminal No.	Color of Wire	Signal Name [Specification]
1	B	–
2	R	–
3	Y	–
4	G	– [With NAVI]
4	R	– [Without NAVI]
5	SHIELD	–
6	R	– [With NAVI]
6	G	– [Without NAVI]
7	B	–
8	L	–
9	R	–
10	R	–
11	V	–
12	LG	–
13	R	–
18	B	–
19	P	–

Connector No.	M131
Connector Name	INSIDE KEY ANTENNA (INSTRUMENT CENTER)
Connector Type	RK02FGY

H.S.

Terminal No.	Color of Wire	Signal Name [Specification]
1	BR	–
2	Y	–

Connector No.	M132
Connector Name	CIGARETTE LIGHTER SOCKET
Connector Type	NS03FW-CS

H.S.

Terminal No.	Color of Wire	Signal Name [Specification]
1	B	–
2	BR	–
3	P	– [LHD models]
3	R	– [RHD models]

Connector No.	M133
Connector Name	WIRE TO WIRE
Connector Type	M02FB-LC

H.S.

Terminal No.	Color of Wire	Signal Name [Specification]
1	Y	–
2	B	–

Connector No.	M134
Connector Name	WIRE TO WIRE
Connector Type	CP06MGY-S

H.S.

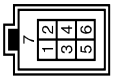

Terminal No.	Color of Wire	Signal Name [Specification]
1	W	–
2	G	–
5	L	–
6	R	–
7	SHIELD	–

JCMWM6744GB

CONNECTOR INFORMATION

MAIN HARNESS

Connector No.	M135
Connector Name	USB CONNECTER
Connector Type	HAA04FG

Terminal No.	Color of Wire	Signal Name [Specification]
1	W	–
2	L	–
3	G	–
4	R	–
5	SHIELD	–

Connector No.	M136
Connector Name	WIRE TO WIRE
Connector Type	TH24FW-NH

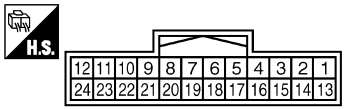

Terminal No.	Color of Wire	Signal Name [Specification]
1	V	–
2	BR	–
3	R	–
4	GR	–
5	R	– [LHD models with climate controlled seat]
5	W	– [LHD models without climate controlled seat]
5	L	– [RHD models]
6	BG	– [With climate controlled seat]
6	W	– [Without climate controlled seat]
7	Y	– [With climate controlled seat]
7	R	– [Without climate controlled seat]
8	G	– [With climate controlled seat]
8	GR	– [Without climate controlled seat]
9	L	– [With climate controlled seat]
9	SB	– [Without climate controlled seat]
10	V	– [Except LHD models without climate controlled seat]
10	R	– [LHD models without climate controlled seat]
11	P	– [With climate controlled seat]
11	L	– [Without climate controlled seat]
12	R	– [LHD models with climate controlled seat]
12	LG	– [RHD models with climate controlled seat]
12	GR	– [Without climate controlled seat]
16	B	–
17	SB	–
18	BR	–
19	GR	–
20	R	– [LHD models]
20	P	– [RHD models]
21	R	– [With climate controlled seat]
21	GR	– [Without climate controlled seat]
22	W	– [LHD models without climate controlled seat]
22	P	– [RHD models without climate controlled seat]
22	BG	– [With climate controlled seat]
23	B	– [Except LHD models without climate controlled seat]
23	GR	– [LHD models without climate controlled seat]
24	B	– [With climate controlled seat]
24	W	– [Without climate controlled seat]

Connector No.	M137
Connector Name	A/T SHIFT SELECTOR
Connector Type	TH12FW-NH

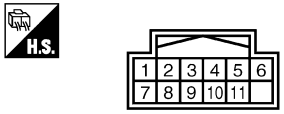

Terminal No.	Color of Wire	Signal Name [Specification]
1	W	–
2	V	–
3	L	–
4	BR	–
5	G	–
7	Y	– [LHD models]
7	LG	– [RHD models]
8	SB	– [LHD models]
8	R	– [RHD models]
9	B	–
10	GR	– [LHD models]
10	Y	– [RHD models]
11	R	–

Connector No.	M140
Connector Name	FRONT POWER SOCKET
Connector Type	P02FB-Z

Terminal No.	Color of Wire	Signal Name [Specification]
1	P	–
2	B	–

Connector No.	M141
Connector Name	HEATED SEAT SWITCH (DRIVER SIDE)
Connector Type	TK10FW

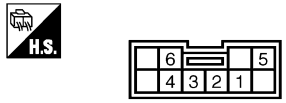

Terminal No.	Color of Wire	Signal Name [Specification]
1	L	–
2	GR	–
3	R	–
4	W	–
5	W	–
6	GR	–

Connector No.	M142
Connector Name	HEATED SEAT SWITCH (PASSENGER SIDE)
Connector Type	TK08FBR

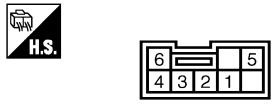

Terminal No.	Color of Wire	Signal Name [Specification]
1	GR	–
2	SB	–
3	R	–
4	W	–
5	W	–
6	GR	–

Connector No.	M143
Connector Name	YAW RATE / SIDE G SENSOR
Connector Type	AAZ04FB

Terminal No.	Color of Wire	Signal Name [Specification]
1	GR	GND [LHD models]
1	B	GND [RHD models]
2	Y	BUS-L
3	SB	BUS-H [LHD models]
3	W	BUS-H [RHD models]
4	G	12V

Connector No.	M146
Connector Name	INSIDE KEY ANTENNA (CONSOLE)
Connector Type	RK02FGY

Terminal No.	Color of Wire	Signal Name [Specification]
1	G	–
2	R	–

JCMWM6745GB

MAIN HARNESS

Connector No.	M147
Connector Name	AIR BAG DIAGNOSIS SENSOR UNIT
Connector Type	NH28FY-EX

H.S.

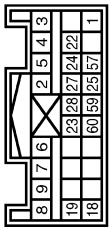

Terminal No.	Color of Wire	Signal Name [Specification]
1	LG	IGN
2	B	GND
3	Y	DR1 (+)
4	Y	DR1 (−) DR2 (−)
5	Y	DR2 (+)
6	Y	AS1 (+)
7	Y	AS1 (−)
8	Y	AS2 (+)
9	Y	AS2 (−)
18	SB	ECZS (+)
19	V	ECZS (−)
22	SHIELD	GND
23	LG	AIRBAG W/L
24	G	SEAT BELT
25	R	CUTOFF TELLTALE
27	R	ACTIVE
28	V	DEACTIVE
57	G	DEPLOYMENT INFORMATION OUTPUT
59	L	CAN-H
60	P	CAN-L

Connector No.	M148
Connector Name	CONSOLE POWER SOCKET
Connector Type	P02FB-Z

H.S.

Terminal No.	Color of Wire	Signal Name [Specification]
1	Y	–
2	B	–

Connector No.	M149
Connector Name	WIRE TO WIRE
Connector Type	TH12MW-NH

H.S.

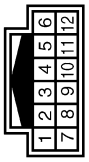

Terminal No.	Color of Wire	Signal Name [Specification]
2	SHIELD	–
3	B	–
4	W	–
5	G	–
6	R	–
9	SHIELD	–
10	W	–
11	SHIELD	–
12	L	–

Connector No.	M150
Connector Name	CLIMATE CONTROLLED SEAT RELAY
Connector Type	M06FBR-R-LC

H.S.

Terminal No.	Color of Wire	Signal Name [Specification]
1	B	–
2	G	– [LHD models]
2	GR	– [RHD models]
3	V	– [LHD models]
3	Y	– [RHD models]
5	BR	–
6	L	–
7	BG	– [LHD models]
7	V	– [RHD models]

Connector No.	M151
Connector Name	WIRE TO WIRE
Connector Type	M02MB-P-LC

H.S.

Terminal No.	Color of Wire	Signal Name [Specification]
1	R	–
2	B	–

Connector No.	M152
Connector Name	POWER SOCKET
Connector Type	P02FB-Z

H.S.

Terminal No.	Color of Wire	Signal Name [Specification]
1	R	–
2	B	–

Connector No.	M153
Connector Name	SONAR CANCEL SWITCH
Connector Type	TK08FW

H.S.

Terminal No.	Color of Wire	Signal Name [Specification]
1	SB	–
2	W	–

3	B	–
4	BG	–
5	L	–
6	BR	–

Connector No.	M154
Connector Name	AUXILIARY INPUT JACKS
Connector Type	A08FW

H.S.

Terminal No.	Color of Wire	Signal Name [Specification]
1	R	AUX SOUND SIGNAL RH (+)
2	B	AUX SOUND SIGNAL GND
3	W	AUX SOUND SIGNAL LH (+)
7	G	AUX IMAGE SIGNAL
8	R	AUX IMAGE GND

Connector No.	M155
Connector Name	WIRE TO WIRE
Connector Type	TH08FW-NH

H.S.

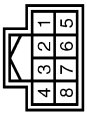

Terminal No.	Color of Wire	Signal Name [Specification]
1	SHIELD	–
2	B	–
3	R	–
4	W	–
5	B	–
6	SHIELD	–
7	G	–
8	R	–

JCMWM6746GB

CONNECTOR INFORMATION

MAIN HARNESS

Connector No.	M156
Connector Name	PASSENGER AIR BAG MODULE 1
Connector Type	JCA02FB

Terminal No.	Color of Wire	Signal Name [Specification]
1	Y	–
2	Y	–

Connector No.	M157
Connector Name	PASSENGER AIR BAG MODULE
Connector Type	JCA02FOR

Terminal No.	Color of Wire	Signal Name [Specification]
1	Y	–
2	Y	–

Connector No.	M159
Connector Name	PASSENGER AIR BAG MODULE 2
Connector Type	JCA02FOR

Terminal No.	Color of Wire	Signal Name [Specification]
1	Y	–
2	Y	–

Connector No.	M162
Connector Name	HEATED SEAT SWITCH (DRIVER SIDE)
Connector Type	TK08FBR

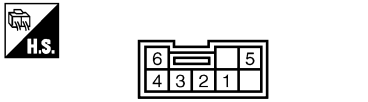

Terminal No.	Color of Wire	Signal Name [Specification]
1	GR	–
2	SB	–
3	R	–
4	W	–
5	L	–
6	GR	–

Connector No.	M163
Connector Name	HEATED SEAT SWITCH (PASSENGER SIDE)
Connector Type	TK10FW

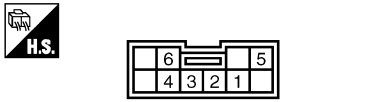

Terminal No.	Color of Wire	Signal Name [Specification]
1	L	–
2	GR	–
3	V	–
4	P	–
5	W	–
6	B	–

Connector No.	M164
Connector Name	WIRE TO WIRE
Connector Type	TH08FW-NH

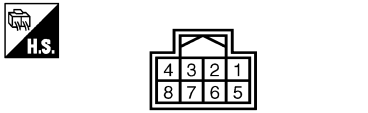

Terminal No.	Color of Wire	Signal Name [Specification]
1	Y	–
2	G	–
3	R	–
4	W	–
7	SHIELD	–
8	B	–

Connector No.	M165
Connector Name	DONGLE UNIT
Connector Type	NS08FBR-CS

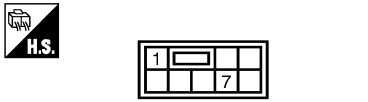

Terminal No.	Color of Wire	Signal Name [Specification]
1	B	GND
7	BR	INTERFACE

Connector No.	M167
Connector Name	WIRE TO WIRE
Connector Type	TH08FW-NH

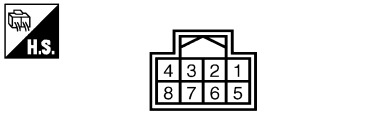

Terminal No.	Color of Wire	Signal Name [Specification]
1	SHIELD	–
2	W	–

Connector No.	M168
Connector Name	WIRE TO WIRE
Connector Type	TH08MW-NH

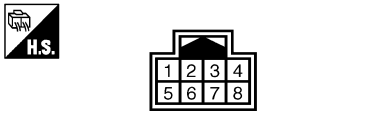

Terminal No.	Color of Wire	Signal Name [Specification]
1	SHIELD	–
2	W	–

Connector No.	M170
Connector Name	CLIMATE CONTROLLED SEAT SWITCH (DRIVER SIDE)
Connector Type	TK08FBR

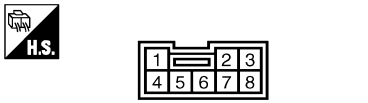

Terminal No.	Color of Wire	Signal Name [Specification]
1	SB	–
2	G	–
3	L	–
4	BG	–
5	Y	–
6	B	–
7	R	–
8	P	–

JCMWM6747GB

CONNECTOR INFORMATION

MAIN HARNESS

Connector No.	M171
Connector Name	CLIMATE CONTROLLED SEAT SWITCH (PASSENGER SIDE)
Connector Type	TK10FW

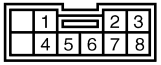

Terminal No.	Color of Wire	Signal Name [Specification]
1	BG	–
2	V	–
3	P	–
4	BR	–
5	GR	–
6	B	–
7	LG	–
8	R	–

Connector No.	M172
Connector Name	HEATED SEAT SWITCH (DRIVER SIDE)
Connector Type	TK08FBR

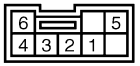

Terminal No.	Color of Wire	Signal Name [Specification]
1	GR	–
2	SB	–
3	R	–
4	W	–
5	W	–
6	GR	–

Connector No.	M173
Connector Name	HEATED SEAT SWITCH (PASSENGER SIDE)
Connector Type	TK10FW

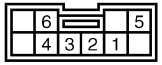

Terminal No.	Color of Wire	Signal Name [Specification]
1	L	–
2	GR	–
3	R	–
4	W	–
5	W	–
6	B	–

Connector No.	M174
Connector Name	WIRE TO WIRE
Connector Type	TH24MW-NH

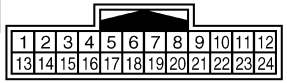

Terminal No.	Color of Wire	Signal Name [Specification]
1	V	–
2	BR	–
3	R	–
4	GR	–
5	R	– [With climate controlled seat]
5	W	– [Without climate controlled seat]
6	O	– [LHD models with climate controlled seat]
6	LG	– [LHD models without climate controlled seat]
6	BG	– [RHD models with climate controlled seat]
6	W	– [RHD models without climate controlled seat]
7	Y	– [With climate controlled seat]
7	R	– [Without climate controlled seat]
8	P	– [LHD models without climate controlled seat]
8	GR	– [RHD models without climate controlled seat]
8	G	– [With climate controlled seat]
9	L	– [With climate controlled seat]
9	SB	– [Without climate controlled seat]
10	O	– [LHD models without climate controlled seat]
10	R	– [RHD models without climate controlled seat]
10	V	– [With climate controlled seat]
11	P	– [With climate controlled seat]
11	L	– [Without climate controlled seat]
12	G	– [LHD models without climate controlled seat]
12	GR	– [RHD models without climate controlled seat]
12	Y	– [With climate controlled seat]
16	B	–
17	SB	–
18	BR	–
19	GR	–
20	LG	–
21	R	– [With climate controlled seat]
21	GR	– [Without climate controlled seat]
22	O	– [LHD models with climate controlled seat]
22	BG	– [RHD models with climate controlled seat]
22	W	– [Without climate controlled seat]
23	B	–
24	Y	– [LHD models without climate controlled seat]
24	W	– [RHD models without climate controlled seat]
24	B	– [With climate controlled seat]

Connector No.	M175
Connector Name	HEATED SEAT SWITCH (DRIVER SIDE)
Connector Type	TK10FW

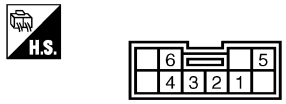

Terminal No.	Color of Wire	Signal Name [Specification]
1	L	–
2	G	–
3	O	–
4	W	–
5	LG	–
6	B	–

Connector No.	M176
Connector Name	HEATED SEAT SWITCH (PASSENGER SIDE)
Connector Type	TK08FBR

Terminal No.	Color of Wire	Signal Name [Specification]
1	P	–
2	SB	–
3	R	–
4	Y	–
5	W	–
6	GR	–

Connector No.	M177
Connector Name	CLIMATE CONTROLLED SEAT SWITCH (DRIVER SIDE)
Connector Type	TK10FW

Terminal No.	Color of Wire	Signal Name [Specification]
1	BG	–
2	V	–
3	P	–
4	BR	–
5	GR	–
6	B	–
7	R	–
8	R	–

CONNECTOR INFORMATION

MAIN HARNESS

Connector No.	M178
Connector Name	CLIMATE CONTROLLED SEAT SWITCH (PASSENGER SIDE)
Connector Type	TK08FBR

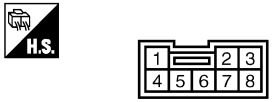

Terminal No.	Color of Wire	Signal Name [Specification]
1	SB	–
2	G	–
3	L	–
4	BG	–
5	Y	–
6	B	–
7	R	–
8	R	–

Connector No.	M179
Connector Name	ROOF OPEN / CLOSE SWITCH
Connector Type	TK06FW-1V

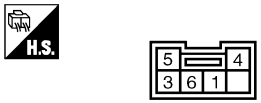

Terminal No.	Color of Wire	Signal Name [Specification]
1	B	–
3	V	–
4	BR	–
5	R	–
6	GR	–

Connector No.	M191
Connector Name	CLIMATE CONTROLLED SEAT SWITCH (DRIVER SIDE)
Connector Type	TK10FW

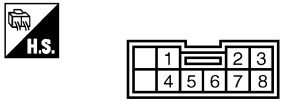

Terminal No.	Color of Wire	Signal Name [Specification]
1	O	–
2	V	–
3	P	–
4	BR	–
5	GR	–
6	B	–
7	Y	–
8	R	–

Connector No.	M192
Connector Name	CLIMATE CONTROLLED SEAT SWITCH (PASSENGER SIDE)
Connector Type	TK08FBR

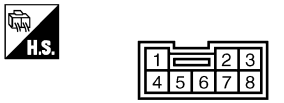

Terminal No.	Color of Wire	Signal Name [Specification]
1	SB	–
2	G	–
3	L	–
4	O	–
5	Y	–
6	B	–
7	R	–
8	LG	–

Connector No.	M193
Connector Name	CLIMATE CONTROLLED SEAT SWITCH (DRIVER SIDE)
Connector Type	TK08FBR

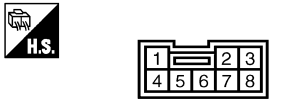

Terminal No.	Color of Wire	Signal Name [Specification]
1	SB	–
2	G	–
3	L	–
4	BG	–
5	Y	–
6	B	–
7	R	–
8	LG	–

Connector No.	M194
Connector Name	CLIMATE CONTROLLED SEAT SWITCH (PASSENGER SIDE)
Connector Type	TK10FW

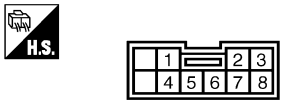

Terminal No.	Color of Wire	Signal Name [Specification]
1	BG	–
2	V	–
3	P	–
4	BR	–
5	GR	–
6	B	–
7	Y	–
8	R	–

Connector No.	M201
Connector Name	AV CONTROL UNIT
Connector Type	TH18FW-CS2

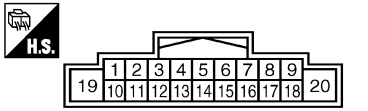

Terminal No.	Color of Wire	Signal Name [Specification]
2	L	SOUND SIGNAL FRONT LH (+)
3	W	SOUND SIGNAL FRONT LH (–)
4	LG	SOUND SIGNAL REAR LH (+)
5	SB	SOUND SIGNAL REAR LH (–) [LHD models]
5	Y	SOUND SIGNAL REAR LH (–) [RHD models]
6	P	STRG SW A
7	V	ACC
9	L	ILLUMINATION
11	BR	SOUND SIGNAL FRONT RH (+)
12	GR	SOUND SIGNAL FRONT RH (–) [LHD models]
12	R	SOUND SIGNAL FRONT RH (–) [RHD models]
13	L	SOUND SIGNAL REAR RH (+)
14	P	SOUND SIGNAL REAR RH (–)
15	B	STRG SW GND
16	L	STRG SW B
18	G	GND
19	BR	BATTERY [LHD models]
19	Y	BATTERY [RHD models]
20	B	GND

JCMWM6749GB

MAIN HARNESS

Connector No.	M202
Connector Name	AV CONTROL UNIT
Connector Type	TH24FW-NH

H.S.

36	37	38	39	40	41	42	43	44	45	46	47
48	49	50	51	52	53	54	55	56	57	58	59

Terminal No.	Color of Wire	Signal Name [Specification]
36	BG	SIGNAL VCC
37	LG	SIGNAL GND
38	R	HP
39	L	COMM (DISP->CONT)
40	B	RGB AREA (YS) SIGNAL
41	SHIELD	SHIELD
42	W	RGB SYNC
43	G	RGB (RRED) SIGNAL
44	L	RGB (LGGREEN) SIGNAL
45	P	RGB (BBLUE) SIGNAL
46	V	COMPOSITE IMAGE GND
47	SB	COMPOSITE IMAGE SIGNAL
48	Y	INVERTER VCC
49	BR	INVERTER GND
50	G	VP
51	P	COMM (CONT->DISP)
52	SHIELD	SHIELD
57	SHIELD	SHIELD
58	SHIELD	SHIELD

Connector No.	M203
Connector Name	AV CONTROL UNIT
Connector Type	TH16FW-NH

H.S.

60	61	62	63	64	65	66	67
68	69	70	71	72	73	74	75

Terminal No.	Color of Wire	Signal Name [Specification]
61	G	AUX IMAGE SIGNAL
62	W	CAMERA IMAGE SIGNAL
69	R	AUX IMAGE GND

70	B	SHIELD
71	SHIELD	SHIELD
72	W	CAMERA GND
73	R	CAMERA POWER SUPPLY

Connector No.	M204
Connector Name	AV CONTROL UNIT
Connector Type	TH32FW-NH

H.S.

76	77	78	79	80	81	82	83	84	85	86	87	88	89	90	91
92	93	94	95	96	97	98	99	100	101	102	103	104	105	106	107

Terminal No.	Color of Wire	Signal Name [Specification]
76	LG	AV COMM (L)
77	SB	AV COMM (H)
78	LG	AV COMM (L)
79	SB	AV COMM (H)
80	P	CAN-L
81	L	CAN-H
82	BR	SW GND
86	SHIELD	SHIELD
87	L	TEL VOICE SIGNAL (+)
88	P	TEL VOICE SIGNAL (-)
92	GR	VEHICLE SPEED (8-PULSE)
93	SB	PARKING BRAKE
94	BG	REVERSE [LHD models]
94	BR	REVERSE [RHD models]
95	G	IGNITION
96	SB	DISK EJECT SIGNAL
102	B	AUX SOUND SIGNAL GND
103	W	AUX SOUND SIGNAL LH (+)
104	R	AUX SOUND SIGNAL RH (+)

Connector No.	M207
Connector Name	AV CONTROL UNIT
Connector Type	HAA04FL

H.S.

132	134
133	135
136	

Terminal No.	Color of Wire	Signal Name [Specification]
132	G	USB GND
133	R	USB D- SIGNAL
134	W	V BUS SIGNAL
135	L	USB D+ SIGNAL
136	SHIELD	SHIELD

Connector No.	M208
Connector Name	AV CONTROL UNIT
Connector Type	TH18FW-CS2

H.S.

1	2	3	4	5	6	7	8	9
19	10	11	12	13	14	15	16	17	18	20

Terminal No.	Color of Wire	Signal Name [Specification]
2	P	SOUND SIGNAL LH (+)
3	L	SOUND SIGNAL LH (-)
6	P	STRG SW A
7	V	ACC
10	B	SHIELD [LHD models]
10	SHIELD	SHIELD [RHD models]
11	R	SOUND SIGNAL RH (+)
12	G	SOUND SIGNAL RH (-)
15	B	STRG SW GND
16	L	STRG SW B
19	BR	BATTERY [LHD models]
19	Y	BATTERY [RHD models]
20	B	GND

Connector No.	M209
Connector Name	AV CONTROL UNIT
Connector Type	TH40FW-NH

H.S.

21	22	23	24	25	26	27	28	29	30	31	32	33	34	35	36	37	38	39	40
41	42	43	44	45	46	47	48	49	50	51	52	53	54	55	56	57	58	59	60

Terminal No.	Color of Wire	Signal Name [Specification]
22	R	CAMERA POWER SUPPLY
26	G	AUX IMAGE SIGNAL
29	SB	DISK EJECT SIGNAL
42	W	CAMERA GND
46	R	AUX IMAGE GND
47	B	SHIELD
49	BR	SW GND

JCMWM6750GB

MAIN HARNESS

Connector No.	M210
Connector Name	AV CONTROL UNIT
Connector Type	TH32FW-NH

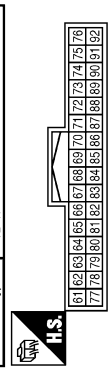

Terminal No.	Color of Wire	Signal Name [Specification]
65	SB	PARKING BRAKE
67	P	COMPOSITE IMAGE GND
68	L	COMPOSITE IMAGE SIGNAL
71	SHIELD	MICROPHONE SHIELD
72	G	MICROPHONE VCC
73	P	COMM (CONT->DISP)
74	P	CAN-L
75	LG	AV COMM (L)
76	LG	AV COMM (L)
79	L	ILLUMINATION
80	G	IGNITION
81	BG	REVERSE SIGNAL [LHD models]
81	BR	REVERSE SIGNAL [RHD models]
82	GR	VEHICLE SPEED (8-PULSE)
83	SHIELD	SHIELD
87	R	MICROPHONE SIGNAL
88	SHIELD	SHIELD
89	L	COMM (DISP->CONT)
90	L	CAN-H
91	SB	AV COMM (H)
92	SB	AV COMM (H)

Connector No.	M211
Connector Name	AV CONTROL UNIT
Connector Type	TH28FW

Terminal No.	Color of Wire	Signal Name [Specification]
104	W	AUX SOUND SIGNAL LH (-)
117	SHIELD	SHIELD
118	R	AUX SOUND SIGNAL RH (+)
119	B	AUX SOUND SIGNAL GND

Connector No.	M212
Connector Name	AV CONTROL UNIT
Connector Type	HAA04FL

Terminal No.	Color of Wire	Signal Name [Specification]
129	G	USB GND
130	R	USB D– SIGNAL
131	W	V BUS SIGNAL
132	L	USB D+ SIGNAL
133	SHIELD	SHIELD

Connector No.	M213
Connector Name	AV CONTROL UNIT
Connector Type	TH16FW-NH

Terminal No.	Color of Wire	Signal Name [Specification]
135	BR	VOICE GUIDANCE SIGNAL (+)
136	Y	VOICE GUIDANCE SIGNAL (–)

Connector No.	M221
Connector Name	SHIFT POSITION SWITCH
Connector Type	TH12FW

Terminal No.	Color of Wire	Signal Name [Specification]
2	L	N
3	BR	D
4	G	R
5	P	P
6	V	M
7	O	AT
9	Y	MT
10	R	ILL
11	B	GND

Connector No.	M222
Connector Name	SHIFT LOCK UNIT
Connector Type	–

Terminal No.	Color of Wire	Signal Name [Specification]
3	BR	IGN
4	L	GND

Connector No.	M251
Connector Name	WIRE TO WIRE
Connector Type	A03FW

Terminal No.	Color of Wire	Signal Name [Specification]
1	L	–
2	B	–
3	L	–

Connector No.	M252
Connector Name	AIR MIX DOOR MOTOR LH
Connector Type	A03FW

Terminal No.	Color of Wire	Signal Name [Specification]
1	L	–
2	B	–
3	L	–

JCMWM6751GB

CONNECTOR INFORMATION

MAIN HARNESS

Connector No.	M253
Connector Name	MODE DOOR MOTOR
Connector Type	A03FW

Terminal No.	Color of Wire	Signal Name [Specification]
1	L	–
2	B	–
3	L	–

Connector No.	M254
Connector Name	INTAKE DOOR MOTOR
Connector Type	A03FW

Terminal No.	Color of Wire	Signal Name [Specification]
1	L	–
2	B	–
3	L	–

Connector No.	M255
Connector Name	AIR MIX DOOR MOTOR RH
Connector Type	A03FW

Terminal No.	Color of Wire	Signal Name [Specification]
1	L	–
2	B	–
3	L	–

Connector No.	M301
Connector Name	DRIVER AIR BAG MODULE
Connector Type	ACA02FOR

Terminal No.	Color of Wire	Signal Name [Specification]
9	–	–
12	–	–

Connector No.	M302
Connector Name	DRIVER AIR BAG MODULE
Connector Type	ACA02FY-2V

Terminal No.	Color of Wire	Signal Name [Specification]
10	–	–
11	–	–

Connector No.	M303
Connector Name	COMBINATION SWITCH (SPIRAL CABLE)
Connector Type	TK08FGY

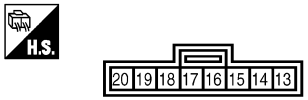

Terminal No.	Color of Wire	Signal Name [Specification]
13	R	–
14	W	–
15	L	–
16	B	–
17	BR	–
18	G	–
19	P	–
20	Y	–

Connector No.	M304
Connector Name	COMBINATION SWITCH (SPIRAL CABLE)
Connector Type	TK03FW

Terminal No.	Color of Wire	Signal Name [Specification]
35	O	–
36	G	–
37	V	–

Connector No.	M361
Connector Name	WIRE TO WIRE
Connector Type	TH08MW-NH

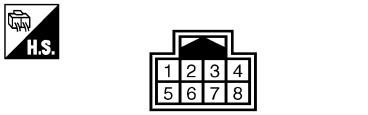

Terminal No.	Color of Wire	Signal Name [Specification]
1	SHIELD	–
2	B	–
3	R	–
4	W	–
5	SHIELD	–
6	SHIELD	–
7	G	–
8	R	–

Connector No.	M362
Connector Name	AUXILIARY INPUT JACKS
Connector Type	A08FW

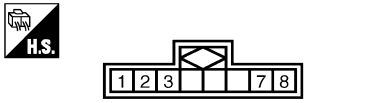

Terminal No.	Color of Wire	Signal Name [Specification]
1	R	AUX SOUND SIGNAL RH (+)
2	B	AUX SOUND SIGNAL GND
3	W	AUX SOUND SIGNAL LH (+)
7	G	AUX IMAGE SIGNAL
8	R	AUX IMAGE GND

CONNECTOR INFORMATION

MAIN HARNESS

Connector No.	M371
Connector Name	AV CONTROL UNIT
Connector Type	GT13SH-2/1S-HU

Terminal No.	Color of Wire	Signal Name [Specification]
151	–	AM-FM MAIN
152	–	ANTENNA AMP. ON SIGNAL

Connector No.	M373
Connector Name	AV CONTROL UNIT
Connector Type	GT5-1S-HU

Terminal No.	Color of Wire	Signal Name [Specification]
153	–	GPS ANTENNA
154	–	SHIELD

Connector No.	M375
Connector Name	WIRE TO WIRE
Connector Type	GT13SSN-1/1PP-HU

Terminal No.	Color of Wire	Signal Name [Specification]
1	–	–
2	–	–

Connector No.	M385
Connector Name	AV CONTROL UNIT
Connector Type	GT17HNN-4DS-HU

Terminal No.	Color of Wire	Signal Name [Specification]
157	–	RGB DIGITAL IMAGE SIGNAL (–)
158	–	RGB DIGITAL IMAGE SIGNAL (+)

Connector No.	M386
Connector Name	DISPLAY UNIT
Connector Type	GT17HN2-4DS-HU

Terminal No.	Color of Wire	Signal Name [Specification]
27	–	RGB DIGITAL IMAGE SIGNAL (–)
28	–	RGB DIGITAL IMAGE SIGNAL (+)

Connector No.	M387
Connector Name	GPS ANTENNA
Connector Type	GT5N-1PP-HU

Terminal No.	Color of Wire	Signal Name [Specification]
1	–	GPS ANTENNA
2	–	SHIELD

Connector No.	M388
Connector Name	WIRE TO WIRE
Connector Type	GT13SSN-1/1PP-HU

Terminal No.	Color of Wire	Signal Name [Specification]
1	–	–
2	–	–

Connector No.	M389
Connector Name	WIRE TO WIRE
Connector Type	GT16C-1PP-HU

Terminal No.	Color of Wire	Signal Name [Specification]
1	–	–
2	–	–

JCMWM6753GB

R Room Lamp Harness

INFOID:0000000006044202

ROOM LAMP HARNESS

Connector No.	R1
Connector Name	WIRE TO WIRE
Connector Type	NH10FW-CS10

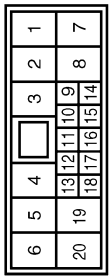

Terminal No.	Color of Wire	Signal Name [Specification]
1	B	–
2	BR	–
3	Y	–
4	W	–
5	SHIELD	–
6	O	–
7	B	–
8	L	–
9	Y	–
10	B	–
11	V	–
12	R	–
13	R	–
18	B	–
19	BR	–

Connector No.	R4
Connector Name	AUTO ANTI-DAZZLING INSIDE MIRROR
Connector Type	JAA07FB

Terminal No.	Color of Wire	Signal Name [Specification]
6	B	–
7	BR	–

Connector No.	R5
Connector Name	MAP LAMP
Connector Type	TK08FGY

Terminal No.	Color of Wire	Signal Name [Specification]
3	Y	CONSOLE L(+)
4	B	CONSOLE L GND
6	B	MAP L(–)
7	V	MAP L SIG
8	R	MAP L(+)

Connector No.	R6
Connector Name	ROOF LATCH LIMIT SWITCH
Connector Type	TH04FW-NH

Terminal No.	Color of Wire	Signal Name [Specification]
2	L	–
3	B	–

Connector No.	R7
Connector Name	MICROPHONE
Connector Type	TK04FW

Terminal No.	Color of Wire	Signal Name [Specification]
1	B	–
2	R	–
3	Y	–
4	W	–
5	SHIELD	–
6	O	–
7	B	–
8	L	–
9	Y	–
10	B	–
11	V	–
12	R	–
13	R	–
18	B	–
19	BR	–

Connector No.	R8
Connector Name	LIGHT & RAIN SENSOR
Connector Type	AAB03FB

Terminal No.	Color of Wire	Signal Name [Specification]
1	Y	+B
2	BR	SIG [LHD models]
2	R	SIG [RHD models]
3	B	GND

Connector No.	R10
Connector Name	WIRE TO WIRE
Connector Type	NH10MW-CS10

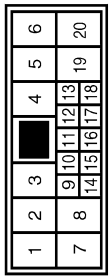

Terminal No.	Color of Wire	Signal Name [Specification]
1	B	–
2	R	–
3	Y	–
4	W	–
5	SHIELD	–
6	O	–
7	B	–
8	L	–
9	Y	–
10	B	–
11	V	–
12	R	
13	R	
18	B	
19	BR	

Connector No.	R12
Connector Name	VANITY MIRROR LAMP LH
Connector Type	5557-02R

Terminal No.	Color of Wire	Signal Name [Specification]
1	R	–
2	B	–

Connector No.	R13
Connector Name	VANITY MIRROR LAMP RH
Connector Type	5557-02R

Terminal No.	Color of Wire	Signal Name [Specification]
1	R	–
2	B	–

JCMWM6754GB

ROOM LAMP HARNESS

Connector No.	R20
Connector Name	PASSENGER AIR BAG OFF INDICATOR
Connector Type	TK03FW

Terminal No.	Color of Wire	Signal Name [Specification]
1	R	–
2	B	–

JCMWM6755GB

BASIC INSPECTION

BATTERY INSPECTION

How to Handle Battery

INFOID:0000000005911874

CAUTION:
- **If it becomes necessary to start the engine with a booster battery and jumper cables, use a 12-volt booster battery.**
- **After connecting battery cables, ensure that they are tightly clamped to battery terminals for good contact.**
- **Never add distilled water through the hole used to check specific gravity.**

METHODS OF PREVENTING OVER-DISCHARGE

The following precautions must be taken to prevent over-discharging a battery.
- The battery surface (particularly its top) should always be kept clean and dry.
- The terminal connections should be clean and tight.
- At every routine maintenance, check the electrolyte level.
  This also applies to batteries designated as “low maintenance” and “maintenance-free”.

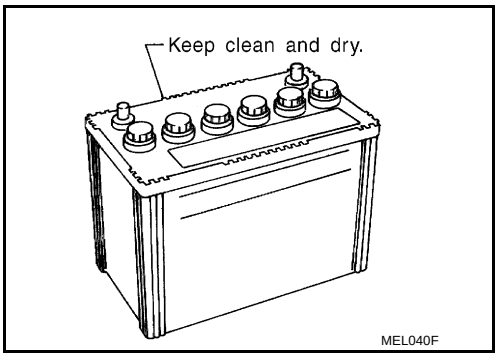

- When the vehicle is not going to be used over a long period of time, disconnect the battery cable from the negative terminal. (If the vehicle has an extended storage switch, turn it off.)

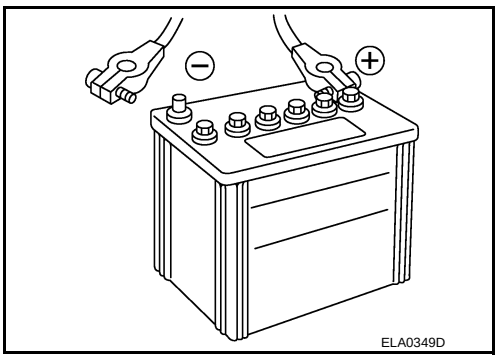

- Check the charge condition of the battery.
  Periodically check the specific gravity of the electrolyte. Keep a close check on charge condition to prevent over-discharge.

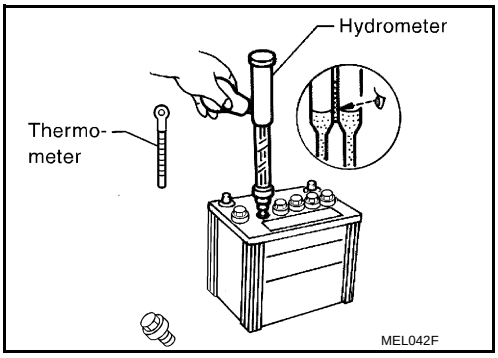

CHECKING ELECTROLYTE LEVEL

WARNING:
Never allow battery fluid to come in contact with skin, eyes, fabrics, or painted surfaces. After touching a battery, never touch or rub your eyes until you have thoroughly washed your hands. If acid contacts eyes, skin or clothing, immediately flush with water for 15 minutes and seek medical attention.

- Remove the cell plug using a suitable tool.
- Add distilled water up to the MAX level.

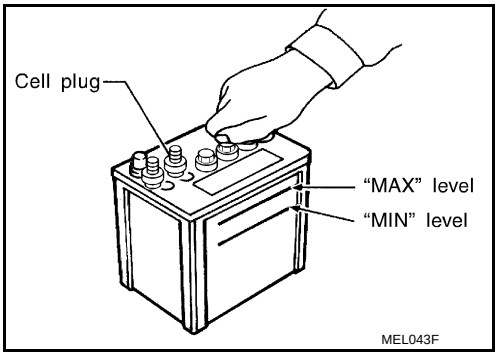

Sulphation

A battery will be completely discharged if it is left unattended for a long time and the specific gravity will become less than 1.100. This may result in sulphation on the cell plates.
To determine if a battery has been "sulphated", note its voltage and current when charging it. As shown in the figure, less current and higher voltage are observed in the initial stage of charging sulphated batteries.
A sulphated battery may sometimes be brought back into service by means of a long, slow charge, 12 hours or more, followed by a battery capacity test.

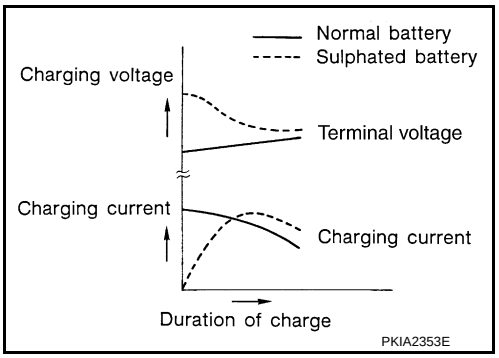

SPECIFIC GRAVITY CHECK

1. Read hydrometer and thermometer indications at eye level.
2. Convert into specific gravity at 20°C (68°F).

Example:
- When electrolyte temperature is 35°C (95°F) and specific gravity of electrolyte is 1.230, converted specific gravity at 20°C (68°F) is 1.240.
- When electrolyte temperature is 0°C (32°F) and specific gravity of electrolyte is 1.210, converted specific gravity at 20°C (68°F) is 1.196.

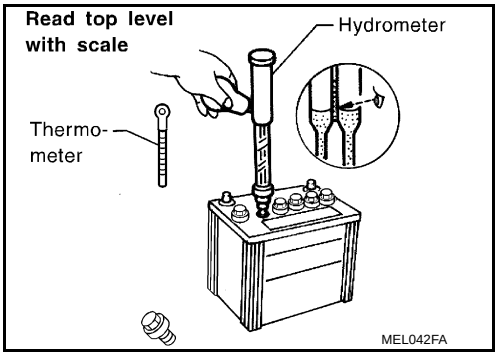

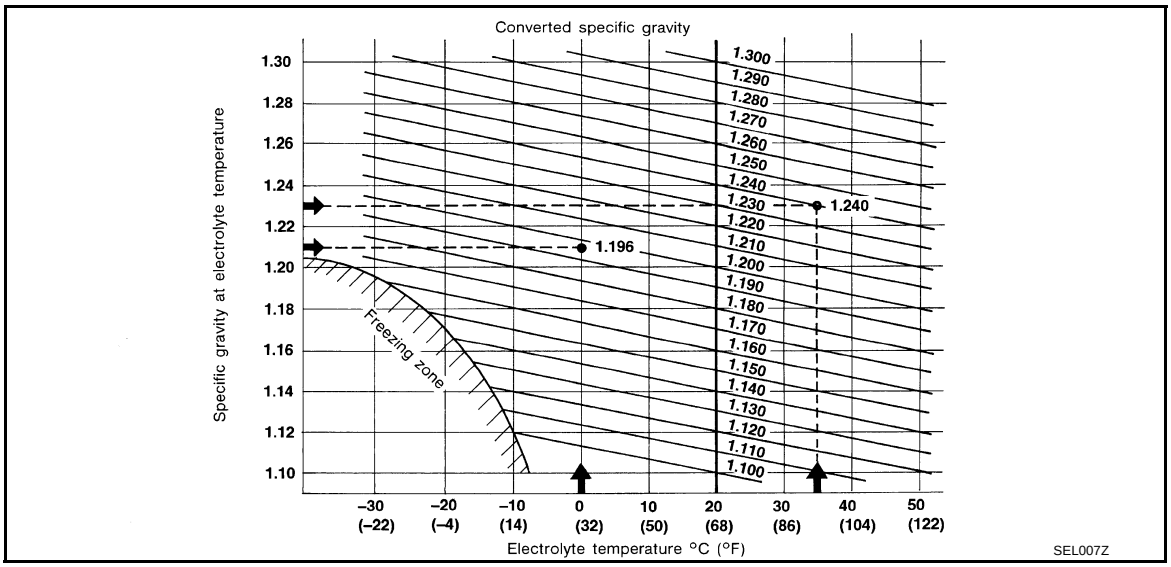

Work Procedure

INFOID:0000000005911875

OVERALL SEQUENCE

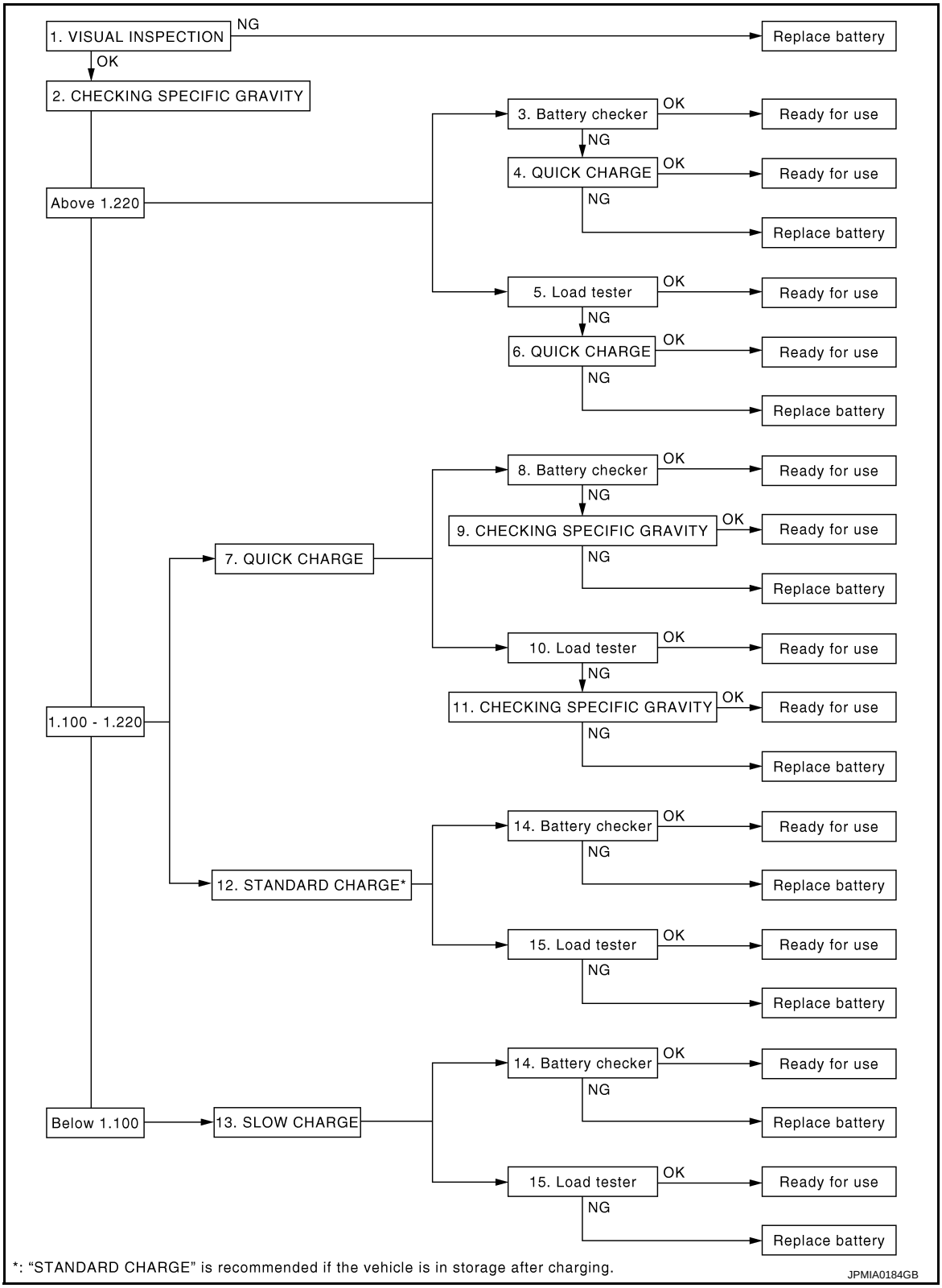

DETAILED FLOW

1.VISUAL INSPECTION

1. Check battery case for cracks or bends.
2. Check battery terminals for damage.

3. If the difference between the max. and min. electrolyte level in cells is within 10 mm (0.39 in), it is OK.

Are these inspection results normal?

YES >> GO TO 2.
NO >> Replace battery.

2. CHECKING SPECIFIC GRAVITY

Check specific gravity. Refer to PG-130, "How to Handle Battery".

Inspection results

Above 1.220 (Test using battery checker)>>GO TO 3.
Above 1.220 (Test using load tester)>>GO TO 5.
1.100 - 1.220 (When performing quick charge)>>GO TO 7.
1.100 - 1.220 (When performing standard charge)>>GO TO 12.
Below 1.100>>GO TO 13.

3. CAPACITY TEST

Test using battery checker.

Is the battery usable, according to the manufacturer's instructions?

YES >> Ready for use. Mount battery again and check loose terminals. Also check other related circuits.
NO >> GO TO 4.

4. QUICK CHARGE

1. Perform quick charge. Time required: 45 min. Refer to PG-141, "Quick Charge".
2. Test using battery checker.

Is the battery usable, according to the manufacturer's instructions?

YES >> Ready for use.
NO >> Replace battery.

5. CAPACITY TEST

1. Test using load tester.
2. Check battery type and determine the specified current using the table.

Discharging Current (Load Tester)

Type	Current (A)
28B19L/R	90
34B19L/R	99
46B24L/R	135
55B24L/R	
50D23L/R	150
55D23L/R	180
80D23L/R	195
65D26L/R	
80D26L/R	
75D31L/R	210
95D31L/R	240
115D31L/R	
025 [YUASA type code]	
027 [YUASA type code]	285
110D26L/R	300
95E41L/R	
067 [YUASA type code]	325
130E41L/R	330
096 [YUASA type code]	375

3. Read load tester voltage when specified discharging current flows through battery for 15 seconds.

Is the voltage 9.6 V or more?

YES >> Ready for use.
NO >> GO TO 6.

6. QUICK CHARGE

1. Perform quick charge. Time required: 45 min. Refer to PG-141, "Quick Charge".
2. Test using load tester.

Is the voltage 9.6 V or more?

YES >> Ready for use.
NO >> Replace battery.

7. QUICK CHARGE

1. Perform quick charge. Refer to PG-141, "Quick Charge".
2. Perform capacity test.

Test using battery checker.>>GO TO 8.
Test using load tester.>>GO TO 10.

8. CAPACITY TEST

Test using battery checker.

Is the battery usable, according to the manufacturer's instructions?

YES >> Ready for use.
NO >> GO TO 9.

9. CHECKING SPECIFIC GRAVITY

1. Check specific gravity. Refer to PG-130, "How to Handle Battery".
2. Perform recharge. Refer to PG-141, "Quick Charge".
   NOTE:
   If battery temperature rises above 55°C (131°F), stop charging. Always charge battery when its temperature is below 55°C (131°F).
3. Test using battery checker.

Is the battery usable, according to the manufacturer's instructions?

YES >> Ready for use.
NO >> Replace battery.

10. CAPACITY TEST

1. Test using load tester.
2. Check battery type and determine the specified current using the table.

Discharging Current (Load Tester)

Type	Current (A)
28B19L/R	90
34B19L/R	99
46B24L/R	135
55B24L/R	
50D23L/R	150
55D23L/R	180
80D23L/R	195
65D26L/R	
80D26L/R	
75D31L/R	210
95D31L/R	240
115D31L/R	
025 [YUASA type code]	

Type	Current (A)
027 [YUASA type code]	285
110D26L/R	300
95E41L/R	
067 [YUASA type code]	325
130E41L/R	330
096 [YUASA type code]	375

3. Read load tester voltage when specified discharging current flows through battery for 15 seconds.

Is the voltage 9.6 V or more?

YES >> Ready for use.
NO >> GO TO 11.

11. CHECKING SPECIFIC GRAVITY

1. Check specific gravity. Refer to PG-130, "How to Handle Battery".
2. Perform recharge. Refer to PG-141, "Quick Charge".
   NOTE:
   If battery temperature rises above 55°C (131°F), stop charging. Always charge battery when its temperature is below 55°C (131°F).
3. Test using load tester.

Is the voltage 9.6 V or more?

YES >> Ready for use.
NO >> Replace battery.

12. STANDARD CHARGE

NOTE:
“STANDARD CHARGE” is recommended if the vehicle is in storage after charging.

1. Perform standard charge. Refer to PG-140, "Standard Charge".
2. Perform capacity test.

Test using battery checker.>>GO TO 14.
Test using load tester.>>GO TO 15.

13. SLOW CHARGE

1. Perform slow charge. Refer to PG-139, "Slow Charge".
2. Perform capacity test.

Test using battery checker.>>GO TO 14.
Test using load tester.>>GO TO 15.

14. CAPACITY TEST

Test using battery checker.

Is the battery usable, according to the manufacturer’s instructions?

YES >> Ready for use.
NO >> Replace battery.

15. CAPACITY TEST

1. Test using load tester.
2. Check battery type and determine the specified current using the table.

Discharging Current (Load Tester)

Type	Current (A)
28B19L/R	90
34B19L/R	99
46B24L/R	135
55B24L/R	

< BASIC INSPECTION >

Type	Current (A)
50D23L/R	150
55D23L/R	180
80D23L/R	195
65D26L/R	
80D26L/R	
75D31L/R	210
95D31L/R	240
115D31L/R	
025 [YUASA type code]	
027 [YUASA type code]	285
110D26L/R	300
95E41L/R	
067 [YUASA type code]	325
130E41L/R	330
096 [YUASA type code]	375

3. Read load tester voltage when specified discharging current flows through battery for 15 seconds.

Is the voltage 9.6 V or more?

YES >> Ready for use.
NO >> Replace battery.

FUSE INSPECTION

How To Check

INFOID:0000000005911876

- If fuse is blown, be sure to eliminate cause of malfunction before installing new fuse.
- Use fuse of specified rating. Never use fuse of more than specified rating.
- Do not partially install fuse; always insert it into fuse holder properly.
- Remove fuse for “ELECTRICAL PARTS (BAT)” if vehicle is not used for a long period of time.

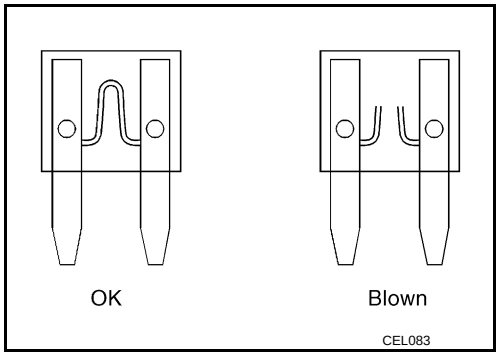

FUSIBLE LINK INSPECTION

How To Check

INFOID:0000000005911877

A melted fusible link can be detected either by visual inspection or by feeling with finger tip. If its condition is questionable, use circuit tester or test lamp.

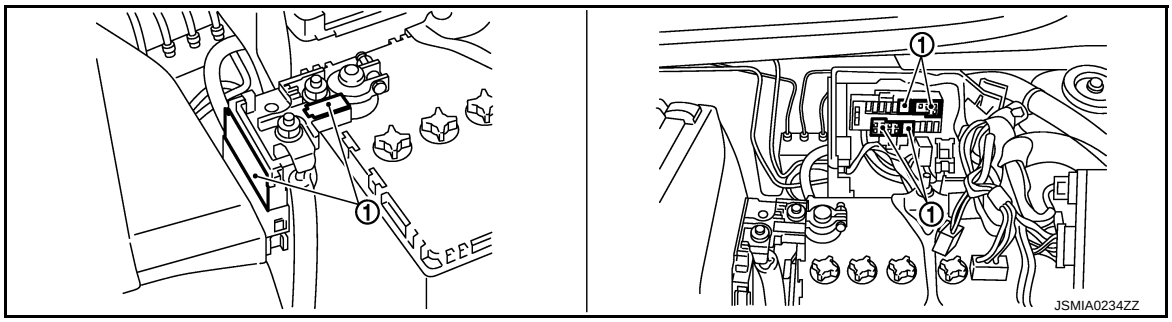

1. Fusible link

CAUTION:

- **If fusible link should melt, it is possible that critical circuit (power supply or large current carrying circuit) is shorted. In such a case, carefully check and eliminate cause of malfunction.**
- **Never wrap outside of fusible link with vinyl tape. Important: Never let fusible link touch any other wiring harness, vinyl or rubber parts.**

BATTERY CHARGING CHART

Slow Charge

INFOID:0000000005911878

1. DETERMINE INITIAL CHARGING CURRENT

1. Determine initial charging current from specific gravity.
2. Check battery type and determine the specified current using the table.

NOTE:
After starting charging, adjustment of charging current is not necessary.

Initial Charging Current Setting (Slow Charge)

CONVERTED SPECIFIC GRAVITY	BATTERY TYPE																		
	28B19L/R	34B19L/R	46B24L/R	55B24L/R	50D23L/R	55D23L/R	025 [YUASA type code]	027 [YUASA type code]	80D23L/R	65D26L/R	80D26L/R	067 [YUASA type code]	096 [YUASA type code]	75D31L/R	95D31L/R	115D31L/R	110D26L/R	95E41L/R	130E41L/R
Below 1.100	4.0 (A)		5.0 (A)		7.0 (A)				8.0 (A)				8.5 (A)	9.0 (A)	10.0 (A)				14.0 (A)

>> GO TO 2.

2. CHARGE BATTERY

1. Charge battery.
2. Check charge voltage 30 minutes after starting the battery charge.

Is the voltage between 12 V and 15 V?

YES >> GO TO 3.
NO >> Replace battery.

3. CHARGE BATTERY

Continue to charge for 12 hours.

>> GO TO 4.

4. CHECKING SPECIFIC GRAVITY

Check specific gravity. Refer to PG-130, "How to Handle Battery".

Is the specific gravity 1.240 or more?

YES >> Complete slow charge. Perform “CAPACITY TEST”. Refer to PG-132, "Work Procedure".
NO >> GO TO 5.

5. CONDUCT ADDITIONAL CHARGE

Add charging time depending on specific gravity.

Additional Charge (Slow Charge)

SPECIFIC GRAVITY	CHARGING TIME (h)
Below 1.150	5
1.150 - 1.200	4
1.200 - 1.240	2

>> Complete slow charge. Perform “CAPACITY TEST”. Refer to PG-132, "Work Procedure".

CAUTION:

- **Set charging current to value specified in “Initial Charging Current Setting (Slow Charge)”. If charger is not capable of producing specified current value, set its charging current as close to that value as possible.**

- **Keep battery away from open flame while it is being charged.**
- **When connecting charger, connect leads first, then turn on charger. Never turn on charger first, as this may cause a spark.**
- **If battery temperature rises above 55°C (131°F), stop charging. Always charge battery when its temperature is below 55°C (131°F).**

Standard Charge

INFOID:0000000005911879

1. DETERMINE INITIAL CHARGING CURRENT

1. Determine initial charging current from specific gravity.
2. Check battery type and determine the specified current using the table.

NOTE:
After starting charging, adjustment of charging current is not necessary.

Initial Charging Current Setting (Standard Charge)

CONVERTED SPECIFIC GRAVITY	BATTERY TYPE																		
	28B19L/R	34B19L/R	46B24L/R	55B24L/R	50D23L/R	55D23L/R	025 [YUASA type code]	027 [YUASA type code]	80D23L/R	65D26L/R	80D26L/R	067 [YUASA type code]	096 [YUASA type code]	75D31L/R	95D31L/R	115D31L/R	110D26L/R	95E41L/R	130E41L/R
1.100 - 1.130	4.0 (A)		5.0 (A)		6.0 (A)				7.0 (A)					8.0 (A)	9.0 (A)				13.0 (A)
1.130 - 1.160	3.0 (A)		4.0 (A)		5.0 (A)				6.0 (A)					7.0 (A)	8.0 (A)				11.0 (A)
1.160 - 1.190	2.0 (A)		3.0 (A)		4.0 (A)				5.0 (A)					6.0 (A)	7.0 (A)				9.0 (A)
1.190 - 1.220	2.0 (A)		2.0 (A)		3.0 (A)				4.0 (A)					5.0 (A)	5.0 (A)				7.0 (A)

>> GO TO 2.

2. CHARGE BATTERY

Charge battery for 8 hours.

>> GO TO 3.

3. CHECKING SPECIFIC GRAVITY

Check specific gravity. Refer to PG-130, "How to Handle Battery".

Is the specific gravity 1.240 or more?

YES >> Complete standard charge. Perform “CAPACITY TEST”. Refer to PG-132, "Work Procedure".
NO >> GO TO 4.

4. CONDUCT ADDITIONAL CHARGE

Add charging time depending on specific gravity.

Additional Charge (Standard Charge)

SPECIFIC GRAVITY	CHARGING TIME (h)
Below 1.150	3.5
1.150 - 1.200	2.5
1.200 - 1.240	1.5

>> Complete standard charge. Perform “CAPACITY TEST”. Refer to PG-132, "Work Procedure".

CAUTION:

- **Never use standard charge method on a battery whose specific gravity is less than 1.100.**
- **Set charging current to value specified in "Initial Charging Current Setting (Standard Charge)". If charger is not capable of producing specified current value, set its charging current as close to that value as possible.**
- **Keep battery away from open flame while it is being charged.**
- **When connecting charger, connect leads first, then turn on charger. Never turn on charger first, as this may cause a spark.**
- **If battery temperature rises above 55°C (131°F), stop charging. Always charge battery when its temperature is below 55°C (131°F).**

Quick Charge

INFOID:0000000005911880

1. DETERMINE INITIAL CHARGING CURRENT

1. Determine initial charging current setting and charging time from specific gravity.
2. Check battery type and determine the specified current using the table.

NOTE:
After starting charging, adjustment of charging current is not necessary.

Initial Charging Current Setting and Charging Time (Quick Charge)

BATTERY TYPE		28B19L/R	34B19L/R	46B24L/R	55B24L/R	50D23L/R	55D23L/R	80D23L/R	65D26L/R	80D26L/R	025 [YUASA type code]	027 [YUASA type code]	067 [YUASA type code]	096 [YUASA type code]	75D31L/R	95D31L/R	115D31L/R	110D26L/R	95E41L/R	130E41L/R
CURRENT [A]		10		15			20						25		30					40
CONVERTED SPECIFIC GRAVITY	1.100 - 1.130	2.5 hours																		
	1.130 - 1.160	2.0 hours																		
	1.160 - 1.190	1.5 hours																		
	1.190 - 1.220	1.0 hour																		
	Above 1.220	0.75 hour (45 min.)																		

CAUTION:
- **Never use quick charge method on a battery whose specific gravity is less than 1.100.**
- **Set initial charging current to value specified in "Initial Charging Current Setting and Charging Time (Quick Charge)". If charger is not capable of producing specified current value, set its charging current as close to that value as possible.**
- **Keep battery away from open flame while it is being charged.**
- **When connecting charger, connect leads first, then turn on charger. Never turn on charger first, as this may cause a spark.**
- **Be careful of a rise in battery temperature because a large current flow is required during quick-charge operation.**
  If battery temperature rises above 55°C (131°F), stop charging. Always charge battery when its temperature is below 55°C (131°F).
- **Never exceed the charging time specified in "Initial Charging Current Setting and Charging Time (Quick Charge)", because charging battery over the charging time can cause deterioration of the battery.**

>> GO TO 2.

2. CHARGE BATTERY

Charge battery.

>> Complete quick charge. Perform “CAPACITY TEST”. Refer to PG-132, "Work Procedure".

REMOVAL AND INSTALLATION

BATTERY

Exploded View

INFOID:0000000005911881

1 : Battery fix frame

Refer to GI-3, "Contents" for symbols in the figure.

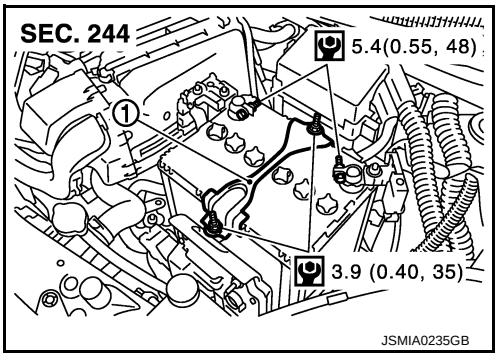

Removal and Installation

INFOID:0000000005911882

REMOVAL

1. Remove cover of battery positive terminal.
2. Loosen battery terminal nuts, and disconnect both battery cables from battery terminals.
   CAUTION:
   When disconnecting, disconnect the battery cable from the negative terminal first.
3. Remove battery fix frame mounting nuts and battery fix frame.
4. Remove battery.

INSTALLATION

Install in the reverse order of removal.

CAUTION:

When connecting, connect the battery cable to the positive terminal first.

Reset electronic systems as necessary. Refer to GI-46, "ADDITIONAL SERVICE WHEN REMOVING BATTERY NEGATIVE TERMINAL : Required Procedure After Battery Disconnection".

BATTERY TERMINAL WITH FUSIBLE LINK

Exploded View

INFOID:0000000005911883

1 : Battery terminal with fusible link
2 : Harness connector
Refer to GI-3, "Contents" for symbols in the figure.

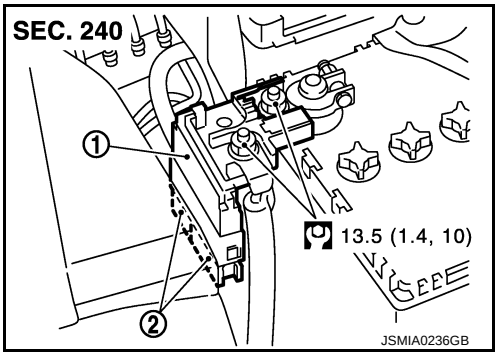

Removal and Installation

INFOID:0000000005911884

REMOVAL

1. Disconnect the battery cable from the negative terminal.
2. Remove cover of battery positive terminal.
3. Remove harness mounting nut and battery terminal with fusible link mounting nut.
4. Disconnect harness connector and remove battery terminal with fusible link.

INSTALLATION

Install in the reverse order of removal.

SERVICE DATA AND SPECIFICATIONS (SDS)

SERVICE DATA AND SPECIFICATIONS (SDS)

Battery

INFOID:0000000005911885

Application		Type 1	Type 2
Type		34B19L	46B19L
20 hour rate capacity	[V – Ah]	12 – 30	12 – 45
Cold cranking current (For reference value)	[A]	272	325

NOTE:
For the battery type application, refer to the following list.
- Type 1
- For Pakistan without rear wiper
- For Thailand (M/T models)
- Type 2
- Except for Pakistan without rear wiper
- Except for Thailand (M/T models)

SECTION PWC

POWER WINDOW CONTROL SYSTEM

CONTENTS

PRECAUTION 3

PRECAUTIONS 3
Precaution for Supplemental Restraint System (SRS) "AIR BAG" and "SEAT BELT PRE-TENSIONER" 3

SYSTEM DESCRIPTION 4

COMPONENT PARTS 4
Component Parts Location 4
Component Description 4

SYSTEM 6

POWER WINDOW SYSTEM 6
POWER WINDOW SYSTEM : System Diagram 6
POWER WINDOW SYSTEM : System Description 6
Fail Safe 7

ECU DIAGNOSIS INFORMATION 8

BCM (BODY CONTROL MODULE) 8
List of ECU Reference 8

POWER WINDOW MAIN SWITCH 9
Reference Value 9
Fail Safe 10

WIRING DIAGRAM 11

POWER WINDOW SYSTEM 11
Wiring Diagram 11

BASIC INSPECTION 12

DIAGNOSIS AND REPAIR WORK FLOW 12
WorkFlow 12

ADDITIONAL SERVICE WHEN REMOVING BATTERY NEGATIVE TERMINAL 13
Description 13
Work Procedure 13

ADDITIONAL SERVICE WHEN REPLACING CONTROL UNIT 14
Description 14
Work Procedure 14

SYSTEM INITIALIZATION 15
Description 15
Work Procedure 15

CHECK ANTI-PINCH FUNCTION 16
Description 16
Work Procedure 16

DTC/CIRCUIT DIAGNOSIS 17

POWER SUPPLY AND GROUND CIRCUIT 17

BCM (BODY CONTROL SYSTEM) (WITH INTELLIGENT KEY SYSTEM) 17
BCM (BODY CONTROL SYSTEM) (WITH INTELLIGENT KEY SYSTEM) : Diagnosis Procedure 17

BCM (BODY CONTROL SYSTEM) (WITHOUT INTELLIGENT KEY SYSTEM) 17
BCM (BODY CONTROL SYSTEM) (WITHOUT INTELLIGENT KEY SYSTEM) : Diagnosis Procedure 17

POWER WINDOW MAIN SWITCH 18
POWER WINDOW MAIN SWITCH : Diagnosis Procedure 18

FRONT POWER WINDOW SWITCH (PASSENGER SIDE) 19
FRONT POWER WINDOW SWITCH (PASSENGER SIDE) : Diagnosis Procedure 19

REAR POWER WINDOW SWITCH 20
REAR POWER WINDOW SWITCH : Diagnosis Procedure 20

FRONT POWER WINDOW SWITCH (PASSENGER SIDE) 22
Component Function Check 22
Diagnosis Procedure 22
Component Inspection 23

REAR POWER WINDOW SWITCH 24
Component Function Check 24
Diagnosis Procedure 24
Component Inspection 25

POWER WINDOW MOTOR 26

DRIVER SIDE 26
DRIVER SIDE : Component Function Check 26
DRIVER SIDE : Diagnosis Procedure 26

PASSENGER SIDE 26
PASSENGER SIDE : Component Function Check ... 27
PASSENGER SIDE : Diagnosis Procedure 27

REAR LH 27
REAR LH : Component Function Check 28
REAR LH : Diagnosis Procedure 28

REAR RH 28
REAR RH : Component Function Check 28
REAR RH : Diagnosis Procedure 29

ENCODER CIRCUIT 30
Component Function Check 30
Diagnosis Procedure 30

SYMPTOM DIAGNOSIS 33

NONE OF THE POWER WINDOWS CAN BE OPERATED USING ANY SWITCH 33
Diagnosis Procedure 33

DRIVER SIDE POWER WINDOW DOES NOT OPERATE 34
Diagnosis Procedure 34

FRONT PASSENGER SIDE POWER WINDOW DOES NOT OPERATE 35

WITH BOTH POWER WINDOW MAIN SWITCH AND FRONT PASSENGER SIDE POWER WINDOW SWITCH 35
WITH BOTH POWER WINDOW MAIN SWITCH AND FRONT PASSENGER SIDE POWER WINDOW SWITCH : Diagnosis Procedure 35

WITH FRONT POWER WINDOW SWITCH ONLY... 35
WITH FRONT POWER WINDOW SWITCH ONLY : Diagnosis Procedure 35

WITH POWER WINDOW MAIN SWITCH 35
WITH POWER WINDOW MAIN SWITCH : Diagnosis Procedure 36

REAR LH SIDE POWER WINDOW DOES NOT OPERATE 37

WITH BOTH POWER WINDOW MAIN SWITCH AND REAR POWER WINDOW SWITCH LH 37
WITH BOTH POWER WINDOW MAIN SWITCH AND REAR POWER WINDOW SWITCH LH : Diagnosis Procedure 37

WITH REAR POWER WINDOW SWITCH LH ONLY 37
WITH REAR POWER WINDOW SWITCH LH ONLY : Diagnosis Procedure 37

WITH POWER WINDOW MAIN SWITCH 37
WITH POWER WINDOW MAIN SWITCH : Diagnosis Procedure 38

REAR RH SIDE POWER WINDOW DOES NOT OPERATE 39

WITH BOTH POWER WINDOW MAIN SWITCH AND REAR POWER WINDOW SWITCH RH 39
WITH BOTH POWER WINDOW MAIN SWITCH AND REAR POWER WINDOW SWITCH RH : Diagnosis Procedure 39

WITH REAR POWER WINDOW SWITCH RH ONLY 39
WITH REAR POWER WINDOW SWITCH RH ONLY : Diagnosis Procedure 39

WITH POWER WINDOW MAIN SWITCH 39
WITH POWER WINDOW MAIN SWITCH : Diagnosis Procedure 40

AUTO OPERATION DOES NOT OPERATE BUT MANUAL OPERATE NORMALLY (DRIVER SIDE) 41
Diagnosis Procedure 41

ANTI-PINCH SYSTEM DOES NOT OPERATE NORMALLY (DRIVER SIDE) 42
Diagnosis Procedure 42

POWER WINDOW LOCK SWITCH DOES NOT FUNCTION 43
Diagnosis Procedure 43

REMOVAL AND INSTALLATION 44

POWER WINDOW MAIN SWITCH 44
Exploded View 44
Removal and Installation 44

PRECAUTION

PRECAUTIONS

Precaution for Supplemental Restraint System (SRS) "AIR BAG" and "SEAT BELT PRE-TENSIONER"

INFOID:0000000005981117

The Supplemental Restraint System such as “AIR BAG” and “SEAT BELT PRE-TENSIONER”, used along with a front seat belt, helps to reduce the risk or severity of injury to the driver and front passenger for certain types of collision. Information necessary to service the system safely is included in the “SRS AIR BAG” and “SEAT BELT” of this Service Manual.

WARNING:

- **To avoid rendering the SRS inoperative, which could increase the risk of personal injury or death in the event of a collision which would result in air bag inflation, all maintenance must be performed by an authorized NISSAN/INFINITI dealer.**
- **Improper maintenance, including incorrect removal and installation of the SRS, can lead to personal injury caused by unintentional activation of the system. For removal of Spiral Cable and Air Bag Module, see the “SRS AIR BAG”.**
- **Do not use electrical test equipment on any circuit related to the SRS unless instructed to in this Service Manual. SRS wiring harnesses can be identified by yellow and/or orange harnesses or harness connectors.**

PRECAUTIONS WHEN USING POWER TOOLS (AIR OR ELECTRIC) AND HAMMERS

WARNING:

- **When working near the Air Bag Diagnosis Sensor Unit or other Air Bag System sensors with the ignition ON or engine running, DO NOT use air or electric power tools or strike near the sensor(s) with a hammer. Heavy vibration could activate the sensor(s) and deploy the air bag(s), possibly causing serious injury.**
- **When using air or electric power tools or hammers, always switch the ignition OFF, disconnect the battery, and wait at least 3 minutes before performing any service.**

SYSTEM DESCRIPTION

COMPONENT PARTS

Component Parts Location

INFOID:0000000005978506

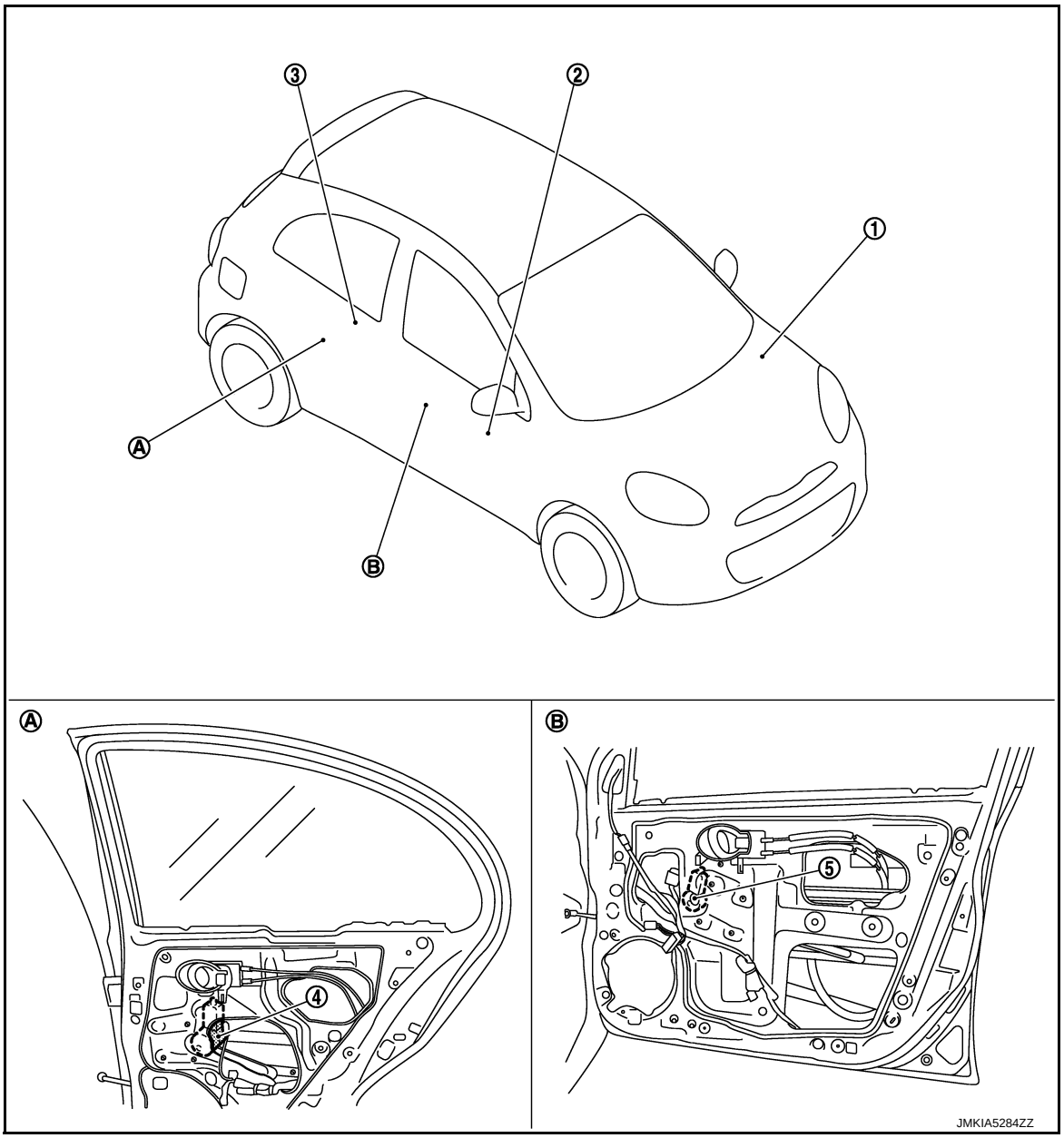

1. BCM
   Refer to BCS-5, "BODY CONTROL SYSTEM : Component Parts Location" (With Intelligent Key)
   Refer to BCS-60, "BODY CONTROL SYSTEM : Component Parts Location" (Without Intelligent Key)
2. Power window main switch
3. Rear power window switch RH
4. Rear power window motor RH
5. Front power window motor (driver side)

A. View with rear door finisher removed
B. View with front door finisher removed

Component Description

INFOID:0000000005978507

Component parts	Description
BCM	Supplies power supply to power window switch.
Power window main switch	• Directly controls all power window motor of all doors. • Controls anti-pinch operation of power window.
Front power window switch (passenger side)	Controls power window motor of front passenger side door.
Rear power window switch (LH & RH)	Controls power window motor of rear right and left doors.
Front power window motor (driver side)	• Integrates the encoder and power window motor. • Starts operating with signals from power window main switch. • Transmits front power window motor (driver side) rotation as a pulse signal to power window main switch.
Front power window motor (passenger side)	Starts operating with signals from power window main switch & front power window switch (passenger side).
Rear power window motor (LH & RH)	Starts operating with signals from power window main switch & rear power window switch (LH & RH).
Encoder	Detects condition of the front power window motor (driver side) operation and transmits to power window main switch as pulse signal.

SYSTEM

POWER WINDOW SYSTEM

POWER WINDOW SYSTEM : System Diagram

INFOID:0000000005978504

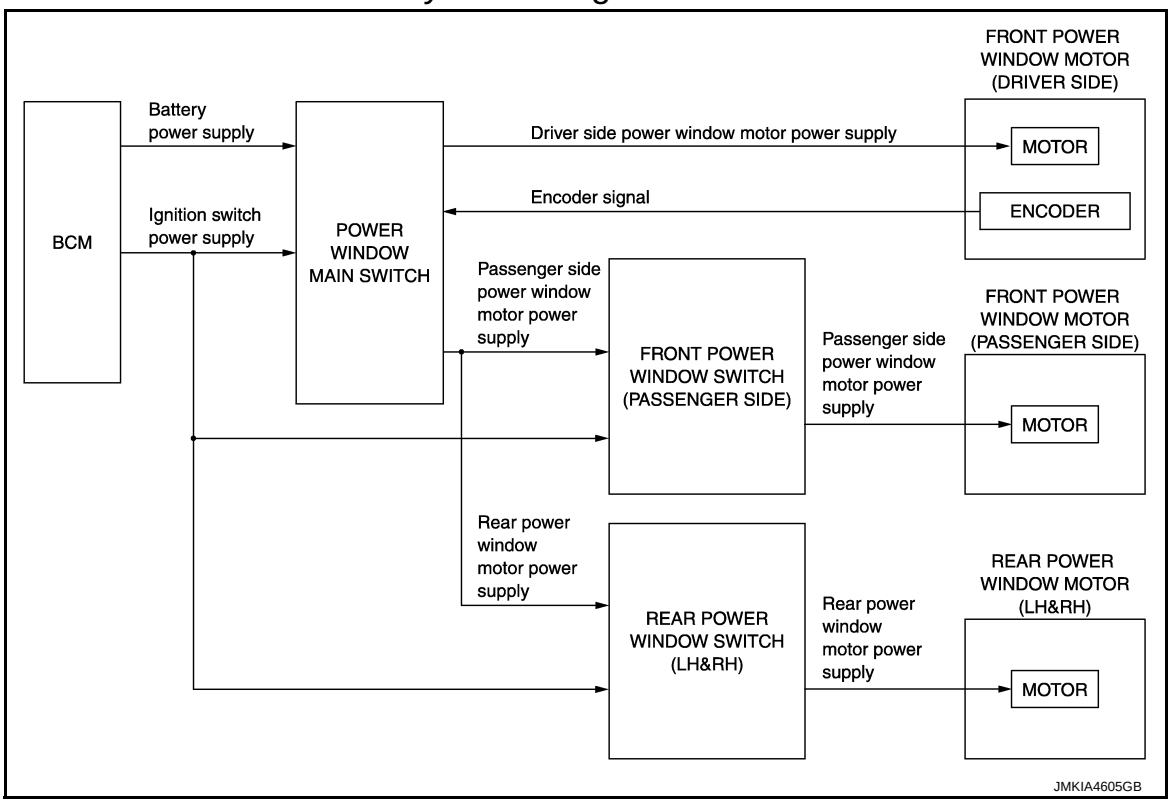

POWER WINDOW SYSTEM : System Description

INFOID:0000000005978505

POWER WINDOW OPERATION

- Power window main switch can open/close all windows.
- Front & rear power window switch can open/close the corresponding windows.

POWER WINDOW AUTO-OPERATION (FRONT DRIVER SIDE)

- AUTO UP/DOWN operation can be performed when power window main switch turns to AUTO.
- Encoder continues detecting the movement of power window motor and transmits to power window switch as the encoder pulse signal while power window motor is operating.
- Power window switch reads the changes of encoder signal and stops AUTO operation when door glass is at fully opened/closed position.
- Power window motor is operable in case encoder is malfunctioning.

POWER WINDOW LOCK

Ground circuit inside power window main switch shuts off when power window lock switch is ON. This inhibits power window switch operation except with the power window main switch.

ANTI-PINCH SYSTEM (FRONT DRIVER SIDE)

- Pinch foreign material in the door glass during AUTO-UP operation, and it is the anti-pinch function that lowers the door glass 150 mm (5.9 in) when detected.
- Encoder continues detecting the movement of front power window motor (driver side) and transmits to power window main switch as the encoder pulse signal while front power window motor (driver side) is operating.
- Resistance is applied to the front power window motor (driver side) rotation that changes the frequency of encoder pulse signal if foreign material is trapped in the door glass.
- Power window main switch controls to lower the window glass for 150 mm (5.9 in) after it detects encoder pulse signal frequency change.

OPERATION CONDITION

- When front door glass (driver side) AUTO-UP operation is performed (anti-pinch function does not operate just before the door glass closes and is fully closed)

NOTE:
Depending on environment and driving conditions, if a similar impact or load is applied to the door glass, it may lower.

Fail Safe

INFOID:0000000005981493

FAIL-SAFE CONTROL

Switches to fail-safe control when malfunction is detected in encoder signal that detects up/down speed and direction of door glass. Switches to fail-safe control when error beyond regulation value is detected between the fully closed position and the actual position of the glass.

Error	Error condition
Pulse sensor malfunction	When only one side of pulse signal is being detected for more than the specified value.
Both pulse sensors malfunction	When both pulse signals have not been detected for more than the specified value during glass open/close operation.
Pulse direction malfunction	When the pulse signal that is detected during glass open/close operation detects the opposite condition of power window motor operating direction.
Glass recognition position malfunction 1	When it detects the error between glass fully closed position in power window switch memory and actual fully closed position during glass open/close operation is more than the specified value.
Glass recognition position malfunction 2	When it detects pulse count more than the value of glass full stroke during glass open/close operation.
Malfunction of not yet updated closed position of glass	When glass open/close operation is continuously performed without fully closing more than the specified value (approximately 10 strokes).

It changes to condition before initialization and the following functions do not operate when switched to fail-safe control.
- Auto-up operation
- Anti-pinch function

Perform initial operation to recover when switched to fail-safe mode. However, it switches back to fail-safe control when malfunction is found in power window main switch or front power window motor (driver side).

ECU DIAGNOSIS INFORMATION

BCM (BODY CONTROL MODULE)

List of ECU Reference

INFOID:0000000005979241

ECU	Reference
BCM (With Intelligent Key)	BCS-18, "Reference Value"
	BCS-37, "Fail-safe"
	BCS-39, "DTC Inspection Priority Chart"
	BCS-40, "DTC Index"
BCM (Without Intelligent Key)	BCS-72, "Reference Value"
	BCS-85, "Fail-safe"
	BCS-85, "DTC Inspection Priority Chart"
	BCS-86, "DTC Index"

POWER WINDOW MAIN SWITCH

Reference Value

INFOID:0000000005978547

TERMINAL LAYOUT

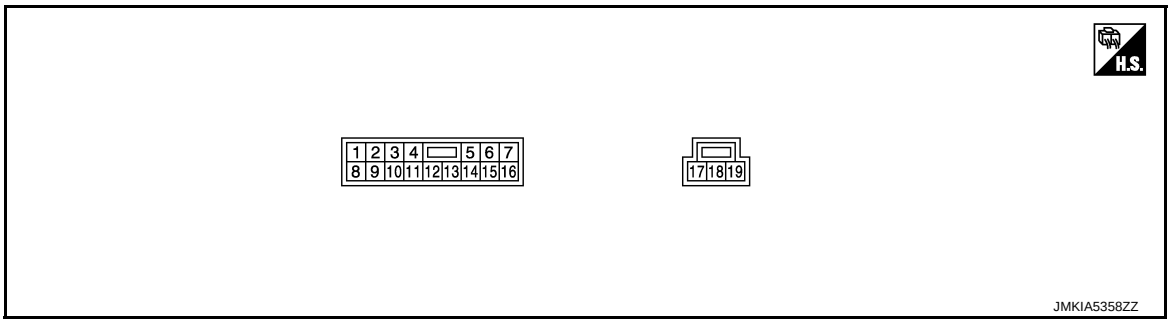

PHYSICAL VALUES

POWER WINDOW MAIN SWITCH

Terminal No. (Wire color)		Description		Condition	Voltage (V) (Approx.)
+	-	Signal name	Input/ Output		
1 (BR)	Ground	Rear power window motor LH UP signal	Output	When rear LH switch in power window main switch is UP at operated.	12
2 (BG)	Ground	Encoder pulse signal 2	Input	When front power window motor (driver side) operates.	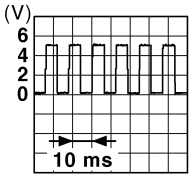 JMKIA0070GB
3 (G)	Ground	Rear power window motor LH DOWN signal	Output	When rear LH switch in power window main switch is DOWN at operated.	12
5 (Y)	Ground	Rear power window motor RH DOWN signal	Output	When rear RH switch in power window main switch is DOWN at operated.	12
7 (GR)	Ground	Rear power window motor RH UP signal	Output	When rear RH switch in power window main switch is UP at operated.	12
8 (W)	Ground	Front power window motor (passenger side) UP signal	Output	When front RH switch in power window main switch is UP at operated.	12
9 (R)	Ground	Encoder ground	—	—	0
10 (L)	Ground	Ignition switch power supply	Input	Ignition switch ON	12
				Other than above	0
11 (SB)	Ground	Front power window motor (passenger side) DOWN signal	Output	When front RH switch in power window main switch is DOWN at operated.	12
12 (LG)	Ground	Front power window motor (driver side) UP signal	Output	When front LH switch in power window main switch is UP at operated.	12

Terminal No. (Wire color)		Description		Condition	Voltage (V) (Approx.)
+	-	Signal name	Input/ Output		
13 (V)	Ground	Encoder pulse signal 1	Input	When front power window motor (driver side) operates.	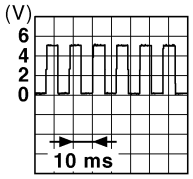 JMKIA0070GB
15 (G)	Ground	Encoder power supply	Output	Ignition switch ON.	12
16 (W)	Ground	Front power window motor (driver side) DOWN signal	Output	When front LH switch in power window main switch is DOWN at operated.	12
17 (B)	Ground	Ground	—	—	0
19 (P)	Ground	Battery power supply	Input	—	12

Fail Safe

INFOID:0000000006022092

FAIL-SAFE CONTROL

Switches to fail-safe control when malfunction is detected in encoder signal that detects up/down speed and direction of door glass. Switches to fail-safe control when error beyond regulation value is detected between the fully closed position and the actual position of the glass.

Error	Error condition
Pulse sensor malfunction	When only one side of pulse signal is being detected for more than the specified value.
Both pulse sensors malfunction	When both pulse signals have not been detected for more than the specified value during glass open/close operation.
Pulse direction malfunction	When the pulse signal that is detected during glass open/close operation detects the opposite condition of power window motor operating direction.
Glass recognition position malfunction 1	When it detects the error between glass fully closed position in power window switch memory and actual fully closed position during glass open/close operation is more than the specified value.
Glass recognition position malfunction 2	When it detects pulse count more than the value of glass full stroke during glass open/close operation.
Malfunction of not yet updated closed position of glass	When glass open/close operation is continuously performed without fully closing more than the specified value (approximately 10 strokes).

It changes to condition before initialization and the following functions do not operate when switched to fail-safe control.
- Auto-up operation
- Anti-pinch function

Perform initial operation to recover when switched to fail-safe mode. However, it switches back to fail-safe control when malfunction is found in power window main switch or front power window motor (driver side).

WIRING DIAGRAM

POWER WINDOW SYSTEM

Wiring Diagram

INFOID:0000000005978548

For connector terminal arrangements, harness layouts, and alphabets in a ⬡ (option abbreviation; if not described in wiring diagram), refer to GI-12, "Connector Information".

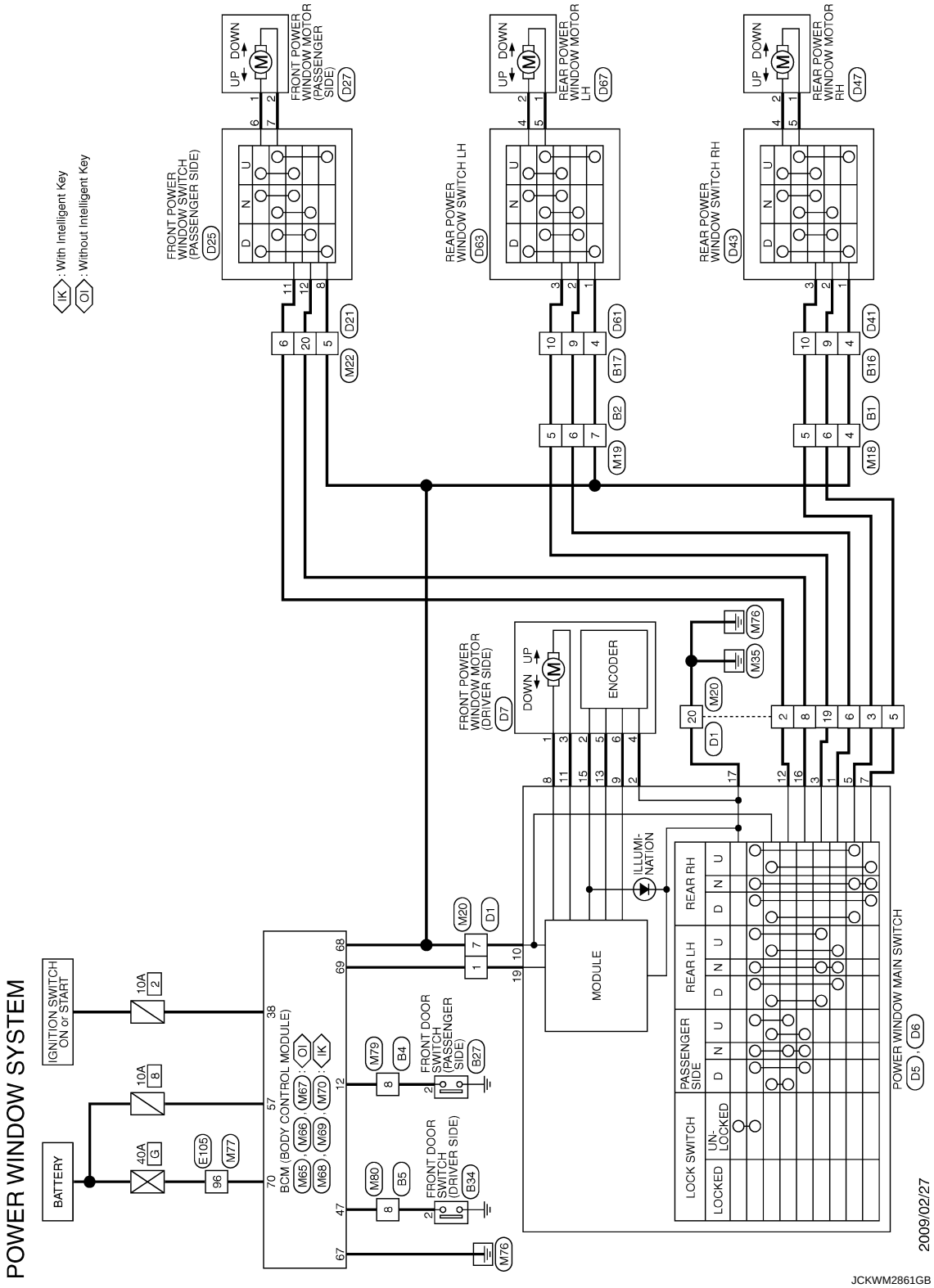

BASIC INSPECTION

DIAGNOSIS AND REPAIR WORK FLOW

WorkFlow

INFOID:0000000005978499

DETAILED FLOW

1.OBTAIN INFORMATION ABOUT SYMPTOM

Interview the customer to obtain the malfunction information (conditions and environment when the malfunction occurred) as much as possible when the customer brings the vehicle in.

>> GO TO 2.

2.REPRODUCE THE MALFUNCTION INFORMATION

Check the malfunction on the vehicle that the customer describes.
Inspect the relation of the symptoms and the condition when the symptoms occur.

>> GO TO 3.

3.IDENTIFY THE MALFUNCTIONING SYSTEM WITH “SYMPTOM DIAGNOSIS”

Use “Symptom diagnosis” from the symptom inspection result in step 2 and then identify where to start performing the diagnosis based on possible causes and symptoms.

>> GO TO 4.

4.IDENTIFY THE MALFUNCTIONING PARTS WITH “COMPONENT DIAGNOSIS”

Perform the diagnosis with “Component diagnosis” of the applicable system.

>> GO TO 5.

5.REPAIR OR REPLACE THE MALFUNCTIONING PARTS

Repair or replace the specified malfunctioning parts.

>> GO TO 6.

6.FINAL CHECK

Check that malfunctions are not reproduced when obtaining the malfunction information from the customer, referring to the symptom inspection result in step 2.

Are the malfunctions corrected?

YES >> INSPECTION END
NO >> GO TO 3.

ADDITIONAL SERVICE WHEN REMOVING BATTERY NEGATIVE TERMINAL

Description

INFOID:0000000005985042

When the battery negative terminal is disconnected, the initialization is necessary.
If any of the following operations are performed, the initialization is necessary as well as when the negative terminal of battery is disconnected.

- Power supply to the power window main switch or power window motor is cut off by the removal of battery terminal or if the battery fuse is blown.
- Disconnection and connection of power window main switch harness connector.
- Removal and installation of motor from regulator assembly.
- Operation of regulator assembly as an independent unit.
- Removal and installation of glass.
- Removal and installation of door glass run.

The following specified operations can not be performed under the non-initialized condition.

- Auto-up operation
- Anti-pinch function

Work Procedure

INFOID:0000000005985043

1. SYSTEM INITIALIZATION

Perform system initialization. Refer to PWC-15, "Work Procedure".

>> GO TO 2.

2. CHECK ANTI-PINCH FUNCTION

Check anti-pinch function. Refer to PWC-16, "Work Procedure".

>> END

ADDITIONAL SERVICE WHEN REPLACING CONTROL UNIT

Description

INFOID:0000000005985044

When the control unit replaced, the initialization in necessary.
If any of the following operations are performed, the initialization is necessary as well as when the control unit is disconnected.
- Power supply to the power window main switch or power window motor is cut off by the removal of battery terminal or if the battery fuse is blown.
- Disconnection and connection of power window main switch harness connector.
- Removal and installation of motor from regulator assembly.
- Disconnection and connection of battery negative terminal.
- Removal and installation of glass.
- Removal and installation of door glass run.

The following specified operations can not be performed under the non-initialized condition.
- Auto-up operation
- Anti-pinch function

Work Procedure

INFOID:0000000005985045

1. SYSTEM INITIALIZATION

Perform system initialization. Refer to PWC-15, "Work Procedure".

>> GO TO 2.

2. CHECK ANTI-PINCH FUNCTION

Check anti-pinch function. Refer to PWC-16, "Work Procedure".

>> END

SYSTEM INITIALIZATION

Description

INFOID:0000000005985046

When the battery negative terminal is disconnected, or when control unit replaced, the initialization is necessary.
If any of the following operations are performed, the initialization is necessary as well as when the negative terminal of battery is disconnected.
- Power supply to the power window main switch or power window motor is cut off by the removal of battery terminal or if the battery fuse is blown.
- Disconnection and connection of power window main switch harness connector.
- Removal and installation of motor from regulator assembly.
- Operation of regulator assembly as an independent unit.
- Removal and installation of glass.
- Removal and installation of door glass run.

The following specified operations can not be performed under the non-initialized condition.
- Auto-up operation
- Anti-pinch function

Work Procedure

INFOID:0000000005985047

1.STEP 1

1. Turn ignition switch ON.
2. Operate power window switch to fully open the window. (This operation is unnecessary if the window is already fully open)

>> GO TO 2.

2.STEP 2

Continue pulling the power window switch UP (AUTO-UP operation). Even after glass stops at fully closed position, keep pulling the switch for 2 seconds or more.

>> GO TO 3.

3.STEP 3

Check that AUTO-UP function operates normally.

>> GO TO 4.

4.STEP 4

Check anti-pinch function. Refer to PWC-16, "Work Procedure".

>> END

CHECK ANTI-PINCH FUNCTION

Description

INFOID:0000000005985048

When the battery negative terminal is disconnected, or when control unit is replaced, the initialization is necessary.
If any of the following operations are performed, the initialization is necessary as well as when the negative terminal of battery is disconnected.
- Power supply to the power window main switch or power window motor is cut off by the removal of battery terminal or if the battery fuse is blown.
- Disconnection and connection of power window main switch harness connector.
- Removal and installation of motor from regulator assembly.
- Operation of regulator assembly as an independent unit.
- Removal and installation of glass.
- Removal and installation of door glass run.

The following specified operations can not be performed under the non-initialized condition.
- Auto-up operation
- Anti-pinch function

Work Procedure

INFOID:0000000005985049

1.STEP 1

Fully open the door window.

>> GO TO 2.

2.STEP 2

Place a piece of wood near fully closed position.

>> GO TO 3.

3.STEP 3

Close door glass completely with AUTO-UP.

>> GO TO 4.

4.STEP 4

Check the following conditions
- Check that glass lowers for approximately 150 mm (5.9 in) without pinching piece of wood and stops.
- Check that glass does not rise not when operating the power window main switch while lowering.

CAUTION:
- **Perform initial setting when AUTO-UP operation or anti-pinch function does not operate normally.**
- **Check that AUTO-UP operates before inspection when system initialization is performed.**
- **Do not check with hands and other body parts because they may be pinched. Do not get pinched.**
- **It may switch to fail-safe mode if open/close operation is performed continuously without full close. Perform initial setting in that situation. Refer to PWC-7, "Fail Safe".**

>> END

DTC/CIRCUIT DIAGNOSIS

POWER SUPPLY AND GROUND CIRCUIT

BCM (BODY CONTROL SYSTEM) (WITH INTELLIGENT KEY SYSTEM)

BCM (BODY CONTROL SYSTEM) (WITH INTELLIGENT KEY SYSTEM) : Diagnosis Procedure

INFOID:0000000005978510

1.CHECK FUSE AND FUSIBLE LINK

1. Turn ignition switch OFF.
2. Check that the following fuses and fusible link are not blown.

Terminal No.	Signal name	Fuse and fusible link No.
38	Ignition power supply	6 (10 A)
57	Battery power supply	9 (10 A)
70		G (40 A)

Is the inspection result normal?

YES >> GO TO 2.
NO >> Replace the blown fuse or fusible link after repairing the affected circuit if a fuse or fusible link is blown.

2.CHECK POWER SUPPLY CIRCUIT

1. Disconnect BCM connector.
2. Check voltage between BCM harness connector and ground.

(+)		(-)	Condition		Voltage (Approx.)
BCM					
Connector	Terminal				
M68	38	Ground	Ignition switch	ON	Battery voltage
M70	57		—		
	70				

Is the inspection result normal?

YES >> GO TO 3.
NO >> Repair or replace harness or connector.

3.CHECK GROUND CIRCUIT

Check continuity between BCM harness connector and ground.

BCM		Ground	Continuity
Connector	Terminal		
M70	67		Existed

Is the inspection result normal?

YES >> INSPECTION END
NO >> Repair or replace harness or connector.

BCM (BODY CONTROL SYSTEM) (WITHOUT INTELLIGENT KEY SYSTEM)

BCM (BODY CONTROL SYSTEM) (WITHOUT INTELLIGENT KEY SYSTEM) : Diagnosis Procedure

INFOID:0000000006046388

1.CHECK FUSE AND FUSIBLE LINK

1. Turn ignition switch OFF.
2. Check that the following fuses and fusible link are not blown.

Terminal No.	Signal name	Fuse and fusible link No.
38	Ignition power supply	6 (10 A)
57	Battery power supply	9 (10 A)
70		G (40 A)

Is the inspection result normal?

YES >> GO TO 2.
NO >> Replace the blown fuse or fusible link after repairing the affected circuit if a fuse or fusible link is blown.

2.CHECK POWER SUPPLY CIRCUIT

1. Disconnect BCM connector.
2. Check voltage between BCM harness connector and ground.

(+)		(-)	Condition		Voltage (Approx.)
BCM					
Connector	Terminal				
M65	38	Ground	Ignition switch	ON	Battery voltage
M67	57		—		
	70				

Is the inspection result normal?

YES >> GO TO 3.
NO >> Repair or replace harness or connector.

3.CHECK GROUND CIRCUIT

Check continuity between BCM harness connector and ground.

BCM		Ground	Continuity
Connector	Terminal		
M67	67		Existed

Is the inspection result normal?

YES >> INSPECTION END
NO >> Repair or replace harness or connector.

POWER WINDOW MAIN SWITCH

POWER WINDOW MAIN SWITCH : Diagnosis Procedure

INFOID:0000000005978511

1.CHECK POWER SUPPLY CIRCUIT

1. Turn ignition OFF.
2. Disconnect power window main switch connector.
3. Turn ignition switch ON.
4. Check voltage between power window main switch harness connector and ground.

(+)		(-)	Voltage (V) (Approx.)
Power window main switch			
Connector	Terminal		
D5	10	Ground	12
D6	19		

Is the inspection result normal?

YES >> GO TO 2.
NO >> GO TO 3.

2.CHECK GROUND CIRCUIT

1. Turn ignition switch OFF.
2. Check continuity between power window main switch harness connector and ground.

Power window main switch		Ground	Continuity
Connector	Terminal		
D6	17		Existed

Is the inspection result normal?

YES >> INSPECTION END
NO >> Repair or replace harness.

3. CHECK HARNESS CONTINUITY

1. Turn ignition switch OFF.
2. Disconnect BCM connector.
3. Check continuity between BCM harness connector and power window main switch harness connector.

BCM		Power window main switch		Continuity
Connector	Terminal	Connector	Terminal	
M70*1	68	D5	10	Existed
M67*2	69	D6	19	

*1 : With Intelligent Key

*2 : Without Intelligent Key

4. Check continuity between BCM harness connector and ground.

BCM		Ground	Continuity
Connector	Terminal		
M70*1	68		Not existed
M67*2	69		

*1 : With Intelligent Key

*2 : Without Intelligent Key

Is the inspection result normal?

YES >> Replace BCM. Refer to BCS-57, "Removal and Installation" (With Intelligent Key). Refer to BCS-99, "Removal and Installation" (Without Intelligent Key).
NO >> Repair or replace harness.

FRONT POWER WINDOW SWITCH (PASSENGER SIDE)

FRONT POWER WINDOW SWITCH (PASSENGER SIDE) : Diagnosis Procedure

INFOID:0000000005978512

1. CHECK POWER SUPPLY CIRCUIT

1. Turn ignition switch OFF.
2. Disconnect front power window switch (passenger side) connector.
3. Turn ignition switch ON.
4. Check voltage between front power window switch (passenger side) harness connector and ground.

(+)		(-)	Condition		Voltage (V) (Approx.)
Front power window switch (passenger side)					
Connector	Terminal				
D25	1	Ground	Ignition switch	ON	12

Is the inspection result normal?

YES >> INSPECTION END
NO >> GO TO 2.

2. CHECK HARNESS CONTINUITY

1. Turn ignition switch OFF.
2. Disconnect BCM connector.
3. Check continuity between BCM harness connector and front power window switch (passenger side) harness connector.

BCM		Front power window switch (passenger side)		Continuity
Connector	Terminal	Connector	Terminal	
M70*1 M67*2	68	D25	1	Existed

*1 : With Intelligent Key

*2 : Without Intelligent Key

4. Check continuity between BCM harness connector and ground.

BCM		Ground	Continuity
Connector	Terminal		
M70*1 M67*2	68		Not existed

*1 : With Intelligent Key

*2 : Without Intelligent Key

Is the inspection result normal?

YES >> Replace BCM. Refer to BCS-57, "Removal and Installation" (With Intelligent Key). Refer to BCS-99, "Removal and Installation" (Without Intelligent Key).

NO >> Repair or replace harness.

REAR POWER WINDOW SWITCH

REAR POWER WINDOW SWITCH : Diagnosis Procedure

INFOID:0000000005978513

1. CHECK POWER SUPPLY CIRCUIT

1. Turn ignition switch OFF.
2. Disconnect rear power window switch connector.
3. Turn ignition switch ON.
4. Check voltage between rear power window switch harness connector and ground.

(+)			(-)	Condition		Voltage (V) (Approx.)
Rear power window switch						
Connector		Terminal				
LH	D63	1	Ground	Ignition switch	ON	12
RH	D43					

Is the inspection result normal?

YES >> INSPECTION END

NO >> GO TO 2.

2. CHECK HARNESS CONTINUITY

1. Turn ignition switch OFF.
2. Disconnect BCM connector.
3. Check continuity between BCM harness connector and rear power window switch harness connector.

BCM		Rear power window switch			Continuity
Connector	Terminal	Connector		Terminal	
M70*1 M67*2	68	LH	D63	1	Existed
		RH	D43		

*1 : With Intelligent Key

*2 : Without Intelligent Key

4. Check continuity between BCM harness connector and ground.

BCM		Ground	Continuity
Connector	Terminal		
M70*1 M67*2	68		Not existed

*1 : With Intelligent Key

*2 : Without Intelligent Key

Is the inspection result normal?

YES >> Replace BCM. Refer to BCS-57, "Removal and Installation" (With Intelligent Key). Refer to BCS-99, "Removal and Installation" (Without Intelligent Key).

NO >> Repair or replace harness.

FRONT POWER WINDOW SWITCH (PASSENGER SIDE)

Component Function Check

INFOID:0000000005978515

1. CHECK FRONT POWER WINDOW SWITCH (PASSENGER SIDE) FUNCTION

Check front power window motor (passenger side) operation with front power window switch (passenger side).

Is the inspection result normal?

YES >> INSPECTION END
NO >> Refer to PWC-22, "Diagnosis Procedure".

Diagnosis Procedure

INFOID:0000000005978516

1. CHECK FRONT POWER WINDOW SWITCH (PASSENGER SIDE) INPUT SIGNAL

1. Turn ignition switch OFF.
2. Disconnect front power window switch (passenger side) connector.
3. Turn ignition switch ON.
4. Check voltage between front power window switch (passenger side) harness connector and ground.

(+)		(-)	Condition		Voltage (V) (Approx.)
Front power window switch (passenger side)					
Connector	Terminal				
D25	2	Ground	Power window main switch (passenger side)	UP	12
				DOWN	0
	3			UP	0
				DOWN	12

Is the inspection result normal?

YES >> GO TO 2.
NO >> GO TO 3.

2. CHECK FRONT POWER WINDOW SWITCH (PASSENGER SIDE)

Check front power window switch (passenger side).
Refer to PWC-23, "Component Inspection".

Is the inspection result normal?

YES >> GO TO 4.
NO >> Replace front power window switch (passenger side). Refer to PWC-44, "Removal and Installation".

3. CHECK FRONT WINDOW SWITCH (PASSENGER SIDE) CIRCUIT

1. Turn ignition switch OFF.
2. Disconnect power window main switch connector.
3. Check continuity between power window main switch harness connector and front power window switch (passenger side) harness connector.

Power window main switch		Front power window switch (passenger side)		Continuity
Connector	Terminal	Connector	Terminal	
D5	8	D25	2	Existed
	11		3	

4. Check continuity between power window main switch harness connector and ground.

Power window main switch		Ground	Continuity
Connector	Terminal		
D5	8	Ground	Not existed
	11		

Is the inspection result normal?

YES >> Replace power window main switch. Refer to PWC-44, "Removal and Installation".
NO >> Repair or replace harness.

4. CHECK INTERMITTENT INCIDENT

Refer to GI-33, "Intermittent Incident".

>> INSPECTION END

Component Inspection

INFOID:0000000005978517

1. CHECK FRONT POWER WINDOW SWITCH (PASSENGER SIDE)

1. Turn ignition OFF.
2. Disconnect front power window switch (passenger side) connector.
3. Check front power window switch (passenger side) terminals under the following conditions.

Terminal		Condition		Continuity
1	5	Front power window switch (passenger side)	UP	Existed
3	4			
3	4		NEUTRAL	
2	5			
1	4		DOWN	
2	5			

Is the inspection result normal?

YES >> INSPECTION END
NO >> Replace front power window switch (passenger side). Refer to PWC-44, "Removal and Installation".

REAR POWER WINDOW SWITCH

Component Function Check

INFOID:0000000005978519

1. CHECK REAR POWER WINDOW SWITCH FUNCTION

Check rear power window motor operation with rear power window switch.

Is the inspection result normal?

YES >> INSPECTION END
NO >> Refer to PWC-24, "Diagnosis Procedure".

Diagnosis Procedure

INFOID:0000000005978520

1. CHECK REAR POWER WINDOW SWITCH INPUT SIGNAL

1. Turn ignition switch OFF.
2. Disconnect rear power window switch connector.
3. Turn ignition switch ON.
4. Check voltage between rear power window switch harness connector and ground.

(+)			(-)	Condition		Voltage (V) (Approx.)
Rear power window switch						
Connector		Terminal				
LH	D63	2	Ground	Power window main switch (rear LH)	UP	12
					DOWN	0
		3			UP	0
					DOWN	12
RH	D43	2		Power window main switch (rear RH)	UP	12
					DOWN	0
		3			UP	0
					DOWN	12

Is the inspection result normal?

YES >> GO TO 2.
NO >> GO TO 3.

2. CHECK REAR POWER WINDOW SWITCH

Check rear power window switch.
Refer to PWC-25, "Component Inspection".

Is the inspection result normal?

YES >> GO TO 4.
NO >> Replace rear power window switch. Refer to PWC-44, "Removal and Installation".

3. CHECK REAR POWER WINDOW SWITCH CIRCUIT

1. Turn ignition switch OFF.
2. Disconnect power window main switch connector.
3. Check continuity between power window main switch harness connector and rear power window switch harness connector.

Power window main switch		Rear power window switch			Continuity
Connector	Terminal	Connector		Terminal	
D5	1	LH	D63	2	Existed
	3			3	
	5	RH	D43	3	
	7			2	

4. Check continuity between power window main switch harness connector and ground.

Power window main switch		Ground	Continuity
Connector	Terminal		
D5	1	Ground	Not existed
	3		
	5		
	7		

Is the inspection result normal?

YES >> Replace power window main switch. Refer to PWC-44, "Removal and Installation".
NO >> Repair or replace harness.

4. CHECK INTERMITTENT INCIDENT

Refer to GI-33, "Intermittent Incident".

>> INSPECTION END

Component Inspection

INFOID:0000000005978521

1. CHECK REAR POWER WINDOW SWITCH

1. Turn ignition switch OFF.
2. Disconnect rear power window switch connector.
3. Check rear power window switch terminals under the following conditions.

Terminal		Condition		Continuity
1	5	Rear power window switch	UP	Existed
3	4			
3	4		NEUTRAL	
2	5			
1	4		DOWN	
2	5			

Is the inspection result normal?

YES >> INSPECTION END
NO >> Replace rear power window switch. Refer to PWC-44, "Removal and Installation".

POWER WINDOW MOTOR

DRIVER SIDE

DRIVER SIDE : Component Function Check

INFOID:0000000005978523

1. CHECK FRONT POWER WINDOW MOTOR (DRIVER SIDE) OPERATION

Check front power window motor (driver side) operation with power window main switch.

Is the inspection result normal?

YES >> INSPECTION END
NO >> Refer to PWC-26, "DRIVER SIDE : Diagnosis Procedure".

DRIVER SIDE : Diagnosis Procedure

INFOID:0000000005978524

1. CHECK FRONT POWER WINDOW MOTOR (DRIVER SIDE) INPUT SIGNAL

1. Turn ignition switch OFF.
2. Disconnect front power window motor (driver side) connector.
3. Turn ignition switch ON.
4. Check voltage between front power window motor (driver side) harness connector and ground.

(+)		(-)	Condition		Voltage (V) (Approx.)
Front power window motor (driver side)					
Connector	Terminal				
D7	3	Ground	Power window main switch	UP	12
				DOWN	0
	1			UP	0
				DOWN	12

Is the inspection result normal?

YES >> Replace front power window motor (driver side). Refer to GW-18, "Removal and Installation".
NO >> GO TO 2.

2. CHECK FRONT POWER WINDOW MOTOR CIRCUIT

1. Turn ignition switch OFF.
2. Disconnect power window main switch connector.
3. Check continuity between power window main switch harness connector and front power window motor (driver side) harness connector.

Power window main switch		Front power window motor (driver side)		Continuity
Connector	Terminal	Connector	Terminal	
D5	12	D7	1	Existed
	16		3	

4. Check continuity between power window main switch harness connector and ground.

Power window main switch		Ground	Continuity
Connector	Terminal		
D5	12	Ground	Not existed
	16		

Is the inspection result normal?

YES >> Replace power window main switch. Refer to PWC-44, "Removal and Installation".
NO >> Repair or replace harness.

PASSENGER SIDE

PASSENGER SIDE : Component Function Check

INFOID:0000000005978526

1. CHECK FRONT POWER WINDOW MOTOR (PASSENGER SIDE) OPERATION

Check front power window motor (passenger side) operation with power window main switch or front power window switch (passenger side).

Is the inspection result normal?

YES >> INSPECTION END
NO >> Refer to PWC-27, "PASSENGER SIDE : Diagnosis Procedure".

PASSENGER SIDE : Diagnosis Procedure

INFOID:0000000005978527

1. CHECK FRONT POWER WINDOW MOTOR (PASSENGER SIDE) INPUT SIGNAL

1. Turn ignition switch OFF.
2. Disconnect front power window motor (passenger side) connector.
3. Turn ignition switch ON.
4. Check voltage between front power window motor (passenger side) harness connector and ground.

(+)		(-)	Condition		Voltage (V) (Approx.)
Front power window motor (passenger side)					
Connector	Terminal				
D27	2	Ground	Front power window switch (passenger side)	UP	12
				DOWN	0
	1			UP	0
				DOWN	12

Is the inspection result normal?

YES >> Replace front power window motor (passenger side). Refer to GW-18, "Removal and Installation".
NO >> GO TO 2.

2. CHECK FRONT POWER WINDOW MOTOR (PASSENGER SIDE) CIRCUIT

1. Turn ignition switch OFF.
2. Disconnect front power window switch (passenger side) connector.
3. Check continuity between front power window switch (passenger side) harness connector and front power window motor (passenger side) harness connector.

Front power window switch (passenger side)		Front power window motor (passenger side)		Continuity
Connector	Terminal	Connector	Terminal	
D25	4	D27	1	Existed
	5		2	

4. Check continuity between front power window switch (passenger side) harness connector and ground.

Front power window switch (passenger side)		Ground	Continuity
Connector	Terminal		
D25	4	Ground	Not existed
	5		

Is the inspection result normal?

YES >> Replace front power window switch (passenger side). Refer to PWC-44, "Removal and Installation".
NO >> Repair or replace harness.

REAR LH

REAR LH : Component Function Check

INFOID:0000000005978529

1. CHECK REAR POWER WINDOW MOTOR LH OPERATION

Check rear power window motor LH operation with power window main switch or rear power window switch LH.

Is the inspection result normal?

YES >> INSPECTION END
NO >> Refer to PWC-28, "REAR LH : Diagnosis Procedure".

REAR LH : Diagnosis Procedure

INFOID:0000000005978530

1. CHECK REAR POWER WINDOW MOTOR LH INPUT SIGNAL

1. Turn ignition switch OFF.
2. Disconnect rear power window motor LH connector.
3. Turn ignition switch ON.
4. Check voltage between rear power window motor LH harness connector and ground.

(+)		(-)	Condition		Voltage (V) (Approx.)
Rear power window motor LH					
Connector	Terminal				
D67	1	Ground	Rear power window switch LH	UP	12
				DOWN	0
	2			UP	0
				DOWN	12

Is the inspection result normal?

YES >> Replace rear power window motor LH. Refer to GW-22, "Removal and Installation".
NO >> GO TO 2.

2. CHECK REAR POWER WINDOW MOTOR LH CIRCUIT

1. Turn ignition switch OFF.
2. Disconnect rear power window switch LH connector.
3. Check continuity between rear power window switch LH harness connector and rear power window motor LH harness connector.

Rear power window switch LH		Rear power window motor LH		Continuity
Connector	Terminal	Connector	Terminal	
D63	4	D67	2	Existed
	5		1	

4. Check continuity between rear power window switch LH connector and ground.

Rear power window switch LH		Ground	Continuity
Connector	Terminal		
D83	4	Ground	Not existed
	5		

Is the inspection result normal?

YES >> Replace rear power window switch LH. Refer to PWC-44, "Removal and Installation".
NO >> Repair or replace harness.

REAR RH

REAR RH : Component Function Check

INFOID:0000000005978532

1. CHECK REAR POWER WINDOW MOTOR RH OPERATION

Check rear power window motor RH operation with power window main switch or rear power window switch RH.

Is the inspection result normal?

YES >> INSPECTION END
NO >> Refer to PWC-29, "REAR RH : Diagnosis Procedure".

REAR RH : Diagnosis Procedure

INFOID:0000000005978533

1. CHECK REAR POWER WINDOW MOTOR RH INPUT SIGNAL

1. Turn ignition switch OFF.
2. Disconnect rear power window motor RH connector.
3. Turn ignition switch ON.
4. Check voltage between rear power window motor RH harness connector and ground.

(+)		(-)	Condition		Voltage (V) (Approx.)
Rear power window motor RH					
Connector	Terminal				
D47	1	Ground	Rear power window switch RH	UP	12
				DOWN	0
	2			UP	0
				DOWN	12

Is the inspection result normal?

YES >> Replace rear power window motor RH. Refer to GW-22, "Removal and Installation".
NO >> GO TO 2.

2. CHECK REAR POWER WINDOW MOTOR RH CIRCUIT

1. Turn ignition switch OFF.
2. Disconnect rear power window switch RH connector.
3. Check continuity between rear power window switch RH harness connector and rear power window motor RH harness connector.

Rear power window switch RH		Rear power window motor RH		Continuity
Connector	Terminal	Connector	Terminal	
D43	4	D47	2	Existed
	5		1	

4. Check continuity between rear power window switch RH harness connector and ground.

Rear power window switch RH		Ground	Continuity
Connector	Terminal		
D43	4		Not existed
	5		

Is the inspection result normal?

YES >> Replace rear power window switch RH. Refer to PWC-44, "Removal and Installation".
NO >> Repair or replace harness.

ENCODER CIRCUIT

Component Function Check

INFOID:0000000005978535

1.CHECK ENCODER OPERATION

Check that front driver side door glass perform AUTO UP/DOWN operation normally when power window main switch is operated.

Is the inspection result normal?

YES >> INSPECTION END
NO >> Refer to PWC-30, "Diagnosis Procedure".

Diagnosis Procedure

INFOID:0000000005978536

Encoder Circuit Check

1.CHECK ENCODER OPERATION

1. Turn ignition switch ON.
2. Check signal between power window main switch harness connector and ground with oscilloscope.

(+)		(-)	Signal (Reference value)
Power window main switch			
Connector	Terminal		
D5	2	Ground	Refer to following signal
	13		

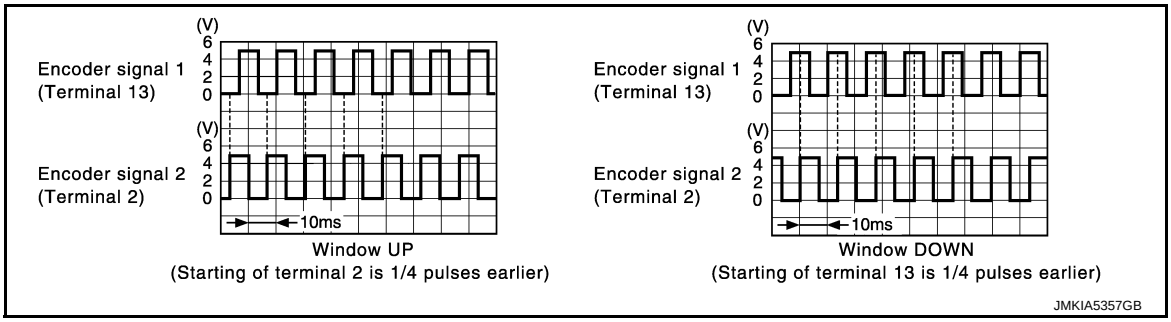

Is the inspection result normal?

YES >> GO TO 7.
NO >> GO TO 2.

2.CHECK ENCODER SIGNAL CIRCUIT

1. Turn ignition switch OFF.
2. Disconnect power window main switch connector and front power window motor (driver side) connector.
3. Check continuity between power window main switch harness connector and front power window motor (driver side) harness connector.

Power window main switch		Front power window motor (driver side)		Continuity
Connector	Terminal	Connector	Terminal	
D5	2	D7	6	Existed
	13		5	

4. Check continuity between power window main switch harness connector and ground.

Power window main switch		Ground	Continuity
Connector	Terminal		
D5	2		Not existed
	13		

Is the inspection result normal?

YES >> GO TO 3.
NO >> Repair or replace harness.

3. CHECK ENCODER POWER SUPPLY CIRCUIT

1. Connect power window main switch connector.
2. Turn ignition switch ON.
3. Check voltage between front power window motor (driver side) harness connector and ground.

(+)		(-)	Voltage (V) (Approx.)
Front power window motor (driver side)			
Connector	Terminal		
D7	2	Ground	12

Is the inspection result normal?

YES >> GO TO 4.
NO >> GO TO 5.

4. CHECK GROUND CIRCUIT

1. Turn ignition switch OFF.
2. Check continuity between front power window motor (driver side) harness connector and ground.

Front power window motor (driver side)		Ground	Continuity
Connector	Terminal		
D7	4		Existed

Is the inspection result normal?

YES >> GO TO 7.
NO >> GO TO 6.

5. CHECK HARNESS CONTINUITY 1

1. Turn ignition switch OFF.
2. Check continuity between power window main switch harness connector and front power window motor (driver side) harness connector.

Power window main switch		Front power window motor (driver side)		Continuity
Connector	Terminal	Connector	Terminal	
D5	15	D7	2	Existed

3. Check continuity between power window main switch harness connector and ground.

Power window main switch		Ground	Continuity
Connector	Terminal		
D5	15		Not existed

Is the inspection result normal?

YES >> Replace power window main switch. Refer to PWC-44, "Removal and Installation".
NO >> Repair or replace harness.

6. CHECK HARNESS CONTINUITY 2

1. Disconnect power window main switch connector.
2. Check continuity between power window main switch harness connector and front power window motor (driver side) harness connector.

Power window main switch		Front power window motor (driver side)		Continuity
Connector	Terminal	Connector	Terminal	
D5	9	D7	4	Existed

Is the inspection result normal?

YES >> Replace power window main switch. Refer to PWC-44, "Removal and Installation".
NO >> Repair or replace harness.

7. CHECK INTERMITTENT INCIDENT

Refer to GI-33, "Intermittent Incident".

>> INSPECTION END

SYMPTOM DIAGNOSIS

NONE OF THE POWER WINDOWS CAN BE OPERATED USING ANY SWITCH

Diagnosis Procedure

INFOID:0000000005978550

1. CHECK BCM POWER SUPPLY AND GROUND CIRCUIT

Check BCM power supply and ground circuit. Refer to following.

- With Intelligent Key : PWC-17, "BCM (BODY CONTROL SYSTEM) (WITH INTELLIGENT KEY SYSTEM) : Diagnosis Procedure".
- Without Intelligent Key : PWC-17, "BCM (BODY CONTROL SYSTEM) (WITHOUT INTELLIGENT KEY SYSTEM) : Diagnosis Procedure".

Is the inspection result normal?

YES >> GO TO 2.
NO >> Repair or replace the malfunctioning parts.

2. CHECK POWER WINDOW MAIN SWITCH POWER SUPPLY AND GROUND CIRCUIT

Check power window main switch power supply and ground circuit.
Refer to PWC-18, "POWER WINDOW MAIN SWITCH : Diagnosis Procedure".

Is the inspection result normal?

YES >> GO TO 3.
NO >> Repair or replace the malfunctioning parts.

3. CONFIRM THE OPERATION

Confirm the operation again.

Is the result normal?

YES >> Check intermittent incident. Refer to GI-33, "Intermittent Incident".
NO >> GO TO 1.

DRIVER SIDE POWER WINDOW DOES NOT OPERATE

Diagnosis Procedure

INFOID:0000000005978551

1. CHECK FRONT POWER WINDOW MOTOR (DRIVER SIDE)

Check front power window motor (driver side).
Refer to PWC-26, "DRIVER SIDE : Component Function Check".

Is the inspection result normal?

YES >> GO TO 2.
NO >> Repair or replace the malfunctioning parts.

2. CONFIRM THE OPERATION

Confirm the operation again.

Is the result normal?

YES >> Check intermittent incident. Refer to GI-33, "Intermittent Incident".
NO >> GO TO 1.

FRONT PASSENGER SIDE POWER WINDOW DOES NOT OPERATE

WITH BOTH POWER WINDOW MAIN SWITCH AND FRONT PASSENGER SIDE POWER WINDOW SWITCH

WITH BOTH POWER WINDOW MAIN SWITCH AND FRONT PASSENGER SIDE POWER WINDOW SWITCH : Diagnosis Procedure

INFOID:0000000005978552

1. CHECK FRONT POWER WINDOW SWITCH (PASSENGER SIDE)

Check front power window switch (passenger side).
Refer to PWC-22, "Component Function Check".

Is the inspection result normal?

YES >> GO TO 2.
NO >> Repair or replace the malfunctioning parts.

2. CHECK FRONT POWER WINDOW MOTOR (PASSENGER SIDE)

Check front power window motor (passenger side).
Refer to PWC-27, "PASSENGER SIDE : Component Function Check".

Is the inspection result normal?

YES >> GO TO 3.
NO >> Repair or replace the malfunctioning parts.

3. CONFIRM THE OPERATION

Confirm the operation again.

Is the result normal?

YES >> Check intermittent incident. Refer to GI-33, "Intermittent Incident".
NO >> GO TO 1.

WITH FRONT POWER WINDOW SWITCH ONLY

WITH FRONT POWER WINDOW SWITCH ONLY : Diagnosis Procedure

INFOID:0000000006052883

1. CHECK FRONT POWER WINDOW SWITCH (PASSENGER SIDE) POWER SUPPLY AND GROUND CIRCUIT

Check front power window switch (passenger side) power supply and ground circuit.
Refer to PWC-19, "FRONT POWER WINDOW SWITCH (PASSENGER SIDE) : Diagnosis Procedure".

Is the inspection result normal?

YES >> GO TO 2.
NO >> Repair or replace the malfunctioning parts.

2. CHECK FRONT POWER WINDOW SWITCH (PASSENGER SIDE)

Check front power window switch (passenger side).
Refer to PWC-22, "Component Function Check".

Is the inspection result normal?

YES >> GO TO 3.
NO >> Repair or replace the malfunctioning parts.

3. CONFIRM THE OPERATION

Confirm the operation again.

Is the result normal?

YES >> Check intermittent incident. Refer to GI-33, "Intermittent Incident".
NO >> GO TO 1.

WITH POWER WINDOW MAIN SWITCH

WITH POWER WINDOW MAIN SWITCH : Diagnosis Procedure

INFOID:0000000005978553

1. CHECK FRONT POWER WINDOW SWITCH (PASSENGER SIDE)

Check front power window switch (passenger side).
Refer to PWC-22, "Component Function Check".

Is the inspection result normal?

YES >> GO TO 2.
NO >> Repair or replace the malfunctioning parts.

2. CONFIRM THE OPERATION

Confirm the operation again.

Is the result normal?

YES >> Check intermittent incident. Refer to GI-33, "Intermittent Incident".
NO >> GO TO 1.

REAR LH SIDE POWER WINDOW DOES NOT OPERATE

WITH BOTH POWER WINDOW MAIN SWITCH AND REAR POWER WINDOW SWITCH LH

WITH BOTH POWER WINDOW MAIN SWITCH AND REAR POWER WINDOW SWITCH LH : Diagnosis Procedure

INFOID:0000000005978554

1. CHECK REAR POWER WINDOW SWITCH LH

Check rear power window switch LH.
Refer to PWC-24, "Component Function Check".

Is the inspection result normal?

YES >> GO TO 2.
NO >> Repair or replace the malfunctioning parts.

2. CHECK REAR POWER WINDOW MOTOR LH

Check rear power window motor LH.
Refer to PWC-28, "REAR LH : Component Function Check".

Is the inspection result normal?

YES >> GO TO 3.
NO >> Repair or replace the malfunctioning parts.

3. CONFIRM THE OPERATION

Confirm the operation again.

Is the result normal?

YES >> Check intermittent incident. Refer to GI-33, "Intermittent Incident".
NO >> GO TO 1.

WITH REAR POWER WINDOW SWITCH LH ONLY

WITH REAR POWER WINDOW SWITCH LH ONLY : Diagnosis Procedure

INFOID:0000000006052884

1. CHECK REAR POWER WINDOW SWITCH LH POWER SUPPLY AND GROUND CIRCUIT

Check rear power window switch LH power supply and ground circuit.
Refer to PWC-20, "REAR POWER WINDOW SWITCH : Diagnosis Procedure".

Is the inspection result normal?

YES >> GO TO 2.
NO >> Repair or replace the malfunctioning parts.

2. CHECK REAR POWER WINDOW SWITCH LH

Check rear power window switch LH.
Refer to PWC-24, "Component Function Check".

Is the inspection result normal?

YES >> GO TO 3.
NO >> Repair or replace the malfunctioning parts.

3. CONFIRM THE OPERATION

Confirm the operation again.

Is the result normal?

YES >> Check intermittent incident. Refer to GI-33, "Intermittent Incident".
NO >> GO TO 1.

WITH POWER WINDOW MAIN SWITCH

WITH POWER WINDOW MAIN SWITCH : Diagnosis Procedure

INFOID:0000000005978555

1. CHECK REAR POWER WINDOW SWITCH LH

Check rear power window switch LH.
Refer to PWC-24, "Component Function Check".

Is the inspection result normal?

YES >> GO TO 2.
NO >> Repair or replace the malfunctioning parts.

2. CONFIRM THE OPERATION

Confirm the operation again.

Is the result normal?

YES >> Check intermittent incident. Refer to GI-33, "Intermittent Incident".
NO >> GO TO 1.

REAR RH SIDE POWER WINDOW DOES NOT OPERATE

WITH BOTH POWER WINDOW MAIN SWITCH AND REAR POWER WINDOW SWITCH RH

WITH BOTH POWER WINDOW MAIN SWITCH AND REAR POWER WINDOW SWITCH RH : Diagnosis Procedure

INFOID:0000000005978556

1. CHECK REAR POWER WINDOW SWITCH RH

Check rear power window switch RH.
Refer to PWC-24, "Component Function Check".

Is the inspection result normal?

YES >> GO TO 2.
NO >> Repair or replace the malfunctioning parts.

2. CHECK REAR POWER WINDOW MOTOR RH

Check rear power window motor RH.
Refer to PWC-28, "REAR RH : Component Function Check".

Is the inspection result normal?

YES >> GO TO 3.
NO >> Repair or replace the malfunctioning parts.

3. CONFIRM THE OPERATION

Confirm the operation again.

Is the result normal?

YES >> Check intermittent incident. Refer to GI-33, "Intermittent Incident".
NO >> GO TO 1.

WITH REAR POWER WINDOW SWITCH RH ONLY

WITH REAR POWER WINDOW SWITCH RH ONLY : Diagnosis Procedure

INFOID:0000000005978557

1. CHECK REAR POWER WINDOW SWITCH RH POWER SUPPLY AND GROUND CIRCUIT

Check rear power winodw switch RH power supply and ground circuit.
Refer to PWC-20, "REAR POWER WINDOW SWITCH : Diagnosis Procedure".

Is the inspection result normal?

YES >> GO TO 2.
NO >> Repair or replace the malfunctioning parts.

2. CHECK REAR POWER WINDOW SWITCH RH

Check rear power window switch RH.
Refer to PWC-24, "Component Function Check".

Is the inspection result normal?

YES >> GO TO 3.
NO >> Repair or replace the malfunctioning parts.

3. CONFIRM THE OPERATION

Confirm the operation again.

Is the result normal?

YES >> Check intermittent incident. Refer to GI-33, "Intermittent Incident".
NO >> GO TO 1.

WITH POWER WINDOW MAIN SWITCH

WITH POWER WINDOW MAIN SWITCH : Diagnosis Procedure

INFOID:0000000006052885

1. CHECK REAR POWER WINDOW SWITCH RH

Check rear power window switch RH.
Refer to PWC-24, "Component Function Check".

Is the inspection result normal?

YES >> GO TO 2.
NO >> Repair or replace the malfunctioning parts.

2. CONFIRM THE OPERATION

Confirm the operation again.

Is the result normal?

YES >> Check intermittent incident. Refer to GI-33, "Intermittent Incident".
NO >> GO TO 1.

AUTO OPERATION DOES NOT OPERATE BUT MANUAL OPERATE NORMALLY (DRIVER SIDE)

Diagnosis Procedure

INFOID:0000000005978560

1. PERFORM INITIALIZATION PROCEDURE

Initialization procedure is executed and operation is confirmed.
Refer to PWC-15, "Work Procedure".

Is the inspection result normal?

YES >> INSPECTION END
NO >> GO TO 2.

2. CHECK ENCODER CIRCUIT

Check encoder circuit.
Refer to PWC-30, "Component Function Check".

Is the inspection result normal?

YES >> GO TO 3.
NO >> Repair or replace the malfunctioning parts.

3. CONFIRM THE OPERATION

Confirm the operation again.

Is the result normal?

YES >> Check intermittent incident. Refer to GI-33, "Intermittent Incident".
NO >> GO TO 1.

ANTI-PINCH SYSTEM DOES NOT OPERATE NORMALLY (DRIVER SIDE)

Diagnosis Procedure

INFOID:0000000005978558

1. CHECK POWER WINDOW AUTO OPERATION

Check AUTO operation when anti-pinch function does not operate.
Refer to PWC-41, "Diagnosis Procedure".

Is the inspection result normal?

YES >> INSPECTION END
NO >> GO TO 2.

2. CONFIRM THE OPERATION

Confirm the operation again.

Is the result normal?

YES >> Check intermittent incident. Refer to GI-33, "Intermittent Incident".
NO >> GO TO 1.

POWER WINDOW LOCK SWITCH DOES NOT FUNCTION

Diagnosis Procedure

INFOID:0000000005978561

1. REPLACE POWER WINDOW MAIN SWITCH

Replace power window main switch.

>> Refer to PWC-44, "Removal and Installation".

REMOVAL AND INSTALLATION

POWER WINDOW MAIN SWITCH

Exploded View

INFOID:0000000005978563

Refer to INT-13, "Exploded View".

Removal and Installation

INFOID:0000000005978564

REMOVAL

1. Remove power window main switch finisher. Refer to INT-14, "Removal and Installation".
2. Remove power window main switch from power window main switch finisher using flat-head screw driver.

CAUTION:
Do not fold the pawl of power window main switch finisher.
NOTE:
The same procedure is also performed for front power window switch (passenger side) and rear power window switch (LH & RH).

INSTALLATION

Install in the reverse order of removal.
NOTE:
Power window main switch is exchanged or is detached it is necessary to do the initialization procedure.
Refer to PWC-15, "Work Procedure".

SECTION PWO
POWER OUTLET

CONTENTS

PRECAUTION 2
PRECAUTIONS 2
Precaution for Supplemental Restraint System (SRS) "AIR BAG" and "SEAT BELT PRE-TENSIONER" 2
WIRING DIAGRAM 3
POWER SOCKET 3
Wiring Diagram 3
REMOVAL AND INSTALLATION 4
POWER SOCKET 4
Exploded View 4
Removal and Installation 4

PRECAUTION

PRECAUTIONS

Precaution for Supplemental Restraint System (SRS) "AIR BAG" and "SEAT BELT PRE-TENSIONER"

INFOID:0000000005911708

The Supplemental Restraint System such as “AIR BAG” and “SEAT BELT PRE-TENSIONER”, used along with a front seat belt, helps to reduce the risk or severity of injury to the driver and front passenger for certain types of collision. Information necessary to service the system safely is included in the “SRS AIR BAG” and “SEAT BELT” of this Service Manual.

WARNING:

- **To avoid rendering the SRS inoperative, which could increase the risk of personal injury or death in the event of a collision which would result in air bag inflation, all maintenance must be performed by an authorized NISSAN/INFINITI dealer.**
- **Improper maintenance, including incorrect removal and installation of the SRS, can lead to personal injury caused by unintentional activation of the system. For removal of Spiral Cable and Air Bag Module, see the “SRS AIR BAG”.**
- **Do not use electrical test equipment on any circuit related to the SRS unless instructed to in this Service Manual. SRS wiring harnesses can be identified by yellow and/or orange harnesses or harness connectors.**

PRECAUTIONS WHEN USING POWER TOOLS (AIR OR ELECTRIC) AND HAMMERS

WARNING:

- **When working near the Air Bag Diagnosis Sensor Unit or other Air Bag System sensors with the ignition ON or engine running, DO NOT use air or electric power tools or strike near the sensor(s) with a hammer. Heavy vibration could activate the sensor(s) and deploy the air bag(s), possibly causing serious injury.**
- **When using air or electric power tools or hammers, always switch the ignition OFF, disconnect the battery, and wait at least 3 minutes before performing any service.**

WIRING DIAGRAM

POWER SOCKET

Wiring Diagram

INFOID:0000000005911713

For connector terminal arrangements, harness layouts, and alphabets in a ⬡ (option abbreviation; if not described in wiring diagram), refer to XX-XX, "*****".

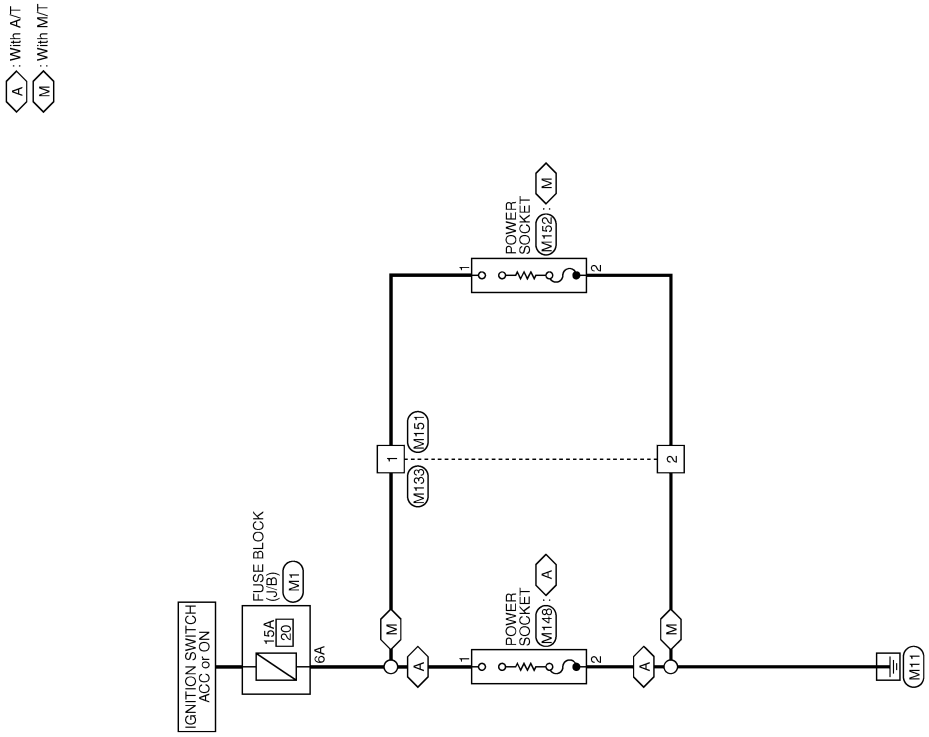

POWER SOCKET

2009/02/27

JCMWA4247GB

REMOVAL AND INSTALLATION

POWER SOCKET

Exploded View

INFOID:0000000005911716

1 : Inner socket
2 : Ring

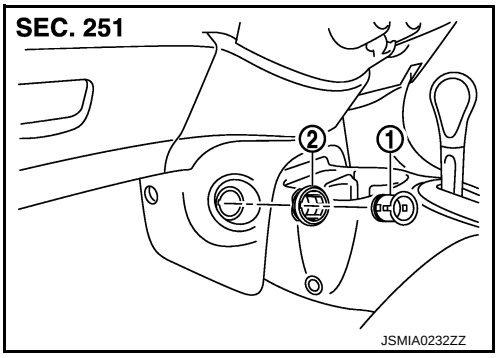

Removal and Installation

INFOID:0000000005911717

REMOVAL

1. Remove clips of the instrument lower center panel to obtain space for work. Refer to IP-12, "Exploded View".
2. Disconnect power socket connector (A).

B : Hole for power socket (Instrument lower center panel)
E : Cut out

3. Pull out inner socket (1) by pushing the ring pawl (C) from the inner socket hole (square) (D).
4. Remove ring (2) from instrument lower center panel while pressing pawls.

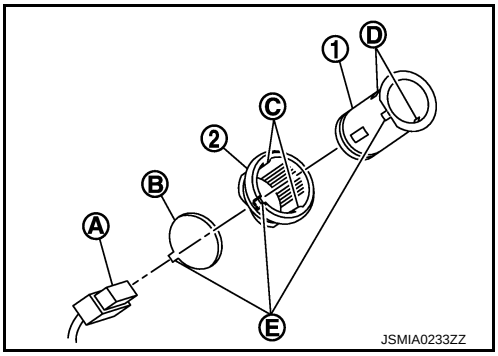

INSTALLATION

Install in the reverse order of removal.

NOTE:

Align the cut outs of inner socket, ring and instrument lower center panel.

SECTION RAX
REAR AXLE

CONTENTS

PREPARATION 2
PREPARATION 2
Special Service Tool 2
SYMPTOM DIAGNOSIS 3
NOISE, VIBRATION AND HARSHNESS (NVH) TROUBLESHOOTING 3
NVH Troubleshooting Chart 3
PERIODIC MAINTENANCE 4
REAR WHEEL HUB 4
Inspection 4
REMOVAL AND INSTALLATION 5
REAR WHEEL HUB 5
Exploded View 5
Removal and Installation 5
Disassembly and Assembly 6
Inspection 6
SERVICE DATA AND SPECIFICATIONS (SDS) 8
SERVICE DATA AND SPECIFICATIONS (SDS) 8
Wheel Bearing 8

PREPARATION

PREPARATION

Special Service Tool

INFOID:0000000006044296

Description	Application
Drift ST30720000 a: 77 mm (3.03 in) dia. b: 55 mm (2.17 in) dia. 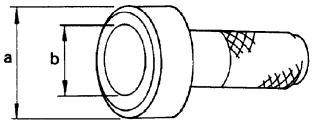 ZZA0701D	Installing hub cap
Drift KV40104730 a: 53.7 mm (2.114 in) dia. b: 47 mm (1.85 in) dia. c: 15 mm (0.59 in). 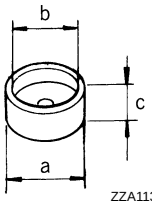 ZZA1133D	Installing wheel bearing
Drift ST33710000 a: 30 mm (1.18 in) dia. b: 23 mm (0.91 in) dia. 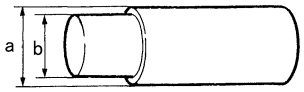 ZZA1234D	Removing wheel bearing

SYMPTOM DIAGNOSIS

NOISE, VIBRATION AND HARSHNESS (NVH) TROUBLESHOOTING

NVH Troubleshooting Chart

INFOID:0000000006044165

Use chart below to find the cause of the symptom. If necessary, repair or replace these parts.

Reference page			RAX-5	—	RAX-4	NVH in RAX and RSU sections	NVH in WT section	NVH in WT section	NVH in BR section
Possible cause and SUSPECTED PARTS			Improper installation, looseness	Parts interference	Wheel bearing damage	REAR AXLE AND REAR SUSPENSION	TIRE	ROAD WHEEL	BRAKE
Symptom	REAR AXLE	Noise	×	×	×	×	×	×	×
		Shake	×	×	×	×	×	×	×
		Vibration	×	×	×	×	×		
		Shimmy	×	×		×	×	×	×
		Judder	×			×	×	×	×
		Poor quality ride or handling	×	×		×	×	×	

×: Applicable

PERIODIC MAINTENANCE

REAR WHEEL HUB

Inspection

INFOID:0000000006044166

COMPONENT PART

Check the mounting conditions (looseness, back lash) of each component and component conditions (wear, damage) are normal.

WHEEL HUB AND BEARING ASSEMBLY

Check the following items, and replace the part it necessary.

- Move wheel hub and bearing assembly in the axial direction by hand. Check there is no looseness of wheel bearing.

Axial end play : Refer to RAX-8, "Wheel Bearing".

- Rotate wheel hub and bearing assembly and check there is no unusual noise or other irregular conditions. If there is any of irregular conditions, replace wheel hub and bearing assembly.

REMOVAL AND INSTALLATION

REAR WHEEL HUB

Exploded View

INFOID:0000000006044167

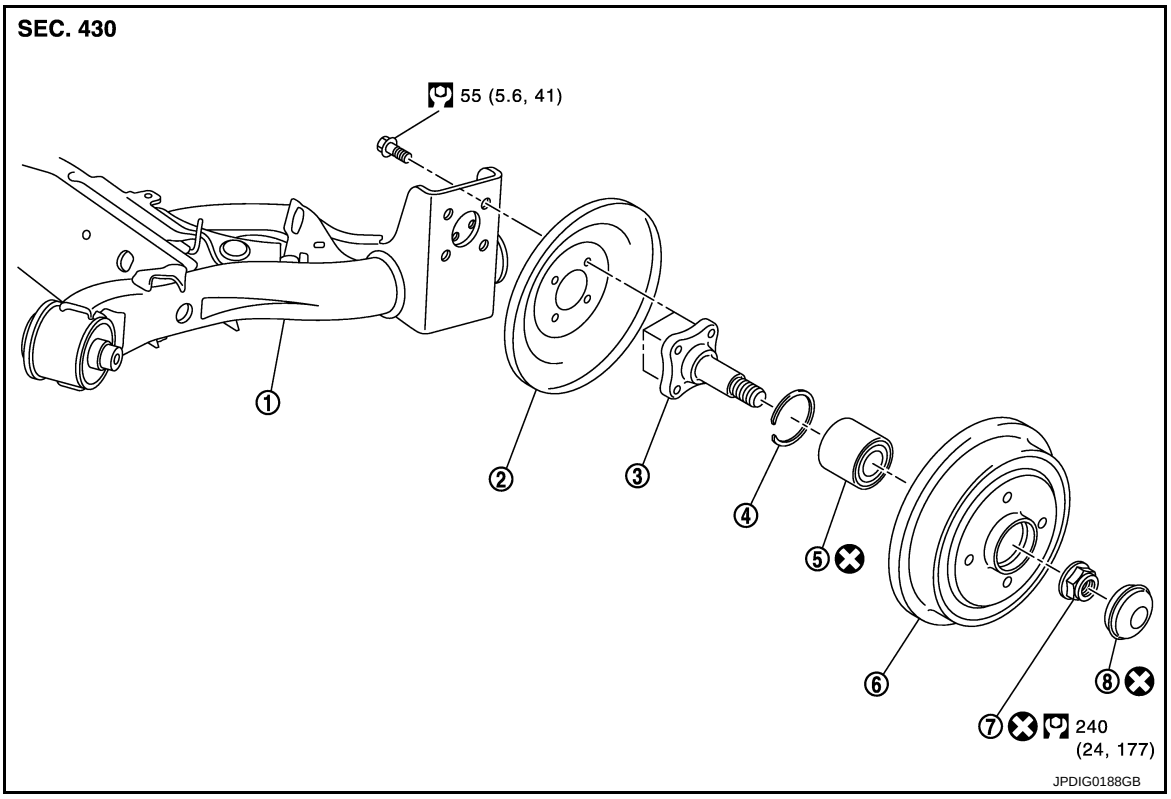

1.	Rear suspension beam	2.	Back plate	3.	Spindle
4.	Snap ring	5.	Wheel bearing	6.	Brake drum
7.	Wheel hub lock nut	8.	Hub cap		

Refer to XX-XX, "*****" for symbols in the figure.

Removal and Installation

INFOID:0000000006044168

REMOVAL

1. Remove tires. Refer to XX-XX, "*****".
2. Remove hub cap from brake drum, using a hub cap pliers.
3. Remove wheel hub lock nut and brake drum.
4. Remove brake shoe assembly. Refer to Dummy cross-reference("XX-XX").
5. Remove spindle mounting bolt. Separate back plate and spindle from rear suspension beam.

INSTALLATION

Note the following, and install in the reverse order of removal.

- Using a drift (SST), mount hub cap on brake drum.
  CAUTION:
  Never reuse hub cap.
- Never reuse wheel lock nut.

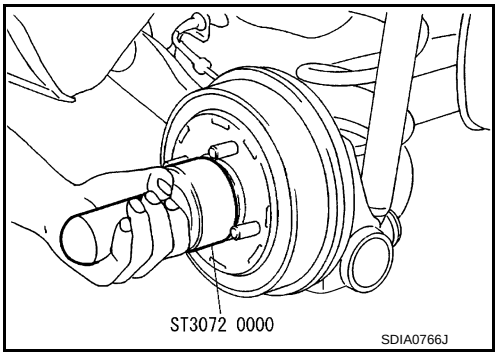

Disassembly and Assembly

INFOID:0000000006044295

DISASSEMBLY

1. Remove snap ring.

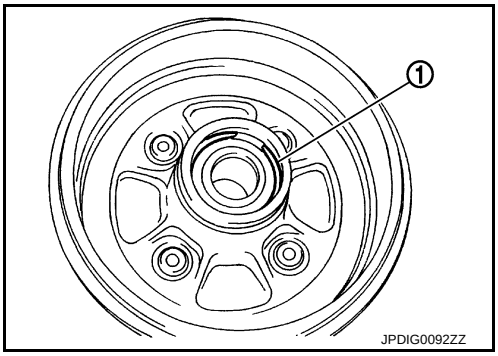

2. Remove wheel bearing, using the drift (SST).

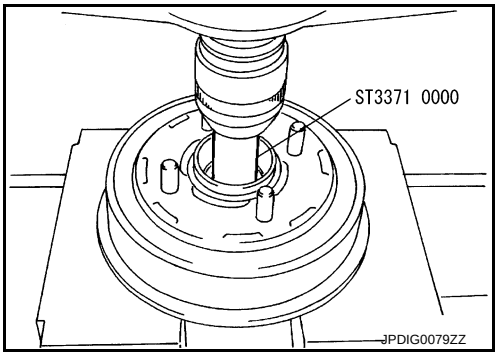

ASSEMBLY

1. Install wheel bearing, using the drift (A) (SST: KV40104730).
   CAUTION:
   Never reuse wheel bearing.
2. Install snap ring.

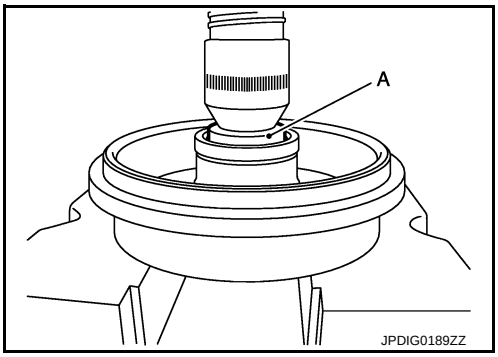

Inspection

INFOID:0000000006044169

INSPECTION AFTER REMOVAL

Check the brake drum assembly and spindle for wear, cracks, and damage. Replace if necessary.

INSPECTION AFTER DISASSEMBLY

- Check brake drum for wear, cracks, or any other damage. Replace if necessary.

- Check snap ring for wear or cracks. Replace if necessary.

INSPECTION AFTER ASSEMBLY

1. After installing brake drum on spindle, tighten wheel hub lock nut to the standard torque.
2. Rotate the wheel hub in both directions ten times each to check for smooth movement.
3. Rotating speed of 8 – 10 rpm, place a spring balance on hub bolt to measure torque.

Rotating torque	**Refer to RAX-8, "Wheel Bearing".**
Spring balance measurement	**Refer to RAX-8, "Wheel Bearing".**

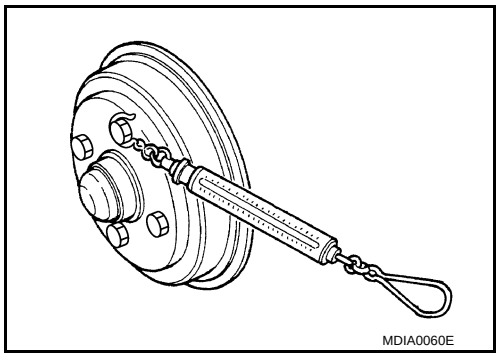

INSPECTION AFTER INSTALLATION

1. Adjust parking brake operation (stroke). Refer to XX-XX, "*****".
2. Check wheel alignment. Refer to XX-XX, "*****".

SERVICE DATA AND SPECIFICATIONS (SDS)

SERVICE DATA AND SPECIFICATIONS (SDS)

Wheel Bearing

INFOID:0000000006044170

Item	Standard
Axial end play	0.05 mm (0.002 in) or less
Rotating torque	0.20 - 0.95 N·m (0.02 - 0.09 kg-m)
Spring balance measurement	4 - 19 N (0.41 - 1.94 kg)

SECTION RSU
REAR SUSPENSION

CONTENTS

PRECAUTION 2
PRECAUTIONS 2
Precautions for Suspension 2
SYMPTOM DIAGNOSIS 3
NOISE, VIBRATION AND HARSHNESS (NVH) TROUBLESHOOTING 3
NVH Troubleshooting Chart 3
PERIODIC MAINTENANCE 4
REAR SUSPENSION ASSEMBLY 4
Inspection 4
WHEEL ALIGNMENT 5
Inspection 5
REMOVAL AND INSTALLATION 7
REAR SHOCK ABSORBER 7
Exploded View 7
Removal and Installation 7
Inspection 8
Disposal 8
COIL SPRING 9
Exploded View 9
Removal and Installation 9
Inspection 9
REAR SUSPENSION BEAM 11
Exploded View 11
Removal and Installation 11
Inspection 11
SERVICE DATA AND SPECIFICATIONS (SDS) 13
SERVICE DATA AND SPECIFICATIONS (SDS) 13
Wheel Alignment 13
Wheelarch Height 13

PRECAUTION

PRECAUTIONS

Precautions for Suspension

INFOID:0000000006044850

- When installing rubber bushings, the final tightening must be carried out under unladen conditions with tires on ground. Spilled oil might shorten the life of rubber bushings. Be sure to wipe off any spilled oil.
- Unladen conditions mean that fuel, engine coolant and lubricant are full. Spare tire, jack, hand tools and mats are in designated positions.
- After servicing suspension parts, be sure to check wheel alignment.
- Self-lock nuts are not reusable. Always use new ones when installing. Since new self-lock nuts are pre-oiled, tighten as they are.

SYMPTOM DIAGNOSIS

NOISE, VIBRATION AND HARSHNESS (NVH) TROUBLESHOOTING

NVH Troubleshooting Chart

INFOID:0000000006044849

Use chart below to find the cause of the symptom. If necessary, repair or replace these parts.

Reference page			XX-XX, "****", XX-XX, "****", XX-XX, "****"	XX-XX, "****"	—	—	—	XX-XX, "****", XX-XX, "****", XX-XX, "****"	RSU-5	NVH in RAX and RSU sections	NVH in WT section	NVH in WT section	NVH in BR section
Possible cause and SUSPECTED PARTS			Improper installation, looseness	Shock absorber deformation, damage or deflection	Bushing or mounting deterioration	Parts interference	Spring fatigue	Suspension looseness	Incorrect wheel alignment	REAR AXLE AND REAR SUSPENSION	TIRE	ROAD WHEEL	BRAKE
Symptom	REAR SUSPENSION	Noise	×	×	×	×	×	×		×	×	×	×
		Shake	×	×	×	×		×		×	×	×	×
		Vibration	×	×	×	×	×			×	×		
		Shimmy	×	×	×	×			×	×	×	×	×
		Judder	×	×	×					×	×	×	×
		Poor quality ride or handling	×	×	×	×	×		×	×	×	×	

×: Applicable

PERIODIC MAINTENANCE

REAR SUSPENSION ASSEMBLY

Inspection

INFOID:0000000006044851

COMPONENT PART

Check the mounting conditions (looseness, backlash) of each component and component conditions (wear, damage) are normal.

SHOCK ABSORBER ASSEMBLY

Check for oil leakage, damage, and replace if necessary.

WHEEL ALIGNMENT

Inspection

INFOID:0000000006044852

DESCRIPTION

Measure wheel alignment under unladen conditions.

NOTE:

“Unladen conditions” means that fuel, engine coolant, and lubricant are full. Spare tire, jack, hand tools and mats are in designated positions.

PRELIMINARY CHECK

Check the following:

- Tires for improper air pressure and wear
- Road wheels for runout: refer to XX-XX, "*****".
- Wheel bearing axial end play: refer to XX-XX, "*****".
- Shock absorber operation
- Each mounting point of axle and suspension for looseness and deformation
- Each of rear suspension beam and shock absorber for cracks, deformation, and other damage
- Vehicle height (posture)

CAMBER

- Measure camber of both right and left wheels with a suitable alignment gauge.
- If camber is outside specified range, replace rear suspension beam. Refer to XX-XX, "*****".

Camber : Refer to XX-XX, "***".**

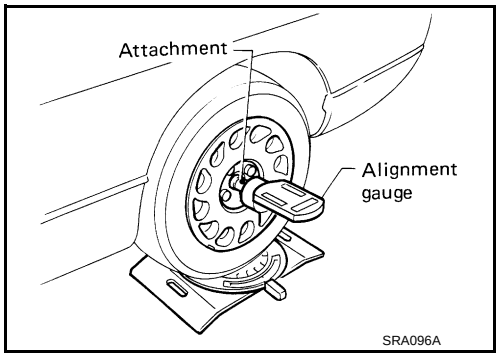

TOE-IN

Measure toe-in by the following procedure.

WARNING:

- **Always perform the following procedure on a flat surface.**
- **Check that no person is in front of vehicle before pushing it.**

1. Bounce the front of vehicle up and down to stabilize the vehicle height (posture).
2. Push vehicle straight ahead about 5 m (16 ft).
3. Put matching mark (A) on base line of the tread (rear side) of both tires at the same height of hub center. These are measuring points.

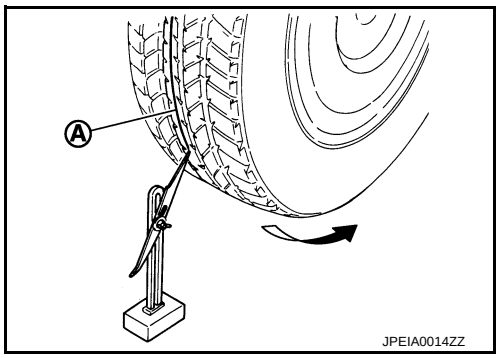

4. Measure distance (A) (rear side).

   ⇦ : Vehicle front

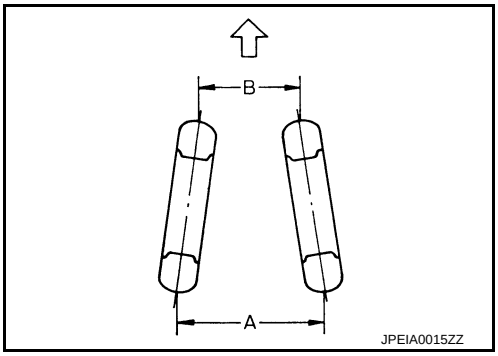

5. Push vehicle slowly ahead to rotate wheels 180 degrees (1/2 turn).
   NOTE:
   If the wheels rotates more than 180 degrees (1/2 turn), start this procedure again from the beginning. Do not push the vehicle backward.
6. Measure distance (B) (front side).

   Total toe-in = A – B

   Total toe-in : Refer to XX-XX, "***".**

   - If toe-in is outside specified range, replace rear suspension beam. Refer to XX-XX, "*****".

REMOVAL AND INSTALLATION

REAR SHOCK ABSORBER

Exploded View

INFOID:0000000006044853

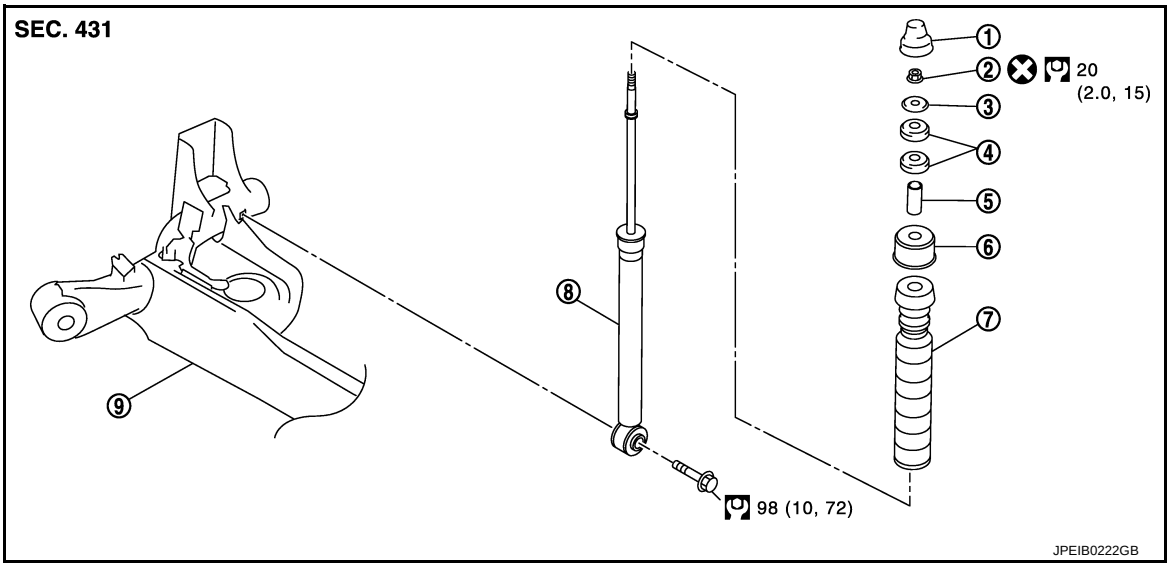

1.	Cap	2.	Piston rod lock nut	3.	Washer
4.	Bushing	5.	Distance tube	6.	Bound bumper cover
7.	Bound bumper	8.	Shock absorber	9.	Rear suspension beam

Refer to XX-XX, "*****" for symbols in the figure.

Removal and Installation

INFOID:0000000006044854

REMOVAL

1. Remove tires. Refer to XX-XX, "*****".
2. Set suitable jack under rear suspension beam.
   CAUTION:
   Check the stable condition when using a jack.
3. Remove shock absorber mounting bolt (lower side).
4. Remove luggage lid from luggage side finisher. Refer to XX-XX, "*****".
5. Remove cap and shock absorber mounting nut (upper side), and then remove washer and bushing.
6. Remove shock absorber assembly.
7. Remove bushing, distance tube, bound bumper cover, and bound bumper from shock absorber.

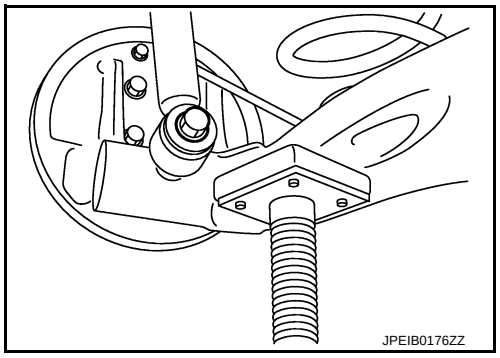

INSTALLATION

Note the following, and install in the reverse order of removal.

- Perform final tightening of bolts and nuts at the shock absorber lower side (rubber bushing), under unladen conditions with tires on level ground.

- Install projection surely into the hole on the vehicle side as shown in the figure, when installing bushing.
- Hold a head of shock absorber piston rod not to have it rotate, then tighten piston rod lock nut with a standard tightening torque value.

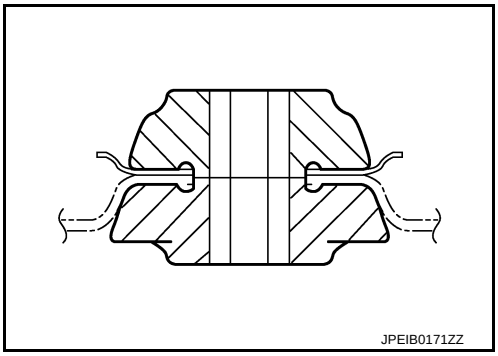

Inspection

INFOID:0000000006044855

INSPECTION AFTER REMOVAL

Shock Absorber

Check the following items, and replace the part if necessary.
- Shock absorber for deformation, cracks, and other damage.
- Piston rod for damage, uneven wear, and distortion.

Bound Bumper, Bushing

Check for cracks and damage. Replace it if necessary.

Washer, Bound Bumper Cover, Distance Tube
- Check for cracks and damage. Replace it if necessary.

INSPECTION AFTER INSTALLATION

Check wheel alignment. Refer to XX-XX, "*****".

Disposal

INFOID:0000000006044856

1. Set shock absorber horizontally to the ground with the piston rod fully extracted.
2. Drill 2 – 3 mm (0.08 – 0.12 in) hole at the position (●) from top as shown in the figure to release gas gradually.
   CAUTION:
   - **Wear eye protection (safety glass).**
   - **Wear gloves.**
   - **Be careful with metal chips or oil blown out by the compressed gas.**

   NOTE:
   - Drill vertically in this direction (⬅).
   - Directly to the outer tube avoiding brackets.
   - The gas is clear, colorless, odorless, and harmless.

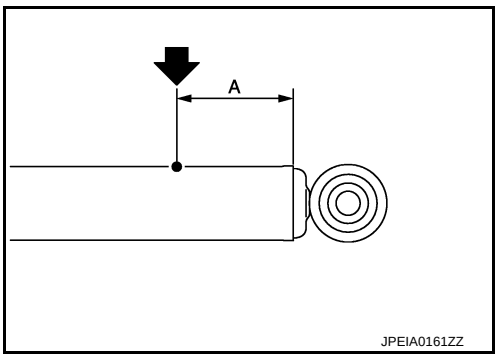

   A : 20 – 30 mm (0.79 – 1.18 in)

3. Position the drilled hole downward and drain oil by moving the piston rod several times.
   CAUTION:
   Dispose of drained oil according to the law and local regulations.

COIL SPRING

Exploded View

INFOID:0000000006044857

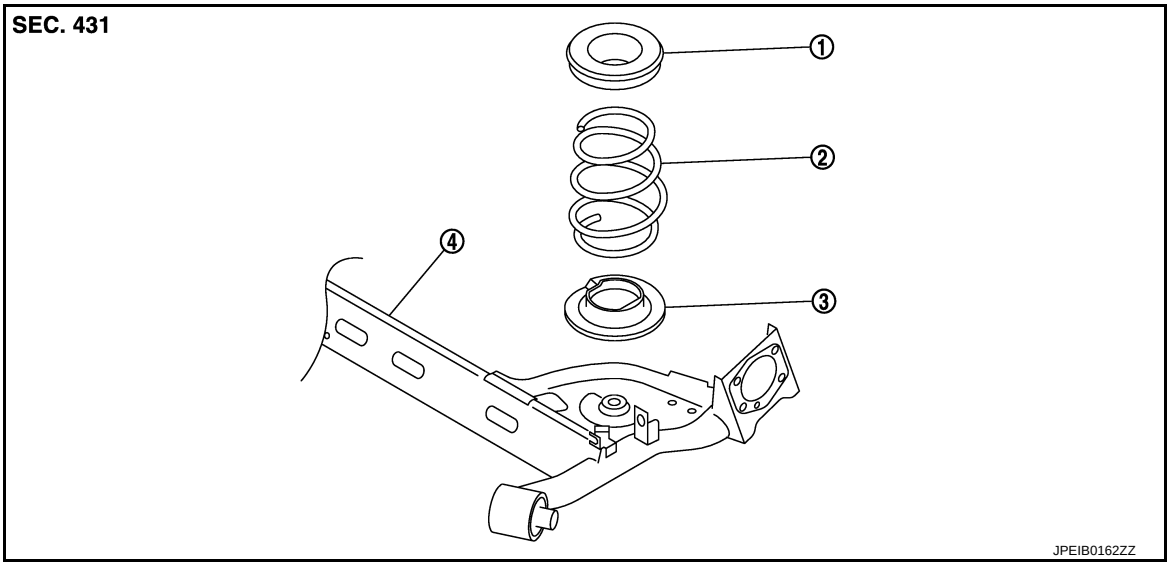

1. Upper rubber seat
2. Coil spring
3. Lower rubber seat
4. Rear suspension beam

Removal and Installation

INFOID:0000000006044858

REMOVAL

1. Remove tires. Refer to XX-XX, "*****".
2. Set jack under rear suspension beam.
   CAUTION:
   Check the stable condition when using a jack.
3. Remove right and left rear shock absorber mounting bolts (lower side). Refer to RSU-7, "Exploded View".
4. Slowly lower jack, then remove upper rubber seat, coil spring and lower rubber seat from rear suspension beam.
   CAUTION:
   Check the stable condition when using a jack.

INSTALLATION

Note the following, and install in the reverse order of removal.

- Install the lower rubber seat a projection (A) is attached as rear suspension beam mounting hole (B).
- Match up lower rubber seat indentions and rear suspension beam grooves and attach.

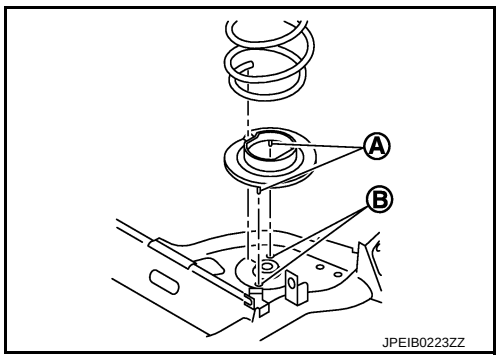

Inspection

INFOID:0000000006044859

INSPECTION AFTER REMOVAL

Check lubber seat and coil spring for deformation, crack, and damage. Replace it if necessary.

INSPECTION AFTER INSTALLATION

Check wheel alignment. Refer to XX-XX, "*****".

REAR SUSPENSION BEAM

Exploded View

INFOID:0000000006044860

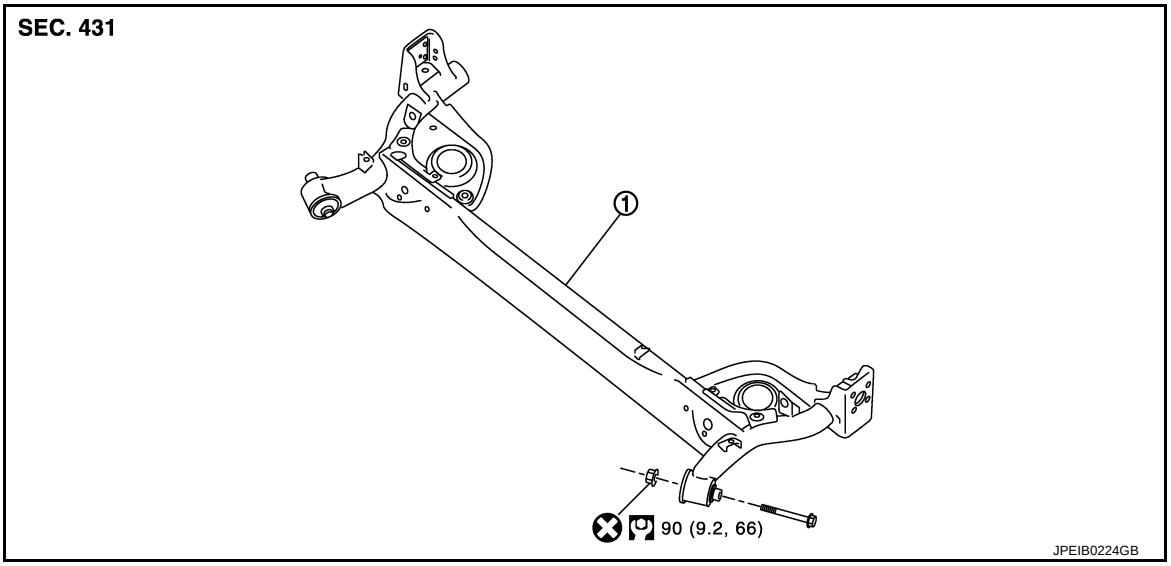

1. Rear suspension beam

Refer to XX-XX, "*****" for symbols in the figure.

Removal and Installation

INFOID:0000000006044861

REMOVAL

1. Remove tires. Refer to XX-XX, "*****".
2. Drain brake fluid. Refer to XX-XX, "*****".
3. Remove parking brake cable and brake drum from rear suspension beam. Refer to XX-XX, "*****", XX-XX, "*****".
4. Set suitable jack under rear suspension beam.
   CAUTION:
   Check the stable condition when using a jack.
5. Remove shock absorber mounting bolts (lower side). Refer to RSU-7, "Exploded View".
6. Remove coil springs. Refer to RSU-9, "Exploded View".
7. Separate brake hose and brake tube. Refer to XX-XX, "*****".
8. Slowly lower jack, remove rear suspension beam from vehicle body.
   CAUTION:
   Check the stable condition when using a jack.
9. Remove wheel hub assembly. Refer to RAX-5, "Removal and Installation".

INSTALLATION

Note the following, and install in the reverse order of removal.

- Perform final tightening of rear suspension beam installation position (rubber bushing), under unladen conditions with tires on level ground.
- Refill with new brake fluid and perform the air bleeding. Refer to XX-XX, "*****".

Inspection

INFOID:0000000006044862

INSPECTION AFTER REMOVAL

Check rear suspension beam and rear suspension beam bracket for deformation, cracks or damage. Replace the part if necessary.

INSPECTION AFTER INSTALLATION

< REMOVAL AND INSTALLATION >

1. Adjust parking brake. Refer to XX-XX, "*****".
2. Check wheel alignment. Refer to XX-XX, "*****".
3. Adjust neutral position of steering angle sensor. Refer to XX-XX, "*****".

SERVICE DATA AND SPECIFICATIONS (SDS)

SERVICE DATA AND SPECIFICATIONS (SDS)

Wheel Alignment

INFOID:0000000006044863

Item			Standard
Camber Degree minute (Decimal degree)		Minimum	–2° 00′ (–2.00°)
		Nominal	–1° 30′ (–1.50°)
		Maximum	–1° 00′ (–1.00°)
Toe-in	Total toe-in Distance	Minimum	Out 2.0 mm (Out 0.079 in)
		Nominal	In 2.0 mm (In 0.079 in)
		Maximum	In 6.0 mm (In 0.236 in)
	Toe angle (left wheel or right wheel) Degree minute (Decimal degree)	Minimum	Out 0° 15′ (Out 0.25°)
		Nominal	In 0° 10′ (In 0.17°)
		Maximum	In 0° 35′ (In 0.58°)

Measure value under unladen* conditions.

*: Fuel, engine coolant and lubricant are full. Spare tire, jack, hand tools and mats are in designated positions.

Wheelarch Height

INFOID:0000000006044864

Item	Standard	
Tire size	165/70R14	175/60R15
Front (Hf)	659 mm (25.94 in)	661 mm (26.02 in)
Rear (Hr)	653 mm (25.71 in)	655 mm (25.79 in)

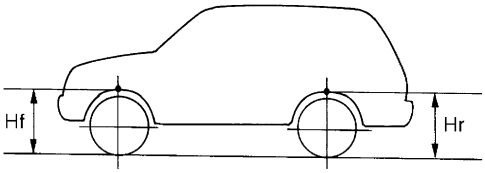

SFA746B

Measure value under unladen* conditions.

*: Fuel, engine coolant and lubricant are full. Spare tire, jack, hand tools and mats are in designated positions.

SECTION SB
SEAT BELT

CONTENTS

PRECAUTION 2

PRECAUTIONS 2
Precaution for Supplemental Restraint System (SRS) "AIR BAG" and "SEAT BELT PRE-TENSIONER" 2
Precaution Necessary for Steering Wheel Rotation after Battery Disconnect 2
Precaution for Seat Belt Service 3

REMOVAL AND INSTALLATION 4

FRONT SEAT BELT 4

SEAT BELT RETRACTOR 4
SEAT BELT RETRACTOR : Inspection 4
SEAT BELT RETRACTOR : Exploded View 6
SEAT BELT RETRACTOR : Removal and Installation 6

SEAT BELT BUCKLE 7
SEAT BELT BUCKLE : Inspection 7
SEAT BELT BUCKLE : Exploded View 8
SEAT BELT BUCKLE : Removal and Installation..... 8

REAR SEAT BELT 9

SEAT BELT RETRACTOR 9
SEAT BELT RETRACTOR : Inspection 9
SEAT BELT RETRACTOR : Exploded View 11
SEAT BELT RETRACTOR : Removal and Installation 11

SEAT BELT BUCKLE 12
SEAT BELT BUCKLE : Inspection 12
SEAT BELT BUCKLE : Exploded View 13
SEAT BELT BUCKLE : Removal and Installation.... 13

PRECAUTION

PRECAUTIONS

Precaution for Supplemental Restraint System (SRS) "AIR BAG" and "SEAT BELT PRE-TENSIONER"

INFOID:0000000006043803

The Supplemental Restraint System such as “AIR BAG” and “SEAT BELT PRE-TENSIONER”, used along with a front seat belt, helps to reduce the risk or severity of injury to the driver and front passenger for certain types of collision. Information necessary to service the system safely is included in the “SRS AIR BAG” and “SEAT BELT” of this Service Manual.

WARNING:

- **To avoid rendering the SRS inoperative, which could increase the risk of personal injury or death in the event of a collision which would result in air bag inflation, all maintenance must be performed by an authorized NISSAN/INFINITI dealer.**
- **Improper maintenance, including incorrect removal and installation of the SRS, can lead to personal injury caused by unintentional activation of the system. For removal of Spiral Cable and Air Bag Module, see the “SRS AIR BAG”.**
- **Do not use electrical test equipment on any circuit related to the SRS unless instructed to in this Service Manual. SRS wiring harnesses can be identified by yellow and/or orange harnesses or harness connectors.**

PRECAUTIONS WHEN USING POWER TOOLS (AIR OR ELECTRIC) AND HAMMERS

WARNING:

- **When working near the Air Bag Diagnosis Sensor Unit or other Air Bag System sensors with the ignition ON or engine running, DO NOT use air or electric power tools or strike near the sensor(s) with a hammer. Heavy vibration could activate the sensor(s) and deploy the air bag(s), possibly causing serious injury.**
- **When using air or electric power tools or hammers, always switch the ignition OFF, disconnect the battery, and wait at least 3 minutes before performing any service.**

Precaution Necessary for Steering Wheel Rotation after Battery Disconnect

INFOID:0000000006043812

NOTE:

- Before removing and installing any control units, first turn the push-button ignition switch to the LOCK position, then disconnect both battery cables.
- After finishing work, confirm that all control unit connectors are connected properly, then re-connect both battery cables.
- Always use CONSULT-III to perform self-diagnosis as a part of each function inspection after finishing work. If a DTC is detected, perform trouble diagnosis according to self-diagnosis results.

For vehicle with steering lock unit, if the battery is disconnected or discharged, the steering wheel will lock and cannot be turned.

If turning the steering wheel is required with the battery disconnected or discharged, follow the operation procedure below before starting the repair operation.

OPERATION PROCEDURE

1. Connect both battery cables.
   NOTE:
   Supply power using jumper cables if battery is discharged.
2. Turn the push-button ignition switch to ACC position.
   (At this time, the steering lock will be released.)
3. Disconnect both battery cables. The steering lock will remain released with both battery cables disconnected and the steering wheel can be turned.
4. Perform the necessary repair operation.
5. When the repair work is completed, re-connect both battery cables. With the brake pedal released, turn the push-button ignition switch from ACC position to ON position, then to LOCK position. (The steering wheel will lock when the push-button ignition switch is turned to LOCK position.)
6. Perform self-diagnosis check of all control units using CONSULT-III.

Precaution for Seat Belt Service

INFOID:0000000005984482

CAUTION:

- **Before removing the front seat belt pre-tensioner assembly, turn the ignition switch off, disconnect battery negative terminal and wait at least 3 minutes.**
- **Do not use electrical test equipment for front seat belt pre-tensioner connector.**
- **After replacing or reinstalling front seat belt pre-tensioner assembly, or reconnecting front seat belt pre-tensioner connector, check the system function. Refer to SRC-7, "Description".**
- **Do not use disassembled buckle or seat belt assembly.**
- **Replace anchor bolts if they are deformed or worn out.**
- **Never oil tongue and buckle.**
- **If any component of seat belt assembly is questionable, do not repair. Replace the entire seat belt assembly.**
- **If webbing is cut, frayed or damaged, replace seat belt assembly.**
- **When replacing seat belt assembly, use a genuine NISSAN seat belt assembly.**

AFTER A COLLISION

WARNING:

Inspect all seat belt assemblies including retractors and attached hardware after any collision.
NISSAN recommends that all seat belt assemblies in use during a collision be replaced unless the collision was minor and the belts show no damage and continue to operate properly. Failure to do so could result in serious personal injury in an accident. Seat belt assemblies not in use during a collision should also be replaced if either damage or improper operation is noted. Seat belt pre-tensioners should be replaced even if the seat belts are not in use during a frontal collision in which the air bags are deployed.

Replace any seat belt assembly (including anchor bolts) if:

- The seat belt was in use at the time of a collision (except for minor collisions and the belts, retractors and buckles show no damage and continue to operate properly).
- The seat belt was damaged in an accident (i.e. torn webbing, bent retractor or guide).
- The seat belt attaching point was damaged in an accident. Inspect the seat belt attaching area for damage or distortion and repair as necessary before installing a new seat belt assembly.
- Anchor bolts are deformed or worn out.
- The front seat belt pre-tensioner should be replaced even if the seat belts are not in use during the collision in which the air bags are deployed.

REMOVAL AND INSTALLATION

FRONT SEAT BELT

SEAT BELT RETRACTOR

SEAT BELT RETRACTOR : Inspection

INFOID:0000000005984483

AFTER A COLLISION

WARNING:

Inspect all seat belt assemblies including retractors and attached hardware after any collision. NISSAN/INFINITI recommends that all seat belt assemblies in use during a collision be replaced unless the collision was minor and the belts show no damage and continue to operate properly. Failure to do so could result in serious personal injury in an accident. Seat belt assemblies not in use during a collision should also be replaced if either damage or improper operation was noted. Seat belt pre-tensioners should be replaced even if the seat belts were not in use during a frontal collision in which the air bags were deployed.

Replace any seat belt assembly (including anchor bolts) if:

- The seat belt is in use at the time of a collision (except for minor collisions and the belts, retractors and buckles show no damage and continue to operate properly).
- The seat belt is damaged in an accident (i.e. torn webbing, bent retractor or guide, etc.).
- The seat belt attaching point is damaged in an accident. Inspect the seat belt attaching area for damage or distortion and repair if necessary before installing a new seat belt assembly.
- Anchor bolts are deformed or worn out.
- The seat belt pre-tensioners must be replaced even if the seat belts were not in use during the collision in which the air bags were deployed.

PRELIMINARY CHECKS

1. Check the seat belt warning lamp for proper operation as per the following:

a. Turn ignition switch ON. The seat belt warning lamp should illuminate.

b. Fasten driver seat belt. The seat belt warning lamp should turn OFF.

2. If the air bag warning lamp is blinking, perform self-diagnosis with CONSULT-III and air bag warning lamp. Refer to SRC-7, "Description".

3. Check that the seat belt retractor, seat belt anchor and buckle bolts are tightened firmly.

4. Check the shoulder seat belt guide and shoulder belt height adjuster for front seats. Check that guide swivels freely and that webbing lays flat and does not bind in guide. Check that height adjuster operates properly and holds securely.

5. Check retractor operation:

a. Fully extend the seat belt webbing and check for twists, tears or other damage.

b. Allow the seat belt to retract. Check that webbing returns smoothly and completely into the retractor. If the seat belt does not return smoothly, wipe the inside of the loops with a clean paper cloth. Dirt build-up in the loops of the upper anchors can cause the seat belts to retract slowly.

c. Fasten the seat belt. Check that seat belt returns smoothly and completely to the retractor. If the webbing does not return smoothly, the cause may be an accumulation of dust or dirt. Use the “SEAT BELT TAPE SET” and perform the following steps.

Inspect the front seat belt through-anchor

1. Pull the seat belt out to a length of 500 mm (19.69 in) or more.
2. Fix the seat belt at the center pillar webbing opening with a clip or other device.
3. Pass a thin wire through the through-anchor webbing opening. Hold both ends of the wire and pull it tightly while moving it up and down several times along the webbing opening surface to remove dirt stuck there.
4. Any dirt that cannot be removed with the wire can be removed by cleaning the opening with a clean cloth.
5. Apply tape at the point where the webbing contacts the through-anchor webbing opening.
   NOTE:
   Apply the tape so that there is no slack or wrinkling.
6. Remove the clip fixing the seat belt and check that the webbing returns smoothly.

6. Repeat steps above if necessary to check the other seat belts.

SEAT BELT RETRACTOR ON-VEHICLE CHECK

Emergency Locking Retractors (ELR)

NOTE:

All seat belt retractors are Emergency Locking Retractors (ELR) type. In an emergency (sudden stop) the retractor will lock and prevent the webbing from extending any further.

Check the seat belt retractors with the following test(s) to determine if a retractor assembly is operating properly.

ELR Function Stationary Check

Grasp the shoulder webbing and pull forward quickly. The retractor should lock and prevent the belt from extending further.

ELR Function Moving Check

WARNING:

Perform the following test in a safe, open area clear of other vehicles and obstructions (for example, a large, empty parking lot). Road surface must be paved and dry. Never perform the following test on wet or gravel roads or on public streets and highways. This could result in an accident and serious personal injury. The driver and passenger must be prepared to brace themselves in the event that the retractor does not lock.

1. Fasten driver seat belt. Buckle a passenger into the seat for the belt that is to be tested.
2. Proceed to the designated safe area.
3. Drive the vehicle at approximately 16 km/h (10 MPH). Notify any passengers of a pending sudden stop and the driver and passenger must be prepared to brace themselves in the event that the retractor does not lock. Apply brakes firmly and make a very hard stop.

During stopping, seat belts should lock and not be extended. If the seat belt retractor assembly does not lock, perform the retractor off-vehicle check.

SEAT BELT RETRACTOR OFF-VEHICLE CHECK

1. Remove the front seat belt retractor. Refer to SB-6, "SEAT BELT RETRACTOR : Removal and Installation".
2. Slowly pull out webbing while tilting the retractor assembly forward from the mounted position without twisting the retractor assembly as shown in the figure.
   - The webbing can be pulled out when the angle (A) is 12 degrees or less.
   - The webbing cannot be pulled out when the angle (B) is 13 degrees or more.

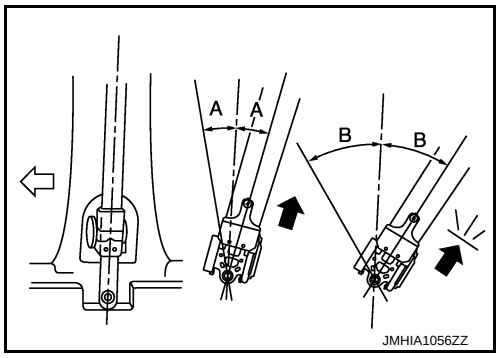

A and B : Tilting angles

⇦ : Vehicle front

3. Replace the seat belt assembly if it does not operate normally.

SEAT BELT RETRACTOR : Exploded View

INFOID:0000000005984484

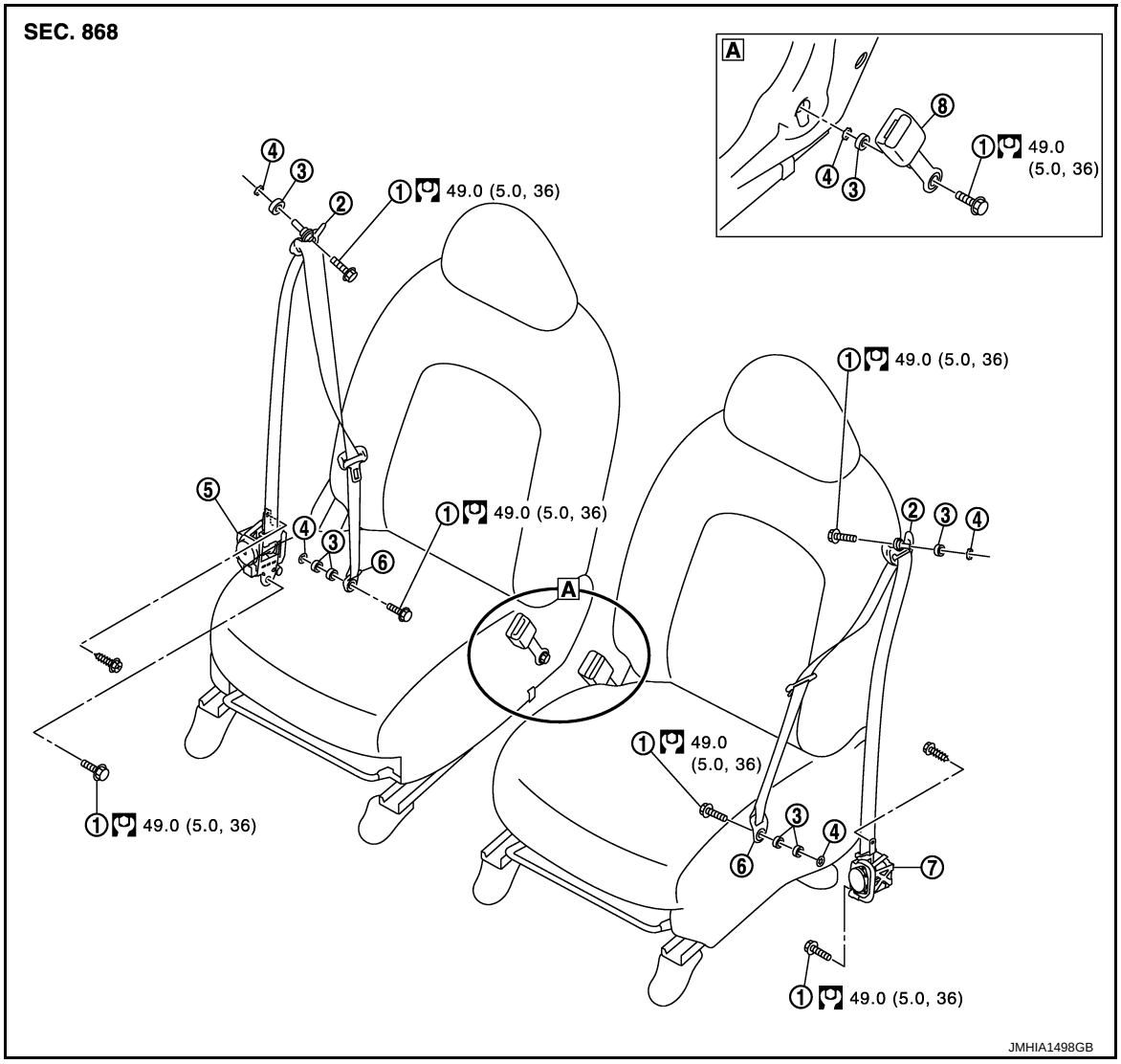

1.	Anchor bolt	2.	Shoulder anchor	3.	Spacer
4.	Toothed washer	5.	Seat belt pre-tensioner retractor (RH side)	6.	Outer anchor
7.	Seat belt pre-tensioner retractor (LH side)	8.	Seat belt buckle		

Refer to GI-4, "Components" for symbols in the figure.

SEAT BELT RETRACTOR : Removal and Installation

INFOID:0000000005984485

REMOVAL

CAUTION:

Before removal or installation, always turn the ignition switch OFF and disconnect the battery negative terminal, then wait for at least 3 minutes or more.

1. Remove the outer anchor.
   Remove the outer anchor mounting anchor bolt.
2. Remove the shoulder anchor.
   1. Remove the center pillar lower garnish. Refer to INT-23, "CENTER PILLAR LOWER GARNISH : Removal and Installation".
   2. Remove the center pillar upper garnish. Refer to INT-24, "CENTER PILLAR UPPER GARNISH : Removal and Installation".

3. Remove the shoulder anchor mounting anchor bolt.

3. Remove the seat belt pre-tensioner retractor.
   - Disconnect the seat belt pre-tensioner connector.

     CAUTION:
     - **For installing/removing seat belt pre-tensioner connector, insert thin screwdriver wrapped in tape into notch, lift lock and remove connector.**
     - **Install connector with lock raised, and push lock into connector.**
     - **After installing the connector, check that the lock is pushed securely into it.**

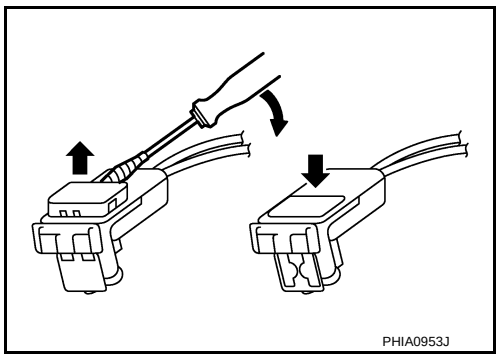

   - Remove the seat belt pre-tensioner retractor mounting anchor bolt and screw.

INSTALLATION

Install in the reverse order of removal.

SEAT BELT BUCKLE

SEAT BELT BUCKLE : Inspection

INFOID:0000000005984486

AFTER A COLLISION

WARNING:

Inspect all seat belt assemblies including retractors and attached hardware after any collision. NISSAN/INFINITI recommends that all seat belt assemblies in use during a collision be replaced unless the collision was minor and the belts show no damage and continue to operate properly. Failure to do so could result in serious personal injury in an accident. Seat belt assemblies not in use during a collision should also be replaced if either damage or improper operation was noted. Seat belt pre-tensioners should be replaced even if the seat belts were not in use during a frontal collision in which the air bags were deployed.

Replace any seat belt assembly (including anchor bolts) if:
- The seat belt is in use at the time of a collision (except for minor collisions and the belts, retractors and buckles show no damage and continue to operate properly).
- The seat belt is damaged in an accident (i.e. torn webbing, bent retractor or guide, etc.).
- The seat belt attaching point is damaged in an accident. Inspect the seat belt attaching area for damage or distortion and repair if necessary before installing a new seat belt assembly.
- Anchor bolts are deformed or worn out.
- The seat belt pre-tensioner must be replaced even if the seat belts were not in use during the collision in which the air bags were deployed.

PRELIMINARY CHECKS

1. Check the seat belt warning lamp for proper operation as pen the following:

a. Turn ignition switch ON. The seat belt warning lamp should illuminate.

b. Fasten driver seat belt. The seat belt warning lamp should turn OFF.

2. If the air bag warning lamp is blinking, perform self-diagnosis using CONSULT-III and air bag warning lamp. Refer to SRC-7, "Description".
3. Check that the seat belt retractor, seat belt anchor and buckle bolts are tightened firmly.
4. Repeat steps above if necessary to check the other seat belts.

SEAT BELT BUCKLE : Exploded View

INFOID:0000000006039623

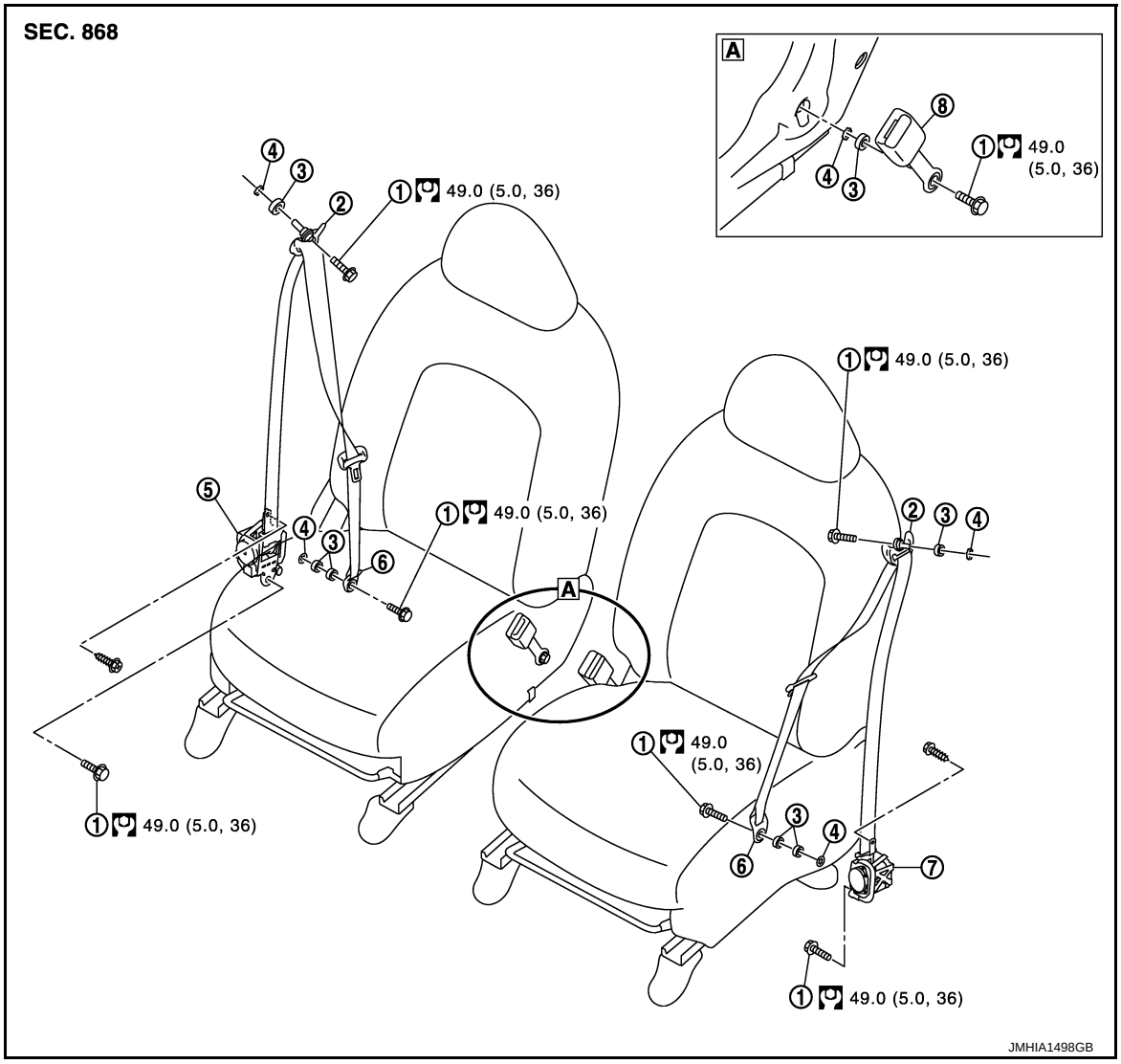

1.	Anchor bolt	2.	Shoulder anchor	3.	Spacer
4.	Toothed washer	5.	Seat belt pre-tensioner retractor (RH side)	6.	Outer anchor
7.	Seat belt pre-tensioner retractor (LH side)	8.	Seat belt buckle		

Refer to GI-4, "Components" for symbols in the figure.

SEAT BELT BUCKLE : Removal and Installation

INFOID:0000000005984488

REMOVAL

Remove the seat belt buckle.

1. Remove the front seat from vehicle. Refer to SE-15, "Removal and Installation". (for ease of tool operation in narrow space.)
2. Remove the seat belt buckle mounting anchor bolt.

INSTALLATION

Install in the reverse order of removal.

REAR SEAT BELT

SEAT BELT RETRACTOR

SEAT BELT RETRACTOR : Inspection

INFOID:0000000005984489

AFTER A COLLISION

WARNING:

Inspect all seat belt assemblies including retractors and attached hardware after any collision. NISSAN/INFINITI recommends that all seat belt assemblies in use during a collision be replaced unless the collision was minor and the belts show no damage and continue to operate properly. Failure to do so could result in serious personal injury in an accident. Seat belt assemblies not in use during a collision should also be replaced if either damage or improper operation was noted. Seat belt pre-tensioners should be replaced even if the seat belts were not in use during a frontal collision in which the air bags were deployed.

Replace any seat belt assembly (including anchor bolts) if:

- The seat belt is in use at the time of a collision (except for minor collisions and the belts, retractors and buckles show no damage and continue to operate properly).
- The seat belt is damaged in an accident (i.e. torn webbing, bent retractor or guide, etc.).
- The seat belt attaching point is damaged in an accident. Inspect the seat belt attaching area for damage or distortion and repair if necessary before installing a new seat belt assembly.
- Anchor bolts are deformed or worn out.
- The seat belt pre-tensioners must be replaced even if the seat belts were not in use during the collision in which the air bags were deployed.

PRELIMINARY CHECKS

1. Check that the seat belt retractor, seat belt anchor and buckle bolts are tightened firmly.
2. Check retractor operation:

a. Fully extend the seat belt webbing and check for twists, tears or other damage.

b. Allow the seat belt to retract. Check that webbing returns smoothly and completely into the retractor. If the seat belt does not return smoothly, wipe the inside of the loops with a clean paper cloth. Dirt build-up in the loops of that upper anchors can cause the seat belts to retract slowly.

c. Fasten the seat belt. Check that seat belt returns smoothly and completely to the retractor. If the webbing does not return smoothly, the cause may be an accumulation of dust or dirt. Use the “SEAT BELT TAPE SET” and perform the following steps.

3. Repeat steps above if necessary to check the other seat belts.

SEAT BELT RETRACTOR ON-VEHICLE CHECK

Emergency Locking Retractors (ELR)

NOTE:

All seat belt retractors are Emergency Locking Retractors (ELR) type.
Check the seat belt retractors with the following test(s) to determine if a retractor assembly is operating properly.

ELR Function Stationary Check

Grasp the shoulder webbing and pull forward quickly. The retractor should lock and prevent the belt from extending further.

ELR Function Moving Check

WARNING:

Perform the following test in a safe, open area clear of other vehicles and obstructions (for example, a large, empty parking lot). Road surface must be paved and dry. Never perform the following test on wet or gravel roads or on public streets and highways. This could result in an accident and serious personal injury. The driver and passenger must be prepared to brace themselves in the event that the retractor does not lock.

1. Fasten driver seat belt. Buckle a passenger into the seat for the belt that is to be tested.
2. Proceed to the designated safe area.

3. Drive the vehicle at approximately 16 km/h (10 MPH). Notify any passengers of a pending sudden stop and the driver and passenger must be prepared to brace themselves in the event that the retractor does not lock. Apply brakes firmly and make a very hard stop.

During stopping, seat belts should lock and not be extended. If the seat belt retractor assembly does not lock, perform the retractor off-vehicle check.

SEAT BELT RETRACTOR OFF-VEHICLE CHECK

1. Remove the rear seat belt retractor. Refer to SB-11, "SEAT BELT RETRACTOR : Removal and Installation".
2. Slowly pull out webbing while tilting the retractor assembly forward from the mounted position without twisting the retractor assembly as shown in the figure.
   - The webbing can be pulled out when the angle (A) is 12 degrees or less.
   - The webbing cannot be pulled out when the angle (B) is 13 degrees or more.

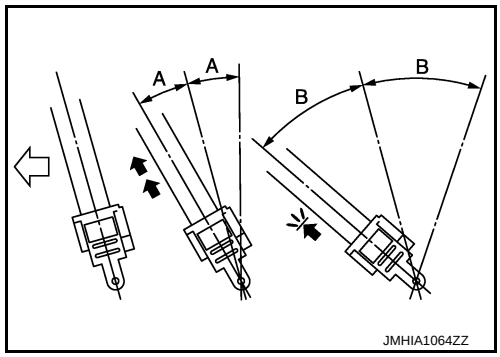

A and B : Tilting angles

⇦ : Vehicle front

3. Replace the seat belt assembly if it does not operate normally.

SEAT BELT RETRACTOR : Exploded View

INFOID:0000000005984490

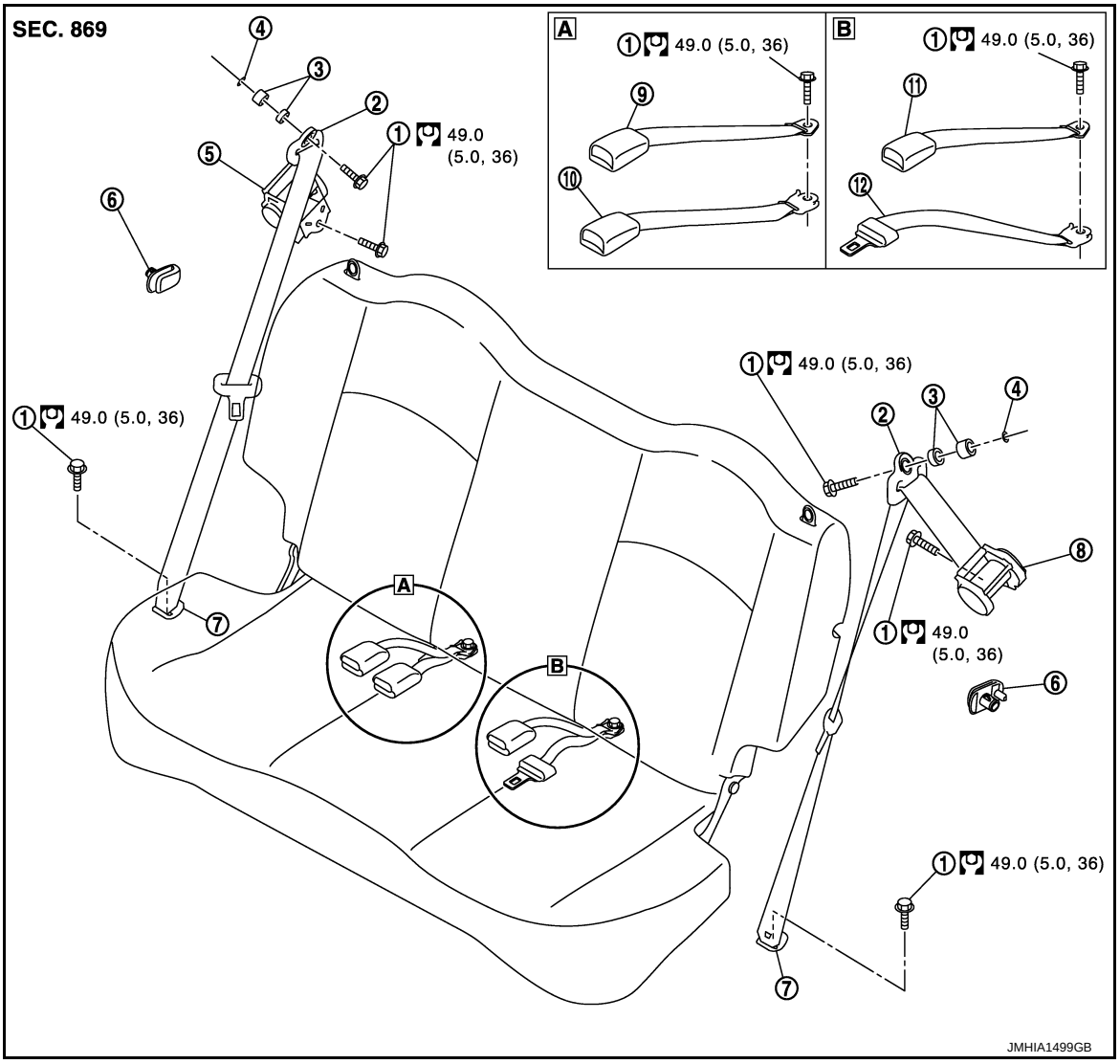

1.	Anchor bolt	2.	Shoulder anchor	3.	Spacer
4.	Toothed washer	5.	Seat belt retractor (RH side)	6.	Seat belt hook
7.	Outer anchor	8.	Seat belt retractor (LH side)	9.	Seat belt buckle (RH side)
10.	Center seat belt buckle	11.	Seat belt buckle (LH side)	12.	Center seat belt

Refer to GI-4, "Components" for symbols in the figure.

SEAT BELT RETRACTOR : Removal and Installation

INFOID:0000000005984491

REMOVAL

OUTER SEAT BELT RETRACTOR

1. Remove the outer anchor.
   1. Remove the seat cushion. Refer to SE-19, "Removal and Installation".
   2. Remove the outer anchor mounting anchor bolt.
2. Remove the shoulder anchor.
   1. Remove the luggage side upper finisher. Refer to INT-31, "LUGGAGE SIDE UPPER FINISHER : Removal and Installation".
   2. Remove the shoulder anchor mounting anchor bolt.
3. Remove the seat belt retractor.
   Remove the seat belt retractor mounting anchor bolt.

INSTALLATION

Install in the reverse order of removal.

SEAT BELT BUCKLE

SEAT BELT BUCKLE : Inspection

INFOID:0000000005984492

AFTER A COLLISION

WARNING:

Inspect all seat belt assemblies including retractors and attached hardware after any collision.

NISSAN/INFINITI recommends that all seat belt assemblies in use during a collision be replaced unless the collision was minor and the belts show no damage and continue to operate properly. Failure to do so could result in serious personal injury in an accident. Seat belt assemblies not in use during a collision should also be replaced if either damage or improper operation was noted. Seat belt pre-tensioners should be replaced even if the seat belts were not in use during a frontal collision in which the air bags were deployed.

Replace any seat belt assembly (including anchor bolts) if:

- The seat belt is in use at the time of a collision (except for minor collisions and the belts, retractors and buckles show no damage and continue to operate properly).
- The seat belt is damaged in an accident. (i.e. torn webbing, bent retractor or guide, etc.)
- The seat belt attaching point is damaged in an accident. Inspect the seat belt attaching area for damage or distortion and repair if necessary before installing a new seat belt assembly.
- Anchor bolts are deformed or worn out.
- The seat belt pre-tensioner must be replaced even if the seat belts were not in use during the collision in which the air bags are deployed.

PRELIMINARY CHECKS

1. Check that the seat belt retractor, seat belt anchor and buckle bolts are tightened firmly.
2. Repeat step above if necessary to check the other seat belts.

SEAT BELT BUCKLE : Exploded View

INFOID:0000000006039624

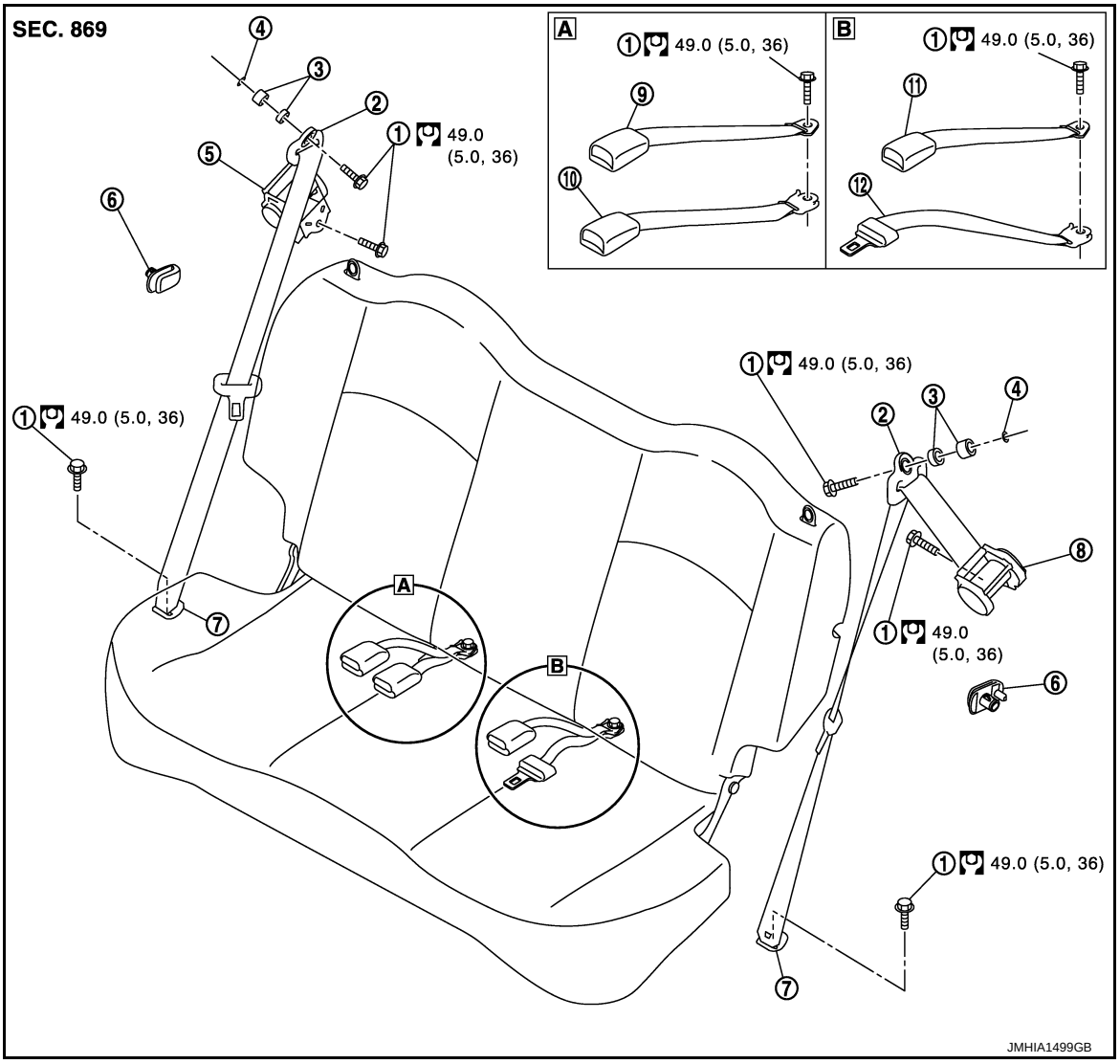

1.	Anchor bolt	2.	Shoulder anchor	3.	Spacer
4.	Toothed washer	5.	Seat belt retractor (RH side)	6.	Seat belt hook
7.	Outer anchor	8.	Seat belt retractor (LH side)	9.	Seat belt buckle (RH side)
10.	Center seat belt buckle	11.	Seat belt buckle (LH side)	12.	Center seat belt

Refer to GI-4, "Components" for symbols in the figure.

SEAT BELT BUCKLE : Removal and Installation

INFOID:0000000005984494

REMOVAL

Remove the seat belt buckle.

1. Remove the rear seat cushion. Refer to SE-19, "Removal and Installation".
2. Remove the seat belt buckle mounting anchor bolt.

INSTALLATION

Install in the reverse order of removal.

SECTION SE

SEAT

CONTENTS

PRECAUTION 2

PRECAUTIONS 2
Precaution for Supplemental Restraint System (SRS) "AIR BAG" and "SEAT BELT PRE-TENSIONER" 2
Service Notice 2
Precaution for Work 2

PREPARATION 4

PREPARATION 4
Commercial Service Tool 4

CLIP LIST 5
Clip List 5

SYMPTOM DIAGNOSIS 6

SQUEAK AND RATTLE TROUBLE DIAGNOSES 6
Work Flow 6
Inspection Procedure 8
Diagnostic Worksheet 10

REMOVAL AND INSTALLATION 12

FRONT SEAT 12
Exploded View 12
Removal and Installation 15
Disassembly and Assembly 16

REAR SEAT 19
Exploded View 19
Removal and Installation 19
Disassembly and Assembly 20

PRECAUTION

PRECAUTIONS

Precaution for Supplemental Restraint System (SRS) "AIR BAG" and "SEAT BELT PRE-TENSIONER"

INFOID:0000000006036888

The Supplemental Restraint System such as “AIR BAG” and “SEAT BELT PRE-TENSIONER”, used along with a front seat belt, helps to reduce the risk or severity of injury to the driver and front passenger for certain types of collision. Information necessary to service the system safely is included in the “SRS AIR BAG” and “SEAT BELT” of this Service Manual.

WARNING:

- **To avoid rendering the SRS inoperative, which could increase the risk of personal injury or death in the event of a collision which would result in air bag inflation, all maintenance must be performed by an authorized NISSAN/INFINITI dealer.**
- **Improper maintenance, including incorrect removal and installation of the SRS, can lead to personal injury caused by unintentional activation of the system. For removal of Spiral Cable and Air Bag Module, see the “SRS AIR BAG”.**
- **Do not use electrical test equipment on any circuit related to the SRS unless instructed to in this Service Manual. SRS wiring harnesses can be identified by yellow and/or orange harnesses or harness connectors.**

PRECAUTIONS WHEN USING POWER TOOLS (AIR OR ELECTRIC) AND HAMMERS

WARNING:

- **When working near the Air Bag Diagnosis Sensor Unit or other Air Bag System sensors with the ignition ON or engine running, DO NOT use air or electric power tools or strike near the sensor(s) with a hammer. Heavy vibration could activate the sensor(s) and deploy the air bag(s), possibly causing serious injury.**
- **When using air or electric power tools or hammers, always switch the ignition OFF, disconnect the battery, and wait at least 3 minutes before performing any service.**

Service Notice

INFOID:0000000005984499

- When removing or installing various parts, place a cloth or padding onto the vehicle body to prevent scratches.
- Handle trim, molding, instruments, grille, etc. carefully during removing or installing. Be careful not to oil or damage them.
- Apply sealing compound where necessary when installing parts.
- When applying sealing compound, be careful that the sealing compound does not protrude from parts.
- When replacing any metal parts (for example body outer panel, members, etc.), be sure to take rust prevention measures.

Precaution for Work

INFOID:0000000005984500

- When removing or disassembling each component, be careful not to damage or deform it. If a component may be subject to interference, be sure to protect it with a shop cloth.
- When removing (disengaging) components with a screwdriver or similar tool, be sure to wrap the component with a shop cloth or vinyl tape to protect it.
- Protect the removed parts with a shop cloth and keep them.
- Replace a deformed or damaged clip.
- If a part is specified as a non-reusable part, always replace it with new one.
- Be sure to tighten bolts and nuts securely to the specified torque.
- After re-installation is completed, be sure to check that each part works normally.
- Follow the steps below to clean components.

- Water soluble foul: Dip a soft cloth into lukewarm water, and wring the water out of the cloth to wipe the fouled area.
  Then rub with a soft and dry cloth.
- Oily foul: Dip a soft cloth into lukewarm water with mild detergent (concentration: within 2 to 3%), and wipe the fouled area.
  Then dip a cloth into fresh water, and wring the water out of the cloth to wipe the detergent off. Then rub with a soft and dry cloth.

- Never use organic solvent such as thinner, benzene, alcohol, and gasoline.
- For genuine leather seats, use a genuine leather seat cleaner.

PREPARATION

PREPARATION

Commercial Service Tool

INFOID:0000000005984502

Tool name		Description
Engine ear	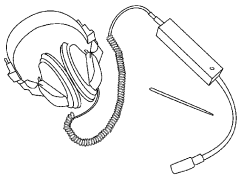 SIIA0995E	Locates the noise
Remover tool	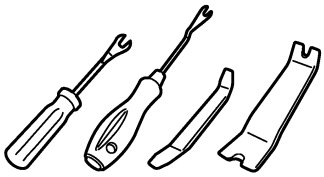 JMKIA3050ZZ	Removes the clips, pawls and metal clips
Hook and pick tool	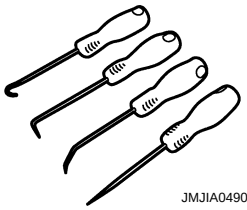 JMJIA0490ZZ	Removes the snap pins

CLIP LIST

Clip List

INFOID:0000000005984503

Shapes	Removal & Installation	Shapes	Removal & Installation
	Removal: Remove by bending up with flat-bladed screwdrivers or clip remover.	Clip A Clip B	**Removal:** Finisher Clip A Flat-bladed screwdriver Clip B
	Removal: Remove with a clip remover.	Clip A Clip B (Grommet)	**Removal:** Flat-bladed screwdriver Finisher Body panel Clip A Clip B (Grommet)
	Removal: Push center pin to catching position. (Do not remove center pin by hitting it.) Push **Installation:** Push		**Removal:** Holder portion of clip must be spread out to remove rod.
	Removal: Remove by bending up with flat-bladed screwdrivers or clip remover. Clip Finisher		**Removal:** 1. Screw out with a Phillips screwdriver. 2. Remove female portion with flat-bladed screwdriver.
	Removal:		**Removal:** Rotate 45° to remove. **Removal:** **Installation:**
	Removal:		**Removal:**

JMJIA3734GB

SYMPTOM DIAGNOSIS

SQUEAK AND RATTLE TROUBLE DIAGNOSES

Work Flow

INFOID:0000000006057586

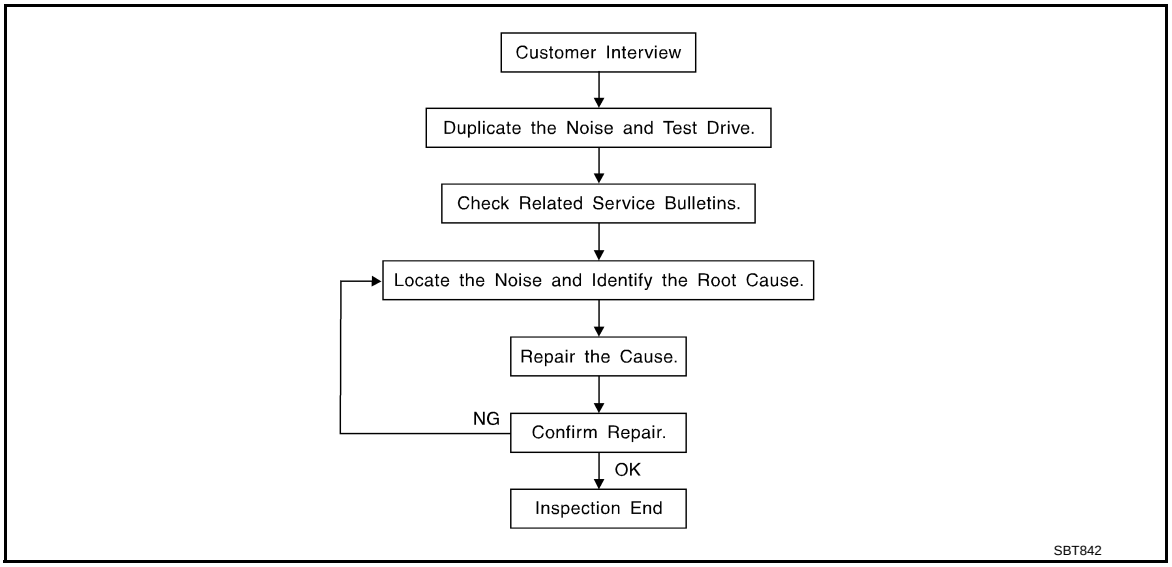

CUSTOMER INTERVIEW

Interview the customer if possible, to determine the conditions that exist when the noise occurs. Use the Diagnostic Worksheet during the interview to document the facts and conditions when the noise occurs and any of the customer's comments; refer to SE-10, "Diagnostic Worksheet". This information is necessary to duplicate the conditions that exist when the noise occurs.

- The customer may not be able to provide a detailed description or the location of the noise. Attempt to obtain all the facts and conditions that exist when the noise occurs (or does not occur).
- If there is more than one noise in the vehicle, be sure to diagnose and repair the noise that the customer is concerned about. This can be accomplished by a test drive with the customer.
- After identifying the type of noise, isolate the noise in terms of its characteristics. The noise characteristics are provided so the customer, service adviser and technician are all speaking the same language when defining the noise.
- Squeak – (Like tennis shoes on a clean floor)
  Squeak characteristics include the light contact/fast movement/brought on by road conditions/hard surfaces = higher pitch noise/softer surfaces = lower pitch noises/edge to surface = chirping
- Creak – (Like walking on an old wooden floor)
  Creak characteristics include firm contact/slow movement/twisting with a rotational movement/pitch dependent on materials/often brought on by activity.
- Rattle – (Like shaking a baby rattle)
  Rattle characteristics include the fast repeated contact/vibration or similar movement/loose parts/missing clip or fastener/incorrect clearance.
- Knock – (Like a knock on a door)
  Knock characteristics include hollow sounding/sometimes repeating/often brought on by driver action.
- Tick – (Like a clock second hand)
  Tick characteristics include gentle contacting of light materials/loose components/can be caused by driver action or road conditions.
- Thump – (Heavy, muffled knock noise)
  Thump characteristics include softer knock/dead sound often brought on by activity.
- Buzz – (Like a bumble bee)
  Buzz characteristics include high frequency rattle/firm contact.
- Often the degree of acceptable noise level will vary depending upon the person. A noise that a technician may judge as acceptable may be very irritating to the customer.
- Weather conditions, especially humidity and temperature, may have a great effect on noise level.

DUPLICATE THE NOISE AND TEST DRIVE

If possible, drive the vehicle with the customer until the noise is duplicated. Note any additional information on the Diagnostic Worksheet regarding the conditions or location of the noise. This information can be used to duplicate the same conditions when the repair is reconfirmed.
If the noise can be duplicated easily during the test drive, to help identify the source of the noise, try to duplicate the noise with the vehicle stopped by doing one or all of the following:
1) Close a door.
2) Tap or push/pull around the area where the noise appears to be coming from.
3) Rev the engine.
4) Use a floor jack to recreate vehicle “twist”.
5) At idle, apply engine load (electrical load, half-clutch on M/T model, drive position on A/T model).
6) Raise the vehicle on a hoist and hit a tire with a rubber hammer.

- Drive the vehicle and attempt to duplicate the conditions the customer states exist when the noise occurs.
- If it is difficult to duplicate the noise, drive the vehicle slowly on an undulating or rough road to stress the vehicle body.

LOCATE THE NOISE AND IDENTIFY THE ROOT CAUSE

1. Narrow down the noise to a general area. To help pinpoint the source of the noise, use a listening tool (Engine Ear or mechanics stethoscope).
2. Narrow down the noise to a more specific area and identify the cause of the noise by:

- Removing the components in the area that is are suspected to be the cause of the noise.
  Do not use too much force when removing clips and fasteners, otherwise clips and fastener can be broken or lost during the repair, resulting in the creation of new noise.
- Tapping or pushing/pulling the component that is are suspected to be the cause of the noise.
  Do not tap or push/pull the component with excessive force, otherwise the noise will be eliminated only temporarily.
- Feeling for a vibration by hand by touching the component(s) that is are suspected to be the cause of the noise.
- Placing a piece of paper between components that is are suspected to be the cause of the noise.
- Looking for loose components and contact marks.
  Refer to SE-8, "Inspection Procedure".

REPAIR THE CAUSE

- If the cause is a loose component, tighten the component securely.
- If the cause is insufficient clearance between components:
- Separate components by repositioning or loosening and retightening the component, if possible.
- Insulate components with a suitable insulator such as urethane pads, foam blocks, felt cloth tape or urethane tape. These insulators are available through the authorized Nissan Parts Department.

CAUTION:
Never use excessive force as many components are constructed of plastic and may be damaged.
NOTE:

- URETHANE PADS
  Insulates connectors, harness, etc.
- INSULATOR (Foam blocks)
  Insulates components from contact. Can be used to fill space behind a panel.
- INSULATOR (Light foam block)
- FELT CLOTHTAPE
  Used to insulate where movement does not occur. Ideal for instrument panel applications.
  The following materials, not available through NISSAN Parts Department, can also be used to repair squeaks and rattles.
- UHMW(TEFLON) TAPE
  Insulates where slight movement is present. Ideal for instrument panel applications.
- SILICONE GREASE
  Used in place of UHMW tape that is be visible or does not fit.
  Note: Will only last a few months.
- SILICONE SPRAY
  Used when grease cannot be applied.
- DUCT TAPE
  Used to eliminate movement.

CONFIRM THE REPAIR

Confirm that the cause of a noise is repaired by test driving the vehicle. Operate the vehicle under the same conditions as when the noise originally occurred. Refer to the notes on the Diagnostic Worksheet.

Inspection Procedure

INFOID:0000000006057587

Refer to Table of Contents for specific component removal and installation information.

INSTRUMENT PANEL

Most incidents are caused by contact and movement between:

1. Cluster lid A and instrument panel
2. Acrylic lens and combination meter housing
3. Instrument panel to front pillar garnish
4. Instrument panel to windshield
5. Instrument panel mounting pins
6. Wiring harnesses behind the combination meter
7. A/C defroster duct and duct joint

These incidents can usually be located by tapping or moving the components to duplicate the noise or by pressing on the components while driving to stop the noise. Most of these incidents can be repaired by applying felt cloth tape or silicon spray (in hard to reach areas). Urethane pads can be used to insulate wiring harness.

CAUTION:

Never use silicone spray to isolate a squeak or rattle. If the area is saturated with silicone, the recheck of repair becomes impossible.

CENTER CONSOLE

Components to pay attention to include:

1. Shifter assembly cover to finisher
2. A/C control unit and cluster lid C
3. Wiring harnesses behind audio and A/C control unit

The instrument panel repair and isolation procedures also apply to the center console.

DOORS

Pay attention to the following:

1. Finisher and inner panel making a slapping noise
2. Inside handle escutcheon to door finisher
3. Wiring harnesses tapping
4. Door striker out of alignment causing a popping noise on starts and stops

Tapping or moving the components or pressing on them while driving to duplicate the conditions can isolate many of these incidents. The areas can usually be insulated with felt cloth tape or insulator foam blocks to repair the noise.

TRUNK

Trunk noises are often caused by a loose jack or loose items put into the trunk by the customer.
In addition look for the following:

1. Trunk lid dumpers out of adjustment
2. Trunk lid striker out of adjustment
3. Trunk lid torsion bars knocking together
4. A loose license plate or bracket

Most of these incidents can be repaired by adjusting, securing or insulating the item(s) or component(s) causing the noise.

SUNROOF/HEADLINING

Noises in the sunroof/headlining area can often be traced to one of the following:

1. Sunroof lid, rail, linkage or seals making a rattle or light knocking noise
2. Sunvisor shaft shaking in the holder
3. Front or rear windshield touching headlining and squeaking

Again, pressing on the components to stop the noise while duplicating the conditions can isolate most of these incidents. Repairs usually consist of insulating with felt cloth tape.

SEATS

When isolating seat noise it is important to note the position the seat is in and the load placed on the seat when the noise occurs. These conditions should be duplicated when verifying and isolating the cause of the noise.

Cause of seat noise include:

1. Headrest rods and holder
2. A squeak between the seat pad cushion and frame
3. Rear seatback lock and bracket

These noises can be isolated by moving or pressing on the suspected components while duplicating the conditions under which the noise occurs. Most of these incidents can be repaired by repositioning the component or applying urethane tape to the contact area.

UNDERHOOD

Some interior noise may be caused by components under the hood or on the engine wall. The noise is then transmitted into the passenger compartment.

Causes of transmitted underhood noise include:

1. Any component mounted to the engine wall
2. Components that pass through the engine wall
3. Engine wall mounts and connectors
4. Loose radiator mounting pins
5. Hood bumpers out of adjustment
6. Hood striker out of adjustment

These noises can be difficult to isolate since they cannot be reached from the interior of the vehicle. The best method is to secure, move or insulate one component at a time and test drive the vehicle. Also, engine RPM or load can be changed to isolate the noise. Repairs can usually be made by moving, adjusting, securing, or insulating the component causing the noise.

Diagnostic Worksheet

INFOID:0000000006057588

SQUEAK & RATTLE
DIAGNOSTIC WORKSHEET

Dear Nissan Customer:
We are concerned about your satisfaction with your Nissan vehicle. Repairing a squeak or rattle sometimes can be very difficult. To help us fix your Nissan right the first time, please take a moment to note the area of the vehicle where the squeak or rattle occurs and under what conditions. You may be asked to take a test drive with a service advisor or technician to ensure we confirm the noise you are hearing.

I. WHERE DOES THE NOISE COME FROM? (circle the area of the vehicle)
The illustrations are for reference only, and may not reflect the actual configuration of your vehicle.

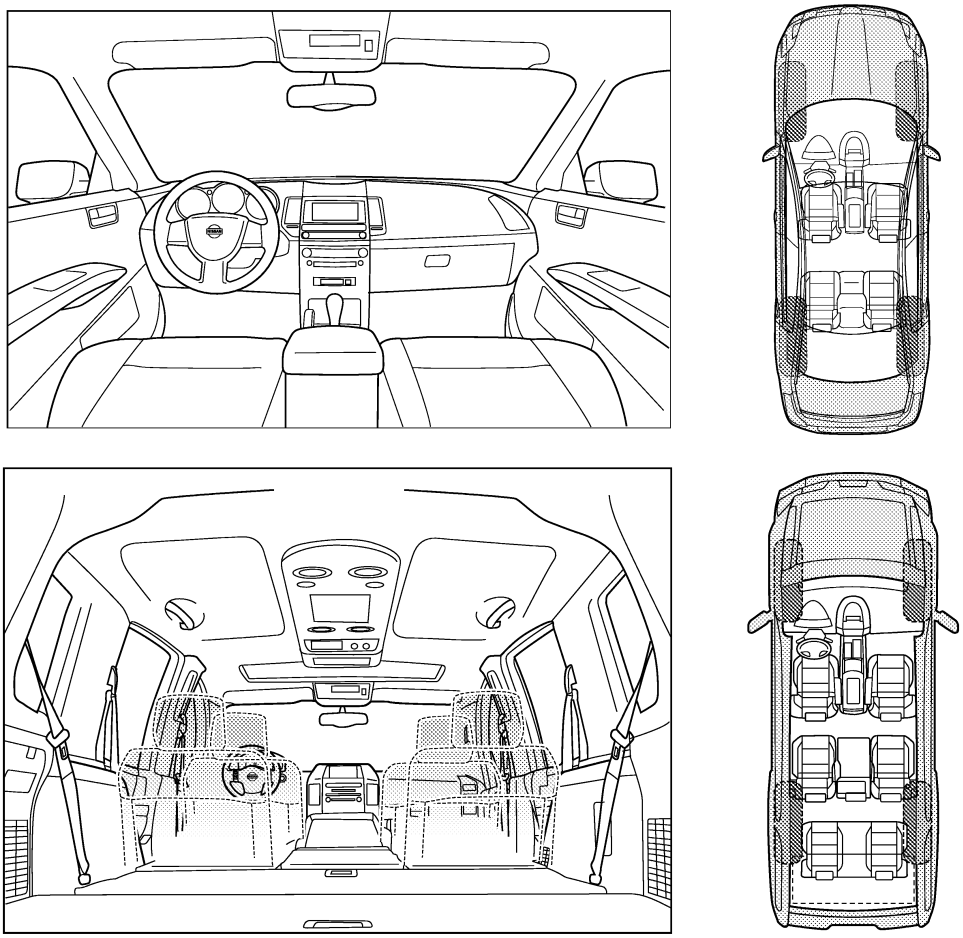

Continue to page 2 of the worksheet and briefly describe the location of the noise or rattle. In addition, please indicate the conditions which are present when the noise occurs.

PIIB8740E

SQUEAK & RATTLE DIAGNOSTIC WORKSHEET - page 2

Briefly describe the location where the noise occurs:

_____

_____

II. WHEN DOES IT OCCUR? (please check the boxes that apply)

- ☐ anytime
- ☐ 1st time in the morning
- ☐ only when it is cold outside
- ☐ only when it is hot outside
- ☐ after sitting out in the rain
- ☐ when it is raining or wet
- ☐ dry or dusty conditions
- ☐ other:

III. WHEN DRIVING:

- ☐ through driveways
- ☐ over rough roads
- ☐ over speed bumps
- ☐ only about ____ mph
- ☐ on acceleration
- ☐ coming to a stop
- ☐ on turns: left, right or either (circle)
- ☐ with passengers or cargo
- ☐ other: _____
- ☐ after driving _____ miles or _____ minutes

IV. WHAT TYPE OF NOISE

- ☐ squeak (like tennis shoes on a clean floor)
- ☐ creak (like walking on an old wooden floor)
- ☐ rattle (like shaking a baby rattle)
- ☐ knock (like a knock at the door)
- ☐ tick (like a clock second hand)
- ☐ thump (heavy, muffled knock noise)
- ☐ buzz (like a bumble bee)

TO BE COMPLETED BY DEALERSHIP PERSONNEL

Test Drive Notes:

_____

_____

_____

	YES	NO	Initials of person performing
Vehicle test driven with customer	☐	☐	_____
- Noise verified on test drive	☐	☐	_____
- Noise source located and repaired	☐	☐	_____
- Follow up test drive performed to confirm repair	☐	☐	_____

VIN: _____ Customer Name: _____

W.O.# _____ Date: _____

This form must be attached to Work Order

PIIB8742E

REMOVAL AND INSTALLATION

FRONT SEAT

Exploded View

INFOID:0000000005985621

HIGH BACK SEAT

DRIVER'S SEAT

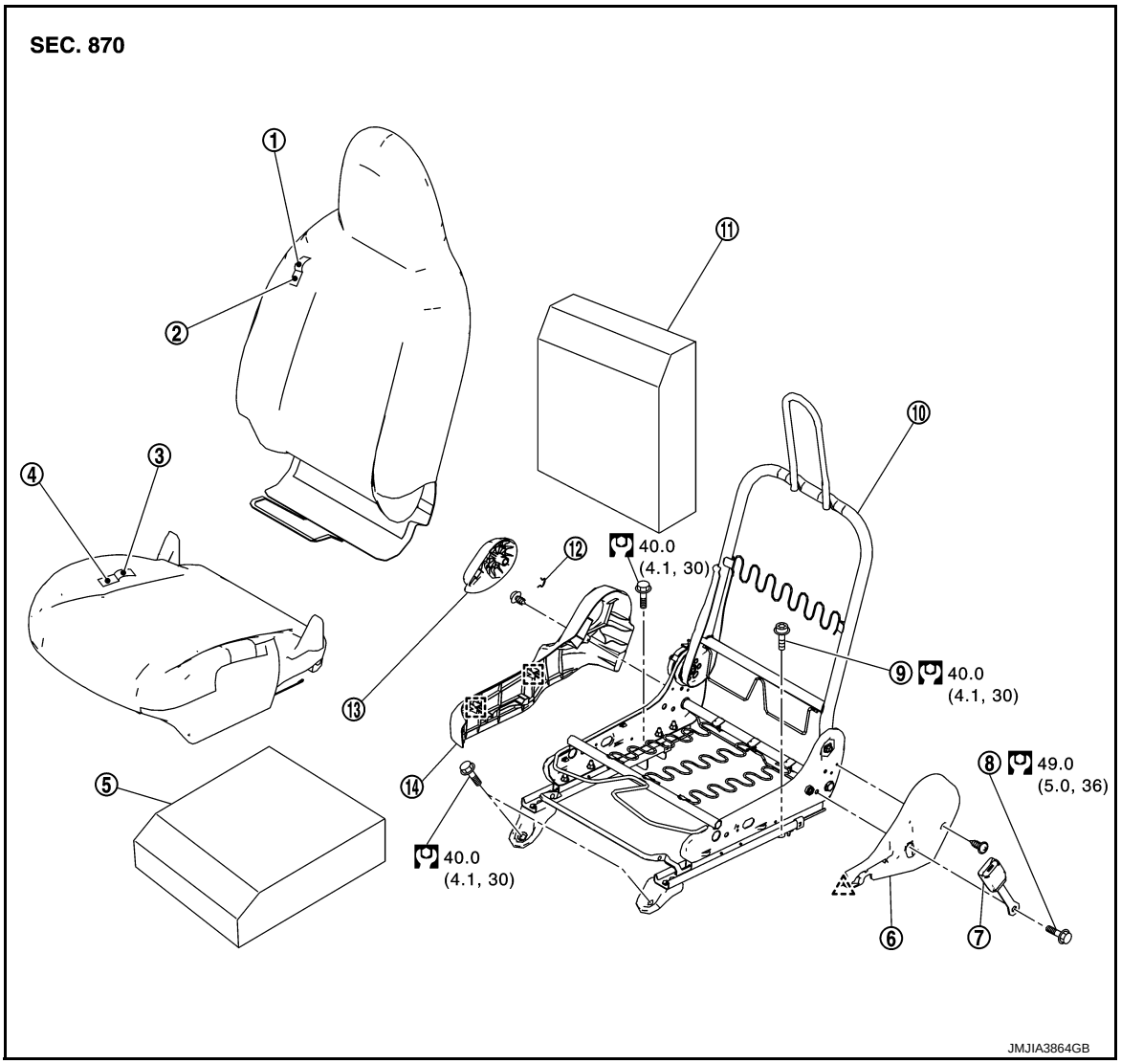

1. Seatback trim	2. Seatback pad	3. Seat cushion trim
4. Seat cushion pad	5. Seat cushion silencer	6. Seat cushion inner finisher
7. Seat belt buckle	8. Anchor bolt	9. TORX bolt
10. Seat frame assembly	11. Seatback silencer	12. Snap ring
13. Reclining lever knob	14. Seat cushion outer finisher	

: Pawl

: Metal clip

Refer to GI-4, "Components" for symbols in the figure.

PASSENGER'S SEAT

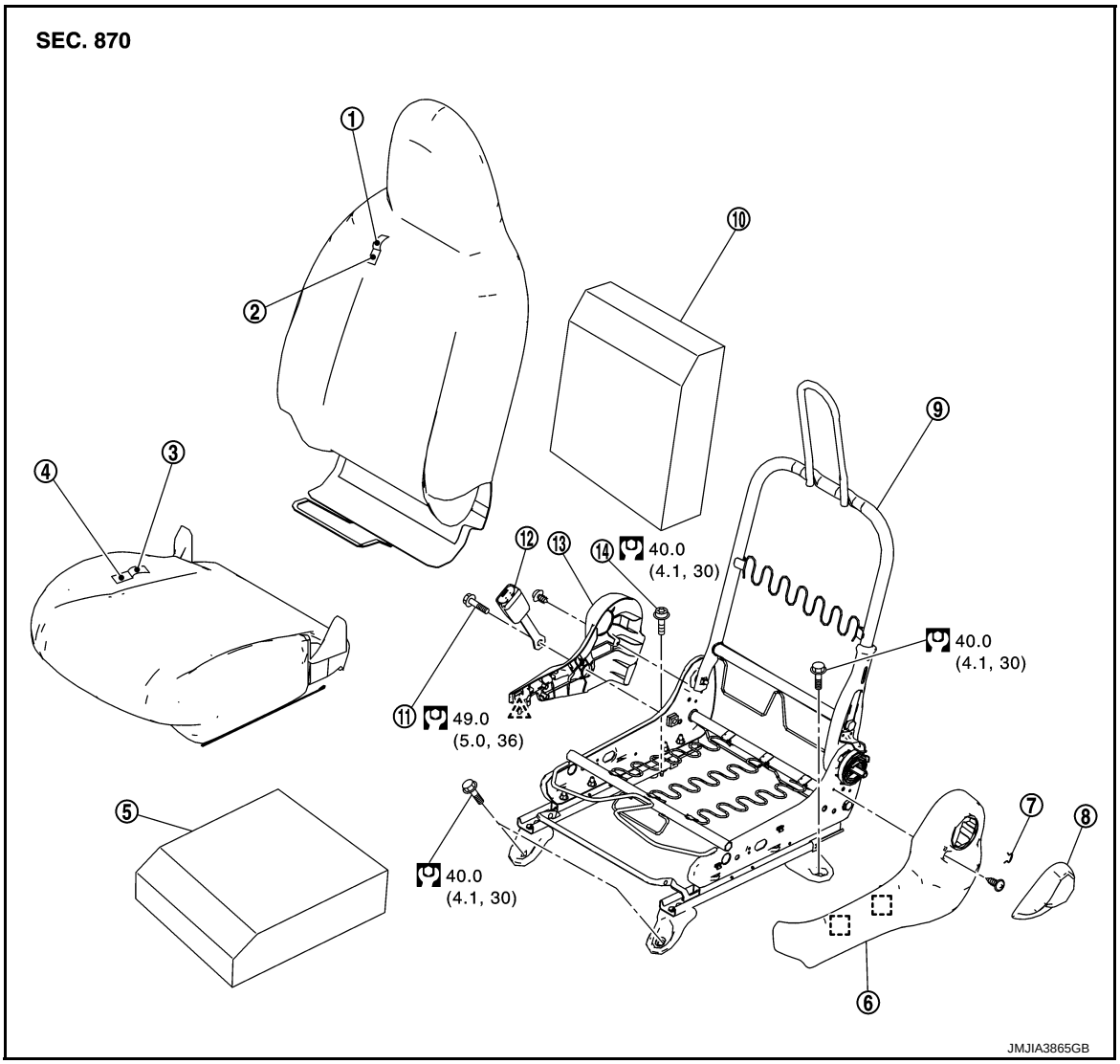

1. Seatback trim
2. Seatback pad
3. Seat cushion trim
4. Seat cushion pad
5. Seat cushion silencer
6. Seat cushion outer finisher
7. Snap ring
8. Reclining lever knob
9. Seat frame assembly
10. Seatback silencer
11. Anchor bolt
12. Seat belt buckle
13. Seat cushion inner finisher
14. TORX bolt

: Pawl

: Metal clip

Refer to GI-4, "Components" for symbols in the figure.

LOW BACK SEAT

DRIVER'S SEAT

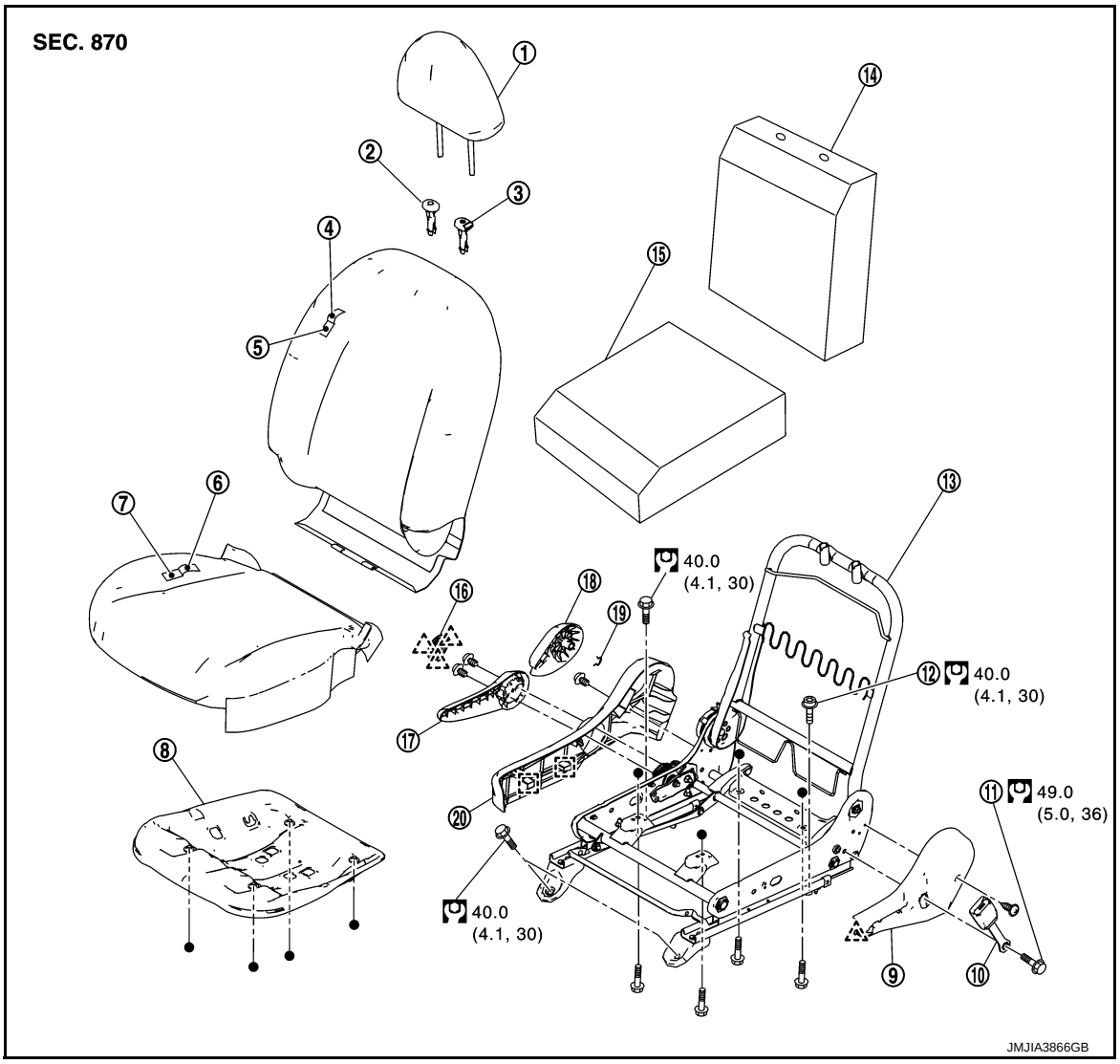

1. Headrest
2. Headrest holder (free)
3. Headrest holder (locked)
4. Seatback trim
5. Seatback pad
6. Seat cushion trim
7. Seat cushion pad
8. Seat cushion frame
9. Seat cushion inner finisher
10. Seat belt buckle
11. Anchor bolt
12. TORX bolt
13. Seat frame assembly
14. Seatback silencer
15. Seat cushion silencer
16. Lifter lever knob cap
17. Lifter lever knob
18. Reclining lever knob
19. Snap ring
20. Seat cushion outer finisher

: Pawl

: Metal clip

Refer to GI-4, "Components" for symbols in the figure.

PASSENGER'S SEAT

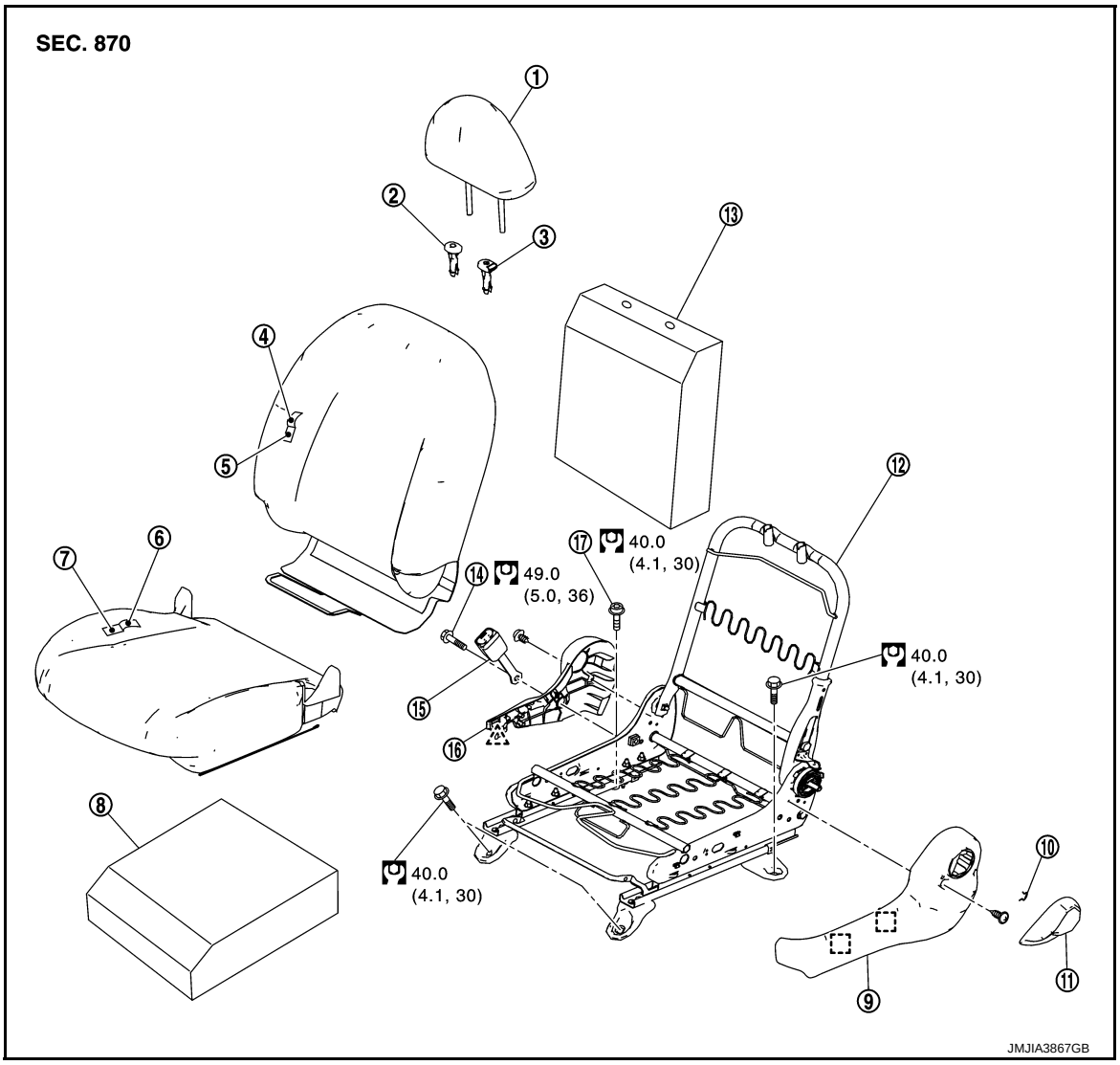

1. Headrest	2. Headrest holder (free)	3. Headrest holder (locked)
4. Seatback trim	5. Seatback pad	6. Seat cushion trim
7. Seat cushion pad	8. Seat cushion silencer	9. Seat cushion outer finisher
10. Snap ring	11. Reclining lever knob	12. Seat frame assembly
13. Seatback silencer	14. Anchor bolt	15. Seat belt buckle
16. Seat cushion inner finisher	17. TORX bolt	

: Pawl

: Metal clip

Refer to GI-4, "Components" for symbols in the figure.

Removal and Installation

INFOID:0000000005986015

REMOVAL

CAUTION:

When removing and installing, use shop cloths to protect parts from damage.

1. Remove the headrest. (Low back seat only)
2. Set seatback in a standing position.
3. Slide the seat to the foremost position.
4. Remove the mounting bolts on the rear outer side.
5. Remove the mounting TORX bolts on the rear inner side.

6. Slide the seat to the rearmost position.
7. Remove the mounting bolts on the front outer side.
8. Remove the mounting bolts on the front inner side.
9. Remove seat from the vehicle.
   CAUTION:
   - **When removing and installing, use shop cloths to protect parts from damage.**
   - **When removing and installing, 2 workers are required so as to prevent it from dropping.**

INSTALLATION

Install in the reverse order of removal.

CAUTION:

- **Tighten front seat mounting bolts following the numerical order shown in the figure.**

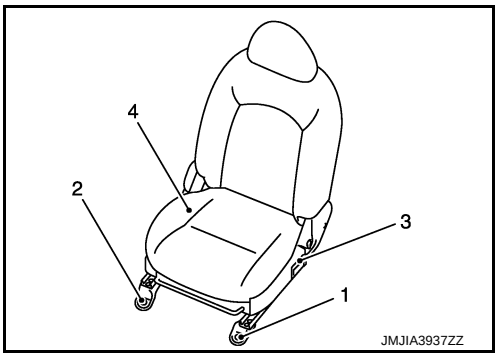

Disassembly and Assembly

INFOID:0000000005986013

SEATBACK

Disassembly

1. Remove the seatback retainers (A) from seatback backside.

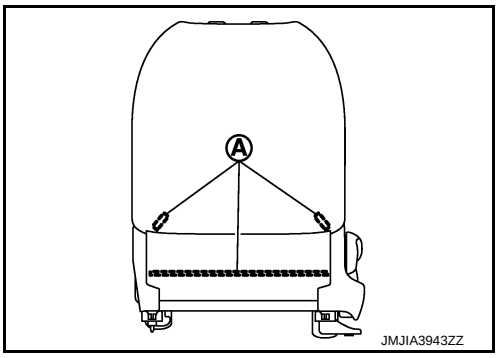

2. Remove the headrest holder. (Low back seat only)
   CAUTION:
   Before installing headrest holder check its orientation. (front/rear and right/left)

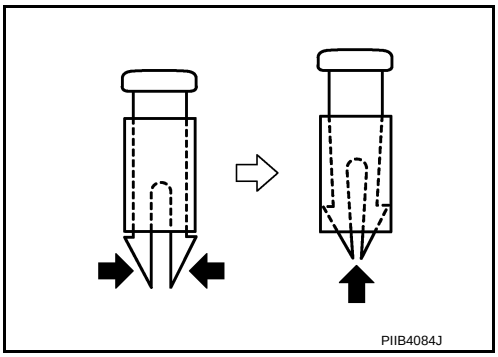

3. Remove the seatback trim and seatback pad from the seatback frame.
4. Remove the hog rings, and separate the seatback trim and seatback pad.
5. Remove the seatback silencer.

Assembly

Assemble in the reverse order of disassembly.

CAUTION:

Install the hog rings of seatback trim in position, and then securely connect the trim or trim cord with the pad side wire.

SEAT CUSHION

Disassembly

1. Remove the seat cushion outer finisher.
   1. Remove the pawls, and then lifter lever knob cap (1). (seat with lifter only)

      : Pawl

   2. Remove the mounting screw, and remove the lifter lever (2). (seat with lifter only)

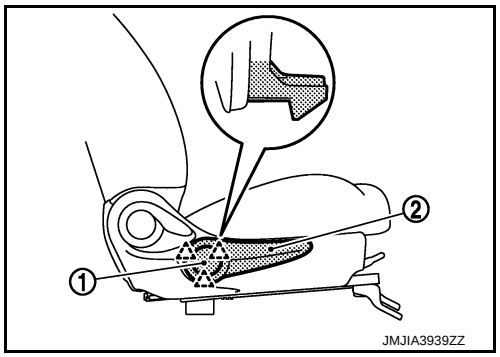

   3. Pull snap ring (1) downward, and remove reclining lever knob (2) from seat frame assembly with hook and picktool.

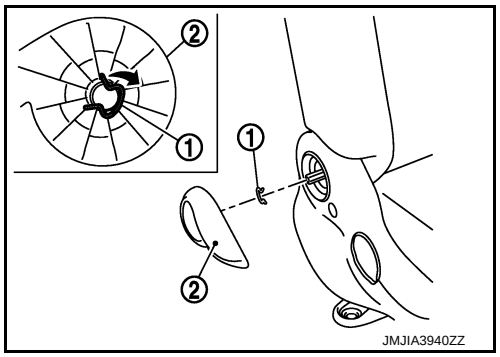

   4. Remove the metal clips and mounting screw (A), and then pull out seat cushion outer finisher.

      : Metal clip

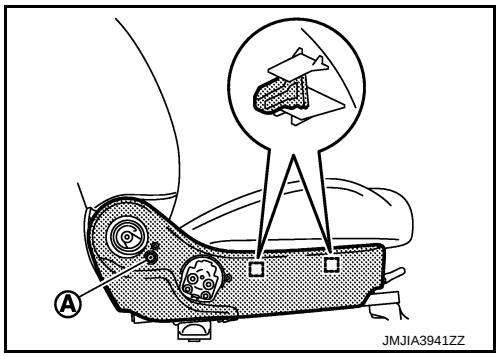

2. Remove the seat cushion inner finisher.
   1. Remove the seat belt buckle. Refer to SB-8, "SEAT BELT BUCKLE : Removal and Installation".
   2. Remove the pawls and mounting screw (A), and then remove seat cushion inner finisher.

      : Pawl

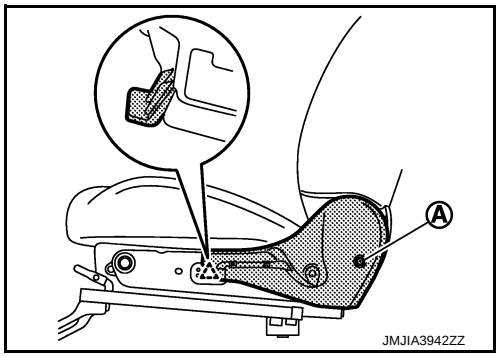

3. Remove the seat cushion trim and seat cushion pad.

Seat with lifter

1. Remove mounting bolts of seat cushion frame. Remove seat cushion assembly from seat frame assembly.
2. Remove seat cushion trim that is hooked on seat cushion frame. Remove seat cushion and seat cushion pad.
3. Remove the hog rings, and separate the seatback trim and seatback pad.

Seat without lifter

1. Remove the hog rings, and separate the seat frame assembly and seat cushion assembly.
2. Remove the hog rings, and separate the seatback trim and seatback pad.

Assembly

Assemble in the reverse order of disassembly.

CAUTION:

Install the hog rings of seat cushion trim in position, and then securely connect the trim or trim cord with the pad side wire.

REAR SEAT

Exploded View

INFOID:0000000005984507

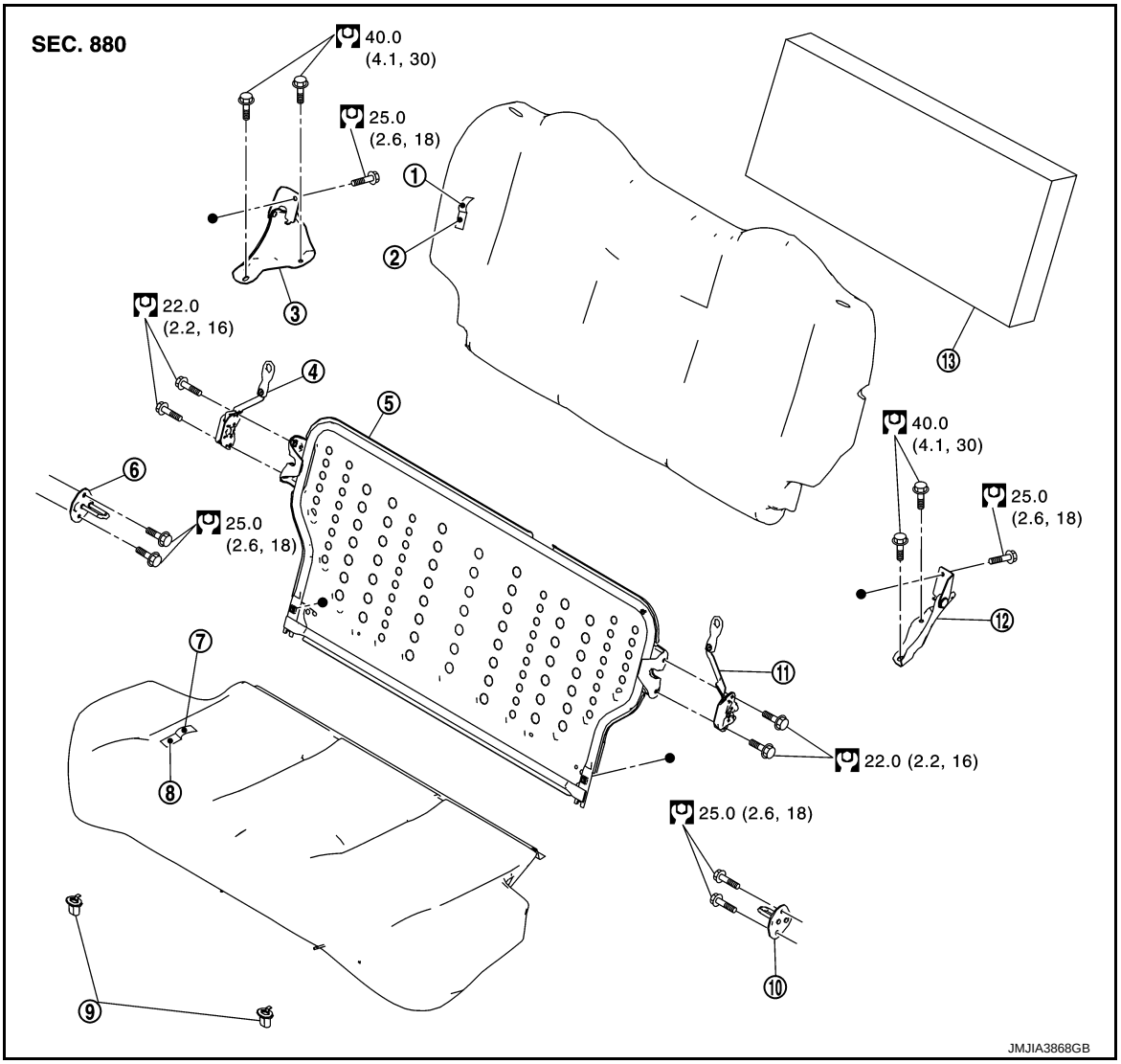

1. Seatback trim
2. Seatback pad
3. Back side bracket assembly (RH)
4. Seat lock assembly (RH)
5. Seatback frame
6. Striker assembly (RH)
7. Seat cushion trim
8. Seat cushion pad
9. Seat cushion hook
10. Striker assembly (LH)
11. Seat lock assembly (LH)
12. Back side bracket assembly (LH)
13. Seatback silencer

Refer to GI-4, "Components" for symbols in the figure.

Removal and Installation

INFOID:0000000005984508

REMOVAL

CAUTION:

When removing and installing, use shop cloths to protect parts from damage.

1. Release U-shaped wire from seat cushion hook that is located on front of seat cushion.
2. Remove seat belt from slot that is located in rear side of seat cushion.
3. Fold seatback forward.

4. Roll up seatback trim (A). Remove mounting bolts (B) of seatback frame and back side bracket assembly. Remove back side bracket assembly from seatback frame.

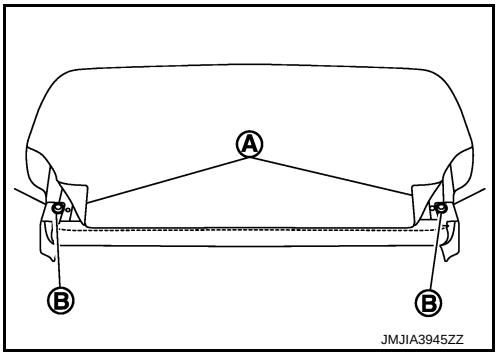

5. Put seatback on seat cushion and remove them together from the vehicle.
6. Remove mounting bolts of back side bracket assembly. Remove back side bracket assembly from the vehicle.
7. Remove the striker assembly.
   1. Remove the luggage side lower finisher. Refer to INT-32, "LUGGAGE SIDE LOWER FINISHER : Removal and Installation".
   2. Remove the striker assembly mounting bolts.

INSTALLATION

1. Install in the reverse order of removal.
   CAUTION:
   When removing and installing, use shop cloths to protect parts from damage.
2. Tighten mounting bolts of seatback (1) in numerical order as per the following figure.

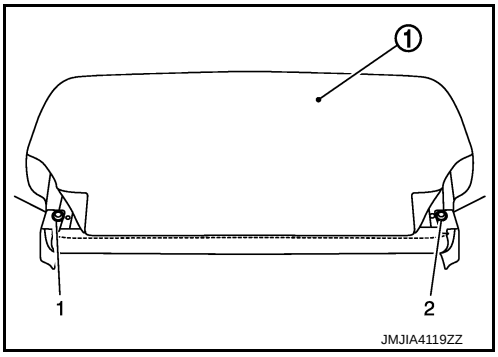

Disassembly and Assembly

INFOID:0000000005984509

SEATBACK

Disassembly

1. Remove the seatback trim and seatback pad.
   1. Remove the seatback retainers (A).

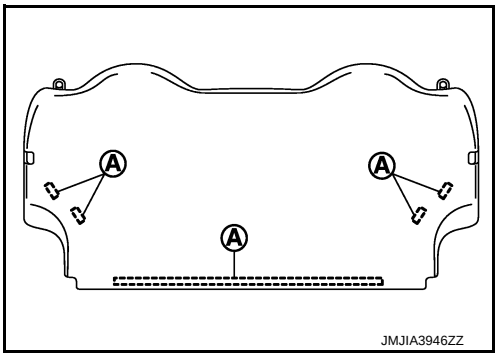

   2. Remove the seatback trim and seatback pad from seatback frame.
   3. Remove the hog rings to separate the seatback trim and seatback pad.
2. Remove the seatback silencer.
3. Remove the seat lock assembly.

Remove the seat lock assembly mounting bolts.

Assembly

1. Assemble in the reverse order of disassembly.
   CAUTION:
   Install the hog rings of seatback trim in position, and then securely connect the trim or trim cord with the seatback frame.
2. Tighten mounting bolts of seat lock assembly (1) in numerical order as per the following figure.
   - LH side

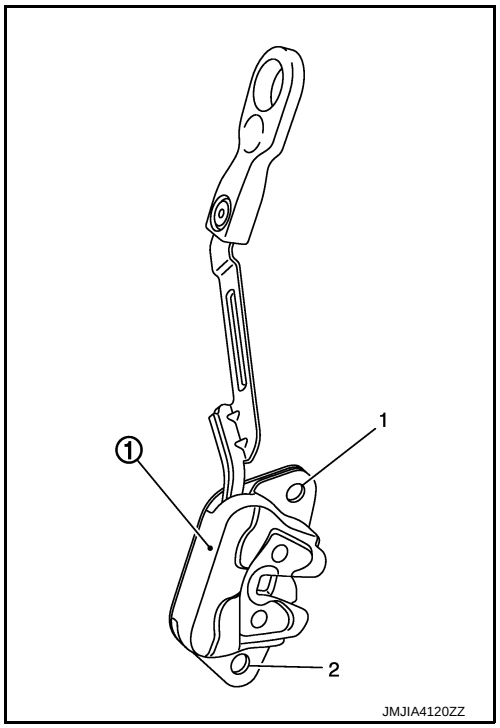

   - RH side

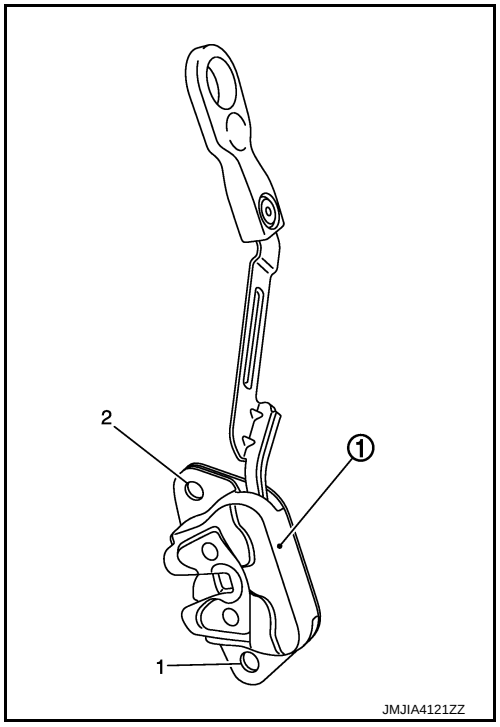

SEAT CUSHION

Disassembly

Remove the hog rings to separate the trim and pad.

Assembly

Assemble in the reverse order of disassembly.

CAUTION:

Install the hog rings of seat cushion trim in position, and then securely connect the trim or trim cord with the seat cushion pad wire.

SECTION SEC

SECURITY CONTROL SYSTEM

CONTENTS

WITH INTELLIGENT KEY SYSTEM

PRECAUTION 5

PRECAUTIONS 5
- Precaution for Supplemental Restraint System (SRS) "AIR BAG" and "SEAT BELT PRE-TENSIONER" 5
- Precaution Necessary for Steering Wheel Rotation after Battery Disconnect 5
- Precaution for Procedure without Cowl Top Cover 6
- Precaution for Battery Service 6

SYSTEM DESCRIPTION 7

COMPONENT PARTS 7
- Component Parts Location 7
- Component Description 8
- A/T Shift Selector (Detention Switch) 8
- BCM 9
- ECM 9
- IPDM E/R 9
- NATS Antenna Amp. 9
- TCM 9
- Combination Meter 9
- Door Switch 9
- Inside Key Antenna 9
- Intelligent Key 10
- Push-button Ignition Switch 10
- Remote Keyless Entry Receiver 10
- Security Indicator Lamp 10
- Starter Control Relay 10
- Starter Relay 10
- Steering Lock Relay 10
- Steering Lock Unit 10
- Stop Lamp Switch 10
- Transmission Range Switch 10
- Vehicle Information Display 11

SYSTEM 12

INTELLIGENT KEY SYSTEM/ENGINE START FUNCTION 12
- INTELLIGENT KEY SYSTEM/ENGINE START FUNCTION : System Diagram 12
- INTELLIGENT KEY SYSTEM/ENGINE START FUNCTION : System Description 12

NISSAN ANTI-THEFT SYSTEM 14
- NISSAN ANTI-THEFT SYSTEM : System Diagram 15
- NISSAN ANTI-THEFT SYSTEM : System Description 15

DIAGNOSIS SYSTEM (BCM) 18

COMMON ITEM 18
- COMMON ITEM : CONSULT-III Function (BCM - COMMON ITEM) 18

INTELLIGENT KEY 19
- INTELLIGENT KEY : CONSULT-III Function (BCM - INTELLIGENT KEY) 19

THEFT ALM 22
- THEFT ALM : CONSULT-III Function (BCM - THEFT) 22

IMMU 23
- IMMU : CONSULT-III Function (BCM - IMMU) 23

ECU DIAGNOSIS INFORMATION 25

BCM, IPDM E/R 25
- List of ECU Reference 25

WIRING DIAGRAM 26

SECURITY CONTROL SYSTEM 26
- Wiring Diagram 26

BASIC INSPECTION 33

DIAGNOSIS AND REPAIR WORK FLOW 33
- Work Flow 33

ADDITIONAL SERVICE WHEN REPLACING CONTROL UNIT 36

ECM 36
ECM : Description 36
ECM : Work Procedure 36

BCM 36
BCM : Description 36
BCM : Work Procedure 36

DTC/CIRCUIT DIAGNOSIS 38

P1610 LOCK MODE 38
Description 38
DTC Logic 38
Diagnosis Procedure 38

P1611 ID DISCORD, IMMU-ECM 39
DTC Logic 39
Diagnosis Procedure 39

P1612 CHAIN OF ECM-IMMU 41
DTC Logic 41
Diagnosis Procedure 41

P1614 CHAIN OF IMMU-KEY 42
DTC Logic 42
Diagnosis Procedure 42

B2192 ID DISCORD, IMMU-ECM 46
DTC Logic 46
Diagnosis Procedure 46

B2193 CHAIN OF ECM-IMMU 48
DTC Logic 48
Diagnosis Procedure 48

B2195 ANTI-SCANNING 49
DTC Logic 49
Diagnosis Procedure 49

B2198 NATS ANTENNA AMP. 50
DTC Logic 50
Diagnosis Procedure 50

B2013 STEERING LOCK UNIT 54
DTC Logic 54
Diagnosis Procedure 54

B2014 CHAIN OF STRG-IMMU 55
DTC Logic 55
Diagnosis Procedure 55

B2555 STOP LAMP 58
DTC Logic 58
Diagnosis Procedure 58
Component Inspection 59

B2556 PUSH-BUTTON IGNITION SWITCH 60
DTC Logic 60
Diagnosis Procedure 60
Component Inspection 61

B2557 VEHICLE SPEED 62
DTC Logic 62
Diagnosis Procedure 62

B2601 SHIFT POSITION 63
DTC Logic 63
Diagnosis Procedure 63
Component Inspection 64

B2602 SHIFT POSITION 66
DTC Logic 66
Diagnosis Procedure 66
Component Inspection 67

B2603 SHIFT POSITION 69
DTC Logic 69
Diagnosis Procedure 69
Component Inspection (Transmission Range Switch) 72
Component Inspection [A/T Shift Selector (Detention Switch)] 72

B2604 SHIFT POSITION 73
DTC Logic 73
Diagnosis Procedure 73
Component Inspection 75

B2605 SHIFT POSITION 76
DTC Logic 76
Diagnosis Procedure 76

B2608 STARTER RELAY 78
DTC Logic 78
Diagnosis Procedure 78
Component Inspection 79

B2609 STEERING STATUS 80
DTC Logic 80
Diagnosis Procedure 80

B260B STEERING LOCK UNIT 83
DTC Logic 83
Diagnosis Procedure 83

B260C STEERING LOCK UNIT 84
DTC Logic 84
Diagnosis Procedure 84

B260D STEERING LOCK UNIT 85
DTC Logic 85
Diagnosis Procedure 85

B260F ENGINE STATUS 86
Description 86
DTC Logic 86
Diagnosis Procedure 86

B2612 STEERING STATUS 87
DTC Logic 87
Diagnosis Procedure 87

B2619 BCM **90**
DTC Logic 90
Diagnosis Procedure 90

B26E9 STEERING STATUS **91**
DTC Logic 91
Diagnosis Procedure 91

B26EF STEERING LOCK RELAY **92**
DTC Logic 92
Diagnosis Procedure 92
Component Inspection 94

B26F0 STEERING LOCK RELAY **95**
DTC Logic 95
Diagnosis Procedure 95
Component Inspection 96

B26F3 STARTER CONTROL RELAY **97**
DTC Logic 97
Diagnosis Procedure 97

B26F4 STARTER CONTROL RELAY **98**
DTC Logic 98
Diagnosis Procedure 98

B26F5 STEERING LOCK STATUS SWITCH **99**
DTC Logic 99
Diagnosis Procedure 99

B26F7 BCM **102**
DTC Logic 102
Diagnosis Procedure 102

B26FC KEY REGISTRATION **103**
DTC Logic 103
Diagnosis Procedure 103

B2108 STEERING LOCK RELAY **104**
DTC Logic 104
Diagnosis Procedure 104
Component Inspection 105

B2109 STEERING LOCK RELAY **106**
DTC Logic 106
Diagnosis Procedure 106
Component Inspection 107

B210A STEERING LOCK UNIT **109**
DTC Logic 109
Diagnosis Procedure 109

B210B STARTER CONTROL RELAY **111**
DTC Logic 111
Diagnosis Procedure 111

B210C STARTER CONTROL RELAY **112**
DTC Logic 112
Diagnosis Procedure 112

B210D STARTER RELAY **113**
DTC Logic 113
Diagnosis Procedure 113
Component Inspection 114

B210E STARTER RELAY **115**
DTC Logic 115
Diagnosis Procedure 115
Component Inspection 117

B210F SHIFT POSITION/CLUTCH INTER-LOCK SWITCH **118**
DTC Logic 118
Diagnosis Procedure 118

B2110 SHIFT POSITION/CLUTCH INTER-LOCK SWITCH **120**
DTC Logic 120
Diagnosis Procedure 120

SECURITY INDICATOR LAMP **122**
Component Function Check 122
Diagnosis Procedure 122

SYMPTOM DIAGNOSIS **124**

ENGINE DOES NOT START WHEN INTELLI-GENT KEY IS INSIDE OF VEHICLE **124**
Description 124
Diagnosis Procedure 124

STEERING DOES NOT LOCK **125**
Description 125
Diagnosis Procedure 125

SECURITY INDICATOR LAMP DOES NOT TURN ON OR BLINK **126**
Description 126
Diagnosis Procedure 126

REMOVAL AND INSTALLATION **127**

NATS ANTENNA AMP. **127**
Removal and Installation 127

PUSH-BUTTON IGNITION SWITCH **128**
Exploded View 128
Removal and Installation 128

WITHOUT INTELLIGENT KEY SYSTEM

PRECAUTION **129**

PRECAUTIONS **129**
Precaution for Supplemental Restraint System (SRS) "AIR BAG" and "SEAT BELT PRE-TEN-SIONER" 129
Precaution for Procedure without Cowl Top Cover. 129
Precaution for Battery Service 129

SYSTEM DESCRIPTION **130**

COMPONENT PARTS **130**
Component Parts Location 130
Component Description 130

BCM 130
Ignition Key 131
NATS Antenna Amp. 131
Security Indicator lamp 131

SYSTEM 132

NISSAN ANTI-THEFT SYSTEM 132
NISSAN ANTI-THEFT SYSTEM : System Diagram 132
NISSAN ANTI-THEFT SYSTEM : System Description 132

DIAGNOSIS SYSTEM (BCM) 134

COMMON ITEM 134
COMMON ITEM : CONSULT-III Function (BCM - COMMON ITEM) 134

THEFT ALM 134
THEFT ALM : CONSULT-III Function (BCM - THEFT) 135

IMMU 135
IMMU : CONSULT-III Function (BCM - IMMU) 135

ECU DIAGNOSIS INFORMATION 136

BCM 136
List of ECU Reference 136

WIRING DIAGRAM 137

NISSAN ANTI-THEFT SYSTEM 137
Wiring Diagram 137

BASIC INSPECTION 139

DIAGNOSIS AND REPAIR WORK FLOW 139
Work Flow 139

ADDITIONAL SERVICE WHEN REPLACING CONTROL UNIT 142

ECM 142
ECM : Description 142
ECM : Work Procedure 142

BCM 142
BCM : Description 142
BCM : Work Procedure 142

DTC/CIRCUIT DIAGNOSIS 144

P1610 LOCK MODE 144
Description 144
DTC Logic 144
Diagnosis Procedure 144

P1611 ID DISCORD, IMMU-ECM 145
DTC Logic 145
Diagnosis Procedure 145

P1612 CHAIN OF ECM-IMMU 146
DTC Logic 146
Diagnosis Procedure 146

P1614 CHAIN OF IMMU-KEY 147
DTC Logic 147
Diagnosis Procedure 147

P1615 DIFFRENCE OF KEY 150
DTC Logic 150
Diagnosis Procedure 150

B2190 NATS ANTENNA AMP. 151
DTC Logic 151
Diagnosis Procedure 151

B2191 DIFFERENCE OF KEY 154
DTC Logic 154
Diagnosis Procedure 154

B2192 ID DISCORD, IMMU-ECM 155
DTC Logic 155
Diagnosis Procedure 155

B2193 CHAIN OF ECM-IMMU 156
DTC Logic 156
Diagnosis Procedure 156

B2195 ANTI-SCANNING 157
DTC Logic 157
Diagnosis Procedure 157

SECURITY INDICATOR LAMP 158
Component Function Check 158
Diagnosis Procedure 158

SYMPTOM DIAGNOSIS 160

SECURITY INDICATOR LAMP DOES NOT TURN ON OR BLINK 160
Description 160
Diagnosis Procedure 160

REMOVAL AND INSTALLATION 161

NATS ANTENNA AMP. 161
Removal and Installation 161

PRECAUTION

PRECAUTIONS

Precaution for Supplemental Restraint System (SRS) "AIR BAG" and "SEAT BELT PRE-TENSIONER"

INFOID:0000000006046545

The Supplemental Restraint System such as “AIR BAG” and “SEAT BELT PRE-TENSIONER”, used along with a front seat belt, helps to reduce the risk or severity of injury to the driver and front passenger for certain types of collision. Information necessary to service the system safely is included in the “SRS AIR BAG” and “SEAT BELT” of this Service Manual.

WARNING:

- **To avoid rendering the SRS inoperative, which could increase the risk of personal injury or death in the event of a collision which would result in air bag inflation, all maintenance must be performed by an authorized NISSAN/INFINITI dealer.**
- **Improper maintenance, including incorrect removal and installation of the SRS, can lead to personal injury caused by unintentional activation of the system. For removal of Spiral Cable and Air Bag Module, see the “SRS AIR BAG”.**
- **Do not use electrical test equipment on any circuit related to the SRS unless instructed to in this Service Manual. SRS wiring harnesses can be identified by yellow and/or orange harnesses or harness connectors.**

PRECAUTIONS WHEN USING POWER TOOLS (AIR OR ELECTRIC) AND HAMMERS

WARNING:

- **When working near the Air Bag Diagnosis Sensor Unit or other Air Bag System sensors with the ignition ON or engine running, DO NOT use air or electric power tools or strike near the sensor(s) with a hammer. Heavy vibration could activate the sensor(s) and deploy the air bag(s), possibly causing serious injury.**
- **When using air or electric power tools or hammers, always switch the ignition OFF, disconnect the battery, and wait at least 3 minutes before performing any service.**

Precaution Necessary for Steering Wheel Rotation after Battery Disconnect

INFOID:0000000006046546

NOTE:

- Before removing and installing any control units, first turn the push-button ignition switch to the LOCK position, then disconnect both battery cables.
- After finishing work, confirm that all control unit connectors are connected properly, then re-connect both battery cables.
- Always use CONSULT-III to perform self-diagnosis as a part of each function inspection after finishing work. If a DTC is detected, perform trouble diagnosis according to self-diagnosis results.

For vehicle with steering lock unit, if the battery is disconnected or discharged, the steering wheel will lock and cannot be turned.

If turning the steering wheel is required with the battery disconnected or discharged, follow the operation procedure below before starting the repair operation.

OPERATION PROCEDURE

1. Connect both battery cables.
   NOTE:
   Supply power using jumper cables if battery is discharged.
2. Turn the push-button ignition switch to ACC position.
   (At this time, the steering lock will be released.)
3. Disconnect both battery cables. The steering lock will remain released with both battery cables disconnected and the steering wheel can be turned.
4. Perform the necessary repair operation.
5. When the repair work is completed, re-connect both battery cables. With the brake pedal released, turn the push-button ignition switch from ACC position to ON position, then to LOCK position. (The steering wheel will lock when the push-button ignition switch is turned to LOCK position.)
6. Perform self-diagnosis check of all control units using CONSULT-III.

Precaution for Procedure without Cowl Top Cover

INFOID:0000000006046549

When performing the procedure after removing cowl top cover, cover the lower end of windshield with urethane, etc.

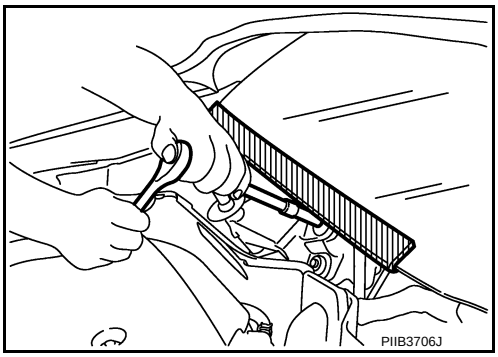

Precaution for Battery Service

INFOID:0000000006046550

Before disconnecting the battery, lower both the driver and passenger windows. This will prevent any interference between the window edge and the vehicle when the door is opened/closed. During normal operation, the window slightly raises and lowers automatically to prevent any window to vehicle interference. The automatic window function will not work with the battery disconnected.

SYSTEM DESCRIPTION

COMPONENT PARTS

Component Parts Location

INFOID:0000000006038458

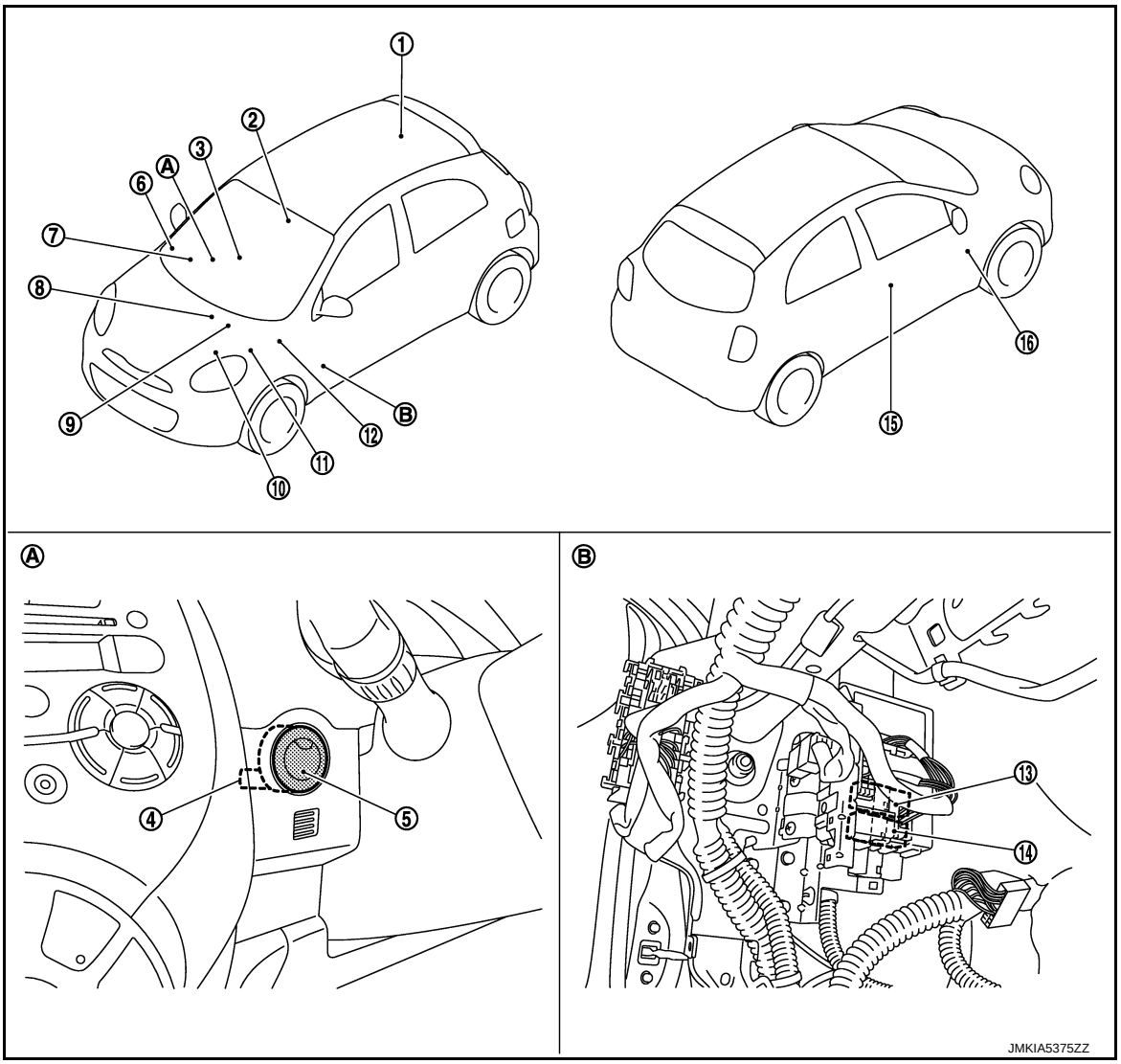

1. Inside key antenna (luggage room) Refer to DLK-11, "DOOR LOCK SYSTEM : Component Parts Location".
2. Inside key antenna (console) Refer to DLK-11, "DOOR LOCK SYSTEM : Component Parts Location".
3. Inside key antenna (instrument center) Refer to DLK-11, "DOOR LOCK SYSTEM : Component Parts Location".
4. NATS antenna amp.
5. Push-button ignition switch
6. Remote keyless entry receiver Refer to DLK-11, "DOOR LOCK SYSTEM : Component Parts Location".
7. Combination meter Refer to MWI-4, "Component Parts Location".
8. ABS actuator and electric unit (control unit) Refer to BRC section.
9. IPDM E/R Refer to PCS-5, "Component Parts Location".

10. TCM
Refer to TM section.

11. ECM
Refer to EC-16, "Component Parts Location" [HR12DE (TYPE 1)].
Refer to EC-323, "Component Parts Location" [HR12DE (TYPE 2)].

12. BCM
Refer to BCS-5, "BODY CONTROL SYSTEM : Component Parts Location".

13. Steering lock relay

14. Starter relay

15. Front door switch (driver side)
Refer to DLK-11, "DOOR LOCK SYSTEM : Component Parts Location".

16. Stop lamp switch
Refer to EC-16, "Component Parts Location" [HR12DE (TYPE 1)].
Refer to EC-323, "Component Parts Location" [HR12DE (TYPE 2)].

A. Behind push-button ignition switch

B. View of dash side LH with dash-side finisher removed.

Component Description

INFOID:0000000006038459

Component	Reference
A/T shift selector (detention switch)	SEC-8
BCM	SEC-9
ECM	SEC-9
IPDM E/R	SEC-9
NATS antenna amp.	SEC-9
TCM	SEC-9
Combination meter	SEC-9
Door switch	SEC-9
Inside key antenna	SEC-9
Intelligent Key	SEC-10
Push-button ignition switch	SEC-10
Remote keyless entry receiver	SEC-10
Security indicator lamp	SEC-10
Starter control relay	SEC-10
Starter relay	SEC-10
Steering lock relay	SEC-10
Steering lock unit	SEC-10
Stop lamp switch	SEC-10
Transmission range switch	SEC-10
Vehicle information display	SEC-11

A/T Shift Selector (Detention Switch)

INFOID:0000000006038460

Detention switch detects that A/T shift selector is in the P position, and then transmits the signal to BCM and IPDM E/R.
BCM confirms the A/T shift selector position with the following 5 signals.
- P position signal from A/T shift selector (detention switch)
- P/N position signal from transmission range switch
- P position signal from IPDM E/R (CAN)
- P/N position signal from IPDM E/R (CAN)

- P/N position signal from TCM (CAN)

IPDM E/R confirms the A/T shift selector position with the following 3 signals.

- P position signal from A/T shift selector (detention switch)
- P/N position signal from transmission range switch
- P/N position signal from BCM (CAN)

BCM

INFOID:0000000006038461

BCM controls INTELLIGENT KEY SYSTEM (ENGINE START FUNCTION) and NISSAN ANTI-THEFT SYSTEM (NATS).
BCM performs the ID verification between BCM and Intelligent Key when the Intelligent Key is carried into the detection area of inside key antenna, and push-button ignition switch is pressed. If the ID verification result is OK, push-button ignition switch operation is available.
Then, when the power supply position is turned ON, BCM performs ID verification between BCM and ECM. If the ID verification result is OK, ECM can start engine.

ECM

INFOID:0000000006038462

ECM controls the engine.
When power supply position is turned ON, BCM starts communication with ECM and performs the ID verification between BCM and ECM.
If the verification result is OK, the engine can start. If the verification result is NG, the engine can not start.

IPDM E/R

INFOID:0000000006038463

Starter control relay and starter relay are used for the engine starting function. Starter relay is located on dash side (LH) and controlled by BCM. Starter control relay is integrated in IPDM E/R and controlled by IPDM E/R while communicating with BCM. IPDM E/R sends the starter control relay and starter relay status signal to BCM.

NATS Antenna Amp.

INFOID:0000000006038464

The ID verification is performed between BCM and transponder in Intelligent Key via NATS antenna amp. when Intelligent Key backside is contacted to push-button ignition switch in case that Intelligent Key battery is discharged. If the ID verification result is OK, the release of steering lock and the operation of starting engine is available.

TCM

INFOID:0000000006038465

TCM transmits the shift position signal (P/N position) to BCM via CAN communication.
BCM confirms the A/T shift selector position with the following 5 signals.

- P position signal from A/T shift selector (detention switch)
- P/N position signal from transmission range switch
- P position signal from IPDM E/R (CAN)
- P/N position signal from IPDM E/R (CAN)
- P/N position signal from TCM (CAN)

IPDM E/R confirms the A/T shift selector position with the following 3 signals.

- P position signal from A/T shift selector (detention switch)
- P/N position signal from transmission range switch
- P/N position signal from BCM (CAN)

Combination Meter

INFOID:0000000006038466

Combination meter transmits the vehicle speed signal to BCM via CAN communication.
BCM also receives the vehicle speed signal from ABS actuator and electric unit (control unit) via CAN communication. BCM compares both signals to detect the vehicle speed.

Door Switch

INFOID:0000000006038467

Door switch detects door open/close condition and then transmits ON/OFF signal to BCM.

Inside Key Antenna

INFOID:0000000006038469

Inside key antenna detects whether Intelligent Key is inside the vehicle, and transmits the signal to BCM.

Three inside key antennas are installed in the instrument center, console and luggage room.

Intelligent Key

INFOID:0000000006038470

Each Intelligent key has an individual electronic ID, and transmits the ID signal by request from BCM.
Carrying the Intelligent Key whose ID is registered in BCM, the driver can performs door lock/unlock operation and push-button ignition switch operation.

Push-button Ignition Switch

INFOID:0000000006038472

Push-button ignition switch detects that push-button is pressed, and then transmits the signal to BCM. BCM changes the power supply position with the operation of push-button ignition switch. BCM maintains the power supply position status while push-button is not operated.

Remote Keyless Entry Receiver

INFOID:0000000006038473

Remote keyless entry receiver receives each button operation signal and electronic key ID signal from Intelligent Key, and then transmits the signal to BCM.

Security Indicator Lamp

INFOID:0000000006038474

Security indicator lamp is located on combination meter.
Security indicator lamp blinks when power supply position is in any position except the ON position to warn that Nissan Anti-Theft System (NATS) is on board.

Starter Control Relay

INFOID:0000000006038477

Starter control relay and starter relay are used for the engine starting function. Starter relay is located on dash side (LH) and controlled by BCM. Starter control relay is integrated in IPDM E/R and controlled by IPDM E/R while communicating with BCM. IPDM E/R sends the starter control relay and starter relay status signal to BCM.

Starter Relay

INFOID:0000000006038478

Starter control relay and starter relay are used for the engine starting function. Starter relay is located on dash side (LH) and controlled by BCM. Starter control relay is integrated in IPDM E/R and controlled by IPDM E/R while communicating with BCM. IPDM E/R sends the starter control relay and starter relay status signal to BCM.

Steering Lock Relay

INFOID:0000000006038479

Steering lock relay is located on dash side (LH), and controlled by IPDM E/R to supply power source for steering lock unit.
When IPDM E/R receives the steering lock relay ON request signal from BCM, IPDM E/R turns ON steering lock relay and then transmits the steering lock relay condition signal to BCM.

Steering Lock Unit

INFOID:0000000006038480

Steering lock unit performs steering lock/unlock operation on request from BCM, and power source is supplied from steering lock relay controlled by IPDM E/R.
When push-button ignition switch is pressed while the Intelligent Key is inside the vehicle, BCM performs the ID verification with steering lock unit. Steering lock unit releases the steering lock based on the result of the ID verification.
Steering lock unit has 2 switches (steering lock status switch and steering unlock status switch) inside. BCM judges the steering lock/unlock condition by comparing these switch signals and steering lock unit status signal transmitted from IPDM E/R via CAN communication.

Stop Lamp Switch

INFOID:0000000006038481

Stop lamp switch detects that brake pedal is depressed, and then transmits the signal to BCM.

Transmission Range Switch

INFOID:0000000006038482

Transmission range switch is integrated in A/T assembly, and detects the A/T shift selector position.

TCM receives the transmission range switch signal and then transmits the P/N position signal to BCM and IPDM E/R.
BCM confirms the A/T shift selector position with the following 5 signals.
- P position signal from A/T shift selector (detention switch)
- P/N position signal from transmission range switch
- P position signal from IPDM E/R (CAN)
- P/N position signal from IPDM E/R (CAN)
- P/N position signal from TCM (CAN)

IPDM E/R confirms the A/T shift selector position with the following 3 signals.
- P position signal from A/T shift selector (detention switch)
- P/N position signal from transmission range switch
- P/N position signal from BCM (CAN)

Vehicle Information Display

INFOID:0000000006038483

Vehicle information display is integrated in combination meter.
Various information and warnings regarding to the Intelligent Key System are displayed.

SYSTEM

INTELLIGENT KEY SYSTEM/ENGINE START FUNCTION

INTELLIGENT KEY SYSTEM/ENGINE START FUNCTION : System Diagram

INFOID:0000000006038485

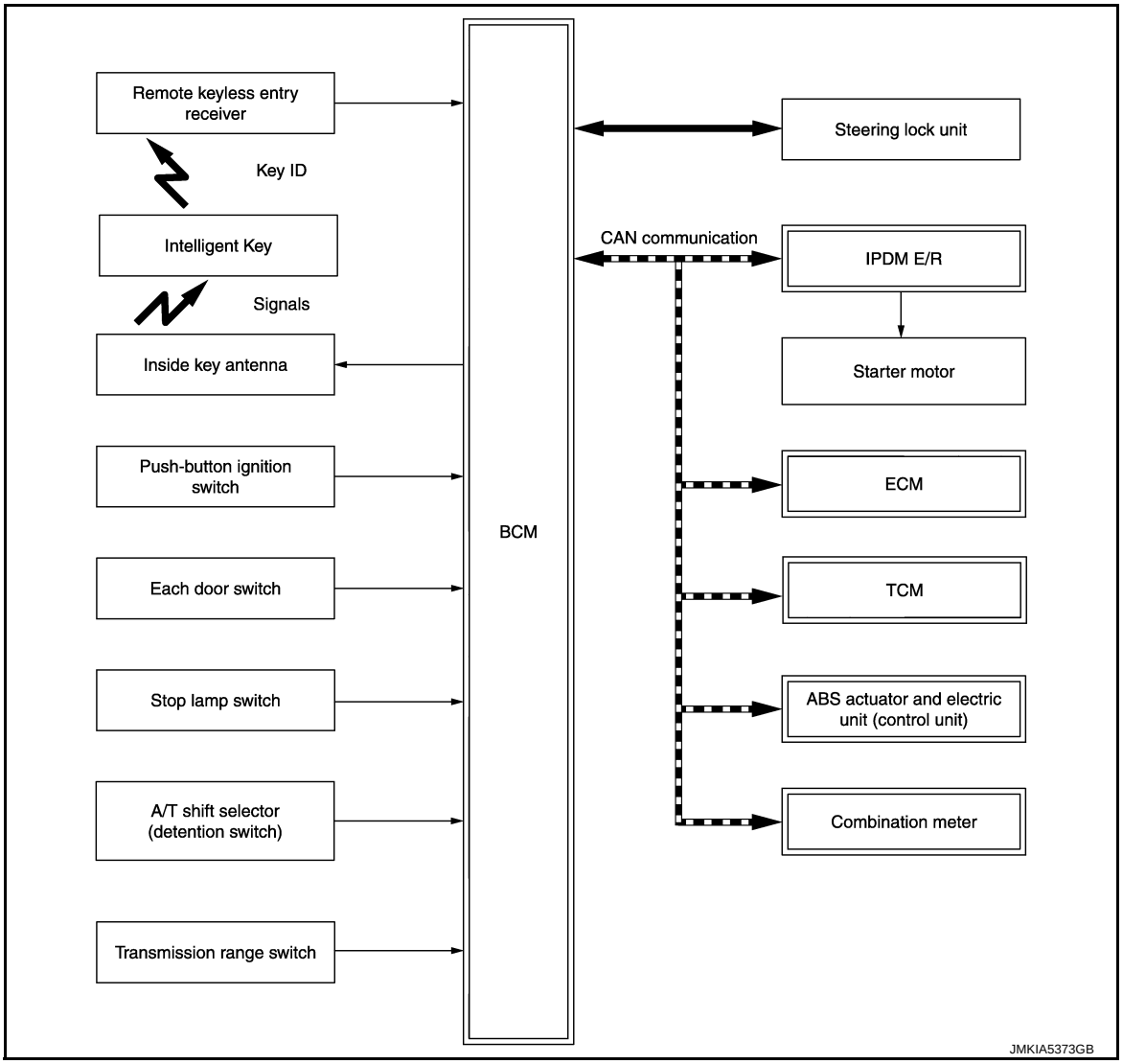

INTELLIGENT KEY SYSTEM/ENGINE START FUNCTION : System Description

INFOID:0000000006038486

SYSTEM DESCRIPTION

- The engine start function of Intelligent Key system makes it possible to start and stop the engine without using the key, based on the electronic ID verification. The electronic ID verification is performed between BCM and Intelligent Key when the push-button ignition switch is pressed while the Intelligent Key is within the detection area of inside key antenna.
  NOTE:
  The driver should carry the Intelligent Key at all times.
- Intelligent Key has 2 IDs (Intelligent Key ID and NATS ID). It can perform the door lock/unlock operation and the push-button ignition switch operation when the registered Intelligent Key is carried.
- When Intelligent Key battery is discharged, engine can be started by operating push-button ignition switch after contacting Intelligent Key backside to push-button ignition switch. At that time, NATS ID verification is performed.
- If the ID is successfully verified, when push-button ignition switch is pressed, steering lock is released and the engine can be started.

- Up to 4 Intelligent Keys can be registered (Including the standard Intelligent Key) upon request from the customer.
  NOTE:
  Refer to DLK-14, "INTELLIGENT KEY SYSTEM : System Description" for any functions other than engine start function of Intelligent Key system.

PRECAUTIONS FOR INTELLIGENT KEY SYSTEM

The transponder (the chip for NATS ID verification) is integrated into the Intelligent Key. (For the conventional models, it is integrated into the mechanical key.) Therefore, ID verification cannot be performed by mechanical key only.
In that case, NATS ID verification can be performed when Intelligent Key backside is contacted to push-button ignition switch. If verification result is OK, engine can be started.

OPERATION WHEN INTELLIGENT KEY IS CARRIED

1. When the push-button ignition switch is pressed, the BCM activates the inside key antenna and transmits the request signal to the Intelligent Key.
2. The Intelligent Key receives the request signal and transmits the Intelligent Key ID signal to the BCM.
3. BCM receives the Intelligent Key ID signal via remote keyless entry receiver and verifies it with the registered ID.
4. BCM transmits the unlock signal to steering lock unit and IPDM E/R if the verification results are OK.
5. IPDM E/R turns the steering lock relay ON and supplies power supply to the steering lock unit.
6. The steering lock releases.
7. BCM transmits the power supply stop signal to IPDM E/R when detecting that the steering lock is in the unlock condition.
8. IPDM E/R turns the steering lock relay OFF and stops power supply to the steering lock unit.
9. BCM turns ACC relay ON and transmits the ignition power supply ON signal to IPDM E/R.
10. IPDM E/R turns the ignition relay ON and starts the ignition power supply.
11. BCM detects that the selector lever position and brake pedal operating condition.
12. BCM transmits the starter request signal to IPDM E/R and turns the starter relay in IPDM E/R ON if BCM judges that the engine start condition is satisfied.
13. IPDM E/R turns the starter control relay ON when receiving the starter request signal.
14. Power supply is supplied through the starter relay and the starter control relay to operate the starter motor.
    CAUTION:
    If a malfunction is detected in the Intelligent Key system, the “KEY” warning lamp in the combination meter illuminates. At that time, the engine cannot be started.
15. When BCM receives feedback signal from ECM indicating that the engine is started, the BCM transmits a stop signal to IPDM E/R and stops cranking by turning OFF the starter motor relay. (If engine start is unsuccessful, cranking stops automatically within 5 seconds.)
    CAUTION:
    When the Intelligent Key is carried outside of the vehicle (inside key antenna detection area) while the power supply is in the ACC or ON position, even if the engine start condition* is satisfied, the engine cannot be started.

*: For the engine start condition, refer to “POWER SUPPLY POSITION CHANGE TABLE BY PUSH-BUTTON IGNITION SWITCH OPERATION”.

OPERATION RANGE

Engine can be started when Intelligent Key is inside the vehicle. However, sometimes engine may not start when Intelligent Key is on instrument panel or in glove box.

ENGINE START OPERATION WHEN INTELLIGENT KEY IS CONTACTED TO PUSH-BUTTON IGNITION SWITCH

When Intelligent Key battery is discharged, NATS ID verification between transponder in Intelligent Key and BCM is performed when Intelligent Key backside is contacted to push-button ignition switch. If the verification result is OK, engine can be started.

STEERING LOCK OPERATION

Steering is locked by steering lock unit when any of the following conditions are met.

- When ignition switch is in the OFF position, selector lever is in the P position, and any of the following conditions are met.
- Closing door
- Opening door
- Door is locked using door request switch
- Door is locked using Intelligent Key
- When BCM power consumption control system is released by meeting any of the following conditions.
- Opening any door
- Operating door lock using door request switch
- Operating door lock using Intelligent Key

POWER SUPPLY POSITION CHANGE TABLE BY PUSH-BUTTON IGNITION SWITCH OPERATION

The power supply position changing operation can be performed with the following operations.

NOTE:

- When an Intelligent Key is within the detection area of inside key antenna and when Intelligent Key backside is contacted to push-button ignition switch, it is equivalent to the operations below.
- When starting the engine, the BCM monitors under the engine start conditions,
- Brake pedal operating condition
- Selector lever position
- Vehicle speed

Vehicle speed: less than 4 km/h (2.5 MPH)

Power supply position	Engine start/stop condition		Push-button ignition switch operation frequency
	Selector lever	Brake pedal operation condition	
LOCK → ACC	—	Not depressed	1
LOCK → ACC → ON	—	Not depressed	2
LOCK → ACC → ON → OFF	—	Not depressed	3
LOCK → START ACC → START ON → START	P or N position	Depressed	1
Engine is running → OFF	—	—	1

Vehicle speed: 4 km/h (2.5 MPH) or more

Power supply position	Engine start/stop condition		Push-button ignition switch operation frequency
	Selector lever	Brake pedal operation condition	
Engine is running → ACC	—	—	Emergency stop operation
Engine stall return operation while driving	N position	Not depressed	1

Emergency stop operation

- Press and hold the push-button ignition switch for 2 seconds or more.
- Press the push-button ignition switch 3 times or more within 1.5 seconds.

NISSAN ANTI-THEFT SYSTEM

NISSAN ANTI-THEFT SYSTEM : System Diagram

INFOID:0000000006038487

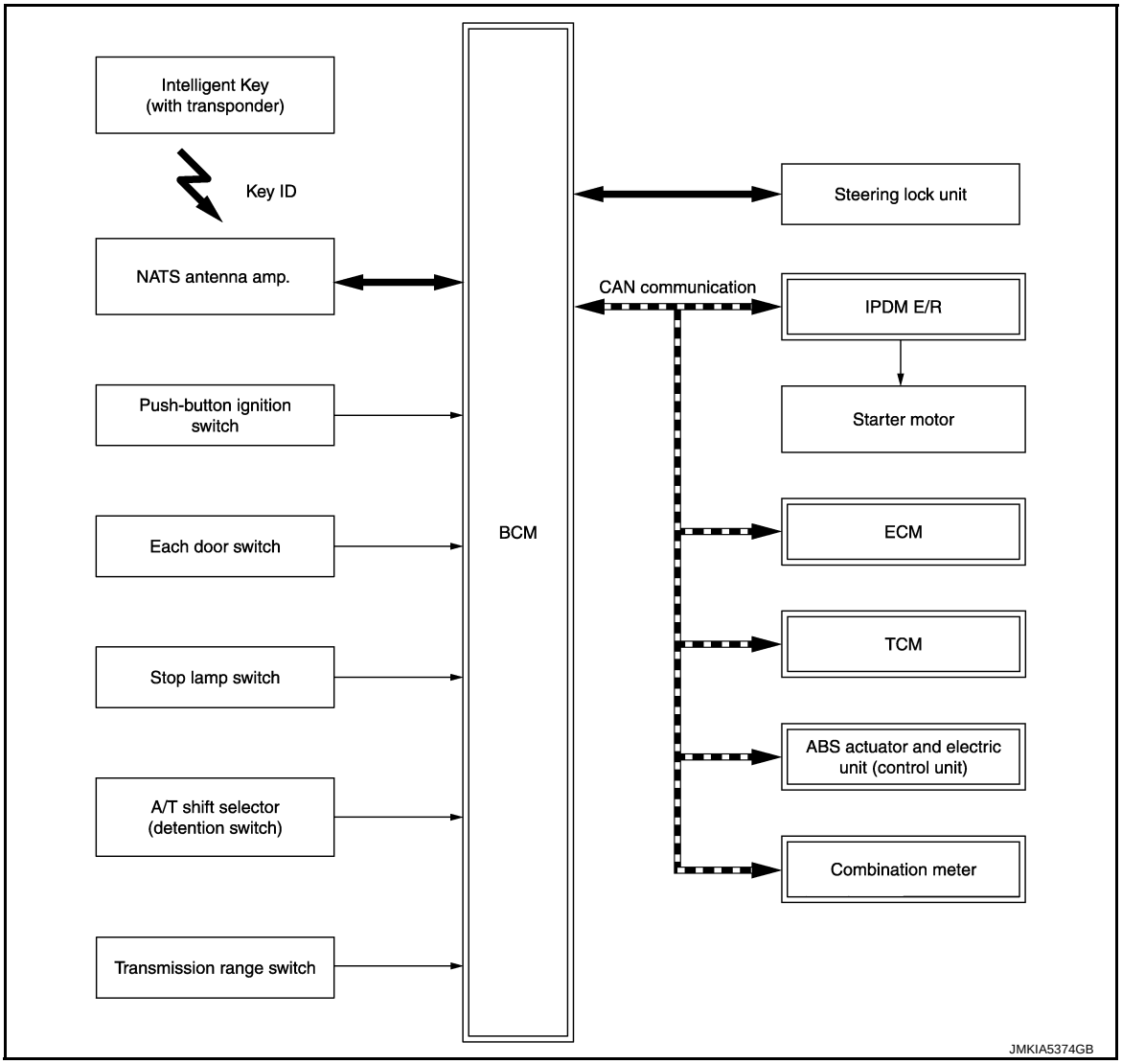

NISSAN ANTI-THEFT SYSTEM : System Description

INFOID:0000000006038488

SYSTEM DESCRIPTION

- The Nissan Anti-Theft System (NATS) prevents the engine from being started by Intelligent Key whose ID is not registered to the vehicle (BCM). It has higher protection against auto theft involving the duplication of mechanical keys.
- The ignition key integrated in the Intelligent Key cannot start the engine. When the Intelligent Key battery is discharged, the NATS ID verification is performed between the transponder integrated with Intelligent Key and BCM via NATS antenna amp. when the Intelligent Key backside is contacted to push-button ignition switch. If the verification result is OK, the engine start operation can be performed by the push-button ignition switch operation.
- Locate the security indicator lamp and apply the anti-theft system equipment sticker that warns that the Nissan Anti-Theft System (NATS) is on board the model.
- Security indicator lamp always blinks when the power supply position is in any position except the ON position.
- Up to 4 Intelligent Keys can be registered (including the standard ignition key) upon request from the owner.
- Specified registration is required when replacing ECM, BCM or Intelligent Key. For the registration procedures, refer to CONSULT-III Operation Manual NATS-IVIS/NVIS.
- When NATS has a malfunction, engine may not start. However, the engine can not be started because of other than NATS malfunction, so start the trouble diagnosis according to SEC-33, "Work Flow".
- If ECM other than genuine part is installed, the engine cannot be started. For ECM replacement procedure, refer to EC-376, "Work Procedure" [HR12DE (TYPE 2)].

PRECAUTIONS FOR KEY REGISTRATION

- The ID registration is a procedure that erases the current NATS ID once, and then reregisters a new ID. Therefore before starting the registration operation, collect all registered Intelligent Keys from the customer.
- When registering the Intelligent Key, perform only one procedure to simultaneously register both ID (NATS ID and Intelligent Key ID).

SECURITY INDICATOR LAMP

- Security indicator lamp warns that the vehicle is equipped with NATS.
- Security indicator lamp always blinks when the power supply position is in any position except the ON position.

  NOTE:
  Because security indicator lamp is highly efficient, the battery is barely affected.

ENGINE START OPERATION WHEN INTELLIGENT KEY IS CONTACTED TO PUSH-BUTTON IGNITION SWITCH

1. When brake pedal is depressed while selector lever is in the P position, BCM activates NATS antenna amp. that is located behind push-button ignition switch.
2. When Intelligent Key (transponder built-in) backside is contacted to push-button ignition switch, BCM starts NATS ID verification between BCM and Intelligent Key (transponder built-in) via NATS antenna amp.
3. When NATS ID verification result is OK, buzzer in combination meter sounds and BCM transmits the result to ECM.
4. When push-button ignition switch is pressed, BCM transmits steering unlock signal to steering lock unit and IPDM E/R.
5. IPDM E/R turns steering lock relay ON and supplies power supply to the steering lock unit.
6. The steering lock is released.
7. BCM transmits the power supply stop signal to IPDM E/R when detecting that the steering lock is in the unlock position.
8. IPDM E/R turns steering lock relay OFF and stops power supply to the steering lock unit.
9. BCM turns ACC relay ON and transmits ignition power supply ON signal to IPDM E/R.
10. IPDM E/R turns the ignition relay ON and starts the ignition power supply.
11. BCM detects that the selector lever position is P or N.
12. BCM transmits starter request signal to IPDM E/R and turns the starter relay in IPDM E/R ON if BCM judges that the engine start condition* is satisfied.
13. IPDM E/R turns the starter control relay ON when receiving the starter request signal.
14. Power supply is supplied through the starter relay and the starter control relay to operate the starter motor.
15. When BCM receives feedback signal from ECM indicating that the engine is started, BCM transmits a stop signal to IPDM E/R and stops cranking by turning off the starter motor relay. (If engine start is unsuccessful, cranking stops automatically within 5 seconds.)

*: For the engine start condition, refer to “POWER SUPPLY POSITION CHANGE TABLE BY PUSH-BUTTON IGNITION SWITCH OPERATION” below.

POWER SUPPLY POSITION CHANGE TABLE BY PUSH-BUTTON IGNITION SWITCH OPERATION

The power supply position changing operation can be performed with the following operations.

NOTE:

- When an Intelligent Key is within the detection area of inside key antenna and when Intelligent Key backside is contacted to push-button ignition switch, it is equivalent to the operations below.
- When starting the engine, the BCM monitors under the engine start conditions,

- Brake pedal operating condition
- Selector lever position
- Vehicle speed

Vehicle speed: less than 4 km/h (2.5 MPH)

Power supply position	Engine start/stop condition		Push-button ignition switch operation frequency
	Selector lever	Brake pedal operation condition	
LOCK → ACC	—	Not depressed	1
LOCK → ACC → ON	—	Not depressed	2
LOCK → ACC → ON → OFF	—	Not depressed	3
LOCK → START ACC → START ON → START	P or N position	Depressed	1
Engine is running → OFF	—	—	1

Vehicle speed: 4 km/h (2.5 MPH) or more

Power supply position	Engine start/stop condition		Push-button ignition switch operation frequency
	Selector lever	Brake pedal operation condition	
Engine is running → ACC	—	—	Emergency stop operation
Engine stall return operation while driving	N position	Not depressed	1

Emergency stop operation

- Press and hold the push-button ignition switch for 2 seconds or more.
- Press the push-button ignition switch 3 times or more within 1.5 seconds.

DIAGNOSIS SYSTEM (BCM)

COMMON ITEM

COMMON ITEM : CONSULT-III Function (BCM - COMMON ITEM)

INFOID:0000000006046710

APPLICATION ITEM

CONSULT-III performs the following functions via CAN communication with BCM.

Diagnosis mode	Function Description
Work Support	Changes the setting for each system function.
Self Diagnostic Result	Displays the diagnosis results judged by BCM.
CAN Diag Support Monitor	Monitors the reception status of CAN communication viewed from BCM. Refer to CONSULT-III operation manual.
Data Monitor	The BCM input/output signals are displayed.
Active Test	The signals used to activate each device are forcibly supplied from BCM.
Ecu Identification	The BCM part number is displayed.
Configuration	• Read and save the vehicle specification. • Write the vehicle specification when replacing BCM.

SYSTEM APPLICATION

BCM can perform the following functions for each system.

NOTE:

It can perform the diagnosis modes except the following for all sub system selection items.

×: Applicable item

System	Sub system selection item	Diagnosis mode		
		Work Support	Data Monitor	Active Test
Door lock	DOOR LOCK	×	×	×
Rear window defogger	REAR DEFOGGER		×	×
Warning chime	BUZZER		×	×
Interior room lamp timer	INT LAMP	×	×	×
Exterior lamp	HEAD LAMP	×	×	×
Wiper and washer	WIPER	×	×	×
Turn signal and hazard warning lamps	FLASHER	×	×	×
Automatic air conditioner	AIR CONDITONER		×	×
• Intelligent Key system • Engine start system	INTELLIGENT KEY	×	×	×
Combination switch	COMB SW		×	
Body control system	BCM	×		
NATS	IMMU	×	×	×
Interior room lamp battery saver	BATTERY SAVER	×	×	×
Back door	TRUNK		×	
—	THEFT ALM*	×	×	×
—	RETAINED PWR*		×	
Signal buffer system	SIGNAL BUFFER		×	×

*: This item is displayed, but is not used.

FREEZE FRAME DATA (FFD)

The BCM records the following vehicle condition at the time a particular DTC is detected, and displays on CONSULT-III.

CONSULT screen item	Indication/Unit	Description	
Vehicle Speed	km/h	Vehicle speed of the moment a particular DTC is detected	
Odo/Trip Meter	km	Total mileage (Odometer value) of the moment a particular DTC is detected	
Vehicle Condition	SLEEP>LOCK	Power position status of the moment a particular DTC is detected	While turning BCM status from low power consumption mode to normal mode (Power supply position is “LOCK”)
	SLEEP>OFF		While turning BCM status from low power consumption mode to normal mode (Power supply position is “OFF”.)
	LOCK>ACC		While turning power supply position from “LOCK” to “ACC”
	ACC>ON		While turning power supply position from “ACC” to “IGN”
	RUN>ACC		While turning power supply position from “RUN” to “ACC” (Vehicle is stopping and selector lever is except P position.)
	CRANK>RUN		While turning power supply position from “CRANKING” to “RUN” (From cranking up the engine to run it)
	RUN>URGENT		While turning power supply position from “RUN“ to “ACC” (Emergency stop operation)
	ACC>OFF		While turning power supply position from “ACC” to “OFF”
	OFF>LOCK		While turning power supply position from “OFF” to “LOCK”
	OFF>ACC		While turning power supply position from “OFF” to “ACC”
	ON>CRANK		While turning power supply position from “IGN” to “CRANKING”
	OFF>SLEEP		While turning BCM status from normal mode (Power supply position is “OFF”.) to low power consumption mode
	LOCK>SLEEP		While turning BCM status from normal mode (Power supply position is “LOCK”.) to low power consumption mode
	LOCK		Power supply position is “LOCK” (Ignition switch OFF with steering is locked.)
	OFF		Power supply position is “OFF” (Ignition switch OFF with steering is unlocked.)
	ACC		Power supply position is “ACC” (Ignition switch ACC)
	ON		Power supply position is “IGN” (Ignition switch ON with engine stopped)
	ENGINE RUN		Power supply position is “RUN” (Ignition switch ON with engine running)
	CRANKING		Power supply position is “CRANKING” (At engine cranking)
IGN Counter	0 - 39	The number of times that ignition switch is turned ON after DTC is detected • The number is 0 when a malfunction is detected now. • The number increases like 1 → 2 → 3...38 → 39 after returning to the normal condition whenever ignition switch OFF → ON. • The number is fixed to 39 until the self-diagnosis results are erased if it is over 39.	

INTELLIGENT KEY

INTELLIGENT KEY : CONSULT-III Function (BCM - INTELLIGENT KEY)

INFOID:0000000006046711

WORK SUPPORT

Monitor item	Description
INSIDE ANT DIAGNOSIS	This function allows inside key antenna self-diagnosis
LOCK/UNLOCK BY I-KEY	Door lock/unlock function by door request switch mode can be changed to operation in this mode • On: Operate • Off: Non-operation

Monitor item	Description
ENGINE START BY I-KEY	Engine start function mode can be changed to operation with this mode • On: Operate • Off: Non-operation
TRUNK/GLASS HATCH OPEN	**NOTE:** This item is indicated, but not used
PANIC ALARM SET	Panic alarm button pressing time on Intelligent Key remote control button can be selected from the following with this mode • MODE 1: 0.5 sec • MODE 2: Non-operation • MODE 3: 1.5 sec
TRUNK OPEN DELAY	**NOTE:** This item is indicated, but not used
LO- BATT OF KEY FOB WARN	Intelligent Key low battery warning mode can be changed to operation with this mode • On: Operate • Off: Non-operation
ANTI KEY LOCK IN FUNCTI	Key reminder function mode can be changed to operation with this mode • On: Operate • Off: Non-operation
HAZARD ANSWER BACK	Hazard reminder function mode by door request switch and Intelligent Key button can be selected from the following with this mode • Lock Only: Door lock operation only • Unlock Only: Door unlock operation only • Lock/Unlock: Lock and unlock operation • Off: Non-operation
ANS BACK I-KEY LOCK	Buzzer reminder function (lock operation) mode by door request switch can be selected from the following with this mode • Horn Chirp: Sound horn • Buzzer: Sound Intelligent Key warning buzzer • Off: Non-operation
ANS BACK I-KEY UNLOCK	Buzzer reminder function (unlock operation) mode by door request switch can be changed to operation with this mode • On: Operate • Off: Non-operation
SHORT CRANKING OUTPUT	Starter motor can operate during the times below • 70 msec • 100 msec • 200 msec
CONFIRM KEY FOB ID	It can be checked whether Intelligent Key ID code is registered or not in this mode
AUTO LOCK SET	Auto door lock operation time can be changed in this mode • MODE 1: OFF • MODE 2: 30 sec. • MODE 3: 1 minute • MODE 4: 2 minutes • MODE 5: 3 minutes • MODE 6: 4 minutes • MODE 7: 5 minutes
ANSWER BACK FUNCTION	Buzzer reminder function mode by Intelligent Key button can be selected from the following with this mode • On: Operate • Off: Non-operation
TAKE OUT FROM WIN WARN SET	**NOTE:** This item is indicated, but not used
RETRACTABLE MIRROR SET	Auto retractable door mirror function mode can be changed to operation with this mode • On: Operate • Off: Non-operation

DATA MONITOR

Monitor Item	Condition
REQ SW -DR	Indicates [On/Off] condition of door request switch (driver side)
REQ SW -AS	Indicates [On/Off] condition of door request switch (passenger side)
REQ SW -BD/TR	Indicates [On/Off] condition of back door request switch
PUSH SW	Indicates [On/Off] condition of push-button ignition switch
CLUTCH SW	**NOTE:** This item is indicated, but not monitored
BRAKE SW 1	Indicates [On/Off] condition of stop lamp switch
BRAKE SW 2	Indicates [On/Off]* condition of stop lamp switch power supply
DETE/CANCL SW	Indicates [On/Off] condition of P position
SFT PN/N SW	Indicates [On/Off] condition of P or N position
S/L -LOCK	Indicates [On/Off] condition of steering lock unit (LOCK)
S/L -UNLOCK	Indicates [On/Off] condition of steering lock unit (UNLOCK)
S/L RELAY -F/B	Indicates [On/Off] condition of steering lock relay
UNLK SEN -DR	Indicates [On/Off] condition of driver door UNLOCK status
PUSH SW -IPDM	Indicates [On/Off] condition of push-button ignition switch
IGN RLY1 -F/B	Indicates [On/Off] condition of ignition relay 1
DETE SW -IPDM	Indicates [On/Off] condition of P position
SFT PN -IPDM	Indicates [On/Off] condition of P or N position
SFT P -MET	Indicates [On/Off] condition of P position
SFT N -MET	Indicates [On/Off] condition of N position
ENGINE STATE	Indicates [Stop/Stall/Crank/Run] condition of engine states
S/L LOCK-IPDM	Indicates [On/Off] condition of steering lock unit (LOCK)
S/L UNLK-IPDM	Indicates [On/Off] condition of steering lock unit (UNLOCK)
S/L RELAY-REQ	Indicates [On/Off] condition of steering lock relay
VEH SPEED 1	Display the vehicle speed signal received from combination meter by numerical value [Km/h]
VEH SPEED 2	Display the vehicle speed signal received from ABS or VDC or TCM by numerical value [Km/h]
DOOR STAT-DR	Indicates [LOCK/READY/UNLK] condition of driver side door status
DOOR STAT-AS	Indicates [LOCK/READY/UNLK] condition of passenger side door status
ID OK FLAG	Indicates [Set/Reset] condition of key ID
PRMT ENG STRT	Indicates [Set/Reset] condition of engine start possibility
PRMT RKE STRT	**NOTE:** This item is indicated, but not monitored
TRNK/HAT MNTR	**NOTE:** This item is indicated, but not monitored
RKE OPE COUN1	When remote keyless entry receiver receives the signal transmitted while operating on Intelligent Key, the numerical value start changing
RKE OPE COUN2	**NOTE:** This item is indicated, but not monitored
RKE-LOCK	Indicates [On/Off] condition of LOCK signal from Intelligent Key
RKE-UNLOCK	Indicates [On/Off] condition of UNLOCK signal from Intelligent Key
RKE-TR/BD	**NOTE:** This item is indicated, but not monitored
RKE-PANIC	Indicates [On/Off] condition of PANIC button of Intelligent Key
RKE-MODE CHG	Indicates [On/Off] condition of MODE CHANGE signal from Intelligent Key

*: OFF is displayed when brake pedal is depressed while brake switch power supply is OFF.

ACTIVE TEST

Test item	Description
OUTSIDE BUZZER	This test is able to check Intelligent Key warning buzzer operation • On: Operate • Off: Non-operation
INSIDE BUZZER	This test is able to check warning chime in combination meter operation • Take Out: Take away warning chime sounds when CONSULT-III screen is touched • Key: Key warning chime sounds when CONSULT-III screen is touched • Knob: OFF position warning chime sounds when CONSULT-III screen is touched • Off: Non-operation
INDICATOR	This test is able to check warning lamp operation • KEY ON: “KEY” Warning lamp illuminates when CONSULT-III screen is touched • KEY IND: “KEY” Warning lamp blinks when CONSULT-III screen is touched • Off: Non-operation
INT LAMP	This test is able to check interior room lamp operation • On: Operate • Off: Non-operation
LCD	This test is able to check meter display information • B&P N: Engine start information indicate when CONSULT-III screen is touched • B&P I: Engine start information indicate when CONSULT-III screen is touched • ID NG: This item is displayed, but cannot be monitored • ROTAT: This item is displayed, but cannot be monitored • SFT P: Shift P warning lamp indicate when CONSULT-III screen is touched • INSRT: This item is displayed, but cannot be monitored • BATT: Key warning lamp indicator when CONSULT-III screen is touched • NO KY: Key warning lamp indicator when CONSULT-III screen is touched • OUTKEY: Engine start information indicate when CONSULT-III screen is touched • LK WN: Engine start information indicate when CONSULT-III screen is touched
FLASHER	This test is able to check security hazard lamp operation The hazard lamps are activated after “LH/RH/Off” on CONSULT-III screen is touched
P RANGE	This test is able to check AT shift selector power supply • On: Operate • Off: Non-operation
ENGINE SW ILLUMI	This test is able to check push-ignition switch illumination operation Push-ignition switch illumination illuminates when “ON” on CONSULT-III screen is touched
PUSH SWITCH INDICATOR	This test is able to check LOCK indicator in push-ignition switch operation LOCK indicator in push-ignition switch illuminates when “ON” on CONSULT-III screen is touched
TRUNK/BACK DOOR	**NOTE:** This item is indicated, but not tested
RETRACTABLE MIRROR	This test is able to check auto retractable door mirror operation • On: Operate • Off: Non-operation

THEFT ALM

THEFT ALM : CONSULT-III Function (BCM - THEFT)

INFOID:0000000006038495

DATA MONITOR

Monitored Item	Description
REQ SW -DR	Indicates [ON/OFF] condition of door request switch (driver side).
REQ SW -AS	Indicates [ON/OFF] condition of door request switch (passenger side).
REQ SW -RR	**NOTE:** This is displayed even when it is not equipped.
REQ SW -RL	**NOTE:** This is displayed even when it is not equipped.
REQ SW -BD/TR	Indicates [ON/OFF] condition of back door request switch.

Monitored Item	Description
PUSH SW	Indicates [ON/OFF] condition of push-button ignition switch
UNLK SEN -DR	Indicates [ON/OFF] condition of driver door UNLOCK status.
DOOR SW-DR	Indicates [ON/OFF] condition of front door switch (driver side).
DOOR SW-AS	Indicates [ON/OFF] condition of front door switch (passenger side).
DOOR SW-RR	Indicates [ON/OFF] condition of rear door switch RH.
DOOR SW-RL	Indicates [ON/OFF] condition of rear door switch LH.
DOOR SW-BK	Indicates [ON/OFF] condition of back door switch.
CDL LOCK SW	Indicates [ON/OFF] condition of lock signal from door lock/unlock switch LH and RH.
CDL UNLOCK SW	Indicates [ON/OFF] condition of unlock signal from door lock/unlock switch LH and RH.
KEY CYL LK-SW	Indicates [ON/OFF] condition of lock signal from door key cylinder.
KEY CYL UN-SW	Indicates [ON/OFF] condition of unlock signal from door key cylinder.
TR/BD OPEN SW	**NOTE:** This is displayed even when it is not equipped.
TRNK/HAT MNTR	**NOTE:** This is displayed even when it is not equipped.
RKE-LOCK	Indicates [ON/OFF] condition of LOCK signal from Intelligent Key.
RKE-UNLOCK	Indicates [ON/OFF] condition of UNLOCK signal from Intelligent Key.
RKE-TR/BD	**NOTE:** This is displayed even when it is not equipped.

WORK SUPPORT

Service Item	Description
SECURITY ALARM SET	**NOTE:** Never use this item, if displayed.
THEFT ALM TRG	**NOTE:** Never use this item, if displayed.
SIREN SET	**NOTE:** Never use this item, if displayed.
SECURITY ALARM SET (SIREN)	**NOTE:** Never use this item, if displayed.

ACTIVE TEST

Test Item	Description
THEFT IND	This test is able to check security indicator lamp operation. Security indicator lamp is turned on when “ON” on CONSULT-III screen is touched.
VEHICLE SECURITY HORN	**NOTE:** This item cannot be tested, if displayed.
HEADLAMP(HI)	**NOTE:** This item cannot be tested, if displayed.
FLASHER	**NOTE:** This item cannot be tested, if displayed.

IMMU

IMMU : CONSULT-III Function (BCM - IMMU)

INFOID:0000000006038496

DATA MONITOR

Monitor item	Content
CONFRM ID ALL	Indicates [YET] at all time. Switches to [DONE] when a registered Intelligent Key backside is contacted to push-button ignition switch.
CONFIRM ID4	
CONFIRM ID3	
CONFIRM ID2	
CONFIRM ID1	
NOT REGISTERED	Indicates [ID OK] when key ID that is registered is received or is not yet received. Indicates [ID NG] when key ID that is not registered is received.
TP 4	Indicates the number of IDs that are registered.
TP 3	
TP 2	
TP 1	
PUSH SW	Indicates [ON/OFF] condition of push-button ignition switch.

ACTIVE TEST

Test item	Description
THEFT IND	This test is able to check security indicator lamp operation. Security indicator lamp is turned on when “ON” on CONSULT-III screen touched.

WORK SUPPORT

Service item	Description
CONFIRM DONGLE ID	It is possible to check that dongle unit is applied to the vehicle.

ECU DIAGNOSIS INFORMATION

BCM, IPDM E/R

List of ECU Reference

INFOID:0000000006038498

ECU		Reference
BCM	Reference Value	BCS-18, "Reference Value"
	Fail-safe	BCS-37, "Fail-safe"
	DTC Inspection Priority Chart	BCS-39, "DTC Inspection Priority Chart"
	DTC Index	BCS-40, "DTC Index"
IPDM E/R	Reference Value	PCS-15, "Reference Value"
	Fail-safe	PCS-20, "Fail-Safe"
	DTC Index	PCS-22, "DTC Index"

WIRING DIAGRAM

SECURITY CONTROL SYSTEM

Wiring Diagram

INFOID:0000000006038501

For connector terminal arrangements, harness layouts, and alphabets in a ⬡ (option abbreviation; if not described in wiring diagram), refer to GI-12, "Connector Information".

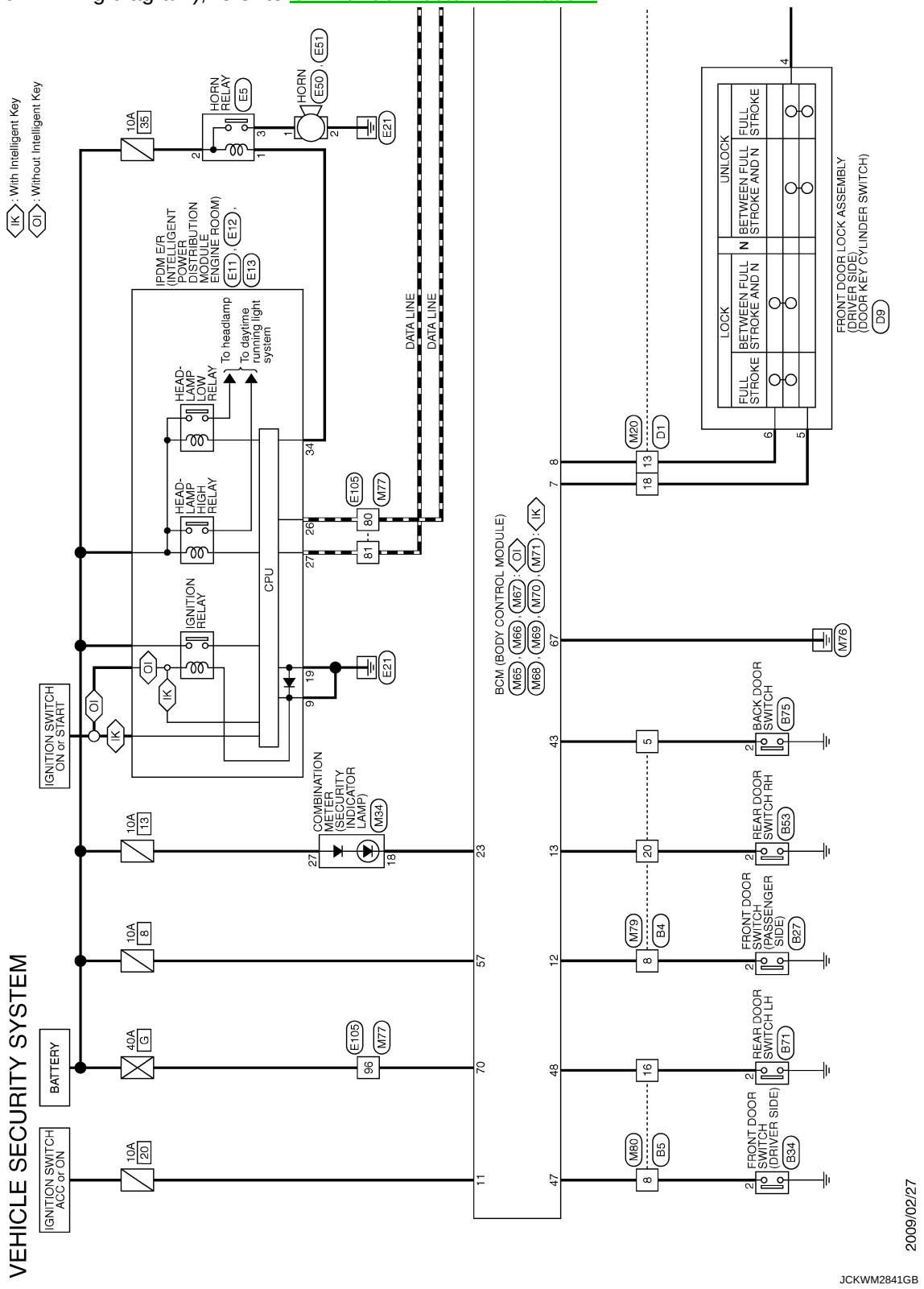

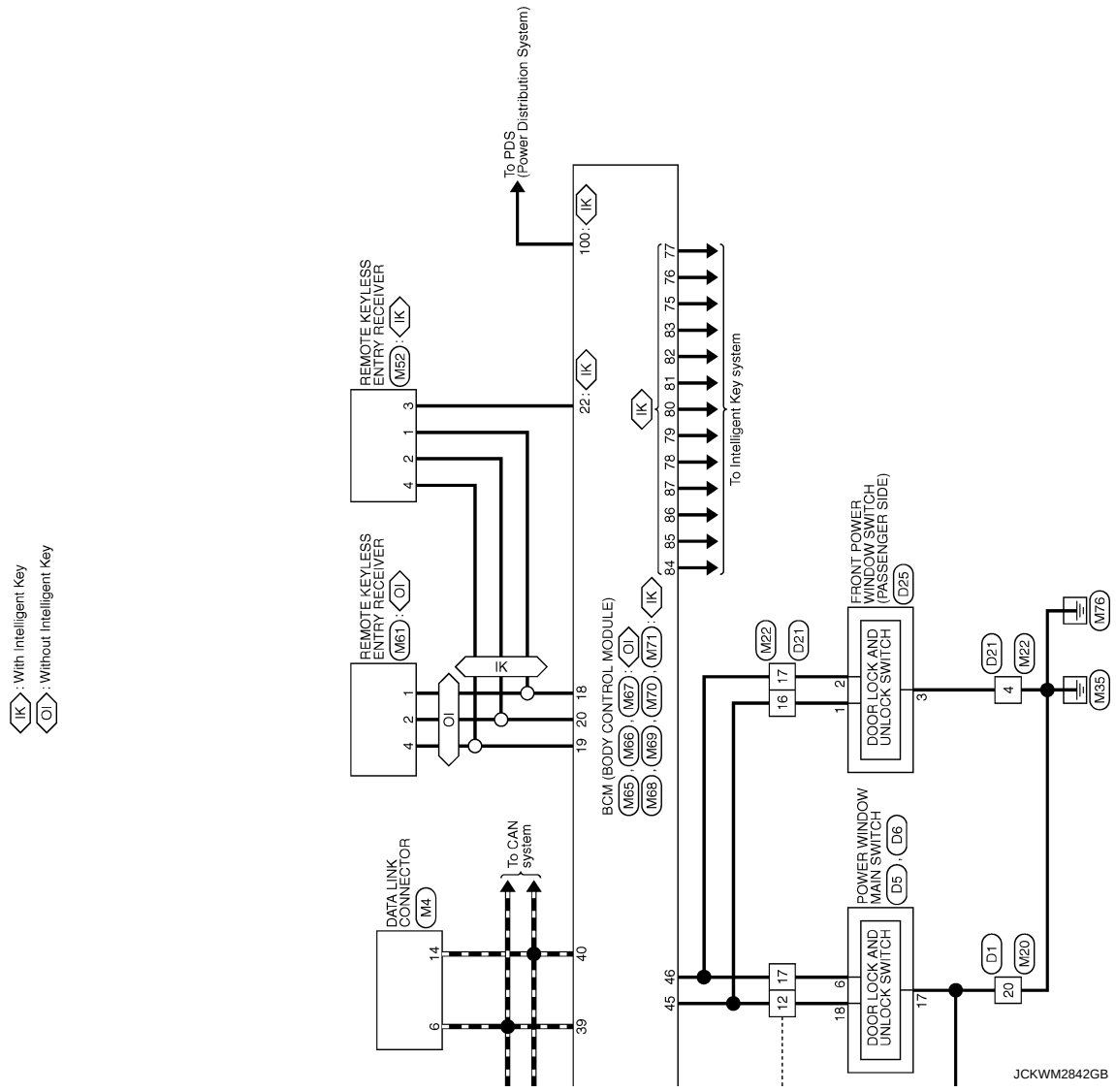
IK : With Intelligent Key
OI : Without Intelligent Key
REMOTE KEYLESS ENTRY RECEIVER
M61
OI
REMOTE KEYLESS ENTRY RECEIVER
M52
IK
DATA LINK CONNECTOR
M4
To CAN system
To PDS (Power Distribution System)
BCM (BODY CONTROL MODULE)
M65, M66, M67, M68, M69, M70, M71
To Intelligent Key system
POWER WINDOW MAIN SWITCH
D5, D6
FRONT POWER WINDOW SWITCH (PASSENGER SIDE)
D25
DOOR LOCK AND UNLOCK SWITCH
DOOR LOCK AND UNLOCK SWITCH
M22
D21
D1
M20
M76
M35
JCKWM2842GB

VEHICLE SECURITY SYSTEM

Connector No.	B4
Connector Name	WIRE TO WIRE
Connector Type	TH24MW-NH

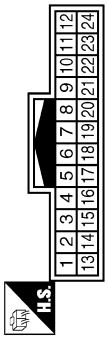

Terminal No.	Color of Wire	Signal Name [Specification]
5	W	–
8	SB	–
20	LG	–

Connector No.	B5
Connector Name	WIRE TO WIRE
Connector Type	TH16MW-NH

Terminal No.	Color of Wire	Signal Name [Specification]
8	LG	–
16	W	–

Connector No.	B27
Connector Name	FRONT DOOR SWITCH (PASSENGER SIDE)
Connector Type	A03FW

Terminal No.	Color of Wire	Signal Name [Specification]
2	SB	–

Connector No.	B34
Connector Name	FRONT DOOR SWITCH (DRIVER SIDE)
Connector Type	A03FW

Terminal No.	Color of Wire	Signal Name [Specification]
2	LG	–

Connector No.	B53
Connector Name	REAR DOOR SWITCH RH
Connector Type	A03FW

Terminal No.	Color of Wire	Signal Name [Specification]
2	LG	–

Connector No.	B71
Connector Name	REAR DOOR SWITCH LH
Connector Type	A03FW

Terminal No.	Color of Wire	Signal Name [Specification]
2	W	–

Connector No.	B75
Connector Name	BACK DOOR SWITCH
Connector Type	A03FW

Terminal No.	Color of Wire	Signal Name [Specification]
2	W	–

Connector No.	D1
Connector Name	WIRE TO WIRE
Connector Type	NH10FW-CS10

Terminal No.	Color of Wire	Signal Name [Specification]
12	GR	–
13	W	–
17	R	–
18	L	–
20	B	–

JCKWM2843GB

VEHICLE SECURITY SYSTEM

Connector No.	D5
Connector Name	POWER WINDOW MAIN SWITCH
Connector Type	NS16FW-CS

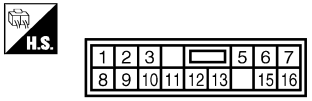

Terminal No.	Color of Wire	Signal Name [Specification]
6	V	–

Connector No.	D6
Connector Name	POWER WINDOW MAIN SWITCH
Connector Type	NS03FW-CS

Terminal No.	Color of Wire	Signal Name [Specification]
17	B	–
18	GR	–

Connector No.	D9
Connector Name	FRONT DOOR LOCK ASSEMBLY (DRIVER SIDE)
Connector Type	E06FGY-RS

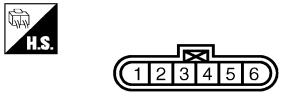

Terminal No.	Color of Wire	Signal Name [Specification]
4	B	–
5	L	–
6	W	–

Connector No.	D21
Connector Name	WIRE TO WIRE
Connector Type	NH10FW-CS10

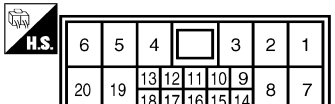

Terminal No.	Color of Wire	Signal Name [Specification]
4	B	–
16	GR	–
17	BR	–

Connector No.	D25
Connector Name	FRONT POWER WINDOW SWITCH (PASSENGER SIDE)
Connector Type	NS12FW-CS

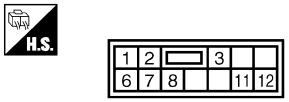

Terminal No.	Color of Wire	Signal Name [Specification]
1	GR	–
2	BR	–
3	B	–

Connector No.	E5
Connector Name	HORN RELAY
Connector Type	–

Terminal No.	Color of Wire	Signal Name [Specification]
1	R	–
2	G	–
3	G	–

Connector No.	E11
Connector Name	IPDM E/R (INTELLIGENT POWER DISTRIBUTION MODULE ENGINE ROOM)
Connector Type	M06FB-LC

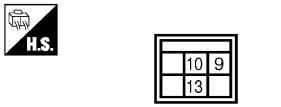

Terminal No.	Color of Wire	Signal Name [Specification]
9	B/W	–

Connector No.	E12
Connector Name	IPDM E/R (INTELLIGENT POWER DISTRIBUTION MODULE ENGINE ROOM)
Connector Type	NS08FBR-CS

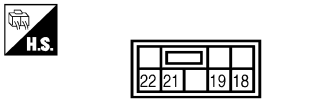

Terminal No.	Color of Wire	Signal Name [Specification]
19	B/W	–

JCKWM2844GB

VEHICLE SECURITY SYSTEM

Connector No.	E13
Connector Name	IPDM E/R (INTELLIGENT POWER DISTRIBUTION MODULE ENGINE ROOM)
Connector Type	TH12FW-NH

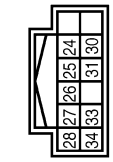

Terminal No.	Color of Wire	Signal Name [Specification]
26	P	–
27	L	–
34	R	–

Connector No.	E50
Connector Name	HORN
Connector Type	P01FB-A

Terminal No.	Color of Wire	Signal Name [Specification]
1	V	–

Connector No.	E51
Connector Name	HORN
Connector Type	P01FB-A

Terminal No.	Color of Wire	Signal Name [Specification]
2	B/W	–

Connector No.	E105
Connector Name	WIRE TO WIRE
Connector Type	TH80MW-CS16-TM4

Terminal No.	Color of Wire	Signal Name [Specification]
80	P	–
81	L	–
96	LG	–

Connector No.	M4
Connector Name	DATA LINK CONNECTOR
Connector Type	BD16FW

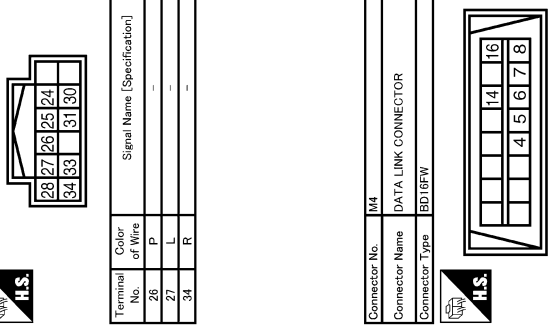

Terminal No.	Color of Wire	Signal Name [Specification]
6	L	–
14	P	–

Connector No.	M20
Connector Name	WIRE TO WIRE
Connector Type	NH10MW-CS10

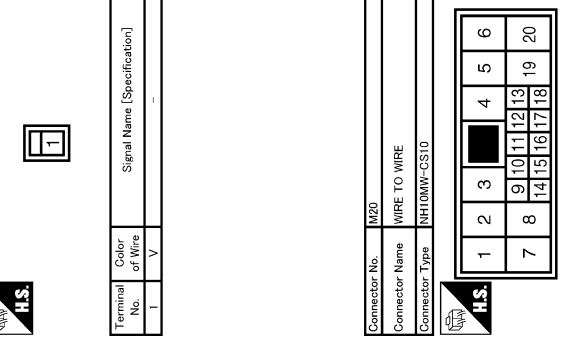

Terminal No.	Color of Wire	Signal Name [Specification]
12	GR	–
13	W/B	–
17	BR	–
18	W/R	–
20	B	–

Connector No.	M22
Connector Name	WIRE TO WIRE
Connector Type	NH10MW-CS10

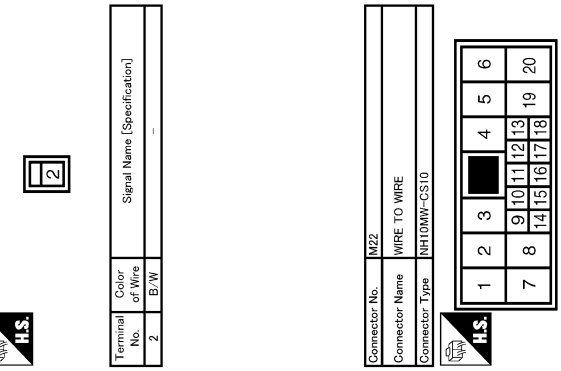

Terminal No.	Color of Wire	Signal Name [Specification]
4	B	–
16	GR	–
17	BR	–

Connector No.	M34
Connector Name	COMBINATION METER
Connector Type	TH40FW-NH

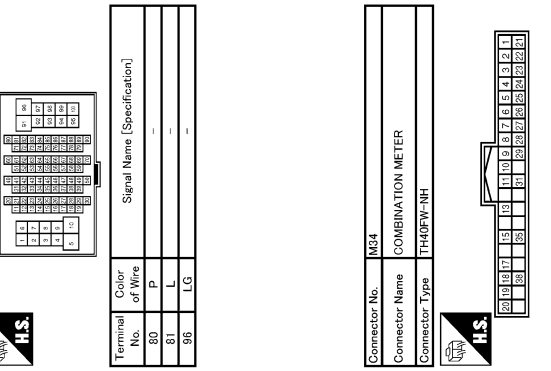

Terminal No.	Color of Wire	Signal Name [Specification]
18	R/Y	SECURITY SIGNAL
27	LG	BATTERY POWER SUPPLY

JCKWM2845GB

VEHICLE SECURITY SYSTEM

Connector No.	M52
Connector Name	REMOTE KEYLESS ENTRY RECEIVER (WITH INTELLIGENT KEY)
Connector Type	JAB04FB

Terminal No.	Color of Wire	Signal Name [Specification]
1	V	GND
2	G/Y	SIGNAL
3	W/G	RSSI
4	BR	POWER

Connector No.	M61
Connector Name	REMOTE KEYLESS ENTRY RECEIVER (WITHOUT INTELLIGENT KEY)
Connector Type	TK04FW

Terminal No.	Color of Wire	Signal Name [Specification]
1	V	–
2	G/Y	–
4	BR	–

Connector No.	M65
Connector Name	BCM (BODY CONTROL MODULE) (WITHOUT INTELLIGENT KEY)
Connector Type	TH40FW-NH

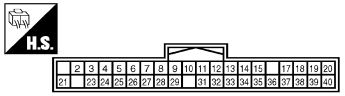

Terminal No.	Color of Wire	Signal Name [Specification]
7	W/R	KEY CYL UNLOCK SW
8	W/B	KEY CYL LOCK SW
11	L/Y	ACC
12	SB	PASSENGER DOOR SW
13	GR/L	REAR RH DOOR SW
18	V	RECEIVER/SENSOR GND
19	BR	KEYLESS ENTRY RECEIVER POWER SUPPLY
20	G/Y	KEYLESS ENTRY RECEIVER COMM
23	R/Y	SECURITY INDICATOR LAMP
39	L	CAN-H
40	P	CAN-L

Connector No.	M66
Connector Name	BCM (BODY CONTROL MODULE) (WITHOUT INTELLIGENT KEY)
Connector Type	FEA09FW-FHA6-SA

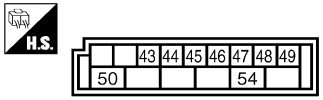

Terminal No.	Color of Wire	Signal Name [Specification]
43	W	BACK DOOR SW
45	GR	CENTRAL DOOR LOCK SW
46	BR	CENTRAL DOOR UNLOCK SW
47	BR/Y	DRIVER DOOR SW
48	W/G	REAR LH DOOR SW

Connector No.	M67
Connector Name	BCM (BODY CONTROL MODULE) (WITHOUT INTELLIGENT KEY)
Connector Type	FEA09FB-FHA6-SA

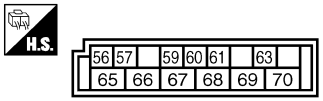

Terminal No.	Color of Wire	Signal Name [Specification]
57	Y	BAT (FUSE)
67	B	GND
70	Y	BAT (F/L)

Connector No.	M68
Connector Name	BCM (BODY CONTROL MODULE) (WITH INTELLIGENT KEY)
Connector Type	TH40FB-NH

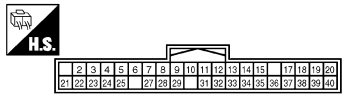

Terminal No.	Color of Wire	Signal Name [Specification]
7	W/R	KEY CYL UNLOCK SW
8	W/B	KEY CYL LOCK SW
11	L/Y	ACC F/B
12	SB	PASSENGER DOOR SW
13	GR/L	REAR RH DOOR SW
18	V	RECEIVER/SENSOR GND
19	BR	KEYLESS ENTRY RECEIVER POWER SUPPLY
20	G/Y	KEYLESS ENTRY RECEIVER COMM
22	W/G	KEYLESS ENTRY RECEIVER RSSI
23	R/Y	SECURITY INDICATOR LAMP
39	L	CAN-H
40	P	CAN-L

Connector No.	M69
Connector Name	BCM (BODY CONTROL MODULE) (WITH INTELLIGENT KEY)
Connector Type	FEA09FW-FHA6-SA

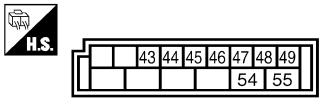

Terminal No.	Color of Wire	Signal Name [Specification]
43	W	BACK DOOR SW
45	GR	CENTRAL DOOR LOCK SW
46	BR	CENTRAL DOOR UNLOCK SW
47	BR/Y	DRIVER DOOR SW
48	W/G	REAR LH DOOR SW

JCKWM2846GB

VEHICLE SECURITY SYSTEM

Connector No.	M70
Connector Name	BCM (BODY CONTROL MODULE) (WITH INTELLIGENT KEY)
Connector Type	FEA09FB-FHA6-SA

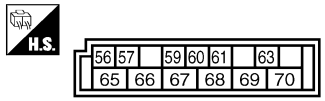

Terminal No.	Color of Wire	Signal Name [Specification]
57	Y	BAT (FUSE)
67	B	GND
70	Y	BAT (F/L)

Connector No.	M71
Connector Name	BCM (BODY CONTROL MODULE) (WITH INTELLIGENT KEY)
Connector Type	TH40FW-NH

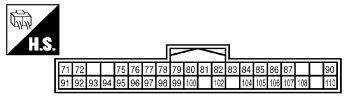

Terminal No.	Color of Wire	Signal Name [Specification]
75	SB	DRIVER DOOR REQUEST SW
76	G	PASSENGER DOOR REQUEST SW
77	W	BACK DOOR REQUEST SW
78	LG	DRIVER DOOR ANT+
79	V	DRIVER DOOR ANT-
80	BR/Y	PASSENGER DOOR ANT+
81	L/Y	PASSENGER DOOR ANT-
82	W/B	BACK DOOR ANT+
83	B/W	BACK DOOR ANT-
84	Y/G	ROOM ANT+
85	Y/L	ROOM ANT-

86	P	LUGGAGE ROOM ANT+
87	L	LUGGAGE ROOM ANT-
100	L/O	PUSH SW

Connector No.	M77
Connector Name	WIRE TO WIRE
Connector Type	TH80FW-CS16-TM4

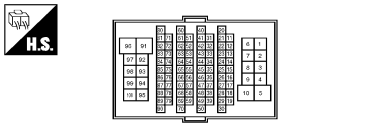

Terminal No.	Color of Wire	Signal Name [Specification]
80	P	–
81	L	–
96	Y	–

Connector No.	M79
Connector Name	WIRE TO WIRE
Connector Type	TH24FW-NH

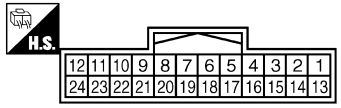

Terminal No.	Color of Wire	Signal Name [Specification]
5	W	–
8	SB	–
20	GR/L	–

Connector No.	M80
Connector Name	WIRE TO WIRE
Connector Type	TH16FW-NH

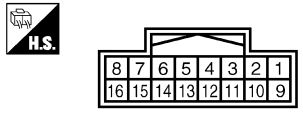

Terminal No.	Color of Wire	Signal Name [Specification]
8	BR/Y	–
16	W/G	–

JCKWM2847GB

BASIC INSPECTION

DIAGNOSIS AND REPAIR WORK FLOW

Work Flow

INFOID:0000000006038502

OVERALL SEQUENCE

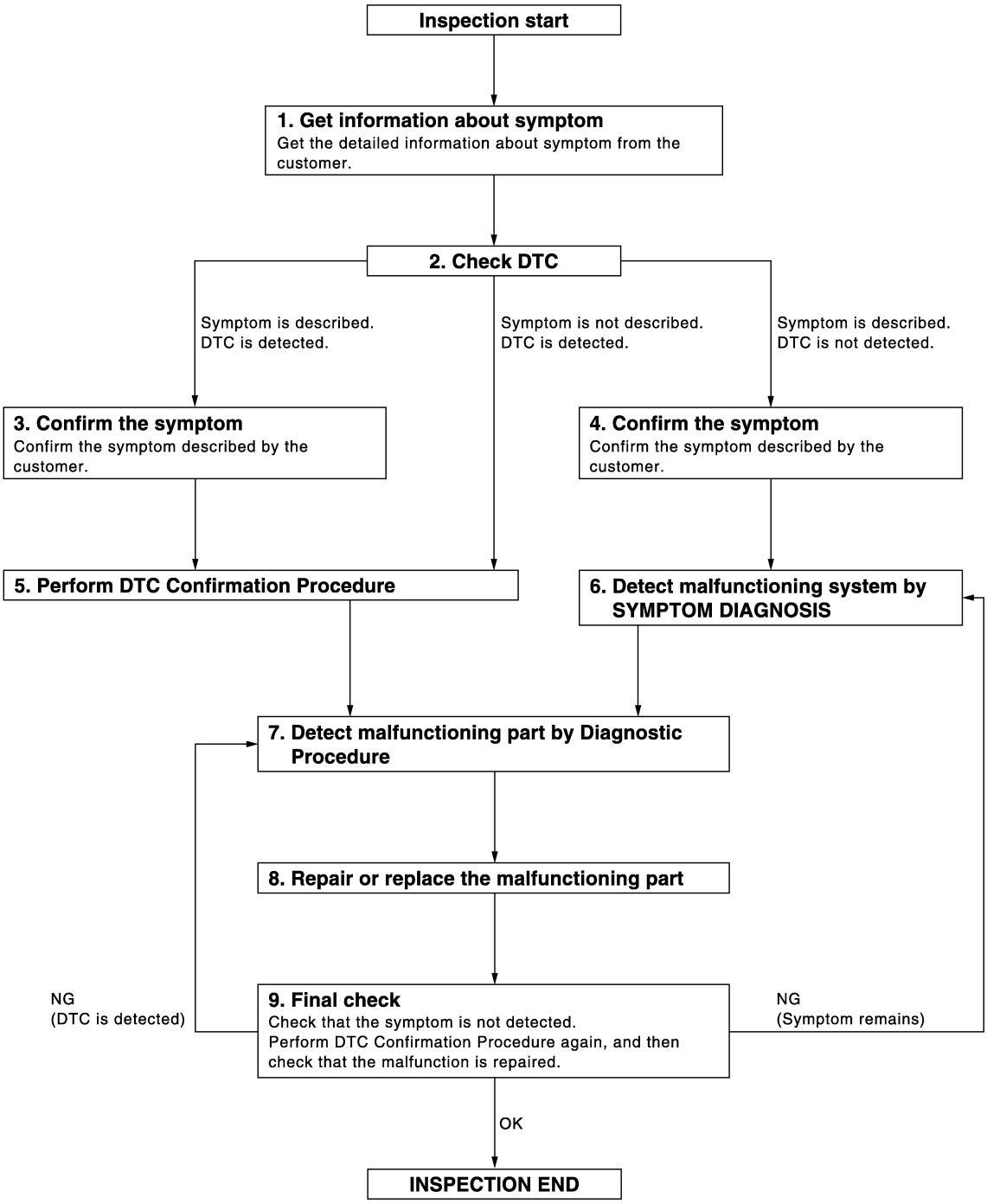

JMKIA3449GB

DETAILED FLOW

1. GET INFORMATION ABOUT SYMPTOM

Get detailed information from the customer about the symptom (the condition and the environment when the incident/malfunction occurs).

>> GO TO 2.

2. CHECK DTC

1. Check DTC for “ENGINE”, “BCM” and “IPDM E/R” using CONSULT-III.
2. Perform the following procedure if DTC is detected.
- Record DTC and freeze frame data (Print them out using CONSULT-III.)
- Erase DTC.
- Study the relationship between the cause detected by DTC and the symptom described by the customer.
3. Check related service bulletins for information.

Are any symptoms described and any DTC detected?

Symptom is described, DTC is detected>>GO TO 3.
Symptom is described, DTC is not detected>>GO TO 4.
Symptom is not described, DTC is detected>>GO TO 5.

3. CONFIRM THE SYMPTOM

Confirm the symptom described by the customer.
Connect CONSULT-III to the vehicle, and check self diagnosis results in real time.
Verify relation between the symptom and the condition when the symptom is detected.

>> GO TO 5.

4. CONFIRM THE SYMPTOM

Confirm the symptom described by the customer.
Connect CONSULT-III to the vehicle, and check self diagnosis results in real time.
Verify relation between the symptom and the condition when the symptom is detected.

>> GO TO 6.

5. PERFORM DTC CONFIRMATION PROCEDURE

Perform DTC CONFIRMATION PROCEDURE for the detected DTC, and then check that DTC is detected again. At this time, always connect CONSULT-III to the vehicle, and check self diagnostic results in real time.
If two or more DTCs are detected, refer to BCS-39, "DTC Inspection Priority Chart" (BCM) or PCS-22, "DTC Index" (IPDM E/R), and determine the trouble diagnosis order.

Is DTC detected?

YES >> GO TO 7.
NO >> Refer to GI-33, "Intermittent Incident".

6. DETECT MALFUNCTIONING SYSTEM BY SYMPTOM DIAGNOSIS

Detect malfunctioning system according to SYMPTOM DIAGNOSIS based on the confirmed symptom in step 4, and determine the trouble diagnosis order based on possible causes and symptom.

>> GO TO 7.

7. DETECT MALFUNCTIONING PART BY DIAGNOSTIC PROCEDURE

Inspect according to Diagnostic Procedure of the system.
NOTE:
The Diagnostic Procedure is described based on open and short circuit inspection.

Is malfunctioning part detected?

YES >> GO TO 8.
NO >> Check voltage of related BCM terminals or IPDM E/R terminals using CONSULT-III.

8. REPAIR OR REPLACE THE MALFUNCTIONING PART

1. Repair or replace the malfunctioning part.

2. Reconnect parts or connectors disconnected during Diagnostic Procedure again after repair and replacement.
3. Check DTC. If DTC is detected, erase it.

>> GO TO 9.

9. FINAL CHECK

When DTC is detected in step 2, perform DTC CONFIRMATION PROCEDURE again, and then check that the malfunction is repaired securely.
When symptom is described by the customer, refer to confirmed symptom in step 3 or 4, and check that the symptom is not detected.

Does the symptom reappear?

YES (DTC is detected)>>GO TO 7.
YES (Symptom remains)>>GO TO 6.
NO >> INSPECTION END

ADDITIONAL SERVICE WHEN REPLACING CONTROL UNIT

ECM

ECM : Description

INFOID:0000000006038503

Performing the following procedure can automatically activate recommunication of ECM and BCM, but only when the ECM is replaced with a new one*.
*: New one means a virgin ECM that has never been energized on-board.
(In this step, initialization procedure by CONSULT-III is not necessary)
NOTE:
- **When registering new Key IDs or replacing the ECM that is not brand new, refer to CONSULT-III Operation Manual NATS-IVIS/NVIS.**
- **If multiple keys are attached to the key holder, separate them before beginning work.**
- **Distinguish keys with unregistered key IDs from those with registered IDs.**

ECM : Work Procedure

INFOID:0000000006038504

1. PERFORM ECM RECOMMUNICATING FUNCTION

1. Install ECM.
2. Contact backside of registered Intelligent key* to push-button ignition switch, then turn power supply position to ON.
   *: To perform this step, use the key that is used before performing ECM replacement.
3. Maintain power supply position in the ON position for at least 5 seconds.
4. Turn power supply position to OFF.
5. Check that the engine starts.

>> GO TO 2.

2. PERFORM ADDITIONAL SERVICE WHEN REPLACING ECM

Perform the following procedure.
- HR12DE (TYPE 2): EC-376, "Work Procedure"

>> END

BCM

BCM : Description

INFOID:0000000006038505

BEFORE REPLACEMENT

When replacing BCM, save or print current vehicle specification with CONSULT-III configuration before replacement.
NOTE:
If “READ CONFIGURATION” can not be used, use the “WRITE CONFIGURATION - Manual selection” after replacing BCM.

AFTER REPLACEMENT

CAUTION:
- **When replacing BCM, you must perform “WRITE CONFIGURATION” with CONSULT-III.**
- **Complete the procedure of “WRITE CONFIGURATION” in order.**
- **If you set incorrect “WRITE CONFIGURATION”, incidents might occur.**
- **Configuration is different for each vehicle model. Confirm configuration of each vehicle model.**
- **When replacing BCM, perform the system initialization (NATS).**

BCM : Work Procedure

INFOID:0000000006038506

1. SAVING VEHICLE SPECIFICATION

CONSULT-III Configuration
Perform “READ CONFIGURATION” to save or print current vehicle specification. Refer to BCS-44, "Work Procedure".

NOTE:
If “READ CONFIGURATION” can not be used, use the “WRITE CONFIGURATION - Manual selection” after replacing BCM.

>> GO TO 2.

2. REPLACE BCM

Replace BCM. Refer to BCS-57, "Removal and Installation".

>> GO TO 3.

3. WRITING VEHICLE SPECIFICATION

CONSULT-III Configuration
Perform “WRITE CONFIGURATION - Config file” or “WRITE CONFIGURATION - Manual selection” to write vehicle specification. Refer to BCS-45, "Work Procedure".

>> GO TO 4.

4. INITIALIZE BCM (NATS)

Perform BCM initialization. (NATS)

>> WORK END

DTC/CIRCUIT DIAGNOSIS

P1610 LOCK MODE

Description

INFOID:0000000006038507

ECM forcibly switches to the mode that inhibits engine start, when engine start operation is performed 5 times or more while communication between ECM and BCM is not normal.

DTC Logic

INFOID:0000000006038508

DTC DETECTION LOGIC

DTC No.	Trouble diagnosis name	DTC detecting condition	Possible cause
P1610	LOCK MODE	When ECM detects a communication malfunction between ECM and BCM 5 times or more.	—

DTC CONFIRMATION PROCEDURE

1. PERFORM DTC CONFIRMATION PROCEDURE

1. Turn ignition switch ON.
2. Check DTC in “Self Diagnostic Result” mode of “ENGINE” using CONSULT-III.

Is DTC detected?

YES >> Go to SEC-38, "Diagnosis Procedure".
NO >> INSPECTION END

Diagnosis Procedure

INFOID:0000000006038509

1. CHECK ENGINE START FUNCTION

1. Check that DTC except for DTC P1610 is not detected.
   If detected, erase the DTC after fixing.
2. Turn ignition switch OFF.
3. Contact the registered Intelligent Key backside to push-button ignition switch and wait 5 seconds.
4. Turn ignition switch ON.
5. Turn ignition switch OFF and wait 5 seconds.
6. Repeat steps 3 and 5 twice (a total of 3 times).
7. Check that engine can start.

>> INSPECTION END

P1611 ID DISCORD, IMMU-ECM

DTC Logic

INFOID:0000000006038510

DTC DETECTION LOGIC

NOTE:
- If DTC P1611 is displayed with DTC U1000 (for BCM), first perform the trouble diagnosis for DTC U1000. Refer to BCS-47, "DTC Logic".
- If DTC P1611 is displayed with DTC U1010 (for BCM), first perform the trouble diagnosis for DTC U1010. Refer to BCS-48, "DTC Logic".

DTC No.	Trouble diagnosis name	DTC detecting condition	Possible cause
P1611	ID DISCORD, IMMU-ECM	The ID verification results between BCM and ECM are NG.	• Harness or connectors (The CAN communication line is open or shorted.) • BCM • ECM

DTC CONFIRMATION PROCEDURE

1. PERFORM DTC CONFIRMATION PROCEDURE

1. Turn ignition switch ON.
2. Check DTC in “Self Diagnostic Result” mode of “ENGINE” using CONSULT-III.

Is DTC detected?

YES >> Go to SEC-39, "Diagnosis Procedure".
NO >> INSPECTION END

Diagnosis Procedure

INFOID:0000000006038511

1. PERFORM INITIALIZATION

Perform initialization of BCM and reregistration of all Intelligent Keys using CONSULT-III.
For initialization and registration procedures, refer to CONSULT-III Operation Manual NATS-IVIS/NVIS.

Can the system be initialized and can the engine be started with reregistered Intelligent Key?

YES >> INSPECTION END
NO >> GO TO 2.

2. CHECK SELF DIAGNOSTIC RESULT

1. Select “Self Diagnostic Result” mode of “ENGINE” using CONSULT-III.
2. Erase DTC.
3. Perform DTC CONFIRMATION PROCEDURE for DTC P1611. Refer to SEC-39, "DTC Logic".

Is DTC detected?

YES >> GO TO 3.
NO >> INSPECTION END

3. REPLACE BCM

1. Replace BCM. Refer to BCS-57, "Removal and Installation".
2. Perform initialization of BCM using CONSULT-III.
   For initialization procedure, refer to CONSULT-III Operation Manual NATS-IVIS/NVIS.

Can the system be initialized and can the engine be started with reregistered Intelligent Key?

YES >> INSPECTION END
NO >> GO TO 4.

4. REPLACE ECM

1. Replace ECM. Refer to EC-524, "Removal and Installation" [HR12DE (TYPE 2)].
2. Perform “ADDITIONAL SERVICE WHEN REPLACING ECM”. Refer to SEC-36, "ECM : Work Procedure" [HR12DE (TYPE 2)].

Can the system be initialized and can the engine be started with reregistered Intelligent Key?

YES >> INSPECTION END

NO >> GO TO 5.

5. CHECK INTERMITTENT INCIDENT

Refer to GI-33, "Intermittent Incident".

>> INSPECTION END

P1612 CHAIN OF ECM-IMMU

DTC Logic

INFOID:0000000006038512

DTC DETECTION LOGIC

NOTE:
- If DTC P1612 is displayed with DTC U1000 (for BCM), first perform the trouble diagnosis for DTC U1000. Refer to BCS-47, "DTC Logic".
- If DTC P1612 is displayed with DTC U1010 (for BCM), first perform the trouble diagnosis for DTC U1010. Refer to BCS-48, "DTC Logic".

DTC No.	Trouble diagnosis name	DTC detecting condition	Possible cause
P1612	CHAIN OF ECM-IMMU	Inactive communication between ECM and BCM	• Harness or connectors (The CAN communication line is open or shorted.) • BCM • ECM

DTC CONFIRMATION PROCEDURE

1. PERFORM DTC CONFIRMATION PROCEDURE

1. Turn ignition switch ON.
2. Check DTC in “Self Diagnostic Result” mode of “ENGINE” using CONSULT-III.

Is DTC detected?

YES >> Go to SEC-41, "Diagnosis Procedure".
NO >> INSPECTION END

Diagnosis Procedure

INFOID:0000000006038513

1. REPLACE BCM

1. Replace BCM. Refer to BCS-57, "Removal and Installation".
2. Perform initialization of BCM using CONSULT-III.
   For initialization procedure, refer to CONSULT-III Operation Manual NATS-IVIS/NVIS.

Does the engine start?

YES >> INSPECTION END
NO >> GO TO 2.

2. REPLACE ECM

1. Replace ECM. Refer to EC-524, "Removal and Installation" [HR12DE (TYPE 2)].
2. Perform “ADDITIONAL SERVICE WHEN REPLACING ECM”. Refer to SEC-36, "ECM : Work Procedure" [HR12DE (TYPE 2)].

>> INSPECTION END

P1614 CHAIN OF IMMU-KEY

DTC Logic

INFOID:0000000006038514

DTC DETECTION LOGIC

DTC No.	Trouble diagnosis name	DTC detecting condition	Possible cause
P1614	CHAIN OF IMMU-KEY	Inactive communication between NATS antenna amp. and BCM	• Harness or connectors (NATS antenna amp. circuit is open or shorted.) • NATS antenna amp. • BCM

DTC CONFIRMATION PROCEDURE

1.PERFORM DTC CONFIRMATION PROCEDURE 1

1. Contact Intelligent Key backside to push-button ignition switch.
2. Check DTC in “Self Diagnostic Result” mode of “ENGINE” using CONSULT-III.

Is DTC detected?

YES >> Go to SEC-42, "Diagnosis Procedure".
NO >> GO TO 2.

2.PERFORM DTC CONFIRMATION PROCEDURE 2

1. Press the push-button ignition switch.
2. Check DTC in “Self Diagnostic Result” mode of “ENGINE” using CONSULT-III.

Is DTC detected?

YES >> Go to SEC-42, "Diagnosis Procedure".
NO >> INSPECTION END

Diagnosis Procedure

INFOID:0000000006038515

1.CHECK FUSE

1. Turn ignition switch OFF.
2. Check that the following fuse in IPDM E/R is not blown.

Signal name	Fuse No.
Battery power supply	49

Is the fuse fusing?

YES >> Replace the blown fuse after repairing the cause of blowing.
NO >> GO TO 2.

2.CHECK NATS ANTENNA AMP. POWER SUPPLY

1. Disconnect NATS antenna amp. connector.
2. Check voltage between NATS antenna amp. harness connector and ground.

(+)		(–)	Voltage (V) (Approx.)
NATS antenna amp.			
Connector	Terminal		
M26	1	Ground	Battery voltage

Is the inspection result normal?

YES >> GO TO 4.
NO >> GO TO 3.

3.CHECK NATS ANTENNA AMP. POWER SUPPLY CIRCUIT

1. Disconnect IPDM E/R connector.
2. Check continuity between IPDM E/R harness connector and NATS antenna amp. connector.

IPDM E/R		NATS antenna amp.		Continuity
Connector	Terminal	Connector	Terminal	
E17	71	M26	1	Existed

3. Check continuity between IPDM E/R harness connector and ground.

IPDM E/R		Ground	Continuity
Connector	Terminal		
E17	71		Not existed

Is the inspection result normal?

YES >> Replace IPDM E/R. Refer to BCS-57, "Removal and Installation".
NO >> Repair or replace harness.

4. CHECK NATS ANTENNA AMP. OUTPUT SIGNAL 1

1. Connect NATS antenna amp. connector.
2. Disconnect BCM connector.
3. Check voltage between BCM harness connector and ground.

(+)		(–)	Voltage (V) (Approx.)
BCM			
Connector	Terminal		
M68	21	Ground	12

Is the inspection result normal?

YES >> GO TO 6.
NO >> GO TO 5.

5. CHECK NATS ANTENNA AMP. OUTPUT SIGNAL CIRCUIT 1

1. Disconnect NATS antenna amp. connector.
2. Check continuity between BCM harness connector and NATS antenna amp. connector.

BCM		NATS antenna amp.		Continuity
Connector	Terminal	Connector	Terminal	
M68	21	M26	2	Existed

3. Check continuity between BCM harness connector and ground.

BCM		Ground	Continuity
Connector	Terminal		
M68	21		Not existed

Is the inspection result normal?

YES >> Replace NATS antenna amp. Refer to SEC-127, "Removal and Installation".
NO >> Repair or replace harness.

6. CHECK NATS ANTENNA AMP. COMMUNICATION SIGNAL 1

1. Connect BCM connector.
2. Check voltage between BCM harness connector and ground using analog tester.

(+)		(–)	Condition	Voltage (V) (Approx.)
BCM				
Connector	Terminal			
M68	21	Ground	Contact Intelligent Key backside to push-button ignition switch, then turn ignition switch ON.	Just after pressing push-button ignition switch, pointer of analog tester should move.

Is the inspection result normal?

YES >> GO TO 7.
NO >> Replace NATS antenna amp. Refer to SEC-127, "Removal and Installation".

7. CHECK NATS ANTENNA AMP. OUTPUT SIGNAL 2

1. Disconnect BCM connector.
2. Check voltage between BCM harness connector and ground.

(+)		(–)	Voltage (V) (Approx.)
BCM			
Connector	Terminal		
M68	25	Ground	12

Is the inspection result normal?

YES >> GO TO 9.
NO >> GO TO 8.

8. CHECK NATS ANTENNA AMP. OUTPUT SIGNAL CIRCUIT 2

1. Disconnect NATS antenna amp. connector.
2. Check continuity between BCM harness connector and NATS antenna amp. connector.

BCM		NATS antenna amp.		Continuity
Connector	Terminal	Connector	Terminal	
M68	25	M26	3	Existed

3. Check continuity between BCM harness connector and ground.

BCM		Ground	Continuity
Connector	Terminal		
M68	25		Not existed

Is the inspection result normal?

YES >> Replace NATS antenna amp. Refer to SEC-127, "Removal and Installation".
NO >> Repair or replace harness.

9. CHECK NATS ANTENNA AMP. COMMUNICATION SIGNAL 2

1. Connect BCM connector.
2. Check voltage between BCM harness connector and ground using analog tester.

(+)		(–)	Condition	Voltage (V) (Approx.)
BCM				
Connector	Terminal			
M68	25	Ground	Contact Intelligent Key backside to push-button ignition switch, then turn ignition switch ON.	Just after pressing push-button ignition switch, pointer of analog tester should move.

Is the inspection result normal?

YES >> GO TO 10.
NO >> Replace NATS antenna amp. Refer to SEC-127, "Removal and Installation".

10. CHECK NATS ANTENNA AMP. GROUND CIRCUIT

1. Disconnect NATS antenna amp. connector.
2. Check continuity between NATS antenna amp. harness connector and ground.

NATS antenna amp.		Ground	Continuity
Connector	Terminal		
M26	4		Existed

Is the inspection result normal?

YES >> GO TO 11.
NO >> Repair or replace harness.

11. CHECK INTERMITTENT INCIDENT

Refer to GI-33, "Intermittent Incident".

>> INSPECTION END

B2192 ID DISCORD, IMMU-ECM

DTC Logic

INFOID:0000000006038516

DTC DETECTION LOGIC

NOTE:

- If DTC B2192 is displayed with DTC U1000, first perform the trouble diagnosis for DTC U1000. Refer to BCS-47, "DTC Logic".
- If DTC B2192 is displayed with DTC U1010, first perform the trouble diagnosis for DTC U1010. Refer to BCS-48, "DTC Logic".

DTC No.	Trouble diagnosis name	DTC detecting condition	Possible cause
B2192	ID DISCORD BCM-ECM	The ID verification results between BCM and ECM are NG.	• Harness or connectors (The CAN communication line is open or shorted.) • BCM • ECM

DTC CONFIRMATION PROCEDURE

1. PERFORM DTC CONFIRMATION PROCEDURE

1. Turn ignition switch ON.
2. Check DTC in “Self Diagnostic Result” mode of “BCM” using CONSULT-III.

Is DTC detected?

YES >> Go to SEC-46, "Diagnosis Procedure".
NO >> INSPECTION END

Diagnosis Procedure

INFOID:0000000006038517

1. PERFORM INITIALIZATION

Perform initialization of BCM and reregistration of all Intelligent Keys using CONSULT-III.
For initialization and registration procedures, refer to CONSULT-III Operation Manual NATS-IVIS/NVIS.

Can the system be initialized and can the engine be started with reregistered Intelligent Key?

YES >> INSPECTION END
NO >> GO TO 2.

2. CHECK SELF-DIAGNOSIS RESULT

1. Select “Self Diagnostic Result” mode of “BCM” using CONSULT-III.
2. Erase DTC.
3. Perform DTC CONFIRMATION PROCEDURE for DTC B2192. Refer to SEC-46, "DTC Logic".

Is DTC detected?

YES >> GO TO 3.
NO >> INSPECTION END

3. REPLACE BCM

1. Replace BCM. Refer to BCS-57, "Removal and Installation".
2. Perform initialization of BCM using CONSULT-III.
   For initialization procedure, refer to CONSULT-III Operation Manual NATS-IVIS/NVIS.

Can the system be initialized and can the engine be started with reregistered Intelligent Key?

YES >> INSPECTION END
NO >> GO TO 4.

4. REPLACE ECM

1. Replace ECM. Refer to EC-524, "Removal and Installation" [HR12DE (TYPE 2)].
2. Perform “ADDITIONAL SERVICE WHEN REPLACING ECM”. Refer to SEC-36, "ECM : Work Procedure" [HR12DE (TYPE 2)].

Can the system be initialized and can the engine be started with reregistered Intelligent Key?

YES >> INSPECTION END

NO >> GO TO 5.

5. CHECK INTERMITTENT INCIDENT

Refer to GI-33, "Intermittent Incident".

>> INSPECTION END

B2193 CHAIN OF ECM-IMMU

DTC Logic

INFOID:0000000006038518

DTC DETECTION LOGIC

NOTE:

- If DTC B2193 is displayed with DTC U1000, first perform the trouble diagnosis for DTC U1000. Refer to BCS-47, "DTC Logic".
- If DTC B2193 is displayed with DTC U1010, first perform the trouble diagnosis for DTC U1010. Refer to BCS-48, "DTC Logic".

DTC No.	Trouble diagnosis name	DTC detecting condition	Possible cause
B2193	CHAIN OF BCM-ECM	Inactive communication between BCM and ECM	• Harness or connectors (The CAN communication line is open or shorted.) • BCM • ECM

DTC CONFIRMATION PROCEDURE

1. PERFORM DTC CONFIRMATION PROCEDURE

1. Turn ignition switch ON.
2. Check DTC in “Self Diagnostic Result” mode of “BCM” using CONSULT-III.

Is DTC detected?

YES >> Go to SEC-48, "Diagnosis Procedure".
NO >> INSPECTION END

Diagnosis Procedure

INFOID:0000000006038519

1. REPLACE BCM

1. Replace BCM. Refer to BCS-57, "Removal and Installation".
2. Perform initialization of BCM using CONSULT-III.
   For initialization procedure, refer to CONSULT-III Operation Manual NATS-IVIS/NVIS.

Does the engine start?

YES >> INSPECTION END
NO >> GO TO 2.

2. REPLACE ECM

1. Replace ECM. Refer to EC-524, "Removal and Installation" [HR12DE (TYPE 2)].
2. Perform “ADDITIONAL SERVICE WHEN REPLACING ECM”. Refer to SEC-36, "ECM : Work Procedure" [HR12DE (TYPE 2)].

>> INSPECTION END

B2195 ANTI-SCANNING

DTC Logic

INFOID:0000000006038520

DTC DETECTION LOGIC

DTC No.	Trouble diagnosis name	DTC detecting condition	Possible cause
B2195	ANTI-SCANNING	ID verification between BCM and ECM that is out of the specified specification is detected.	ID verification request out of the specified specification

DTC CONFIRMATION PROCEDURE

1. PERFORM DTC CONFIRMATION PROCEDURE

1. Turn ignition switch ON.
2. Check DTC in “Self Diagnostic Result” mode of “BCM” using CONSULT-III.

Is DTC detected?

YES >> Refer to SEC-49, "Diagnosis Procedure".
NO >> INSPECTION END.

Diagnosis Procedure

INFOID:0000000006038521

1. CHECK SELF DIAGNOSTIC RESULT 1

1. Select “Self Diagnostic Result” mode of “BCM” using CONSULT-III.
2. Erase DTC.
3. Perform DTC CONFIRMATION PROCEDURE for DTC B2195. Refer to SEC-49, "DTC Logic".

Is DTC detected?

YES >> GO TO 2.
NO >> INSPECTION END

2. CHECK EQUIPMENT OF THE VEHICLE

Check that unspecified accessory part related to engine start is not installed.

Is unspecified accessory part related to engine start installed?

YES >> GO TO 3.
NO >> Replace BCM. Refer to BCS-57, "Removal and Installation".

3. CHECK SELF DIAGNOSTIC RESULT 2

1. Obtain the customers approval to remove unspecified accessory part related to engine start, and then remove it.
2. Select “Self Diagnostic Result” of “BCM” using CONSULT-III.
3. Erase DTC.
4. Perform DTC CONFIRMATION PROCEDURE for DTC B2195. Refer to SEC-49, "DTC Logic".

Is DTC detected?

YES >> Replace BCM. Refer to BCS-57, "Removal and Installation".
NO >> INSPECTION END

B2198 NATS ANTENNA AMP.

DTC Logic

INFOID:0000000006038522

DTC DETECTION LOGIC

DTC No.	Trouble diagnosis name	DTC detecting condition	Possible cause
B2198	NATS ANTENNA AMP.	Inactive communication between NATS antenna amp. and BCM	• Harness or connectors (NATS antenna amp. circuit is open or shorted.) • NATS antenna amp. • BCM

DTC CONFIRMATION PROCEDURE

1. PERFORM DTC CONFIRMATION PROCEDURE 1

1. Contact Intelligent Key backside to push-button ignition switch.
2. Check DTC in “Self Diagnostic Result” mode of “BCM” using CONSULT-III.

Is DTC detected?

YES >> Go to SEC-50, "Diagnosis Procedure".
NO >> GO TO 2.

2. PERFORM DTC CONFIRMATION PROCEDURE 2

1. Press the push-button ignition switch.
2. Check DTC in “Self Diagnostic Result” mode of “BCM” using CONSULT-III.

Is DTC detected?

YES >> Go to SEC-50, "Diagnosis Procedure".
NO >> INSPECTION END

Diagnosis Procedure

INFOID:0000000006038523

1. CHECK FUSE

1. Turn ignition switch OFF.
2. Check that the following fuse in IPDM E/R is not blown.

Signal name	Fuse No.
Battery power supply	49

Is the fuse fusing?

YES >> Replace the blown fuse after repairing the cause of blowing.
NO >> GO TO 2.

2. CHECK NATS ANTENNA AMP. POWER SUPPLY

1. Disconnect NATS antenna amp. connector.
2. Check voltage between NATS antenna amp. harness connector and ground.

(+)		(–)	Voltage (V) (Approx.)
NATS antenna amp.			
Connector	Terminal		
M26	1	Ground	Battery voltage

Is the inspection result normal?

YES >> GO TO 4.
NO >> GO TO 3.

3. CHECK NATS ANTENNA AMP. POWER SUPPLY CIRCUIT

1. Disconnect IPDM E/R connector.
2. Check continuity between IPDM E/R harness connector and NATS antenna amp. connector.

IPDM E/R		NATS antenna amp.		Continuity
Connector	Terminal	Connector	Terminal	
E17	71	M26	1	Existed

3. Check continuity between IPDM E/R harness connector and ground.

IPDM E/R		Ground	Continuity
Connector	Terminal		
E17	71		Not existed

Is the inspection result normal?

YES >> Replace IPDM E/R. Refer to PCS-28, "Removal and Installation".
NO >> Repair or replace harness.

4. CHECK NATS ANTENNA AMP. OUTPUT SIGNAL 1

1. Connect NATS antenna amp. connector.
2. Disconnect BCM connector.
3. Check voltage between BCM harness connector and ground.

(+)		(–)	Voltage (V) (Approx.)
BCM			
Connector	Terminal		
M68	21	Ground	12

Is the inspection result normal?

YES >> GO TO 6.
NO >> GO TO 5.

5. CHECK NATS ANTENNA AMP. OUTPUT SIGNAL CIRCUIT 1

1. Disconnect NATS antenna amp. connector.
2. Check continuity between BCM harness connector and NATS antenna amp. connector.

BCM		NATS antenna amp.		Continuity
Connector	Terminal	Connector	Terminal	
M68	21	M26	2	Existed

3. Check continuity between BCM harness connector and ground.

BCM		Ground	Continuity
Connector	Terminal		
M68	21		Not existed

Is the inspection result normal?

YES >> Replace NATS antenna amp. Refer to SEC-127, "Removal and Installation".
NO >> Repair or replace harness.

6. CHECK NATS ANTENNA AMP. COMMUNICATION SIGNAL 1

1. Connect BCM connector.
2. Check voltage between BCM harness connector and ground using analog tester.

(+)		(–)	Condition	Voltage (V) (Approx.)
BCM				
Connector	Terminal			
M68	21	Ground	Contact Intelligent Key backside to push-button ignition switch, then turn ignition switch ON.	Just after pressing push-button ignition switch, pointer of analog tester should move.

Is the inspection result normal?

YES >> GO TO 7.
NO >> Replace NATS antenna amp. Refer to SEC-127, "Removal and Installation".

7. CHECK NATS ANTENNA AMP. OUTPUT SIGNAL 2

1. Disconnect BCM connector.
2. Check voltage between BCM harness connector and ground.

(+)		(–)	Voltage (V) (Approx.)
BCM			
Connector	Terminal		
M68	25	Ground	12

Is the inspection result normal?

YES >> GO TO 9.
NO >> GO TO 8.

8. CHECK NATS ANTENNA AMP. OUTPUT SIGNAL CIRCUIT 2

1. Disconnect NATS antenna amp. connector.
2. Check continuity between BCM harness connector and NATS antenna amp. connector.

BCM		NATS antenna amp.		Continuity
Connector	Terminal	Connector	Terminal	
M68	25	M26	3	Existed

3. Check continuity between BCM harness connector and ground.

BCM		Ground	Continuity
Connector	Terminal		
M68	25		Not existed

Is the inspection result normal?

YES >> Replace NATS antenna amp. Refer to SEC-127, "Removal and Installation".
NO >> Repair or replace harness.

9. CHECK NATS ANTENNA AMP. COMMUNICATION SIGNAL 2

1. Connect BCM connector.
2. Check voltage between BCM harness connector and ground using analog tester.

(+)		(–)	Condition	Voltage (V) (Approx.)
BCM				
Connector	Terminal			
M68	25	Ground	Contact Intelligent Key backside to push-button ignition switch, then turn ignition switch ON.	Just after pressing push-button ignition switch, pointer of analog tester should move.

Is the inspection result normal?

YES >> GO TO 10.
NO >> Replace NATS antenna amp. Refer to SEC-127, "Removal and Installation".

10. CHECK NATS ANTENNA AMP. GROUND CIRCUIT

1. Disconnect NATS antenna amp. connector.
2. Check continuity between NATS antenna amp. harness connector and ground.

NATS antenna amp.		Ground	Continuity
Connector	Terminal		
M26	4		Existed

Is the inspection result normal?

YES >> GO TO 11.
NO >> Repair or replace harness.

11. CHECK INTERMITTENT INCIDENT

Refer to GI-33, "Intermittent Incident".

>> INSPECTION END

B2013 STEERING LOCK UNIT

DTC Logic

INFOID:0000000006038524

DTC DETECTION LOGIC

DTC No.	Trouble diagnosis name	DTC detecting condition	Possible cause
B2013	ID DISCORD BCM-S/L	The ID verification results between BCM and steering lock unit are NG.	Steering lock unit

DTC CONFIRMATION PROCEDURE

1.PERFORM DTC CONFIRMATION PROCEDURE

1. Lock the steering.
   NOTE:

To lock the steering	1. Set the selector lever in the P position. 2. Turn the power supply position to the OFF position. 3. Press any door switch.
To unlock the steering	1. Set the selector lever in the P position. 2. Press the push-button ignition switch with brake pedal not depressed.

3. Press the push-button ignition switch.
4. Check DTC in “Self Diagnostic Result” mode of “BCM” using CONSULT-III.

Is DTC detected?

YES >> Go to SEC-54, "Diagnosis Procedure".
NO >> INSPECTION END

Diagnosis Procedure

INFOID:0000000006038525

1.PERFORM INITIALIZATION

Perform initialization of BCM using CONSULT-III.
For initialization procedure, refer to CONSULT-III Operation Manual NATS-IVIS/NVIS.

Does steering lock operate?

YES >> INSPECTION END
NO >> GO TO 2.

2.REPLACE STEERING LOCK UNIT

1. Replace steering lock unit.
2. Perform initialization of BCM using CONSULT-III.
   For initialization procedure, refer to CONSULT-III Operation Manual NATS-IVIS/NVIS.

Does steering lock operate?

YES >> INSPECTION END
NO >> GO TO 3.

3.CHECK INTERMITTENT INCIDENT

Refer to GI-33, "Intermittent Incident".

>> INSPECTION END

B2014 CHAIN OF STRG-IMMU

DTC Logic

INFOID:0000000006038526

DTC DETECTION LOGIC

DTC No.	Trouble diagnosis name	DTC detecting condition	Possible cause
B2014	CHAIN OF S/L-BCM	Inactive communication between steering lock unit and BCM	• Harness or connectors (Steering lock unit circuit is open or shorted.) • Steering lock unit • BCM

DTC CONFIRMATION PROCEDURE

1. PERFORM DTC CONFIRMATION PROCEDURE

1. Lock steering.
   NOTE:

To lock the steering	1. Set the selector lever in the P position. 2. Turn the power supply position to the OFF position. 3. Press any door switch.
To unlock the steering	1. Set the selector lever in the P position. 2. Press the push-button ignition switch with brake pedal not depressed.

3. Press the push-button ignition switch.
4. Check DTC in “Self Diagnostic Result” mode of “BCM” using CONSULT-III.

Is DTC detected?

YES >> Go to SEC-55, "Diagnosis Procedure".
NO >> INSPECTION END

Diagnosis Procedure

INFOID:0000000006038527

1. CHECK STEERING LOCK UNIT POWER SUPPLY

1. Turn ignition switch OFF.
2. Disconnect steering lock unit connector.
3. Check voltage between steering lock unit harness connector and ground.

(+)		(–)	Condition		Voltage (V) (Approx.)
Steering lock unit					
Connector	Terminal				
M12	7	Ground	Ignition switch	OFF or ACC	12
				ON	0

Is the inspection result normal?

YES >> GO TO 3.
NO >> GO TO 2.

2. CHECK STEERING LOCK UNIT POWER SUPPLY CIRCUIT

1. Disconnect BCM connector.
2. Check continuity between steering lock unit harness connector and BCM harness connector.

Steering lock unit		BCM		Continuity
Connector	Terminal	Connector	Terminal	
M12	7	M71	95	Existed

3. Check continuity between steering lock unit harness connector and ground.

Steering lock unit		Ground	Continuity
Connector	Terminal		
M12	7		Not existed

Is the inspection result normal?

YES >> Replace BCM. Refer to BCS-57, "Removal and Installation".
NO >> Repair or replace harness.

3. CHECK STEERING LOCK UNIT GROUND CIRCUIT

Check continuity between steering lock unit and ground.

Steering lock unit		Ground	Continuity
Connector	Terminal		
M12	5		Existed
	6		

Is the inspection result normal?

YES >> GO TO 4.
NO >> Repair or replace harness.

4. CHECK STEERING LOCK UNIT COMMUNICATION SIGNAL

1. Connect steering lock unit connector and BCM connector.
2. Read voltage signal between steering lock unit harness connector and ground.

(+) Steering lock unit		(–)	Condition		Voltage (V) (Approx.)
Connector	Terminal				
M12	2	Ground	Steering lock unit	Lock status	12
				Lock or unlock	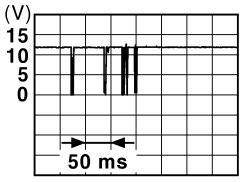 JMKIA0066GB
				For 15 seconds after unlock	12
				15 seconds or later after unlock.	0

NOTE:

To lock the steering	1. Set the selector lever in the P position. 2. Turn the power supply position to the OFF position. 3. Press any door switch.
To unlock the steering	1. Set the selector lever in the P position. 2. Press the push-button ignition switch with brake pedal not depressed.

Is the inspection result normal?

YES >> Replace steering lock unit.
NO >> GO TO 5.

5. CHECK STEERING LOCK UNIT COMMUNICATION CIRCUIT

1. Disconnect steering lock unit and BCM connector.
2. Check continuity between steering lock unit harness connector and BCM harness connector.

Steering lock unit		BCM		Continuity
Connector	Terminal	Connector	Terminal	
M12	2	M71	94	Existed

3. Check continuity between steering lock unit harness connector and ground.

Steering lock unit		Ground	Continuity
Connector	Terminal		
M12	2		Not existed

Is the inspection result normal?

YES >> Replace BCM. Refer to BCS-57, "Removal and Installation".
NO >> Repair or replace harness.

B2555 STOP LAMP

DTC Logic

INFOID:0000000006038528

DTC DETECTION LOGIC

DTC No.	Trouble diagnosis name	DTC detecting condition	Possible cause
B2555	STOP LAMP	BCM makes a comparison between the upper voltage and lower voltage of stop lamp switch. It judges from their values to detect the malfunctioning circuit.	• Harness or connectors (Stop lamp switch circuit is open or shorted.) • Stop lamp switch • Fuse

DTC CONFIRMATION PROCEDURE

1.PERFORM DTC CONFIRMATION PROCEDURE

1. Depress the brake pedal and wait 1 second or more.
2. Check DTC in “Self Diagnostic Result” mode of “BCM” using CONSULT-III.

Is DTC detected?

YES >> Go to SEC-58, "Diagnosis Procedure".
NO >> INSPECTION END

Diagnosis Procedure

INFOID:0000000006038529

1.CHECK STOP LAMP SWITCH INPUT SIGNAL 1

1. Turn ignition switch OFF.
2. Disconnect BCM connector.
3. Check voltage between BCM harness connector and ground.

(+)		(–)	Voltage (V) (Approx.)
BCM			
Connector	Terminal		
M71	105	Ground	Battery voltage

Is the inspection normal?

YES >> GO TO 2.
NO-1 >> Check 10 A fuse [No. 38, located in the fuse block (J/B)].
NO-2 >> Check harness for open or short between BCM and fuse.

2.CHECK STOP LAMP SWITCH POWER SUPPLY CIRCUIT

1. Disconnect stop lamp switch connector.
2. Check voltage between stop lamp switch harness connector and ground.

(+)		(–)	Voltage (V) (Approx.)
Stop lamp switch			
Connector	Terminal		
E115	1	Ground	Battery voltage

Is the inspection result normal?

YES >> GO TO 3.
NO >> Check harness for open or short between stop lamp switch and fuse.

3.CHECK STOP LAMP SWITCH INPUT SIGNAL 2

1. Connect stop lamp switch connector.
2. Check voltage between BCM harness connector and ground.

(+)		(–)	Condition		Voltage (V) (Approx.)
BCM					
Connector	Terminal				
M68	9	Ground	Brake pedal	Depressed	Battery voltage
				Not depressed	0

Is the inspecting result normal?

YES >> Replace BCM. Refer to BCS-57, "Removal and Installation".
NO >> GO TO 4.

4. CHECK STOP LAMP SWITCH CIRCUIT

1. Disconnect stop lamp switch connector.
2. Check continuity between stop lamp switch harness connector and BCM harness connector.

Stop lamp switch		BCM		Continuity
Connector	Terminal	Connector	Terminal	
E115	2	M68	9	Existed

3. Check continuity between stop lamp switch harness connector and ground.

Stop lamp switch		Ground	Continuity
Connector	Terminal		
E115	2		Not existed

Is the inspection result normal?

YES >> GO TO 5.
NO >> Repair or replace harness.

5. CHECK STOP LAMP SWITCH

Refer to SEC-59, "Component Inspection".

Is the inspection result normal?

YES >> GO TO 6.
NO >> Replace stop lamp switch. Refer to BR-16, "Removal and Installation".

6. CHECK INTERMITTENT INCIDENT

Refer to GI-33, "Intermittent Incident".

>> INSPECTION END

Component Inspection

INFOID:0000000006038530

1. CHECK STOP LAMP SWITCH

1. Turn ignition switch OFF.
2. Disconnect stop lamp switch connector.
3. Check continuity between stop lamp switch terminals.

Stop lamp switch		Condition		Continuity
Terminal				
1	2	Brake pedal	Not depressed	Not existed
			Depressed	Existed

Is the inspection result normal?

YES >> INSPECTION END
NO >> Replace stop lamp switch. Refer to BR-16, "Removal and Installation".

B2556 PUSH-BUTTON IGNITION SWITCH

DTC Logic

INFOID:0000000006038531

DTC DETECTION LOGIC

DTC No.	Trouble diagnosis name	DTC detecting condition	Possible cause
B2556	PUSH-BTN IGN SW	BCM detects the push-button ignition switch stuck at ON for 100 seconds or more.	• Harness or connectors (Push-button ignition switch circuit is shorted.) • Push-button ignition switch • BCM

DTC CONFIRMATION PROCEDURE

1. PERFORM DTC CONFIRMATION PROCEDURE

1. Start the engine and wait 100 seconds or more.
2. Check DTC in “Self Diagnostic Result” mode of “BCM” using CONSULT-III.

Is DTC detected?

YES >> Go to SEC-60, "Diagnosis Procedure".
NO >> INSPECTION END

Diagnosis Procedure

INFOID:0000000006038532

1. CHECK PUSH-BUTTON IGNITION SWITCH INPUT SIGNAL

1. Turn ignition switch OFF.
2. Disconnect push-button ignition switch connector.
3. Check voltage between push-button ignition switch harness connector and ground.

(+)		(–)	Voltage (V) (Approx.)
Push-button ignition switch			
Connector	Terminal		
M101	8	Ground	12

Is the inspection result normal?

YES >> GO TO 3.
NO >> GO TO 2.

2. CHECK PUSH-BUTTON IGNITION SWITCH CIRCUIT

1. Disconnect BCM connector and IPDM E/R connector.
2. Check continuity between push-button ignition switch harness connector and BCM harness connector.

Push-button ignition switch		BCM		Continuity
Connector	Terminal	Connector	Terminal	
M101	8	M71	100	Existed

3. Check continuity between push-button ignition switch harness connector and ground.

Push-button ignition switch		Ground	Continuity
Connector	Terminal		
M101	8		Not existed

Is the inspection result normal?

YES >> Replace BCM. Refer to BCS-57, "Removal and Installation".
NO >> Repair or replace harness.

3. CHECK PUSH-BUTTON IGNITION SWITCH GROUND CIRCUIT

Check continuity between push-button ignition switch harness connector and ground.

Push-button ignition switch		Ground	Continuity
Connector	Terminal		
M101	4		Existed

Is the inspection result normal?

YES >> GO TO 4.
NO >> Repair or replace harness.

4. CHECK PUSH-BUTTON IGNITION SWITCH

Refer to SEC-61, "Component Inspection".

Is the inspection result normal?

YES >> GO TO 5.
NO >> Replace push-button ignition switch. Refer to SEC-128, "Removal and Installation".

5. CHECK INTERMITTENT INCIDENT

Refer to GI-33, "Intermittent Incident".

>> INSPECTION END

Component Inspection

INFOID:0000000006038533

1. CHECK PUSH-BUTTON IGNITION SWITCH

1. Turn ignition switch OFF.
2. Disconnect push-button ignition switch connector.
3. Check continuity between push-button ignition switch terminals.

Push-button ignition switch		Condition		Continuity
Terminal				
4	8	Push-button ignition switch	Pressed	Existed
			Not pressed	Not existed

Is the inspection result normal?

YES >> INSPECTION END
NO >> Replace push-button ignition switch. Refer to SEC-128, "Removal and Installation".

B2557 VEHICLE SPEED

DTC Logic

INFOID:0000000006038534

DTC DETECTION LOGIC

NOTE:

- If DTC B2557 is displayed with DTC U1000, first perform the trouble diagnosis for DTC U1000. Refer to BCS-47, "DTC Logic".
- If DTC B2557 is displayed with DTC U1010, first perform the trouble diagnosis for DTC U1010. Refer to BCS-48, "DTC Logic".

DTC No.	Trouble diagnosis name	DTC detecting condition	Possible causes
B2557	VEHICLE SPEED	BCM detects the following difference between the vehicle speed signal from “combination meter” and the one from “ABS actuator and electric unit” for 10 seconds continuously. • One is 10 km/h (6.2 MPH) or more and the other is 4 km/h (2.5 MPH) or less	• Harness or connectors (The CAN communication line is open or shorted.) • Combination meter • ABS actuator and electric unit (control unit)

DTC CONFIRMATION PROCEDURE

1. PERFORM DTC CONFIRMATION PROCEDURE

1. Start engine and wait 10 seconds or more.
2. Drive the vehicle at a vehicle speed of 10 km/h (6.2 MPH) or more for 10 seconds or more.
3. Check DTC in “Self Diagnostic Result” mode of “BCM” using CONSULT-III.

Is DTC detected?

YES >> Go to SEC-62, "Diagnosis Procedure".
NO >> INSPECTION END

Diagnosis Procedure

INFOID:0000000006038535

1. CHECK DTC WITH “ABS ACTUATOR AND ELECTRIC UNIT (CONTROL UNIT)”

Check DTC in “Self Diagnostic Result” mode of “ABS” using CONSULT-III.

Is DTC detected?

YES >> Perform the trouble diagnosis related to the detected DTC. Refer to BRC.
NO >> GO TO 2.

2. CHECK DTC WITH “COMBINATION METER”

Check DTC in “Self Diagnostic Result” mode of “METER/M&A” using CONSULT-III.

Is DTC detected?

YES >> Perform the trouble diagnosis related to the detected DTC. Refer to MWI-27, "DTC Index".
NO >> GO TO 3.

3. CHECK INTERMITTENT INCIDENT

Refer to GI-33, "Intermittent Incident".

>> INSPECTION END

B2601 SHIFT POSITION

DTC Logic

INFOID:0000000006038536

DTC DETECTION LOGIC

NOTE:

- If DTC B2601 is displayed with DTC U1000, first perform the trouble diagnosis for DTC U1000. Refer to BCS-47, "DTC Logic".
- If DTC B2601 is displayed with DTC U1010, first perform the trouble diagnosis for DTC U1010. Refer to BCS-48, "DTC Logic".

DTC No.	Trouble diagnosis name	DTC detecting condition	Possible cause
B2601	SHIFT POSITION	When there is a difference between P range signal from A/T shift selector (detention switch) and P position signal from IPDM E/R (CAN).	• Harness or connectors (CAN communication line is open or shorted.) • Harness or connectors [A/T shift selector (detention switch) circuit is open or shorted.] • A/T shift selector (detention switch) • BCM

DTC CONFIRMATION PROCEDURE

1. PERFORM DTC CONFIRMATION PROCEDURE

1. Shift the selector lever to the P position.
2. Turn ignition switch ON and wait 2 seconds or more.
3. Shift the selector lever to other than the P position and wait 2 seconds or more.
4. Check DTC in “Self Diagnostic Result” mode of “BCM” using CONSULT-III.

Is DTC detected?

YES >> Go to SEC-63, "Diagnosis Procedure".
NO >> INSPECTION END

Diagnosis Procedure

INFOID:0000000006038537

1. CHECK A/T SHIFT SELECTOR POWER SUPPLY

1. Turn ignition switch OFF.
2. Disconnect A/T shift selector (detention switch) connector.
3. Check voltage between A/T shift selector (detention switch) harness connector and ground.

(+)		(–)	Voltage (V) (Approx.)
A/T shift selector (detention switch)			
Connector	Terminal		
M58	7	Ground	12

Is the inspection result normal?

YES >> GO TO 3.
NO >> GO TO 2.

2. CHECK A/T SHIFT SELECTOR POWER SUPPLY CIRCUIT

1. Disconnect BCM connector.
2. Check continuity between A/T shift selector (detention switch) harness connector and BCM harness connector.

A/T shift selector (detention switch)		BCM		Continuity
Connector	Terminal	Connector	Terminal	
M58	7	M71	104	Existed

3. Check continuity between A/T shift selector (detention switch) harness connector and ground.

A/T shift selector (detention switch)		Ground	Continuity
Connector	Terminal		
M58	7		Not existed

Is the inspection result normal?

YES >> Replace BCM. Refer to BCS-57, "Removal and Installation".
NO >> Repair or replace harness.

3. CHECK A/T SHIFT SELECTOR CIRCUIT (BCM)

1. Disconnect BCM connector and IPDM E/R connector.
2. Check continuity between A/T shift selector (detention switch) harness connector and BCM harness connector.

A/T shift selector (detention switch)		BCM		Continuity
Connector	Terminal	Connector	Terminal	
M58	8	M68	37	Existed

3. Check continuity between A/T shift selector (detention switch) harness connector and ground.

A/T shift selector (detention switch)		Ground	Continuity
Connector	Terminal		
M58	8		Not existed

Is the inspection result normal?

YES >> GO TO 4.
NO >> Repair or replace harness.

4. CHECK A/T SHIFT SELECTOR CIRCUIT (IPDM E/R)

Check continuity between A/T shift selector (detention switch) harness connector and IPDM E/R harness connector.

A/T shift selector (detention switch)		IPDM E/R		Continuity
Connector	Terminal	Connector	Terminal	
M58	8	E17	80	Existed

Is the inspection result normal?

YES >> GO TO 5.
NO >> Repair or replace harness.

5. CHECK A/T SHIFT SELECTOR (DETENTION SWITCH)

Refer to SEC-64, "Component Inspection".

Is the inspection result normal?

YES >> GO TO 6.
NO >> Replace A/T shift selector. Refer to TM.

6. CHECK INTERMITTENT INCIDENT

Refer to GI-33, "Intermittent Incident".

>> INSPECTION END

Component Inspection

INFOID:0000000006038538

1. CHECK A/T SHIFT SELECTOR (DETENTION SWITCH)

1. Turn ignition switch OFF.
2. Disconnect A/T shift selector connector.
3. Check continuity between A/T shift selector (detention switch) terminals.

A/T shift selector (detention switch)		Condition		Continuity
Terminal				
7	8	Selector lever	P position	Not existed
			Other than above	Existed

Is the inspection result normal?

YES >> INSPECTION END
NO >> Replace A/T shift selector. Refer to TM.

B2602 SHIFT POSITION

DTC Logic

INFOID:0000000006038539

DTC DETECTION LOGIC

NOTE:

- If DTC B2602 is displayed with DTC U1000, first perform the trouble diagnosis for DTC U1000. Refer to BCS-47, "DTC Logic".
- If DTC B2602 is displayed with DTC U1010, first perform the trouble diagnosis for DTC U1010. Refer to BCS-48, "DTC Logic".

DTC No.	Trouble diagnosis name	DTC detecting condition	Possible cause
B2602	SHIFT POSITION	BCM detects the following status for 10 seconds. • Selector lever is in the P position • Vehicle speed is 4 km/h (2.5 MPH) or more • Ignition switch is in the ON position	• Harness or connectors (The CAN communication line is open or shorted.) • Harness or connectors [A/T shift selector (detention switch) circuit is open or shorted.] • A/T shift selector (detention switch) • Combination meter

DTC CONFIRMATION PROCEDURE

1. PERFORM DTC CONFIRMATION PROCEDURE

1. Start engine.
2. Drive vehicle at a speed of 4 km/h (2.5 MPH) or more for 10 seconds or more.
3. Check DTC in “Self Diagnostic Result” mode of “BCM” using CONSULT-III.

Is DTC detected?

YES >> Go to SEC-66, "Diagnosis Procedure".
NO >> INSPECTION END

Diagnosis Procedure

INFOID:0000000006038540

1. CHECK DTC WITH COMBINATION METER

Check DTC in “Self Diagnostic Result” mode of “METER/M&A” using CONSULT-III.

Is DTC detected?

YES >> Perform the trouble diagnosis related to the detected DTC. Refer to MWI-27, "DTC Index".
NO >> GO TO 2.

2. CHECK A/T SHIFT SELECTOR POWER SUPPLY

1. Turn ignition switch OFF.
2. Disconnect A/T shift selector (detention switch) connector.
3. Check voltage between A/T shift selector (detention switch) harness connector and ground.

(+)		(–)	Voltage (V) (Approx.)
A/T shift selector (detention switch)			
Connector	Terminal		
M58	7	Ground	12

Is the inspection result normal?

YES >> GO TO 4.
NO >> GO TO 3.

3. CHECK A/T SHIFT SELECTOR POWER SUPPLY CIRCUIT

1. Disconnect BCM connector.
2. Check continuity between A/T shift selector (detention switch) harness connector and BCM harness connector.

A/T shift selector (detention switch)		BCM		Continuity
Connector	Terminal	Connector	Terminal	
M58	7	M71	104	Existed

3. Check continuity between A/T shift selector (detention switch) harness connector and ground.

A/T shift selector (detention switch)		Ground	Continuity
Connector	Terminal		
M58	7		Not existed

Is the inspection result normal?

YES >> Replace BCM. Refer to BCS-57, "Removal and Installation".
NO >> Repair or replace harness.

4. CHECK A/T SHIFT SELECTOR CIRCUIT

1. Disconnect BCM connector and IPDM E/R connector.
2. Check continuity between A/T shift selector (detention switch) harness connector and BCM harness connector.

A/T shift selector (detention switch)		BCM		Continuity
Connector	Terminal	Connector	Terminal	
M58	8	M68	37	Existed

3. Check continuity between A/T shift selector (detention switch) harness connector and ground.

A/T shift selector (detention switch)		Ground	Continuity
Connector	Terminal		
M58	8		Not existed

Is the inspection result normal?

YES >> GO TO 5.
NO >> Repair or replace harness.

5. CHECK A/T SHIFT SELECTOR (DETENTION SWITCH)

Refer to SEC-67, "Component Inspection".

Is the inspection result normal?

YES >> GO TO 6.
NO >> Replace A/T shift selector. Refer to TM.

6. CHECK INTERMITTENT INCIDENT

Refer to GI-33, "Intermittent Incident".

>> INSPECTION END

Component Inspection

INFOID:0000000006038541

1. CHECK A/T SHIFT SELECTOR (DETENTION SWITCH)

1. Turn ignition switch OFF.
2. Disconnect A/T shift selector connector.
3. Check continuity between A/T shift selector (detention switch) terminals.

A/T shift selector (detention switch)		Condition		Continuity
Terminal				
7	8	Selector lever	P position	Not existed
			Other than above	Existed

Is the inspection result normal?

YES >> INSPECTION END
NO >> Replace A/T shift selector. Refer to TM.

B2603 SHIFT POSITION

DTC Logic

INFOID:0000000006038542

DTC DETECTION LOGIC

NOTE:

- If DTC B2603 is displayed with DTC B2601, first perform the trouble diagnosis for DTC B2601. Refer to SEC-63, "DTC Logic".

DTC No.	Trouble diagnosis name	DTC detecting condition	Possible causes
B2603	SHIFT POSI STATUS	BCM detects the following status when ignition switch is in the ON position. • Transmission range switch signal: approx. 0 V • A/T shift selector (detention switch) signal: approx. 0 V	• Harness or connector [A/T shift selector (detention switch) circuit is open or shorted.] • Harness or connectors (Transmission range switch circuit is open or shorted.) • A/T shift selector (detention switch) • Transmission range switch • BCM

DTC CONFIRMATION PROCEDURE

1. PERFORM DTC CONFIRMATION PROCEDURE 1

1. Shift the selector lever to the P position.
2. Turn ignition switch ON and wait 1 second or more.
3. Check DTC in “Self Diagnostic Result” mode of “BCM” using CONSULT-III.

Is DTC detected?

YES >> Go to SEC-69, "Diagnosis Procedure".
NO >> GO TO 2.

2. PERFORM DTC CONFIRMATION PROCEDURE 2

1. Shift the selector lever to other than the P position and wait 1 second or more.
2. Check DTC in “Self Diagnostic Result” mode of “BCM” using CONSULT-III.

Is DTC detected?

YES >> Go to SEC-69, "Diagnosis Procedure".
NO >> INSPECTION END

Diagnosis Procedure

INFOID:0000000006038543

1. INSPECTION START

Perform inspection in accordance with procedure that confirms DTC.

Which procedure confirms DTC?

DTC confirmation procedure 1>>GO TO 2.
DTC confirmation procedure 2>>GO TO 7.

2. CHECK TRANSMISSION RANGE SWITCH POWER SUPPLY

1. Turn ignition switch OFF.
2. Disconnect transmission range switch connector.
3. Turn ignition switch ON.
4. Check voltage between transmission range switch harness connector and ground.

(+)		(–)	Voltage (V) (Approx.)
Transmission range switch			
Connector	Terminal		
F21	7	Ground	Battery voltage

Is the inspection result normal?

YES >> GO TO 4.

NO >> GO TO 3.

3. CHECK TRANSMISSION RANGE SWITCH POWER SUPPLY CIRCUIT

1. Turn ignition switch OFF.
2. Disconnect IPDM E/R connector.
3. Check continuity between transmission range switch harness connector and IPDM E/R harness connector.

Transmission range switch		IPDM E/R		Continuity
Connector	Terminal	Connector	Terminal	
F21	7	E14	57	Existed

4. Check continuity between transmission range switch harness connector and ground.

Transmission range switch		Ground	Continuity
Connector	Terminal		
F21	7		Not existed

Is the inspection result normal?

YES >> Check 10 A fuse (No. 52, located in the IPDM E/R).
NO >> Repair or replace harness.

4. CHECK BCM INPUT SIGNAL

1. Turn ignition switch OFF.
2. Connect transmission range switch harness connector.
3. Turn ignition switch ON.
4. Check voltage between BCM harness connector and ground.

(+)		(–)	Condition		Voltage (V) (Approx.)
BCM					
Connector	Terminal				
M71	102	Ground	Selector lever	P or N position	Battery voltage
				Other than above	0

Is the inspection result normal?

YES >> Replace BCM. Refer to BCS-57, "Removal and Installation".
NO >> GO TO 5.

5. CHECK BCM INPUT SIGNAL CIRCUIT

1. Turn ignition switch OFF.
2. Disconnect transmission range switch connector.
3. Check continuity between transmission range switch harness connector and BCM harness connector.

Transmission range switch		BCM		Continuity
Connector	Terminal	Connector	Terminal	
F21	10	M71	102	Existed

4. Check continuity between transmission range switch harness connector and ground.

Transmission range switch		Ground	Continuity
Connector	Terminal		
F21	10		Not existed

Is the inspection result normal?

YES >> GO TO 6.
NO >> Repair or replace harness.

6. CHECK TRANSMISSION RANGE SWITCH

Refer to SEC-72, "Component Inspection (Transmission Range Switch)".

Is the inspection result normal?

YES >> GO TO 11.
NO >> Replace transaxle assembly. Refer to TM.

7. CHECK A/T SHIFT SELECTOR POWER SUPPLY

1. Turn ignition switch OFF.
2. Disconnect A/T shift selector (detention switch) connector.
3. Check voltage between A/T shift selector (detention switch) harness connector and ground.

(+)		(–)	Voltage (V) (Approx.)
A/T shift selector (detention switch)			
Connector	Terminal		
M58	7	Ground	12

Is the inspection result normal?

YES >> GO TO 9.
NO >> GO TO 8.

8. CHECK A/T SHIFT SELECTOR POWER SUPPLY CIRCUIT

1. Disconnect BCM connector.
2. Check continuity between A/T shift selector (detention switch) harness connector and BCM harness connector.

A/T shift selector (detention switch)		BCM		Continuity
Connector	Terminal	Connector	Terminal	
M58	7	M71	104	Existed

3. Check continuity between A/T shift selector (detention switch) harness connector and ground.

A/T shift selector (detention switch)		Ground	Continuity
Connector	Terminal		
M58	7		Not existed

Is the inspection result normal?

YES >> Replace BCM. Refer to BCS-57, "Removal and Installation".
NO >> Repair or replace harness.

9. CHECK A/T SHIFT SELECTOR CIRCUIT

1. Disconnect BCM connector and IPDM E/R connector.
2. Check continuity between A/T shift selector (detention switch) harness connector and BCM harness connector.

A/T shift selector (detention switch)		BCM		Continuity
Connector	Terminal	Connector	Terminal	
M58	8	M68	37	Existed

3. Check continuity between A/T shift selector (detention switch) harness connector and ground.

A/T shift selector (detention switch)		Ground	Continuity
Connector	Terminal		
M58	8		Not existed

Is the inspection result normal?

YES >> GO TO 10.
NO >> Repair or replace harness.

10. CHECK A/T SHIFT SELECTOR (DETENTION SWITCH)

Refer to SEC-72, "Component Inspection [A/T Shift Selector (Detention Switch)]".

Is the inspection result normal?

YES >> GO TO 11.
NO >> Replace A/T shift selector. Refer to TM.

11. CHECK INTERMITTENT INCIDENT

Refer to GI-33, "Intermittent Incident".

>> INSPECTION END

Component Inspection (Transmission Range Switch)

INFOID:0000000006044292

1. CHECK TRANSMISSION RANGE SWITCH

1. Turn ignition switch OFF.
2. Disconnect transmission range switch connector.
3. Check continuity between transmission range switch terminals.

Transmission range switch Terminal		Condition	Continuity
7	10	P or N position	Existed
		Other than above	Not existed

Is the inspection result normal?

YES >> INSPECTION END
NO >> Replace transaxle assembly. Refer to TM.

Component Inspection [A/T Shift Selector (Detention Switch)]

INFOID:0000000006038544

1. CHECK A/T SHIFT SELECTOR (DETENTION SWITCH)

1. Turn ignition switch OFF.
2. Disconnect A/T shift selector connector.
3. Check continuity between A/T shift selector (detention switch) terminals.

A/T shift selector (detention switch) Terminal		Condition		Continuity
7	8	Selector lever	P position	Not existed
			Other than above	Existed

Is the inspection result normal?

YES >> INSPECTION END
NO >> Replace A/T shift selector. Refer to TM.

B2604 SHIFT POSITION

DTC Logic

INFOID:0000000006038545

DTC DETECTION LOGIC

NOTE:
- If DTC B2604 is displayed with DTC U1000, first perform the trouble diagnosis for DTC U1000. Refer to BCS-47, "DTC Logic".
- If DTC B2604 is displayed with DTC U1010, first perform the trouble diagnosis for DTC U1010. Refer to BCS-48, "DTC Logic".

DTC No.	Trouble diagnosis name	DTC detecting condition	Possible cause
B2604	PNP/CLUTCH SW	The following states are detected for 5 seconds while ignition switch is ON. • P/N position signal is sent from transmission range switch but shift position signal input (CAN) from TCM is other than P and N • P/N position signal is not sent from transmission range switch but shift position signal input (CAN) from TCM is P or N	• Harness or connectors (The CAN communication line is open or shorted.) • Harness or connectors (Transmission range switch circuit is open or shorted.) • Transmission range switch • TCM • BCM

DTC CONFIRMATION PROCEDURE

1. PERFORM DTC CONFIRMATION PROCEDURE

1. Shift the selector lever to the P position.
2. Turn ignition switch ON and wait 5 seconds or more.
3. Shift the selector lever to the N position and wait 5 seconds or more.
4. Shift the selector lever to other than the P and N positions and wait 5 seconds or more.
5. Check DTC in “Self Diagnostic Result” mode of “BCM” using CONSULT-III.

Is DTC detected?

YES >> Go to SEC-73, "Diagnosis Procedure".
NO >> INSPECTION END

Diagnosis Procedure

INFOID:0000000006038546

1. CHECK DTC WITH TCM

Check DTC in “Self Diagnostic Result” mode of “TCM” using CONSULT-III.

Is DTC detected?

YES >> Perform the trouble diagnosis related to the detected DTC. Refer to TM.
NO >> GO TO 2.

2. CHECK TRANSMISSION RANGE SWITCH POWER SUPPLY

1. Turn ignition switch OFF.
2. Disconnect transmission range switch connector.
3. Turn ignition switch ON.
4. Check voltage between transmission range switch harness connector and ground.

(+)		(–)	Voltage (V) (Approx.)
Transmission range switch			
Connector	Terminal		
F21	7	Ground	Battery voltage

Is the inspection result normal?

YES >> GO TO 4.
NO >> GO TO 3.

3. CHECK TRANSMISSION RANGE SWITCH POWER SUPPLY CIRCUIT

1. Turn ignition switch OFF.

2. Disconnect IPDM E/R connector.
3. Check continuity between transmission range switch harness connector and IPDM E/R harness connector.

Transmission range switch		IPDM E/R		Continuity
Connector	Terminal	Connector	Terminal	
F21	7	E14	57	Existed

4. Check continuity between transmission range switch harness connector and ground.

Transmission range switch		Ground	Continuity
Connector	Terminal		
F21	7		Not existed

Is the inspection result normal?

YES >> Replace IPDM E/R. Refer to PCS-28, "Removal and Installation".
NO >> Repair or replace harness.

4. CHECK BCM INPUT SIGNAL

1. Turn ignition switch OFF.
2. Reconnect transmission range switch connector.
3. Turn ignition switch ON.
4. Check voltage between BCM harness connector and ground.

(+)		(–)	Condition		Voltage (V) (Approx.)
BCM					
Connector	Terminal				
M71	102	Ground	Selector lever	P or N position	Battery voltage
				Other than above	0

Is the inspection result normal?

YES >> Replace BCM. Refer to BCS-57, "Removal and Installation".
NO >> GO TO 5.

5. CHECK BCM INPUT SIGNAL CIRCUIT

1. Turn ignition switch OFF.
2. Disconnect transmission range switch connector.
3. Disconnect BCM connector.
4. Check continuity between transmission range switch harness connector and BCM harness connector.

Transmission range switch		BCM		Continuity
Connector	Terminal	Connector	Terminal	
F21	10	M71	102	Existed

5. Check continuity between TCM harness connector and ground.

TCM		Ground	Continuity
Connector	Terminal		
F21	10		Not existed

Is the inspection result normal?

YES >> GO TO 6.
NO >> Repair or replace harness.

6. CHECK TRANSMISSION RANGE SWITCH

Refer to SEC-75, "Component Inspection".

Is the inspection result normal?

YES >> GO TO 7.

NO >> Replace transaxle assembly. Refer to TM.

7. CHECK INTERMITTENT INCIDENT

Refer to GI-33, "Intermittent Incident".

>> INSPECTION END

Component Inspection

INFOID:0000000006044293

1. CHECK TRANSMISSION RANGE SWITCH

1. Turn ignition switch OFF.
2. Disconnect transmission range switch connector.
3. Check continuity between transmission range switch terminals.

Transmission range switch		Condition	Continuity
Terminal			
7	10	P or N position	Existed
		Other than above	Not existed

Is the inspection result normal?

YES >> INSPECTION END
NO >> Replace transaxle assembly. Refer to TM.

B2605 SHIFT POSITION

DTC Logic

INFOID:0000000006038547

DTC DETECTION LOGIC

NOTE:

- If DTC B2605 is displayed with DTC U1000, first perform the trouble diagnosis for DTC U1000. Refer to BCS-47, "DTC Logic".
- If DTC B2605 is displayed with DTC U1010, first perform the trouble diagnosis for DTC U1010. Refer to BCS-48, "DTC Logic".

DTC No.	Trouble diagnosis name	DTC detecting condition	Possible cause
B2605	PNP/CLUTCH SW	When ignition switch is ON, P/N position signal input from transmission range switch and P/N position signal (CAN) input from IPDM E/R do not match.	• Harness or connectors (The CAN communication line is open or shorted.) • Harness or connectors (Transmission range switch circuit is open or shorted.) • Transmission range switch • IPDM E/R • BCM

DTC CONFIRMATION PROCEDURE

1. PERFORM DTC CONFIRMATION PROCEDURE

1. Shift the selector lever to the P position.
2. Turn ignition switch ON and wait 1 second or more.
3. Shift the selector lever to the N position and wait 1 second or more.
4. Shift the selector lever to other than the P and N positions and wait 1 second or more.
5. Check DTC in “Self Diagnostic Result” mode of “BCM” using CONSULT-III.

Is DTC detected?

YES >> Go to SEC-76, "Diagnosis Procedure".
NO >> INSPECTION END

Diagnosis Procedure

INFOID:0000000006038548

1. CHECK IPDM E/R INPUT SIGNAL

1. Turn ignition switch OFF.
2. Disconnect IPDM E/R connector.
3. Turn ignition switch ON.
4. Check voltage between IPDM E/R harness connector and ground.

(+)		(–)	Condition		Voltage (V) (Approx.)
IPDM E/R					
Connector	Terminal				
F115	76	Ground	Selector lever	P or N position	Battery voltage
				Other than above	0

Is the inspection result normal?

YES >> Replace IPDM E/R. Refer to PCS-28, "Removal and Installation".
NO >> GO TO 2.

2. CHECK IPDM E/R INPUT SIGNAL CIRCUIT

1. Turn ignition switch OFF.
2. Disconnect BCM connector.
3. Check continuity between IPDM E/R harness connector and BCM harness connector.

IPDM E/R		BCM		Continuity
Connector	Terminal	Connector	Terminal	
F115	76	M71	102	Existed

4. Check continuity between IPDM E/R harness connector and ground.

IPDM E/R		Ground	Continuity
Connector	Terminal		
F115	76		Not existed

Is the inspection result normal?

YES >> Replace BCM. Refer to BCS-57, "Removal and Installation".
NO >> Repair or replace harness.

B2608 STARTER RELAY

DTC Logic

INFOID:0000000006038549

DTC DETECTION LOGIC

NOTE:

- If DTC B2608 is displayed with DTC U1000, first perform the trouble diagnosis for DTC U1000. Refer to BCS-47, "DTC Logic".
- If DTC B2608 is displayed with DTC U1010, first perform the trouble diagnosis for DTC U1010. Refer to BCS-48, "DTC Logic".

DTC No.	Trouble diagnosis name	DTC detecting condition	Possible cause
B2608	STARTER RELAY	BCM outputs starter motor relay OFF signal but BCM receives starter motor relay ON signal from IPDM E/R (CAN).	• Harness or connectors (The CAN communication line is open or shorted.) • Harness or connectors (Starter relay circuit is open or shorted.) • IPDM E/R • Starter relay

DTC CONFIRMATION PROCEDURE

1. PERFORM DTC CONFIRMATION PROCEDURE

1. Press push-button ignition switch under the following conditions to start engine.
- Selector lever: In the P position
- Brake pedal: Depressed
2. Wait 1 second after engine started.
3. Check DTC in “Self Diagnostic Result” mode of “BCM” using CONSULT-III.

Is DTC detected?

YES >> Go to SEC-78, "Diagnosis Procedure".
NO >> INSPECTION END

Diagnosis Procedure

INFOID:0000000006038550

1. CHECK DTC WITH IPDM E/R

Check DTC in “Self Diagnostic Result” mode of “IPDM E/R” using CONSULT-III.

Is DTC detected?

YES >> Perform the trouble diagnosis related to the detected DTC. Refer to PCS-22, "DTC Index".
NO >> GO TO 2.

2. CHECK STARTER RELAY POWER SUPPLY CIRCUIT

1. Turn ignition switch ON.
2. Check voltage between BCM harness connector and ground.

(+)		(–)	Condition		Voltage (V) (Approx.)
BCM					
Connector	Terminal				
M71	97	Ground	Selector lever	N or P position	Battery voltage
				Other than above	0

Is the inspection result normal?

YES >> GO TO 4.
NO >> GO TO 3.

3. CHECK STARTER RELAY CIRCUIT

1. Turn ignition switch OFF.
2. Disconnect starter relay.
3. Disconnect BCM connector connector.

4. Check continuity between starter relay harness connector and BCM harness connector.

Starter relay		BCM		Continuity
Connector	Terminal	Connector	Terminal	
E60	1	M71	97	Existed

5. Check continuity between IPDM E/R harness connector and ground.

Starter relay		Ground	Continuity
Connector	Terminal		
E60	1		Not existed

Is the inspection result normal?

YES >> Replace IPDM E/R. Refer to BCS-57, "Removal and Installation".
NO >> Repair or replace harness.

4. CHECK STARTER RELAY

Refer to SEC-79, "Component Inspection".

Is the inspection result normal?

YES >> GO TO 5.
NO >> Replace starter relay.

5. CHECK INTERMITTENT INCIDENT

Refer to GI-33, "Intermittent Incident".

>> INSPECTION END

Component Inspection

INFOID:0000000006044327

1. CHECK STARTER RELAY

1. Turn ignition switch OFF.
2. Disconnect starter relay.
3. Check continuity between starter relay terminals.

Starter relay Terminal		Condition	Continuity
3	5	12 V direct current supply between terminals 1 and 2	Existed
		No current supply	Not existed

Is the inspection result normal?

YES >> INSPECTION END
NO >> Replace starter relay.

B2609 STEERING STATUS

DTC Logic

INFOID:0000000006038551

DTC DETECTION LOGIC

DTC No.	Trouble diagnosis name	DTC detecting condition	Possible cause
B2609	S/L STATUS	BCM detects one of the following status. • Combination of steering lock state switch and steering unlock state switch is not normal. • Combination of steering lock state switch and steering unlock state switch is different from steering lock/unlock state that BCM recognizes.	• Harness or connectors (Steering lock unit circuit is open or shorted.) • Steering lock unit • BCM

DTC CONFIRMATION PROCEDURE

1. PERFORM DTC CONFIRMATION PROCEDURE 1

1. Press push-button ignition switch under the following conditions and wait 1 second or more.
- Selector lever: In the P position
- Brake pedal: Not depressed
2. Check DTC in “Self Diagnostic Result” mode of “BCM” using CONSULT-III.

Is DTC detected?

YES >> Go to SEC-80, "Diagnosis Procedure".
NO >> GO TO 2.

2. PERFORM DTC CONFIRMATION PROCEDURE 2

1. Turn ignition switch ON.
2. Turn ignition switch OFF.
3. Press driver side door switch and wait 1 second or more.
4. Check DTC in “Self Diagnostic Result” mode of “BCM” using CONSULT-III.

Is DTC detected?

YES >> Go to SEC-80, "Diagnosis Procedure".
NO >> INSPECTION END

Diagnosis Procedure

INFOID:0000000006038552

1. CHECK IPDM E/R INPUT SIGNAL

1. Turn ignition switch OFF.
2. Check voltage between IPDM E/R harness connector and ground.

(+)		(–)	Condition		Voltage (V) (Approx.)
IPDM E/R					
Connector	Terminal				
E17	88	Ground	Steering lock unit	Unlock	12
				Lock	0
	89			Unlock	0
				Lock	12

NOTE:

To lock the steering	1. Set the selector lever in the P position. 2. Turn the power supply position to the OFF position. 3. Press any door switch.
To unlock the steering	1. Set the selector lever in the P position. 2. Press the push-button ignition switch with brake pedal not depressed.

Is the inspection result normal?

YES >> GO TO 3.

NO >> GO TO 2.

2. CHECK IPDM E/R INPUT SIGNAL CIRCUIT

1. Disconnect IPDM E/R connector and steering lock unit connector.
2. Check continuity between IPDM E/R harness connector and steering lock unit harness connector.

IPDM E/R		Steering lock unit		Continuity
Connector	Terminal	Connector	Terminal	
E17	88	M12	3	Existed
	89		8	

3. Check continuity between IPDM E/R harness connector and ground.

IPDM E/R		Ground	Continuity
Connector	Terminal		
E17	88		Not existed
	89		

Is the inspection result normal?

YES >> Replace steering lock unit.
NO >> Repair or replace harness.

3. CHECK BCM INPUT SIGNAL

1. Turn ignition switch OFF.
2. Check voltage between BCM harness connector and ground.

(+)		(–)	Condition		Voltage (V) (Approx.)
BCM					
Connector	Terminal				
M71	107	Ground	Steering lock unit	Lock	0
				Unlock	12
	108			Lock	12
				Unlock	0

NOTE:

To lock the steering	1. Set the selector lever in the P position. 2. Turn the power supply position to the OFF position. 3. Press any door switch.
To unlock the steering	1. Set the selector lever in the P position. 2. Press the push-button ignition switch with brake pedal not depressed.

Is the inspection result normal?

YES >> Replace BCM. Refer to BCS-57, "Removal and Installation".
NO >> GO TO 4.

4. CHECK BCM INPUT SIGNAL CIRCUIT

1. Disconnect BCM connector and steering lock unit connector.
2. Check continuity between BCM harness connector and steering lock unit harness connector.

BCM		Steering lock unit		Continuity
Connector	Terminal	Connector	Terminal	
M71	107	M12	3	Existed
	108		8	

3. Check continuity between BCM harness connector and ground.

BCM		Ground	Continuity
Connector	Terminal		
M71	107		Not existed
	108		

Is the inspection result normal?

YES >> Replace steering lock unit.
NO >> Repair or replace harness.

B260B STEERING LOCK UNIT

DTC Logic

INFOID:0000000006038553

DTC DETECTION LOGIC

DTC No.	Trouble diagnosis name	DTC detecting condition	Possible cause
B260B	STEERING LOCK UNIT	BCM detects malfunctioning of steering lock unit before steering unlocking.	Steering lock unit

DTC CONFIRMATION PROCEDURE

1. PERFORM DTC CONFIRMATION PROCEDURE

1. Turn ignition switch ON.
2. Turn ignition switch OFF.
3. Press driver side door switch.
4. Shift selector lever to the P position.
5. Press push-button ignition switch with brake pedal not depressed.
6. Check DTC in “Self Diagnostic Result” mode of “BCM” using CONSULT-III.

Is DTC detected?

YES >> Go to SEC-83, "Diagnosis Procedure".
NO >> INSPECTION END

Diagnosis Procedure

INFOID:0000000006038554

1. INSPECTION START

1. Turn ignition switch ON.
2. Select “Self Diagnostic Result” mode of “BCM” using CONSULT-III.
3. Touch “ERASE”.
4. Perform DTC CONFIRMATION PROCEDURE for DTC B260B. Refer to SEC-83, "DTC Logic".

Is DTC detected?

YES >> Replace steering lock unit.
NO >> INSPECTION END

B260C STEERING LOCK UNIT

DTC Logic

INFOID:0000000006038555

DTC DETECTION LOGIC

DTC No.	Trouble diagnosis name	DTC detecting condition	Possible cause
B260C	STEERING LOCK UNIT	BCM detects malfunctioning of steering lock unit before steering locking.	Steering lock unit

DTC CONFIRMATION PROCEDURE

1. PERFORM DTC CONFIRMATION PROCEDURE

1. Shift selector lever to the P position.
2. Press push-button ignition switch with brake pedal not depressed.
3. Turn ignition switch ON.
4. Turn ignition switch OFF.
5. Press driver side door switch.
6. Check DTC in “Self Diagnostic Result” mode of “BCM” using CONSULT-III.

Is DTC detected?

YES >> Go to SEC-84, "Diagnosis Procedure".
NO >> INSPECTION END

Diagnosis Procedure

INFOID:0000000006038556

1. INSPECTION START

1. Turn ignition switch ON.
2. Select “Self Diagnostic Result” mode of “BCM” using CONSULT-III.
3. Touch “ERASE”.
4. Perform DTC CONFIRMATION PROCEDURE for DTC B260C. Refer to SEC-84, "DTC Logic".

Is DTC detected?

YES >> Replace steering lock unit.
NO >> INSPECTION END

B260D STEERING LOCK UNIT

DTC Logic

INFOID:0000000006038557

DTC DETECTION LOGIC

DTC No.	Trouble diagnosis name	DTC detecting condition	Possible cause
B260D	STEERING LOCK UNIT	BCM detects malfunctioning of steering lock unit after steering locking.	Steering lock unit

DTC CONFIRMATION PROCEDURE

1. PERFORM DTC CONFIRMATION PROCEDURE

1. Shift selector lever to the P position.
2. Press push-button ignition switch with brake pedal not depressed.
3. Turn ignition switch ON.
4. Turn ignition switch OFF.
5. Press driver side door switch.
6. Check DTC in “Self Diagnostic Result” mode of “BCM” using CONSULT-III.

Is DTC detected?

YES >> Go to SEC-85, "Diagnosis Procedure".
NO >> INSPECTION END

Diagnosis Procedure

INFOID:0000000006038558

1. INSPECTION START

1. Turn ignition switch ON.
2. Select “Self Diagnostic Result” mode of “BCM” using CONSULT-III.
3. Touch “ERASE”.
4. Perform DTC CONFIRMATION PROCEDURE for DTC B260D. Refer to SEC-85, "DTC Logic".

Is DTC detected?

YES >> Replace steering lock unit.
NO >> INSPECTION END

B260F ENGINE STATUS

Description

INFOID:0000000006038559

BCM receives the engine status signal from ECM via CAN communication.

DTC Logic

INFOID:0000000006038560

DTC DETECTION LOGIC

NOTE:

- If DTC B260F is displayed with DTC U1000, first perform the trouble diagnosis for DTC U1000. Refer to BCS-47, "DTC Logic".
- If DTC B260F is displayed with DTC U1010, first perform the trouble diagnosis for DTC U1010. Refer to BCS-48, "DTC Logic".

DTC No.	Trouble diagnosis name	DTC detecting condition	Possible cause
B260F	ENG STATE SIG LOST	BCM has not yet received the engine status signal from ECM when ignition switch is in the ON position.	• Harness or connectors (The CAN communication line is open or shorted.) • ECM

DTC CONFIRMATION PROCEDURE

1. PERFORM DTC CONFIRMATION PROCEDURE

1. Turn ignition switch ON and wait 2 seconds or more.
2. Check DTC in “Self Diagnostic Result” mode of “BCM” using CONSULT-III.

Is DTC detected?

YES >> Go to SEC-86, "Diagnosis Procedure".
NO >> INSPECTION END

Diagnosis Procedure

INFOID:0000000006038561

1. INSPECTION START

1. Turn ignition switch ON.
2. Select “Self Diagnostic Result” mode of “BCM” using CONSULT-III.
3. Touch “ERASE”.
4. Perform DTC CONFIRMATION PROCEDURE for DTC B260F. Refer to SEC-86, "DTC Logic".

Is DTC detected?

YES >> GO TO 2.
NO >> INSPECTION END

2. REPLACE ECM

1. Replace ECM. Refer to EC-524, "Removal and Installation" [HR12DE (TYPE 2)].
2. Perform “ADDITIONAL SERVICE WHEN REPLACING ECM”. Refer to SEC-36, "ECM : Work Procedure" [HR12DE (TYPE 2)].

>> INSPECTION END

B2612 STEERING STATUS

DTC Logic

INFOID:0000000006038562

DTC DETECTION LOGIC

NOTE:

- If DTC B2612 is displayed with DTC U1000, first perform the trouble diagnosis for DTC U1000. Refer to BCS-47, "DTC Logic".
- If DTC B2612 is displayed with DTC U1010, first perform the trouble diagnosis for DTC U1010. Refer to BCS-48, "DTC Logic".

DTC No.	Trouble diagnosis name	DTC detecting condition	Possible causes
B2612	S/L STATUS	The following 2 state signals are different. • Steering lock state recognition of BCM • Steering lock state signal from IPDM E/R	• Harness or connectors (The CAN communication line is open or shorted.) • Harness or connectors (Steering lock unit circuit is open or shorted.) • Steering lock unit • IPDM E/R • BCM

DTC CONFIRMATION PROCEDURE

1. PERFORM DTC CONFIRMATION PROCEDURE 1

1. Press push-button ignition switch under the following conditions and wait 1 second or more.
- Selector lever: In the P position
- Brake pedal: Not depressed
2. Check DTC in “Self Diagnostic Result” mode of “BCM” using CONSULT-III.

Is DTC detected?

YES >> Go to SEC-87, "Diagnosis Procedure".
NO >> GO TO 2.

2. PERFORM DTC CONFIRMATION PROCEDURE 2

1. Turn ignition switch ON.
2. Turn ignition switch OFF.
3. Press driver side door switch and wait 1 second or more.
4. Check DTC in “Self Diagnostic Result” mode of “BCM” using CONSULT-III.

Is DTC detected?

YES >> Go to SEC-87, "Diagnosis Procedure".
NO >> INSPECTION END

Diagnosis Procedure

INFOID:0000000006038563

1. CHECK IPDM E/R INPUT SIGNAL

1. Turn ignition switch OFF.
2. Check voltage between IPDM E/R harness connector and ground.

(+)		(–)	Condition		Voltage (V) (Approx.)
IPDM E/R					
Connector	Terminal				
E17	88	Ground	Steering lock unit	Unlock	12
				Lock	0
	89			Unlock	0
				Lock	12

NOTE:

To lock the steering	1. Set the selector lever in the P position. 2. Turn the power supply position to the OFF position. 3. Press any door switch.
To unlock the steering	1. Set the selector lever in the P position. 2. Press the push-button ignition switch with brake pedal not depressed.

Is the inspection result normal?

YES >> GO TO 3.
NO >> GO TO 2.

2. CHECK IPDM E/R INPUT SIGNAL CIRCUIT

1. Disconnect IPDM E/R connector and steering lock unit connector.
2. Check continuity between IPDM E/R harness connector and steering lock unit harness connector.

IPDM E/R		Steering lock unit		Continuity
Connector	Terminal	Connector	Terminal	
E17	88	M12	3	Existed
	89		8	

3. Check continuity between IPDM E/R harness connector and ground.

IPDM E/R		Ground	Continuity
Connector	Terminal		
E17	88		Not existed
	89		

Is the inspection result normal?

YES >> Replace steering lock unit.
NO >> Repair or replace harness.

3. CHECK BCM INPUT SIGNAL

1. Turn ignition switch OFF.
2. Check voltage between BCM harness connector and ground.

(+)		(–)	Condition		Voltage (V) (Approx.)
BCM					
Connector	Terminal				
M71	107	Ground	Steering lock unit	Lock	0
				Unlock	12
	108			Lock	12
				Unlock	0

NOTE:

To lock the steering	1. Set the selector lever in the P position. 2. Turn the power supply position to the OFF position. 3. Press any door switch.
To unlock the steering	1. Set the selector lever in the P position. 2. Press the push-button ignition switch with brake pedal not depressed.

Is the inspection result normal?

YES >> Replace BCM. Refer to BCS-57, "Removal and Installation".
NO >> GO TO 4.

4. CHECK BCM INPUT SIGNAL CIRCUIT

1. Disconnect BCM connector and steering lock unit connector.
2. Check continuity between BCM harness connector and steering lock unit harness connector.

BCM		Steering lock unit		Continuity
Connector	Terminal	Connector	Terminal	
M71	107	M12	3	Existed
	108		8	

3. Check continuity between BCM harness connector and ground.

BCM		Ground	Continuity
Connector	Terminal		
M71	107		Not existed
	108		

Is the inspection result normal?

YES >> Replace steering lock unit.
NO >> Repair or replace harness.

B2619 BCM

DTC Logic

INFOID:0000000006038564

DTC DETECTION LOGIC

DTC No.	Trouble diagnosis name	DTC detecting condition	Possible cause
B2619	BCM	There is a difference between power supply output to steering lock unit and steering lock unit F/B result.	BCM

DTC CONFIRMATION PROCEDURE

1.PERFORM DTC CONFIRMATION PROCEDURE

1. Press push-button ignition switch under the following conditions and wait 1 second or more.
- Selector lever: In the P position
- Brake pedal: Not depressed
2. Check DTC in “Self Diagnostic Result” of “BCM” using CONSULT-III.

Is DTC detected?

YES >> Go to SEC-90, "Diagnosis Procedure".
NO >> INSPECTION END

Diagnosis Procedure

INFOID:0000000006038565

1.INSPECTION START

1. Turn ignition switch ON.
2. Select “Self Diagnostic Result” mode of “BCM” using CONSULT-III.
3. Touch “ERASE”.
4. Perform DTC CONFIRMATION PROCEDURE for DTC B2619. Refer to SEC-90, "DTC Logic".

Is DTC detected?

YES >> Replace BCM. Refer to BCS-57, "Removal and Installation".
NO >> INSPECTION END

B26E9 STEERING STATUS

DTC Logic

INFOID:0000000006038566

DTC DETECTION LOGIC

DTC No.	Trouble diagnosis name	DTC detecting condition	Possible cause
B26E9	LOCK MALFUNCTION	BCM activates steering lock but steering state that BCM recognizes is unlock.	Steering lock unit

DTC CONFIRMATION PROCEDURE

1. PERFORM DTC CONFIRMATION PROCEDURE

1. Turn ignition switch ON.
2. Turn ignition switch OFF.
3. Press driver side door switch.
4. Turn ignition switch ON.
5. Check DTC in “Self Diagnostic Result” mode of “BCM” using CONSULT-III.

Is DTC detected?

YES >> Refer to SEC-91, "Diagnosis Procedure".
NO >> INSPECTION END

Diagnosis Procedure

INFOID:0000000006038567

1. INSPECTION START

1. Turn ignition switch ON.
2. Select “Self Diagnostic Result” mode of “BCM” using CONSULT-III.
3. Touch “ERASE”.
4. Perform DTC CONFIRMATION PROCEDURE for DTC B26E9. Refer to SEC-91, "DTC Logic".

Is DTC detected?

YES >> Replace steering lock unit.
NO >> INSPECTION END

B26EF STEERING LOCK RELAY

DTC Logic

INFOID:0000000006038568

DTC DETECTION LOGIC

NOTE:

- If DTC B26EF is displayed with DTC U1000, first perform the trouble diagnosis for DTC U1000. Refer to BCS-47, "DTC Logic".
- If DTC B26EF is displayed with DTC U1010, first perform the trouble diagnosis for DTC U1010. Refer to BCS-48, "DTC Logic".

DTC No.	Trouble diagnosis name	DTC detecting condition	Possible cause
B26EF	STRG LCK RELAY OFF	BCM requests IPDM E/R to turn steering lock relay ON, but BCM cannot receive steering lock relay ON state signal from IPDM E/R (CAN) within 2 seconds.	• Harness or connectors (The CAN communication line is open or shorted.) • Harness or connector (Steering lock relay circuit is open or shorted.) • Steering lock relay • IPDM E/R

DTC CONFIRMATION PROCEDURE

1. PERFORM DTC CONFIRMATION PROCEDURE

1. Shift selector lever to the P position.
2. Turn ignition switch ON.
3. Turn ignition switch OFF.
4. Press driver side door switch and wait 2 seconds or more.
5. Check DTC in “Self Diagnostic Result” mode of “BCM” using CONSULT-III.

Is DTC detected?

YES >> Go to SEC-92, "Diagnosis Procedure".
NO >> INSPECTION END

Diagnosis Procedure

INFOID:0000000006038569

1. CHECK DTC WITH IPDM E/R

Check DTC in “Self Diagnostic Result” mode of IPDM E/R using CONSULT-III.

Is DTC detected?

YES >> Perform the diagnosis procedure related to the detected DTC. Refer to PCS-22, "DTC Index".
NO >> GO TO 2.

2. CHECK STEERING LOCK UNIT POWER SUPPLY

Check voltage between steering lock unit harness connector and ground.

(+)		(–)	Condition		Voltage (V) (Approx.)
Steering lock unit					
Connector	Terminal				
M12	1	Ground	Ignition switch OFF	A few seconds after opening the driver door	Battery voltage
			Ignition switch LOCK	Press the push-button ignition switch	Battery voltage
			Ignition switch ACC or ON		0

NOTE:

To lock the steering	1. Set the selector lever in the P position. 2. Turn the power supply position to the OFF position. 3. Press any door switch.
To unlock the steering	1. Set the selector lever in the P position. 2. Press the push-button ignition switch with brake pedal not depressed.

Is the inspection normal?

YES >> GO TO 3.
NO >> GO TO 4.

3. CHECK STEERING LOCK RELAY CIRCUIT 1

1. Turn ignition switch OFF.
2. Disconnect steering lock relay.
3. Disconnect IPDM E/R connector.
4. Check continuity between steering lock relay harness connector and IPDM E/R harness connector.

Steering lock relay		IPDM E/R		Continuity
Connector	Terminal	Connector	Terminal	
E56	3	E17	87	Existed

5. Check continuity between steering lock relay harness connector and ground.

Steering lock relay		Ground	Continuity
Connector	Terminal		
E56	3		Not existed

Is the inspection result normal?

YES >> Replace IPDM E/R. Refer to PCS-28, "Removal and Installation".
NO >> Repair or replace harness.

4. CHECK STEERING LOCK UNIT CIRCUIT

1. Turn ignition switch OFF.
2. Disconnect steering lock relay.
3. Disconnect steering lock unit connector.
4. Check continuity between steering lock relay harness connector and steering lock unit harness connector.

Steering lock relay		Steering lock unit		Continuity
Connector	Terminal	Connector	Terminal	
E56	3	M12	1	Existed

5. Check continuity between steering lock relay harness connector and ground.

Steering lock relay		Ground	Continuity
Connector	Terminal		
E56	3		Not existed

Is the inspection result normal?

YES >> GO TO 5.
NO >> Repair or replace harness.

5. CHECK STEERING LOCK RELAY POWER SUPPLY SIRCUIT

Check voltage between steering lock relay harness connector and ground.

(+)		(–)	Voltage (V) (Approx.)
Steering lock relay			
Connector	Terminal		
E56	2	Ground	Battery voltage
	5		

Is the inspection result normal?

YES >> GO TO 6.
NO-1 >> Check 10 A fuse [No. 34, located in the fuse block (J/B)].
NO-2 >> Check harness for open or short between steering lock relay and fuse.

6. CHECK STEERING LOCK RELAY CIRCUIT 2

1. Disconnect IPDM E/R connector.
2. Check continuity between steering lock relay harness connector and IPDM E/R harness connector.

Steering lock relay		IPDM E/R		Continuity
Connector	Terminal	Connector	Terminal	
E56	1	E17	82	Existed

3. Check continuity between steering lock relay harness connector and ground.

Steering lock relay		Ground	Continuity
Connector	Terminal		
E56	1		Not existed

Is the inspection result normal?

YES >> GO TO 7.
NO >> Repair or replace harness.

7. CHECK STEERING LOCK RELAY

Refer to SEC-94, "Component Inspection".

Is the inspection result normal?

YES >> Replace IPDM E/R. Refer to PCS-28, "Removal and Installation".
NO >> Replace steering lock relay.

Component Inspection

INFOID:0000000006044485

1. CHECK STEERING LOCK RELAY

1. Turn ignition switch OFF.
2. Disconnect steering lock relay.
3. Check continuity between steering lock relay terminals.

Steering lock relay		Condition	Continuity
Terminal			
3	5	12 V direct current supply between terminals 1 and 2	Existed
		No current supply	Not existed

Is the inspection result normal?

YES >> INSPECTION END
NO >> Replace steering lock relay.

B26F0 STEERING LOCK RELAY

DTC Logic

INFOID:0000000006038570

DTC DETECTION LOGIC

NOTE:
- If DTC B26F0 is displayed with DTC U1000, first perform the trouble diagnosis for DTC U1000. Refer to BCS-47, "DTC Logic".
- If DTC B26F0 is displayed with DTC U1010, first perform the trouble diagnosis for DTC U1010. Refer to BCS-48, "DTC Logic".

DTC No.	Trouble diagnosis name	DTC detecting condition	Possible cause
B26F0	STRG LCK RELAY ON	BCM requests IPDM E/R to turn steering lock relay OFF, but BCM cannot receive steering lock relay OFF state signal from IPDM E/R (CAN) within 2 seconds.	• Harness or connectors (The CAN communication line is open or shorted.) • Harness or connector (Steering lock relay circuit is open or shorted.) • Steering lock relay • IPDM E/R

DTC CONFIRMATION PROCEDURE

1. PERFORM DTC CONFIRMATION PROCEDURE

1. Shift selector lever to the P position.
2. Turn ignition switch ON.
3. Turn ignition switch OFF.
4. Press driver side door switch and wait 2 seconds or more.
5. Check DTC in “Self Diagnostic Result” mode of “BCM” using CONSULT-III.

Is DTC detected?

YES >> Go to SEC-95, "Diagnosis Procedure".
NO >> INSPECTION END

Diagnosis Procedure

INFOID:0000000006038571

1. CHECK DTC WITH IPDM E/R

Check DTC in “Self Diagnostic Result” mode of “IPDM E/R” using CONSULT-III.

Is DTC detected?

YES >> Perform the diagnosis procedure related to the detected DTC. Refer to PCS-22, "DTC Index".
NO >> GO TO 2.

2. CHECK STEERING LOCK RELAY CIRCUIT 1

1. Turn ignition switch OFF.
2. Disconnect steering lock relay.
3. Disconnect IPDM E/R connector.
4. Check continuity between steering lock relay harness connector and IPDM E/R harness connector.

Steering lock relay		IPDM E/R		Continuity
Connector	Terminal	Connector	Terminal	
E56	1	E17	82	Existed

5. Check continuity between steering lock relay harness connector and ground.

Steering lock relay		Ground	Continuity
Connector	Terminal		
E56	1		Not existed

Is the inspection result normal?

YES >> GO TO 3.

NO >> Repair or replace harness.

3. CHECK STEERING LOCK RELAY CIRCUIT 2

1. Check continuity between steering lock relay harness connector and IPDM E/R harness connector.

Steering lock relay		IPDM E/R		Continuity
Connector	Terminal	Connector	Terminal	
E56	3	E17	87	Existed

2. Check continuity between steering lock relay harness connector and ground.

Steering lock relay		Ground	Continuity
Connector	Terminal		
E56	3		Not existed

Is the inspection result normal?

YES >> GO TO 4.
NO >> Repair or replace harness.

4. CHECK STEERING LOCK RELAY

Refer to SEC-96, "Component Inspection".

Is the inspection result normal?

YES >> Replace IPDM E/R. Refer to PCS-28, "Removal and Installation".
NO >> Replace steering lock relay.

Component Inspection

INFOID:0000000006046168

1. CHECK STEERING LOCK RELAY

1. Turn ignition switch OFF.
2. Disconnect steering lock relay.
3. Check continuity between steering lock relay terminals.

Steering lock relay		Condition	Continuity
Terminal			
3	5	12 V direct current supply between terminals 1 and 2	Existed
		No current supply	Not existed

Is the inspection result normal?

YES >> INSPECTION END
NO >> Replace steering lock relay.

B26F3 STARTER CONTROL RELAY

DTC Logic

INFOID:0000000006038572

DTC DETECTION LOGIC

NOTE:

- If DTC B26F3 is displayed with DTC U1000, first perform the trouble diagnosis for DTC U1000. Refer to BCS-47, "DTC Logic".
- If DTC B26F3 is displayed with DTC U1010, first perform the trouble diagnosis for DTC U1010. Refer to BCS-48, "DTC Logic".

DTC No.	Trouble diagnosis name	DTC detecting condition	Possible cause
B26F3	START CONT RLY ON	BCM requests IPDM E/R to turn starter control relay OFF, but BCM cannot receive starter control relay OFF state signal from IPDM E/R (CAN).	• Harness or connectors (The CAN communication line is open or shorted.) • IPDM E/R

DTC CONFIRMATION PROCEDURE

1. PERFORM DTC CONFIRMATION PROCEDURE

1. Press push-button ignition switch under the following conditions to start engine.
- Selector lever: In the P position
- Brake pedal: Depressed
2. Wait 2 seconds after engine started.
3. Check DTC in “Self Diagnostic Result” mode of “BCM” using CONSULT-III.

Is DTC detected?

YES >> Go to SEC-97, "Diagnosis Procedure".
NO >> INSPECTION END

Diagnosis Procedure

INFOID:0000000006038573

1. CHECK DTC WITH IPDM E/R

Check DTC in “Self Diagnostic Result” mode of “IPDM E/R” using CONSULT-III.

Is DTC detected?

YES >> Perform the diagnosis procedure related to the detected DTC. Refer to SEC-97, "DTC Logic".
NO >> GO TO 2.

2. CHECK INTERMITTENT INCIDENT

Refer to GI-33, "Intermittent Incident".

>> INSPECTION END

B26F4 STARTER CONTROL RELAY

DTC Logic

INFOID:0000000006038574

DTC DETECTION LOGIC

NOTE:

- If DTC B26F4 is displayed with DTC U1000, first perform the trouble diagnosis for DTC U1000. Refer to BCS-47, "DTC Logic".
- If DTC B26F4 is displayed with DTC U1010, first perform the trouble diagnosis for DTC U1010. Refer to BCS-48, "DTC Logic".

DTC No.	Trouble diagnosis name	DTC detecting condition	Possible cause
B26F4	START CONT RELAY OFF	BCM requests IPDM E/R to turn starter control relay ON, but BCM cannot receive starter control relay ON state signal from IPDM E/R (CAN).	• Harness or connectors (The CAN communication line is open or shorted.) • IPDM E/R

DTC CONFIRMATION PROCEDURE

1. PERFORM DTC CONFIRMATION PROCEDURE

1. Press push-button ignition switch under the following conditions to start engine, and wait 1 second or more.
- Selector lever: In the P position
- Brake pedal: Depressed
2. Check DTC in “Self Diagnostic Result” mode of “BCM” using CONSULT-III.

Is DTC detected?

YES >> Go to SEC-98, "Diagnosis Procedure".
NO >> INSPECTION END

Diagnosis Procedure

INFOID:0000000006038575

1. CHECK DTC WITH IPDM E/R

Check DTC in “Self Diagnostic Result” mode of “IPDM E/R” using CONSULT-III.

Is DTC detected?

YES >> Perform the diagnosis procedure related to the detected DTC. Refer to SEC-97, "DTC Logic".
NO >> GO TO 2.

2. CHECK INTERMITTENT INCIDENT

Refer to GI-33, "Intermittent Incident".

>> INSPECTION END

B26F5 STEERING LOCK STATUS SWITCH

DTC Logic

INFOID:0000000006038576

DTC DETECTION LOGIC

NOTE:

- If DTC B210A is displayed with DTC U1000, first perform the trouble diagnosis for DTC U1000. Refer to BCS-47, "DTC Logic".
- If DTC B210A is displayed with DTC U1010, first perform the trouble diagnosis for DTC U1010. Refer to BCS-48, "DTC Logic".

DTC No.	Trouble diagnosis name	DTC detecting condition	Possible cause
B26F5	STRG LCK STS SW	When BCM performs steering lock request to IPDM E/R, steering lock state signal from IPDM E/R is already lock state.	• Harness or connectors (The CAN communication line is open or shorted.) • Harness or connectors (Steering lock unit circuit is open or shorted.) • Steering lock unit • IPDM E/R • BCM

DTC CONFIRMATION PROCEDURE

1. PERFORM DTC CONFIRMATION PROCEDURE

1. Shift selector lever to the P position.
2. Turn ignition switch ON.
3. Turn ignition switch OFF.
4. Press driver side door switch.
5. Check DTC in “Self Diagnostic Result” mode of “BCM” using CONSULT-III.

Is DTC detected?

YES >> Go to SEC-99, "Diagnosis Procedure".
NO >> INSPECTION END

Diagnosis Procedure

INFOID:0000000006038577

1. CHECK IPDM E/R INPUT SIGNAL

1. Turn ignition switch OFF.
2. Check voltage between IPDM E/R harness connector and ground.

(+)		(–)	Condition		Voltage (V) (Approx.)
IPDM E/R					
Connector	Terminal				
E17	88	Ground	Steering lock unit	Unlock	12
				Lock	0
	89			Unlock	0
				Lock	12

NOTE:

To lock the steering	1. Set the selector lever in the P position. 2. Turn the power supply position to the OFF position. 3. Press any door switch.
To unlock the steering	1. Set the selector lever in the P position. 2. Press the push-button ignition switch with brake pedal not depressed.

Is the inspection result normal?

YES >> GO TO 3.

NO >> GO TO 2.

2. CHECK IPDM E/R INPUT SIGNAL CIRCUIT

1. Disconnect IPDM E/R connector and steering lock unit connector.
2. Check continuity between IPDM E/R harness connector and steering lock unit harness connector.

IPDM E/R		Steering lock unit		Continuity
Connector	Terminal	Connector	Terminal	
E17	88	M12	3	Existed
	89		8	

3. Check continuity between IPDM E/R harness connector and ground.

IPDM E/R		Ground	Continuity
Connector	Terminal		
E17	88		Not existed
	89		

Is the inspection result normal?

YES >> Replace steering lock unit.
NO >> Repair or replace harness.

3. CHECK BCM INPUT SIGNAL

1. Turn ignition switch OFF.
2. Check voltage between BCM harness connector and ground.

(+)		(–)	Condition		Voltage (V) (Approx.)
BCM					
Connector	Terminal				
M71	107	Ground	Steering lock unit	Lock	0
				Unlock	12
	108			Lock	12
				Unlock	0

NOTE:

To lock the steering	1. Set the selector lever in the P position. 2. Turn the power supply position to the OFF position. 3. Press any door switch.
To unlock the steering	1. Set the selector lever in the P position. 2. Press the push-button ignition switch with brake pedal not depressed.

Is the inspection result normal?

YES >> Replace BCM. Refer to BCS-57, "Removal and Installation".
NO >> GO TO 4.

4. CHECK BCM INPUT SIGNAL CIRCUIT

1. Disconnect BCM connector and steering lock unit connector.
2. Check continuity between BCM harness connector and steering lock unit harness connector.

BCM		Steering lock unit		Continuity
Connector	Terminal	Connector	Terminal	
M71	107	M12	3	Existed
	108		8	

3. Check continuity between BCM harness connector and ground.

BCM		Ground	Continuity
Connector	Terminal		
M71	107		Not existed
	108		

Is the inspection result normal?

YES >> Replace steering lock unit.
NO >> Repair or replace harness.

B26F7 BCM

DTC Logic

INFOID:0000000006038578

DTC DETECTION LOGIC

DTC No.	Trouble diagnosis name	DTC detecting condition	Possible cause
B26F7	BCM	Inside key antenna output circuit in BCM is malfunctioning.	BCM

DTC CONFIRMATION PROCEDURE

1.PERFORM DTC CONFIRMATION PROCEDURE

1. Press door request switch.
2. Turn ignition switch ON.
3. Check DTC in “Self Diagnostic Result” mode of “BCM” using CONSULT-III.

Is DTC detected?

YES >> Go to SEC-102, "Diagnosis Procedure".
NO >> INSPECTION END

Diagnosis Procedure

INFOID:0000000006038579

1.INSPECTION START

1. Turn ignition switch ON.
2. Select “Self Diagnostic Result” mode of “BCM” using CONSULT-III.
3. Touch “ERASE”.
4. Perform DTC CONFIRMATION PROCEDURE for DTC B26F7. Refer to SEC-102, "DTC Logic".

Is DTC detected?

YES >> Replace BCM. Refer to BCS-57, "Removal and Installation".
NO >> INSPECTION END

B26FC KEY REGISTRATION

DTC Logic

INFOID:0000000006038587

DTC DETECTION LOGIC

DTC No.	Trouble diagnosis name	DTC detecting condition	Possible cause
B26FC	KEY REGISTRATION	Intelligent Key that does not match the vehicle is registered.	• Improper registration operation • Intelligent Key • BCM

DTC CONFIRMATION PROCEDURE

1. PERFORM DTC CONFIRMATION PROCEDURE

1. Perform initialization of BCM and reregistration of all Intelligent Keys using CONSULT-III.
   For initialization and registration procedures, refer to CONSULT-III Operation Manual NATS-IVIS/NVIS.
2. Check DTC in “Self Diagnostic Result” mode of “BCM” using CONSULT-III.

Is DTC detected?

YES >> Go to SEC-103, "Diagnosis Procedure"
NO >> INSPECTION END

Diagnosis Procedure

INFOID:0000000006038588

1. REPLACE INTELLIGENT KEY

1. Prepare Intelligent Key that matches the vehicle.
2. Perform initialization of BCM and reregistration of Intelligent Key using CONSULT-III.
   For initialization and registration procedures, refer to CONSULT-III Operation Manual NATS-IVIS/NVIS.
3. Check DTC in “Self Diagnostic Result” mode of “BCM” using CONSULT-III.

Is DTC detected?

YES >> Replace BCM. Refer to BCS-57, "Removal and Installation".
NO >> INSPECTION END

B2108 STEERING LOCK RELAY

DTC Logic

INFOID:0000000006038593

DTC DETECTION LOGIC

NOTE:
If DTC B2108 is displayed with DTC U1000, first perform the trouble diagnosis for DTC U1000. Refer to PCS-24, "DTC Logic".

DTC No.	Trouble diagnosis name	DTC detecting condition	Possible cause
B2108	STRG LCK RELAY ON	IPDM E/R detects that steering lock relay is stuck in the ON position for about 1 second even if IPDM E/R receives steering lock relay ON/OFF signal from BCM.	• Harness or connectors (The CAN communication line is open or shorted.) • Harness or connector (Steering lock relay circuit is open or shorted.) • Steering lock relay • IPDM E/R

DTC CONFIRMATION PROCEDURE

1. PERFORM DTC CONFIRMATION PROCEDURE

1. Press push-button ignition switch under the following conditions and wait 1 second or more.
- Selector lever: In the P position
- Brake pedal: Not depressed
2. Check DTC in “Self Diagnostic Result” mode of “IPDM E/R” using CONSULT-III.

Is DTC detected?

YES >> Go to SEC-104, "Diagnosis Procedure".
NO >> INSPECTION END

Diagnosis Procedure

INFOID:0000000006038594

1. CHECK STEERING LOCK RELAY SIGNAL

Check voltage between IPDM E/R harness connector and ground.

(+)		(–)	Condition		Voltage (V) (Approx.)
IPDM E/R					
Connector	Terminal				
E17	87	Ground	Ignition switch OFF	A few seconds after opening the driver door	Battery voltage
			Ignition switch LOCK	Press the push-button ignition switch	Battery voltage
			Ignition switch ACC or ON		0

Is the inspection result normal?

YES >> Replace IPDM E/R. Refer to PCS-28, "Removal and Installation".
NO >> GO TO 2.

2. CHECK STEERING LOCK RELAY CIRCUIT 1

1. Turn ignition switch OFF.
2. Disconnect steering lock relay.
3. Disconnect IPDM E/R connector.
4. Check continuity between steering lock relay harness connector and IPDM E/R harness connector.

Steering lock relay		IPDM E/R		Continuity
Connector	Terminal	Connector	Terminal	
E56	3	E17	87	Existed

5. Check continuity between steering lock relay harness connector and ground.

Steering lock relay		Ground	Continuity
Connector	Terminal		
E56	3		Not existed

Is the inspection result normal?

YES >> GO TO 3.
NO >> Repair or replace harness.

3. CHECK STEERING LOCK RELAY CIRCUIT 2

1. Check continuity between steering lock relay harness connector and IPDM E/R harness connector.

Steering lock relay		IPDM E/R		Continuity
Connector	Terminal	Connector	Terminal	
E56	1	E17	82	Existed

2. Check continuity between steering lock relay harness connector and ground.

Steering lock relay		Ground	Continuity
Connector	Terminal		
E56	1		Not existed

Is the inspection result normal?

YES >> GO TO 4.
NO >> Repair or replace harness.

4. CHECK STEERING LOCK RELAY

Refer to SEC-105, "Component Inspection".

Is the inspection result normal?

YES >> Replace IPDM E/R. Refer to PCS-28, "Removal and Installation".
NO >> Replace steering lock relay.

Component Inspection

INFOID:0000000006046373

1. CHECK STEERING LOCK RELAY

1. Turn ignition switch OFF.
2. Disconnect steering lock relay.
3. Check continuity between steering lock relay terminals.

Steering lock relay		Condition	Continuity
Terminal			
3	5	12 V direct current supply between terminals 1 and 2	Existed
		No current supply	Not existed

Is the inspection result normal?

YES >> INSPECTION END
NO >> Replace steering lock relay.

B2109 STEERING LOCK RELAY

DTC Logic

INFOID:0000000006038595

DTC DETECTION LOGIC

NOTE:

- If DTC B2109 is displayed with DTC U1000, first perform the trouble diagnosis for DTC U1000. Refer to PCS-24, "DTC Logic".
- When IPDM E/R power supply voltage is low (Approx. 7 - 8 V for about 1 second), the DTC B2109 may be detected.

DTC No.	Trouble diagnosis name	DTC detecting condition	Possible cause
B2109	STRG LCK RELAY OFF	IPDM E/R detects that steering lock relay is stuck in the OFF position for about 1 second even if IPDM E/R receives steering lock relay ON/OFF signal from BCM.	• Harness or connectors (The CAN communication line is open or shorted.) • Harness or connector (Steering lock relay circuit is open or shorted.) • Steering lock relay • IPDM E/R • Battery

DTC CONFIRMATION PROCEDURE

1. PERFORM DTC CONFIRMATION PROCEDURE

1. Press push-button ignition switch under the following conditions and wait 1 second or more.
- Selector lever: In the P position
- Brake pedal: Not depressed
2. Check DTC in “Self Diagnostic Result” mode of “IPDM E/R” using CONSULT-III.

Is DTC detected?

YES >> Go to SEC-106, "Diagnosis Procedure".
NO >> INSPECTION END

Diagnosis Procedure

INFOID:0000000006038596

1. CHECK STEERING LOCK RELAY SIGNAL

Check voltage between IPDM E/R harness connector and ground.

(+)		(–)	Condition		Voltage (V) (Approx.)
IPDM E/R					
Connector	Terminal				
E17	87	Ground	Ignition switch OFF	A few seconds after opening the driver door	Battery voltage
			Ignition switch LOCK	Press the push-button ignition switch	Battery voltage
			Ignition switch ACC or ON		0

Is the inspection result normal?

YES >> Replace IPDM E/R. Refer to PCS-28, "Removal and Installation".
NO >> GO TO 2.

2. CHECK STEERING LOCK RELAY POWER SUPPLY SIRCUIT

1. Turn ignition switch OFF.
2. Disconnect steering lock relay.
3. Check voltage between steering lock relay harness connector and ground.

(+)		(–)	Voltage (V) (Approx.)
Steering lock relay			
Connector	Terminal		
E56	2	Ground	Battery voltage
	5		

Is the inspection result normal?

YES >> GO TO 3.
NO-1 >> Check 10 A fuse [No. 34, located in the fuse block (J/B)].
NO-2 >> Check harness for open or short between steering lock relay and fuse.

3. CHECK STEERING LOCK RELAY CIRCUIT 1

1. Disconnect IPDM E/R connector.
2. Check continuity between steering lock relay harness connector and IPDM E/R harness connector.

Steering lock relay		IPDM E/R		Continuity
Connector	Terminal	Connector	Terminal	
E56	3	E17	87	Existed

3. Check continuity between steering lock relay harness connector and ground.

Steering lock relay		Ground	Continuity
Connector	Terminal		
E56	3		Not existed

Is the inspection result normal?

YES >> GO TO 4.
NO >> Repair or replace harness.

4. CHECK STEERING LOCK RELAY CIRCUIT 2

1. Check continuity between steering lock relay harness connector and IPDM E/R harness connector.

Steering lock relay		IPDM E/R		Continuity
Connector	Terminal	Connector	Terminal	
E56	1	E17	82	Existed

2. Check continuity between steering lock relay harness connector and ground.

Steering lock relay		Ground	Continuity
Connector	Terminal		
E56	1		Not existed

Is the inspection result normal?

YES >> GO TO 5.
NO >> Repair or replace harness.

5. CHECK STEERING LOCK RELAY

Refer to SEC-107, "Component Inspection".

Is the inspection result normal?

YES >> Replace IPDM E/R. Refer to PCS-28, "Removal and Installation".
NO >> Replace steering lock relay.

Component Inspection

INFOID:0000000006046374

1. CHECK STEERING LOCK RELAY

1. Turn ignition switch OFF.
2. Disconnect steering lock relay.

3. Check continuity between steering lock relay terminals.

Steering lock relay Terminal		Condition	Continuity
3	5	12 V direct current supply between terminals 1 and 2	Existed
		No current supply	Not existed

Is the inspection result normal?

YES >> INSPECTION END
NO >> Replace steering lock relay.

B210A STEERING LOCK UNIT

DTC Logic

INFOID:0000000006038597

DTC DETECTION LOGIC

DTC No.	Trouble diagnosis name	DTC detecting condition	Possible cause
B210A	STRG LCK STATE SW	IPDM E/R detects the difference between steering condition switches 1 and 2 signals for 1 second.	• Harness or connectors (Steering lock unit circuit is open or shorted.) • Steering lock unit • IPDM E/R

DTC CONFIRMATION PROCEDURE

1. PERFORM DTC CONFIRMATION PROCEDURE 1

1. Press push-button ignition switch under the following conditions and wait 1 second or more.
- Selector lever: In the P position
- Brake pedal: Not depressed
2. Check DTC in “Self Diagnostic Result” mode of “IPDM E/R” using CONSULT-III.

Is DTC detected?

YES >> Go to SEC-109, "Diagnosis Procedure".
NO >> GO TO 2.

2. PERFORM DTC CONFIRMATION PROCEDURE 2

1. Turn ignition switch ON.
2. Turn ignition switch OFF.
3. Press driver side door switch and wait 1 second or more.
4. Check DTC in “Self Diagnostic Result” mode of “IPDM E/R” using CONSULT-III.

Is DTC detected?

YES >> Go to SEC-109, "Diagnosis Procedure".
NO >> INSPECTION END

Diagnosis Procedure

INFOID:0000000006038598

1. CHECK IPDM E/R INPUT SIGNAL

1. Turn ignition switch OFF.
2. Check voltage between IPDM E/R harness connector and ground.

(+)		(–)	Condition		Voltage (V) (Approx.)
IPDM E/R					
Connector	Terminal				
E17	88	Ground	Steering lock unit	Unlock	12
				Lock	0
	89			Unlock	0
				Lock	12

Is the inspection result normal?

YES >> Replace IPDM E/R. Refer to PCS-28, "Removal and Installation".
NO >> GO TO 2.

2. CHECK IPDM E/R INPUT SIGNAL CIRCUIT

1. Disconnect IPDM E/R connector and steering lock unit connector.
2. Check continuity between IPDM E/R harness connector and steering lock unit harness connector.

IPDM E/R		Steering lock unit		Continuity
Connector	Terminal	Connector	Terminal	
E17	88	M12	3	Existed
	89		8	

3. Check continuity between IPDM E/R harness connector and ground.

IPDM E/R		Ground	Continuity
Connector	Terminal		
E17	88		Not existed
	89		

Is the inspection result normal?

YES >> Replace steering lock unit.
NO >> Repair or replace harness.

B210B STARTER CONTROL RELAY

DTC Logic

INFOID:0000000006038599

DTC DETECTION LOGIC

NOTE:
If DTC B210B is displayed with DTC U1000, first perform the trouble diagnosis for DTC U1000. Refer to PCS-24, "DTC Logic".

DTC No.	Trouble diagnosis name	DTC detecting condition	Possible cause
B210B	START CONT RLY ON	When comparing the following items, IPDM E/R detects that starter control relay is stuck in the ON position for 1 second or more. • Starter control relay signal (CAN) from BCM • Starter relay status signal (CAN) from BCM • Starter control relay and starter relay status signal (IPDM E/R input) • Starter control relay control signal (IPDM E/R output) • Transmission range switch signal input	• Harness or connectors (The CAN communication line is open or shorted.) • IPDM E/R • BCM

DTC CONFIRMATION PROCEDURE

1. PERFORM DTC CONFIRMATION PROCEDURE

1. Press push-button ignition switch under the following conditions to start engine, and wait 1 second or more.
- Selector lever: In the P position
- Brake pedal: Depressed
2. Check DTC in “Self Diagnostic Result” mode of “IPDM E/R” using CONSULT-III.

Is DTC detected?

YES >> Go to SEC-111, "Diagnosis Procedure".
NO >> INSPECTION END

Diagnosis Procedure

INFOID:0000000006038600

1. CHECK DTC FOR BCM

Check DTC in “Self Diagnostic Result” mode of “BCM” using CONSULT-III.

Is DTC detected?

YES >> Perform the trouble diagnosis related to the detected DTC. Refer to BCS-40, "DTC Index".
NO >> GO TO 2.

2. INSPECTION START

1. Turn ignition switch ON.
2. Select “Self Diagnostic Result” mode of “IPDM E/R” using CONSULT-III.
3. Touch “ERASE”.
4. Perform DTC CONFIRMATION PROCEDURE for DTC B210B. Refer to SEC-111, "DTC Logic".

Is DTC detected?

YES >> GO TO 3.
NO >> INSPECTION END

3. REPLACE BCM

1. Replace BCM. Refer to BCS-57, "Removal and Installation".
2. Perform DTC CONFIRMATION PROCEDURE for DTC B210B. Refer to SEC-111, "DTC Logic".

Is the inspection result normal?

YES >> INSPECTION END
NO >> Replace IPDM E/R. Refer to PCS-28, "Removal and Installation".

B210C STARTER CONTROL RELAY

DTC Logic

INFOID:0000000006038601

DTC DETECTION LOGIC

NOTE:

- If DTC B210C is displayed with DTC U1000, first perform the trouble diagnosis for DTC U1000. Refer to PCS-24, "DTC Logic".
- When IPDM E/R power supply voltage is low (Approx. 7 - 8 V for about 1 second), the DTC B210C may be detected.

DTC No.	Trouble diagnosis name	DTC detecting condition	Possible cause
B210C	START CONT RLY OFF	When comparing the following items, IPDM E/R detects that starter control relay is stuck in the OFF position for 1 second or more. • Starter control relay signal (CAN) from BCM • Starter relay status signal (CAN) from BCM • Starter control relay and starter relay status signal (IPDM E/R input) • Starter control relay control signal (IPDM E/R output) • Transmission range switch signal input	• Harness or connectors (The CAN communication line is open or shorted.) • IPDM E/R • BCM • Battery

DTC CONFIRMATION PROCEDURE

1. PERFORM DTC CONFIRMATION PROCEDURE

1. Press push-button ignition switch under the following conditions to start engine, and wait 1 second or more.
- Selector lever: In the P position
- Brake pedal: Depressed
2. Check DTC in “Self Diagnostic Result” mode of “IPDM E/R” using CONSULT-III.

Is DTC detected?

YES >> Go to SEC-112, "Diagnosis Procedure".
NO >> INSPECTION END

Diagnosis Procedure

INFOID:0000000006038602

1. CHECK DTC FOR BCM

Check DTC in “Self Diagnostic Result” mode of “BCM” using CONSULT-III.

Is DTC detected?

YES >> Perform the trouble diagnosis related to the detected DTC. Refer to BCS-40, "DTC Index".
NO >> GO TO 2.

2. INSPECTION START

1. Turn ignition switch ON.
2. Select “Self Diagnostic Result” mode of “IPDM E/R” using CONSULT-III.
3. Touch “ERASE”.
4. Perform DTC CONFIRMATION PROCEDURE for DTC B210C. Refer to SEC-112, "DTC Logic".

Is DTC detected?

YES >> GO TO 3.
NO >> INSPECTION END

3. REPLACE BCM

1. Replace BCM. Refer to BCS-57, "Removal and Installation".
2. Perform DTC CONFIRMATION PROCEDURE for DTC B210C. Refer to SEC-112, "DTC Logic".

Is the inspection result normal?

YES >> INSPECTION END
NO >> Replace IPDM E/R. Refer to PCS-28, "Removal and Installation".

B210D STARTER RELAY

DTC Logic

INFOID:0000000006038603

DTC DETECTION LOGIC

NOTE:
If DTC B210D is displayed with DTC U1000, first perform the trouble diagnosis for DTC U1000. Refer to PCS-24, "DTC Logic".

DTC No.	Trouble diagnosis name	DTC detecting condition	Possible cause
B210D	STARTER RELAY ON	When comparing the following items, IPDM E/R detects that starter relay is stuck in the ON position for 1 second or more. • Starter control relay signal (CAN) from BCM • Starter relay status signal (CAN) from BCM • Starter control relay and starter relay status signal (IPDM E/R input) • Starter control relay control signal (IPDM E/R output) • Transmission range switch signal input	• Harness or connectors (The CAN communication line is open or shorted.) • Harness or connectors (Starter relay circuit is open or shorted.) • IPDM E/R • BCM • Starter relay

DTC CONFIRMATION PROCEDURE

1. PERFORM DTC CONFIRMATION PROCEDURE

1. Press push-button ignition switch under the following conditions to start engine, and wait 1 second or more.
- Selector lever: In the P position
- Brake pedal: Depressed
2. Check DTC in “Self Diagnostic Result” mode of “IPDM E/R” using CONSULT-III.

Is DTC detected?

YES >> Go to SEC-113, "Diagnosis Procedure".
NO >> INSPECTION END

Diagnosis Procedure

INFOID:0000000006038604

1. CHECK DTC FOR BCM

Check DTC in “Self Diagnostic Result” mode of “BCM” using CONSULT-III.

Is DTC detected?

YES >> Perform the trouble diagnosis related to the detected DTC. Refer to BCS-40, "DTC Index".
NO >> GO TO 2.

2. CHECK STARTER RELAY POWER SUPPLY CIRCUIT

1. Turn ignition switch ON.
2. Check voltage between BCM harness connector and ground.

(+)		(–)	Condition		Voltage (V) (Approx.)
BCM					
Connector	Terminal				
M71	97	Ground	Selector lever	N or P position	Battery voltage
				Other than above	0

Is the inspection result normal?

YES >> GO TO 4.
NO >> GO TO 3.

3. CHECK STARTER RELAY CIRCUIT

1. Turn ignition switch OFF.
2. Disconnect starter relay.

3. Disconnect BCM connector connector.
4. Check continuity between starter relay harness connector and BCM harness connector.

Starter relay		BCM		Continuity
Connector	Terminal	Connector	Terminal	
E60	1	M71	97	Existed

5. Check continuity between IPDM E/R harness connector and ground.

Starter relay		Ground	Continuity
Connector	Terminal		
E60	1		Not existed

Is the inspection result normal?

YES >> Replace IPDM E/R. Refer to BCS-57, "Removal and Installation".
NO >> Repair or replace harness.

4. CHECK STARTER RELAY

Refer to SEC-114, "Component Inspection".

Is the inspection result normal?

YES >> GO TO 5.
NO >> Replace starter relay.

5. REPLACE BCM

1. Replace BCM. Refer to BCS-57, "Removal and Installation".
2. Perform DTC CONFIRMATION PROCEDURE for DTC B210D. Refer to SEC-113, "DTC Logic".

Is the inspection result normal?

YES >> INSPECTION END
NO >> Replace IPDM E/R. Refer to PCS-28, "Removal and Installation".

Component Inspection

INFOID:0000000006046423

1. CHECK STARTER RELAY

1. Turn ignition switch OFF.
2. Disconnect starter relay.
3. Check continuity between starter relay terminals.

Starter relay		Condition	Continuity
Terminal			
3	5	12 V direct current supply between terminals 1 and 2	Existed
		No current supply	Not existed

Is the inspection result normal?

YES >> INSPECTION END
NO >> Replace starter relay.

B210E STARTER RELAY

DTC Logic

INFOID:0000000006038605

DTC DETECTION LOGIC

NOTE:

- If DTC B210E is displayed with DTC U1000, first perform the trouble diagnosis for DTC U1000. Refer to PCS-24, "DTC Logic".
- If DTC B210E is displayed with DTC B2605, first perform the trouble diagnosis for DTC B2605. Refer to SEC-76, "DTC Logic".
- When IPDM E/R power supply voltage is low (Approx. 7 - 8 V for about 1 second), the DTC B210F may be detected.

DTC No.	Trouble diagnosis name	DTC detecting condition	Possible cause
B210E	STARTER RELAY OFF	When comparing the following items, IPDM E/R detects that starter relay is stuck in the OFF position for 1 second or more. • Starter control relay signal (CAN) from BCM • Starter relay status signal (CAN) from BCM • Starter control relay and starter relay status signal (IPDM E/R input) • Starter control relay control signal (IPDM E/R output) • Transmission range switch signal input	• Harness or connectors (The CAN communication line is open or shorted.) • Harness or connector (Starter relay circuit is open or shorted.) • IPDM E/R • Battery • BCM • Starter relay

DTC CONFIRMATION PROCEDURE

1. PERFORM DTC CONFIRMATION PROCEDURE

1. Press push-button ignition switch under the following conditions to start engine, and wait 1 second or more.
- Selector lever: In the P position
- Brake pedal: Depressed
2. Check DTC in “Self Diagnostic Result” mode of “IPDM E/R” using CONSULT-III.

Is DTC detected?

YES >> Go to SEC-115, "Diagnosis Procedure".
NO >> INSPECTION END

Diagnosis Procedure

INFOID:0000000006038606

1. CHECK DTC FOR BCM

Check DTC in “Self Diagnostic Result” mode of “BCM” using CONSULT-III.

Is DTC detected?

YES >> Perform the trouble diagnosis related to the detected DTC. Refer to BCS-40, "DTC Index".
NO >> GO TO 2.

2. CHECK STARTER RELAY OUTPUT SIGNAL

1. Check voltage between BCM harness connector and ground.

(+) BCM connector		(–)	Condition			Voltage (V) (Approx.)
Connector	Terminal		Ignition switch	Brake pedal	Selector lever	
M71	97	Ground	ON	Depressed	P or N	Battery voltage
					Other than above	0

Is the inspection result normal?

YES >> GO TO 5.
NO >> GO TO 3.

3. CHECK STARTER RELAY OUTPUT SIGNAL CIRCUIT

1. Turn ignition switch OFF.
2. Disconnect BCM connector.
3. Disconnect starter relay.
4. Check continuity between BCM harness connector and starter relay harness connector.

BCM		Starter relay		Continuity
Connector	Terminal	Connector	Terminal	
M71	97	E60	1	Existed

5. Check continuity between BCM harness connector and ground.

BCM		Ground	Continuity
Connector	Terminal		
M71	97		Not existed

Is the inspection result normal?

YES >> GO TO 4.
NO >> Repair or replace harness.

4. CHECK STARTER RELAY CIRCUIT 1

1. Turn ignition switch OFF.
2. Disconnect IPDM E/R connector.
3. Check continuity between IPDM E/R harness connector and starter relay harness connector.

IPDM E/R		Starter relay		Continuity
Connector	Terminal	Connector	Terminal	
E12	39	E60	2	Existed

4. Check continuity between BCM harness connector and ground.

IPDM E/R		Ground	Continuity
Connector	Terminal		
E12	39		Not existed

Is the inspection result normal?

YES >> GO TO 7.
NO >> Repair or replace harness.

5. CHECK STARTER RELAY POWER SUPPLY CIRCUIT

1. Turn ignition switch OFF.
2. Disconnect starter relay.
3. Check voltage between starter relay harness connector and ground.

(+)		(–)	Voltage (V) (Approx.)
Starter relay			
Connector	Terminal		
E60	5	Ground	Battery voltage

Is the inspection result normal?

YES >> GO TO 6.
NO-1 >> Check 40 A fusible link [Figure H, located in the fuse block (J/B)].
NO-2 >> Check harness for open or short between steering lock relay and fusible link.

6. CHECK STARTER RELAY CIRCUIT 2

1. Disconnect IPDM E/R connector.
2. Check continuity between IPDM E/R harness connector and starter relay harness connector.

IPDM E/R		Starter relay		Continuity
Connector	Terminal	Connector	Terminal	
E11	27	E60	3	Existed

3. Check continuity between BCM harness connector and ground.

IPDM E/R		Ground	Continuity
Connector	Terminal		
E11	27		Not existed

Is the inspection result normal?

YES >> GO TO 7.
NO >> Repair or replace harness.

7. CHECK STARTER RELAY

Refer to SEC-117, "Component Inspection".

Is the inspection result normal?

YES >> GO TO 8.
NO >> Replace starter relay.

8. REPLACE BCM

1. Replace BCM. Refer to BCS-57, "Removal and Installation".
2. Perform DTC CONFIRMATION PROCEDURE for DTC B210E. Refer to SEC-115, "DTC Logic".

Is the inspection result normal?

YES >> INSPECTION END
NO >> Replace IPDM E/R. Refer to PCS-28, "Removal and Installation".

Component Inspection

INFOID:0000000006046424

1. CHECK STARTER RELAY

1. Turn ignition switch OFF.
2. Disconnect starter relay.
3. Check continuity between starter relay terminals.

Starter relay		Condition	Continuity
Terminal			
3	5	12 V direct current supply between terminals 1 and 2	Existed
		No current supply	Not existed

Is the inspection result normal?

YES >> INSPECTION END
NO >> Replace starter relay.

B210F SHIFT POSITION/CLUTCH INTERLOCK SWITCH

DTC Logic

INFOID:0000000006038607

DTC DETECTION LOGIC

NOTE:
If DTC B210F is displayed with DTC U1000, first perform the trouble diagnosis for DTC U1000. Refer to PCS-24, "DTC Logic".

DTC No.	Trouble diagnosis name	DTC detecting condition	Possible cause
B210F	INTER LOCK/PNP SW ON	There is a difference between P/N position signal from transmission range switch and P/N position signal (CAN) from BCM.	• Harness or connectors (The CAN communication line is open or shorted.) • Harness or connectors (Transmission range switch circuit is open or shorted.) • Transmission range switch • IPDM E/R • BCM

DTC CONFIRMATION PROCEDURE

1. PERFORM DTC CONFIRMATION PROCEDURE

1. Shift selector lever to the P position.
2. Turn ignition switch ON and wait 1 second or more.
3. Shift selector lever to the N position and wait 1 second or more.
4. Shift selector lever to other than the P and N positions and wait 1 second or more.
5. Check DTC in “Self Diagnostic Result” mode of “IPDM E/R” using CONSULT-III.

Is DTC detected?

YES >> Go to SEC-118, "Diagnosis Procedure".
NO >> INSPECTION END

Diagnosis Procedure

INFOID:0000000006038608

1. CHECK DTC WITH BCM

Check DTC in “Self Diagnostic Result” mode of “BCM” using CONSULT-III.

Is DTC detected?

YES >> Perform the trouble diagnosis related to the detected DTC. Refer to BCS-40, "DTC Index".
NO >> GO TO 2.

2. CHECK IPDM E/R SIGNAL CIRCUIT OPEN AND SHORT

1. Turn ignition switch OFF.
2. Disconnect IPDM E/R connector.
3. Disconnect transmission range switch connector.
4. Check continuity between IPDM E/R harness connector and transmission range switch harness connector.

IPDM E/R		Transmission range switch		Continuity
Connector	Terminal	Connector	Terminal	
F115	76	F21	10	Existed

5. Check continuity between IPDM E/R harness connector and ground.

(+)		(–)	Continuity
IPDM E/R			
Connector	Terminal		
F115	76	Ground	Not existed

Is the inspection result normal?

YES >> Replace IPDM E/R. Refer to PCS-28, "Removal and Installation".
NO >> Repair or replace harness.

B2110 SHIFT POSITION/CLUTCH INTERLOCK SWITCH

DTC Logic

INFOID:0000000006038609

DTC DETECTION LOGIC

NOTE:
If DTC B2110 is displayed with DTC U1000, first perform the trouble diagnosis for DTC U1000. Refer to PCS-24, "DTC Logic".

DTC No.	Trouble diagnosis name	DTC detecting condition	Possible cause
B210F	INTER LOCK/PNP SW OFF	There is a difference between P/N position signal from transmission range switch and P/N position signal (CAN) from BCM.	• Harness or connectors (The CAN communication line is open or shorted.) • Harness or connectors (Transmission range switch circuit is open or shorted.) • Transmission range switch • IPDM E/R • BCM

DTC CONFIRMATION PROCEDURE

1. PERFORM DTC CONFIRMATION PROCEDURE

1. Shift selector lever to the P position.
2. Turn ignition switch ON and wait 1 second or more.
3. Shift selector lever to the N position and wait 1 second or more.
4. Shift selector lever to other than the P and N positions and wait 1 second or more.
5. Check DTC in “Self Diagnostic Result” mode of “IPDM E/R” using CONSULT-III.

Is DTC detected?

YES >> Go to SEC-120, "Diagnosis Procedure".
NO >> INSPECTION END

Diagnosis Procedure

INFOID:0000000006038610

1. CHECK DTC WITH BCM

Check DTC in “Self Diagnostic Result” mode of “BCM” using CONSULT-III.

Is DTC detected?

YES >> Perform the trouble diagnosis related to the detected DTC. Refer to BCS-40, "DTC Index".
NO >> GO TO 2.

2. CHECK IPDM E/R SIGNAL CIRCUIT OPEN AND SHORT

1. Turn ignition switch OFF.
2. Disconnect IPDM E/R connector.
3. Disconnect transmission range switch connector.
4. Check continuity between IPDM E/R harness connector and transmission range switch harness connector.

IPDM E/R		Transmission range switch		Continuity
Connector	Terminal	Connector	Terminal	
F115	76	F21	10	Existed

5. Check continuity between IPDM E/R harness connector and ground.

(+)		(–)	Continuity
IPDM E/R			
Connector	Terminal		
F115	76	Ground	Not existed

Is the inspection result normal?

YES >> Replace IPDM E/R. Refer to PCS-28, "Removal and Installation".
NO >> Repair or replace harness.

SECURITY INDICATOR LAMP

Component Function Check

INFOID:0000000006038616

1.CHECK FUNCTION

1. Perform “THEFT IND” in “ACTIVE TEST” mode of “IMMU” of “BCM” using CONSULT-III.
2. Check security indicator lamp operation.

Test item		Description	
THEFT IND	ON	Security indicator lamp	Illuminates
	OFF		Does not illuminate

Is the inspection result normal?

YES >> INSPECTION END
NO >> Go to SEC-122, "Diagnosis Procedure".

Diagnosis Procedure

INFOID:0000000006038617

1.CHECK SECURITY INDICATOR LAMP POWER SUPPLY CIRCUIT

1. Turn ignition switch OFF.
2. Disconnect combination meter connector.
3. Check voltage between combination meter harness connector and ground.

(+)		(–)	Voltage (V) (Approx.)
Combination meter			
Connector	Terminal		
M34	1	Ground	Battery voltage

Is the inspection result normal?

YES >> GO TO 2.
NO-1 >> Check 10 A fuse [No. 11, located in the fuse block (J/B)].
NO-2 >> Check harness for open or short between combination meter and fuse.

2.CHECK SECURITY INDICATOR LAMP SIGNAL

1. Connect combination meter connector.
2. Disconnect BCM connector.
3. Check voltage between BCM harness connector and ground.

(+)		(–)	Voltage (V) (Approx.)
BCM			
Connector	Terminal		
M68	23	Ground	Battery voltage

Is the inspection result normal?

YES >> Replace BCM. Refer to BCS-57, "Removal and Installation".
NO >> GO TO 3.

3.CHECK SECURITY INDICATOR LAMP CIRCUIT

1. Disconnect combination meter connector.
2. Check continuity between combination meter harness connector and BCM harness connector.

Combination meter		BCM		Continuity
Connector	Terminal	Connector	Terminal	
M34	31	M68	23	Existed

3. Check continuity between combination meter harness connector and ground.

Combination meter		Ground	Continuity
Connector	Terminal		
M34	31		Not existed

Is the inspection result normal?

YES >> Replace combination meter. Refer to MWI-51, "Removal and Installation".
NO >> Repair or replace harness.

SYMPTOM DIAGNOSIS

ENGINE DOES NOT START WHEN INTELLIGENT KEY IS INSIDE OF VEHICLE

Description

INFOID:0000000006038627

Engine does not start when push-button ignition switch is pressed while carrying Intelligent Key.

NOTE:

- Check that vehicle is under the condition shown in “Conditions of vehicle” before starting diagnosis, and check each symptom.
- The engine start function, door lock function, power distribution system, and NATS-IVIS/NVIS in the Intelligent Key system are closely related to each other regarding control. The vehicle security function can operate only when the door lock and power distribution system are operating normally.

Conditions of Vehicle (Operating Conditions)

- “ENGINE START BY I-KEY” setting in “WORK SUPPORT” mode is ON.
- Intelligent Key is not inserted in key slot.
- One or more of Intelligent Keys with registered Intelligent Key ID is in the vehicle.

Diagnosis Procedure

INFOID:0000000006038628

1. PERFORM WORK SUPPORT

Perform “INSIDE ANT DIAGNOSIS” on Work Support in “INTELLIGENT KEY”.
Refer to SEC-19, "INTELLIGENT KEY : CONSULT-III Function (BCM - INTELLIGENT KEY)".

>> GO TO 2.

2. PERFORM SELF-DIAGNOSIS RESULT

Select “Self Diagnostic Result” mode of “BCM”, and check whether or not DTC of inside key antenna is detected.

Is DTC detected?

YES >> Refer to DLK-46, "DTC Logic" (instrument center) or DLK-50, "DTC Logic" (luggage room).
NO >> GO TO 3.

3. CHECK PUSH-BUTTON IGNITION SWITCH

Check push-button ignition switch.
Refer to PCS-87, "Component Function Check".

Is the operation normal?

YES >> GO TO 4.
NO >> Repair or replace malfunctioning parts.

4. CONFIRM THE OPERATION

Confirm the operation again.

Is the inspection normal?

YES >> Check intermittent incident. Refer to GI-33, "Intermittent Incident".
NO >> GO TO 1.

STEERING DOES NOT LOCK

Description

INFOID:0000000006038629

Steering does not lock when door is open while ignition switch is OFF.

NOTE:

Before performing the diagnosis, check “Work Flow”. Refer to SEC-33, "Work Flow".

Diagnosis Procedure

INFOID:0000000006038630

1. CHECK DOOR SWITCH

Check door switch.

Refer to DLK-58, "Component Function Check".

Is the inspection normal?

YES >> GO TO 2.

NO >> Repair or replace malfunctioning parts.

2. CONFIRM THE OPERATION

Confirm the operation again.

Is the inspection normal?

YES >> Check intermittent incident. Refer to GI-33, "Intermittent Incident".

NO >> GO TO 1.

SECURITY INDICATOR LAMP DOES NOT TURN ON OR BLINK

Description

INFOID:0000000006038631

Security indicator lamp does not blink when ignition switch is in a position other than ON

NOTE:

- Before performing the diagnosis, check “Work Flow”. Refer to SEC-33, "Work Flow".
- Check that vehicle is under the condition shown in “Conditions of vehicle” before starting diagnosis, and check each symptom.

Conditions of Vehicle (Operating Conditions)

Ignition switch is not in the ON position.

Diagnosis Procedure

INFOID:0000000006038632

1. CHECK SECURITY INDICATOR LAMP

Check security indicator lamp.

Refer to SEC-122, "Component Function Check".

Is the inspection result normal?

YES >> GO TO 2.

NO >> Repair or replace the malfunctioning parts.

2. CONFIRM THE OPERATION

Confirm the operation again.

Is the result normal?

YES >> Check intermittent incident. Refer to GI-33, "Intermittent Incident".

NO >> GO TO 1.

REMOVAL AND INSTALLATION

NATS ANTENNA AMP.

Removal and Installation

INFOID:0000000006038647

REMOVAL

1. Remove the push-button ignition switch. Refer to SEC-128, "Removal and Installation".
2. Disengage the NATS antenna amp. pawl, and then remove NATS antenna amp.

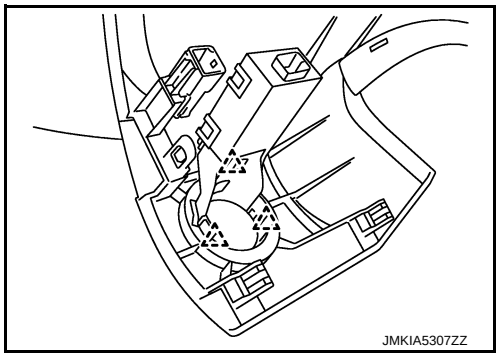

: Pawl

INSTALLATION

Install in the reverse order of removal.

PUSH-BUTTON IGNITION SWITCH

Exploded View

INFOID:0000000006038648

Refer to IP-12, "Exploded View".

Removal and Installation

INFOID:0000000006038649

REMOVAL

1. Remove the cluster lid A. Refer to IP-13, "Removal and Installation".
2. Disengage the push-button ignition switch fixing pawl and then remove push-button ignition switch.

: Pawl

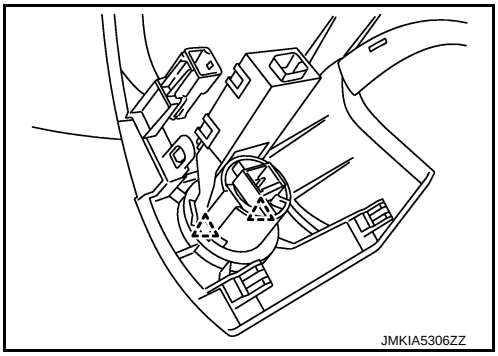

INSTALLATION

Install in the reverse order of removal.

PRECAUTION

PRECAUTIONS

Precaution for Supplemental Restraint System (SRS) "AIR BAG" and "SEAT BELT PRE-TENSIONER"

INFOID:0000000006053657

The Supplemental Restraint System such as “AIR BAG” and “SEAT BELT PRE-TENSIONER”, used along with a front seat belt, helps to reduce the risk or severity of injury to the driver and front passenger for certain types of collision. Information necessary to service the system safely is included in the “SRS AIR BAG” and “SEAT BELT” of this Service Manual.

WARNING:

- **To avoid rendering the SRS inoperative, which could increase the risk of personal injury or death in the event of a collision which would result in air bag inflation, all maintenance must be performed by an authorized NISSAN/INFINITI dealer.**
- **Improper maintenance, including incorrect removal and installation of the SRS, can lead to personal injury caused by unintentional activation of the system. For removal of Spiral Cable and Air Bag Module, see the “SRS AIR BAG”.**
- **Do not use electrical test equipment on any circuit related to the SRS unless instructed to in this Service Manual. SRS wiring harnesses can be identified by yellow and/or orange harnesses or harness connectors.**

PRECAUTIONS WHEN USING POWER TOOLS (AIR OR ELECTRIC) AND HAMMERS

WARNING:

- **When working near the Air Bag Diagnosis Sensor Unit or other Air Bag System sensors with the ignition ON or engine running, DO NOT use air or electric power tools or strike near the sensor(s) with a hammer. Heavy vibration could activate the sensor(s) and deploy the air bag(s), possibly causing serious injury.**
- **When using air or electric power tools or hammers, always switch the ignition OFF, disconnect the battery, and wait at least 3 minutes before performing any service.**

Precaution for Procedure without Cowl Top Cover

INFOID:0000000006053658

When performing the procedure after removing cowl top cover, cover the lower end of windshield with urethane, etc.

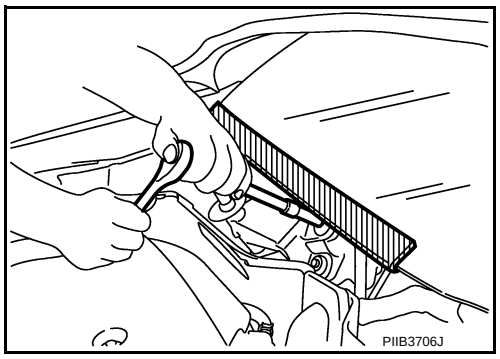

Precaution for Battery Service

INFOID:0000000006053660

Before disconnecting the battery, lower both the driver and passenger windows. This will prevent any interference between the window edge and the vehicle when the door is opened/closed. During normal operation, the window slightly raises and lowers automatically to prevent any window to vehicle interference. The automatic window function will not work with the battery disconnected.

SYSTEM DESCRIPTION

COMPONENT PARTS

Component Parts Location

INFOID:0000000006014761

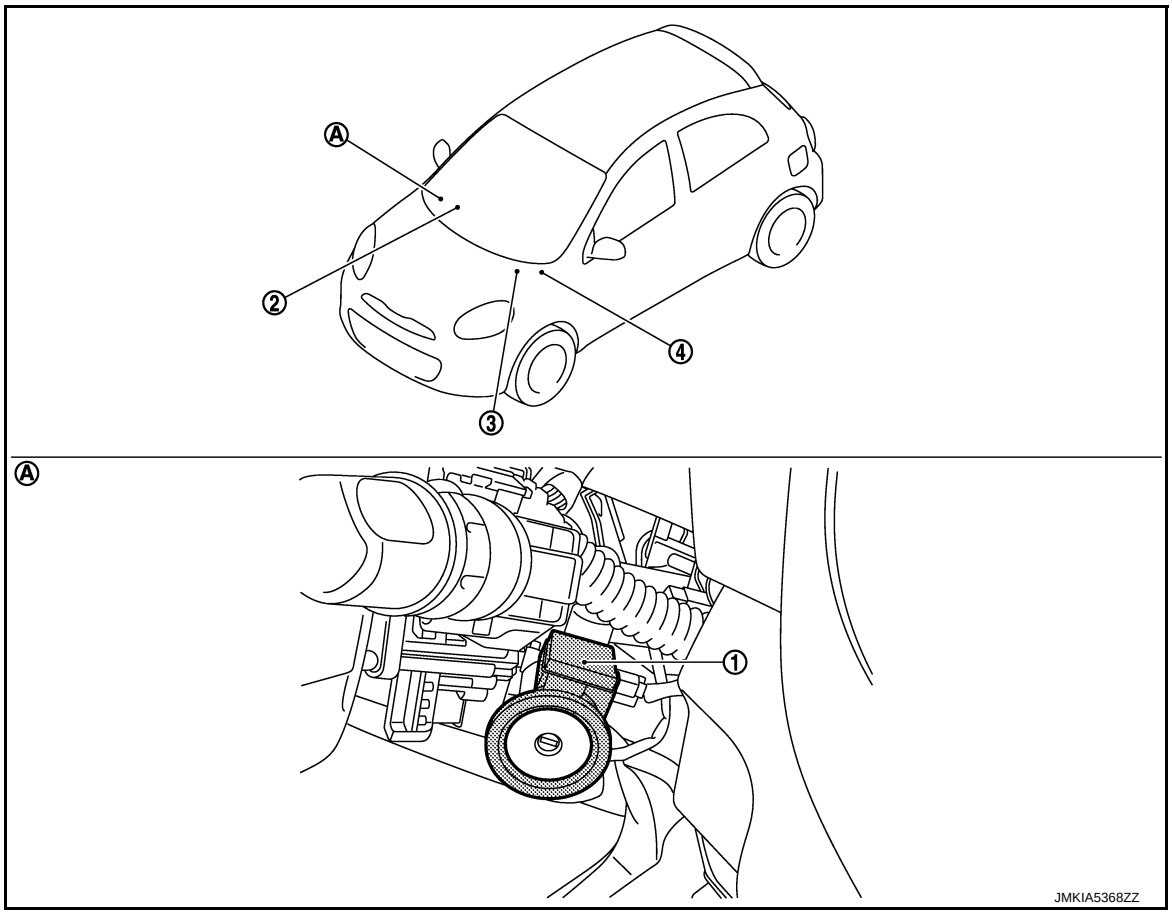

1. NATS antenna amp.
2. Combination meter
   Refer to MWI-4, "Component Parts Location".
3. ECM
   Refer to EC-323, "Component Parts Location" [HR12DE (TYPE 2)].
4. BCM
   Refer to BCS-60, "BODY CONTROL SYSTEM : Component Parts Location".

A. Behind steering column cover

Component Description

INFOID:0000000006014762

Component	Reference
BCM	SEC-130
Ignition key	SEC-131
NATS antenna amp.	SEC-131
Security indicator lamp	SEC-131

BCM

INFOID:0000000006014763

BCM performs the ID verification between BCM and ECM when ignition switch is turned ON.

If the verification result is OK, ECM can start engine. If the verification result is NG, ECM cannot start engine.

Ignition Key

INFOID:0000000006014764

The ID verification is performed between BCM and ignition key via NATS antenna amp. when ignition switch is turned ON. If an unregistered ID of ignition key is used, the operation of the starting engine is prohibited.

NATS Antenna Amp.

INFOID:0000000006014765

The ID verification is performed between BCM and ignition key via NATS antenna amp. when ignition switch is turned ON. If an unregistered ID of ignition key is used, the operation of the starting engine is prohibited.

Security Indicator lamp

INFOID:0000000006014766

Security indicator lamp is located on combination meter.
Nissan Anti-Theft System (NATS) conditions are indicated by blinking or illumination of security indicator lamp.

SYSTEM

NISSAN ANTI-THEFT SYSTEM

NISSAN ANTI-THEFT SYSTEM : System Diagram

INFOID:0000000006014767

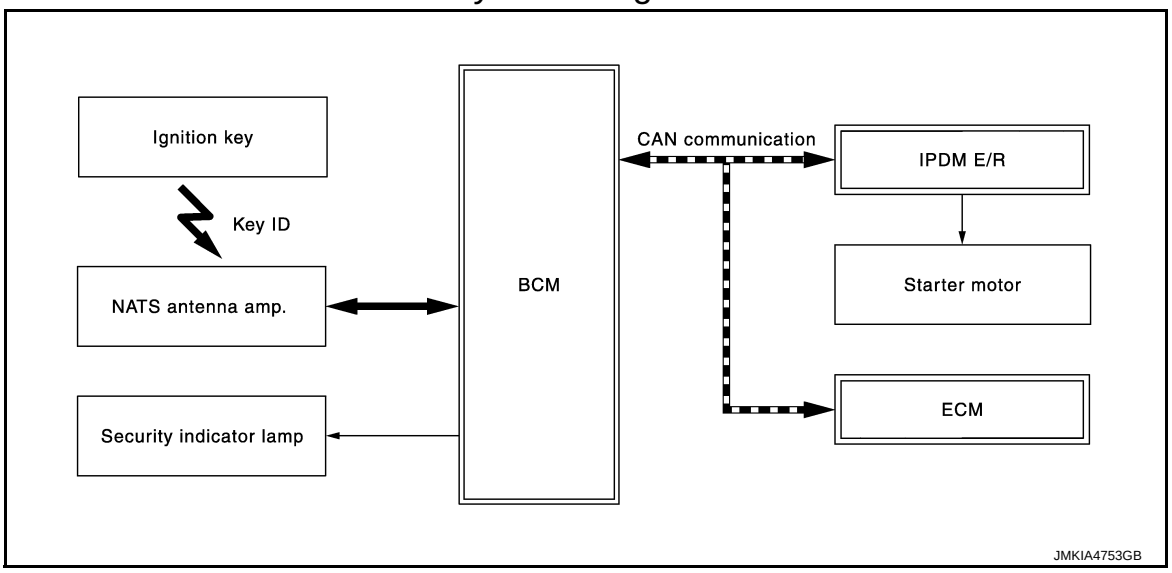

NISSAN ANTI-THEFT SYSTEM : System Description

INFOID:0000000006014768

SYSTEM DESCRIPTION

Nissan Anti-Theft System (NATS) has the following immobilizer functions:

- NATS shows high anti-theft performance to prevent engine from starting by anyone other than the owner who has the registered ignition key.
- The ignition key has NATS ID and only ignition key which has the same ID as the ID registered in BCM and ECM can start engine. This makes high anti-theft performance to prevent the vehicle from being stolen using a copied ignition key.
- Security indicator lamp always flashes when ignition switch is in any position other than the ON position. Therefore, NATS warns outsiders that the vehicle is equipped with the anti-theft system.
- If the system detects a malfunction, security indicator lamp illuminates when ignition switch is turned ON.
- If the owner requires, ignition key ID can be registered for up to 5 keys.
- During trouble diagnosis, when additional ignition key is needed, or when the following components are replaced, the ID registration is required. For the registration procedure, refer to CONSULT-III Operation Manual NATS-IVIS/NVIS.
  - BCM
  - Ignition key
- Possible symptom of NATS malfunction is “Engine cannot start”. The engine can not be started because of other than the NATS malfunction, so start the trouble diagnosis according to SEC-139, "Work Flow".
- If ECM other than Genuine NISSAN parts is installed, the engine cannot be started. For ECM replacement procedure, refer to EC-524, "Removal and Installation" and EC-376, "Work Procedure" [HR12DE (TYPE 2)].

PRECAUTIONS FOR KEY REGISTRATION

- Refer to CONSULT-III Operation Manual NATS-IVIS/NVIS, for the actual procedure of NATS ID registration.
- The NATS ID registration is the procedure that registers the ID stored into the ignition key (transponder is integrated) to BCM.

SECURITY INDICATOR LAMP

- Security indicator lamp is located on combination meter and warns that the vehicle is equipped with NATS.
- Security indicator lamp always blinks, when the ignition switch is in any position except the ON position.
- Security indicator lamp turns OFF, when the ignition switch is in ON position.

OPERATION WHEN IGNITION KEY IS INSERTED INTO IGNITION KEY CYLINDER

1. When ignition switch is turned ON, BCM activates NATS antenna amp. to start NATS ID verification with the ignition key (transponder is integrated).

2. BCM receives the NATS ID signal from ignition key via NATS antenna amp. and verifies it with the registered ID.
3. When the NATS ID verification result is OK, BCM performs the ID verification between BCM and ECM.
4. When the verification result is OK, BCM sends the verification OK signal to ECM, and then ECM can start the engine.
5. When the ignition switch is turned to the START position, BCM sends the starter request signal to IPDM E/R.

DIAGNOSIS SYSTEM (BCM)

COMMON ITEM

COMMON ITEM : CONSULT-III Function (BCM - COMMON ITEM)

INFOID:0000000006032067

APPLICATION ITEM

CONSULT-III performs the following functions via CAN communication with BCM.

Diagnosis mode	Function Description
Work Support	Changes the setting for each system function.
Self Diagnostic Result	Displays the diagnosis results judged by BCM.
CAN Diag Support Monitor	Monitors the reception status of CAN communication viewed from BCM. Refer to CONSULT-III operation manual.
Data Monitor	The BCM input/output signals are displayed.
Active Test	The signals used to activate each device are forcibly supplied from BCM.
Ecu Identification	The BCM part number is displayed.
Configuration	• Read and save the vehicle specification. • Write the vehicle specification when replacing BCM.

SYSTEM APPLICATION

BCM can perform the following functions for each system.

NOTE:

It can perform the diagnosis modes except the following for all sub system selection items.

×: Applicable item

System	Sub system selection item	Diagnosis mode		
		Work Support	Data Monitor	Active Test
Door lock	DOOR LOCK		×	×
Rear window defogger	REAR DEFOGGER		×	×
Warning chime	BUZZER		×	×
Interior room lamp control	INT LAMP	×	×	×
Remote keyless entry system	MULTI REMOTE ENT	×	×	×
Exterior lamp	HEAD LAMP	×	×	×
Wiper and washer	WIPER	×	×	×
Turn signal and hazard warning lamps	FLASHER		×	×
• Automatic air conditioner • Manual air conditioner	AIR CONDITONER		×	
Combination switch	COMB SW		×	
Body control system	BCM	×		
NATS	IMMU	×*1		×
Interior room lamp battery saver	BATTERY SAVER	×	×	×
Back door	TRUNK		×	
—	THEFT ALM*2		×	×
—	RETAINED PWR*2			
Signal buffer system	SIGNAL BUFFER		×	×
Panic alarm	PANIC ALARM			×

- *1: For models without NATS this mode is not used.
- *2: This item is displayed, but is not used.

THEFT ALM

THEFT ALM : CONSULT-III Function (BCM - THEFT)

INFOID:0000000006014770

ACTIVE TEST

Test Item	Description
THEFT IND	This test is able to check security indicator lamp operation. Security indicator lamp will be turned on when “ON” on CONSULT-III screen is touched.
VEHICLE SECURITY HORN	This test is able to check horn operation. Horn will be activated for 0.5 seconds after “ON” on CONSULT-III screen is touched.
HEADLAMP (HI)	This test is able to check headlamp (HI) operation. Headlamps (HI) will be activated for 0.5 seconds after “ON” on CONSULT-III screen is touched.
FLASHER	This test is able to check hazard warning lamp operation. Hazard warning lamps will be activated after “LH” or “RH” on CONSULT-III screen is touched.

IMMU

IMMU : CONSULT-III Function (BCM - IMMU)

INFOID:0000000006014771

ACTIVE TEST

Test item	Description
THEFT IND	This test is able to check security indicator lamp operation. Security indicator lamp will be turned on when “ON” on CONSULT-III screen is touched.

ECU DIAGNOSIS INFORMATION

BCM

List of ECU Reference

INFOID:0000000006014772

ECU	Reference
BCM	BCS-72, "Reference Value"
	BCS-85, "Fail-safe"
	BCS-85, "DTC Inspection Priority Chart"
	BCS-86, "DTC Index"

WIRING DIAGRAM

NISSAN ANTI-THEFT SYSTEM

Wiring Diagram

INFOID:0000000006014773

For connector terminal arrangements, harness layouts, and alphabets in a ⬡ (option abbreviation; if not described in wiring diagram), refer to GI-12, "Connector Information".

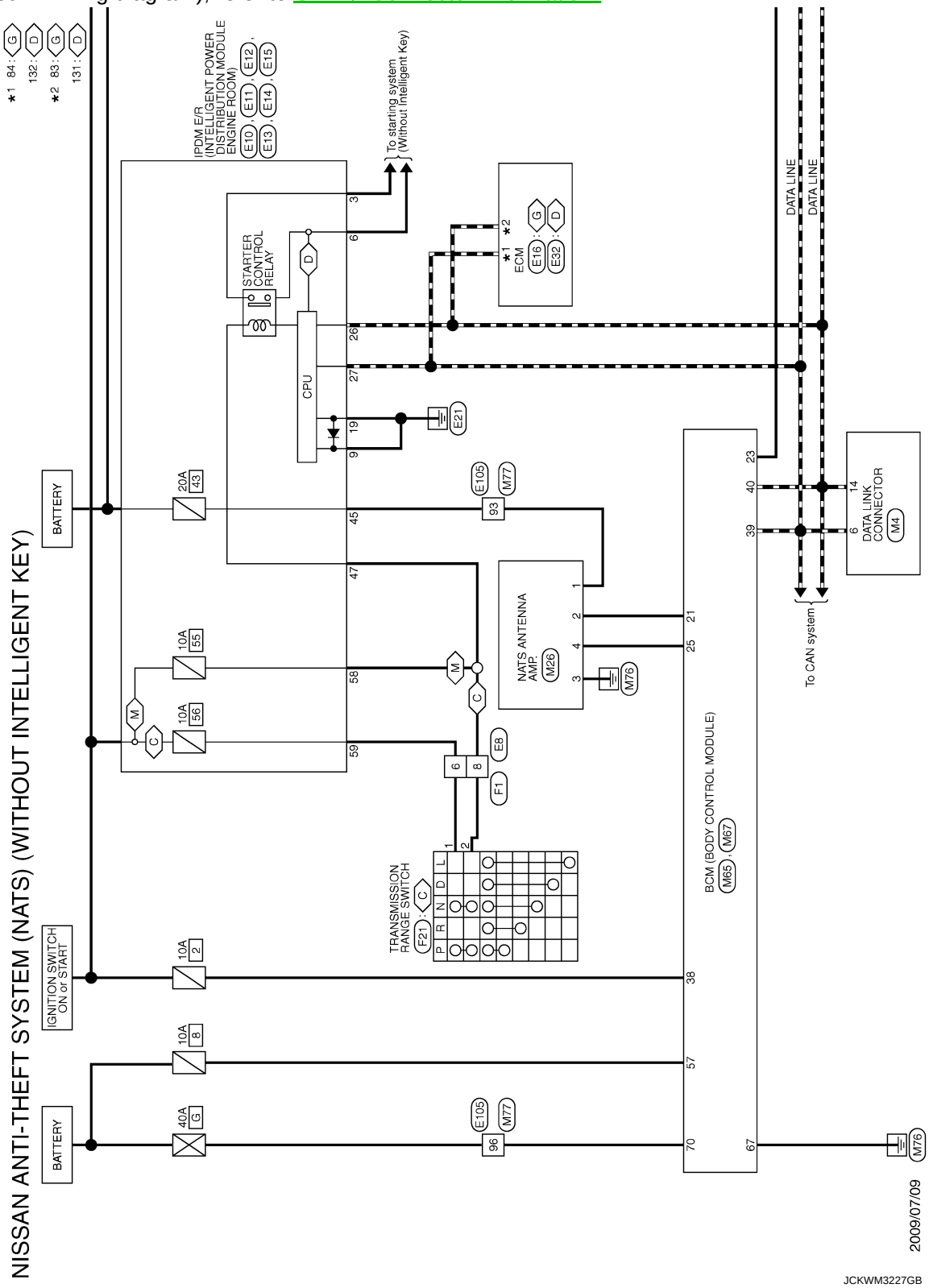

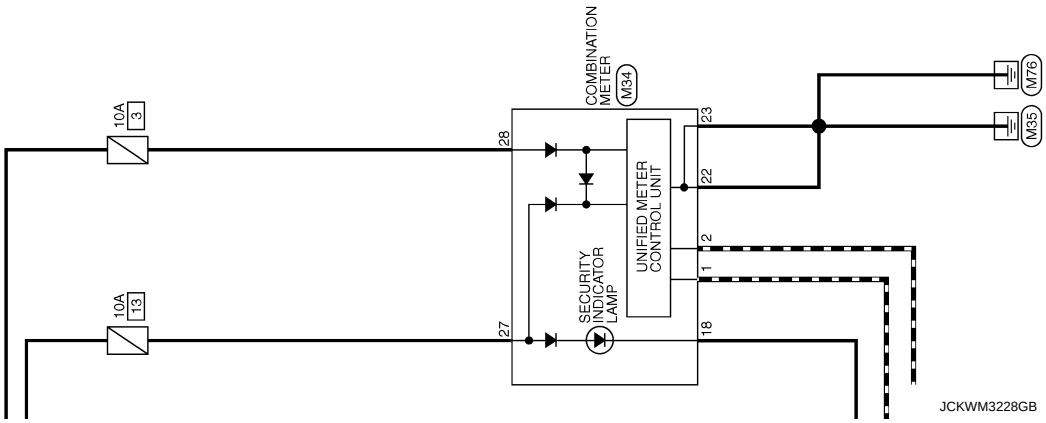
10A
3
10A
13
28
27
COMBINATION METER
M34
SECURITY INDICATOR LAMP
UNIFIED METER CONTROL UNIT
23
22
2
1
18
M76
M35
JCKWM3228GB

BASIC INSPECTION

DIAGNOSIS AND REPAIR WORK FLOW

Work Flow

INFOID:0000000006014774

OVERALL SEQUENCE

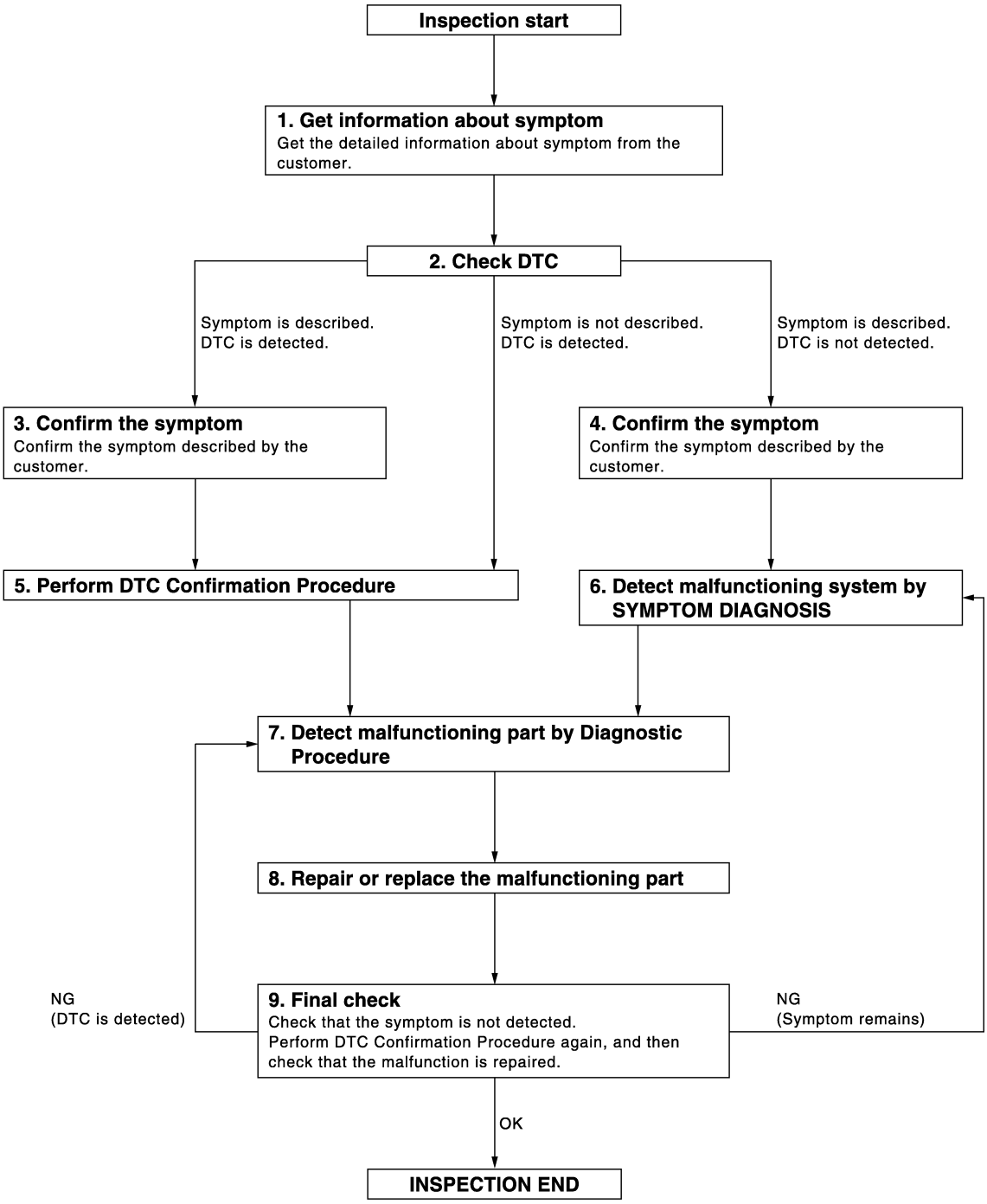

JMKIA3449GB

DETAILED FLOW

1. GET INFORMATION ABOUT SYMPTOM

Get the detailed information from the customer about the symptom (the condition and the environment when the incident/malfunction occurred).

>> GO TO 2.

2. CHECK DTC

1. Check DTC for “ENGINE” and “BCM” using CONSULT-III.
2. Perform the following procedure if DTC is displayed.
- Erase DTC.
- Study the relationship between the cause detected by DTC and the symptom described by the customer.
3. Check related service bulletins for information.

Is any symptom described and any DTC detected?

Symptom is described, DTC is displayed>>GO TO 3.
Symptom is described, DTC is not displayed>>GO TO 4.
Symptom is not described, DTC is displayed>>GO TO 5.

3. CONFIRM THE SYMPTOM

Confirm the symptom described by the customer.
Connect CONSULT-III to the vehicle and check self diagnosis results in real time.
Verify relation between the symptom and the condition when the symptom is detected.

>> GO TO 5.

4. CONFIRM THE SYMPTOM

Confirm the symptom described by the customer.
Connect CONSULT-III to the vehicle and check self diagnosis results in real time.
Verify relation between the symptom and the condition when the symptom is detected.

>> GO TO 6.

5. PERFORM DTC CONFIRMATION PROCEDURE

Perform DTC CONFIRMATION PROCEDURE for the displayed DTC, and then check that DTC is detected again.
If two or more DTCs are detected, refer to EC-365, "DTC Inspection Priority Chart" [HR12DE (TYPE 2)] and BCS-85, "DTC Inspection Priority Chart" (BCM), and then determine the trouble diagnosis order.

Is DTC detected?

YES >> GO TO 7.
NO >> Refer to GI-33, "Intermittent Incident".

6. DETECT MALFUNCTIONING SYSTEM BY SYMPTOM DIAGNOSIS

Detect malfunctioning system according to SYMPTOM DIAGNOSIS based on the confirmed symptom in step 4, and determine the trouble diagnosis order based on possible causes and symptom.

>> GO TO 7.

7. DETECT MALFUNCTIONING PART BY DIAGNOSTIC PROCEDURE

Inspect according to Diagnostic Procedure of the system.

>> GO TO 8.

8. REPAIR OR REPLACE THE MALFUNCTIONING PART

1. Repair or replace the malfunctioning part.
2. Reconnect parts or connectors disconnected during Diagnostic Procedure again after repair and replacement.
3. Check DTC. If DTC is displayed, erase it.

>> GO TO 9.

9. FINAL CHECK

When DTC was detected in step 2, perform DTC CONFIRMATION PROCEDURE again, and then check that the malfunctions have been fully repaired.
When symptom was described by the customer, refer to the confirmed symptom in step 3 or 4, and check that the symptom is not detected.

Does the symptom reappear?

YES (DTC is detected)>>GO TO 7.
YES (Symptom remains)>>GO TO 6.
NO >> INSPECTION END

ADDITIONAL SERVICE WHEN REPLACING CONTROL UNIT

ECM

ECM : Description

INFOID:0000000006046712

Performing the following procedure can automatically activate recommunication of ECM and BCM, but only when the ECM is replaced with a new one*.
*: New one means a virgin ECM that has never been energized on-board.
(In this step, initialization procedure by CONSULT-III is not necessary)
NOTE:
- **When registering new Key IDs or replacing the ECM that is not brand new, refer to CONSULT-III Operation Manual NATS-IVIS/NVIS.**
- **If multiple keys are attached to the key holder, separate them before beginning work.**
- **Distinguish keys with unregistered key IDs from those with registered IDs.**

ECM : Work Procedure

INFOID:0000000006046713

1. PERFORM ECM RECOMMUNICATING FUNCTION

1. Install ECM.
2. Contact backside of registered Intelligent key* to push-button ignition switch, then turn power supply position to ON.
   *: To perform this step, use the key that is used before performing ECM replacement.
3. Maintain power supply position in the ON position for at least 5 seconds.
4. Turn power supply position to OFF.
5. Check that the engine starts.

>> GO TO 2.

2. PERFORM ADDITIONAL SERVICE WHEN REPLACING ECM

Perform the following procedure.
- HR12DE (TYPE 2): EC-376, "Work Procedure"

>> END

BCM

BCM : Description

INFOID:0000000006046714

BEFORE REPLACEMENT

When replacing BCM, save or print current vehicle specification with CONSULT-III configuration before replacement.
NOTE:
If “READ CONFIGURATION” can not be used, use the “WRITE CONFIGURATION - Manual selection” after replacing BCM.

AFTER REPLACEMENT

CAUTION:
- **When replacing BCM, you must perform “WRITE CONFIGURATION” with CONSULT-III.**
- **Complete the procedure of “WRITE CONFIGURATION” in order.**
- **If you set incorrect “WRITE CONFIGURATION”, incidents might occur.**
- **Configuration is different for each vehicle model. Confirm configuration of each vehicle model.**
- **When replacing BCM, perform the system initialization (NATS).**

BCM : Work Procedure

INFOID:0000000006046715

1. SAVING VEHICLE SPECIFICATION

CONSULT-III Configuration
Perform “READ CONFIGURATION” to save or print current vehicle specification. Refer to BCS-89, "Description".

NOTE:
If “READ CONFIGURATION” can not be used, use the “WRITE CONFIGURATION - Manual selection” after replacing BCM.

>> GO TO 2.

2. REPLACE BCM

Replace BCM. Refer to BCS-99, "Removal and Installation".

>> GO TO 3.

3. WRITING VEHICLE SPECIFICATION

CONSULT-III Configuration
Perform “WRITE CONFIGURATION - Config file” or “WRITE CONFIGURATION - Manual selection” to write vehicle specification. Refer to BCS-88, "Work Procedure".

>> GO TO 4.

4. INITIALIZE BCM (NATS)

Perform BCM initialization. (NATS)

>> WORK END

DTC/CIRCUIT DIAGNOSIS

P1610 LOCK MODE

Description

INFOID:0000000006014777

ECM forcibly switches to the mode that inhibits engine start, when engine start operation is performed 5 times or more while communication between ECM and BCM is not normal, or when engine start operation is performed 5 times or more using the unregistered ignition key.

DTC Logic

INFOID:0000000006014778

DTC DETECTION LOGIC

DTC No.	Trouble diagnosis name	DTC detecting condition	Possible cause
P1610	LOCK MODE	When ECM detects a communication malfunction between ECM and BCM 5 times or more.	—

DTC CONFIRMATION PROCEDURE

1. PERFORM DTC CONFIRMATION PROCEDURE

1. Turn ignition switch ON.
2. Check DTC in “Self Diagnostic Result” mode of “ENGINE” using CONSULT-III.

Is DTC detected?

YES >> Refer to SEC-144, "Diagnosis Procedure".
NO >> INSPECTION END

Diagnosis Procedure

INFOID:0000000006014779

1. CHECK ENGINE START FUNCTION

1. Perform the check for DTC except DTC P1610.
2. Use CONSULT-III to erase DTC after fixing.
3. Turn ignition switch OFF.
4. Turn ignition switch ON using the registered ignition key and wait for 5 seconds.
5. Turn the ignition switch OFF and wait 5 seconds.
6. Repeat steps 4 and 5 twice (a total of 3 times).
7. Check that engine can start using the registered ignition key.

>> INSPECTION END

P1611 ID DISCORD, IMMU-ECM

DTC Logic

INFOID:0000000006014781

DTC DETECTION LOGIC

NOTE:
- If DTC P1611 is displayed with DTC U1000 (for BCM), first perform the trouble diagnosis for DTC U1000. Refer to BCS-47, "DTC Logic".
- If DTC P1611 is displayed with DTC U1010 (for BCM), first perform the trouble diagnosis for DTC U1010. Refer to BCS-48, "DTC Logic".

DTC No.	Trouble diagnosis name	DTC detecting condition	Possible cause
P1611	ID DISCORD IMMU-ECM	The ID verification results between BCM and ECM are NG.	• Harness or connectors (The CAN communication line is open or shorted.) • BCM • ECM

DTC CONFIRMATION PROCEDURE

1. PERFORM DTC CONFIRMATION PROCEDURE

1. Turn ignition switch ON.
2. Check DTC in “Self Diagnostic Result” mode of “ENGINE” using CONSULT-III.

Is DTC detected?

YES >> Refer to SEC-145, "Diagnosis Procedure".
NO >> INSPECTION END

Diagnosis Procedure

INFOID:0000000006014782

1. PERFORM INITIALIZATION

Perform initialization of BCM and reregistration of all ignition keys using CONSULT-III.
For initialization and registration procedures, refer to CONSULT-III Operation Manual NATS-IVIS/NVIS.

Can the system be initialized and can the engine be started with reregistered ignition key?

YES >> INSPECTION END
NO >> GO TO 2.

2. REPLACE BCM

1. Replace BCM. Refer to BCS-57, "Removal and Installation".
2. Perform initialization of BCM and reregistration of all ignition keys using CONSULT-III.
   For initialization and registration procedures, refer to CONSULT-III Operation Manual NATS-IVIS/NVIS.

Can the system be initialized and can the engine be started with reregistered ignition key?

YES >> INSPECTION END
NO >> GO TO 3.

3. REPLACE ECM

1. Replace ECM. Refer to EC-524, "Removal and Installation" [HR12DE (TYPE 2)].
2. Perform “ADDITIONAL SERVICE WHEN REPLACING ECM”. Refer to SEC-36, "ECM : Work Procedure" [HR12DE (TYPE 2)].
3. Start engine.

Does engine start?

YES >> INSPECTION END
NO >> GO TO 4.

4. CHECK INTERMITTENT INCIDENT

Refer to GI-33, "Intermittent Incident".

>> INSPECTION END

P1612 CHAIN OF ECM-IMMU

DTC Logic

INFOID:0000000006014784

DTC DETECTION LOGIC

NOTE:

- If DTC P1612 is displayed with DTC U1000 (for BCM), first perform the trouble diagnosis for DTC U1000. Refer to BCS-47, "DTC Logic".
- If DTC P1612 is displayed with DTC U1010 (for BCM), first perform the trouble diagnosis for DTC U1010. Refer to BCS-48, "DTC Logic".

DTC No.	Trouble diagnosis name	DTC detecting condition	Possible cause
P1612	CHAIN OF ECM-IMMU	Inactive communication between ECM and BCM	• Harness or connectors (The CAN communication line is open or shorted.) • BCM • ECM

DTC CONFIRMATION PROCEDURE

1. PERFORM DTC CONFIRMATION PROCEDURE

1. Turn ignition switch ON.
2. Check DTC in “Self Diagnostic Result” mode of “ENGINE” using CONSULT-III.

Is DTC detected?

YES >> Refer to SEC-146, "Diagnosis Procedure".
NO >> INSPECTION END

Diagnosis Procedure

INFOID:0000000006014785

1. REPLACE BCM

1. Replace BCM. Refer to BCS-57, "Removal and Installation".
2. Perform initialization of BCM and reregistration of all ignition keys using CONSULT-III.
   For initialization and registration procedures, refer to CONSULT-III Operation Manual NATS-IVIS/NVIS.
3. Start engine.

Does the engine start?

YES >> INSPECTION END
NO >> GO TO 2.

2. REPLACE ECM

1. Replace ECM. Refer to EC-524, "Removal and Installation" [HR12DE (TYPE 2)].
2. Perform “ADDITIONAL SERVICE WHEN REPLACING ECM”. Refer to SEC-36, "ECM : Work Procedure" [HR12DE (TYPE 2)].

>> INSPECTION END

P1614 CHAIN OF IMMU-KEY

DTC Logic

INFOID:0000000006014787

DTC DETECTION LOGIC

DTC No.	Trouble diagnosis name	DTC detecting condition	Possible cause
P1614	CHAIN OF IMMU-KEY	• Inactive communication between NATS antenna amp. and BCM • Ignition key is malfunctioning	• Harness or connectors (The NATS antenna amp. circuit is open or shorted.) • Ignition key • NATS antenna amp. • BCM

DTC CONFIRMATION PROCEDURE

1. PERFORM DTC CONFIRMATION PROCEDURE

1. Turn ignition switch ON.
2. Check DTC in “Self Diagnostic Result” mode of “ENGINE” using CONSULT-III.

Is DTC detected?

YES >> Refer to SEC-147, "Diagnosis Procedure".
NO >> INSPECTION END

Diagnosis Procedure

INFOID:0000000006014788

1. CHECK FUSE

Check that the following IPDM E/R fuse is not blown.

Signal name	Fuse No.
Battery power supply	49

Is the fuse fusing?

YES >> Replace the blown fuse after repairing the affected circuit if a fuse is blown.
NO >> GO TO 2.

2. CHECK NATS ANTENNA AMP. INSTALLATION

Check NATS antenna amp. Installation. Refer to SEC-161, "Removal and Installation".

Is the inspection result normal?

YES >> GO TO 3.
NO >> Reinstall NATS antenna amp. correctly.

3. CHECK IGNITION KEY

Start engine using another registered ignition key.

Does the engine start?

YES-1 >> Replace ignition key.
YES-2 >> Perform initialization of BCM and registration of all ignition keys using CONSULT-III. For initialization and registration procedures, refer to CONSULT-III Operation Manual NATS-IVIS/NVIS.
NO >> GO TO 4.

4. CHECK NATS ANTENNA AMP. POWER SUPPLY

1. Turn ignition switch OFF.
2. Disconnect NATS antenna amp. connector.
3. Check voltage between NATS antenna amp. harness connector and ground.

(+)		(–)	Voltage (V) (Approx.)
NATS antenna amp.			
Connector	Terminal		
M26	1	Ground	Battery voltage

Is the inspection result normal?

YES >> GO TO 6.
NO >> GO TO 5.

5. CHECK NATS ANTENNA AMP. POWER SUPPLY CIRCUIT

1. Disconnect IPDM E/R connector.
2. Check continuity between IPDM E/R harness connector and NATS antenna amp. connector.

IPDM E/R		NATS antenna amp.		Continuity
Connector	Terminal	Connector	Terminal	
F115	71	M26	1	Existed

3. Check continuity between IPDM E/R harness connector and ground.

IPDM E/R		Ground	Continuity
Connector	Terminal		
F115	71		Not existed

Is the inspection result normal?

YES >> Replace IPDM E/R. Refer to PCS-52, "Removal and Installation".
NO >> Repair or replace harness.

6. CHECK NATS ANTENNA AMP. GROUND CIRCUIT

Check continuity between NATS antenna amp. harness connector and ground.

NATS antenna amp.		Ground	Continuity
Connector	Terminal		
M26	3		Existed

Is the inspection result normal?

YES >> GO TO 7.
NO >> Repair or replace harness.

7. CHECK NATS ANTENNA AMP. SIGNAL

1. Connect BCM connector and NATS antenna amp. connector.
2. Check voltage between BCM harness connector and ground.

(+)		(–)	Condition	Voltage (V) (Approx.)
BCM				
Connector	Terminal			
M65	21	Ground	Just after inserting ignition key into key cylinder	Pointer of tester should move
			Other than above	0
	25		Just after inserting ignition key into key cylinder	Pointer of tester should move
			Other than above	0

Is the inspection result normal?

YES >> GO TO 9.
NO >> GO TO 8.

8. CHECK NATS ANTENNA AMP. SIGNAL CIRCUIT

1. Disconnect NATS antenna amp. connector.
2. Check continuity between BCM harness connector and NATS antenna amp. harness connector.

BCM		NATS antenna amp.		Continuity
Connector	Terminal	Connector	Terminal	
M65	21	M26	2	Existed
	25		4	

3. Check continuity between BCM harness connector and ground.

BCM		Ground	Continuity
Connector	Terminal		
M65	21		Not existed
	25		

Is the inspection result normal?

YES >> Replace NATS antenna amp. Refer to SEC-161, "Removal and Installation".
NO >> Repair or replace harness.

9. CHECK INTERMITTENT INCIDENT

Refer to GI-33, "Intermittent Incident".

>> INSPECTION END

P1615 DIFFRENCE OF KEY

DTC Logic

INFOID:0000000006014790

DTC DETECTION LOGIC

DTC No.	Trouble diagnosis name	DTC detecting condition	Possible cause
P1615	DIFFERENCE OF KEY	The ID verification results between BCM and ignition key are NG.	• Ignition key • BCM

DTC CONFIRMATION PROCEDURE

1. PERFORM DTC CONFIRMATION PROCEDURE

1. Turn ignition switch ON.
2. Check DTC in “Self Diagnostic Result” mode of “ENGINE” using CONSULT-III.

Is DTC detected?

YES >> Refer to SEC-150, "Diagnosis Procedure".
NO >> INSPECTION END

Diagnosis Procedure

INFOID:0000000006014791

1. PERFORM INITIALIZATION

Perform initialization of BCM and reregistration of all ignition keys using CONSULT-III.
For initialization and registration procedures, refer to CONSULT-III Operation Manual NATS-IVIS/NVIS.

Can the system be initialized and can the engine be started with reregistered ignition key?

YES >> INSPECTION END
NO >> GO TO 2.

2. REPLACE BCM

1. Replace BCM. Refer to BCS-57, "Removal and Installation".
2. Perform initialization of BCM and reregistration of all ignition keys using CONSULT-III.
   For initialization and registration procedures, refer to CONSULT-III Operation Manual NATS-IVIS/NVIS.

Can the system be initialized and can the engine be started with reregistered ignition key?

YES >> INSPECTION END
NO >> GO TO 3.

3. REPLACE ECM

1. Replace ECM. Refer to EC-524, "Removal and Installation" [HR12DE (TYPE 2)].
2. Perform “ADDITIONAL SERVICE WHEN REPLACING ECM”. Refer to SEC-36, "ECM : Work Procedure" [HR12DE (TYPE 2)].

>> INSPECTION END

B2190 NATS ANTENNA AMP.

DTC Logic

INFOID:0000000006014793

DTC DETECTION LOGIC

DTC No.	Trouble diagnosis name	DTC detecting condition	Possible cause
B2190	NATS ANTENNA AMP.	• Inactive communication between NATS antenna amp. and BCM. • Ignition key is malfunctioning.	• Harness or connectors (The NATS antenna amp. circuit is open or shorted.) • Ignition key • NATS antenna amp. • BCM

DTC CONFIRMATION PROCEDURE

1. PERFORM DTC CONFIRMATION PROCEDURE

1. Turn ignition switch ON.
2. Check DTC in “Self Diagnostic Result” mode of “BCM” using CONSULT-III.

Is DTC detected?

YES >> Refer to SEC-151, "Diagnosis Procedure".
NO >> INSPECTION END

Diagnosis Procedure

INFOID:0000000006014794

1. CHECK FUSE

Check that the following IPDM E/R fuse is not blown.

Signal name	Fuse No.
Battery power supply	49

Is the fuse fusing?

YES >> Replace the blown fuse after repairing the affected circuit if a fuse is blown.
NO >> GO TO 2.

2. CHECK NATS ANTENNA AMP. INSTALLATION

Check NATS antenna amp. Installation. Refer to SEC-161, "Removal and Installation".

Is the inspection result normal?

YES >> GO TO 3.
NO >> Reinstall NATS antenna amp. correctly.

3. CHECK IGNITION KEY

Start engine using another registered ignition key.

Does the engine start?

YES-1 >> Replace ignition key.
YES-2 >> Perform initialization of BCM and reregistration of all ignition keys using CONSULT-III. For initialization and registration procedures, refer to CONSULT-III Operation Manual NATS-IVIS/NVIS.
NO >> GO TO 4.

4. CHECK NATS ANTENNA AMP. POWER SUPPLY

1. Turn ignition switch OFF.
2. Disconnect NATS antenna amp. connector.
3. Check voltage between NATS antenna amp. harness connector and ground.

(+)		(–)	Voltage (V) (Approx.)
NATS antenna amp.			
Connector	Terminal		
M26	1	Ground	Battery voltage

Is the inspection result normal?

YES >> GO TO 6.
NO >> GO TO 5.

5. CHECK NATS ANTENNA AMP. POWER SUPPLY CIRCUIT

1. Disconnect IPDM E/R connector.
2. Check continuity between IPDM E/R harness connector and NATS antenna amp. connector.

IPDM E/R		NATS antenna amp.		Continuity
Connector	Terminal	Connector	Terminal	
F115	71	M26	1	Existed

3. Check continuity between IPDM E/R harness connector and ground.

IPDM E/R		Ground	Continuity
Connector	Terminal		
F115	71		Not existed

Is the inspection result normal?

YES >> Replace IPDM E/R. Refer to PCS-52, "Removal and Installation".
NO >> Repair or replace harness.

6. CHECK NATS ANTENNA AMP. GROUND CIRCUIT

Check continuity between NATS antenna amp. harness connector and ground.

NATS antenna amp.		Ground	Continuity
Connector	Terminal		
M26	3		Existed

Is the inspection result normal?

YES >> GO TO 7.
NO >> Repair or replace harness.

7. CHECK NATS ANTENNA AMP. SIGNAL

1. Connect BCM connector and NATS antenna amp. connector.
2. Check voltage between BCM harness connector and ground.

(+)		(–)	Condition	Voltage (V) (Approx.)
BCM				
Connector	Terminal			
M65	21	Ground	Just after inserting ignition key into key cylinder	Pointer of tester should move
			Other than above	0
	25		Just after inserting ignition key into key cylinder	Pointer of tester should move
			Other than above	0

Is the inspection result normal?

YES >> GO TO 9.
NO >> GO TO 8.

8. CHECK NATS ANTENNA AMP. SIGNAL CIRCUIT

1. Disconnect NATS antenna amp. connector.
2. Check continuity between BCM harness connector and NATS antenna amp. harness connector.

BCM		NATS antenna amp.		Continuity
Connector	Terminal	Connector	Terminal	
M65	21	M26	2	Existed
	25		4	

3. Check continuity between BCM harness connector and ground.

BCM		Ground	Continuity
Connector	Terminal		
M65	21		Not existed
	25		

Is the inspection result normal?

YES >> Replace NATS antenna amp. Refer to SEC-161, "Removal and Installation".
NO >> Repair or replace harness.

9. CHECK INTERMITTENT INCIDENT

Refer to GI-33, "Intermittent Incident".

>> INSPECTION END

B2191 DIFFERENCE OF KEY

DTC Logic

INFOID:0000000006014796

DTC DETECTION LOGIC

DTC No.	Trouble diagnosis name	DTC detecting condition	Possible cause
B2191	DIFFERENCE OF KEY	The ID verification results between BCM and ignition key are NG.	• Ignition key • BCM

DTC CONFIRMATION PROCEDURE

1. PERFORM DTC CONFIRMATION PROCEDURE

1. Turn ignition switch ON.
2. Check DTC in “Self Diagnostic Result” mode of “BCM” using CONSULT-III.

Is DTC detected?

YES >> Refer to SEC-154, "Diagnosis Procedure".
NO >> INSPECTION END

Diagnosis Procedure

INFOID:0000000006014797

1. PERFORM INITIALIZATION

Perform initialization of BCM and reregistration of all ignition keys using CONSULT-III.
For initialization and registration procedures, refer to CONSULT-III Operation Manual NATS-IVIS/NVIS.

Can the system be initialized and can the engine be started with reregistered ignition key?

YES >> INSPECTION END
NO >> GO TO 2.

2. REPLACE IGNITION KEY

1. Replace ignition key.
2. Perform initialization of BCM and reregistration of all ignition keys using CONSULT-III.
   For initialization and registration procedures, refer to CONSULT-III Operation Manual NATS-IVIS/NVIS.

Can the system be initialized and can the engine be started with reregistered ignition key?

YES >> INSPECTION END
NO >> GO TO 3.

3. REPLACE BCM

1. Replace ECM. Refer to EC-524, "Removal and Installation" [HR12DE (TYPE 2)].
2. Perform “ADDITIONAL SERVICE WHEN REPLACING ECM”. Refer to SEC-36, "ECM : Work Procedure" [HR12DE (TYPE 2)].

>> INSPECTION END

B2192 ID DISCORD, IMMU-ECM

DTC Logic

INFOID:0000000006014799

DTC DETECTION LOGIC

NOTE:

- If DTC B2192 is displayed with DTC U1000, first perform the trouble diagnosis for DTC U1000. Refer to BCS-47, "DTC Logic".
- If DTC B2192 is displayed with DTC U1010, first perform the trouble diagnosis for DTC U1010. Refer to BCS-48, "DTC Logic".

DTC No.	Trouble diagnosis name	DTC detecting condition	Possible cause
B2192	ID DISCORD BCM-ECM	The ID verification results between BCM and ECM are NG.	• Harness or connectors (The CAN communication line is open or shorted.) • BCM • ECM

DTC CONFIRMATION PROCEDURE

1. PERFORM DTC CONFIRMATION PROCEDURE

1. Turn ignition switch ON.
2. Check DTC in “Self Diagnostic Result” mode of “BCM” using CONSULT-III.

Is DTC detected?

YES >> Refer to SEC-155, "Diagnosis Procedure".
NO >> INSPECTION END

Diagnosis Procedure

INFOID:0000000006014800

1. PERFORM INITIALIZATION

Perform initialization of BCM and reregistration of all ignition keys using CONSULT-III.
For initialization and registration procedures, refer to CONSULT-III Operation Manual NATS-IVIS/NVIS.

Can the system be initialized and can the engine be started with reregistered ignition key?

YES >> INSPECTION END
NO >> GO TO 2.

2. REPLACE BCM

1. Replace BCM. Refer to BCS-57, "Removal and Installation".
2. Perform initialization of BCM and reregistration of all ignition keys using CONSULT-III.
   For initialization and registration procedures, refer to CONSULT-III Operation Manual NATS-IVIS/NVIS.

Can the system be initialized and can the engine be started with reregistered ignition key?

YES >> INSPECTION END
NO >> GO TO 3.

3. REPLACE ECM

1. Replace ECM. Refer to EC-524, "Removal and Installation" [HR12DE (TYPE 2)].
2. Perform “ADDITIONAL SERVICE WHEN REPLACING ECM”. Refer to SEC-36, "ECM : Work Procedure" [HR12DE (TYPE 2)].
3. Start engine.

Does engine start?

YES >> INSPECTION END
NO >> GO TO 4.

4. CHECK INTERMITTENT INCIDENT

Refer to GI-33, "Intermittent Incident".

>> INSPECTION END

B2193 CHAIN OF ECM-IMMU

DTC Logic

INFOID:0000000006014802

DTC DETECTION LOGIC

NOTE:

- If DTC B2193 is displayed with DTC U1000, first perform the trouble diagnosis for DTC U1000. Refer to BCS-47, "DTC Logic".
- If DTC B2193 is displayed with DTC U1010, first perform the trouble diagnosis for DTC U1010. Refer to BCS-48, "DTC Logic".

DTC No.	Trouble diagnosis name	DTC detecting condition	Possible cause
B2193	CHAIN OF BCM-ECM	Inactive communication between ECM and BCM	• Harness or connectors (The CAN communication line is open or shorted.) • BCM • ECM

DTC CONFIRMATION PROCEDURE

1. PERFORM DTC CONFIRMATION PROCEDURE

1. Turn ignition switch ON.
2. Check DTC in “Self Diagnostic Result” mode of “BCM” using CONSULT-III.

Is DTC detected?

YES >> Refer to SEC-156, "Diagnosis Procedure".
NO >> INSPECTION END

Diagnosis Procedure

INFOID:0000000006014803

1. REPLACE BCM

1. Replace BCM. Refer to BCS-57, "Removal and Installation".
2. Perform initialization of BCM and reregistration of all ignition keys using CONSULT-III.
   For initialization and registration procedures, refer to CONSULT-III Operation Manual NATS-IVIS/NVIS.

Can the system be initialized and can the engine be started with reregistered ignition key?

YES >> INSPECTION END
NO >> GO TO 2.

2. REPLACE ECM

1. Replace ECM. Refer to EC-524, "Removal and Installation" [HR12DE (TYPE 2)].
2. Perform “ADDITIONAL SERVICE WHEN REPLACING ECM”. Refer to SEC-36, "ECM : Work Procedure" [HR12DE (TYPE 2)].

>> INSPECTION END

B2195 ANTI-SCANNING

DTC Logic

INFOID:0000000006014805

DTC DETECTION LOGIC

DTC No.	Trouble diagnosis name	DTC detecting condition	Possible cause
B2195	ANTI SCANNING	ID verification between BCM and ECM that is out of the specified specification is detected	ID verification request out of the specified specification

DTC CONFIRMATION PROCEDURE

1. PERFORM DTC CONFIRMATION PROCEDURE

1. Turn ignition switch ON.
2. Check DTC in “Self Diagnostic Result” mode of “BCM” using CONSULT-III.

Is DTC detected?

YES >> Refer to SEC-157, "Diagnosis Procedure".
NO >> INSPECTION END.

Diagnosis Procedure

INFOID:0000000006014806

1. CHECK SELF DIAGNOSTIC RESULT 1

1. Select “Self Diagnostic Result” of “BCM” using CONSULT-III.
2. Erase DTC.
3. Perform DTC Confirmation Procedure for DTC P2195. Refer to SEC-157, "DTC Logic".

Is DTC detected?

YES >> GO TO 2.
NO >> INSPECTION END

2. CHECK EQUIPMENT OF THE VEHICLE

Check that unspecified accessory part related to engine start is not installed.

Is unspecified accessory part related to engine start installed?

YES >> GO TO 3.
NO >> Replace BCM. Refer to BCS-57, "Removal and Installation".

3. CHECK SELF DIAGNOSTIC RESULT 2

1. Obtain the customers approval to remove unspecified accessory part related to engine start, and then remove it.
2. Select “Self Diagnostic Result” of “BCM” using CONSULT-III.
3. Erase DTC.
4. Perform DTC Confirmation Procedure for for DTC B2195. Refer to SEC-157, "DTC Logic".

Is DTC detected?

YES >> Replace BCM. Refer to BCS-57, "Removal and Installation".
NO >> INSPECTION END

SECURITY INDICATOR LAMP

Component Function Check

INFOID:0000000006014807

1.CHECK FUNCTION

1. Perform “THEFT IND” in the “ACTIVE TEST” mode of “BCM” using CONSULT-III.
2. Check security indicator lamp operation.

Test item		Description	
THEFT IND	ON	Security indicator lamp	Illuminates
	OFF		Does not illuminate

Is the inspection result normal?

YES >> INSPECTION END
NO >> Go to SEC-158, "Diagnosis Procedure".

Diagnosis Procedure

INFOID:0000000006014808

1.CHECK SECURITY INDICATOR LAMP POWER SUPPLY CIRCUIT

1. Turn ignition switch OFF.
2. Disconnect combination meter connector.
3. Check voltage between combination meter harness connector and ground.

(+)		(–)	Voltage (V) (Approx.)
Combination meter			
Connector	Terminal		
M34	1	Ground	Battery voltage

Is the inspection result normal?

YES >> GO TO 2.
NO-1 >> Check 10 A fuse [No. 11, located in the fuse block (J/B)].
NO-2 >> Check harness for open or short between combination meter and fuse.

2.CHECK SECURITY INDICATOR LAMP SIGNAL

1. Connect combination meter connector.
2. Disconnect BCM connector.
3. Check voltage between BCM harness connector and ground.

(+)		(–)	Voltage (V) (Approx.)
BCM			
Connector	Terminal		
M65	23	Ground	Battery voltage

Is the inspection result normal?

YES >> Replace BCM. Refer to BCS-57, "Removal and Installation".
NO >> GO TO 3.

3.CHECK COMBINATION METER CIRCUIT

1. Disconnect combination meter connector.
2. Check continuity between combination meter harness connector and BCM harness connector.

Combination meter		BCM		Continuity
Connector	Terminal	Connector	Terminal	
M34	31	M65	23	Existed

3. Check continuity between combination meter harness connector and ground.

Combination meter		Ground	Continuity
Connector	Terminal		
M34	31		Not existed

Is the inspection result normal?

YES >> Replace combination meter. Refer to MWI-51, "Removal and Installation".
NO >> Repair or replace harness.

SYMPTOM DIAGNOSIS

SECURITY INDICATOR LAMP DOES NOT TURN ON OR BLINK

Description

INFOID:0000000006014809

Security indicator lamp does not blink when ignition switch is in a position other than ON.

NOTE:

- Before performing the diagnosis, check “Work Flow”. Refer to SEC-139, "Work Flow".
- Check that vehicle is under the condition shown in “CONDITIONS OF VEHICLE” before starting diagnosis, and check each symptom.

CONDITIONS OF VEHICLE (OPERATING CONDITIONS)

Ignition switch is not in the ON position.

Diagnosis Procedure

INFOID:0000000006014810

1. CHECK SECURITY INDICATOR LAMP

Check security indicator lamp function.

Refer to SEC-158, "Component Function Check".

Is the inspection result normal?

YES >> GO TO 2.

NO >> Repair or replace the malfunctioning parts.

2. CONFIRM THE OPERATION

Confirm the operation again.

Is the result normal?

YES >> Check intermittent incident. Refer to GI-33, "Intermittent Incident".

NO >> GO TO 1.

REMOVAL AND INSTALLATION

NATS ANTENNA AMP.

Removal and Installation

INFOID:0000000006014811

REMOVAL

1. Remove the steering column cover.
   Refer to IP-13, "Removal and Installation".
2. Remove the NATS antenna amp. mounting screw, and then remove NATS antenna amp. from steering lock assembly.

INSTALLATION

Install in the reverse order of removal.

SECTION SR
SRS AIRBAG

CONTENTS

PRECAUTION 3

PRECAUTIONS 3
- Precaution for Supplemental Restraint System (SRS) "AIR BAG" and "SEAT BELT PRE-TENSIONER" 3
- Precaution Necessary for Steering Wheel Rotation After Battery Disconnect 3
- Precaution for Disposal 4
- Service 4

PREPARATION 5

PREPARATION 5
- Special Service Tool 5
- Commercial Service Tools 5

BASIC INSPECTION 6

COLLISION DIAGNOSIS 6

FOR FRONTAL COLLISION 6
- FOR FRONTAL COLLISION : When SRS is activated in a collision 6
- FOR FRONTAL COLLISION : When SRS is not activated in a collision 7

FOR SIDE AND ROLLOVER COLLISION 8
- FOR SIDE AND ROLLOVER COLLISION : When SRS is activated in a collision 8
- FOR SIDE AND ROLLOVER COLLISION : When SRS is not activated in a collision 9

REMOVAL AND INSTALLATION 13

DRIVER AIR BAG MODULE 13
- Exploded View 13
- Removal and Installation 13

SPIRAL CABLE 16
- Exploded View 16
- Removal and Installation 16

FRONT PASSENGER AIR BAG MODULE 19
- Exploded View 19
- Removal and Installation 19

SIDE CURTAIN AIR BAG MODULE 22
- Exploded View 22
- Removal and Installation 22

CRASH ZONE SENSOR 25
- Exploded View 25
- Removal and Installation 25

SIDE AIR BAG (SATELLITE) SENSOR 27
- Exploded View 27
- Removal and Installation 27

DIAGNOSIS SENSOR UNIT 29
- Exploded View 29
- Removal and Installation 29

SEAT BELT PRE-TENSIONER 31
- Exploded View 31
- Removal and Installation 31

DEPLOYMENT AND DISPOSAL 32

DRIVER AIR BAG MODULE 32
- DRIVER AIR BAG MODULE : Deployment 32
- DRIVER AIR BAG MODULE : Disposal 33

FRONT PASSENGER AIR BAG MODULE 33
- FRONT PASSENGER AIR BAG MODULE : Deployment 33
- FRONT PASSENGER AIR BAG MODULE : Disposal 35

SIDE CURTAIN AIR BAG MODULE 35
- SIDE CURTAIN AIR BAG MODULE : Deployment 35
- SIDE CURTAIN AIR BAG MODULE : Disposal 37

SEAT BELT PRE-TENSIONER 37
- SEAT BELT PRE-TENSIONER : Deployment 37

SEAT BELT PRE-TENSIONER : Disposal 39

PRECAUTION

PRECAUTIONS

Precaution for Supplemental Restraint System (SRS) "AIR BAG" and "SEAT BELT PRE-TENSIONER"

INFOID:0000000005891432

The Supplemental Restraint System such as “AIR BAG” and “SEAT BELT PRE-TENSIONER”, used along with a front seat belt, helps to reduce the risk or severity of injury to the driver and front passenger for certain types of collision. Information necessary to service the system safely is included in the “SRS AIR BAG” and “SEAT BELT” of this Service Manual.

WARNING:

- **To avoid rendering the SRS inoperative, which could increase the risk of personal injury or death in the event of a collision which would result in air bag inflation, all maintenance must be performed by an authorized NISSAN/INFINITI dealer.**
- **Improper maintenance, including incorrect removal and installation of the SRS, can lead to personal injury caused by unintentional activation of the system. For removal of Spiral Cable and Air Bag Module, see the “SRS AIR BAG”.**
- **Do not use electrical test equipment on any circuit related to the SRS unless instructed to in this Service Manual. SRS wiring harnesses can be identified by yellow and/or orange harnesses or harness connectors.**

PRECAUTIONS WHEN USING POWER TOOLS (AIR OR ELECTRIC) AND HAMMERS

WARNING:

- **When working near the Air Bag Diagnosis Sensor Unit or other Air Bag System sensors with the ignition ON or engine running, DO NOT use air or electric power tools or strike near the sensor(s) with a hammer. Heavy vibration could activate the sensor(s) and deploy the air bag(s), possibly causing serious injury.**
- **When using air or electric power tools or hammers, always switch the ignition OFF, disconnect the battery, and wait at least 3 minutes before performing any service.**

Precaution Necessary for Steering Wheel Rotation After Battery Disconnect

INFOID:0000000005891433

NOTE:

- This Procedure is applied only to models with Intelligent Key system and NATS (NISSAN ANTI-THEFT SYSTEM).
- Remove and install all control units after disconnecting both battery cables with the ignition knob in the ″LOCK″ position.
- Always use CONSULT-III to perform self-diagnosis as a part of each function inspection after finishing work. If DTC is detected, perform trouble diagnosis according to self-diagnostic results.

For models equipped with the Intelligent Key system and NATS, an electrically controlled steering lock mechanism is adopted on the key cylinder.
For this reason, if the battery is disconnected or if the battery is discharged, the steering wheel will lock and steering wheel rotation will become impossible.
If steering wheel rotation is required when battery power is interrupted, follow the procedure below before starting the repair operation.

OPERATION PROCEDURE

1. Connect both battery cables.
   NOTE:
   Supply power using jumper cables if battery is discharged.
2. Use the Intelligent Key or mechanical key to turn the ignition switch to the ″ACC″ position. At this time, the steering lock will be released.
3. Disconnect both battery cables. The steering lock will remain released and the steering wheel can be rotated.
4. Perform the necessary repair operation.
5. When the repair work is completed, return the ignition switch to the ″LOCK″ position before connecting the battery cables. (At this time, the steering lock mechanism will engage.)
6. Perform a self-diagnosis check of all control units using CONSULT-III.

Precaution for Disposal

INFOID:0000000005891434

- Before disposing of air bag module, pop-up roll bar and seat belt pre-tensioner, or vehicles equipped with such systems, deploy the systems. If such systems have already been deployed due to an accident, dispose of them as indicated in Disposing of Air Bag Module, Pop-up Roll Bar and Seat Belt Pre-tensioner.
- When deploying the air bag module, pop-up roll bar and seat belt pre-tensioner, always use the Special Service Tool; Deployment tool (SST: KV99106400).
- When deploying the air bag module, pop-up roll bar and seat belt pre-tensioner, stand at least 5.0 m (16.4 ft.) away from the deployment component.
- When deploying air bag module, pop-up roll bar and seat belt pre-tensioner, a fairly loud noise is made, followed by smoke being released. The smoke is not poisonous, however, be careful not to inhale smoke since it irritates the throat and can cause choking.
- Always activate one air bag module at a time.
- Due to heat, leave air bag module unattended for more than 30 minutes after deployment. Also leave pop-up roll bar and seat belt pre-tensioner unattended for more than 10 minutes after deployment.
- Wear gloves when handling a deployed air bag module, pop-up roll bar and seat belt pre-tensioner.
- Never apply water to the deployed air bag module, pop-up roll bar and seat belt pre-tensioner.
- Wash your hands after work is completed.
- Place the vehicle outdoors with an open space of at least 6.0 m (19.7 ft) on all sides when deploying air bag module, pop-up roll bar and seat belt pre-tensioner while mounted in vehicle.
- Use a volt meter to make sure the vehicle battery is fully charged.
- Never dispose of the air bag module, pop-up roll bar and seat belt pre-tensioner that does not deploy.

Service

INFOID:0000000005891435

- Never use electrical test equipment to check SRS circuits unless instructed to in this Service Manual.
- Before servicing the SRS, turn ignition switch OFF, disconnect battery negative terminal and wait at least 3 minutes or more.
  For approximately 3 minutes after the battery negative terminal are removed, it is still possible for the air bag and seat belt pre-tensioner to deploy. Therefore, never work on any SRS connectors or wires until at least 3 minutes have elapsed.
- Diagnosis sensor unit must always be installed with their arrow marks “⇐” pointing towards the front of the vehicle for proper operation. Also check diagnosis sensor unit for cracks, deformities or rust before installation and replace as required.
- The spiral cable must be aligned in the neutral position since its rotations are limited. Never turn steering wheel and column after removal of steering gear.
- Handle air bag module carefully. Always place driver and front passenger air bag modules with the pad side facing upward and seat mounted front side air bag module standing with the stud bolt side facing down.
- Conduct self-diagnosis to check entire SRS for proper functioning after replacing any components.
- After air bag inflates, the front instrument panel assembly should be replaced if damaged.
- Always replace instrument panel pad following front passenger air bag deployment.

PREPARATION

PREPARATION

Special Service Tool

INFOID:0000000005891436

Tool number Tool name		Description
KV99105300 Air bag module bracket	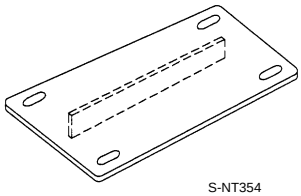 S-NT354	Anchors air bag module
KV99106400 Deployment tool	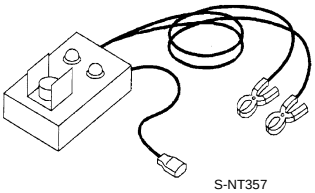 S-NT357	Disposes of driver air bag module, front passenger air bag module, side curtain air bag module, and front seat belt pre-tensioner
KV99110500 Deployment tool adapter • Deployment tool adapter for driver air bag module • Deployment tool adapter for front passenger air bag module • Deployment tool adapter for side curtain air bag module • Deployment tool adapter for front seat belt pre-tensioner	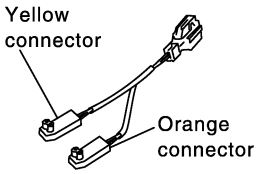 PHIA0184E	• Connects the deployment tool and driver air bag module • Connects the deployment tool and front passenger air bag module • Connects the deployment tool and side curtain air bag module • Connects the deployment tool and front seat belt pre-tensioner

Commercial Service Tools

INFOID:0000000005891437

Tool name		Description
Remover tool	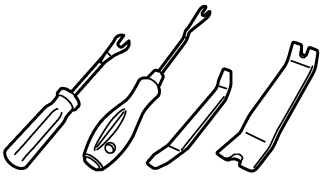 JMKIA3050ZZ	Removes clips, pawls, and metal clips

BASIC INSPECTION

COLLISION DIAGNOSIS
FOR FRONTAL COLLISION

FOR FRONTAL COLLISION : When SRS is activated in a collision

INFOID:0000000005891438

CAUTION:
Due to varying models and option levels, not all parts listed in the chart below apply to all vehicles.

WORK PROCEDURE

1. Before performing any of the following steps, ensure that all vehicle body and structural repairs have been completed.
2. Replace the diagnosis sensor unit.
3. Remove the front air bag modules, crash zone sensor, bracket and seat belt pre-tensioner assemblies.
4. Check the SRS components using the table below:
   Replace any SRS components showing visible signs of damage. (dents, cracks and deformation, etc.)
5. Install new front air bag modules, crash zone sensor assembly, bracket and seat belt pre-tensioner assemblies.
6. Perform self-diagnosis using CONSULT-III or air bag warning lamp. Refer to SRC-9, "CONSULT-III Function" or SRC-7, "On Board Diagnosis Function" for details. Ensure entire SRS operates properly.
7. After the work is completed, perform self-diagnosis to check that no malfunction is detected. Refer to SRC-7, "Description".

SRS INSPECTION (FOR FRONTAL COLLISION)

Part	Inspection
Driver air bag module	If the driver air bag has deployed: REPLACE Install with new fasteners.
Front passenger air bag module (if equipped)	If the front passenger air bag has deployed: REPLACE Install with new fasteners.
Crash zone sensor	If any of the front air bags or seat belt pre-tensioners* have been activated: REPLACE the crash zone sensor and bracket with new fasteners. *: Confirm seat belt pre-tensioner activation using CONSULT-III only.
Seat belt pre-tensioner assemblies (All applicable locations: buckle, retractor, lap outer)	If either the driver or passenger seat belt pre-tensioner* has been activated: REPLACE all seat belt pre-tensioner assemblies with new fasteners. *: Confirm seat belt pre-tensioner activation using CONSULT-III only.
Diagnosis sensor unit	If any of the SRS components have been activated: REPLACE the diagnosis sensor unit. Install with new fasteners.
Steering wheel	1. Visually check steering wheel for deformities. 2. Check harness (built into steering wheel) and connectors for damage, and terminals for deformities. 3. Install driver air bag module into the steering wheel to check fit and alignment with the wheel. 4. Check steering wheel for excessive free play. 5. If no damage is found, reinstall. 6. If damaged – REPLACE.
Spiral cable	If the driver front air bag has deployed: REPLACE the spiral cable.
Occupant classification system (Passenger seat)	1. Remove passenger seat assembly. 2. Check control unit case for dents, cracks of deformities. 3. Check connectors and pressure sensor tube for damage, and terminals for deformities. 4. Check seat frame and cushion pan for dents or deformities. 5. If no damage is found, reinstall seat with new fasteners. 6. If damaged – REPLACE seat cushion assembly with new fasteners.

Part	Inspection
Harness and connectors	1. Check connectors for poor connection, damage, and terminals for deformities. 2. Check harness for binding, chafing, cuts, or deformities. 3. If no damage is found, reinstall the harness and connectors. 4. If damaged – REPLACE the damaged harness. Do not attempt to repair, splice or modify any SRS harness.
Instrument panel assembly	If the front passenger air bag has deployed: REPLACE the instrument panel assembly. (integrated type)

FOR FRONTAL COLLISION : When SRS is not activated in a collision

INFOID:0000000005891439

CAUTION:
Due to varying models and option levels, not all parts listed in the chart below apply to all vehicles.

WORK PROCEDURE

1. Before performing any of the following steps, ensure that all vehicle body and structural repairs have been completed.
2. Check the SRS components using the table below:
   Replace any SRS components showing visible signs of damage. (dents, cracks and deformation, etc.)
3. Perform self-diagnosis using CONSULT-III or air bag warning lamp. Refer to SRC-9, "CONSULT-III Function" or SRC-7, "On Board Diagnosis Function" for details. Ensure entire SRS operates properly.
4. After the work is completed, perform self-diagnosis to check that no malfunction is detected. Refer to SRC-7, "Description".

SRS INSPECTION (FOR FRONTAL COLLISION)

Part	Inspection
Driver air bag module	If the driver air bag has NOT been deployed: 1. Remove driver air bag module. Check harness cover and connectors for damage, terminals for deformities, and harness for binding. 2. Install driver air bag module into the steering wheel to check fit and alignment with the wheel. 3. If no damage is found, reinstall with new fasteners. 4. If damaged – REPLACE. Install driver air bag module with new fasteners. **CAUTION:** **Before disposing of such systems, deploy the systems.**
Front passenger air bag module (if equipped)	If the front passenger air bag has NOT been deployed: 1. Remove front passenger air bag module. Check harness cover and connectors for damage, terminals for deformities, and harness for binding. 2. Install front passenger air bag module into the instrument panel to check fit with the instrument panel. 3. If no damage is found, reinstall with new fasteners. 4. If damaged – REPLACE. Install front passenger air bag modules with new fasteners. **CAUTION:** **Before disposing of such systems, deploy the systems.**
Crash zone sensor	If the front air bags or seat belt pre-tensioners have NOT been activated: 1. Remove the crash zone sensor. Check harness connectors for damage, terminals for deformities, and harness for binding. 2. Check for visible signs of damage (dents, cracks, deformation, etc.) of the crash zone sensor and bracket. 3. Install the crash zone sensor to check fit. 4. If no damage is found, reinstall with new fasteners. 5. If damaged – REPLACE the crash zone sensor and bracket with new fasteners.

Part	Inspection
Seat belt pre-tensioner assemblies (All applicable locations: buckle, retractor, lap outer)	If the pre-tensioners have NOT been activated: 1. Remove seat belt pre-tensioners. Check harness cover and connectors for damage, terminals for deformities, and harness for binding. 2. Check belts for damage and anchors for loose mounting. 3. Check retractor for smooth operation. 4. Check seat belt adjuster for damage. 5. Check for deformities of the center pillar inner. 6. If the center pillar inner has no damage, REPLACE the seat belt pre-tensioner assembly. 7. If no damage is found, reinstall seat belt pre-tensioner assembly. 8. If damaged – REPLACE. Install the seat belt pre-tensioners with new fasteners. **CAUTION:** **Before disposing of such systems, deploy the systems.**
Diagnosis sensor unit	If none of the SRS components have been activated: 1. Check case for dents, cracks or deformities. 2. Check connectors for damage, and terminals for deformities. 3. If no damage is found, reinstall with new fasteners. 4. If damaged – REPLACE. Install diagnosis sensor unit with new fasteners.
Steering wheel	1. Visually check steering wheel for deformities. 2. Check harness (built into steering wheel) and connectors for damage, and terminals for deformities. 3. Install driver air bag module into the steering wheel to check fit and alignment with the wheel. 4. Check steering wheel for excessive free play. 5. If no damage is found, reinstall. 6. If damaged – REPLACE.
Spiral cable	If the driver front air bag has not deployed: 1. Visually check spiral cable and combination switch for damage. 2. Check connectors and protective tape for damage. 3. Check steering wheel for noise, binding or heavy operation. 4. If no damage is found, reinstall. 5. If damaged – REPLACE.
Occupant classification system (Passenger seat)	1. Remove passenger seat assembly. 2. Check control unit case for dents, cracks of deformities. 3. Check connectors and pressure sensor tube for damage, and terminals for deformities. 4. Check seat frame and cushion pan for dents or deformities. 5. If no damage is found, reinstall seat with new fasteners. 6. If damaged – REPLACE seat cushion assembly with new fasteners.
Harness and connectors	1. Check connectors for poor connection, damage, and terminals for deformities. 2. Check harness for binding, chafing, cuts, or deformities. 3. If no damage is found, reinstall the harness and connectors. 4. If damaged – REPLACE the damaged harness. Do not attempt to repair, splice or modify any SRS harness.
Instrument panel assembly	If the front passenger air bag has NOT deployed: 1. Visually check instrument panel assembly for damage. 2. If no damage is found, reinstall the instrument panel assembly. 3. If damaged – REPLACE the instrument panel assembly.

FOR SIDE AND ROLLOVER COLLISION

FOR SIDE AND ROLLOVER COLLISION : When SRS is activated in a collision

INFOID:0000000005891440

CAUTION:
Due to varying models and option levels, not all parts listed in the chart below apply to all vehicles.

WORK PROCEDURE

1. Before performing any of the following steps, ensure that all vehicle body and structural repairs have been completed.
2. Replace the following components:
   - Front seat back assembly (on the side on which side air bag is activated)
   - Door finisher (on the side on which door-mounted curtain air bag is activated)
   - Pop-up roll bar assemblies and pop-up roll bar covers

- Side air bag (satellite) sensor LH/RH (on the side on which side air bag is activated)
- Diagnosis sensor unit
- Seat belt pre-tensioner assemblies

3. Check the SRS components and the related parts using the following table.
   Replace any SRS components and the related parts showing visible signs of damage. (dents, cracks, deformation, etc.)
4. Perform self-diagnosis using CONSULT-III and “AIR BAG” warning lamp. Refer to SRC-9, "CONSULT-III Function" or SRC-7, "On Board Diagnosis Function" for details. Make sure entire SRS operates properly.
5. After the work is completed, perform self-diagnosis to check that no malfunction is detected. Refer to SRC-7, "Description".

SRS INSPECTION (FOR SIDE AND ROLLOVER COLLISION)

Part	Inspection
Side curtain air bag module LH	If the side curtain air bag LH has deployed: REPLACE the side curtain air bag module LH. Install with new fasteners.
Side curtain air bag module RH	If the side curtain air bag RH has deployed: REPLACE the side curtain air bag module RH. Install with new fasteners.
Front side air bag module LH	If the front side air bag LH has deployed: REPLACE front seatback assembly LH.
Front side air bag module RH	If the front side air bag RH has deployed: REPLACE front seatback assembly RH.
Side air bag (satellite) sensor (LH or RH)	If any of the SRS components have deployed: REPLACE the side air bag (satellite) sensor on the collision side with new fasteners.
Diagnosis sensor unit	If any of the SRS components have deployed: REPLACE the diagnosis sensor unit with new fasteners.
Seat belt pre-tensioner assemblies (All applicable locations: buckle, retractor, lap outer)	If either the driver or passenger seat belt pre-tensioner* has been activated: REPLACE all seat belt pre-tensioner assemblies with new fasteners. *: Confirm seat belt pre-tensioner activation using CONSULT-III only.
Center inner pillar	1. Check the center inner pillar on the collision side for damage (dents, cracks, deformation, etc.). 2. If damaged – REPAIR the center inner pillar.
Trim/headlining	1. Check for visible signs of damage (dents, cracks, deformation, etc.) of the interior trim on the collision side. 2. If damaged – REPLACE the damaged trim parts.
Door-mounted curtain air bag module LH	If the door-mounted curtain air bag module LH has deployed: REPLACE the door finisher LH and door-mounted curtain air bag module. Install with new fasteners.
Door-mounted curtain air bag module RH	If the door-mounted curtain air bag module RH has deployed: REPLACE the door finisher RH and door-mounted curtain air bag module. Install with new fasteners.
Pop-up roll bar assemblies	If the pop-up roll bar has deployed: REPLACE pop-up roll bar assemblies and pop-up roll bar covers. Install with new fasteners.

FOR SIDE AND ROLLOVER COLLISION : When SRS is not activated in a collision

INFOID:0000000005891441

CAUTION:
Due to varying models and option levels, not all parts listed in the chart below apply to all vehicles.

WORK PROCEDURE

1. Before performing any of the following steps, ensure that all vehicle body and structural repairs have been completed.
2. Check the SRS components and the related parts using the following table.
   - If the front seat back assembly is damaged, the front seat back assembly must be replaced.

- If the door finisher assembly is damaged, the door finisher assembly and door-mounted curtain air bag module must be replaced.

3. Perform self-diagnosis using CONSULT-III and “AIR BAG” warning lamp. Refer to SRC-9, "CONSULT-III Function" or SRC-7, "On Board Diagnosis Function" for details. Make sure entire SRS operates properly.
4. After the work is completed, perform self-diagnosis to check that no malfunction is detected. Refer to SRC-7, "Description".

SRS INSPECTION (FOR SIDE AND ROLLOVER COLLISION)

Part	Inspection
Side curtain air bag module LH	If the side curtain air bag LH has NOT deployed: 1. Check for visible signs of damage (dents, tears, deformation, etc.) of the center pillar on the collision side. 2. If damaged – Remove the side curtain air bag module LH. 3. Check for visible signs of damage (tears etc.) of the side curtain air bag module LH. 4. Check harness and connectors for damage, and terminals for deformities. 5. If no damage is found, reinstall the side curtain air bag module LH with new fasteners. 6. If damaged – REPLACE the side curtain air bag module LH with new fasteners. **CAUTION:** **Before disposing of such systems, deploy the systems.**
Side curtain air bag module RH	If the side curtain air bag RH has NOT deployed: 1. Check for visible signs of damage (dents, tears, deformation, etc.) of the center pillar on the collision side. 2. If damaged – Remove the side curtain air bag module RH. 3. Check for visible signs of damage (tears etc.) of the side curtain air bag module RH. 4. Check harness and connectors for damage, and terminals for deformities. 5. If no damage is found, reinstall the side curtain air bag module RH with new fasteners. 6. If damaged – REPLACE the side curtain air bag module RH with new fasteners. **CAUTION:** **Before disposing of such systems, deploy the systems.**
Front side air bag module LH	If the front side air bag LH has NOT deployed: 1. Check for visible signs of damage (dents, tears, deformation, etc.) of the seat back on the collision side. 2. Check harness and connectors for damage, and terminals for deformities. 3. If damaged – REPLACE the front seatback assembly LH. **CAUTION:** **Before disposing of such systems, deploy the systems.**
Front side air bag module RH	If the front side air bag RH has NOT deployed: 1. Check for visible signs of damage (dents, tears, deformation, etc.) of the seat back on the collision side. 2. Check harness and connectors for damage, and terminals for deformities. 3. If damaged – REPLACE the front seatback assembly RH. **CAUTION:** **Before disposing of such systems, deploy the systems.**
Side air bag (satellite) sensor (LH or RH)	If none of the SRS components have been activated: 1. Remove the side air bag (satellite) sensor (LH or RH) on the collision side. Check harness connectors for damage, terminals for deformities, and harness for binding. 2. Check for visible signs of damage (dents, cracks, deformation, etc.) of the side air bag (satellite) sensor (LH or RH). 3. Install the side air bag (satellite) sensor (LH or RH) to check fit. 4. If no damage is found, reinstall the side sir bag (satellite) sensor (LH or RH) with new fasteners. 5. If damaged – REPLACE the side air bag (satellite) sensor (LH or RH) with new fasteners.
Diagnosis sensor unit	If none of the SRS components have been activated: 1. Check case and bracket for dents, cracks or deformities. 2. Check connectors for damage, and terminals for deformities. 3. If no damage is found, reinstall the diagnosis sensor unit with new fasteners. 4. If damaged – REPLACE the diagnosis sensor unit with new fasteners.

Part	Inspection
Seat belt pre-tensioner assemblies (All applicable locations: buckle, retractor, lap outer)	If the pre-tensioners have NOT been activated: 1. Remove seat belt pre-tensioners. Check harness cover and connectors for damage, terminals for deformities, and harness for binding. 2. Check belts for damage and anchors for loose mounting. 3. Check retractor for smooth operation. 4. Check seat belt adjuster for damage. 5. Check for deformities of the center pillar inner. 6. If the center pillar inner has no damage, REPLACE the seat belt pre-tensioner assembly. 7. If no damage is found, reinstall seat belt pre-tensioner assembly. 8. If damaged – REPLACE. Install the seat belt pre-tensioners with new fasteners. **CAUTION:** **Before disposing of such systems, deploy the systems.**
Seat (with front side air bag)	If the front LH or front RH side air bag modules have NOT deployed: 1. Visually check the seat on the collision side. 2. Remove the seat on the collision side and check the following for damage and deformities. - Harness, connectors and terminals - Frame and recliner (for front and rear seat), and also adjuster and slides (for front seat) 3. If no damage is found, reinstall the seat. 4. If damaged – REPLACE the damaged seat parts using new fasteners. If the front seat back is damaged, the front seat back assembly must be replaced.
Center inner pillar	1. Check the center inner pillar on the collision side for damage (dents, cracks, deformation, etc.). 2. If damaged – REPAIR the center inner pillar.
Trim/headlining	1. Check for visible signs of damage (dents, cracks, deformation, etc.) of the interior trim on the collision side. 2. If damaged – REPLACE the damaged trim parts.
Door-mounted curtain air bag module LH	If the door-mounted curtain air bag LH has NOT deployed: 1. Check for visible signs of damage (dents, tears, deformation, etc.) of the door finisher on the collision side. 2. If damaged – REPLACE the door finisher LH with new fasteners. 3. Check for visible signs of damaged (tears etc.) of the door-mounted curtain air bag module LH. 4. Check harness and connectors for damage, and terminals for deformities. 5. If no damage is found, reinstall door finisher. **CAUTION:** **When removing door-mounted curtain air bag module from door finisher, never reuse door finisher.** 6. If damaged – REPLACE the door finisher LH and door-mounted curtain air bag module LH with new fasteners. **CAUTION:** **Before disposing of such systems, deploy the systems.**

Part	Inspection
Door-mounted curtain air bag module RH	If the door-mounted curtain air bag RH has NOT deployed: 1. Check for visible signs of damage (dents, tears, deformation, etc.) of the door finisher on the collision side. 2. If damaged – REPLACE the door finisher RH with new fasteners. 3. Check for visible signs of damage (tears etc.) of the door-mounted curtain air bag module RH. 4. Check harness and connectors for damage, and terminals for deformities. 5. If no damage is found, reinstall door finisher. **CAUTION:** **When removing door-mounted curtain air bag module from door finisher, never reuse door finisher.** 6. If damaged – REPLACE the door finisher RH and door-mounted curtain air bag module RH with new fasteners. **CAUTION:** **Before disposing of such systems, deploy the systems.**
Pop-up roll bar	If the pop-up roll bar has NOT deployed: 1. Check for visible signs of damage (dents, tears, deformation, etc.) of the pop-up roll bar. 2. If damaged – REPLACE the pop-up roll bar with new fasteners. 3. Check harness and connectors for damage, and terminals for deformities. 4. If no damage is found, reinstall the pop-up roll bar with new fasteners. 5. Check for visible signs of damage (dents, cracks, deformation, etc.) of the seatback support brace assembly. 6. If damaged – REPAIR the seatback support brace assembly. **CAUTION:** **Before disposing of such systems, deploy the systems.**

REMOVAL AND INSTALLATION

DRIVER AIR BAG MODULE

Exploded View

INFOID:0000000006044238

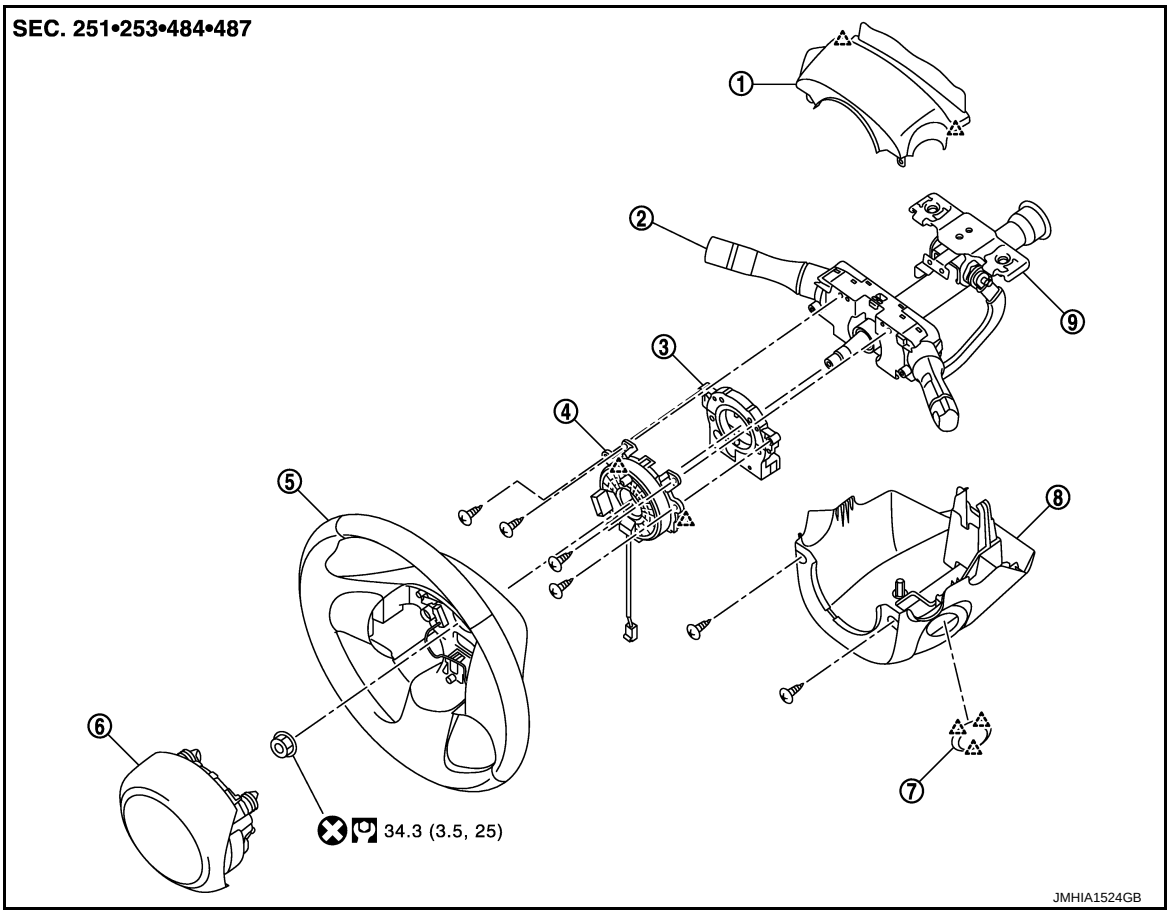

1.	Steering column upper cover	2.	Combination switch	3.	Steering angle sensor (if equipped)
4.	Spiral cable	5.	Steering wheel	6.	Driver air bag module
7.	Steering lock escutcheon	8.	Steering column lower cover	9.	Steering column assembly

: Pawl

Refer to GI-4, "Components" for symbols in the figure.

Removal and Installation

INFOID:0000000006044239

WARNING:
- **Before servicing, turn ignition switch OFF, disconnect battery negative terminal and wait 3 minutes or more.**
- **Always work from the side of air bag module. Never work in front of it.**
- **Never use the air tools or electric tools for servicing.**

REMOVAL

1. Locate retaining clip access hole (LH/RH) and insert a 5.0 mm (0.197 in) diameter, blunt-ended tool (A).

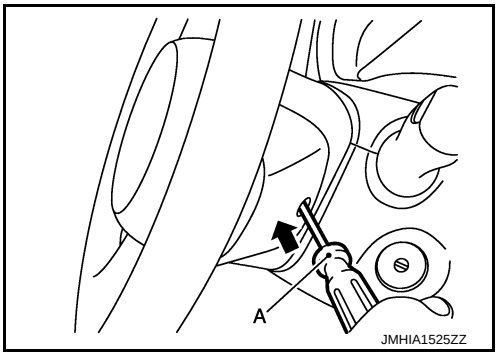

NOTE:
When inserting a blunt-ended tool (A), check that the tool contacts torsion spring (1). By pressing torsion spring, connection of driver air bag module is disengaged.

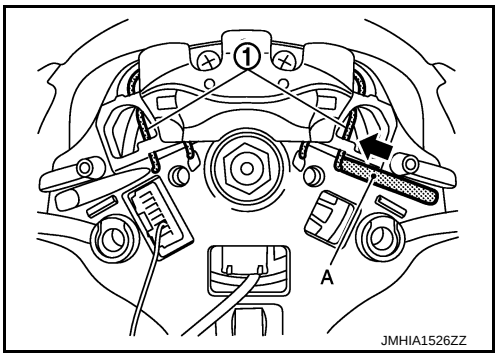

2. Pull out the driver air bag module assembly.
3. Disconnect the driver air bag module harness connector.

CAUTION:
- **For installing/removing the driver air bag module harness connector, insert thin screwdriver wrapped in tape into notch, lift lock and remove connector.**
- **Install the connector with lock raised, and push lock into the connector.**
- **After installing the connector, check that the lock is pushed securely into it.**

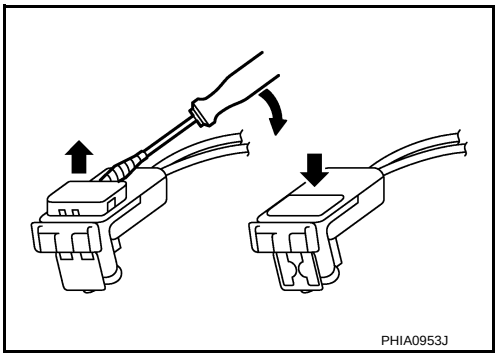

4. Remove the driver air bag module.

CAUTION:
- **Always place the driver air bag module with pad side facing upward.**

⇦ : Upward

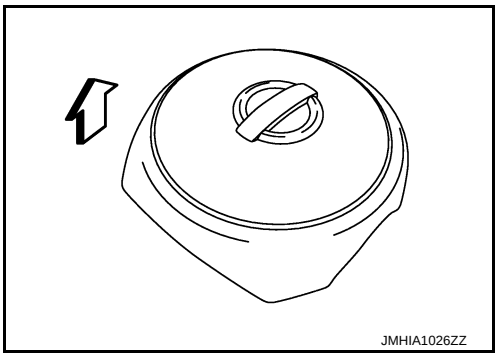

- **Never impact the driver air bag module.**
- **Replace the driver air bag module if it has been dropped or sustained an impact.**

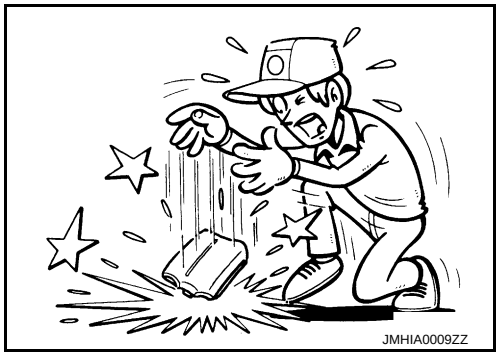

- **Never insert any foreign objects (screwdriver, etc.) into the driver air bag module.**
- **Never disassemble the driver air bag module.**
- **Never expose the driver air bag module to temperatures exceeding 90 °C (194 °F).**
- **Never allow oil, grease, detergent, or water to come in contact with the driver air bag module.**

INSTALLATION

Note the following item, and install in the reverse order of removal.

CAUTION:

- **Fix the driver air bag module harness (A) to the harness fixing hook (B).**

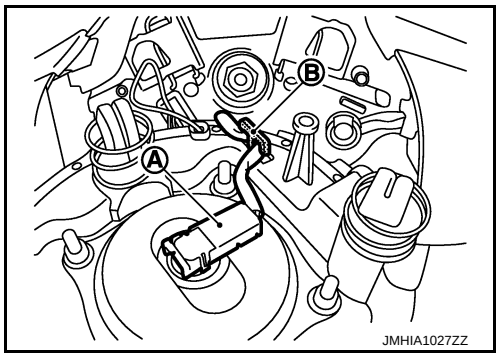

- **Never damage the harness while installing.**
- **If malfunction is detected by the air bag warning lamp, after repair or replacement of the malfunctioning parts, reset the memory using self-diagnosis or CONSULT-III. Refer to SRC-7, "Description".**
- **After the work is completed, check that no system malfunction is detected by air bag warning lamp.**

SPIRAL CABLE

Exploded View

INFOID:0000000006044240

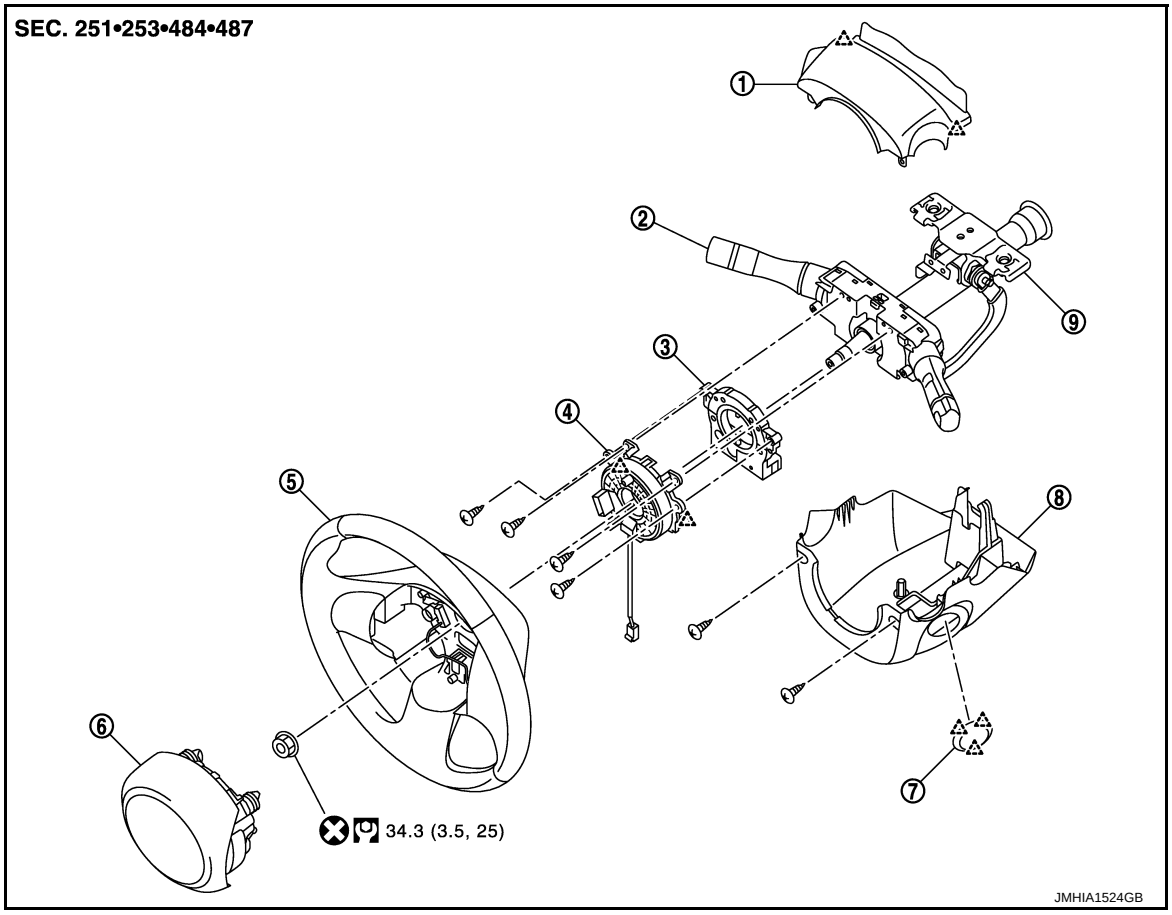

1.	Steering column upper cover	2.	Combination switch	3.	Steering angle sensor (if equipped)
4.	Spiral cable	5.	Steering wheel	6.	Driver air bag module
7.	Steering lock escutcheon	8.	Steering column lower cover	9.	Steering column assembly

Refer to GI-4, "Components" for symbols in the figure.

Removal and Installation

INFOID:0000000006044241

WARNING:

- **Before servicing, turn ignition switch OFF, disconnect battery negative terminal and wait 3 minutes or more.**
- **Never use the air tools or electric tools for servicing.**

REMOVAL

1. Remove the driver air bag module. Refer to SR-13, "Removal and Installation".
2. Remove the steering wheel. Refer to ST-9, "Removal and Installation".
3. Remove the steering column covers. Refer to IP-13, "Removal and Installation".

4. Disconnect the spiral cable body side harness connectors (A) and steering angle sensor harness connector (B).

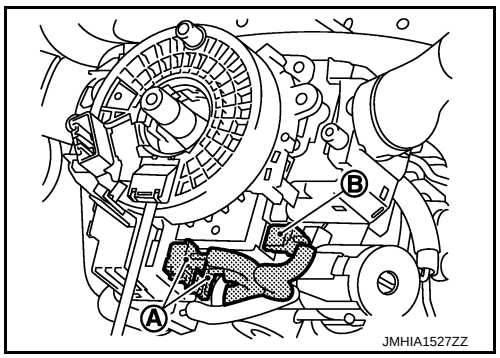

5. Remove the spiral cable fixing screws.
6. Disengage the pawls with a flat-bladed screwdriver (A), and then pull out forward the spiral cable and steering angle sensor.

: Pawl

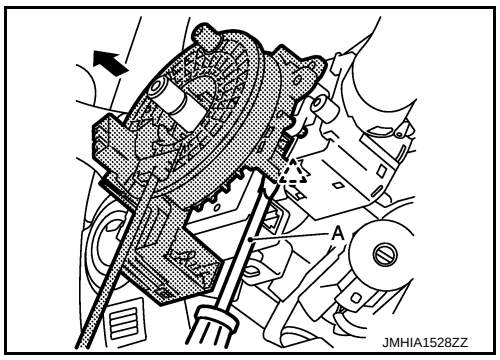

7. Remove steering angle sensor fixing screws, and then remove steering angle sensor (if equipped).

CAUTION:
- **Never impact the spiral cable.**
- **Replace the spiral cable if it has been dropped or sustained an impact.**

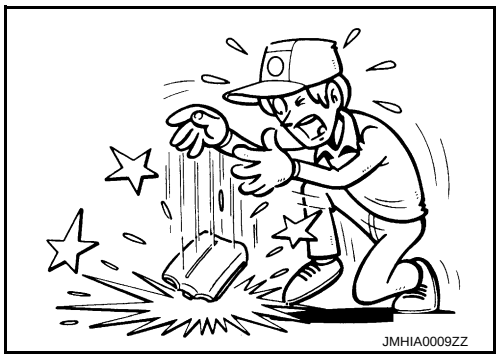

- **Never disassemble the spiral cable.**
- **Never apply lubricant to the spiral cable.**
- **Never allow oil, grease, detergent, or water to come in contact with the spiral cable.**

INSTALLATION

Note the following item, and install in the reverse order of removal.

CAUTION:

- **The spiral cable may snap during steering operation if the cable is installed in an improper position.**
  The neutral position is set as follows.
- **Carefully turn the spiral cable clockwise to the end position. Then turn it counterclockwise (about 2 and a half turns) and stop turning at the mark (B) on which the stopper insertion holes are in the same position.**
- **The service part is installed in the neutral position by the stopper and can be set without adjusting after the stopper is removed.**
- **Never over turn the spiral cable or go beyond the number of turns required. (This will cause the cable to snap)**
- **Adjust the spiral cable locating pin (A) to the steering wheel locating pin hole (C).**

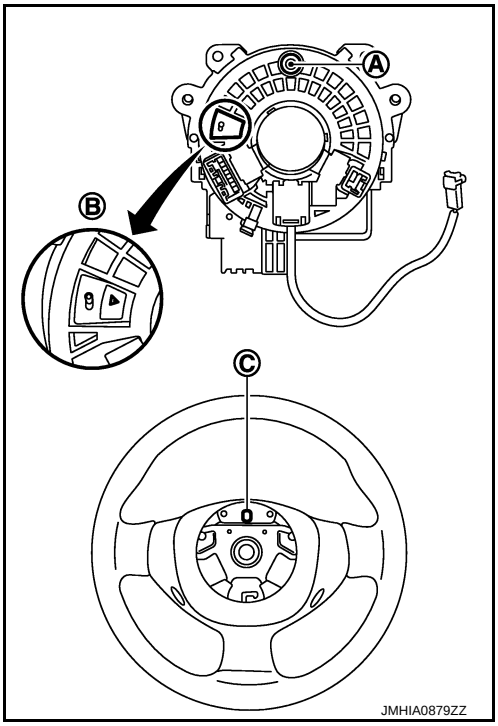

- **If malfunction is detected by the air bag warning lamp, after repair or replacement of the malfunctioning parts, reset the memory using self-diagnosis or CONSULT-III. Refer to SRC-7, "Description".**
- **After the work is completed, check that no system malfunction is detected by air bag warning lamp.**

FRONT PASSENGER AIR BAG MODULE

Exploded View

INFOID:0000000006044242

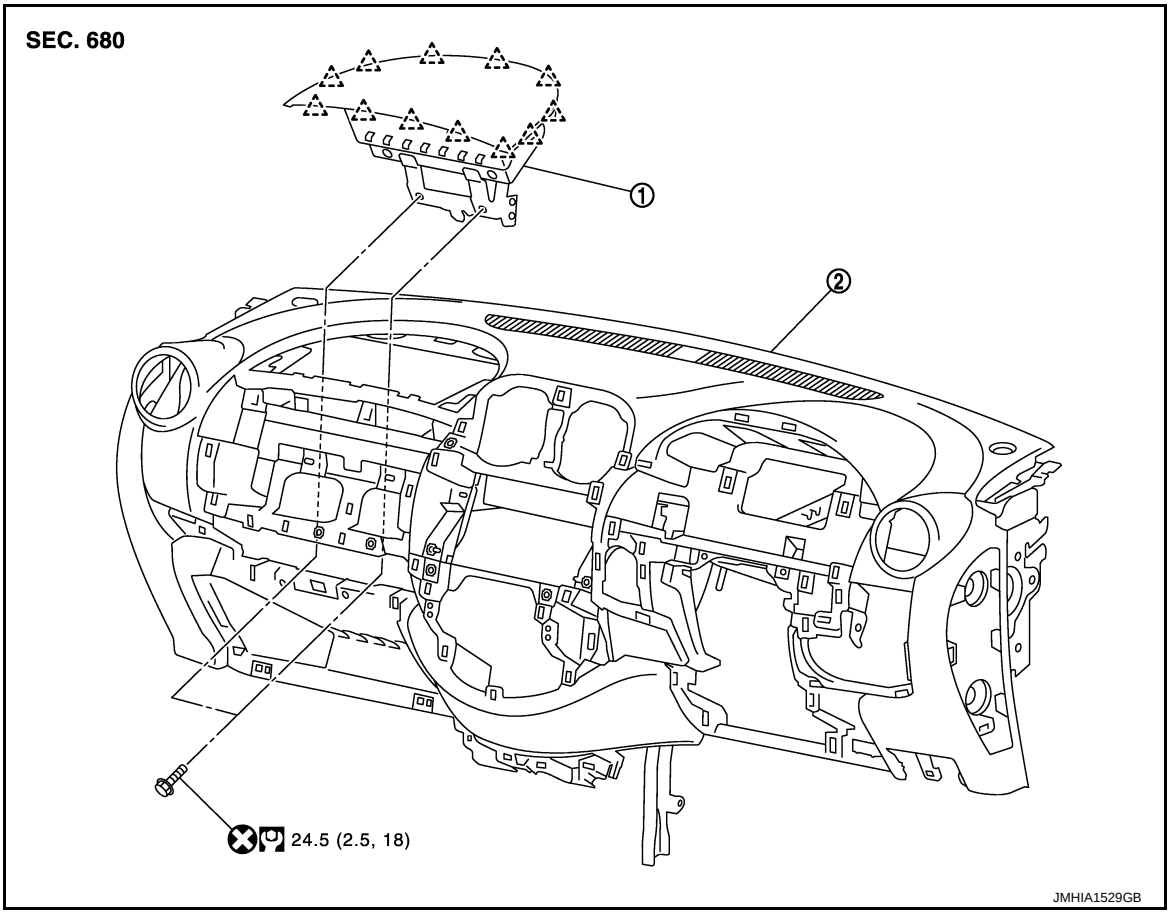

1. Passenger air bag module
2. Instrument panel assembly

: Pawl

Refer to GI-4, "Components" for symbols in the figure.

Removal and Installation

INFOID:0000000006044243

WARNING:

- **Before servicing, turn ignition switch OFF, disconnect battery negative terminal and wait 3 minutes or more.**
- **Always work from the side of air bag module. Never work in front of it.**
- **Never use the air tools or electric tools for servicing.**

REMOVAL

1. Remove glove box escutcheon (without glove box lid). Refer to IP-13, "Removal and Installation".
2. Remove the cluster lid C, instrument finisher B, and glove box cover (without glove upper box). Refer to IP-13, "Removal and Installation".
3. Remove the glove upper box and glove box cover (with glove upper box). Refer to IP-13, "Removal and Installation".

4. Disconnect the front passenger air bag module harness connector (A) from front passenger air bag module.
5. Remove the front passenger air bag module fixing bolts (B).

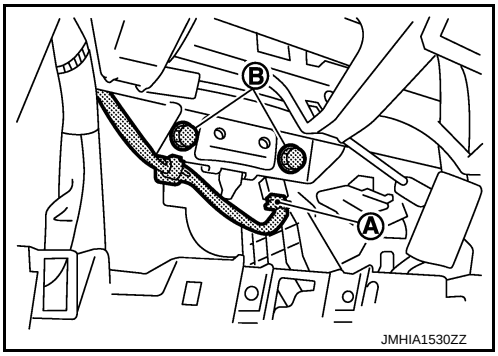

6. Disengage front passenger air bag module fixing pawls with hands.

CAUTION:
Never insert a remover tool between passenger air bag module and instrument panel assembly. Doing so may cause damage.

: Pawl

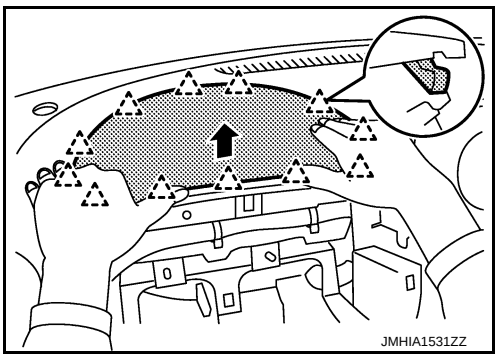

CAUTION:
- **Always place the front passenger air bag module with pad side facing upward.**

: Upward

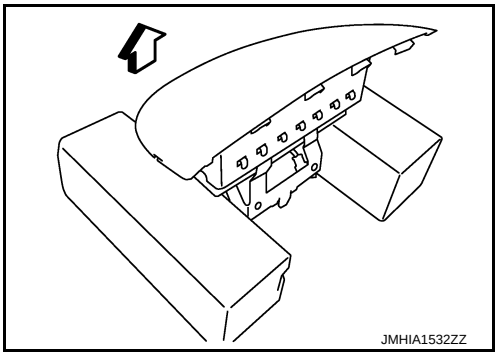

- **Never impact the front passenger air bag module.**
- **Replace the front passenger air bag module if it has been dropped or sustained an impact.**

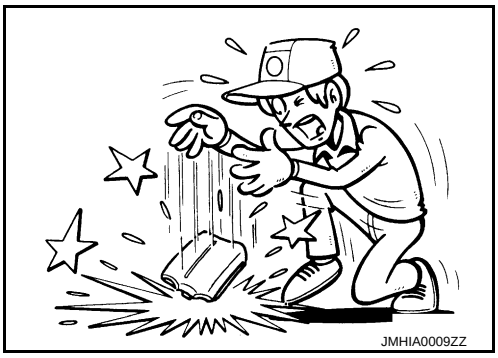

- **Never insert any foreign objects (screwdriver, etc.) into the front passenger air bag module.**
- **Never disassemble the front passenger air bag module.**
- **Never expose the front passenger air bag module to temperatures exceeding 90 °C (194 °F).**
- **Never allow oil, grease, detergent, or water to come in contact with the front passenger air bag module.**

INSTALLATION

Note the following item, and install in the reverse order of removal.

CAUTION:
- **Never use the old fixing bolts after removal, replace with the new bolts.**
- **Never damage the harness while installing.**

- **If malfunction is detected by the air bag warning lamp, after repair or replacement of the malfunctioning parts, reset the memory using self-diagnosis or CONSULT-III. Refer to SRC-7, "Description".**
- **After the work is completed, check that no system malfunction is detected by air bag warning lamp.**

SIDE CURTAIN AIR BAG MODULE

Exploded View

INFOID:0000000006044244

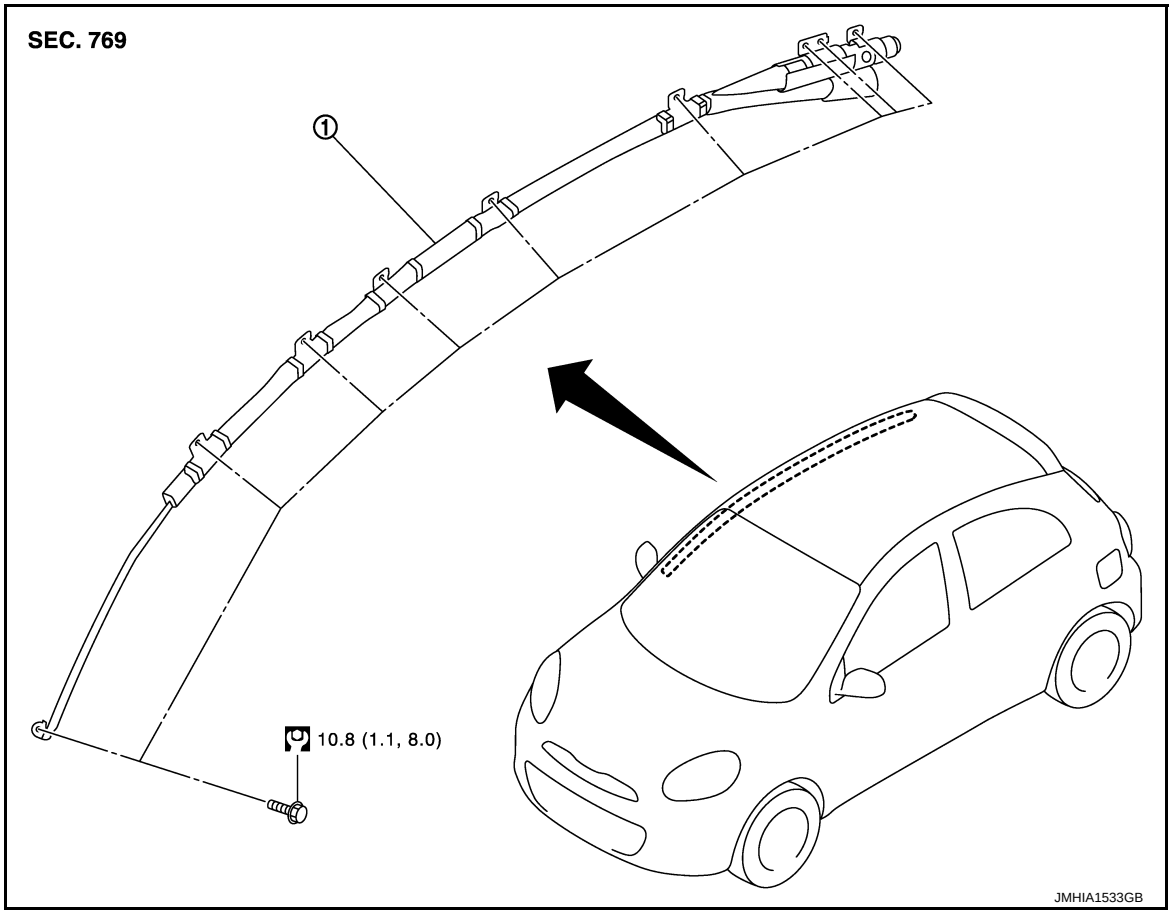

1. Side curtain air bag

Refer to GI-4, "Components" for symbols in the figure.

Removal and Installation

INFOID:0000000006044245

WARNING:
- **Before servicing, turn ignition switch OFF, disconnect battery negative terminal and wait 3 minutes or more.**
- **Always work from the side of air bag module. Never work in front of it.**
- **Never use the air tools or electric tools for servicing.**

REMOVAL

1. Remove the headlining. Refer to INT-28, "Removal and Installation".
2. Disconnect the side curtain air bag module harness connector.
   CAUTION:

- **For installing/removing the side curtain air bag module harness connector, insert thin screwdriver wrapped in tape into notch, lift lock and remove the connector.**
- **Install the connector with lock raised, and push lock into the connector.**
- **After installing the connector, check that the lock is pushed securely into it.**

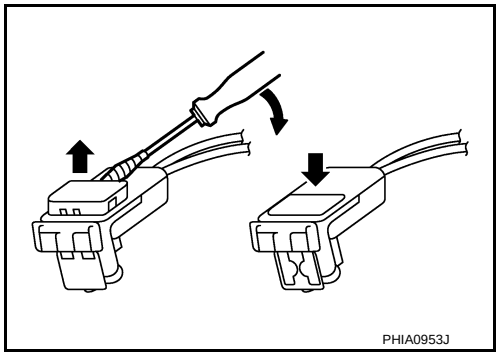

3. Remove the side curtain air bag module fixing bolts, and then remove the side curtain air bag module.
NOTE:
Remove bolts according to the order as shown in the figure.

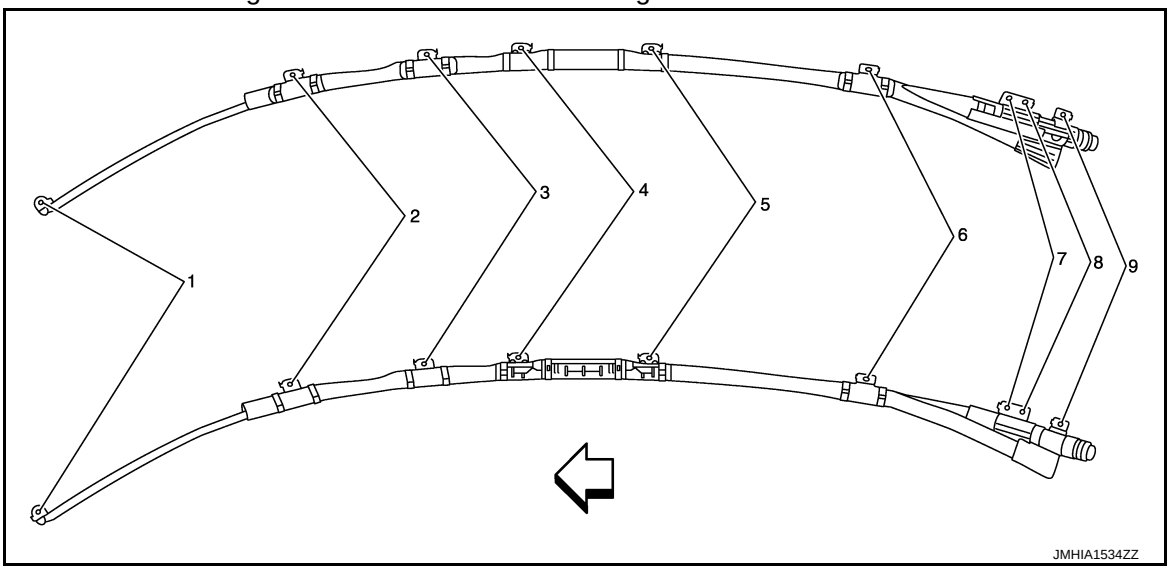

⇦ : Vehicle front

CAUTION:
- **Never impact the side curtain air bag module.**
- **Replace the side curtain air bag module if it has been dropped or sustained an impact.**

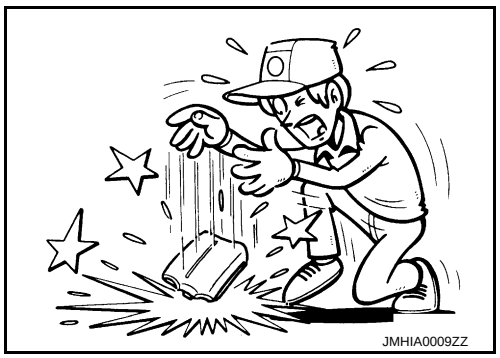

- **Never insert any foreign objects (screwdriver, etc.) into the side curtain air bag module.**
- **Never disassemble the side curtain air bag module.**
- **Never expose the side curtain air bag module to temperatures exceeding 90 °C (194 °F).**
- **Never allow oil, grease, detergent, or water to come in contact with the side curtain air bag module.**

INSTALLATION

Note the following item, and install in the reverse order of removal.

CAUTION:
- **Never damage the harness while installing.**
- **If malfunction is detected by the air bag warning lamp, after repair or replacement of the malfunctioning parts, reset the memory using self-diagnosis or CONSULT-III. Refer to SRC-7, "Description".**

- **After the work is completed, check that no system malfunction is detected by air bag warning lamp.**

CRASH ZONE SENSOR

Exploded View

INFOID:0000000006044246

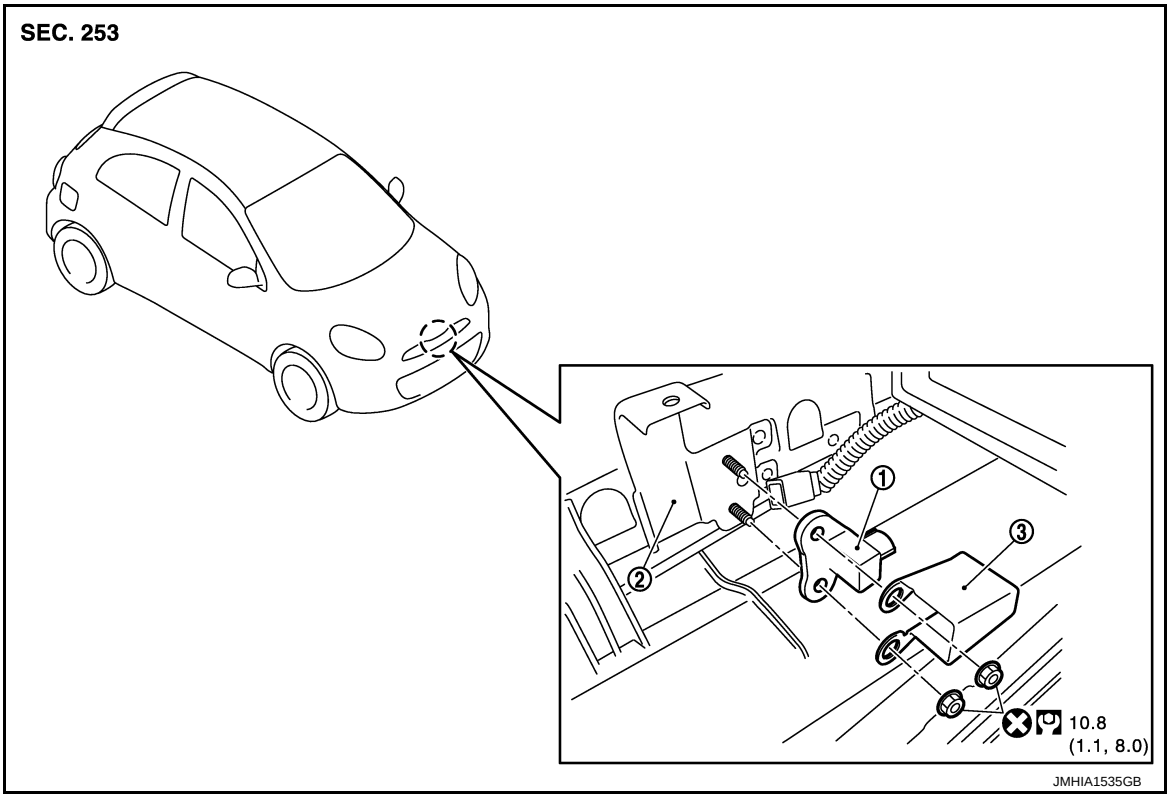

1. Crash zone sensor
2. Radiator core support upper
3. Bracket

Refer to GI-4, "Components" for symbols in the figure.

Removal and Installation

INFOID:0000000006044247

WARNING:
- **Before servicing, turn ignition switch OFF, disconnect battery negative terminal and wait 3 minutes or more.**
- **Never use the air tools or electric tools for servicing.**

REMOVAL

1. Remove the bumper fascia fixing clips (A).

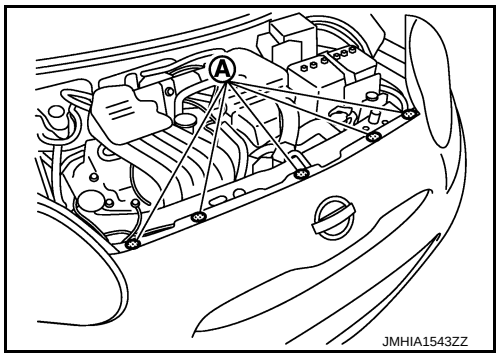

2. Pull back bumper fascia upper center, it makes work space.

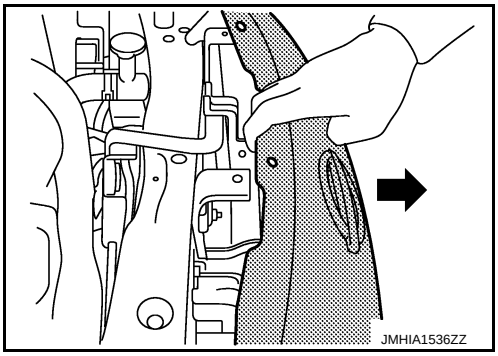

3. Remove the crash zone sensor fixing nuts, and then remove bracket and crash zone sensor.
4. Disconnect the crash zone sensor harness connector.

CAUTION:
- **Never impact the crash zone sensor.**
- **Replace the crash zone sensor if it has been dropped or sustained an impact.**

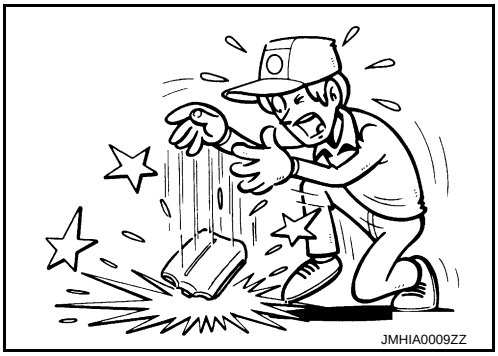

- **Replace the crash zone sensor of deployed SRS driver air bag and deployed SRS front passenger air bag.**

INSTALLATION

Note the following item, and install in the reverse order of removal.

CAUTION:
- **Never use the old fixing nut after removal, replace with the new nut.**
- **Never damage the harness while installing.**
- **Always install normally aligning to the cutout hole, because performance of the crash zone sensor excessively fluctuates according to the installation position.**
- **If malfunction is detected by the air bag warning lamp, after repair or replacement of the malfunctioning parts, reset the memory using self-diagnosis or CONSULT-III. Refer to SRC-7, "Description".**
- **After the work is completed, check that no system malfunction is detected by air bag warning lamp.**

SIDE AIR BAG (SATELLITE) SENSOR

Exploded View

INFOID:0000000006044248

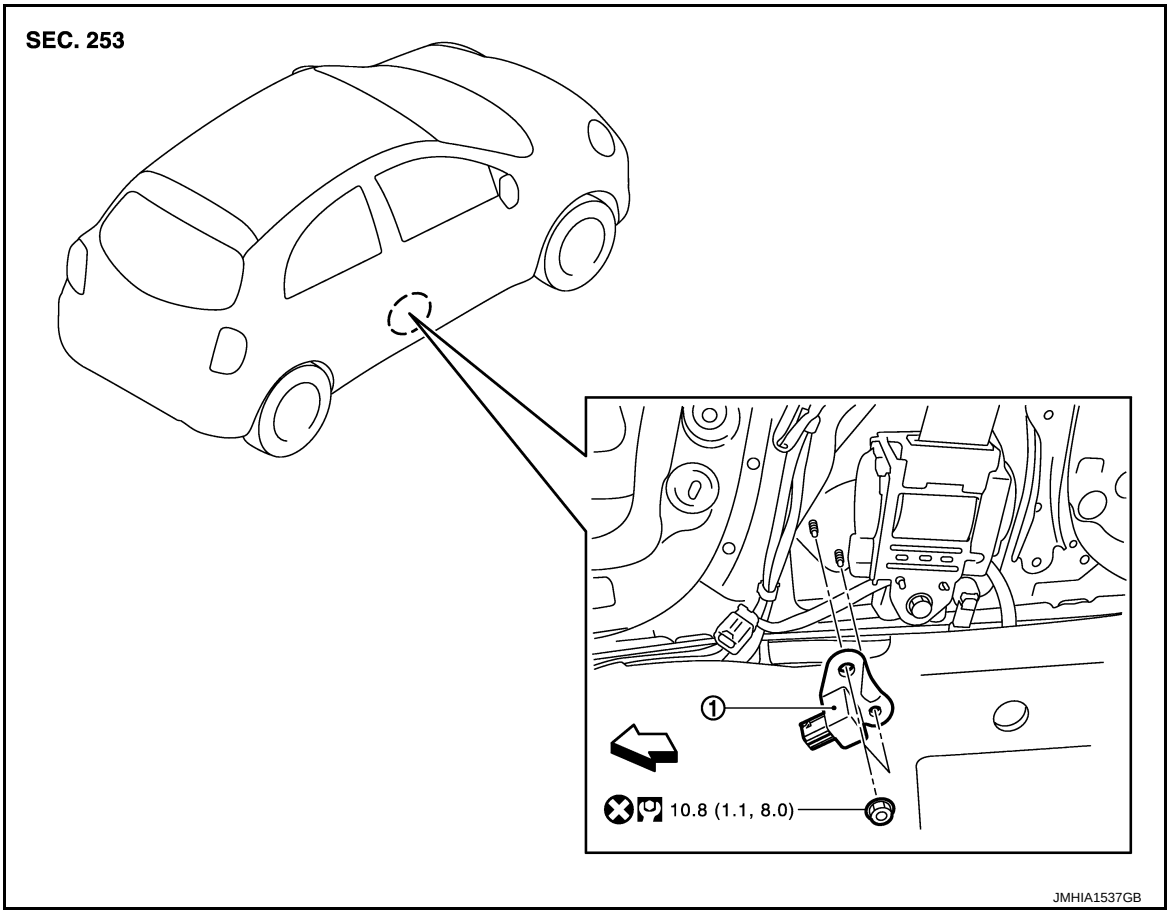

1. Satellite sensor

⇦ : Vehicle front

Refer to GI-4, "Components" for symbols in the figure.

Removal and Installation

INFOID:0000000006044249

WARNING:

- **Before servicing, turn ignition switch OFF, disconnect battery negative terminal and wait 3 minutes or more.**
- **Never use the air tools or electric tools for servicing.**

REMOVAL

1. Remove the center pillar lower garnish. Refer to INT-23, "CENTER PILLAR LOWER GARNISH : Removal and Installation".
2. Remove the side air bag (satellite) sensor fixing nuts.
3. Disconnect the harness connector and then remove the side air bag (satellite) sensor.

CAUTION:

- **Never impact the side air bag (satellite) sensor.**
- **Replace the side air bag (satellite) sensor if it has been dropped or sustained an impact.**

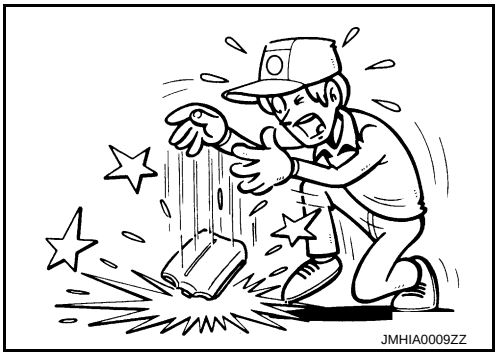

- **Replace the side air bag (satellite) sensor of deployed SRS front side air bag module and deployed SRS side curtain air bag module.**

INSTALLATION

Note the following item, and install in the reverse order of removal.

CAUTION:

- **Never use the old fixing nuts after removal, replace with the new nuts.**
- **Never damage the harness while installing.**
- **Always install normally aligning to the cutout hole, because performance of the side air bag (satellite) sensor excessively fluctuates according to the installation position.**
- **If malfunction is detected by the air bag warning lamp, after repair or replacement of the malfunctioning parts, reset the memory using self-diagnosis or CONSULT-III. Refer to SRC-7, "Description".**
- **After the work is completed, check that no system malfunction is detected by air bag warning lamp.**

DIAGNOSIS SENSOR UNIT

Exploded View

INFOID:0000000006044250

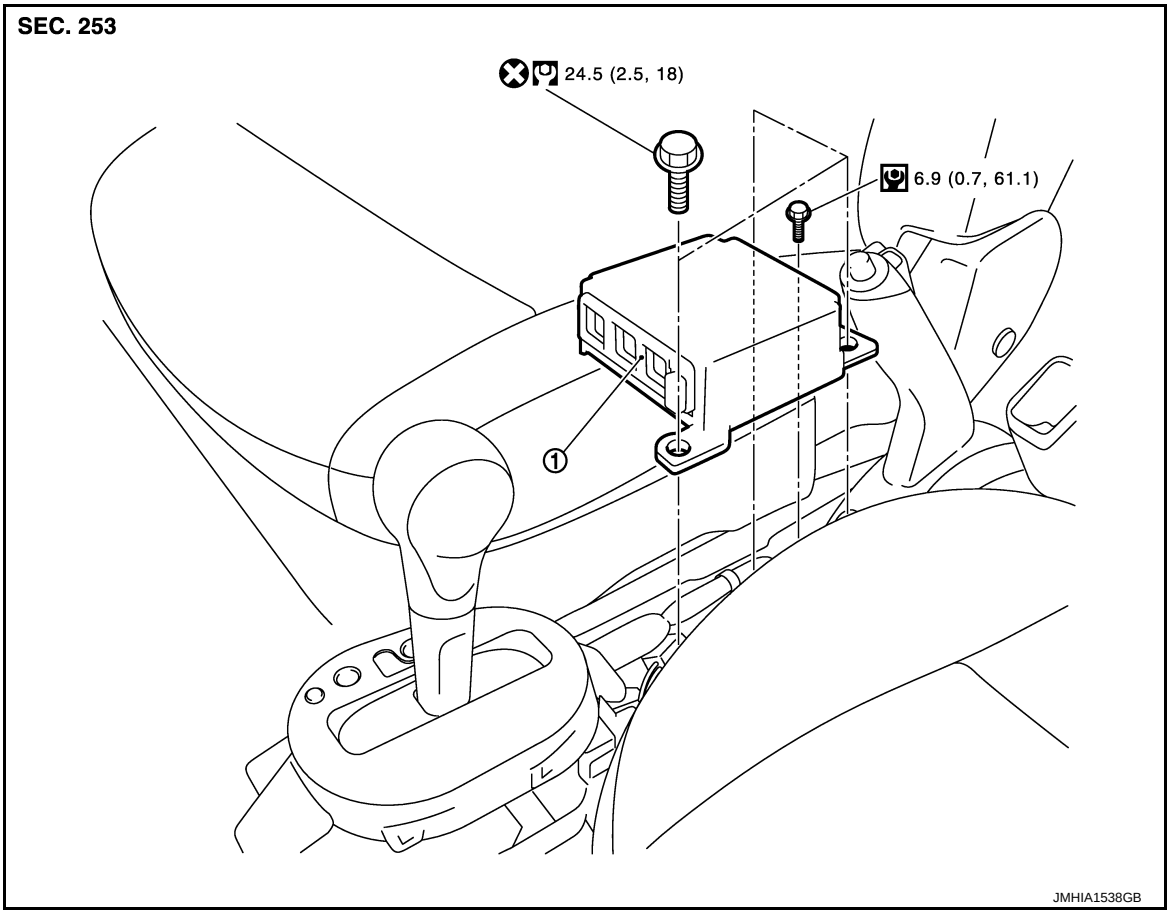

1. Diagnosis sensor unit

Refer to GI-4, "Components" for symbols in the figure.

Removal and Installation

INFOID:0000000006044251

WARNING:

- **Before servicing, turn ignition switch OFF, disconnect battery negative terminal and wait 3 minutes or more.**
- **Before disconnecting the air bag sensor unit harness connector, be sure to disconnect the each harness connector of the air bag module and pre-tensioner seat belt to prevent air bag deployment by static electricity and pre-tensioner seat belt operation.**
- **Never use the air tools or electric tools for servicing.**
- **When replacing the air bag diagnosis sensor unit, always check with the parts department for the latest parts information. Installing an incorrect air bag diagnosis sensor unit may or may not cause the air bag warning lamp to illuminate and may cause incorrect deployment of the supplemental air bags and seat belt pre-tensioners in a collision resulting in serious personal injury or death.**

REMOVAL

1. Always check the air bag diagnosis sensor unit ECU discriminated number (identification number) using CONSULT-III.
2. Disconnect each connector of all air bag modules and pre-tensioner seat belts.
3. Remove the center console assembly. Refer to IP-21, "Removal and Installation".
4. Disconnect the diagnosis sensor unit harness connectors.
5. Remove the diagnosis sensor unit mounting bolts, and then remove the diagnosis sensor unit.

CAUTION:
- **Never impact the diagnosis sensor unit.**
- **Replace the diagnosis sensor unit if it has been dropped or sustained an impact.**

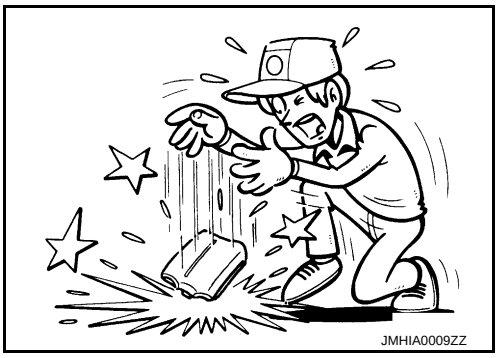

- **Replace the diagnosis sensor unit of deployed SRS air bag and deployed SRS front seat belt pre-tensioner.**

INSTALLATION

Install air bag diagnosis sensor unit in the reverse order of removal.

CAUTION:
- **Never use the old bolts after removal, replace with the new bolts.**
- **Never damage the harness while installing.**
- **If malfunction is detected by the air bag warning lamp, after repair or replacement of the malfunctioning parts, reset the memory using self-diagnosis or CONSULT-III. Refer to SRC-7, "Description".**
- **After the work is completed, check that no system malfunction is detected by air bag warning lamp.**
- **After replacing the air bag diagnosis sensor unit, confirm using CONSULT-III that the ECU discriminated number (identification number) of the new replacement air bag diagnosis sensor unit matches the ECU discriminated number (identification number) of the replaced (old) air bag diagnosis sensor unit.**

NOTE:

If the ECU discriminated number of the new replacement air bag diagnosis sensor unit differs from the ECU discriminated number of the replaced air bag diagnosis sensor unit, reconfirm the parts information and verify that the correct air bag diagnosis sensor unit was installed.

SEAT BELT PRE-TENSIONER

Exploded View

INFOID:0000000005891456

Removal and Installation

INFOID:0000000005891457

For removal and installation procedures, refer to SB-6, "SEAT BELT RETRACTOR : Removal and Installation".

DEPLOYMENT AND DISPOSAL

DRIVER AIR BAG MODULE

DRIVER AIR BAG MODULE : Deployment

INFOID:0000000005891458

CHECKING DEPLOYMENT TOOL

Connecting to Battery

CAUTION:

The battery must show voltage of 9.6 V or more.

Remove the battery from the vehicle and place it on dry wood blocks approximately 5.0 m (16.4 ft) away from the vehicle.

- Wait 3 minutes or more after the vehicle battery is disconnected before proceeding.
- Connect red clip of deployment tool (A) to battery positive terminal and black clip to negative terminal.

Check that the polarity is correct. The right side lamp in the tool, marked “deployment tool power”, should illuminate with a green light. If the right side lamp illuminates red, reverse the connections to the battery.

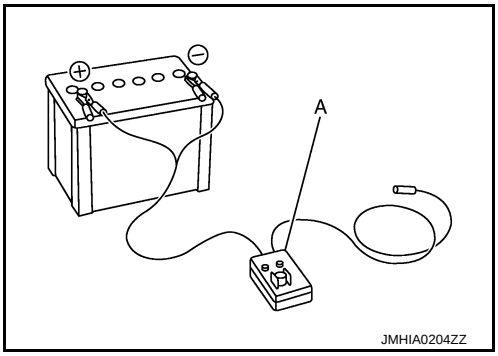

Deployment Tool Check

Press the deployment tool switch (C) to the ON position. The left side lamp in the tool, marked “air bag connector voltage” should illuminate (B). If it does not illuminate, replace the deployment tool (A).

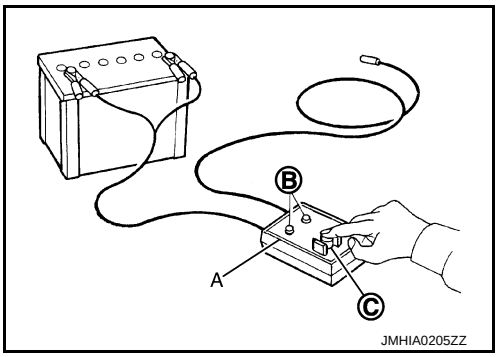

Air Bag Deployment Tool Lamp Illumination Chart (Battery Connected)

Switch operation	Left side lamp, green* “AIR BAG CONNECTOR VOLTAGE”	Right side lamp, green* “DEPLOYMENT TOOL POWER”
OFF	OFF	ON
ON	ON	ON

*: If this lamp illuminates red, the tool is connected to the battery incorrectly. Reverse the connections and check that the lamp illuminates green.

DEPLOYMENT OF DRIVER AIR BAG MODULE (OUTSIDE OF VEHICLE)

1. Unless the vehicle is being scrapped, deploying the air bag in the vehicle is not recommended. This may cause damage to the vehicle interior.
   Anchor air bag module bracket (SST: KV99105300) (A) in a vice secured to a firm foundation deployment.

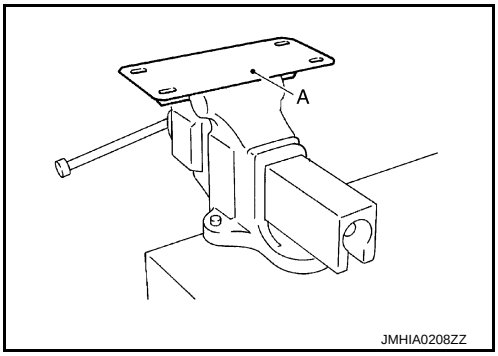

2. Using wire (D), secure driver air bag module (1) to air bag module bracket (SST: KV99105300) (A) at two places.
   CAUTION:
   Use wire of at least 1.0 mm (0.039 in) diameter.
3. Firmly secure air bag module bracket (SST: KV99105300) with driver air bag module attached, in a vise.
4. Connect deployment tool adapter (SST: KV99110500) (C) to driver air bag module and deployment tool connector (SST: KV99106400) (B).

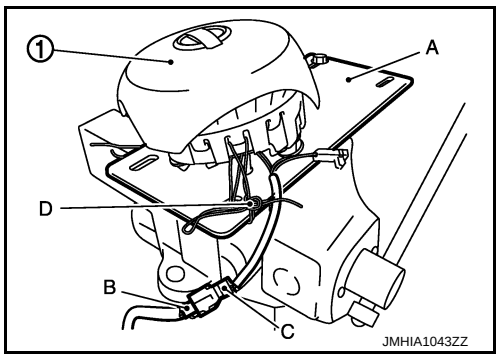

5. Connect red clip of deployment tool (A) to battery positive terminal and black clip to negative terminal (B).
6. The lamp on the right side of the tool, marked “deployment tool power”, should illuminate green, not red.
7. Press the button on the deployment tool. The left side lamp on the tool, marked “air bag connector voltage”, illuminates and the air bag module (1) deploys.
   CAUTION:
   When deploying the driver air bag module, stand at least 5.0 m (16.4 ft) away from the air bag module.

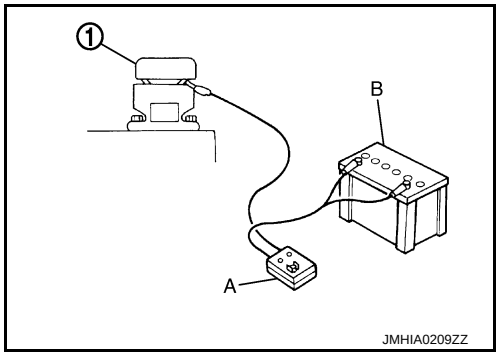

DRIVER AIR BAG MODULE : Disposal

INFOID:0000000005891459

DISPOSING OF AIR BAG MODULE AND SEAT BELT PRE-TENSIONER

Deployed air bag module and seat belt pre-tensioner are very hot. Before disposing of air bag module and seat belt pre-tensioner, wait at least 30 minutes or more, and 10 minutes or more, respectively. Seal them in a plastic bag before disposal.

CAUTION:

- **Never apply water to a deployed air bag module or seat belt pre-tensioner.**
- **Always use gloves when handling a deployed air bag module or seat belt pre-tensioner.**
- **No poisonous gas is produced upon air bag module deployment. However, be careful not to inhale gas since it irritates the throat and can cause choking.**
- **Never disassemble the air bag module and seat belt pre-tensioner.**
- **Air bag module and seat belt pre-tensioner cannot be reused.**
- **Wash your hands clean after the work is complete.**

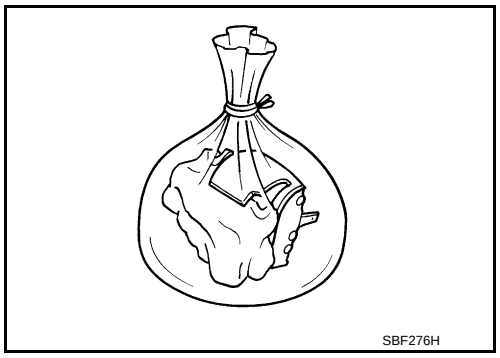

FRONT PASSENGER AIR BAG MODULE

FRONT PASSENGER AIR BAG MODULE : Deployment

INFOID:0000000005891460

CHECKING DEPLOYMENT TOOL

Connecting to Battery

CAUTION:

The battery must show voltage of 9.6 V or more.
Remove the battery from the vehicle and place it on dry wood blocks approximately 5.0 m (16.4 ft) away from the vehicle.
- Wait 3 minutes or more after the vehicle battery is disconnected before proceeding.
- Connect red clip of deployment tool (A) to battery positive terminal and black clip to negative terminal.

Check that the polarity is correct. The right side lamp in the tool, marked “deployment tool power”, should illuminate with a green light. If the right side lamp illuminates red, reverse the connections to the battery.

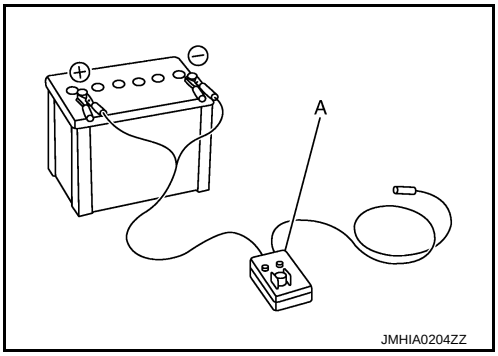

Deployment Tool Check
Press the deployment tool switch (C) to the ON position. The left side lamp in the tool, marked “air bag connector voltage” should illuminate (B). If it does not illuminate, replace the deployment tool (A).

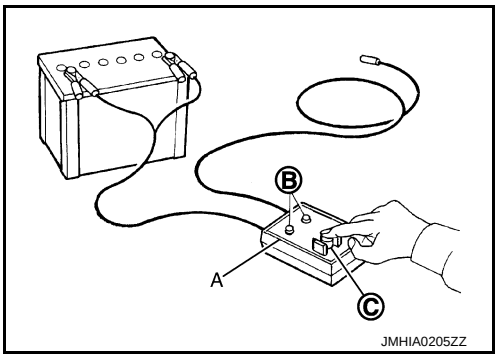

Air Bag Deployment Tool Lamp Illumination Chart (Battery Connected)

Switch operation	Left side lamp, green* “AIR BAG CONNECTOR VOLTAGE”	Right side lamp, green* “DEPLOYMENT TOOL POWER”
OFF	OFF	ON
ON	ON	ON

*: If this lamp illuminates red, the tool is connected to the battery incorrectly. Reverse the connections and check that the lamp illuminates green.

DEPLOYMENT OF FRONT PASSENGER AIR BAG MODULE (OUTSIDE OF VEHICLE)

1. Remove the front passenger air bag module (2) from lid (1).

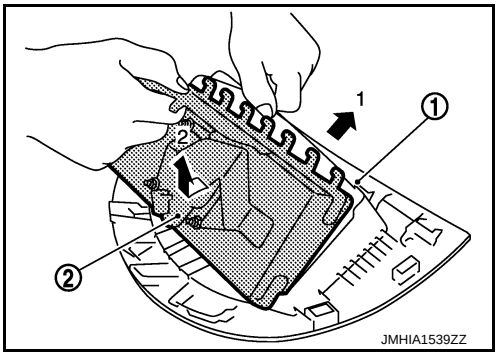

2. Make 8.5 mm (0.335 in) diameter hole (B) in air bag module bracket (SST: KV99105300) (A) at the position shown in figure.

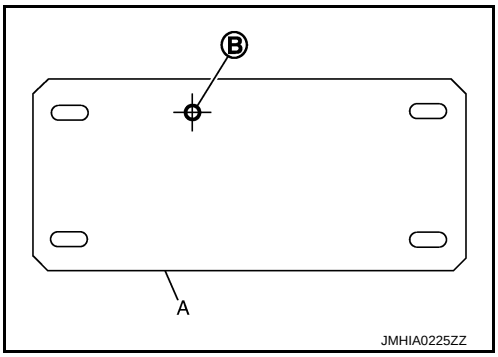

3. Firmly secure air bag module bracket (SST: KV99105300) (A) in a vise.
4. Insert two bolts (D) through air bag module bracket and front passenger air bag module (1) lower side holes, and fix then with two nuts.
5. Connect deployment tool (SST: KV99106400) (B) and deployment tool adapter (SST: KV99110500) (C) to front passenger air bag module.

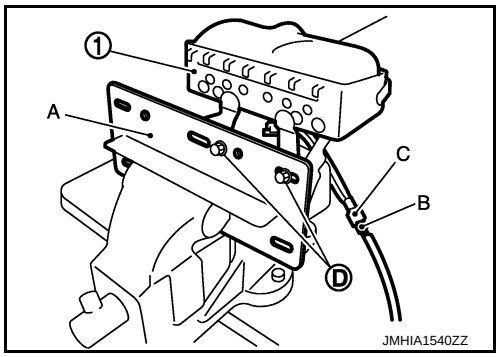

6. Connect red clip of deployment tool (A) to battery positive terminal and black clip to negative terminal (B).
7. The lamp on the right side of the tool, marked “deployment tool power”, should illuminate green, not red.
8. Press the button on the deployment tool (A). The left side lamp on the tool, marked “air bag connector voltage”, illuminates and the front passenger air bag module (1) deploys.
   CAUTION:
   - **When deploying the front passenger air bag module, never stand on the deploying side.**
   - **Stand at least 5.0 m (16.4 ft) away from the front passenger air bag module.**

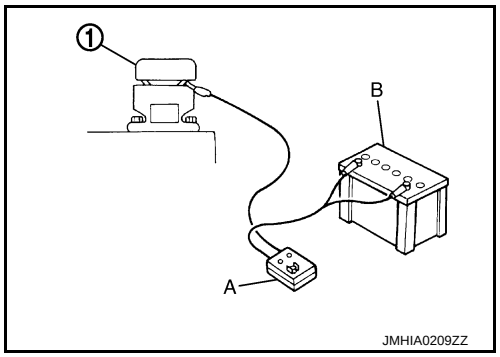

FRONT PASSENGER AIR BAG MODULE : Disposal

INFOID:0000000005891461

DISPOSING OF AIR BAG MODULE AND SEAT BELT PRE-TENSIONER

Deployed air bag module and seat belt pre-tensioner are very hot. Before disposing of air bag module and seat belt pre-tensioner, wait at least 30 minutes or more, and 10 minutes or more, respectively. Seal them in a plastic bag before disposal.

CAUTION:
- **Never apply water to a deployed air bag module or seat belt pre-tensioner.**
- **Always use gloves when handling a deployed air bag module or seat belt pre-tensioner.**
- **No poisonous gas is produced upon air bag module deployment. However, be careful not to inhale gas since it irritates the throat and can cause choking.**
- **Never disassemble the air bag module and seat belt pre-tensioner.**
- **Air bag module and seat belt pre-tensioner cannot be reused.**
- **Wash your hands clean after the work is complete.**

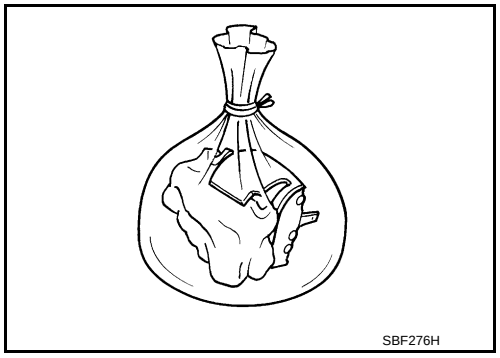

SIDE CURTAIN AIR BAG MODULE

SIDE CURTAIN AIR BAG MODULE : Deployment

INFOID:0000000006037637

CHECKING DEPLOYMENT TOOL

Connecting to Battery

CAUTION:

The battery must show voltage of 9.6 V or more.
Remove the battery from the vehicle and place it on dry wood blocks approximately 5.0 m (16.4 ft) away from the vehicle.
- Wait 3 minutes or more after the vehicle battery is disconnected before proceeding.
- Connect red clip of deployment tool (A) to battery positive terminal and black clip to negative terminal.

Check that the polarity is correct. The right side lamp in the tool, marked “deployment tool power”, should illuminate with a green light. If the right side lamp illuminates red, reverse the connections to the battery.

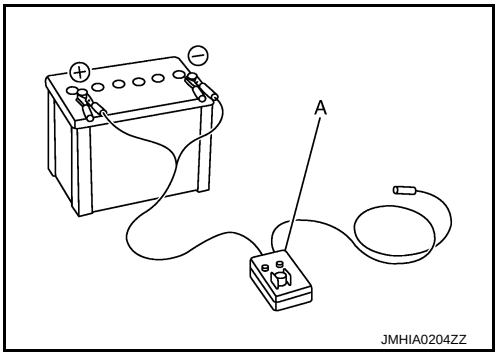

Deployment Tool Check
Press the deployment tool switch (C) to the ON position. The left side lamp in the tool, marked “air bag connector voltage” should illuminate (B). If it does not illuminate, replace the deployment tool (A).

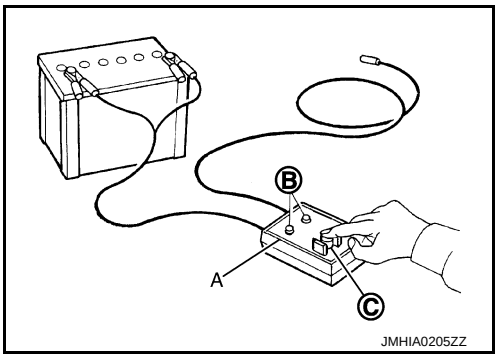

Air Bag Deployment Tool Lamp Illumination Chart (Battery Connected)

Switch operation	Left side lamp, green* “AIR BAG CONNECTOR VOLTAGE”	Right side lamp, green* “DEPLOYMENT TOOL POWER”
OFF	OFF	ON
ON	ON	ON

*: If this lamp glows red, the tool is connected to the battery incorrectly. Reverse the connections and check the lamp glows green.

DEPLOYMENT OF SIDECURTAIN AIR BAG MODULE (OUTSIDE OF VEHICLE)

1. Cut the inflator (1) from side curtain air bag module (2).

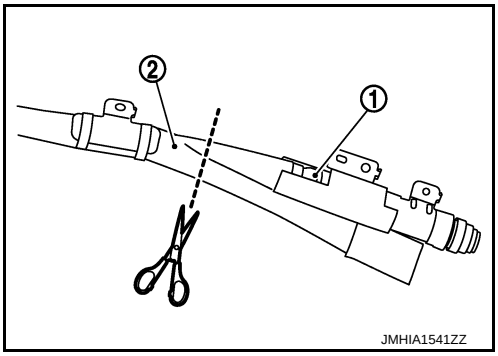

2. Connect deployment tool adapter (SST: KV99110500) (B) and deployment tool (SST: KV99106400) (A) to the inflator (1).

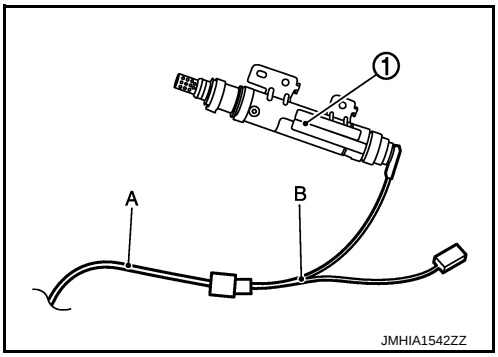

3. Put the inflator connected with the deployment tool (SST: KV99106400) and deployment tool adapter (SST: KV99110500) into a tire without a wheel.

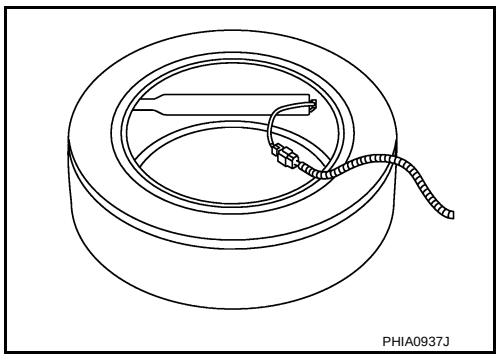

4. Put the tire with the inflator (1) onto another tire without a wheel. Add an additional tire without a wheel and then a tire mounted on a wheel on top.
   CAUTION:
   Tie all tires together with a strap in order keep them standing.
5. Connect red clip of deployment tool (A) to battery positive terminal and black clip to negative terminal.
6. The lamp on the right side of the tool, marked “deployment tool power”, should illuminate green, not red.
7. Press the button on the deployment tool (A). The left side lamp on the tool, marked “air bag connector voltage”, will illuminate and the air bag module inflator (1) will deploy.
   CAUTION:
   When deploying the side curtain air bag module, stand at least 5.0 m (16.4 ft) away from the side curtain air bag module.

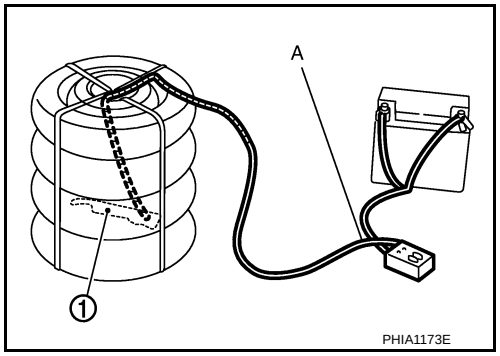

SIDE CURTAIN AIR BAG MODULE : Disposal

INFOID:0000000006037638

DISPOSING OF AIR BAG MODULE AND SEAT BELT PRE-TENSIONER

Deployed air bag module and seat belt pre-tensioner are very hot. Before disposing of air bag module and seat belt pre-tensioner, wait at least 30 minutes or more, and 10 minutes or more, respectively. Seal them in a plastic bag before disposal.

CAUTION:

- **Never apply water to a deployed air bag module or seat belt pre-tensioner.**
- **Always use gloves when handling a deployed air bag module or seat belt pre-tensioner.**
- **No poisonous gas is produced upon air bag module deployment. However, be careful not to inhale gas since it irritates the throat and can cause choking.**
- **Never disassemble the air bag module and seat belt pre-tensioner.**
- **Air bag module and seat belt pre-tensioner cannot be reused.**
- **Wash your hands clean after the work is complete.**

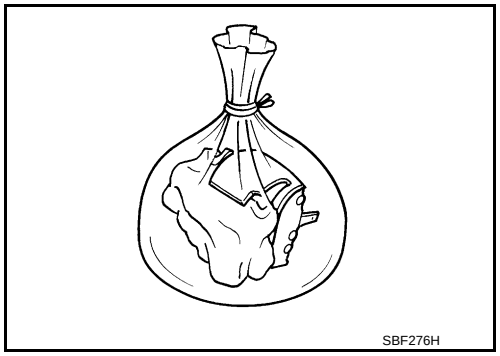

SEAT BELT PRE-TENSIONER

SEAT BELT PRE-TENSIONER : Deployment

INFOID:0000000005891464

CHECKING DEPLOYMENT TOOL

Connecting to Battery

CAUTION:

The battery must show voltage of 9.6 V or more.
Remove the battery from the vehicle and place it on dry wood blocks approximately 5.0 m (16.4 ft) away from the vehicle.

- Wait 3 minutes or more after the vehicle battery is disconnected before proceeding.
- Connect red clip of deployment tool (A) to battery positive terminal and black clip to negative terminal.

Check that the polarity is correct. The right side lamp in the tool, marked “deployment tool power”, should illuminate with a green light. If the right side lamp illuminates red, reverse the connections to the battery.

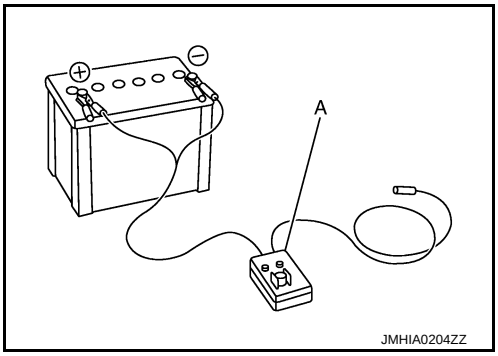

Deployment Tool Check

Press the deployment tool switch (C) to the ON position. The left side lamp in the tool, marked “air bag connector voltage” should illuminate (B). If it does not illuminate, replace the deployment tool (A).

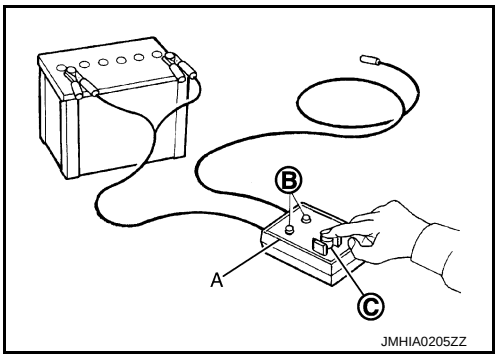

Air Bag Deployment Tool Lamp Illumination Chart (Battery Connected)

Switch operation	Left side lamp, green* “AIR BAG CONNECTOR VOLTAGE”	Right side lamp, green* “DEPLOYMENT TOOL POWER”
OFF	OFF	ON
ON	ON	ON

*: If this lamp illuminates red, the tool is connected to the battery incorrectly. Reverse the connections and check that the lamp illuminates green.

DEPLOYMENT OF FRONT SEAT BELT PRE-TENSIONER (OUTSIDE OF VEHICLE)

1. Firmly grip pre-tensioner (1) in a vise (A) and cut off the webbing.

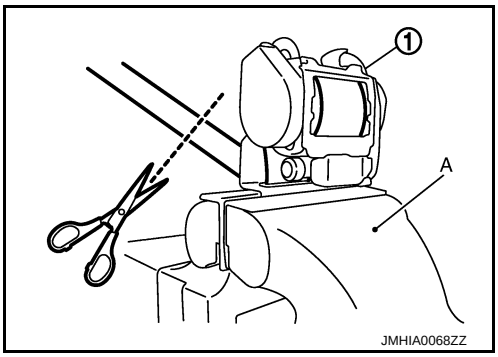

2. Connect deployment tool (SST: KV99106400) (A) and deployment tool adapter (SST: KV99110500) (B) yellow connector to front seat belt pre-tensioner (1).
3. Connect red clip of deployment tool to battery positive terminal and black clip to negative terminal (C).
4. The lamp on the right side of the tool, marked “deployment tool power”, should illuminate green, not red.
5. Press the button on the deployment tool. The left side lamp on the tool, marked “seat belt pre-tensioner connector voltage”, illuminates and the front seat belt pre-tensioner deploys.
   CAUTION:

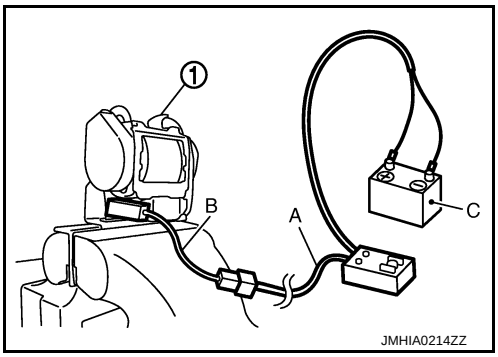

When deploying the front seat belt pre-tensioner, stand at least 5.0 m(16.4 ft) away from the front seat belt pre-tensioner.

SEAT BELT PRE-TENSIONER : Disposal

INFOID:0000000005891465

DISPOSING OF AIR BAG MODULE AND SEAT BELT PRE-TENSIONER

Deployed air bag module and seat belt pre-tensioner are very hot. Before disposing of air bag module and seat belt pre-tensioner, wait at least 30 minutes or more, and 10 minutes or more, respectively. Seal them in a plastic bag before disposal.

CAUTION:

- **Never apply water to a deployed air bag module or seat belt pre-tensioner.**
- **Always use gloves when handling a deployed air bag module or seat belt pre-tensioner.**
- **No poisonous gas is produced upon air bag module deployment. However, be careful not to inhale gas since it irritates the throat and can cause choking.**
- **Never disassemble the air bag module and seat belt pre-tensioner.**
- **Air bag module and seat belt pre-tensioner cannot be reused.**
- **Wash your hands clean after the work is complete.**

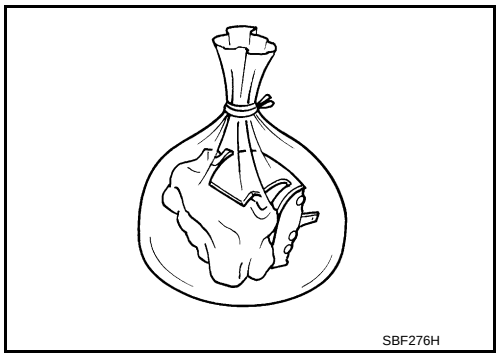

SECTION SRC

SRS AIRBAG CONTROL SYSTEM

CONTENTS

PRECAUTION 3

PRECAUTIONS 3
- Precaution for Supplemental Restraint System (SRS) "AIR BAG" and "SEAT BELT PRE-TENSIONER" 3
- Service 3

SYSTEM DESCRIPTION 4

COMPONENT PARTS 4
- Component Parts Location 4
- Component Description 4

SYSTEM 6
- System Diagram 6
- System Description 6

DIAGNOSIS SYSTEM (AIR BAG) 7
- Description 7
- On Board Diagnosis Function 7
- CONSULT-III Function 9

ECU DIAGNOSIS INFORMATION 11

DIAGNOSIS SENSOR UNIT 11
- DTC Index 11

WIRING DIAGRAM 12

SRS AIR BAG SYSTEM 12
- Wiring Diagram 12

BASIC INSPECTION 14

DIAGNOSIS AND REPAIR WORK FLOW 14
- Work Flow 14

DTC/CIRCUIT DIAGNOSIS 17

B1001, B1002, B1003, B1004, B1005 DIAGNOSIS SENSOR UNIT 17
- Description 17
- DTC Logic 17
- Diagnosis Procedure 17

B1006, B1007, B1008, B1009, B1010 DIAGNOSIS SENSOR UNIT 19
- Description 19
- DTC Logic 19
- Diagnosis Procedure 19

B1011, B1012, B1013, B1014, B1015 DIAGNOSIS SENSOR UNIT 21
- Description 21
- DTC Logic 21
- Diagnosis Procedure 21

B1033, B1034 CRASH ZONE SENSOR 23
- Description 23
- DTC Logic 23
- Diagnosis Procedure 23

B1035 CRASH ZONE SENSOR 25
- Description 25
- DTC Logic 25
- Diagnosis Procedure 25

B1042, B1043, B1044, B1045, B1046, B1047 DIAGNOSIS SENSOR UNIT 27
- Description 27
- DTC Logic 27
- Diagnosis Procedure 27

B1049 DRIVER AIRBAG MODULE 29
- Description 29
- DTC Logic 29
- Diagnosis Procedure 29

B1050 DRIVER AIRBAG MODULE 31
- Description 31
- DTC Logic 31
- Diagnosis Procedure 31

B1051 DRIVER AIRBAG MODULE 33

Description 33
DTC Logic 33
Diagnosis Procedure 33

B1052 DRIVER AIRBAG MODULE 35
Description 35
DTC Logic 35
Diagnosis Procedure 35

B1058, B1059, B1060, B1061, B1062, B1063 DIAGNOSIS SENSOR UNIT 37
Description 37
DTC Logic 37
Diagnosis Procedure 37

B1074, B1075, B1076, B1077, B1078, B1079 DIAGNOSIS SENSOR UNIT 39
Description 39
DTC Logic 39
Diagnosis Procedure 39

B1209 FRONTAL COLLISION DETECTION ... 41
Description 41
DTC Logic 41
Diagnosis Procedure 41

SYMPTOM DIAGNOSIS 42

SRS AIR BAG WARNING LAMP DOES NOT TURN OFF 42
Diagnosis Procedure 42

SRS AIR BAG WARNING LAMP DOES NOT TURN ON 43
Diagnosis Procedure 43

PRECAUTION

PRECAUTIONS

Precaution for Supplemental Restraint System (SRS) "AIR BAG" and "SEAT BELT PRE-TENSIONER"

INFOID:0000000005994171

The Supplemental Restraint System such as “AIR BAG” and “SEAT BELT PRE-TENSIONER”, used along with a front seat belt, helps to reduce the risk or severity of injury to the driver and front passenger for certain types of collision. Information necessary to service the system safely is included in the “SRS AIR BAG” and “SEAT BELT” of this Service Manual.

WARNING:

- **To avoid rendering the SRS inoperative, which could increase the risk of personal injury or death in the event of a collision which would result in air bag inflation, all maintenance must be performed by an authorized NISSAN/INFINITI dealer.**
- **Improper maintenance, including incorrect removal and installation of the SRS, can lead to personal injury caused by unintentional activation of the system. For removal of Spiral Cable and Air Bag Module, see the “SRS AIR BAG”.**
- **Do not use electrical test equipment on any circuit related to the SRS unless instructed to in this Service Manual. SRS wiring harnesses can be identified by yellow and/or orange harnesses or harness connectors.**

PRECAUTIONS WHEN USING POWER TOOLS (AIR OR ELECTRIC) AND HAMMERS

WARNING:

- **When working near the Air Bag Diagnosis Sensor Unit or other Air Bag System sensors with the ignition ON or engine running, DO NOT use air or electric power tools or strike near the sensor(s) with a hammer. Heavy vibration could activate the sensor(s) and deploy the air bag(s), possibly causing serious injury.**
- **When using air or electric power tools or hammers, always switch the ignition OFF, disconnect the battery, and wait at least 3 minutes before performing any service.**

Service

INFOID:0000000005911167

- Never use electrical test equipment to check SRS circuits unless instructed to in this Service Manual.
- Before servicing the SRS, turn ignition switch OFF, disconnect battery negative terminal and wait 3 minutes or more.
  For approximately 3 minutes after the cables are removed, it is still possible for the air bag and seat belt pretensioner to deploy. Therefore, never work on any SRS connectors or wires until at least 3 minutes have passed.
- Diagnosis sensor unit must always be installed with their arrow marks “⇐” pointing towards the front of the vehicle for proper operation. Also check diagnosis sensor unit for cracks, deformities or rust before installation and replace as required.
- The spiral cable must be aligned with the neutral position since its rotations are limited. Never turn steering wheel and column after removal of steering gear.
- Handle air bag module carefully. Always place driver and front passenger air bag modules with the pad side facing upward and seat mounted front side air bag module standing with the stud bolt side facing down.
- Conduct self-diagnosis to check entire SRS for proper function after replacing any components.
- After air bag inflates, the front instrument panel assembly should be replaced if damaged.
- Always replace instrument panel pad following front passenger air bag deployment.
- Never solder the harness when making repairs. Check that harness is not pinched and that there is no contact with other components.
- Never allow harness to come in contact with oil, grease, waste oil, or water.
- Never insert foreign materials, such as a screwdriver, into the harness connector. (This is to prevent accidental activation caused by static electricity.)
- Always use CONSULT-III or SRS air bag warning lamp to perform the circuit diagnosis. (Never use an electric tester such as a circuit tester.)

SYSTEM DESCRIPTION

COMPONENT PARTS

Component Parts Location

INFOID:0000000005911168

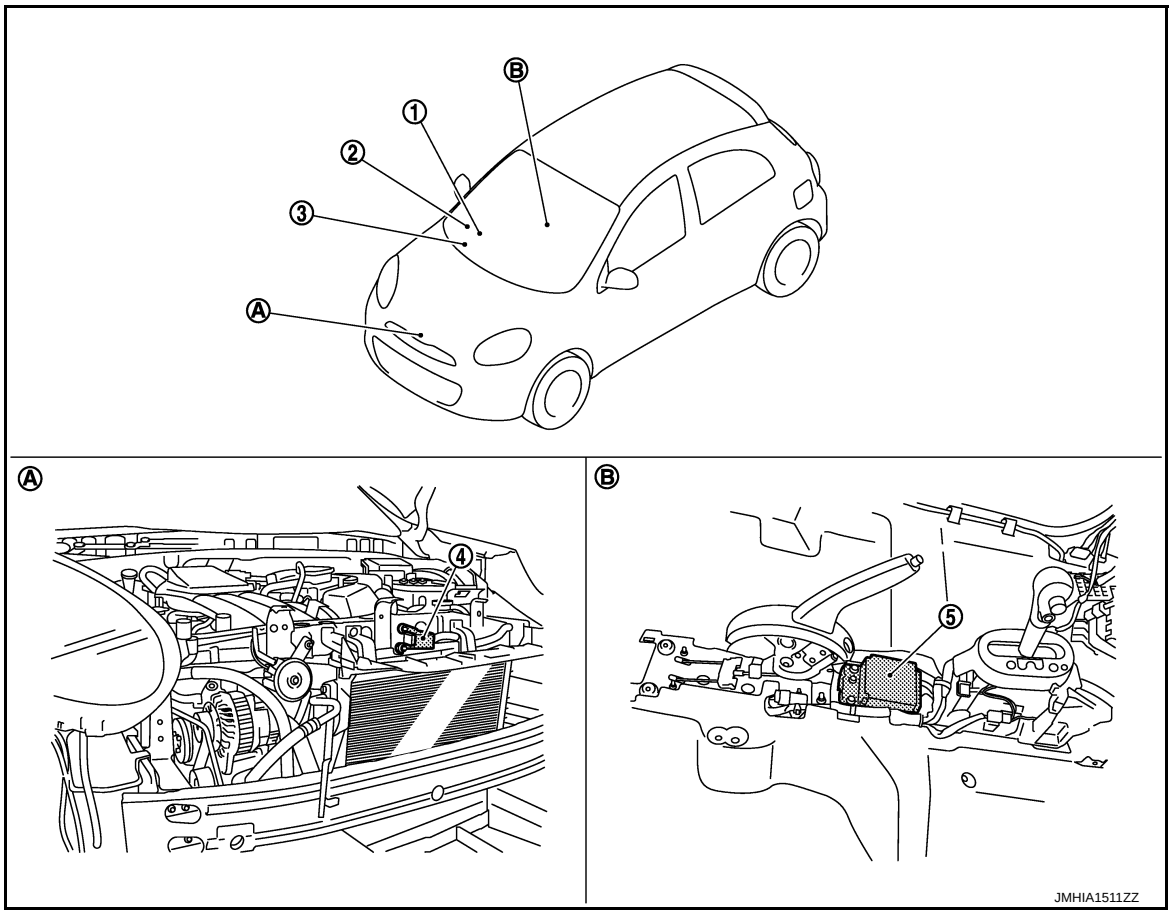

1. Driver air bag module
2. Combination switch (spiral cable)
3. Combination meter
   Refer to MWI-4, "Component Parts Location"
4. Crash zone sensor
5. Air bag diagnosis sensor unit

A. View with bumper fascia assembly removed
B. View with center console assembly removed

Component Description

INFOID:0000000005911169

Component	Function
Air bag diagnosis sensor unit	• Detects a collision and supplies power supply for deployment to air bag module. • It contains the “G” sensors for both frontal collisions and spare battery function in case of main battery damage in collision.
Driver air bag module	• Receives signal from air bag diagnosis sensor unit and deploys air bag. • In case of frontal collision where acceleration is more than the specified level, the ignition materials are ignited by electric ignition system. The system burns the gas generating materials resulting in a chemical reaction. This generates hot gases that flow into the air bag through a filter and expand the bag.

Component	Function
Crash zone sensor	• Transmits signal to air bag diagnosis sensor unit when a frontal collision occurs. • Crash zone sensor is a G sensor that outputs voltage signal during deceleration at the time of a vehicle frontal collision that is more than the specified limit is detected.
Combination switch (spiral cable)	Supplies power supply to driver air bag module on steering wheel.
Combination meter (air bag warning lamp)	Indicates air bag malfunctioning and deployment by blinking and illuminating air bag warning lamp.

SYSTEM

System Diagram

INFOID:0000000005911189

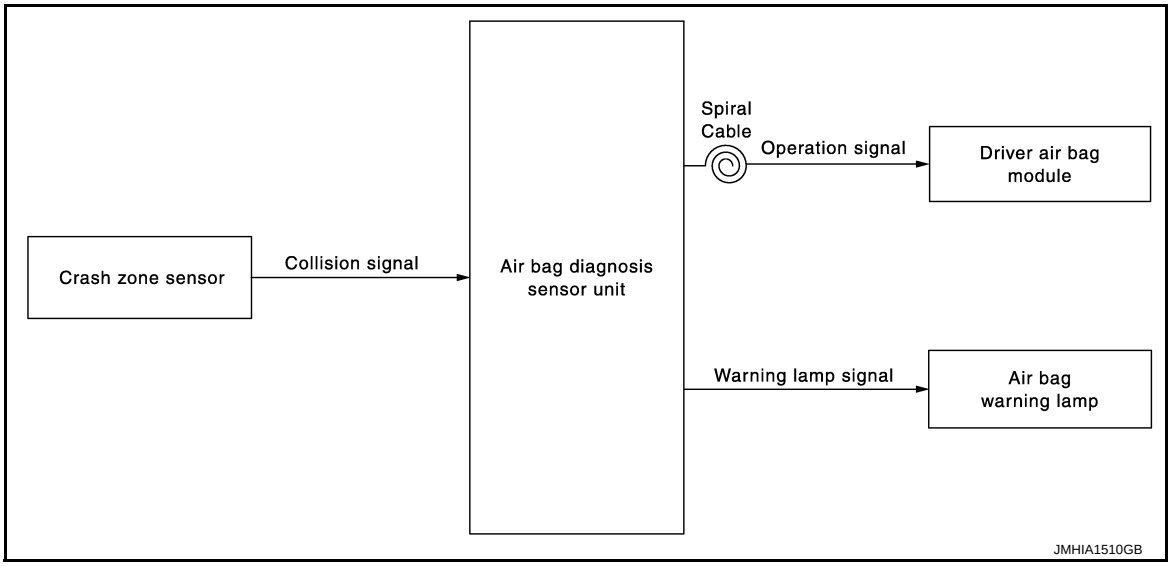

System Description

INFOID:0000000005911190

Supplemental Restraint System (SRS) activates air bag module when it detects a frontal collision that is more than the specified limit. Together with other safety devices, it reduces the impact that occupant receives when vehicle collision occurs.
Air bag diagnosis sensor unit supplies power supply to air bag module when deceleration that is more than the specified limit is detected by G sensor in air bag diagnosis sensor unit, crash zone sensor. Air bag module is composed of electric igniter (squib), filter, pyrotechnic material, and gas generating material. When air bag module receives a signal from air bag diagnosis sensor unit, air bag module ignites pyrotechnic material using electric igniter (squib) so that gas generating material generates high temperature nitrogen gas. The gas through filter activates air bag.

AIR BAG DIAGNOSIS SENSOR UNIT FUNCTIONS

Air bag diagnosis sensor unit has the following functions.
- Detects a collision and supplies the energy for deploying air bag.
- Frontal collision G sensor is integrated for detecting a collision.
- Additional power supply function is integrated in preparation for battery power supply damage at a collision.
- Detects and records electrical malfunction in air bag system blinks air bag warning lamp.
- Detects and records the deployment of air bag turns ON air bag warning lamp.
- Indicates malfunctioning portion via the number of blinks of the air bag warning lamp in the diagnosis mode.

COLLISION MODES

Collision modes are for a frontal collision only.
SRS configurations are activated for the following collision modes.

×: Apply

SRS configuration	Frontal collision
Driver air bag module	×

DIAGNOSIS SYSTEM (AIR BAG)

Description

INFOID:0000000005911191

CAUTION:
- **Never use electrical test equipment on any circuit related to the SRS unless instructed in this Service Manual. SRS wiring harnesses can be identified by yellow and/or orange harnesses or harness connectors.**
- **Never repair, splice or modify the SRS wiring harness. If the harness is damaged, replace it with a new one.**
- **Keep ground portion clean.**

DIAGNOSIS FUNCTION

- The SRS self-diagnostic results can be read with air bag warning lamp and/or CONSULT-III.
- The user mode is exclusively prepared for the customer (driver). This mode warns the driver of a system malfunction through the operation of the air bag warning lamp.
- The diagnosis mode allows the technician to locate and inspect the malfunctioning part.
- The mode applications for the air bag warning lamp and CONSULT-III are as per the following items.

×: Application, —: Not application

Diagnosis tool	User mode	Diagnosis mode
Air bag warning lamp	×	×
CONSULT-III	–	×

On Board Diagnosis Function

INFOID:0000000005911192

ON-BOARD DIAGNOSIS

There are two self diagnosis functions with air bag warning lamp per the following items.
- USER MODE
- DIAGNOSIS MODE

METHOD OF STARTING

- Diagnosis mode changes from user mode to diagnosis mode when changing operation is performed.
- In user mode, when SRS air bag warning lamp is not blinking, changing to diagnosis mode by ignition switch operation is not possible.
- In diagnosis mode, when repair is complete and system is normal, the mode changes to user mode when ignition switch is turned from OFF to ON.

Procedure to Change Diagnosis Mode

1. Turn ignition switch from OFF to ON.
2. SRS air bag lamp turns ON for 7 second and turns OFF, then turn ignition switch OFF within 1second after the lamp turns OFF.
3. After turning ignition switch OFF, wait for 3 seconds or more.
4. Repeat operation 1 to 3 for 2 times so that operation 1 to 3 is repeated for 3times in total.
5. Turn ignition switch from OFF to ON. Diagnosis mode changes.

USER MODE

In USER MODE, air bag warning lamp on combination meter blinks when a malfunction is detected and warns the customer (driver).

How to Read Air Bag Warning Lamp

1. Turn the ignition switch from OFF to ON, and check that the air bag warning lamp blinks.
2. Compare the air bag warning lamp blinking pattern with the examples.

Air Bag Warning Lamp Examples

Air bag warning lamp operation (user mode)	SRS condition	Reference item
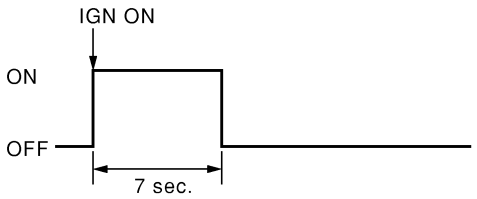 SHIA0011E	A malfunction is not detect and further action is not necessary	—
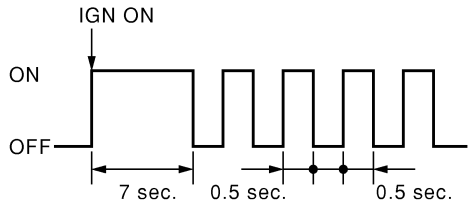 SHIA0012E	• The system is malfunctioning • Self diagnostic result is not erased after repair	Erase “Self Diagnostic Result” Refer to SRC-9, "CONSULT-III Function", How to Erase Self-diagnostic Result
	Battery voltage is low (less than 9 V)	Check “CAUSE OF WARNING” in “Special Function” with CONSULT-III Refer to SRC-9, "CONSULT-III Function"
	Intermittent malfunction is detected in the past	Go to GI-33, "Intermittent Incident"
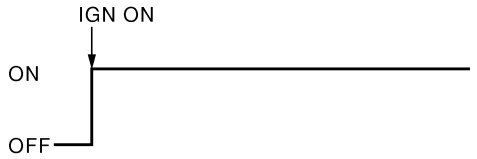 SHIA0013E	Air bag is deployed	Go to SRC-41, "Diagnosis Procedure"
	• Air bag diagnosis sensor unit is malfunctioning • Air bag power supply circuit is malfunctioning • Air bag warning lamp circuit is malfunctioning	Go to SRC-42, "Diagnosis Procedure"
 SHIA0014E	• Air bag diagnosis sensor unit is malfunctioning • Air bag warning lamp circuit is malfunctioning	Go to SRC-43, "Diagnosis Procedure"

DIAGNOSIS MODE

The diagnosis mode can only be switched when a malfunction is detected in the user mode. Malfunctioning system is indicated according to blinking pattern of air bag warning lamp.

How to Read Air Bag Warning Lamp

1. Follow the procedures of “PROCEDURE TO CHANGE DIAGNOSIS MODE”, and switch to the diagnosis mode.
2. Turn ignition switch ON. Check the blinking pattern of air bag warning lamp.
   There are 2 blinking patterns for the air bag warning lamp as per the following items.
   • Front air bag system: 3 second blink followed by a 0.5 second blink repeated.

Front air bag system

Number of 0.5 second blinks	Malfunctioning items
0	• Self-diagnostic result is not erased after repair • Intermittent malfunction is detected in the past
2	Driver air bag module
6	Crash zone sensor
7	Air bag diagnosis sensor unit

How to Erase Self-diagnostic Result

After a malfunction is repaired, turn the ignition switch OFF for one second or more, then turn ignition switch ON. The diagnosis mode returns to the user mode. At that time the self-diagnostic result is cleared.

EXAMPLE OF AIR BAG WARNING LAMP OPERATION IN THE DIAGNOSIS MODE

System Normal

When system is normal.

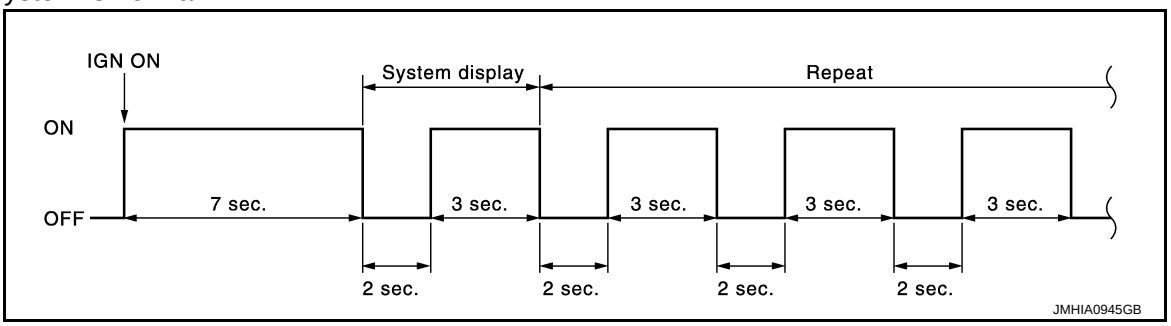

Single System Malfunction

- Front air bag system
  When air bag diagnosis sensor unit system (Item display) is malfunctioning.

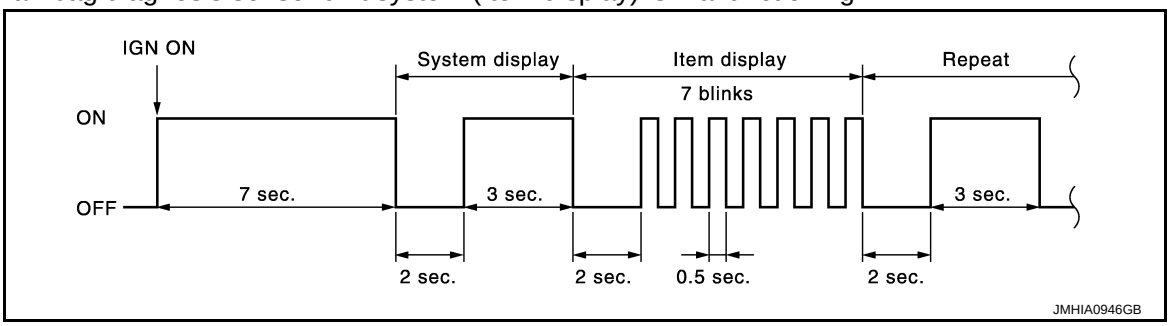

Multiple Systems Malfunction

- Front air bag system
  When driver air bag module (Item display 1) and air bag diagnosis sensor unit system (Item display 2) are malfunctioning.

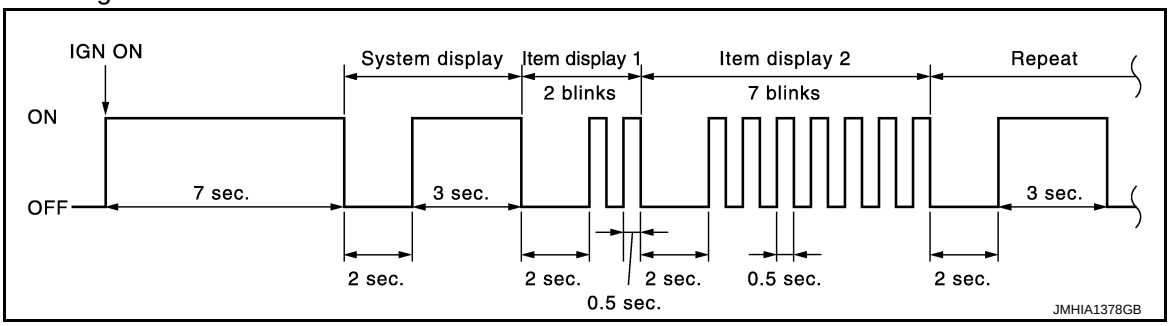

CONSULT-III Function

INFOID:0000000005911193

APPLICATION ITEM

CONSULT-III performs the following functions.

Diagnosis mode		Description
Ecu Identification		Air bag diagnosis sensor unit ECU discriminated number (identification number) is displayed. Air bag diagnosis sensor unit has individual ECU discriminated number (identification number) based on model and equipment.
Self Diagnostic Result		The current self diagnosis results (also indicated with the number of air bag warning lamp blinks in the diagnosis mode) are displayed on CONSULT-III screen in real time. This refers to a malfunctioning part requiring repairs. Refer to SRC-11, "DTC Index".
Function Test	CAR COMPUTER DIAG.	Test result is indicated using “OK” or “NG” so that the customer recognizes easily.
Special function	SELF-DIAG [PAST]	Diagnosis results previously stored in the memory are displayed on CONSULT-III screen. The stored results are not erased until memory erasing is executed.
	TROUBLE DIAG RECORD	With TROUBLE DIAG RECORD, diagnosis results previously erased by a reset operation can be displayed on CONSULT-III screen.
	SELF-DIAG RESULTS [CAN]	**NOTE:** This item is displayed, but cannot be supported.
	CAUSE OF WARNING	It displays the cause of warning lamp illumination that is not recorded in memory.

HOW TO ERASE SELF DIAGNOSTIC RESULTS

- “Self Diagnostic Result”
  A current self-diagnosis result is displayed on CONSULT-III screen in real time.
  After the malfunction is repaired completely, no malfunction is detected on “Self Diagnostic Result”.
- “SELF-DIAG [PAST]”
  Return to “Self Diagnostic Result” CONSULT-III screen by touching the “BACK” key of CONSULT-III and select “Self Diagnostic Result” in SELECT DIAG MODE. Touch “ERASE” in “Self Diagnostic Result” mode.
  NOTE:
  If the memory of the malfunction in “SELF-DIAG [PAST]” is not erased, the user mode shows the system malfunction by the illumination of the warning lamp even if the malfunction is repaired completely.
- “TROUBLE DIAG RECORD”
  The memory of “TROUBLE DIAG RECORD” cannot be erased.

SPECIAL FUNCTION

CAUSE OF WARNING

This item indicates IGN low voltage condition.
The air bag warning lamp blink in user mode when the battery voltage is lowered to the voltage value (less than 9 V) at which the SRS cannot be operated normally. The air bag warning lamp turns OFF after the battery voltage returns to normal status after blinking.
In such a case, the DTC memory is not performed and changing to the self-diagnostic mode by IGN operation cannot be performed while the air bag warning lamp illuminates. “NO DTC” is displayed even if the malfunctioning parts are checked by CONSULT-III.
This function records the following items.

Display contents of CONSULT-III		Description
Air bag	IGN VOLT COND	“LOW” is displayed when IGN low voltage is detected. If not, “OK” is displayed.
	IGN VOLT TIME	Times of IGN low voltage is detected.
	LOW V RECORED	Times of IGN ON after IGN low voltage is detected.

ECU DIAGNOSIS INFORMATION

DIAGNOSIS SENSOR UNIT

DTC Index

INFOID:0000000005911194

DTC	Diagnostic item	Warning lamp blinking times in diagnosis mode*	Explanation		Reference page
—	NO DTC IS DETECTED.	0	When malfunction is indicated by the “AIR BAG” warning lamp in the user mode	Low battery voltage (Less than 9 V)	SRC-9, "CONSULT-III Function".
				Self-diagnostic result is not erased after repair	SRC-7, "On Board Diagnosis Function", SRC-9, "CONSULT-III Function".
				Intermittent malfunction is detected in the past	GI-33, "Intermittent Incident"
			No malfunction is detected		—
B1001-B1015	CONTROL UNIT	7	Air bag diagnosis sensor unit is malfunctioning		• SRC-17, "DTC Logic". • SRC-19, "DTC Logic". • SRC-21, "DTC Logic".
B1033 B1034	CRASH ZONE SEN [UNIT FAIL]	6	Crash zone sensor is malfunctioning		SRC-23, "DTC Logic".
B1035	CRASH ZONE SEN [COMM FAIL]	6	Crash zone sensor is malfunctioning		SRC-25, "DTC Logic".
B1042-B1047	CONTROL UNIT	7	Air bag diagnosis sensor unit is malfunctioning		SRC-27, "DTC Logic".
B1049	DRIVER AIRBAG MODULE [OPEN]	2	Driver air bag module circuit is open (including the spiral cable)		SRC-29, "DTC Logic".
B1050	DRIVER AIRBAG MODULE [VB-SHORT]	2	Driver air bag module circuit is shorted to power supply circuit (including the spiral cable)		SRC-31, "DTC Logic".
B1051	DRIVER AIRBAG MODULE [GND-SHORT]	2	Driver air bag module circuit is shorted to ground (including the spiral cable)		SRC-33, "DTC Logic".
B1052	DRIVER AIRBAG MODULE [SHORT]	2	Driver air bag module circuits are shorted to each other (including spiral cable)		SRC-35, "DTC Logic".
B1058-B1063	CONTROL UNIT	7	Air bag diagnosis sensor unit is malfunctioning		SRC-37, "DTC Logic".
B1074-B1079	CONTROL UNIT	7	Air bag diagnosis sensor unit is malfunctioning		SRC-39, "DTC Logic".
B1209	FRONTAL COLLISION DETECTION	—	Driver side air bag is deployed		SRC-41, "DTC Logic".

*: For blinking pattern of warning lamp, refer to SRC-7, "On Board Diagnosis Function".

WIRING DIAGRAM

SRS AIR BAG SYSTEM

Wiring Diagram

INFOID:0000000005911195

For connector terminal arrangements, harness layouts, and alphabets in a ⬡ (option abbreviation; if not described in wiring diagram), refer to GI-12, "Connector Information".

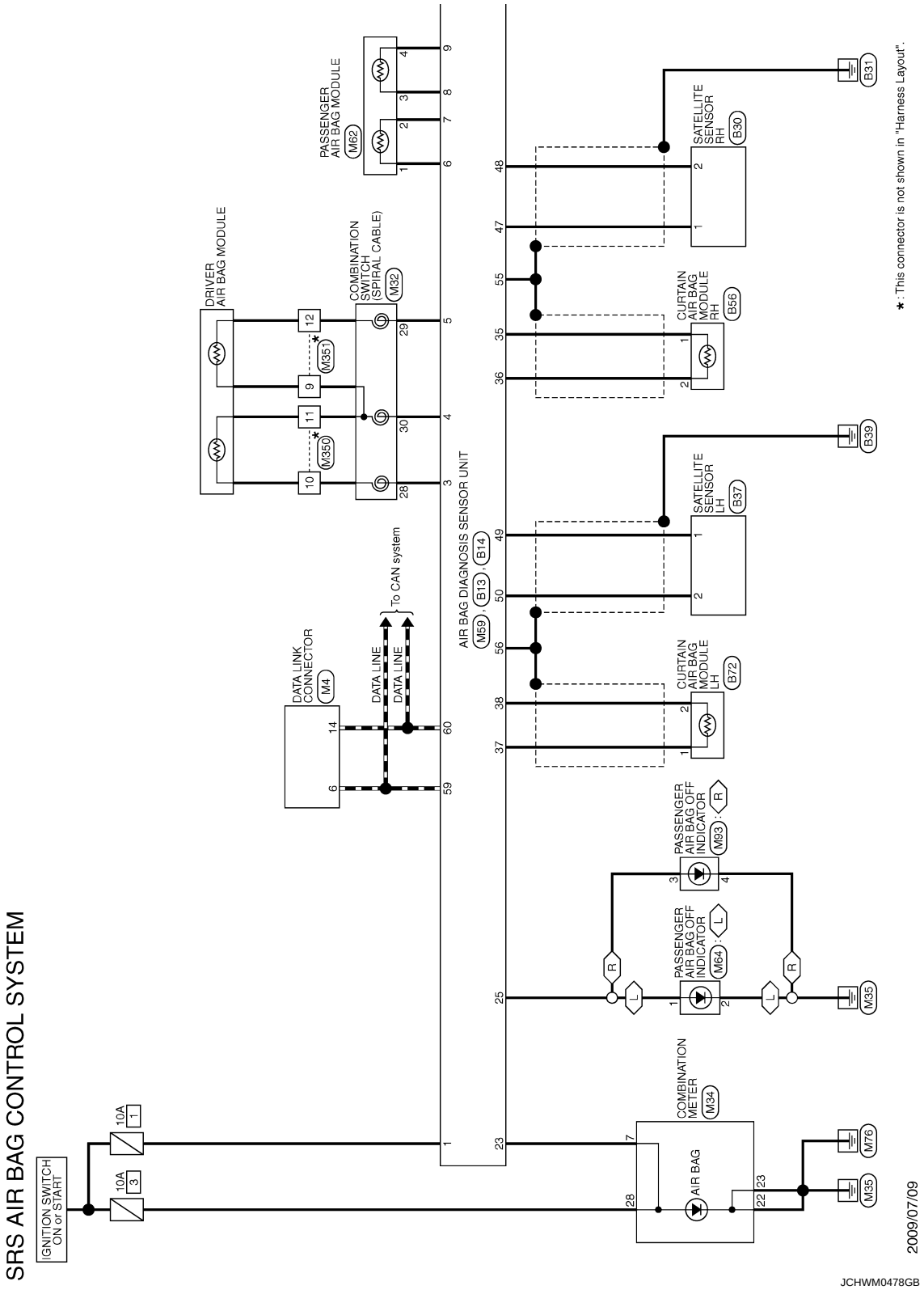

* : This connector is not shown in "Harness Layout".

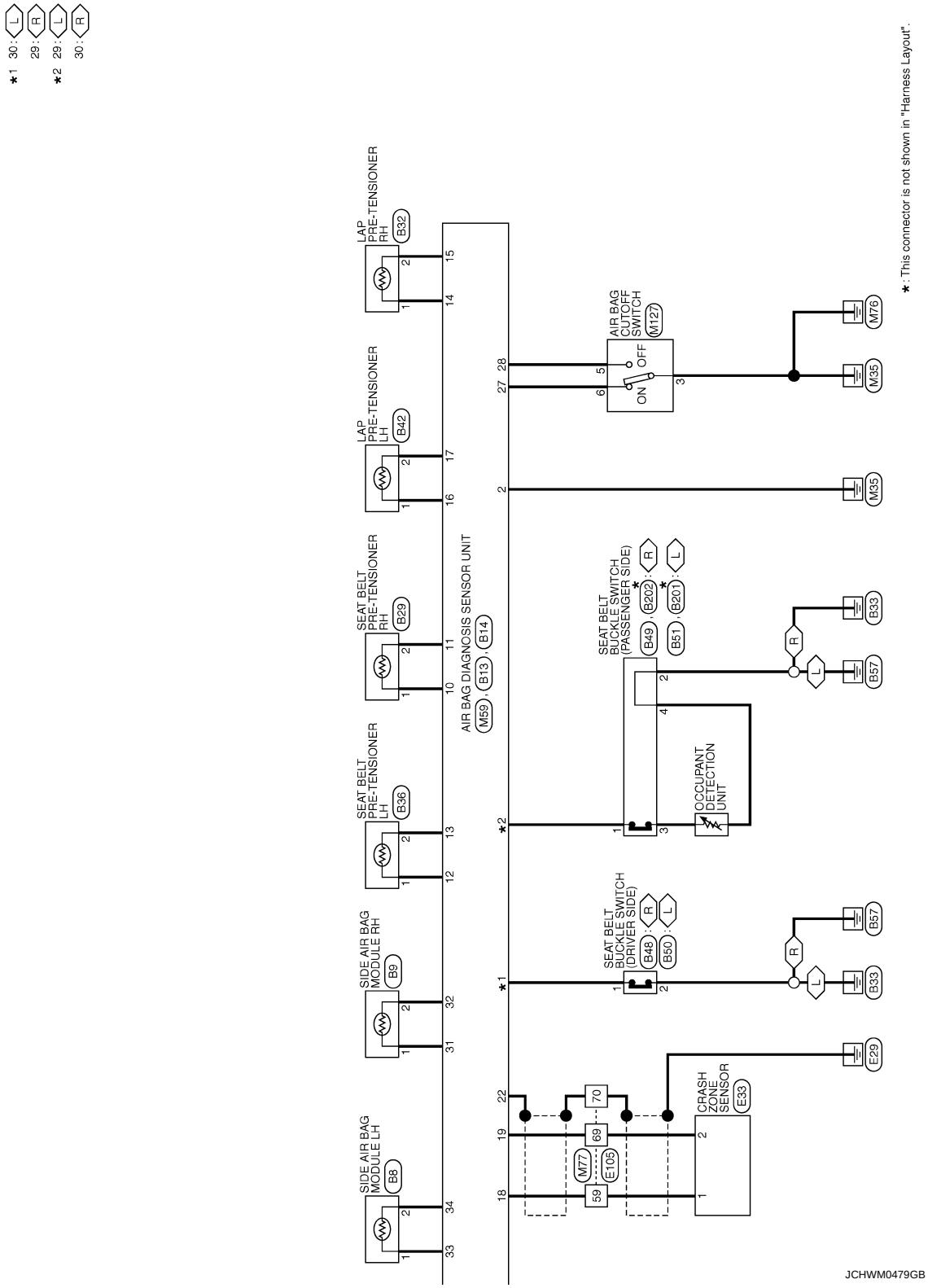
*1 30 : L
29 : R
*2 29 : L
30 : R
LAP PRE-TENSIONER RH
B32
LAP PRE-TENSIONER LH
B42
SEAT BELT PRE-TENSIONER RH
B29
SEAT BELT PRE-TENSIONER LH
B36
SIDE AIR BAG MODULE RH
B9
SIDE AIR BAG MODULE LH
B8
AIR BAG DIAGNOSIS SENSOR UNIT
M59 , B13 , B14
AIR BAG CUTOFF SWITCH
M127
ON
OFF
SEAT BELT BUCKLE SWITCH (PASSENGER SIDE)
B49 , B202 , B51 , B201
OCCUPANT DETECTION UNIT
SEAT BELT BUCKLE SWITCH (DRIVER SIDE)
B48 , B50
CRASH ZONE SENSOR
E33
M77
E105
59
69
70
M76
M35
B33
B57
E29
R
L
*: This connector is not shown in "Harness Layout".
JCHWM0479GB

BASIC INSPECTION

DIAGNOSIS AND REPAIR WORK FLOW

Work Flow

INFOID:0000000005911196

OVERALL SEQUENCE

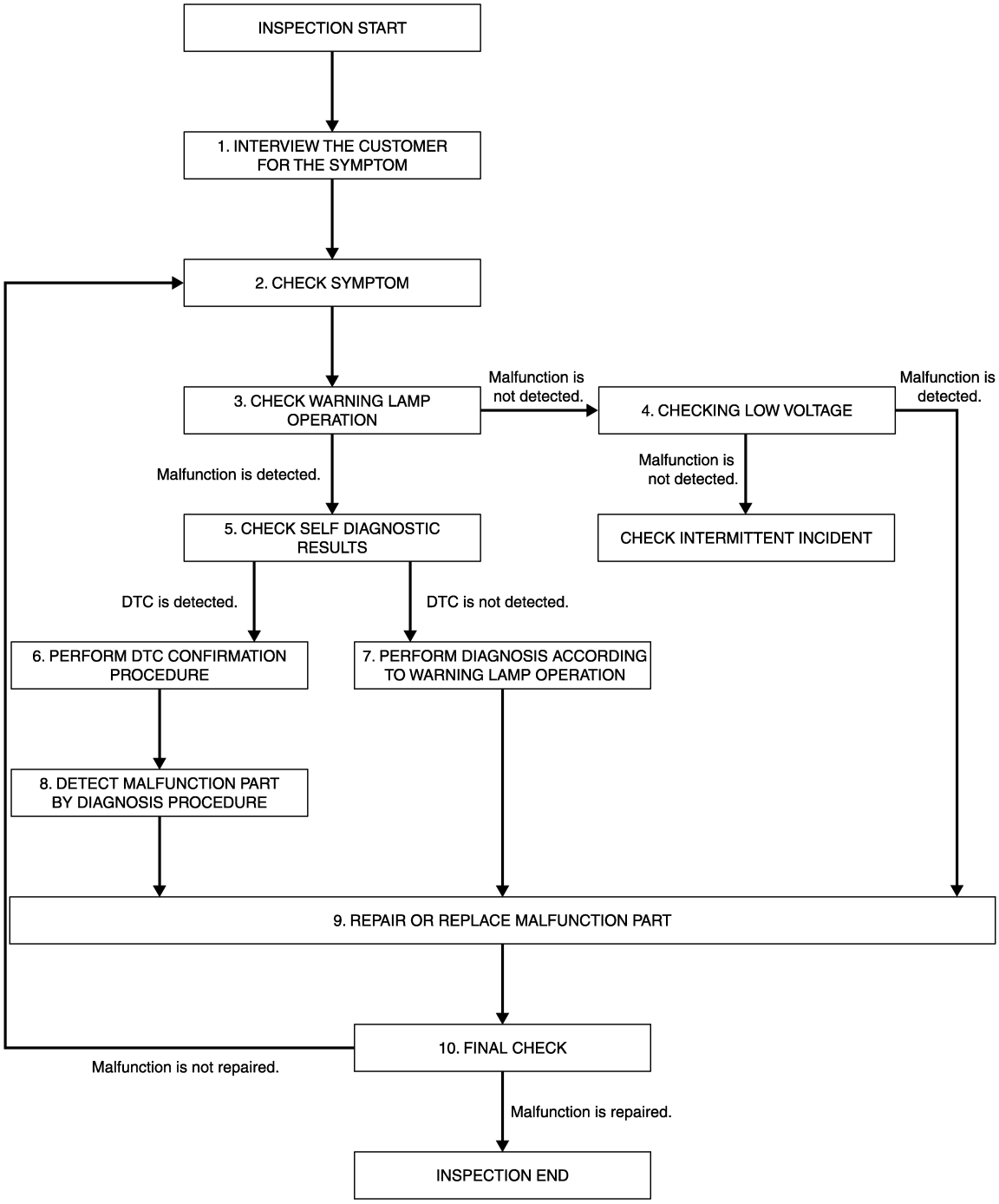

JMHIA1324GB

DETAILED FLOW

1. INTERVIEW THE CUSTOMER FOR THE SYMPTOM

Interview the customer for the symptom (the condition and the environment when the incident/malfunction occurs).

>> GO TO 2.

2. CHECK SYMPTOM

Check the symptom from the customer information.

>> GO TO 3.

3. CHECK WARNING LAMP OPERATION

Check air bag warning lamp operation in the user mode. Refer to SRC-7, "On Board Diagnosis Function".

Are any malfunction detected?

YES >> GO TO 5.
NO >> GO TO 4.

4. CHECK LOW VOLTAGE

Check low voltage with CONSULT-III (Special function). Refer to SRC-9, "CONSULT-III Function".

Are any malfunction detected?

YES >> GO TO 9.
NO >> Check intermittent incident. Refer to GI-33, "Intermittent Incident".

5. CHECK SELF DIAGNOSTIC RESULTS

Check self diagnostic result with CONSULT-III or diagnosis mode.
If it is impossible to switch to diagnosis mode, follow the same procedure that DTC is not detected.

NOTE:
Perform the following procedure if DTC is detected.

- Record DTC (Print them out with CONSULT-III.)
- Erase self diagnostic result.
- Study the relationship between the malfunction that DTC or air bag warning lamp indicates and the symptom that the customer describes.
- Check related service bulletins for information.

Is DTC detected?

YES >> GO TO 6.
NO >> GO TO 7.

6. PERFORM DTC CONFIRMATION PROCEDURE

Perform DTC CONFIRMATION PROCEDURE for the DTC.

>> GO TO 8.

7. PERFORM DIAGNOSIS ACCORDING TO WARNING LAMP OPERATION

1. Check air bag warning lamp operation in the user mode. Refer to SRC-7, "On Board Diagnosis Function".
2. Perform Diagnosis Procedure for the air bag warning lamp operation. Refer to SRC-7, "On Board Diagnosis Function" (USER MODE).

>> GO TO 9.

8. DETECT MALFUNCTIONING PART BY DIAGNOSTIC PROCEDURE

Inspect according to Diagnostic Procedure of the DTC.

>> GO TO 9.

9. REPAIR OR REPLACE THE MALFUNCTION PART

Repair or replace the malfunctioning part.

>> GO TO 10.

10. FINAL CHECK

Check self diagnostic result and air bag warning lamp operation in the user mode.

Is the malfunction repaired?

YES >> INSPECTION END
NO >> GO TO 2.

DTC/CIRCUIT DIAGNOSIS

B1001, B1002, B1003, B1004, B1005 DIAGNOSIS SENSOR UNIT

Description

INFOID:0000000005987849

- It detects a shock that is more than the specified level and monitors whether the driver air bag operates normally.
- It contains the “G” sensor for frontal collisions and spare battery function in case of main battery damage in collision.

DTC Logic

INFOID:0000000005987850

DTC DETECTION LOGIC

DTC	Display contents of CONSULT-III	DTC detecting condition	Possible cause
B1001 B1002 B1003 B1004 B1005	CONTROL UNIT	Air bag diagnosis sensor unit is malfunctioning	Malfunction in air bag diagnosis sensor unit

DTC CONFIRMATION PROCEDURE

1. CHECK SELF-DIAG RESULT

With CONSULT-III
1. Turn ignition switch ON.
2. Perform “AIR BAG” Self Diagnostic Result.

Without CONSULT-III
1. Turn ignition switch ON.
2. Check the air bag warning lamp status. Refer to SRC-7, "On Board Diagnosis Function".

NOTE:
SRS does not enter the diagnosis mode if no malfunction is detected in the user mode.

Is malfunctioning part detected?

YES >> Refer to SRC-17, "Diagnosis Procedure".
NO >> INSPECTION END

Diagnosis Procedure

INFOID:0000000005987851

WARNING:
- **Before servicing, turn ignition switch OFF, disconnect battery negative terminal, and wait 3 minutes or more. (To discharge backup capacitor.)**
- **Never use unspecified tester or other measuring device.**

1. CHECK HARNESS CONNECTOR

Check the harness connector.

Is the inspection result normal?

YES >> GO TO 2.
NO >> Replace harness connectors.

2. CHECK WIRING HARNESS

Check the wiring harness externals.

Is the inspection result normal?

YES >> GO TO 3.
NO >> Replace wiring harness.

3. REPLACE AIR BAG DIAGNOSIS SENSOR UNIT

1. Replace air bag diagnosis sensor unit. Refer to SR-29, "Removal and Installation".

2. Perform DTC confirmation procedure. Refer to SRC-17, "DTC Logic".

Is DTC detected?

YES >> GO TO 1.
NO >> INSPECTION END

B1006, B1007, B1008, B1009, B1010 DIAGNOSIS SENSOR UNIT

Description

INFOID:0000000006055196

- It detects a shock that is more than the specified level and monitors whether the driver air bag operates normally.
- It contains the “G” sensor for frontal collisions and spare battery function in case of main battery damage in collision.

DTC Logic

INFOID:0000000005987853

DTC DETECTION LOGIC

DTC	Display contents of CONSULT-III	DTC detecting condition	Possible cause
B1006 B1007 B1008 B1009 B1010	CONTROL UNIT	Air bag diagnosis sensor unit is malfunctioning	Malfunction in air bag diagnosis sensor unit

DTC CONFIRMATION PROCEDURE

1. CHECK SELF-DIAG RESULT

With CONSULT-III
1. Turn ignition switch ON.
2. Perform “AIR BAG” Self-Diagnostic Result.

Without CONSULT-III
1. Turn ignition switch ON.
2. Check the air bag warning lamp status. Refer to SRC-7, "On Board Diagnosis Function".

NOTE:
SRS does not enter the diagnosis mode if no malfunction is detected in the user mode.

Is malfunctioning part detected?

YES >> Refer to SRC-19, "Diagnosis Procedure".
NO >> INSPECTION END

Diagnosis Procedure

INFOID:0000000005987854

WARNING:
- **Before servicing, turn ignition switch OFF, disconnect battery negative terminal, and wait 3 minutes or more. (To discharge backup capacitor.)**
- **Never use unspecified tester or other measuring device.**

1. CHECK HARNESS CONNECTOR

Check the harness connector.

Is the inspection result normal?

YES >> GO TO 2.
NO >> Replace harness connectors.

2. CHECK WIRING HARNESS

Check the wiring harness externals.

Is the inspection result normal?

YES >> GO TO 3.
NO >> Replace wiring harness.

3. REPLACE AIR BAG DIAGNOSIS SENSOR UNIT

1. Replace air bag diagnosis sensor unit. Refer to SR-29, "Removal and Installation"
2. Perform DTC confirmation procedure. Refer to SRC-19, "DTC Logic"

Is DTC detected?

YES >> GO TO 1.
NO >> INSPECTION END

B1011, B1012, B1013, B1014, B1015 DIAGNOSIS SENSOR UNIT

Description

INFOID:0000000006055197

- It detects a shock that is more than the specified level and monitors whether the driver air bag operates normally.
- It contains the “G” sensor for frontal collisions and spare battery function in case of main battery damage in collision.

DTC Logic

INFOID:0000000005987856

DTC DETECTION LOGIC

DTC	Display contents of CONSULT-III	DTC detecting condition	Possible cause
B1011 B1012 B1013 B1014 B1015	CONTROL UNIT	Air bag diagnosis sensor unit is malfunctioning	Malfunction in air bag diagnosis sensor unit

DTC CONFIRMATION PROCEDURE

1. CHECK SELF-DIAG RESULT

With CONSULT-III
1. Turn ignition switch ON.
2. Perform “AIR BAG” Self Diagnostic Result.

Without CONSULT-III
1. Turn ignition switch ON.
2. Check the air bag warning lamp status. Refer to SRC-7, "On Board Diagnosis Function".

NOTE:
SRS does not enter the diagnosis mode if no malfunction is detected in the user mode.

Is malfunctioning part detected?

YES >> Refer to SRC-21, "Diagnosis Procedure".
NO >> INSPECTION END

Diagnosis Procedure

INFOID:0000000005987857

WARNING:
- **Before servicing, turn ignition switch OFF, disconnect battery negative terminal, and wait 3 minutes or more. (To discharge backup capacitor.)**
- **Never use unspecified tester or other measuring device.**

1. CHECK HARNESS CONNECTOR

Check the harness connector.

Is the inspection result normal?

YES >> GO TO 2.
NO >> Replace harness connectors.

2. CHECK WIRING HARNESS

Check the wiring harness externals.

Is the inspection result normal?

YES >> GO TO 3.
NO >> Replace wiring harness.

3. REPLACE AIR BAG DIAGNOSIS SENSOR UNIT

1. Replace air bag diagnosis sensor unit. Refer to SR-29, "Removal and Installation"
2. Perform DTC confirmation procedure. Refer to SRC-21, "DTC Logic"

Is DTC detected?

YES >> GO TO 1.
NO >> INSPECTION END

B1033, B1034 CRASH ZONE SENSOR

Description

INFOID:0000000005987876

Crash zone sensor is a G sensor that outputs voltage signal during deceleration at the time of a vehicle frontal collision that is more than the specified limit is detected.

DTC Logic

INFOID:0000000005987877

DTC DETECTION LOGIC

DTC	Display contents of CONSULT-III	DTC detecting condition	Possible cause
B1033 B1034	CRASH ZONE SENSOR [UNIT FAIL]	Crash zone sensor is malfunctioning	• Disconnection of wiring harness • Malfunction in crash zone sensor • Malfunction in air bag diagnosis sensor unit

DTC CONFIRMATION PROCEDURE

1. CHECK SELF-DIAG RESULT

With CONSULT-III
1. Turn ignition switch ON.
2. Perform “AIR BAG” Self Diagnostic Result.

Without CONSULT-III
1. Turn ignition switch ON.
2. Check the air bag warning lamp status. Refer to SRC-7, "On Board Diagnosis Function".

NOTE:
SRS does not enter the diagnosis mode if no malfunction is detected in the user mode.

Is malfunctioning part detected?

YES >> Refer to SRC-23, "Diagnosis Procedure".
NO >> INSPECTION END

Diagnosis Procedure

INFOID:0000000005987878

WARNING:
- **Before servicing, turn ignition switch OFF, disconnect battery negative terminal, and wait 3 minutes or more. (To discharge backup capacitor.)**
- **Never use unspecified tester or other measuring device.**

1. CHECK HARNESS CONNECTOR

Check the harness connector.

Is the inspection result normal?

YES >> GO TO 2.
NO >> Replace harness connectors.

2. CHECK WIRING HARNESS

Check the wiring harness externals.

Is the inspection result normal?

YES >> GO TO 3.
NO >> Replace wiring harness.

3. REPLACE CRASH ZONE SENSOR

1. Replace crash zone sensor. Refer to SR-25, "Removal and Installation".
2. Perform DTC confirmation procedure. Refer to SRC-23, "DTC Logic".

Is DTC detected?

YES >> GO TO 4.
NO >> INSPECTION END

4. REPLACE AIR BAG DIAGNOSIS SENSOR UNIT

1. Replace air bag diagnosis sensor unit. Refer to SR-29, "Removal and Installation".
2. Perform DTC confirmation procedure. Refer to SRC-23, "DTC Logic".

Is DTC detected?

YES >> GO TO 1.
NO >> INSPECTION END

B1035 CRASH ZONE SENSOR

Description

INFOID:0000000005987879

Crash zone sensor is a G sensor that outputs voltage signal during deceleration at the time of a vehicle frontal collision that is more than the specified limit is detected.

DTC Logic

INFOID:0000000005987880

DTC DETECTION LOGIC

DTC	Display contents of CONSULT-III	DTC detecting condition	Possible cause
B1035	CRASH ZONE SENSOR [COMM FAIL]	Crash zone sensor is malfunctioning	• Disconnection of wiring harness • Malfunction in crash zone sensor • Malfunction in air bag diagnosis sensor unit

DTC CONFIRMATION PROCEDURE

1. CHECK SELF-DIAG RESULT

With CONSULT-III
1. Turn ignition switch ON.
2. Perform “AIR BAG” Self Diagnostic Result.

Without CONSULT-III
1. Turn ignition switch ON.
2. Check the air bag warning lamp status. Refer to SRC-7, "On Board Diagnosis Function".

NOTE:
SRS does not enter the diagnosis mode if no malfunction is detected in the user mode.

Is malfunctioning part detected?

YES >> Refer to SRC-25, "Diagnosis Procedure".
NO >> INSPECTION END

Diagnosis Procedure

INFOID:0000000005987881

WARNING:
- **Before servicing, turn ignition switch OFF, disconnect battery negative terminal, and wait 3 minutes or more. (To discharge backup capacitor.)**
- **Never use unspecified tester or other measuring device.**

1. CHECK HARNESS CONNECTOR

Check the harness connector.

Is the inspection result normal?

YES >> GO TO 2.
NO >> Replace harness connectors.

2. CHECK WIRING HARNESS

Check the wiring harness externals.

Is the inspection result normal?

YES >> GO TO 3.
NO >> Replace wiring harness.

3. REPLACE CRASH ZONE SENSOR

1. Replace crash zone sensor. Refer to SR-25, "Removal and Installation".
2. Perform DTC confirmation procedure. Refer to SRC-25, "DTC Logic".

Is DTC detected?

YES >> GO TO 4.
NO >> INSPECTION END

4. REPLACE AIR BAG DIAGNOSIS SENSOR UNIT

1. Replace air bag diagnosis sensor unit. Refer to SR-29, "Removal and Installation".
2. Perform DTC confirmation procedure. Refer to SRC-25, "DTC Logic".

Is DTC detected?

YES >> GO TO 1.
NO >> INSPECTION END

B1042, B1043, B1044, B1045, B1046, B1047 DIAGNOSIS SENSOR UNIT

Description

INFOID:0000000006055198

- It detects a shock that is more than the specified level and monitors whether the driver air bag operates normally.
- It contains the “G” sensor for frontal collisions and spare battery function in case of main battery damage in collision.

DTC Logic

INFOID:0000000005987889

DTC DETECTION LOGIC

DTC	Display contents of CONSULT-III	DTC detecting condition	Possible cause
B1042 B1043 B1044 B1045 B1046 B1047	CONTROL UNIT	Air bag diagnosis sensor unit is malfunctioning	Malfunction in air bag diagnosis sensor unit

DTC CONFIRMATION PROCEDURE

1. CHECK SELF-DIAG RESULT

With CONSULT-III
1. Turn ignition switch ON.
2. Perform “AIR BAG” Self Diagnostic Result.

Without CONSULT-III
1. Turn ignition switch ON.
2. Check the air bag warning lamp status. Refer to SRC-7, "On Board Diagnosis Function".

NOTE:
SRS does not enter the diagnosis mode if no malfunction is detected in the user mode.

Is malfunctioning part detected?

YES >> Refer to SRC-27, "Diagnosis Procedure".
NO >> INSPECTION END

Diagnosis Procedure

INFOID:0000000005987890

WARNING:
- **Before servicing, turn ignition switch OFF, disconnect battery negative terminal, and wait 3 minutes or more. (To discharge backup capacitor.)**
- **Never use unspecified tester or other measuring device.**

1. CHECK HARNESS CONNECTOR

Check the harness connector.

Is the inspection result normal?

YES >> GO TO 2.
NO >> Replace harness connectors.

2. CHECK WIRING HARNESS

Check the wiring harness externals.

Is the inspection result normal?

YES >> GO TO 3.
NO >> Replace wiring harness.

3. REPLACE AIR BAG DIAGNOSIS SENSOR UNIT

1. Replace air bag diagnosis sensor unit. Refer to SR-29, "Removal and Installation".
2. Perform DTC confirmation procedure. Refer to SRC-27, "DTC Logic".

Is DTC detected?

YES >> GO TO 1.
NO >> INSPECTION END

B1049 DRIVER AIRBAG MODULE

Description

INFOID:0000000005987891

In case of frontal collision where acceleration is more than the specified level, the ignition materials are ignited by electric ignition system. The system burns the gas generating materials resulting in a chemical reaction. This generates hot gases that flow into the air bag through a filter and expand the bag.

DTC Logic

INFOID:0000000005987892

DTC DETECTION LOGIC

DTC	Display contents of CONSULT-III	DTC detecting condition	Possible cause
B1049 B1054	DRIVER AIRBAG MODULE [OPEN]	Driver air bag module circuit is open (including the spiral cable)	• Disconnection of wiring harness and open • Malfunction in driver air bag module • Malfunction in spiral cable • Malfunction in air bag diagnosis sensor unit

DTC CONFIRMATION PROCEDURE

1. CHECK SELF-DIAG RESULT

With CONSULT-III
1. Turn ignition switch ON.
2. Perform “AIR BAG” Self Diagnostic Result.

Without CONSULT-III
1. Turn ignition switch ON.
2. Check the air bag warning lamp status. Refer to SRC-7, "On Board Diagnosis Function".

NOTE:
SRS does not enter the diagnosis mode if no malfunction is detected in the user mode.

Is malfunctioning part detected?

YES >> Refer to SRC-29, "Diagnosis Procedure".
NO >> INSPECTION END

Diagnosis Procedure

INFOID:0000000005987893

WARNING:
- **Before servicing, turn ignition switch OFF, disconnect battery negative terminal, and wait 3 minutes or more. (To discharge backup capacitor.)**
- **Never use unspecified tester or other measuring device.**

1. CHECK HARNESS CONNECTOR

Check the harness connector.

Is the inspection result normal?

YES >> GO TO 2.
NO >> Replace harness connector.

2. CHECK WIRING HARNESS

Check the wiring harness externals.

Is the inspection result normal?

YES >> GO TO 3.
NO >> Replace wiring harness.

3. CHECK SPIRAL CABLE CIRCUIT

1. Turn ignition switch OFF.
2. Disconnect driver air bag module connector and combination switch (spiral cable) connector.
3. Check continuity between driver air bag module harness connector and combination switch (spiral cable) harness connector.

Driver air bag module		Combination switch (spiral cable)		Continuity
Connector	Terminal	Connector	Terminal	
M350	10	M32	28	Existed
	11		30	

4. Check continuity between driver air bag module harness connector and ground.

Driver side air bag module		Ground	Continuity
Connector	Terminal		
M350	10		Not existed
	11		

Is the inspection result normal?

YES >> GO TO 4.
NO >> Replace combination switch (spiral cable). Refer to SR-16, "Removal and Installation".

4. REPLACE AIR BAG DIAGNOSIS SENSOR UNIT

1. Replace air bag diagnosis sensor unit. Refer to SR-29, "Removal and Installation"
2. Perform DTC confirmation procedure. Refer to SRC-29, "DTC Logic".

Is DTC detected?

YES >> GO TO 5.
NO >> INSPECTION END

5. REPLACE DRIVER AIR BAG MODULE

1. Replace driver air bag module. Refer to SR-13, "Removal and Installation"
2. Perform DTC confirmation procedure. Refer to SRC-29, "DTC Logic".

Is DTC detected?

YES >> GO TO 1.
NO >> INSPECTION END

B1050 DRIVER AIRBAG MODULE

Description

INFOID:0000000005987894

In case of frontal collision where acceleration is more than the specified level, the ignition materials are ignited by electric ignition system. The system burns the gas generating materials resulting in a chemical reaction. This generates hot gases that flow into the air bag through a filter and expand the bag.

DTC Logic

INFOID:0000000005987895

DTC DETECTION LOGIC

DTC	Display contents of CONSULT-III	DTC detecting condition	Possible cause
B1050 B1055	DRIVER AIRBAG MODULE [VB-SHORT]	Driver air bag module circuit is shorted to power supply circuit (including the spiral cable)	• Disconnection of wiring harness and short • Malfunction in driver air bag module • Malfunction in spiral cable • Malfunction in air bag diagnosis sensor unit

DTC CONFIRMATION PROCEDURE

1. CHECK SELF-DIAG RESULT

With CONSULT-III
1. Turn ignition switch ON.
2. Perform “AIR BAG” Self Diagnostic Result.

Without CONSULT-III
1. Turn ignition switch ON.
2. Check the air bag warning lamp status. Refer to SRC-7, "On Board Diagnosis Function".

NOTE:
SRS does not enter the diagnosis mode if no malfunction is detected in the user mode.

Is malfunctioning part detected?

YES >> Refer to SRC-31, "Diagnosis Procedure".
NO >> INSPECTION END

Diagnosis Procedure

INFOID:0000000005987896

WARNING:
- **Before servicing, turn ignition switch OFF, disconnect battery negative terminal, and wait 3 minutes or more. (To discharge backup capacitor.)**
- **Never use unspecified tester or other measuring device.**

1. CHECK HARNESS CONNECTOR

Check the harness connector.

Is the inspection result normal?

YES >> GO TO 2.
NO >> Replace harness connector.

2. CHECK WIRING HARNESS

Check the wiring harness externals.

Is the inspection result normal?

YES >> GO TO 3.
NO >> Replace wiring harness.

3. CHECK SPIRAL CABLE CIRCUIT

1. Turn ignition switch OFF.
2. Disconnect driver air bag module connector and combination switch (spiral cable) connector.
3. Check continuity between driver air bag module harness connector and combination switch (spiral cable) harness connector.

Driver air bag module		Combination switch (spiral cable)		Continuity
Connector	Terminal	Connector	Terminal	
M350	10	M32	28	Existed
	11		30	

4. Check continuity between driver air bag module harness connector and ground.

Driver side air bag module		Ground	Continuity
Connector	Terminal		
M350	10		Not existed
	11		

Is the inspection result normal?

YES >> GO TO 4.
NO >> Replace combination switch (spiral cable). Refer to SR-16, "Removal and Installation".

4. REPLACE AIR BAG DIAGNOSIS SENSOR UNIT

1. Replace air bag diagnosis sensor unit. Refer to SR-29, "Removal and Installation"
2. Perform DTC confirmation procedure. Refer to SRC-31, "DTC Logic".

Is DTC detected?

YES >> GO TO 5.
NO >> INSPECTION END

5. REPLACE DRIVER AIR BAG MODULE

1. Replace driver air bag module. Refer to SR-13, "Removal and Installation"
2. Perform DTC confirmation procedure. Refer to SRC-31, "DTC Logic".

Is DTC detected?

YES >> GO TO 1.
NO >> INSPECTION END

B1051 DRIVER AIRBAG MODULE

Description

INFOID:0000000005987897

In case of frontal collision where acceleration is more than the specified level, the ignition materials are ignited by electric ignition system. The system burns the gas generating materials resulting in a chemical reaction. This generates hot gases that flow into the air bag through a filter and expand the bag.

DTC Logic

INFOID:0000000005987898

DTC DETECTION LOGIC

DTC	Display contents of CONSULT-III	DTC detecting condition	Possible cause
B1051 B1056	DRIVER AIRBAG MODULE [GND-SHORT]	Driver air bag module circuit is shorted to ground (including the spiral cable)	• Disconnection of wiring harness and short • Malfunction in driver air bag module • Malfunction in spiral cable • Malfunction in air bag diagnosis sensor unit

DTC CONFIRMATION PROCEDURE

1. CHECK SELF-DIAG RESULT

With CONSULT-III
1. Turn ignition switch ON.
2. Perform “AIR BAG” Self Diagnostic Result.

Without CONSULT-III
1. Turn ignition switch ON.
2. Check the air bag warning lamp status. Refer to SRC-7, "On Board Diagnosis Function".

NOTE:
SRS does not enter the diagnosis mode if no malfunction is detected in the user mode.

Is malfunctioning part detected?

YES >> Refer to SRC-33, "Diagnosis Procedure".
NO >> INSPECTION END

Diagnosis Procedure

INFOID:0000000005987899

WARNING:
- **Before servicing, turn ignition switch OFF, disconnect battery negative terminal, and wait 3 minutes or more. (To discharge backup capacitor.)**
- **Never use unspecified tester or other measuring device.**

1. CHECK HARNESS CONNECTOR

Check the harness connector.

Is the inspection result normal?

YES >> GO TO 2.
NO >> Replace harness connector.

2. CHECK WIRING HARNESS

Check the wiring harness externals.

Is the inspection result normal?

YES >> GO TO 3.
NO >> Replace wiring harness.

3. CHECK SPIRAL CABLE CIRCUIT

1. Turn ignition switch OFF.
2. Disconnect driver air bag module connector and combination switch (spiral cable) connector.
3. Check continuity between driver air bag module harness connector and combination switch (spiral cable) harness connector.

Driver air bag module		Combination switch (spiral cable)		Continuity
Connector	Terminal	Connector	Terminal	
M350	10	M32	28	Existed
	11		30	

4. Check continuity between driver air bag module harness connector and ground.

Driver side air bag module		Ground	Continuity
Connector	Terminal		
M350	10		Not existed
	11		

Is the inspection result normal?

YES >> GO TO 4.
NO >> Replace combination switch (spiral cable). Refer to SR-16, "Removal and Installation".

4. REPLACE AIR BAG DIAGNOSIS SENSOR UNIT

1. Replace air bag diagnosis sensor unit. Refer to SR-29, "Removal and Installation".
2. Perform DTC confirmation procedure. Refer to SRC-33, "DTC Logic".

Is DTC detected?

YES >> GO TO 5.
NO >> INSPECTION END

5. REPLACE DRIVER AIR BAG MODULE

1. Replace driver air bag module. Refer to SR-13, "Removal and Installation".
2. Perform DTC confirmation procedure. Refer to SRC-33, "DTC Logic".

Is DTC detected?

YES >> GO TO 1.
NO >> INSPECTION END

B1052 DRIVER AIRBAG MODULE

Description

INFOID:0000000005987900

In case of frontal collision where acceleration is more than the specified level, the ignition materials are ignited by electric ignition system. The system burns the gas generating materials resulting in a chemical reaction. This generates hot gases that flow into the air bag through a filter and expand the bag.

DTC Logic

INFOID:0000000005987901

DTC DETECTION LOGIC

DTC	Display contents of CONSULT-III	DTC detecting condition	Possible cause
B1052 B1057	DRIVER AIRBAG MODULE [SHORT]	Driver air bag module circuit are shorted to each other (including the spiral cable)	• Disconnection of wiring harness and short • Malfunction in driver air bag module • Malfunction in spiral cable • Malfunction in air bag diagnosis sensor unit

DTC CONFIRMATION PROCEDURE

1. CHECK SELF-DIAG RESULT

With CONSULT-III
1. Turn ignition switch ON.
2. Perform “AIR BAG” Self Diagnostic Result.

Without CONSULT-III
1. Turn ignition switch ON.
2. Check the air bag warning lamp status. Refer to SRC-7, "On Board Diagnosis Function".

NOTE:
SRS does not enter the diagnosis mode if no malfunction is detected in the user mode.

Is malfunctioning part detected?

YES >> Refer to SRC-35, "Diagnosis Procedure".
NO >> INSPECTION END

Diagnosis Procedure

INFOID:0000000005987902

WARNING:
- **Before servicing, turn ignition switch OFF, disconnect battery negative terminal, and wait 3 minutes or more. (To discharge backup capacitor.)**
- **Never use unspecified tester or other measuring device.**

1. CHECK HARNESS CONNECTOR

Check the harness connector.

Is the inspection result normal?

YES >> GO TO 2.
NO >> Replace harness connector.

2. CHECK WIRING HARNESS

Check the wiring harness externals.

Is the inspection result normal?

YES >> GO TO 3.
NO >> Replace wiring harness.

3. CHECK SPIRAL CABLE CIRCUIT

1. Turn ignition switch OFF.
2. Disconnect driver air bag module connector and combination switch (spiral cable) connector.
3. Check continuity between driver air bag module harness connector and combination switch (spiral cable) harness connector.

Driver air bag module		Combination switch (spiral cable)		Continuity
Connector	Terminal	Connector	Terminal	
M350	10	M32	28	Existed
	11		30	

4. Check continuity between driver air bag module harness connector and ground.

Driver side air bag module		Ground	Continuity
Connector	Terminal		
M350	10		Not existed
	11		

Is the inspection result normal?

YES >> GO TO 4.
NO >> Replace combination switch (spiral cable). Refer to SR-16, "Removal and Installation".

4. REPLACE AIR BAG DIAGNOSIS SENSOR UNIT

1. Replace air bag diagnosis sensor unit. Refer to SR-29, "Removal and Installation".
2. Perform DTC confirmation procedure. Refer to SRC-35, "DTC Logic".

Is DTC detected?

YES >> GO TO 5.
NO >> INSPECTION END

5. REPLACE DRIVER AIR BAG MODULE

1. Replace driver air bag module. Refer to SR-13, "Removal and Installation".
2. Perform DTC confirmation procedure. Refer to SRC-35, "DTC Logic".

Is DTC detected?

YES >> GO TO 1.
NO >> INSPECTION END

B1058, B1059, B1060, B1061, B1062, B1063 DIAGNOSIS SENSOR UNIT

Description

INFOID:0000000006055199

- It detects a shock that is more than the specified level and monitors whether the driver air bag operates normally.
- It contains the “G” sensor for frontal collisions and spare battery function in case of main battery damage in collision.

DTC Logic

INFOID:0000000005987904

DTC DETECTION LOGIC

DTC	Display contents of CONSULT-III	DTC detecting condition	Possible cause
B1058 B1059 B1060 B1061 B1062 B1063	CONTROL UNIT	Air bag diagnosis sensor unit is malfunctioning	Malfunction in air bag diagnosis sensor unit

DTC CONFIRMATION PROCEDURE

1. CHECK SELF-DIAG RESULT

With CONSULT-III
1. Turn ignition switch ON.
2. Perform “AIR BAG” Self Diagnostic Result.

Without CONSULT-III
1. Turn ignition switch ON.
2. Check the air bag warning lamp status. Refer to SRC-7, "On Board Diagnosis Function".

NOTE:
SRS does not enter the diagnosis mode if no malfunction is detected in the user mode.

Is malfunctioning part detected?

YES >> Refer to SRC-37, "Diagnosis Procedure".
NO >> INSPECTION END

Diagnosis Procedure

INFOID:0000000005987905

WARNING:
- **Before servicing, turn ignition switch OFF, disconnect battery negative terminal, and wait 3 minutes or more. (To discharge backup capacitor.)**
- **Never use unspecified tester or other measuring device.**

1. CHECK HARNESS CONNECTOR

Check the harness connector.

Is the inspection result normal?

YES >> GO TO 2.
NO >> Replace harness connectors.

2. CHECK WIRING HARNESS

Check the wiring harness externals.

Is the inspection result normal?

YES >> GO TO 3.
NO >> Replace wiring harness.

3. REPLACE AIR BAG DIAGNOSIS SENSOR UNIT

1. Replace air bag diagnosis sensor unit. Refer to SR-29, "Removal and Installation".
2. Perform DTC confirmation procedure. Refer to SRC-37, "DTC Logic".

Is DTC detected?

YES >> GO TO 1.
NO >> INSPECTION END

B1074, B1075, B1076, B1077, B1078, B1079 DIAGNOSIS SENSOR UNIT

Description

INFOID:0000000006055200

- It detects a shock that is more than the specified level and monitors whether the driver air bag operates normally.
- It contains the “G” sensor for frontal collisions and spare battery function in case of main battery damage in collision.

DTC Logic

INFOID:0000000005987919

DTC DETECTION LOGIC

DTC	Display contents of CONSULT-III	DTC detecting condition	Possible cause
B1074 B1075 B1076 B1077 B1078 B1079	CONTROL UNIT	Air bag diagnosis sensor unit is malfunctioning	Malfunction in air bag diagnosis sensor unit

DTC CONFIRMATION PROCEDURE

1. CHECK SELF-DIAG RESULT

With CONSULT-III
1. Turn ignition switch ON.
2. Perform “AIR BAG” Self Diagnostic Result.

Without CONSULT-III
1. Turn ignition switch ON.
2. Check the air bag warning lamp status. Refer to SRC-7, "On Board Diagnosis Function".

NOTE:
SRS does not enter the diagnosis mode if no malfunction is detected in the user mode.

Is malfunctioning part detected?

YES >> Refer to SRC-39, "Diagnosis Procedure".
NO >> INSPECTION END

Diagnosis Procedure

INFOID:0000000005987920

WARNING:
- **Before servicing, turn ignition switch OFF, disconnect battery negative terminal, and wait at least 3 minutes or more. (To discharge backup capacitor.)**
- **Never use unspecified tester or other measuring device.**

1. CHECK HARNESS CONNECTOR

Check the harness connector.

Is the inspection result normal?

YES >> GO TO 2.
NO >> Replace harness connectors.

2. CHECK WIRING HARNESS

Check the wiring harness externals.

Is the inspection result normal?

YES >> GO TO 3.
NO >> Replace wiring harness.

3. REPLACE AIR BAG DIAGNOSIS SENSOR UNIT

1. Replace air bag diagnosis sensor unit. Refer to SR-29, "Removal and Installation".
2. Perform DTC confirmation procedure. Refer to SRC-39, "DTC Logic".

Is DTC detected?

YES >> GO TO 1.
NO >> INSPECTION END

B1209 FRONTAL COLLISION DETECTION

Description

INFOID:0000000005988041

The air bag are activated by the air bag diagnosis sensor unit signal transmitted at the time of the frontal collision.

DTC Logic

INFOID:0000000005988042

DTC DETECTION LOGIC

DTC	Display contents of CONSULT-III	DTC detecting condition	Possible cause
B1209	FRONTAL COLLISION DETECTION	Driver side air bag is deployed	—

DTC CONFIRMATION PROCEDURE

1. CHECK SELF-DIAG RESULT

With CONSULT-III
1. Turn ignition switch ON.
2. Perform “AIR BAG” Self Diagnostic Result.

Without CONSULT-III
1. Turn ignition switch ON.
2. Check the air bag warning lamp status. Refer to SRC-7, "On Board Diagnosis Function".

NOTE:
SRS does not enter the diagnosis mode if no malfunction is detected in the user mode.

Is malfunctioning part detected?

YES >> Refer to SRC-41, "Diagnosis Procedure".
NO >> INSPECTION END

Diagnosis Procedure

INFOID:0000000005988043

WARNING:
- **Before servicing, turn ignition switch OFF, disconnect battery negative terminal, and wait at least 3 minutes or more. (To discharge backup capacitor.)**
- **Never use unspecified tester or other measuring device.**

1. PERFORM COLLISION DIAGNOSIS

Perform collision diagnosis.Refer to SR-6, "FOR FRONTAL COLLISION : When SRS is activated in a collision" or SR-7, "FOR FRONTAL COLLISION : When SRS is not activated in a collision".

Is collision diagnosis complete?

YES >> GO TO 2.
NO >> INSPECTION END

2. FINAL INSPECTION

Perform “AIR BAG” Self Diagnostic Result.

Is the inspection result normal?

YES >> INSPECTION END
NO >> Perform diagnosis of applicable DTC.Refer to SRC-11, "DTC Index".

SYMPTOM DIAGNOSIS

SRS AIR BAG WARNING LAMP DOES NOT TURN OFF

Diagnosis Procedure

INFOID:0000000005911349

1. CHECK AIR BAG MODULE AND SEAT BELT PRE-TENSIONER

Check the deployment of air bag module.

Is air bag module deployed?

YES >> Replace the malfunctioning parts.
NO >> GO TO 2.

2. CHECK AIR BAG FUSE

Check 10 A fuse [No.5, located in fuse block (J/B)].

Is the inspection result normal?

YES >> GO TO 3.
NO >> Replace the fuse.

3. CHECK HARNESS CONNECTOR

Check the harness connector.

Is the inspection result normal?

YES >> GO TO 4.
NO >> Replace harness connectors.

4. CHECK WIRING HARNESS

Check the wiring harness externals.

Is the inspection result normal?

YES >> GO TO 5.
NO >> Replace wiring harness.

5. REPLACE AIR BAG DIAGNOSIS SENSOR UNIT

1. Replace air bag diagnosis sensor unit. Refer to SR-29, "Removal and Installation".
2. Check air bag warning lamp operation.

Is the inspection result normal?

YES >> INSPECTION END
NO >> GO TO 6.

6. REPLACE COMBINATION METER

1. Replace combination meter. Refer to MWI-51, "Exploded View".
2. Check air bag warning lamp operation.

Is the inspection result normal?

YES >> INSPECTION END
NO >> GO TO 1.

SRS AIR BAG WARNING LAMP DOES NOT TURN ON

Diagnosis Procedure

INFOID:0000000005911350

1. CHECK COMBINATION METER POWER SUPPLY AND GROUND CIRCUIT

Check conbination meter unit power supply and ground circuit. Refer to MWI-40, "COMBINATION METER : Diagnosis Procedure".

Is the inspection result normal?

YES >> GO TO 2.
NO >> Repair or replace the malfunctioning parts.

2. CHECK HARNESS CONNECTOR

Check the harness connector.

Is the inspection result normal?

YES >> GO TO 3.
NO >> Replace harness connectors.

3. CHECK WIRING HARNESS

Check the wiring harness externals.

Is the inspection result normal?

YES >> GO TO 4.
NO >> Replace wiring harness.

4. CHECK AIR BAG DIAGNOSIS SENSOR UNIT

Disconnect air bag diagnosis sensor unit connector and turn ignition switch ON.

Does air bag warning lamp turn ON?

YES >> Replace air bag diagnosis sensor unit. Refer to SR-29, "Removal and Installation".
NO >> Replace combination meter. Refer to MWI-51, "Exploded View".

SECTION ST
STEERING SYSTEM

CONTENTS

PRECAUTION 2

PRECAUTIONS 2
Precaution for Supplemental Restraint System (SRS) "AIR BAG" and "SEAT BELT PRE-TENSIONER" 2
Precaution Necessary for Steering Wheel Rotation after Battery Disconnect 2
Service Notice or Precautions for Steering System 3

PREPARATION 4

PREPARATION 4
Special Service Tools 4
Commercial Service Tools 4

BASIC INSPECTION 5

STEERING WHEEL 5
Inspection 5

SYMPTOM DIAGNOSIS 7

NOISE, VIBRATION AND HARSHNESS (NVH) TROUBLESHOOTING 7
NVH Troubleshooting Chart 7

PERIODIC MAINTENANCE 8

STEERING WHEEL 8
Inspection 8

REMOVAL AND INSTALLATION 9

STEERING WHEEL 9
Exploded View 9
Removal and Installation 9
Disassembly and Assembly 9

STEERING COLUMN 11
Exploded View 11
Removal and Installation 11
Inspection 12

STEERING GEAR AND LINKAGE 14
Exploded View 14
Removal and Installation 15
Disassembly and Assembly 15
Inspection 18

SERVICE DATA AND SPECIFICATIONS (SDS) 20

SERVICE DATA AND SPECIFICATIONS (SDS) 20
General Specifications 20
Steering Wheel Axial End Play and Play 20
Steering Wheel Turning Force 20
Steering Angle 20
Steering Column Operating Range 20
Rack Stroke 20
Socket Swing Force and Rotating Torque 20
Socket Axial End Play 21
Inner Socket Length 21

PRECAUTION

PRECAUTIONS

Precaution for Supplemental Restraint System (SRS) "AIR BAG" and "SEAT BELT PRE-TENSIONER"

INFOID:0000000006046464

The Supplemental Restraint System such as “AIR BAG” and “SEAT BELT PRE-TENSIONER”, used along with a front seat belt, helps to reduce the risk or severity of injury to the driver and front passenger for certain types of collision. Information necessary to service the system safely is included in the “SRS AIR BAG” and “SEAT BELT” of this Service Manual.

WARNING:

- **To avoid rendering the SRS inoperative, which could increase the risk of personal injury or death in the event of a collision which would result in air bag inflation, all maintenance must be performed by an authorized NISSAN/INFINITI dealer.**
- **Improper maintenance, including incorrect removal and installation of the SRS, can lead to personal injury caused by unintentional activation of the system. For removal of Spiral Cable and Air Bag Module, see the “SRS AIR BAG”.**
- **Do not use electrical test equipment on any circuit related to the SRS unless instructed to in this Service Manual. SRS wiring harnesses can be identified by yellow and/or orange harnesses or harness connectors.**

PRECAUTIONS WHEN USING POWER TOOLS (AIR OR ELECTRIC) AND HAMMERS

WARNING:

- **When working near the Air Bag Diagnosis Sensor Unit or other Air Bag System sensors with the ignition ON or engine running, DO NOT use air or electric power tools or strike near the sensor(s) with a hammer. Heavy vibration could activate the sensor(s) and deploy the air bag(s), possibly causing serious injury.**
- **When using air or electric power tools or hammers, always switch the ignition OFF, disconnect the battery, and wait at least 3 minutes before performing any service.**

Precaution Necessary for Steering Wheel Rotation after Battery Disconnect

INFOID:0000000006046465

NOTE:

- Before removing and installing any control units, first turn the push-button ignition switch to the LOCK position, then disconnect both battery cables.
- After finishing work, confirm that all control unit connectors are connected properly, then re-connect both battery cables.
- Always use CONSULT-III to perform self-diagnosis as a part of each function inspection after finishing work. If a DTC is detected, perform trouble diagnosis according to self-diagnosis results.

For vehicle with steering lock unit, if the battery is disconnected or discharged, the steering wheel will lock and cannot be turned.

If turning the steering wheel is required with the battery disconnected or discharged, follow the operation procedure below before starting the repair operation.

OPERATION PROCEDURE

1. Connect both battery cables.
   NOTE:
   Supply power using jumper cables if battery is discharged.
2. Turn the push-button ignition switch to ACC position.
   (At this time, the steering lock will be released.)
3. Disconnect both battery cables. The steering lock will remain released with both battery cables disconnected and the steering wheel can be turned.
4. Perform the necessary repair operation.
5. When the repair work is completed, re-connect both battery cables. With the brake pedal released, turn the push-button ignition switch from ACC position to ON position, then to LOCK position. (The steering wheel will lock when the push-button ignition switch is turned to LOCK position.)
6. Perform self-diagnosis check of all control units using CONSULT-III.

Service Notice or Precautions for Steering System

INFOID:0000000006038904

- In case of removing steering gear assembly, make the final tightening with grounded and unloaded vehicle condition, and then check wheel alignment.
- Observe the following precautions when disassembling.
- Before disassembly, thoroughly clean the outside of the unit.
- Disassembly should be done in a clean work area. It is important to prevent the internal parts from becoming contaminated by dirt or other foreign matter.
- For easier and proper assembly, place disassembled parts in order on a parts rack.
- Use nylon cloth or paper towels to clean the parts; common shop rags can leave lint that might interfere with their operation.
- Never reuse non-reusable parts.
- Before assembling, apply the specified grease to the directed parts.

PREPARATION

PREPARATION

Special Service Tools

INFOID:0000000006038905

Tool number Tool name	Description
ST3127S000 Preload gauge 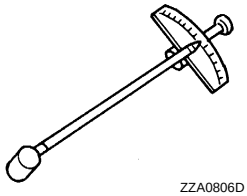 ZZA0806D	Inspecting steering column assembly rotating torque, pinion rotating torque and ball joint rotating torque
ST27180001 Steering wheel puller 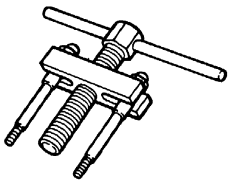 ZZA0819D	Removing steering wheel
KV48103400 Preload adapter 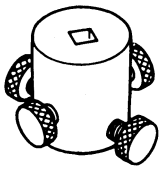 ZZA0824D	Inspecting rotating torque

Commercial Service Tools

INFOID:0000000006038906

Tool name	Description
Ball joint remover 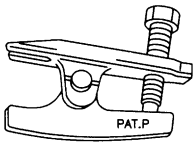 S-NT146	Remove steering outer socket
Boot band crimping tool 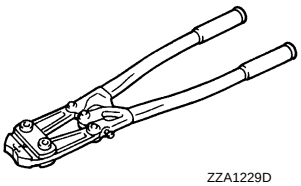 ZZA1229D	Installing boot clamp (large diameter)

BASIC INSPECTION

STEERING WHEEL

Inspection

INFOID:0000000006038907

NEUTRAL POSITION STEERING WHEEL

1. Make sure that steering gear assembly, steering column assembly and steering wheel are installed in the correct position.
2. Perform neutral position inspection after wheel alignment. Refer to FSU-7, "Inspection".
3. Set vehicle to the straight-ahead position and confirm steering wheel is in the neutral position.
4. Loosen outer socket lock nut and turn inner socket to left and right equally to make fine adjustments if steering wheel is not in the neutral position.

STEERING WHEEL TURNING FORCE

1. Park vehicle on a level and dry surface, set parking brake.
2. Tires need to be inflated normal pressure. Refer to WT-6, "Tire Air Pressure".
3. Start engine.
4. Check steering wheel turning force when steering wheel has been turned 360° from neutral position.

Steering wheel turning force	**: Refer to ST-20, "Steering Wheel Turning Force".**

NOTE:
Multiply the distance (L) from the hook of spring balance to the center of steering wheel by the measurement value with a spring balance.

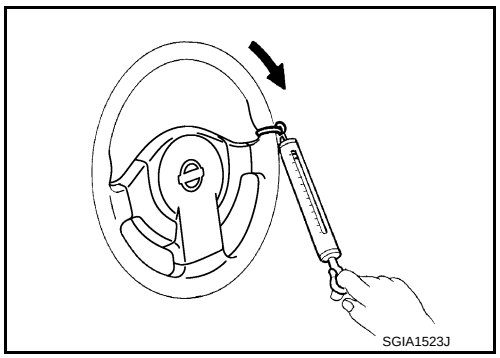
SGIA1523J

FRONT WHEEL TURNING ANGLE

1. Check front wheel turning angle after toe-in inspection. Refer to FSU-7, "Inspection".
2. Place front wheels on turning radius gauges and rear wheels on stands, so that vehicle can be level.
3. Check the maximum inner and outer wheel turning angles for LH and RH road wheels.

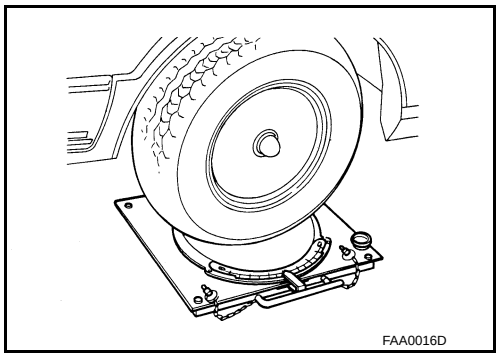
FAA0016D

4. With the engine at idle, turn steering wheel from full left stop to full right stop and measure the turning angles.

Inner wheel (Angle: A)	**: Refer to ST-20, "Steering Angle".**
Outer wheel (Angle: B)	**: Refer to ST-20, "Steering Angle".**

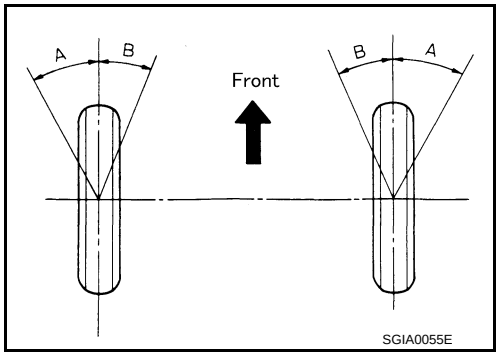

SGIA0055E

5. Check the following items when turning angle is out of the standard.

a. Check rack stroke (L).

L : Refer to ST-20, "Rack Stroke".

b. Disassemble steering gear assembly to check the cause that rack stroke is outside of the standard.
   - Steering angles are not adjustable. Check steering gear assembly, steering column assembly and front suspension components for wear or damage if any of the turning angles are different from the specified value. Replace any of them, if any non-standard condition exists.

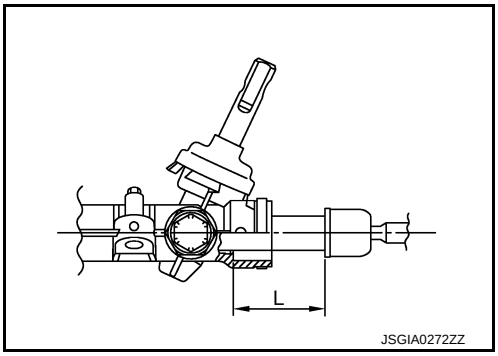

SYMPTOM DIAGNOSIS

NOISE, VIBRATION AND HARSHNESS (NVH) TROUBLESHOOTING

NVH Troubleshooting Chart

INFOID:0000000006038908

Use the chart below to find the cause of the symptom. If necessary, repair or replace these parts.

Possible cause and SUSPECTED PARTS		Reference	Outer/inner socket ball joint swinging torque	Outer/inner socket ball joint rotating torque	Outer/inner socket ball joint end play	Steering wheel play	Improper steering wheel	Improper installation or looseness of tilt lock lever	Mounting looseness	Steering column deformation or damage	Improper installation or looseness of steering column	Steering linkage looseness	AXLE and SUSPENSION	TIRE	ROAD WHEEL	DRIVE SHAFT	BRAKE
		Reference	ST-18, "Inspection"	ST-18, "Inspection"	ST-18, "Inspection"	ST-8, "Inspection"	ST-8, "Inspection"	—	ST-14, "Exploded View"	ST-12, "Inspection"	ST-11, "Exploded View"	ST-14, "Exploded View"	NVH in FAX, RAX, FSU, RSU section	NVH in WT section	NVH in WT section	NVH in FAX section	NVH in BR section
Symptom	Steering	Noise	×	×	×	×				×	×		×	×	×	×	×
		Shake					×	×	×				×	×	×	×	×
		Vibration					×	×	×	×	×		×	×		×	
		Shimmy					×		×			×	×	×	×		×
		Judder						×	×			×	×	×	×		×

×: Applicable

PERIODIC MAINTENANCE

STEERING WHEEL

Inspection

INFOID:0000000006038909

STEERING WHEEL AXIAL END PLAY

1. Check installation conditions of steering gear assembly, front suspension assembly, axle and steering column assembly.
2. Check if movement exists when steering wheel is moved up and down, to the left and right and to the axial direction.

Steering wheel axial end play	**: Refer to ST-20, "Steering Wheel Axial End Play and Play".**

3. Check the following items when steering wheel axial end play is out of the standard.
   - Check the steering column assembly mounting condition. Refer to ST-11, "Exploded View".
   - Check steering gear assembly mounting condition for looseness. Refer to ST-14, "Exploded View".

STEERING WHEEL PLAY

1. Turn steering wheel so that front wheels come to the straight-ahead position.
2. Start engine and lightly turn steering wheel to the left and right until front wheels start to move.
3. Measure steering wheel movement on the outer circumference.

Steering wheel play on the outer circumference	**: Refer to ST-20, "Steering Wheel Axial End Play and Play".**

4. Check the following items when steering wheel play is out of the standard.
   - Check backlash for each joint of steering column assembly.
   - Check installation condition of steering gear assembly.

REMOVAL AND INSTALLATION

STEERING WHEEL

Exploded View

INFOID:0000000006038883

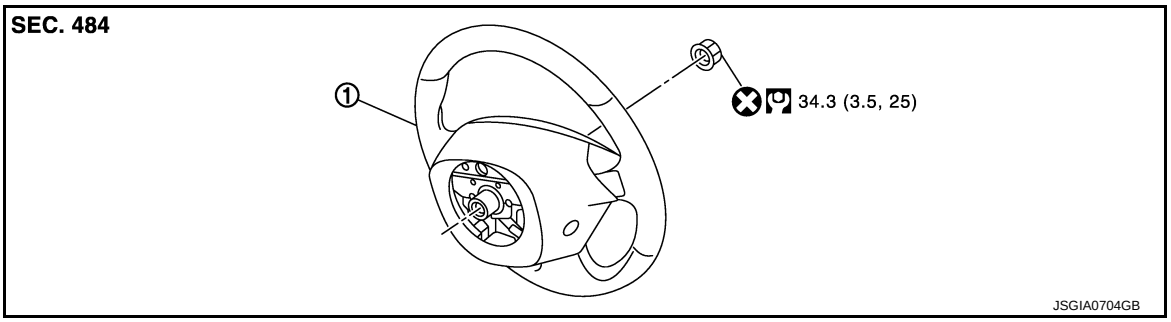

1. Steering wheel

Refer to GI-4, "Components" for symbols in the figure.

Removal and Installation

INFOID:0000000006038884

REMOVAL

NOTE:
When reconnecting spiral cable, fix cable with a tape so that fixing case and rotating part keep aligned. This will omit neutral position alignment procedure during spiral cable installation.

1. Set vehicle to the straight-ahead position.
2. Remove driver air bag module. Refer to SR-13, "Removal and Installation".
3. Remove steering wheel lock nut after steering is locked.
4. Remove steering wheel with the steering wheel puller (A) (SST: ST27180001).

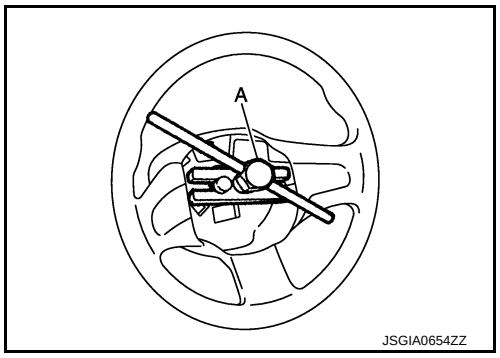

INSTALLATION

Note the following, and install in the reverse order of removal.

CAUTION:
Never twist spiral cable excessively after it becomes tight. (Twisting may cause the cable to be torn off.)

NOTE:
Check the spiral cable neutral position after replacing or rotating spiral cable. Refer to SR-16, "Removal and Installation".

Disassembly and Assembly

INFOID:0000000006038885

DISASSEMBLY

1. Remove steering wheel. Refer to ST-9, "Exploded View".
2. Remove steering column side cover.
3. Remove steering switch.

ASSEMBLY

Note the following, and install in the reverse order of removal.

- Securely insert the steering switch into the mounting hole of locating bush for the steering wheel.

STEERING COLUMN

Exploded View

INFOID:0000000006039599

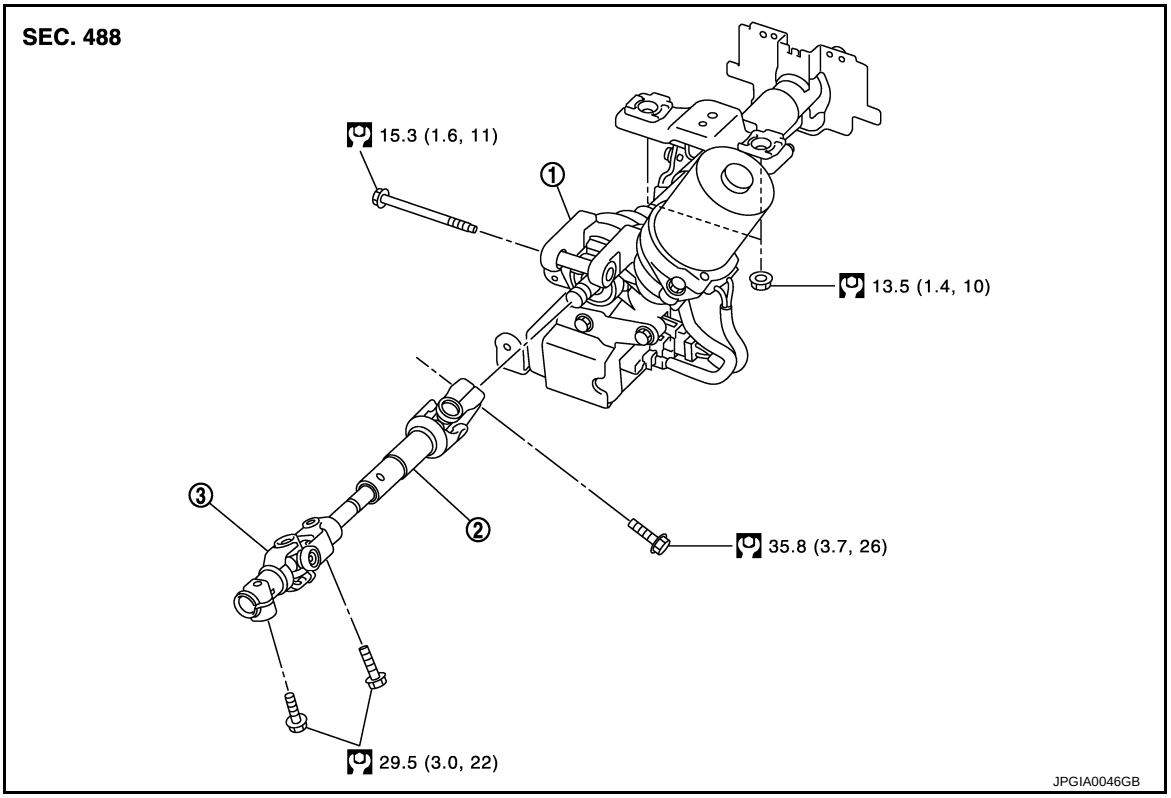

1. Steering column assembly
2. Intermediate shaft
3. Lower joint

Refer to GI-4, "Components" for symbols in the figure.

Removal and Installation

INFOID:0000000006038887

REMOVAL

CAUTION:

- **Never impact on the axis when removing steering column assembly.**
- **Place a matching mark on both intermediate shaft and steering column assembly before removing intermediate shaft.**
- **Never repeat static steering. (Motor and EPS control unit could be heated.)**
- **Be careful when removing steering column assembly from the vehicle because it is heavy.**
- **Keep steering column assembly away from magnetic sources.**
- **Never disassemble steering column assembly. It is not separable.**

1. Set vehicle to the straight-ahead position.
2. Place the tilt to the lowest level.
3. Remove instrument lower panel LH. Refer to IP-13, "Removal and Installation".
4. Remove knee protector.
5. Remove driver air bag module. Refer to SR-13, "Removal and Installation".
6. Remove steering wheel. Refer to ST-9, "Exploded View".
7. Remove steering column cover. Refer to IP-13, "Removal and Installation".
8. Remove spiral cable. Refer to SR-16, "Removal and Installation".
9. Remove combination switch. Refer to BCS-100, "Removal and Installation". (without intelligent key system) or BCS-58, "Removal and Installation" (with intelligent key system).
10. Disconnect each switch harness connectors installed to steering column assembly.
11. Remove the intermediate shaft mounting bolt (steering column side).

12. Loosen the lower joint mounting bolt (intermediate shaft side).
13. Remove the lower joint mounting bolt (steering gear side).
14. Remove the intermediate shaft.
15. Remove steering column assembly.

INSTALLATION

CAUTION:

- **Never impact on the axis when removing steering column assembly.**
- **Be careful when removing steering column assembly from the vehicle because it is heavy.**

Note the following, and install in the reverse order of removal.

- Insert bolt in the proper direction. (Do not insert it from the other side.)
- When connecting intermediate shaft lower side and pinion assembly, make sure the bolt is securely seated in groove of pinion assembly before final tightening.
- When tightening bolt (steering gear assembly side), tighten it by hand first, and make sure there is no feeling of sticking or galling before final tightening.
- To install align the guide protrusion (A) with the groove of lower joint (1), make sure the bolt is securely seated in groove (B) of steering gear (B) before final tightening.

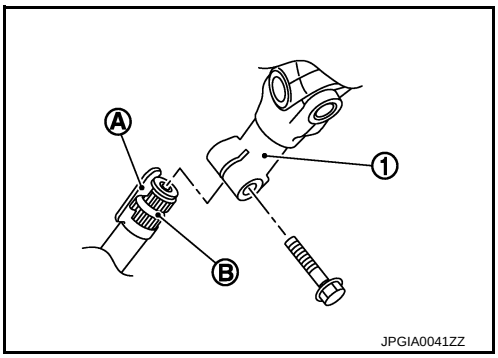

- When connecting intermediate shaft upper side (1) and column shaft, make sure the bolt is securely seated in groove (A) of column shaft (A) before final tightening.

CAUTION:

- **After installing steering column assembly, perform self-diagnosis with CONSULT-III to ensure correct operation. Refer to STC-9, "CONSULT-III Function".**
- **Rotate steering wheel to check for decentered condition, binding, noise or excessive steering effort.**

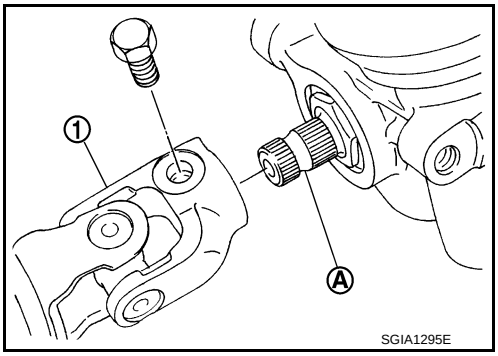

Inspection

INFOID:0000000006038888

INSPECTION AFTER REMOVAL

- Check each part of steering column assembly for damage or other malfunctions. Replace if there are any abnormal conditions.
- Measure steering column assembly rotating torque using a preload gauge (SST: ST3127S000). Replace steering column assembly if the rotating torque is outside the standard.

Rotating torque	**: Refer to ST-20, "Steering Column Operating Range".**

- Measure the length “L” shown in the figure, if vehicle has been involved in a minor collision. Replace steering column assembly (with motor, reduction gear, sensor) if “L” is outside the standard.

L **: Refer to ST-20, "Steering Column Operating Range".**

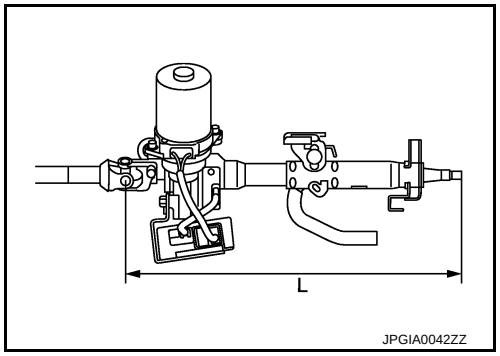

INSPECTION AFTER INSTALLATION

- Check each part of steering column assembly for damage or other malfunctions. Replace if there are any abnormal conditions.
- Check the steering wheel play, neutral position steering wheel, steering wheel turning force, and front wheel turning angle. Refer to ST-8, "Inspection".
- Check tilt mechanism operating range “T” shown in the figure.

T **: Refer to ST-20, "Steering Column Operating Range".**

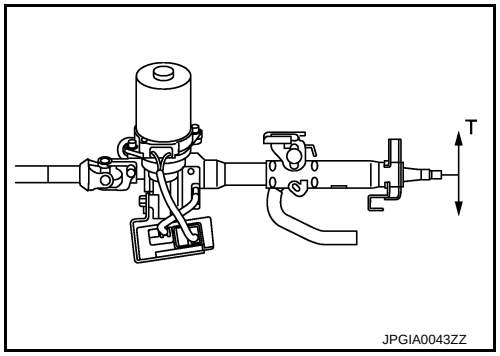

STEERING GEAR AND LINKAGE

Exploded View

INFOID:0000000006039600

REMOVAL

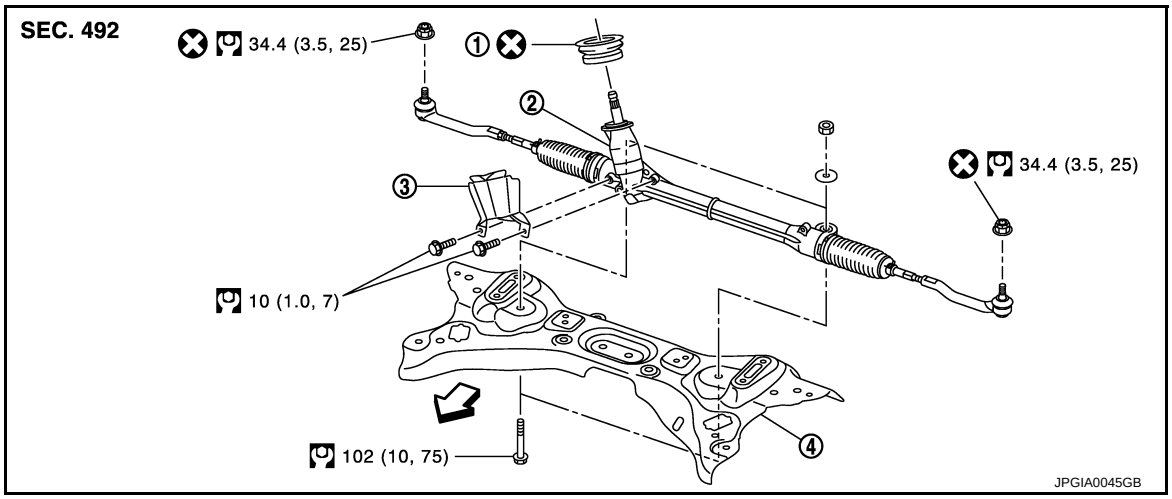

1. Fire wall seal
2. Steering gear assembly
3. Heat insulator
4. Front suspension member

⇦: Vehicle front

Refer to GI-4, "Components" for symbols in the figure.

DISASSEMBLY

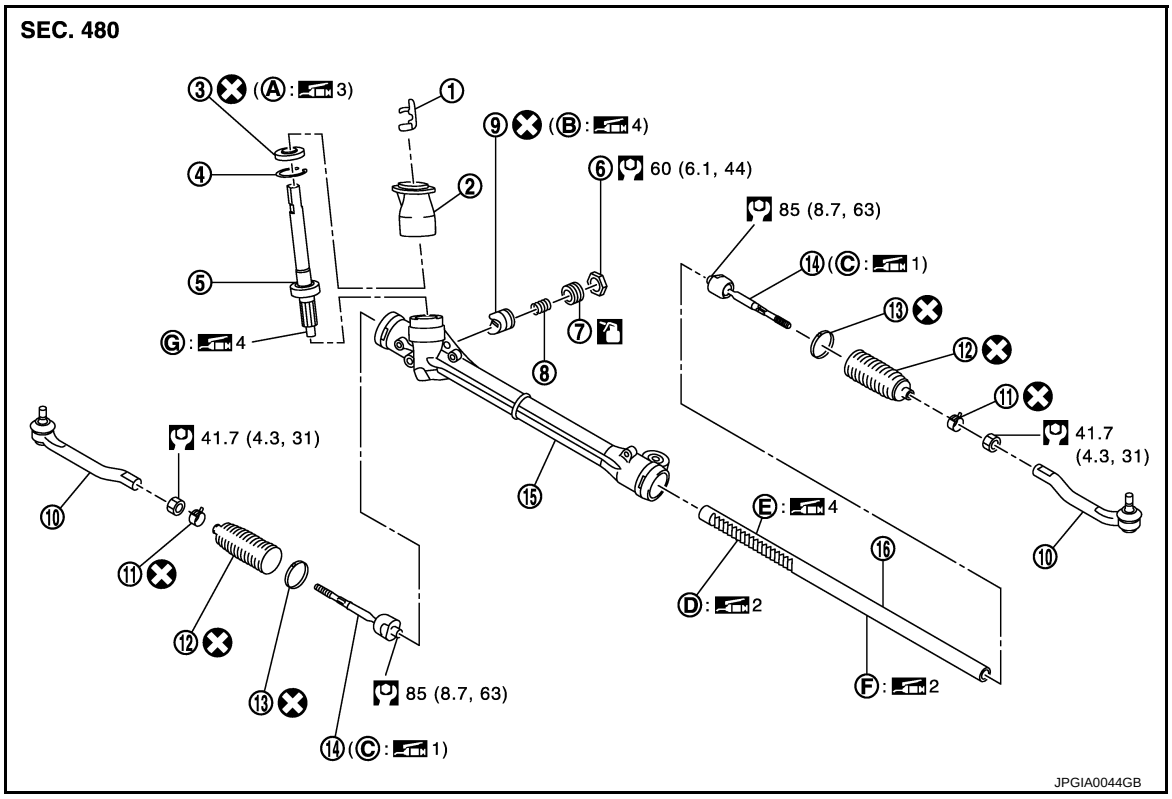

1. Guide
2. Joint cover
3. Dust cover
4. Snap ring
5. Pinion assembly
6. Lock nut
7. Adjusting screw
8. Spring
9. Retainer

10.	Outer socket	11.	Boot clamp (small diameter)	12.	Boot
13.	Boot clamp (large diameter)	14.	Inner socket	15.	Gear housing assembly
16.	Rack assembly				
A.	Oil seal lip	B.	Around retainer	C.	Inner socket
D.	Teeth part of rack assembly	E.	back of rack assembly	F.	Bush part of rack assembly
G.	Needle bearing				

1: Apply Genuine Lithium Soap, Autorex A (manufactured by Kyoudouyushi) or equivalent.

2: Apply Genuine Lithium Soap, Wanlouver MO No.2 (manufactured by Kyoudouyushi) or equivalent.

3: Apply Genuine Lithium Soap, Idemitsu Autorex A or equivalent.

4: Apply Genuine Lithium Soap, Multemp AC-P (manufactured by Kyoudouyushi) or equivalent.

: Apply Genuine Thread Locking Sealant, Three Bond 1141 or equivalent.

Refer to GI-4, "Components" and the followings for the symbols in the figure.

Removal and Installation

INFOID:0000000006038890

REMOVAL

1. Set vehicle to the straight-ahead position.
2. Remove lower joint mounting bolt (steering gear assembly side). Refer to ST-11, "Removal and Installation".
   CAUTION:
   Spiral cable may be cut if steering wheel turns while separating steering column assembly and steering gear assembly. Always fix the steering wheel using string to avoid.
3. Remove tires. Refer to WT-4, "Removal and Installation".
4. Remove steering outer socket from steering knuckle so as not to damage ball joint boot using suitable ball joint remover (commercial service tool).
   CAUTION:
   Temporarily tighten the nut to prevent damage to threads and to prevent the ball joint remover from sudden drop turning.
5. Support front suspension member with a suitable jack.
6. Remove rear torque and front suspension member mounting bolts. Refer to EM-79, "Removal and Installation" and FSU-14, "Removal and Installation".
7. Remove the mounting bolts and nuts of steering gear assembly.
8. Lower the suitable jack for the front suspension member to the steering gear assembly can be removed.

INSTALLATION

Note the following, and install in the reverse order of removal.

CAUTION:

Spiral cable may be cut if steering wheel turns while separating steering column assembly and steering gear assembly. Always fix the steering wheel using string to avoid turning.

- Clean mounting surface on the body side of fire wall seal when installing steering gear assembly.
- Perform final tightening of nuts and bolts on each part under unladen conditions with tires on level ground when removing steering gear assembly. Check wheel alignment. Refer to FSU-7, "Inspection".
- Rotate steering wheel to check for decentered condition, binding, noise or excessive steering effort.

Disassembly and Assembly

INFOID:0000000006038891

DISASSEMBLY

CAUTION:

- **Disassemble and assemble steering gear assembly by fixing the mounting area with a vise using copper plates.**
- **Clean steering gear assembly with kerosene before disassembling. Be careful to avoid splashing or applying any kerosene over connector of discharge port or return port.**

1. Loosen outer socket lock nut, and remove outer socket.
   CAUTION:
   When loosening lock nut, be sure to fix outer socket with a wrench or an equivalent to prevent ball joint from getting contact with knuckle.

2. Remove boot clamps, and then remove boot from inner socket.
   CAUTION:
   Never damage inner socket and gear housing assembly when removing boot. Inner socket and gear housing assembly must be replaced if inner socket and gear housing assembly are damaged because it may cause foreign material interfusion.
3. Remove inner socket from gear housing assembly.
4. Measure adjusting screw (1) height “H”, and loosen adjusting screw.
   CAUTION:
   - **Never loosen adjusting screw 2 turns or more.**
   - **Replace steering gear assembly if adjusting screw is loosened 2 turns or more and it is removed.**
5. Remove lock nut (2), adjusting screw, spring (4) and retainer (3) from gear housing assembly (5).
6. Remove guide from pinion assembly.
7. Remove joint cover from gear housing assembly.
   CAUTION:
   Never damage the locating protrusion of the joint cover.

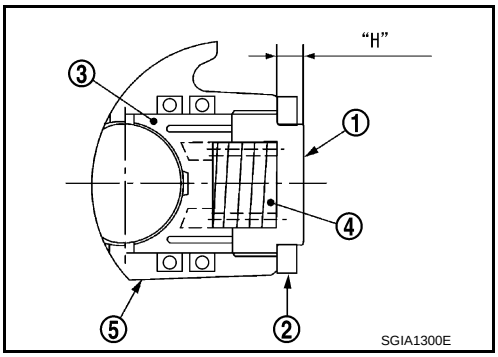

8. Remove dust cover from pinion assembly.
9. Remove snap ring, and then remove pinion assembly from gear housing assembly.
10. Pull pinion assembly from gear housing assembly.
    CAUTION:
    Never damage pinion assembly and gear housing assembly inner wall.
11. Pull rack assembly from gear housing assembly.
    CAUTION:
    Never damage rack assembly and gear housing assembly inner wall.

ASSEMBLY

1. Apply recommended grease to teeth part and bush part of rack assembly, if necessary.
   Use Genuine Lithium Soap, Wanlouver MO No.2 (manufactured by kyoudouyushi) or equivalent.
2. Apply recommended grease to back of rack assembly, if necessary.
   Use Genuine Lithium Soap, Multemp AC-P (manufactured by kyoudouyushi) or equivalent.
3. Install rack assembly to gear housing assembly.
   CAUTION:
   Never damage rack assembly and gear housing assembly inner wall.
4. Apply recommended grease to pinion assembly needle bearing, if necessary.
   Use Genuine Lithium Soap, Multemp AC-P (manufactured by kyoudouyushi) or equivalent.
5. Install pinion assembly to gear housing assembly.
6. Install snap ring to pinion assembly.
   CAUTION:
   - **Never reuse snap ring.**
   - **When installing snap ring, check that the chamfered surface faces upward.**
7. Install inner socket to rack assembly.
8. Apply recommended grease to dust cover, and then install dust cover to pinion assembly.
   Use Genuine Lithium Soap, Idemitsu Autorex A or equivalent.
9. Decide on the neutral position for the rack stroke (L).

L **: Refer to ST-20, "Rack Stroke".**

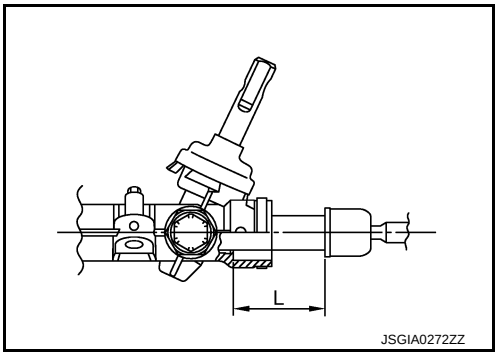

10. Apply recommended grease to around retainer (3), then install retainer, spring (4) and adjusting screw (1) to gear housing assembly (5).
Use Genuine Lithium Soap, Multemp AC-P (manufactured by kyoudouyushi) or equivalent.
11. Apply recommended thread locking sealant to the thread (2 turns thread), and then screw in the adjusting screw until it reaches height "H" from gear housing assembly measured before disassembling.
Use Genuine Thread Locking Sealant, Three Bond 1141 or equivalent.
12. Tighten lock nut to (2) the specified torque securing it to prevent adjusting screw from freewheeling condition.

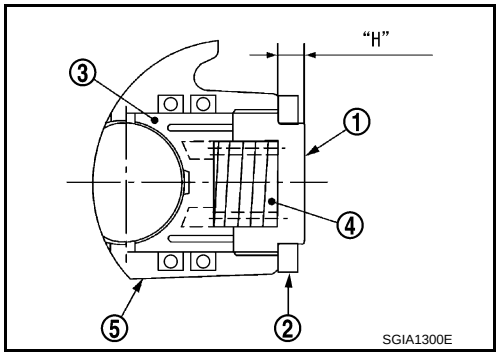

13. Move rack assembly 10 strokes throughout the full stroke so that the parts can fit with each other.
14. Using preload gauge (A) (SST: ST3127S000) and preload adapter (B) (SST: KV48103400), measure rotating torque of pinion assembly. If the measurement is outside of the specified range, readjust pinion rotating torque. If the measurement is outside of the specified range for readjust, replace steering gear assembly.

Pinion rotating torque

Around neutral position (within±100°) Average A	**0.6 - 1.2 N·m (0.07 - 0.12 kg-m, 6 - 10 in-lb)**
Maximum variation C	**1.6 N·m (0.16 kg-m, 14 in-lb)**

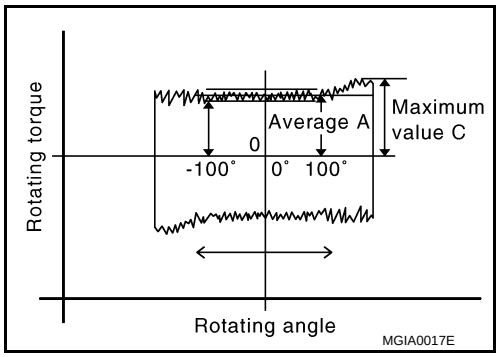

15. Set dial gauge to the back of rack assembly on the pinion assembly side around the center of stroke. Measure displacement of rack under torsional torque of ± 7.8 N·m (0.80 kg-m, 69 in-lb), and then check if it is within the standard value. If the measurement is outside the standard value, adjust it again. After the readjustment, if measurement is still outside the standard value, replace steering gear assembly.

Standard value : 0.1 mm (0.004 in) or less

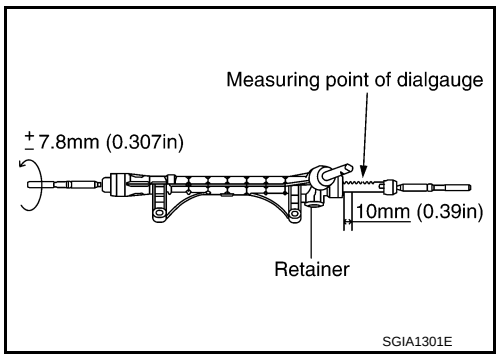

16. Apply recommended grease to inner socket, and then install boot to gear housing assembly and inner socket.
Use Genuine Lithium Soap, Idemitsu Autorex A or equivalent.
CAUTION:
Never reuse boot.
17. Install boot clamp (large diameter) (1) to boot using boot band crimping tool (SST: KV40107300).
CAUTION:
- **Never reuse boot clamp (large diameter).**
- **Install boot clamp (large diameter) (1) securely to boot groove, and crimp it so as to have clearance of 3 mm (0.12 in) or less as shown.**
18. Install boot clamp (small diameter) to boot.
CAUTION:
Never reuse boot clamp (small diameter).

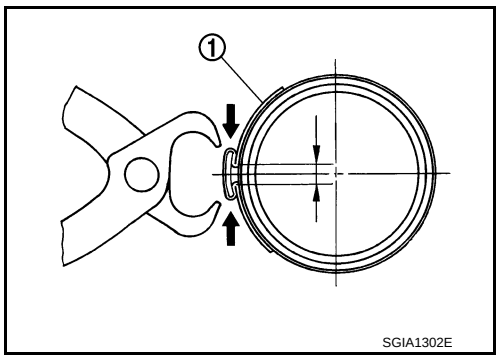

19. Install joint cover (1) to gear housing assembly (2).
    CAUTION:
    Install joint cover so that the protrusion for locating is securely set to gear housing groove.

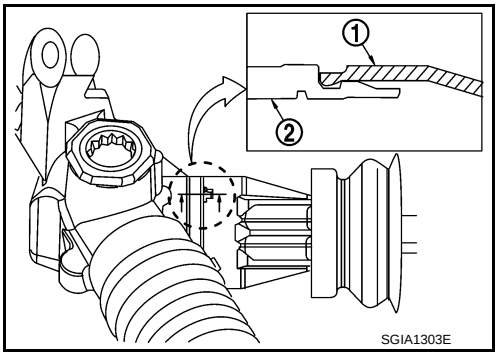

20. Adjust inner socket to standard length (L), and then tighten lock nut to the specified torque. Check length again after tightening lock nut.

    L **: Refer to ST-21, "Inner Socket Length".**

    CAUTION:
    - **When tightening lock nut, be sure to fix outer socket with a wrench or equivalent to prevent ball joint from getting contact with knuckle.**
    - **Adjust toe-in. Refer to FSU-7, "Inspection". Length achieved after toe-in adjustment is not necessarily the above value.**

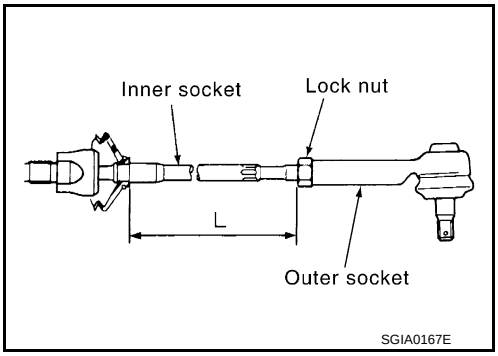

Inspection

INFOID:0000000006038892

INSPECTION AFTER INSTALLATION

- Check if steering wheel turns smoothly when it is turned several times fully to the end of the left and right.
- Check the steering wheel play, neutral position steering wheel, steering wheel turning force, and front wheel turning angle. Refer to ST-8, "Inspection".

INSPECTION AFTER DISASSEMBLY

Boot
- Check boot for cracks, and replace it if a malfunction is detected.

Gear Housing Assembly
- Check gear housing assembly for damage and scratches (inner wall). Replace if there are any abnormal conditions.

Outer Socket and Inner Socket
- Check the following items and replace the component if it does not meet the standard.

BALL JOINT SWINGING TORQUE
- Hook a spring balance at the point shown in the figure and pull the spring balance. Make sure that the spring balance reads the specified value when ball stud and inner socket start to move. Replace outer socket and inner socket if they are outside the standard.

  (Measuring point of outer socket: Ball stud upper side)

  Outer socket **: Refer to ST-20, "Socket Swing Force and Rotating Torque".**

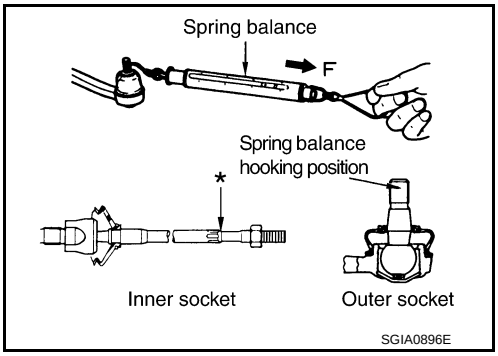

(Measuring point of inner socket: "*" mark shown in the figure)

Inner socket **: Refer to ST-20, "Socket Swing Force and Rotating Torque".**

BALL JOINT AXIAL END PLAY

- Apply an axial load of 490 N (50 kg, 110 lb) to ball stud. Using a dial gauge, measure amount of stud movement, and then make sure that the value is within the following specified range. Replace outer socket (1) and inner socket (2) if the measured value is outside the standard.

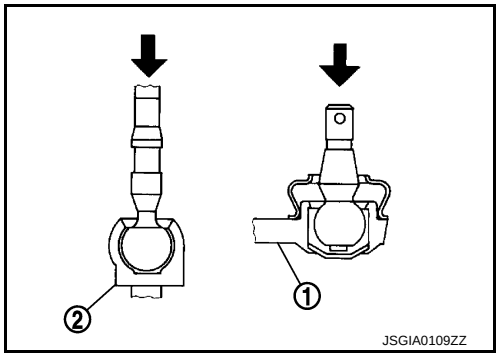

Outer socket **: Refer to ST-21, "Socket Axial End Play".**

Inner socket **: Refer to ST-21, "Socket Axial End Play".**

SERVICE DATA AND SPECIFICATIONS (SDS)

SERVICE DATA AND SPECIFICATIONS (SDS)

General Specifications

INFOID:0000000006038893

Steering gear model	R24K

Steering Wheel Axial End Play and Play

INFOID:0000000006038894

Unit: mm (in)

Item	Standard
Steering wheel axial end play	0 (0)
Steering wheel play on the outer circumference	0 - 35 (0 - 1.38)

Steering Wheel Turning Force

INFOID:0000000006038895

Unit: N (kg-f, lb-f)

Item	Standard
Steering wheel turning force	36 (3.7, 8.09) or less

Steering Angle

INFOID:0000000006038896

Unit: Degree minute (Decimal degree)

Item		Standard
Inner wheel	Minimum	40°50′ (40.5°)
	Nominal	43°50′ (43.5°)
	Maximum	44°50′ (44.5°)
Outer wheel	Nominal	35°50′ (35.5°)

Steering Column Operating Range

INFOID:0000000006038897

Tilt operating range	39.4 mm (1.551 in)
Rotating torque	0 – 2.1 N·m (0 – 0.21 kg-m, 0 – 2 in-lb)
Steering column length	475.9 – 479.9 mm (18.74 – 18.89 in)

Rack Stroke

INFOID:0000000006038898

Unit: mm (in)

Item	Standard
Rack stroke neutral position	71.3 (2.807)

Socket Swing Force and Rotating Torque

INFOID:0000000006038899

Item		Spring balance
Outer socket	Swinging torque	0.3 – 2.9 N·m (0.03 – 0.30 kg-m, 3 – 26 in-lb)
	Spring balance measurement	6.0 – 58 N (0.61 – 5.9 kg-f, 1.35 – 13.03 lb-f)
Inner socket	Swinging torque	0.5 – 5.0 N·m (0.05 – 0.51 kg-m, 4 – 44 in-lb)
	Spring balance measurement	4.3 – 43.5 N (0.44 – 4.4 kg-f, 0.97 – 9.77 lb-f)

Socket Axial End Play

INFOID:0000000006038900

Item	Standard
Outer socket	0.5 mm (0.020 in) or less
Inner socket	0.2 mm (0.008 in) or less

Inner Socket Length

INFOID:0000000006038901

Unit: mm (in)

Item	Standard
Rack neutral position, dimension	67.3 (2.650)

SECTION STC
STEERING CONTROL SYSTEM

CONTENTS

PRECAUTION 3

PRECAUTIONS 3
- Precaution for Supplemental Restraint System (SRS) "AIR BAG" and "SEAT BELT PRE-TENSIONER" 3
- Precaution Necessary for Steering Wheel Rotation after Battery Disconnect 3
- Service Notice or Precautions for EPS System 4

SYSTEM DESCRIPTION 5

COMPONENT PARTS 5
- Component Parts Location 5
- Component Description 5
- EPS control unit 5
- EPS motor 6
- Torque sensor 6
- Reduction gear 6
- EPS warning lamp 6

SYSTEM 7

EPS SYSTEM 7
- EPS SYSTEM : System Description 7
- EPS SYSTEM : Fail-Safe 8
- EPS SYSTEM : Protection Function 8

DIAGNOSIS SYSTEM (EPS CONTROL UNIT) 9
- CONSULT-III Function 9

ECU DIAGNOSIS INFORMATION 10

EPS CONTROL UNIT 10
- Reference Value 10
- Fail-Safe 11
- Protection Function 12
- DTC Inspection Priority Chart 12
- DTC Index 12

WIRING DIAGRAM 13

ELECTRONICALLY CONTROLLED POWER STEERING SYSTEM 13
- Wiring Diagram 13

BASIC INSPECTION 17

DIAGNOSIS AND REPAIR WORKFLOW 17
- Work Flow 17

DTC/CIRCUIT DIAGNOSIS 19

C1601 BATTERY POWER SUPPLY 19
- Description 19
- DTC Logic 19
- Diagnosis Procedure 19

C1604 TORQUE SENSOR 21
- DTC Logic 21
- Diagnosis Procedure 21

C1606 EPS MOTOR 23
- DTC Logic 23
- Diagnosis Procedure 23
- Component Inspection 23

C1607, C1608 EPS CONTROL UNIT 24
- DTC Logic 24
- Diagnosis Procedure 24

C1609 VEHICLE SPEED SIGNAL 25
- Description 25
- DTC Logic 25
- Diagnosis Procedure 25

C1610 ENGINE STATUS SIGNAL 26
- Description 26
- DTC Logic 26
- Diagnosis Procedure 26

U1000 CAN COMM CIRCUIT 27
- Description 27
- DTC Logic 27
- Diagnosis Procedure 27

EPS WARNING LAMP 28
Component Function Check 28
Diagnosis Procedure 28

SYMPTOM DIAGNOSIS 29

EPS WARNING LAMP DOES NOT TURN ON... 29
Description 29
Diagnosis Procedure 29

EPS WARNING LAMP DOES NOT TURN OFF 30
Description 30
Diagnosis Procedure 30

STEERING WHEEL TURNING FORCE IS HEAVY OR LIGHT 31
Description 31
Diagnosis Procedure 31

UNBALANCE STEERING WHEEL TURNING FORCE AND RETURN BETWEEN RIGHT AND LEFT 32
Description 32
Diagnosis Procedure 32

UNBALANCE STEERING WHEEL TURNING FORCE (TORQUE VARIATION) 33
Description 33
Diagnosis Procedure 33

REMOVAL AND INSTALLATION 34

EPS CONTROL UNIT 34
Exploded View 34
Removal and Installation 34

PRECAUTION

PRECAUTIONS

Precaution for Supplemental Restraint System (SRS) "AIR BAG" and "SEAT BELT PRE-TENSIONER"

INFOID:0000000005912776

The Supplemental Restraint System such as “AIR BAG” and “SEAT BELT PRE-TENSIONER”, used along with a front seat belt, helps to reduce the risk or severity of injury to the driver and front passenger for certain types of collision. Information necessary to service the system safely is included in the “SRS AIR BAG” and “SEAT BELT” of this Service Manual.

WARNING:

- **To avoid rendering the SRS inoperative, which could increase the risk of personal injury or death in the event of a collision which would result in air bag inflation, all maintenance must be performed by an authorized NISSAN/INFINITI dealer.**
- **Improper maintenance, including incorrect removal and installation of the SRS, can lead to personal injury caused by unintentional activation of the system. For removal of Spiral Cable and Air Bag Module, see the “SRS AIR BAG”.**
- **Do not use electrical test equipment on any circuit related to the SRS unless instructed to in this Service Manual. SRS wiring harnesses can be identified by yellow and/or orange harnesses or harness connectors.**

PRECAUTIONS WHEN USING POWER TOOLS (AIR OR ELECTRIC) AND HAMMERS

WARNING:

- **When working near the Air Bag Diagnosis Sensor Unit or other Air Bag System sensors with the ignition ON or engine running, DO NOT use air or electric power tools or strike near the sensor(s) with a hammer. Heavy vibration could activate the sensor(s) and deploy the air bag(s), possibly causing serious injury.**
- **When using air or electric power tools or hammers, always switch the ignition OFF, disconnect the battery, and wait at least 3 minutes before performing any service.**

Precaution Necessary for Steering Wheel Rotation after Battery Disconnect

INFOID:0000000005912777

NOTE:

- Before removing and installing any control units, first turn the push-button ignition switch to the LOCK position, then disconnect both battery cables.
- After finishing work, confirm that all control unit connectors are connected properly, then re-connect both battery cables.
- Always use CONSULT-III to perform self-diagnosis as a part of each function inspection after finishing work. If a DTC is detected, perform trouble diagnosis according to self-diagnosis results.

For vehicle with steering lock unit, if the battery is disconnected or discharged, the steering wheel will lock and cannot be turned.

If turning the steering wheel is required with the battery disconnected or discharged, follow the operation procedure below before starting the repair operation.

OPERATION PROCEDURE

1. Connect both battery cables.
   NOTE:
   Supply power using jumper cables if battery is discharged.
2. Turn the push-button ignition switch to ACC position.
   (At this time, the steering lock will be released.)
3. Disconnect both battery cables. The steering lock will remain released with both battery cables disconnected and the steering wheel can be turned.
4. Perform the necessary repair operation.
5. When the repair work is completed, re-connect both battery cables. With the brake pedal released, turn the push-button ignition switch from ACC position to ON position, then to LOCK position. (The steering wheel will lock when the push-button ignition switch is turned to LOCK position.)
6. Perform self-diagnosis check of all control units using CONSULT-III.

Service Notice or Precautions for EPS System

INFOID:0000000005912702

CAUTION:

Check the following item when performing the trouble diagnosis.

- **Check any possible causes by interviewing the symptom and it's condition from the customer if any malfunction, such as EPS warning lamp is turned ON, occurs.**
- **Check if air pressure and size of tires are proper, the specified part is used for the steering wheel, and control unit is genuine part.**
- **Check if the connection of steering column assembly and steering gear assembly is proper (there is not looseness of mounting bolts, damage of rods, boots or sealants, and leakage of grease, etc).**
- **Check if the wheel alignment is adjusted properly.**
- **Check if there is any damage or modification to suspension or body resulting in increased weight or altered ground clearance.**
- **Check if installation conditions of each link and suspension are proper.**
- **Check if the battery voltage is proper.**
- **Check connection conditions of each connector are proper.**
- **Before connecting or disconnecting the EPS control unit harness connector, turn ignition switch "OFF" and disconnect battery ground cable. Because battery voltage is applied to EPS control unit even if ignition switch is turned "OFF".**

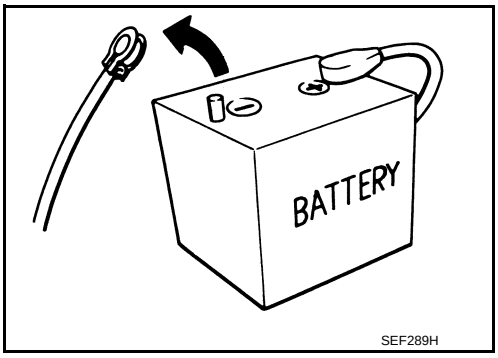

- **When connecting or disconnecting pin connectors into or from EPS control unit, take care not to damage pin terminals (bend or break).**
  When connecting pin connectors, make sure that there are no bends or breaks on EPS control unit pin terminal.

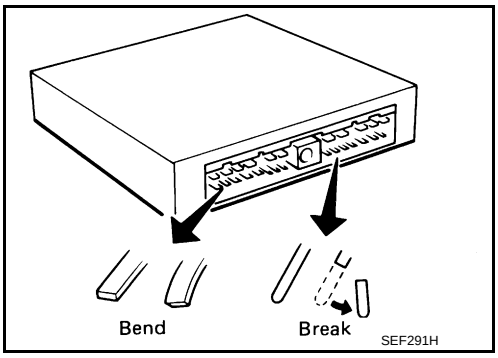

SYSTEM DESCRIPTION

COMPONENT PARTS

Component Parts Location

INFOID:0000000005912703

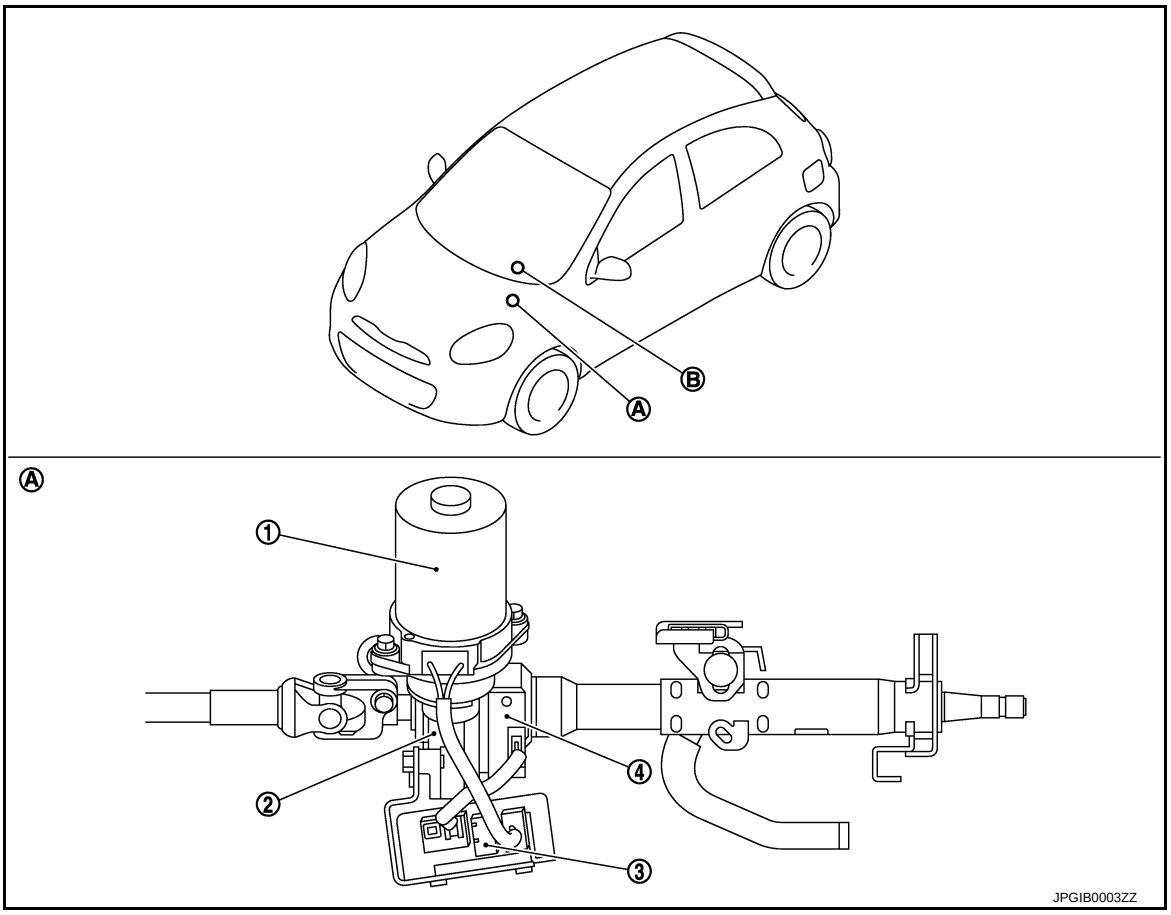

1. EPS motor
2. Reduction gear
3. EPS control unit
4. Torque sensor

A. Steering column assembly
B. EPS warning lamp (In combination meter)

Component Description

INFOID:0000000005912704

Components parts	Reference
EPS control unit	STC-5, "EPS control unit"
EPS motor	STC-6, "EPS motor"
Torque sensor	STC-6, "Torque sensor"
Reduction gear	STC-6, "Reduction gear"
EPS warning lamp	STC-6, "EPS warning lamp"

EPS control unit

INFOID:0000000005912705

EPS control unit performs an arithmetical operation on data, such as steering wheel turning force (sensor signal) from the torque sensor, vehicle speed signal, etc. Then it generates an optimum assist torque signal to the EPS motor according to the driving condition.

EPS motor

INFOID:0000000005912706

EPS motor provides the assist torque by the control signal from EPS control unit.

Torque sensor

INFOID:0000000005912707

Torque sensor detects the steering torque, and transmit the signal to EPS control unit.

Reduction gear

INFOID:0000000005912708

Reduction gear increases the assist torque provided from EPS motor with worm gears, and outputs to the column shaft.

EPS warning lamp

INFOID:0000000005912709

- Turn ON when there is a malfunction in EPS system. If indicates that fail-safe mode is engaged and enters a manual steering state (Control turning force steering wheel becomes heavy).
- Also turns ON when ignition switch is turned ON, for purpose of lamp check. Turns OFF after the engine starts, if system is normal.

SYSTEM

EPS SYSTEM

EPS SYSTEM : System Description

INFOID:0000000005912711

- EPS control unit performs an arithmetical operation on data, such as steering wheel turning force (sensor signal) from the torque sensor, vehicle speed signal, etc. Then it generates an optimum assist torque signal to the EPS motor according to the driving condition.
- In case of an error in the electrical system, the fail-safe function stops output signals to the EPS motor. Then the previous state is changed to the manual steering state.
- Self-diagnosis can be done with CONSULT-III.
- EPS control unit will decrease assistance under the following 2 conditions.
- Extensive steering at low speed will cause the ECU and MOTOR to heat up, once temperature reaches critical point ECU will reduce current to reduce heat up. System will recover as temperature lowers (reduced or no assistance).
- Holding steering on rack-end (full lock) for 1 second will cause the system to engage rack-end protection. This reduces assistance down to 50% in order to prevent heat up. Assistance is immediately returned to 100% when steering released or turned away from rack-end.

SYSTEM DIAGRAM

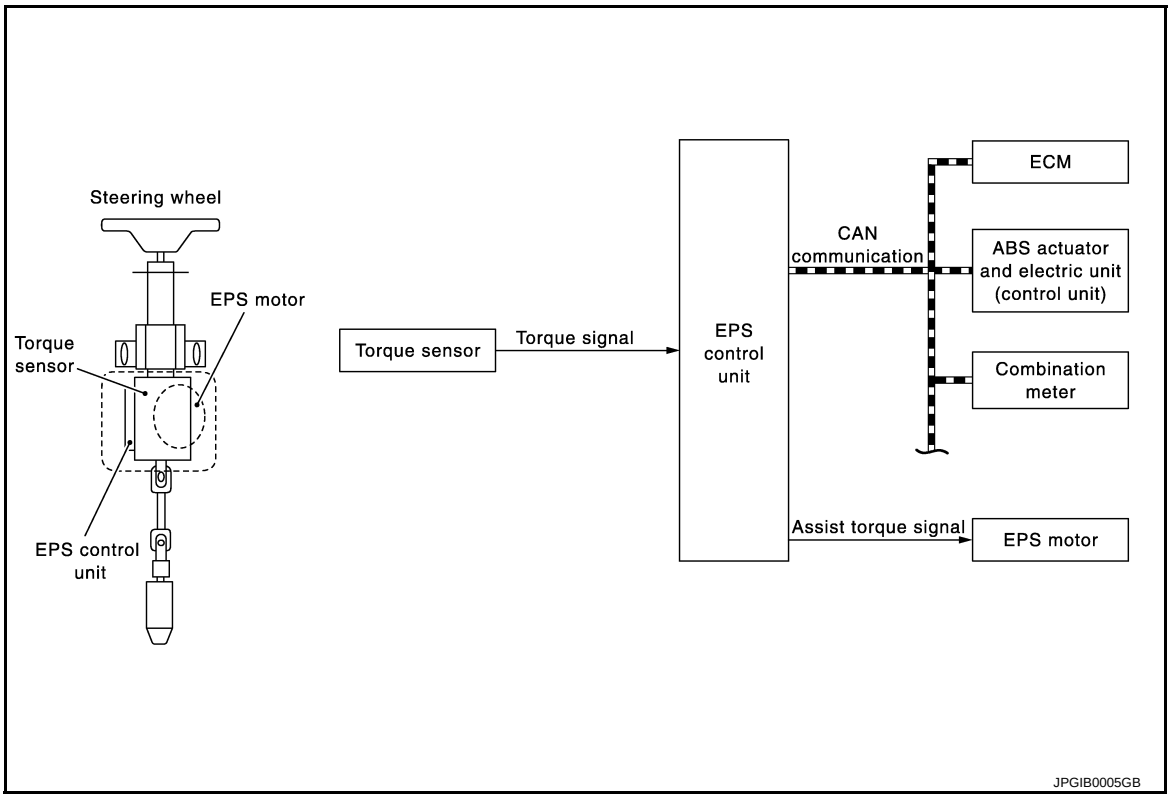

INPUT/OUTPUT SIGNAL

Communicates the signal from each control unit via CAN communication.

Control unit	Signal status
ECM	Transmits mainly the following signals to EPS control unit via CAN communication. • Engine status signal
ABS actuator and electric unit (control unit)*1	Transmits mainly the following signals to EPS control unit via CAN communication. • Vehicle speed signal*1
Combination meter	Transmits mainly the following signals to EPS control unit via CAN communication. • Vehicle speed signal
	EPS warning lamp signal is received from the EPS control unit via CAN communication.

*1: With ABS models

EPS WARNING LAMP INDICATION

Condition	EPS warning lamp
Ignition switch ON. (Lamp check)	ON
Engine running.	OFF
EPS system malfunction [Other diagnostic item]	ON

CAUTION:

EPS warning lamp also turns ON due to data reception error, CAN communication error etc.

EPS SYSTEM : Fail-Safe

INFOID:0000000005912779

- If any malfunction occurs in the system, and control unit detects the malfunction, EPS warning lamp on combination meter turns ON to indicate system malfunction.
- When EPS warning lamp is ON, enters into a manual steering state. (Control turning force steering wheel becomes heavy.)

EPS SYSTEM : Protection Function

INFOID:0000000006021884

EPS control unit decreases the output signal to EPS motor while extremely using the power steering function (e.g., full steering) consecutively for protecting EPS motor and EPS control unit (Overload protection control). While activating overload protection control, the assist torque gradually decreases, and the steering wheel turning force becomes heavy. The normal assist torque reactivates by no steering.

DIAGNOSIS SYSTEM (EPS CONTROL UNIT)

CONSULT-III Function

INFOID:0000000005912713

FUNCTION

CONSULT-III can display each diagnostic item using the diagnostic test modes shown following.

Diagnostic test mode	Function
ECU identification	Steering column assembly number can be read.
Self diagnostic result	Self-diagnostic results can be read and erased quickly.
Data monitor	Input/Output data in the EPS control unit can be read.

ECU IDENTIFICATION

Displays the part number stored in the control unit.

SELF-DIAG RESULTS MODE

Display Item List

Refer to STC-12, "DTC Index".

DATA MONITOR MODE

Display Item List

Monitor item (Unit)	Remarks
BATTERY VOLT (V)	Displays the power supply voltage for EPS control unit.
TORQUE SENSOR (Nm)	Displays steering wheel turning force detected by torque sensor.
MOTOR CURRENT (A)	Displays the current value consumed by EPS motor.
MOTOR SIG (A)	Displays the current commanded value to EPS motor.
ASSIST TORQUE (Nm)	Displays assist torque being output by the electric power steering.
C/U TEMP (°C)	Displays the temperature of the EPS control unit.
ASSIST LEVEL (%)	Normally displays 100%. In case of an excessive stationary steering, the assist curvature gradually falls. However, it return to 100% when left standing.
VEHICLE SPEED (km/h) or (MPH)	Vehicle speed is displayed from vehicle speed signal via CAN communication.
WARNING LAMP (On/Off)	EPS warning lamp control status is displayed.
ENGINE STATUS (Stop/Run)	Engine speed is displayed from engine status signal via CAN communication.

ECU DIAGNOSIS INFORMATION

EPS CONTROL UNIT

Reference Value

INFOID:0000000005912714

VALUES ON THE DIAGNOSIS TOOL

CAUTION:

The output signal indicates the EPS control unit calculation data. The normal values will be displayed even in the event that the output circuit (harness) is open.

Monitor item	Display content	Data monitor		
		Condition		Display value
BATTERY VOLT	Power supply voltage for EPS control unit	Ignition switch: ON		Battery voltage
TORQUE SENSOR	Steering wheel turning force	Engine running	Steering wheel: Not steering (There is no steering force)	Approx. 0 Nm
			Steering wheel: Right turn	Positive value (Nm)
			Steering wheel: Left turn	Negative value (Nm)
MOTOR CURRENT	Consumption current of EPS motor	Engine running	Steering wheel: Not steering (There is no steering force)	Approx. 0 A
			Steering wheel: Right or left turn	Displays consumption current of EPS motor (A)*1
MOTOR SIG	Command current to EPS motor	Engine running	Steering wheel: Not steering (There is no steering force)	Approx. 0 A
			Steering wheel: Right turn	Negative value (A)
			Steering wheel: Left turn	Positive value (A)
ASSIST TORQUE	Displays assist torque being output by the EPS.	Engine running		Approx. 0 Nm*2
C/U TEMP	Displays temperature of the EPS control unit.	Ignition switch ON or engine running		Displays temperature of inside of EPS control unit (°C)
ASSIST LEVEL	Assist available level	Engine running		100 % *3
VEHICLE SPEED	Vehicle speed	Vehicle stopped		0 km/h (0 mph)
		While driving		Approximately equal to the indication on speedometer (inside of ±10%)*4
WARNING LAMP	EPS warning lamp condition	EPS warning lamp: ON		On
		EPS warning lamp: OFF		Off
ENGINE STATUS	Engine status	Engine not running		Stop
		Engine running		Run

*1: Almost in accordance with the value of MOTOR SIG. It is not a malfunction though these values are not accorded when steering quickly.

*2: A fixed value is indicated regardless of steering turning.

*3: Normally displays 100%. In case of an excessive stationary steering, the assist curvature gradually falls. However, it returns to 100% when left standing.

*4: It is not a malfunction, though it might not be corresponding just after ignition switch in turned ON.

TERMINAL LAYOUT

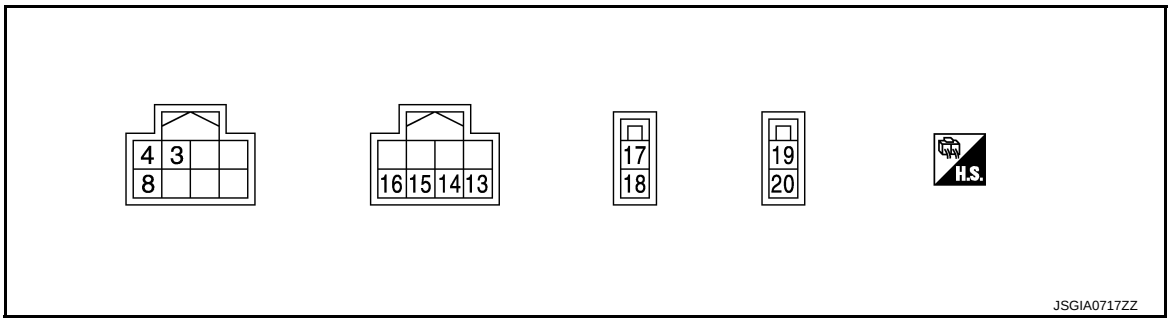

PHYSICAL VALUES

Terminal No. (Wire Color)		Description		Condition		Value (Approx.)
+	–	Signal name	Input/Output			
3 (P)	Ground	CAN-L	Input/Output	—		—
4 (Y)	Ground	Ignition power supply	Input	Ignition switch: ON		Battery voltage
				Ignition switch: OFF		0 V
8 (L)	Ground	CAN-H	Input/Output	—		—
13 (–)	Ground	Torque sensor power supply	Output	Ignition switch: ON		5 V
14 (–)	Ground	Torque sensor sub	Input	Ignition switch: ON	Steering wheel: Not steering (There is no steering force)	2.5 V
				Engine running	Steering wheel: steering	1.6 V – 3.4 V (The value is changed according to steering left or right)
15 (–)	Ground	Torque sensor ground	—	Always		0 V
16 (–)	Ground	Torque sensor main	Input	Ignition switch: ON	Steering wheel: Not steering (There is no steering force)	2.5 V
				Engine running	Steering wheel: steering	1.6 V – 3.4 V (The value is changed according to steering left or right)
17 (R)	Ground	Battery power supply	Input	Always		Battery voltage
18 (B)	Ground	Ground	—	Always		0 V
19 (–)	—	Motor +	—	—		—
20 (–)	—	Motor –	—	—		—

Fail-Safe

INFOID:0000000005912715

- If any malfunction occurs in the system, and control unit detects the malfunction, EPS warning lamp on combination meter turns ON to indicate system malfunction.
- When EPS warning lamp is ON, enters into a manual steering state. (Control turning force steering wheel becomes heavy.)

Protection Function

INFOID:0000000006018345

EPS control unit decreases the output signal to EPS motor while extremely using the power steering function (e.g., full steering) consecutively for protecting EPS motor and EPS control unit (Overload protection control). While activating overload protection control, the assist torque gradually decreases, and the steering wheel turning force becomes heavy. The normal assist torque reactivates by no steering.

DTC Inspection Priority Chart

INFOID:0000000005912716

When multiple DTCs are detected simultaneously, check one by one depending on the following priority list.

Priority	Priority order item (DTC)
1	U1000 CAN COMM CIRCUIT
2	C1601 BATTERY POWER SUPPLY
3	Other than the above

DTC Index

INFOID:0000000005912717

DTC	Items (CONSULT-III screen terms)	Reference
C1601	BATTERY VOLT	STC-19, "DTC Logic"
C1604	TORQUE SENSOR	STC-21, "DTC Logic"
C1606	EPS MOTOR	STC-23, "DTC Logic"
C1607	EEPROM	STC-24, "DTC Logic"
C1608	CONTROL UNIT	STC-24, "DTC Logic"
C1609	CAN VHCL SPEED	STC-25, "DTC Logic"
C1610	CAN ENG RPM	STC-26, "DTC Logic"
U1000	CAN COMM CIRCUIT	STC-27, "DTC Logic"

WIRING DIAGRAM

ELECTRONICALLY CONTROLLED POWER STEERING SYSTEM

Wiring Diagram

INFOID:0000000005912718

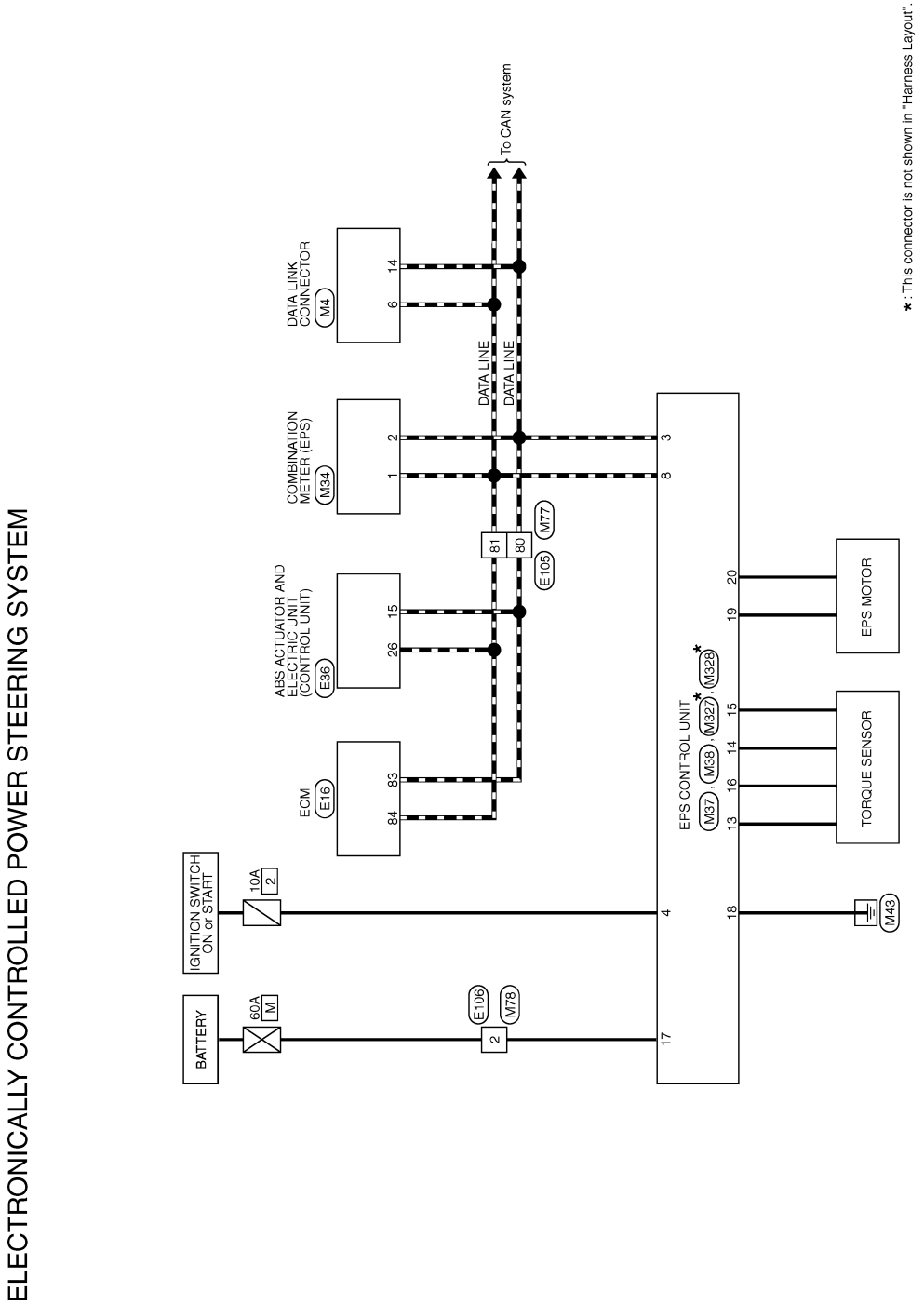

*: This connector is not shown in "Harness Layout".

ELECTRONICALLY CONTROLLED POWER STEERING SYSTEM

Connector No.	E16
Connector Name	ECM
Connector Type	RH24FB-RZ8-L-RH

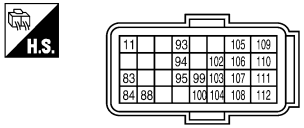

Terminal No.	Color of Wire	Signal Name [Specification]
83	P	CAN-L
84	L	CAN-H
88	LG	K LINE
93	L	IGNSW
94	SB	ASCDSW
95	BR	GNDA-ASCDSW
99	W	BRAKE
100	SB	BNCSW
102	O	AVCC-APS2
103	G	APS2
104	R	GNDA-APS2
105	G	VBR
106	V	AVCC-APS1
108	B	GND
110	BR	APS1
111	Y	GNDA-APS1

Connector No.	E36
Connector Name	ABS ACTUATOR AND ELECTRIC UNIT (CONTROL UNIT)
Connector Type	BAA22FB-AHZ4-RH

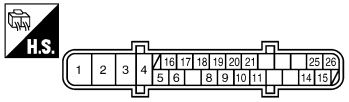

Terminal No.	Color of Wire	Signal Name [Specification]
1	B	GND (MTR)
2	Y	BAT (MTR)
3	L	BAT (SOL)
4	B	GND (SOL)
5	Y	DS FL
6	W	DP RL
8	O	DP RR
9	L	DP FR
10	R	DS FR
11	LG	K LINE
14	GR	CAN-L
15	P	CAN-L
16	BR	DP FL
17	G	DS RL
18	V	IGN
19	SB	DS RR
20	W	STOP LAMP SW
21	P	VDC OFF SW
25	R	CAN-H
26	L	CAN-H

Connector No.	E105
Connector Name	WIRE TO WIRE
Connector Type	TH80MW-CS16-TM4

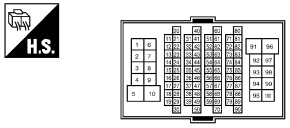

Terminal No.	Color of Wire	Signal Name [Specification]
1	V	–
2	W	–
3	SB	–
4	G	–
5	P	–
6	R	–
7	Y	–
8	O	–
9	W	–
10	SB	–
31	V	–
32	R	–
33	GR	–
34	P	–
35	Y	–
36	BR	–
39	SB	–
44	R	–
45	V	–
46	P	–
47	W	–
48	L	–
49	Y	–
50	W	–
51	BR	– [With CVT]
51	B	– [With M/T]
53	SB	–
54	W	– [With CVT]
54	O	– [With M/T]
57	LG	–
59	L	–
60	O	–
61	G	–
62	W	–
63	L	–
67	GR	– [With CVT]
67	V	– [With M/T]
69	P	–
70	SHIELD	–
71	GR	–
72	LG	–
73	P	–
74	V	–
76	Y	–
77	LG	–
78	O	–
79	G	–
80	P	–
81	L	–
82	W	–
83	BR	–
84	B	–
87	GR	–
91	W	–
92	Y	–
93	Y	–
94	R	–
95	V	–
96	LG	–
97	R	–
98	SB	–
99	G	–
100	P	–

Connector No.	E106
Connector Name	WIRE TO WIRE
Connector Type	L02FB-MC

Terminal No.	Color of Wire	Signal Name [Specification]
1	W	–
2	R	–

Connector No.	M4
Connector Name	DATA LINK CONNECTOR
Connector Type	BD16FW

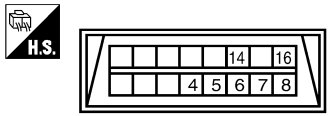

Terminal No.	Color of Wire	Signal Name [Specification]
4	B	–
5	B	–
6	L	–
7	GR/R	–
8	O	–
14	P	–
16	LG/R	–

JCGWM0282GB

ELECTRONICALLY CONTROLLED POWER STEERING SYSTEM

Connector No.	M34
Connector Name	COMBINATION METER
Connector Type	TH40FW-NH

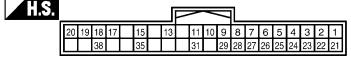

Terminal No.	Color of Wire	Signal Name [Specification]
1	L	CAN-H
2	P	CAN-L
3	V	VEHICLE SPEED SIGNAL (2-PULSE)
4	L	VEHICLE SPEED SIGNAL (8-PULSE)
6	BR/Y	FUEL LEVEL SENSOR SIGNAL
7	R/G	AIR BAG SIGNAL
8	P	OVERDRIVE CONTROL SWITCH SIGNAL
9	O	SEAT BELT BUCKLE SWITCH SIGNAL (DRIVER SIDE)
10	SB	PARKING BRAKE SWITCH SIGNAL
11	G/R	BRAKE FLUID LEVEL SWITCH SIGNAL
13	B/R	ILLUMINATION CONTROL SIGNAL
15	L/Y	ACC POWER SUPPLY
17	G	WASHER LEVEL SWITCH SIGNAL
18	R/Y	SECURITY SIGNAL
19	V/W	AMBIENT SENSOR SIGNAL
20	R/W	AMBIENT SENSOR GROUND
21	B	GROUND
22	B	GROUND
23	B	GROUND
24	V	FUEL LEVEL SENSOR GROUND
25	B	VDC GROUND
27	LG	BATTERY POWER SUPPLY
28	GR	IGNITION SIGNAL
29	BR	PASSENGER SEAT BELT WARNING SIGNAL
31	R	A/C AUTO AMP. CONNECTION RECOGNITION SIGNAL
35	BR	ENGINE COOLANT TEMPERATURE SIGNAL
38	GR	ALTERNATOR SIGNAL

Connector No.	M37
Connector Name	EPS CONTROL UNIT
Connector Type	TH08FB

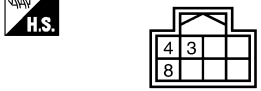

Terminal No.	Color of Wire	Signal Name [Specification]
3	P	CAN-L
4	O	IGN
8	L	CAN-H

Connector No.	M38
Connector Name	EPS CONTROL UNIT
Connector Type	L02FB-UH

Terminal No.	Color of Wire	Signal Name [Specification]
17	R	BAT
18	B	GND

Connector No.	M77
Connector Name	WIRE TO WIRE
Connector Type	TH80FW-CS16-TM4

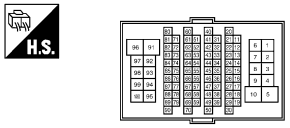

Terminal No.	Color of Wire	Signal Name [Specification]
1	B/O	–
2	R	–
3	G/R	–
4	G/B	–
5	L	–
6	L	–
7	W/R	–
8	G/W	–
9	Y/L	–
10	W	–
31	GR/L	–
32	L/B	–
33	R/Y	–
34	SB	–
35	BR	–
36	G	–
39	L/R	–
44	G/O	–
45	LG/R	–
46	GR/W	–
47	BR/Y	–
48	L/O	–
49	L/W	–
50	P/L	–
51	B/W	–
53	R/L	–
54	O	–
57	GR	–
59	V	–
60	R/W	–
61	V/W	–
62	W/L	–
63	W/B	–
67	Y/R	–
69	LG	–
70	SHIELD	–
71	P/B	–
72	R/G	–
73	R	–
74	L/Y	–
76	W/G	–
77	GR/R	–
78	O	–
79	LG	–
80	P	–
81	L	–
82	GR	–
83	G/R	–
84	B	–
87	G	–
91	R	–
92	O	–
93	Y	–
94	R/B	–
95	L/W	–
96	Y	–
97	L	–
98	BR/W	–
99	W	–
100	G/R	–

Connector No.	M78
Connector Name	WIRE TO WIRE
Connector Type	L02MB-MC

Terminal No.	Color of Wire	Signal Name [Specification]
1	W	–
2	R	–

Connector No.	M327
Connector Name	EPS CONTROL UNIT
Connector Type	TH08FGY

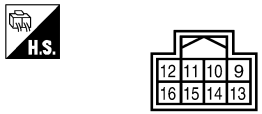

Terminal No.	Color of Wire	Signal Name [Specification]
13	–	TORQUE SENSOR POWER SUPPLY
14	–	TORQUE SENSOR SUB
15	–	TORQUE SENSOR GND
16	–	TORQUE SENSOR MAIN

JCGWM0283GB

ELECTRONICALLY CONTROLLED POWER STEERING SYSTEM

Connector No.	M328
Connector Name	EPS CONTROL UNIT
Connector Type	L02FL

Terminal No.	Color of Wire	Signal Name [Specification]
19	–	MOTOR (+)
20	–	MOTOR (–)

JCGWM0284GB

BASIC INSPECTION

DIAGNOSIS AND REPAIR WORKFLOW

Work Flow

INFOID:0000000005912719

1. OBTAIN INFORMATION ABOUT SYMPTOM

Interview the customer to obtain as much information as possible about the conditions and environment under which the malfunction occurs.

>> GO TO 2.

2. CHECK DTC

1. Check DTC for “EPS” with CONSULT-III.
2. If a DTC exists, perform the following operations.
- Records the DTCs.
- Erase DTCs
- Check that the root cause clarified with DTC matches to the malfunction information described by the customer.
3. Check also the related service information or others.

Do malfunction information or DTC exist?

Malfunction information and DTC exist. >>GO TO 3.
Malfunction information exists but no DTC. >>GO TO 4.
No malfunction information, but DTC exists. >>GO TO 5.

3. REPRODUCE THE MALFUNCTION INFORMATION

Check the malfunction described by the customer on the vehicle.
Record the status of each signal when a symptom occurs with “DATA MONITOR” in “EPS” of CONSULT-III.
Inspect the relation of the information and the condition when it occurs.

>> GO TO 5.

4. CHECK THE MALFUNCTION

Check the malfunction described by the customer on the vehicle.
Record the status of each signal when a symptom occurs with “DATA MONITOR” in “EPS” of CONSULT-III.
Inspect the relation of the information and the condition when it occurs.

>> GO TO 6.

5. PERFORM “DTC CONFIRMATION PROCEDURE”

Perform the “DTC conformation procedure” to the detected DTC and check that the DTC is detected again.
Refer to STC-12, "DTC Inspection Priority Chart" when multiple DTCs are detected, and then judge the order for performing the diagnosis.

Is any DTC detected?

YES >> GO TO 7.
NO >> Follow GI-6, "How to Follow Test Groups in Trouble Diagnosis" to check.

6. IDENTIFY MALFUNCTIONING SYSTEM WITH “SYMPTOM DIAGNOSIS”

Use the “Symptom diagnosis” from the symptom inspection result in step 4. Then identify where to start performing the diagnosis based on the possible causes and the symptoms.

>> GO TO 7.

7. IDENTIFY MALFUNCTIONING PARTS WITH “COMPONENT DIAGNOSIS”

Perform the inspection with the “component diagnosis” of the applicable system.
NOTE:
The “component diagnosis” mainly consists of the check for an open circuit.

The circuit check in the diagnosis procedure also requires the check for a short circuit. Refer to GI-35, "Circuit Inspection" for details.

>> GO TO 8.

8. REPAIR OR REPLACE THE MALFUNCTIONING PARTS

1. Repair or replace the part detected as malfunctioning.
2. After repairing or replacing, reinstall/reconnect parts or connectors removed/disconnected in the “component diagnosis”, and then erase the DTC.

>> GO TO 9.

9. FINAL CHECK

Perform the “DTC confirmation procedure” or “component Inspection” to check that the repair is correctly performed. Check that malfunctions are not reproduced when obtaining the malfunction information from the customer, referring to the symptom inspection result in step 3 or 4.

Is the check result normal?

YES >> Trouble diagnosis is completed.
NO-1 >> The DTC is reproduced. GO TO 7.
NO-2 >> The symptom is reproduced. GO TO 6.

DTC/CIRCUIT DIAGNOSIS

C1601 BATTERY POWER SUPPLY

Description

INFOID:0000000005912720

Power is supplied from the battery to EPS control unit.

DTC Logic

INFOID:0000000005912721

DTC DETECTION LOGIC

DTC	Display item	Malfunction detected condition	Possible cause
C1601	BATTERY VOLT	When a power supply voltage to the EPS control unit is maintained at 17.5 V or more or at less than 9V continuously for five second or more.	• Harness or connector • EPS control unit

DTC CONFIRMATION PROCEDURE

1. DTC REPRODUCTION PROCEDURE

With CONSULT-III

1. Turn the ignition switch OFF to ON.
2. Perform “EPS” self-diagnosis.

Is DTC “C1601” detected?

YES >> Proceed to diagnosis procedure. Refer to STC-19, "Diagnosis Procedure".
NO >> INSPECTION END

Diagnosis Procedure

INFOID:0000000005912722

1. CHECK EPS CONTROL UNIT GROUND CIRCUIT

1. Turn ignition switch OFF.
2. Disconnect EPS control unit harness connector.
3. Check continuity between EPS control unit harness connector terminal and ground.

EPS control unit		—	Continuity
Connector	Terminal		
E36	18	Ground	Existed

4. Connect EPS control unit harness connector.

Is the inspection result normal?

YES >> GO TO 2.
NO >> Repair open circuit or short to ground or short to power in harness or connectors.

2. CHECK EPS CONTROL UNIT POWER SUPPLY CIRCUIT (1)

1. Check voltage between EPS control unit harness connector terminals and ground.

EPS control unit		—	Voltage
Connector	Terminal		
M37	4	Ground	Approx. 0 V

2. Turn ignition switch ON.
   CAUTION:
   Never start the engine.
3. Check voltage between EPS control unit harness connector and ground.

EPS control unit		—	Voltage
Connector	Terminal		
M37	4	Ground	Battery voltage

Is the inspection result normal?

YES >> GO TO 4.
NO >> GO TO 3.

3. CHECK EPS CONTROL UNIT POWER SUPPLY CIRCUIT (2)

1. Turn ignition switch OFF.
2. Check the 10A fuse (#3).
3. Check the harness for open or short between EPS control unit harness connector No.4 terminal and the 10A fuse (#3).

Is the inspection result normal?

YES >> Perform the trouble diagnosis for ignition power supply circuit. Refer to PG-19, "Wiring Diagram - IGNITION POWER SUPPLY -".
NO >> Repair or replace error-detected parts.

4. CHECK EPS CONTROL UNIT POWER SUPPLY CIRCUIT (3)

1. Turn ignition switch OFF.
2. Check voltage between EPS control unit harness connector terminals and ground.

EPS control unit		—	Voltage
Connector	Terminal		
E36	17	Ground	Battery voltage

3. Turn ignition switch ON.
   CAUTION:
   Never start the engine.
4. Check voltage between EPS control unit harness connector and ground.

EPS control unit		—	Voltage
Connector	Terminal		
E36	17	Ground	Battery voltage

Is the inspection result normal?

YES >> GO TO 6.
NO >> GO TO 5.

5. CHECK EPS CONTROL UNIT POWER SUPPLY CIRCUIT (4)

1. Turn ignition switch OFF.
2. Check the 60A fusible link (J).
3. Check the harness for open or short between EPS control unit harness connector No.17 terminal and the 60A fusible link (J).

Is the inspection result normal?

YES >> Perform the trouble diagnosis for power supply circuit. Refer to PG-10, "Wiring Diagram - BATTERY POWER SUPPLY -".
NO >> Repair or replace error-detected parts.

6. CHECK CONNECTOR

1. Turn ignition switch OFF.
2. Disconnect torque sensor harness connector.
3. Check terminal for deformation, disconnection, looseness, and so on. If any malfunction is found, repair or replace terminal.

Is the inspection result normal?

YES >> Replace EPS control unit. Refer to STC-34, "Exploded View".
NO >> Repair or replace error-detected parts.

C1604 TORQUE SENSOR

DTC Logic

INFOID:0000000005912724

DTC DETECTION LOGIC

DTC	Display item	Malfunction detected condition	Possible cause
C1604	TORQUE SENSOR	When torque sensor output signal is malfunctioning.	• Harness or connector • Torque sensor • EPS control unit

DTC CONFIRMATION PROCEDURE

1. DTC REPRODUCTION PROCEDURE

With CONSULT-III

1. Turn the ignition switch OFF to ON.
2. Perform “EPS” self-diagnosis.

Is DTC “C1604” detected?

YES >> Proceed to diagnosis procedure. Refer to STC-21, "Diagnosis Procedure".
NO >> INSPECTION END

Diagnosis Procedure

INFOID:0000000005912725

1. CHECK TORQUE SENSOR POWER SUPPLY CIRCUIT

1. Turn ignition switch OFF to ON.
   CAUTION:
   Never start the engine.
2. Check voltage between torque sensor harness connector terminals and ground.
   CAUTION:
   Steering wheel is neutral position. (There is no steering force.)

Torque sensor		—	Voltage
Connector	Terminal		
M327	13	Ground	Approx. 5 V

Is the inspection result normal?

YES >> GO TO 2.
NO >> Perform the trouble diagnosis for battery power supply circuit. Refer to STC-19, "Diagnosis Procedure".

2. CHECK TORQUE SENSOR GROUND CIRCUIT

1. Turn ignition switch OFF.
2. Check continuity between torque sensor harness connector terminal and ground.
   CAUTION:
   Steering wheel is neutral position. (There is no steering force.)

Torque sensor		—	Continuity
Connector	Terminal		
M327	15	Ground	Existed

Is the inspection result normal?

YES >> GO TO 3.
NO >> Repair open circuit or short to ground or short to power in harness or connectors.

3. CHECK TORQUE SENSOR SIGNAL

1. Turn ignition switch OFF to ON.
2. Check continuity between torque sensor harness connector terminal and ground.
   CAUTION:

Steering wheel is neutral position. (There is no steering force.)

Torque sensor		—	Continuity
Connector	Terminal		
M327	14	Ground	Approx. 2.5 V
	16		

Is the inspection result normal?

YES >> GO TO 4.
NO >> Torque sensor is malfunction. Replace steering column assembly. Refer to ST-11, "Exploded View".

4. CHECK CONNECTOR

1. Turn ignition switch OFF.
2. Disconnect torque sensor harness connector.
3. Check terminal for deformation, disconnection, looseness, and so on. If any malfunction is found, repair or replace terminal.

Is the inspection result normal?

YES >> Replace EPS control unit. Refer to STC-34, "Exploded View".
NO >> Repair or replace error-detected parts.

C1606 EPS MOTOR

DTC Logic

INFOID:0000000005912727

DTC DETECTION LOGIC

DTC	Display item	Malfunction detected condition	Possible cause
C1606	EPS MOTOR	When the motor driver malfunction of EPS control unit or EPS motor malfunction is detected.	• Harness or connector • EPS motor • EPS control unit

DTC CONFIRMATION PROCEDURE

1. DTC REPRODUCTION PROCEDURE

With CONSULT-III

1. Turn the ignition switch OFF to ON.
2. Perform “EPS” self-diagnosis.

Is DTC “C1606” detected?

YES >> Proceed to diagnosis procedure. Refer to STC-23, "Diagnosis Procedure".
NO >> INSPECTION END

Diagnosis Procedure

INFOID:0000000005912728

1. CHECK EPS MOTOR

Check the EPS motor. Refer to STC-23, "Component Inspection".

Is the inspection result normal?

YES >> GO TO 2.
NO >> EPS motor is malfunction. Replace steering column assembly. Refer to ST-11, "Exploded View".

2. CHECK CONNECTOR

1. Turn ignition switch OFF.
2. Disconnect EPS motor harness connector.
3. Check terminal for deformation, disconnection, looseness, and so on. If any malfunction is found, repair or replace terminal.

Is the inspection result normal?

YES >> Replace EPS control unit. Refer to STC-34, "Exploded View".
NO >> Repair or replace error-detected parts.

Component Inspection

INFOID:0000000005912729

1. CHECK EPS MOTOR

1. Turn the ignition switch OFF.
2. Disconnect EPS motor harness connector.
3. Check resistance between EPS motor connector terminals.

EPS motor		Resistance (Approx.)
Terminal		
19	20	0.1 Ω or less

Is the inspection result normal?

YES >> INSPECTION END
NO >> EPS motor is malfunction. Replace steering column assembly. Refer to ST-11, "Exploded View".

C1607, C1608 EPS CONTROL UNIT

DTC Logic

INFOID:0000000005912731

DTC DETECTION LOGIC

DTC	Display item	Malfunction detected condition	Possible cause
C1607	EEPROM	When the memory (EEPROM) system malfunction is detected in EPS control unit.	EPS control unit
C1608	CONTROL UNIT	When the internal malfunction is detected in EPS control unit.	

DTC CONFIRMATION PROCEDURE

1. DTC REPRODUCTION PROCEDURE

With CONSULT-III

1. Turn the ignition switch OFF to ON.
2. Perform “EPS” self-diagnosis.

Is DTC “C1607” or “C1608” detected?

YES >> Proceed to diagnosis procedure. Refer to STC-24, "Diagnosis Procedure".
NO >> INSPECTION END

Diagnosis Procedure

INFOID:0000000005912732

1. PERFORM SELF-DIAGNOSIS

With CONSULT-III

1. Turn the ignition switch OFF to ON.
2. Erase self-diagnosis results for “EPS”.
3. Perform “EPS” self-diagnosis.

Is DTC “C1607” or “C1608” detected?

YES >> Replace EPS control unit. Refer to STC-34, "Exploded View".
NO >> Check EPS control unit pin terminals for damage or loose connection with harness connector. If any item are damaged, repair or replace error-detected parts.

C1609 VEHICLE SPEED SIGNAL

Description

INFOID:0000000005912733

EPS control unit receives the vehicle speed signal from ABS actuator and electric unit (control unit) via CAN communication line.

DTC Logic

INFOID:0000000005912734

DTC DETECTION LOGIC

DTC	Display item	Malfunction detected condition	Possible cause
C1609	CAN VHCL SPEED	• Malfunction is detected in vehicle speed signal that is output from ABS actuator and electric unit (control unit) via CAN communication. • ABS actuator and electric unit (control unit) input signal error is detected.	• Harness or connector • CAN communication line • EPS control unit • ABS malfunction - Vehicle speed signal error

DTC CONFIRMATION PROCEDURE

1. DTC REPRODUCTION PROCEDURE

With CONSULT-III

1. Turn the ignition switch OFF to ON.
2. Perform “EPS” self-diagnosis.

Is DTC “C1609” detected?

YES >> Proceed to diagnosis procedure. Refer to STC-25, "Diagnosis Procedure".
NO >> INSPECTION END

Diagnosis Procedure

INFOID:0000000005912735

1. PERFORM ABS ACTUATOR AND ELECTRIC UNIT (CONTROL UNIT) SELF-DIAGNOSIS

With CONSULT-III

1. Turn the ignition switch OFF to ON.
2. Perform “ABS” self-diagnosis.

Is any DTC detected?

YES >> Check the DTC.
NO >> GO TO 2.

2. PERFORM SELF-DIAGNOSIS

With CONSULT-III

Perform “EPS” self-diagnosis.

Is DTC “C1609” detected?

YES >> Replace EPS control unit. Refer to STC-34, "Exploded View".
NO >> Check EPS control unit pin terminals for damage or loose connection with harness connector. If any item are damaged, repair or replace error-detected parts.

C1610 ENGINE STATUS SIGNAL

Description

INFOID:0000000005912736

EPS control unit receives the engine status signal from ECM via CAN communication line.

DTC Logic

INFOID:0000000005912737

DTC DETECTION LOGIC

DTC	Display item	Malfunction detected condition	Possible cause
C1610	CAN ENG RPM	• Malfunction is detected in engine status signal that is output from ECM via CAN communication. • ECM input signal error is detected.	• Harness or connector • CAN communication line • EPS control unit • ECM - Engine status signal error

DTC CONFIRMATION PROCEDURE

1. DTC REPRODUCTION PROCEDURE

With CONSULT-III

1. Turn the ignition switch OFF to ON.
2. Perform “EPS” self-diagnosis.

Is DTC “C1610” detected?

YES >> Proceed to diagnosis procedure. Refer to STC-26, "Diagnosis Procedure".
NO >> INSPECTION END

Diagnosis Procedure

INFOID:0000000005912738

1. PERFORM ECM SELF-DIAGNOSIS

With CONSULT-III

1. Turn the ignition switch OFF to ON.
2. Perform “ENGINE” self-diagnosis. Refer to EC-57, "CONSULT-III Function" [HR12DE (TYPE 1)], EC-350, "CONSULT-III Function" [HR12DE (TYPE 2)].

Is any DTC detected?

YES >> Check the DTC. Refer to EC-78, "DTC Index" [HR12DE (TYPE 1)], EC-365, "DTC Index" [HR12DE (TYPE 2)].
NO >> GO TO 2.

2. PERFORM SELF-DIAGNOSIS

With CONSULT-III

Perform “EPS” self-diagnosis.

Is DTC “C1610” detected?

YES >> Replace EPS control unit. Refer to STC-34, "Exploded View".
NO >> Check EPS control unit pin terminals for damage or loose connection with harness connector. If any item are damaged, repair or replace error-detected parts.

U1000 CAN COMM CIRCUIT

Description

INFOID:0000000005912739

CAN (Controller Area Network) is a serial communication line for real time application. It is an on-vehicle multiplex communication line with high data communication speed and excellent error detection ability. Many electronic control units are equipped onto a vehicle, and each control unit shares information and links with other control units during operation (not independent). In CAN communication, control units are connected with 2 communication lines (CAN-H line, CAN-L line) allowing a high rate of information transmission with less wiring. Each control unit communicate data but selectively reads required data only.

DTC Logic

INFOID:0000000005912740

DTC DETECTION LOGIC

DTC	Display item	Malfunction detected condition	Possible cause
U1000	CAN COMM CIRCUIT	EPS control unit is not transmitting/receiving CAN communication signal for 2 seconds or more.	• CAN communication error • EPS control unit

DTC CONFIRMATION PROCEDURE

1. DTC REPRODUCTION PROCEDURE

With CONSULT-III

1. Turn the ignition switch OFF to ON.
2. Perform “EPS” self-diagnosis.

Is DTC “U1000” detected?

YES >> Proceed to diagnosis procedure. Refer to STC-27, "Diagnosis Procedure".
NO >> INSPECTION END

Diagnosis Procedure

INFOID:0000000005912741

1. PERFORM SELF-DIAGNOSIS

With CONSULT-III

Perform “EPS” self-diagnosis.

Is DTC “U1000” detected?

YES >> Refer to LAN-23, "CAN COMMUNICATION SYSTEM : CAN System Specification Chart".
NO >> INSPECTION END

EPS WARNING LAMP

Component Function Check

INFOID:0000000005912743

1. CHECK THE ILLUMINATION OF THE EPS WARNING LAMP

Check that the EPS warning lamp turns ON when ignition switch turns ON. Then, EPS warning lamp turns OFF after the engine is started.

Is the inspection result normal?

YES >> INSPECTION END
NO >> Perform trouble diagnosis. Refer to STC-28, "Diagnosis Procedure".

Diagnosis Procedure

INFOID:0000000005912744

1. PERFORM SELF-DIAGNOSIS

With CONSULT-III

1. Turn the ignition switch OFF to ON.
2. Perform “EPS” self-diagnosis.

Is any DTC detected?

YES >> Check the DTC. Refer to STC-12, "DTC Index".
NO >> GO TO 2.

2. CHECK EPS WARNING LAMP SIGNAL

With CONSULT-III

1. Turn the ignition switch ON.
   CAUTION:
   Never start the engine.
2. Select “DATA MONITOR” of “EPS” and select “WARNING LAMP” of “DATA MONITOR”
3. Check that the EPS warning lamp is turned ON.
4. Start the engine.
   CAUTION:
   Stop the vehicle.
5. Check that the EPS warning lamp is turned OFF.

Is the inspection result normal?

YES >> Perform the trouble diagnosis for combination meter power supply circuit. Refer to MWI-40, "COMBINATION METER : Diagnosis Procedure".
NO >> Replace the EPS control unit. Refer to STC-34, "Exploded View".

SYMPTOM DIAGNOSIS

EPS WARNING LAMP DOES NOT TURN ON

Description

INFOID:0000000005912745

EPS warning lamp does not turn ON when turning ignition switch ON from OFF. (Check the illumination of the EPS warning lamp.)

Diagnosis Procedure

INFOID:0000000005912746

1. CHECK EPS WARNING LAMP

Perform the trouble diagnosis of EPS warning Lamp. Refer to STC-28, "Diagnosis Procedure".

Is the inspection result normal?

YES >> Check that there is no malfunction in each harness connector pin terminal or disconnection.
NO >> Repair or replace the specific malfunctioning part.

EPS WARNING LAMP DOES NOT TURN OFF

Description

INFOID:0000000005912747

EPS warning lamp does not turn OFF several seconds after engine started.

Diagnosis Procedure

INFOID:0000000005912748

1. PERFORM SELF-DIAGNOSIS

With CONSULT-III

1. Turn the ignition switch OFF to ON.
2. Perform “EPS” self-diagnosis.

Is any DTC detected?

YES >> Check the DTC. Refer to STC-12, "DTC Index".
NO >> GO TO 2.

2. CHECK EPS WARNING LAMP

Perform the trouble diagnosis of EPS warning Lamp. Refer to STC-28, "Diagnosis Procedure".

Is the inspection result normal?

YES >> GO TO 3.
NO >> Repair or replace the specific malfunctioning part.

3. CHECK EPS CONTROL UNIT POWER SUPPLY AND GROUND CIRCUIT

Perform the trouble diagnosis of EPS control unit power supply and ground. Refer to STC-19, "Diagnosis Procedure".

Is the inspection result normal?

YES >> Check that there is no malfunction in each harness connector pin terminal or disconnection.
NO >> Repair or replace the specific malfunctioning part.

STEERING WHEEL TURNING FORCE IS HEAVY OR LIGHT

Description

INFOID:0000000005912749

Steering wheel turning force is heavy or light.

Diagnosis Procedure

INFOID:0000000005912750

1. CHECK THE ILLUMINATION OF THE EPS WARNING LAMP

Check that the EPS warning lamp turns ON when ignition switch turns ON. Then, EPS warning lamp turns OFF after the engine is started.

Is the inspection result normal?

YES >> GO TO 4.
NO >> GO TO 2.

2. PERFORM SELF-DIAGNOSIS

With CONSULT-III

1. Turn the ignition switch OFF to ON.
2. Perform “EPS” self-diagnosis.

Is any DTC detected?

YES >> Check the DTC. Refer to STC-12, "DTC Index".
NO >> GO TO 3.

3. CHECK EPS CONTROL UNIT SIGNAL

With CONSULT-III

1. Start the engine.
   CAUTION:
   Stop the vehicle.
2. Turn steering wheel from full left stop to full right stop.
3. Select “DATA MONITOR” of “EPS” and select “TORQUE SENSOR”.
4. Perform the torque sensor inspection.

Monitor item	Condition	Display value
TORQUE SENSOR	Steering wheel: Not steering (There is no steering force)	Approx. 0 Nm
	Steering wheel: Right turn	Positive value (Nm)
	Steering wheel: Left turn	Negative value (Nm)

Is the inspection result normal?

YES >> GO TO 5.
NO >> GO TO 4.

4. CHECK EPS MOTOR

Perform the trouble diagnosis of EPS motor. Refer to STC-23, "Diagnosis Procedure".

Is the inspection result normal?

YES >> GO TO 5.
NO >> Repair or replace the specific malfunctioning part.

5. CHECK STEERING WHEEL TURNING FORCE

Check the steering wheel turning force. Refer to ST-8, "Inspection".

Is the inspection result normal?

YES >> INSPECTION END
NO >> Check the steering wheel turning force for mechanical malfunction. Refer to ST-8, "Inspection".

UNBALANCE STEERING WHEEL TURNING FORCE AND RETURN BETWEEN RIGHT AND LEFT

Description

INFOID:0000000005912751

Unbalance steering wheel turning force and return between right and left.

Diagnosis Procedure

INFOID:0000000005912752

1. CHECK THE ILLUMINATION OF THE EPS WARNING LAMP

Check that the EPS warning lamp turns ON when ignition switch turns ON. Then, EPS warning lamp turns OFF after the engine is started.

Is the inspection result normal?

YES >> GO TO 2.
NO >> Refer to STC-30, "Diagnosis Procedure".

2. CHECK WHEEL ALIGNMENT

1. Check the wheel alignment. Refer to FSU-7, "Inspection".
2. Perform “EPS” self-diagnosis.

Is the inspection result normal?

YES >> GO TO 3.
NO >> Adjustment of wheel alignment. Refer to FSU-7, "Inspection".

3. CHECK EPS CONTROL UNIT SIGNAL

With CONSULT-III

1. Start the engine.
   CAUTION:
   Stop the vehicle.
2. Turn steering wheel from full left stop to full right stop.
3. Select “DATA MONITOR” of “EPS” and select “TORQUE SENSOR”.
4. Perform the torque sensor inspection.

Monitor item	Condition	Display value
TORQUE SENSOR	Steering wheel: Not steering (There is no steering force)	Approx. 0 Nm
	Steering wheel: Right turn	Positive value (Nm)
	Steering wheel: Left turn	Negative value (Nm)

Is the inspection result normal?

YES >> GO TO 5.
NO >> GO TO 4.

4. CHECK EPS MOTOR

Perform the trouble diagnosis of EPS motor. Refer to STC-23, "Diagnosis Procedure".

Is the inspection result normal?

YES >> GO TO 5.
NO >> Repair or replace the specific malfunctioning part.

5. CHECK STEERING WHEEL TURNING FORCE

Check the steering wheel turning force. Refer to ST-8, "Inspection".

Is the inspection result normal?

YES >> INSPECTION END
NO >> Check the steering wheel turning force for mechanical malfunction. Refer to ST-8, "Inspection".

UNBALANCE STEERING WHEEL TURNING FORCE (TORQUE VARIATION)

Description

INFOID:0000000005912753

Unbalance steering wheel turning force (torque variation).

Diagnosis Procedure

INFOID:0000000005912754

1. CHECK THE ILLUMINATION OF THE EPS WARNING LAMP

Check that the EPS warning lamp turns ON when ignition switch turns ON. Then, EPS warning lamp turns OFF after the engine is started.

Is the inspection result normal?

YES >> GO TO 2.
NO >> Refer to STC-30, "Diagnosis Procedure".

2. CHECK STEERING COLUMN AND STEERING GEAR

Check the steering column assembly and steering gear assembly.
- Steering column assembly. Refer to ST-11, "Exploded View".
- Steering gear assembly. Refer to ST-14, "Exploded View".

Is the inspection result normal?

YES >> GO TO 3.
NO >> Repair or replace the specific malfunctioning part.

3. CHECK EPS CONTROL UNIT SIGNAL

With CONSULT-III

1. Start the engine.
   CAUTION:
   Stop the vehicle.
2. Turn steering wheel from full left stop to full right stop.
3. Select “DATA MONITOR” of “EPS” and select “TORQUE SENSOR”.
4. Perform the torque sensor inspection.

Monitor item	Condition	Display value
TORQUE SENSOR	Steering wheel: Not steering (There is no steering force)	Approx. 0 Nm
	Steering wheel: Right turn	Positive value (Nm)
	Steering wheel: Left turn	Negative value (Nm)

Is the inspection result normal?

YES >> GO TO 5.
NO >> GO TO 4.

4. CHECK EPS MOTOR

Perform the trouble diagnosis of EPS motor. Refer to STC-23, "Diagnosis Procedure".

Is the inspection result normal?

YES >> GO TO 5.
NO >> Repair or replace the specific malfunctioning part.

5. CHECK STEERING WHEEL TURNING FORCE

Check the steering wheel turning force. Refer to ST-8, "Inspection".

Is the inspection result normal?

YES >> INSPECTION END
NO >> Check the steering wheel turning force for mechanical malfunction. Refer to ST-8, "Inspection".

REMOVAL AND INSTALLATION

EPS CONTROL UNIT

Exploded View

INFOID:0000000005912755

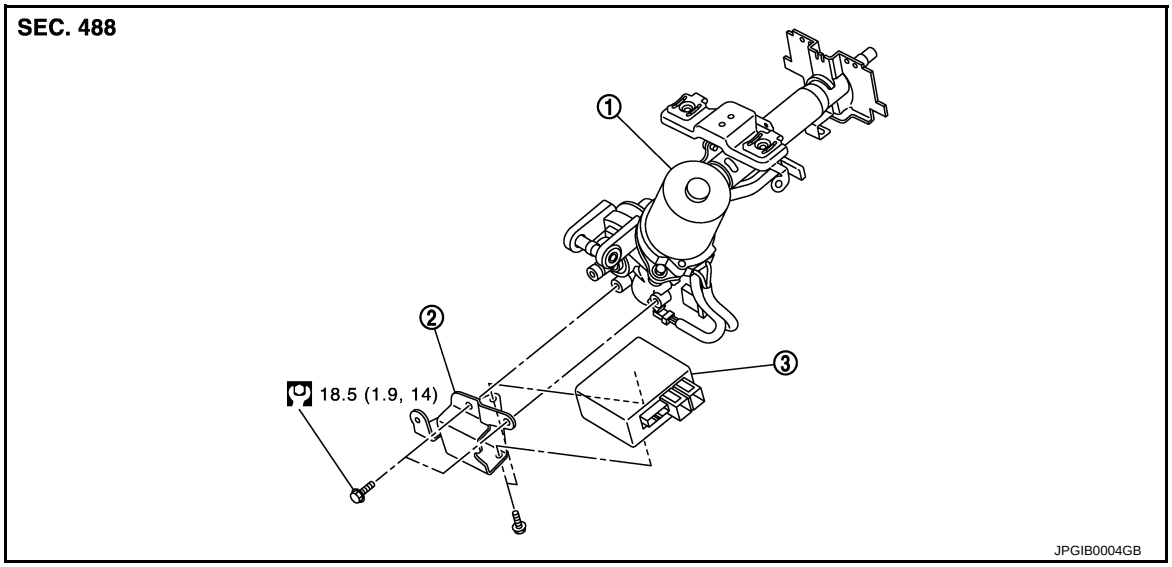

1. Steering column assembly
2. Bracket
3. EPS control unit

Refer to GI-4, "Components" for symbols in the figure.

Removal and Installation

INFOID:0000000005912756

REMOVAL

CAUTION:

- **Disconnect battery negative terminal before starting operations.**
- **Never shock EPS control unit, e.g. drop or hit.**
- **Never get EPS control unit wet with water or other liquid. Also, do not give EPS control unit a radical temperature change to avoid getting water drops.**
- **Never disassemble or remodel EPS control unit, EPS motor, torque sensor, harness and connectors.**

1. Remove instrument lower panel LH. Refer to IP-12, "Exploded View".
2. Disconnect EPS control unit connectors.
   CAUTION:
   Hold and pull the connector housing, not pulling harness, when disconnecting connectors. Also, do not grip, collapse or apply excessive force to the connector.
3. Remove EPS control unit from steering column assembly.

INSTALLATION

Note the following, and install in the reverse order of removal.

- Check that harness is not damaged when installing EPS control unit. Also, check that EPS control unit is installed without trapping harness of foreign materials.
- After installing steering column assembly, perform self-diagnosis with CONSULT-III to ensure correct operation. Refer to STC-9, "CONSULT-III Function".

SECTION STR
STARTING SYSTEM

CONTENTS

PRECAUTION 3

PRECAUTIONS 3
Precaution for Supplemental Restraint System (SRS) "AIR BAG" and "SEAT BELT PRE-TENSIONER" 3
Precaution Necessary for Steering Wheel Rotation after Battery Disconnect 3

PREPARATION 4

PREPARATION 4
Commercial Service Tools 4

SYSTEM DESCRIPTION 5

COMPONENT PARTS 5

STARTING SYSTEM (WITH INTELLIGENT KEY) 5
STARTING SYSTEM (WITH INTELLIGENT KEY) : Component Parts Location 5
STARTING SYSTEM (WITH INTELLIGENT KEY) : Component Description 5

STARTING SYSTEM (WITHOUT INTELLIGENT KEY) 6
STARTING SYSTEM (WITHOUT INTELLIGENT KEY) : Component Parts Location 6
STARTING SYSTEM (WITHOUT INTELLIGENT KEY) : Component Description 6

SYSTEM 7

STARTING SYSTEM (WITH INTELLIGENT KEY) 7
STARTING SYSTEM (WITH INTELLIGENT KEY) : System Diagram 7
STARTING SYSTEM (WITH INTELLIGENT KEY) : System Description 7

STARTING SYSTEM (WITHOUT INTELLIGENT KEY) 7
STARTING SYSTEM (WITHOUT INTELLIGENT KEY) : System Diagram 8
STARTING SYSTEM (WITHOUT INTELLIGENT KEY) : System Description 8

WIRING DIAGRAM 9

STARTING SYSTEM (WITH INTELLIGENT KEY) 9
Wiring Diagram 9

STARTING SYSTEM (WITHOUT INTELLIGENT KEY) 10
Wiring Diagram 10

BASIC INSPECTION 11

DIAGNOSIS AND REPAIR WORK FLOW 11
Work Flow 11

DTC/CIRCUIT DIAGNOSIS 14

B TERMINAL CIRCUIT 14
Description 14
Diagnosis Procedure 14

S TERMINAL CIRCUIT 15
Description 15
Diagnosis Procedure 15

SYMPTOM DIAGNOSIS 17

STARTING SYSTEM 17
Symptom Table 17

REMOVAL AND INSTALLATION 18

STARTER MOTOR 18
Exploded View 18
Removal and Installation 19
Inspection and Adjustment 19

SERVICE DATA AND SPECIFICATIONS (SDS) 24

SERVICE DATA AND SPECIFICATIONS (SDS) 24
Starter Motor 24

PRECAUTION

PRECAUTIONS

Precaution for Supplemental Restraint System (SRS) "AIR BAG" and "SEAT BELT PRE-TENSIONER"

INFOID:0000000006057595

The Supplemental Restraint System such as “AIR BAG” and “SEAT BELT PRE-TENSIONER”, used along with a front seat belt, helps to reduce the risk or severity of injury to the driver and front passenger for certain types of collision. Information necessary to service the system safely is included in the “SRS AIR BAG” and “SEAT BELT” of this Service Manual.

WARNING:

- **To avoid rendering the SRS inoperative, which could increase the risk of personal injury or death in the event of a collision which would result in air bag inflation, all maintenance must be performed by an authorized NISSAN/INFINITI dealer.**
- **Improper maintenance, including incorrect removal and installation of the SRS, can lead to personal injury caused by unintentional activation of the system. For removal of Spiral Cable and Air Bag Module, see the “SRS AIR BAG”.**
- **Do not use electrical test equipment on any circuit related to the SRS unless instructed to in this Service Manual. SRS wiring harnesses can be identified by yellow and/or orange harnesses or harness connectors.**

PRECAUTIONS WHEN USING POWER TOOLS (AIR OR ELECTRIC) AND HAMMERS

WARNING:

- **When working near the Air Bag Diagnosis Sensor Unit or other Air Bag System sensors with the ignition ON or engine running, DO NOT use air or electric power tools or strike near the sensor(s) with a hammer. Heavy vibration could activate the sensor(s) and deploy the air bag(s), possibly causing serious injury.**
- **When using air or electric power tools or hammers, always switch the ignition OFF, disconnect the battery, and wait at least 3 minutes before performing any service.**

Precaution Necessary for Steering Wheel Rotation after Battery Disconnect

INFOID:0000000006057596

NOTE:

- Before removing and installing any control units, first turn the push-button ignition switch to the LOCK position, then disconnect both battery cables.
- After finishing work, confirm that all control unit connectors are connected properly, then re-connect both battery cables.
- Always use CONSULT-III to perform self-diagnosis as a part of each function inspection after finishing work. If a DTC is detected, perform trouble diagnosis according to self-diagnosis results.

For vehicle with steering lock unit, if the battery is disconnected or discharged, the steering wheel will lock and cannot be turned.

If turning the steering wheel is required with the battery disconnected or discharged, follow the operation procedure below before starting the repair operation.

OPERATION PROCEDURE

1. Connect both battery cables.
   NOTE:
   Supply power using jumper cables if battery is discharged.
2. Turn the push-button ignition switch to ACC position.
   (At this time, the steering lock will be released.)
3. Disconnect both battery cables. The steering lock will remain released with both battery cables disconnected and the steering wheel can be turned.
4. Perform the necessary repair operation.
5. When the repair work is completed, re-connect both battery cables. With the brake pedal released, turn the push-button ignition switch from ACC position to ON position, then to LOCK position. (The steering wheel will lock when the push-button ignition switch is turned to LOCK position.)
6. Perform self-diagnosis check of all control units using CONSULT-III.

PREPARATION

PREPARATION

Commercial Service Tools

INFOID:0000000006057504

Tool name	Description
Power tool 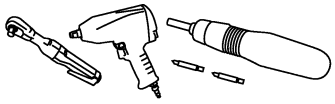 PIIB1407E	Loosening bolts, nuts and screws

SYSTEM DESCRIPTION

COMPONENT PARTS

STARTING SYSTEM (WITH INTELLIGENT KEY)

STARTING SYSTEM (WITH INTELLIGENT KEY) : Component Parts Location

INFOID:0000000006057516

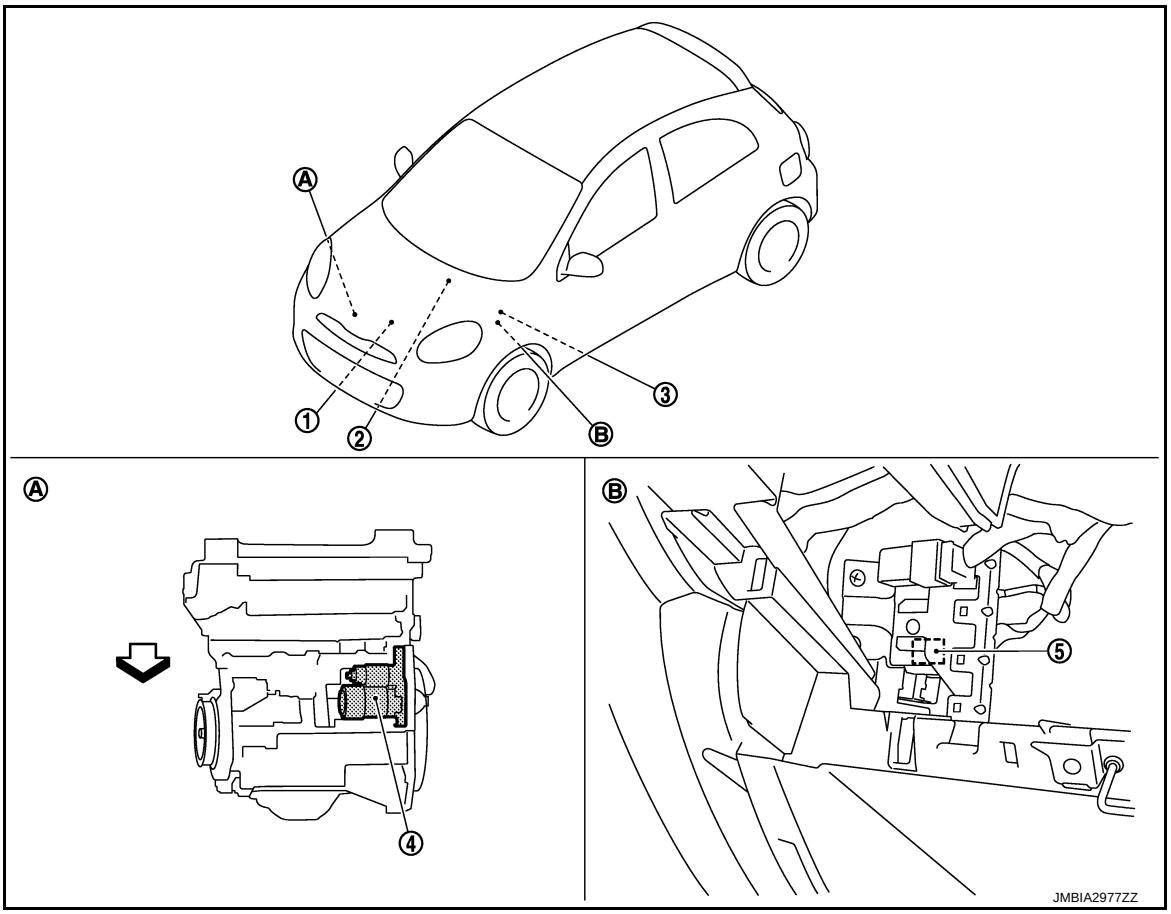

1. Transmission range switch
   Refer to A/T.
2. IPDM E/R
   Refer to PCS-5, "Component Parts Location".
3. BCM
   Refer to BCS-5, "BODY CONTROL SYSTEM : Component Parts Location".
4. Starter motor
5. Starter relay

A. Engine
B. Glove box removed condition

⇦ :Vehicle front

STARTING SYSTEM (WITH INTELLIGENT KEY) : Component Description

INFOID:0000000006057517

Component part	Description
BCM	BCM controls the starter relay.
IPDM E/R	CPU inside IPDM E/R controls the starter control relay.
Starter motor	The starter motor plunger closes and the motor is supplied with battery power, which in turn cranks the engine, when the “S” terminal is supplied with electric power.

Component part	Description
Starter relay	Power is supplied to the starter control relay with BCM control.
Transmission range switch	Transmission range switch supplies power to the starter relay and starter control relay inside IPDM E/R when the selector lever is shifted to the P or N position.

STARTING SYSTEM (WITHOUT INTELLIGENT KEY)

STARTING SYSTEM (WITHOUT INTELLIGENT KEY) : Component Parts Location

INFOID:0000000006066881

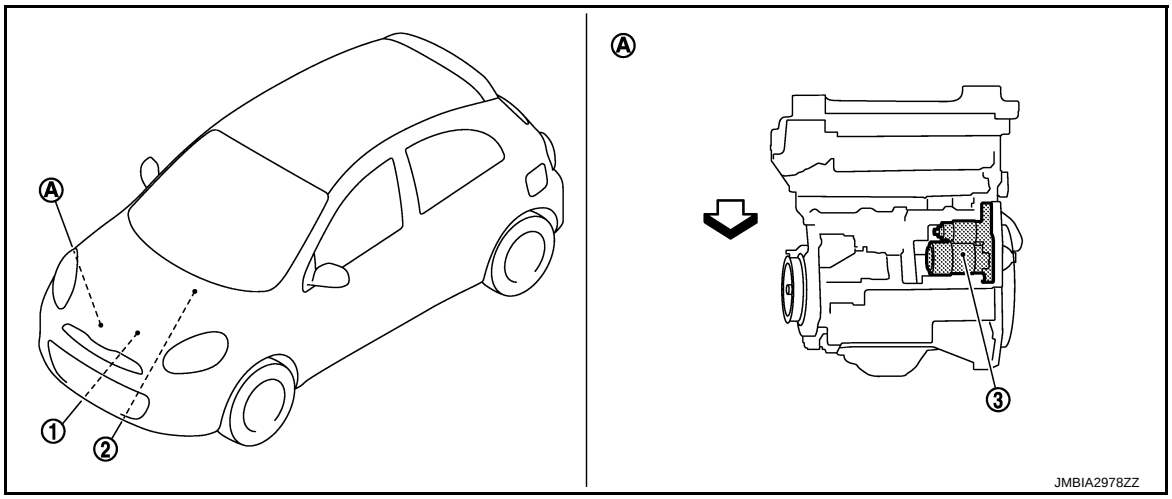

1. Transmission range switch
   Refer to A/T. (A/T models)
2. IPDM E/R (A/T models)
   Refer to PCS-30, "Component Parts Location".
3. Starter motor

A. Engine

⇦ :Vehicle front

STARTING SYSTEM (WITHOUT INTELLIGENT KEY) : Component Description

INFOID:0000000006066882

Component part	Description
IPDM E/R (A/T models)	CPU inside IPDM E/R controls the starter control relay.
Starter motor	The starter motor plunger closes and the motor is supplied with battery power, which in turn cranks the engine, when the “S” terminal is supplied with electric power.
Transmission range switch (A/T models)	Transmission range switch supplies power to the starter control relay inside IPDM E/R when the selector lever is shifted to the P or N position.

SYSTEM

STARTING SYSTEM (WITH INTELLIGENT KEY)

STARTING SYSTEM (WITH INTELLIGENT KEY) : System Diagram

INFOID:0000000006057512

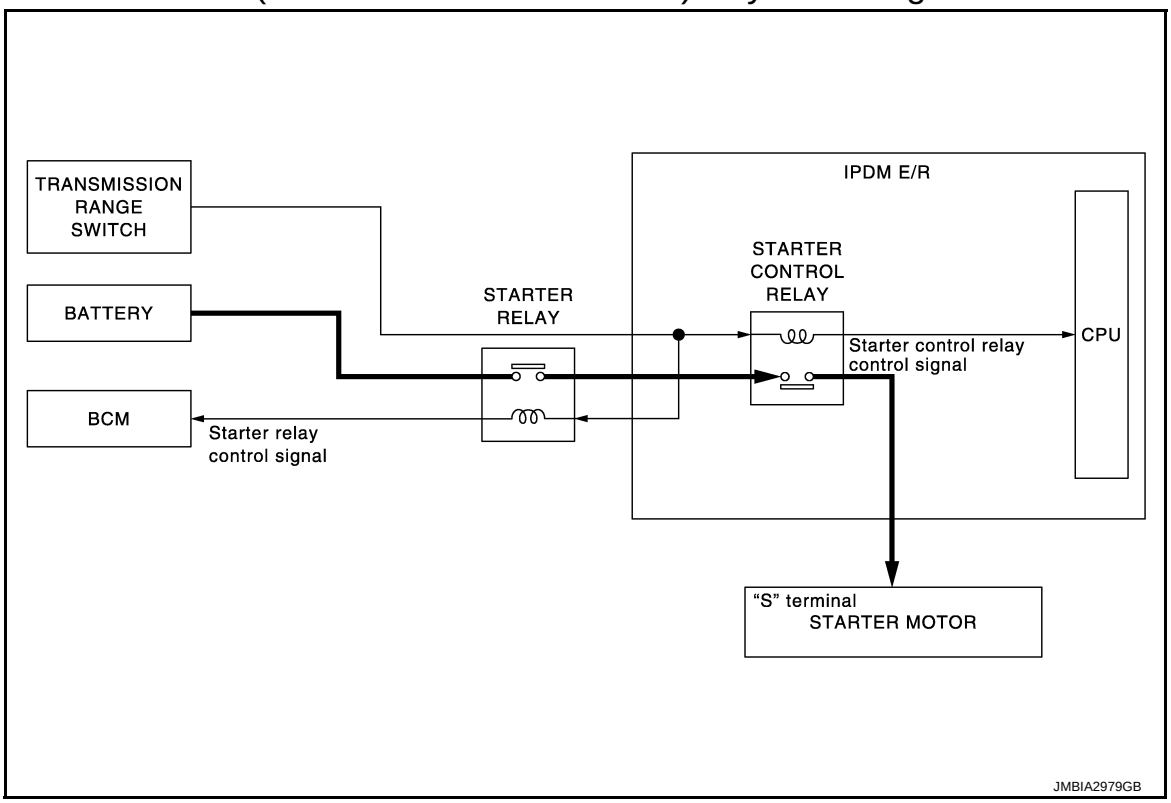

STARTING SYSTEM (WITH INTELLIGENT KEY) : System Description

INFOID:0000000006057514

- When selector lever is P or N, power is supplied to starter relay and starter control relay by transmission range switch. And BCM and IPDM E/R (CPU) detect selector lever P/N condition by the inputted signal.
- When starter operating condition is satisfied, IPDM E/R turns starter control relay ON by starter control relay control signal.
- When engine cranking condition is satisfied, BCM turns starter relay ON by starter control relay control signal.
- Then battery power is supplied to starter motor ("S" terminal) through starter control relay and starter relay.

STARTING SYSTEM (WITHOUT INTELLIGENT KEY)

STARTING SYSTEM (WITHOUT INTELLIGENT KEY) : System Diagram

INFOID:0000000006066883

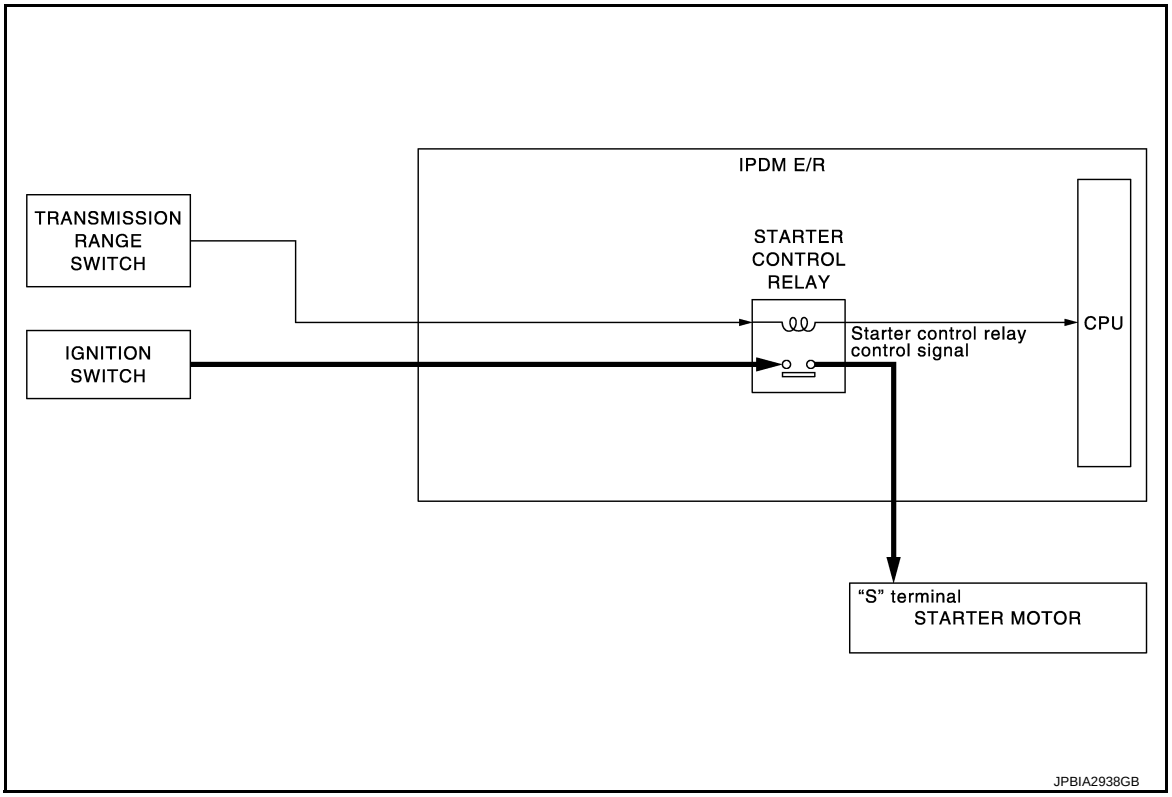

STARTING SYSTEM (WITHOUT INTELLIGENT KEY) : System Description

INFOID:0000000006066884

A/T models

- When selector lever is P or N, power is supplied to starter control relay by transmission range switch. And IPDM E/R (CPU) detect selector lever P/N condition by the inputted signal.
- When engine cranking condition is satisfied, then battery power is supplied to starter motor ("S" terminal) through starter control relay.

M/T models

When ignition switch is START position, battery power is supplied to starter motor ("S" terminal).

WIRING DIAGRAM

STARTING SYSTEM (WITH INTELLIGENT KEY)

Wiring Diagram

INFOID:0000000006057520

For connector terminal arrangements, harness layouts, and alphabets in a ⬡ (option abbreviation; if not described in wiring diagram), refer to GI-12, "Connector Information".

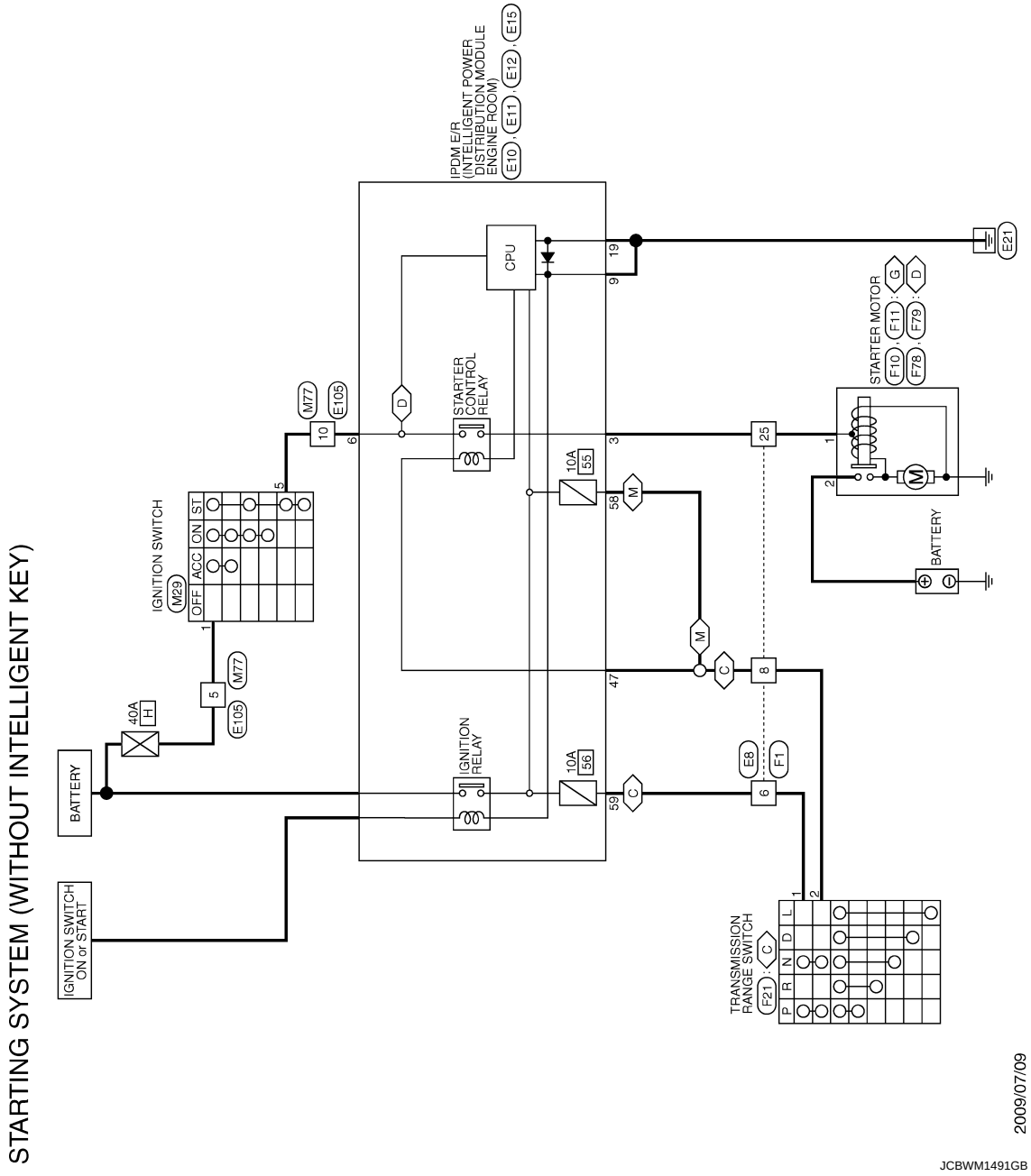

STARTING SYSTEM (WITHOUT INTELLIGENT KEY)

Wiring Diagram

INFOID:0000000006066886

For connector terminal arrangements, harness layouts, and alphabets in a ⬡ (option abbreviation; if not described in wiring diagram), refer to GI-12, "Connector Information".

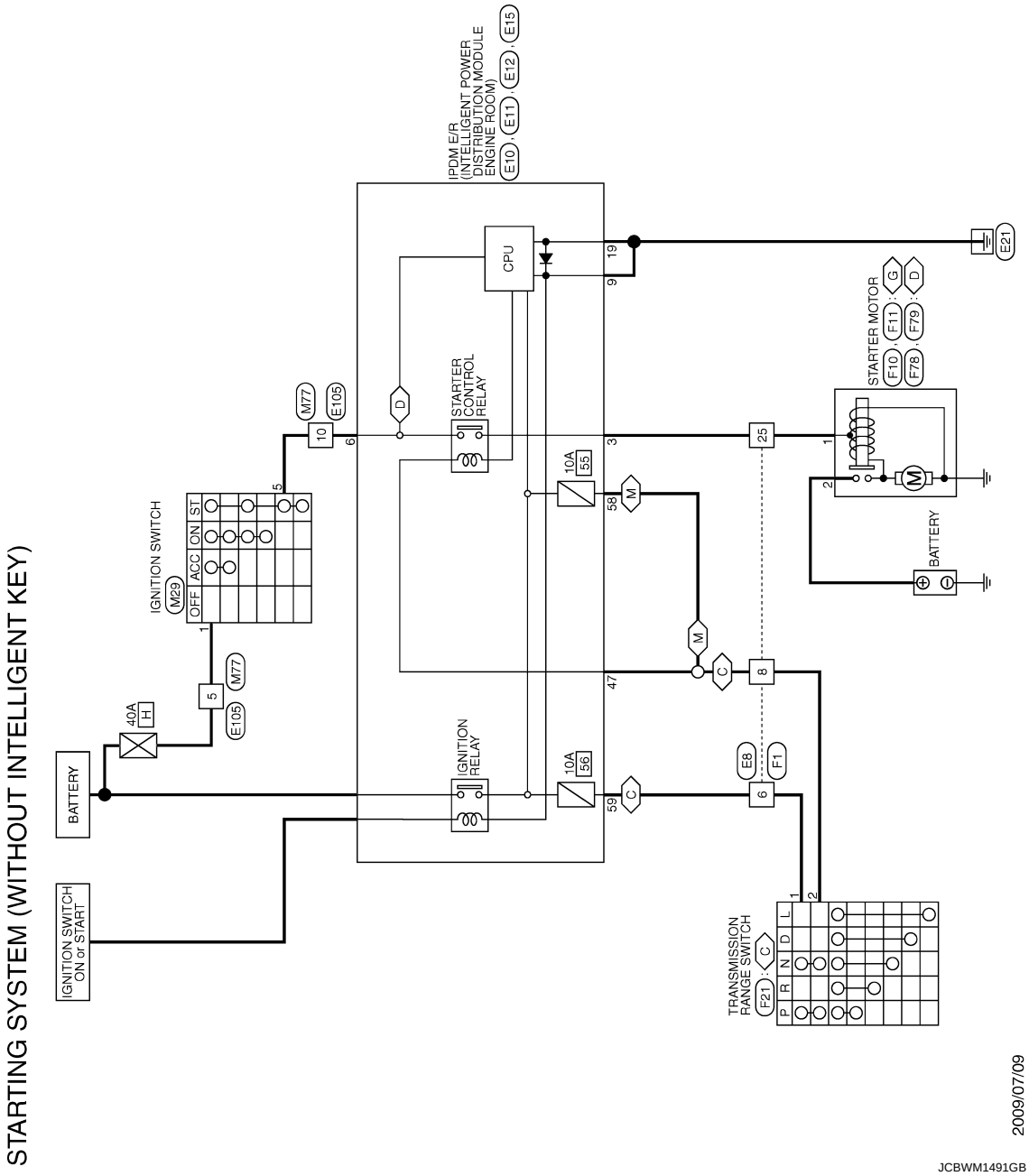

BASIC INSPECTION

DIAGNOSIS AND REPAIR WORK FLOW

Work Flow

INFOID:0000000006057521

STR

OVERALL SEQUENCE

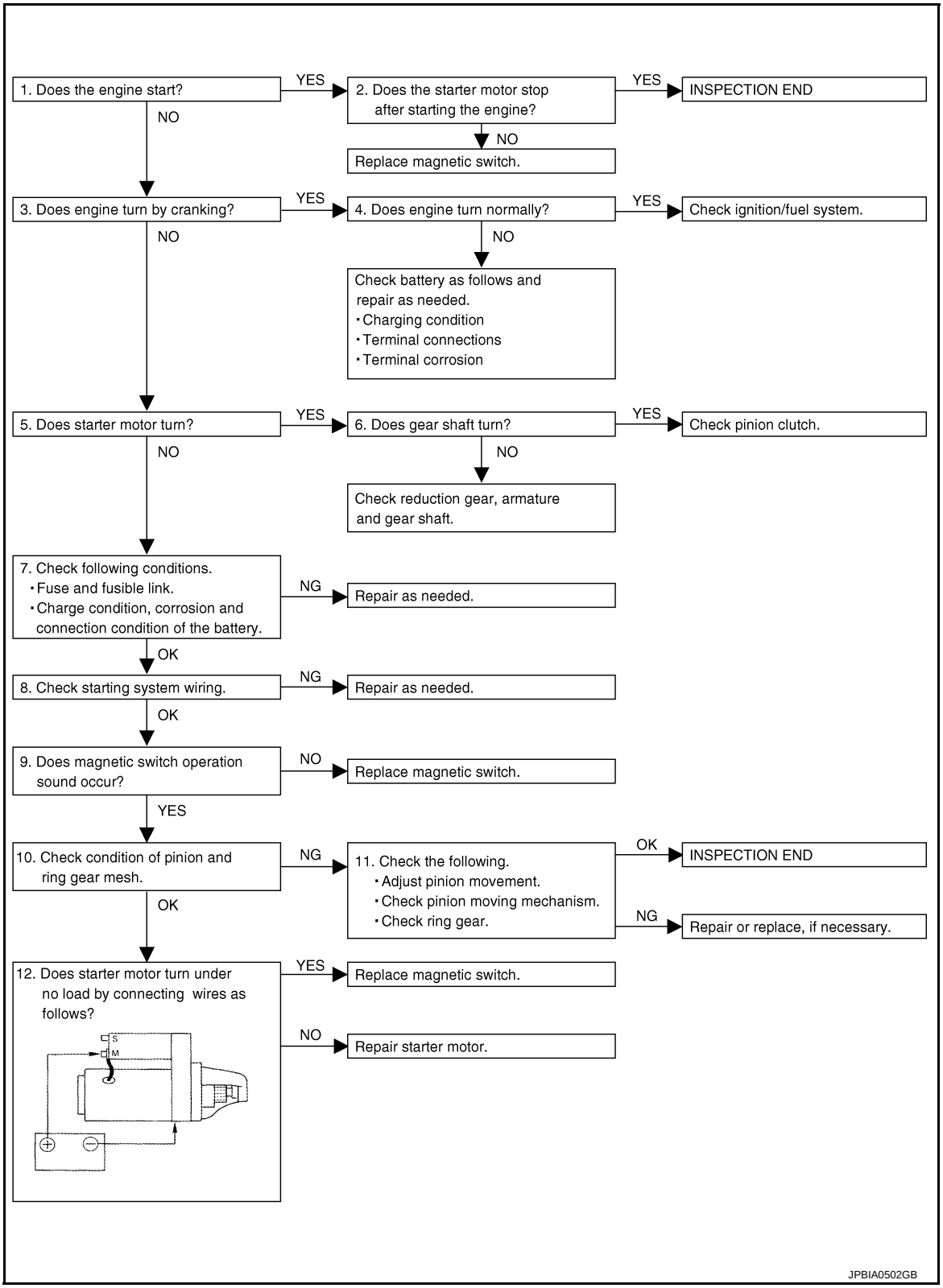

DETAILED FLOW

NOTE:
If any malfunction is found, immediately disconnect the battery cable from the negative terminal.

1. CHECK ENGINE START

Crank the engine and check that the engine starts.

Does the engine start?

YES >> GO TO 2.
NO >> GO TO 3.

2. CHECK THAT THE STARTER MOTOR STOPS

Check that the starter motor stops after starting the engine.

Does the starter motor stop?

YES >> INSPECTION END
NO >> Replace magnetic switch.

3. CHECK THE ENGINE SPEED WITH CRANKING

Check that the engine runs at cranking.

Does engine turn by cranking?

YES >> GO TO 4.
NO >> GO TO 5.

4. CHECK THE ENGINE SPEED WITH CRANKING

Check that the engine speed is not low at cranking.

Does engine turn normally?

YES >> Check ignition/fuel system.
NO >> Check charge condition, corrosion and connection condition of the battery. Refer to PG-132, "Work Procedure".

5. CHECK STARTER MOTOR ACTIVATION

Check that the starter motor runs at cranking.

Does starter motor turn?

YES >> GO TO 6.
NO >> GO TO 7.

6. CHECK STARTER MOTOR UNIT

1. Remove starter motor.
2. Check that the gear shaft of starter motor rotates.

Does gear shaft turn?

YES >> Check pinion clutch. Refer to STR-19, "Inspection and Adjustment".
NO >> Check reduction gear, armature and gear shaft.

7. CHECK POWER SUPPLY CIRCUIT

Check the following conditions.
- Fuse and fusible link
- Charge condition, corrosion and connection condition of the battery. Refer to PG-132, "Work Procedure".

Are these inspection results normal?

YES >> GO TO 8.
NO >> Repair as needed.

8. CHECK STARTING SYSTEM WIRING

Check the following.
- “B” terminal circuit. Refer to STR-14, "Diagnosis Procedure".
- “S” terminal circuit. Refer to STR-15, "Diagnosis Procedure".

Are these inspection results normal?

YES >> GO TO 9.
NO >> Repair as needed.

9. CHECK MAGNETIC SWITCH OPERATION SOUND

Check that a magnetic switch operation sound can be heard when the ignition switch is set at the starting position.

Does magnetic switch operation sound occur?

YES >> GO TO 10.
NO >> Replace magnetic switch.

10. PINION AND RING GEAR ENGAGEMENT CHECK

Check condition of pinion and ring gear mesh.

Is the inspection result normal?

YES >> GO TO 12.
NO >> GO TO 11.

11. CHECK STARTER MOTOR UNIT

Check the following.
- Adjust pinion movement. Refer to STR-19, "Inspection and Adjustment".
- Check pinion moving mechanism.
- Check ring gear.

Are these inspection results normal?

YES >> INSPECTION END
NO >> Repair or replace, if necessary.

12. CHECK STARTER MOTOR UNIT

Check that the starter motor runs when connecting the positive terminal (12 V) to starter motor terminal M and the negative terminal (ground) to starter motor body.

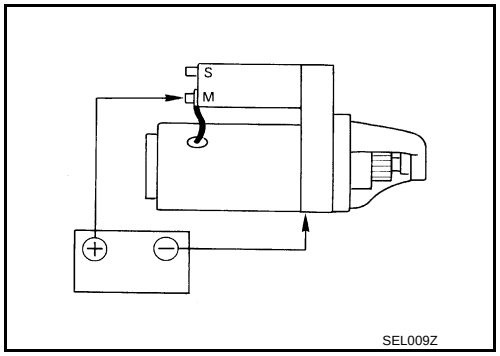

Does the starter motor run?

YES >> Replace magnetic switch.
NO >> Repair starter motor.

DTC/CIRCUIT DIAGNOSIS

B TERMINAL CIRCUIT

Description

INFOID:0000000006057523

The “B” terminal is constantly supplied with battery power.

Diagnosis Procedure

INFOID:0000000006057524

CAUTION:
Perform diagnosis under the condition that engine cannot start by the following procedure.
1. Remove fuel pump fuse.
2. Crank or start the engine (where possible) until the fuel pressure is released.

1. CHECK “B” TERMINAL CIRCUIT

1. Turn ignition switch OFF.
2. Check that starter motor “B” terminal connection is clean and tight.
3. Check voltage between starter motor “B” terminal and ground.

Terminals			Voltage (Approx.)
(+)		(–)	
Starter motor “B” terminal	Terminal		
F11	2	Ground	Battery voltage

Is the inspection result normal?

YES >> GO TO 2.
NO >> Check harness between battery and starter motor for open circuit.

2. CHECK BATTERY CABLE CONNECTION STATUS (VOLTAGE DROP TEST)

1. Shift selector lever to “P” or “N” position. (A/T models)
2. Check voltage between battery positive terminal and starter motor “B” terminal.

Terminals			Condition	Voltage (Approx.)
(+)	(–)			
	Starter motor “B” terminal	Terminal		
Battery positive terminal	F11	2	When the ignition switch is in START position	Less than 0.5 V

Is the inspection result normal?

YES >> GO TO 3.
NO >> Check harness between the battery and the starter motor for poor continuity.

3. CHECK GROUND CIRCUIT STATUS (VOLTAGE DROP TEST)

1. Shift selector lever to “P” or “N” position. (A/T models)
2. Check voltage between starter motor case and battery negative terminal.

Terminals		Condition	Voltage (Approx.)
(+)	(–)		
Starter motor case	Battery negative terminal	When the ignition switch is in START position	Less than 0.2 V

Is the inspection result normal?

YES >> “B” terminal circuit is OK. Further inspection is necessary. Refer to STR-11, "Work Flow".
NO >> Check the starter motor case and ground for poor continuity.

S TERMINAL CIRCUIT

Description

INFOID:0000000006057525

The starter motor magnetic switch is supplied with power when the ignition switch is turned to the START position while the selector lever is in the P or N position for A/T models.

Diagnosis Procedure

INFOID:0000000006057526

CAUTION:
Perform diagnosis under the condition that engine cannot start by the following procedure.
1. Remove fuel pump fuse.
2. Crank or start the engine (where possible) until the fuel pressure is released.

1. INSPECTION START

Check which type of transmission the vehicle is equipped with.

Which type of transmission?

A/T >> GO TO 2.
M/T >> GO TO 4.

2. CHECK “S” TERMINAL CIRCUIT

1. Turn ignition switch OFF.
2. Disconnect starter motor connector.
3. Shift selector lever to “P” or “N” position.
4. Check voltage between starter motor harness connector and ground.

Terminals			Condition	Voltage (Approx.)
(+)		(–)		
Starter motor harness connector	Terminal			
F10	1	Ground	When the ignition switch is in START position	Battery voltage

Is the inspection result normal?

YES >> “S” terminal circuit is OK. Further inspection is necessary. Refer to STR-11, "Work Flow".
NO >> GO TO 3.

3. CHECK HARNESS CONTINUITY (OPEN CIRCUIT)

1. Disconnect IPDM E/R connector.
2. Check continuity between starter motor harness connector and IPDM E/R harness connector.

Starter motor harness connector		IPDM E/R harness connector		Continuity
Connector No.	Terminal No.	Connector No.	Terminal No.	
F10	1	E10	30	Existed

Is the inspection result normal?

YES >> Further inspection is necessary. Refer to STR-11, "Work Flow".
NO >> Repair the harness.

4. CHECK “S” TERMINAL CIRCUIT

1. Turn ignition switch OFF.
2. Disconnect starter motor connector.
3. Check voltage between starter motor harness connector and ground.

Terminals			Condition	Voltage (Approx.)
(+)		(–)		
Starter motor harness connector	Terminal			
F10	1	Ground	When the ignition switch is in START position	Battery voltage

Is the inspection result normal?

YES >> “S” terminal circuit is OK. Further inspection is necessary. Refer to STR-11, "Work Flow".
NO >> GO TO 5.

5. CHECK HARNESS CONTINUITY (OPEN CIRCUIT)

1. Disconnect ignition switch connector.
2. Check continuity between starter motor harness connector and ignition switch harness connector.

Starter motor harness connector		Ignition switch harness connector		Continuity
Connector No.	Terminal No.	Connector No.	Terminal No.	
F10	1	M29	5	Existed

Is the inspection result normal?

YES >> Further inspection is necessary. Refer to STR-11, "Work Flow".
NO >> Repair the harness.

SYMPTOM DIAGNOSIS

STARTING SYSTEM

Symptom Table

INFOID:0000000006057527

Symptom	Reference
No normal cranking	Refer to STR-11, "Work Flow".
Starter motor does not rotate	

REMOVAL AND INSTALLATION

STARTER MOTOR

Exploded View

INFOID:0000000006057535

REMOVAL

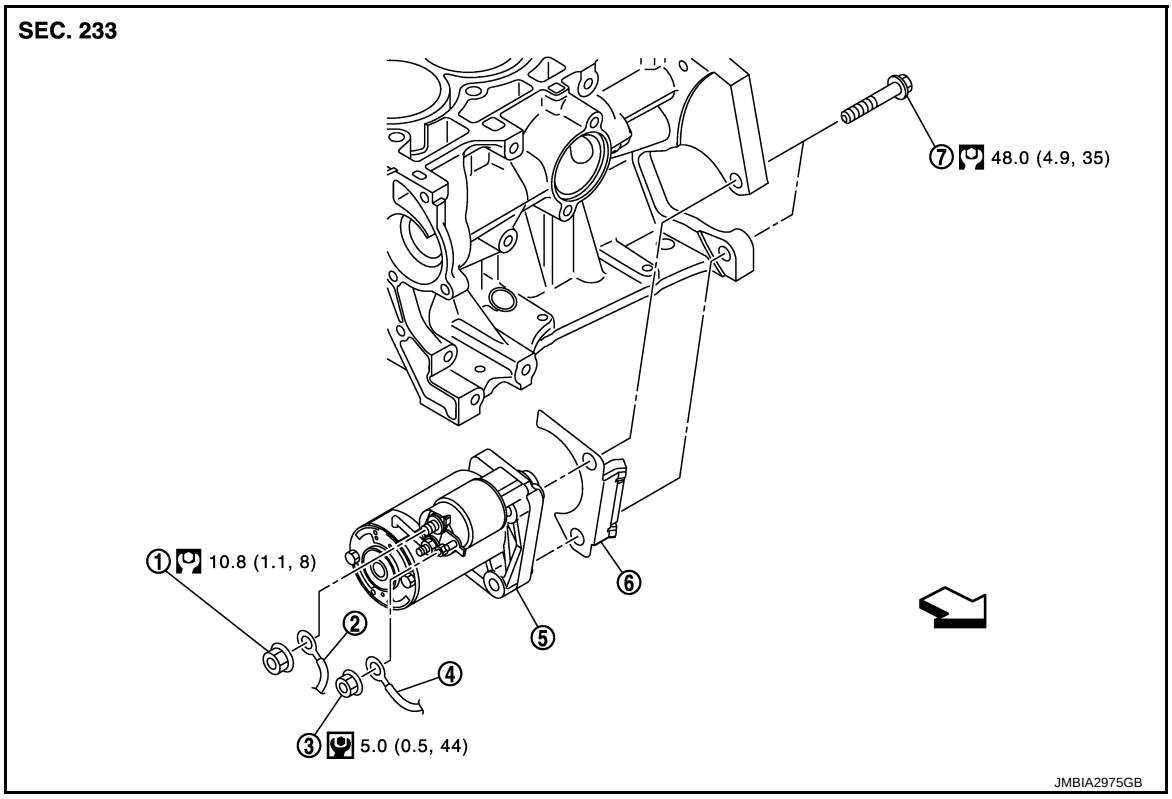

1. Terminal B nut
2. Terminal B harness
3. Terminal S nut
4. Terminal S harness
5. Starter motor
6. Rear plate cover
7. Cylinder block
8. Starter motor mounting bolt

⇦ : Vehicle front

Refer to GI-4, "Components" for symbols in the figure.

DISASSEMBLY

Type: 196052

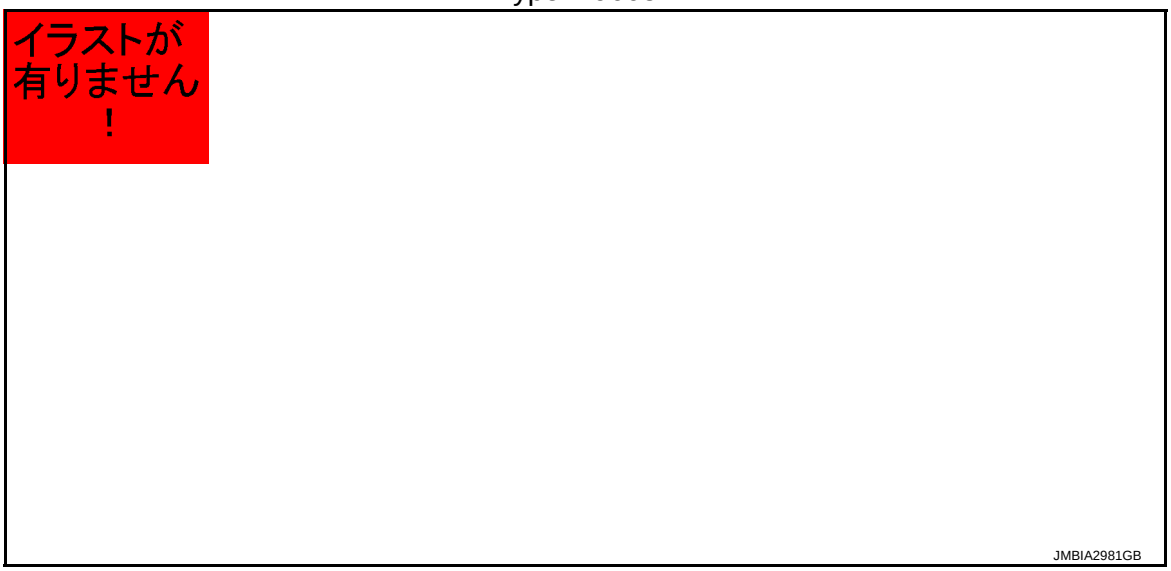

1.	Solenoid assembly	2.	Circlip	3.	Lever and lever rest
4.	Paper sealant	5.	Front bracket assemby	6.	Drive housing assembly
7.	Armature assembly	8.	Yoke assembly	9.	Rear bracket assembly
10.	Brush holder assembly	11.	Metal RR	12.	Rear cover

(H): High-temperature grease point

Refer to GI-4, "Components" for symbols not described on the above.

Removal and Installation

INFOID:0000000006057536

REMOVAL

1. Disconnect the battery cable from the negative terminal. Refer to PG-143, "Removal and Installation".
2. Remove terminal B nut and terminal B harness.
3. Remove terminal S nut and terminal S harness.
4. Remove radiator hose (lower) from radiator (with A/C models). Refer to CO-14, "Removal and Installation".
5. Disconnect engine oil pressure switch connector.
6. Remove starter motor mounting bolts.
7. Remove starter motor from underneath the vehicle.
   CAUTION:
   When removing starter motor, be careful not to damage engine oil pressure switch.

INSTALLATION

Install in the reverse order of removal.

CAUTION:

Be careful to tighten terminal B nut to the specified torque.

Inspection and Adjustment

INFOID:0000000006057538

INSPECTION

Magnetic Switch Check

- Before starting to check, disconnect the battery cable from the negative terminal.
- Disconnect “M” terminal of starter motor.

1. Continuity test [between “S” terminal (A) and switch body]

   B : “B” terminal
   C : “M” terminal

   - Replace magnetic switch if continuity does not exist.

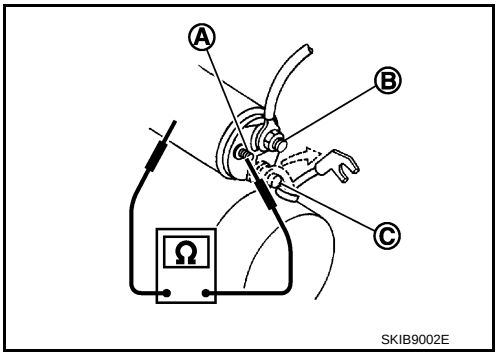

2. Continuity test [between “S” terminal (A) and “M” terminal (C)]

   B : “B” terminal

   - Replace magnetic switch if continuity does not exist.

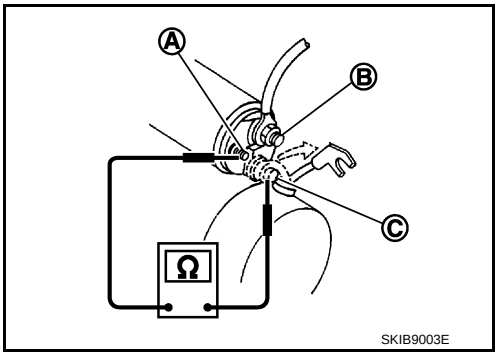

Pinion/Clutch Check

1. Inspect pinion teeth.
   - Replace pinion if teeth are worn or damaged. (Also check condition of ring gear teeth.)
2. Inspect reduction gear teeth (If equipped).
   - Replace reduction gear if teeth are worn or damaged. (Also check condition of armature shaft gear teeth.)
3. Check to see if pinion locks in one direction and rotates smoothly in the opposite direction.
   - Replace pinion assembly if it is locked or rotated in both directions or unusual resistance is evident.

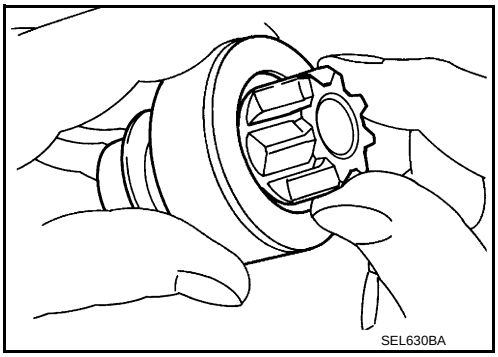

Brush Check

- Check wear of brush.

Minimum length of brush	**: Refer to SDS STR-24, "Starter Motor".**

- Replace brush if the measurement value is less than the specified value.

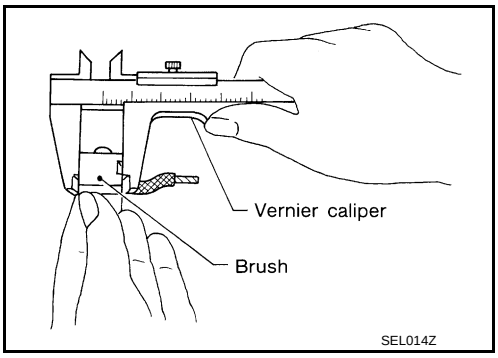

Brush Spring Check

- Check brush spring tension with brush spring detached from brush.

Spring tension (with new brush) **: Refer to SDS STR-24, "Starter Motor".**

- Replace brush spring if the measurement value is less than the specified value.

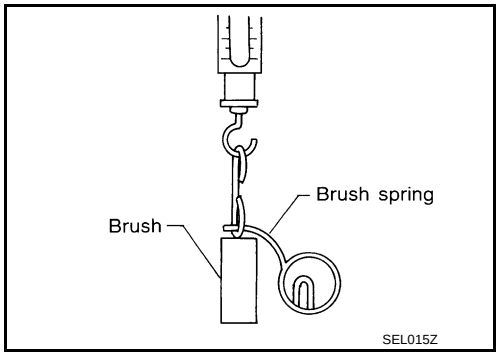

Brush Holder Check

1. Perform insulation test between brush holder (positive side) and its base (negative side).
   - Replace brush holder assembly if continuity does not exist.
2. Check brush to see if it moves smoothly.
   - If brush holder is bent, replace it; if sliding surface is dirty, clean.

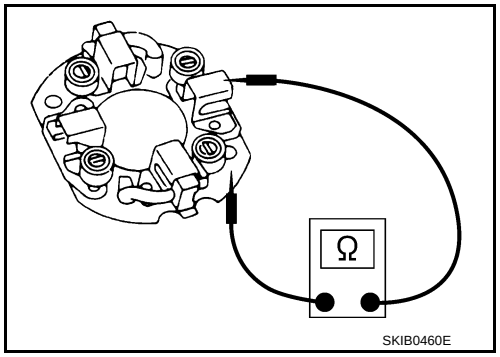

Yoke Check

Magnet is secured to yoke by bonding agent. Check magnet to see that it is secured to yoke and for any cracks. Replace malfunctioning parts as an assembly.

CAUTION:

Never clamp yoke in a vise or strike it with a hammer.

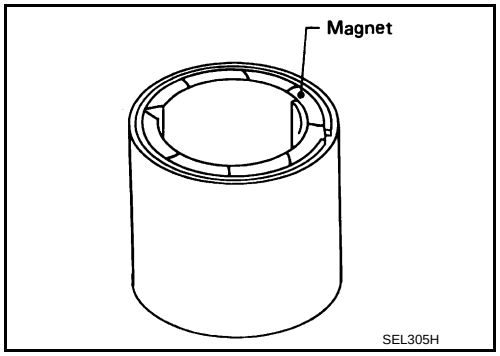

Armature Check

1. Continuity test (between two segments side by side)
   - Replace armature assembly if continuity does not exist.
2. Insulation test (between each commutator bar and shaft)
   - Replace armature assembly if continuity exists.

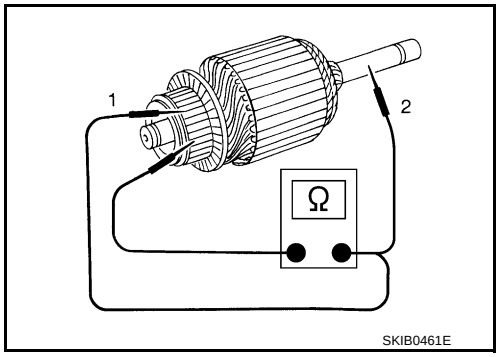

3. Check commutator surface.
   - Grind with No. 500 - 600 emery paper if it has a rough surface.

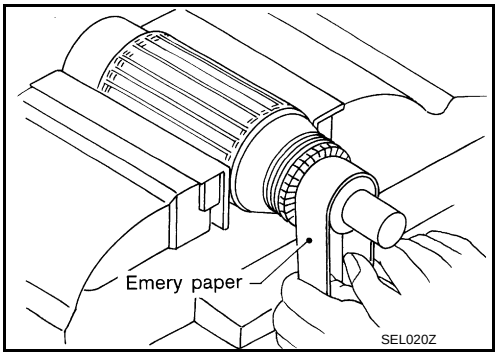

4. Check diameter of commutator.

Commutator minimum diameter	**: Refer to SDS STR-24, "Starter Motor".**

   - Replace armature assembly if the measurement value is less than the specified value.

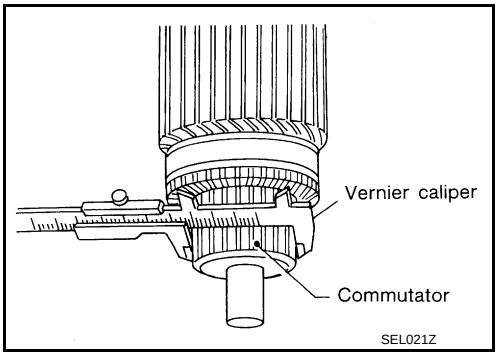

5. Check depth of insulating mold from commutator surface.
   - Undercut to 0.5 to 0.8 mm (0.020 to 0.031 in) if the depth is 0.2 mm (0.008 in) or less.

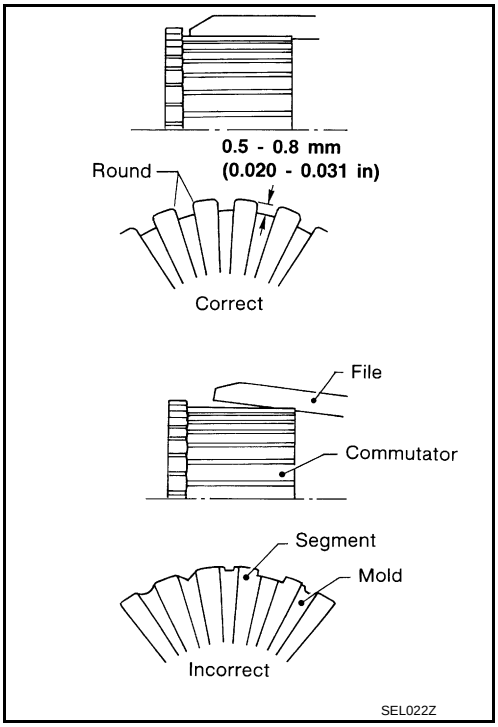

ADJUSTMENT

Pinion Protrusion Length Adjustment

CLEARANCE

- With pinion driven out by magnetic switch, push pinion back to remove slack and measure clearance “L” between the front edge of the pinion and the pinion stopper.

Clearance “L” : Refer to SDS STR-24, "Starter Motor".

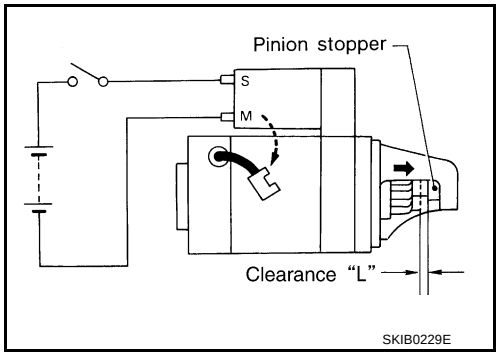

- Adjust with the adjusting plate if the measurement value is not in the specified area.

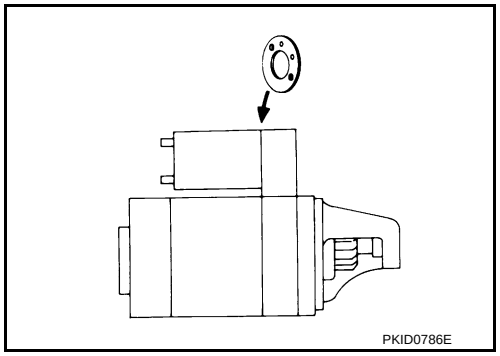

SERVICE DATA AND SPECIFICATIONS (SDS)

SERVICE DATA AND SPECIFICATIONS (SDS)

Starter Motor

INFOID:0000000006057534

Type			196052
			VALEO make
			Direct drive type
System voltage		[V]	12
No-load	Terminal voltage	[V]	11
	Current	[A]	Less than 70
	Revolution	[rpm]	More than 6,000
Minimum diameter of commutator		[mm (in)]	29.3 (1.153)
Minimum length of brush		[mm (in)]	7.5 (0.295)
Brush spring tension		[N (kg, lb)]	18.5 (1.88, 4.11)
Clearance between bearing metal and armature shaft		[mm (in)]	Less than 0.08 (0.003)
Clearance “L” between pinion front edge and pinion stopper		[mm (in)]	0 (0)

SECTION TM
TRANSAXLE & TRANSMISSION

CONTENTS

5MT: RS5F91R

PRECAUTION 3

PRECAUTIONS 3
Precaution for Supplemental Restraint System (SRS) "AIR BAG" and "SEAT BELT PRE-TENSIONER" 3
Precaution Necessary for Steering Wheel Rotation after Battery Disconnect 3
General Precautions 4

PREPARATION 5

PREPARATION 5
Special Service Tools 5
Commercial Service Tools 7

SYSTEM DESCRIPTION 8

COMPONENT PARTS 8
Component Parts Location 8

STRUCTURE AND OPERATION 9
Sectional View 9

DTC/CIRCUIT DIAGNOSIS 10

POSITION SWITCH 10

BACK-UP LAMP SWITCH 10
BACK-UP LAMP SWITCH : Component Inspection 10

PARK/NEUTRAL POSITION (PNP) SWITCH 10
PARK/NEUTRAL POSITION (PNP) SWITCH : Component Inspection 10

SYMPTOM DIAGNOSIS 11

NOISE, VIBRATION AND HARSHNESS (NVH) TROUBLESHOOTING 11
NVH Troubleshooting Chart 11

PERIODIC MAINTENANCE 12

GEAR OIL 12
Inspection 12
Draining 12
Refilling 12

REMOVAL AND INSTALLATION 13

SIDE OIL SEAL 13
Removal and Installation 13
Inspection 13

POSITION SWITCH 14
Removal and Installation 14
Inspection 14

CONTROL LINKAGE 15
Exploded View 15
Removal and Installation 15
Inspection 16

AIR BREATHER HOSE 17
Exploded View 17
Removal and Installation 17

5TH MAIN GEAR ASSEMBLY 18
Removal and Installation 18
Inspection 18

UNIT REMOVAL AND INSTALLATION 19

TRANSAXLE ASSEMBLY 19
Exploded View 19
Removal and Installation 19
Inspection 20

UNIT DISASSEMBLY AND ASSEMBLY 21

TRANSAXLE ASSEMBLY 21
Exploded View 21
Disassembly 25
Assembly 31

Inspection 38

INPUT SHAFT AND GEAR 40
Exploded View 40
Disassembly 40
Assembly 40
Inspection 40

MAINSHAFT AND GEAR 42
Exploded View 42
Disassembly 42
Assembly 44
Inspection 45

FINAL DRIVE 47
Exploded View 47
Disassembly 47
Assembly 48
Inspection 48

SERVICE DATA AND SPECIFICATIONS (SDS) 49

SERVICE DATA AND SPECIFICATIONS (SDS) 49
General Specification 49

PRECAUTION

PRECAUTIONS

Precaution for Supplemental Restraint System (SRS) "AIR BAG" and "SEAT BELT PRE-TENSIONER"

INFOID:0000000006056627

The Supplemental Restraint System such as “AIR BAG” and “SEAT BELT PRE-TENSIONER”, used along with a front seat belt, helps to reduce the risk or severity of injury to the driver and front passenger for certain types of collision. Information necessary to service the system safely is included in the “SRS AIR BAG” and “SEAT BELT” of this Service Manual.

WARNING:

- **To avoid rendering the SRS inoperative, which could increase the risk of personal injury or death in the event of a collision which would result in air bag inflation, all maintenance must be performed by an authorized NISSAN/INFINITI dealer.**
- **Improper maintenance, including incorrect removal and installation of the SRS, can lead to personal injury caused by unintentional activation of the system. For removal of Spiral Cable and Air Bag Module, see the “SRS AIR BAG”.**
- **Do not use electrical test equipment on any circuit related to the SRS unless instructed to in this Service Manual. SRS wiring harnesses can be identified by yellow and/or orange harnesses or harness connectors.**

PRECAUTIONS WHEN USING POWER TOOLS (AIR OR ELECTRIC) AND HAMMERS

WARNING:

- **When working near the Air Bag Diagnosis Sensor Unit or other Air Bag System sensors with the ignition ON or engine running, DO NOT use air or electric power tools or strike near the sensor(s) with a hammer. Heavy vibration could activate the sensor(s) and deploy the air bag(s), possibly causing serious injury.**
- **When using air or electric power tools or hammers, always switch the ignition OFF, disconnect the battery, and wait at least 3 minutes before performing any service.**

Precaution Necessary for Steering Wheel Rotation after Battery Disconnect

INFOID:0000000006056628

NOTE:

- Before removing and installing any control units, first turn the push-button ignition switch to the LOCK position, then disconnect both battery cables.
- After finishing work, confirm that all control unit connectors are connected properly, then re-connect both battery cables.
- Always use CONSULT-III to perform self-diagnosis as a part of each function inspection after finishing work. If a DTC is detected, perform trouble diagnosis according to self-diagnosis results.

For vehicle with steering lock unit, if the battery is disconnected or discharged, the steering wheel will lock and cannot be turned.

If turning the steering wheel is required with the battery disconnected or discharged, follow the operation procedure below before starting the repair operation.

OPERATION PROCEDURE

1. Connect both battery cables.
   NOTE:
   Supply power using jumper cables if battery is discharged.
2. Turn the push-button ignition switch to ACC position.
   (At this time, the steering lock will be released.)
3. Disconnect both battery cables. The steering lock will remain released with both battery cables disconnected and the steering wheel can be turned.
4. Perform the necessary repair operation.
5. When the repair work is completed, re-connect both battery cables. With the brake pedal released, turn the push-button ignition switch from ACC position to ON position, then to LOCK position. (The steering wheel will lock when the push-button ignition switch is turned to LOCK position.)
6. Perform self-diagnosis check of all control units using CONSULT-III.

General Precautions

INFOID:0000000006056555

CAUTION:

- **Never reuse CSC (Concentric Slave Cylinder). Because CSC slides back to the original position every time when removing transaxle assembly. At this timing, dust on the sliding parts may damage a seal of CSC and may cause clutch fluid leakage. CL-16, "Removal and Installation".**
- **Never reuse transaxle gear oil, once it has been drained.**
- **Check oil level or replace gear oil with vehicle on level surface.**
- **During removal or installation, keep inside of transaxle clear of dust or dirt.**
- **Check for the correct installation status prior to removal or disassembly. If matching marks are required, be certain they never interfere with the function of the parts they are applied.**
- **In principle, tighten bolts or nuts gradually in several steps working diagonally from inside to outside. If tightening sequence is specified, use it.**
- **Never damage sliding surfaces and mating surfaces.**

PREPARATION

PREPARATION

Special Service Tools

INFOID:0000000006056556

Tool number Tool name		Description
KV32500QAA (Renault SST: B.vi 1666) Drift set 1. — (Stamping number: B.vi 1666-A) Drift a: 54.3 mm (2.138 in) dia. b: 45 mm (1.77 in) dia. c: 26.6 mm (1.047 in) dia. 2. — (Stamping number: B.vi 1666-B) Drift d: 54 mm (2.13 in) dia. e: 48.6 mm (1.913 in) dia. f: 26.6 mm (1.047 in) dia.	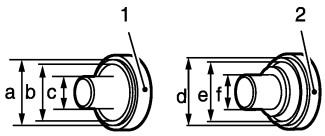 JPDIC0730ZZ	Installing differential side oil seal
KV32300QAC (Renault SST: B.Vi 22-01) Puller	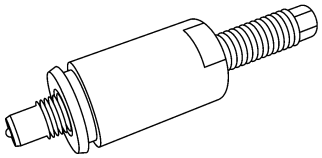 SCIA1781J	Removing 5th main gear
KV32300QAD (Renault SST: B.Vi 1000-01) Puller	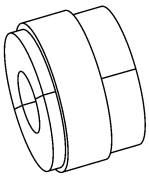 SCIA1782J	Removing 5th main gear
ST35300000 Drift a: 45 mm (1.77 in) dia. b: 59 mm (2.32 in) dia.	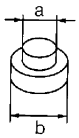 ZZA0969D	• Removing and installing input shaft rear bearing • Removing and installing mainshaft rear bearing
KV111011S0 Valve seat remover	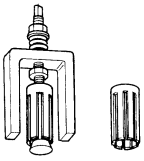 ZZA0872D	Removing mainshaft front bearing

Tool number Tool name		Description
ST33400001 Drift a: 60 mm (2.36 in) dia. b: 47 mm (1.85 in) dia.	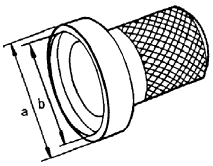 ZZA0814D	Installing mainshaft front bearing
KV40100900 Drift a: 52 mm (2.05 in) dia. b: 39.5 mm (1.555 in) dia.	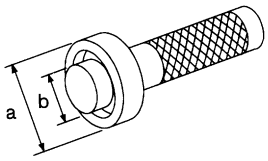 NT084	Installing input shaft front bearing
KV32300QAE (Renault SST: B.Vi.1554) Drift a: 61.5 mm (2.421 in) dia.	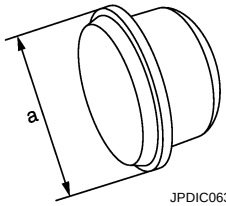 JPDIC0635ZZ	Installing differential side bearing outer race
ST33052000 Drift a: 22 mm (0.87 in) dia. b: 28 mm (1.10 in) dia.	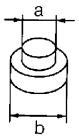 ZZA0969D	Removing differential side bearing
KV40104920 Drift a: 21.7 mm (0.854 in) dia. b: 44.7 mm (1.760 in) dia.	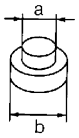 ZZA0969D	Installing differential side bearing

Commercial Service Tools

INFOID:0000000006056557

Tool name	Description
Socket a: 8 mm (0.31 in) b: 5 mm (0.20 in) 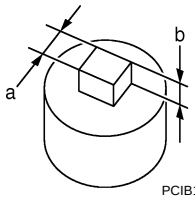 PCIB1776E	Removing and installing drain plug
Drift a: 38 mm (1.50 in) dia. 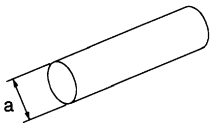 S-NT063	Removing input shaft front bearing
Drift a: 14.5 mm (0.571 in) dia. 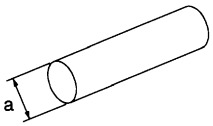 S-NT063	Installing bushing
Puller 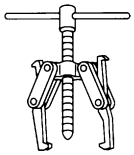 NT077	• Removing 5th-reverse synchronizer hub • Removing differential side bearing
Bearing remover S-NT134	Removing bushing

SYSTEM DESCRIPTION

COMPONENT PARTS

Component Parts Location

INFOID:0000000006056558

Position Switch

1 : Position switch

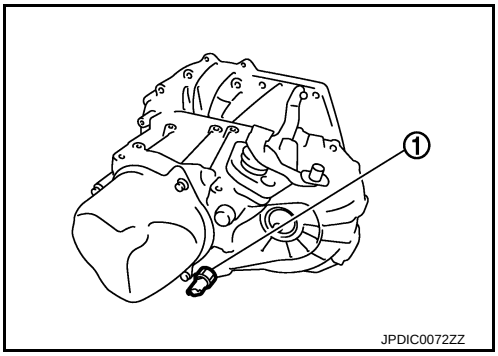

STRUCTURE AND OPERATION

Sectional View

INFOID:0000000006056559

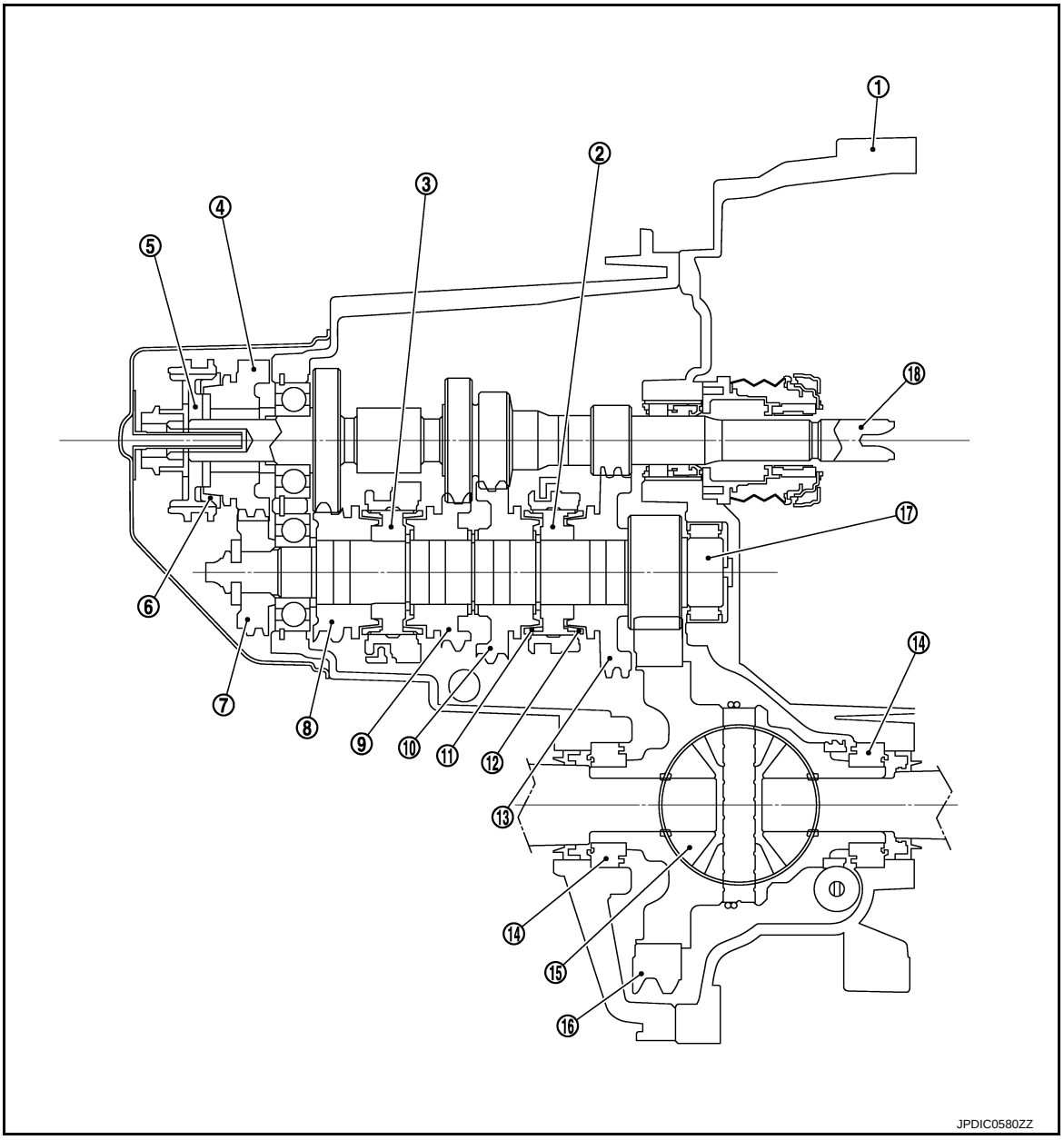

1. Clutch housing	2. 1st-2nd synchronizer hub assembly	3. 3rd-4th synchronizer hub assembly
4. 5th input gear	5. 5th-reverse synchronizer hub assembly	6. 5th baulk ring
7. 5th main gear	8. 4th main gear	9. 3rd main gear
10. 2nd main gear	11. 2nd single cone synchronizer	12. 1st single cone synchronizer
13. 1st main gear	14. Differential side bearing	15. Differential
16. Final gear	17. Mainshaft	18. Input shaft

DTC/CIRCUIT DIAGNOSIS

POSITION SWITCH

BACK-UP LAMP SWITCH

BACK-UP LAMP SWITCH : Component Inspection

INFOID:0000000006056560

1. CHECK BACK-UP LAMP SWITCH

1. Disconnect position switch connector. Refer to TM-14, "Removal and Installation".
2. Check continuity between position switch terminals.

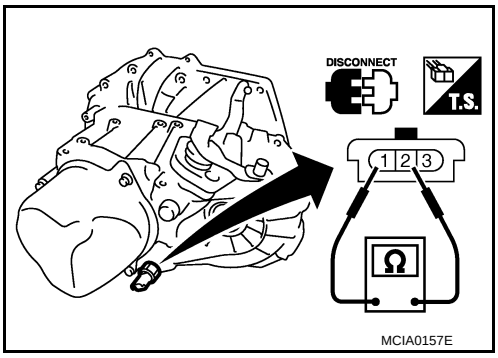

Terminals		Condition	Continuity
1	2	Reverse gear position	Existed
		Except reverse gear position	Not existed

Is the inspection result normal?

YES >> INSPECTION END
NO >> Replace position switch. Refer to TM-14, "Removal and Installation".

PARK/NEUTRAL POSITION (PNP) SWITCH

PARK/NEUTRAL POSITION (PNP) SWITCH : Component Inspection

INFOID:0000000006056561

1. CHECK PARK/NEUTRAL POSITION (PNP) SWITCH

1. Disconnect position switch connector. Refer to TM-14, "Removal and Installation".
2. Check continuity between position switch terminals.

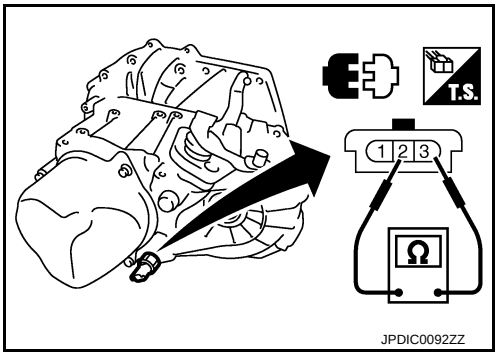

Terminals		Condition	Continuity
2	3	Neutral gear position	Existed
		Except neutral gear position	Not existed

Is the inspection result normal?

YES >> INSPECTION END
NO >> Replace position switch. Refer to TM-14, "Removal and Installation".

SYMPTOM DIAGNOSIS

NOISE, VIBRATION AND HARSHNESS (NVH) TROUBLESHOOTING

NVH Troubleshooting Chart

INFOID:0000000006056562

Use the chart below to find the cause of the symptom. The numbers indicate the order of the inspection. If necessary, repair or replace these parts.

SUSPECTED PARTS (Possible cause)		OIL (Oil level is low)	OIL (Wrong oil)	OIL (Oil level is high)	GASKET (Damaged)	OIL SEAL (Worn or damaged)	O-RING (Worn or damaged)	SHIFT CONTROL LINKAGE (Worn)	SHIFT FORK (Worn)	GEAR (Worn or damaged)	BEARING (Worn or damaged)	BAULK RING (Worn or damaged)	INSERT SPRING (Damaged)
Reference			TM-12			TM-21		TM-15	TM-21	TM-21			
Symptoms	Noise	1	2							3	3		
	Oil leakage		3	1	2	2	2						
	Hard to shift or will not shift		1	1				2				3	3
	Jumps out of gear							1	2	2			

PERIODIC MAINTENANCE

GEAR OIL

Inspection

INFOID:0000000006056563

OIL LEAKAGE

Make sure that gear oil is not leaking from transaxle or around it.

OIL LEVEL

1. Remove filler plug (1) and gasket from transaxle case.
2. Check the oil level from filler plug mounting hole as shown in the figure.
   CAUTION:
   Never start engine while checking oil level.
3. Set a gasket on filler plug and then install it to transaxle case.
   CAUTION:
   Never reuse gasket.
4. Tighten filler plug to the specified torque. Refer to TM-21, "Exploded View".

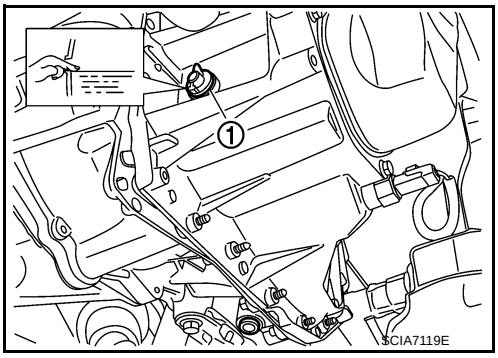

Draining

INFOID:0000000006056564

1. Start engine and let it run to warm up transaxle.
2. Stop engine. Remove drain plug (1) and gasket, using a socket [Commercial service tool] and then drain gear oil.
3. Set a gasket on drain plug and install it to clutch housing, using a socket [Commercial service tool].
   CAUTION:
   Never reuse gasket.
4. Tighten drain plug to the specified torque. Refer to TM-21, "Exploded View".

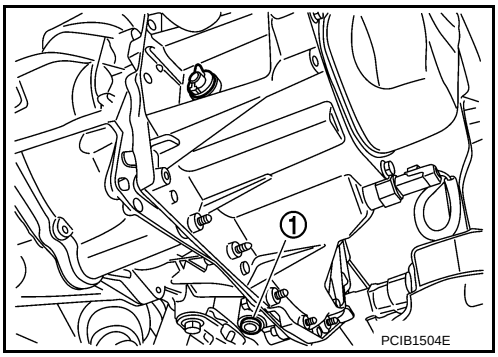

Refilling

INFOID:0000000006056565

1. Remove filler plug (1) and gasket from transaxle case.
2. Fill with new gear oil until oil level reaches the specified limit at filler plug mounting hole as shown in the figure.

Oil grade and viscosity	**: Refer to MA-8, "Fluids and Lubricants".**
Oil capacity	**: Refer to TM-49, "General Specification".**

3. After refilling gear oil, check the oil level. Refer to TM-12, "Inspection".
4. Set a gasket on filler plug and then install it to transaxle case.
   CAUTION:
   Never reuse gasket.
5. Tighten filler plug to the specified torque. Refer to TM-21, "Exploded View".

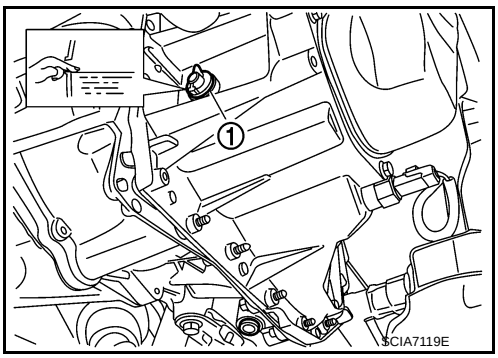

REMOVAL AND INSTALLATION

SIDE OIL SEAL

Removal and Installation

INFOID:0000000006056566

REMOVAL

1. Remove front drive shafts. Refer to FAX-17, "Removal and Installation".
2. Remove differential side oil seals (1) from clutch housing and transaxle case, using a suitable tool.
   CAUTION:
   Never damage transaxle case and clutch housing.

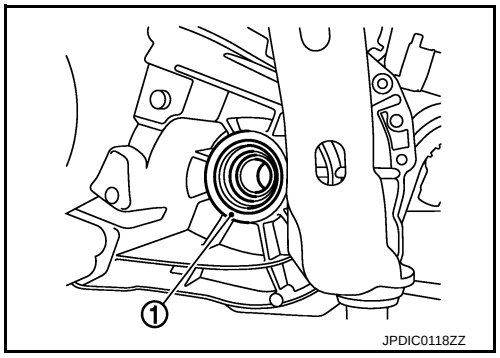

INSTALLATION

Note the following, and install in the reverse order of removal.

- Install differential side oil seals (1) to clutch housing and transaxle case, using the drift [Stamping number: B.vi 1666-B] of the drift set [SST: KV32500QAA].

B : Transaxle case side
C : Clutch housing side

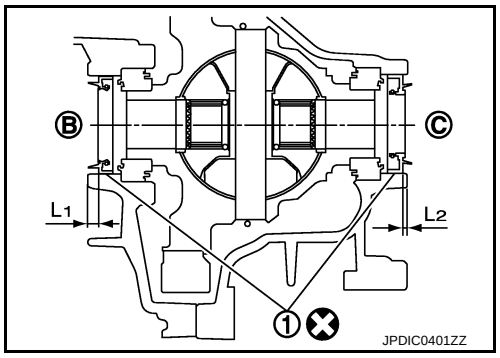

Dimension "L_1" : 5.7 – 6.3 mm (0.224 – 0.248 in)
Dimension "L_2" : 2.4 – 3.0 mm (0.094 – 0.118 in)

CAUTION:
- **Never incline differential side oil seal.**
- **Never damage clutch housing and transaxle case.**

Inspection

INFOID:0000000006056567

INSPECTION AFTER INSTALLATION

Check the oil level and oil leakage. Refer to TM-12, "Inspection".

POSITION SWITCH

Removal and Installation

INFOID:0000000006056568

REMOVAL

1. Drain gear oil. Refer to TM-12, "Draining".
2. Disconnect position switch connector (A).
3. Remove position switch from transaxle case.

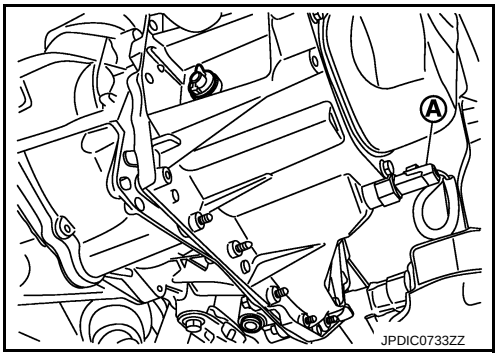

INSTALLATION

1. Apply recommended sealant to threads of position switch.
   - **Use Genuine Liquid Gasket, Three Bond 1215 or an equivalent.**

   CAUTION:
   Remove old sealant and oil adhering to threads.
2. Install position switch to transaxle case.
3. Tighten position switch to the specified torque. Refer to TM-21, "Exploded View".
4. Refill gear oil. Refer to TM-12, "Refilling".

Inspection

INFOID:0000000006056569

INSPECTION AFTER INSTALLATION

- Check continuity between position switch terminals. Refer to TM-10, "BACK-UP LAMP SWITCH : Component Inspection" (Back-up lamp switch) and TM-10, "PARK/NEUTRAL POSITION (PNP) SWITCH : Component Inspection" (PNP switch).
- Check the oil leakage and the oil level. Refer to TM-12, "Inspection".

CONTROL LINKAGE

Exploded View

INFOID:0000000006056570

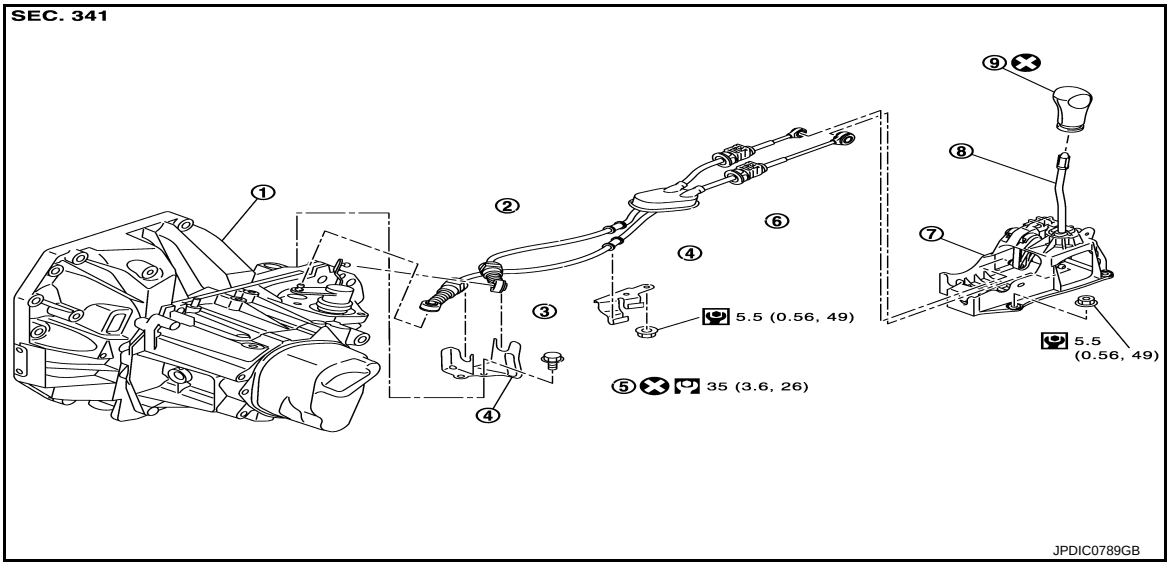

1. Shifter lever A
2. Selector lever
3. Selector cable
4. Shifter cable
5. Cable mounting bracket
6. Tapping bolt
7. Bracket
8. Grommet
9. Control device
10. Shifter lever
11. Shifter lever knob

Refer to GI-4, "Components" for the symbols in the figure.

Removal and Installation

INFOID:0000000006056571

REMOVAL

1. Shift the shifter lever to the neutral position.
2. Remove air duct (inlet), air cleaner body assembly, and air cleaner cover assembly. Refer to EM-24, "Removal and Installation".
3. Pull out and disconnect the each cable from the shifter lever A and the selector lever, using a suitable remover.
4. While pressing the lock of the selector cable in the direction of the arrow shown in the figure, remove the selector cable from the cable mounting bracket.
5. While pressing the lock of the shifter cable in the direction of the arrow shown in the figure, remove the shifter cable from the cable mounting bracket.
6. Remove cable mounting bracket from clutch housing.
7. Pull the shifter lever knob upward to remove.
8. Remove center console assembly. Refer to IP-21, "Removal and Installation".
9. Pull out and disconnect the each cable from the control device, using a suitable remover.

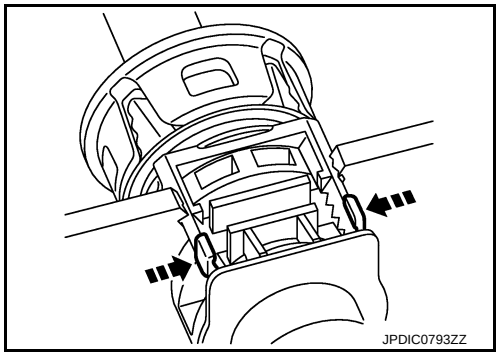

10. While pressing the lock of the selector cable in the direction of the arrow shown in the figure, remove the selector cable from the control device.
11. While pressing the lock of the shifter cable in the direction of the arrow shown in the figure, remove the shifter cable from the control device.
12. Remove the control device.
13. Remove center muffler, exhaust front tube, and heat plate. Refer to EX-5, "Removal and Installation".
14. Remove the bracket from the vehicle.
15. Remove the grommet and then remove the shifter cable and selector cable from the vehicle.

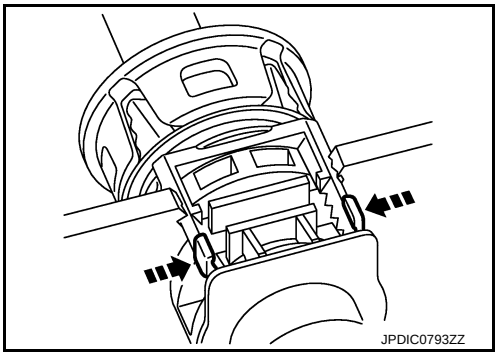

INSTALLATION

Note the following, and install in the reverse order of removal.

CAUTION:

- **Install each cable without causing interference with other parts, a 120 mm (4.72 in)-or-less bend, and a 180-degrees-or-more twist.**
- **Install boot of each cable without causing interference with other parts and a 90-degrees-or-more twist.**
- **Fit boot of to center console assembly the groove on shifter lever knob.**
- To install the shifter lever knob, press it into the shifter lever.

  CAUTION:
  - **Never reuse shifter lever knob.**
  - **Be careful with orientation of shifter lever knob.**
- Tapping work for tapping bolts is not applied to new clutch housing. Do not perform tapping by other than screwing tapping bolts because tapping is formed by screwing tapping bolts into clutch housing.

  CAUTION:

  Never reuse tapping bolt.
- Insert the each cable until it reaches the cable mounting bracket.
- Insert the each cable until it reaches the shifter lever A and the selector lever.
- Shift the shifter lever to the neutral position.

Inspection

INFOID:0000000006056572

INSPECTION AFTER INSTALLATION

Shifter lever knob

Check that the shifter lever knob is installed in the right position.

Shifter cable and selector cable

- Pull each cable in the removal direction to check that it dose not disconnect from the cable mounting bracket.
- Pull each cable in the removal direction to check that it dose not disconnect from the control device.
- Pull grommet in the removal direction to check that it dose not disconnect from the vehicle.

Shifter lever

- Check that there is no tangle, hook, abnormal sound, looseness, and interference when the shifter lever is moved to each position. If there is a malfunction, then repair or replace the malfunctioning part.
- Check that the shifter lever smoothly returns to the neutral position after moving the lever from 1st to 2nd gear and moving hands off the lever. If there is a malfunction, then repair or replace the malfunctioning part.
- Check that the shifter lever smoothly returns to the neutral position after moving the lever from 5th to the reverse gear position and moving hands off the lever. If there is a malfunction, then repair or replace the malfunctioning part.

AIR BREATHER HOSE

Exploded View

INFOID:0000000006056573

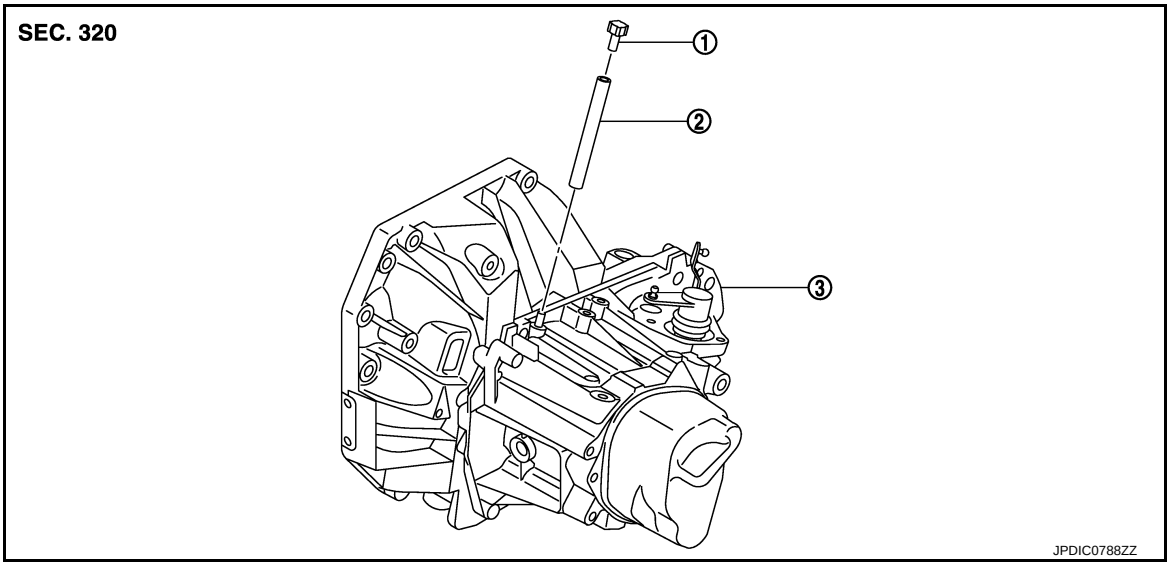

1. Cap
2. Air breather hose
3. 2 way connector

Removal and Installation

INFOID:0000000006056574

REMOVAL

1. Remove air breather hose from the 2 way connector.
   CAUTION:
   When removing air breather hose, be sure to hold 2 way connector securely.
2. Remove cap hose from air breather hose.

INSTALLATION

Note the following, and install in the reverse order of removal.

CAUTION:

- **Install air breather hose, preventing crush and clogging caused by bending.**
- **Insert the allowance of air breather hose to the spool of the 2 way connector.**

5TH MAIN GEAR ASSEMBLY

Removal and Installation

INFOID:0000000006056575

REMOVAL

1. Shift the shifter lever to the 3rd gear position.
2. Disconnect the shifter cable and the selector cable from shifter lever A and selector lever. Refer to TM-15, "Removal and Installation".
   CAUTION:
   Never move shifter lever A and the selector lever to disconnect each cable.
3. Drain gear oil. Refer to TM-12, "Draining".
4. Remove fender protector LH. Refer to EXT-17, "FENDER PROTECTOR : Removal and Installation".
5. Remove the harness clamp (A) from rear housing (1).
6. Remove rear housing and O-ring.
   CAUTION:
   Remove in the input shaft axial direction because the oil channel of the rear housing is inserted in the center hole of the input shaft.
7. Remove 5th main gear assembly, referring to Step 5 to 9 of “Disassembly of TRANSAXLE ASSEMBLY.” Refer to TM-25, "Disassembly".

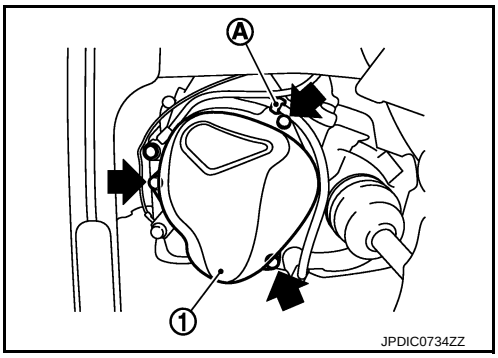

INSTALLATION

Note the following, and install in the reverse order of removal.

- Shift into 3rd with shifter lever to install the 5th main gear assembly, referring to Step 35 to 38 of “Assembly of TRANSAXLE ASSEMBLY.” Refer to TM-31, "Assembly".
- Install O-ring and the rear housing to the transaxle case and tighten the mounting bolts to the specified torque. Refer to TM-21, "Exploded View".
  CAUTION:
  Never pinch O-ring when installing rear housing.
- Refill gear oil. Refer to TM-12, "Refilling".

Inspection

INFOID:0000000006056576

INSPECTION AFTER INSTALLATION

- Check the oil leakage and the oil level. Refer to TM-12, "Inspection".
- Check the operation of the control linkage. Refer to TM-16, "Inspection".

UNIT REMOVAL AND INSTALLATION

TRANSAXLE ASSEMBLY

Exploded View

INFOID:0000000006056577

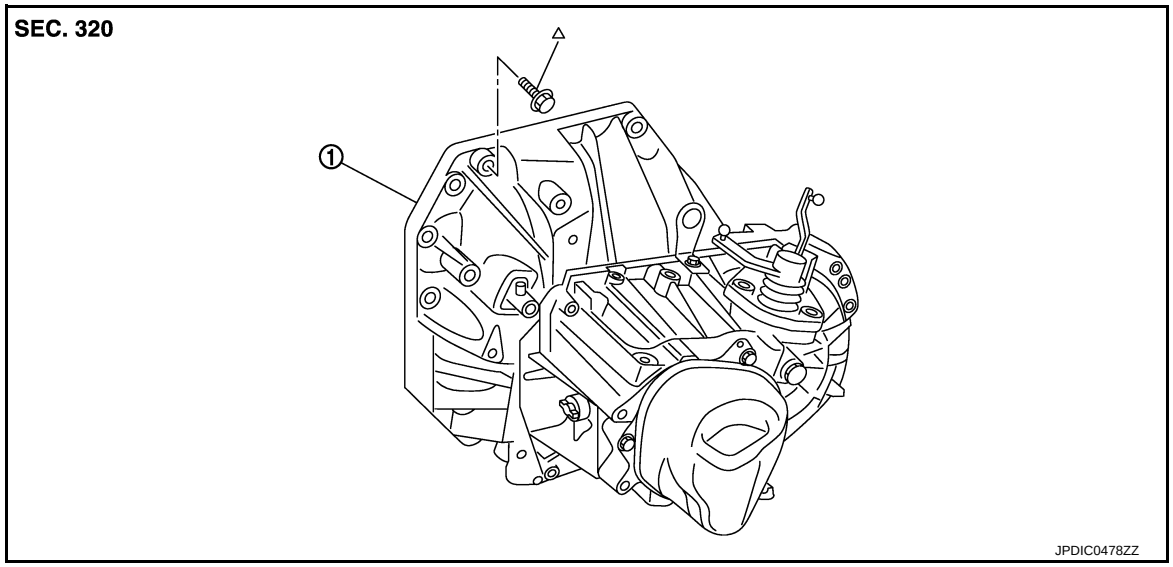

1. Transaxle assembly

△: Refer to "INSTALLATION" in TM-19, "Removal and Installation" for the locations and tightening torque.

Removal and Installation

INFOID:0000000006056578

CAUTION:
Never reuse CSC (Concentric Slave Cylinder). Because CSC slides back to the original position every time when removing transaxle assembly. At this timing, dust on the sliding parts may damage a seal of CSC and may cause clutch fluid leakage. Refer to CL-16, "Removal and Installation".

REMOVAL

1. Shift the shifter lever to the neutral position.
2. Remove battery. Refer to PG-143, "Removal and Installation".
3. Remove air duct (inlet), air cleaner body assembly, and air cleaner cover assembly. Refer to EM-24, "Removal and Installation".
4. Remove air breather hose. Refer to TM-17, "Removal and Installation".
5. Remove bracket (1).

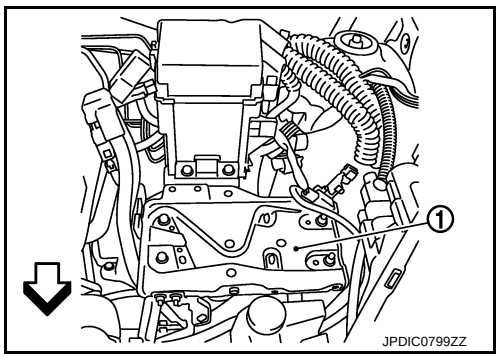

⇦ : Vehicle front

6. Disconnect selector cable and shifter cable from transaxle assembly. Refer to TM-15, "Removal and Installation".
7. Disconnect speed sensor connector.
8. Remove clutch tube clip from engine mounting bracket (LH).
9. Remove clutch tube from CSC (Concentric Slave Cylinder) and then temporarily secure it to a position where it will not inhibit work. Refer to CL-14, "Removal and Installation".
   CAUTION:
   - **Keep painted surface on the body or other parts free of clutch fluid. If it spills, wipe up immediately and wash the affected area with water.**
   - **Never depress clutch pedal during removal procedure.**
10. Remove fender protector LH. Refer to EXT-17, "FENDER PROTECTOR : Removal and Installation".

11. Disconnect ground cable.
12. Disconnect position switch connector (A).
13. Remove the harness clamp from rear housing.
14. Disconnect crankshaft position sensor connector.
15. Remove the engine harness clamp and then temporarily secure it to a position where it will not inhibit work.
16. Remove starter motor. Refer to STR-19, "Removal and Installation".
17. Remove front drive shafts. Refer to FAX-17, "Removal and Installation".
    NOTE:
    Insert a suitable plug into differential side oil seal after removing front drive shaft.

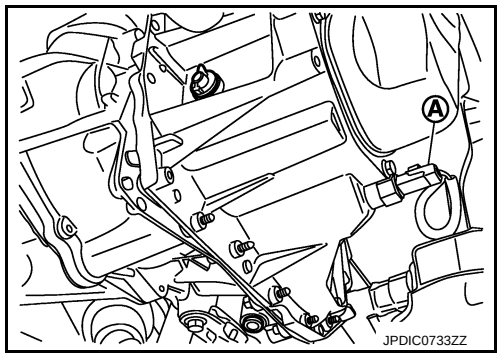

18. Set a suitable jack to transaxle assembly and then set a suitable jack to engine assembly.
    CAUTION:
    When setting a suitable jack, be careful so that it does not contact with the switch.
19. Remove engine mounting frame support (LH) mounting bolts from vehicle. Refer to EM-79, "Removal and Installation".
20. Remove rear engine mounting bracket and rear torque rod. Refer to EM-79, "Removal and Installation".
21. Remove transaxle assembly mounting bolts.
22. Remove transaxle assembly from the engine.
    CAUTION:
    - **Fix transaxle assembly to a suitable jack.**
    - **The transaxle assembly must not interfere with the wire harnesses and clutch tube.**
23. Remove engine mounting bracket (LH) and engine mounting frame support (LH) from transaxle assembly. Refer to EM-79, "Exploded View".
24. Remove CSC. Refer to CL-16, "Removal and Installation".

INSTALLATION

Note the following, and install in the reverse order of removal.

CAUTION:
- **Fix transaxle assembly to a suitable jack.**
- **The transaxle assembly must not interfere with the wire harnesses and clutch tube.**
- **When installing transaxle assembly, never bring input shaft into contact with clutch cover.**
- **Tapping work for tapping bolts is not applied to new clutch housing. Do not perform tapping by other than screwing tapping bolts because tapping is formed by screwing tapping bolts into clutch housing.**
- Tighten transaxle assembly mounting bolts to the specified torque. The figure is the view from the engine.

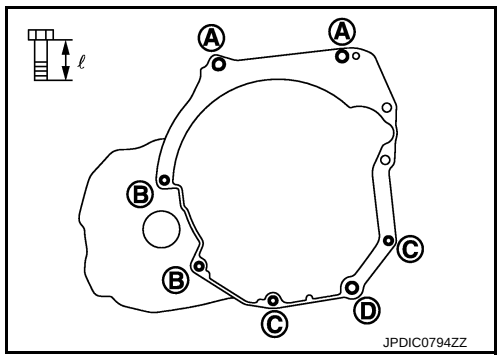

Bolt symbol	A	B	C	D
Insertion direction	Transaxle to engine	Engine to transaxle		
Quantity	2	2	2	1
Bolt length "ℓ" mm (in)	55 (2.17)	44 (1.73)	49 (1.93)	69 (2.72)
Tightening torque N·m (kg-m, ft-lb)	48.0 (4.9, 35)			

Inspection

INFOID:0000000006056629

INSPECTION AFTER INSTALLATION

- Check the oil leakage and the oil level. Refer to TM-12, "Inspection".
- Check the operation of the control linkage. Refer to TM-16, "Inspection".

UNIT DISASSEMBLY AND ASSEMBLY

TRANSAXLE ASSEMBLY

Exploded View

INFOID:0000000006056579

CASE AND HOUSING

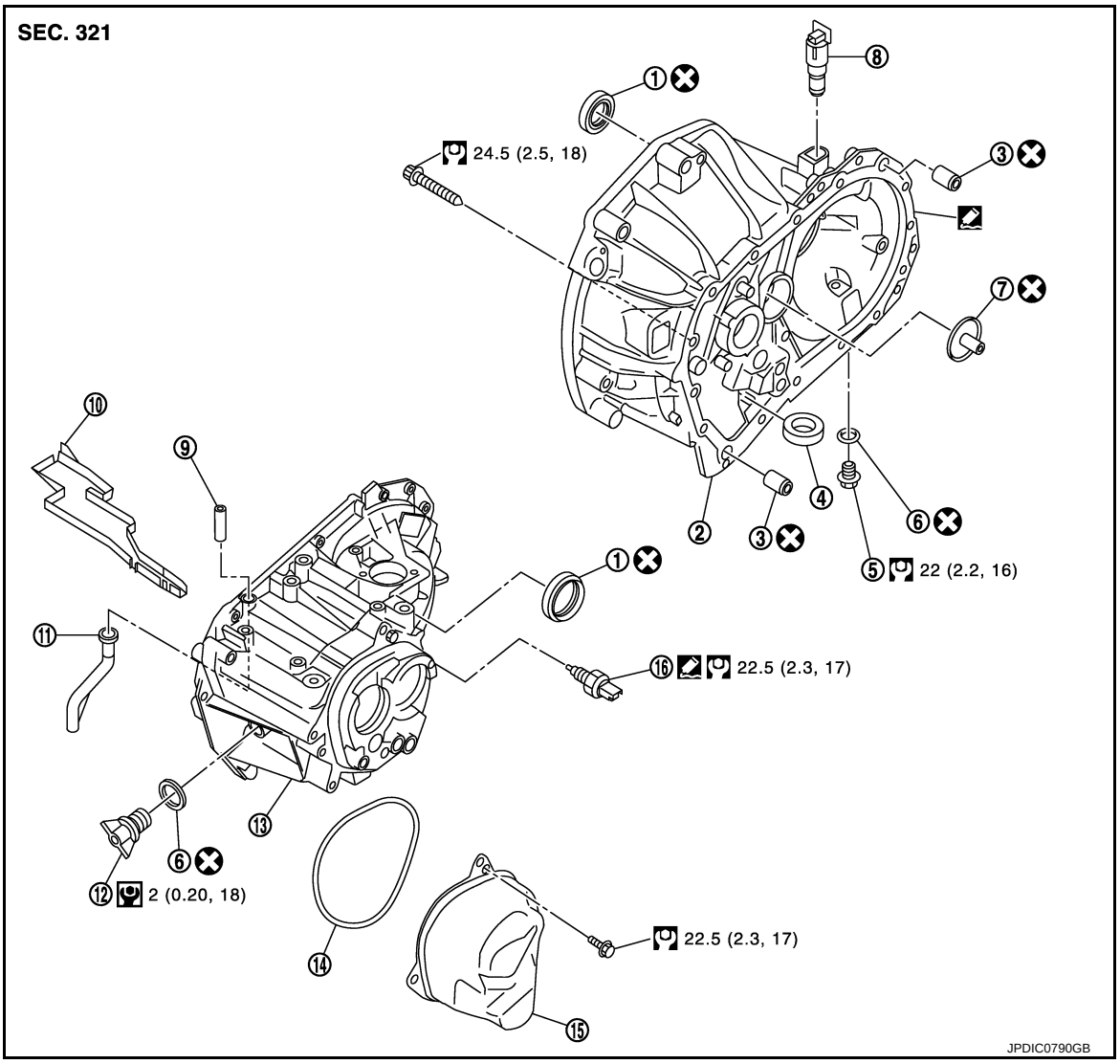

1. Differential side oil seal	2. Clutch housing	3. Dowel pin
4. Magnet	5. Drain plug	6. Gasket
7. Oil channel	8. Speed sensor	9. 2 way connector
10. Oil gutter	11. Air breather inner tube	12. Filler plug
13. Transaxle case	14. O-ring	15. Rear housing
16. Position switch		

: Apply Genuine Liquid Gasket, Three Bond 1215 or an equivalent.

Refer to GI-4, "Components" for symbols not described on the above.

SHAFT AND GEAR

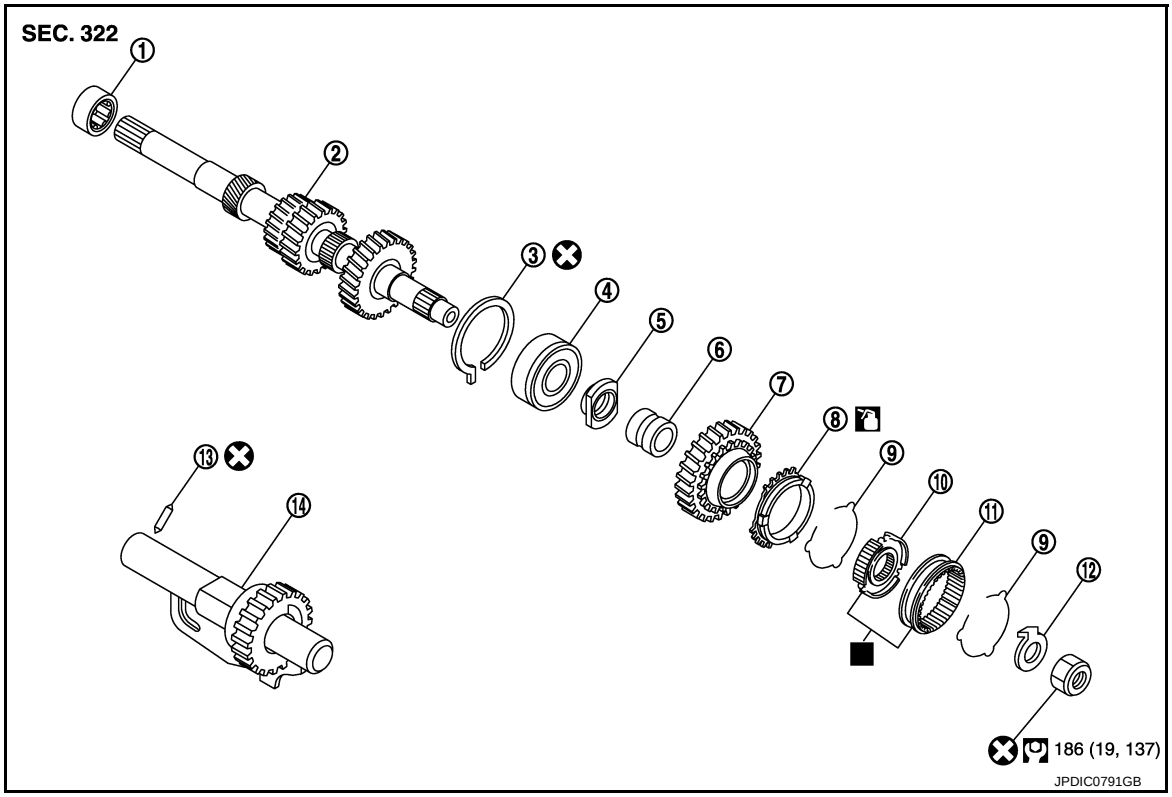

1. Input shaft front bearing
2. Input shaft
3. Snap ring
4. Input shaft rear bearing
5. Adapter plate
6. Bushing
7. 5th input gear
8. 5th baulk ring
9. Spread spring
10. 5th-reverse synchronizer hub
11. 5th-reverse coupling sleeve
12. Retaining pin
13. Reverse gear assembly

: Apply gear oil.

: Replace the parts as a set.

Refer to GI-4, "Components" for symbols not described on the above.

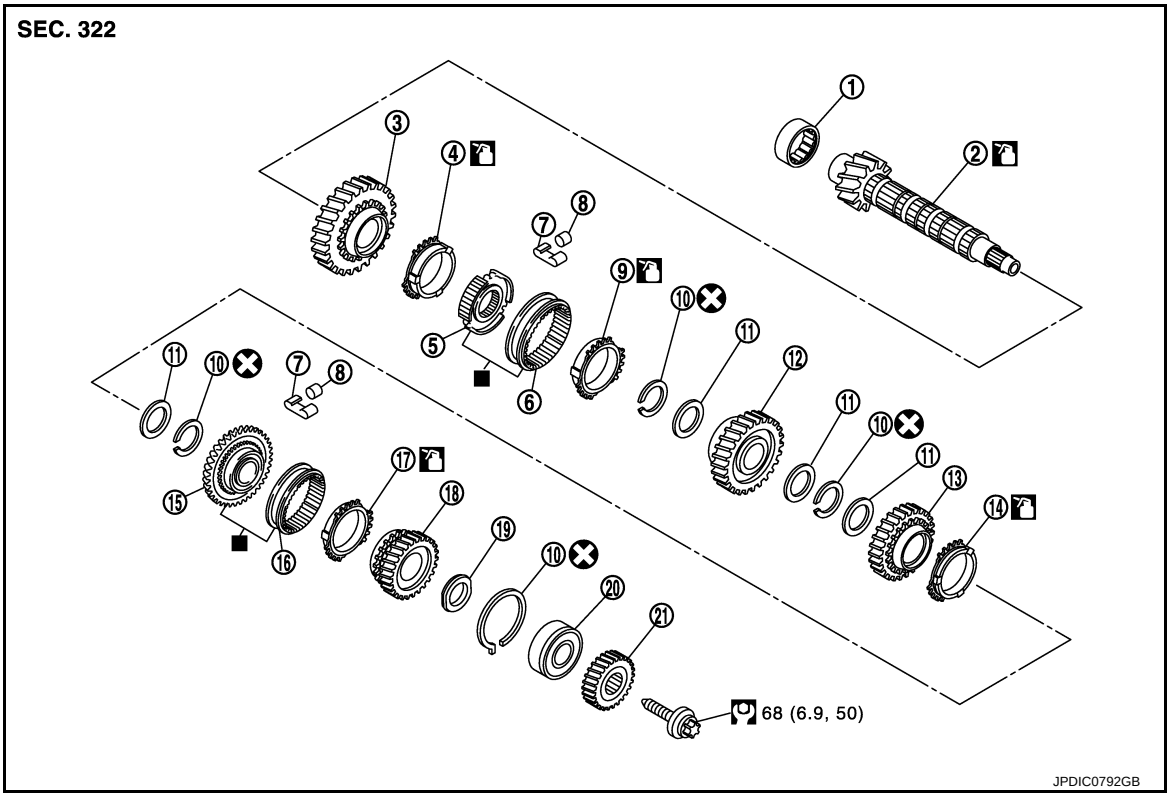

1.	Mainshaft front bearing	2.	Mainshaft	3.	1st main gear
4.	1st baulk ring	5.	1st-2nd synchronizer hub	6.	1st-2nd coupling sleeve
7.	Spring	8.	Insert key	9.	2nd baulk ring
10.	Snap ring	11.	Thrust washer	12.	2nd main gear
13.	3rd main gear	14.	3rd baulk ring	15.	3rd-4th synchronizer hub
16.	3rd-4th coupling sleeve	17.	4th baulk ring	18.	4th main gear
19.	Spacer	20.	Mainshaft rear bearing	21.	5th main gear

: Apply gear oil.

: Replace the parts as a set.

Refer to GI-4, "Components" for symbols not described on the above.

SHIFT FORK AND FORK ROD

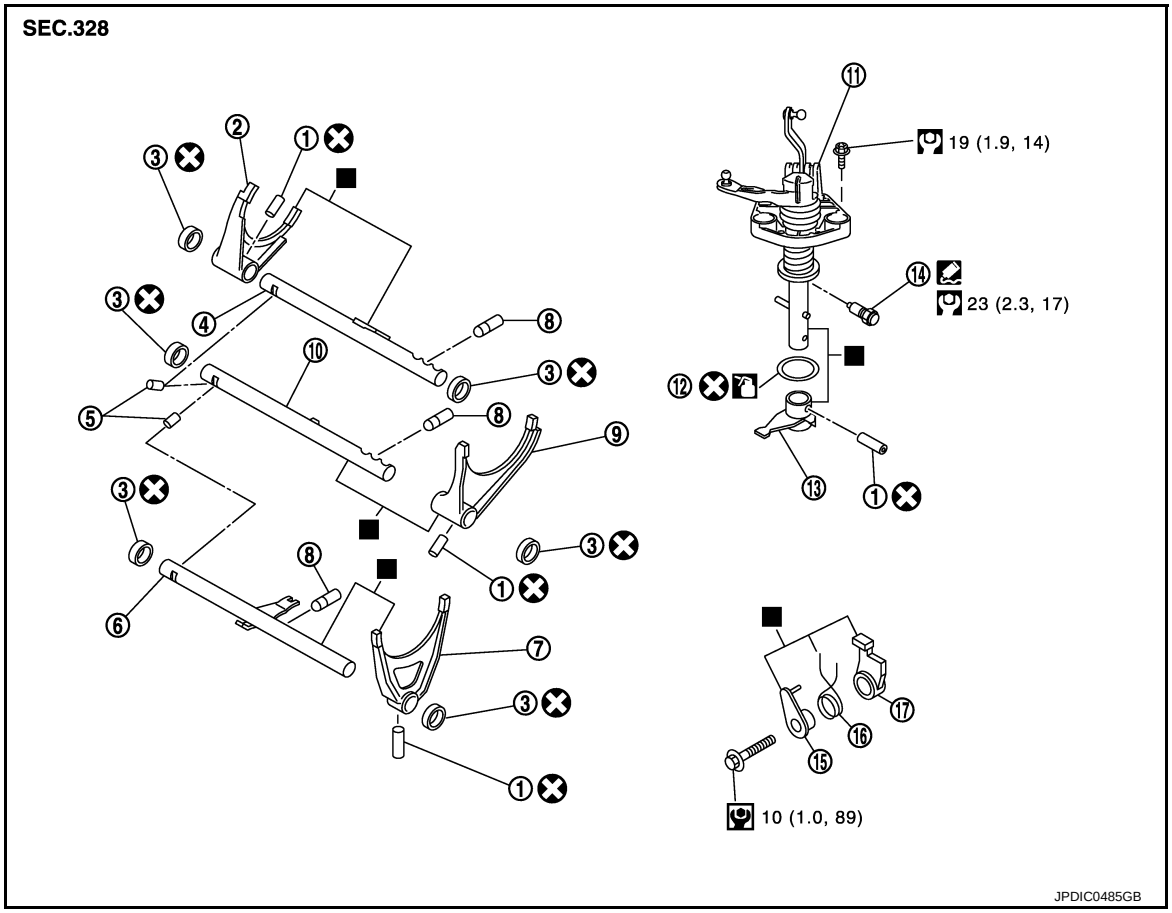

1. Retaining pin	2. 1st-2nd shift fork	3. Bushing
4. 1st-2nd fork rod	5. Lock pin	6. 5th-reverse fork rod
7. 5th-reverse shift fork	8. Check ball	9. 3rd-4th shift fork
10. 3rd-4th fork rod	11. Control shaft	12. O-ring
13. Selector	14. Check ball plug	15. Bushing
16. Spring	17. Gear catch	

: Apply gear oil.

: Apply Genuine Liquid Gasket, Three Bond 1215 or an equivalent.

: Replace the parts as a set.

Refer to GI-4, "Components" for symbols not described on the above.

FINAL DRIVE

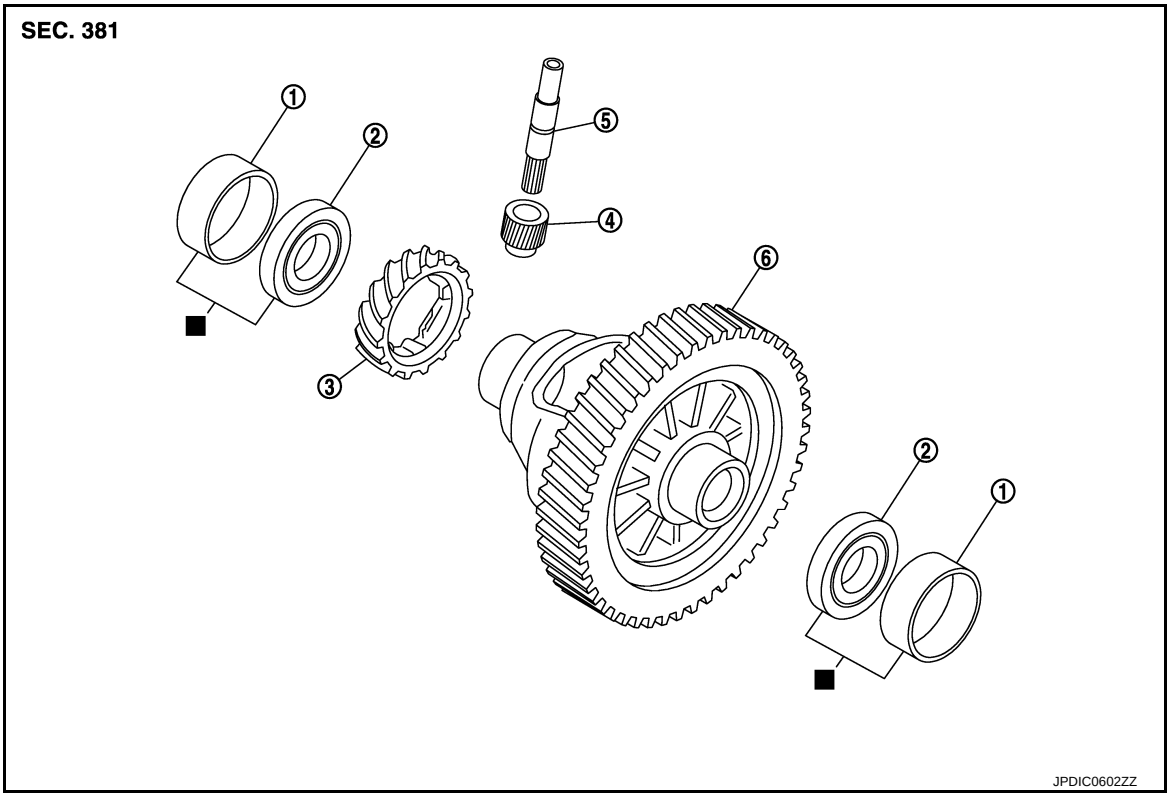

1. Differential side bearing outer race
2. Differential side bearing
3. Speedometer drive gear
4. Pinion gear
5. Pinion shaft
6. Final drive assembly

■: Replace the parts as a set.

Disassembly

INFOID:0000000006056580

1. Remove drain plug and gasket from clutch housing, using a socket [Commercial service tool] and drain gear oil.
2. Remove filler plug and gasket from transaxle case.
3. Remove rear housing and O-ring.

CAUTION:

Remove to axial direction of input shaft (⬅) because rear housing oil channel is inserted to input shaft center hole.

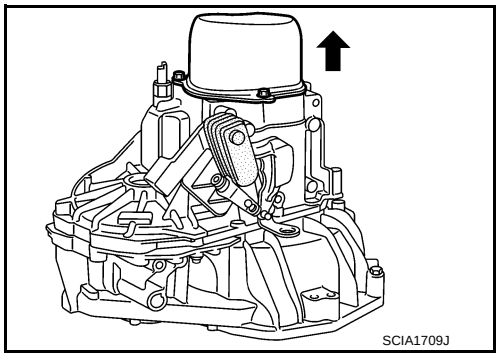

4. Shift the shifter lever A (1) to the 3rd gear position.
NOTE:
- If it is not shifted to the 3rd gear position, transaxle case cannot be removed from clutch housing.
- The 3rd gear position means that shifter lever A is fully rotated clockwise and it is returned approximately 10 degrees.

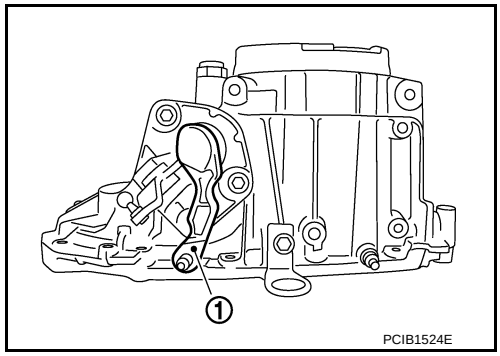

5. Remove 5th-reverse shift fork (1) and 5th-reverse coupling sleeve according to the following steps.

a. Remove retaining pin from 5th-reverse shift fork, using a pin punch (A).

b. Press 5th-reverse shift fork, shift to 5th, and then engage it with 3rd gear.

c. Remove mounting bolt (B).

d. Remove mounting nut (C) and washer.
CAUTION:
Never use an impact wrench for removal, or otherwise each gear may be damaged.

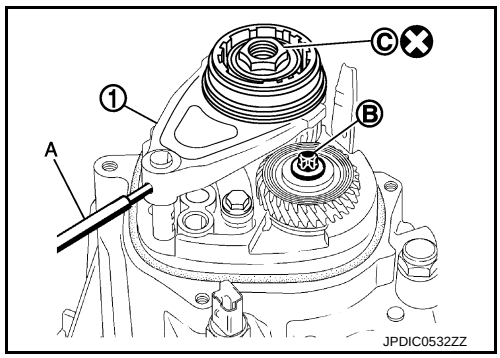

e. Remove 5th-reverse shift fork and 5th-reverse coupling sleeve from 5th-reverse synchronizer hub.

6. Remove 5th-reverse synchronizer hub from input shaft, using a puller [Commercial service tool].
CAUTION:
Set claw of the puller to the wider side of the hub when setting the puller in 5th-reverse synchronizer hub.

7. Remove spread springs from 5th-reverse synchronizer hub.

8. Remove 5th baulk ring, 5th input gear, bushing, and adapter plate from input shaft.

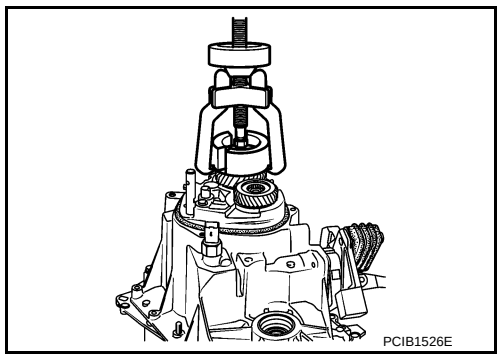

9. Remove 5th main gear from mainshaft, using the pullers.

A : Puller [SST: KV32300QAC]
B : Puller [SST: KV32300QAD]

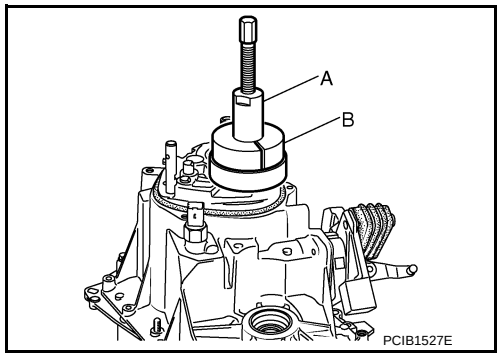

10. Remove position switch from transaxle case.

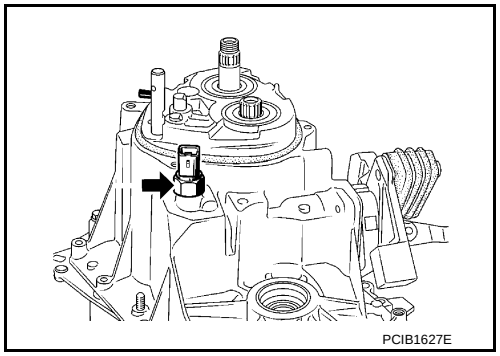

11. Remove transaxle case mounting bolts (⬅).
12. Remove transaxle case from clutch housing.

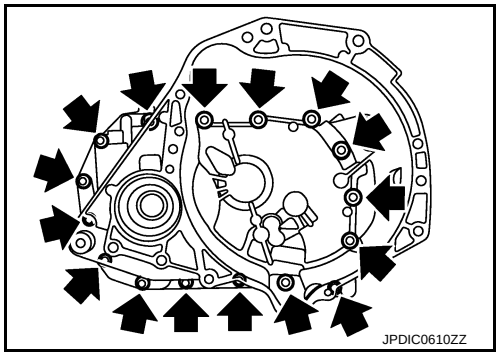

13. Remove spacer (1) and 4th main gear (2) from mainshaft.

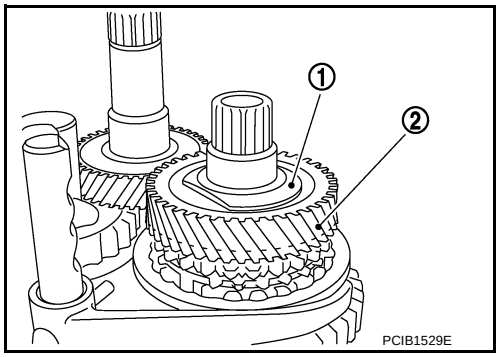

14. Remove 5th-reverse fork rod (1) according to the following steps.
a. Pull 5th-reverse fork rod up until it contacts claw (⌒) of reverse gear assembly (2).
b. Press gear portion of reverse gear assembly down, and then remove 5th-reverse fork rod from clutch housing.

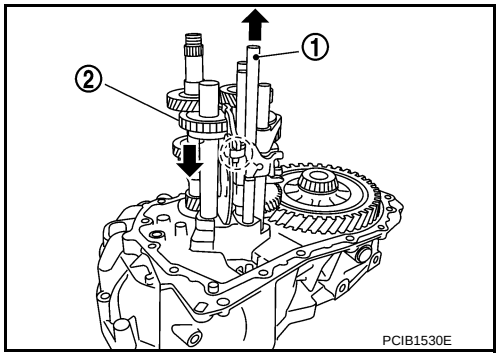

15. Remove 3rd-4th fork rod assembly (1), 3rd-4th coupling sleeve (2), and input shaft assembly (3) according to the following steps.
a. Remove 4th baulk ring, insert keys, and springs from mainshaft.
b. Pull gear of reverse gear assembly (4) up.
c. Pull 1st-2nd fork rod (5) up, and then maintain the neutral position.
d. Remove 3rd-4th fork rod assembly, 3rd-4th coupling sleeve, and input shaft assembly from clutch housing at the same time.
16. Remove retaining pin from 3rd-4th shift fork, using a pin punch.

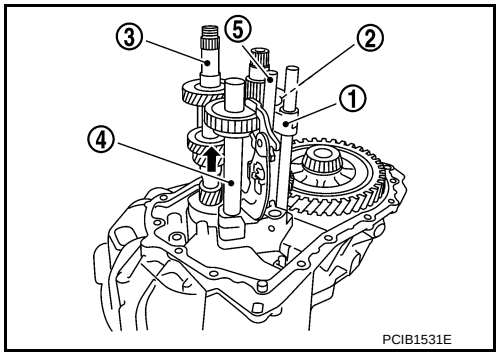

17. Remove 3rd-4th shift fork from 3rd-4th shift fork rod.
18. Remove lock pins (⬅) from clutch housing.

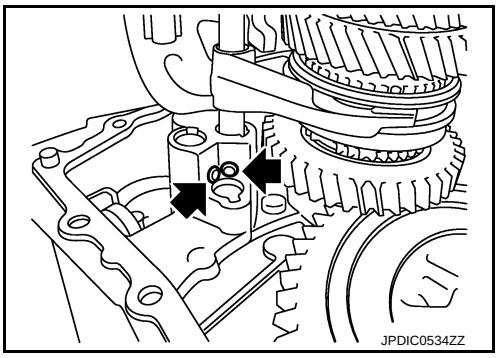

19. Remove 1st-2nd fork rod assembly (1) and mainshaft assembly (2) from clutch housing at the same time.
20. Remove retaining pin from 1st-2nd shift fork, using a pin punch.
21. Remove 1st-2nd shift fork from 1st-2nd shift fork rod.

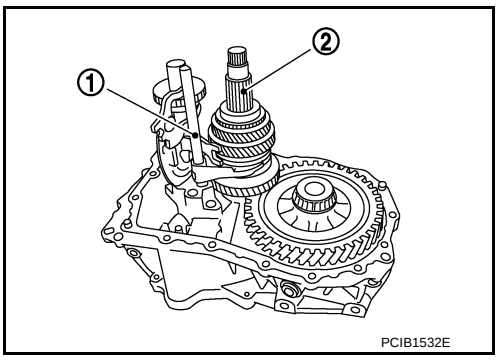

22. Remove retaining pin from reverse gear assembly, using a pin punch.
23. Remove reverse gear assembly from clutch housing.

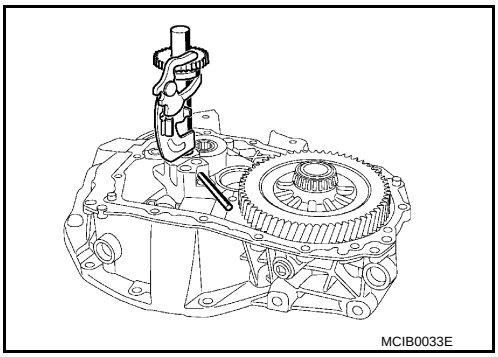

24. Remove final drive assembly (1) from clutch housing.
25. Remove pinion gear, pinion shaft, and speed sensor from clutch housing.
26. Remove magnet and dowel pins (2) from clutch housing.

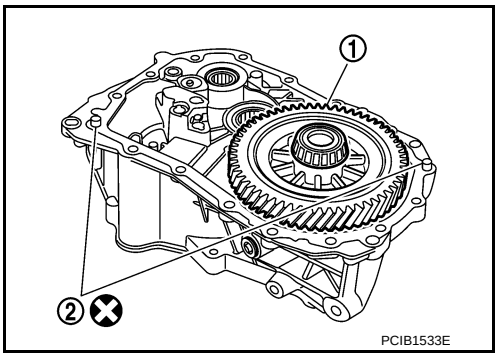

27. Remove input shaft front bearing from clutch housing, using a drift [Commercial service tool].

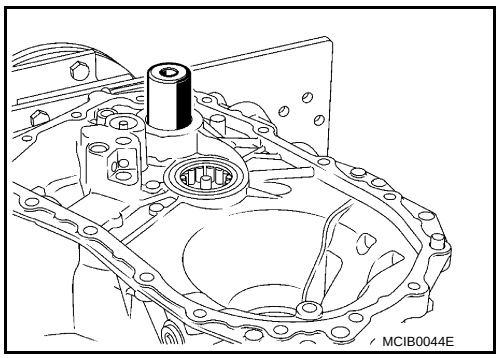

28. Cut oil channel tube at the root.
29. Remove mainshaft front bearing and oil channel from clutch housing, using the valve seat remover (A) [SST: KV111011S0].

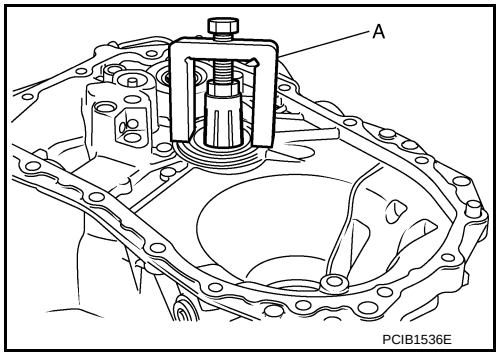

30. Remove bushings (1) from clutch housing, using a bearing remover [Commercial service tool].

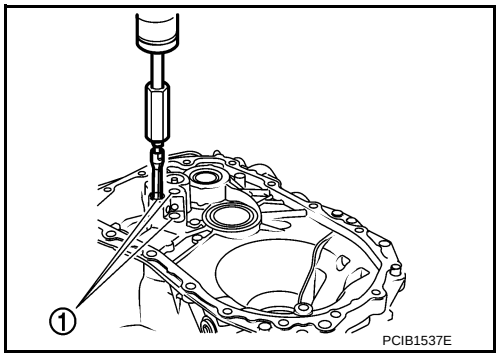

31. Remove differential side oil seals (1) from clutch housing and transaxle case, using a screwdriver.
CAUTION:
Never damage transaxle case and clutch housing.

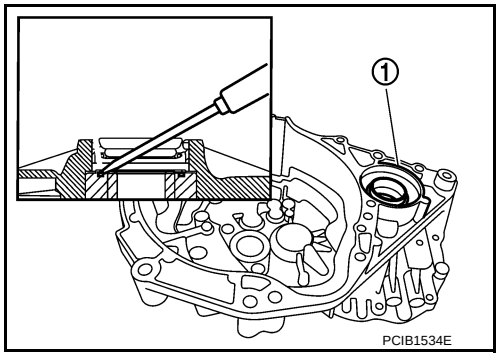

32. Remove differential side bearing outer races (1) from clutch housing and transaxle case, using a brass rod.
CAUTION:
Never damage transaxle case and clutch housing.

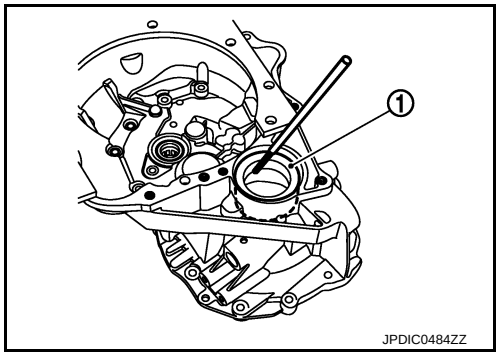

33. Pull 2 way connector (1) straight to remove it from air breather inner tube (2).
34. Remove air breather inner tube from transaxle case.

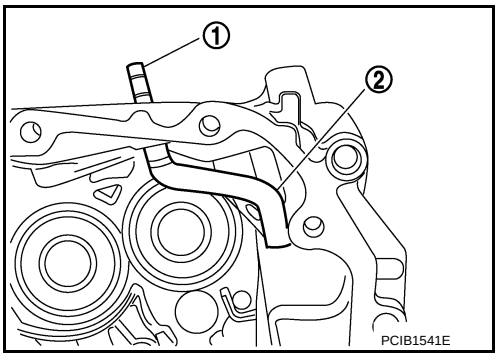

35. Remove bushings (1) from transaxle case, using a bearing remover [Commercial service tool].
36. Remove retaining pin (⬅) from selector, using a pin punch.
37. Remove selector from control shaft.
38. Remove oil gutter from transaxle case.

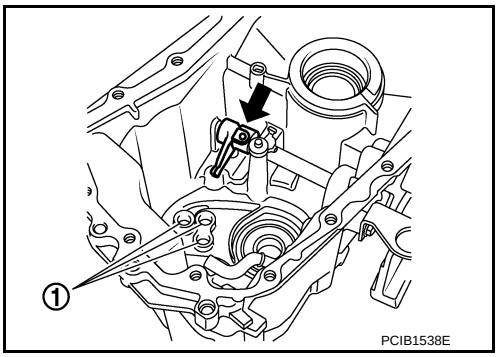

39. Remove mounting bolt (⬅), and then remove bushing, spring, and gear catch from transaxle case.
40. Remove check ball plug from transaxle case.

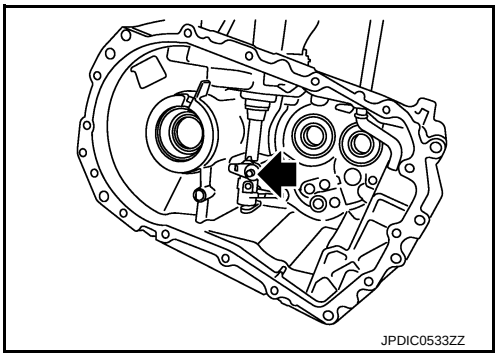

41. Remove mounting bolts (⬅), and then remove control shaft (1) from transaxle case.
42. Remove O-ring from control shaft.

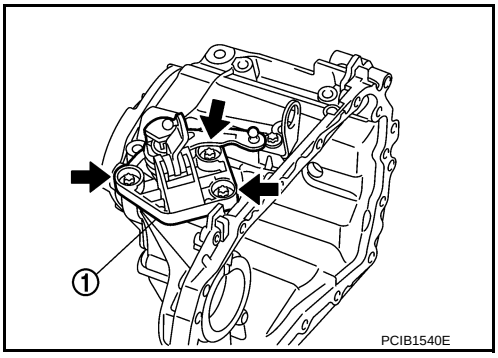

43. Expand snap rings (1) and remove input shaft rear bearing and mainshaft rear bearing from transaxle case, using the drift (A) [SST: ST35300000].
44. Remove snap rings from transaxle case.
45. Remove check balls (2) from transaxle case.

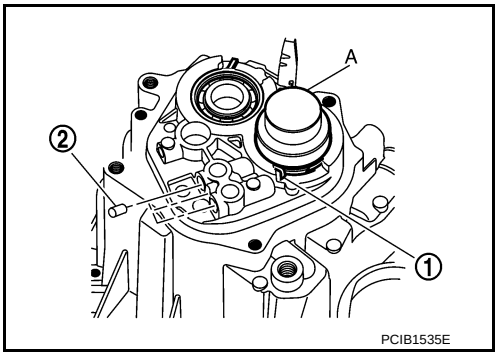

Assembly

INFOID:0000000006056581

1. Install snap rings (1) along transaxle case groove so that notch mates with housing as shown in the figure.
   CAUTION:
   Check snap ring installing direction. Never misassemble.

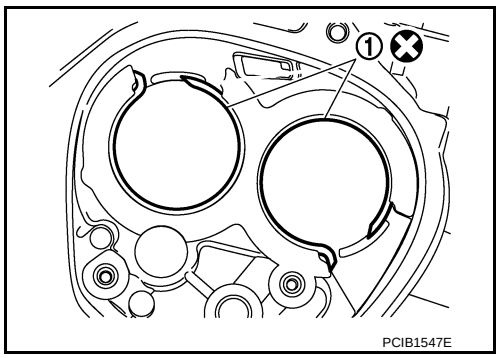

2. Expand snap rings (1) and install input shaft rear bearing and mainshaft rear bearing to transaxle case, using the drift (A) [SST: ST35300000].
   CAUTION:
   Check that snap ring is correctly installed within bearing groove.
3. Install check balls (2) to transaxle case.

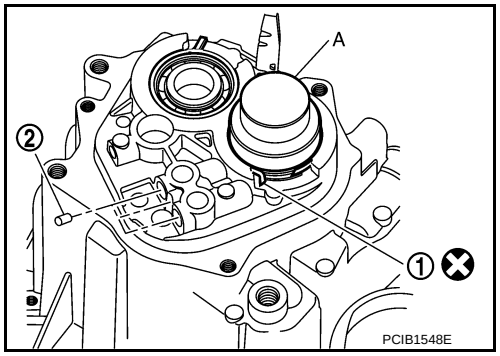

4. Install bushings (1) until they reach transaxle case, using a drift (A) [Commercial service tool].
5. Apply gear oil to O-ring, and then install it to control shaft.
   CAUTION:
   Never reuse O-ring.

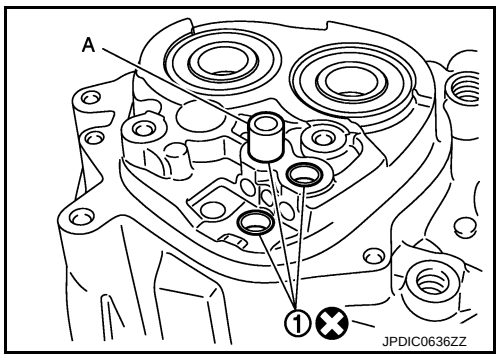

6. Install control shaft (1) to transaxle case, and tighten mounting bolts (⬅) to the specified torque.
   CAUTION:
   Replace control shaft and selector as a set.

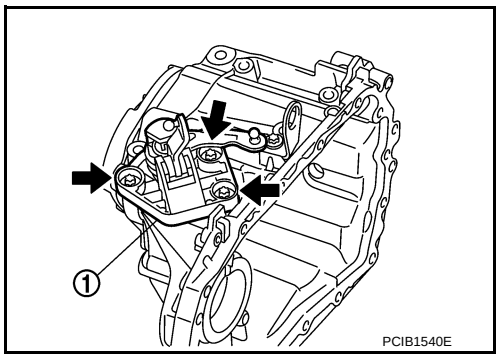

7. Install selector to control shaft, and then install retaining pin (⬅) to selector, using a pin punch.
   CAUTION:
   - **Be careful with the orientation of selector.**
   - **Replace control shaft and selector as a set.**
   - **Never reuse retaining pin.**

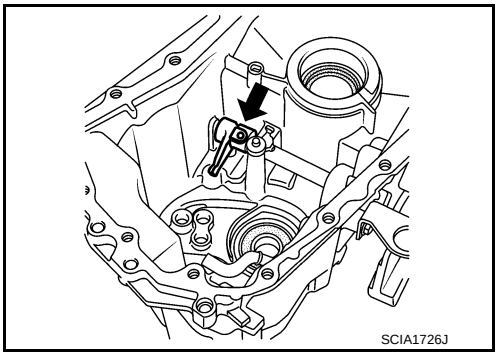

8. Install gear catch, spring, and bushing to transaxle case, and then tighten mounting bolt (⬅) to the specified torque.
   CAUTION:
   Replace gear catch, spring, and bushing as a set.
9. Install oil gutter to transaxle case.

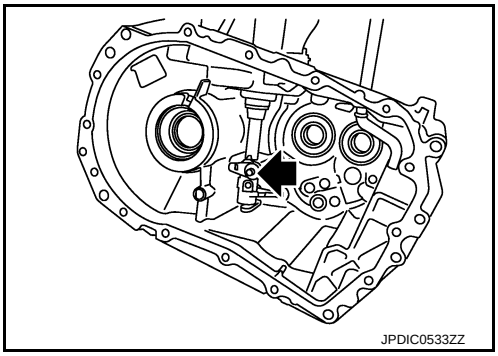

10. Install air breather inner tube (2) to transaxle case.
    CAUTION:
    Never damage air breather inner tube.
    NOTE:
    It is easier to install when air breather inner tube end is wrapped and narrowed by tape. Remove tape after installation.
11. Insert 2 way connector (1) straight, and then install it to air breather inner tube.
    CAUTION:
    Check air breather inner tube for twists after installing.

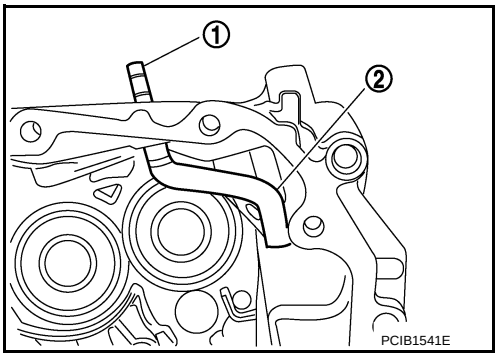

12. Install differential side oil seals (1) to clutch housing and transaxle case, using the drift [Stamping number: B.vi 1666-B] of the drift set [SST: KV32500QAA].

    B : Transaxle case side
    C : Clutch housing side

    Dimension "L_1" : 5.7 – 6.3 mm (0.224 – 0.248 in)
    Dimension "L_2" : 2.4 – 3.0 mm (0.094 – 0.118 in)

    CAUTION:
    - **Never incline differential side oil seal.**
    - **Never damage clutch housing and transaxle case.**

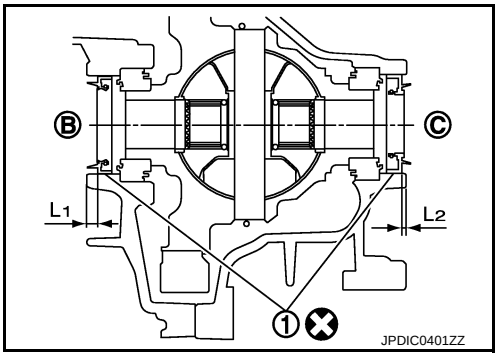

13. Install differential side bearing outer races until they reach clutch housing and transaxle case, using the drift (A) [SST: KV32300QAE].
CAUTION:
Replace differential side bearing outer race and differential side bearing as a set.

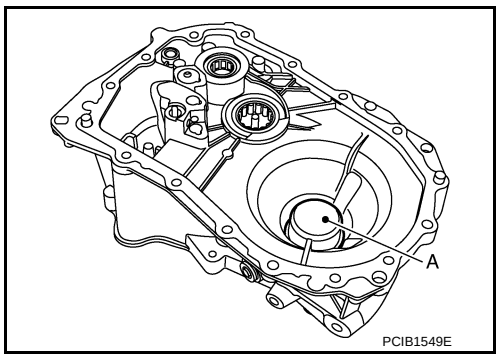

14. Install bushings (1) until they reach clutch housing, using a drift (A) [Commercial service tool].
15. Install oil channel to clutch housing.
CAUTION:
Never reuse oil channel.

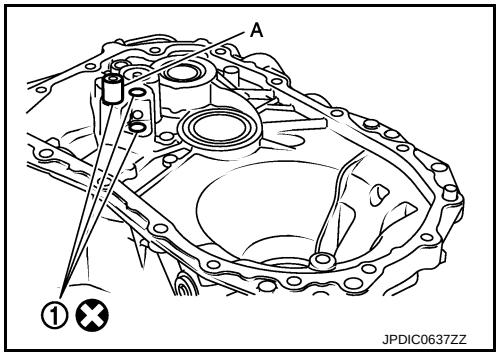

16. Install mainshaft front bearing so that it becomes even to clutch housing surface, using the drift (A) [SST: ST33400001].

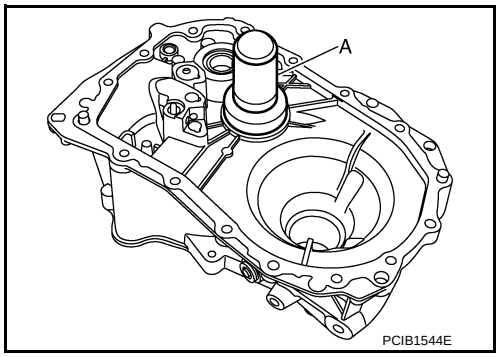

17. Install input shaft front bearing so that it becomes even to clutch housing surface, using the drift [SST].
18. Install pinion gear, pinion shaft, and speed sensor to clutch housing.

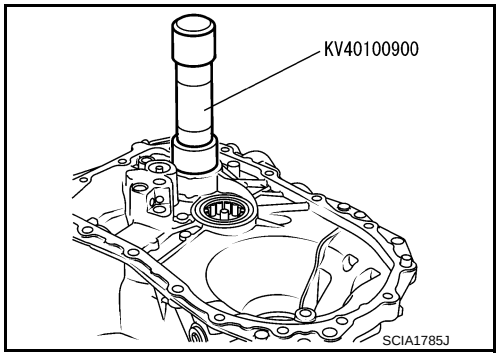

19. Install final drive assembly (1) to clutch housing.
20. Install dowel pins (2) and magnet to clutch housing.

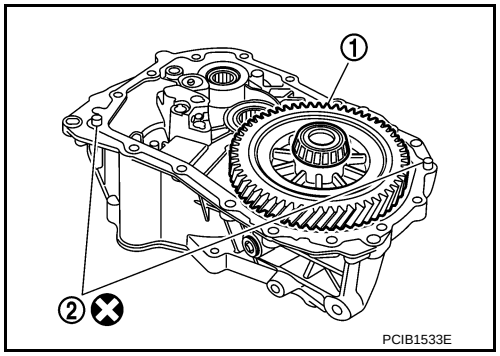

21. Install reverse gear assembly to clutch housing, and then install retaining pin to clutch housing, using a pin punch.
    CAUTION:
    Never reuse retaining pin.
22. Install 1st-2nd shift fork to 1st-2nd fork rod, and then install retaining pin to 1st-2nd shift fork.
    CAUTION:
    - **Never reuse retaining pin.**
    - **Replace 1st-2nd fork rod and 1st-2nd shift fork as a set.**

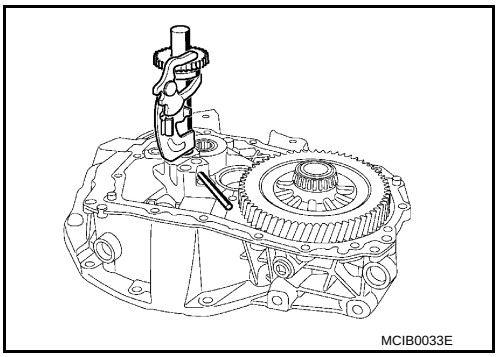
MCIB0033E

23. Set 1st-2nd fork rod assembly (1) onto mainshaft assembly (2), and then install them to clutch housing.

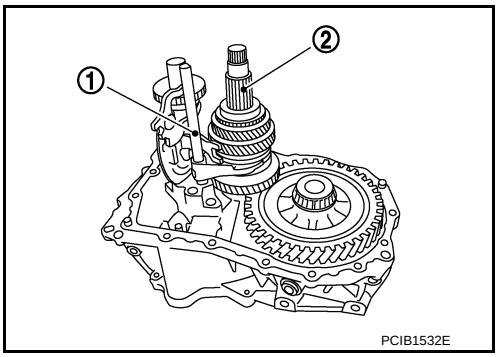

PCIB1532E

24. Install lock pins (⬅) to clutch housing.
25. Install 3rd-4th shift fork to 3rd-4th fork rod, and then install retaining pin to 3rd-4th shift fork.
    CAUTION:
    - **Never reuse retaining pin.**
    - **Replace 3rd-4th fork rod and 3rd-4th shift fork as a set.**

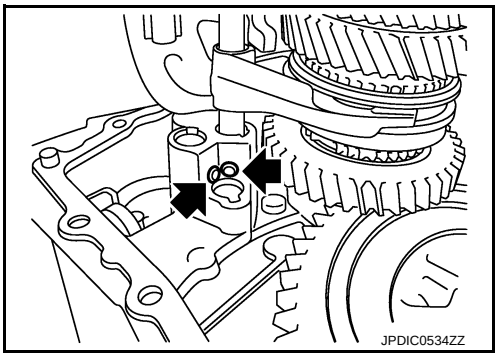
JPDIC0534ZZ

26. Install 3rd-4th fork rod assembly (1), 3rd-4th coupling sleeve (2), and input shaft assembly (3) to clutch housing according to the following steps.

a. Pull 1st-2nd fork rod (4) up, and then maintain the neutral position.

b. Set 3rd-4th fork rod assembly onto 3rd-4th coupling sleeve, and then install them together with input shaft assembly to clutch housing.
   CAUTION:
   - **Set lock pin (3rd-4th fork rod side) onto 1st-2nd fork rod groove and then install 3rd-4th fork rod assembly.**

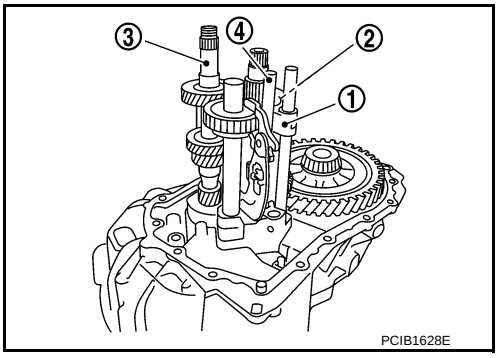

PCIB1628E

- **Be careful with the orientation of 3rd-4th coupling sleeve.**

  A : 4th main gear side
  B : 3rd main gear side

- **Install 3rd input gear of input shaft assembly so that it is set under reverse main gear of 3rd-4th coupling sleeve.**
- **Replace 3rd-4th coupling sleeve and 3rd-4th synchronizer hub as a set.**

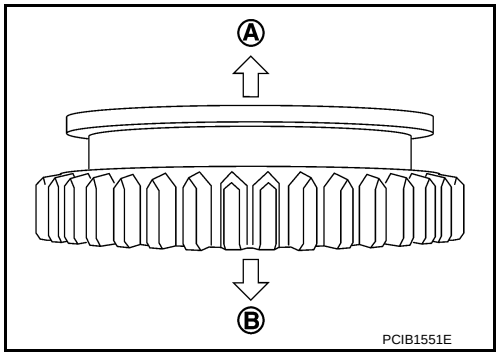

c. Install springs and insert keys to 3rd-4th synchronizer hub.
d. Apply gear oil to 4th baulk ring.
e. Install 4th baulk ring.

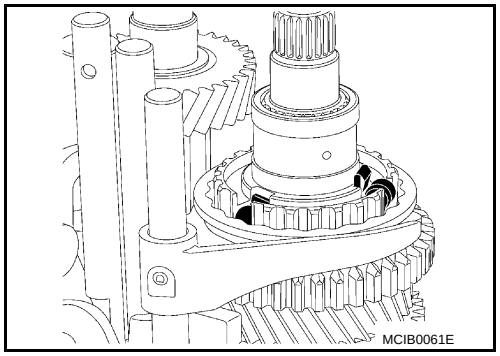

27. Install 5th-reverse fork rod (1) to clutch housing according to the following steps.
    CAUTION:
    Replace 5th-reverse fork rod and 5th-reverse shift fork as a set.
    a. Pull gear of reverse gear assembly (2) up.
    b. Temporarily install 5th-reverse fork rod to clutch housing.

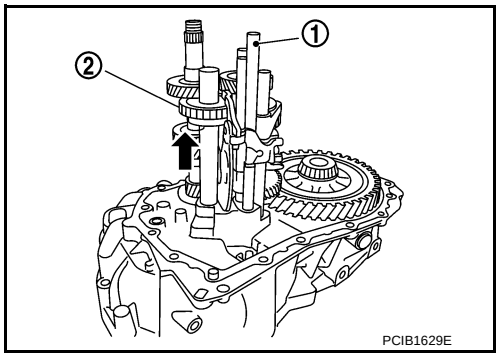

c. Press gear of reverse gear assembly (1) down and then install 5th-reverse fork rod (2) to clutch housing.
   CAUTION:
   Set levers of 5th-reverse fork rod so as to align with reverse gear assembly groove ( ).

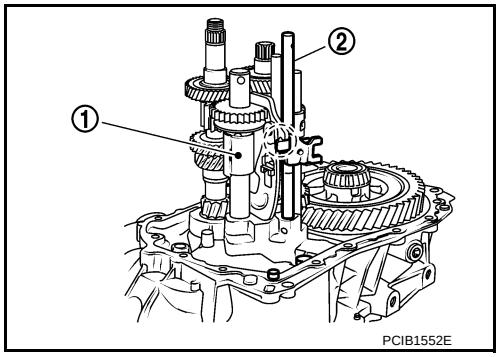

28. Install 4th main gear (2) and spacer (1) to mainshaft.
    CAUTION:
    Install spacer so that spacer protrusion faces to transaxle rear side.
29. Press 3rd-4th shift fork down and then shift 3rd-4th coupling sleeve to 3rd gear side.

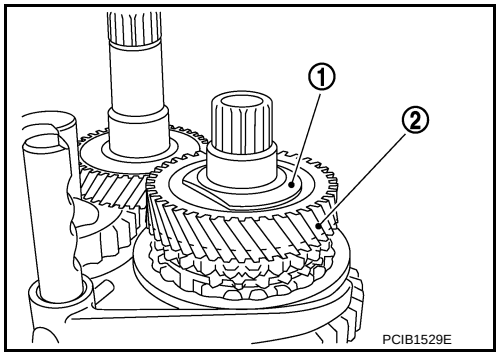

30. Shift the shifter lever A (1) to the 3rd gear position.
    NOTE:
    - If it is not shifted to the 3rd gear position, transaxle case cannot be installed to clutch housing.
    - The 3rd gear position means that shifter lever A is fully rotated clockwise and it is returned approximately 10 degrees.

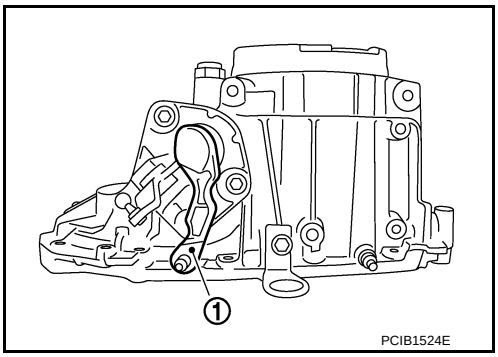

31. Apply recommended sealant to transaxle case mounting surface of clutch housing.
    - **Use Genuine Liquid Gasket, Three Bond 1215 or an equivalent.**

    CAUTION:
    - **Never allow old liquid gasket, moisture, oil, or foreign matter to remain on mounting surface.**
    - **Check that mounting surface is not damaged.**
    - **Apply a continuous bead of liquid gasket to the mounting surface.**

32. Install transaxle case to clutch housing. If it is difficult to install, slightly rotate shifter lever A counterclockwise, and then install.

    1 : Selector
    2 : Shift fork

    CAUTION:
    - **Never disrupt liquid gasket bead with transaxle case or other objects during installation.**
    - **Be careful to align the lever of 5th-reverse fork rod with reverse gear assembly groove.**

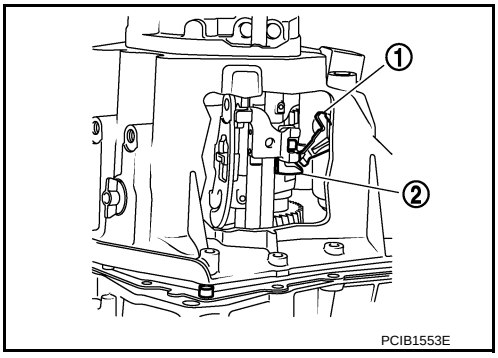

33. Rotate input shaft so that bearing and shaft fit each other, and then tighten transaxle mounting bolts (⬅) to the specified torque.
34. Apply recommended sealant to position switch thread and check ball plug thread. Tighten them to transaxle case and them to the specified torque.
    - **Use Genuine Liquid Gasket, Three Bond 1215 or an equivalent.**

    CAUTION:
    Never allow old liquid gasket, moisture, oil, or foreign matter to remain on thread.

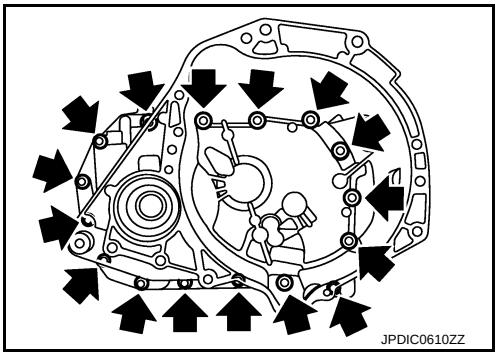

35. Apply gear oil to mainshaft spline.
36. Install 5th main gear (1) to mainshaft, using a suitable bolt (A) [M10 x 1.0] and a suitable nut (B).

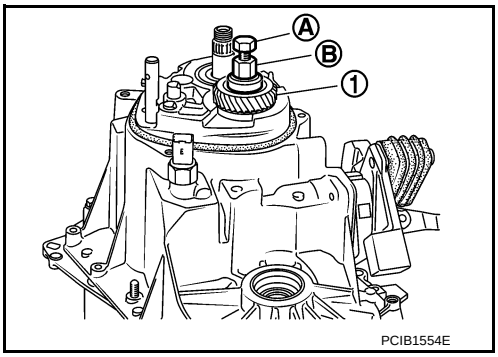

37. Install adapter plate (1), bushing (2), and 5th input gear (3) to input shaft.
CAUTION:
Be careful with the orientation of adapter plate.

⇦ : Transaxle case side

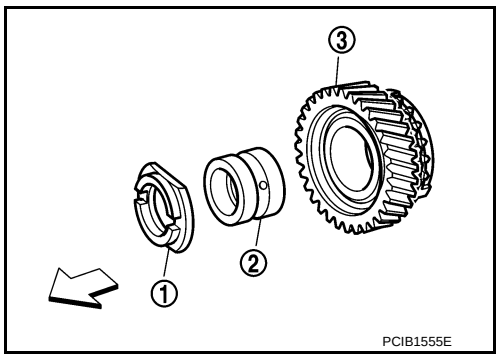

38. Install 5th-reverse synchronizer hub, 5th-reverse coupling sleeve, and 5th-reverse shift fork according to the following steps.

a. Apply gear oil to 5th baulk ring.

b. Install 5th baulk ring to 5th input gear.

c. Install spread springs to 5th-reverse synchronizer hub.
CAUTION:
Replace 5th-reverse synchronizer hub and 5th-reverse coupling sleeve as a set.

d. Install 5th-reverse synchronizer hub assembly and washer to input shaft.
CAUTION:
Be careful with the orientation of 5th-reverse synchronizer hub.

⇦ : 5th input gear side

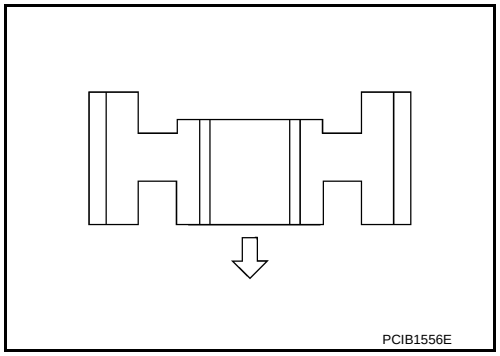

e. Set 5th-reverse shift fork (1) to 5th-reverse coupling sleeve, and then install them to 5th-reverse fork rod and input shaft.

A	: Pin punch
B	: Mounting bolt
C	: Mounting nut

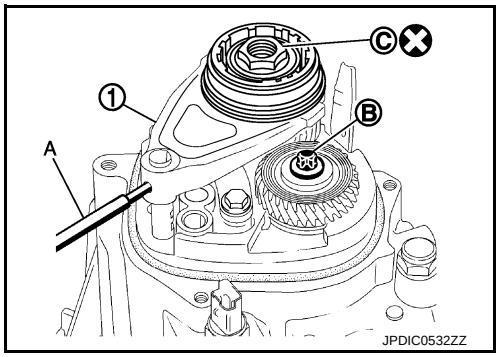

CAUTION:
- **Be careful with the orientation of 5th-reverse coupling sleeve.**

⇦ : 5th input gear side

- **Replace 5th-reverse synchronizer hub and 5th-reverse coupling sleeve as a set.**
- **Replace 5th-reverse shift fork and 5th-reverse fork rod as a set.**

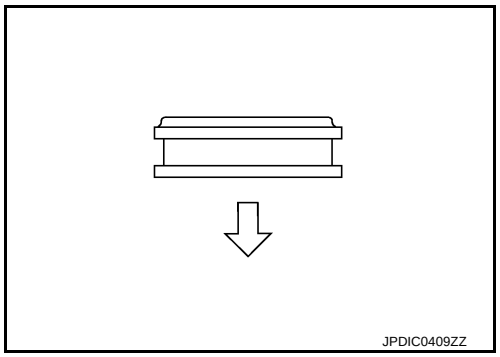

f. Check that the gear position is in the 3rd position. Press 5th-reverse shift fork and shift to 5th gear.

g. Tighten mounting bolt to the specified torque.

h. Tighten mounting nut to the specified torque.

CAUTION:
Never reuse mounting nut.

i. Install retaining pin to 5th-reverse shift fork, using a pin punch.
CAUTION:
Never reuse retaining pin.

39. Shift the shifter lever A (1) to the neutral position.
40. Install O-ring to rear housing.

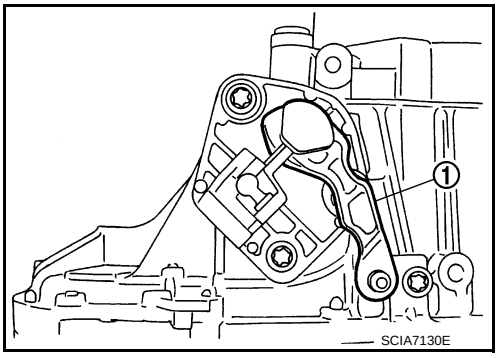

41. Install rear housing to transaxle case, and tighten bolts (⬅) to the specified torque.
CAUTION:
Never pinch O-ring when installing rear housing.
42. Install drain plug according to the following steps.

a. Install gasket to drain plug.
CAUTION:
Never reuse gasket.

b. Install drain plug to clutch housing, using a socket [Commercial service tool].

c. Tighten drain plug to the specified torque.

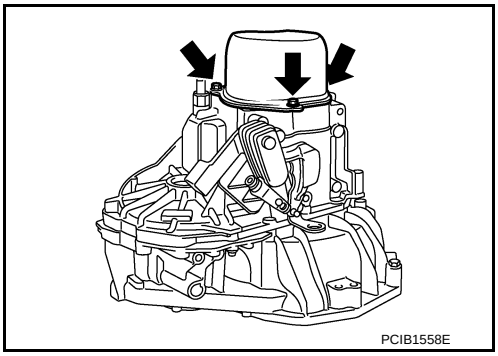

43. Install filler plug according to the following steps.

a. Install gasket to filler plug, and then install them to transaxle case.
CAUTION:
Never reuse gasket.

b. Tighten filler plug to the specified torque.
CAUTION:
Fill with gear oil before tightening filler plug to the specified torque.

Inspection

INFOID:0000000006056582

INSPECTION AFTER DISASSEMBLY

Check contact surface and sliding surface of fork rod and shift fork for excessive wear, uneven wear, bend, and damage. Replace if necessary.

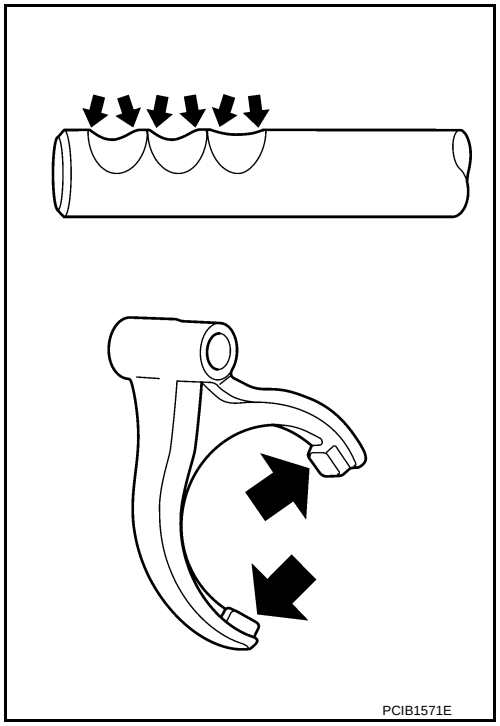

INPUT SHAFT AND GEAR

Exploded View

INFOID:0000000006056583

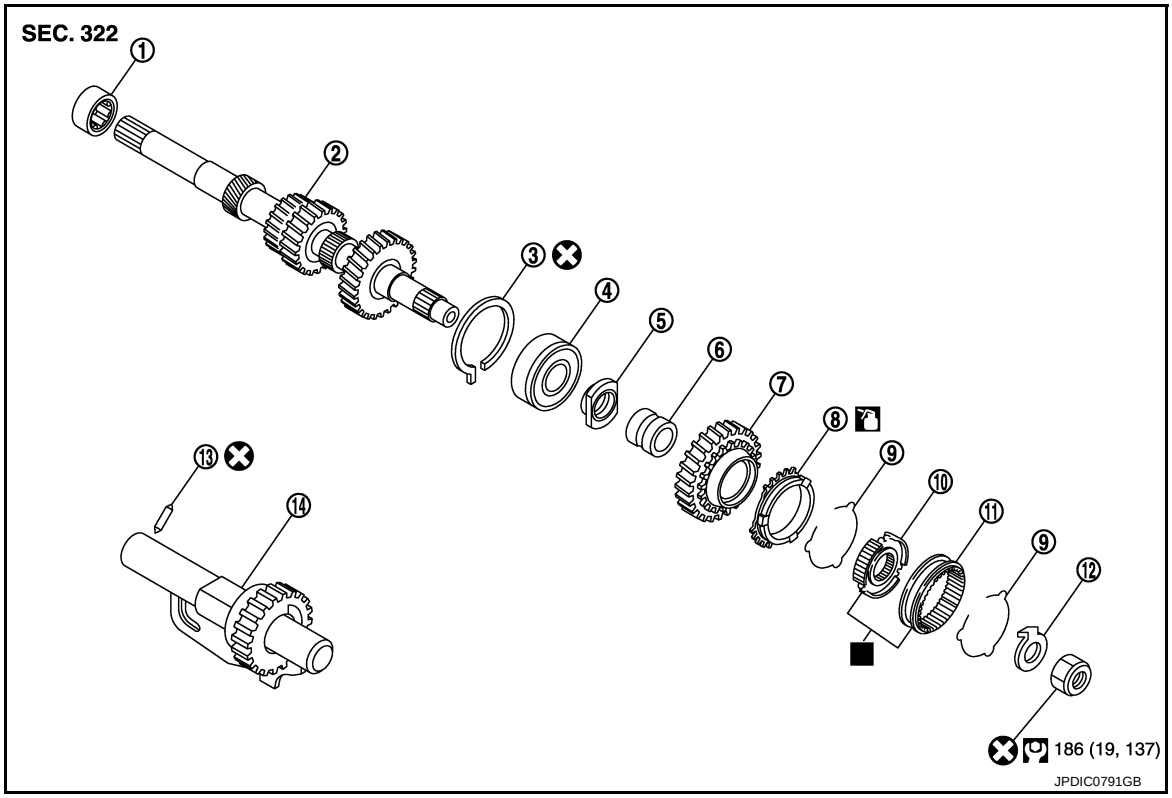

1. Input shaft front bearing
2. Input shaft
3. Snap ring
4. Input shaft rear bearing
5. Adapter plate
6. Bushing
7. 5th input gear
8. 5th baulk ring
9. Spread spring
10. 5th-reverse synchronizer hub
11. 5th-reverse coupling sleeve
12. Retaining pin
13. Reverse gear assembly

: Apply gear oil.

: Replace the parts as a set.

Refer to GI-4, "Components" for symbols not described on the above.

Disassembly

INFOID:0000000006056584

Refer to TM-25, "Disassembly" for disassembly procedure.

Assembly

INFOID:0000000006056585

Refer to TM-31, "Assembly" for assembly procedure.

Inspection

INFOID:0000000006056586

INSPECTION AFTER DISASSEMBLY

Input Shaft and Gears

Check the following items and replace if necessary.
- Damage, peeling, bend, uneven wear, and distortion of shaft
- Excessive wear, damage, and peeling of gear

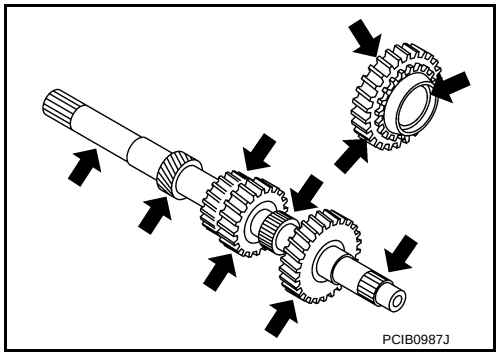

Synchronizer

Check for the following and replace if necessary.
- Contact surface breakage, damage, and unusual wear of coupling sleeve and synchronizer hub.
- Coupling sleeve and synchronizer hub move smoothly.

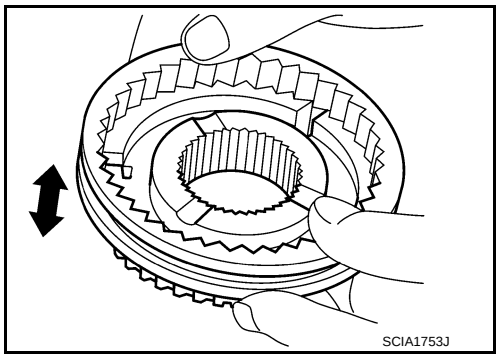

- Breakage, damage, and excessive wear of baulk ring cam surface.

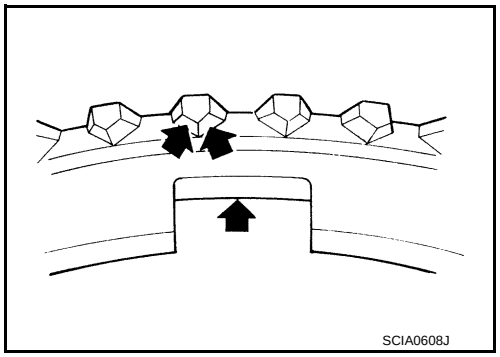

Bearing

Check bearing for damage and unsmooth rotation. Replace if necessary.

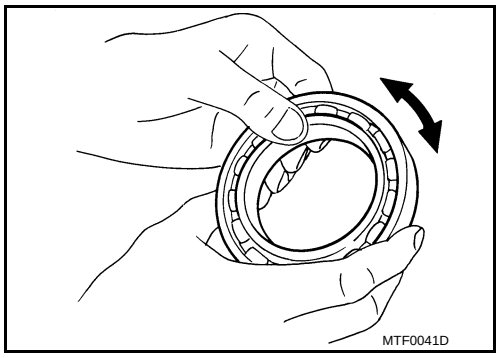

MAINSHAFT AND GEAR

Exploded View

INFOID:0000000006056587

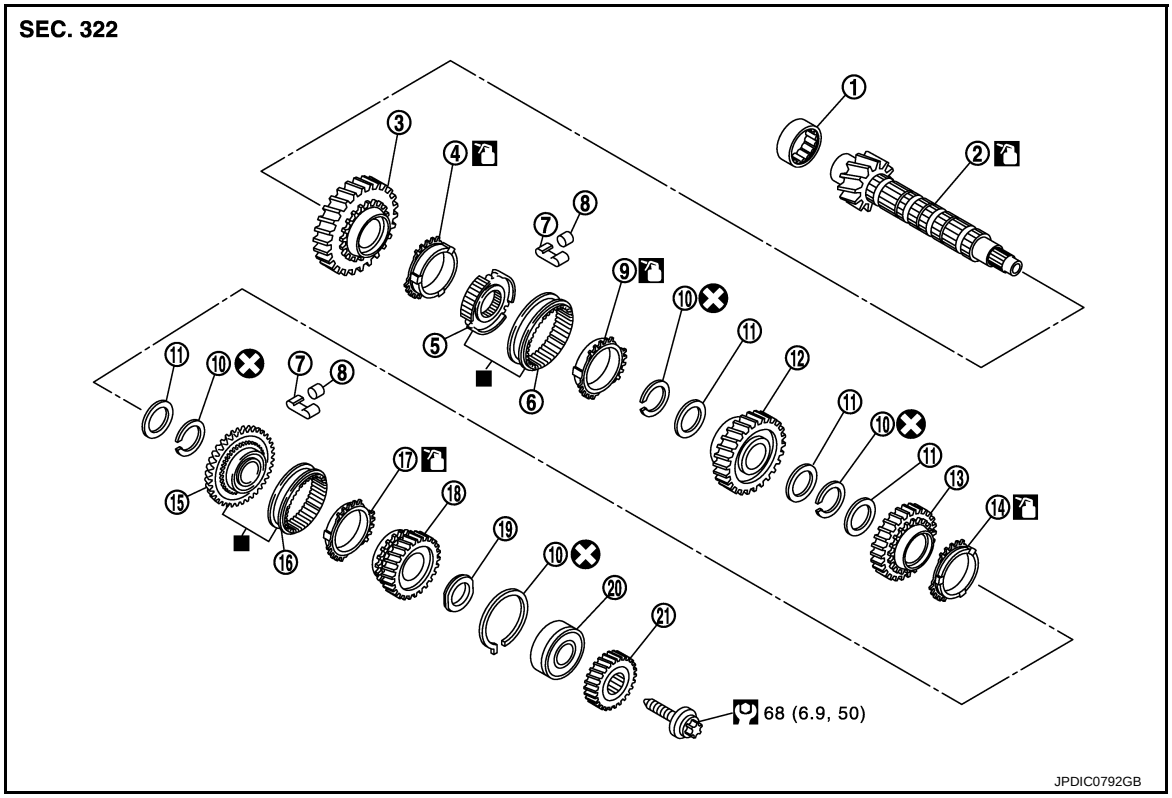

1.	Mainshaft front bearing	2.	Mainshaft	3.	1st main gear
4.	1st baulk ring	5.	1st-2nd synchronizer hub	6.	1st-2nd coupling sleeve
7.	Spring	8.	Insert key	9.	2nd baulk ring
10.	Snap ring	11.	Thrust washer	12.	2nd main gear
13.	3rd main gear	14.	3rd baulk ring	15.	3rd-4th synchronizer hub
16.	3rd-4th coupling sleeve	17.	4th baulk ring	18.	4th main gear
19.	Spacer	20.	Mainshaft rear bearing	21.	5th main gear

: Apply gear oil.

: Replace the parts as a set.

Refer to GI-4, "Components" for symbols not described on the above.

Disassembly

INFOID:0000000006056588

CAUTION:

- **Fix mainshaft in a vise with backplate, and then remove gears and snap rings.**
- **For removal of snap ring, set snap ring pliers and flat pliers at both sides of snap ring. While expanding snap ring with snap ring pliers, move snap ring with flat pliers.**
- **Disassemble gear components putting direction marks on the parts that never affect any functions.**

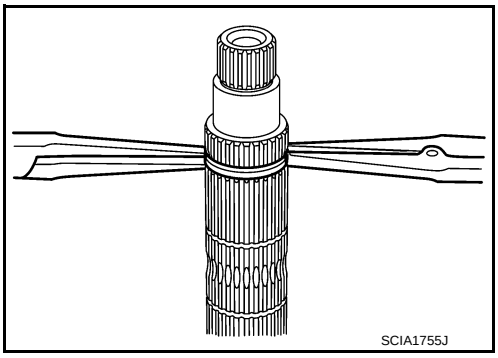

1. Remove 3rd-4th synchronizer hub and 3rd baulk ring.
2. Remove snap ring (1) and thrust washer (2).

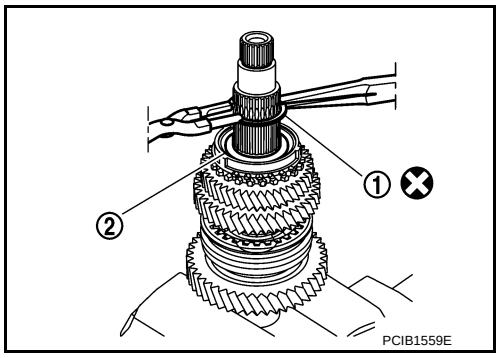

3. Remove 3rd main gear (1) and thrust washer (2).

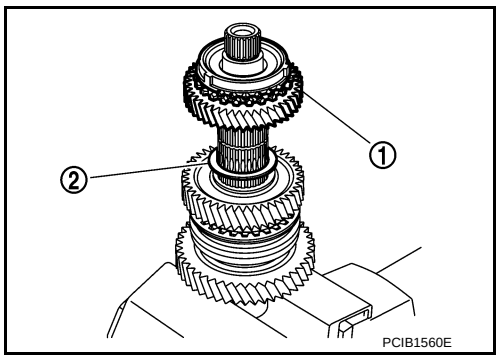

4. Remove snap ring (1) and thrust washer (2).

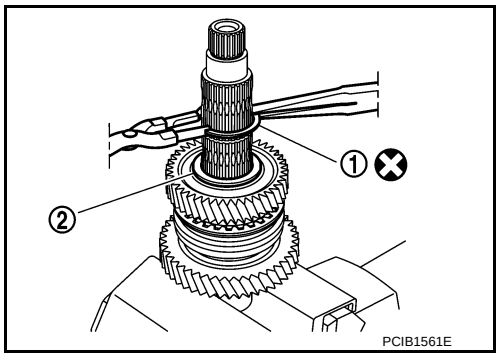

5. Remove 2nd main gear (1) and thrust washer (2).

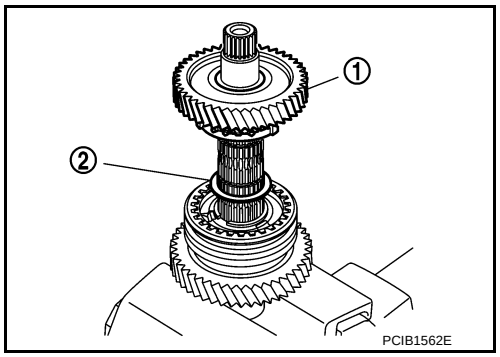

6. Remove snap ring (1), and then remove 2nd baulk ring.
7. Remove 1st-2nd coupling sleeve, insert keys, springs, and 1st-2nd synchronizer hub.
8. Remove 1st baulk ring and 1st main gear (2).

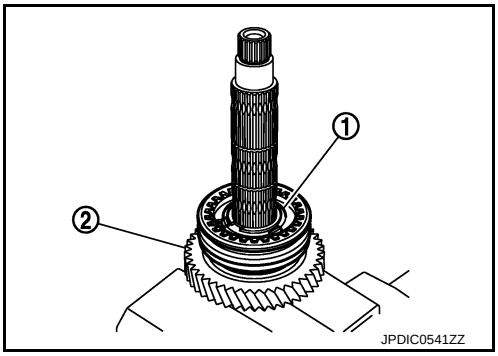

Assembly

INFOID:0000000006056589

Note the following items, and assemble in the reverse order of disassembly.

CAUTION:

- **Never reuse snap ring.**
- **For installation of snap ring, set snap ring pliers and flat pliers at both sides of snap ring. While expanding snap ring with snap ring pliers, move snap ring with flat pliers.**
- **Check that snap ring is securely installed to the groove.**
- **Apply gear oil to 1st baulk ring, 2nd baulk ring, and 3rd baulk ring.**

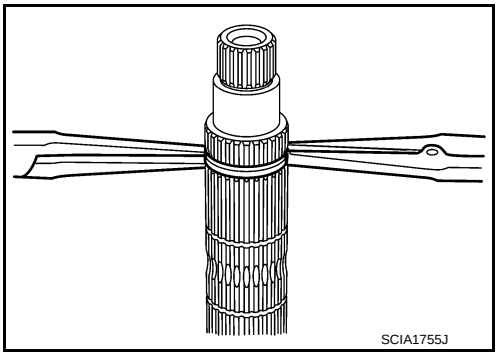

- **Be careful with the orientation of 1st-2nd synchronizer hub.**

  A : 1st main gear side
  B : 2nd main gear side

- **Replace 1st-2nd synchronizer hub and 1st-2nd coupling sleeve as a set.**

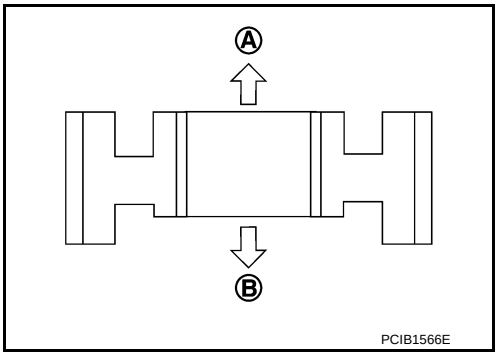

- **Be careful with the orientation of 1st-2nd coupling sleeve.**

  A : 2nd main gear side
  B : 1st main gear side

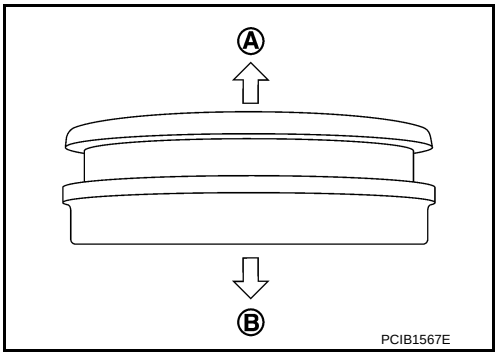

- **Be careful with the orientation of 3rd-4th synchronizer hub.**

  A : 4th main gear side
  B : 3rd main gear side

- **Replace 3rd-4th synchronizer hub and 3rd-4th coupling sleeve as a set.**

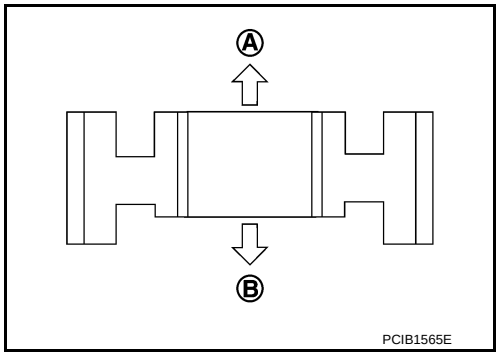

- **Be careful with the orientation of insert key (1) and spring (2).**

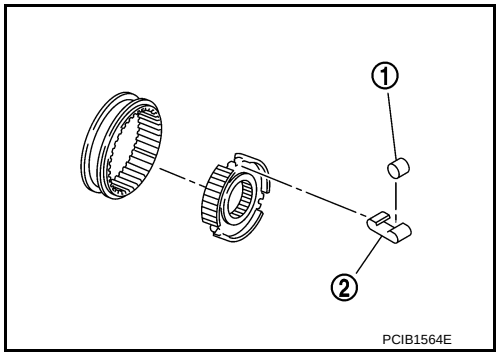

Inspection

INFOID:0000000006056590

INSPECTION AFTER DISASSEMBLY

Mainshaft and Gear

Check the following items and replace if necessary.

- Damage, peeling, bend, uneven wear, and distortion of shaft
- Excessive wear, damage, and peeling of gear

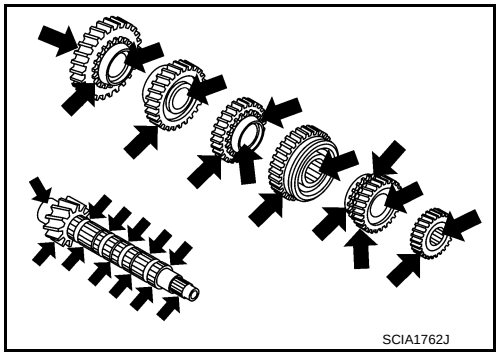

Synchronizer

Check the following items and replace if necessary.

- Contact surface breakage, damage, and unusual wear of coupling sleeve, synchronizer hub, insert key, and spring.
- Coupling sleeve and synchronizer hub move smoothly.

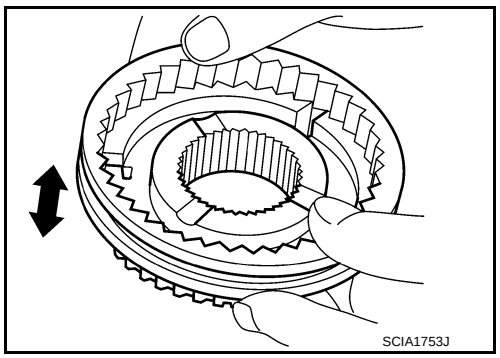

- Breakage, damage, and excessive wear of baulk ring cam surface and insert contact surface

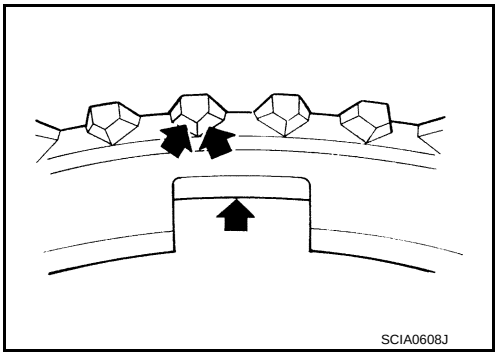

Bearing

Check bearing for damage and unsmooth rotation. Replace if necessary.

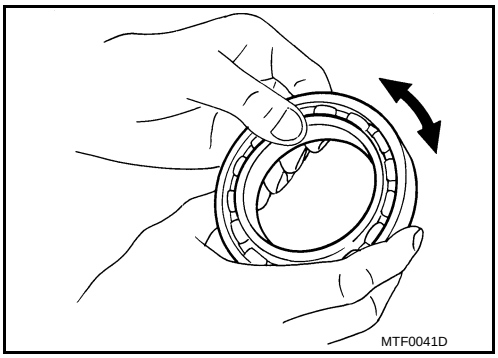

FINAL DRIVE

Exploded View

INFOID:0000000006056591

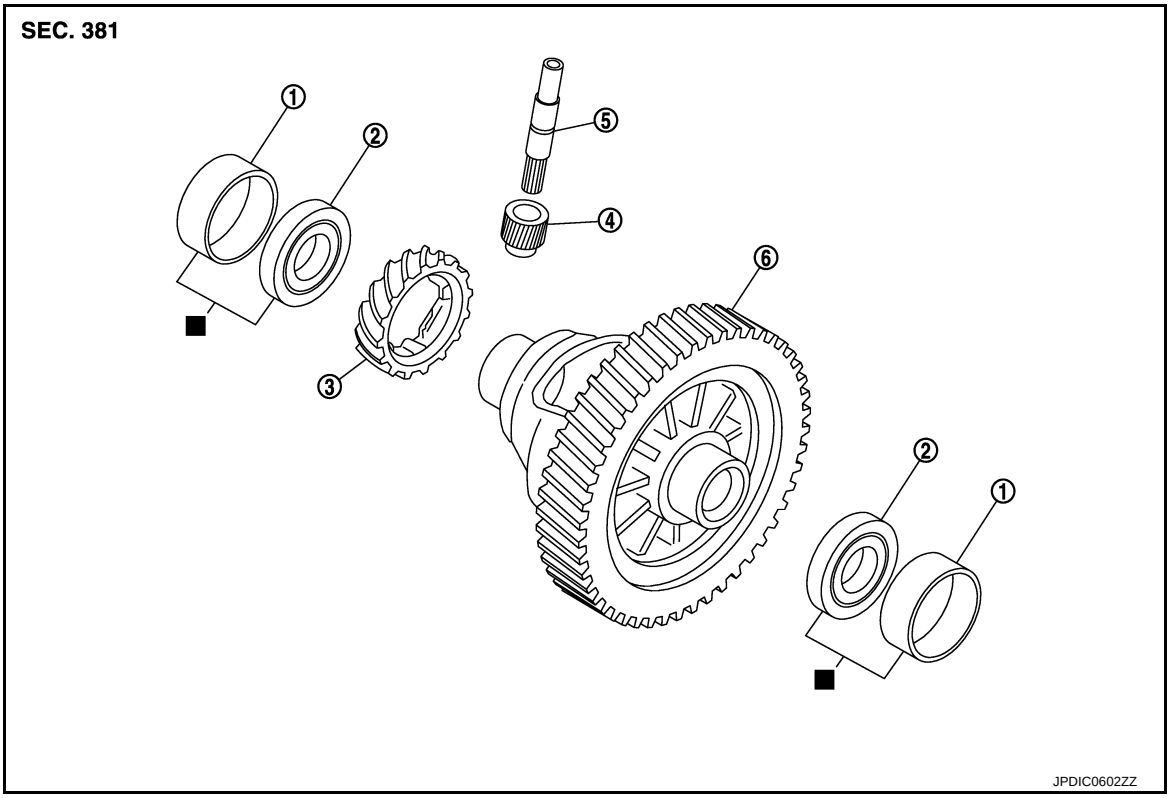

1. Differential side bearing outer race
2. Differential side bearing
3. Speedometer drive gear
4. Pinion gear
5. Pinion shaft
6. Final drive assembly

■: Replace the parts as a set.

Disassembly

INFOID:0000000006056592

1. Remove differential side bearings, using the drift (A) [SST: ST33052000] and a puller [Commercial service tool].
2. Remove speedometer drive gear.

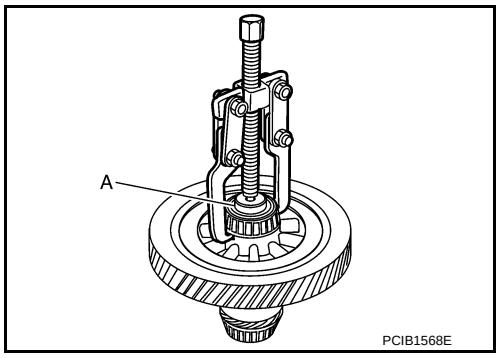

Assembly

INFOID:0000000006056593

1. Install differential side bearings, using the drift [SST].
   CAUTION:
   Replace differential side bearing outer race and differential side bearing as a set.
2. Install speedometer drive gear.

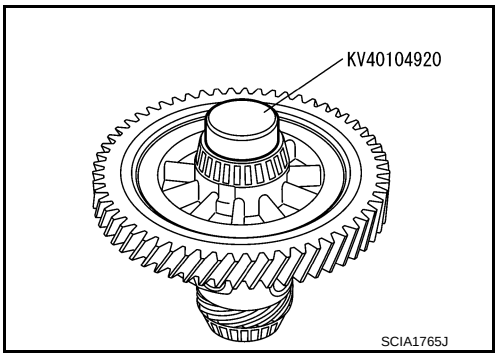

Inspection

INFOID:0000000006056594

INSPECTION AFTER DISASSEMBLY

Case
Check differential case and replace if necessary.

Bearing
Check bearing for damage and unsmooth rotation. Replace if necessary.

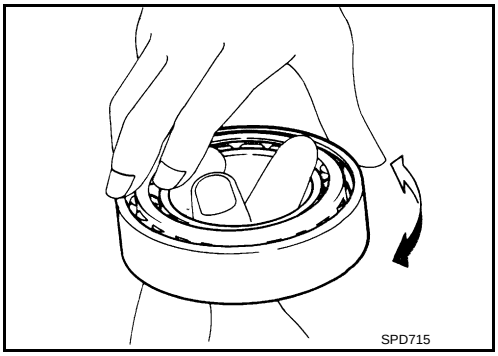

SERVICE DATA AND SPECIFICATIONS (SDS)

SERVICE DATA AND SPECIFICATIONS (SDS)

General Specification

INFOID:0000000006056595

Transaxle type			RS5F91R	
Engine type			HR12DE	
Model code number			1HC0C	1HC0A
Number of speed			5	
Synchromesh type			Warner	
Shift pattern			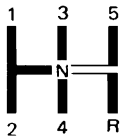 SCIA0821E	
Gear ratio	1st		3.7273	
	2nd		2.0476	
	3rd		1.3929	
	4th		1.0294	
	5th		0.8205	
	Reverse		3.5454	
	Final gear		4.0667	4.5000
Number of teeth	Input gear	1st	11	
		2nd	21	
		3rd	28	
		4th	34	
		5th	39	
		Reverse	11	
	Main gear	1st	41	
		2nd	43	
		3rd	39	
		4th	35	
		5th	32	
		Reverse	39	
	Reverse idler gear		26	
	Final gear	Final gear/Pinion	61/15	63/14
		Side gear/Pinion mate gear	13/9	
Oil capacity (Reference)		ℓ (Imp pt)	Approx. 2.6 (4-5/8)	

SECTION VTL
VENTILATION SYSTEM

CONTENTS

PRECAUTION 2

PRECAUTIONS 2
Precaution for Supplemental Restraint System (SRS) "AIR BAG" and "SEAT BELT PRE-TENSIONER" 2
Precaution Necessary for Steering Wheel Rotation after Battery Disconnect 2

PREPARATION 3

PREPARATION 3
Commercial Service Tool 3

SYSTEM DESCRIPTION 4

VENTILATION SYSTEM 4
System Description 4

REMOVAL AND INSTALLATION 5

DUCT AND GRILLE 5
Exploded View 5

CENTER VENTILATOR GRILLE 5
CENTER VENTILATOR GRILLE : Removal and Installation 5

SIDE VENTILATOR GRILLE 5
SIDE VENTILATOR GRILLE : Removal and Installation 5

CENTER VENTILATOR DUCT 6
CENTER VENTILATOR DUCT : Removal and Installation 6

FOOT DUCT 6
FOOT DUCT : Removal and Installation 6

BLOWER MOTOR 7
Exploded View 7
Removal and Installation 7

PRECAUTION

PRECAUTIONS

Precaution for Supplemental Restraint System (SRS) "AIR BAG" and "SEAT BELT PRE-TENSIONER"

INFOID:0000000006067223

The Supplemental Restraint System such as “AIR BAG” and “SEAT BELT PRE-TENSIONER”, used along with a front seat belt, helps to reduce the risk or severity of injury to the driver and front passenger for certain types of collision. Information necessary to service the system safely is included in the “SRS AIR BAG” and “SEAT BELT” of this Service Manual.

WARNING:

- **To avoid rendering the SRS inoperative, which could increase the risk of personal injury or death in the event of a collision which would result in air bag inflation, all maintenance must be performed by an authorized NISSAN/INFINITI dealer.**
- **Improper maintenance, including incorrect removal and installation of the SRS, can lead to personal injury caused by unintentional activation of the system. For removal of Spiral Cable and Air Bag Module, see the “SRS AIR BAG”.**
- **Do not use electrical test equipment on any circuit related to the SRS unless instructed to in this Service Manual. SRS wiring harnesses can be identified by yellow and/or orange harnesses or harness connectors.**

PRECAUTIONS WHEN USING POWER TOOLS (AIR OR ELECTRIC) AND HAMMERS

WARNING:

- **When working near the Air Bag Diagnosis Sensor Unit or other Air Bag System sensors with the ignition ON or engine running, DO NOT use air or electric power tools or strike near the sensor(s) with a hammer. Heavy vibration could activate the sensor(s) and deploy the air bag(s), possibly causing serious injury.**
- **When using air or electric power tools or hammers, always switch the ignition OFF, disconnect the battery, and wait at least 3 minutes before performing any service.**

Precaution Necessary for Steering Wheel Rotation after Battery Disconnect

INFOID:0000000006067224

NOTE:

- Before removing and installing any control units, first turn the push-button ignition switch to the LOCK position, then disconnect both battery cables.
- After finishing work, confirm that all control unit connectors are connected properly, then re-connect both battery cables.
- Always use CONSULT-III to perform self-diagnosis as a part of each function inspection after finishing work. If a DTC is detected, perform trouble diagnosis according to self-diagnosis results.

For vehicle with steering lock unit, if the battery is disconnected or discharged, the steering wheel will lock and cannot be turned.

If turning the steering wheel is required with the battery disconnected or discharged, follow the operation procedure below before starting the repair operation.

OPERATION PROCEDURE

1. Connect both battery cables.
   NOTE:
   Supply power using jumper cables if battery is discharged.
2. Turn the push-button ignition switch to ACC position.
   (At this time, the steering lock will be released.)
3. Disconnect both battery cables. The steering lock will remain released with both battery cables disconnected and the steering wheel can be turned.
4. Perform the necessary repair operation.
5. When the repair work is completed, re-connect both battery cables. With the brake pedal released, turn the push-button ignition switch from ACC position to ON position, then to LOCK position. (The steering wheel will lock when the push-button ignition switch is turned to LOCK position.)
6. Perform self-diagnosis check of all control units using CONSULT-III.

PREPARATION

PREPARATION

Commercial Service Tool

INFOID:0000000006032356

Tool name	Description
Remover tool 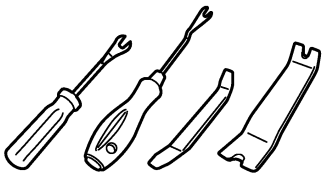 JMKIA3050ZZ	Remove clips, pawls, and metal clips

SYSTEM DESCRIPTION

VENTILATION SYSTEM

System Description

INFOID:0000000006032353

OUTLINE

Ventilation system is controlled by A/C auto amp. (AUTOMATIC AIR CONDITIONER) or A/C control (MANUAL AIR CONDITIONER ,MANUAL HEATER and VENTILATION). For details of air conditioner system, refer to HAC-13, "Air Flow Control" (AUTOMATIC AIR CONDITIONER), HAC-88, "System Description" (MANUAL AIR CONDITIONER), HAC-126, "System Description" (HEATER and VENTILATION).

AIR FLOW

Front

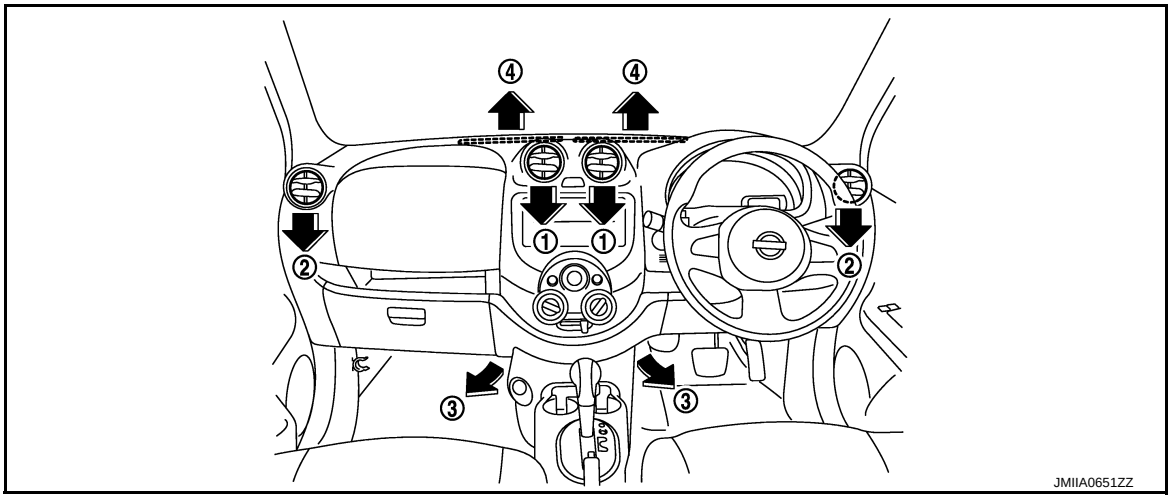

×: Applicable

MODE/DEF position indication	AIR OUTLET			
	Ventilator (1)	Ventilator (2)	Foot (3)	Defroster (4)
	×	×	—	—
	×	×	×	—
	—	×	×	×
	—	×	×	×
	—	×	—	×

REMOVAL AND INSTALLATION

DUCT AND GRILLE

Exploded View

INFOID:0000000006032360

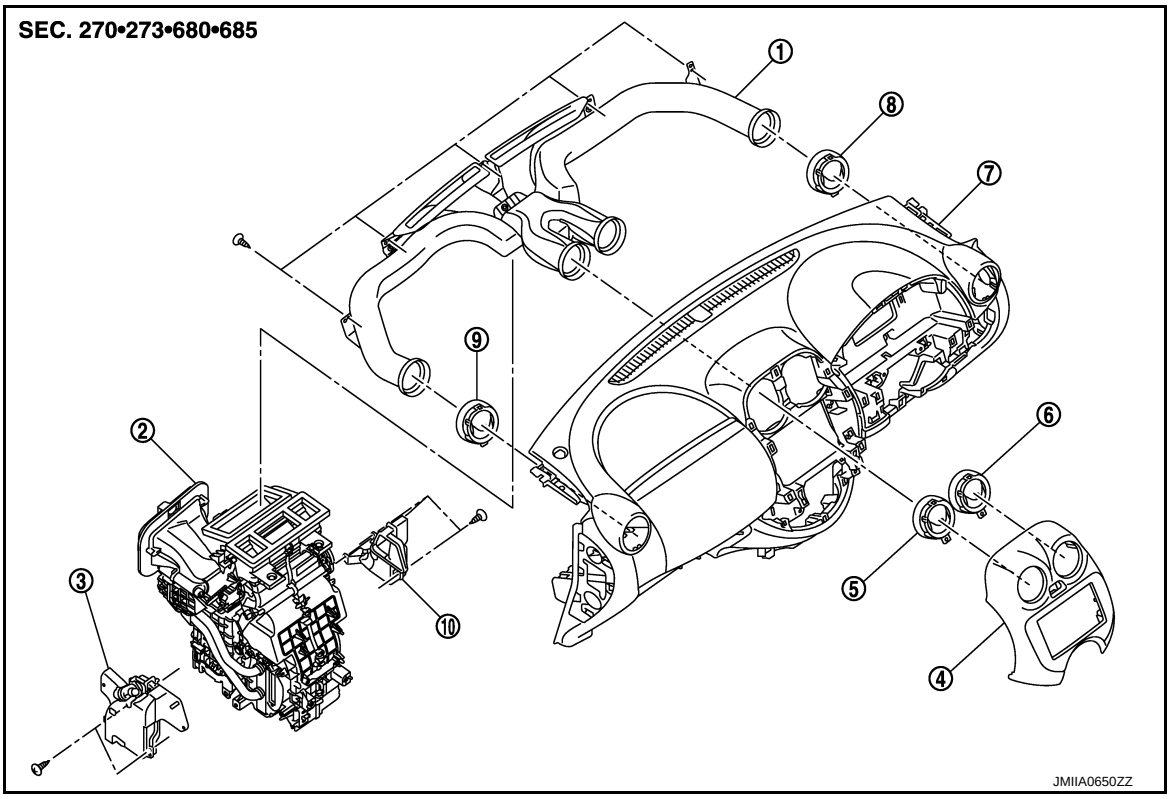

1. Center ventilator duct assembly
2. A/C unit assembly
3. Foot duct LH
4. Cluster lid C
5. Center ventilator grille LH
6. Center ventilator grille RH
7. Instrument panel assembly
8. Side ventilator grille RH
9. Side ventilator grille LH
10. Foot duct RH

CENTER VENTILATOR GRILLE

CENTER VENTILATOR GRILLE : Removal and Installation

INFOID:0000000006032361

REMOVAL

1. Remove cluster lid C. Refer to IP-13, "Removal and Installation".
2. Remove mounting screws, and then remove center ventilator grille from cluster lid C.

INSTALLATION

Install in the reverse order of removal.

SIDE VENTILATOR GRILLE

SIDE VENTILATOR GRILLE : Removal and Installation

INFOID:0000000006032362

REMOVAL

1. Remove instrument panel assembly. Refer to IP-13, "Removal and Installation".
2. Remove mounting screws, and then remove side ventilator grille from instrument panel assembly.

INSTALLATION

Install in the reverse order of removal.

CENTER VENTILATOR DUCT

CENTER VENTILATOR DUCT : Removal and Installation

INFOID:0000000006032363

REMOVAL

1. Remove instrument panel assmebly. Refer to IP-13, "Removal and Installation".
2. Remove mounting screws, and then remove center ventilator duct assembly from instrument panel assembly.

INSTALLATION

Install in the reverse order of removal.

FOOT DUCT

FOOT DUCT : Removal and Installation

INFOID:0000000006032369

REMOVAL

Driver side

1. Remove instrument panel assembly. Refer to IP-13, "Removal and Installation".
2. Remove mounting screws, and then remove foot duct LH.

Passenger side

1. Remove A/C unit assembly. Refer to HA-42, "A/C UNIT ASSEMBLY : Removal and Installation".
2. Remove mounting screws, and then remove foot duct RH.

INSTALLATION

Install in the reverse order of removal.

BLOWER MOTOR

Exploded View

INFOID:0000000006032370

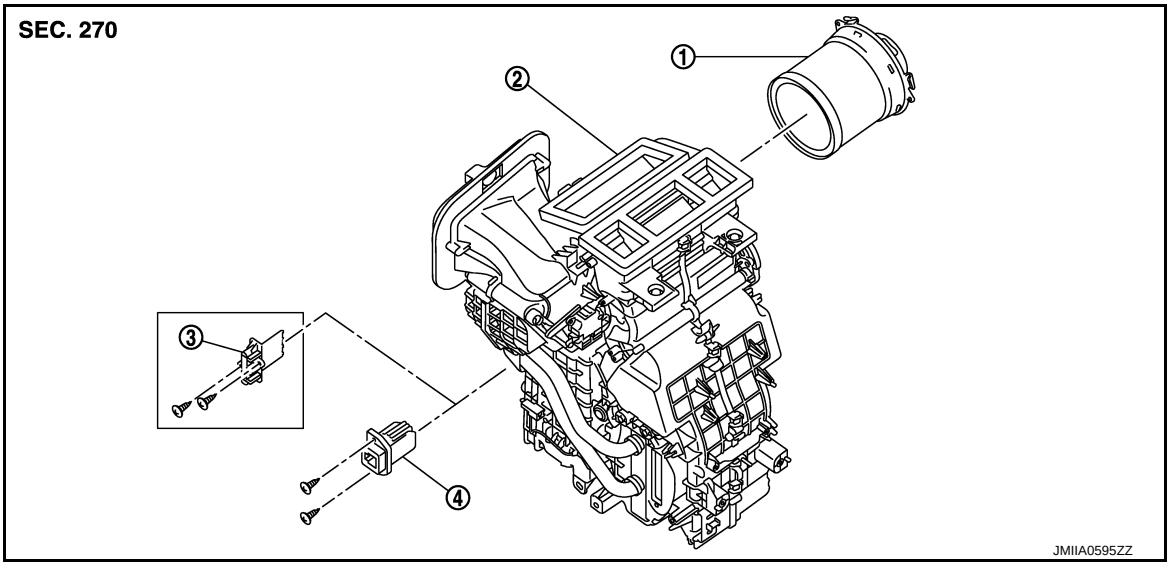

1. Blower motor
2. A/C unit assembly
3. Blower fan resistor*1
4. Power transistor*2

- *1: Manual air conditioner, Manual heater or Ventilator
- *2: Automatic air conditioner

Removal and Installation

INFOID:0000000006032371

REMOVAL

1. Remove instrument panel assembly. Refer to IP-13, "Removal and Installation".
2. Disconnect blower motor connector.
3. Press flange holding hook (A), and then turn blower motor (1) clockwise.
4. Pull outside, and then remove blower motor.

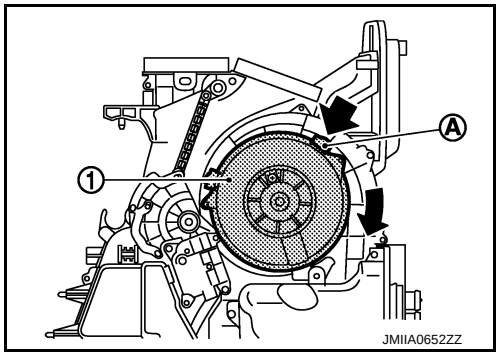

INSTALLATION

Install in the reverse order of removal.

SECTION WCS
WARNING CHIME SYSTEM

CONTENTS

PRECAUTION 3

PRECAUTIONS 3
- Precaution for Supplemental Restraint System (SRS) "AIR BAG" and "SEAT BELT PRE-TENSIONER" 3
- Precaution for Battery Service 3

SYSTEM DESCRIPTION 4

COMPONENT PARTS 4
- Component Parts Location 4
- Component Description 4
- Combination Meter 5

SYSTEM 6

WARNING CHIME SYSTEM 6
- WARNING CHIME SYSTEM : System Diagram 6
- WARNING CHIME SYSTEM : System Description 6
- WARNING CHIME SYSTEM : Fail-Safe 7

PARKING BRAKE RELEASE WARNING CHIME 8
- PARKING BRAKE RELEASE WARNING CHIME : System Diagram 8
- PARKING BRAKE RELEASE WARNING CHIME : System Description 9

LIGHT REMINDER WARNING CHIME 10
- LIGHT REMINDER WARNING CHIME : System Diagram 10
- LIGHT REMINDER WARNING CHIME : System Description 10

KEY WARNING CHIME 11
- KEY WARNING CHIME : System Diagram 12
- KEY WARNING CHIME : System Description 12

DIAGNOSIS SYSTEM (COMBINATION METER) 14
- CONSULT-III Function 14

DIAGNOSIS SYSTEM (BCM) (WITH INTELLIGENT KEY SYSTEM) 18

COMMON ITEM 18
- COMMON ITEM : CONSULT-III Function (BCM - COMMON ITEM) 18

BUZZER 19
- BUZZER : CONSULT-III Function (BCM - BUZZER) 19

DIAGNOSIS SYSTEM (BCM) (WITHOUT INTELLIGENT KEY SYSTEM) 21

COMMON ITEM 21
- COMMON ITEM : CONSULT-III Function (BCM - COMMON ITEM) 21

BUZZER 21
- BUZZER : CONSULT-III Function (BCM - BUZZER) 22

ECU DIAGNOSIS INFORMATION 23

COMBINATION METER 23
- Reference Value 23
- Fail-Safe 27
- DTC Index 28

BCM (BODY CONTROL MODULE) 29
- List of ECU Reference 29

WIRING DIAGRAM 30

WARNING CHIME SYSTEM 30
- Wiring Diagram 30

BASIC INSPECTION 31

DIAGNOSIS AND REPAIR WORKFLOW 31
- Work Flow 31

DTC/CIRCUIT DIAGNOSIS 33

POWER SUPPLY AND GROUND CIRCUIT 33

COMBINATION METER 33
COMBINATION METER : Diagnosis Procedure ... 33

METER BUZZER CIRCUIT 34
Component Function Check 34
Diagnosis Procedure 34

PARKING BRAKE SWITCH SIGNAL CIRCUIT 35
Diagnosis Procedure 35
Component Inspection 35

SYMPTOM DIAGNOSIS 36

THE PARKING BRAKE RELEASE WARNING CONTINUES SOUNDING, OR DOES NOT SOUND 36
Description 36
Diagnosis Procedure 36

THE LIGHT REMINDER WARNING DOES NOT SOUND 37
Description 37
Diagnosis Procedure 37

THE KEY WARNING DOES NOT SOUND (WITHOUT INTELLIGENT KEY) 38
Description 38
Diagnosis Procedure 38

PRECAUTION

PRECAUTIONS

Precaution for Supplemental Restraint System (SRS) "AIR BAG" and "SEAT BELT PRE-TENSIONER"

INFOID:0000000005904850

The Supplemental Restraint System such as “AIR BAG” and “SEAT BELT PRE-TENSIONER”, used along with a front seat belt, helps to reduce the risk or severity of injury to the driver and front passenger for certain types of collision. Information necessary to service the system safely is included in the “SRS AIR BAG” and “SEAT BELT” of this Service Manual.

WARNING:

- **To avoid rendering the SRS inoperative, which could increase the risk of personal injury or death in the event of a collision which would result in air bag inflation, all maintenance must be performed by an authorized NISSAN/INFINITI dealer.**
- **Improper maintenance, including incorrect removal and installation of the SRS, can lead to personal injury caused by unintentional activation of the system. For removal of Spiral Cable and Air Bag Module, see the “SRS AIR BAG”.**
- **Do not use electrical test equipment on any circuit related to the SRS unless instructed to in this Service Manual. SRS wiring harnesses can be identified by yellow and/or orange harnesses or harness connectors.**

PRECAUTIONS WHEN USING POWER TOOLS (AIR OR ELECTRIC) AND HAMMERS

WARNING:

- **When working near the Air Bag Diagnosis Sensor Unit or other Air Bag System sensors with the ignition ON or engine running, DO NOT use air or electric power tools or strike near the sensor(s) with a hammer. Heavy vibration could activate the sensor(s) and deploy the air bag(s), possibly causing serious injury.**
- **When using air or electric power tools or hammers, always switch the ignition OFF, disconnect the battery, and wait at least 3 minutes before performing any service.**

Precaution for Battery Service

INFOID:0000000005904851

Before disconnecting the battery, lower both the driver and passenger windows. This will prevent any interference between the window edge and the vehicle when the door is opened/closed. During normal operation, the window slightly raises and lowers automatically to prevent any window to vehicle interference. The automatic window function will not work with the battery disconnected.

SYSTEM DESCRIPTION

COMPONENT PARTS

Component Parts Location

INFOID:0000000005887662

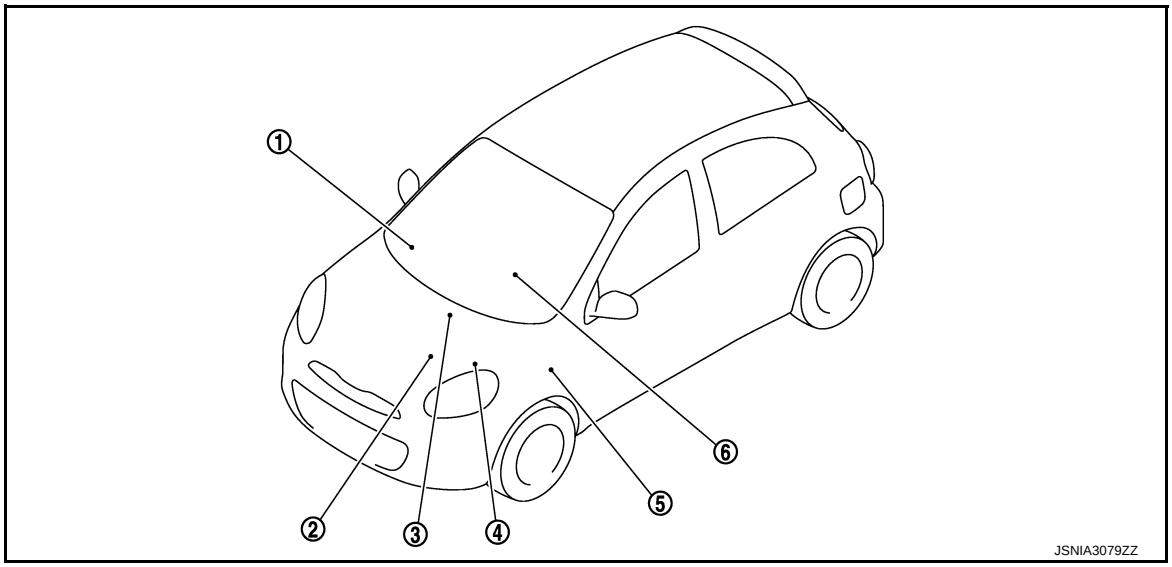

1. Combination meter
2. Vehicle speed sensor
   Refer to XX-XX, "*****".
3. ABS actuator and electric unit (control unit)
   Refer to XX-XX, "*****".
4. TCM
   Refer to XX-XX, "*****".
5. BCM
   Refer to BCS-5, "BODY CONTROL SYSTEM : Component Parts Location" (with intelligent key models).
   Refer to BCS-60, "BODY CONTROL SYSTEM : Component Parts Location" (without intelligent key models).
6. Parking brake switch

Component Description

INFOID:0000000005887663

Unit	Description
Combination meter	Receives a buzzer output signal from the BCM with CAN communication line and sounds the buzzer. MODELS WITH ABS • Controls the following with the vehicle speed signal received from ABS actuator and electric unit (control unit) via CAN communication and the signals from switches. - Parking brake release warning chime A/T MODELS WITHOUT ABS • Controls the following with the vehicle speed signal received from TCM via CAN communication and the signals from switches. - Parking brake release warning chime M/T MODELS • Controls the following with the vehicle speed sensor signal received from vehicle speed sensor and the signals from switches. - Parking brake release warning chime
BCM	Based on the signals received from various units and switches, transmits the buzzer output signal to the combination meter via CAN communication.
ABS actuator and electric unit (control unit) (Models with ABS)	Transmits the vehicle speed signal to the combination meter via CAN communication.
Vehicle speed sensor (M/T models)	Transmits the vehicle speed sensor signal to the combination meter.

Unit	Description
TCM (A/T models without ABS)	Transmits the vehicle speed signal to the combination meter via CAN communication.
Combination switch (Lighting switch)	Transmits the combination switch signal to BCM.
Front door switch (driver side)	Transmits the driver side door switch signal to BCM.
Key switch	Transmits the key switch signal to BCM.
Parking brake switch	Transmits the parking brake switch signal to the combination meter.

Combination Meter

INFOID:0000000005887664

The buzzer (1) for the warning chime system is integrated in the combination meter.

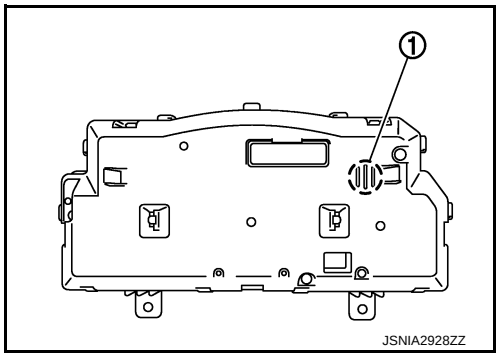

SYSTEM

WARNING CHIME SYSTEM

WARNING CHIME SYSTEM : System Diagram

INFOID:0000000005887665

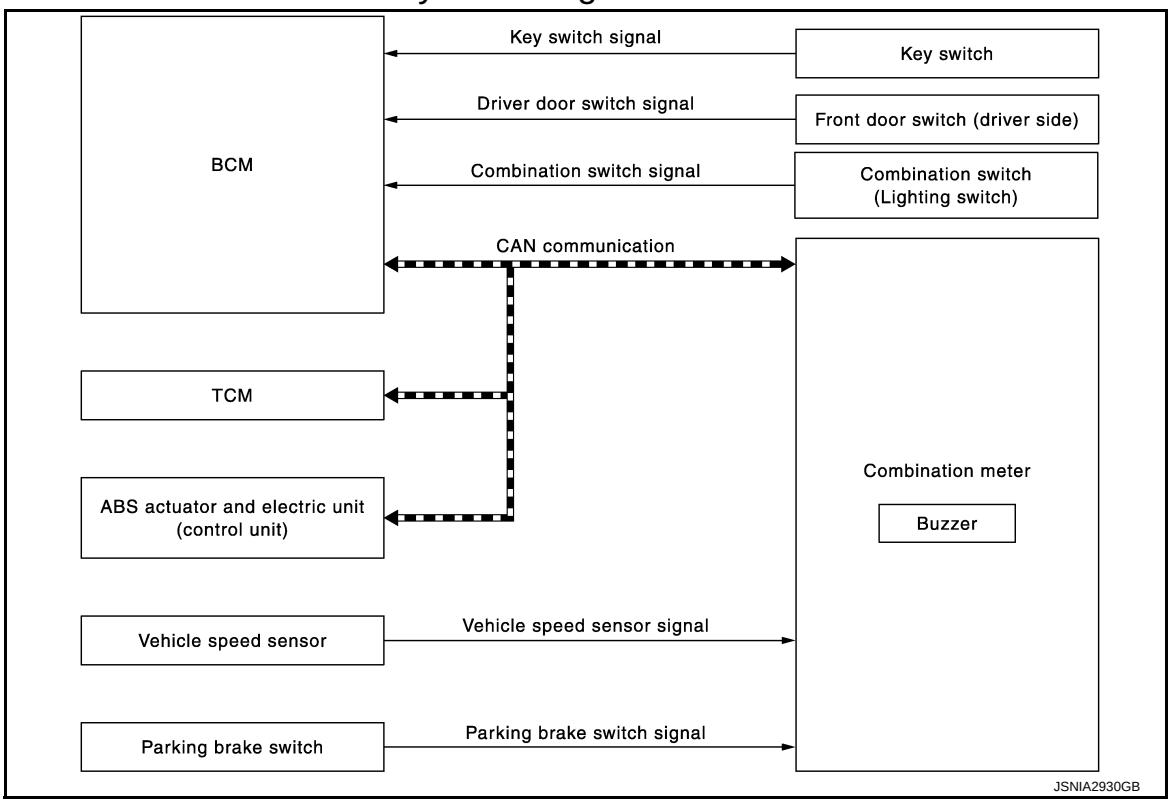

WARNING CHIME SYSTEM : System Description

INFOID:0000000005887666

COMBINATION METER

The combination meter sounds the alarm buzzer installed in the combination meter when receiving the buzzer output signal transmitted from each unit.

BCM

BCM receives signals from various units and transmits a buzzer output signal to the combination meter via CAN communication if it judges that the warning buzzer should be activated.

WARNING CHIME FUNCTION LIST

Warning functions	Out line	Warning judgment unit	Refer to
Parking brake release warning chime	The warning chime sounds when the ignition switch is in ON position with the parking brake in operation and the vehicle speed 7 km/h (4.3 MPH) or more.	Combination meter	WCS-9, "PARKING BRAKE RELEASE WARNING CHIME : System Description"

Warning functions	Out line	Warning judgment unit	Refer to
Light reminder warning chime	The warning chime sounds when the ignition switch is in OFF or ACC position with the combination switch (lighting switch) in the 1st or 2nd position and the driver side door open.	BCM	WCS-10, "LIGHT REMINDER WARNING CHIME : System Description"
Key warning chime (Without intelligent key)	The warning chime sounds when the ignition switch is in OFF or ACC position with the key inserted and the driver side door open.	BCM	WCS-12, "KEY WARNING CHIME : System Description"

WARNING CHIME SYSTEM : Fail-Safe

INFOID:0000000005887667

FAIL-SAFE

The combination meter activates the fail-safe control if CAN communication with each unit is malfunctioning.

Function		Specifications
Speedometer		Reset to zero by suspending communication.
Tachometer		
Engine coolant temperature gauge		
Illumination control		When suspending communication, changes to nighttime mode.
Shift position indicator		The indicator turns OFF by suspending communication.
Information display	Instantaneous fuel warning	• When reception time of an abnormal signal is 2 seconds or less, the last received datum is used for calculation to indicate the result. • When reception time of an abnormal signal is more than two seconds, the last result calculated during normal condition is indicated.
	Average fuel consumption	
	Possible driving distance	
	Average vehicle speed	
Buzzer		The buzzer turns off by suspending communication.

Function		Specifications
Warning lamp/indicator lamp	ABS warning lamp	The lamp turns ON by suspending communication.
	ESP OFF indicator lamp	
	SLIP indicator lamp	
	EPS warning lamp	
	Brake warning lamp	
	High beam indicator lamp	The lamp turns OFF by suspending communication.
	Turn signal indicator lamp	
	Door warning lamp	
	Light indicator lamp	
	Engine start operation indicator lamp	
	Shift P warning lamp	
	Oil pressure warning lamp	
	Malfunction indicator	
	CRUISE indicator lamp	
	SET indicator lamp	
	Speed limiter indicator lamp	
	SPORT indicator lamp	
	Key warning lamp	
	DPF (Diesel Particulate Filter) warning lamp	
	Glow indicator lamp	

PARKING BRAKE RELEASE WARNING CHIME

PARKING BRAKE RELEASE WARNING CHIME : System Diagram

INFOID:0000000005887672

MODELS WITH ABS

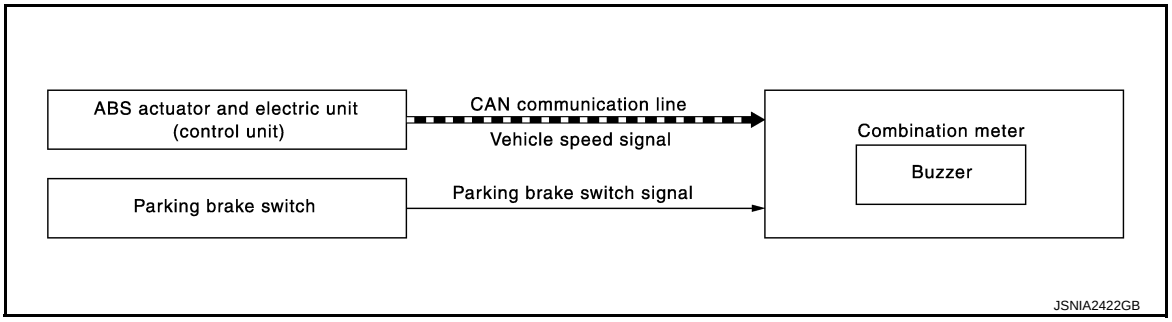

A/T MODELS WITHOUT ABS

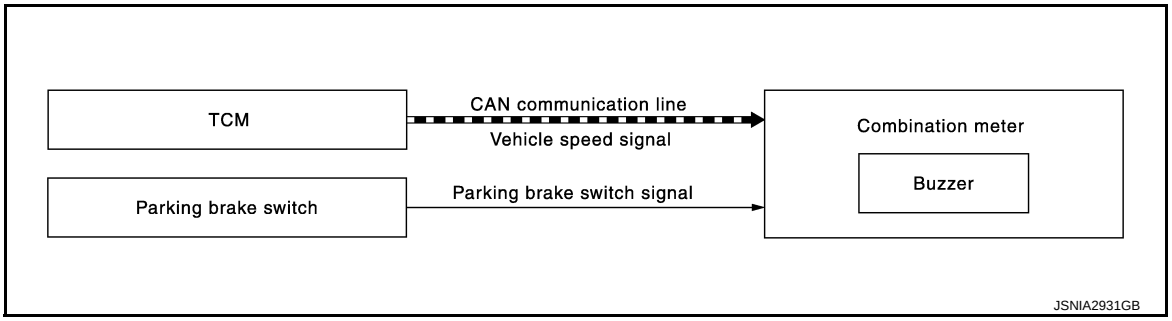

M/T MODELS

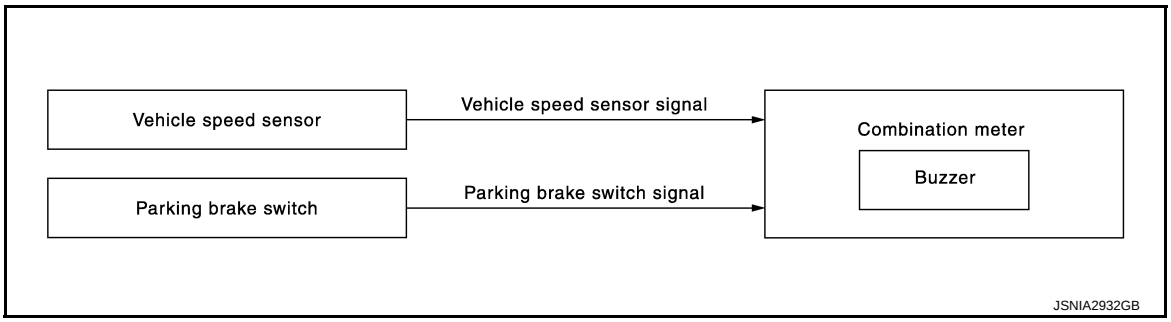

PARKING BRAKE RELEASE WARNING CHIME : System Description

INFOID:0000000005887673

WARNING OPERATION CONDITIONS

If all of the following conditions are fulfilled.

Operation conditions	
Ignition switch	ON
Parking brake	During the operation (parking brake switch ON)
Vehicle speed	Approximately 7 km/h (4.3 MPH) or more

WARNING CANCEL CONDITIONS

Warning is canceled if any of the following conditions are fulfilled.

Cancel conditions	
Ignition switch	OFF
Parking brake	Release condition (parking brake switch OFF)
Vehicle speed	Approximately 3 km/h (1.9 MPH) or less

SIGNAL PATH

Combination meter sounds integrated buzzer when it judges that parking brake release warning chime is necessary from signals below.

MODELS WITH ABS

Signal name	Signal path
Ignition switch signal	—
Parking brake switch signal	Parking brake switch → Combination meter
Vehicle speed signal	ABS actuator and electric unit (control unit) —CAN→ Combination meter

A/T MODELS WITHOUT ABS

Signal name	Signal path
Ignition switch signal	—
Parking brake switch signal	Parking brake switch → Combination meter
Vehicle speed signal	TCM —CAN→ Combination meter

M/T MODELS

Signal name	Signal path
Ignition switch signal	—

Signal name	Signal path
Parking brake switch signal	Parking brake switch → Combination meter
Vehicle speed sensor signal	Vehicle speed sensor → Combination meter

TIMING CHART

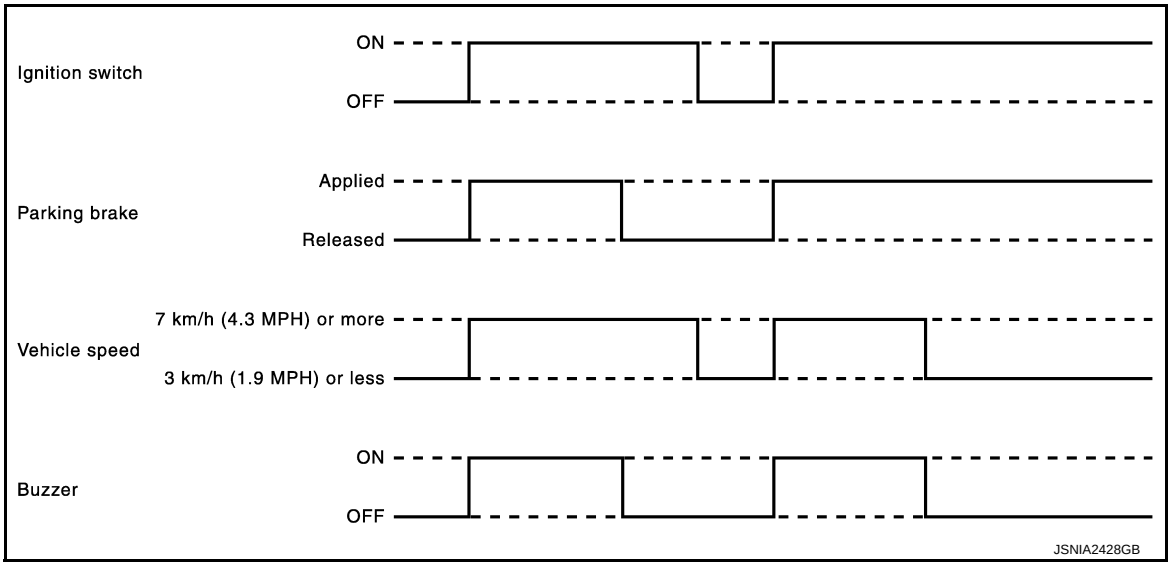

SOUND SPECIFICATION

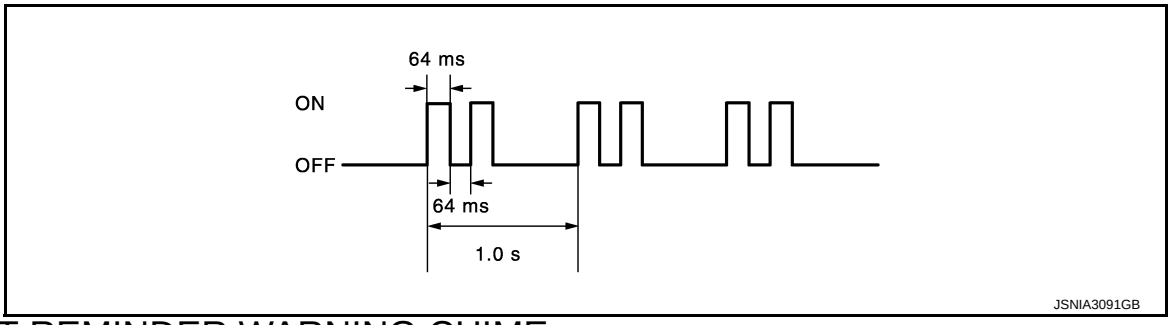

LIGHT REMINDER WARNING CHIME

LIGHT REMINDER WARNING CHIME : System Diagram

INFOID:0000000005887668

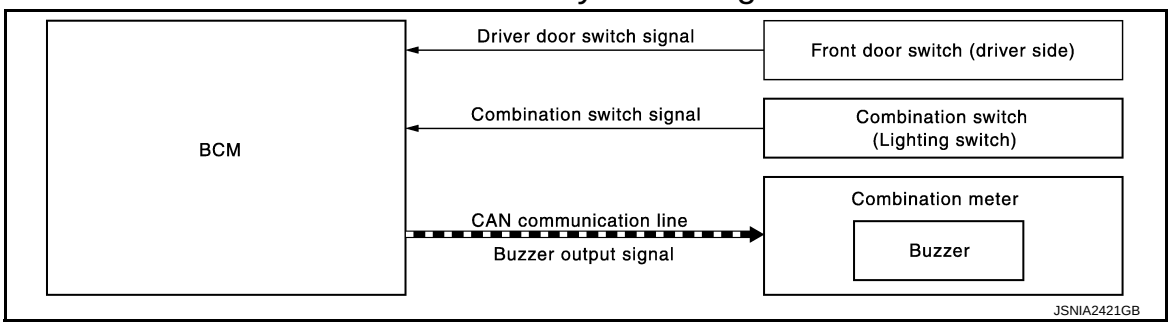

LIGHT REMINDER WARNING CHIME : System Description

INFOID:0000000005887669

WARNING CHIME OPERATION CONDITIONS

If all of the following conditions are fulfilled.

Operation conditions	
Ignition switch	OFF or ACC position
Combination switch (Lighting switch)	1st or 2nd position
Driver door	Open [front door switch (driver side) ON]

WARNING CHIME CANCEL CONDITIONS

Warning is canceled if any of the following conditions is fulfilled.

Cancel conditions	
Ignition switch	ON
Combination switch (Lighting switch)	OFF
Driver door	Close [front door switch (driver side) OFF]

SIGNAL PATH

1. BCM requires warning chime output to combination meter when it judges light reminder warning chime is necessary from signals below.

Signal name	Signal path
Ignition switch signal	—
Combination switch signal	Combination switch (Lighting switch) → BCM
Driver door switch signal	Front door switch (driver side) → BCM

2. Combination meter sounds integrated buzzer, following the warning chime output requirement (below signal) from BCM.

Signal name	Signal path
Buzzer output signal	BCM —CAN→ Combination meter

TIMING CHART

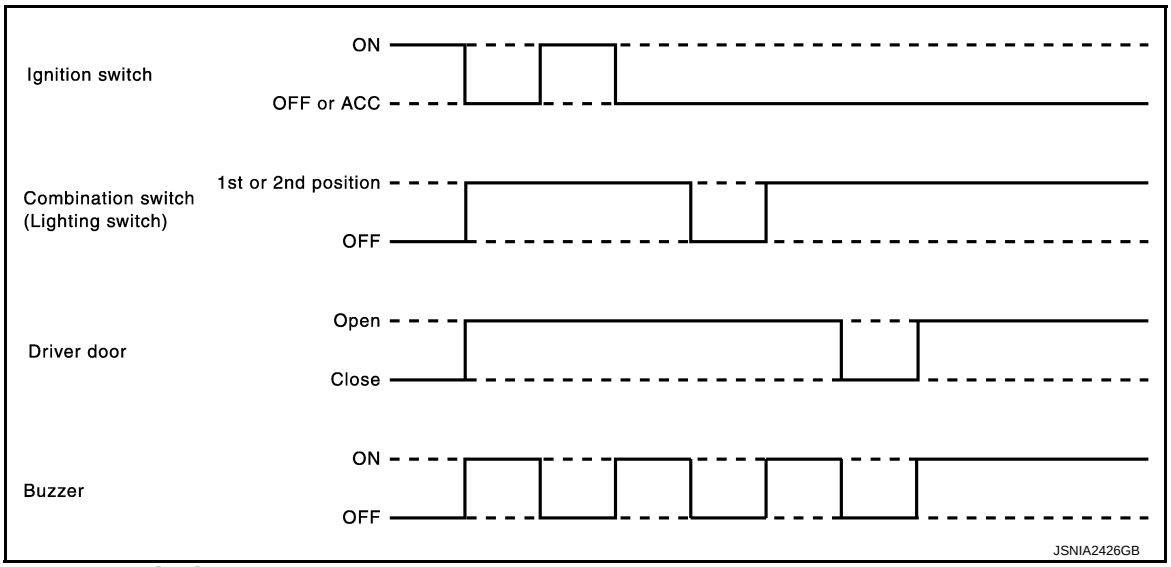

KEY WARNING CHIME

KEY WARNING CHIME : System Diagram

INFOID:0000000005887674

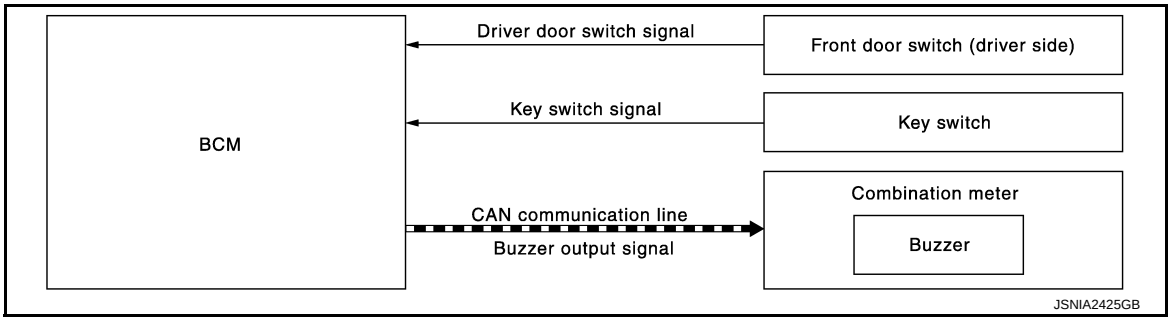

KEY WARNING CHIME : System Description

INFOID:0000000005887675

WARNING OPERATION CONDITIONS

If all of the following conditions are fulfilled.

Operation conditions	
Ignition switch	OFF or ACC position
Key switch	ON (state that inserted key in key cylinder)
Driver door	Open [front door switch (driver side) ON]

WARNING CANCEL CONDITIONS

Warning is canceled if any of the following conditions is fulfilled.

Cancel conditions	
Ignition switch	ON
Key switch	OFF (state that removed key from key cylinder)
Driver door	Close [front door switch (driver side) OFF]

SIGNAL PATH

1. BCM requires warning chime output to combination meter when it judges key warning chime is necessary from signals below.

Signal name	Signal path
Ignition switch signal	—
Key switch signal	Key switch → BCM
Driver door switch signal	Front door switch (driver side) → BCM

2. Combination meter sounds integrated buzzer, following the warning chime output requirement (below signal) from BCM.

Signal name	Signal path
Buzzer output signal	BCM —CAN→ Combination meter

TIMING CHART

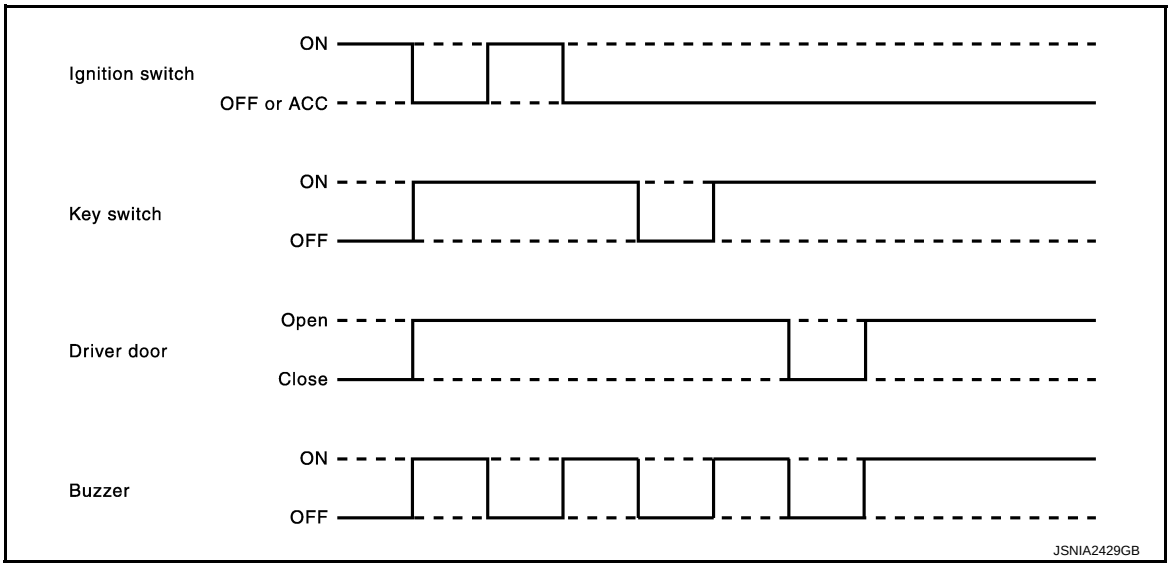

SOUND SPECIFICATION

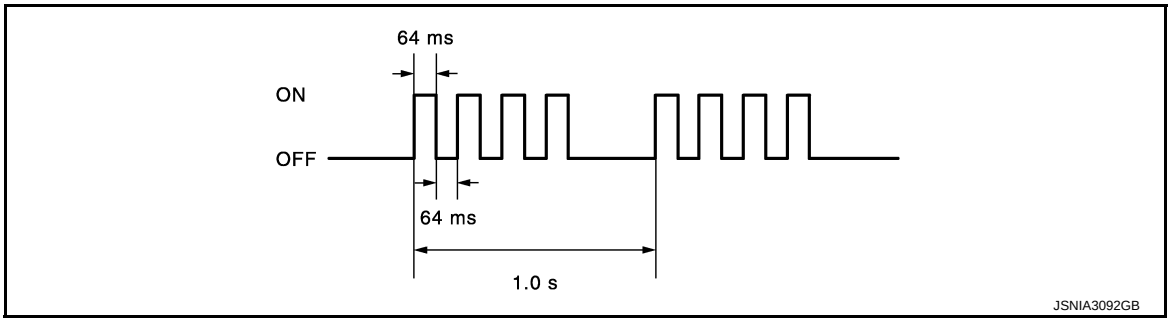

DIAGNOSIS SYSTEM (COMBINATION METER)

CONSULT-III Function

INFOID:0000000005904784

APPLICATION ITEMS

CONSULT-III can perform the following diagnosis modes via CAN communication and the combination meter.

System	Diagnosis mode	Description
METER/M&A	Self Diagnostic Result	The combination meter checks the conditions and displays memorized errors.
	Data Monitor	Displays the combination meter input/output data in real time.
	Special function	Lighting history of the warning lamp and indicator lamp can be checked.

SELF DIAG RESULT

Refer to MWI-27, "DTC Index".

DATA MONITOR

Display Item List

X: Applicable

Display item [Unit]	MAIN SIGNALS	Description
SPEED METER [km/h]	X	• Value of vehicle speed signal received from ABS actuator and electric unit (control unit) via CAN communication. (Models with ABS) **NOTE:** 655.35 is displayed when the malfunction signal is received. • Value of vehicle speed signal received from TCM via CAN communication. (A/T models without ABS) **NOTE:** 655.35 is displayed when the malfunction signal is received. • Value of vehicle speed sensor signal received from vehicle speed sensor. (M/T models)
SPEED OUTPUT [km/h]	X	Vehicle speed signal value transmitted to other units via CAN communication. **NOTE:** 655.35 is displayed when the malfunction signal is received.
ODO OUTPUT [km/h or mph]		Odometer signal value transmitted to other units via CAN communication.
TACHO METER [rpm]	X	Value of the engine speed signal received from ECM via CAN communication. **NOTE:** 8191.875 is displayed when the malfunction signal is received.
FUEL METER [L]	X	Fuel level indicated on combination meter.
W TEMP METER [°C]	X	Value of engine coolant temperature signal is received from ECM via CAN communication. **NOTE:** 215 is displayed when the malfunction signal is input.
ABS W/L [On/Off]		Status of ABS warning lamp detected from ABS warning lamp signal is received from ABS actuator and electric unit (control unit) via CAN communication.
BRAKE W/L [On/Off]		Status of brake warning lamp detected from brake warning lamp signal is received from ABS actuator and electric unit (control unit) via CAN communication. **NOTE:** Displays “Off” if the brake warning lamp is illuminated when the valve check starts, the parking brake switch is turned ON or the brake fluid level switch is turned ON.
DOOR W/L [On/Off]		Status of door warning detected from door switch signal received from BCM via CAN communication.
HI-BEAM IND [On/Off]		Status of high beam indicator lamp detected from high beam request signal is received from BCM via CAN communication.
TURN IND [On/Off]		Status of turn indicator lamp detected from turn indicator signal is received from BCM via CAN communication.

Display item [Unit]	MAIN SIGNALS	Description
FR FOG IND [On/Off]		Status of front fog lamp indicator lamp detected from front fog light request signal is received from BCM via CAN communication.
OIL W/L [On/Off]		Status of oil pressure warning lamp detected from oil pressure switch signal is received from BCM via CAN communication.
MIL [On/Off]		Status of malfunction indicator lamp detected from malfunctioning indicator lamp signal is received from ECM via CAN communication.
GLOW IND [Off]		This item is displayed, but cannot be monitored.
C-ENG2 W/L [Off]		This item is displayed, but cannot be monitored.
CRUISE IND [Off]		This item is displayed, but cannot be monitored.
SET IND [Off]		This item is displayed, but cannot be monitored.
O/D OFF IND [On/Off]		Status of OD OFF indicator lamp detected from OD OFF indicator lamp signal is received from TCM via CAN communication.
FUEL W/L [On/Off]		Low-fuel warning status detected by the identified fuel level.
KEY G/Y W/L [On/Off]		Status of KEY warning lamp (Green/Yellow) detected from KEY warning lamp signal is received from BCM via CAN communication.
EPS W/L [On/Off]		Status of EPS warning lamp detected from EPS warning lamp signal is received from EPS control unit via CAN communication.
e-4WD W/L [Off]		This item is displayed, but cannot be monitored.
DPF W/L [Off]		This item is displayed, but cannot be monitored.
FILTER W/L [Off]		This item is displayed, but cannot be monitored.
LCD [B&P N, B&P I, SFT P, NO KY]		Status of engine start operation indicator, shift P warning lamp and KEY warning lamp, detected from engine start operation indicator signal, shift P warning lamp signal and KEY warning lamp signal are received from BCM via CAN communication.
SHIFT IND [P, R, N, D, 2, 1]		Status of shift position, detected from shift position signal received from TCM via CAN communication.
O/D OFF SW [On/Off]		Status of over drive control switch.
COMP F/B SIG [On/Off]		A/C compressor activation condition that ECM judges according to the engine coolant temperature and the acceleration degree.
PKB SW [On/Off]		Status of parking brake switch.
BUCKLE SW [On/Off]		This item is displayed, but cannot be monitored.
BRAKE SW [On/Off]		This item is displayed, but cannot be monitored.
BRAKE OIL SW [On/Off]		Status of brake fluid level switch.
DISTANCE [km]		Value of possible driving distance calculated by combination meter.
FUEL LOW SIG [On/Off]		Status of fuel level low warning signal to output to AV control unit via CAN communication.
BUZZER [On/Off]	X	Buzzer status (in the combination meter) is detected from the buzzer output signal received from each unit via CAN communication and the warning output condition of the combination meter.

NOTE:

Some items are not available according to vehicle specification.

SPECIAL FUNCTION

Special menu

Display item	Description
W/L ON HISTORY	Lighting history of warning lamp and indicator lamp can be checked.

W/L ON HISTORY

- Stores histories when warning/indicator lamp is turned on.
- “W/L ON HISTORY” indicates the “TIME” when the warning/ indicator lamp is turned on.
- The “TIME” above is:
- 0: The condition that the warning/indicator lamp has been turned on 1 or more times after starting the engine and waiting for 30 seconds.
- 1 - 39: The number of times the engine was restarted after the 0 condition.
- NO W/L ON HISTORY: Stores NO (0) turning on history of warning/indicator lamp.

NOTE:

- W/L ON HISTORY is not stored for approximately 30 seconds after the engine starts.
- Brake warning lamp does not store any history when the parking brake is applied or the brake fluid level gets low.

Display Item

Display item	Description
ABS W/L	Lighting history of ABS warning lamp.
VDC/TCS IND	This item is displayed, but cannot be monitored.
SLIP IND	This item is displayed, but cannot be monitored.
BRAKE W/L	Lighting history of brake warning lamp. (With ABS)
DOOR W/L	Lighting history of door warning lamp.
TRUNK/GLAS-H	This item is displayed, but cannot be monitored.
OIL W/L	Lighting history of oil pressure warning lamp.
C-ENG W/L	Lighting history of malfunction indicator lamp.
C-ENG2 W/L	This item is displayed, but cannot be monitored.
CRUISE IND	This item is displayed, but cannot be monitored.
SET IND	This item is displayed, but cannot be monitored.
CRUISE W/L	This item is displayed, but cannot be monitored.
BA W/L	This item is displayed, but cannot be monitored.
O/D OFF IND	Lighting history of OD OFF indicator lamp.
ATC/T-AMT W/L	This item is displayed, but cannot be monitored.
ATF TEMP W/L	This item is displayed, but cannot be monitored.
CVT IND	This item is displayed, but cannot be monitored.
SPORT IND	This item is displayed, but cannot be monitored.
4WD W/L	This item is displayed, but cannot be monitored.
FUEL W/L	Lighting history of low fuel level warning lamp.
WASHER W/L	This item is displayed, but cannot be monitored.
AIR PRES W/L	This item is displayed, but cannot be monitored.
KEY G/Y W/L	Lighting history of KEY warning lamp (Green/Yellow).
KEY R W/L	This item is displayed, but cannot be monitored.
KEY KNOB W/L	This item is displayed, but cannot be monitored.
EPS W/L	Lighting history of EPS warning lamp.

Display item	Description
e-4WD	This item is displayed, but cannot be monitored.
AFS OFF IND	This item is displayed, but cannot be monitored.
4WAS/RAS W/L	This item is displayed, but cannot be monitored.
HDC W/L	This item is displayed, but cannot be monitored.
SYS FAIL W/L	This item is displayed, but cannot be monitored.
SFT POSI W/L	This item is displayed, but cannot be monitored.
HV BAT W/L	This item is displayed, but cannot be monitored.
HEV BRAKE W/L	This item is displayed, but cannot be monitored.
SFT OPER W/L	This item is displayed, but cannot be monitored.
LANE W/L	This item is displayed, but cannot be monitored.
CHAGE W/L	This item is displayed, but cannot be monitored.
OIL LEV LOW	This item is displayed, but cannot be monitored.
DPF W/L	This item is displayed, but cannot be monitored.
TRAILER IND	This item is displayed, but cannot be monitored.
RUN FLAT W/L	This item is displayed, but cannot be monitored.
E-SUS W/L	This item is displayed, but cannot be monitored.
LAUNCH CNT W/L	This item is displayed, but cannot be monitored.
BRAKE PAD W/L	This item is displayed, but cannot be monitored.

DIAGNOSIS SYSTEM (BCM) (WITH INTELLIGENT KEY SYSTEM) COMMON ITEM

COMMON ITEM : CONSULT-III Function (BCM - COMMON ITEM)

INFOID:0000000005887677

APPLICATION ITEM

CONSULT-III performs the following functions via CAN communication with BCM.

Diagnosis mode	Function Description
Work Support	Changes the setting for each system function.
Self Diagnostic Result	Displays the diagnosis results judged by BCM.
CAN Diag Support Monitor	Monitors the reception status of CAN communication viewed from BCM. Refer to CONSULT-III operation manual.
Data Monitor	The BCM input/output signals are displayed.
Active Test	The signals used to activate each device are forcibly supplied from BCM.
Ecu Identification	The BCM part number is displayed.
Configuration	• Read and save the vehicle specification. • Write the vehicle specification when replacing BCM.

SYSTEM APPLICATION

BCM can perform the following functions for each system.

NOTE:

It can perform the diagnosis modes except the following for all sub system selection items.

×: Applicable item

System	Sub system selection item	Diagnosis mode		
		Work Support	Data Monitor	Active Test
Door lock	DOOR LOCK	×	×	×
Rear window defogger	REAR DEFOGGER		×	×
Warning chime	BUZZER		×	×
Interior room lamp timer	INT LAMP	×	×	×
Exterior lamp	HEAD LAMP	×	×	×
Wiper and washer	WIPER	×	×	×
Turn signal and hazard warning lamps	FLASHER	×	×	×
Automatic air conditioner	AIR CONDITONER		×	×
• Intelligent Key system • Engine start system	INTELLIGENT KEY	×	×	×
Combination switch	COMB SW		×	
Body control system	BCM	×		
NATS	IMMU	×	×	×
Interior room lamp battery saver	BATTERY SAVER	×	×	×
Back door	TRUNK		×	
Vehicle security system	THEFT ALM	×	×	×
—	RETAINED PWR*		×	
Signal buffer system	SIGNAL BUFFER		×	×

*: This item is displayed, but is not used.

FREEZE FRAME DATA (FFD)

The BCM records the following vehicle condition at the time a particular DTC is detected, and displays on CONSULT-III.

CONSULT screen item	Indication/Unit	Description	
Vehicle Speed	km/h	Vehicle speed of the moment a particular DTC is detected	
Odo/Trip Meter	km	Total mileage (Odometer value) of the moment a particular DTC is detected	
Vehicle Condition	SLEEP>LOCK	Power position status of the moment a particular DTC is detected	While turning BCM status from low power consumption mode to normal mode (Power supply position is “LOCK”)
	SLEEP>OFF		While turning BCM status from low power consumption mode to normal mode (Power supply position is “OFF”.)
	LOCK>ACC		While turning power supply position from “LOCK” to “ACC”
	ACC>ON		While turning power supply position from “ACC” to “IGN”
	RUN>ACC		While turning power supply position from “RUN” to “ACC” (Vehicle is stopping and selector lever is except P position.)
	CRANK>RUN		While turning power supply position from “CRANKING” to “RUN” (From cranking up the engine to run it)
	RUN>URGENT		While turning power supply position from “RUN“ to “ACC” (Emergency stop operation)
	ACC>OFF		While turning power supply position from “ACC” to “OFF”
	OFF>LOCK		While turning power supply position from “OFF” to “LOCK”
	OFF>ACC		While turning power supply position from “OFF” to “ACC”
	ON>CRANK		While turning power supply position from “IGN” to “CRANKING”
	OFF>SLEEP		While turning BCM status from normal mode (Power supply position is “OFF”.) to low power consumption mode
	LOCK>SLEEP		While turning BCM status from normal mode (Power supply position is “LOCK”.) to low power consumption mode
	LOCK		Power supply position is “LOCK” (Ignition switch OFF with steering is locked.)
	OFF		Power supply position is “OFF” (Ignition switch OFF with steering is unlocked.)
	ACC		Power supply position is “ACC” (Ignition switch ACC)
	ON		Power supply position is “IGN” (Ignition switch ON with engine stopped)
	ENGINE RUN		Power supply position is “RUN” (Ignition switch ON with engine running)
	CRANKING		Power supply position is “CRANKING” (At engine cranking)
IGN Counter	0 - 39	The number of times that ignition switch is turned ON after DTC is detected • The number is 0 when a malfunction is detected now. • The number increases like 1 → 2 → 3...38 → 39 after returning to the normal condition whenever ignition switch OFF → ON. • The number is fixed to 39 until the self-diagnosis results are erased if it is over 39.	

BUZZER

BUZZER : CONSULT-III Function (BCM - BUZZER)

INFOID:0000000005887678

APPLICATION ITEMS

Test item	Diagnosis mode	Description
BUZZER	Data Monitor	Displays BCM input data in real time.
	Active Test	Operation of electrical loads can be checked by sending driving signal to them.

DATA MONITOR

Display item [Unit]	Description
PUSH SW [On/Off]	Status of push-button ignition switch judged by BCM.
UNLK SEN-DR [On/Off]	Status of unlock sensor judged by BCM.
VEH SPEED 1 [km/h]	Value of vehicle speed signal received from combination meter with CAN communication line.
TAIL LAMP SW [On/Off]	Status of lighting switch judged by BCM using the combination switch readout function.
FR FOG SW [On/Off]	Status of front fog lamp switch judged by BCM using the combination switch readout function.
DOOR SW-DR [On/Off]	Status of driver side door switch judged by BCM.
CDL LOCK SW [On/Off]	Status of door lock unlock switch judged by BCM.

ACTIVE TEST

Display item [Unit]	Description
KEY REMINDER WARN	The key warning chime operation can be checked by operating the relevant function (On/Off).
LIGHT WARN ALM	The light warning chime operation can be checked by operating the relevant function (On/Off).

DIAGNOSIS SYSTEM (BCM) (WITHOUT INTELLIGENT KEY SYSTEM) COMMON ITEM

COMMON ITEM : CONSULT-III Function (BCM - COMMON ITEM)

INFOID:0000000006033917

APPLICATION ITEM

CONSULT-III performs the following functions via CAN communication with BCM.

Diagnosis mode	Function Description
Work Support	Changes the setting for each system function.
Self Diagnostic Result	Displays the diagnosis results judged by BCM.
CAN Diag Support Monitor	Monitors the reception status of CAN communication viewed from BCM. Refer to CONSULT-III operation manual.
Data Monitor	The BCM input/output signals are displayed.
Active Test	The signals used to activate each device are forcibly supplied from BCM.
Ecu Identification	The BCM part number is displayed.
Configuration	• Read and save the vehicle specification. • Write the vehicle specification when replacing BCM.

SYSTEM APPLICATION

BCM can perform the following functions for each system.

NOTE:

It can perform the diagnosis modes except the following for all sub system selection items.

×: Applicable item

System	Sub system selection item	Diagnosis mode		
		Work Support	Data Monitor	Active Test
Door lock	DOOR LOCK		×	×
Rear window defogger	REAR DEFOGGER		×	×
Warning chime	BUZZER		×	×
Interior room lamp control	INT LAMP	×	×	×
Remote keyless entry system	MULTI REMOTE ENT	×	×	×
Exterior lamp	HEAD LAMP	×	×	×
Wiper and washer	WIPER	×	×	×
Turn signal and hazard warning lamps	FLASHER		×	×
• Automatic air conditioner • Manual air conditioner	AIR CONDITONER		×	
Combination switch	COMB SW		×	
Body control system	BCM	×		
NATS	IMMU	×*1		×
Interior room lamp battery saver	BATTERY SAVER	×	×	×
Back door	TRUNK		×	
—	THEFT ALM*2		×	×
—	RETAINED PWR*2			
Signal buffer system	SIGNAL BUFFER		×	×
Panic alarm	PANIC ALARM			×

- *1: For models without NATS this mode is not used.
- *2: This item is displayed, but is not used.

BUZZER

BUZZER : CONSULT-III Function (BCM - BUZZER)

INFOID:0000000006033918

APPLICATION ITEMS

Test item	Diagnosis mode	Description
BUZZER	Data Monitor	Displays BCM input data in real time.
	Active Test	Operation of electrical loads can be checked by sending driving signal to them.

DATA MONITOR

Display item [Unit]	Description
IGN ON SW [On/Off]	Status of ignition switch judged by BCM.
KEY ON SW [On/Off]	Status of key switch judged by BCM.
DOOR SW-DR [km/h]	Status of driver side door switch judged by BCM.
REVERSE SW CAN [On/Off]	This item is displayed, but cannot be monitored.
TAIL LAMP SW [On/Off]	Status of lighting switch judged by BCM using the combination switch readout function.
FR FOG SW [On/Off]	Status of front fog lamp switch judged by BCM using the combination switch readout function.
BUCKLE SW [On/Off]	Status of seatbelt buckle switch (driver side) received from combination meter with CAN communication line.
VEHICLE SPEED [km/h]	Value of vehicle speed signal received from combination meter with CAN communication line.

ACTIVE TEST

Display item [Unit]	Description
IGN KEY WARN ALM	The key warning chime operation can be checked by operating the relevant function (On/Off).
LIGHT WARN ALM	The light warning chime operation can be checked by operating the relevant function (On/Off).

ECU DIAGNOSIS INFORMATION

COMBINATION METER

Reference Value

INFOID:0000000005904785

VALUES ON THE DIAGNOSIS TOOL

Monitor Item	Condition		Value/Status
SPEED METER [km/h]	Ignition switch ON	While driving	Equivalent to speedometer reading **NOTE:** 655.35 is displayed when the malfunction signal is received (A/T models)
SPEED OUTPUT [km/h]	Ignition switch ON	While driving	Equivalent to speedometer reading **NOTE:** 655.35 is displayed when the malfunction signal is received (A/T models)
ODO OUTPUT [km/h or mph]	Ignition switch ON	—	Equivalent to odometer reading in combination meter
TACHO METER [rpm]	Ignition switch ON	Engine running	Equivalent to tachometer reading **NOTE:** 8191.875 is displayed when the malfunction signal is received
FUEL METER [L]	Ignition switch ON	—	Values according to fuel level
W TEMP METER [°C]	Ignition switch ON	—	Values according to engine coolant temperature **NOTE:** 215 is displayed when the malfunction signal is input
ABS W/L	Ignition switch ON	ABS warning lamp ON	On
		ABS warning lamp OFF	Off
BRAKE W/L	Ignition switch ON	Brake warning lamp ON	On
		Brake warning lamp OFF	Off
DOOR W/L	Ignition switch ON	Door warning lamp ON	On
		Door warning lamp OFF	Off
HI-BEAM IND	Ignition switch ON	High-beam indicator lamp ON	On
		High-beam indicator lamp OFF	Off
TURN IND	Ignition switch ON	Turn signal indicator lamp ON	On
		Turn signal indicator lamp OFF	Off
FR FOG IND	Ignition switch ON	Front fog lamp indicator lamp ON	On
		Front fog lamp indicator lamp OFF	Off
OIL W/L	Ignition switch ON	Oil pressure warning lamp ON	On
		Oil pressure warning lamp OFF	Off
MIL	Ignition switch ON	Malfunction indicator lamp ON	On
		Malfunction indicator lamp OFF	Off
GLOW IND	Ignition switch ON	This item is displayed, but cannot be monitored.	Off
C-ENG2 W/L	Ignition switch ON	This item is displayed, but cannot be monitored.	Off
CRUISE IND	Ignition switch ON	This item is displayed, but cannot be monitored.	Off

Monitor Item	Condition		Value/Status
SET IND	Ignition switch ON	This item is displayed, but cannot be monitored.	Off
O/D OFF IND	Ignition switch ON	OD OFF indicator lamp ON	On
		OD OFF indicator lamp OFF	Off
FUEL W/L	Ignition switch ON	Low fuel warning displayed Dummy cross-reference("XX-XX")	On
		Low fuel warning not displayed Dummy cross-reference("XX-XX")	Off
KEY G/Y W/L	Ignition switch ON	KEY warning lamp (Green/Yellow) ON	On
		KEY warning lamp (Green/Yellow) OFF	Off
EPS W/L	Ignition switch ON	EPS warning lamp ON	On
		EPS warning lamp OFF	Off
e-4WD W/L	Ignition switch ON	This item is displayed, but cannot be monitored.	Off
DPF W/L	Ignition switch ON	This item is displayed, but cannot be monitored.	Off
FILTER W/L	Ignition switch ON	This item is displayed, but cannot be monitored.	Off
LCD	Ignition switch LOCK or ACC	Engine start operation indicator ON Dummy cross-reference("XX-XX")	B&P N
	Ignition switch ON	Engine start operation indicator ON Dummy cross-reference("XX-XX")	B&P I
	Ignition switch LOCK	Shift P warning lamp ON	SFT P
	Ignition switch ON	KEY warning lamp blinking	NO KY
SHIFT IND	Ignition switch ON	Shift position indicator P display	P
		Shift position indicator R display	R
		Shift position indicator N display	N
		Shift position indicator D display	D
		Shift position indicator 2 display	2
		Shift position indicator 1 display	1
O/D OFF SW	Ignition switch ON	While pressing the overdrive control switch	On
		Other than the above	Off
COMP F/B SIG	Ignition switch ON	A/C compressor activation condition	On
		A/C compressor deactivation condition	Off
PKB SW	Ignition switch ON	Parking brake switch ON	On
		Parking brake switch OFF	Off
BUCKLE SW	Ignition switch ON	Seat belt (driver side) not fastened	On
		Seat belt (driver side) fastened	Off
BRAKE SW	Ignition switch ON	This item is displayed, but cannot be monitored.	Off
BRAKE OIL SW	Ignition switch ON	Brake fluid level switch ON	On
		Brake fluid level switch OFF	Off
DISTANCE [km]	Ignition switch ON	—	Possible driving distance calculated by combination meter

Monitor Item	Condition		Value/Status
FUEL LOW SIG	Ignition switch ON	Low fuel warning displayed Dummy cross-reference("XX-XX")	On
		Low fuel warning not displayed Dummy cross-reference("XX-XX")	Off
BUZZER	Ignition switch ON	Buzzer ON	On
		Buzzer OFF	Off

NOTE:

Some items are not available according to vehicle specification.

TERMINAL LAYOUT

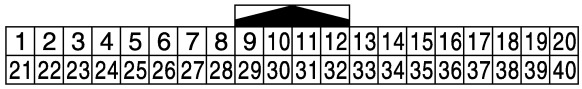

JPNIA0968GB

PHYSICAL VALUES

Terminal No. (Wire color)		Description		Condition		Value (Approx.)
+	–	Signal name	Input/ Output			
1 (R)	Ground	Battery power supply	Input	Ignition switch OFF	—	Battery voltage
3 (GR)	Ground	Ignition signal	Input	Ignition switch ON	—	Battery voltage
4 (W)	26 (GR)	Fuel level sensor signal	Input	Ignition switch ON	—	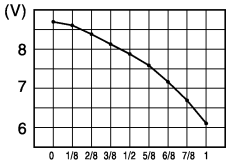 JSNIA2927ZZ

Terminal No. (Wire color)		Description		Condition		Value (Approx.)
+	–	Signal name	Input/ Output			
6 (L)	25 (B)	Vehicle speed sensor signal	Input	Ignition switch ON	Speedometer operated [When vehicle speed is approx. 20 km/h (12.5 MPH)]	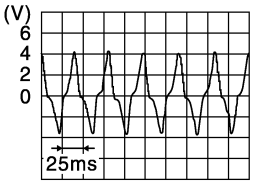 JSNIA3084ZZ
					Speedometer operated [When vehicle speed is approx. 40 km/h (25 MPH)]	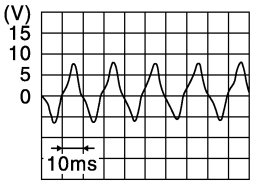 JSNIA3085ZZ
					Speedometer operated [When vehicle speed is approx. 60 km/h (37.5 MPH)]	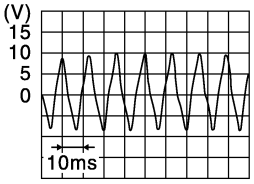 JSNIA3086ZZ
8 (L)	—	CAN-H	—	—	—	—
10 (P)	—	CAN-L	—	—	—	—
14 (G)	Ground	Engine coolant temperature signal	Output	Ignition switch ON	Engine idling [Approximately 20°C (68°F)]	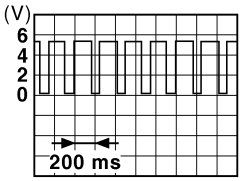 PKID0590E
					Engine idling [Approximately 80°C (176°F)]	0 V 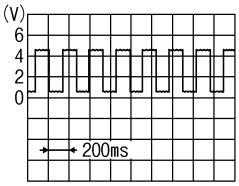 SKIB3651J
15* (GR)	—	—	—	—	—	—
21 (B)	Ground	Ground	—	Ignition switch ON	—	0 V
22 (B)	Ground	Ground	—	Ignition switch ON	—	0 V

Terminal No. (Wire color)		Description		Condition		Value (Approx.)
+	–	Signal name	Input/ Output			
23 (B/W)	Ground	Ground	—	Ignition switch ON	—	0 V
28 (P)	Ground	Overdrive control switch signal	Input	Ignition switch ON	While pressing the overdrive control switch.	0 V
					Other than the above	12 V
31 (G)	Ground	Security signal	Input	Ignition switch ON	Security warning lamp ON	0 V
					Security warning lamp OFF	12 V
32 (V)	Ground	Air bag signal	Input	Ignition switch ON	Air bag warning lamp ON	6 V
					Air bag warning lamp OFF	0 V
35 (Y)	Ground	Alternator signal	Input	Ignition switch ON	Charge warning lamp ON	2 V
					Charge warning lamp OFF	12 V
36 (LG)	Ground	Brake fluid level switch signal	Input	Ignition switch ON	Brake fluid level is normal	12 V
					Brake fluid level is less than low level	0 V
37 (SB)	Ground	Parking brake switch signal	Input	Ignition switch ON	Parking brake applied.	0 V
					Parking brake released.	12 V

*: This harness is not used.

Fail-Safe

INFOID:0000000005904786

FAIL-SAFE

The combination meter activates the fail-safe control if CAN communication with each unit is malfunctioning.

Function		Specifications
Speedometer (A/T models)		Reset to zero by suspending communication.
Tachometer		
Illumination control		When suspending communication, changes to nighttime mode.
Information display	Shift position indicator	The indicator turns OFF by suspending communication.
	Instantaneous fuel consumption	• When reception time of an abnormal signal is 2 seconds or less, the last received datum is used for calculation to indicate the result. • When reception time of an abnormal signal is more than two seconds, the last result calculated during normal condition is indicated.
	Average fuel consumption	
	Possible driving distance	
	Engine start operation indicator	The indicator turns OFF by suspending communication.
Buzzer		The buzzer turns off by suspending communication.

Function		Specifications
Warning lamp/indicator lamp	ABS warning lamp	The lamp turns ON by suspending communication.
	EPS warning lamp	
	Brake warning lamp (With ABS)	
	High water temperature warning lamp	The lamp turns OFF by suspending communication.
	Malfunction indicator lamp	
	High beam indicator lamp	
	Turn signal indicator lamp	
	Front fog lamp indicator lamp	
	Door warning lamp	
	Shift P warning lamp	
	Key warning lamp	
	Oil pressure warning lamp	
	OD OFF indicator lamp	

DTC Index

INFOID:0000000005904787

Display contents of CONSULT-III	Diagnostic item is detected when...	Refer to
CAN COMM CIRCUIT [U1000]	When combination meter is not transmitting or receiving CAN communication signal for 2 seconds or more.	MWI-35, "Diagnosis Procedure"
CONTROL UNIT (CAN) [U1010]	When detecting error during the initial diagnosis of the CAN controller of combination meter.	XX-XX, "*****"
VEHICLE SPEED [B2205]	The abnormal vehicle speed signal is input from the ABS actuator and electric unit (control unit) for 2 seconds or more.	MWI-37, "Diagnosis Procedure"
ENGINE SPEED [B2267]	If ECM continuously transmits abnormal engine speed signals for 2 seconds or more.	MWI-38, "Diagnosis Procedure"
WATER TEMP [B2268]	If ECM continuously transmits abnormal engine coolant temperature signals for 60 seconds or more.	MWI-39, "Diagnosis Procedure"

BCM (BODY CONTROL MODULE)

List of ECU Reference

INFOID:0000000005887684

ECU		Reference
BCM	With intelligent key models	BCS-18, "Reference Value"
		BCS-37, "Fail-safe"
		BCS-39, "DTC Inspection Priority Chart"
		BCS-40, "DTC Index"
	Without intelligent key models	BCS-72, "Reference Value"
		BCS-85, "Fail-safe"
		BCS-85, "DTC Inspection Priority Chart"
		BCS-86, "DTC Index"

WIRING DIAGRAM

WARNING CHIME SYSTEM

Wiring Diagram

INFOID:0000000005887685

For connector terminal arrangements, harness layouts, and alphabets in a ⬡ (option abbreviation; if not described in wiring diagram), refer to GI-12, "Connector Information".

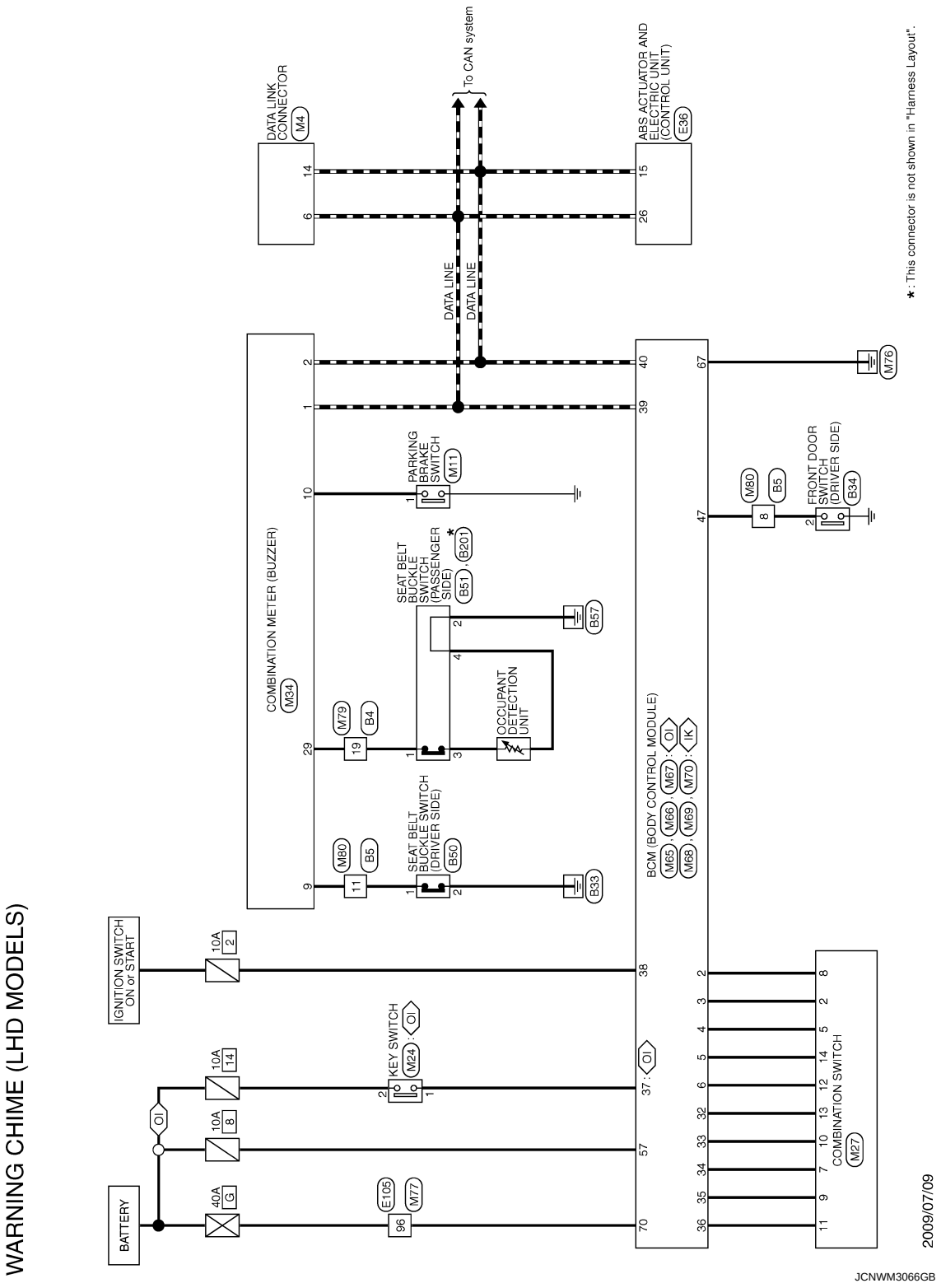

BASIC INSPECTION

DIAGNOSIS AND REPAIR WORKFLOW

Work Flow

INFOID:0000000005887687

OVERALL SEQUENCE

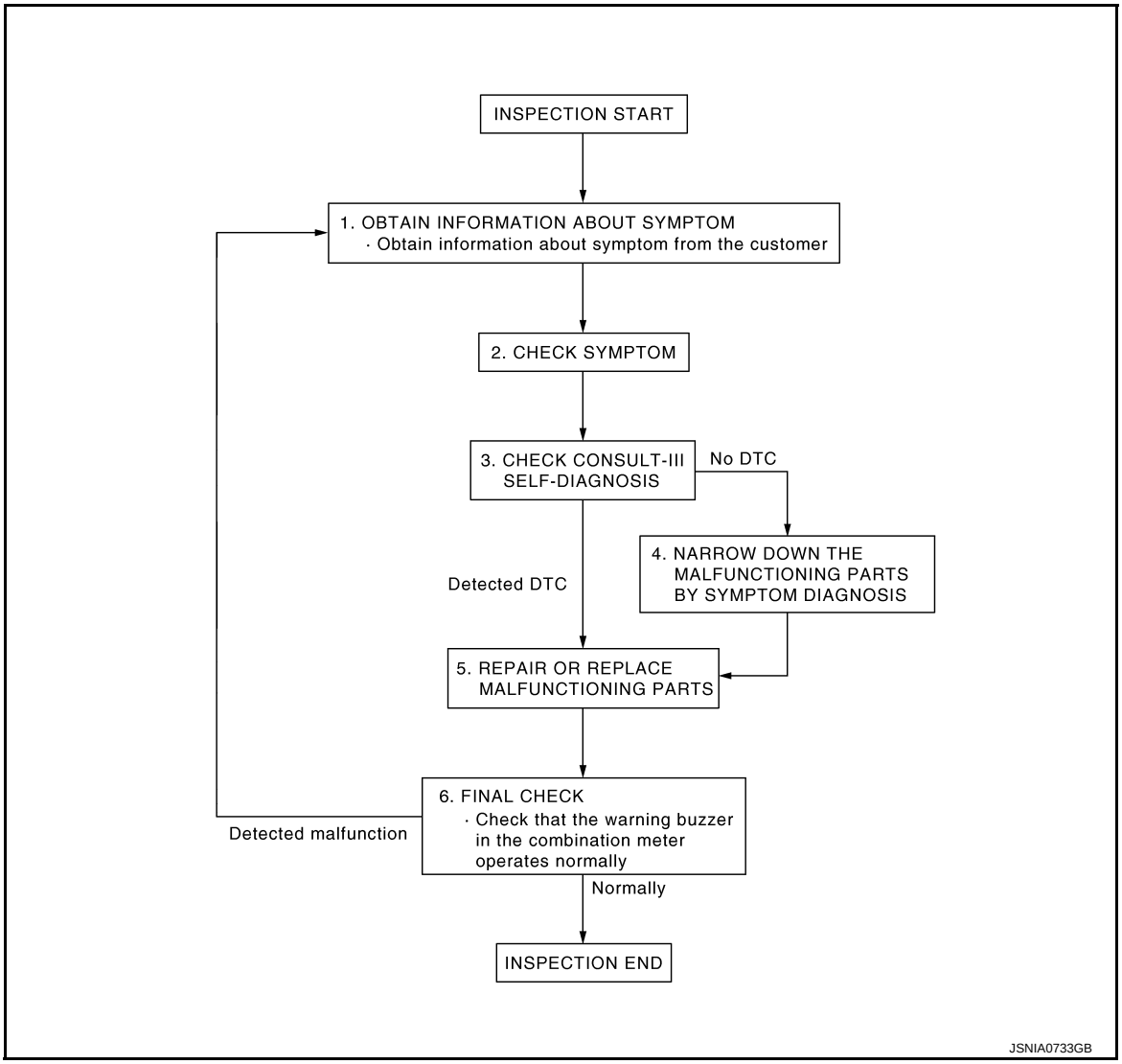

DETAILED FLOW

1. OBTAIN INFORMATION ABOUT SYMPTOM

Interview the customer to obtain as much information as possible about the conditions and environment under which the malfunction occurred.

>> GO TO 2.

2. CHECK SYMPTOM

- Check the symptom based on the information obtained from the customer.
- Check if any other malfunctions are present.

>> GO TO 3.

3. CHECK CONSULT-III SELF-DIAGNOSIS RESULTS

Connect CONSULT-III and perform self-diagnosis. Refer to MWI-18, "CONSULT-III Function".

< BASIC INSPECTION >

Are self-diagnosis results normal?

YES >> GO TO 4.
NO >> GO TO 5.

4. NARROW DOWN MALFUNCTIONING PARTS BY SYMPTOM DIAGNOSIS

Perform symptom diagnosis and narrow down the malfunctioning parts.

>> GO TO 5.

5. REPAIR OR REPLACE MALFUNCTIONING PARTS

Repair or replace malfunctioning parts.

NOTE:

If DTC is displayed, erase DTC after repairing or replacing malfunctioning parts.

>> GO TO 6.

6. FINAL CHECK

Check that the warning buzzer in the combination meter operates normally.

Does it operate normally?

YES >> INSPECTION END
NO >> GO TO 1.

DTC/CIRCUIT DIAGNOSIS

POWER SUPPLY AND GROUND CIRCUIT

COMBINATION METER

COMBINATION METER : Diagnosis Procedure

INFOID:0000000005904800

1.CHECK FUSE

Check for blown fuses.

Power source	Fuse No.
Battery	11
Ignition switch ON or START	5

Is the inspection result normal?

YES >> GO TO 2.
NO >> Be sure to eliminate cause of malfunction before installing new fuse.

2.CHECK POWER SUPPLY CIRCUIT

Check voltage between combination meter harness connector and ground.

Terminals			Ignition switch position	Voltage (Approx.)
(+)		(–)		
Combination meter		Ground		
Connector	Terminal			
M34	21		OFF	Battery voltage
	22		ON	

Is the inspection result normal?

YES >> GO TO 3.
NO >> Check harness between combination meter and fuse.

3.CHECK GROUND CIRCUIT

1. Turn ignition switch OFF.
2. Disconnect combination meter connector.
3. Check continuity between combination meter harness connector and ground.

Combination meter		Ground	Continuity
Connector	Terminal		
M34	21		Existed
	22		

Is the inspection result normal?

YES >> INSPECTION END
NO >> Repair harness or connector.

METER BUZZER CIRCUIT

Component Function Check

INFOID:0000000005887689

1. CHECK OPERATION OF METER BUZZER

1. Select “BUZZER” of “BCM” on CONSULT-III.
2. Perform “LIGHT WARN ALM” of “Active Test”.

Does meter buzzer beep?

YES >> INSPECTION END
NO >> GO TO 2.

2. CHECK COMBINATION METER INPUT SIGNAL

Select the “Data Monitor” for the “METER/M&A” and check the “BUZZER” monitor value.

BUZZER	
Under the condition of buzzer input	: On
Except above	: Off

Is the inspection result normal?

YES >> Replace combination meter. Refer to MWI-51, "Removal and Installation".
NO >> Replace BCM. Refer to BCS-58, "Removal and Installation" (with Intelligent Key system) or BCS-99, "Removal and Installation" (without Intelligent Key system).

Diagnosis Procedure

INFOID:0000000005887690

1. CHECK POWER SUPPLY OF COMBINATION METER

Check power supply of combination meter. Refer to WCS-33, "COMBINATION METER : Diagnosis Procedure".

Is the inspection result normal?

YES >> INSPECTION END
NO >> Repair power supply circuit of combination meter.

PARKING BRAKE SWITCH SIGNAL CIRCUIT

Diagnosis Procedure

INFOID:0000000005887691

1. CHECK COMBINATION METER INPUT SIGNAL

1. Turn ignition switch ON.
2. Check the voltage between combination meter harness connector and ground.

(+)		(–)	Condition		Voltage (Approx.)
Combination meter		Ground			
Connector	Terminal				
M34	10		Ignition switch ON	When parking brake is applied	0 V
				When parking brake is released	12 V

Is the inspection result normal?

YES >> INSPECTION END
NO >> GO TO 2.

2. CHECK PARKING BRAKE SWITCH SIGNAL CIRCUIT

1. Turn ignition switch OFF.
2. Disconnect combination meter connector and parking brake switch connector.
3. Check continuity between combination meter harness connector and parking brake switch harness connector.

Terminals				Continuity
Combination meter		Parking brake switch		
Connector	Terminal	Connector	Terminal	
M34	10	M11	1	Existed

4. Check continuity between combination meter harness connector and ground.

Terminals			Continuity
Combination meter		Ground	
Connector	Terminal		
M34	10		Not existed

Is the inspection result normal?

YES >> INSPECTION END
NO >> Repair harness or connector.

Component Inspection

INFOID:0000000005887692

1. CHECK PARKING BRAKE SWITCH

Check parking brake switch. Refer to BRC-5, "Component Inspection".

Is the inspection result normal?

YES >> INSPECTION END.
NO >> Replace parking brake switch. Refer to XX-XX, "*****".

SYMPTOM DIAGNOSIS

THE PARKING BRAKE RELEASE WARNING CONTINUES SOUNDING, OR DOES NOT SOUND

Description

INFOID:0000000005887693

- The parking brake warning buzzer sounds continuously during vehicle travel though the parking brake is released.
- The parking brake warning buzzer does not sound at all even though driving the vehicle with the parking brake applied.

Diagnosis Procedure

INFOID:0000000005887694

1. CHECK PARKING BRAKE WARNING LAMP

1. Start the engine.
2. Check the operation of the brake warning lamp by operating the parking brake.

When parking brake is applied	: ON
When parking brake is released	: OFF

Is the inspection result normal?

YES >> Replace combination meter. Refer to MWI-51, "Removal and Installation"
NO >> GO TO 2.

2. CHECK PARKING BRAKE SWITCH SIGNAL CIRCUIT

Perform check for the parking brake switch signal circuit. Refer to WCS-35, "Diagnosis Procedure".

Is the inspection result normal?

YES >> GO TO 3.
NO >> Repair harness or connector.

3. CHECK PARKING BRAKE SWITCH

Perform a unit check for the parking brake switch. Refer to WCS-35, "Component Inspection".

Is the inspection result normal?

YES >> Replace combination meter. Refer to MWI-51, "Removal and Installation"
NO >> Replace parking brake switch. Refer to PB-3, "Exploded View".

THE LIGHT REMINDER WARNING DOES NOT SOUND

Description

INFOID:0000000005887695

Light reminder warning chime does not sound even though headlamp is illuminated.

Diagnosis Procedure

INFOID:0000000005887696

1. CHECK COMBINATION SWITCH (LIGHTING SWITCH) OPERATION

Check that the headlamps operate normally by operating the combination switch (lighting switch).

Do they operate normally?

YES >> GO TO 2.
NO >> Refer to EXL-78, "Symptom Table".

2. CHECK DRIVER SIDE DOOR SWITCH SIGNAL CIRCUIT

Perform the check for the driver side door switch signal circuit. Refer to DLK-58, "Diagnosis Procedure" (with intelligent models) or DLK-177, "Diagnosis Procedure" (without intelligent models).

Is the inspection result normal?

YES >> GO TO 3.
NO >> Repair harness or connector.

3. CHECK DRIVER SIDE DOOR SWITCH

Perform a unit check for the driver side door switch. Refer to DLK-61, "Component Inspection" (with intelligent models) or DLK-180, "Component Inspection" (without intelligent models).

Is the inspection result normal?

YES >> Replace BCM. Refer to BCS-57, "Removal and Installation" (with intelligent models) or BCS-99, "Removal and Installation" (without intelligent models).
NO >> Replace driver side door switch. Refer to DLK-143, "Removal and Installation" (with intelligent models) or DLK-248, "Removal and Installation" (without intelligent models).

THE KEY WARNING DOES NOT SOUND (WITHOUT INTELLIGENT KEY)

Description

INFOID:0000000005887699

The key warning chime does not sound, when all of the following conditions are fulfilled.
- Key inserted into the key cylinder (key switch signal ON).
- Ignition switch is in ACC or OFF (ignition switch signal OFF).
- Driver side door is open (driver side door switch ON)

Diagnosis Procedure

INFOID:0000000005887700

1. CHECK BCM INPUT SIGNAL

1. Connect CONSULT-III.
2. Select the “Data Monitor” of “BCM (BUZZER)” and check the “KEY ON SW” monitor value. Refer to WCS-19, "BUZZER : CONSULT-III Function (BCM - BUZZER)".

Is the inspection result normal?

YES >> Replace BCM. Refer to BCS-57, "Removal and Installation" (with intelligent key) or BCS-99, "Removal and Installation" (with intelligent key).

NO >> GO TO 2.

2. CHECK KEY SWITCH SIGNAL CIRCUIT

Check the key switch signal circuit. Refer to DLK-196, "Diagnosis Procedure".

Is the inspection result normal?

YES >> Replace BCM. Refer to BCS-57, "Removal and Installation" (with intelligent key) or BCS-99, "Removal and Installation" (with intelligent key).

NO >> Check applicable parts, and repair or replace corresponding parts.

SECTION WT
ROAD WHEELS & TIRES

CONTENTS

SYMPTOM DIAGNOSIS 2

NOISE, VIBRATION AND HARSHNESS (NVH) TROUBLESHOOTING 2
NVH Troubleshooting Chart 2

PERIODIC MAINTENANCE 3

ROAD WHEEL 3
Tire rotation 3

REMOVAL AND INSTALLATION 4

ROAD WHEEL TIRE ASSEMBLY 4
Exploded View 4
Removal and Installation 4
Inspection 4

SERVICE DATA AND SPECIFICATIONS (SDS) 6

SERVICE DATA AND SPECIFICATIONS (SDS) 6
Road Wheel 6
Tire Air Pressure 6

SYMPTOM DIAGNOSIS

NOISE, VIBRATION AND HARSHNESS (NVH) TROUBLESHOOTING

NVH Troubleshooting Chart

INFOID:0000000006043982

Use chart below to find the cause of the symptom. If necessary, repair or replace these parts.

Reference page			XX-XX, "*****", XX-XX, "*****"	WT-4, "Inspection"	WT-3, "Tire rotation"	WT-6, "Tire Air Pressure"	WT-3, "Tire rotation"	—	—	WT-6, "Tire Air Pressure"	NVH in FAX and FSU sections.	NVH in RAX and RSU sections.	Refer to TIRES in this chart.	Refer to ROAD WHEEL in this chart.	NVH in FAX section.	NVH in BR section.	NVH in ST section.
Possible cause and SUSPECTED PARTS			Improper installation, looseness	Out-of-round	unbalance	Incorrect tire pressure	Uneven tire wear	Deformation or damage	Non-uniformity	Incorrect tire size	FRONT AXLE AND FRONT SUSPENSION	REAR AXLE AND REAR SUSPENSION	TIRES	ROAD WHEELS	DRIVE SHAFT	BRAKE	STEERING
Symptom	TIRES	Noise	×	×	×	×	×	×	×		×	×		×	×	×	×
		Shake	×	×	×	×	×	×		×	×	×		×	×	×	×
		Vibration				×				×	×	×			×		×
		Shimmy	×	×	×	×	×	×	×	×	×	×		×		×	×
		Judder	×	×	×	×	×	×		×	×	×		×		×	×
		Poor quality ride or handling	×	×	×	×	×	×		×	×		×	×			
	ROAD WHEEL	Noise	×	×	×			×			×	×	×		×	×	×
		Shake	×	×	×			×			×	×	×		×	×	×
		Shimmy, Judder	×	×	×			×			×	×	×			×	×
		Poor quality ride or handling	×	×	×			×			×	×	×				

×: Applicable

PERIODIC MAINTENANCE

ROAD WHEEL

Tire rotation

INFOID:0000000006043983

- Follow the maintenance schedule for tire rotation service intervals. Refer to XX-XX, "*****".
- When installing the wheel, tighten wheel nuts to the specified torque.

  CAUTION:
  - **When installing wheels, tighten them diagonally by dividing the work two to three times in order to prevent the wheels from developing any distortion.**
  - **Be careful not to tighten wheel nut at torque exceeding the criteria for preventing strain of disc rotor.**
  - **Use NISSAN genuine wheel nuts for aluminum wheels.**

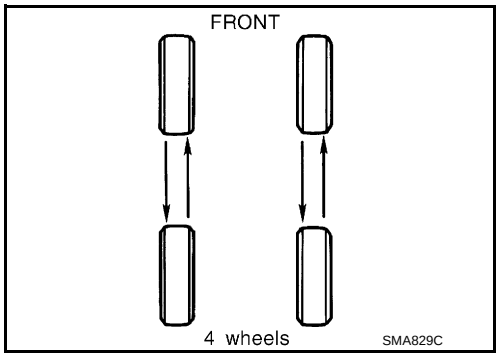

Wheel nuts tighting torque : Refer to WT-4, "Exploded View".

REMOVAL AND INSTALLATION

ROAD WHEEL TIRE ASSEMBLY

Exploded View

INFOID:0000000006043984

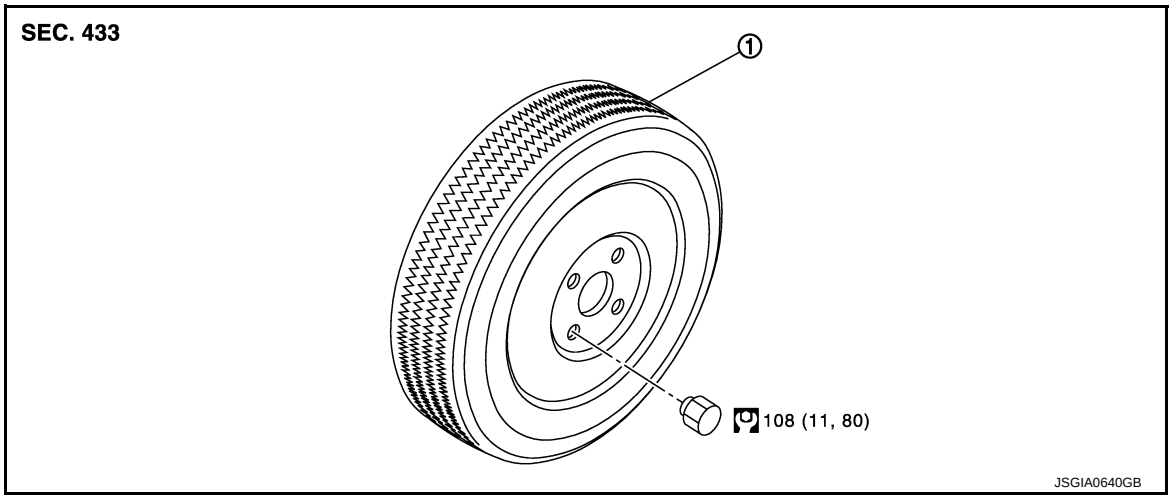

1. Tire assembly

Refer to XX-XX, "*****" for symbols in the figure.

Removal and Installation

INFOID:0000000006043985

REMOVAL

1. Remove wheel nuts.
2. Remove tire assembly.

INSTALLATION

Install in the reverse order of removal.

Inspection

INFOID:0000000006043986

ALUMINUM WHEEL

1. Check tires for wear and improper inflation.
2. Check wheels for deformation, cracks and other damage. If deformed, remove wheel and check wheel runout.

a. Remove tire from aluminum wheel and mount on a tire balance machine.
b. Set dial indicator as shown in the figure.
c. If the lateral deflection (A) or vertical deflection (B) for radial runout value exceeds the limit, replace aluminum wheel.

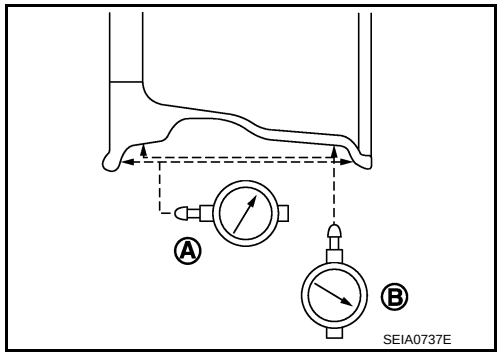

Limit

A: Refer to WT-6, "Road Wheel".

B: Refer to WT-6, "Road Wheel".

STEEL WHEEL

1. Check tires for were and improper inflation.

2. Check wheels for deformation, clacks and other damage. If deformed, remove wheel and check wheel runout.

a. Remove tire from steel wheel and mount wheel on a tire balance machine.

b. Set two dial indicators as shown in the illustration.

c. Set each dial indicator to “0”.

d. Rotate wheel and check dial indicators at several points around the circumference of the wheel.

e. Calculate runout at each point as shown below.

Lateral runout limit (A): (❶+❷)/2

Radial runout limit (B): (❸+❹)/2

f. Select maximum positive runout value and the maximum negative value. Add the two values to determine total runout.

CAUTION:

In case a positive or negative value is not available, use the maximum value (negative or positive) for total runout.

Limit

A: Refer to WT-6, "Road Wheel".

B: Refer to WT-6, "Road Wheel".

g. If the total runout value exceeds limit, replace steel wheel.

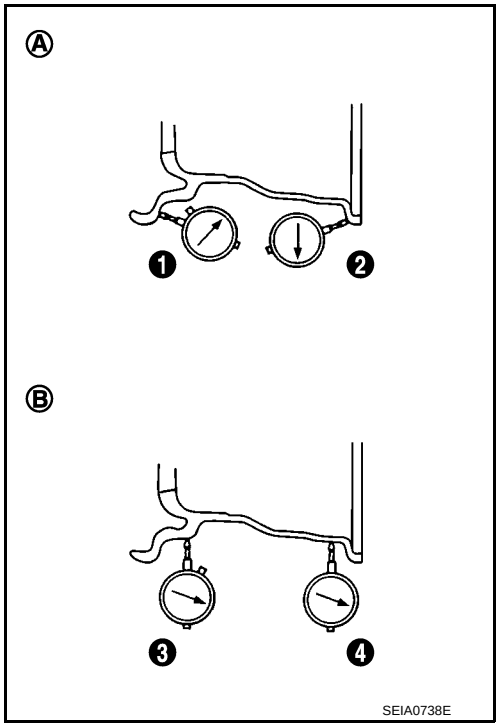

SERVICE DATA AND SPECIFICATIONS (SDS)

SERVICE DATA AND SPECIFICATIONS (SDS)

Road Wheel

INFOID:0000000006043987

ALUMINUM WHEEL

Item		Limit
Radial runout	Lateral deflection	Less than 0.3 mm (0.012 in)
	Vertical deflection	
Allowable unbalance	Dynamic (At flange)	Less than 10 g (0.35 oz) (one side)
	Static (At flange)	Less than 20 g (0.70 oz)

STEEL WHEEL

Item		Limit
Radial runout	Lateral deflection	Less than 0.8 mm (0.031 in)
	Vertical deflection	Less than 0.5 mm (0.020 in)
Allowable unbalance	Dynamic (At flange)	Less than 10 g (0.35 oz) (one side)
	Static (At flange)	Less than 20 g (0.70 oz)

STEEL WHEEL (FOR EMERGENCY USE)

Item		Limit
Radial runout	Lateral deflection	Less than 0.8 mm (0.031 in)
	Vertical deflection	Less than 0.5 mm (0.020 in)
Allowable unbalance	Dynamic (At flange)	Less than 10 g (0.35 oz) (one side)
	Static (At flange)	Less than 20 g (0.70 oz)

Tire Air Pressure

INFOID:0000000006043988

Unit: kPa (bar, kg/cm^2, psi)

Tire size	Air pressure		
	Front	Rear	
		Half load	Maximum load
165/70R14 81S	220 (2.2, 2.2, 32)	220 (2.2, 2.2, 32)	300 (3.0, 3.0, 44)
175/60R15 81H	220 (2.2, 2.2, 32)	220 (2.2, 2.2, 32)	300 (3.0, 3.0, 44)

SECTION WW
WIPER & WASHER

CONTENTS

PRECAUTION 3

PRECAUTIONS 3
Precaution for Supplemental Restraint System (SRS) "AIR BAG" and "SEAT BELT PRE-TENSIONER" 3
Precaution for Procedure without Cowl Top Cover..... 3

SYSTEM DESCRIPTION 4

COMPONENT PARTS 4
Component Parts Location 4
Component Description 4
Washer Switch 5

SYSTEM 6

FRONT WIPER AND WASHER SYSTEM 6
FRONT WIPER AND WASHER SYSTEM : System Diagram 6
FRONT WIPER AND WASHER SYSTEM : System Description 6
FRONT WIPER AND WASHER SYSTEM : Fail-Safe 8

REAR WIPER AND WASHER SYSTEM 9
REAR WIPER AND WASHER SYSTEM : System Diagram 9
REAR WIPER AND WASHER SYSTEM : System Description 9
REAR WIPER AND WASHER SYSTEM : Fail-safe 11

DIAGNOSIS SYSTEM (BCM) (WITH INTELLIGENT KEY SYSTEM) 12

COMMON ITEM 12
COMMON ITEM : CONSULT-III Function (BCM - COMMON ITEM) 12

WIPER 13
WIPER : CONSULT-III Function (BCM - WIPER)..... 13

DIAGNOSIS SYSTEM (BCM) (WITHOUT INTELLIGENT KEY SYSTEM) 15

COMMON ITEM 15
COMMON ITEM : CONSULT-III Function (BCM - COMMON ITEM) 15

WIPER 15
WIPER : CONSULT-III Function (BCM - WIPER)..... 16

DIAGNOSIS SYSTEM (IPDM E/R) 18

WITH INTELLIGENT KEY 18
WITH INTELLIGENT KEY : Diagnosis Description 18
WITH INTELLIGENT KEY : CONSULT-III Function (IPDM E/R) 20

WITHOUT INTELLIGENT KEY 21
WITHOUT INTELLIGENT KEY : Diagnosis Description 21
WITHOUT INTELLIGENT KEY : CONSULT-III Function (IPDM E/R) 24

ECU DIAGNOSIS INFORMATION 26

BCM, IPDM E/R 26

WITH INTELLIGENT KEY 26
WITH INTELLIGENT KEY : List of ECU Reference 26

WITHOUT INTELLIGENT KEY 26
WITHOUT INTELLIGENT KEY : List of ECU Reference 26

WIRING DIAGRAM 27

WIPER AND WASHER SYSTEM 27
Wiring Diagram - for The Middle East - 27

BASIC INSPECTION 31

DIAGNOSIS AND REPAIR WORKFLOW 31

Work Flow 31

DTC/CIRCUIT DIAGNOSIS 33

WIPER AND WASHER FUSE 33
Diagnosis Procedure 33

FRONT WIPER MOTOR LO CIRCUIT 34
Component Function Check 34
Diagnosis Procedure 34

FRONT WIPER MOTOR HI CIRCUIT 35
Component Function Check 35
Diagnosis Procedure 35

FRONT WIPER AUTO STOP SIGNAL CIRCUIT 36
Component Function Check 36
Diagnosis Procedure 36

FRONT WIPER MOTOR GROUND CIRCUIT ... 37
Diagnosis Procedure 37

WASHER SWITCH 38
Component Inspection 38

REAR WIPER MOTOR CIRCUIT 39
Component Function Check 39
Diagnosis Procedure 39

REAR WIPER AUTO STOP SIGNAL CIRCUIT ... 41
Component Function Check 41
Diagnosis Procedure 41

SYMPTOM DIAGNOSIS 42

WIPER AND WASHER SYSTEM SYMPTOMS ... 42
Symptom Table 42

NORMAL OPERATING CONDITION 44
Description 44

FRONT WIPER DOES NOT OPERATE 45
Description 45
Diagnosis Procedure 45

REMOVAL AND INSTALLATION 47

WASHER TANK 47
Exploded View 47
Removal and Installation 47

WASHER PUMP 48
Exploded View 48
Removal and Installation 48

FRONT WASHER NOZZLE AND TUBE 49
Exploded View 49
Hydraulic Layout 49
Removal and Installation 49
Inspection and Adjustment 50

FRONT WIPER ARM 52
Exploded View 52
Removal and Installation 52
Adjustment 52

FRONT WIPER DRIVE ASSEMBLY 54
Exploded View 54
Removal and Installation 54
Disassembly and Assembly 55

WIPER AND WASHER SWITCH 56
Exploded View 56

REAR WIPER ARM 57
Exploded View 57
Removal and Installation 57
Adjustment 57

REAR WIPER MOTOR 59
Exploded View 59
Removal and Installation 59

REAR WASHER NOZZLE AND TUBE 60
Hydraulic Layout 60
Removal and Installation 60
Inspection and Adjustment 61

PRECAUTION

PRECAUTIONS

Precaution for Supplemental Restraint System (SRS) "AIR BAG" and "SEAT BELT PRE-TENSIONER"

INFOID:0000000006025155

The Supplemental Restraint System such as “AIR BAG” and “SEAT BELT PRE-TENSIONER”, used along with a front seat belt, helps to reduce the risk or severity of injury to the driver and front passenger for certain types of collision. This system includes seat belt switch inputs and dual stage front air bag modules. The SRS system uses the seat belt switches to determine the front air bag deployment, and may only deploy one front air bag, depending on the severity of a collision and whether the front occupants are belted or unbelted.
Information necessary to service the system safely is included in the “SRS AIR BAG” and “SEAT BELT” of this Service Manual.

WARNING:

- **To avoid rendering the SRS inoperative, which could increase the risk of personal injury or death in the event of a collision which would result in air bag inflation, all maintenance must be performed by an authorized NISSAN/INFINITI dealer.**
- **Improper maintenance, including incorrect removal and installation of the SRS, can lead to personal injury caused by unintentional activation of the system. For removal of Spiral Cable and Air Bag Module, see the “SRS AIR BAG”.**
- **Do not use electrical test equipment on any circuit related to the SRS unless instructed to in this Service Manual. SRS wiring harnesses can be identified by yellow and/or orange harnesses or harness connectors.**

PRECAUTIONS WHEN USING POWER TOOLS (AIR OR ELECTRIC) AND HAMMERS

WARNING:

- **When working near the Air Bag Diagnosis Sensor Unit or other Air Bag System sensors with the ignition ON or engine running, DO NOT use air or electric power tools or strike near the sensor(s) with a hammer. Heavy vibration could activate the sensor(s) and deploy the air bag(s), possibly causing serious injury.**
- **When using air or electric power tools or hammers, always switch the ignition OFF, disconnect the battery, and wait at least 3 minutes before performing any service.**

Precaution for Procedure without Cowl Top Cover

INFOID:0000000006025156

When performing the procedure after removing cowl top cover, cover the lower end of windshield with urethane, etc.

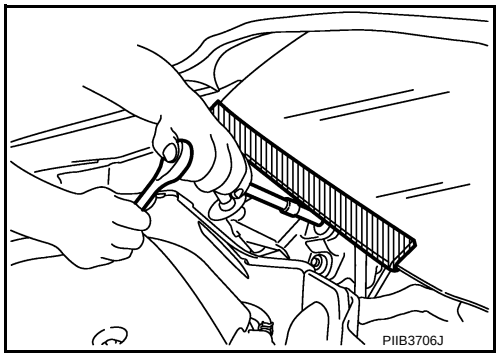

SYSTEM DESCRIPTION

COMPONENT PARTS

Component Parts Location

INFOID:0000000006025157

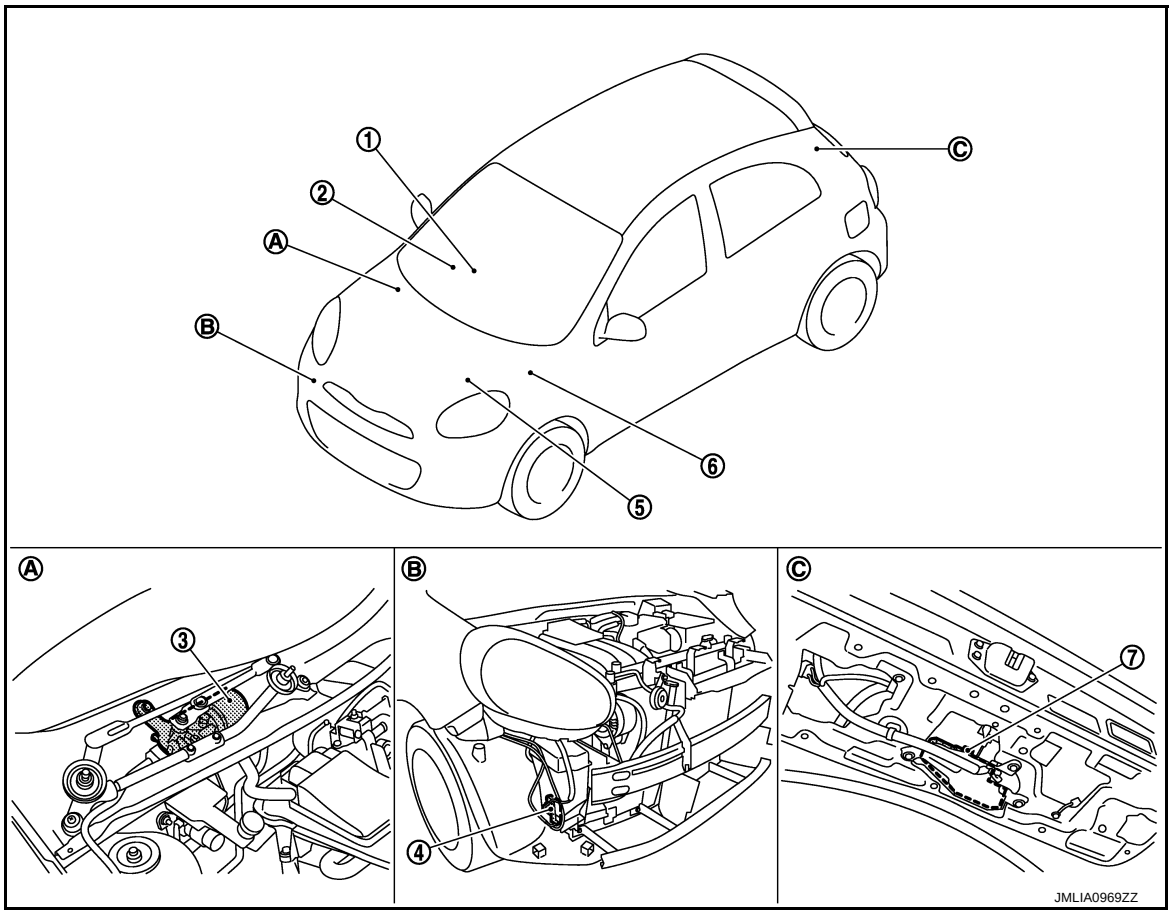

1.	Combination switch	2.	Combination meter	3.	Front wiper motor
4.	Washer pump	5.	IPDM E/R Refer to PCS-5, "Component Parts Location"	6.	BCM Refer to BCS-5, "BODY CONTROL SYSTEM : Component Parts Location"
7.	Rear wiper motor				
A.	Cowl top, right side of engine room	B.	Behind front bumper (RH)	C.	Back door finisher inside

Component Description

INFOID:0000000006025158

Part	Description
IPDM E/R	• Controls the integrated relay according to the request (via CAN communication) from BCM. • Performs the auto stop control of the front wiper.
BCM	• Judges the each switch status by the combination switch reading function. • Requests (via CAN communication) the front wiper relay and the front wiper high relay ON to IPDM E/R. • Supplies power to the rear wiper motor. • Performs the auto stop control of the rear wiper.
Combination meter	Transmits the vehicle speed signal to BCM via CAN communication.
Combination switch (Wiper & washer switch)	Refer to BCS-9, "COMBINATION SWITCH READING SYSTEM : System Description".

Part	Description
Washer switch	Refer to WW-5, "Washer Switch".
Front wiper motor	• IPDM E/R controls front wiper operation. • Front wiper auto stop signal is transmitted to IPDM E/R.
Rear wiper motor	• BCM controls rear wiper operation. • Rear wiper auto stop signal is transmitted to BCM.
Washer pump	• Washer fluid is sprayed according to washer switch states. • Switching between front washer and rear washer is performed according to the voltage polarity change to washer pomp.

Washer Switch

INFOID:0000000006043857

- Washer switch is integrated in combination switch.
- Combination switch switches polarity between front washer operating and rear washer operating to supply power to the washer pump on ground.

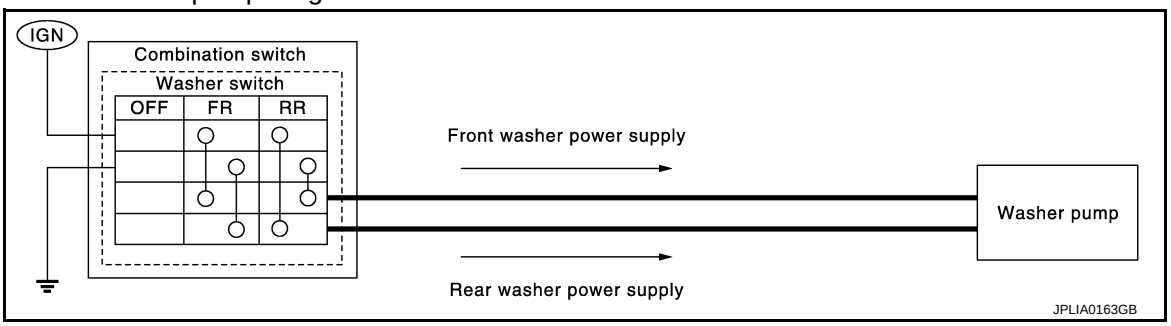

SYSTEM

FRONT WIPER AND WASHER SYSTEM

FRONT WIPER AND WASHER SYSTEM : System Diagram

INFOID:0000000006025162

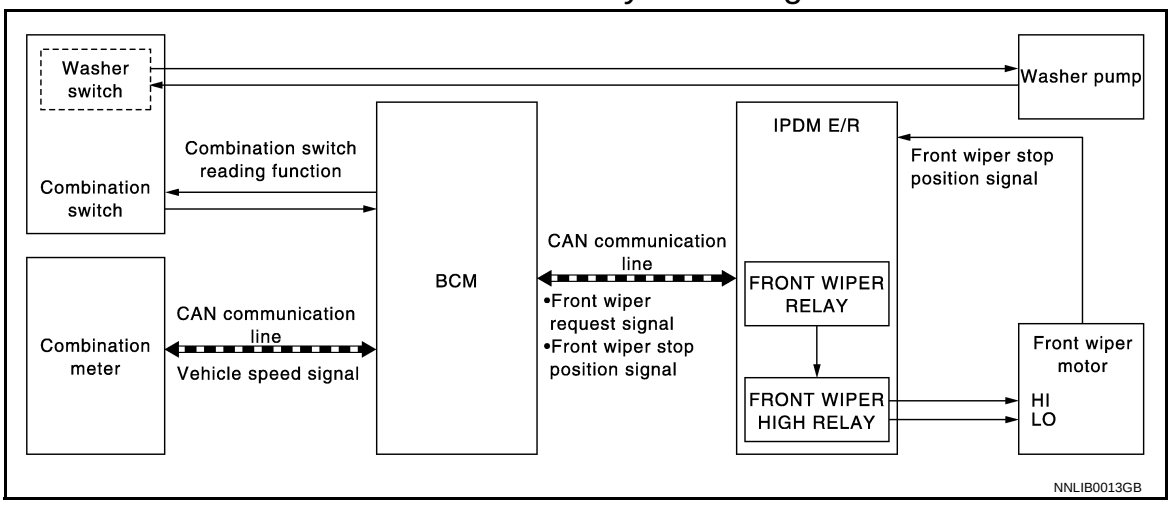

FRONT WIPER AND WASHER SYSTEM : System Description

INFOID:0000000006025163

OUTLINE

The front wiper is controlled by each function of BCM and IPDM E/R.

Control by BCM
- Combination switch reading function
- Front wiper control function

Control by IPDM E/R
- Front wiper control function
- Relay control function

FRONT WIPER BASIC OPERATION

- BCM detects the combination switch condition by the combination switch reading function.
- BCM transmits the front wiper request signal to IPDM E/R via CAN communication depending on each operating condition of the front wiper.
- IPDM E/R turns ON/OFF the integrated front wiper relay and the front wiper high relay according to the front wiper request signal. IPDM E/R provides the power supply to operate the front wiper HI/LO operation.

FRONT WIPER LO OPERATION

- BCM transmits the front wiper request signal (LO) to IPDM E/R via CAN communication according to the front wiper LO operating condition.

Front wiper LO operating condition
- Ignition switch ON
- Front wiper switch LO or front wiper switch MIST (while pressing)
- IPDM E/R turns ON the integrated front wiper relay according to the front wiper request signal (LO).

FRONT WIPER HI OPERATION

- BCM transmits the front wiper request signal (HI) to IPDM E/R via CAN communication according to the front wiper HI operating condition.

Front wiper HI operating condition
- Ignition switch ON
- Front wiper switch HI
- IPDM E/R turns ON the integrated front wiper relay and the front wiper high relay according to the front wiper request signal (HI).

FRONT WIPER INT OPERATION

- BCM transmits the front wiper request signal (INT) to IPDM E/R via CAN communication depending on the front wiper INT operating condition and intermittent operation delay interval according to the wiper intermittent dial position.

Front wiper INT operating condition
- Ignition switch ON
- Front wiper switch INT

- IPDM E/R turns ON the integrated front wiper relay so that the front wiper is operated only once according to the front wiper request signal (INT).
- BCM detects stop position/except stop position of the front wiper motor according to the front wiper stop position signal received from IPDM E/R via CAN communication.
- BCM transmits the front wiper request signal (INT) again after the intermittent operation delay interval.

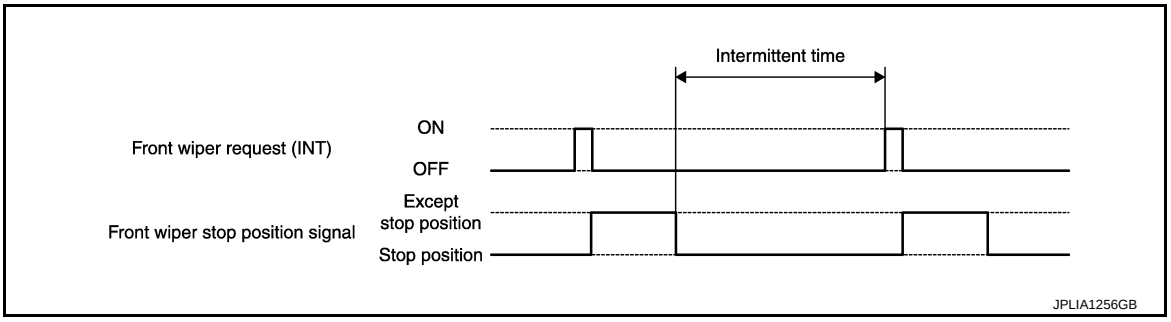

NOTE:
Factory setting of the front wiper intermittent operation is operation linked with vehicle speed. Front wiper intermittent operation can be set to operation linked or not linked with vehicle speed using CONSULT-III. Refer to WW-13, "WIPER : CONSULT-III Function (BCM - WIPER)".

Front wiper intermittent operation with vehicle speed
- BCM calculates the intermittent operation delay interval from the following
- Vehicle speed signal
- Wiper intermittent dial position

Unit: Second

Wiper intermittent dial position	Intermittent operation interval	Intermittent operation delay Interval		
		Vehicle speed		
		0 – 5 km/h (0 – 3.1 MPH)	5 – 65 km/h (3.1 – 40.4 MPH)*1	65 km/h (40.4 MPH) or more
1	Short ↑	1	0.4	0.24
2		2.5	1	0.6
3		5	2	1.2
4*2		7.5	3	1.8
5		12.5	5	3
6	↓ Long	25	10	6
7		40	16	9.6

*1: When operation setting is not linked with vehicle speed.

*2:Position for models without wiper intermittent dial.

FRONT WIPER AUTO STOP OPERATION

- BCM stops transmitting the front wiper request signal when the front wiper switch is turned OFF.
- IPDM E/R detects the front wiper stop position signal from the front wiper motor and detects the front wiper motor position (stop position/except stop position).

< SYSTEM DESCRIPTION >

- When the front wiper request signal is stopped, IPDM E/R turns ON the front wiper relay until the front wiper motor returns to the stop position.

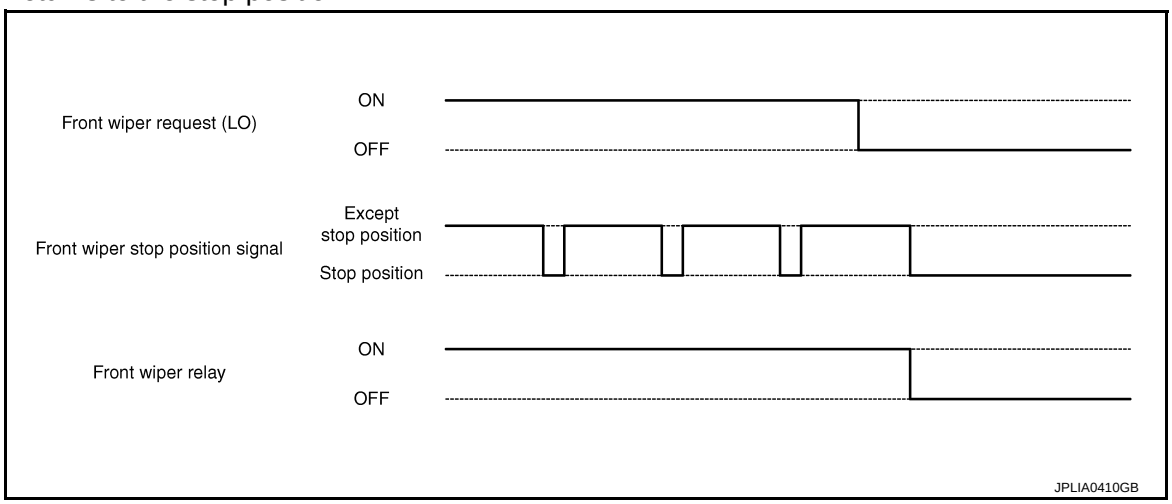

NOTE:
- BCM stops the transmitting of the front wiper request signal when the ignition switch is OFF.
- IPDM E/R turns the front wiper relay OFF when the ignition switch is OFF.

FRONT WIPER OPERATION LINKED WITH WASHER

- BCM transmits the front wiper request signal (LO) to IPDM E/R via CAN communication according to the washer linked operating condition of the front wiper.
- BCM transmits the front wiper request signal (LO) so that the front wiper operates approximately 2 times when the front washer switch OFF is detected.

Washer linked operating condition of front wiper
- Ignition switch ON
- Front washer switch ON (0.4 second or more)

- IPDM E/R turns ON the integrated front wiper relay according to the front wiper request signal (LO).
- The washer pump is grounded through the combination switch with the front washer switch ON.

FRONT WIPER AND WASHER SYSTEM : Fail-Safe

INFOID:0000000006067184

CAN COMMUNICATION CONTROL

When CAN communication with ECM and BCM is impossible, IPDM E/R performs fail-safe control. After CAN communication recovers normally, it also returns to normal control.

If No CAN Communication Is Available With ECM

Control part	Fail-safe operation
Cooling fan	• The cooling fan relay turn ON when the ignition switch is turned ON (Cooling fan HI operation) • The cooling fan relay turn OFF when the ignition switch is turned OFF
A/C compressor	A/C relay OFF
Alternator	Outputs the power generation command signal (PWM signal) 0%

If No CAN Communication Is Available With BCM

Control part	Fail-safe operation
Headlamp	• Turns ON the headlamp low relay when the ignition switch is turned ON • Turns OFF the headlamp low relay when the ignition switch is turned OFF • Headlamp high relay OFF
• Parking lamps • License plate lamps • Illuminations • Tail lamps	• Turns ON the tail lamp relay when the ignition switch is turned ON • Turns OFF the tail lamp relay when the ignition switch is turned OFF

Control part	Fail-safe operation
Front wiper motor	• The status just before activation of fail-safe control is maintained until the ignition switch is turned OFF while the front wiper is operating at LO or HI speed. • The wiper is operated at LO speed until the ignition switch is turned OFF if the fail-safe control is activated while the front wiper is set in the INT mode and the front wiper motor is operating. • Returns automatically wiper to stop position when ignition switch is turned ON if fail-safe control is activated while front wiper motor is operated and wiper stop in the other position than stop position.
Front fog lamps	Front fog lamp relay OFF
Horn	Horn OFF
Ignition relay	The status just before activation of fail-safe is maintained.
Starter motor	Starter control relay OFF
Steering lock unit	Steering lock relay OFF

FRONT WIPER PROTECTION FUNCTION

IPDM E/R detects front wiper stop position by a front wiper stop position signal.
When a front wiper stop position signal is in the conditions listed below, IPDM E/R stops power supply to wiper after repeating a front wiper 10 seconds activation and 20 seconds stop.

Ignition switch	Front wiper switch	Front wiper stop position signal
ON	OFF	The front wiper stop position signal (stop position) cannot be input for 10 seconds.
	ON	The front wiper stop position signal does not change for 10 seconds.

NOTE:
This operation status can be confirmed on the IPDM E/R “Data Monitor” that displays “BLOCK” for the item “WIP PROT” while the wiper is stopped.

REAR WIPER AND WASHER SYSTEM

REAR WIPER AND WASHER SYSTEM : System Diagram

INFOID:0000000006025165

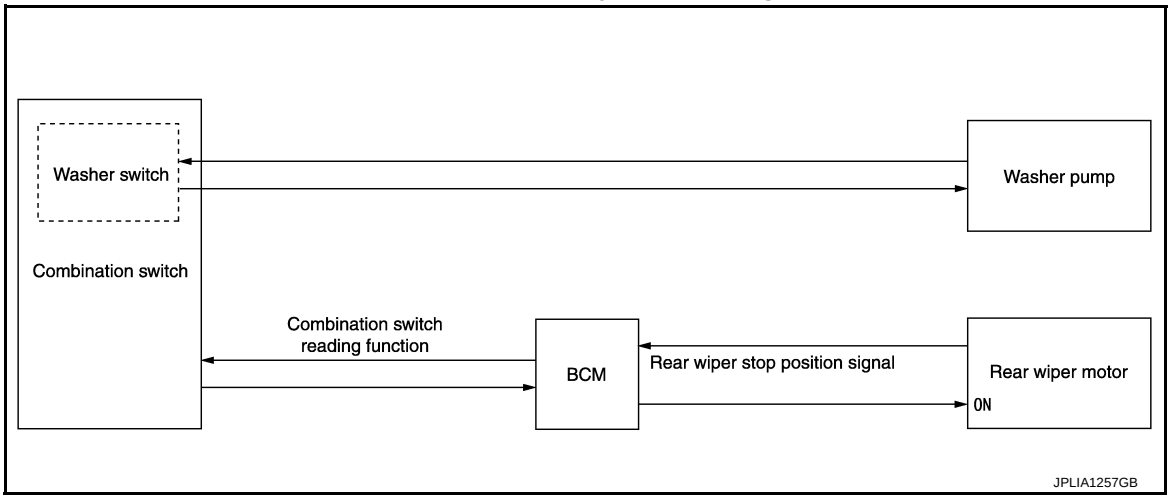

REAR WIPER AND WASHER SYSTEM : System Description

INFOID:0000000006025166

OUTLINE

The rear wiper is controlled by each function of BCM.

Control by BCM
- Combination switch reading function
- Rear wiper control function

REAR WIPER BASIC OPERATION

- BCM detects the combination switch condition by the combination switch reading function.
- BCM controls the rear wiper to start or stop.

REAR WIPER ON OPERATION

- BCM supplies power to the rear wiper motor according to the rear wiper ON operating condition.

Rear wiper ON operating condition
- Ignition switch ON
- Rear wiper switch ON

REAR WIPER INT OPERATION

- BCM supplies power to the rear wiper motor according to the INT operating condition.

Rear wiper INT operating condition
- Ignition switch ON
- Rear wiper switch INT
- BCM controls the rear wiper to operate once.
- BCM detects the rear wiper motor stopping position.
- BCM supplies power to the rear wiper motor after an intermittent from the stop of the rear wiper motor.

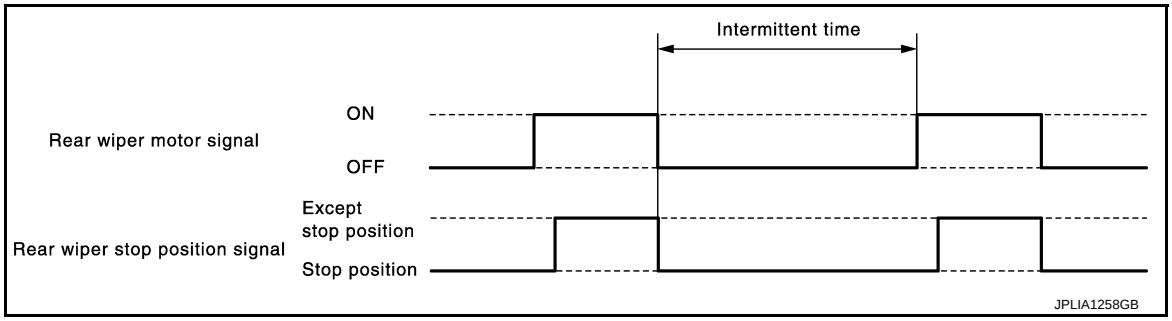

REAR WIPER AUTO STOP OPERATION

- BCM stops supplying power to the rear wiper motor when the rear wiper switch is turned OFF.
- BCM reads a rear wiper stop position signal from the rear wiper motor to detect a rear wiper motor position.
- When the rear wiper motor is at other than the stopping position, BCM continues to supply power to the rear wiper motor until it returns to the stopping position.

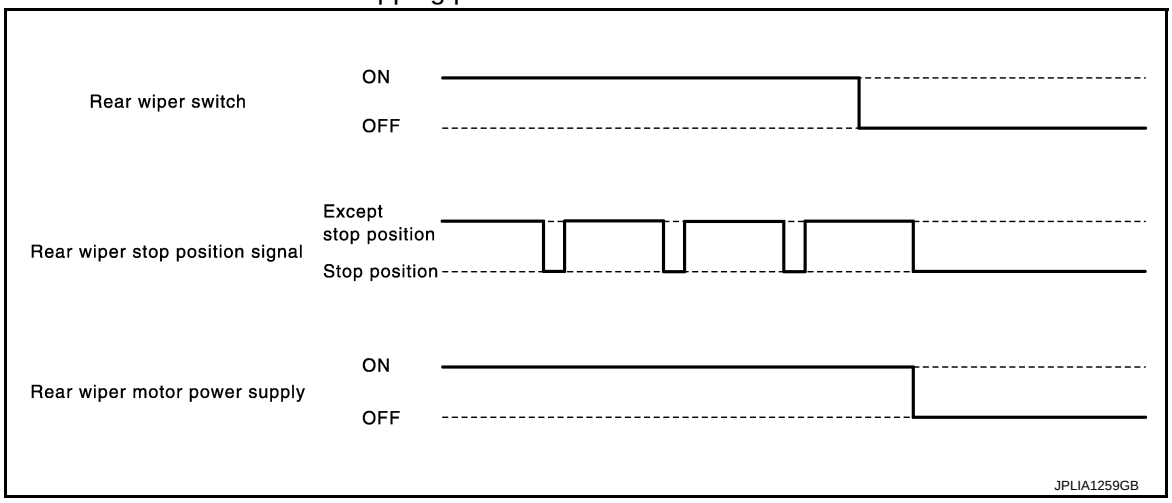

NOTE:
BCM stops supplying power to the rear wiper motor when the ignition switch is turned OFF.

REAR WIPER OPERATION LINKED WITH WASHER

- BCM supplies power to the rear wiper motor according to the washer linked operating condition of rear wiper. When the rear washer switch is turned OFF, BCM controls rear wiper to operate approximately 3 times.

Washer linked operating condition of rear wiper
- Ignition switch ON
- Rear washer switch ON (0.4 second or more)
- The washer pump is grounded through the combination switch with the rear washer switch ON.

REAR WIPER AND WASHER SYSTEM : Fail-safe

INFOID:0000000006067185

REAR WIPER MOTOR PROTECTION

BCM detects the rear wiper stopping position according to the rear wiper stop position signal.
When the rear wiper stop position signal does not change for more than 5 seconds while driving the rear wiper, BCM stops power supply to protect the rear wiper motor.

Condition of cancellation

1. More than 1 minute is passed after the rear wiper stop.
2. Turn rear wiper switch OFF.
3. Operate the rear wiper switch or rear washer switch.

DIAGNOSIS SYSTEM (BCM) (WITH INTELLIGENT KEY SYSTEM) COMMON ITEM

COMMON ITEM : CONSULT-III Function (BCM - COMMON ITEM)

INFOID:0000000006067178

APPLICATION ITEM

CONSULT-III performs the following functions via CAN communication with BCM.

Diagnosis mode	Function Description
Work Support	Changes the setting for each system function.
Self Diagnostic Result	Displays the diagnosis results judged by BCM.
CAN Diag Support Monitor	Monitors the reception status of CAN communication viewed from BCM. Refer to CONSULT-III operation manual.
Data Monitor	The BCM input/output signals are displayed.
Active Test	The signals used to activate each device are forcibly supplied from BCM.
Ecu Identification	The BCM part number is displayed.
Configuration	• Read and save the vehicle specification. • Write the vehicle specification when replacing BCM.

SYSTEM APPLICATION

BCM can perform the following functions for each system.

NOTE:

It can perform the diagnosis modes except the following for all sub system selection items.

×: Applicable item

System	Sub system selection item	Diagnosis mode		
		Work Support	Data Monitor	Active Test
Door lock	DOOR LOCK	×	×	×
Rear window defogger	REAR DEFOGGER		×	×
Warning chime	BUZZER		×	×
Interior room lamp timer	INT LAMP	×	×	×
Exterior lamp	HEAD LAMP	×	×	×
Wiper and washer	WIPER	×	×	×
Turn signal and hazard warning lamps	FLASHER	×	×	×
Automatic air conditioner	AIR CONDITONER		×	×
• Intelligent Key system • Engine start system	INTELLIGENT KEY	×	×	×
Combination switch	COMB SW		×	
Body control system	BCM	×		
NATS	IMMU	×	×	×
Interior room lamp battery saver	BATTERY SAVER	×	×	×
Back door	TRUNK		×	
—	THEFT ALM*	×	×	×
—	RETAINED PWR*		×	
Signal buffer system	SIGNAL BUFFER		×	×

*: This item is displayed, but is not used.

FREEZE FRAME DATA (FFD)

The BCM records the following vehicle condition at the time a particular DTC is detected, and displays on CONSULT-III.

CONSULT screen item	Indication/Unit	Description	
Vehicle Speed	km/h	Vehicle speed of the moment a particular DTC is detected	
Odo/Trip Meter	km	Total mileage (Odometer value) of the moment a particular DTC is detected	
Vehicle Condition	SLEEP>LOCK	Power position status of the moment a particular DTC is detected	While turning BCM status from low power consumption mode to normal mode (Power supply position is “LOCK”)
	SLEEP>OFF		While turning BCM status from low power consumption mode to normal mode (Power supply position is “OFF”.)
	LOCK>ACC		While turning power supply position from “LOCK” to “ACC”
	ACC>ON		While turning power supply position from “ACC” to “IGN”
	RUN>ACC		While turning power supply position from “RUN” to “ACC” (Vehicle is stopping and selector lever is except P position.)
	CRANK>RUN		While turning power supply position from “CRANKING” to “RUN” (From cranking up the engine to run it)
	RUN>URGENT		While turning power supply position from “RUN“ to “ACC” (Emergency stop operation)
	ACC>OFF		While turning power supply position from “ACC” to “OFF”
	OFF>LOCK		While turning power supply position from “OFF” to “LOCK”
	OFF>ACC		While turning power supply position from “OFF” to “ACC”
	ON>CRANK		While turning power supply position from “IGN” to “CRANKING”
	OFF>SLEEP		While turning BCM status from normal mode (Power supply position is “OFF”.) to low power consumption mode
	LOCK>SLEEP		While turning BCM status from normal mode (Power supply position is “LOCK”.) to low power consumption mode
	LOCK		Power supply position is “LOCK” (Ignition switch OFF with steering is locked.)
	OFF		Power supply position is “OFF” (Ignition switch OFF with steering is unlocked.)
	ACC		Power supply position is “ACC” (Ignition switch ACC)
	ON		Power supply position is “IGN” (Ignition switch ON with engine stopped)
	ENGINE RUN		Power supply position is “RUN” (Ignition switch ON with engine running)
	CRANKING		Power supply position is “CRANKING” (At engine cranking)
IGN Counter	0 - 39	The number of times that ignition switch is turned ON after DTC is detected • The number is 0 when a malfunction is detected now. • The number increases like 1 → 2 → 3...38 → 39 after returning to the normal condition whenever ignition switch OFF → ON. • The number is fixed to 39 until the self-diagnosis results are erased if it is over 39.	

WIPER

WIPER : CONSULT-III Function (BCM - WIPER)

INFOID:0000000006033874

WORK SUPPORT

Service item	Setting item	Description	
WIPER SPEED SETTING	On*	Linked with vehicle speed (Front wiper intermittent time linked with the vehicle speed and wiper intermittent dial position)	The setting of front wiper INT operation can be changed
	Off	Not linked with vehicle speed (Front wiper intermittent time linked with the wiper intermittent dial position)	

*:Factory setting

DATA MONITOR

Monitor Item [Unit]	Description
PUSH SW [Off/On]	The switch status input from push-button ignition switch.
VEH SPEED 1 [km/h]	The value of the vehicle speed signal received from combination meter with CAN communication.
FR WIPER HI [Off/On]	Each switch status that BCM judges from the combination switch reading function.
FR WIPER LOW [Off/On]	
FR WASHER SW [Off/On]	
FR WIPER INT [Off/On]	
FR WIPER STOP [Off/On]	Front wiper motor (stop position) status received from IPDM E/R with CAN communication.
INT VOLUME [1 – 7]	Each switch status that BCM judges from the combination switch reading function.
RR WIPER ON [Off/On]	Each switch status that BCM judges from the combination switch reading function.
RR WIPER INT [Off/On]	
RR WASHER SW [Off/On]	
RR WIPER STOP [Off/On]	Rear wiper motor (stop position) status input from the rear wiper motor.
RAIN SENSOR [Off/On]	**NOTE:** The item is indicated, but not monitored.

ACTIVE TEST

Test item	Operation	Description
FR WIPER	Hi	Transmits the front wiper request signal (HI) to IPDM E/R with CAN communication to operate the front wiper HI operation.
	Lo	Transmits the front wiper request signal (LO) to IPDM E/R with CAN communication to operate the front wiper LO operation.
	INT	Transmits the front wiper request signal (INT) to IPDM E/R with CAN communication to operate the front wiper INT operation.
	Off	Stops transmitting the front wiper request signal to stop the front wiper operation.
RR WIPER	On	Outputs the voltage to operate the rear wiper motor.
	Off	Stops the voltage to stop.

DIAGNOSIS SYSTEM (BCM) (WITHOUT INTELLIGENT KEY SYSTEM) COMMON ITEM

COMMON ITEM : CONSULT-III Function (BCM - COMMON ITEM)

INFOID:0000000006067179

APPLICATION ITEM

CONSULT-III performs the following functions via CAN communication with BCM.

Diagnosis mode	Function Description
Work Support	Changes the setting for each system function.
Self Diagnostic Result	Displays the diagnosis results judged by BCM.
CAN Diag Support Monitor	Monitors the reception status of CAN communication viewed from BCM. Refer to CONSULT-III operation manual.
Data Monitor	The BCM input/output signals are displayed.
Active Test	The signals used to activate each device are forcibly supplied from BCM.
Ecu Identification	The BCM part number is displayed.
Configuration	• Read and save the vehicle specification. • Write the vehicle specification when replacing BCM.

SYSTEM APPLICATION

BCM can perform the following functions for each system.

NOTE:

It can perform the diagnosis modes except the following for all sub system selection items.

×: Applicable item

System	Sub system selection item	Diagnosis mode		
		Work Support	Data Monitor	Active Test
Door lock	DOOR LOCK		×	×
Rear window defogger	REAR DEFOGGER		×	×
Warning chime	BUZZER		×	×
Interior room lamp control	INT LAMP	×	×	×
Remote keyless entry system	MULTI REMOTE ENT	×	×	×
Exterior lamp	HEAD LAMP	×	×	×
Wiper and washer	WIPER	×	×	×
Turn signal and hazard warning lamps	FLASHER		×	×
• Automatic air conditioner • Manual air conditioner	AIR CONDITONER		×	
Combination switch	COMB SW		×	
Body control system	BCM	×		
NATS	IMMU	×*1		×
Interior room lamp battery saver	BATTERY SAVER	×	×	×
Back door	TRUNK		×	
—	THEFT ALM*2		×	×
—	RETAINED PWR*2			
Signal buffer system	SIGNAL BUFFER		×	×
Panic alarm	PANIC ALARM			×

- *1: For models without NATS this mode is not used.
- *2: This item is displayed, but is not used.

WIPER

WIPER : CONSULT-III Function (BCM - WIPER)

INFOID:0000000006033875

WORK SUPPORT

Service item	Setting item	Description	
WIPER SPEED SETTING	On*	Linked with vehicle speed (Front wiper intermittent time linked with the vehicle speed and wiper intermittent dial position)	The setting of front wiper INT operation can be changed
	Off	Not linked with vehicle speed (Front wiper intermittent time linked with the wiper intermittent dial position)	

*:Factory setting

DATA MONITOR

Monitor Item [Unit]	Description
IGN ON SW [On/Off]	Ignition switch ON status judged from ignition power supply.
IGN SW CAN [On/Off]	Ignition switch ON status received from IPDM E/R with CAN communication.
FR WIPER HI [On/Off]	Each switch status that BCM judges from the combination switch reading function.
FR WIPER LOW [On/Off]	
FR WIPER INT [On/Off]	
FR WASHER SW [On/Off]	
INT VOLUME [1 – 7]	Each switch status that BCM judges from the combination switch reading function.
FR WIPER STOP [On/Off]	Front wiper motor (stop position) status received from IPDM E/R with CAN communication.
VEHICLE SPEED [km/h]	The value of the vehicle speed signal received from combination meter with CAN communication.
RR WIPER ON* [On/Off]	Each switch status that BCM judges from the combination switch reading function.
RR WIPER INT* [On/Off]	
RR WASHER SW* [On/Off]	
RR WIPER STOP* [On/Off]	Rear wiper motor (stop position) status input from the rear wiper motor.
REVERSE SW CAN* [On/Off]	Reverse position status as judged from TCM with CAN communication.

*: With rear wiper models

ACTIVE TEST

Test item	Operation	Description
FR WIPER	Hi	Transmits the front wiper request signal (HI) to IPDM E/R with CAN communication to operate the front wiper HI operation.
	Lo	Transmits the front wiper request signal (LO) to IPDM E/R with CAN communication to operate the front wiper LO operation.
	INT	Transmits the front wiper request signal (INT) to IPDM E/R with CAN communication to operate the front wiper INT operation.
	Off	Stops transmitting the front wiper request signal to stop the front wiper operation.
RR WIPER*	On	Outputs the voltage to operate the rear wiper motor.
	Off	Stops the voltage to stop.

*: With rear wiper models

DIAGNOSIS SYSTEM (IPDM E/R)
WITH INTELLIGENT KEY

WITH INTELLIGENT KEY : Diagnosis Description

INFOID:0000000006067180

AUTO ACTIVE TEST

Description

In auto active test, the IPDM E/R sends a drive signal to the following systems to check their operation.
- Oil pressure warning lamp
- Front wiper (LO, HI)
- Parking lamps
- License plate lamps
- Tail lamps
- Front fog lamps
- Headlamps (LO, HI)
- A/C compressor (magnet clutch)
- Cooling fan

Operation Procedure

CAUTION:
Never perform auto active test in the following conditions.
- **Engine is running**
- **CONSULT-III is connected**

1. Close the hood and lift the wiper arms from the windshield. (Prevent windshield damage due to wiper operation)
   NOTE:
   When auto active test is performed with hood opened, sprinkle water on windshield beforehand.
2. Turn the ignition switch OFF.
3. Turn the ignition switch ON, and within 20 seconds, press the driver door switch 10 times. Then turn the ignition switch OFF.
   CAUTION:
   Close passenger door.
4. Turn the ignition switch ON within 10 seconds. After that the horn sounds once and the auto active test starts.
   CAUTION:
   Engine starts when ignition switch is turned ON while brake pedal is depressed.
5. The oil pressure warning lamp starts blinking when the auto active test starts.
6. After a series of the following operations is repeated 3 times, auto active test is completed.

NOTE:
- When auto active test has to be cancelled halfway through test, turn the ignition switch OFF.
- When auto active test is not activated, door switch may be the cause. Check door switch. Refer to DLK-58, "Component Function Check".

Inspection in Auto Active Test

When auto active test is actuated, the following operation sequence is repeated 3 times.

Operation sequence	Inspection location	Operation
1	Oil pressure warning lamp	Blinks continuously during operation of auto active test
2	Front wiper	LO for 5 seconds → HI for 5 seconds
3	• Parking lamps • License plate lamps • Tail lamps • Front fog lamps	10 seconds
4	Headlamps	LO for 10 seconds →HI ON ⇔ OFF 5 times
5	A/C compressor (magnet clutch)	ON ⇔ OFF 5 times
6	Cooling fan	LO for 5 seconds → MID for 3 seconds → HI for 2 seconds

Concept of Auto Active Test

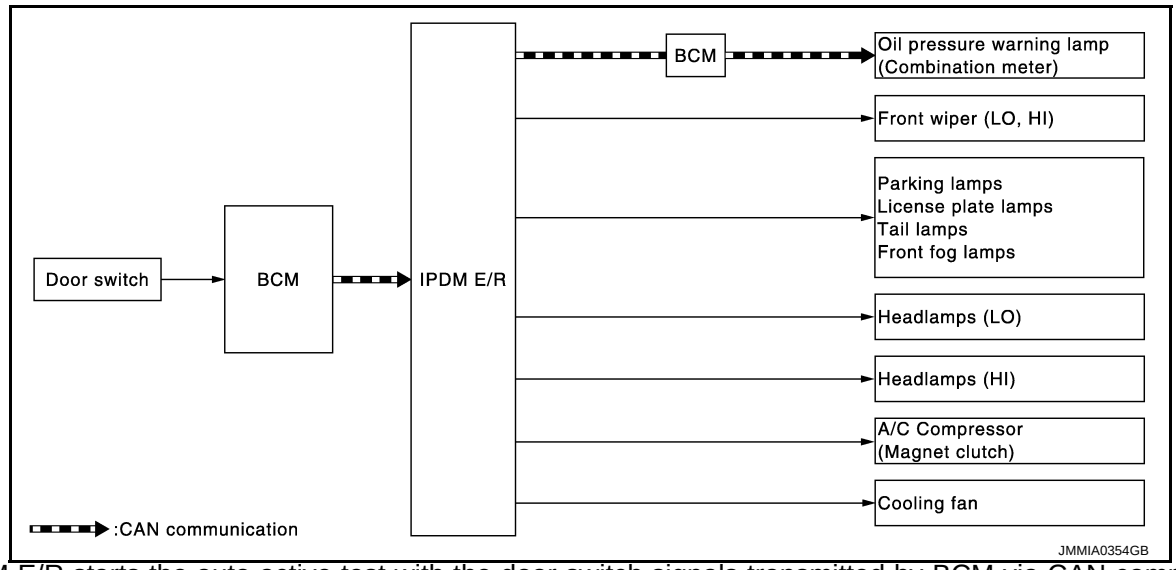

- IPDM E/R starts the auto active test with the door switch signals transmitted by BCM via CAN communication. Therefore, the CAN communication line between IPDM E/R and BCM is considered normal if the auto active test starts successfully.
- The auto active test facilitates troubleshooting if any systems controlled by IPDM E/R cannot be operated.

Diagnosis Chart in Auto Active Test

Symptom	Inspection contents		Possible cause
Any of the following components do not operate • Parking lamps • License plate lamps • Tail lamps • Front fog lamps • Headlamps (HI, LO) • Front wiper (HI, LO)	Perform auto active test. Does the applicable system operate?	YES	BCM signal input circuit
		NO	• Lamp or motor • Lamp or motor ground circuit • Harness or connector between IPDM E/R and applicable system • IPDM E/R
A/C compressor does not operate	Perform auto active test. Does the magnet clutch operate?	YES	• BCM signal input circuit • CAN communication signal between BCM and ECM • CAN communication signal between ECM and IPDM E/R
		NO	• Magnet clutch • Harness or connector between IPDM E/R and magnet clutch • IPDM E/R
Oil pressure warning lamp does not operate	Perform auto active test. Does the oil pressure warning lamp blink?	YES	• Harness or connector between IPDM E/R and oil pressure switch • Oil pressure switch • IPDM E/R
		NO	• CAN communication signal between IPDM E/R and BCM • CAN communication signal between BCM and combination meter • Combination meter
Cooling fan does not operate	Perform auto active test. Does the cooling fan operate?	YES	• ECM signal input circuit • CAN communication signal between ECM and IPDM E/R
		NO	• Cooling fan motor • Harness or connector between IPDM E/R and cooling fan motor • IPDM E/R

WITH INTELLIGENT KEY : CONSULT-III Function (IPDM E/R)

INFOID:0000000006067181

APPLICATION ITEM

CONSULT-III performs the following functions via CAN communication with IPDM E/R.

Diagnosis mode	Description
Ecu Identification	Allows confirmation of IPDM E/R part number.
Self Diagnostic Result	Displays the diagnosis results judged by IPDM E/R.
Data Monitor	Displays the real-time input/output data from IPDM E/R input/output data.
Active Test	IPDM E/R can provide a drive signal to electronic components to check their operations.
CAN Diag Support Monitor	The results of transmit/receive diagnosis of CAN communication can be read.

SELF DIAGNOSTIC RESULT

Refer to PCS-22, "DTC Index".

DATA MONITOR

Monitor item

Monitor Item [Unit]	MAIN SIGNALS	Description
MOTOR FAN REQ [1/2/3/4]	×	Displays the value of the cooling fan speed request signal received from ECM via CAN communication.
AC COMP REQ [Off/On]	×	Displays the status of the A/C compressor request signal received from ECM via CAN communication.
TAIL&CLR REQ [Off/On]	×	Displays the status of the position light request signal received from BCM via CAN communication.
HL LO REQ [Off/On]	×	Displays the status of the low beam request signal received from BCM via CAN communication.
HL HI REQ [Off/On]	×	Displays the status of the high beam request signal received from BCM via CAN communication.
FR FOG REQ [Off/On]	×	Displays the status of the front fog light request signal received from BCM via CAN communication.
FR WIP REQ [Stop/1LOW/Low/Hi]	×	Displays the status of the front wiper request signal received from BCM via CAN communication.
WIP AUTO STOP [STOP P/ACT P]	×	Displays the status of the front wiper stop position signal judged by IPDM E/R.
WIP PROT [Off/BLOCK]	×	Displays the status of the front wiper fail-safe operation judged by IPDM E/R.
IGN RLY1 -REQ [Off/On]		Displays the status of the ignition switch ON signal received from BCM via CAN communication.
IGN RLY [Off/On]	×	Displays the status of the ignition relay judged by IPDM E/R.
PUSH SW [Off/On]		Displays the status of the push-button ignition switch judged by IPDM E/R.
INTER/NP SW [Off/On]		Displays the status of the shift position judged by IPDM E/R.
ST RLY CONT [Off/On]		Displays the status of the starter relay status signal received from BCM via CAN communication.
IHBT RLY -REQ [Off/On]		Displays the status of the starter control relay signal received from BCM via CAN communication.
ST/INHI RLY [Off/ ST ON/INHI ON/UNKWN]		Displays the status of the starter relay and starter control relay judged by IPDM E/R.
DETENT SW [Off/On]		Displays the status of the A/T shift selector (detention switch) judged by IPDM E/R.

Monitor Item [Unit]	MAIN SIGNALS	Description
S/L RLY -REQ [Off/On]		Displays the status of the steering lock relay signal received from BCM via CAN communication.
S/L STATE [LOCK/UNLK/UNKWN]		Displays the status of the steering lock judged by IPDM E/R.
DTRL REQ [Off/On]		**NOTE:** This item is indicated, but not monitored.
OIL P SW [Open/Close]		Displays the status of the oil pressure switch judged by IPDM E/R.
HOOD SW [Off/On]		**NOTE:** This item is indicated, but not monitored
HL WASHER REQ [Off/On]		**NOTE:** This item is indicated, but not monitored.
THFT HRN REQ [Off/On]		Displays the status of the theft warning horn request signal received from BCM via CAN communication.
HORN CHIRP [Off/On]		**NOTE:** This item is indicated, but not monitored.

ACTIVE TEST

Test item

Test item	Operation	Description
CORNERING LAMP	LH	**NOTE:** This item is indicated, but cannot be tested.
	RH	
HORN	On	Operates horn relay for 20 ms.
FRONT WIPER	Off	OFF
	Lo	Operates the front wiper relay.
	Hi	Operates the front wiper relay and front wiper high relay.
MOTOR FAN	1	OFF
	2	Operates the cooling fan relay (LO operation).
	3	Operates the cooling fan relay (MID operation).
	4	Operates the cooling fan relay (HI operation).
HEAD LAMP WASHER	Off	**NOTE:** This item is indicated, but cannot be tested.
EXTERNAL LAMPS	Off	OFF
	TAIL	Operates the tail lamp relay.
	Lo	Operates the headlamp low relay.
	Hi	Operates the headlamp low relay and ON/OFF the headlamp high relay at 1 second intervals.
	Fog	Operates the front fog lamp relay.

WITHOUT INTELLIGENT KEY

WITHOUT INTELLIGENT KEY : Diagnosis Description

INFOID:0000000006067182

AUTO ACTIVE TEST

Description

In auto active test, the IPDM E/R sends a drive signal to the following systems to check their operation.

- Oil pressure warning lamp
- Front wiper (LO, HI)
- Parking lamps
- License plate lamps

- Tail lamps
- Headlamps (LO, HI)
- A/C compressor (magnet clutch)
- Cooling fan

Operation Procedure

CAUTION:

Never perform auto active test in the following conditions.

- **Engine is running**
- **CONSULT-III is connected**

1. Close the hood and lift the wiper arms from the windshield. (Prevent windshield damage due to wiper operation)
   NOTE:
   When auto active test is performed with hood opened, sprinkle water on windshield beforehand.
2. Turn the ignition switch OFF.
3. Turn the ignition switch ON, and within 20 seconds, press the driver door switch 10 times. Then turn the ignition switch OFF.
   CAUTION:
   Close passenger door.
4. Turn the ignition switch ON within 10 seconds. After that the horn sounds once and the auto active test starts.
   CAUTION:
   Engine starts when ignition switch is turned ON while brake pedal is depressed.
5. The oil pressure warning lamp starts blinking when the auto active test starts.
6. After a series of the following operations is repeated 3 times, auto active test is completed.

NOTE:

- When auto active test has to be cancelled halfway through test, turn the ignition switch OFF.
- When auto active test is not activated, door switch may be the cause. Check door switch. Refer to XX-XX, "*****".

Inspection in Auto Active Test

When auto active test is actuated, the following operation sequence is repeated 3 times.

Operation sequence	Inspection location	Operation
1	Oil pressure warning lamp	Blinks continuously during operation of auto active test
2	Front wiper	LO for 5 seconds → HI for 5 seconds
3	• Parking lamps • License plate lamps • Tail lamps	10 seconds
4	Headlamps	LO for 10 seconds →HI ON ⇔ OFF 5 times
5	A/C compressor (magnet clutch)	ON ⇔ OFF 5 times
6	Cooling fan	LO for 5 seconds → MID for 3 seconds → HI for 2 seconds

Concept of Auto Active Test

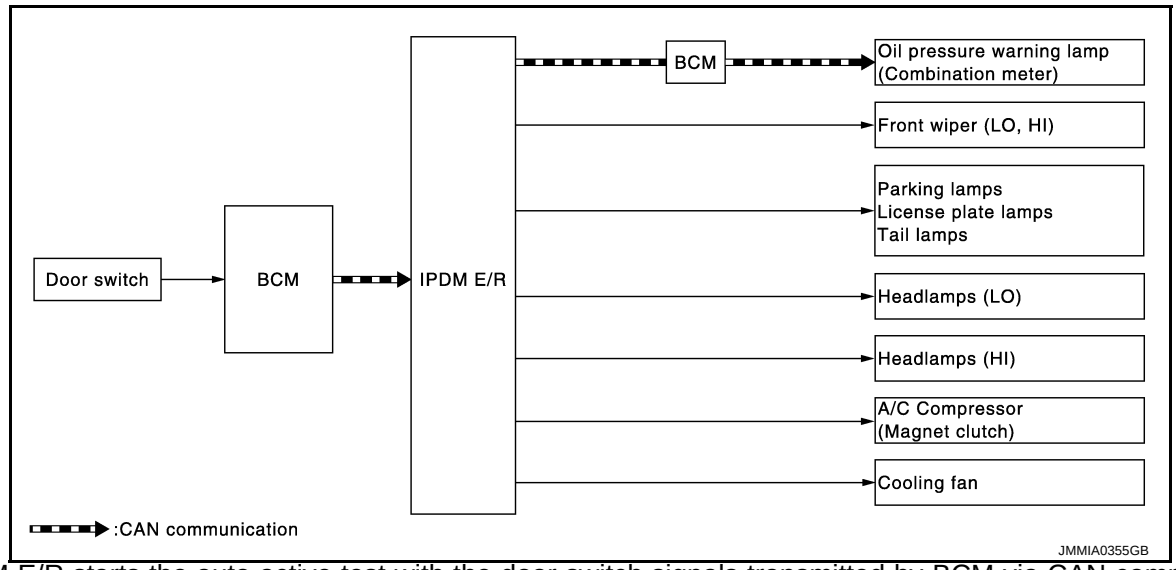

- IPDM E/R starts the auto active test with the door switch signals transmitted by BCM via CAN communication. Therefore, the CAN communication line between IPDM E/R and BCM is considered normal if the auto active test starts successfully.
- The auto active test facilitates troubleshooting if any systems controlled by IPDM E/R cannot be operated.

Diagnosis chart in auto active test mode

Symptom	Inspection contents		Possible cause
Any of the following components do not operate • Parking lamps • License plate lamps • Tail lamps • Headlamps (HI, LO) • Front wiper (HI, LO)	Perform auto active test. Does the applicable system operate?	YES	BCM signal input circuit
		NO	• Lamp or motor • Lamp or motor ground circuit • Harness or connector between IPDM E/R and applicable system • IPDM E/R
A/C compressor does not operate	Perform auto active test. Does the magnet clutch operate?	YES	• BCM signal input circuit • CAN communication signal between BCM and ECM • CAN communication signal between ECM and IPDM E/R
		NO	• Magnet clutch • Harness or connector between IPDM E/R and magnet clutch • IPDM E/R
Oil pressure warning lamp does not operate	Perform auto active test. Does the oil pressure warning lamp blink?	YES	• Harness or connector between IPDM E/R and oil pressure switch • Oil pressure switch • IPDM E/R
		NO	• CAN communication signal between IPDM E/R and BCM • CAN communication signal between BCM and combination meter • Combination meter
Cooling fan does not operate	Perform auto active test. Does the cooling fan operate?	YES	• ECM signal input circuit • CAN communication signal between ECM and IPDM E/R
		NO	• Cooling fan motor • Harness or connector between IPDM E/R and cooling fan motor • IPDM E/R

WITHOUT INTELLIGENT KEY : CONSULT-III Function (IPDM E/R)

INFOID:0000000006067183

APPLICATION ITEM

CONSULT-III performs the following functions via CAN communication with IPDM E/R.

Diagnosis mode	Description
Ecu Identification	Allows confirmation of IPDM E/R part number.
Self Diagnostic Result	Displays the diagnosis results judged by IPDM E/R.
Data Monitor	Displays the real-time input/output data from IPDM E/R input/output data.
Active Test	IPDM E/R can provide a drive signal to electronic components to check their operations.
CAN Diag Support Monitor	The results of transmit/receive diagnosis of CAN communication can be read.

SELF DIAGNOSTIC RESULT

Refer to PCS-45, "DTC Index".

DATA MONITOR

Monitor item

Monitor Item [Unit]	MAIN SIGNALS	Description
MOTOR FAN REQ [1/2/3/4]	×	Displays the value of the cooling fan speed request signal received from ECM via CAN communication.
AC COMP REQ [Off/On]	×	Displays the status of the A/C compressor request signal received from ECM via CAN communication.
TAIL&CLR REQ [Off/On]	×	Displays the status of the position light request signal received from BCM via CAN communication.
HL LO REQ [Off/On]	×	Displays the status of the low beam request signal received from BCM via CAN communication.
HL HI REQ [Off/On]	×	Displays the status of the high beam request signal received from BCM via CAN communication.
FR FOG REQ [Off/On]	×	**NOTE:** This item is indicated, but not monitored.
FR WIP REQ [Stop/1LOW/Low/Hi]	×	Displays the status of the front wiper request signal received from BCM via CAN communication.
WIP AUTO STOP [STOP P/ACT P]	×	Displays the status of the front wiper stop position signal judged by IPDM E/R.
WIP PROT [Off/BLOCK]	×	Displays the status of the front wiper fail-safe operation judged by IPDM E/R.
IGN RLY [Off/On]	×	Displays the status of the ignition relay judged by IPDM E/R.
INTER/NP SW [Off/On]		Displays the status of the shift position judged by IPDM E/R.
ST RLY REQ [Off/On]		Displays the status of the starter control relay signal received from BCM via CAN communication.
DTRL REQ [Off/On]		**NOTE:** This item is indicated, but not monitored.
OIL P SW [Open/Close]		Displays the status of the oil pressure switch judged by IPDM E/R.
HOOD SW [Off/On]		**NOTE:** This item is indicated, but not monitored.
HL WASHER REQ [Off/On]		**NOTE:** This item is indicated, but not monitored.
THFT HRN REQ [Off/On]		Displays the status of the theft warning horn request signal received from BCM via CAN communication.

Monitor Item [Unit]	MAIN SIGNALS	Description
HORN CHIRP [Off/On]		**NOTE:** This item is indicated, but not monitored.
CRNRNG LMP REQ [Off/On]		**NOTE:** This item is indicated, but not monitored.

ACTIVE TEST

Test item

Test item	Operation	Description
CORNERING LAMP	LH	**NOTE:** This item is indicated, but cannot be tested.
	RH	
HORN	On	Operates horn relay for 20 ms.
FRONT WIPER	Off	OFF
	Lo	Operates the front wiper relay.
	Hi	Operates the front wiper relay and front wiper high relay.
MOTOR FAN	1	OFF
	2	Operates the cooling fan relay (LO operation).
	3	Operates the cooling fan relay (MID operation).
	4	Operates the cooling fan relay (HI operation).
HEAD LAMP WASHER	Off	**NOTE:** This item is indicated, but cannot be tested.
EXTERNAL LAMPS	Off	OFF
	TAIL	Operates the tail lamp relay.
	Lo	Operates the headlamp low relay.
	Hi	Operates the headlamp low relay and ON/OFF the headlamp high relay at 1 second intervals.
	Fog	**NOTE:** This item is indicated, but cannot be tested.

ECU DIAGNOSIS INFORMATION

BCM, IPDM E/R

WITH INTELLIGENT KEY

WITH INTELLIGENT KEY : List of ECU Reference

INFOID:0000000006025174

ECU	Reference
BCM	BCS-18, "Reference Value"
	BCS-37, "Fail-safe"
	BCS-39, "DTC Inspection Priority Chart"
	BCS-40, "DTC Index"
IPDM E/R	PCS-15, "Reference Value"
	PCS-20, "Fail-Safe"
	PCS-22, "DTC Index"

WITHOUT INTELLIGENT KEY

WITHOUT INTELLIGENT KEY : List of ECU Reference

INFOID:0000000006067186

ECU	Reference
BCM	BCS-72, "Reference Value"
	BCS-85, "Fail-safe"
	BCS-85, "DTC Inspection Priority Chart"
	BCS-86, "DTC Index"
IPDM E/R	PCS-40, "Reference Value"
	PCS-44, "Fail-Safe"
	PCS-45, "DTC Index"

WIRING DIAGRAM

WIPER AND WASHER SYSTEM

Wiring Diagram - for The Middle East -

INFOID:0000000006025175

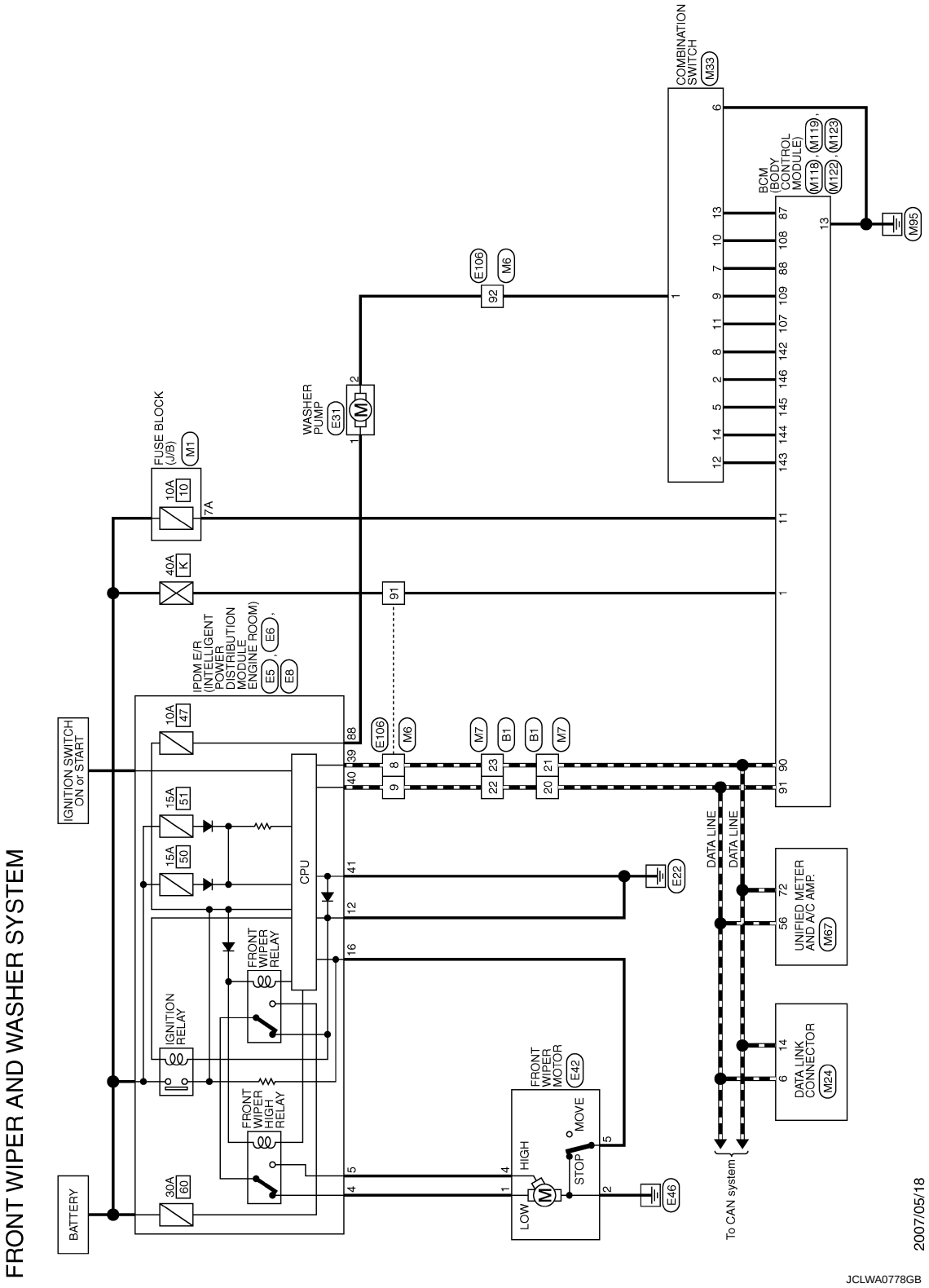

FRONT WIPER AND WASHER SYSTEM

Connector No.	B1
Connector Name	WIRE TO WIRE
Connector Type	TH80FW-CS16-TM4

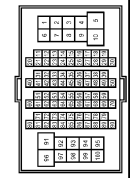

Terminal No.	Color of Wire	Signal Name [Specification]
20	L	–
21	P	–
22	L	–
23	P	–

Connector No.	E5
Connector Name	IPDM E/R (INTELLIGENT POWER DISTRIBUTION MODULE ENGINE ROOM)
Connector Type	TH20FW-CS12-M4-1V

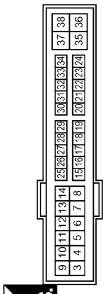

Terminal No.	Color of Wire	Signal Name [Specification]
4	V	–
5	L	–
12	B/W	–
16	LG	–

Connector No.	E6
Connector Name	IPDM E/R (INTELLIGENT POWER DISTRIBUTION MODULE ENGINE ROOM)
Connector Type	TH08FW-NH

Terminal No.	Color of Wire	Signal Name [Specification]
39	P	–
40	L	–
41	B/W	–

Connector No.	E8
Connector Name	IPDM E/R (INTELLIGENT POWER DISTRIBUTION MODULE ENGINE ROOM)
Connector Type	NS08FW-CS

Terminal No.	Color of Wire	Signal Name [Specification]
88	G	–

Connector No.	E31
Connector Name	WASHER PUMP
Connector Type	E02FGY-RS

Terminal No.	Color of Wire	Signal Name [Specification]
1	G	–
2	SB	–

Connector No.	E42
Connector Name	FRONT WIPER MOTOR
Connector Type	HS05FGY

Terminal No.	Color of Wire	Signal Name [Specification]
1	V	–
2	B/W	–
4	L	–
5	LG	–

Connector No.	E106
Connector Name	WIRE TO WIRE
Connector Type	TH80FW-CS16-TM4

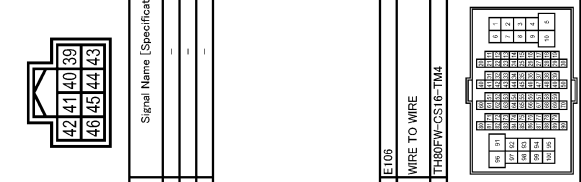

Terminal No.	Color of Wire	Signal Name [Specification]
8	P	–
9	L	–
91	W	–
92	SB	–

Connector No.	M1
Connector Name	FUSE BLOCK (J/B)
Connector Type	NS06FW-M2

Terminal No.	Color of Wire	Signal Name [Specification]
7A	R	–

JCLWA0779GB

FRONT WIPER AND WASHER SYSTEM

Connector No.	M6
Connector Name	WIRE TO WIRE
Connector Type	TH80MW-CS16-TM4

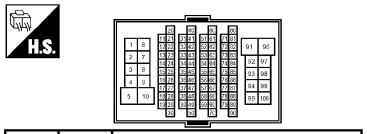

Terminal No.	Color of Wire	Signal Name [Specification]
8	P	–
9	L	–
91	W	–
92	P	–

Connector No.	M7
Connector Name	WIRE TO WIRE
Connector Type	TH80MW-CS16-TM4

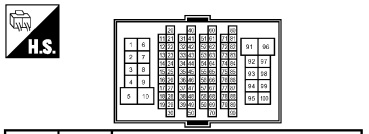

Terminal No.	Color of Wire	Signal Name [Specification]
20	L	–
21	P	–
22	L	–
23	P	–

Connector No.	M24
Connector Name	DATA LINK CONNECTOR
Connector Type	BD16FW

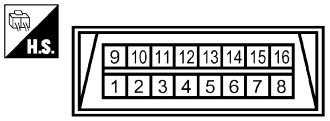

Terminal No.	Color of Wire	Signal Name [Specification]
6	L	–
14	P	–

Connector No.	M33
Connector Name	COMBINATION SWITCH
Connector Type	TH16FW-NH

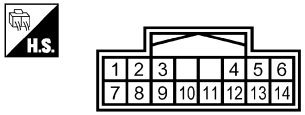

Terminal No.	Color of Wire	Signal Name [Specification]
1	P	FR WASHER(–)
2	SB	OUTPUT 4
5	L	OUTPUT 3
6	B	GND
7	O	INPUT 3
8	BR	OUTPUT 5
9	W	INPUT 2
10	R	INPUT 4
11	LG	INPUT 1
12	V	OUTPUT 1
13	Y	INPUT 5
14	G	OUTPUT 2

Connector No.	M67
Connector Name	UNIFIED METER AND A/C AMP.
Connector Type	TH32FW-NH

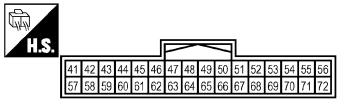

Terminal No.	Color of Wire	Signal Name [Specification]
56	L	CAN-H
72	P	CAN-L

Connector No.	M118
Connector Name	BCM (BODY CONTROL MODULE)
Connector Type	M03FB-LC

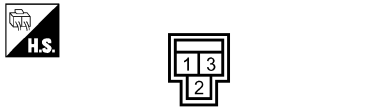

Terminal No.	Color of Wire	Signal Name [Specification]
1	W	BAT (F/L)

JCLWA0780GB

FRONT WIPER AND WASHER SYSTEM

Connector No.	M119
Connector Name	BCM (BODY CONTROL MODULE)
Connector Type	NS16FW-CS

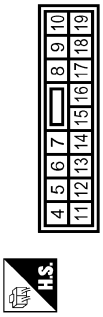

Terminal No.	Color of Wire	Signal Name [Specification]
11	R	BAT (FUSE)
13	B	GND

Connector No.	M122
Connector Name	BCM (BODY CONTROL MODULE)
Connector Type	TH40FB-NH

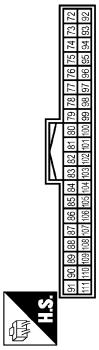

Terminal No.	Color of Wire	Signal Name [Specification]
87	Y	COMBI SW INPUT 5
88	O	COMBI SW INPUT 3
90	P	CAN-L
91	L	CAN-H
107	LG	COMBI SW INPUT 1
108	R	COMBI SW INPUT 4
109	W	COMBI SW INPUT 2

Connector No.	M123
Connector Name	BCM (BODY CONTROL MODULE)
Connector Type	TH40FG-NH

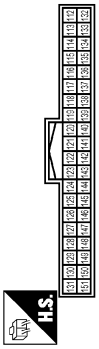

Terminal No.	Color of Wire	Signal Name [Specification]
142	BR	COMBI SW OUTPUT 5
143	V	COMBI SW OUTPUT 1
144	G	COMBI SW OUTPUT 2
145	L	COMBI SW OUTPUT 3
146	SB	COMBI SW OUTPUT 4

JCLWA0781GB

BASIC INSPECTION

DIAGNOSIS AND REPAIR WORKFLOW

Work Flow

INFOID:0000000006025178

OVERALL SEQUENCE

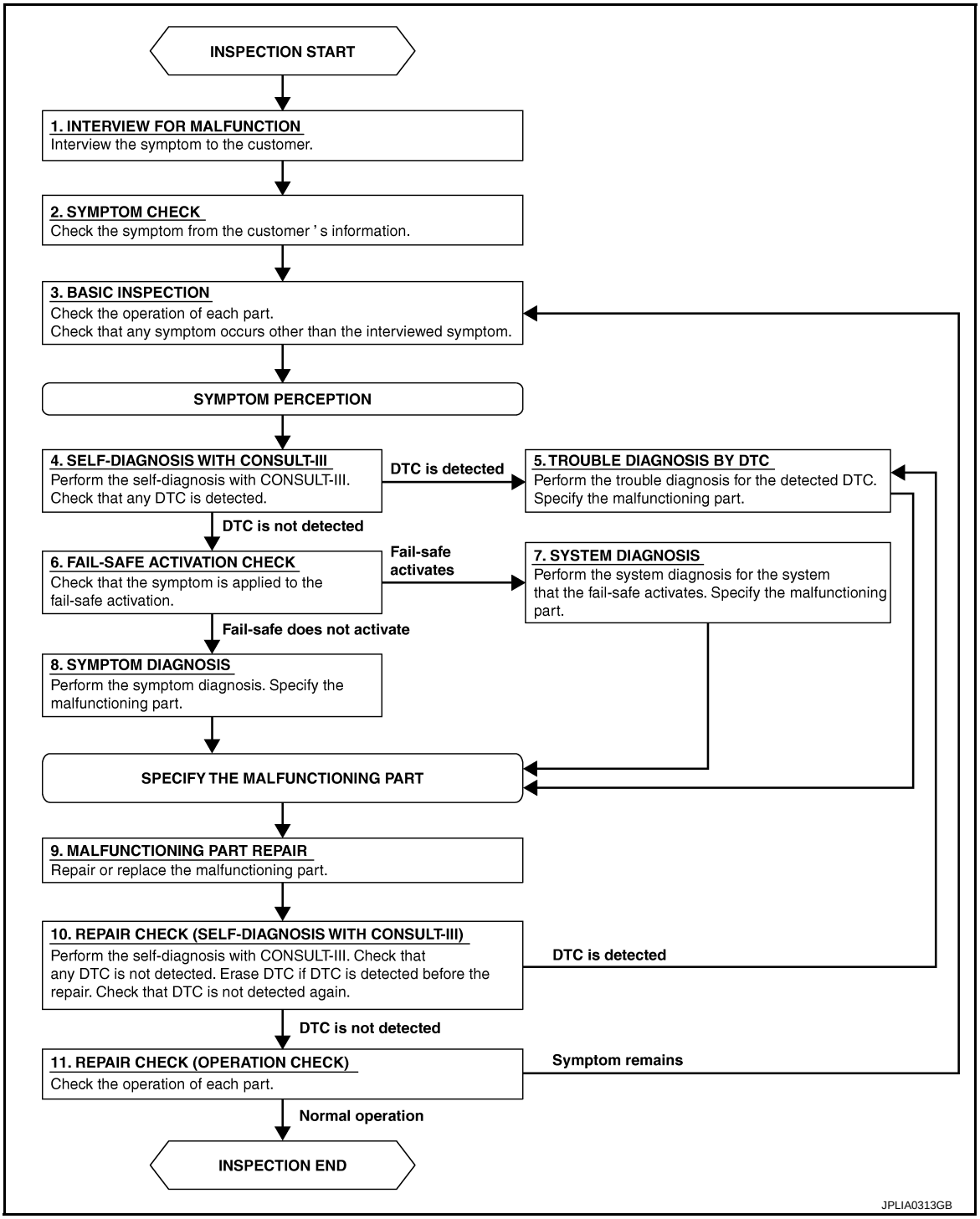

DETAILED FLOW

1. INTERVIEW FOR MALFUNCTION

Interview the symptom to the customer.

>> GO TO 2.

2. SYMPTOM CHECK

Check the symptom from the customer's information.

>> GO TO 3.

3. BASIC INSPECTION

Check the operation of each part. Check that any symptom occurs other than the interviewed symptom.

>> GO TO 4.

4. SELF-DIAGNOSIS WITH CONSULT-III

Perform the self-diagnosis with CONSULT-III. Check that any DTC is detected.

Is any DTC detected?

YES >> GO TO 5.
NO >> GO TO 6.

5. TROUBLE DIAGNOSIS BY DTC

Perform the trouble diagnosis for the detected DTC. Specify the malfunctioning part.

>> GO TO 9.

6. FAIL-SAFE ACTIVATION CHECK

Check that the symptom is applied to the fail-safe activation.

Does the fail-safe activate?

YES >> GO TO 7.
NO >> GO TO 8.

7. SYSTEM DIAGNOSIS

Perform the system diagnosis for the system that the fail-safe activates. Specify the malfunctioning part.

>> GO TO 9.

8. SYMPTOM DIAGNOSIS

Perform the symptom diagnosis. Specify the malfunctioning part.

>> GO TO 9.

9. MALFUNCTION PART REPAIR

Repair or replace the malfunctioning part.

>> GO TO 10.

10. REPAIR CHECK (SELF-DIAGNOSIS WITH CONSULT-III)

Perform the self-diagnosis with CONSULT-III. Check that any DTC is not detected. Erase DTC if DTC is detected before the repair. Check that DTC is not detected again.

Is any DTC detected?

YES >> GO TO 5.
NO >> GO TO 11.

11. REPAIR CHECK (OPERATION CHECK)

Check the operation of each part.

Does it operate normally?

YES >> INSPECTION END
NO >> GO TO 3.

DTC/CIRCUIT DIAGNOSIS

WIPER AND WASHER FUSE

Diagnosis Procedure

INFOID:0000000006025179

1.CHECK FUSES

Check that the following fuses is not fusing.

Unit	Location	No.	Capacity
Front wiper motor	IPDM E/R	56	30 A
Washer pump	Fuse block (J/B)	2	10 A

Is the inspection result normal?

YES >> INSPECTION END
NO >> Replace the fuse with a new one after repairing the applicable circuit.

FRONT WIPER MOTOR LO CIRCUIT

Component Function Check

INFOID:0000000006025180

1. CHECK FRONT WIPER LO OPERATION

IPDM E/R AUTO ACTIVE TEST
1. Start IPDM E/R auto active test. Refer to WW-18, "WITH INTELLIGENT KEY : Diagnosis Description".
2. Check that the front wiper operates at the LO operation.

CONSULT-III ACTIVE TEST
1. Select “FRONT WIPER” of IPDM E/R active test item.
2. With operating the test item, check front wiper operation.

Lo : Front wiper (LO) operation
Off : Stop the front wiper.

Is front wiper (LO) operation normally?

YES >> Front wiper motor LO circuit is normal.
NO >> Refer to WW-34, "Diagnosis Procedure".

Diagnosis Procedure

INFOID:0000000006025181

1. CHECK FRONT WIPER MOTOR (LO) OUTPUT VOLTAGE

CONSULT-III ACTIVE TEST
1. Turn ignition switch OFF.
2. Disconnect front wiper motor connector.
3. Turn ignition switch ON.
4. Select “FRONT WIPER” of IPDM E/R active test item.
5. With operating the test item, check voltage between front wiper motor harness connector and ground.

(+)		(–)	Condition		Voltage (Approx.)
Front wiper motor					
Connector	Terminal				
E20	2	Ground	FRONT WIPER	Lo	Battery voltage
				Off	0 V

Is the inspection result normal?

YES >> Replace front wiper motor.
NO >> GO TO 2.

2. CHECK FRONT WIPER MOTOR (LO) CIRCUIT

1. Turn ignition switch OFF.
2. Disconnect IPDM E/R connector.
3. Check continuity between IPDM E/R harness connector and front wiper motor harness connector.

IPDM E/R		Front wiper motor		Continuity
Connector	Terminal	Connector	Terminal	
E14	53	E20	2	Existed

4. Check continuity between IPDM E/R harness connector and ground.

IPDM E/R		Ground	Continuity
Connector	Terminal		
E14	53		Not existed

Is the inspection result normal?

YES >> Replace IPDM E/R.
NO >> Repair or replace harness.

FRONT WIPER MOTOR HI CIRCUIT

Component Function Check

INFOID:0000000006025182

1. CHECK FRONT WIPER HI OPERATION

IPDM E/R AUTO ACTIVE TEST
1. Start IPDM E/R auto active test. Refer to WW-18, "WITH INTELLIGENT KEY : Diagnosis Description".
2. Check that the front wiper operates at the HI operation.

CONSULT-III ACTIVE TEST
1. Select “FRONT WIPER” of IPDM E/R active test item.
2. With operating the test item, check front wiper operation.

Hi : Front wiper (HI) operation
Off : Stop the front wiper.

Is front wiper (HI) operation normally?

YES >> Front wiper motor HI circuit is normal.
NO >> Refer to WW-35, "Diagnosis Procedure".

Diagnosis Procedure

INFOID:0000000006025183

1. CHECK FRONT WIPER MOTOR (HI) OUTPUT VOLTAGE

CONSULT-III ACTIVE TEST
1. Turn ignition switch OFF.
2. Disconnect front wiper motor connector.
3. Turn ignition switch ON.
4. Select “FRONT WIPER” of IPDM E/R active test item.
5. With operating the test item, check voltage between front wiper motor harness connector and ground.

(+)		(–)	Condition		Voltage (Approx.)
Front wiper motor					
Connector	Terminal				
E20	1	Ground	FRONT WIPER	Hi	Battery voltage
				Off	0 V

Is the inspection result normal?

YES >> Replace front wiper motor.
NO >> GO TO 2.

2. CHECK FRONT WIPER MOTOR (HI) CIRCUIT

1. Turn ignition switch OFF.
2. Disconnect IPDM E/R connector.
3. Check continuity between IPDM E/R harness connector and front wiper motor harness connector.

IPDM E/R		Front wiper motor		Continuity
Connector	Terminal	Connector	Terminal	
E14	54	E20	1	Existed

4. Check continuity between IPDM E/R harness connector and ground.

IPDM E/R		Ground	Continuity
Connector	Terminal		
E14	54		Not existed

Is the inspection result normal?

YES >> Replace IPDM E/R.
NO >> Repair or replace harness.

FRONT WIPER AUTO STOP SIGNAL CIRCUIT

Component Function Check

INFOID:0000000006025184

1. CHECK FRONT WIPER (AUTO STOP) SIGNAL

CONSULT-III DATA MONITOR
1. Select “WIP AUTO STOP” of IPDM E/R data monitor item.
2. Operate the front wiper.
3. With the front wiper operation, check the monitor status.

Monitor item	Condition		Monitor status
WIP AUTO STOP	Front wiper motor	Stop position	STOP P
		Except stop position	ACT P

Is the status of item normal?

YES >> Auto stop signal circuit is normal.
NO >> Refer to WW-36, "Diagnosis Procedure".

Diagnosis Procedure

INFOID:0000000006025185

1. CHECK IPDM E/R OUTPUT VOLTAGE

1. Turn ignition switch OFF.
2. Disconnect front wiper motor connector.
3. Turn ignition switch ON.
4. Check voltage between front wiper motor harness connector and ground.

(+)		(–)	Voltage (Approx.)
Front wiper motor			
Connector	Terminal		
E20	4	Ground	Battery voltage

Is the inspection result normal?

YES >> Replace front wiper motor.
NO >> GO TO 2.

2. CHECK FRONT WIPER MOTOR (AUTO STOP) CIRCUIT

1. Turn ignition switch OFF.
2. Disconnect IPDM E/R connector.
3. Check continuity between IPDM E/R harness connector and front wiper motor harness connector.

IPDM E/R		Front wiper motor		Continuity
Connector	Terminal	Connector	Terminal	
E10	24	E20	4	Existed

4. Check continuity between IPDM E/R harness connector and ground.

IPDM E/R		Ground	Continuity
Connector	Terminal		
E10	24		Not existed

Is the inspection result normal?

YES >> Replace IPDM E/R.
NO >> Repair or replace harness.

FRONT WIPER MOTOR GROUND CIRCUIT

Diagnosis Procedure

INFOID:0000000006025186

1. CHECK FRONT WIPER MOTOR GROUND CIRCUIT

1. Turn ignition switch OFF.
2. Disconnect front wiper motor connector.
3. Check continuity between front wiper motor harness connector and ground.

Front wiper motor		Ground	Continuity
Connector	Terminal		
E20	5		Existed

Is the inspection result normal?

YES >> INSPECTION END
NO >> Repair or replace harness.

WASHER SWITCH

Component Inspection

INFOID:0000000006043866

1.CHECK WASHER SWITCH

1. Turn ignition switch OFF.
2. Disconnect combination switch connector.
3. Check continuity between the combination switch terminals.

A : Terminal 6
B : Terminal 4
C : Terminal 1
D : Terminal 3

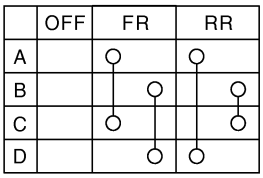

JPLIA0164GB

Combination switch		Condition	Continuity
Terminal			
1	6	Front washer switch ON	Existed
3	4		
1	4	Rear washer switch ON	
3	6		

Is the inspection result normal?

YES >> INSPECTION END
NO >> Replace combination switch (Wiper and washer switch).

REAR WIPER MOTOR CIRCUIT

Component Function Check

INFOID:0000000006025190

1. CHECK REAR WIPER ON OPERATION

CONSULT-III ACTIVE TEST
1. Select “RR WIPER” of BCM active test item.
2. With operating the test item, check rear wiper operation.

On : Rear wiper ON operation
Off : Stop the rear wiper.

Is rear wiper operation normally?

YES >> Rear wiper motor circuit is normal.
NO >> Refer to WW-39, "Diagnosis Procedure".

Diagnosis Procedure

INFOID:0000000006025191

1. CHECK REAR WIPER MOTOR OUTPUT VOLTAGE

CONSULT-III ACTIVE TEST
1. Turn ignition switch OFF.
2. Disconnect rear wiper motor connector.
3. Turn ignition switch ON.
4. Select “RR WIPER” of BCM active test item.
5. With operating the test item, check voltage between rear wiper motor harness connector and ground.

(+)		(–)	Condition		Voltage (Approx.)
Rear wiper motor					
Connector	Terminal				
D112	1	Ground	REAR WIPER	On	Battery voltage
				Off	0 V

Is the inspection result normal?

YES >> GO TO 3.
NO >> GO TO 2.

2. CHECK REAR WIPER MOTOR CIRCUIT

1. Turn ignition switch OFF.
2. Disconnect BCM connector.
3. Check continuity between BCM harness connector and rear wiper motor harness connector.

BCM		Rear wiper motor		Continuity
Connector	Terminal	Connector	Terminal	
M66/M69*	54	D112	1	Existed

*: With Intelligent KEY

4. Check continuity between BCM harness connector and ground.

BCM		Ground	Continuity
Connector	Terminal		
M66/M69*	54		Not existed

*: With Intelligent KEY

Is the inspection result normal?

YES >> Replace BCM. Refer to BCS-57, "Removal and Installation" (With Intelligent Key), BCS-99, "Removal and Installation" (Without Intelligent Key).
NO >> Repair or replace harness.

3. CHECK REAR WIPER MOTOR GROUND OPEN CIRCUIT

Check continuity between rear wiper motor harness connector and ground.

Rear wiper motor		Ground	Continuity
Connector	Terminal		
D112	3		Existed

Is the inspection result normal?

YES >> Replace rear wiper motor.
NO >> Repair or replace harness.

REAR WIPER AUTO STOP SIGNAL CIRCUIT

Component Function Check

INFOID:0000000006025192

1. CHECK REAR WIPER (AUTO STOP) OPERATION

CONSULT-III DATA MONITOR
1. Select “WIPER” of BCM data monitor item.
2. Operate the rear wiper.
3. Check that “RR WIPER STOP” changes to “On” and “Off” linked with the wiper operation.

Monitor item	Condition		Monitor status
RR WIPER STOP	Rear wiper motor	Stop position	On
		Except stop position	Off

Is the status of item normal?

YES >> Rear wiper auto stop signal circuit is normal.
NO >> Refer to WW-41, "Diagnosis Procedure".

Diagnosis Procedure

INFOID:0000000006025193

1. CHECK REAR WIPER MOTOR (AUTO STOP) OUTPUT VOLTAGE

1. Turn ignition switch OFF.
2. Disconnect rear wiper motor connector.
3. Turn ignition switch ON.
4. Check voltage between rear wiper motor harness connector and ground.

(+)		(–)	Voltage (Approx.)
Rear wiper motor			
Connector	Terminal		
D112	4	Ground	Battery voltage

Is the inspection result normal?

YES >> Replace rear wiper motor.
NO >> GO TO 2.

2. CHECK REAR WIPER MOTOR (AUTO STOP) CIRCUIT

1. Turn ignition switch OFF.
2. Disconnect BCM connector.
3. Check continuity between BCM harness connector and rear wiper motor harness connector.

BCM		Rear wiper motor		Continuity
Connector	Terminal	Connector	Terminal	
M66/M69*	44	D112	4	Existed

*: With Intelligent Key

4. Check continuity between BCM harness connector and ground.

BCM		Ground	Continuity
Connector	Terminal		
M66/M69*	44		Not existed

*: With Intelligent Key

Is the inspection result normal?

YES >> Replace BCM. Refer to BCS-57, "Removal and Installation" (With Intelligent Key), BCS-99, "Removal and Installation" (Without Intelligent Key).
NO >> Repair or replace harness.

SYMPTOM DIAGNOSIS

WIPER AND WASHER SYSTEM SYMPTOMS

Symptom Table

INFOID:0000000006025197

Symptom		Probable malfunction location	Inspection item
Front wiper does not operate	HI only	• Combination switch • Harness between combination switch and BCM • BCM	Combination switch Refer to BCS-98, "Symptom Table"
		• IPDM E/R • Harness between IPDM E/R and front wiper motor • Front wiper motor	Front wiper motor (HI) circuit Refer to WW-35, "Component Function Check"
		Front wiper request signal • BCM • IPDM E/R	IPDM E/R DATA MONITOR “FR WIP REQ”
	Lo and INT	• Combination switch • Harness between combination switch and BCM • BCM	Combination switch Refer to BCS-98, "Symptom Table"
		• IPDM E/R • Harness between IPDM E/R and front wiper motor • Front wiper motor	Front wiper motor (LO) circuit Refer to WW-34, "Component Function Check"
		Front wiper request signal • BCM • IPDM E/R	IPDM E/R DATA MONITOR “FR WIP REQ”
	INT only	• Combination switch • Harness between combination switch and BCM • BCM	Combination switch Refer to BCS-98, "Symptom Table"
		Front wiper request signal • BCM • IPDM E/R	IPDM E/R DATA MONITOR “FR WIP REQ”
	HI, LO and INT	SYMPTOM DIAGNOSIS “FRONT WIPER DOES NOT OPERATE” Refer to WW-45, "Diagnosis Procedure".	
Front wiper does not stop	HI only	• Combination switch • BCM	Combination switch Refer to BCS-98, "Symptom Table"
		Front wiper request signal • BCM • IPDM E/R	IPDM E/R DATA MONITOR “FR WIP REQ”
		IPDM E/R	—
	LO only	• Combination switch • BCM	Combination switch Refer to BCS-98, "Symptom Table"
		Front wiper request signal • BCM • IPDM E/R	IPDM E/R DATA MONITOR “FR WIP REQ”
		IPDM E/R	—
	INT only	• Combination switch • BCM	Combination switch Refer to BCS-98, "Symptom Table"
		Front wiper request signal • BCM • IPDM E/R	IPDM E/R DATA MONITOR “FR WIP REQ”

Symptom		Probable malfunction location	Inspection item
Front wiper does not operate normally	Intermittent adjustment cannot be performed.	• Combination switch • Harness between combination switch and BCM • BCM	Combination switch Refer to BCS-98, "Symptom Table"
		BCM	—
	Intermittent control linked with vehicle speed cannot be performed.	Check the wiper setting is linked with vehicle speed. Refer to WW-16, "WIPER : CONSULT-III Function (BCM - WIPER)".	
	Wiper is not linked to the washer operation.	• Combination switch • Harness between combination switch and BCM • BCM	Combination switch Refer to BCS-98, "Symptom Table"
		BCM	—
	Does not return to stop position. [Repeatedly operates for 10 seconds and then stops for 20 seconds. (Fail-safe)]	• IPDM E/R • Harness between IPDM E/R and front wiper motor • Front wiper motor	Front wiper auto stop signal circuit Refer to WW-36, "Component Function Check"
Rear wiper does not operate	ON only	• Combination switch • Harness between combination switch and BCM • BCM	Combination switch Refer to BCS-98, "Symptom Table"
	INT only	• Combination switch • Harness between combination switch and BCM • BCM	Combination switch Refer to BCS-98, "Symptom Table"
	ON and INT	• Combination switch • Harness between combination switch and BCM • BCM	Combination switch Refer to BCS-98, "Symptom Table"
		• BCM • Harness between rear wiper motor and BCM • Harness between rear wiper motor and ground • Rear wiper motor	Combination switch Refer to BCS-98, "Symptom Table"
Rear wiper does not stop	ON only	• Combination switch • BCM	Rear wiper motor circuit Refer to WW-39, "Component Function Check".
	INT only	• Combination switch • BCM	Combination switch Refer to BCS-98, "Symptom Table"
Rear wiper does not operate normally	Wiper is not linked to the washer operation.	• Combination switch • Harness between rear wiper motor and BCM • BCM	Combination switch Refer to BCS-98, "Symptom Table"
		BCM	—
	Rear wiper does not return to the stop position. [Stops after a five-second operation. (Fail-safe)]	• BCM • Harness between rear wiper motor and BCM • Rear wiper motor	Rear wiper auto stop signal circuit Refer to WW-41, "Component Function Check"

NORMAL OPERATING CONDITION

Description

INFOID:0000000006025198

FRONT WIPER MOTOR PROTECTION FUNCTION

- IPDM E/R may stop the front wiper to protect the front wiper motor if any obstruction (operation resistance) such as a large amount of snow is detected during the front wiper operation.
- At that time turn OFF the front wiper and remove the foreign object. Then wait for approximately 20 seconds or more and reactivate the front wiper. The wiper will operate normally.

REAR WIPER MOTOR PROTECTION FUNCTION

- BCM may stop rear wiper to protect the rear wiper motor when the rear wiper is stopped for 5 seconds or more due to a snowfall.
- Rear wiper operates normally one minute after the obstacles are removed with rear wiper OFF.

FRONT WIPER DOES NOT OPERATE

Description

INFOID:0000000006025199

The front wiper does not operate under any operation conditions.

Diagnosis Procedure

INFOID:0000000006025200

1. CHECK WIPER RELAY OPERATION

IPDM E/R AUTO ACTIVE TEST
1. Start IPDM E/R auto active test. Refer to WW-18, "WITH INTELLIGENT KEY : Diagnosis Description".
2. Check that the front wiper operates at the LO/HI operation.

CONSULT-III ACTIVE TEST
1. Select “FRONT WIPER” of IPDM E/R active test item.
2. With operating the test item, check front wiper operation.

Lo : Front wiper LO operation
Hi : Front wiper HI operation
Off : Stop the front wiper.

Is front wiper operation normally?

YES >> GO TO 5.
NO >> GO TO 2.

2. CHECK FRONT WIPER MOTOR FUSE

Check front wiper motor fuse. Refer to WW-33, "Diagnosis Procedure".

Is the inspection result normal?

YES >> GO TO 3.
NO >> Replace the fuse after repairing the applicable circuit.

3. CHECK FRONT WIPER MOTOR GROUND CIRCUIT

Check front wiper motor ground circuit. Refer to WW-37, "Diagnosis Procedure".

Is the inspection result normal?

YES >> GO TO 4.
NO >> Repair or replace harness.

4. CHECK FRONT WIPER MOTOR INPUT VOLTAGE

CONSULT-III ACTIVE TEST
1. Turn ignition switch OFF.
2. Disconnect front wiper motor connector.
3. Turn ignition switch ON.
4. Select “FRONT WIPER” of IPDM E/R active test item.
5. With operating the test item, check voltage between front wiper motor harness connector and ground.

(+)		(–)	Condition		Voltage (Approx.)
Front wiper motor					
Connector	Terminal				
E20	2	Ground	FRONT WIPER	Lo	Battery voltage
				Off	0 V
	1			Hi	Battery voltage
				Off	0 V

Is the inspection result normal?

YES >> Replace front wiper motor.
NO >> Replace IPDM E/R.

5. CHECK FRONT WIPER REQUEST SIGNAL INPUT

CONSULT-III DATA MONITOR

1. Select “FR WIP REQ” of IPDM E/R data monitor item.
2. Switch the front wiper switch to HI and LO.
3. With operating the front wiper switch, check the status of “FR WIP REQ”.

Monitor item	Condition		Monitor status
FR WIP REQ	Front wiper switch HI	On	Hi
		Off	Stop
	Front wiper switch LO	On	Low
		Off	Stop

Is the inspection result normal?

YES >> Replace IPDM E/R.
NO >> GO TO 6.

6. CHECK COMBINATION SWITCH

Perform the inspection of the combination switch. Refer to BCS-98, "Symptom Table".

Is combination switch normal?

YES >> Replace BCM. Refer to BCS-57, "Removal and Installation" (With Intelligent Key), BCS-99, "Removal and Installation" (Without Intelligent Key).
NO >> Repair or replace the applicable parts.

REMOVAL AND INSTALLATION

WASHER TANK

Exploded View

INFOID:0000000006067385

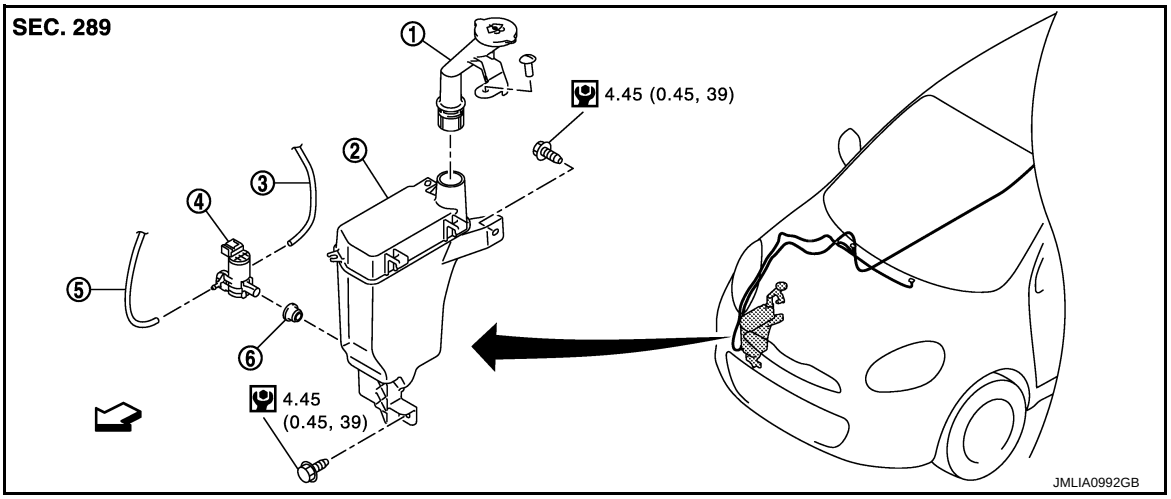

1. Washer tank inlet
2. Washer tank
3. Rear washer tube
4. Washer pump
5. Front washer tube
6. Packing

⇦ : Vehicle front

Removal and Installation

INFOID:0000000006067386

REMOVAL

1. Fully open hood.
2. Remove the clip (A).

⇦ : Vehicle front

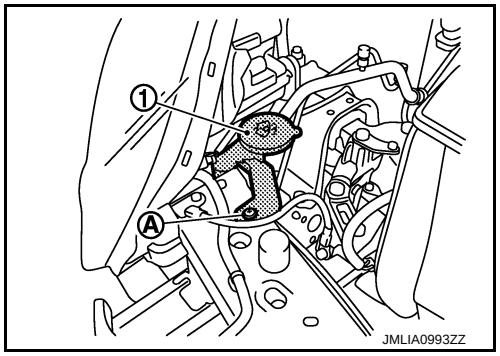

3. Pull out washer tank inlet (1) from washer tank.
4. Remove the fender protector RH. Refer to EXT-17, "FENDER PROTECTOR : Removal and Installation".
5. Disconnect washer pump connector.
6. Remove front washer tube and rear washer tube.
7. Remove washer tank mounting bolts.
8. Remove washer tank from the vehicle.

INSTALLATION

Note the following item, and then install in the reverse order of removal.

CAUTION:

Add water up to the top of the washer tank inlet after installing. Check that there is no leakage.

WASHER PUMP

Exploded View

INFOID:0000000006067387

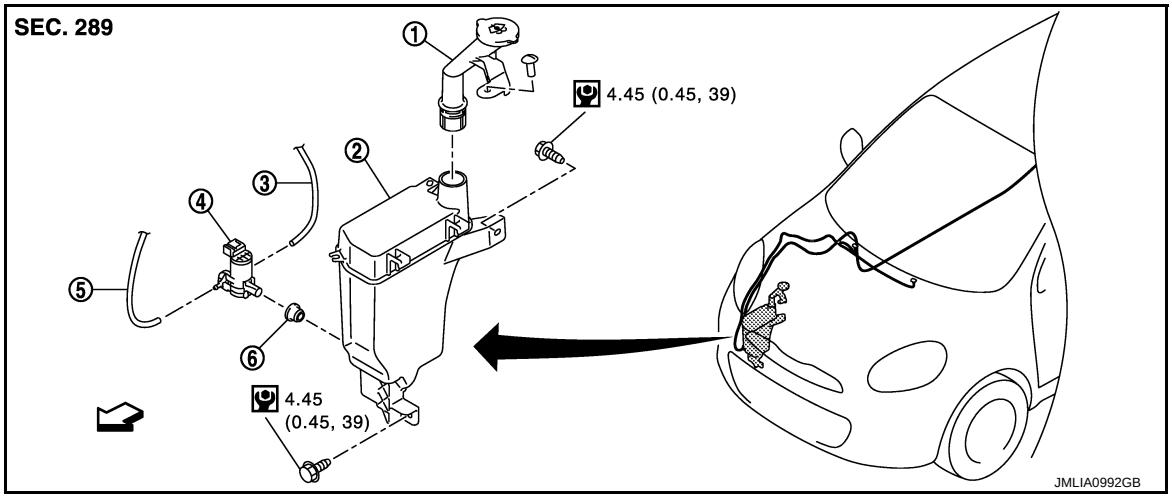

1. Washer tank inlet
2. Washer tank
3. Rear washer tube
4. Washer pump
5. Front washer tube
6. Packing

⇦ : Vehicle front

Removal and Installation

INFOID:0000000006067388

REMOVAL

1. Remove fender protector RH (front). Refer to EXT-17, "FENDER PROTECTOR : Removal and Installation".
2. Disconnect washer pump connector.
3. Remove front washer tube and rear washer tube.
4. Remove washer pump from the washer tank.
5. Remove packing from the washer tank.

INSTALLATION

Note the following item, and then install in the reverse order of removal.

CAUTION:

Never twist the packing when installing the washer pump.

FRONT WASHER NOZZLE AND TUBE

Exploded View

INFOID:0000000006067389

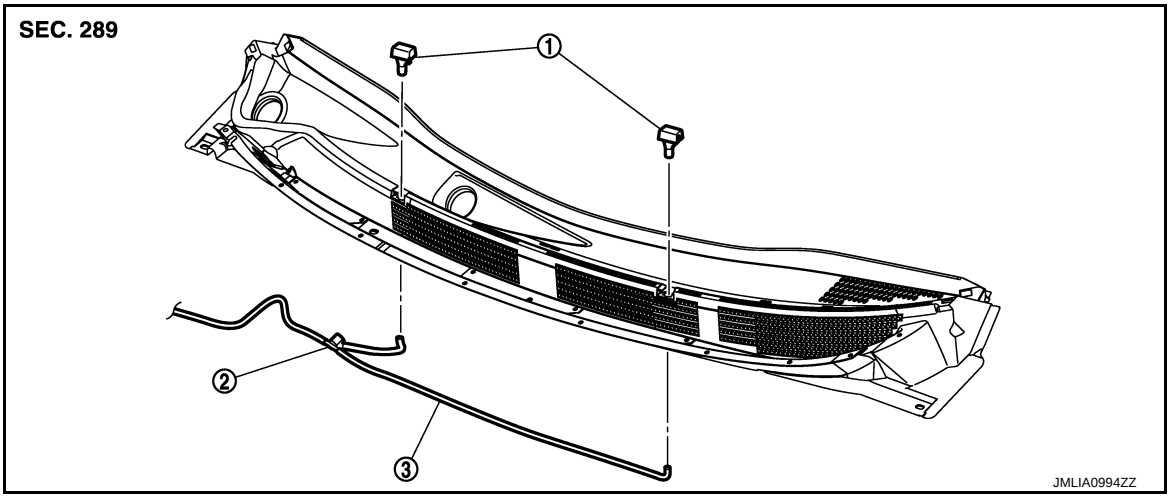

1. Front washer nozzle
2. Check valve
3. Front washer tube

Hydraulic Layout

INFOID:0000000006067390

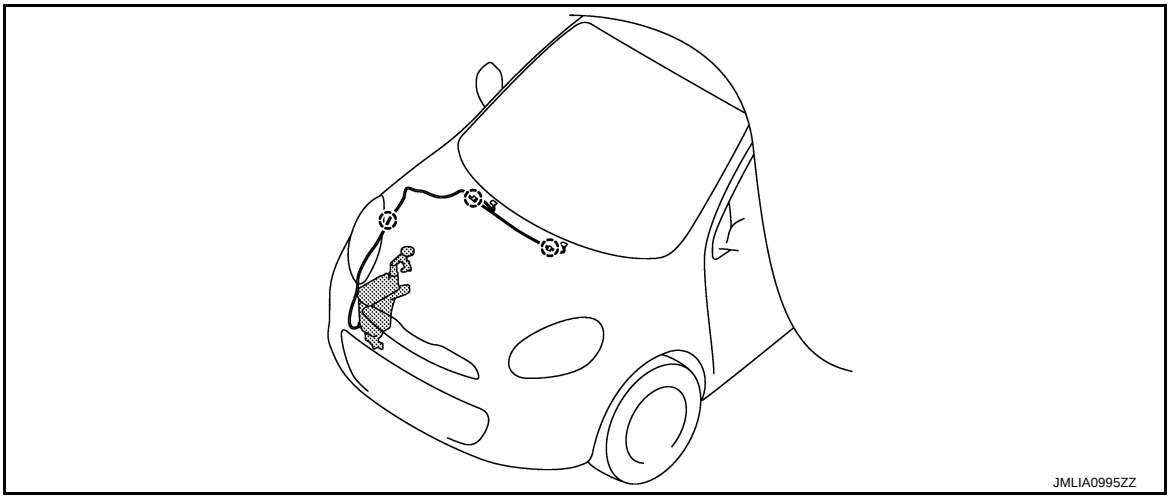

1. Front washer nozzle
2. Front washer tube
3. Washer tank

: Clip

Removal and Installation

INFOID:0000000006067391

REMOVAL

1. Remove cowl top cover. Refer to EXT-15, "Removal and Installation".

2. Disconnect front washer tube from front washer nozzle (1).
3. While pressing pawl (A) on the cowl top cover front side of front washer nozzle, remove front washer nozzle from cowl top cover.

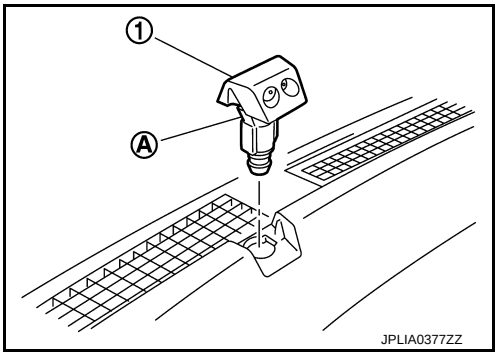

INSTALLATION

Note the following item, and then install in the reverse order of removal.

CAUTION:

The spray positions differ, check that left and right nozzles are installed correctly.

Inspection and Adjustment

INFOID:0000000006067392

INSPECTION

Check valve Inspection

Check that air can pass through the hose by blowing forward (toward the nozzle), and check that air cannot pass through by sucking.

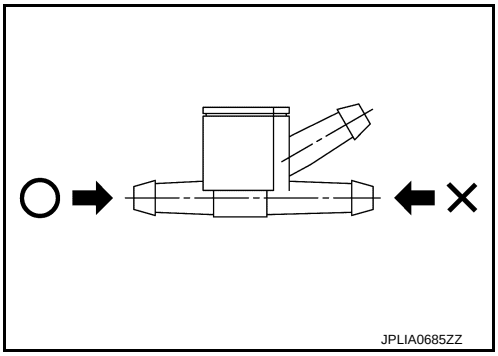

ADJUSTMENT

Washer Nozzle Spray Position Adjustment

Adjust spray positions to match the positions shown in the figure.

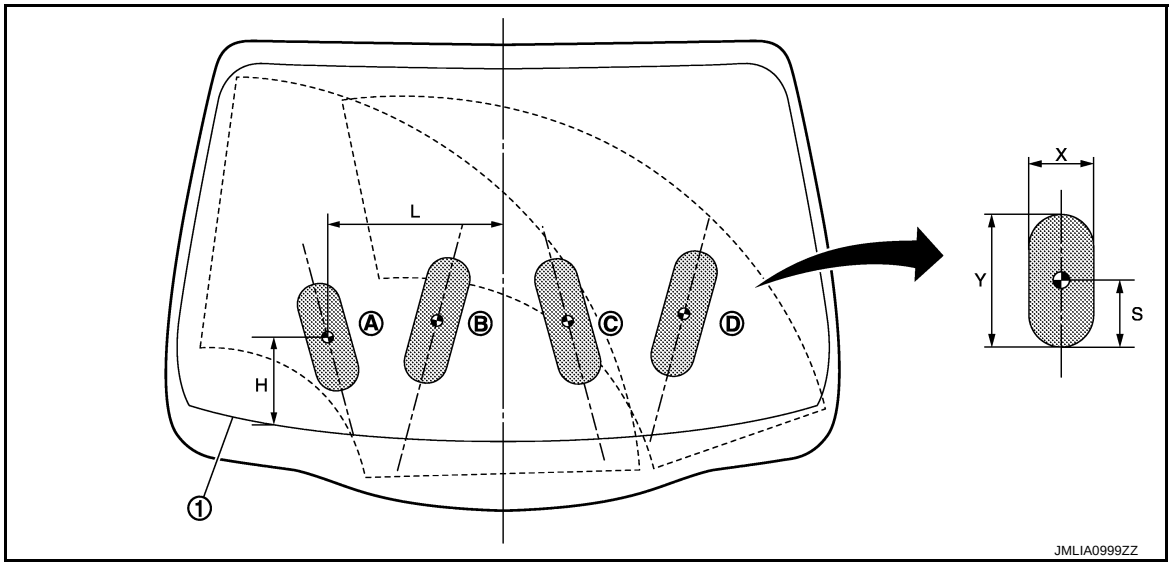

1. Black printed frame line

: Spray area

: Target spray position

Unit: mm (in)

Spray position	H	L	X	Y	S
A	167 (6.57)	329 (12.95)	80 (3.15)	220 (8.66)	90 (3.54)
B	217 (8.54)	130 (5.12)	80 (3.15)	250 (9.84)	110 (4.33)
C	217 (8.54)	130 (5.12)	80 (3.15)	250 (9.84)	110 (4.33)
D	215 (8.46)	341 (13.43)	80 (3.15)	250 (9.84)	110 (4.33)

Insert a needle or similar object (A) into the spray opening (1). Move up/down and left/right to adjust the spray position.

NOTE:

If wax or dust gets into the nozzle, remove wax or dust with a needle or small pin.

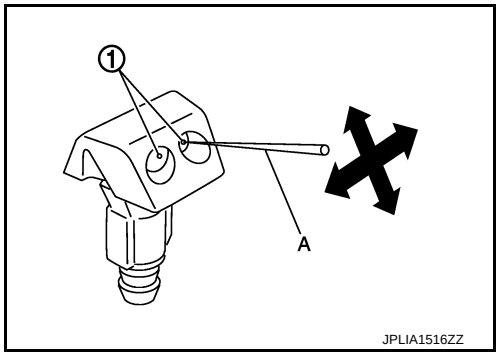

FRONT WIPER ARM

Exploded View

INFOID:0000000006067394

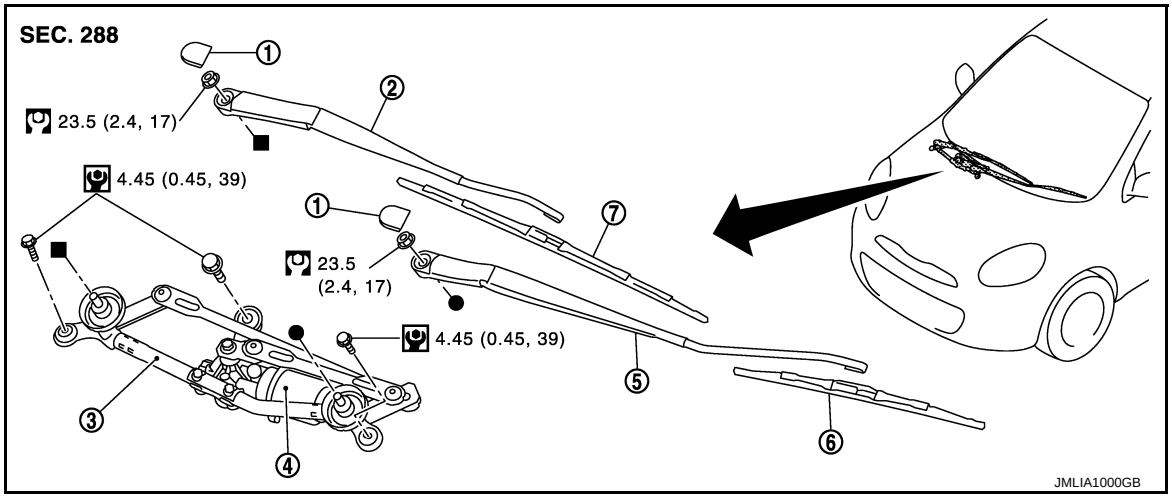

1. Front wiper arm cap RH
2. Front wiper arm RH
3. Front wiper drive
4. Front wiper motor
5. Front wiper arm LH
6. Front wiper blade LH
7. Front wiper blade RH

Refer to GI-4, "Components" for symbols in the figure.

Removal and Installation

INFOID:0000000006067395

REMOVAL

1. Operate front wiper to move it to the auto stop position.
2. Fully open hood assembly.
3. Remove front wiper arm caps.
4. Remove front wiper arm mounting nuts.
5. Raise front wiper arm, and remove front wiper arm from the vehicle.

INSTALLATION

1. Clean wiper arm mount as shown in the figure to prevent nuts from being loosened.
2. Operate front wiper motor to move the front wiper to the auto stop position.
3. Adjust front wiper blade position. Refer to WW-52, "Adjustment".
4. Install front wiper arms by tightening the mounting nuts.
5. Inject washer fluid.
6. Operate front wiper to move it to the auto stop position.
7. Check that front wiper blades stop at the specified position.
8. Install front wiper arm caps.

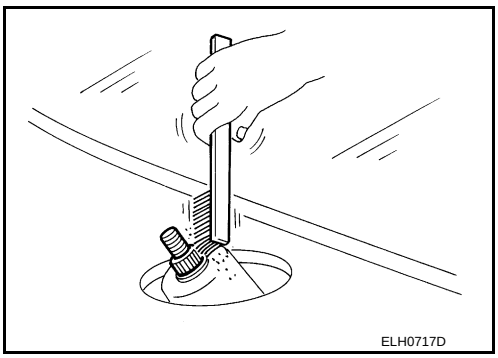

Adjustment

INFOID:0000000006067396

WIPER BLADE POSITION ADJUSTMENT

Clearance between the end of cowl top cover and the top of front wiper blade center

Standard clearance

R : 37.1 ± 7.5 mm (1.461 ± 0.295 in)

L : 28.4 ± 7.5 mm (1.118 ± 0.295 in)

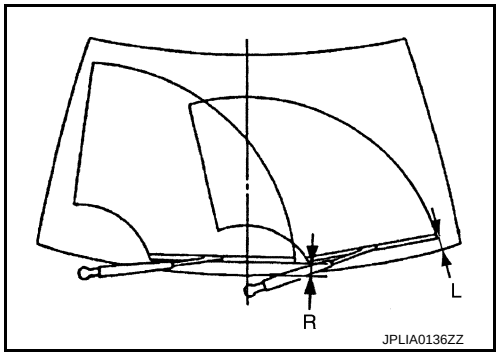

FRONT WIPER DRIVE ASSEMBLY

Exploded View

INFOID:0000000006067398

REMOVAL VIEW

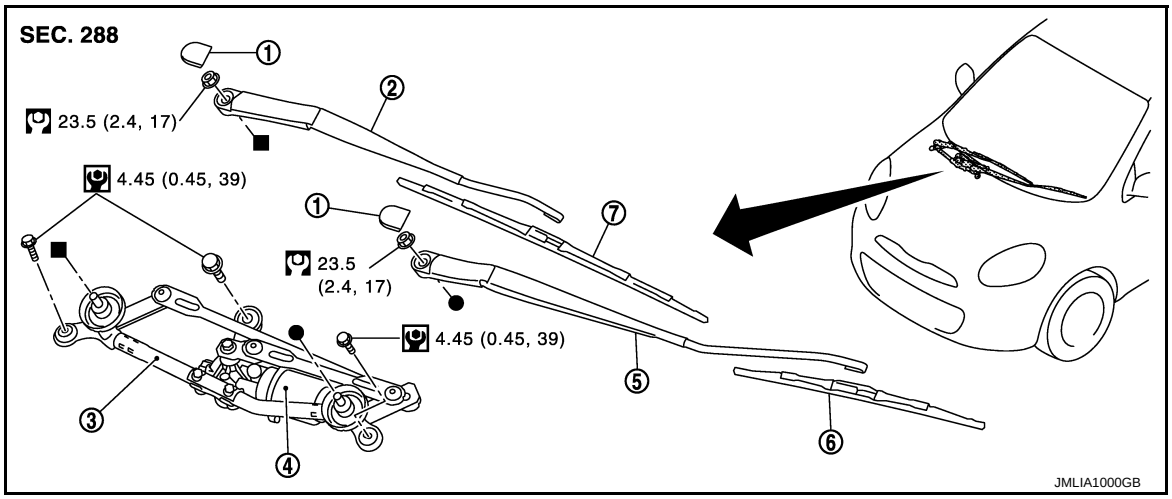

1. Front wiper arm cap RH
2. Front wiper arm RH
3. Front wiper drive
4. Front wiper motor
5. Front wiper arm LH
6. Front wiper blade LH
6. Front wiper blade (RH)

Refer to GI-4, "Components" for symbols in the figure.

DISASSEMBLY VIEW

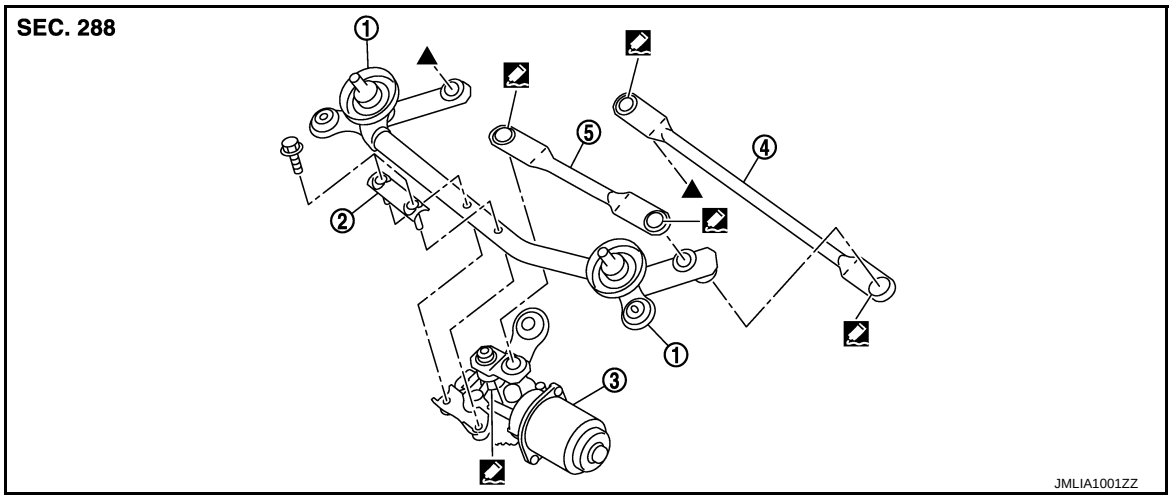

1. Shaft seal
2. Bracket Front wiper frame
3. Front wiper motor
4. Front wiper linkage 2
5. Front wiper linkage 1

: Multi–purpose grease or an equivalent

Removal and Installation

INFOID:0000000006067399

REMOVAL

1. Remove front wiper arm (LH and RH). Refer to WW-52, "Exploded View".
2. Remove cowl top cover. Refer to EXT-15, "Removal and Installation".
3. Disconnect front wiper motor connector.
4. Remove mounting bolts front wiper drive assembly.

5. Remove front wiper drive assembly from the vehicle.

INSTALLATION

1. Install front wiper drive assembly to the vehicle.
2. Connect front wiper motor connector.
3. Operate front wiper to move it to the auto stop position.
4. Install cowl top cover. Refer to EXT-15, "Removal and Installation".
5. Install front wiper arms. Refer to WW-52, "Exploded View".

Disassembly and Assembly

INFOID:0000000006067400

DISASSEMBLY

1. Remove front wiper linkage 1 and 2 from the front wiper drive assembly.
   CAUTION:
   Never bend the linkage or damage the plastic part of the ball joint when removing the front wiper linkage.
2. Remove front wiper motor mounting screws, and then remove the front wiper motor from the front wiper frame.

ASSEMBLY

1. Connect front wiper motor connector.
2. Operate front wiper to move it to the auto stop position.
3. Disconnect front wiper motor connector.
4. Install front wiper motor to front wiper frame.
5. Install front wiper linkage 1 to the front wiper motor and the front wiper frame.
6. Install front wiper linkage 2 to the front wiper frame.
   CAUTION:
   - **Never drop front wiper motor or cause it to come into contact with other parts.**
   - **Be careful for the grease condition at the front wiper motor and front wiper linkage joint (retainer). Apply multi–purpose grease or an equivalent if necessary.**

WIPER AND WASHER SWITCH

Exploded View

INFOID:0000000006067403

Refer to WW-47, "Removal and Installation".

REAR WIPER ARM

Exploded View

INFOID:0000000006067404

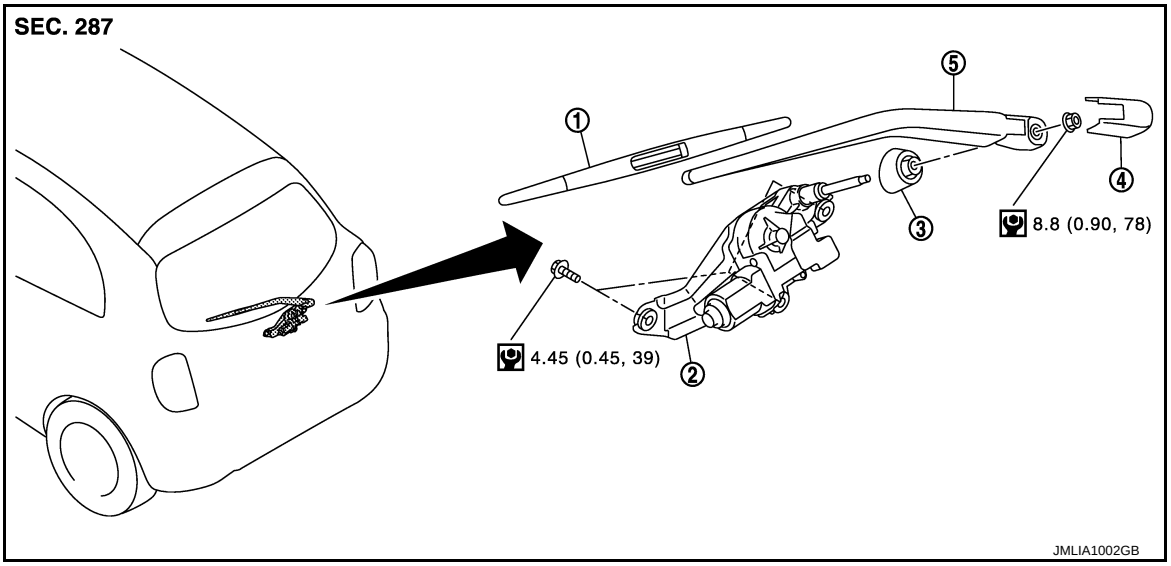

1. Rear wiper blade
2. Rear wiper motor
3. pivot seal
4. Rear wiper arm cover
5. Rear wiper arm

Refer to GI-4, "Components" for symbols in the figure.

Removal and Installation

INFOID:0000000006067405

REMOVAL

1. Operate rear wiper to the auto stop position.
2. Remove rear wiper arm cover.
3. Remove rear wiper arm mounting nut.
4. Raise rear wiper arm, and remove wiper arm from the vehicle.

INSTALLATION

1. Clean wiper arm mount as shown in the figure to prevent nut from being loosened.
2. Operate rear wiper motor to the auto stop position.
3. Adjust rear wiper blade position. Refer to WW-57, "Adjustment".
4. Install rear wiper arm by tightening the mounting nut.
5. Inject washer fluid.
6. Operate rear wiper to the auto stop position.
7. Check that rear wiper blades stop at the specified position.
8. Install rear wiper arm cover.

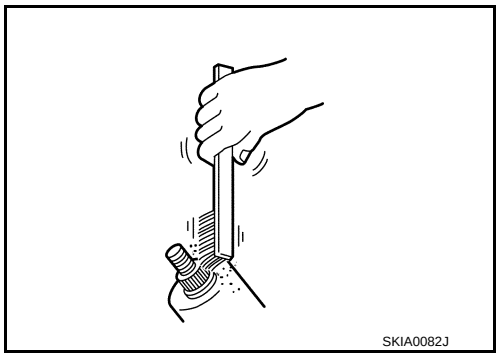

Adjustment

INFOID:0000000006067406

REAR WIPER BLADE POSITION ADJUSTMENT

Clearance between the end of back door glass and the top of wiper blade center.

Standard clearance

L : 54.5 ± 7.5 mm (2.146 ± 0.295 in)

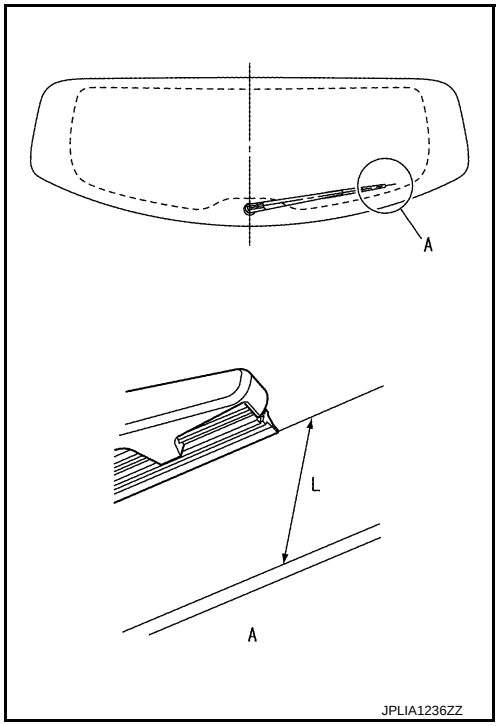

REAR WIPER MOTOR

Exploded View

INFOID:0000000006067407

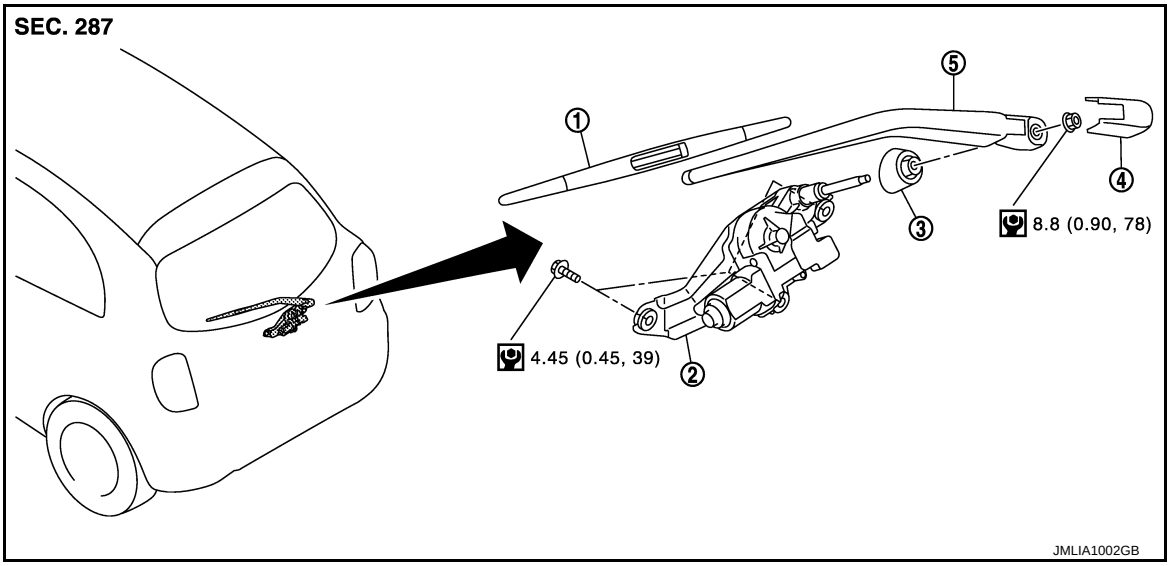

1. Rear wiper blade
2. Rear wiper motor
3. Pivot seal
4. Rear wiper arm cover
5. Rear wiper arm

Refer to GI-4, "Components" for symbols in the figure.

Removal and Installation

INFOID:0000000006067408

REMOVAL

1. Remove rear wiper arm cover and rear wiper arm. Refer to WW-57, "Exploded View".
2. Remove back door finisher lower. Refer to INT-33, "Removal and Installation".
3. Disconnect rear wiper motor connector.
4. Remove rear wiper motor mounting bolts.
5. Remove rear wiper motor from the vehicle.
6. Remove pivot seal.

INSTALLATION

1. Install pivot seal.
2. Install rear wiper motor to the vehicle.
3. Connect rear wiper motor connector.
4. Operate rear wiper to the auto stop position.
5. Install back door finisher lower. Refer to INT-33, "Removal and Installation".
6. Install rear wiper arm cover and rear wiper arm. Refer to WW-57, "Exploded View".

REAR WASHER NOZZLE AND TUBE

Hydraulic Layout

INFOID:0000000006067409

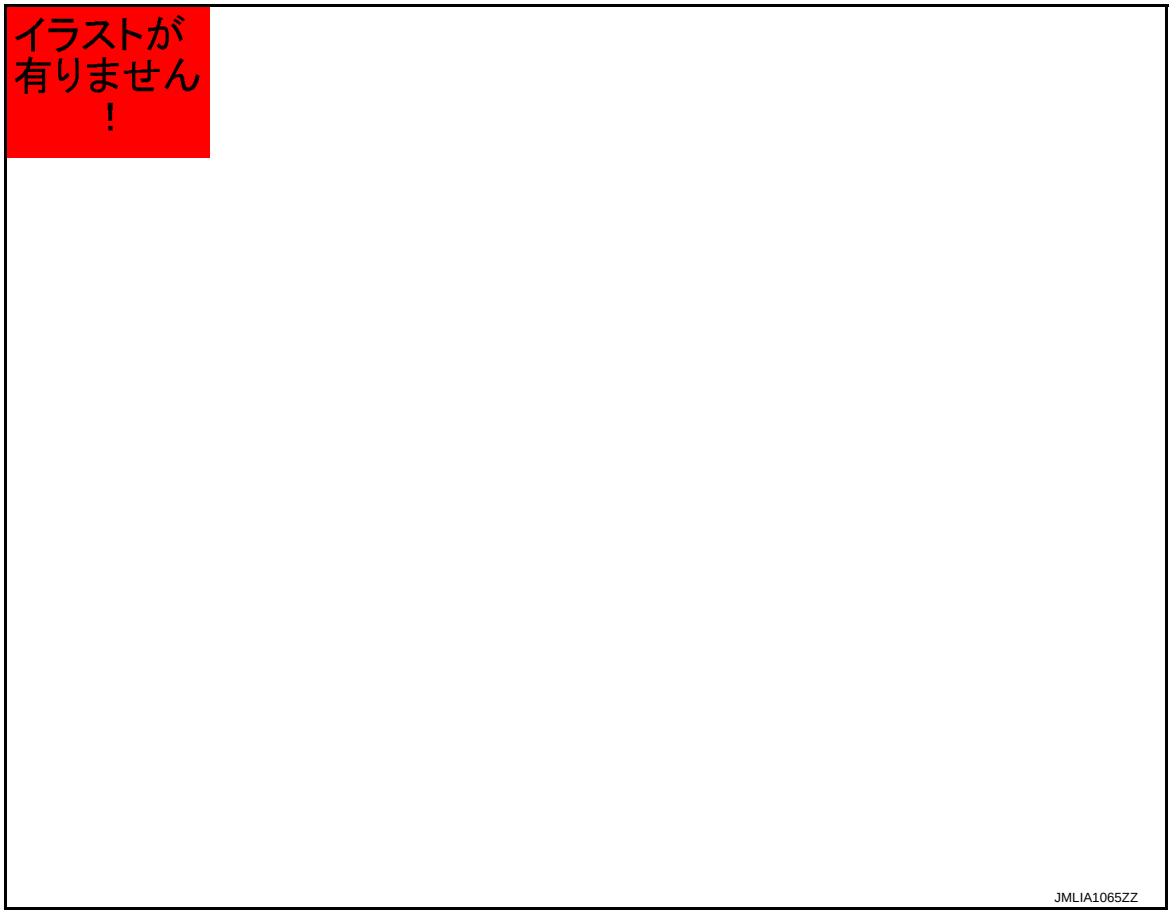

1. Rear washer nozzle
2. Grommet
3. Rear washer tube
4. Washer tank

: Clip

Removal and Installation

INFOID:0000000006067410

REMOVAL

1. Apply protective tape (B) around rear nozzle to protect the painted surface from damage.
2. Push pawls with a flat-bladed screwdriver (A) wrapped into a protective tape.
3. Remove rear washer tube from rear washer nozzle (1).

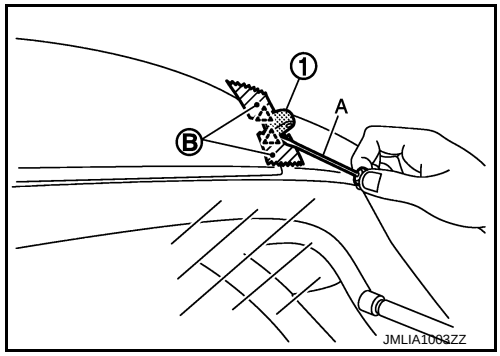

: Pawl

INSTALLATION

Install in the reverse order of removal.

Inspection and Adjustment

INFOID:0000000006067411

INSPECTION

Washer Nozzle Inspection

Check that air can pass through the hose by blowing forward (toward the nozzle), and check that air cannot pass through by sucking.

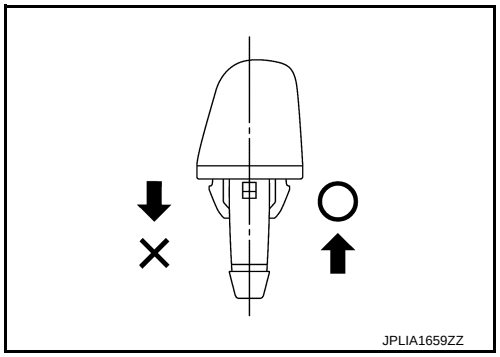

ADJUSTMENT

Washer Nozzle Spray Position adjustment

Adjust spray positions to match the positions shown in the figure.

1 : Black printed frame line

Unit: mm (in)

Spray position	H : Height	L : Length	ϕ : Spray position area
A	1 (0.04)	164.8 (6.49)	30 (1.18)

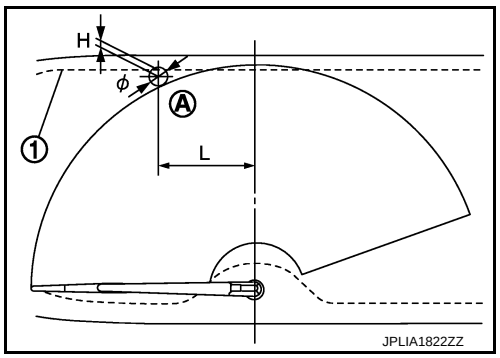

Insert a needle or similar object (A) into the spray opening (1) and move up/down and left/right to adjust the spray position.

NOTE:
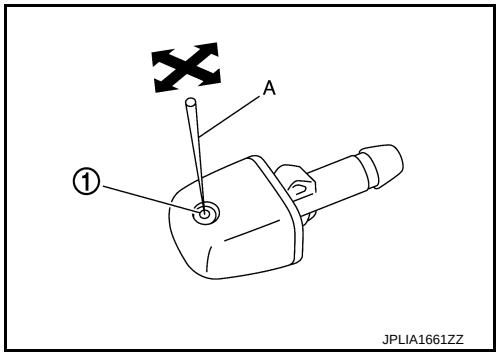
If wax or dust gets into the nozzle, remove wax or dust with a needle or small pin.