SYSTEM WIRING DIAGRAMS
Courtesy Lamps Circuit
1997 Mitsubishi Montero

For DIAKOM-AUTO http://www.diakom.ru Taganrog support@diakom.ru (8634)315187

Copyright © 1998 Mitchell Repair Information Company, LLC
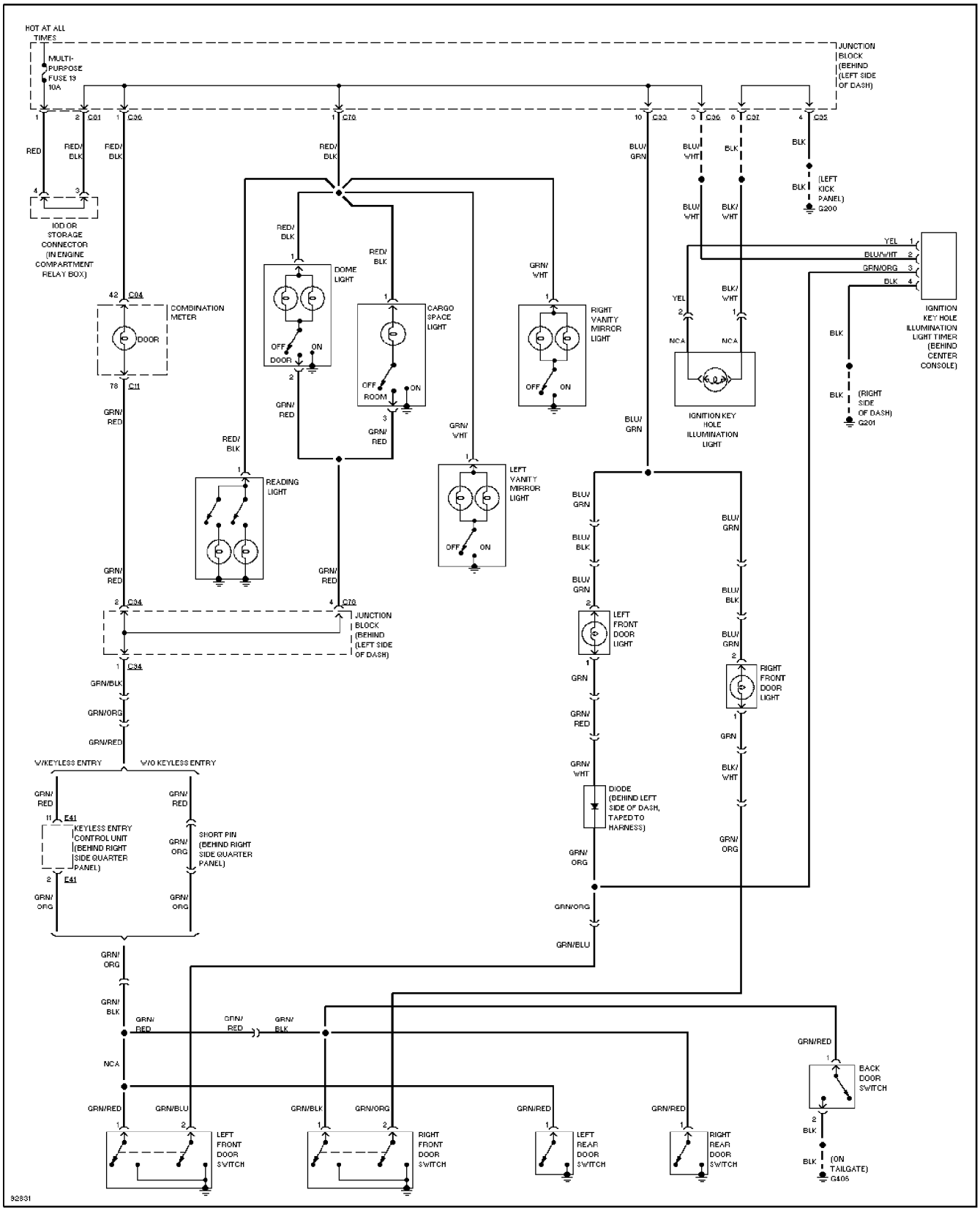
Thursday, December 14, 2000 05:14PM