BACKUP
Service Manual

ECLIPSE/ ECLIPSE SPYDER

Volume 1
Chassis & Body

Includes Engine & Transaxle Overhaul

FOREWORD

This Service Manual has been prepared with the latest service information available at the time of publication. It is subdivided into various group categories and each section contains diagnostic, disassembly, repair, and installation procedures along with complete specifications and tightening references. Use of this manual will aid in properly performing any servicing necessary to maintain or restore the high levels of performance and reliability designed into these outstanding vehicles.

WE SUPPORT
VOLUNTARY TECHNICIAN
CERTIFICATION THROUGH

National Institute for
AUTOMOTIVE
SERVICE
EXCELLENCE

MITSUBISHI
MOTOR SALES OF AMERICA, Inc.

Mitsubishi Motors Corporation reserves the right to make changes in design or to make additions to or improvements in its products without imposing any obligations upon itself to install them on its products previously manufactured.

 Printed in U.S.A.

GROUP INDEX

NOTE: Electrical system information is contained in Volume 2 "Electrical" of this paired Service Manual.

WARNINGS REGARDING SERVICING OF SUPPLEMENTAL RESTRAINT SYSTEM (SRS) EQUIPPED VEHICLES

WARNING!

(1) Improper service or maintenance of any component of the SRS, or any SRS-related component, can lead to personal injury or death to service personnel (from inadvertent firing. of the air bag) or to the driver and passenger (from rendering the SRS inoperative).

(2) If it is possible that the SRS components are subjected to heat over 93°C (200°F) in baklng or in drying after painting, remove the SRS components (air bag module, SRS-ECU) beforehand.

(3) Service or maintenance of any SRS component or SRS-related component must be performed only at an authorized MITSUBISHI dealer.

(4) MITSUBISHI dealer personnel must thoroughly review this manual, and especially Its GROUP 52B – Supplemental Restraint System (SRS), before beginning any service or maintenance of any component of the SRS or any SRS-related component.

NOTE

Section titles with the asterisks (*) in the table of contents in each group indicate operations requiring warnings.

GENERAL

CONTENTS

00109000171

NOTES

HOW TO USE THIS MANUAL

00100010142

MAINTENANCE, REPAIR AND SERVICING EXPLANATIONS

This manual provides explanations, etc. concerning procedures for the inspection, maintenance, repair and servicing of the subject model. Unless otherwise specified, each service procedure covers all models. Procedures covering specific models are identified by the model codes, or similar designation (engine type, transaxle type, etc.). A description of these designations is covered in this manual under "VEHICLE IDENTIFICATION".

ON-VEHICLE SERVICE

"On-vehicle Service" are procedures for performing inspections and adjustments of particularly important locations with regard to the construction and for maintenance and servicing, but other inspections (for looseness, play, cracking, damage, etc.) must also be performed.

SERVICE PROCEDURES

The service steps are arranged in numerical order and attention must to be paid in performing vehicle service are described in detail in SERVICE POINTS.

TERMS DEFINITION

STANDARD VALUE

Indicates the value used as the standard for judging the quality of a part or assembly on inspection or the value to which the part or assembly is corrected and adjusted. It is given by tolerance.

LIMIT

Indicates a maximum or minimum value, the part or assembly should be kept within, in order to be functional. This value is established outside the standard value range.

REFERENCE VALUE

Indicates the adjustment value prior to starting the work (presented in order to facilitate assembly and adjustment procedures, and so they can be completed in a shorter time).

CAUTION

Indicates the presentation of information particularly vital to the worker during the performance of maintenance and servicing procedures in order to avoid the possibility of injury to the worker, or damage to component parts, or a reduction of component or vehicle function or performance, etc..

TIGHTENING TORQUE INDICATION

The tightening torque shown in this manual is a basic value with a tolerance of ± 10% except the following cases when the upper. and lower limits of tightening torque are given.

(1) The tolerance of the 'basic value is within ± 10%.
(2) Special bolts or, the 'like are in use.
(3) Special tightening methods are used.

SPECIAL TOOL NOTE

When the MMC special tool is described, please refer to the special tool cross reference chart, which is located at the beginning of each group, for a cross reference from the MMC special tool, number to the special tool number that is available in your market.

MODEL INDICATIONS

The following abbreviations are used in this manual for classification of model types.

M/T : Indicates the manual transaxle, or models equipped with the manual transaxle.
A/T : Indicates the automatic transaxle, or models equipped with the automatic transaxle.
MFI: Indicates the multiport fuel injection, or engines equipped with the multiport fuel injection.
Turbo: Indicates the engine with turbocharger, or models equipped with such an engine.
Non-turbo: Indicates the engine without turbocharger, or models equipped with, such an engine.
FWD: Indicates the front wheel drive vehicles.
AWD: Indicates the all wheel drive vehicles.
ABS: Indicates the anti-lock braking system or models equipped with the anti-lock braking system.

EXPLANATION OF MANUAL CONTENTS

Indicates procedures to be performed before the work in that section is started, and procedures to be performed after the work in that section is finished.

Component Diagram

A diagram of the component parts is provided near the front of each section in order to give the reader a better understanding of the installed condition of component parts.

Indicates (by symbols) where lubrication is necessary.

Maintenance and Servicing Procedures

The numbers provided within the diagram indicate the sequence for maintenance and servicing procedures.

- Removal steps :
  The part designation number corresponds to the number in the illustration to indicate removal steps.
- Disassembly steps :
  The part designation number corresponds to the number in the illustration to indicate disassembly steps.
- Installation steps :
  Specified in case installation is impossible in reverse order of removal steps. Omitted if installation is possible in reverse order of removal steps.
- Reassembly steps :
  Specified in case reassembly is impossible in reverse order of disassembly steps. Omitted if reassembly is possible in reverse order of disassembly steps.

Classifications of Major Maintenance / Service points

When there are major points relative to maintenance and servicing procedures (such as essential maintenance and service points, maintenance and service standard values, information regarding the use of special tools, etc.), these are arranged together as major maintenance and service points and explained in detail.

◀A▶ : Indicates that there are essential points for removal or disassembly.

▶A◀ : Indicates that there are essential points for installation or reassembly.

Symbols for Lubrication, Sealants and Adhesives

Information concerning the locations for lubrication and for application of sealants and adhesives is provided, by using symbols, in the diagram of component parts or on the page following the component parts page, and explained.

- : Grease (multipurpose grease unless there is a brand or type specified)
- : Sealant or adhesive
- : Brake fluid or automatic transmission fluid
- : Engine oil, gear oil or air conditioning compressor oil
- : Adhesive tape or butyl rubber tape

Indicates the group title.

Indicates the section title.

Indicates the group number.

Indicates the page number.

1

STEERING – Power Steering Gear Box 37A-23

POWER STEERING GEAR BOX

REMOVAL AND INSTALLATION

Pre-removal Operation
- Power Steering Fluid Draining (Refer to P.37A-15.)
- Stabilizer Bar Removal (Refer to GROUP 33A – Stabilizer Bar)

Denotes tightening torque. If there is no indication of tightening torque refer to TIGHTENING TABLE.

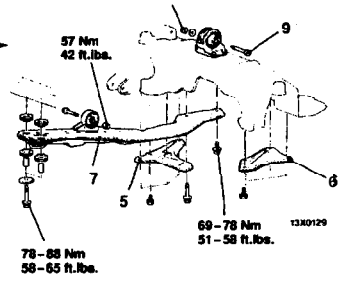

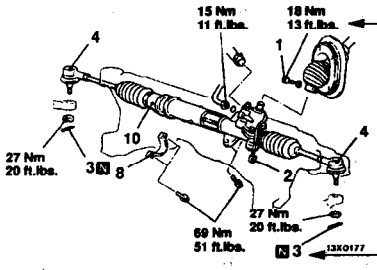

Denotes non-reusable part.

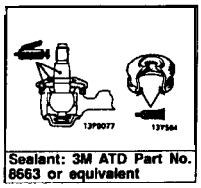
Sealant: 3M ATD Part No. 8663 or equivalent

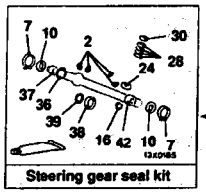
Steering gear seal kit

Repair kit or set parts are shown. (Only very frequently used parts are shown.)

Removal steps
1. Joint assembly and gear box connecting bolt
2. Solenoid valve connector <Vehicles with EPS>
3. Cotter pin
4. ◀A▶ ▶A◀ Connection for tie-rod end and knuckle
5. Stay (L.H.)
6. Stay (R.H.)
7. Center member assembly
8. Clamp
9. ◀B▶ Bolt
10. ◀C▶ Gear box assembly

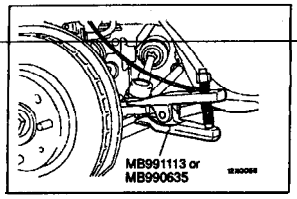

REMOVAL SERVICE POINTS

◀A▶ TIE-ROD END DISCONNECTION

Caution
1. Be sun to tie the cord of the special tool to the nearby part.
2. Loosen the nut but do not remove it.

Operating procedures, cautions, etc. on removal, installation, disassembly and reassembly are described.

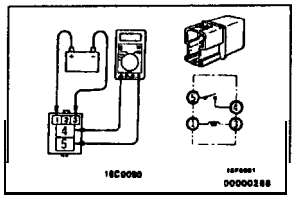

FOG LIGHT RELAY **CONTINUITY** CHECK

Battery voltage	Terminal			
	1	3	4	5
Power is not supplied	o -	- a		
Powerisss supplied	⊕ -	- ⊖	O—	—O

O—O indicates that there is continuity' between the terminals.
⊕—⊖ indicates terminals' to which battery voltage is applied.

37A-28 STEERING – Power Steering Gear Box

LUBRICATION AND SEALING POINTS
<Conventional power steering gear box>

The title of the page (following the page on which the diagram of Component parts is presented) indicating the locations of lubrication and sealing procedures.

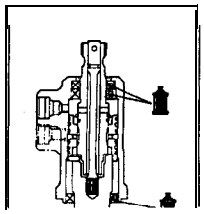

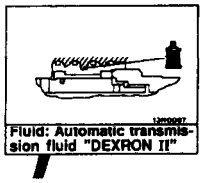
Fluid: Automatic transmission fluid "DEXRON II"

HOW TO USE TROUBLESHOOTING/INSPECTION SERVICE POINTS

00100020060

Troubleshooting of electronic control systems for which the scan tool can be used follows the basic outline described below. Furthermore, even in systems for which the scan tool cannot be used, part of these systems still follow this outline.

TROUBLESHOOTING CONTENTS

1. STANDARD FLOW OF DIAGNOSTIC TROUBLESHOOTING

The main procedures for diagnostic troubleshooting are shown.

2. SYSTEM OPERATION AND SYMPTOM VERIFICATION TESTS

If verification of the trouble symptoms is difficult, procedures for checking operation and verifying trouble symptoms are shown.

3. DIAGNOSTIC FUNCTION

The following diagnostic functions are shown.

- Method of reading diagnostic trouble codes
- Method of erasing diagnostic trouble codes
- Input inspection service points

4. INSPECTION CHART FOR DIAGNOSTIC TROUBLE CODES

5. INSPECTION PROCEDURE FOR DIAGNOSTIC TROUBLE CODES

Indicates the inspection procedures corresponding to each diagnostic trouble code. (Refer to the next page on how to use the inspection procedures.)

6. INSPECTION CHART FOR TROUBLE SYMPTOMS

If there are trouble symptoms, even though the scan tool displays no diagnostic trouble code, inspection procedures for each trouble symptom will be found by means of this chart.

7. INSPECTION PROCEDURE FOR TROUBLE SYMPTOMS

Indicates the inspection procedures corresponding to each trouble symptoms classified in the Inspection Chart for Trouble Symptoms. (Refer to the next page on how to use the inspection procedures.)

8. DATA LIST REFERENCE TABLE

Inspection items and normal judgement values have been provided in this chart as reference information.

9. CHECK AT ECU TERMINALS

Terminal numbers for the ECU connectors, inspection items and standard values have been provided in this chart as reference information.

Terminal Voltage Checks

1. Connect a needle-nosed wire probe or paper clip to a voltmeter probe.
2. Insert the needle-nosed wire probe into each of the ECU connector terminals from the wire side, and measure the voltage while referring to the check chart.

   NOTE
   1. Measure voltage with the ECU connectors connected.
   2. You may find it convenient to pull out the ECU to make it easier to reach the connector terminals.
   3. Checks don't have to be carried out in the order given in the chart.

   Caution
   Short-circuiting the positive (+) probe between a connector terminal and ground could damage the vehicle wiring, the sensor, the ECU, or all three.
   Use care to prevent this !

3. If voltage readings differ from Normal Condition values, check related sensors, actuators, and wiring, then replace or repair.

4. After repair or replacement, recheck with the voltmeter to confirm that the repair has corrected the problem.

Terminal Resistance and Continuity Checks

1. Turn the ignition switch to off.
2. Disconnect the ECU connector.
3. Measure the resistance and check for continuity between the terminals of the ECU harness-side connector while referring to the check chart.

   NOTE
   Checks don't have to be carried out in the order given in the chart.

   Cautlon
   If resistance and continuity checks are performed on the wrong terminals, damage to the vehicle wiring, sensors, ECU, and/or ohmmeter may occur.
   Use care to prevent this!

4. If the ohmmeter shows any deviation from the Normal Condition value, check the corresponding sensor, actuator and related electrical wiring, then repair or replace.
5. After repair or replacement, recheck with the ohmmeter to confirm that the repair has corrected the problem.

10. INSPECTION PROCEDURES USING AN OSCILLOSCOPE

When there are inspection procedures using an oscilloscope, these are listed here.

HOW TO USE THE INSPECTION PROCEDURES

The causes of a high frequency of problems occurring in electronic circuitry are generally the connectors, components, the ECU and the harnesses between connectors, in that order. These inspection procedures follow this order, and they first try to discover a problem with a connector or a defective component.

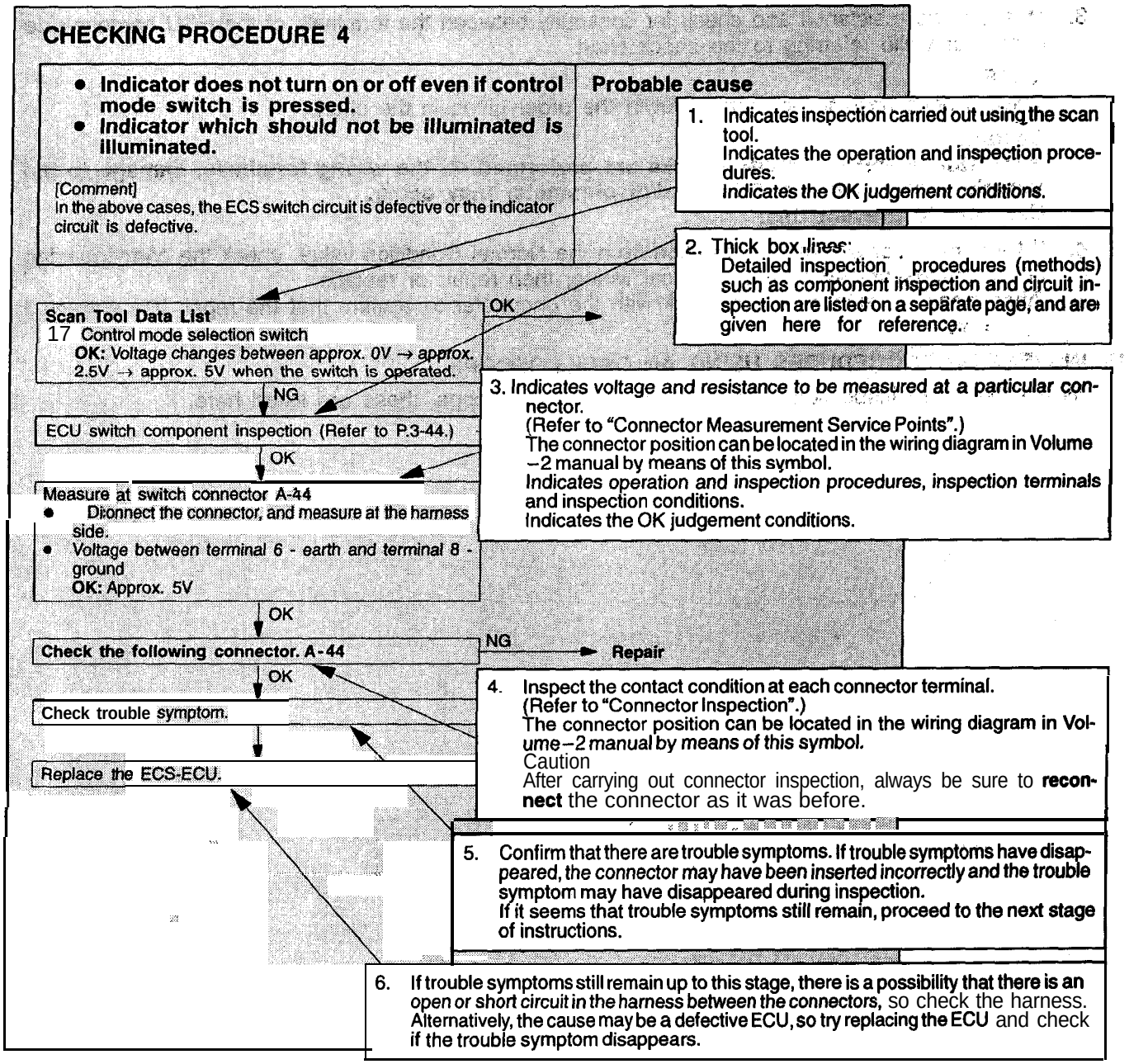

HARNESS INSPECTION

Check for an open or short circuit in the harness between the terminals which were defective according to the connector measurements. Carry out this inspection while referring to Volume 2 Electrical manual. Here, "Check harness between power supply and terminal xx" also includes checking for blown fuses. For inspection service points when there is a blown fuse, refer to "Inspection Service Points for a Blown Fuse".

MEASURES TO TAKE AFTER REPLACING THE ECU

If the trouble symptoms have not disappeared even after replacing the ECU, repeat the inspection procedure from the beginning.

CONNECTOR MEASUREMENT SERVICE POINTS

Turn the ignition switch to OFF when connecting and disconnecting the connectors, and turn the ignition switch to ON when measuring if there are no instructions to the contrary.

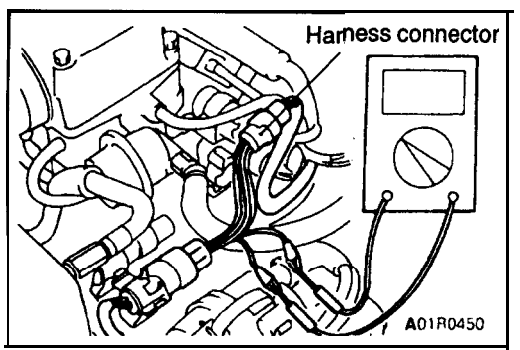

IF INSPECTING WITH THE CONNECTOR CONNECTED (WITH CIRCUIT IN A CONDITION OF CONTINUITY)

Waterproof Connectors

Be sure to use the special tool (harness connector). Never insert a test probe from the. harness side, because to do so will reduce the waterproof performance and result in corrosion.

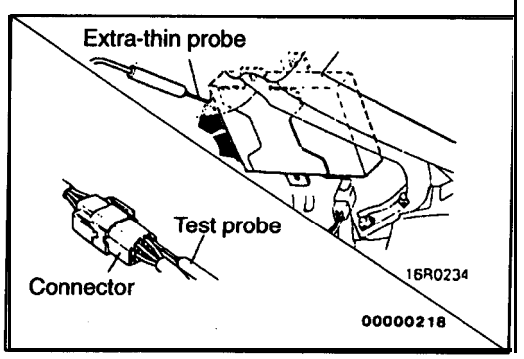

Ordinary (non-waterproof) Connectors

Check by inserting the test probe from'. the harness side. Note that if the connector (control unit, etc.) is too small to permit insertion of the test probe, it should not be forced; use a special tool (the extra-thin probe in the harness set for checking) for this purpose.

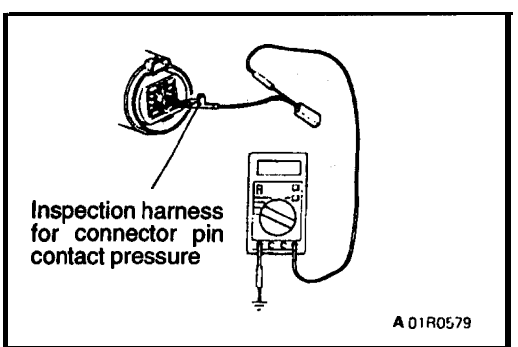

IF INSPECTING WITH THE CONNECTOR DISCONNECTED,

<When Inspecting a Female Pin>

Use the special tool (inspection harness for connector pin contact pressure in the harness set, for 'inspection).
The inspection harness for connector pin contact pressure' should be used. The test probe should never be forcibly inserted, as it may cause a defective contact.

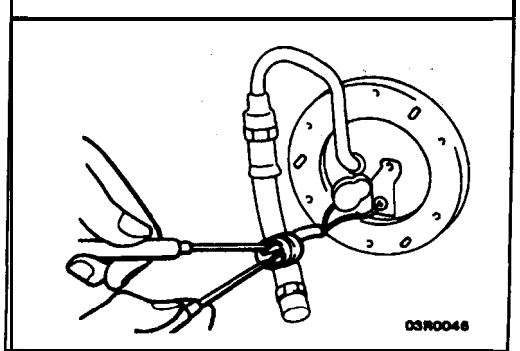

<When Inspecting a Male Pin>

Touch the pin directly with the test bar.

Caution

At this time, be careful not to short the connector pins with the test probes. To do so may damage the circuits inside the ECU.

Connector disconnected or improperly connected

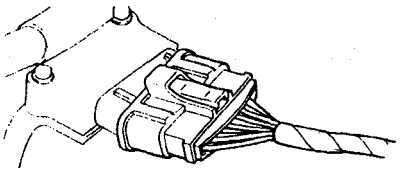

1650256

Defective connector contact

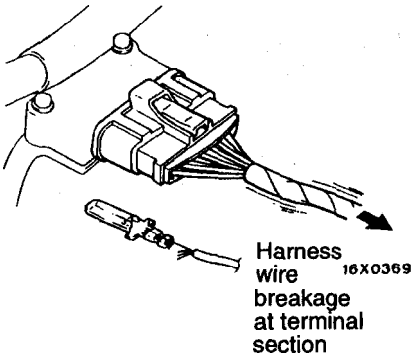

Low contact pressure

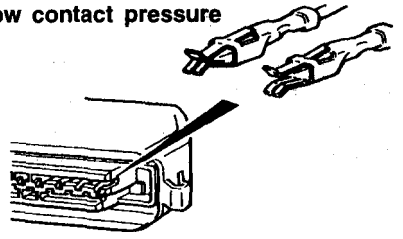

16'30254
00000219

CONNECTOR INSPECTION SERVICE POINTS

VISUAL INSPECTION

- Connector is disconnected or improperly connected
- Connector pins are pulled out
- Harness wire breakage due to harness tension at terminal section
- Low contact pressure between male and female terminals
- Low connection pressure due to rusted terminals or foreign matter lodged in terminals

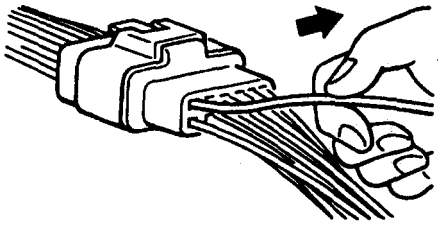

16R1317

CONNECTOR PIN INSPECTION'

If the connector pin stopper is damaged, the terminal connections (male and female pins) will not be perfect 'even when the connector body is connected, because the pins may pull, out of the back side of the connector. Therefore, gently pull the wires one by one to make sure that no pins pull out' of the connector.

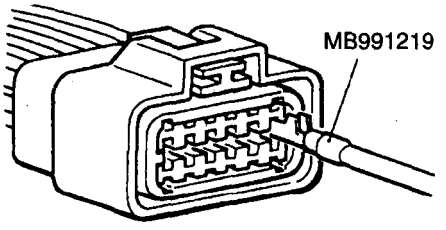

A16R1318

CONNECTOR ENGAGEMENT INSPECTION

Use the special tool (connector pin connection pressure inspection harness of the inspection harness set) to inspect' the engagement of the male pins and female pins. [Pin drawing force : 1 N (.2 lbs.) or more]

TSB Revision

HOW TO COPE WITH INTERMITTENT MALFUNCTIONS

Most intermittent malfunctions occur under certain conditions. If those conditions can be identified, the cause will be easier to find.

TO COPE WITH INTERMITTENT MALFUNCTION;

1. Ask the customer about the malfunction

Ask what it feels like, what it sounds like, etc. Then ask about driving conditions; weather, frequency of occurrence, and so on.

2. Determine the conditions from the customer's responses

Typically, almost all intermittent malfunctions occur from conditions like vibration, temperature and/or moisture change, poor connections. From the customer's replies, it should be reasoned which condition is influenced.

3. Use simulation test

In the cases of vibration or poor connections, use the simulation tests below to attempt to duplicate the customer's complaint. Determine the most likely circuit(s) and perform the simulation tests on the connectors and parts of that circuit(s). Be sure to use the inspection procedures provided for diagnostic trouble codes and trouble symptoms.

For temperature and/or moisture conditions related intermittent malfunctions, using common sense, try to change the conditions of the suspected circuit components, then use the simulation tests below,

4. Verify the intermittent malfunction is eliminated

Repair the malfunctioning part and try to duplicate the condition(s) again to verify the intermittent malfunction has been eliminated.

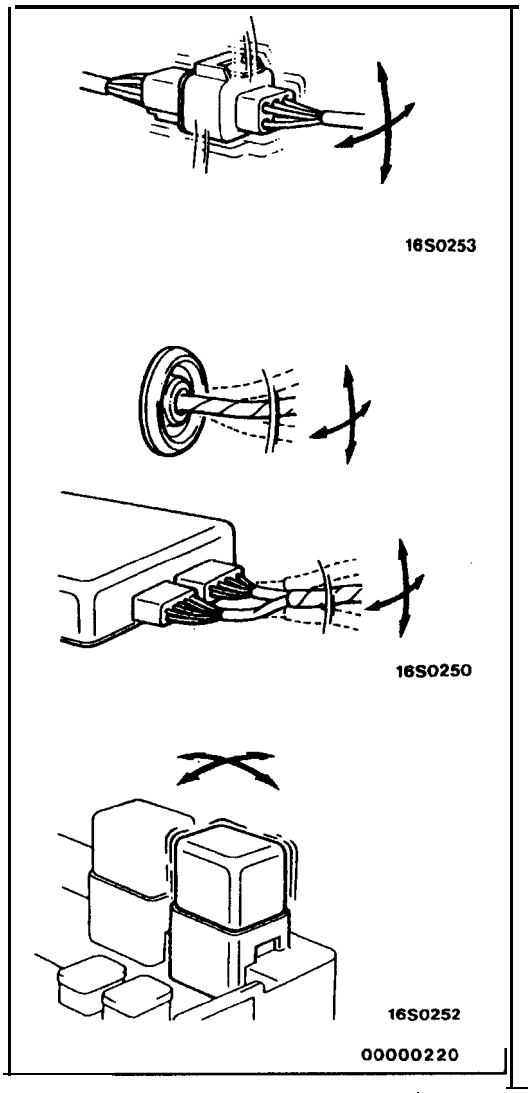

SIMULATION TESTS

For these simulation tests, shake, then gently bend, pull, and twist the wiring of each of these examples to duplicate the intermittent malfunction.

- Shake the connector up-and-down, and right-and-left.
- Shake the wiring harness up-and-down, and right-and-left.
- Vibrate the part or sensor.

NOTE

In case of difficulty in finding the cause of the intermittent malfunction, the data recorder function in the scan tool is effective.

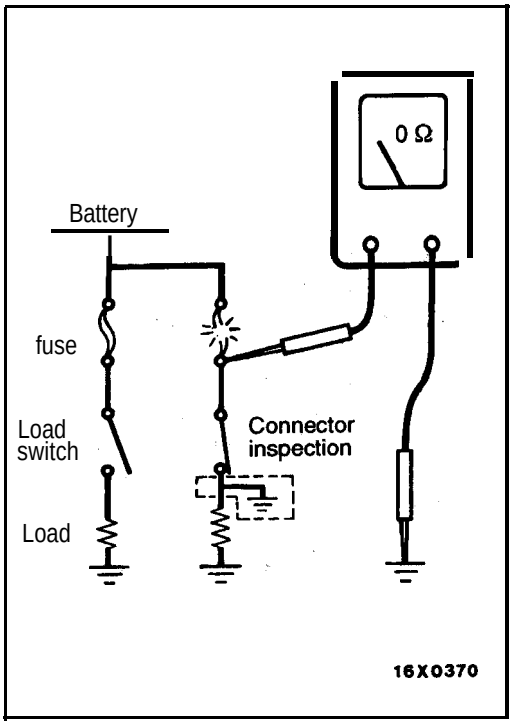

INSPECTION SERVICE POINTS FOR A BLOWN FUSE

Remove the fuse and measure the resistance between the load side of the fuse and ground. Set the switches of all circuits which are connected to this fuse to a condition of continuity. If the resistance is almost 0 Ω at this time, there is a short somewhere between these switches and the load. If the resistance is not 0 Ω, there is 'no short at the present time, but a momentary short has probably caused the fuse to blow.

The main causes of a short circuit are the following.

- Harness being clamped by the vehicle-body
- Damage to the outer casing 'of the harness due to wear or heat
- Water getting into the connector or circuitry ,
- Human error (mistakenly shorting a circuit, etc.)

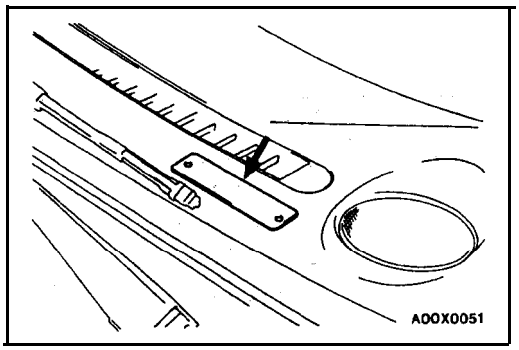

VEHICLE IDENTIFICATION

00100040189

VEHICLE IDENTIFICATION NUMBER LOCATION

The vehicle identification number (V.I.N.) is located on a plate attached to the left top side of the instrument panel.

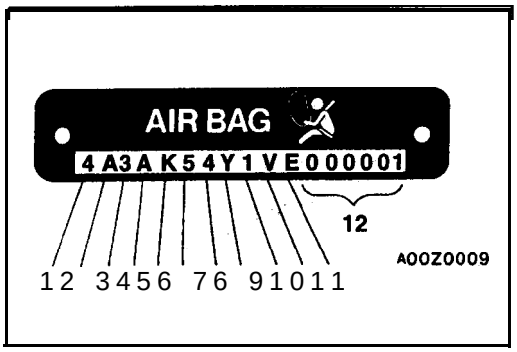

VEHICLE IDENTIFICATION CODE CHART PLATE

All vehicle identification numbers contain 17 digits. The vehicle number is a code which tells country, make, vehicle type, etc.

No.	Items	Contents
1	Country	4: USA
2	Make	A: Mitsubishi
3	Vehicle type	3: Passenger car
4	Others	A: Drive and passenger air bags
5	Line	K: ECLIPSE <FWD>
		L: ECLIPSE <AWD>
		X: ECLIPSE SPYDER
6	Price class	2: Low
		3: Medium
		4: High
		5: Premium
7	Body	4: 3-door hatchback
		5: 2-door "convertible"
8	Engine	Y: 2.0dm^3 (122.0cu.in.) [DOHC-MFI]
		F: 2.0dm^3 (122.0cu.in.) [DOHC-MFI-Turbo]
		G: 2.4dm^3 (146.5cu.in.) [SOHC-MFI]
9	Check digits*	1 2 3 4 5 6 7 8 9 X
10	Model year	V: 1997
11	Plant	E: Mitsubishi Motor Manufacturing of America, Inc.
12	Serial number	000001 to 999999

NOTE
* "Check digit" means a single number or letter X used to verify the accuracy of transcription of vehicle identification number.

VEHICLE IDENTIFICATION NUMBER LIST

VEHICLES FOR FEDERAL

V.I.N. (except sequence number)	Brand	Engine displacement	Model code
4A3AK24Y_VE	Mitsubishi Eclipse <FWD>	2.0 dm^3 (122.0 cu.in.) [DOHC-MFI (420A)]	D31AMNSML4M D31AMRSML4M
4A3AK34Y_VE			D31AMNJML4M D31AMRJML4M
4A3AK44Y_VE			D31AMNHML4M D31AMRHML4M
4A3AK54F_VE		2.0 dm^3 (122.0 cu.in.) [DOHC-MFI-Turbo (4G63)]	D32AMNGFL4M D32AMRGFL4M
4A3AL54F_VE	Mitsubishi Eclipse <AWD>		D33AMNGFL4M D33AMRGFL4M
4A3AX55F_VE	Mitsubishi Eclipse Spyder	2.0 dm^3 (122.0 cu.in.) [DOHC-MFI-Turbo (4G63)]	D38ABNGFL4M D38ABRGFL4M
4A3AX35G_VE		2.4 dm^3 (146.5 cu.in.) [SOHC-MFI (4G64)]	D39ABNJEL4M D39ABRJEL4M

VEHICLES FOR CALIFORNIA

V.I.N. (except sequence number)	Brand	Engine displacement	Model code
4A3AK24Y_VE	Mitsubishi Eclipse <FWD>	2.0 dm^3 (122.0 cu.in.) [DOHC-MFI (420A)]	D31AMNSML9M D31AMRSML9M
4A3AK34Y_VE			D31AMNJML9M D31AMRJML9M
4A3AK44Y_VE			D31AMNHML9M D31AMRHML9M
4A3AK54F_VE		2.0 dm^3 (122.0 cu.in.) [DOHC-MFI-Turbo (4G63)]	D32AMNGFL9M D32AMRGFL9M
4A3AL54F_VE	Mitsubishi Eclipse <AWD>		D33AMNGFL9M D33AMRGFL9M
4A3AX55F_VE	Mitsubishi Eclipse Spyder	2.0 dm^3 (122.0 cu.in.) [DOHC-MFI-Turbo (4G63)]	D38ABNGFL9M D38ABRGFL9M
4A3AX35G_VE		2.4 dm^3 (146.5 cu.in.) [SOHC-MFI (4G64)]	D39ABNJEL9M D39ABRJEL9M

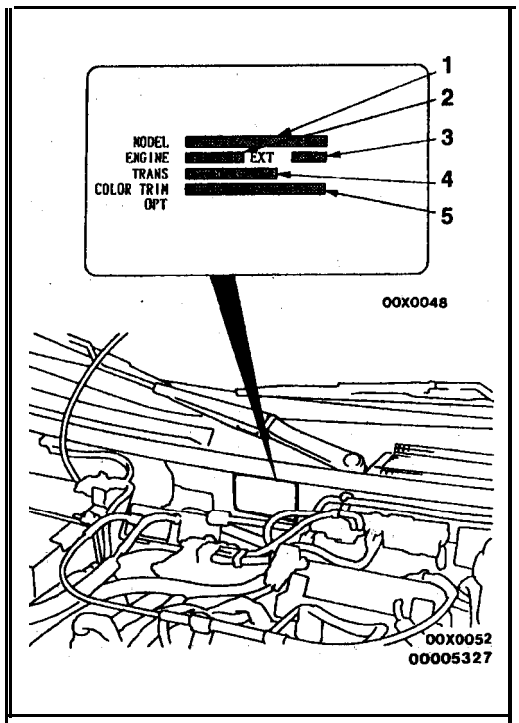

VEHICLE INFORMATION CODE PLATE

Vehicle information code plate is riveted onto the bulkhead in the engine compartment.
The place shows model code, engine model, transaxle model, and body color code.

No.	Item	Contents	
1	MODEL	D32AM	D32AM: Vehicle model
			RGFL4E: Model series
2	ENGINE	4G63	Engine model
3	EXT	CA6A	Exterior code
4	TRANS	F4A33	Transaxle code
5	COLOR TRIM OPT	R25 87V 03V	R25: Body color code
			87V: Interior code
			03V: Equipment code

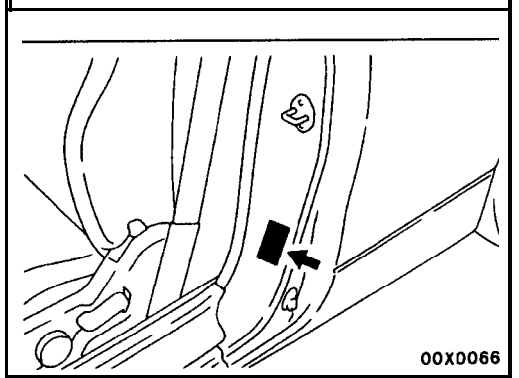

VEHICLE SAFETY CERTIFICATION LABEL

1. The vehicle safety certification label is attached to face of left door pillar.
2. This label indicates Gross Vehicle Weight Rating (G.V.W.R.), Gross Axle Weight Rating (G.A.W.R.) front, rear and Vehicle Identification Number (V.I.N.).

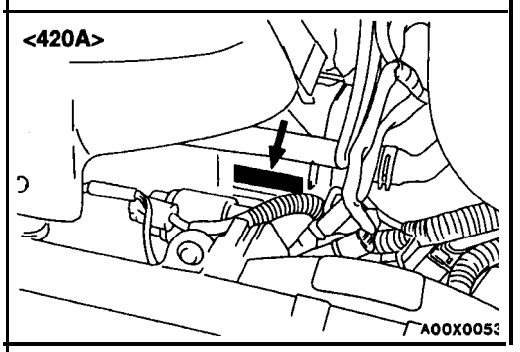

ENGINE MODEL STAMPING

1. The engine model number is stamped at the front side on the top edge of the cylinder block as shown in the following.

Engine model	Engine displacement
420A	2.0 dm^3 (122.0 cu.in.)
4G63	2.0 dm^3 (122.0 cu.in.)
4G64	2.4 dm^3 (146.5 cu.in.)

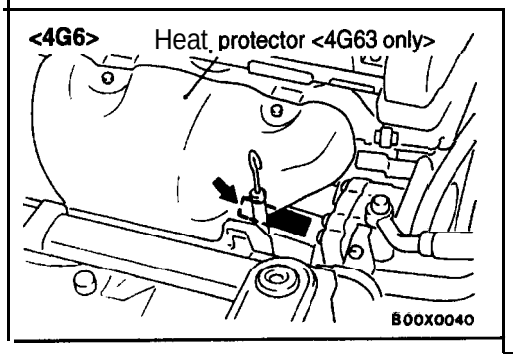

2. The 4G6 and 420A engine serial number is stamped near the engine model number, and the serial number cycles, as shown below.

Engine serial number	AA0201 to YY9999

Theft protection label

For original parts

MITSUBISHI MITSUBISHI MITSUBISHI

0020014

For replacement parts

RADOT

MITSUBISHI

0020015

00004743

THEFT PROTECTION

In order to protect against theft, a Vehicle Identification Number (VIN) is stamped in, or attached as a label to, the following major parts of the engine and transaxle, as well as main outer panels:

Engine cylinder block, Transaxle housing. Fender, Door, Quarter panel, Hood, Liftgate, Trunk lid, Bumpers

In addition, a theft-protection label is attached to replacement parts for the body outer panel main components, and the same data are stamped into replacement parts for the engine and the transaxle.

Cautions regarding panel repairs:'

1. **When repainting original parts, do so after first masking the theft-protection label, and, after painting, be sure to peel off the masking tape.**
2. **The theft-protection label for replacement parts is covered by masking tape, so such part&an be painted as is. The masking tape should be removed after painting is finished.**
3. **The theft-protection label should not be removed from original parts or replacement parts.**

LOCATIONS

Target area (A: for original equipment parts, B: for replacement parts)

Engine

<2.0L Engine (Non-turbo)>

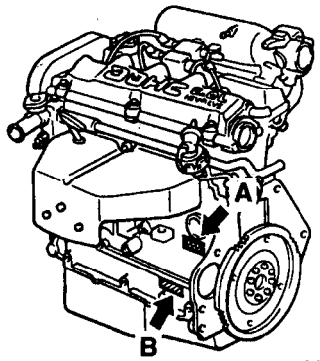

00X0095

<2.0L Engine (Turbo)>

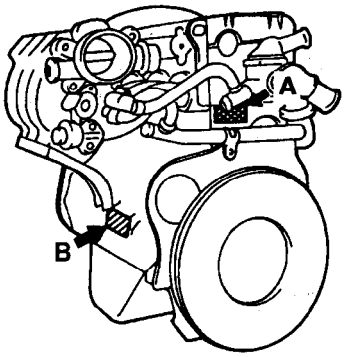

00X0050

<2.4L Engine>

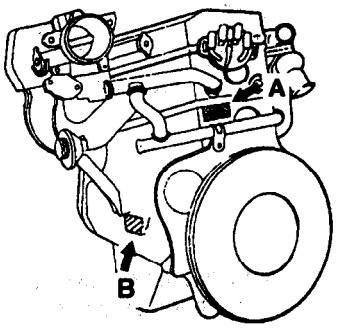

00A0231

00004111

Manual transaxle

<2.0L Engine (Non-turbo)>

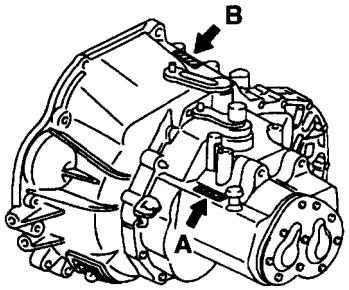

00X0092

<2.0L Engine (Turbo) and 2.4L Engine>

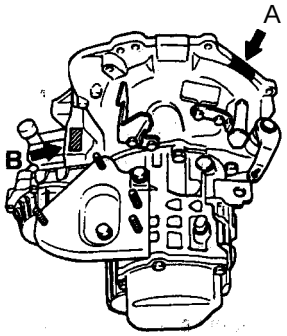

00X0049

00003676

Automatic transaxle

<2.0L Engine (Non-turbo)>

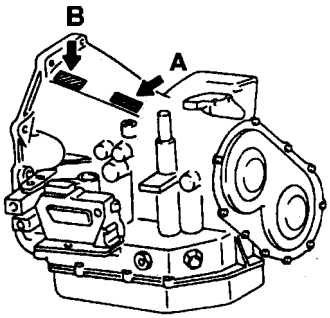

00X0093

<2.0L Engine (Turbo) and 2.4L Engine>

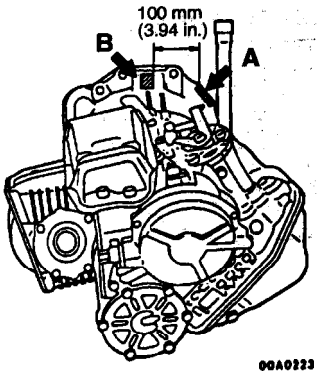

00A0223

00003679

TSB Revision

Target area (A: for original equipment parts, B: for replacement parts)

Fender

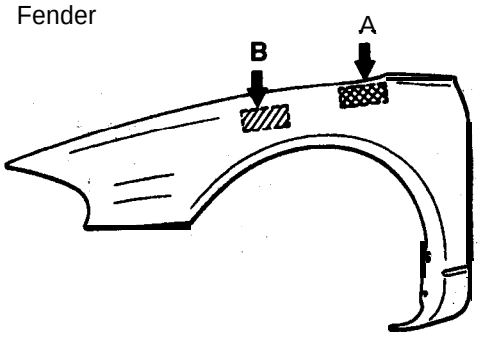

31X0321

Door

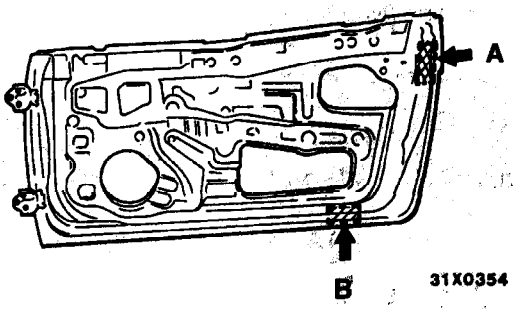

31X0354
00003680

The illustration indicates left hand side, outer.
Right hand side is symmetrically opposite.

Quarter panel

The label is attached at the inner side of the parts shown in the figure.

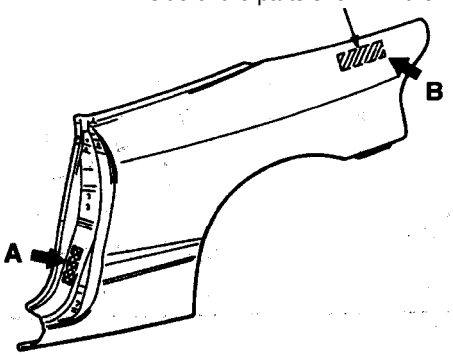

A31X0325

The illustration indicates right hand side, outer.
Left hand side is symmetrically opposite.

Hood

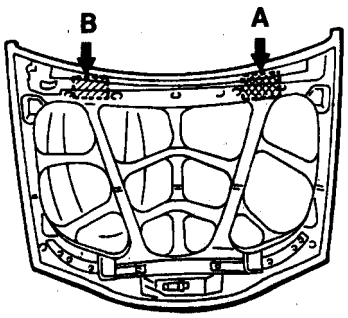

31X0356

Liftgate

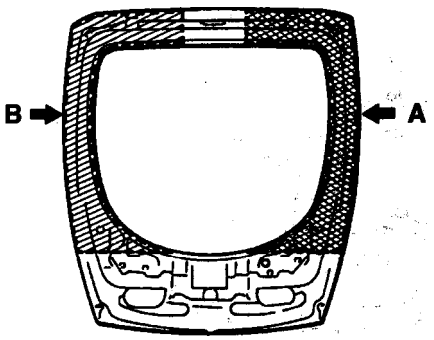

31X0473
00003661

Target area (A: for original equipment parts, B: for replacement parts)

Front bumper

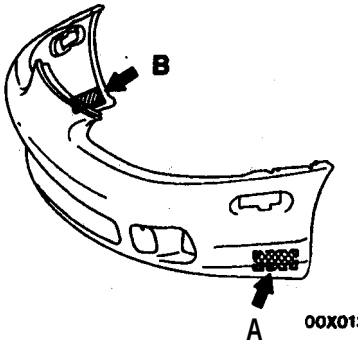

Rear bumper

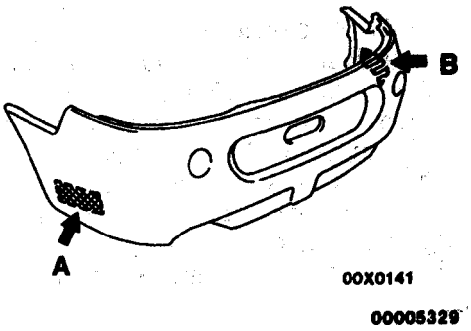

Trunk lid

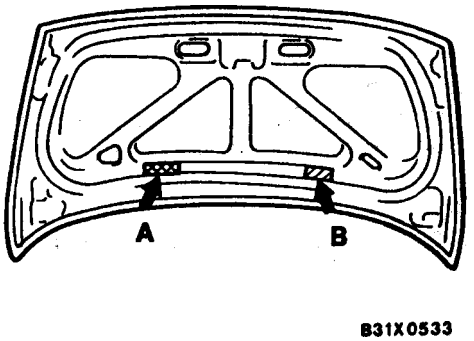

PRECAUTIONS BEFORE SERVICE

00100050083

SUPPLEMENTAL RESTRAINT SYSTEM (SRS)

1. Items to follow when servicing SRS
   (1) Be sure to read GROUP 52B – Supplemental Restraint System (SRS).
   For safe operations, please follow the directions and heed all warnings.
   (2) Always use the designated special tools and test equipment.
   (3) Wait at least 60 seconds after disconnecting the battery cable before" doing any further work;
   The SRS system is designed to retain enough voltage to deploy the air bag even after the battery has been disconnected. Serious injury may result from unintended air bag deployment if work is done on the SRS system immediately after the battery cable is disconnected.
   (4) Never attempt to disassemble or repair the SRS components (SRS-ECU air bag module and clock spring). If faulty, replace it.
   (5) Warning labels must be heeded when servicing or handling SRS components. Warning labels are located in the following locations.
   - Sun visor
   - Glove box
   - SRS-ECU
   - Steering wheel
   - Air bag module
   - Clock spring
   - Steering gear and linkage clamp

   (6) Store components removed from the SRS in a clean and dry place.
   The air bag module should be stored on a flat surface and placed so that the pad surface is' facing upward.
   Do not place anything on top of it.
   (7) Be sure to deploy the air bag before disposing of the air bag'module or disposing of a vehicle equipped with an air bag. (Refer to GROUP 52B – Air Bag Module Disposal Procedures.)
   (8) Whenever you finish servicing the SRS, check the SRS warning light operation to make sure that the system functions properly.
2. Observe the following when carrying out operations on places where SRS components are installed,' including operations not directly related to the SRS air bag.
   (1) When removing or installing parts do not allow any impact or shock to the SRS components.
   (2) SRS components should not be subjected to heat over 93°C (200°F), so remove the SRS components before drying or baking the vehicle after painting.
   After re-installing them, check the SRS warning light operation to make sure that the system functions properly.

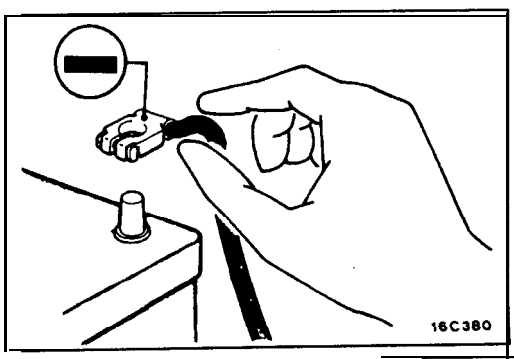

SERVICING THE ELECTRICAL SYSTEM

1. Note the following before proceeding with work on the electrical system.
   Note that the following must never be done:
   Unauthorized modifications of any electrical device or wiring, because such modifications might lead to a vehicle malfunction, over-capacity or short-circuit that could result in a fire in the vehicle.
2. When servicing the electrical system, disconnect the negative cable terminal from the battery.

TSB Revision

Caution

1. **Before connecting or disconnecting the negative cable, be sure to turn off the ignition switch and the lighting switch.**
   (if this is not done, there is the possibility of semi-conductor parts being damaged.)
2. **After completion of the work steps [when the battery's negative (–) terminal is connected], warm up the engine and allow it to idle for approximately five minutes under the conditions described below, in order to stabilize the engine control conditions, and then check to be sure that idling' is satisfactory.**

   Engine coolant temperature: 80–95°C (176–203°F)
   Lights, electric fans, accessories: OFF
   Transaxle: Neutral position
   (A/T models: "N" or "P")
   Steering wheel: neutral (center) position

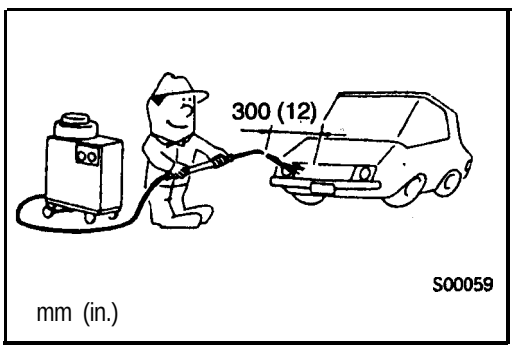

VEHICLE WASHING

If high-pressure car-washing equipment or steam car-washing equipment is used to wash the vehicle, be sure to maintain the spray nozzle at a distance of at 'least 300 mm (12 in.) from any plastic parts and all opening parts (doors, luggage compartment, etc.).

APPLYING ANTI-CORROSION AGENT OR OTHER UNDERCOAT AGENTS.

Be careful not to adhere oil or grease to the heated oxygen sensor. If adhered, the sensor may malfunction.
Protect the heated oxygen sensor with a cover before applying anti-corrosion agent, etc.

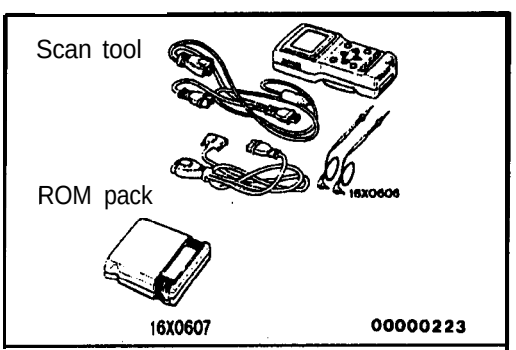

SCAN TOOL

To operate the scan tool, refer to the "MUT-II OPERATING INSTRUCTIONS".

Caution
Turn the ignition switch off befoie connecting and disconnecting the scan tool.

TSB Revision

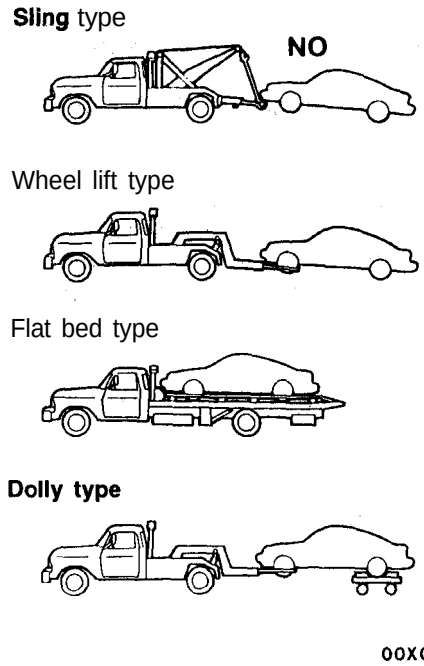

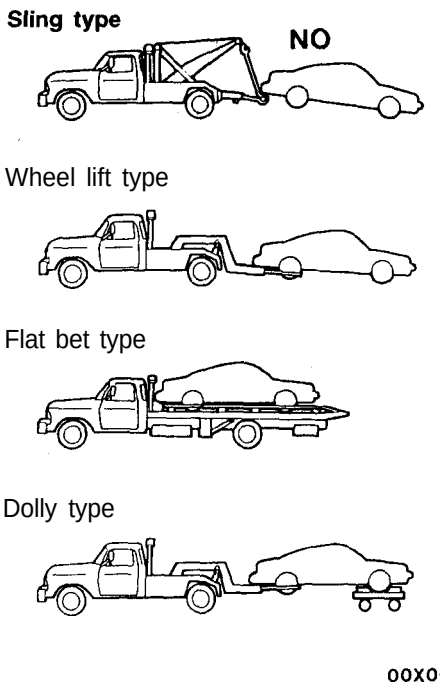

TOWING AND HOISTING

00100080068

<FWD>

WRECKER TOWING RECOMMENDATION

FRONT TOWING PICKUP

Caution

This vehicle cannot be towed by a wrecker using sling type equipment to prevent the bumper from deformation. if this vehicle is towed, use wheel lift type, fiat bed type or dolly type equipment.

The vehicle may be towed on its rear wheels for extended distances provided the parking brake is released. It is recommended that vehicles be towed using the front pickup whenever possible.

REAR TOWING PICKUP

Caution

1. **This vehicle cannot be towed by a wrecker using sling-type equipment to prevent the bumper from 'deformation.**
   if this vehicle is towed, use wheel lift type, flat bed type or doily type equipment.
2. **Do not use steering column lock to secure front wheel position for towing.**
3. **Make sure the transaxle is in Neutral if vehicle will be with drive wheels on the ground.**

Automatic transaxle vehicle may be towed on the front wheels at speeds not to exceed 50 km/h (30 mph) for distances not to exceed 30 km (18 miles).

C a u t i o n

if these limits cannot be met, the front wheels must be placed on a tow doily or a fiat bet type must be used.

TOWING WHEN KEYS ARE, NOT, AVAILABLE

When a locked vehicle must be towed and keys are not available, the vehicle may be lifted and towed from the front; provided the parking brake is released. If not released,. the rear wheels should be placed on a tow dolly.

SAFETY PRECAUTIONS

The following precautions should be taken when towing the vehicle.

1. DO NOT LIFT OR TOW THE VEHICLE BY ATTACHING TO OR WRAPPING AROUND THE BUMPER.
2. Any loose or protruding parts of damaged vehicle such as hoods, doors, fenders, trim, etc., should be secured or removed prior to moving the vehicle.
3. Operator should refrain from going under a vehicle while it is lifted by the towing equipment, unless the vehicle is adequately supported by safety stands.
4. Never allow passengers to ride in a towed vehicle.
5. State and local rules and regulations must be followed when towing a vehicle.

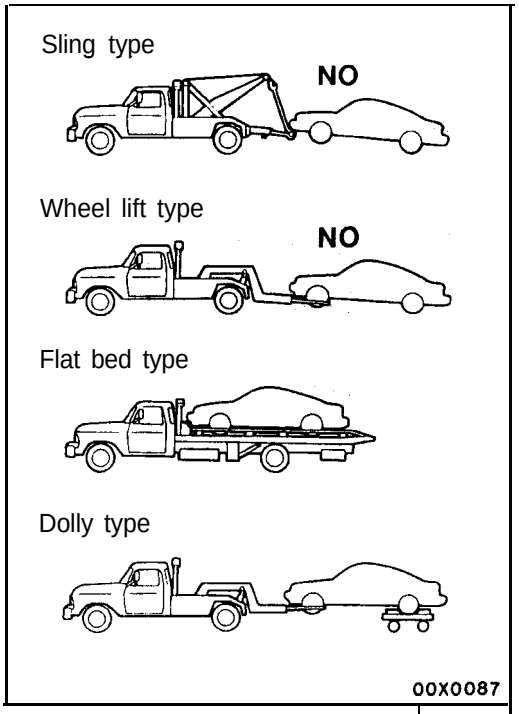

<AWD>

Caution

1. **If only the front wheels or only. the rear wheels are lifted for towing, the bumper will be damaged. In addition, lifting of the rear wheels causes the oil to flow forward, and may result in heat damage to the rear bushing of the transfer, and so should never be done.**
2. **Do not tow the vehicle 'with "only its front wheels or only the rear wheels on a rolling dolly, or the viscous coupling will be damaged. In a worst case, the vehicle may jump forward suddenly.**
3. **If this vehicle is towed, use flat bed type or dolly type equipment.**

LIFTING, JACKING SUPPORT LOCATION

FLOOR JACK

<FWD>

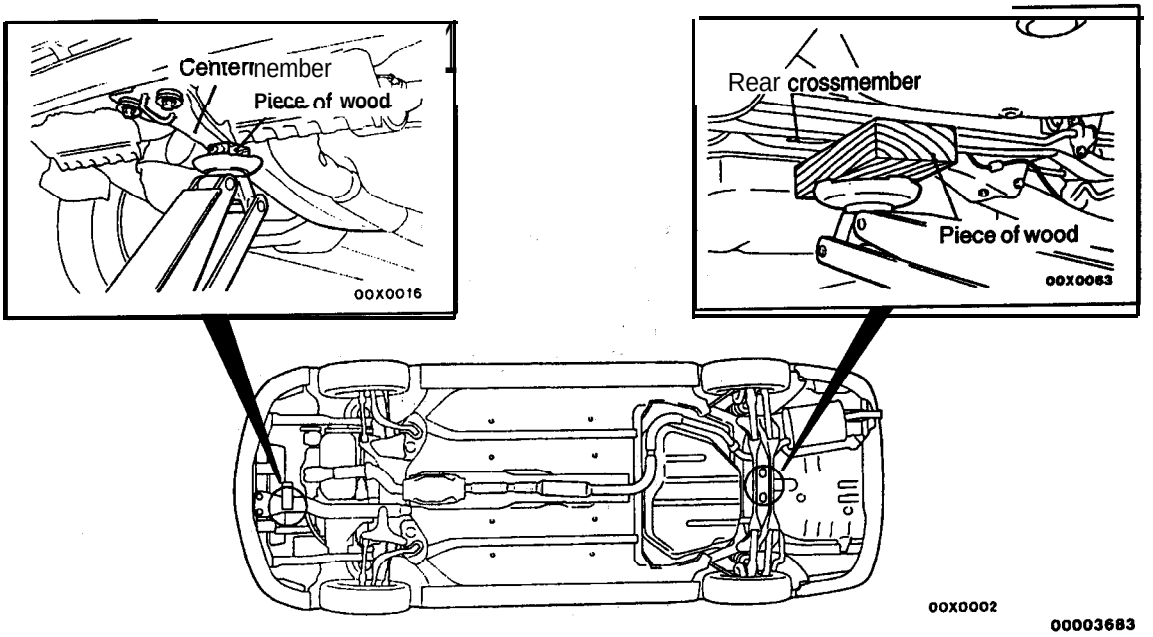

<AWD>

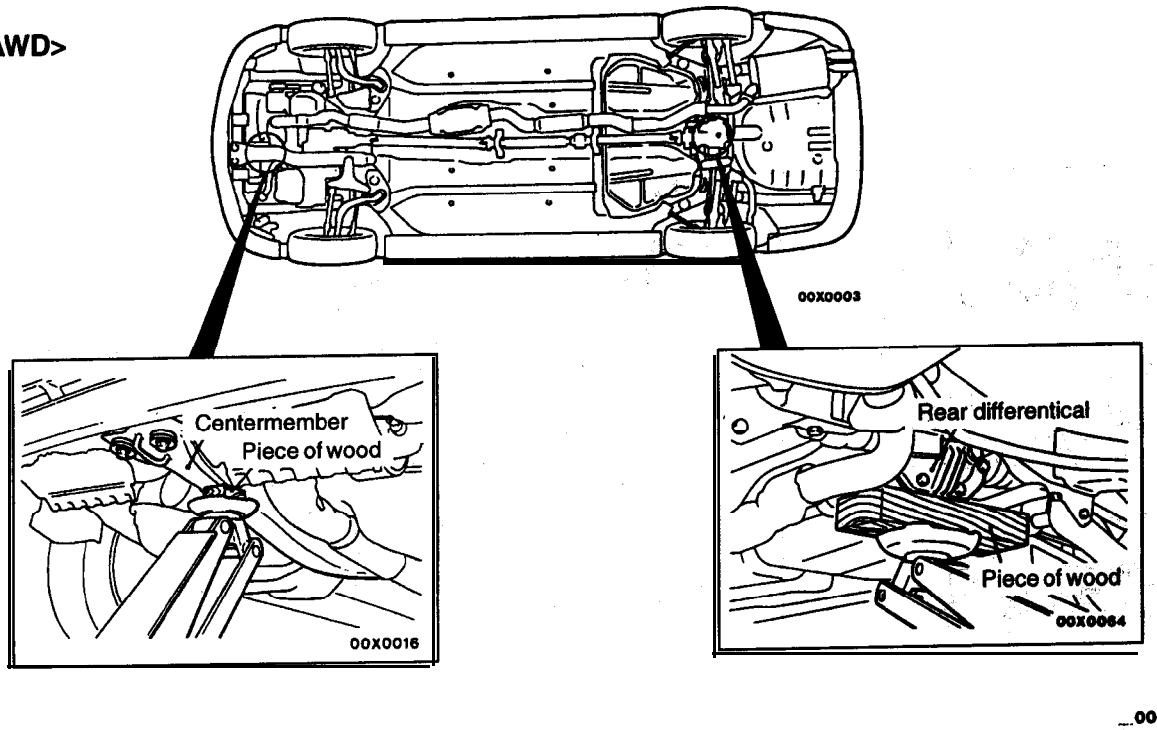

Caution
Never support any point other than the specified one, or it will be deformed.

TSB Revision

RIGID RACK

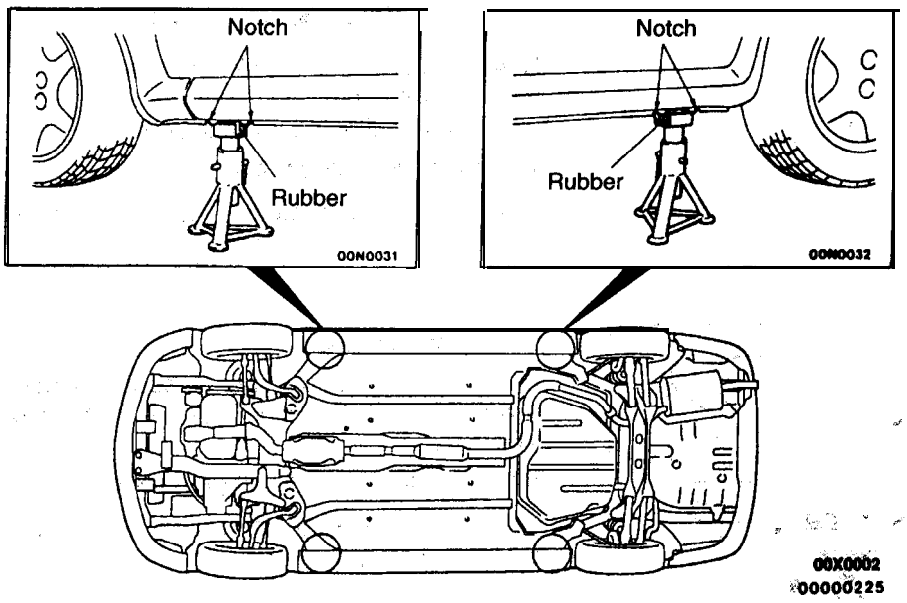

Caution

For lifting, put rubber or similar between the side sill and rigid rack, or the side sill area will be damaged.

POST TYPE

Special care should be taken when raising the vehicle on a frame contact type hoist. The hoist must be equipped with the proper adapters in order to support the vehicle at the proper locations.

Caution

When service procedures require removing rear suspension, fuel tank and spare tire, place additional weight on rear end of vehicle or anchor vehicle to hoist to prevent tipping of center of gravity changes.

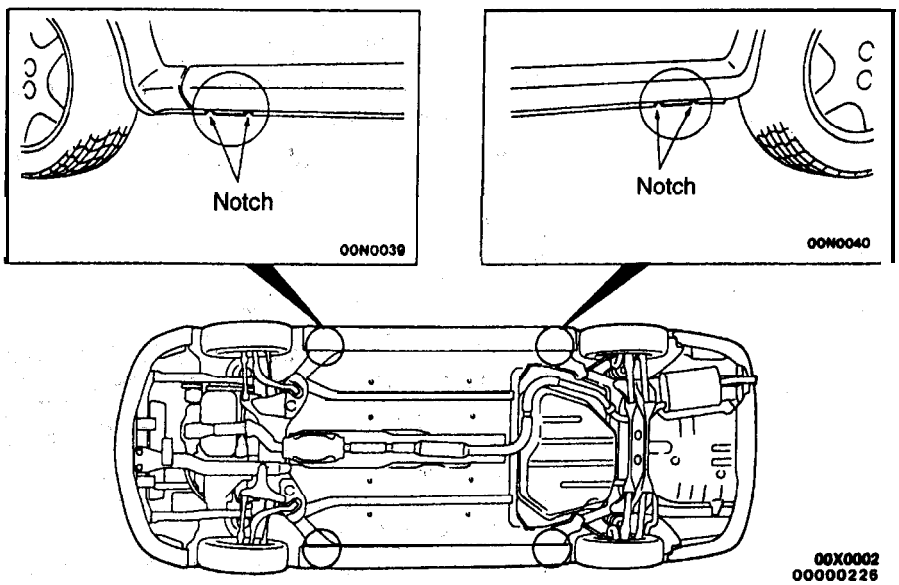

TSB Revision

SPECIAL HANDLING INSTRUCTIONS FOR AWD MODELS

00100740010

Speedometer tests, brake tests and wheel balance measurement for full-time AWD vehicles should be carried out according to the following procedures.

SPEEDOMETER TEST

Refer to GROUP 54 – Combination Meter.

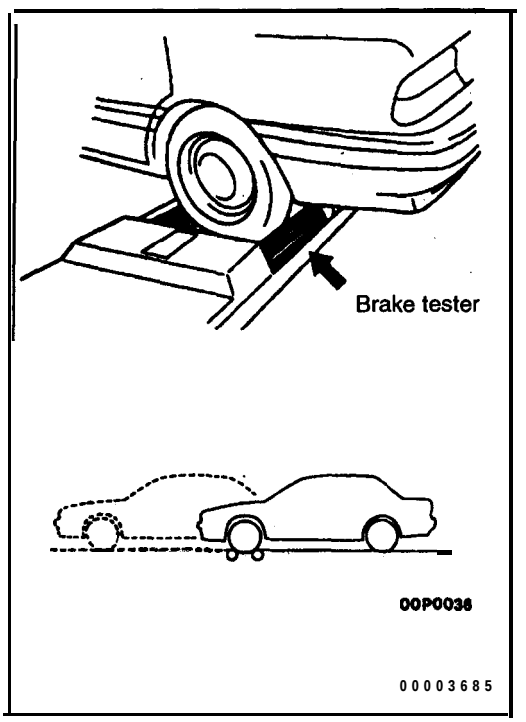

BRAKE TEST

In order to stabilize the viscous coupling's dragging force, the brake test should always be conducted after the speedometer test.

FRONT WHEEL MEASUREMENTS

1. Place the front wheels on' the brake tester.
2. Perform the brake test.

   Caution
   The rear wheels should remain on the ground.

3. If the brake dragging force exceeds the specified value, jack up the vehicle and manually rotate each wheel -to check the rotation condition of each wheel.

   NOTE
   If the brake dragging force exceeds the specified value, the cause may be the effect of the viscous coupling's dragging force, so jack up the front wheels and check the rotation condition of the wheels in this state for no effect by the viscous coupling's dragging force.

REAR WHEEL MEASUREMENTS

After placing the rear wheels on the brake tester, follow the same procedures as for the front wheel measurements.

Brake force of AWD models with VCU

If both front wheels are locked and rear wheel measurement is difficult, the measurement in this condition can be considered to comprise the total.

Items	Brake force	
Total for left and right rear wheels	At 90 kg (198 lbs.) pedal depression force	20 % or more of rear axle weight
Difference for left and right front wheels/difference for left and right rear wheels	8% or less of rear axle weight	8% or less of rear axle weight
Total for front and rear wheels	At 90 kg (198 lbs.) pedal depression force	50% or more of the vehicle's weight

or...

Braking-stop distance	At primary velocity of 50 km/h (31 mph): Within 15.0 m (49.2 ft.)

TSB Revision

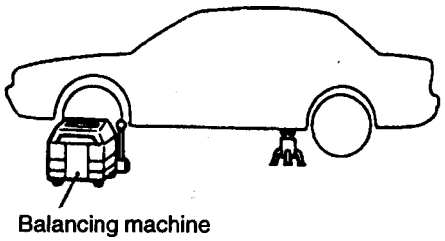

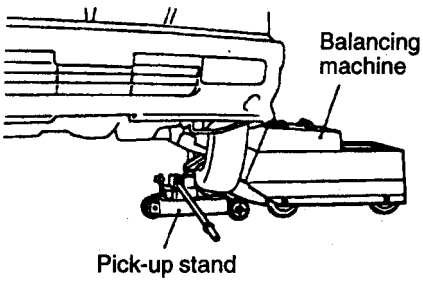

WHEEL BALANCE

FRONT WHEEL MEASUREMENTS

1. Jack up the rear wheels, and place an axle stand at the designated part of the side sill.
2. Jack up the front wheels and set, a pick-up stand and balancing machine in place.

   Caution
   1. **Set so that the front and rear of the vehicle are at the same height.**
   2. **Release the parking brake.**
   3. **Rotate each wheel manually and check to be sure that there is no dragging.**

3. Use the engine to drive the tyres, and then make the measurement.

   Caution
   1. **If an error is indicated in the state of engine drive, motor drive can be used concurrently.**
   2. **Do not operate the clutch suddenly, or increase or reduce speed suddenly during the work.**

REAR WHEEL MEASUREMENTS

1. Jack up the front wheels, and 'place an, 'axle stand at the designated part of the side sill.'
2. Jack up the rear wheels, and then, after setting a pick-up stand and balancing machine in place, follow the same procedure as for front wheel measurements.

GENERAL DATA AND SPECIFICATIONS

00199999191

ECLIPSE

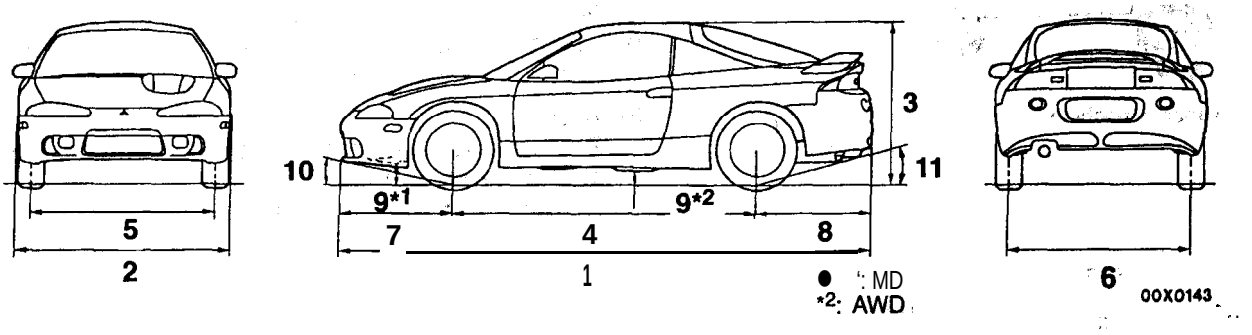

GENERAL SPECIFICATIONS
<FWD>

Items			D31AMNSML4M D31AMNSML9M	D31AMRSML4M D31AMRSML9M	D31AMNJML4M D31AMNJML9M	D31AMRJML4M D31AMRJML9M
Vehicle dimensions	Overall length mm (in.)	1	4,380 (172.4)	4,380 (172.4)	4,380 (172.4)	4,380 (172.4)
	Overall width mm	2	1,735 (68.3)	1,735 (68.3)	1,735 (68.3)	1,735 (68.3)
	Overall height (unladen) mm (in.)	3	1,295 (51 .0)	1,295 (51 .0)	1,295 (51 .0)	1,295 (51 .0)
	Wheelbase mm (in.)	4	2,510 (98.8)	2,510 (98.8)	2,510 (98.8)	2,510 (98.8)
	Tread – Front mm (in.)	5	1,515 (59.6)	1,515 (59.6)	1,515 (59.6)	1,515 (59.6)
	Tread – Rear mm (in.)	6	1,510 (59.4)	1,510 (59.4)	1,510 (59.4)	1,510 (59.4)
	Overhang – Front mm (in.)	7	935 (36.8)	935 (36.8)	935 (36.8)	935 (36.8)
	Overhang – Rear mm (in.)	8	935 (36.8)	935 (36.8)	935 (36.8)	935 (36.8)
	Minimum running ground clearance mm (in.)	9	145 (5.7)	145 (5.7)	145 (5.7)	145 (5.7)
	Angle of approach degrees	10	11.8	11.8	11.8	11.8
	Angle of departure degrees	11	15.8	15.8	15.8	15.8
Vehicle weight kg (lbs.)	Curb weight		1,236 (2,725)	1,266 (2,791)	1,245 (2,745)	1,275 (2,811)
	Gross vehicle weight rating		1,660 (3,660)	1,660 (3,660)	1,690 (3,726)	1,690 (3,726)
	Gross axle weight rating – Front		1 ,010 (2,227)	1 ,010 (2,227)	1,010 (2,227)	1,010 (2,227)
	Gross axle weight rating – Rear		800 (1,764)	800 (1,764)	800 (1,764)	800 (1,764)
Seating capacity			4	4	4	4
Engine	Model No.		420A (DOHC)	420A (DOHC)	420A (DOHC)	420A (DOHC)
	Piston displacement cm^3 (cu.in.)		1,996 (121.8)	1,996 (121.8)	1,996 (121.8)	1,996 (121.8)
Transaxle	Model No.		F5MC1	F4AC1	F5MC1	F4AC1
	Type		5-speed manual	4-speed automatic	5-speed manual	4-speed automatic
Fuel system	Fuel supply system		Electronically controlled multi-port fuel injection	Electronically controlled multi-port fuel injection	Electronically controlled multi-port fuel injection	Electronically controlled multi-port fuel injection

Items			D31AMNHML4M D31 AMNHML9M	D31AMRHML4M D31AMRHML9M	D32AMNGFL4M D32AMNGFL9M	D32AMRGFL4M D32AMRGFL9M
Vehicle dimensions	Overall length mm (in.)	1	4,380 (172.4)	4,380 (172.4)	4,380 (172.4)	4,380 (172.4)
	Overall width mm (in.)	2	1,735 (68.3) 1,740 (68.5)*1	1,735 (68.3) 1,740 (68.5)*1	1,740 (68.5)	1,740 (68.5)
	Overall height (unladen) mm (in.)	3	1,295 (51.0)	1,295 (51.0)	1,295 (51.0)	1,295 (51.0)
	Wheelbase mm (in.)	4	2,510 (98.8)	2,510 (98.8)	2,510 (98.8)	2,510 (98.8)
	Tread – Front mm (in.)	5	1,515 (59.6)	1,515 (59.6)	1,515 (59.6)	1,515 (59.6)
	Tread – Rear mm (in.)	6	1,510 (59.4)	1,510 (59.4)	1,510 (59.4)	1,510 (59.4)
	Overhang – Front mm (in.)	7	935 (36.8)	935 (36.8)	935 (3.6.8)	935 (36.8)
	Overhang – Rear mm (in.)	8	935 (36.8)	935 (36.8)	935 (36.8)	935 (36.8)
	Minimum running ground clearance mm (in.)	9	145 (5.7)	145 (5.7)	145 (5.7)	145 (5.7)
	Angle of approach degrees	10	11.8	11.8	11.8	11.8
	Angle of departure degrees	11	15.8	15.8	15.8	15.8
Vehicle weight kg (lbs.)	Curb weight		1,285 (2,833)	1,315 (2,899)	1,322 (2,915)	1,357 (2,992)
	Gross vehicle weight rating		1,750 (3,858)	1,750 (3,858)	1,750 (3,858)	1,750 (3,858)
	Gross axle weight rating – Front		1,010 (2,227)	1,010 (2,227)	1,025 (2,260)	1,025 (2,260)
	Gross axle weight rating – Rear		800 (1,764)	800 (1,764)	775 (1,709)	775 (1,709)
Seating capacity			4	4	4	4
Engine	Model No.		420A (DOHC)	420A (DOHC)	4G63 (DOHC)	4G63 (DOHC)
	Piston displacement cm^3 (cu.in.)		1,996 (121.8)	1,996 (121.8)	1,997 (121.9)	1,997 (121.9)
Transaxle	Model No.		F5MC1	F4AC1	F5M33	F4A33
	Type		5-speed manual	4-speed automatic	5-speed manual	4-speed automatic
Fuel system	Fuel supply system		Electronically controlled multi-port fuel injection	Electronically controlled multi-port fuel injection	Electronically controlled multi-port fuel injection	Electronically controlled multi-port fuel injection

NOTE
- 1: Vehicles with side air dam.

<AWD>

Items			D33AMNGFL4M D33AMNGFL9M	D33AMRGFL4M D33AMRGFL9M
Vehicle dimensions	Overall length mm (in.)	1	4,380 (172.4)	4,380 (172.4)
	Overall width mm (in.)	2	1,740 (68.5)	1,740 (68.5)
	Overall height (unladen) mm (in.)	3	1,310 (51.6)	1,310 (51.6)
	Wheelbase mm (in.)	4	2,510 (98.8)	2,510 (98.8)
	Tread – Front mm (in.)	5	1,515 (59.6)	1,515 (59.6)
	Tread – Rear mm (in.)	6	1,510 (59.4)	1,510 (59.4)
	Overhang – Front mm (in.)	7	935 (36.8)	935 (36.8)
	Overhang – Rear mm (in.)	8	935 (36.8)	935 (36.8)
	Minimum running ground clearance mm (in.)	9	145 (5.7)	145 (5.7)
	Angle of approach degrees	10	12.2	12.2
	Angle of departure degrees	11	16.2	16.2
Vehicle weight kg (lbs.)	Curb weight		1,427 (3,146)	1,462 (3,223)
	Gross vehicle weight rating		1,850 (4,079)	1,850 (4,079)
	Gross axle weight rating – Front		1,050 (2,315)	1,050 (2,315)
	Gross axle weight rating – Rear		850 (1,874)	850 (1,874)
Seating capacity			4	4
Engine	Model No.		4G63 (DOHC)	4G63 (DOHC)
	Piston displacement cm^3 (cu.in.)		1997 (121.9)	1997 (121.9)
Transaxle	Model No.		W5M33	W4A33
	Type		5-speed manual	4-speed automatic
Fuel system	Fuel supply system		Electronically controlled multiport fuel injection	Electronically controlled multiport fuel injection

ECLIPSE SPYDER

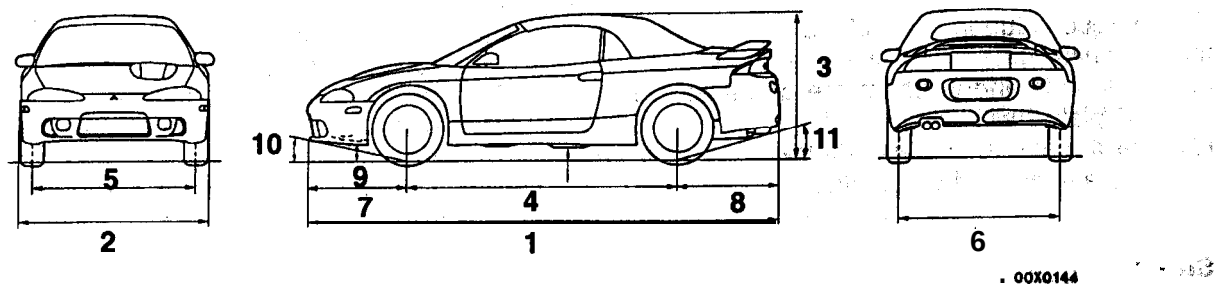

GENERAL SPECIFICATIONS

Items			D38ABNGFL4M D38ABNGFL9M	D38ABRGFL4M D38ABRGFL9M	D39ABNJEL4M D39ABNJEL9M	D39ABRJEL4M D39ABRJEL9M
Vehicle dimensions	Overall length mm (in.)	1	4,380 (172.4)	4,380 (172.4)	4,360 (172.4)	4,380 (172.4)
	Overall width mm (in.)	2	1,740 (68.5)	1,740 (68.5)	1,735 (68.3) 1,740 (68.5)*1	1,735 (68.3) 1,740 (68.5)*1
	Overall height (unladen) mm (in.)	3	1,340 (52.8)	1,340 (52.8)	1,340 (52.8)	1,340 (52.8)
	Wheelbase mm (in.)	4	2,510 (98.8)	2,510 (98.8)	2,510 (98.8)	2,510 (98.8)'
	Tread – Front mm (in.)	5	1,510 (59.4)	1,510 (59.4)	1,510 (59.4)	1,510 (59.4)
	Tread – Rear mm (in.)	6	1,505 (59.2)	1,505 (59.2)	1,505 (59.2)	1,505 (59.2)
	Overhang – Front mm (in.)	7	935 (36.8)	935 (36.8)	935 (36.8)	935 (36.8)
	Overhang – Rear mm (in.)	8	935 (36.8)	935 (36.8)	935 (36.8)	935 (36.8)
	Minimum running ground clearance mm (in.)	9	160 (6.3)	160 (6.3)	160 (6.3)	160 (6.3)
	Angle of approach degrees	10	12.2	12.2	12.2	12.2
	Angle of departure degrees	11	15.8	15.8	15.8	15.6
Vehicle weight kg (lbs.)	Curb weight		1,385 (3,053)	1,425 (3,142)	1,305 (2,877)	1,335 (2,943)
	Gross vehicle weight rating		1,850 (4,079)	1,850 (4,079)	1,765 (3,935)	1,785 (3,935)
	Gross axle weight rating – Front		1,030 (2,271)	1,030 (2,271)	1,010 (2,227)	1,010 (2,227)
	Gross axle weight rating – Rear		820 (1,808)	820 (1,806)	800 (1,764)	800 (1,764)
Seating capacity			4	4	4	4
Engine	Model No.		4G63 (DOHC)	4G63 (DOHC)	4G64 (SOHC)	4G64 (SOHC)
	Piston displacement cm³ (cu.in.)		1,997 (121.9)	1,997 (121.9)	2,351 (143.4)	2,351 (143.4)
Transaxle	Model No.		F5M33	F4A33	F5M31	F4A23
	Type		5-speed manual	4-speed automatic	5-speed manual	4-speed automatic
Fuel system	Fuel supply system		Electronically controlled multi-port fuel injection	Electronically controlled multi-port fuel injection	Electronically controlled multi-port fuel injection	Electronically controlled multi-port fuel injection

NOTE
*1: Vehicles with side air dam.

TIGHTENING TORQUE

00100110057

Each torque value in the table is a standard value for tightening under the following conditions.
(1) Bolts, nuts and washers are all made of steel and plated with zinc.
(2) The threads and bearing surface of bolts and nuts are all in dry condition.

The values in the table are not applicable:
(1) If toothed washers are 'inserted.
(2) If plastic parts are fastened. .
(3) If bolts are tightened to plastic or die-cast inserted nuts.
(4) If self-tapping screws or self-locking nuts are used.

Standard bolt and nut tightening torque

Bolt nominal diameter (mm)	Pitch (mm)	Torque Nm (ft.lbs.)		
		Head mark "4"	Head mark "7"	Head mark "8"
M5	0.8	2.5 (1.8)	4.9 (3.6)	5.9 (4.3)
M6	1.0	4.9 (3.6)	8.8 (6.5)	9.8 (7.2)
M8	1.25	12(8.7)	22 (16)	25 (18)
M10	1.25	24 (17)	44 (33)	52 (38)
M12	1.25	41 (30)	81 (60)	96 (71)
M14	1.5	72 (53)	137 (101)	157 (116)
M16	1.5	111 (82)	206 (152)	235 (174)
M18	1.5	167 (123)	304 (224)	343 (253)
M20	1.5	226 (166)	412 (304)	481 (354)
M22	1.5	304 (224)	559 (412)	647 (477)
M24	1.5	392 (289)	735 (542)	853 (629)

Flange bolt and nut tightening torque

Bolt nominal diameter (mm)	Pitch (mm)	Torque Nm (ft.lbs.)		
		Head mark "4"	Head mark "7"	Head mark "8"
M6	1.0	4.9 (3.6)	9.8 (7.2)	12 (8.7)
M8	1.25	13 (9.4)	24 (17)	28 (20)
M10	1.25	26 (19)	49 (36)	57 (42)
M10	1.5	24 (17)	44 (33)	54 (40)
M12	1.25	46 (34)	93 (69)	103 (76)
M12	1.75	42 (31)	81 (60)	96 (71)

LUBRICATION AND MAINTENANCE

00100120067

Maintenance and lubrication service recommendations have been compiled to provide maximum protection for the vehicle owner's investment against all reasonable types of driving conditions. Since these conditions vary with the individual vehicle owner's driving habits, the area in which the vehicle is operated and the type of driving to which the vehicle is subjected, it is necessary to prescribe lubrication and maintenance service on a time frequency as well as mileage interval basis.

Oils, lubricants and greases are classified and graded according to standards recommended by the Society of Automotive Engineers (SAE), the American Petroleum Institute (API) and the National Lubricating Grease Institute (NLGI).

MAINTENANCE SCHEDULES

Information for service maintenance is provided under "SCHEDULED MAINTENANCE TABLE".

Three schedules are provided; one for "Required Maintenance", one for "General Maintenance" and one for "Severe Usage Service".

Item numbers in the "SCHEDULED MAINTENANCE TABLE" correspond to the item numbers in the "MAINTENANCE SERVICE" section.

SEVERE SERVICE

Vehicles operating under severe service conditions will require more frequent service.

Component service information is included in appropriate units for vehicles operating under one or more of the following conditions:

1. Police, taxi, or commercial type operation
2. Operation of Vehicle
   (1) Short-trip operation at freezing temperature (engine not thoroughly warmed up)
   (2) More than 50% operation in heavy city traffic during hot weather above 32°C (90°F)
   (3) Extensive idling
   (4) Driving in sandy areas
   (5) Driving in salty areas
   (6) Driving in dusty conditions

ENGINE OIL

Either of the following engine oils should be used:

(1) Engine oil displaying EOLCS certification mark
(2) Engine oil conforming to the API classification SH ECII or SH/CD ECII.

For further details, refer to "LUBRICANTS SELECTION" section.

Caution

Test results submitted to EPA have shown that laboratory animals develop skin cancer after prolonged contact with used engine oil. Accordingly, the potential exists for humans to develop a number:, of skin disorders, including cancer, from such exposure to used engine oil.

Care should be taken, therefore, when changing engine oil, to minimize the amount and length of exposure time to used engine oil on your skin. Protective clothing and gloves, that cannot be penetrated by oil, should be worn. The skin should be thoroughly washed with soap and water, or use waterless hand cleaner, to remove, any used engine oil. Do not use gasoline, thinners, or solvents.

GEAR LUBRICANTS

The SAE grade number also indicates the viscosity of Multi-purpose Gear Lubricants.

The API classification system defines gear lubricants in terms of usage. Typically gear lubricants conforming to API GL-4 or GL-5 'with a viscosity of SAE 75W–85W are recommended for manual transaxle.

LUBRICANTS – GREASES

Semi-solid lubricants bear the NLGI designation and are further classified as grades 0, 1, 2; 3 etc. Whenever "Chassis Lubricant" is specified, Multi-purpose Grease, NLGI grade 2, should be used.

FUEL USAGE STATEMENT

Your car must use unleaded gasoline only.

This car has a fuel filler tube especially designed to accept only the smaller-diameter unleaded gasoline dispensing nozzle.

Caution

Using leaded gasoline in your car will damage the catalytic converter and oxygen sensor, and affect the warranty coverage validity.

Your car is designed to operate on premium unleaded gasoline having a minimum octane rating of 91 or 95 RON (Research Octane Number).

If premium unleaded gasoline is not available, unleaded gasoline having a octane rating of 87, or 91 RON (Research Octane Number) may be used. In this case, the performance and fuel consumption will suffer a little degradation.

Gasolines Containing Alcohol

Some gasolines sold at service stations contain alcohol, although they may not be so identified.

Use of fuels containing alcohol is not recommended unless the nature of the blend can be determined as being satisfactory.

Gasohol – A mixture of 10% ethanol (grain alcohol) and 90% unleaded gasoline may be used in your car.

If driveability problems are experienced as a result of using gasohol, it is recommended that the car be operated on gasoline.

Methanol – **Do not use gasolines containing methanol** (wood alcohol). Use of this type of alcohol can result in vehicle performance deterioration and damage critical parts in the fuel system components. Fuel system damage and performance problems, resulting from the use of gasolines containing methanol, may not be covered by the new car warranty.

Gasolines containing MTBE (Methyl Tertiary Butyl Ether)

Unleaded gasoline containing 15% or less MTBE may be used in your car. Fuel containing MTBE over 15% vol. may cause reduced engine performance and produce vapor lock or hard starting.

MATERIALS ADDED TO FUEL

Indiscriminate use of fuel system -cleaning' agents should be avoided. Many of these materials intended for gum and varnish removal may contain highly active solvents or similar ingredients that can be harmful to gasket and diaphragm materials used in fuel system component parts.

RECOMMENDED LUBRICANTS AND LUBRICANT CAPACITIES TABLE

00100130114

RECOMMENDED LUBRICANTS

Items		Recommended lubricants
Engine		Engine oil displaying EOLCS certification mark or conforming to the API classification SH ECII or SH/CD ECII (For further details, refer to "LUBRICANTS SELECTION" section)
Manual transaxle	2.0L Engine (Non-turbo)	TEXACO MTX FLUID FM
	2.0L Engine (Turbo) and 2.4L Engine	API classification GL-4, SAE 75W–90 or 75W–85W
Automatic transaxle		DIAMOND ATF SP II or equivalent
Transfer <AWD>		API classification GL-4, SAE 75W–90 or 75W–85W
Differential (rear axle)		API classification GL-5 or higher Above –23°C (–10°F): SAE 90, 85W–90, 80W–90 From –34°C (–30°F) to –23°C (–10°F): SAE 80W, 80W–90 Below –34°C (–30°F): SAE 75W
Power steering		Automatic transmission fluid "DEXRON II"
Brake and clutch		Conforming to DOT3 or DOT4
Engine coolant		DIA-QUEEN LONG-LIFE COOLANT (Part No. 0103044) or High quality ethylene-glycol antifreeze coolant

LUBRICANT CAPACITIES

Description			Metric measure	U.S. measure
Engine oil	Crankcase (excluding oil filter)	2.0L Engine (Non-turbo)	3.8 dm^3	4 qts.
		2.0L Engine (Turbo) and 2.4L Engine	4.0 dm^3	4.2 qts.
	Oil filter	2.0L Engine (Non-turbo)	0.5 dm^3	.53 qt.
		2.0L Engine (Turbo) and 2.4L Engine	0.3 dm^3	.32 qt.
	Oil cooler <2.0L Engine (Turbo)>		0.1 dm^3	.11 qt.
Cooling system (including heater and engine coolant reserve system)			7.0 dm^3	7.4 qts.
Manual transaxle		FWD	2.0 dm^3	2.1 qts.
		AWD	2.3 dm^3	2.4 qts.
Automatic transaxle		2.0L Engine (Non-turbo)	8.6 dm^3	9.1 qts.
		2.0L Engine (Turbo)	6.7 dm^3	7.1 qts.
		2.41 Engine	6.1 dm^3	6.4 qts.
Transfer <AWD>			0.5 dm^3	.53 qt.
Differential (rear axle)			0.85 dm^3	.9 qt.
Power steering			0.9 dm^3	.95 q t .
Fuel tank			64 dm^3	17.0 gals.

EOLCS certification mark

M03A015

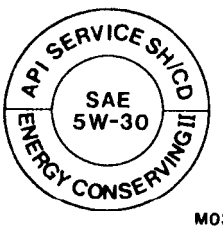

M03A014

LUBRICANTS SELECTION

ENGINE OIL

Caution
Never use non-detergent or straight mineral oil.

Oil Identification Symbol

Use only engine oils displaying the EOLCS certification mark on the container.

If these oils are not available, an API classification SH ECII or SH/CD ECII can be used.

TSB Revision

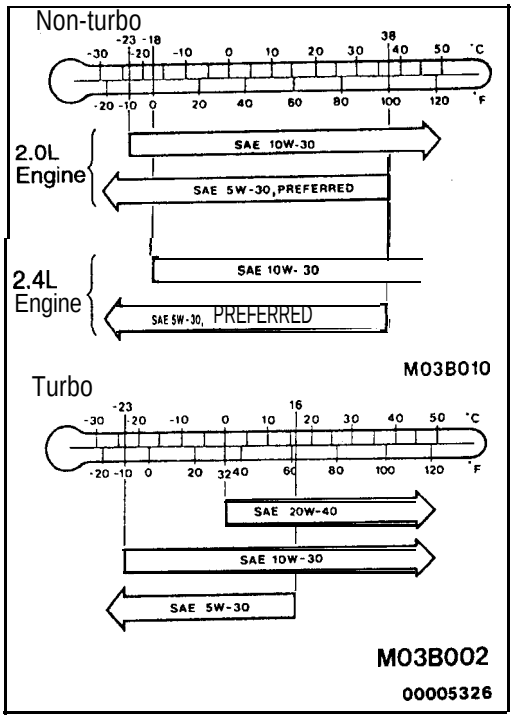

Oil Viscosity

The SAE grade number indicates the viscosity Of the oil. A proper SAE grade number should be selected according to ambient temperature.

NOTE

- SAE 5W-30 may be used for operation in very cold weather areas where the lowest ambient temperature is below – 10°F (– 23°C).

COOLANT SELECTION

COOLANT

Relation between Antifreeze Concentration and Specific Gravity

Engine coolant temperature °C (°F) and specific gravity					Freezing temperature °C (°F)	Safe operating temperature °C (°F)	Engine coolant concentration (Specific volume)
10 (50)	20 (68)	30 (86)	40 (104)	50 (122)			
1.054	1.050	1.046	1.042	1.036	-16 (3.2)	-11 (12.2)	30%
1.063	1.058	1.054	1.049	1.044	-20 (-4)	-15 (5)	35%
1.071	1.067	1.062	1.057	1.052	-25 (-13)	-20 (-4)	40 %
1.079	1.074	1.069	1.064	1.058	-30 (-13)	-25 (–13)	45 %
1.087	1.082	1.076	1.070	1.064	-36 (-32.8)	–31 (–23.8)	50 %
1.095	1.090	1.084	1.077	1.070	-42 (-44)	–37 (–35)	55 %
1.103	1.098	1.092	1.084	1.076	-50 (-58)	-45 (–49)	60 %

Example

The safe operating temperature is –15°C (5°F) when the measured specific gravity is 1.058 at the coolant temperature of 20°C (68°F).

Caution

1. **If the concentration of the coolant is below 30%, the anti-corrosion property, will be adversely affected. In addition, if the concentration is above 60%, both the anti-freeze and engine cooling properties will decrease, affecting the engine adversely. For these reasons, be sure to maintain the concentration level within the specified range.**
2. **Do not use a mixture of different brands of anti-freeze.**

SCHEDULED MAINTENANCE TABLE

00100140124

SCHEDULED MAINTENANCE SERVICES FOR EMISSION CONTROL AND PROPER VEHICLE PERFORMANCE

Inspection and services should be performed any time a malfunction is observed or suspected. Retain receipts for all vehicle emission services to protect your emission warranty.

No.	Emission control system maintenance	Service to be performed	Kilometers in thousands	24	48	72	96	120	144	168
			Mileage in thousands	15	30	45	60	75	90	105
1	Fuel system (Tank, pipe line and connection, and fuel tank filler tube cap)	Check for leaks Every 5 years or					×			
2	Fuel hoses	Check condition Every 2 years or			×		×		×	
3	Air cleaner element	Replace at			×		×		×	
4	Evaporative emission control system (except evaporative emission canister)	Check for leaks and clogging Every 5 years or					×			
5	Spark plugs	Replace at			×		×		×	
6	Ignition cables	Replace Every 5 years or					×			

GENERAL MAINTENANCE SERVICE FOR PROPER VEHICLE, PERFORMANCE

No.	General maintenance		Service to be performed	Kilometers in thousands	24	48	72	96	120	144	168
				Mileage in thousands	15	30	45	60	75	90	105
7	Timing belts		Replace at					×*1		160,000 km*2 (100,000 miles)	
8	Drive belt (for generator, water pump, power steering pump)		Check condition at			×		×		×	
9	Engine oil	Non-turbo	Change Every 6 months or		Every 12,000 km (7,500 miles)						
		Turbo			Every 8,000 km (5,000 miles)						
10	Engine oil filter	Non-turbo	Replace Every Year*3 or		×	×	×	×	×	×	×
		Turbo	Replace Every Year or		Every 16,000 km (10,000 miles)						
11	Manual transaxle oil		Check oil level at			×		×		×	
12	Automatic transaxle fluid		Check fluid level Every year or		×	×	×	×	×	×	×
13	Transfer oil		Check oil level at			×		×		×	
14	Engine coolant		Change Every 2 years or			×		×		×	
15	Disc brake pads		Check for wear Every year or		×	×	×	×	×	×	×
16	Rear drum brake linings and rear wheel cylinders (vehicles without disc brakes for all wheels)		Check for wear and leaks Evety 2 years or			×		×		×	
17	Brake hoses		Check for deterioration or leaks Every year or		×	×	×	×	×	×	×
18	Ball joint and steering linkage seals		Check for grease leaks and damage Every 2 years or			×		×		×	
19	Drive shaft boots		Check for grease leaks and damage Every year or		×	×	×	×	×	×	×
20	Rear axle oil		Check oil level at			×		×		×	
21	SRS*4 system		Check system		At 10 years						
22	Exhaust system (connection portion of muffler, pipings and converter heat shields)		Check and service as required Every 2 years or			×		×		×	

NOTES
*1: For California, this maintenance is recommended but not required
*2: Not required if belt was previously changed.
*3: If the mileage is less than 12,000 km (7,500 miles) each year, the oil filter should be replaced at every oil change.
*4: Supplemental Restraint system

SCHEDULED MAINTENANCE UNDER SEVERE USAGE CONDITIONS

The maintenance items should be performed according to the following table:

No.	Maintenance item	Service to be performed	Kilometers in thousands	24	48	72	96	120	144	168	Severe usage conditions
			Mileage in Thousands	15	30	45	60	75	90	105	
3	Air cleaner element	Replace		×	×	×	×	×	×	×	A and E
5	Spark plugs	Replace		×	×	×	×	×	×	×	B and D
9	Engine oil	Change Every 3 months or		Every 4,800 km (3,000 miles)							A, B, C, D and G
10	Engine oil filter	Replace Every 6 months or		Every 9,600 km (6,000 miles)							A, B, C, D and G
11	Manual transaxle oil	Change oil*1			×		×		×		B, G and H
12	Automatic transaxle fluid	Change fluid			×		×		×		B, G and H
13	Transfer oil	Change oil			×		×		×		B, G and H
15	Disc brake pads	Check for wear Every 6 months or		Every 9,600km (6,000 miles)							A and F
16	Rear drum brake linings and rear wheel cylinders (vehicles without disc brakes for all wheels)	Check for wear and leaks Every 12 months or		Every 24,000km (15,000 miles)							A and F

*1: Vehicles with turbocharger.

Severe usage conditions

A – Driving in dusty conditions
B – Trailer towing or police, taxi, or commercial type operation
C – Extensive idling, driving in stop and go traffic
D – Short-trip operation at freezing temperatures (engine not throughly warmed up)
E – Driving in sandy areas
F – Driving in salty areas
G – More than 50% operation in heavy city traffic or at sustained high speeds during hot weather above 32°C (90°F)
H – Driving on off-road

MAINTENANCE SERVICE

00100160045

1. FUEL SYSTEM (Tank, Pipe Lines, Connections and Fuel Tank Filler Tube Cap) (Check for leaks)/2. FUEL HOSES (Check condition)

1. Check for damage or leakage in" the fuel lines.' and connections and looseness of the fuel tank filler tube cap.
2. Check the surface of fuel hoses for heat and mechanical damage. Hard and brittle rubber, cracking, checking, tears, cuts, abrasions and excessive swelling' indicate deterioration of the rubber.
3. If the fabric casing of the rubber hose is exposed' by cracks and abrasions in the fuel system, the hoses should be changed.

TSB Revision

<2.0L Engine (Non-turbo)>

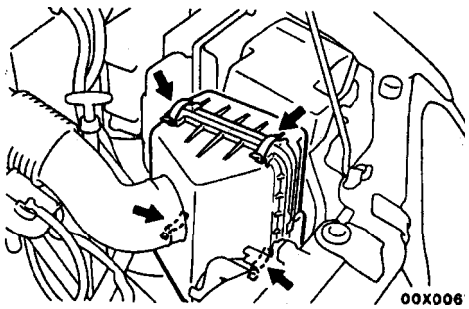

<2.0L Engine (Turbo)>

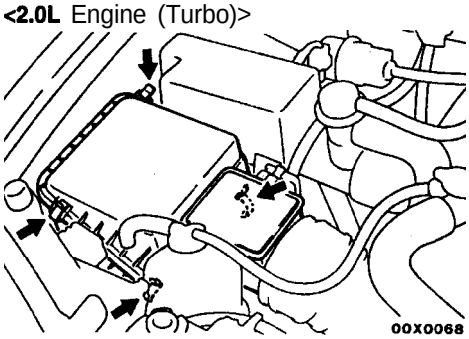

:2.4L Engine>

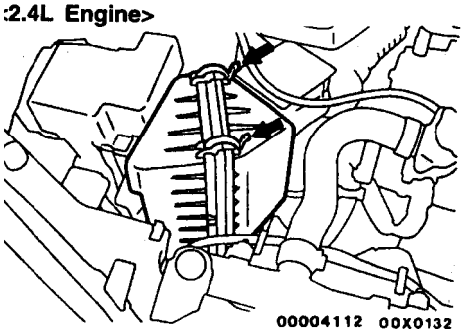

3. AIR CLEANER ELEMENT (Replace) 00100180058

The air cleaner element will become dirty and loaded with dust during use, and the filtering effect will be substantially reduced.

Replace it with a new one.

(1) Unclamp the air cleaner cover.
(2) Take out the air cleaner element, install a new one.
(3) Be sure when clamping the air cleaner cover in place that the cover is completed closed.

4. EVAPORATIVE EMISSION CONTROL SYSTEM (Check for leaks and clogging) – except evaporative emission canister 00100190051

1. If the fuel-vapor vent line is clogged or damaged, a fuel vapor mixture escapes into the atmosphere causing excessive emissions. Disconnect the line at both ends, and blow it clean with compressed air. Remove the fuel tank filler tube cap from the fuel tank filler tube and check to see if there is evidence that the packing makes improper contact to the fuel tank filler tube.
2. The fuel tank pressure control valve installed on the vapor line should be checked for correct operation.

5. SPARK PLUGS (Replace) 00100200068

1. Spark plugs must spark properly to assure proper engine performance and reduce exhaust emission level. Therefore, they should be replaced periodically with new ones.
2. The new plugs should be checked for the proper gap.

   Spark plug gap:

   <2.0L Engine (Turbo)>'
   0.7–0.8 mm (.028–.030 in.)
   <2.0L Engine (Non-turbo)>
   1.22-1.35 mm (.048–.053 in.)
   <2.4L Engine>
   1.0–1.1 mm (.039–.043 in.)

3. Install the spark plug and tighten to the specified.

   Tightening torque:
   <2.0L Engine (Turbo) and 2.4L Engine>
   25 Nm (18 ft.lbs.)
   <2.0L Engine (Non-turbo)>
   28 Nm (20 ft.lbs.)

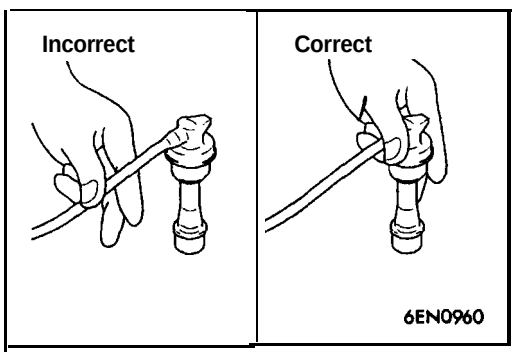

6. IGNITION CABLES (Replace) 00100210054

The ignition cables should. be replaced periodically with new ones. After replacing, make sure that the ignition cables are routed properly and fully seated.

NOTE
When disconnecting an ignition cable; be sure to hold the cable boot. If the cable is disconnected by pulling on the cable alone, an open circuit might result.

7. TIMING BELT (Replace) 00100220027

Replace the belt with a new one periodically to assure proper engine performance.
For disassembly and assembly procedures;
Refer to GROUP 11A – Timing Belt.
Refer to GROUP 11C – Timing Belt.
Refer to GROUP 11 E – Timing Belt.

8. DRIVE BELT (For Generator, Water Pump, Power Steering Pump) (Check condition) 00100250070

Check the tension of the drive belt. Check the drive belt for evidence of cuts and cracks, and replace it if defective.

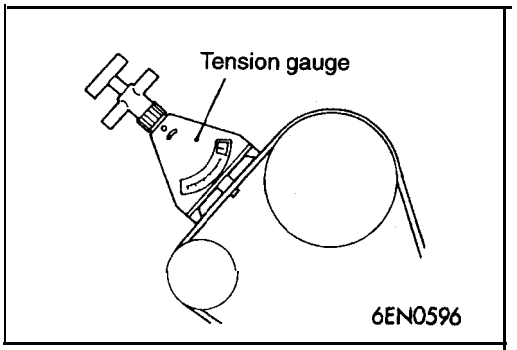

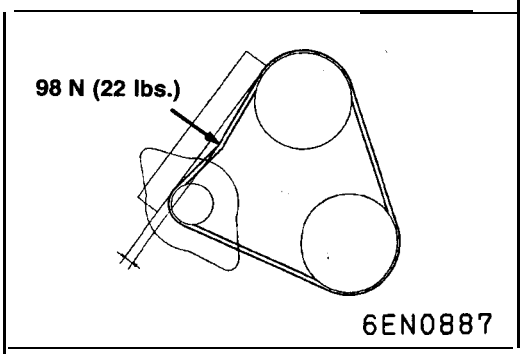

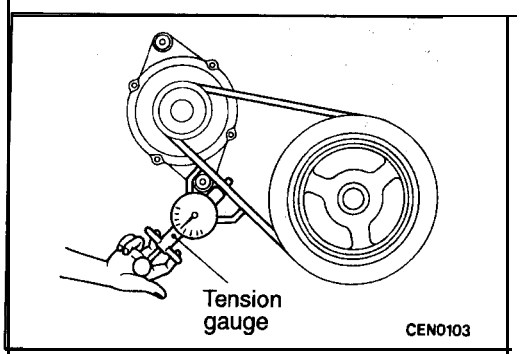

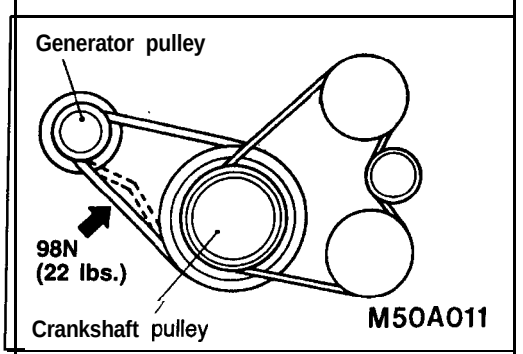

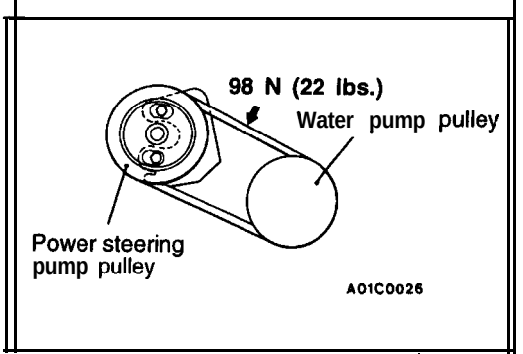

GENERATOR AND WATER PUMP DRIVE BELT TENSION CHECK

<2.0L Engine (Turbo) and 2.4L Engine>

Check the belt tension with the tension gauge, or check the belt deflection by pressing. the middle point of the belt by a force of 98 N (22 lbs.).

Standard value:

Tension N (lbs.)	245 – 490 (55.1 – 110.2)
Deflection mm (in.) <Reference value>	9.0 – 11.5 (.35 – .45)

<2.0L Engine (Non-turbo)>

Check the belt tension with the tension gauge at the middle point of the belt, or check the belt deflection by pressing, the belt point by a force of 98 N (22 lbs.).

Standard value:

Tension N (lbs.)	400 – 490 (90 – 110)
Deflection mm (in.) <Reference value>	9.0 – 12.0 (.35 – .47)

POWER STEERING PUMP DRIVE BELT TENSION CHECK

<2.0L Engine (Turbo) and 2.4L Engine>

1. Pull or push at the mid point of the belt with a force of 98 N (22 lbs.) to measure dirve belt deflection.

   Standard value: 5.5–8.0 mm (.22–.32 in.)

2. Use a tension gauge to measure belt tension.

   Standard value: 245–490 N (55.1–110.2 lbs.)

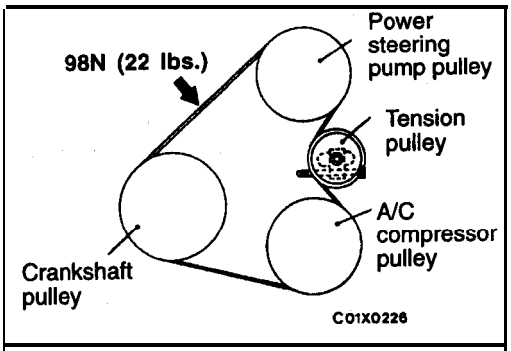

<2.0L Engine (Non-turbo)>

1. Pull or push at the mid point of the belt with a force of 98 N (22 lbs.) to measure dirve belt deflection.

   Standard value: 10.0–11.0 mm (.39–.43 in.)

2. Use a tension gauge to measure belt tension.

   Standard value: 412–510 N (92.6–114.6 lbs.)

9. ENGINE OIL (Change)

00100260158

Use the specified oil. (Refer to P.00-34.)

Caution
Never use nondetergent or straight mineral oil.

1. After warming up the engine, remove the oil filler cap.
2. Remove the drain plug to allow the engine oil to drain.
3. Replace the drain plug gasket with a new one and tighten, the drain plug.
4. Supply new engine oil through the oil filler.

   Engine oil total quantity:
   [including oil filter and oil cooler]
   <2.0L Engine (Non-turbo) and 2.4L Engine>
   4.3 dm^3 (4 1/2 qts.)
   <2.0L Engine (Turbo)>'
   4.4 dm^3 (4.6 qts.)

5. Start and run the engine a few minutes.
6. Stop the engine and check the engine oil level is within the level range indicated on the oil dipstick.

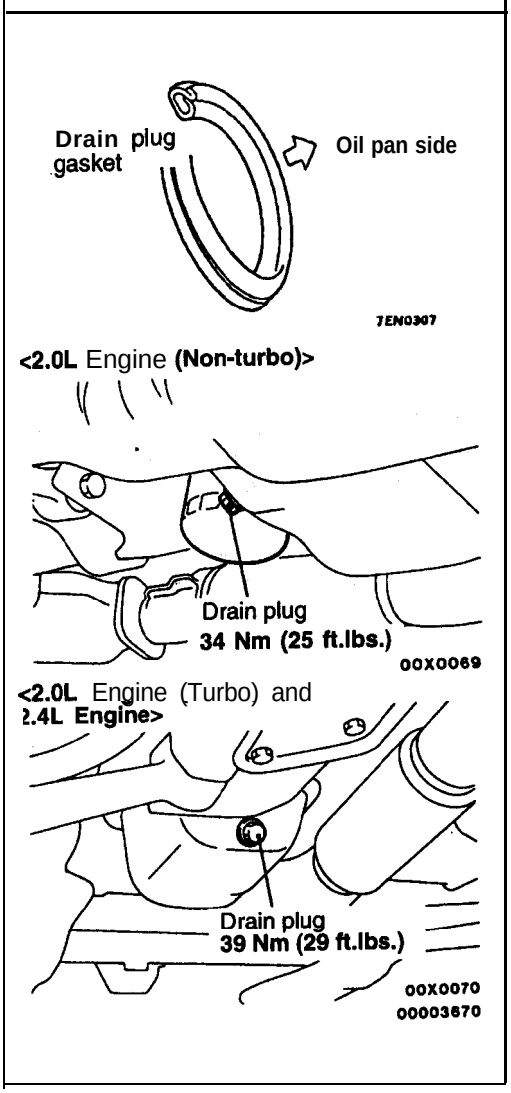

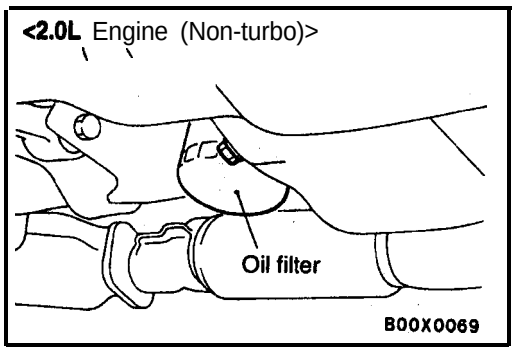

10. ENGINE OIL FILTER (Replace) 00100270076

The quality of replacement filters varies considerably. Only high quality filters should be used to assure most efficient service.

Genuine oil filters are capable of withstanding a pressure, of 1,765 kPa (256 psi). These high' quality filters are highly recommended. The followings part are available as follows.

Oil Filter Part No.

<2.0L Engine (Turbo) and 2.4L Engine>:

Mitsubishi Genuine Parts:

MD1 35737, MD1 36466, MD325714 or equivalent

<2.0L Engine (Non-turbo)>:

Chrysler Genuine Parts: M05281090 or equivalent

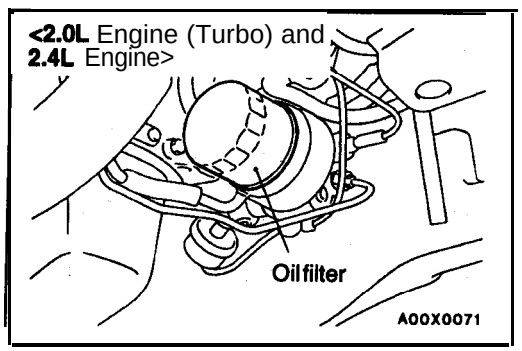

ENGINE OIL FILTER SELECTION

This vehicle is equipped with a full-flow, throw-away oil filter. The same type of replacement filter is recommended as a replacement filter for this vehicle. It is possible, particularly in cold weather, that this vehicle may develop high oil pressure for a short duration. You should be sure that any replacement filter used on this vehicle is a high-quality filter and is capable of withstanding a pressure of 1,765, kPa (256 psi) (manufacturer's specifications) to avoid filter and engine damage.

The following is a high-quality filter and is strongly recommended for use on this vehicle.

<2.0L Engine (Turbo) and 2.4L Engine>

Mitsubishi Engine Oil Filter Part No; MD135737, MD136466 or MD325714

<2.0L Engine (Non-turbo)>

Chrysler Engine Oil Filter Part No. M05281090

Any replacement oil filter should be installed in accordance with the oil filter manufacturer's installation instructions.

(1) Remove the engine oil filler cap.
(2) Remove the engine oil drain plug, and drain out the engine oil.
(3) Remove the engine oil filter by using the oil filter wrench.
(4) Clean the oil filter mounting surface of the oil filter bracket.

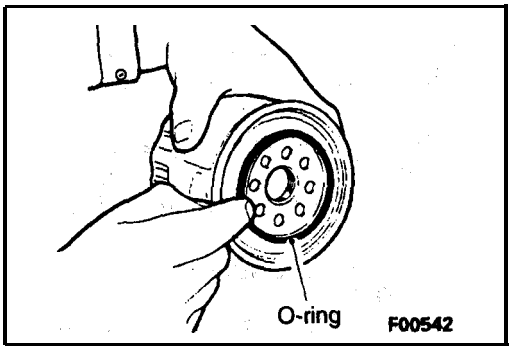

(5) Coat engine oil to the O-ring of new oil filter:
(6) Screw on the oil filter by hand until it touches the surface of the flange and then tighten it with the filter wrench: etc.
<2.0L Engine (Turbo) and 2.4L Engine>
- For MD135737: One full turn or 14 Nm (10 ft.lbs.)
- For MD136466, MD325714: 3/4 turn or 17 Nm (12 ft.lbs.)

<2.0L Engine (Non-turbo)>
- For M05281090: 3/4 turn or 21 Nm (15 ft.lbs.)

(7) Add new engine oil through the oil filter...
(8) Start and run engine and check for engine oil leaks.
(9) After stopping engine, check oil level and replenish as necessary.

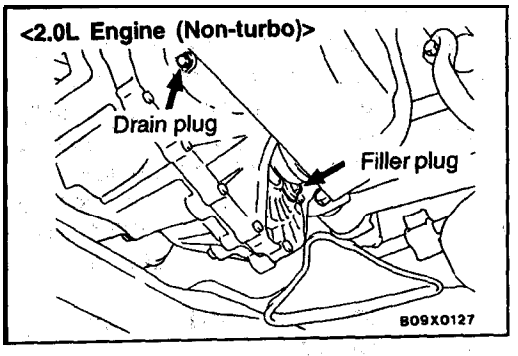

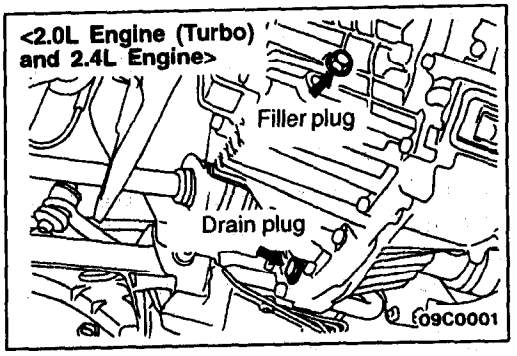

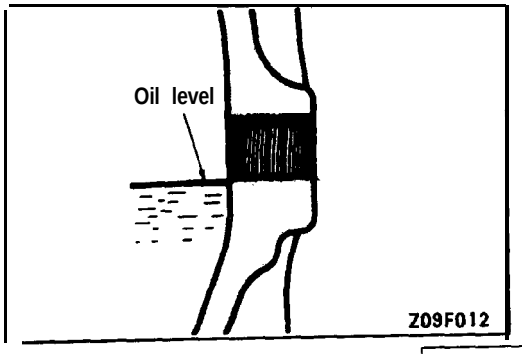

11. MANUAL TRANSAXLE OIL

00100280062

(Check oil level)

Check each component for evidence of leakage, and check the oil level by removing the filler plug. If the oil is contaminated, it is necessary to replace it with new oil.

1. With the vehicle parked at a level place, remove the filler plug and check that the oil level.
2. The level must be up to the lower edge of the filler plug hole.
3. Check that the transaxle oil is not noticeably dirty, and that it has a suitable viscosity.

(Change oil)

1. Remove transaxle drain plug.
2. brain oil.
3. Tighten drain plug to specified torque.

Specified torque:
<2.0L Engine (Non-turbo)> 30 Nm (22 ft.lbs.)
<2.0L Engine (Turbo) and 2.4L Engine>
32 **Nm (24 ft.lbs.)**

4. Remove filler plug and fill with specified oil till the level comes to the lower portion of filler plug hole.

Specified oil:
<2.0L Engine (Non-turbo)>
TEXACO MTX FLUID FM
<2.0L Engine (Turbo) and 2.4L Engine>
API classification GL-4, SAE 75W–90 or 75W -85W

Quantity:
<FWD> 2.0 **dm^3 (2.1 qts.)**
<AWD> 2.3 dm^3 (2.4 qts.)

5. Tighten filler plug to specified torque.

Specified torque:
<2.0L Engine (Non-turbo)> 30 Nm (22 ft.lbs.)
<2.0L Engine (Turbo) and 2.4L Engine>
32 **Nm (24 ft.lbs.)**

12. AUTOMATIC TRANSAXLE FLUID 00100290133

(Check 'fluid level)

<2.0L Engine (Non-turbo)>

1. Position the vehicle on a level surface.
2. Start engine and allow to idle in PARK for at least 60 seconds. The warmer the transaxle fluid, the more accurate the reading.
3. While sitting in driver seat, apply brakes and place gear selector in each position. Return gear selector to PARK.
4. Raise hood and remove transaxle fluid level indicator (dipstick) and wipe clean with a suitable shop towel.
5. **Install** dipstick and verify it is seated in fill tube.

Caution
Do not overfill automatic transaxle, leakage or damage can result.

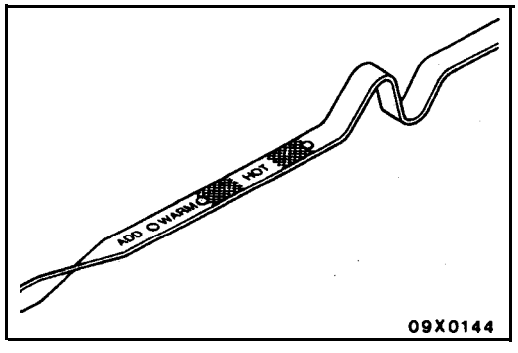

6. Remove dipstick, with handle above tip, take fluid level reading. If the vehicle has been driven for' at feast 15 minutes before inspecting fluid **level,** transaxle can be considered hot and reading should be above the WARM mark. If vehicle has run for less than 15 minutes and more than 60 seconds, transaxle can be considered warm and reading should be above ADD mark. Add fluid only if level is below ADD mark on dipstick when transaxle is warm.

<2.0L Engine (Turbo) and 2.4L Engine>

1. Drive until the fluid temperature reaches the usual , temperature **[70–80°C (158–176°F)]**
2. Place vehicle on level floor.
3. Move selector lever sequentially to every position to fill torque converter and hydraulic circuit with fluid, then place lever, in "N" Neutral position. This operation is necessary to be sure that fluid level check is accurate.

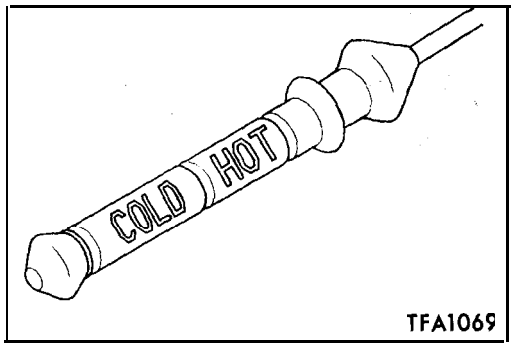

4. Before removing dipstick, wipe all dirt from area around dipstick. Then take out the dipstick and check the condition of the fluid.
   Further investigation of the transaxle is necessary if,
   - the fluid smells burnt.
   - the fluid color is brown or black.
   - metal particles can be seen or felt on the dipstick.

5. Check to see if fluid level is in "HOT" range on dipstick. If fluid level is low, add ATF until level reaches "HOT" range. Low fluid level can cause a variety of conditions because it allows pump to take in air along with fluid. Air trapped in hydraulic circuit forms bubbles which make fluid spongy.
   Therefore, pressures will be erratic.
   Improper filling can also raise fluid level too high. When transaxle has too much fluid, gears churn up foam and cause same conditions which occur with low fluid level, resulting in accelerated deterioration of ATF.
   In either case, air bubbles can cause overheating, fluid -oxidation, which can interfere with normal valve, clutch, and servo operation. Foaming can also result in fluid escaping from transaxle vent where it may be mistaken for a leak.
6. Be sure to examine fluid on dipstick closely.

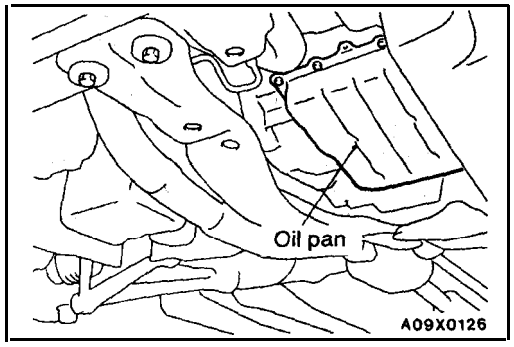

(Change fluid)

<2.0L Engine (Non-turbo)>

1. Place a drain container with a large opening, under the transaxle oil pan.
2. Loosen the pan bolts and tap the pan at one comer' to break it loose allowing fluid to drain, then remove the oil pan.
3. Install a new filter and O-ring on bottom of the valve body.

4. Clean the oil pan and magnet.
   Apply the specified sealant to the oil pan.

   Specified sealant:
   Loctite 18718 or equivalent

   Tighten the oil pan mounting bolts to the specified torque:

   Tightening torque:
   19 Nm (14 ft.lbs.)

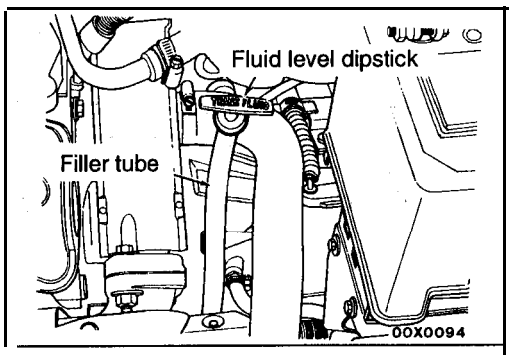

5. Add 3.8 dm^3 (4.0 qts.) of the specified transmission fluid through the filler tube.

   Specified fluid:
   DIAMOND ATF SP II or equivalent

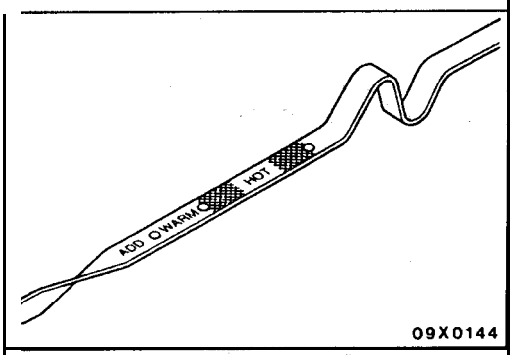

6. Start the engine and allow it to run at idle for at least one minute. Then, with parking and service brake applied, move the selector lever momentarily to each position, ending in the park or neutral position.
7. Add sufficient fluid to bring level to' 1/8 inch below the ADD mark.
8. Recheck fluid level after transaxle is at normal operating temperature. The level should be in the HOT region.

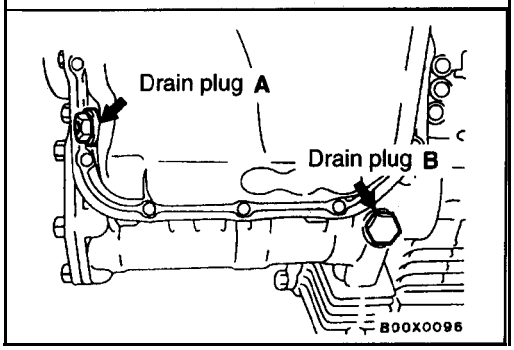

<2.0L Engine (Turbo) and 2.4L Engine>

Drain the fluid and check whether there is any evidence of contamination.
Refill with new fluid after the cause of any contamination has been corrected.

1. Remove drain plugs to let fluid drain.
2. Remove the oil pan.
3. Check the oil filter for clogging and damage and replace if necessary.
4. Clean the inside of oil pan and magnets.
5. Attach the magnets to the concave part of the oil pan.
6. Clean both gasket **surfaces of transaxle case and oil pan.**
7. Install oil pan with new gasket and tighten oil pan bolts.

   Oil pan bolt: 11 Nm (8.0 ft.lbs.)

8. Tighten drain plug with gasket to specified torque.

   Specified torque:

   <2.0L Engine (Turbo)>
   (A) 39 Nm (29 ft.lbs.)
   (B) 29-34 Nm (22-25 ft.lbs.)

   <2.4L Engine>
   (A) 39 Nm (29 **ft.lbs.)**
   (B) 39 Nm (29 ft.lbs.)

9. Fill new ATF up to the COLD mark on the dipstick.

   Transmission fluid:
   DIAMOND ATF SP II or equivalent

10. Start engine and allow to idle for at least two minutes. Then, with parking brake on, move selector lever momentarily to each position, ending in "N" Neutral **position.**
11. Check if ATF is filled up to the HOT mark on the dipstick.

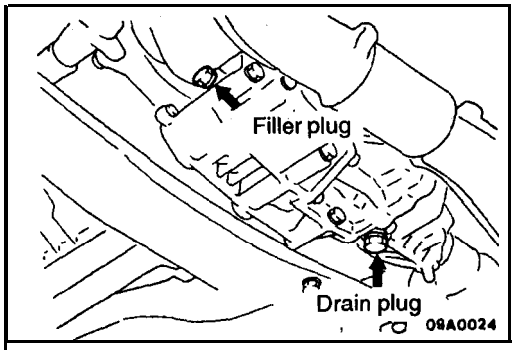

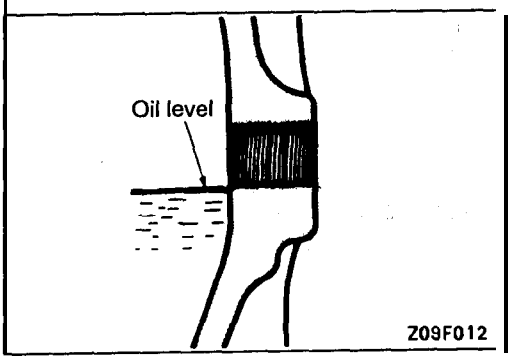

13. TRANSFER OIL

00100630010

(Check oil level)

Check each component for evidence of leakage, and-check the oil level by removing the filler plug. If the oil is contaminated, it is necessary to replace it with new oil.

1. With the vehicle parked at a level place, remove the filler, plug.
2. Check that the transfer oil level is at the lower portion of the filler plug hole.
3. Check to be sure that the transfer oil is not noticeably dirty, and that it has a suitable viscosity.

(Change oil)

1. Remove transfer drain plug.
2. Drain oil.
3. Tighten drain plug to specified torque.

   Specified torque: 32 Nm (24 ft.lbs.)
4. Remove filler plug and fill with specified oil till the. level comes to the lower portion of filler-plug hole.

   Specified oil:
   API classification GL-4, SAE 75W–90 or 75W–85W

   Quantity: 0.5 dm^3 (.53 qt.)
5. Tighten filler plug to specified torque.

   Specified torque: 32 Nm (24 ft.lbs.)

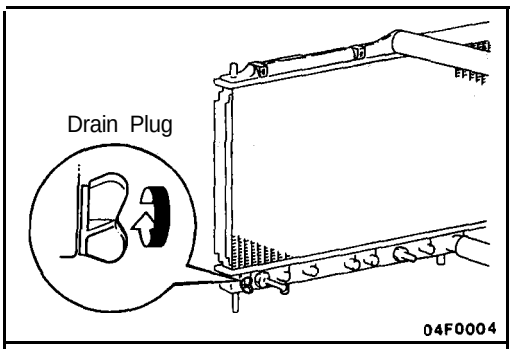

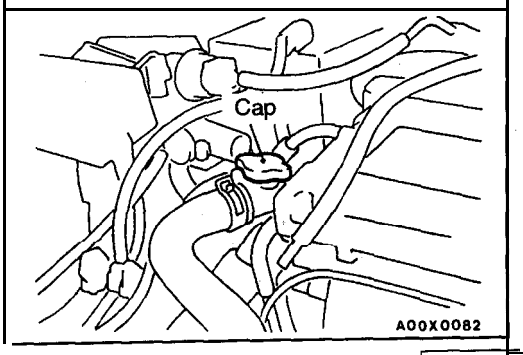

14. ENGINE COOLANT (Change)

00100310075

Check the cooling system parts, such as radiator, heater, and oil cooler hoses, thermostat and connections for leakage and damage.

CHANGING COOLANT

1. Drain the engine coolant by removing the drain plug and then the cap.

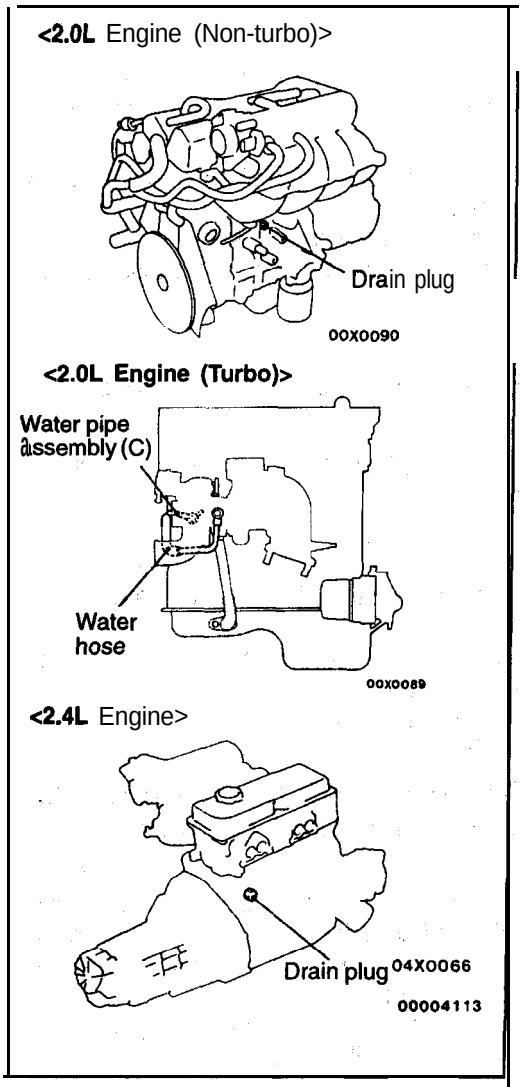

2. For non-turbo, remove the 'drain plug from the cylinder block to drain engine coolant.
   For turbo, remove the water hose from the water pipe assembly (C) to do so.
3. Remove the reserve tank to drain the engine coolant.
4. When the engine coolant has drained, pour in water from the cap to clean the engine coolant line.
5. For non-turbo, install the drain plug to the cylinder block.
   For turbo, install the water hose to the water pipe assembly (C).
6. Securely tighten the radiator drain plug.
7. Install the reserve tank.
8. Slowly pour the engine coolant into the mouth of the radiator until the radiator is full, and pour also into the reserve tank up to the FULL line.

   Recommended antifreeze:
   DIA-QUEEN LONG-LIFE COOLANT (Part No. 0103044) or high quality ethylene-glycol antifreeze coolant)

   Quantity 7.0 dm^3 (7.4 qts.)
9. Install the cap securely.
10. Start the engine and warm the engine until the thermostat opens. (Touch the radiator hose with your hand to check that warm water is flowing.)
11. After the thermostat opens, race the engine at 3,000 r/min 3 times.
12. After the engine is stopped, wait until the engine has cooled down, and then remove the cap to check the level of the liquid. If the level is low, repeat the operation from step 9.
    Lastly, if the level does not drop, fill the condense tank with coolant up to the FULL line.

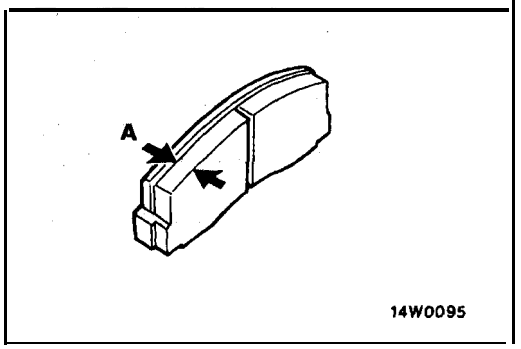

15. DISC BRAKE PADS (Check for wear) 00100320054

Check for fluid contamination and wear. Replace complete set of pads if defective.

Caution
The pads for the right and left wheels should be replaced at, the same time. Never "split" or intermix brake pad sets.
All four pads must be replaced as a complete set.

Thickness of lining (A)
Limit: 2.0 mm (.08 in.)

16. REAR DRUM BRAKE LININGS AND REAR WHEEL CYLINDERS (Check for wear and leaks) 00100330040

1. Remove the brake drum and check the thickness of brake shoe lining for wear. Check the automatic brake adjusting system by hand to see if it operates smoothly.
   Also see if the gears are in proper mesh with each other.
   To assure smooth operation, apply a very thin coat of multipurpose grease to the friction surface of adjuster and link shaft.

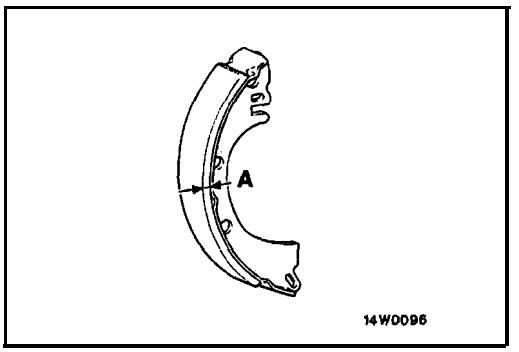

2. Check the wheel cylinder boots for evidence, of a' brake fluid leak. Visually check the boots for cuts, tears or heat cracks. (A slight amount of fluid on the boot may not be a leak, but may be preservative fluid used at assembly.)

Caution
The shoes for the right and left wheels should be, replaced at the same time.
Never split or intermix brake shoe sets.
All four shoes must be replaced as a complete set.

Thickness of lining (A)
Limit: 1.0 mm (.04 in.)

17. BRAKE HOSES (Check for deterioration or leaks)

00100340043

Check of brake hoses and tubing should be included in all brake service operations.

The hoses should be checked for:

1. Correct length, severe surface cracking, pulling, scuffing or worn spots. (If the fabric casing of the hoses is exposed by cracks of abrasion in the rubber hose cover, the hoses should be replaced. Eventual deterioration of hose may occur with possible bursting failure.)
2. Faulty installation, casing twisting or interference with wheel,' tire or chassis.

18. BALL JOINT AND STEERING LINKAGE SEALS (Check for grease leaks and damage)

00100350046

1. These components, which are permanently lubricated at the factory, do not require periodic lubrication. Damaged seals and boots should be replaced to prevent leakage or contamination of the grease.
2. Check the dust cover and boots for proper sealing, leakage and damage. Replace them if defective.

19. DRIVE SHAFT BOOTS (Check for grease leaks and damage)

00100360049

1. These components, which are permanently lubricated at the factory, do not require periodic lubrication. Damaged boots should be replaced to prevent leakage or contamination of the grease.
2. Check the boots for proper sealing, leakage and damage. Replace it if defective.

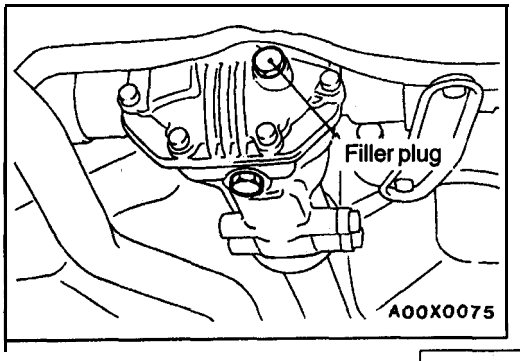

20. REAR AXLE OIL (Check oil level)-AWD

00100750013

Remove the filler plug and check the oil level at bottom of filler hole. If the oil level is slightly below the filler hole, it is in satisfactory condition.

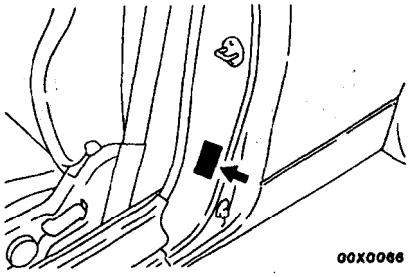

Certification label

Manufacture date

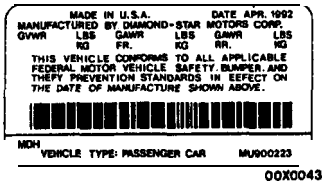

00X0043

00003673

21. SRS SYSTEM (SRS component check: damage, function, connection to wiring, harness, etc.)

00100370066

The SRS must be inspected by an authorized dealer 10 years after the car manufacture date shown on the certification label located on left center pillar.

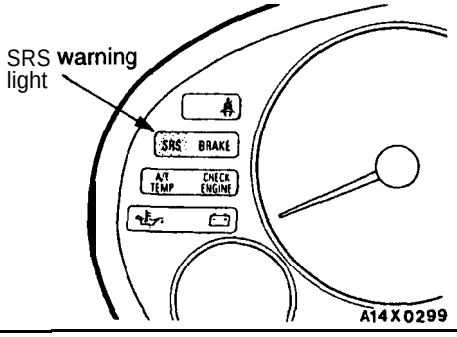

"SRS" WARNING LIGHT CHECK

Turn the ignition key to the "ON" position. Does the "SRS" warning light illuminate for about 7 seconds, turn "OFF" and then remain extinguished for at least 45 seconds? If yes, SRS system is functioning properly. If not, refer to GROUP 52B – Troubleshooting.

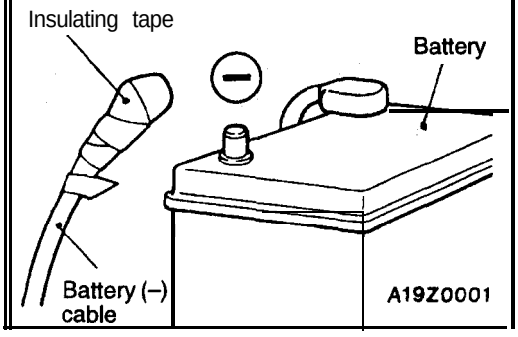

SRS COMPONENTS VISUAL CHECK

1. Turn the ignition key to "LOCK" position, disconnect the negative battery cable and tape the 'terminal.

   Caution
   Wait at least 60 seconds after disconnecting the battery cable before doing any further work.
   The SRS system is designed to retain enough voltage to deploy the air bag for a short time even after the battery has been disconnected, so serious injury may result from unintended air bag deployment if work is done on the SRS system immediately after the battery cable is disconnected.

2. Remove the floor console assembly. (Refer to GROUP 52A – Floor Console.)

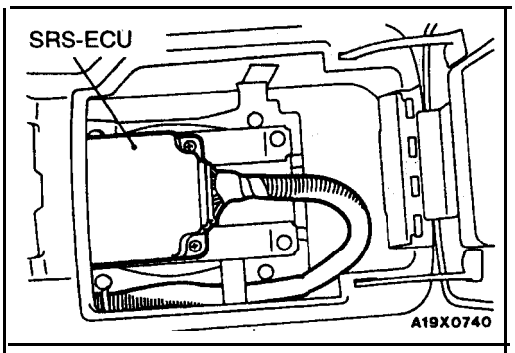

SRS-ECU CHECK

Check SRS-ECU case and brackets for dents, cracks, deformities or rust.

Caution
The SRS may not activate if a front impact sensor is not installed properly, which could result in serious injury or death to the driver and passenger.

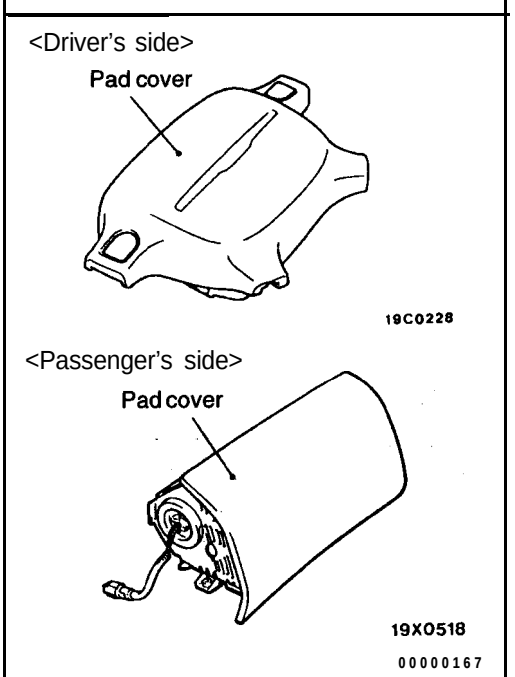

AIR BAG MODULE, STEERING WHEEL AND CLOCK SPRING CHECK

1. Remove the air bag module, steering wheel and clock spring. (Refer to GROUP 52B – Air Bag Module and Clock Spring.)

   Caution
   The removed air bag module should be stored In a clean, dry place with the pad cover face up.

2. Check pad cover for dents, cracks of deformities.

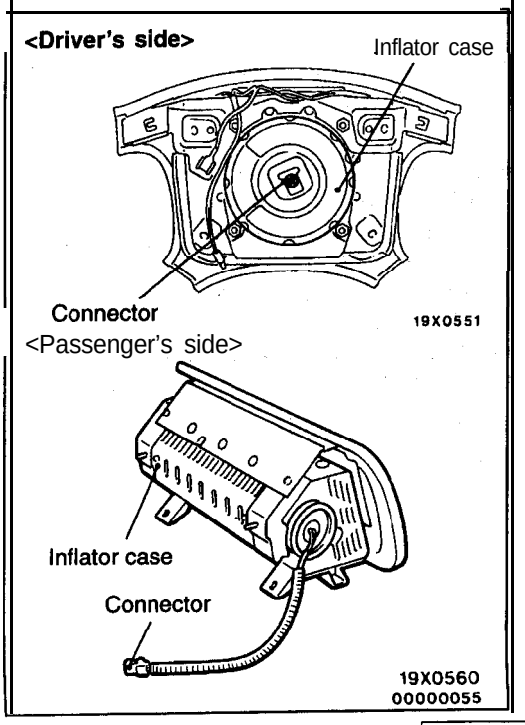

3. Check connector for damage, terminals deformities, and harness for binds.
4. Check air bag inflator case for dents, cracks or deformities.
5. Check harness (built into steering wheel) and connectors for damage, and terminals for deformities.

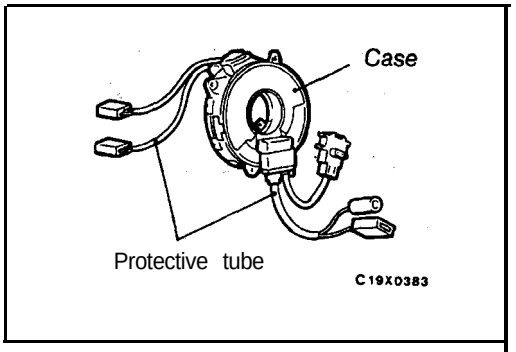

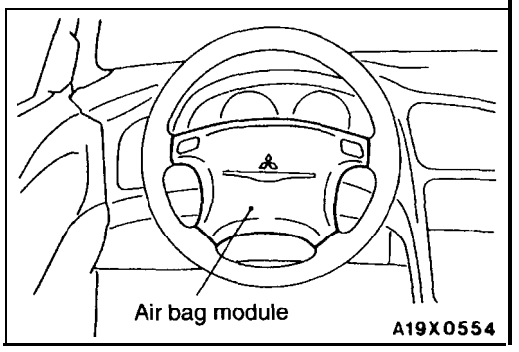

6. Check clock spring connectors and protective tube for damage, and terminals for deformities.
7. Visually check the clock spring case for damage.
8. Align the mating mark of the clock spring and, after turning the vehicle's front wheels to straightahead position, install the clock spring to the column switch.

   Mating mark alignment
   Turn the clock spring fully clockwise, and turn back it approx. 3 and 1/8 turns counterclockwise to align the mating marks.

   Caution
   If the clock spring's mating mark is not properly aligned, the steering wheel may not be completely rotational during a turn, or the flat cable within the clock spring may be severed, obstructing normal operation of the SRS and possibly leading to serious injury to the vehicle's driver and passenger.

9. Install the steering column covers, steering wheel and the air bag module.
10. Check steering wheel for noise, binds of difficult operation.
11. Check steering wheel for excessive free play.

    REPLACE ANY VISUALLY INSPECTED PART IF IT FAILS THAT INSPECTION.

    (Refer to GROUP 52B -Air Bag Module and Clock Spring.)

    Caution
    The SRS may not activate if any of the above components is not installed properly, which could result in serious injury or death to the vehicle's driver and passenger.

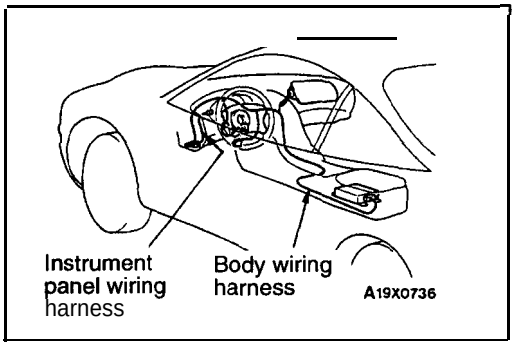

INSTRUMENT PANEL WIRING HARNESS AND BODY WIRING HARNESS

1. Check connector for poor connection.
2. Check harnesses for binds, connectors for damage, and terminals for deformations.
   REPLACE ANY CONNECTORS OR HARNESS **THAT** FAIL THE VISUAL INSPECTION.
   (Refer to GROUP 52B – SRS Service Precautios.)

   Caution
   The SRS may not activate if SRS harnesses or connectors are damaged or improperly connected, which could result in serious injury or death to the vehicle's driver and passenger.

22. EXHAUST SYSTEM (CONNECTION PORTION OF MUFFLER, PIPINGS AND, CONVERTER HEAT SHIELDS) (Check and service as' required)

00100580049

1. Check for holes and gas leaks'dwe to damage; corrosion, etc.
2. Check the joints and connections for looseness and gas' leaks.
3. Check the hanger rubber and brackets for damage.

MAIN SEALANT AND ADHESIVE TABLE

00100380052

SEALANTS FOR ENGINE ACCESSORIES

Application	Recommended brand
Sealing between rocker cover and camshaft bearing cap (4G6 DOHC and 6G7 engines only)	3M ATD Part No. 8680 or equivalent
Sealing between semi-circular packing and rocker cover and between semi-circular packing and cylinder head	
Oil pressure switch (except 4G1 and 6G7 engines)	
Engine coolant temperature switch, Engine coolant temperature sensor, Thermo valve, Thermo switch, Joints, Engine coolant temperature gauge unit (large size)	3M Nut Locking Part No. 4171 or equivalent
Engine coolant temperature gauge unit (small size, MD091056 only)	3M ATD Part No. 8660 or equivalent
Oil pan (except 4G5 engine)	MITSUBISHI GENUINE 'Part No. MD997110 or equivalent

SEALING BETWEEN GLASS AND WEATHERSTRIP

Application	Recommended brand
Sealing between tempered glass and weatherstrip	3M ATD Part No. 8513 or equivalent
Sealing between body flange and weatherstrip	3M ATD Part No. 8509 or equivalent
Sealing between laminated glass and weatherstrip	

ADHESION WITH RIBBON SEALER

Application	Recommended brand
Waterproof film for door, Fender panel, Splash shield, Mud guard, Rear combination light	3M ATD Part No. 8625 or equivalent

ADHESIVES FOR INTERIOR TRIM

Application	Recommended brand
Adhesion of polyvinyl chloride sheet	3M Part No. EC-1368 or equivalent
Adhesion of door weatherstrip to body	3M ATD Part No. 8001 or 3M ATD Part No. 8011 or equivalent
Sealing between grommet or packing, and metal seal	3M ATD Part No. 8513 or equivalent
Adhesion of headlining and other interior trim materials	3M Part No. EC-1368 or 3M ATD Part No. 8080 or equivalent
Adhesion of fuel tank to pad	

BODY SEALANT

Application	Recommended brand
Sealing of sheet metal, drip rail, floor, body side panel, trunk, front panel and the like joints	3M ATD Part No. 8531 or 3M ATD Part No. 8848 or equivalent
Sealing of liftgate hinges	

TSB Revision

CHASSIS SEALANT

Application	Recommended brand
Sealing of flange surfaces and threaded portions	3M ATD Part No. 8659 or equivalent
Fuel gauge unit packing	
Sealing of flange surfaces, threaded portions, packing and dust cover • Differential carrier packing • Dust covers for ball joint and linkage • Steering gear box packing and shims • Steering gear housing rack support cover and top cover • Mating surface of knuckle arm flange	3M ATD Part No. 8663 or equivalent
Sealing between accelerator arm bracket and firewall	Drying sealant
Sealant for drum brake shoe hold-down pin and wheel cylinder	3M ATD Part No. 8513 or equivalent

FAST BONDING ADHESIVE

Application	Recommended brand
Adhesion of all materials except polyethylene, polypropylene, fluorocarbon resin or other materials with highly absorbent surface	3M ATD Part No. 8155 or equivalent

ANAEROBIC FAST BONDING ADHESIVE

Application	Recommended brand
Fixing of bolts and screws • Tightening of drive gear to differential case • Bolts for coupling tilt steering upper column with lower column	3M Stud locking Part No. 4170 or equivalent
Fixing of bearing, fan, pulley and gear connections	
Sealing of small recess or flange surface	
Steering angle stopper bolt	3M Nut locking Part No.4171 or equivalent

UNDERCOAT

Application	Recommended brand
Undercoat	3M ATD Part No. 8864 or equivalent

ENGINE

CONTENTS

11109000177

NOTES

ENGINE
<2.0L (4G6)>

CONTENTS

11109000498

GENERAL INFORMATION

11100010124

Items			Specifications
Type			In-line OHV, DOHC
Number of cylinders			4
Bore mm (in.)			85.0 (3.35)
Stroke mm (in.)			88.0 (3.28)
Piston displacement cm^3 (cu.in.)			1,997 (121.9)
Compression ratio			8.5
Firing order			1–3–4–2
Counterbalance shaft			Equipped
Valve timing	Intake valve	Opens	21 "BTDC
		Closes	51°ABDC
	Exhaust valve	Opens	57°BBDC
		Closes	15°ATDC
Lubrication system			Pressure feed-full flow filtration
Oil pump type			Involute gear type

LUBRICATION SYSTEM

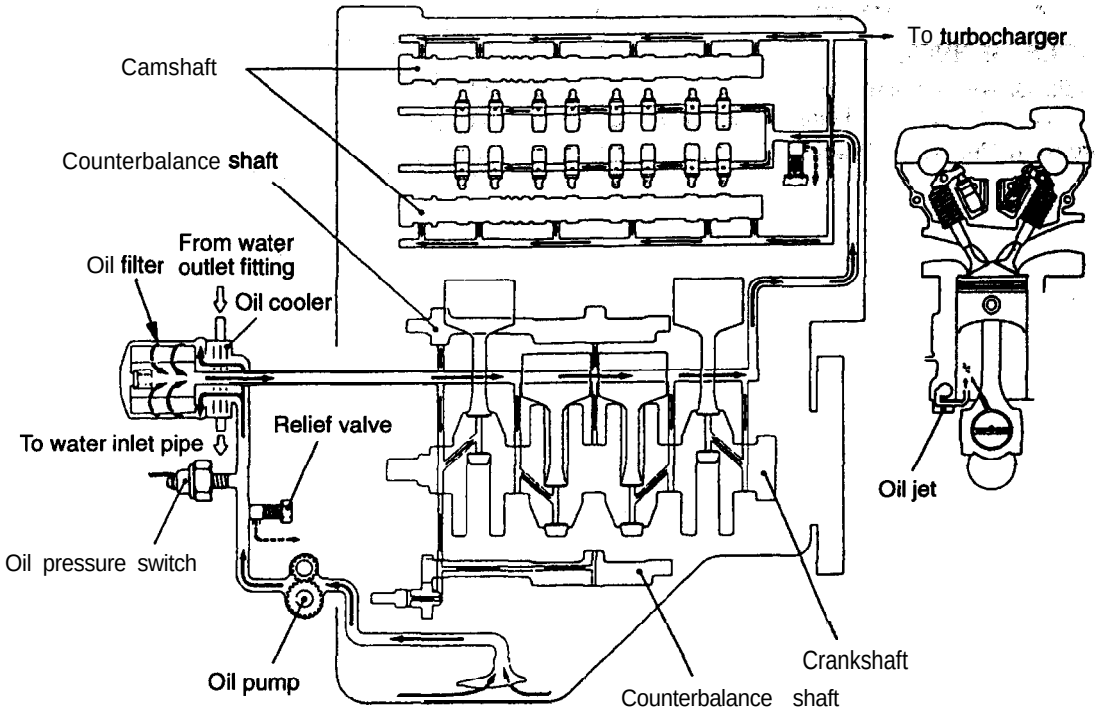

6LU0056

SERVICE SPECIFICATIONS

11100030199

Items			Standard value	Limit
Drive belt (For generator)	Tension N (lbs.)	When checked When a new belt is installed When a used belt is installed	245 -490 (55.1 – 110.2) – 490 – 886 (110.2 – 154.3) 392 (88.2)	
	Deflection mm (in.) <Reference value>	Whenchecked When a new belt is installed When a used belt is installed	'9.0 – 11.5 (.35 – .45) – 7.5 – 9.0 (.30 – .35) 10.0 (.39)	
Drive belt (For power steering pump)	Tension N (lbs.)	When checked When a new belt is installed When a used belt is installed	245 -490 (55.1 – 110.2) 490 – 686 (110.2 – 154.3) 343 – 441 (77.2 – 99.2)	–
	Deflection mm (in.)	Whenchecked When a new belt is installed When a used belt is installed	5.5 – 8.0 (.22 – .32) 4.5 – 5.5 (.18 – .22) 6.0 – 7.0 (.24 – .28)	–
Drive belt (For A/C compressor)	Tension N (Ibs.)	When checked When a new belt is installed When a used belt is installed	255 – 333 (57.3 – 75.0) 382 – 441, (86.0 – 99.2) 255 – 333 (57.3 – 75.0)	–
	Deflection mm (in.)	Whenchecked When a new belt is installed When a used belt is installed	6.5-7.5 (.26 – .30) 5.5 – 6.0 (.22 – .24) 6.5 – 7.5 (.26 – .30)	–
Basic ignition timing at idle			5° BTDC ± 3"	–
Actual ignition timing at idle			Approx. 8° BTDC	–
Curb idle speed r/min			750 ± 100	
CO contents %			0.5 or less	
HC contents ppm			100 or less	–
Compression pressure (at 250 – 400 r/min) kPa (psi)			1250 (178)	min. 935 (133)
Compression pressure difference of all cylinder kPa (psi)				max. 100 (14)
Intake manifold vacuum kPa (in.Hg)				min. 60 (18)
Cylinder head bolt length mm (in.)			–	99.4 (3.91)
Auto tensioner push rod movement mm (in.)			Within 1 (.04)	
Timing belt tension torque Nm (ft.lbs)			3.5 (2.6)	
Auto tensioner rod protrusion mm (in.)			3.8 – 4.5 (.150 – .177)	–
Timing belt B tension mm (in.)			5 – 7 (.20 – .28)	

TSB Revision

SEALANTS

11100050171

Items	Specified sealant
Semi-circular packing and rocker cover	3M ATD Part No. 8860 or equivalent
Bearing cap (front, rear) and cylinder head	
Oil pan, cylinder block and thermostat case assembly	MITSUBISHI GENUINE PART MD970389 or equivalent
Flywheel bolt or drive plate bolt	3M Stud locking 4170 or equivalent

SPECIAL TOOLS

11100060181

Tool	Tool number and name	Supersession	Application
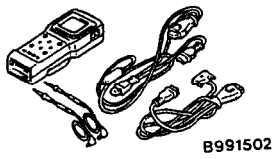 B991502	MB991502 Scan tool (MUT-II)	MB991502	Idle speed inspection
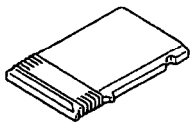 B991325	ROM pack	–	
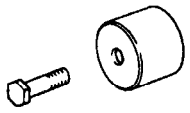	MD998713 Camshaft oil seal installer	MD998713-01	Camshaft oil seal installation
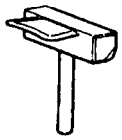	MD998727 Oil pan gasket cutter	MD998727-01	Oil pan removal
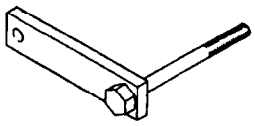	MD998781 Flywheel stopper	General service tool	Flywheel <M/T> or drive plate <A/T> supporting
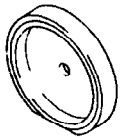	MD998776 Crankshaft rear oil seal installer	MD998776-01	Crankshaft rear oil seal installation Use with MB990938
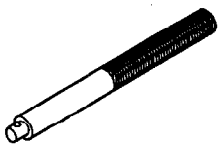	MB990938 Handle	MB990938-01	Use with MD998776

Tool	Tool number and name	Supersession	Application
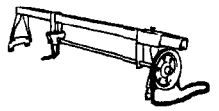 Z203827	GENERAL SERVICE TOOL MZ203827 Engine lifter	MZ203827-01	Supporting engine assembly when removing and installing transaxle
 B991453	MB991453 Engine hanger assembly	MZ203827-01	Supporting the engine assembly during removal and installation of the transaxle
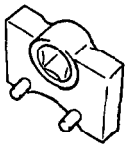	MD998767 Tensioner pulley wrench	MD998752-01	Auto tensioner installation
	MD998778 Crankshaft sprocket puller	General service tool	Crankshaft sprocket removal
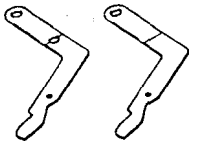	MD998782 Valve lifter set		Lash adjuster removal
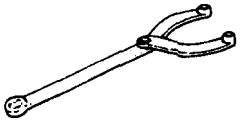	MB990767 End yoke holder	MB990767-01	Crankshaft sprocket holding
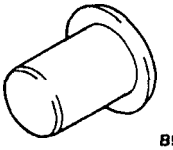 B991193	MB991 193 Plug	General service tool	Preventing foreign substances from entering transfer <AWD>
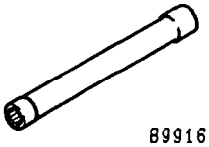 B991654	MB991 654 Cylinder head bolt wrench (12)		Removal and installation of cylinder head bolt

TROUBLESHOOTING

11100070061

Symptom	Probable cause	Remedy
Compression too low	Cylinder head gasket blown	Replace gasket
	Piston ring worn or damaged	Replace rings
	Piston or cylinder worn	Repair or replace piston and/or cylinder block
	Valve seat worn or damaged	Repair or replace valve and/or seat ring
Oil pressure drop	Engine oil level too low	Check engine oil level
	Oil pressure switch faulty	Replace oil pressure switch
	Oil filter clogged	Install new filter
	Oil pump gears or cover worn	Replace gears and/or cover
	Thin or diluted engine oil	Change engine oil to correct viscosity
	Oil relief valve stuck (open)	Repair relief valve
	Excessive bearing clearance	Replace bearings
Oil pressure too high	Oil relief valve stuck (closed)	Repair relief valve
Joisy valves	Incorrect lash adjuster	Bleed air or replace lash adjuster
	Thin or diluted engine oil (low oil pressure)	Change engine oil ,
	Valve stem or valve guide worn or damaged	Replace valve and/or guide
Connecting rod noise/ nain bearing noise	Insufficient oil supply	Check engine oil level
	Low oil pressure	Refer to"Oil pressure drop"
	Thin or diluted engine oil	Change engine oil
	Excessive bearing clearance	Replace bearings
Timing belt noise	Incorrect belt tension	Adjust belt tension and/or replace timing belt
Excessive engine rolng and vibration	Loose engine roll stopper (Front, Rear)	Retighten
	Loose transaxle mount bracket	Retighten
	Loose engine mount bracket	Retighten
	Loose center member	Retighten
	Broken transaxle mount insulator	Replace
	Broken engine mount insulator	Replace
	Broken roll stopper insulator	Replace

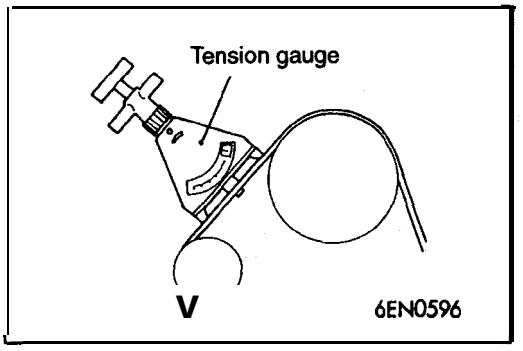

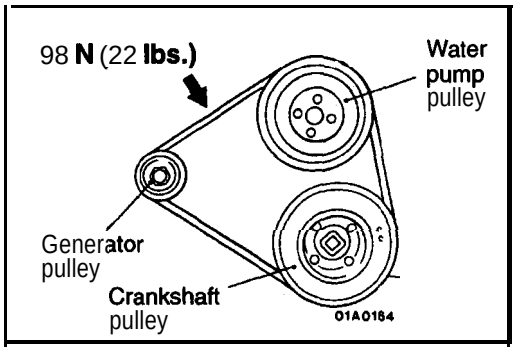

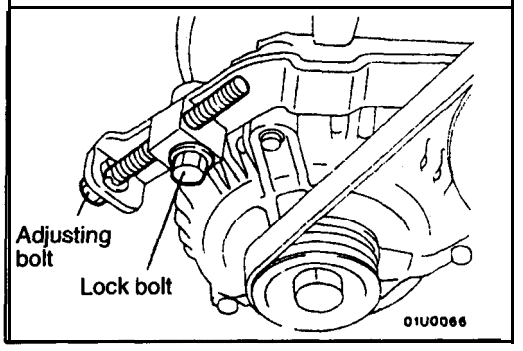

ON-VEHICLE SERVICE

11100090210

DRIVE BELT TENSION CHECK' AND ADJUSTMENT

GENERATOR DRIVE BELT TENSION CHECK

Use the belt tension gauge to check belt tension at the shown point or check deflection by applying 98 N (22 tbs.) to the shown point.

Standard value:

Tension: 245 – 490 N (55.1 – 110.2 lbs.)
Deflection <Reference value>:
9.0 – 11.5 mm (.35 – .45 in.)

GENERATOR DRIVE BELT TENSION ADJUSTMENT

1. Loosen the nut of the generator pivot bolt.
2. Loosen the lock bolt.
3. Turn the adjusting bolt to adjust the belt tension or deflection to the standard value.

Standard value:

Items	When a new belt is installed	When a used belt is installed
Tension N (lbs.)	490–686 (110.2–154.3)	392 (88.2)
Deflection mm (in.) <Reference value>	7.5–9.0 (.30–.35)	10.0 (.39)

4 Tighten the nut of the generator pivot bolt.

Tightening torque: 23 Nm (17 ft.lbs.)

5. Tighten the lock bolt.

Tightening torque: 23 Nm (17 ft.lbs.)

6. Tighten the adjusting bolt.

Tightening torque: 10 Nm (7 ft.lbs.)

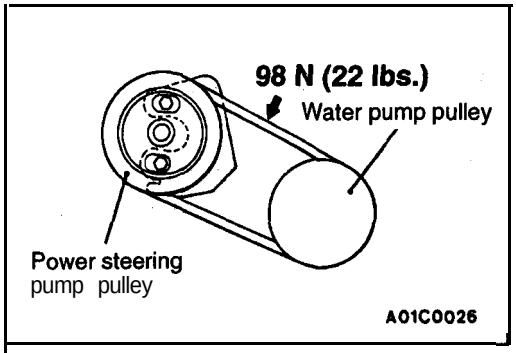

POWER STEERING PUMP DRIVE BELT TENSION" CHECK

11100110114

Use the belt tension gauge to check belt tension at the shown point or check deflection by applying 98 N (22 lbs.) to the shown point.

Standard value:

Tension: 245 – 490 N (55.1 – 110.2 lbs.)
Deflection: 5.5 – 8.0 mm (.22 – .32 in.)

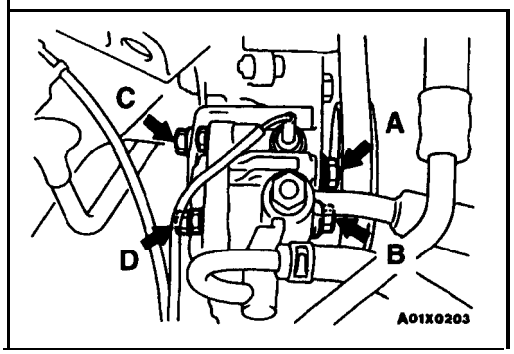

POWER STEERING PUMP DRIVE BELT TENSION ADJUSTMENT

1. Loosen power steering pump: fixing bolt (A, B, C, D).
2. Move power steering pump, tension belt moderately and adjust tension.

   Standard value:

items	When a new belt is installed	When a used belt is installed
Tension N (tbs.)	490–686 (110.2–154.3)	343–441 (77.2–99.2)
Deflection mm (in.)	4.5–5.5 (.18–.22)	6.0–7.0 (.24–.28)

3. Tighten fixing bolt (A).

   Tightening torque: 28 Nm (21 ft lbs.)

4. Tighten the remaining fixing bolts (B, C and D).

   Tightening torque:
   Bolt B and D 28 Nm (21 ft.lbs.)
   Bolt C 22 Nm (18 ft.lbs.)

5. Check the belt deflection amount and readjust if necessaty.

   Caution
   This check should be carried out after turning the crankshaft one full rotation or more in the forward direction (to the right).

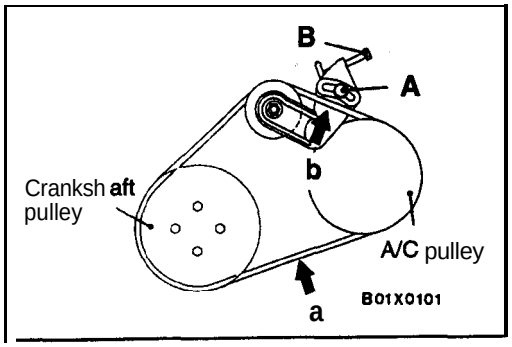

A/C COMPRESSOR DRIVE BELT TENSION CHECK

11100100081

Use the belt tension gauge to check belt tension at the shown point (a) or (b), or check deflection by applying 98 N (22 lbs.) to the shown point.

Standard value:
Tension: 255 – 333 N (57.3 – 75.0 tbs.)
Deflection: 6.5 – 7.5 mm (.26 – .30 in.)

A/C COMPRESSOR DRIVE BELT TENSION ADJUSTMENT

1. Loosen tension pulley fixing bolt A.
2. Adjust belt tension with adjusting bolt B.

Standard value:

Items	When a new belt is installed	When a used belt is installed
Tension N (lbs.)	382-411 (86.0–99.2)	255-333 (57.3–75.0)
Deflection mm (in.)	5.5–6.0 (.22–.24)	6.5-7.5 (.26–.30)

3. Tighten fixing nut A.

   Tightening torque: 23-26 Nm **(17–20 ft.lbs.)**

4. Check the belt deflection **amount** and readjust if necessary.

   Caution
   This check should be carried out after turning the crankshaft one full rotation or more in the forward direction (to the right).

IGNITION TIMING CHECK 11100170181

1. Before inspection and adjustment set vehicle in the following condition.
   - Engine coolant temperature: **80–95°C (176–203°F)**
   - Lights, electric cooling fan and all accessories: OFF
   - Transaxle: Neutral (P range on vehicles with **A/T)**
2. Turn the ignition switch to OFF and connect the scan tool to the data link connector.
3. Set up a timing light
4. Start the engine and run at idle.
5. Select No. 22 of the SCAN TOOL DATA LIST.
6. Check that engine idle speed is within the standard **value.**

   Standard value: 750 ± 100 r/min

7. Select No. 17 of the SCAN TOOL ACTUATOR TEST.
8. Check that basic ignition timing is within the standard value.

   Standard value: 5° BTDC ± 3°

9. If the basic ignition timing is outside the standard value, inspect the **MFI** components by referring to GROUP **13A** – Troubleshooting.
10. Press the scan tool clear key (Select a forced driving cancel mode) to release the ACTUATOR TEST.

    NOTE
    If the test is not **cancelled,** a forced driving will continue for 27 minutes. Driving under this condition may damage the engine.

11. Check that the actual ignition timing is at the standard value.

    Standard value: Approx. 8° BTDC

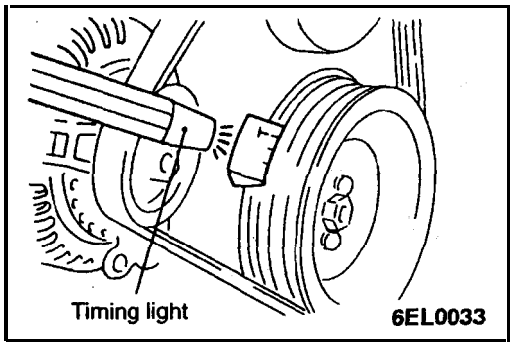

NOTE
1. Ignition timing is variable within about ±7°, even under normal operating.
2. And it is automatically further advanced by about 5° from 8° BTDC at higher altitudes.

CURB IDLE SPEED CHECK

11100190385

1. Before inspection and adjustment, set vehicles in the following condition.
   - Engine coolant temperature: 80–95°C (176–203°F)
   - Lights, electric cooling fan and all accessories: OFF
   - Transaxle: Neutral (P range on vehicles with A/T)
2. Turn the ignition switch to OFF and connect the scan tool to the data link connector.
3. Select No. 17 of the SCAN TOOL ACTUATOR TEST.
4. Check the basic ignition timing.

   Standard value: 5° BTDC ± 3°

5. Run the engine at idle for 2 minutes.
6. Select No. 22 of the SCAN TOOL DATA LIST.
7. Check the curb idle speed.

   Standard value: 750 ± 100 r/min

   NOTE
   The idle speed is controlled automatically by the idle air control system.

8. If the idle speed is outside the standard value, inspect the MFI components by referring to GROUP 13A – Troubleshooting.

IDLE MIXTURE CHECK

11100210296

1. Before inspection, set vehicles in the following condition:
   - Engine coolant temperature: 80–95°C (176–203°F)
   - Lights, electric cooling fan and all accessories: OFF
   - Transaxle: Neutral (P range on vehicles with A/T)
2. Turn the ignition switch to OFF and, connect the scan tool to the data link connector.
3. Select No. 17 of the SCAN TOOL ACTUATOR TEST.
4. Check that the basic ignition timing is within the standard value.

   Standard value: 5° BTDC ± 3°

5. Run the engine 2,500 r/min for 2 minutes.
6. Set the CO, HC tester.
7. Check the CO contents and the HC contents, at idle.

   Standard value:
   CO contents: 0.5% or less
   HC contents: 100 rpm or less

8. If the standard value is exceeded, check the following items:
   - Diagnostic output
   - Closed-loop control (When the closed-loop control is carried out normally, the output signal of the heated oxygen sensor repeats between 0–400 mV and 600–1,000 mV at idle.)
   - Fuel pressure
   - Injector
   - Ignition coil, spark plug cable, spark plug
   - EGR system and the EGR valve leak
   - Evaporative emission control system
   - Compression pressure

   NOTE
   Replace the three-way catalyst whenever the CO and HC contents do not remain inside the standard value. (even though the result of the inspection is normal on all items.)

COMPRESSION PRESSURE CHECK 11100260123

1. Before inspection, check that the engine-oil, starter and battery are normal. Also, set the vehicle to the following condition:
   - Engine coolant temperature: 80–95°C (176–203°F)
   - Lights, electric cooling fan and all accessories: OFF
   - Transaxle: Neutral (P range on vehicles with A/T)
2. Disconnect the spark plug cables.
3. Remove all of the spark plugs.

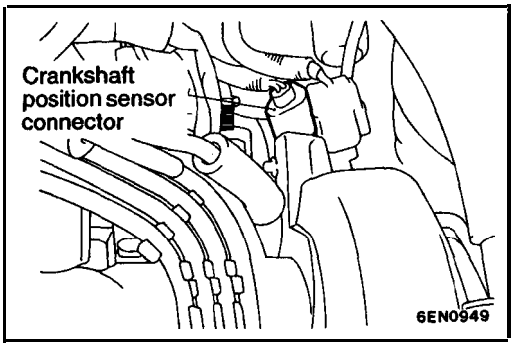

4. Disconnect the crankshaft position sensor connector.

   NOTE
   Doing this will prevent the engine control unit from carrying out ignition and fuel injection.
5. Cover the spark plug hole with a shop towel etc., and after the engine has been cranked, check that no foreign material is adhering to the shop towel.

Caution

1. **Keep away from the spark plug hole when cranking.**
2. **If compression is measured with water, oil, fuel, etc., that has come from cracks inside the cylinder, these materials will become heated and will gush out from the spark plug hole, which is dangerous.**

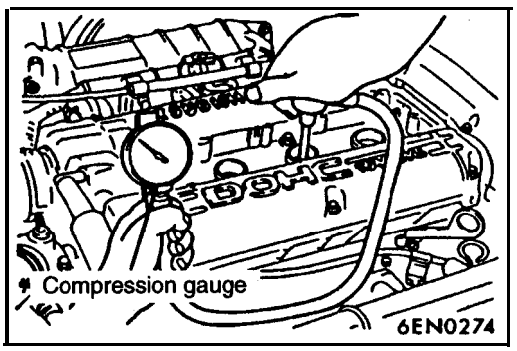

6. Set compression gauge to one of the spark plug holes.
7. Crank the engine with the throttle valve fully open and measure the compression pressure.

   Standard value (at engine speed of 250–400 r/min): 1,250 kPa (178 psi)
   Limit (at engine speed of 250–400 r/min): min. 935 kPa (133 psi)

8. Measure the compression pressure for all the cylinders, and check that the pressure differences of the cylinders are below the limit.

   Limit:. max. 100 kPa (14 psi)

9. If there' is a cylinder with compression or a compression difference that is outside the limit, pour a small amount of engine oil through the spark plug hole, and repeat the operations in steps 7 and 8.
   (1) If the compression increases after oil is added, the cause of the malfunction is a worn or damaged piston ring and/or cylinder inner surface.
   (2) If the compression does not rise after oil is added, the cause is a burnt or defective valve seat, or pressure is leaking from the gasket.
10. Connect the crankshaft position sensor connector.
11. Install the spark plugs and spark plug cables.
12. Use the scan tool to erase the diagnostic trouble codes, or disconnect the negative battery cable' for more than 10 seconds and reconnect it.

    NOTE
    This will erase the diagnostic trouble code resulting from the crankshaft position sensor connector being disconnected.

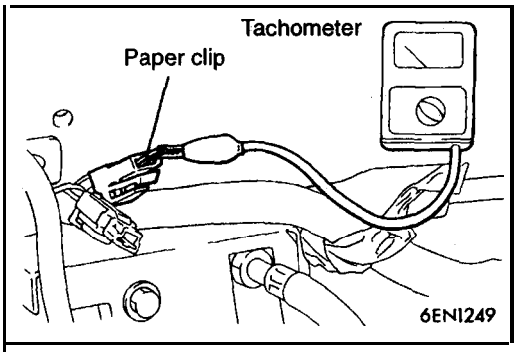

MANIFOLD VACUUM CHECK

11100270200

1. Before inspection, set vehicles in the following condition:
   - Engine coolant temperature: 80–95°C (176–203°F)
   - Lights, electric cooling fan, and accessories: OFF
   - Transaxle: Neutral (P range on vehicles with A/T)
2. Set up the tachometer or connect the scan tool to the data link connector.

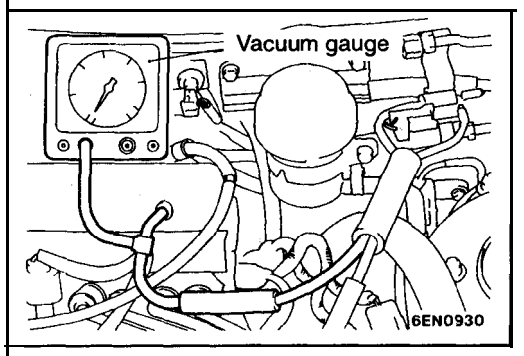

3. Attach a three-way joint to the vacuum hose connected between the intake manifold plenum and the fuel pressure solenoid valve and connect a vacuum gauge.
4. Start the engine, and check that the curb idle speed is within the standard value range.

   Standard value: 750 ± 100 r/min
5. Check the manifold vacuum.

   Limit: min. 60 kPa (18 in.Hg)

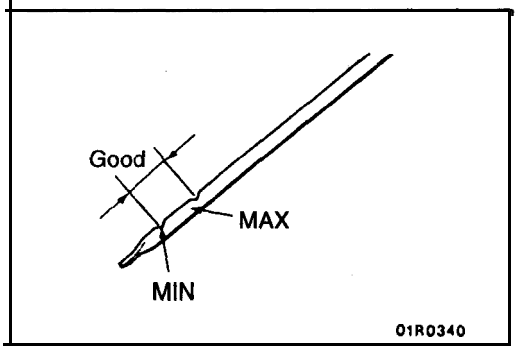

LASH ADJUSTER CHECK

11100290245

NOTE
If an abnormal noise (rattling noise) probably caused by the lash adjusters is heard and the noise does not stop, check as follows.

1. Check the engine oil, and if required, refuel or replace it.

   NOTE
   - If the amount of the engine oil is insufficient, air will be sucked in from the oil strainer and mix in the oil passage.
   - If the amount of the engine oil is more than the specified amount, it will be stirred by the crankshaft to make a lot of air mix in the oil.
   - If the oil is deteriorated, it will not easily separate from air and the amount of air' mixed in the oil will , increase.

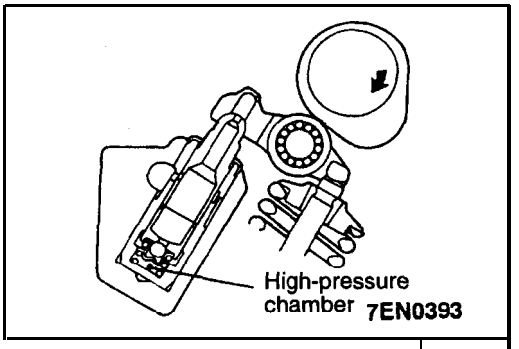

If the air which has mixed in the oil due to the above causes enters the high pressure chamber in the lash adjusters, the air in the high pressure chamber will be pressurized during opening of the valve, which causes the lash adjusters to shrink excessively, and an abnormal noise will be generated when the valve is closed. This is the same phenomenon as the one when the valve clearance has been excessively adjusted by mistake.
In this case, if the air which has entered the lash adjusters is bled, things will be normalized.

2. Start the engine and perform gentle racing* several times (less than 10 times.)
   If the abnormal noise stops by racing, the air is bled from the high pressure chamber of the lash adjusters and the function of the lash adjusters is normalized.
   *: After raising the engine speed from idling to 3000 r/min gradually (in 30 seconds), drop the speed gradually (in 30 seconds) to idling.

NOTE
- If the vehicle is parked on a slope for long, the oil in the lash adjusters will be decreased 'and air may enter the high pressure chamber when the vehicle is started.
- After the vehicle is parked for long, air may enter the high pressure chamber because the, oil in the oil passage will be gone and, it will take a time before the oil is supplied to the lash adjusters.

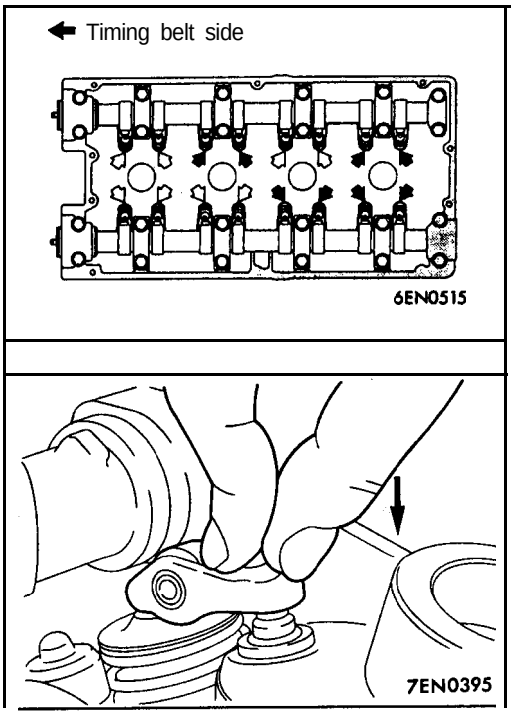

3. If an abnormal noise does not stop by racing, check the lash adjusters according to the following procedures.
   (1) Stop the engine.
   (2) Set the NG. 1 cylinder of the engine to the compression top dead center.
   (3) Push the rocker arm indicated by the white arrow mark as shown in the illustration at left and check whether or not the arm lock goes down.
   (4) Turn slowly the crankshaft 360° clockwise.
   (5) Check the rocker arm indicated by the black arrow mark as shown in the illustration at left same as above (3).
   (6) If the rocker arm can be lowered easily when the part of the rocker arm which is directly above the top of the lash adjuster is pressed, the lash adjuster is defective and should be replaced with a new part. In the same procedure as step 4, replace the lash adjuster.
   Furthermore, when replacing the lash adjuster, bleed all of the air from the lash adjuster and then install. After this, check that there is no problem by checking in steps (1) to (5).

   NOTE
   - A leak-down test can be carried out to accurately determine whether the lash adjuster is defective or not.
   - For the procedures for the leak-down test and air bleeding of the lash adjuster, refer to P.11B-34.

   Furthermore, if the rocker arm' feels 'extremely stiff and cannot be lowered when it is pressed, the lash adjuster is normal, so investigate for some other cause of the abnormality.

4. Lash adjuster replacement procedure.

Caution
In the cylinder which 'are being removed, the valves will touch the pistons when the valves are pushed down, so the crankshaft should be turn to lower the piston positions.
In addition, places where the rocker arms are lifted by the cams cannot be removed. In these cases, the crankshaft should be turned so that the rocker arms are not lifted.

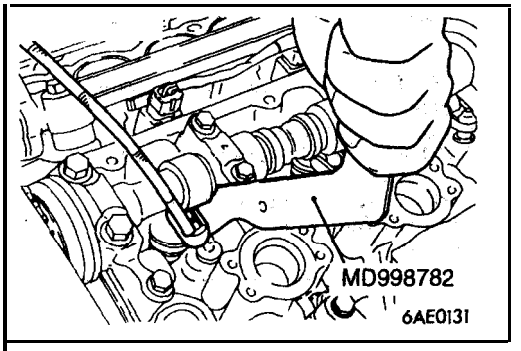

(I) Use the special tool to push down the valve, and remove the roller rocker arm.
(2) Remove. the lash adjuster from the cylinder head.
(3) Install a new lash adjuster from which the air has been 'bled 'to the cylinder head.

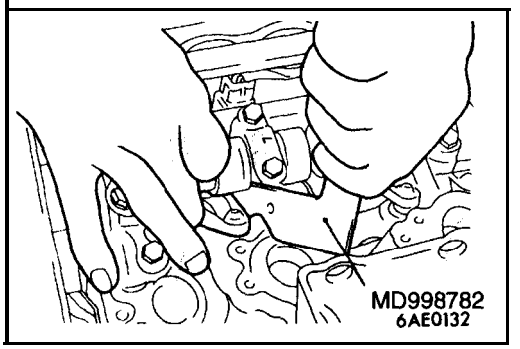

(4) Use the special tool to push down the valve, and install the roller rocker. arm.

NOTE
When installing the roller rocker arm, first set the pivot side of the rocker arm onto the top of the lash adjuster, and then after pushing down the valve, set the slipper side of the rocker arm on top of the end of the valve stem.

LASH ADJUSTER REPLACEMENT 11100320050

Refer to LASH ADJUSTER CHECK.

ENGINE ASSEMBLY

11200100404

REMOVAL AND INSTALLATION

Pre-removal Operation
- Fuel Line Pressure Releasing
  (Refer to GROUP 13A – On-vehicle Service.)
- 'Hood Removal
- Engine Coolant Draining
  (Refer to GROUP 00 – Maintenance Service.)
- Transaxle Assembly Removal
  (M/T-FWD: Refer to GROUP 22A – Transaxle Assembly.)
  (M/T-AWD: Refer to GROUP 22A – Transaxle Assembly.)
  (A/T-FWD: Refer to GROUP 23A – Transaxle Assembly.)
  (A/T-AWD: Refer to GROUP 23A – Transaxle Assembly.)
- Radiator Removal (Refer to GROUP 14 – Radiator.)
- Under Cover Removal
  (Refer to GROUP 42 – Under Cover.)

Post-installation Operation
- Radiator Installation
  (Refer to GROUP 14 – Radiator.)
- Transaxle Assembly Removal
  (M/T-FWD: Refer to GROUP 22A – Transaxle Assembly.)
  (M/T-AWD: Refer to GROUP 22A – Transaxle Assembly.)
  (A/T-FWD: Refer to GROUP 23A – Transaxle Assembly.)
  (A/T-AWD: Refer to GROUP 23A – Transaxle Assembly.)
- Engine Coolant Supplying
  (Refer to GROUP 00 – Maintenance Service.)
- Hood Installation
- Accelerator Cable Adjustment
  (Refer to GROUP 17 – On-vehicle Service.)
- Under Cover Installation
  (Refer to GROUP 42 – Under Cover.)
- Drive Belt Tension Adjustment
  <Power Steering, A/C>

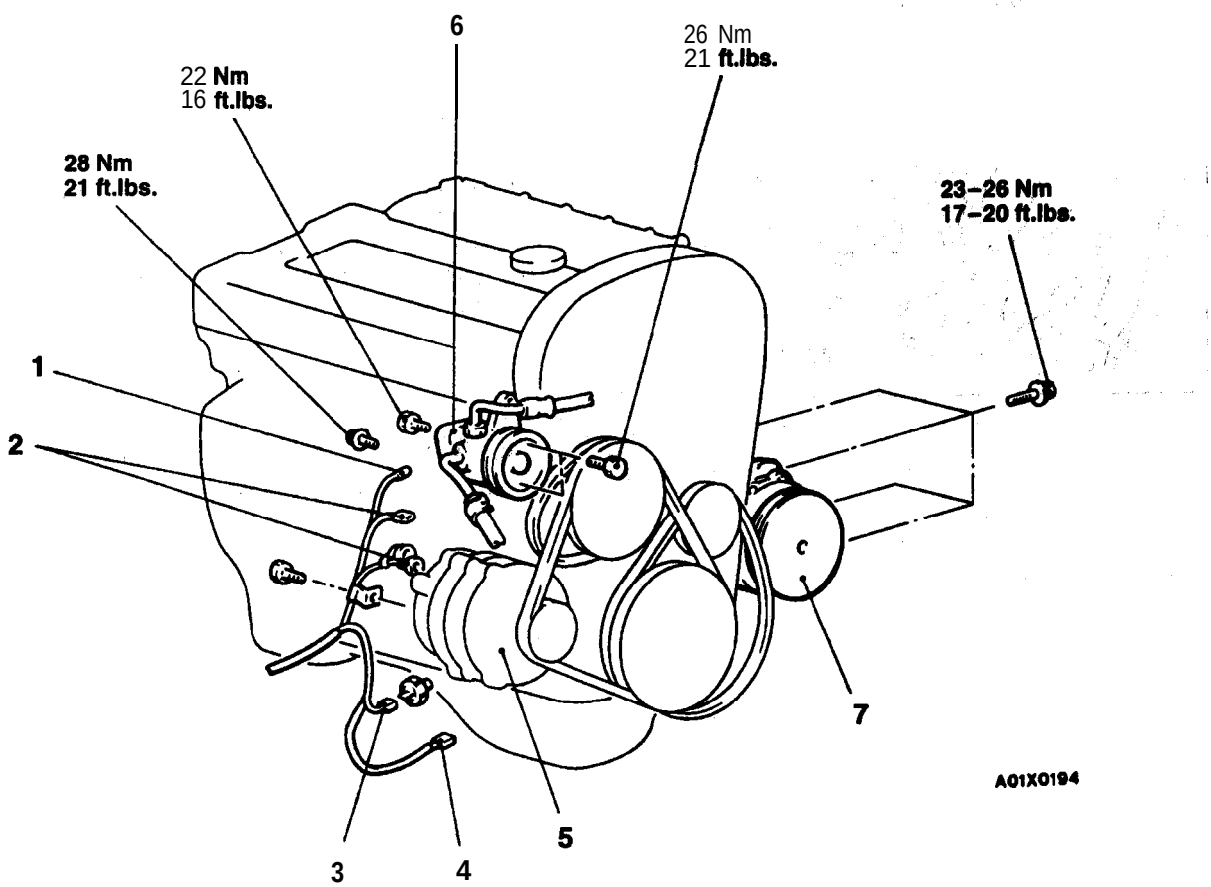

Removal steps

1. Power steering pressure switch connector
2. Generator connectors
3. Oil pressure switch connector
4. Oil pressure gauge unit connector
5. Generator
   (Refer to GROUP 16 – Generator.)
6. Power steering pump connection
7. A/C compressor connection

◀A▶
◀B▶

TSB Revision

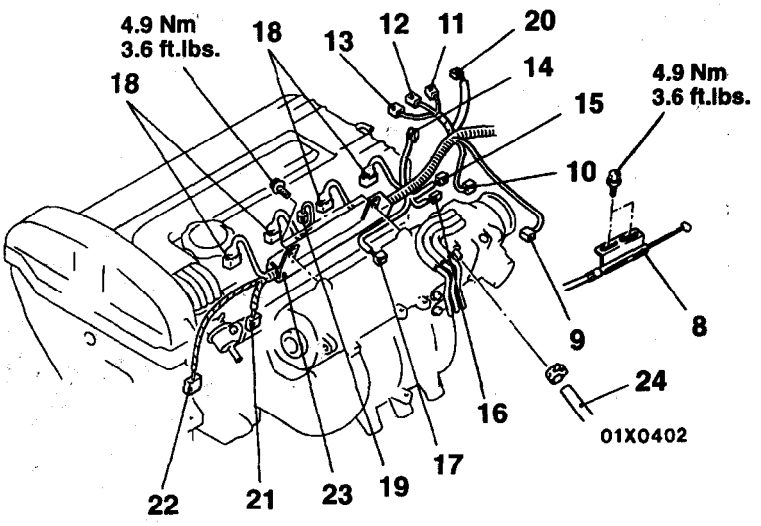

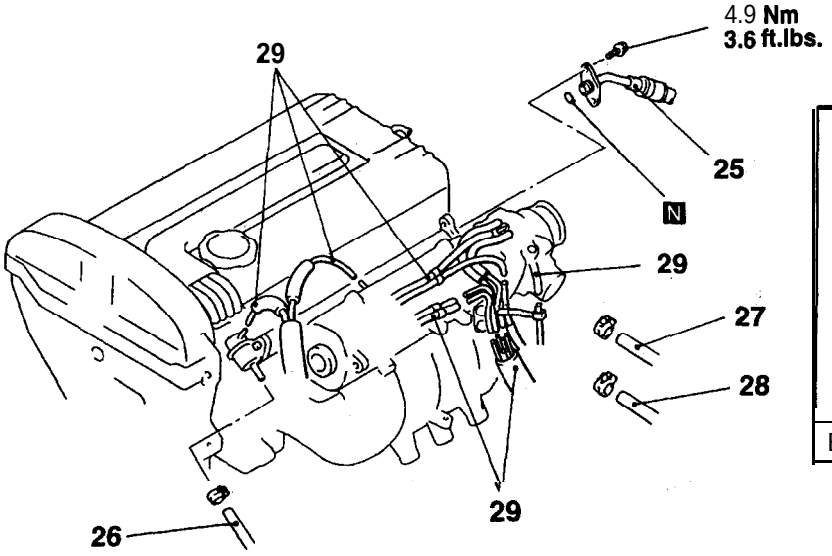

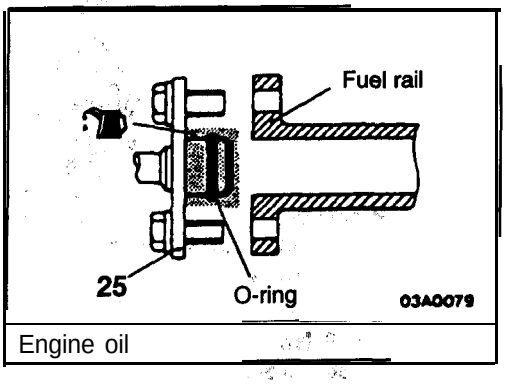

00005320

8. Accelerator cable connection
9. Idle air control motor connector
10. Knock sensor connector
11. Heated oxygen sensor connector
12. Engine coolant temperature gauge unit connector
13. Engine coolant temperature sensor connector
14. Ignition power transistor connector
15. Throttle position sensor connector
16. Capacitor connector
17. Manifold differential pressure sensor connector
18. Injector connectors
19. Ignition 'coil connector'
20. Camshaft position sensor connector
21. Crankshaft position sensor connector
22. Air conditioning compressor connector
23. Control wiring harness
24. Brake booster vacuum hose connection
▶C◀ 25. High-pressure fuel hose connection
26. Fuel return hose connection
27. Water hose A connection
28. Water hose B connection
29. Vacuum hoses connection

TSB Revision

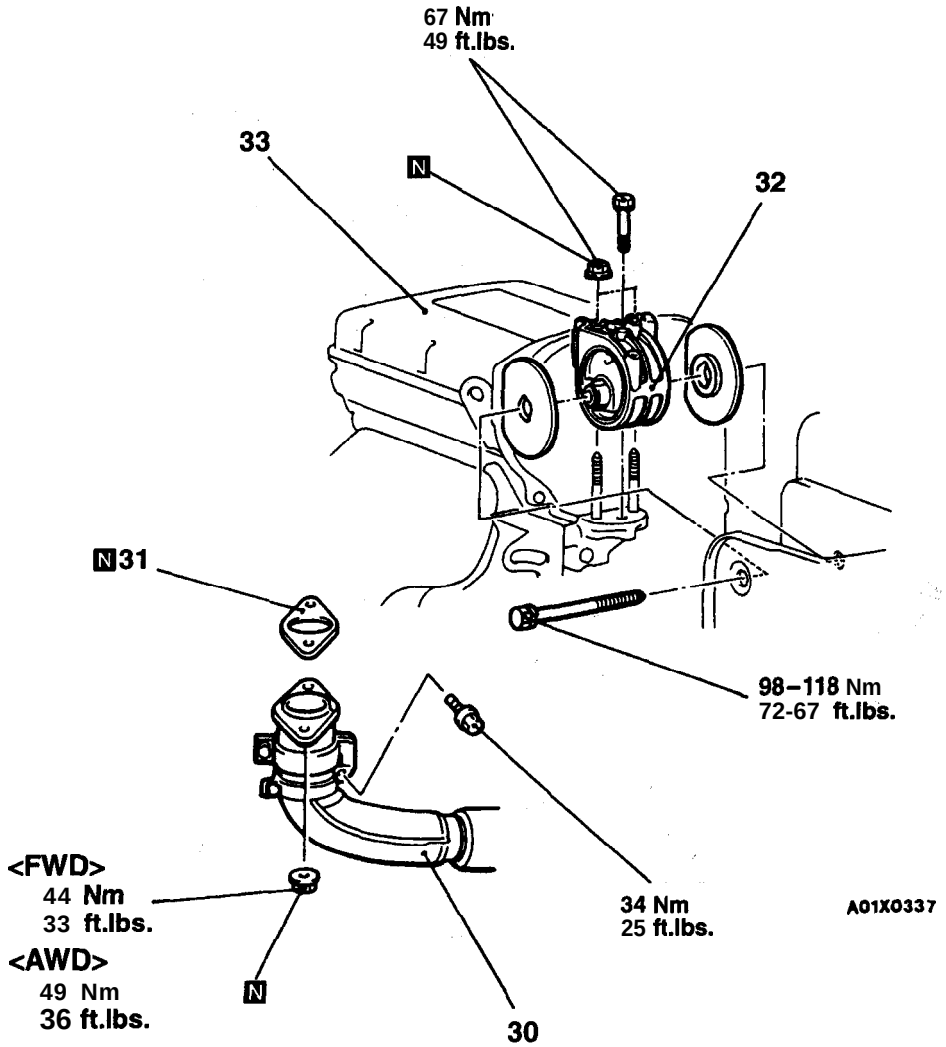

30. Front exhaust pipe connection
31. Gasket
◀C▶ ▶B◀ 32. Engine mount bracket assembly
◀D▶ ▶A◀ 33. Engine assembly

REMOVAL SERVICE POINTS

◀A▶ POWER STEERING PUMP REMOVAL

Remove the power steering pump from the bracket with the hose attached.

NOTE
Place the removed power steering pump in a 'place where it will not be a hindrance when removing and installing the engine assembly, and tie it with a cord.

TSB Revision

◀B▶ A/C COMPRESSOR REMOVAL

Disconnect the A/C compressor connector and remove the compressor from the compressor bracket with the hose still attached.

NOTE
Place the removed A/C compressor in a place where it will not be a hindrance when removing 'and installing the engine assembly, and tie it with a cord:

Caution
Do not bend the joint between the A/C hose and the A/C pipe by force.

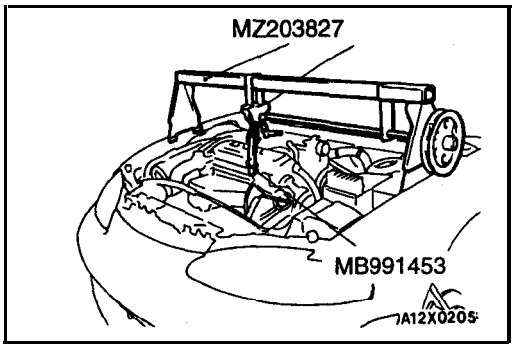

◀C▶ ENGINE MOUNT BRACKET ASSEMBLY REMOVAL

(1) Support the engine with a garage jack.
(2) Remove the special tool which was attached when the transaxle assembly was removed.
(3) Hold the engine assembly with a chain block or similar tool.
(4) Place a garage jack against the engine oil pan with a piece of wood in between, jack up the engine so that the weight of the engine is no longer being applied to the engine mount bracket, and then remove the engine mount bracket.

◀D▶ ENGINE ASSEMBLY REMOVAL

After checking that all cables, hoses and harness connectors, etc., are disconnected from the engine, lift the chain block slowly to remove the engine assembly upward from the engine compartment.

INSTALLATION SERVICE POINTS

▶A◀ ENGINE ASSEMBLY INSTALLATION

Install the engine assembly while checking that the cables, hoses, and harness connectors are not clamped.

▶B◀ ENGINE MOUNT BRACKET ASSEMBLY INSTALLATION

(1) Place a garage jack against the engine oil pan with a piece of wood in between, and install the engine mount bracket while adjusting the position of the engine.
(2) Support the engine with the garage jack.
(3) Remove the chain block and support the engine assembly with the special tool.

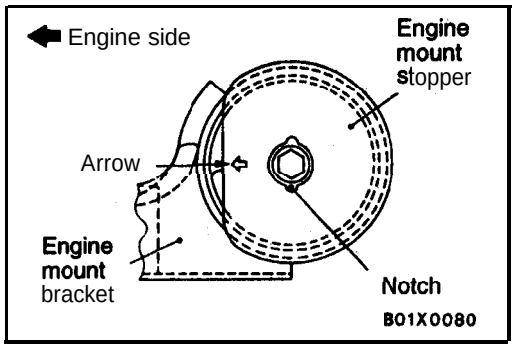

(4) Align the notches on the stopper with the engine mount bracket with the arrow mark facing, toward the shown direction. Then install the stopper.

▶C◀ HIGH-PRESSURE FUEL HOSE CONNECTION

When connecting the high-pressure fuel hose to the fuel rail, apply a small amount of clean engine oil, to the hose union and then insert, being careful not to damage the O-ring.

Caution

Do not let engine oil get into the fuel rail.

CRANKSHAFT PULLEY

11200160136

REMOVAL AND INSTALLATION

Pre-removal Operation
- Under Cover Removal
  (Refer to GROUP 42 – Under Cover.)

Post-installation Operation
- Drive Belt Tension Adjustment
- Under Cover Installation
  (Refer to GROUP 42 – Under Cover.)

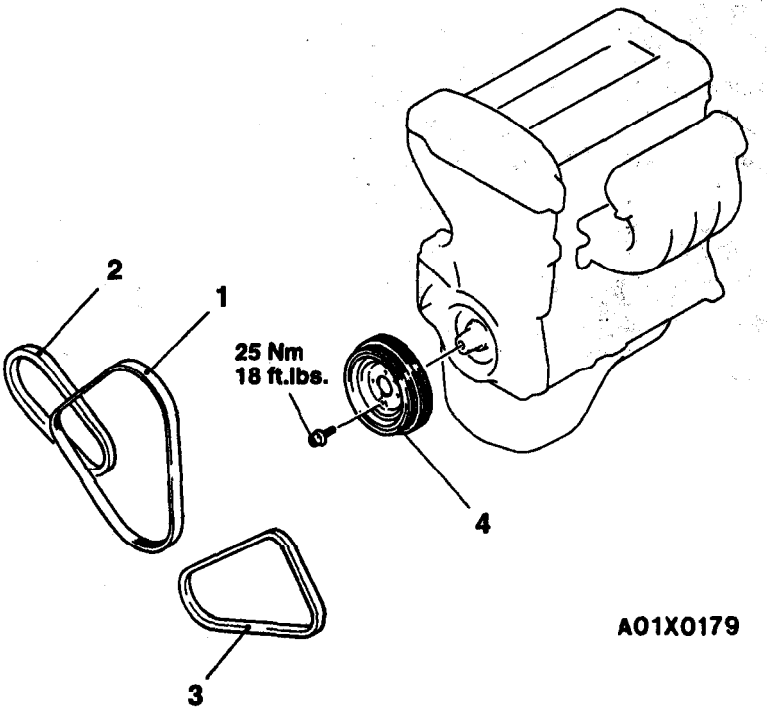

Removal steps

1. Drive belt (Generator)
2. Drive belt (Power steering)
3. Drive belt (A/C)
4. Crankshaft pulley

CAMSHAFT AND CAMSHAFT OIL SEAL

11200190319

REMOVAL AND INSTALLATION

Pre-removal Operation
- Timing Belt Front Upper Cover Removal (Refer to P.11A-36.)

Post-installation Operation
- Timing Belt Front Upper Cover Installation (Refer to P.11A-36.)
- Engine Adjustment

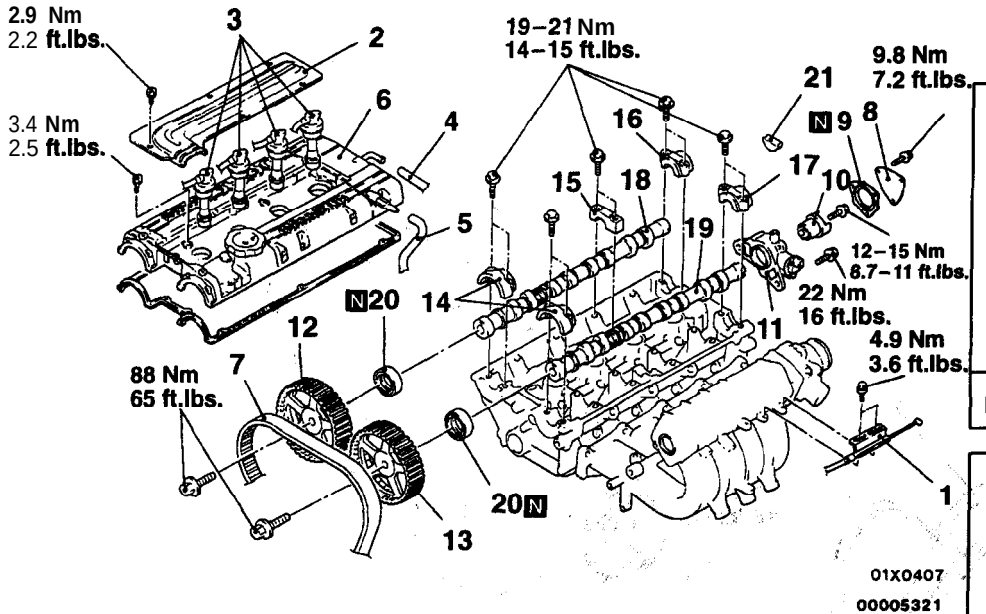

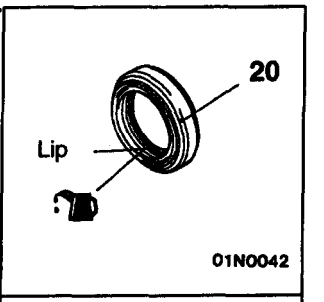

Engine oil

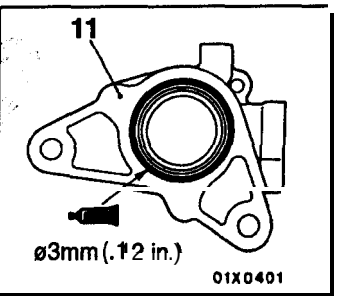

Sealant:
MITSUBISHI GENUINE PART MD970389 or equivalent

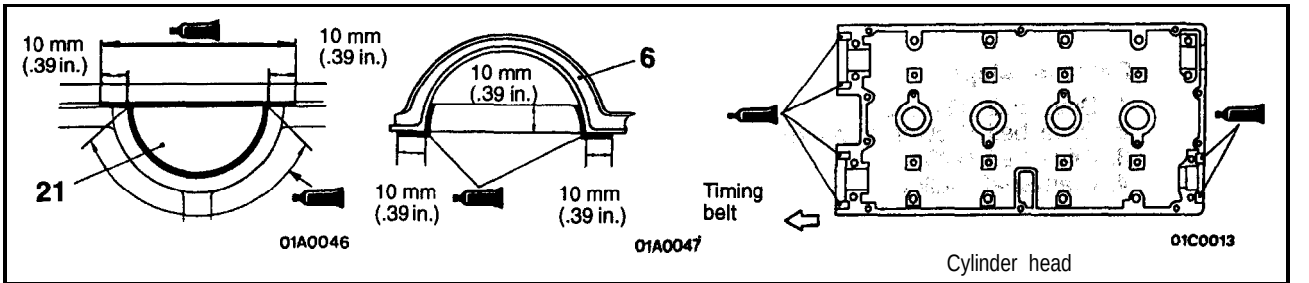

Specified sealant: 3M ATD Part No. 8660 or equivalent

TSB Revision

Removal steps

1. Accelerator cable connection
2. Center cover
3. Spark plug cable
4. Breather hose
5. PCV hose
6. Rocker cover
7. Timing belt (Refer to P.11A-36.)
8. Cover
9. Gasket
10. Camshaft position sensing cylinder
11. Camshaft position sensor support
12. Exhaust camshaft sprocket ◀A▶
13. Intake camshaft sprocket ◀A▶
14. Front camshaft bearing cap ◀B▶
15. Camshaft bearing cap ◀B▶
16. Rear camshaft bearing cap (R.H.) ◀B▶
17. Rear camshaft bearing cap (L.H.) ◀B▶
18. Exhaust camshaft
19. Intake camshaft
20. Camshaft oil seal
21. Semi-circular packing

Installation steps

19. Intake camshaft ▶A◀
18. Exhaust camshaft ▶A◀
17. Rear camshaft bearing cap (R.H.) ▶B◀
16. Rear camshaft bearing cap (L.H.) ▶B◀
15. Camshaft bearing cap ▶B◀
14. Front camshaft bearing cap ▶B◀
20. Camshaft oil seal ▶C◀
13. Intake camshaft sprocket
12. Exhaust camshaft sprocket
11. Camshaft position sensor support ▶D◀
10. Camshaft position sensing cylinder ▶D◀
9. Gasket
8. Cover
7. Timing belt (Refer to P.11A-36.)
21. Semi-circular packing"
6. Rocker cover
5. PCV hose
4. Breather hose
3. Spark plug, cable
2. Center cover
1. Accelerator cable connection (Refer to GROUP 17 – On-vehicle Service.)

TSB Revision

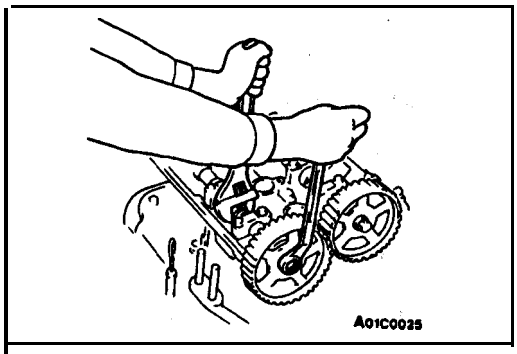

REMOVAL SERVICE POINTS .

◀A▶ EX HA US T CAMSHAFT SPROCKET/INTAKE CAMSHAFT SPROCKET REMOVAL

(1) Use a wrench at the hexagonal part of the camshaft (to prevent the crankshaft from turning) to loosen the camshaft sprocket bolt.
(2) Remove the camshaft sprockets.

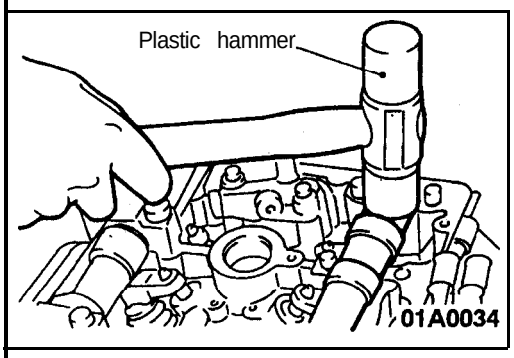

◀B▶ FRONT CAMSHAFT BEARING CAP/CAMSHAFT BEARING CAP/REAR CAMSHAFT BEARING (R.H.)/REAR CAMSHAFT BEARING (L.H.) REMOVAL

(1) Loosen the bearing cap installation bolts 'in two or three steps.
(2) Remove the bearing cap.

NOTE
If the bearing cap is difficult to remove, use a plastic hammer to gently tap the rear part of the camshaft, and then remove.

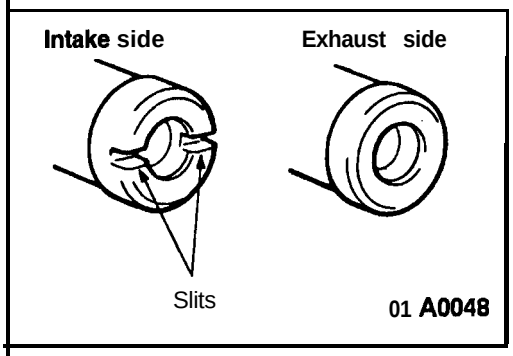

INSTALLATION SERVICE POINTS

▶A◀ INTAKE CAMSHAFT/EXHAUST CAMSHAFT INSTALLATION

(1) Install the camshafts on the cylinder head.

Caution
Do not confuse the intake side and the exhaust side.

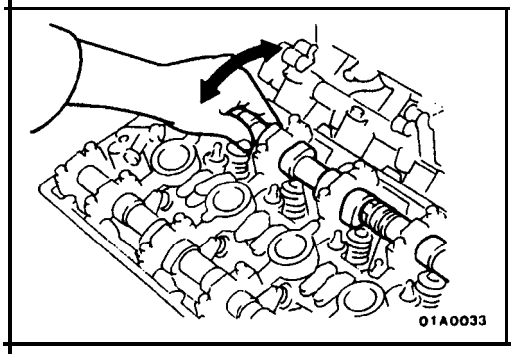

NOTE
Install new camshafts using the following procedure.

(1) Remove the rocker arms.
(2) Lay the camshafts on the cylinder head and install the bearing caps.
(3) Check that the camshaft can be easily turned by hand.
(4) After' checking, remove the bearing caps and the camshafts, and install the rocker arms.

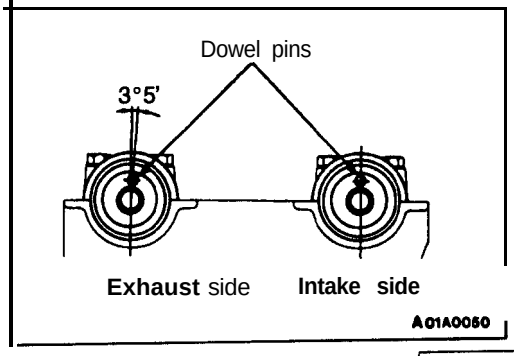

(2) The camshafts dowel pins should be at the positions shown in the figure.

▶B◀ REAR CAMSHAFT BEARING CAP (R.H.)/REAR CAMSHAFT BEARING CAP (L.H.)/CAMSHAFT BEARING CAP/FROM CAMSHAFT BEARING CAP INSTALLATION

Tighten the bearing cap installation bolts to the specified torque in two or three steps.

Caution

Tighten uniformly, otherwise the rocker arms will not be straight.

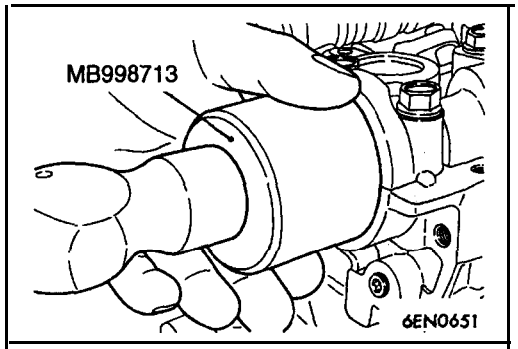

▶C◀ CAMSHAFT OIL SEAL INSTALLATION

Use the special tool to drive the camshaft oil seal into position carefully.

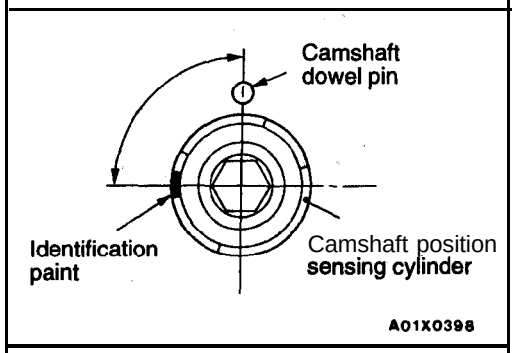

▶D◀ CAMSHAFT POSITION SENSING CYLINDER/ CAMSHAFT POSITION SENSOR SUPPORT INSTALLATION

(1) Install the camshaft position sensing cylinder to the end of the camshaft as shown in the illustration.

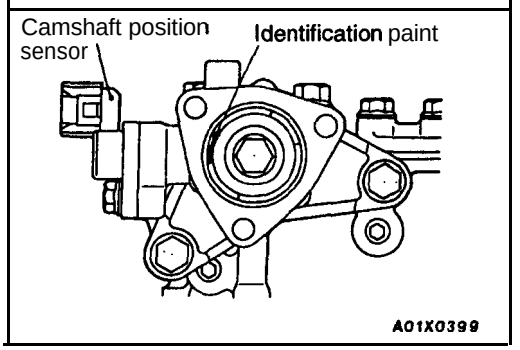

(2) Install the camshaft position sensor support.

(3) Check that the identification paint on the camshaft position sensing cylinder is pointing in the same direction as the, camshaft position sensor installation direction when the camshaft is at the No. 1 compression TDC position.

OIL PAN AND OIL SCREEN

11200250116

REMOVAL AND INSTALLATION

Pre-removal and Post-installation Operation
- Engine Oil Draining and Supplying
- Oil Level Gauge Removal and Installation
- Front Exhaust Pipe Removal and Installation
  <FWD>
  (Refer to GROUP 15 – Exhaust Pipe and Muffler.)
  <AWD>
  (Refer to GROUP 15 – Exhaust Pipe and Muffler.)

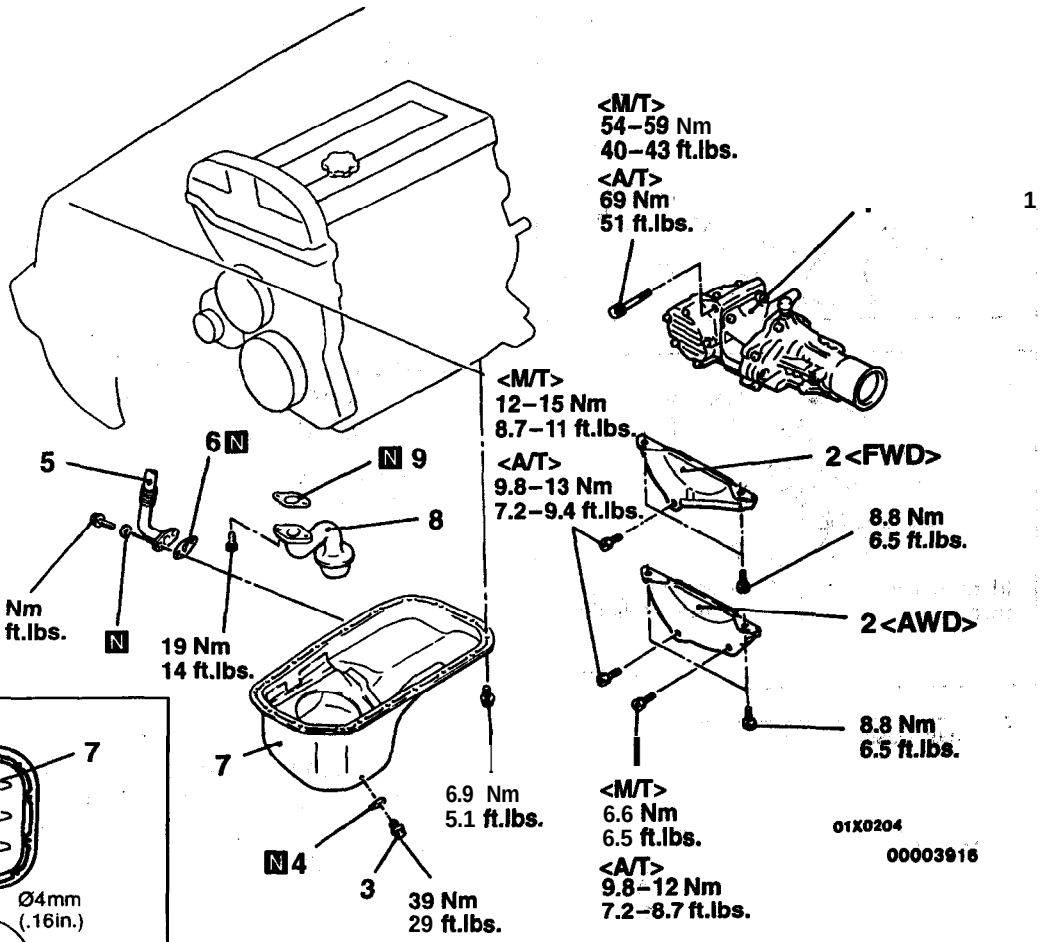

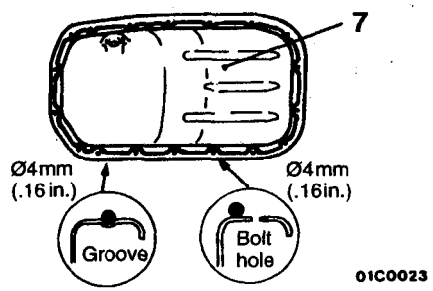

Specified sealant:
MITSUBISHI GENUINE PART
MD970389 or equivalent

Removal steps

◀A▶
1. Transfer assembly <AWD>
2. Bell housing cover
3. Drain plug

▶B◀
4. Gasket
5. Oil return pipe connection
6. Gasket

◀B▶ ▶A◀
7. Oil pan
8. Oil screen
9. Gasket

TSB Revision

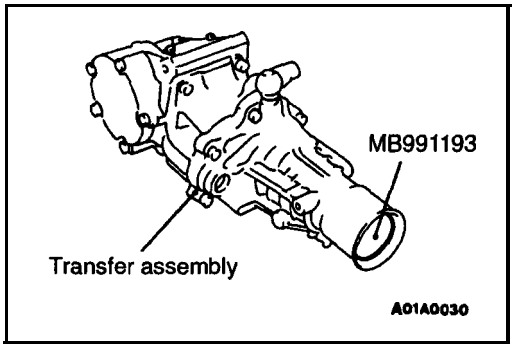

REMOVAL SERVICE POINTS

◀A▶ TRANSFER ASSEMBLY <AWD> REMOVAL

(1) Remove the transfer mounting bolts with the propeller shaft still installed..

(2) Insert a flat-tipped screwdriver or similar tool in between the transfer and transaxle, and remove the transfer from the center shaft

(3) Remove the transfer from the propeller shaft.

Caution
Do not tilt the transfer assembly to the rear, or transfer oil will leak out.

(4) After removing the transfer assembly, insert the special tool to prevent 'the transfer oil from leaking out.

(5) Suspend the propeller shaft from the vehicle chassis with wire: etc.

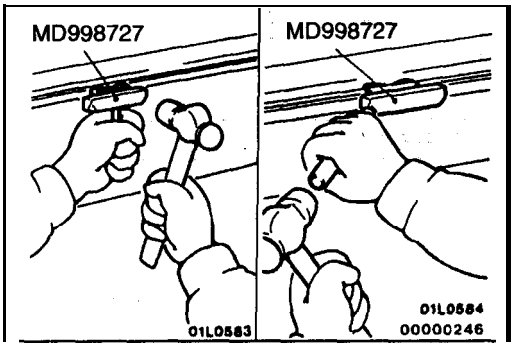

◀B▶ OIL PAN REMOVAL

After removing the oil pan mounting bolts; remove the oil pan with the special tool and a brass bar.

Caution
Do it slowly to avoid deformation of the oil pan flange.

INSTALLATION SERVICE POINTS

▶A◀ OIL PAN INSTALLATION

Caution
After cleaning the oil pan mounting bolt holes in the oil seal case, the oil pan should be fnstalled.

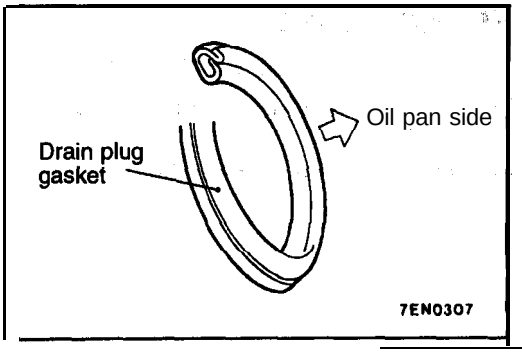

▶B◀ GASKET INSTALLATION

Replace the gasket and install it in the direction shown in the illustration.

CRANKSHAFT FRONT OIL SEAL

11333343133

REMOVAL AND INSTALLATION

Pre-removal and Post-installation Operation
- Timing Belt B Removal and installation (Refer to P.11A-41.)

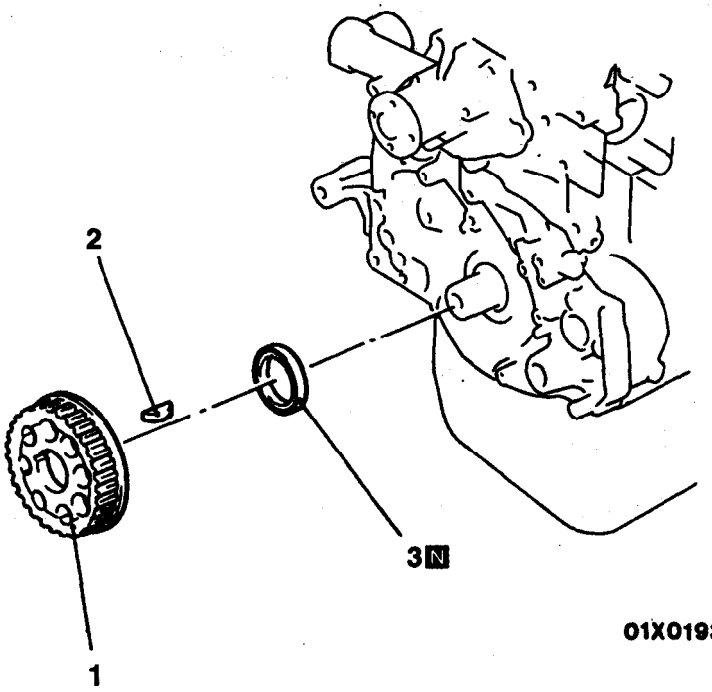

01X0193

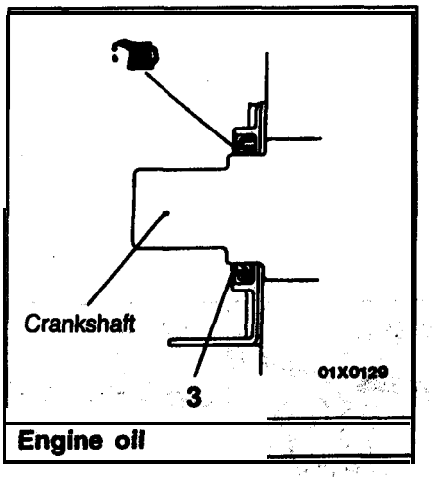

00003917

Removal steps
1. Crankshaft sprocket B
2. Key
▶A◀ 3. Crankshaft front oil seal

INSTALLATION SERVICE POINT

▶A◀ CRANKSHAFT FRONT OIL SEAL INSTALLATION

(1) Apply engine oil to the entire inside diameter of the oil seal lip.
(2) Press-fit the oil seal until it is flush with the oil pump case.

CRANKSHAFT REAR OIL SEAL

11200370294

REMOVAL AND INSTALLATION

Pre-removal and Post-installation Operation

- Transaxle Assembly Removal and Installation
  (M/T-FWD: Refer to GROUP 22A – Transaxle Assembly.)
  (M/T-AWD: Refer to GROUP 22A – Transaxle Assembly.)
  (A/T-FWD: Refer to GROUP 23A – Transaxle Assembly.)
  (A/T-AWD: Refer to GROUP 23A – Transaxle Assembly.)
- Clutch Cover and Clutch Disc Removal and Installation <M/T>

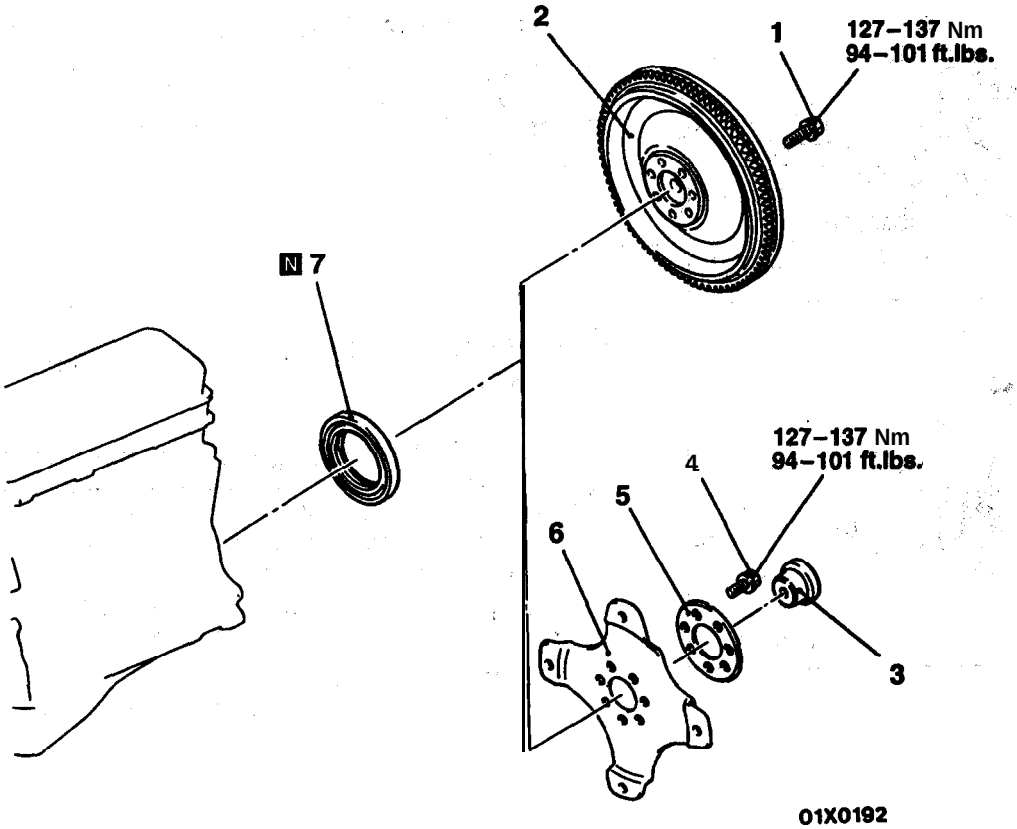

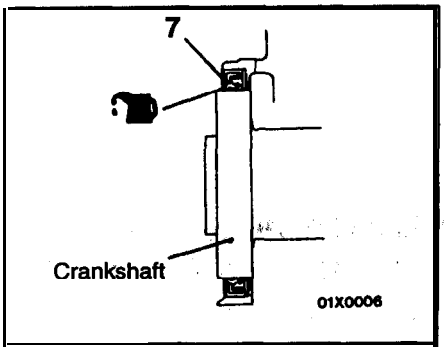

Engine oil

00003918

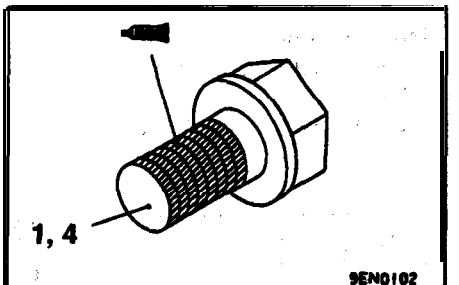

Specified sealant:
3M Stud locking 4170 or equivalent

Removal steps

◀A▶ ▶B◀ 1. Flywheel bolt <M/T>
2. Flywheel <M/T>
3. Crankshaft bushing <A/T>
◀A▶ ▶B◀ 4. Drive plate bolt <A/T>
5. Adapter plate <A/T>
6. Drive plate <A/T>
▶A◀ 7. Crankshaft rear oil seal

TSB Revision

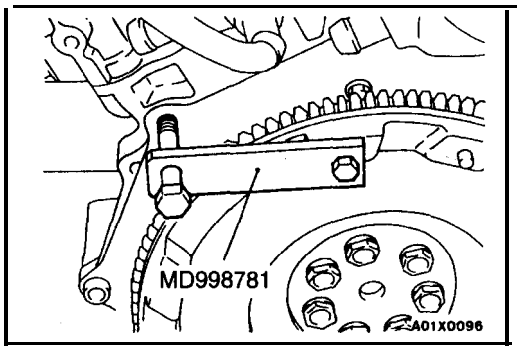

REMOVAL SERVICE POINT

◀A▶ **FLYWHEEL** BOLT **<M/T>/DRIVE** PLATE BOLT <AK>

REMOVAL

Use the special tool to secure. the **flywheel** or drive plate, and remove the bolt.

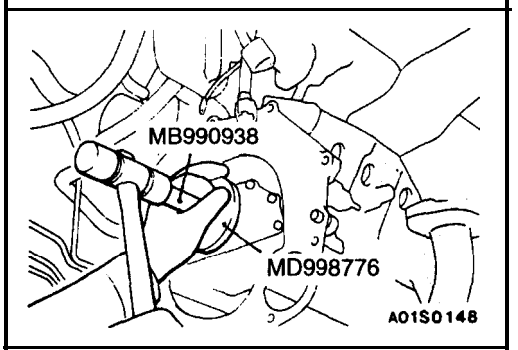

INSTALLATION SERVICE POINTS

▶A◀ **CRANKSHAFT** REAR OIL SEAL INSTALLATION

(1) Apply a small amount of engine oil to the entire inside diameter of the oil seal lip.
(2) Tap in the oil seal as shown in the illustration.

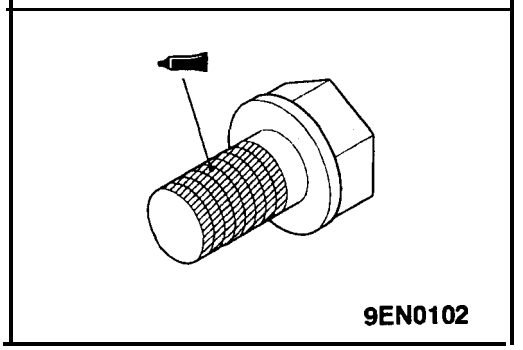

▶B◀ **DRIVE PLATE BOLT <A/T>/FLYWHEEL** BOLT <M/T>

INSTALLATION

(1) Clean off all sealant, oil and other substances which are adhering to the threaded bolts, crankshaft thread holes and the flywheel **<M/T>** or drive plate **<A/T>.**
(2) Apply oil to the bearing surface of the flywheel **<M/T>** or drive plate **<A/T>** bolt.
(3) Apply oil to the crankshaft thread holes.
(4) Apply sealant to the threaded mounting bolts.

Specified sealant:
3M Stud locking 4170 or equivalent

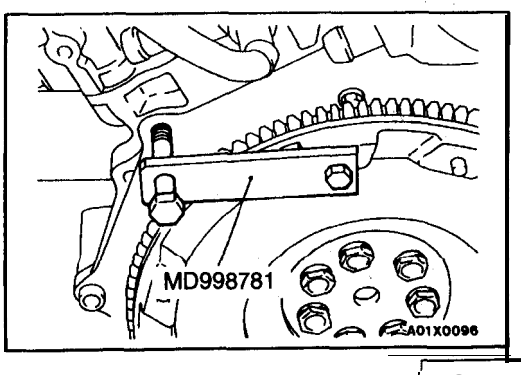

(5) Use the special tool to secure the flywheel **<M/T>** or drive plate **<A/T>,** and then tighten the **bolts to** the specified torque.

Specified torque:
127–137 Nm (94–101 ft.lbs.)

CYLINDER HEAD GASKET

11200400405

REMOVAL AND INSTALLATION

Pre-removal Operation
- Fuel Line Inner Pressure Release
  (Refer to GROUP 13A – On-vehicle Service.)
- Engine Coolant Draining
  (Refer to GROUP 00 – Maintenance Service.)
- Engine Oil Draining
  (Refer to GROUP 00 – Maintenance Service.)

Post-installation Operation
- Engine Oil Refilling
  (Refer to GROUP 00 – Maintenance Service.)
- Engine Coolant Refilling
  (Refer to GROUP 00 – Maintenance Service.)

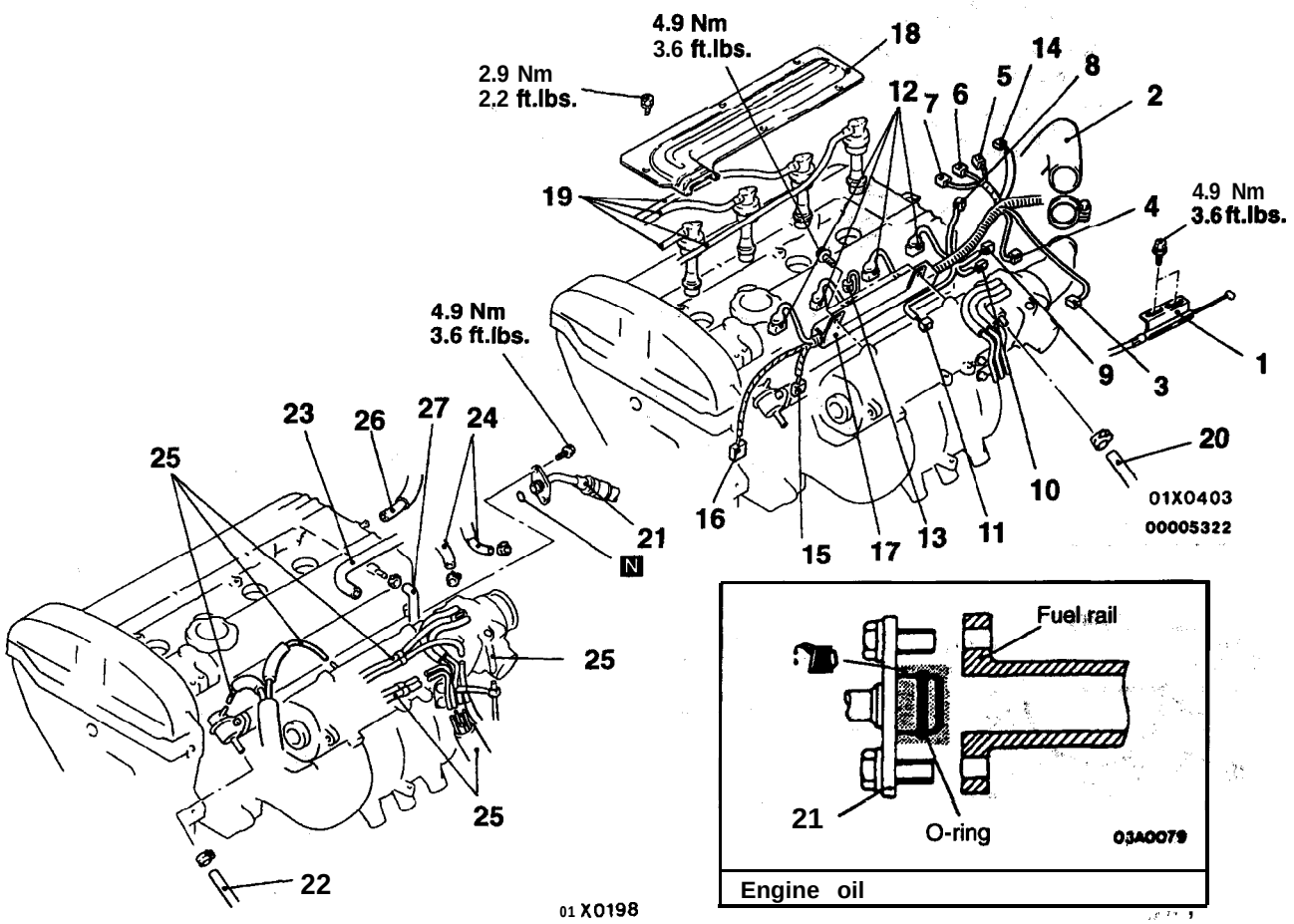

Removal steps

1. Accelerator cable connection (Refer to GROUP 17 – On-vehicle Service.)
2. Air hose C
3. Idle air control motor connector
4. Knock sensor connector
5. Heated oxygen sensor connector
6. Engine coolant temperature gauge unit connector
7. Engine coolant temperature sensor connector
8. Ignition power transistor connector
9. Throttle position sensor connector
10. Capacitor connector
11. Manifold differential pressure sensor connector
12. Injector connectors
13. Ignition coil connector
14. Camshaft position sensor connector
15. Crankshaft position sensor connector
16. Air conditioning compressor connector
17. Control wiring harness
18. Center cover
19. Spark plug cable
20. Brake booster vacuum hose connection

▶F◀ 21. High-pressure fuel hose connection

22. Fuel return hose connection
23. By-pass valve hose connection
24. Water hose connection
25. Vacuum hoses connection
26. Breather hose connection
27. PCV hose connection

TSB Revision

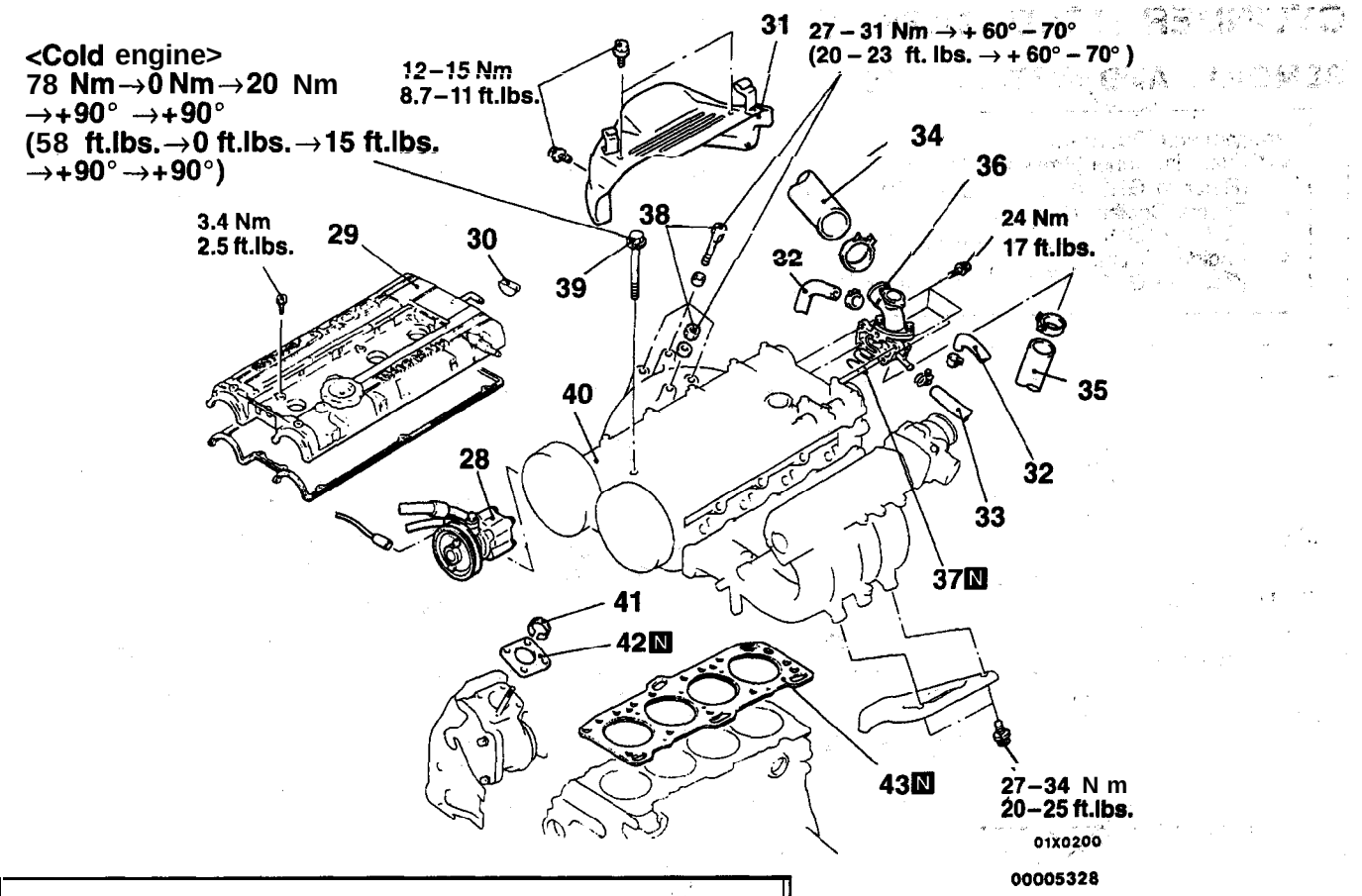

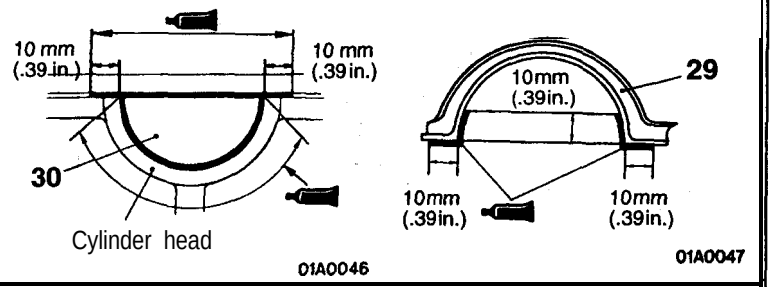

Sealant: 3M ATD Part No. 8880 or equivalent

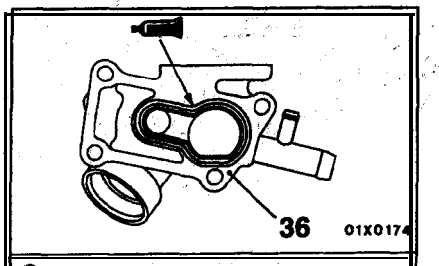

Specified sealant:
MITSUBISHI GENUINE PART
MD970389 or equivalent

- Timing belt
  (Refer to P.11A-36.)

28. Power steering pump
29. Rocker cover
30. Semi-circular packing
31. Heat protector (A)
32. Water hose connection
33. Water hose A connection

◀A▶ ▶E◀ 34. Radiator upper hose connection
◀A▶ ▶E◀ 35. Radiator lower hose connection

▶D◀ 36. Thermostat case assembly
▶C◀ 37. O-ring
38. Flange bolts and flange nut
(Refer to GROUP 15–Exhaust Manifold.)
◀B▶ ▶B◀ 39. Cylinder head bolt
40. Cylinder head assembly
41. Ring
42. Gasket (A)
▶A◀ 43. Cylinder head gasket

TSB Revision

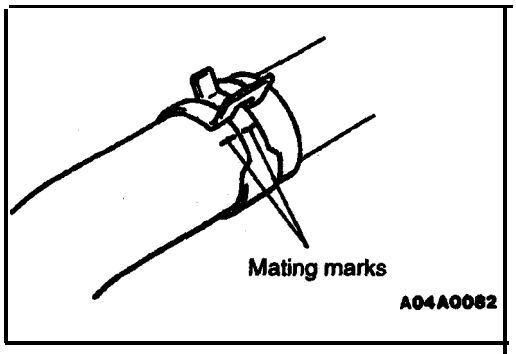

REMOVAL SERVICE POINTS

◀A▶ RADIATOR UPPER HOSE/RADIATOR LOWER HOSE DISCONNECTION

Place mating marks on the radiator hose and the hose clamp, and then disconnect the radiator hose.

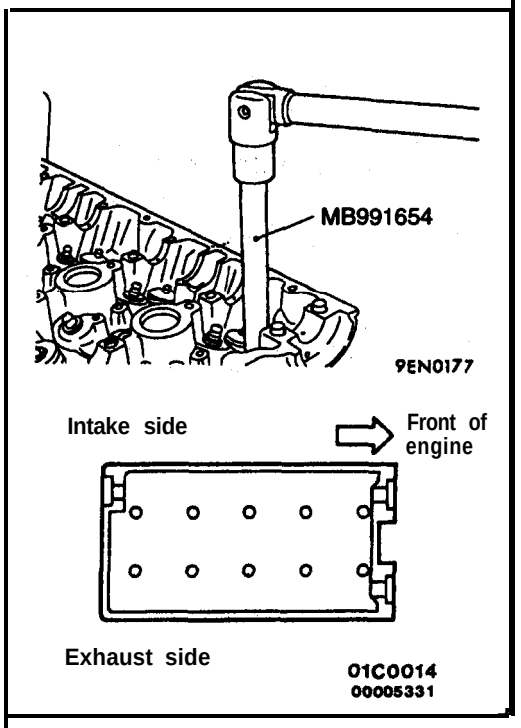

◀B▶ CYLINDER HEAD BOLT REMOVAL

Using the special tool, loosen the bolts in the order shown in the illustration (in 2 or 3 stages), and then remove the cylinder head assembly.

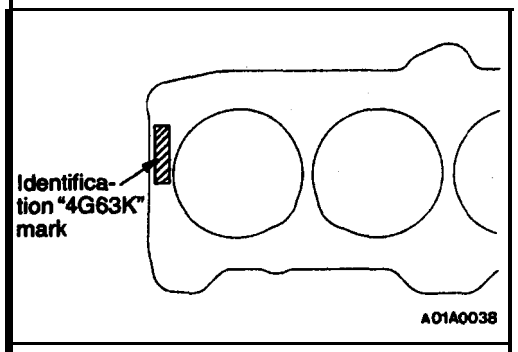

INSTALLATION SERVICE POINTS

▶A◀ CYLINDER HEAD GASKET INSTALLATION

(1) Wipe off all oil and grease from the gasket mounting surface.

(2) Install the gasket to the cylinder block with the identification mark facing upwards.

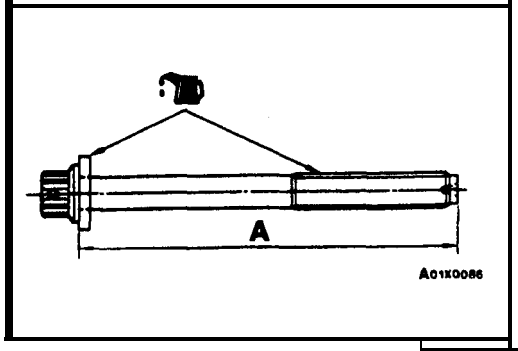

▶B◀ CYLINDER HEAD BOLT INSTALLATION

(1) When installing the cylinder head-bolts, the length below the head of the bolts should be within the limit. If it is outside the limit, replace the bolts.

Limit (A): 99.4 mm (3.91 In.)

(2) Apply engine oil to the bolt thread and the washer.

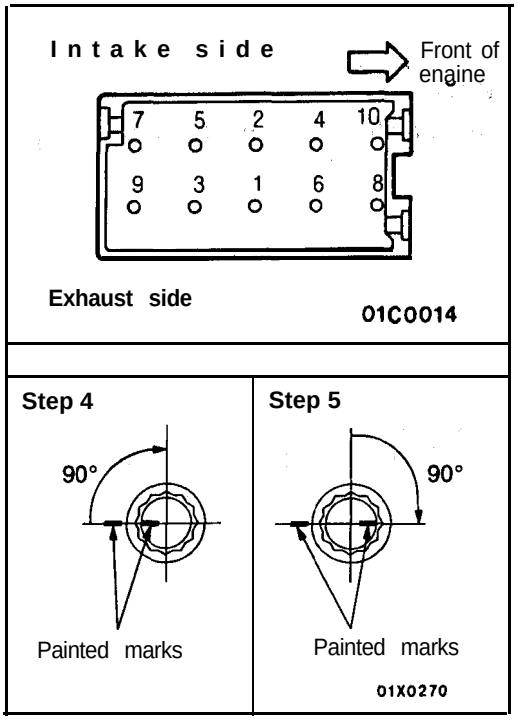

(3) Tighten the bolts by the following procedure.

Step	Operation	Remarks
1	Tighten to 78 Nm (58 ft.lbs).	In the order shown in the illustration.
2	Loosen fully.	In the reverse order of that shown in the illustration.
3	Tighten to 20 Nm (15 ft.lbs.).	In the order shown in the illustration.
4	Tighten 90° of a turn.	In the order-shown in-the illustration; Mark the head of the cylinder head bolt and cylinder head by paint.
5	Tighten 90° of a turn.	In the order shown in the illustration. Check that the painted mark of the head bolt is lined up with that of the cylinder head.

Caution

1. **Always make a tightening angle just 90°. If it is less than 90°, the head bolt will be loosened.**
2. **If it is more than 90°, remove the head bolt and repeat the procedure from step 1.**

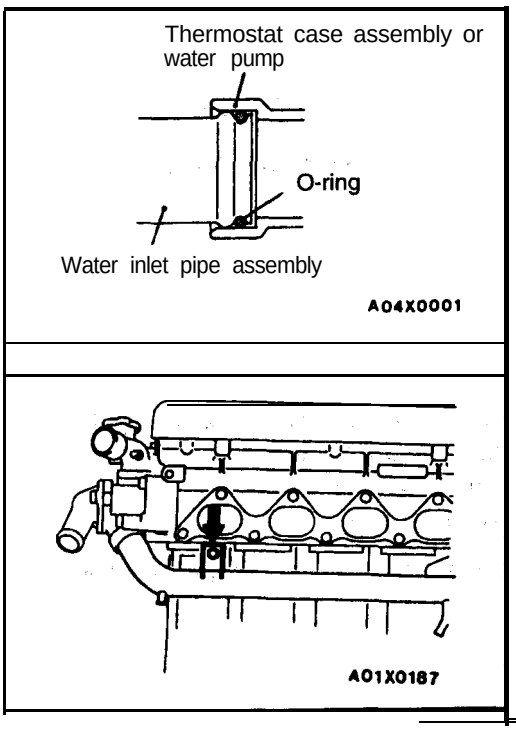

▶C◀ O-RING INSTALLATION

Insert the O-ring to the water inlet pipe, and coat the outer inside diameter of the O-ring with water or engine coolant.

Caution

Do not let engine oil or other greases contact with the O-ring.

▶D◀ THERMOSTAT CASE ASSEMBLY INSTALLATION

(1) Loosen the water inlet pipe bolt shown in the illustration.

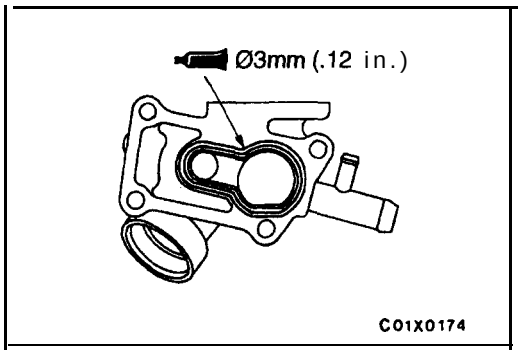

(2) Apply specified sealant to the thermostat case assembly in the places shown in the illustration.

Specified sealant:
MITSUBISHI GENUINE PART MD970389 or equivalent

(3) Apply a small amount of water to the O-ring of the water inlet pipe, and then press the thermostat case assembly into the water inlet pipe.
(4) Tighten the thermostat case assembly mounting bolts.
(5) Tighten the water inlet pipe bolts.

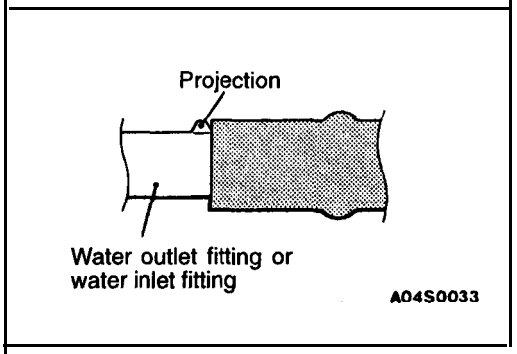

▶E◀ RADIATOR LOWER HOSE/RADIATOR UPPER HOSE CONNECTION

(1) Insert each hose as far as the projection of the water outlet fitting or water inlet fitting.

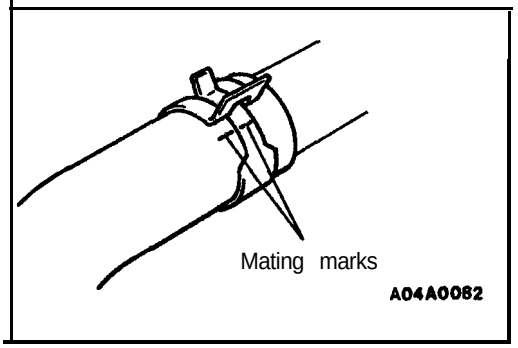

(2) Align the mating marks on the radiator hose and hose clamp, and then connect the radiator hose.

▶F◀ HIGH-PRESSURE FUEL HOSE CONNECTION

When connecting the high-pressure fuel hose to the fuel rail, apply a small amount of clean engine oil to the hose union and then insert, being careful not to damage the O-ring.

Caution
Do not let engine oil **get into the fuel rail.**

TIMING BELT

11200430206

REMOVAL AND INSTALLATION

Pre-removal Operation
- Under Cover Removal
  (Refer to GROUP 42 – Under Cover.)
- Engine Mount Bracket Removal
  (Refer to GROUP 32 – Engine Mounting.)

Post-installation Operation
- Under Cover Installation
  (Refer to GROUP 42 – Under Cover.)
- Engine Adjustment
- Engine Mount Bracket Installation
  (Refer to GROUP 32 – Engine Mounting.)

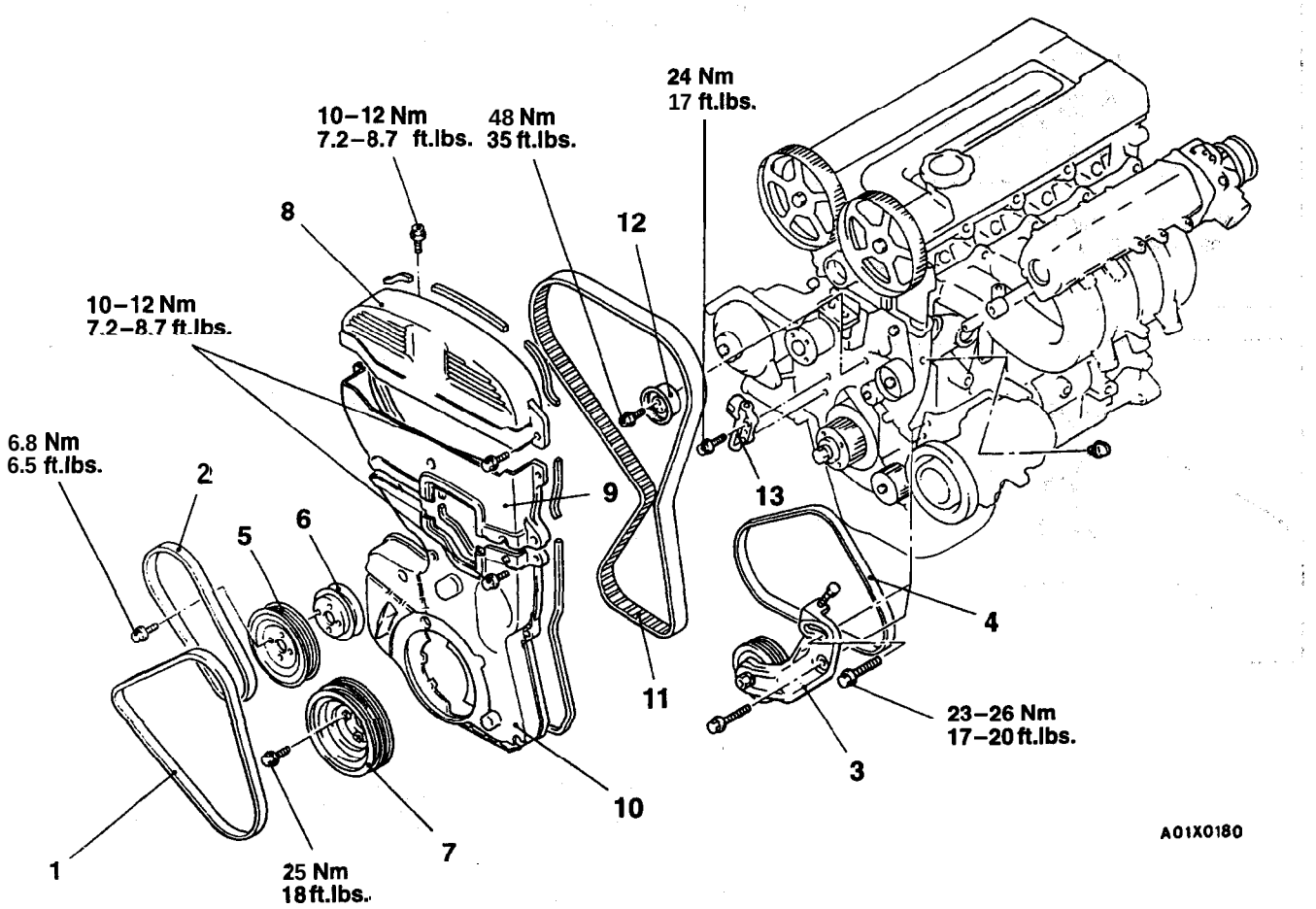

Removal steps
- Drive Belt Tension Adjustment

1. Drive belt (Generator)
2. Drive belt (Power steering)
3. Tensioner pulley bracket
4. Drive belt (A/C)
5. Water pump pulley
6. Water pump pulley (Power steering)
7. Crankshaft pulley

▶D◀ 8. Timing belt front upper cover
◀A▶ ▶D◀ 9. Timing belt front center cover
▶D◀ 10. Timing belt front lower. cover
▶C◀ • Timing belt tension adjustment
◀B▶ ▶B◀ 11. Timing belt
12. Tension pulley
▶A◀ 13. Auto tensioner

TSB Revision

REMOVAL SERVICE POINTS

◀A▶ TIMING BELT FRONT CENTER COVER

Remove the stud bolt of the engine support bracket, and remove the timing belt front center cover.

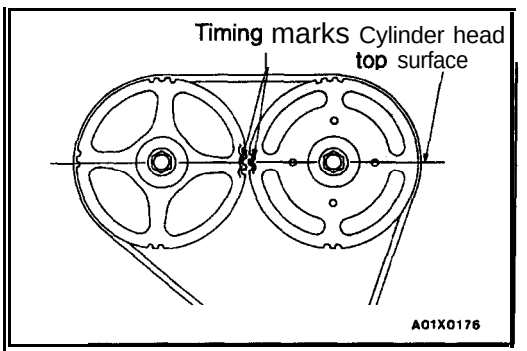

◀B▶ TIMING BELT REMOVAL

(1) Turn the crankshaft in the forward direction (to the right) to align the camshaft sprocket timing marks.

Caution
Always turn the crankshaft in the forward direction only.

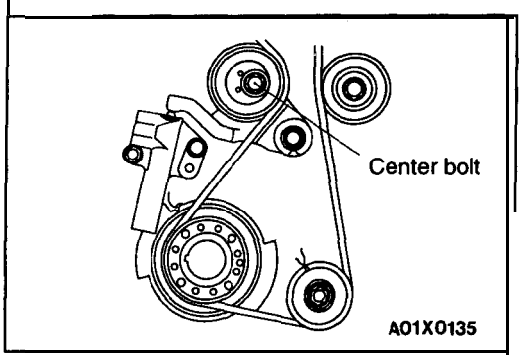

(2) Loosen the tension pulley center bolt.
(3) Move the tension pulley to the water pump side, and then remove the timing belt.

Caution
If the timing belt is to be reused, use chalk to mark (on its flat side) an arrow indicating the clock-wise direction.

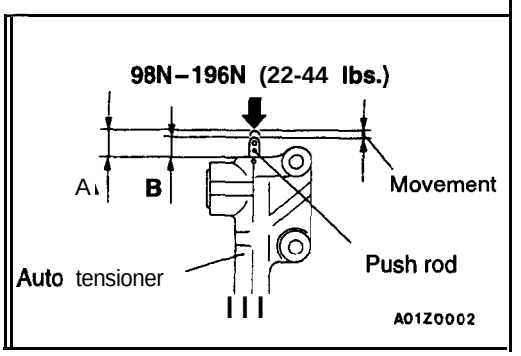

INSTALLATION SERVICE POINTS

▶A◀ AUTO TENSIONER INSTALLATION

(1) Apply 98-196 N (22-44 lbs.) force to the auto tensioner by pressing it against a metal (cylinder block,..etc.), and measure the movement of the push rod.

Standard value:
Within 1 mm (.04 in.)
A: Length when it is free (not pressed)
B: Length when it is pressed
A-B: Movement

(2) If it is out of the standard value, replace the auto tensioner.

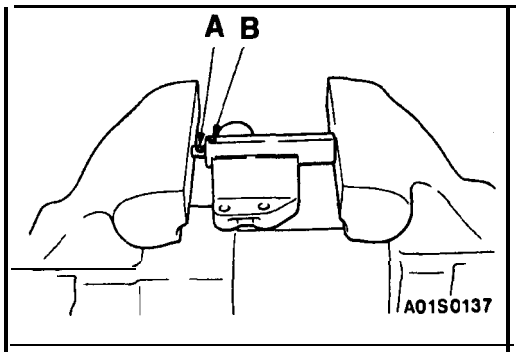

(3) Use a press or vise to gently compress the auto tensioner push rod until pin hole A of the push rod and pin hole B of the tensioner cylinder are aligned.

Caution

If the compression speed is too fast, the rod may become damaged, so be sure to carry out this operation slowly.

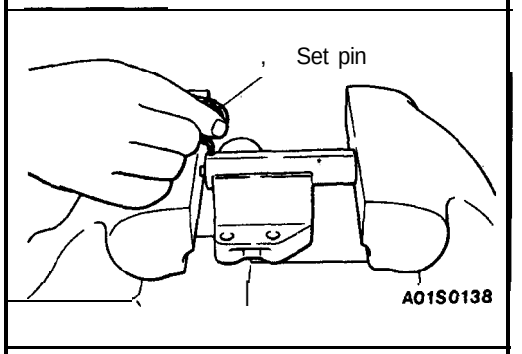

(4) Once the holes are aligned, insert the set pin.

NOTE
When replacing the auto tensioner with a new part, the pin will be in the auto tensioner.

(5) Install the auto tensioner to the engine.

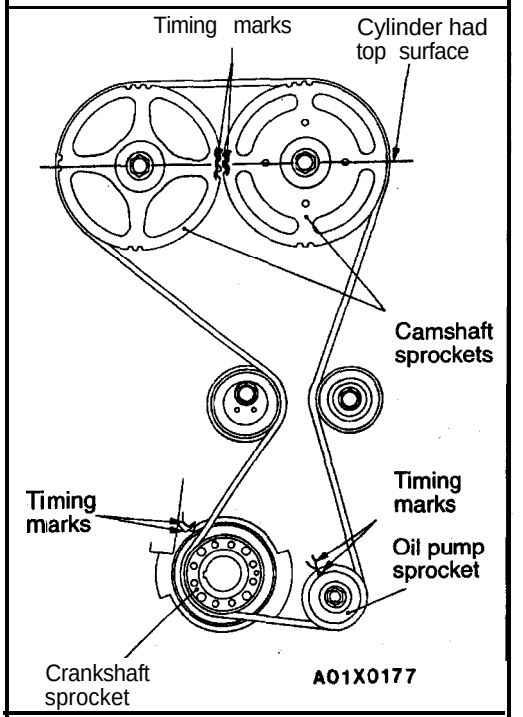

▶B◀ TIMING BELT INSTALLATION'

(1) Align the timing marks on the camshaft sprocket, crankshaft sprocket and oil pump sprocket.

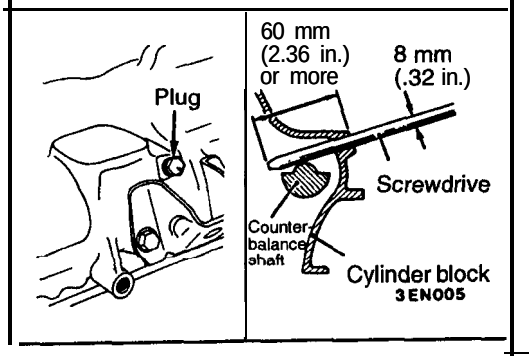

(2) After aligning the timing mark on the oil pump sprocket, remove the cylinder block plug and insert a Phillips screwdriver with a diameter of 8 mm (.32 in.), and check to be sure that the screwdriver goes in 60 mm (2.36 in.) or more. If the screwdriver will only go in 20 – 25 mm (.79–.98 in.) before striking the counterbalance shaft, turn the sprocket once, realign the timing mark and check that the screwdriver goes in 60 mm (2.36 in.) or more. Do not take out the screwdriver until the timing belt is installed.

(3) Install the timing belt so as not to be' loosened among the sprockets, by the following procedure.

Cautidn
If the timing belt is to be reused, install it so that the mark indicates the clockwise direction.

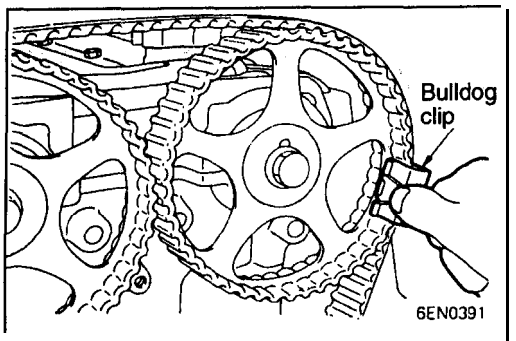

1) Install the timing belt around the intake side camshaft sprocket and fix it at indicated position by a bulldog clip.

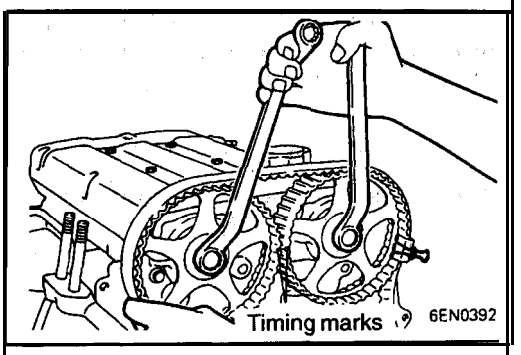

2) Install the timing belt around the exhaust side sprocket, aligning the timing marks with the cylinder head' top surface using two wrenches.

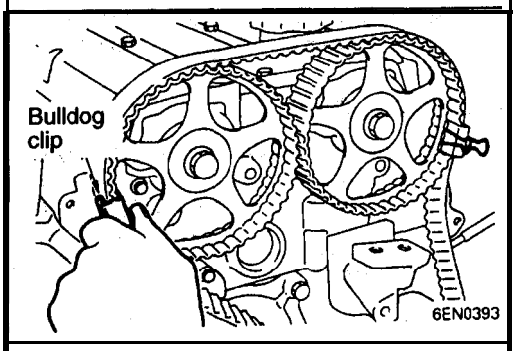

3) Fix the belt at indicated position by another 'bulldog clip.
4) Install the timing belt around the idler pulley, the oil pump sprocket, the crankshaft, sprocket and the tensioner pulleys in the order shown.
5) Remove the two bulldog clips.

(4) Set the tension pulley so that the pin holes are at the bottom, press the tension pulley lightly against the timing; belt.

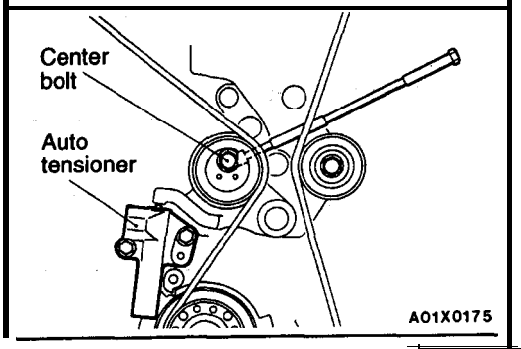

(5) Screw the tool into the engine left support bracket until; its end makes contact with the tensioner arm. At that point, screw the tool in some more and then remove the set wire attached to the auto tensioner:
(6) Remove the tool.
(7) Tighten the center bolt to the specified torque.

Specified torque: 48 Nm (35 **ft.lbs.)**

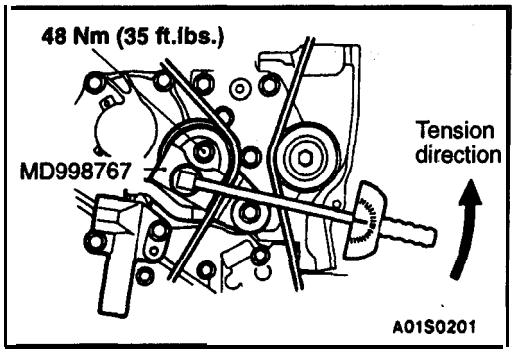

▶C◀ TIMING BELT TENSION ADJUSTMENT

(1) After turning the crankshaft **1/4** of a revolution in the counterclockwise direction, turn it in the clockwise direction until the timing marks are aligned.

(2) Loosen the tension pulley fixing bolt, and then use the special tool and a torque wrench to tighten the fixing bolt to the specified torque while applying tension to the timing belt.

Standard value:
3.5 **Nm (2.6 ft.lbs.)**
<Timing belt tension torque>

Caution
When tightening the fixing bolt, 'do not let the tension pulley turn with the bolt.

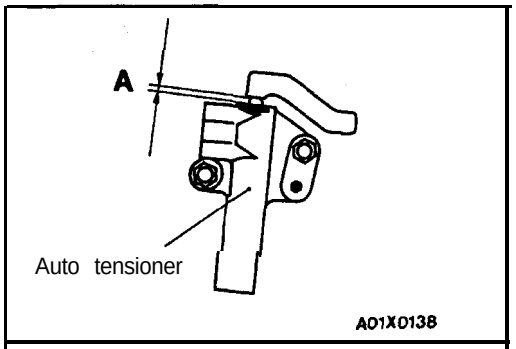

(3) Turn the crankshaft two revolutions clockwise so that the timing marks are aligned. After leaving it for 15 minutes, measure the amount of protrusion of the auto tensioner.

Standard value (A): 3.8–4.5 mm (.150–.177 in.)

(4) If the amount of protrusion is outside the standard value,' repeat the operation in steps (1) to (3).

(5) Check again that the timing marks of each sprocket are aligned.

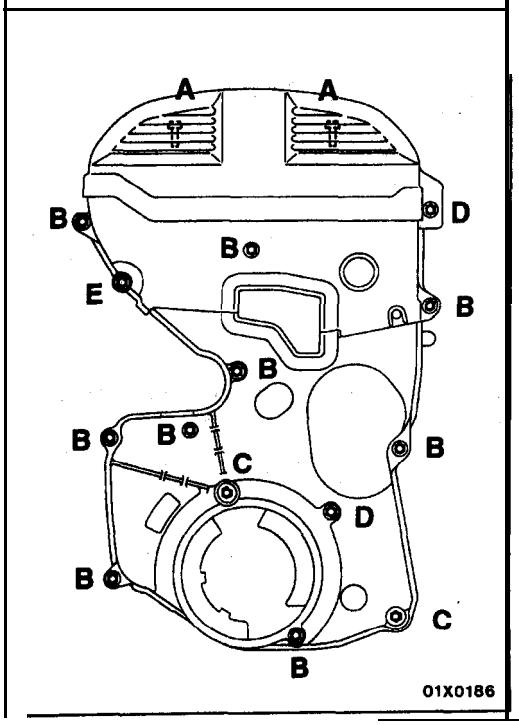

▶D◀ TIMING BELT FRONT LOWER.. COVER/ TIMING BELT FRONT CENTER COVER/ TIMING BELT FRONT UPPER COVER INSTALLATION

Install the bolts, being careful not to mistake the bolt sizes.

Thread diameter × thread length mm (in.)		Bolt classification	"Tightening torque Nm (ft.lbs.)
A	6 × 16 (.24 × .63)	Flange bolt	10–12 (7.2-8.7)
B	6 × 18 (.24 × .71)	Flange bolt	10–12 (7.2-8.7) ,
C	6 × 25 (.24 × .98)	Washer assembled bolt	8.8 (6.5)
D	6 × 25 (.24 × .98)	Flange bolt	10–12 (7.2-8.7)
E	6 × 45 (.24 × 1.77)	Flange bolt	10–12 (7.2–8.7)

TIMING BELT B

11200460052

REMOVAL AND INSTALLATION

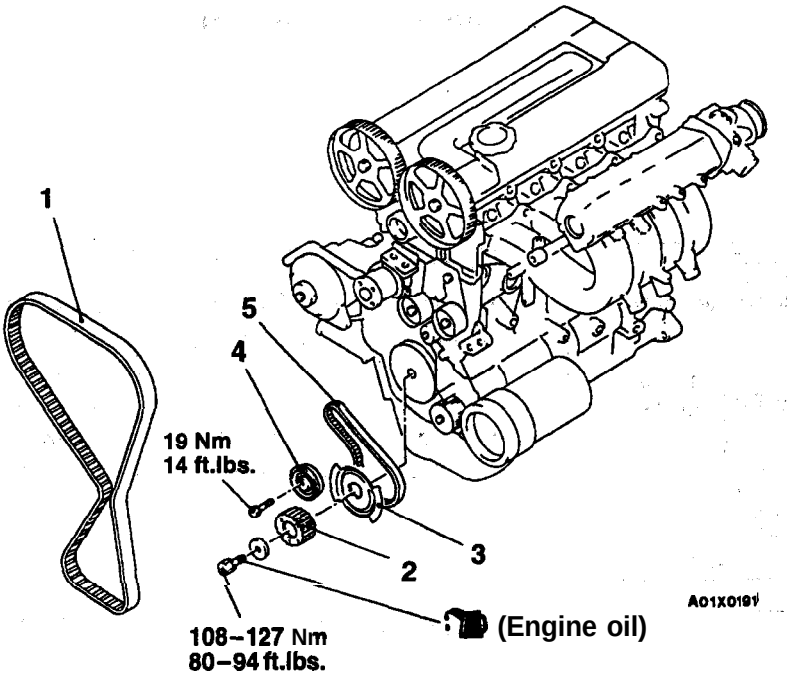

Removal steps

1. Timing belt (Refer to P.11A-36.)
◀A▶ ▶D◀ 2. Crankshaft sprocket
▶C◀ 3. Crankshaft sensing blade
▶B◀ • Timing belt B tension adjustment
4. Timing belt B tensioner
◀B▶ ▶A◀ 5. Timing belt B

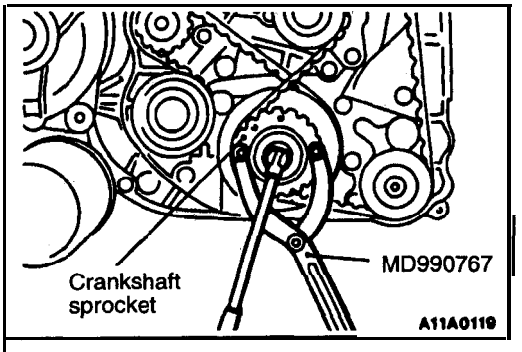

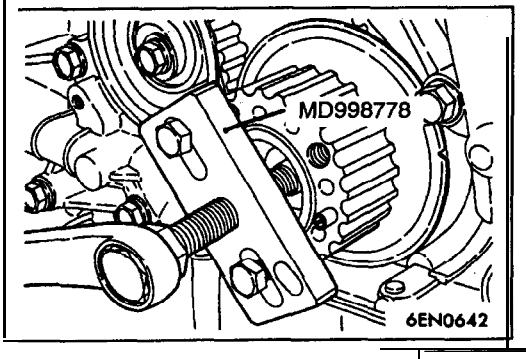

REMOVAL SERVICE POINTS

◀A▶ CRANKSHAFT SPROCKET REMOVAL

(1) Use the special tool to remove the bolt,

(2) Use the special tool to remove the crankshaft sprocket.

◀B▶ TIMING BELT B REMOVAL

Caution
If timing belt "B" is 'to be re-used, use chalk to mark it with an arrow on its flat side indicating the turning direction (to the right).

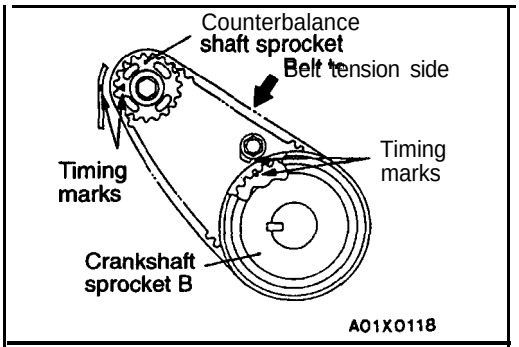

INSTALLATION SERVICE POINTS

▶A◀ TIMING BELT B INSTALLATION

Install' timing belt "B" by the following procedure.
(1) Ensure that crankshaft sprocket "B" timing mark and the counterbalance shaft sprocket timing mark are aligned.
(2) Fit timing belt "B" over crankshaft sprocket **"B"** and the silent shaft sprocket. Ensure that there is no slack in the belt.

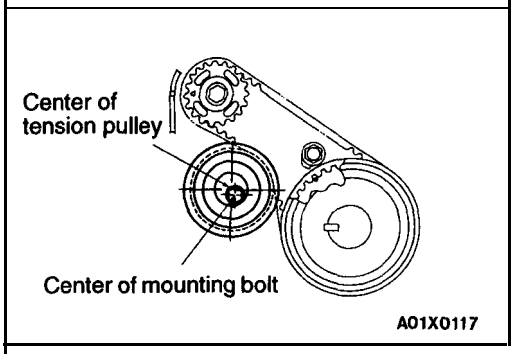

▶B◀ TIMING BELT B TENSION ADJUSTMENT

Adjust the tension of timing belt **"B"** by the following procedure.
(1) Temporarily fix the timing belt "B" tensioner such that the center of the tensioner pulley is to the left and above the center of the installation bolt, and temporarily attach the tensioner pulley so that the flange is toward the front of the engine.

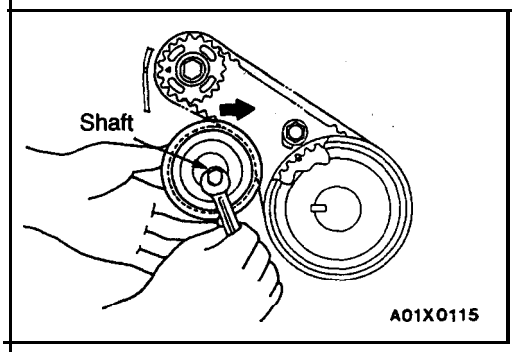

(2) Holding the timing belt "B" tensioner up with your finger in the direction of the arrow, place pressure on the timing belt so that the tension side of the belt is taut. Now tighten the bolt to fix the tensioner.

Caution
When tightening the bolt, ensure that 'the tensioner pulley shaft does not rotate with the "bolt. Allowing it to rotate with the bolt can cause excessive tension on the belt.

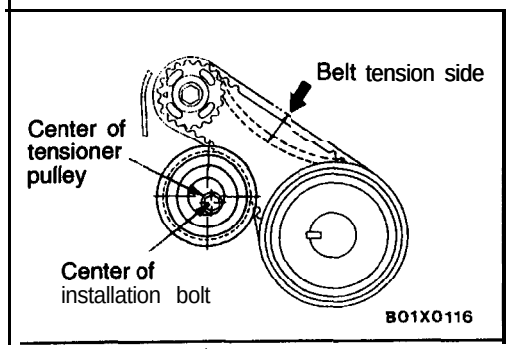

(3) Press the belt at the shown point by a finger 'to check belt tension. If not, adjust.

Standard value: 5-7 mm (.20–.28 In.)

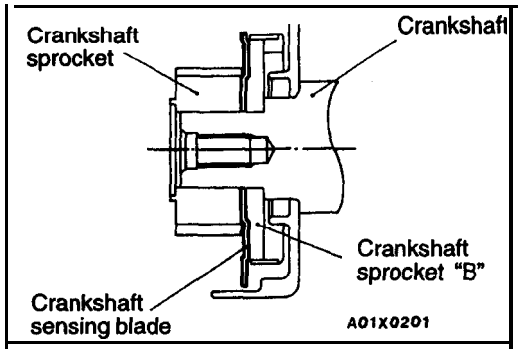

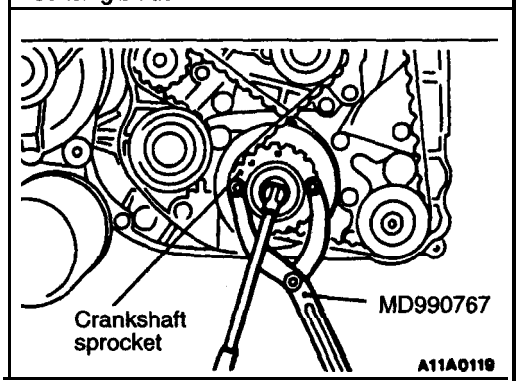

▶C◀ CRANKSHAFT SENSING BLADE INSTALLATION

When installing, make sure the direction is correct. See figure.

▶D◀ CRANKSHAFT SPROCKET INSTALLATION

Use the special tool to install the crankshaft sprocket and bolt.

NOTE

Apply the minimum amount of engine oil to the bearing surface and thread of the crankshaft bolt.

NOTES

ENGINE OVERHAUL <2.0L (4G6)>

CONTENTS

11309000166

GENERAL INFORMATION

11300010090

GENERAL SPECIFICATIONS

Descriptions			Specifications
Type			"in-line OHV, DOHC
Number of cylinders			4
Combustion chamber			Pentroof type
Total displacement cm³ (cu.in.)			1,997 (121.9)
Cylinder bore mm (in.)			85.0 (3.35)
Piston stroke mm (in.)			88.0 (3.46)
Compression ratio			8.5
Valve, timing	Intake valve	Opens (BTDC)	21"
		Closes (ABDC)	51°
	Exhaust valve	Opens (BBDC)	57"
		'Closes (ATDC)	15°
Lubrication system			Pressure feed, full-flow filtration
Oil pump type			Involute gear type
Cooling system			Water-cooled forced circulation
Water pump type			Centrifugal impeller type
EGR type			Single type
Injector type and number			Electromagnetic, 4
Injector identification number			MDL450
Fuel regulated pressure kPa (psi)			300 (42.7)
Throttle bore mm (in.)			54 (2.13)
Throttle position sensor			Variable resistor type
Closed throttle position switch			Contact type

SPECIFICATIONS

11300030232

SERVICE SPECIFICATIONS

Items		Standard value	Limit
Rocker arms and camshaft			
Camshaft cam height mm (in.)	Intake	34.91 (1.37)	34.41 (1.36)
	Exhaust	34.91 (1.37)	34.41 (1.36)
Camshaft journal O.D. mm (in.)		25.96 (1.02)	–
Cylinder head and valve			
Cylinder head flatness of gasket surface mm (in.)		Less than 0.05 (.0020)	0.2 (.008)
Cylinder head grinding limit of gasket surface mm (in.) *Total resurfacing depth of both cylinder head and cylinder block			● 9.2 (.008)
Cylinder head overall height mm (in.)		131.9-132.1 (5.193–5.201)	–
Cylinder head bolt shank length mm (in.)			Max. 99.4 (3.91)
Valve thickness of valve head (margin) mm (in.)	Intake	1.0 (.039)	6.8 (.031)
	Exhaust	1.5 (.059)	0.8 (.031)
Valve overall height mm (in.)	Intake	109.50 (4.3110)	109.00 (4.2913)
	Exhaust	199.70 (4.3189)	109.20 (4.2992)
Valve thickness to valve guide clearance mm (in.)	Intake	0.02–0.05 (.0008–.0020)	0.10 (.004)
	Exhaust	0.05–0.09 (.0020–.0035)	0.15 (.006)
Valve face angle mm (in.)		45°–45.5°	–
Valve spring free length mm (in.)		47.0 (1.85)	46.0 (1.83)
Valve spring load/installed height N/mm (lbs./in.)		245/40.0 (54/1.57)	
Valve spring out of squareness		Max. 1.5"	4"
Valve seat valve contact width mm (in.)		0.9–1.3 (.035–.051)	–
Valve guide I.D. mm (in.)		6.6 (.260)	–
Valve guide O.D. mm (in.)		12.1 (.476)	
Valve guide projection from cylinder head upper surface mm (in.)		19.5 (.77)	
Valve stem projection mm (in.)	Intake	49.20 (1.9370)	49.80 (1.9606)
	Exhaust	48.40 (1.9055)	48.90 (1.9252)
Front case, oil pump and oil pan			
Oil pump side clearance	Drive gear	0.08–0.14 (.0031–.0055)	–
	Driven gear	0.06–0.12 (.0024–.0047)	–
Oil cooler by-pass valve dimension (L) [Normal temperature]		34.5 (1.36)	–
Oil cooler by-pass hole closing temperature [97 to 103°C (207 to 217°F) or more]		40 (1.57) or more	
Oil pressure at curb idle speed kPa (psi) [Oil temperature is 75 to 90°C (167 to 194°F)]		80 (11.4) or more	
Piston and connecting rod			
Piston O.D. mm (in.)		84.98 (3.334)	
Piston ring side clearance mm (in.)	No.1	0.04–0.08 (.0016–.0031)	0.1 (.004)
	No.2	0.02–0.06 (.0008–.0024)	0.1 (.004)

Items		Standard value	Limit
Piston ring end gap mm (in.)	No.1	0.25–0.35 (.0098–.0138)	0.8 (.031)
	No.2	0.40–0.55 (.0157–.0217)	0.8 (.031)
	Oil	0.10–0.40 (.0039–.0157)	9 . 8 (.031)
Piston pin O.D. mm (in.)		21.0 (.83)	
Piston pin press-in load N (lbs.) [Room temperature]		7,500– 17,500 (1,653–3,858)	
Crankshaft pin oil clearance mm (in.)		0.02–0.05 (.0008–.0020)	0.1 (.004)
Connecting rod big end side clearance mm (in.)		0.10–0.25 (.0039–.0098)	0.4 (.016)
Crankshaft, flywheel and drive plate			
Bearing cap bolt shank length mm (in.)			Max. 71.1 (2.80)
Crankshaft end play mm (in.)		0.05–0.18 (.0020–.0071)	0.25 (.0098)
Crankshaft journal O.D. mm (in.)		57 (2.24)	
Crankshaft pin O.D. mm (in.)		42 (1.77)	–
Crankshaft journal oil clearance mm (in.)		0.02–0.05 (.0008–.0020)	0.1 (.004)
Piston to cylinder clearance mm (in.)		0.03–0.05 (.0012–.0020)	–
Cylinder block flatness of gasket surface mm (in.)		0.05 (.0020)	0.1 (.004)
Cylinder block grinding limit of gasket surface mm (in.) *Total resurfacing depth of both cylinder head and cylinder block			● 0.2 (.008)
Cylinder block overall height mm (in.)		283.9-284.1 (11.177-11.185)	
Cylinder block I.D. mm (in.)		85.0 (3.35)	

REWORK DIMENSIONS

Items		Standard value
Cylinder head and valve		
Oversize rework dimensions of valve guide hole (both intake and exhaust) mm (in.)	0.05 O.S.	12.05–12.07 (.4744–.4752)
	0.25 O.S.	12.25-12.27 (.4823–.4831)
	0.50 O.S.	12.50–12.52 (.4921–.4929)
Intake oversize rework dimensions of valve seat hole mm (in.)	0.3 O.S.	35.30–35.33 (1.3898–1 .3909)
	0.6 O.S.	35.60–35.63 (1.4016–1.4028)
Exhaust oversize rework dimensions of valve seat hole mm (in.)	0.3 O.S.	33.30–33.33 (1.3110–1.3122)
	0.6 O.S.	33.60–33.63 (1.3228–1.3240)
Crankshaft, flywheel and drive plate		
Crankshaft out of roundness and taper of journal and pin mm (in.)		Max. 0.01 (.0004)

NOTE
O.D.: Outer diameter
I.D.: Inner diameter
O.S.: Oversize diameter

TSB Revision

TORQUE SPECIFICATIONS

Items	Nm	ft.lbs.
Generator and ignition system		
Water pump pulley bolt	11	8
Generator mounting bolt	23	17
Generator brace bolt	24	17
Generator pivot nut	14	10
Crankshaft pulley bolt	25	18
Spark plug	25	18
Ignition coil bolt	14	10
Center cover bolt	3	2
Ignition power transistor bolt	14	10
Plate	10	7
Camshaft position sensor	9	7
Camshaft position sensor support	14	10
Camshaft position sensing cylinder	22	16
Timing belt		
Crankshaft position sensor bolt	9	7
Tensioner pulley bolt	49	35
Tensioner arm bolt	22	16
Auto tensioner bolt	24	17
Idler pulley bolt	38	27
Oil pump sprocket nut	55	40
Crankshaft bolt	120	87
Tensioner "B" bolt	19	14
Counterbalance shaft sprocket bolt	46	33
Camshaft sprocket bolt	90	65
Engine support bracket bolt	45	33
Fuel and emission parts		
EGR valve bolt	22	16
Throttle body stay bolt	19	14
Throttle body bolt	19	14
Fuel pressure regulator bolt	9	7
Intake manifold		
Intake manifold bolt	20	14
Intake manifold nut	36	26
Intake manifold stay bolt	28	20
Intake manifold plenum bolt and nut	18	13
Intake manifold plenum stay bolt	18	13
Water outlet fitting bolt	19	14
Engine coolant temperature gauge unit	11	8
Engine coolant temperature sensor	30	22

TSB Revision

Items		Nm	ft.lbs.
Thermostat case nut		18	13
Manifold differential pressure sensor bolt		9	7
Exhaust manifold and water pump			
Oil dipstick guide bolt		14	10
Heat protector bolt		14	10
Heated oxygen sensor		44	32
Exhaust fitting bolt		60	43
Oil pipe joint		19	14
Oil pipe bolt		9	7
Oil return pipe bolt		9	7
Turbocharger assembly		27–31 + 60°–70° turns	20–22 + 60°–70° turns
Water pipe eye bolt		43	31
Exhaust manifold nut	M8	28	20
	M10	29	21
Water pipe bolt	M6 × 10	5	4
	M6 × 12	10	7
	M8	13	9
Water inlet pipe bolt		13	9
Water pump bolt		14	10
Rocker arms and camshaft			
Bearing cap bolt		20	14
Oil delivery body		11	8
Cylinder head and valves			
Cylinder head bolt		20 + 90° turns + 90° turns	14.5 + 90° turns + 90° turns
Front case, counterbalance shaft and oil pan			
Drain plug		40	29
Oil pan bolt		7	5
Oil screen bolt and nut		19	14
Baffle plate bolt		9	7
Oil cooler bolt		43	31
Oil filter bracket bolt		19	14
Plug		24	17
Left counterbalance shaft flange bolt		37	27
Front case bolt	M8	24	17
	M10	31	22
Oil pressure switch		10	7
Relief plug		45	33
Oil pump cover bolt		17	12
Oil pressure gauge unit		55	40

items	Nm	ft.lbs.
Piston and connecting rod		
Connecting rod cap nut	20 +90° –100° turns	14.5 +90° –100° turns
Crankshaft, flywheel and drive plate		
Flywheel bolt	135	98
Drive plate bolt	135	98
Oil seal case bolt	11	8
Rear plate bolt	11	8
Bell housing cover bolt	9	7
Bearing cap bolt	25 +90° –100° turns	18 +90° –100° turns
Knock sensor	23	16
Bracket		
Left and right engine support bracket bolt	45	33
Front roll stopper bracket bolt	65	47
Rear roll stopper bracket bolt	120	87
Front engine support bracket bolt	60	43
Exhaust pipe support bracket bolt	36	26

SEALANT

11300050191

Items	Specified sealant
Camshaft position sensor support	Mitsubishi Genuine Part No. MD970389 or equivalent
Rocker cover	3M ATD Part No. 8660 or equivalent
Semi-circular packing	3M ATD Part No. 8660 or equivalent
Enaine support bracket bolt	3M ATD Part No. 8660 or eauivalent
Oil pan	Mitsubishi Genuine Part No. MD970389 or equivalent
Water outlet fitting	Mitsubishi Genuine Part No. MD970389 or equivalent
Engine coolant temperature gauge unit	3M ATD Part No. 8660 or equivalent
Engine coolant temperature sensor	3M Nut Locking Part No. 4171 or equivalent
Oil pressure switch	3M ATD Part No. 8660 or equivalent
Oil pressure gauge unit	3M ATD Part No. 8660 or equivalent
Rear oil seal case	Mitsubishi Genuine Part No. MD970389 or equivalent

SPECIAL TOOLS

1130060224

Tool	Tool number and name	Supersession	Application
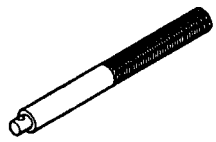	MB990938 Handle	MB990938-01	Installation of crankshaft rear oil seal
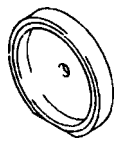	MD998776 Crankshaft rear oil seal installer	MD998376-01	
	MD998162 Plug wrench	MD998162-01	Removal and installation of front case cap plug
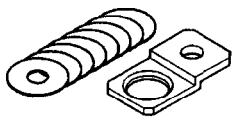	MD998783 Plug wrench retainer	–	
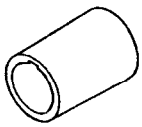	MD998285 Crankshaft front oil seal guide	MD998285-01	Installation of crankshaft front oil seal
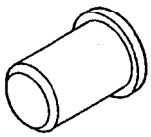	MD998375 Crankshaft front oil seal installer	MD998375-01	
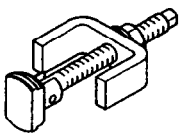	MD998371 Silent shaft bearing puller	MD998371-01 Use with MIT304204	Removal of counterbalance shaft rear bearing
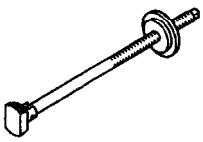	MD998372 Silent shaft bearing puller	MD998372-01 Use with MIT304204	
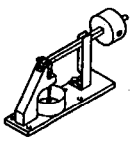	MD998440 Leak-down tester	–	Leak-down test of lash adjuster

Tool	Tool number and name	Supersession	Application
	MD998442 Air bleed wire	–	Air bleeding of lash adjuster
	MD998705 Silent shaft bearing installer	MD998373-01 Use with MB990938-01	Installation of counterbalance shaft bearing
	MD998713 Camshaft oil seal installer	MD998713-01	Installation of camshaft oil seal
	MD998727 Oil pan remover	MD998727-01	Removal of oil pan
	MD998737 Valve stem seal installer	MD998737-01	Installation of valve stem seal
	MD998767 Tension pulley wrench	MD998752-01	Installation of auto tensioner
	MD998772 Valve spring compressor	General service tool	Compression of valve spring
	MD998778 Crankshaft sprocket puller	–	Removal of crankshaft sprocket
	MD998785 Sprocket stopper	–	Supporting counterbalance shaft sprocket

Tool	Tool number and name	Supersession	Application
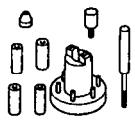	MD998780 Piston pin setting tool	MIT216941	Removal and installation of piston pin
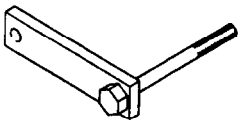	MD998781 Flywheel stopper	–	Supporting flywheel and drive plate
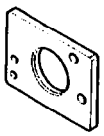	MB991603 Bearing installer stopper	–	Removal and installation of rear bearing
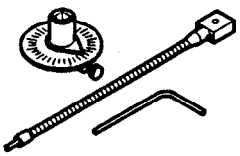	MB991614 Angle gauge	–	Installation of turbocharger assembly
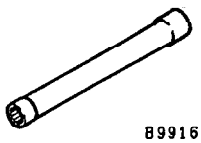	MB991654 Cylinder head bolt wrench (12)	–	Removal and installation of cylinder head bolt

GENERATOR AND IGNITION SYSTEM

11300100155

REMOVAL AND INSTALLATION

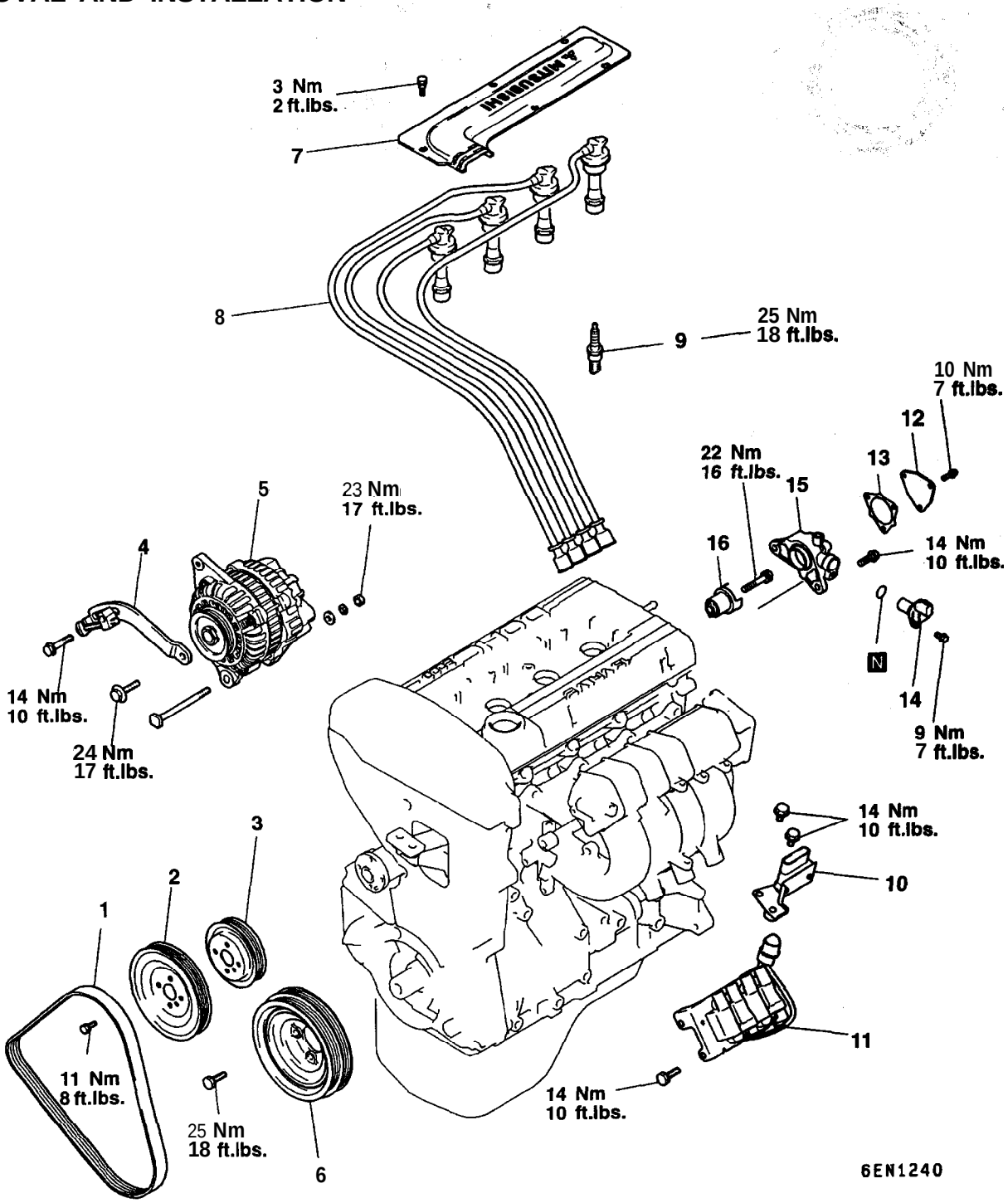

Removal steps

1. Drive belt
2. Water pump pulley
3. Power steering pump pulley
4. Generator brace
5. Generator
6. Crankshaft pulley
7. Center cover
8. Spark plug cable
9. Spark plug
10. Ignition power transistor
11. Ignition coil
12. Plate
13. Gasket
- ▶A◀ 14. Camshaft position sensor
15. Camshaft position sensor support
16. Camshaft position sensing cylinder

TSB Revision

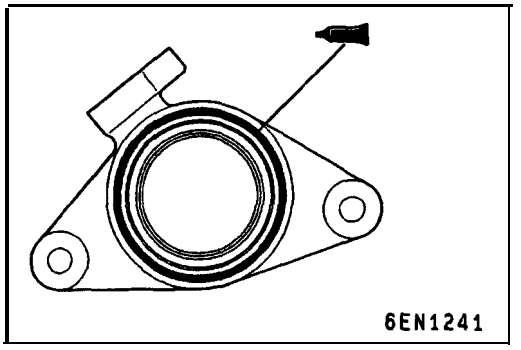

INSTALLATION SERVICE POINTS,

▶A◀ CAMSHAFT POSITION SENSOR SUPPORT INSTALLATION

(1) Apply a 3 mm bead of form-in-place gasket (FIPG) to the area shown.

Specified sealant:
Mitsubishi Genuine Part No. MD970389 or equivalent.

TSB Revision

TIMING BELT

11300190206

REMOVAL AND INSTALLATION

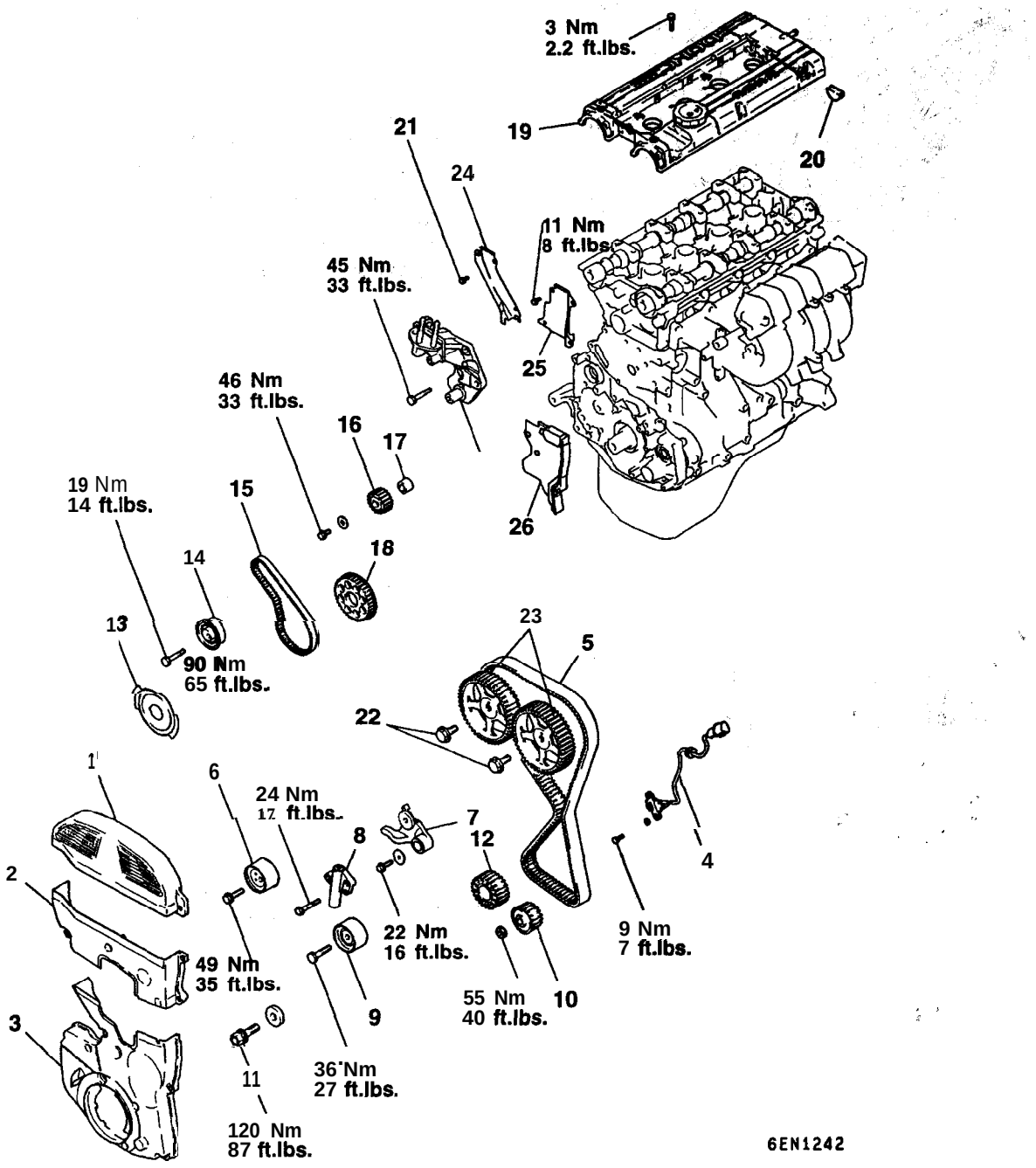

Removal steps

1. Timing belt front upper cover
2. Timing belt front center cover
3. Timing belt front lower cover
4. Crankshaft position sensor
5. ◀A▶ ▶L◀ Timing belt
6. ▶K◀ Tensioner pulley
7. Tensioner arm
8. ▶J◀ Auto tensioner
9. ◀B▶ Idler pulley
10. ◀C▶ ▶I◀ Oil pump sprocket
11. ◀D▶ ▶H◀ Crankshaft bolt
12. Crankshaft sprocket
13. Crankshaft sensing blade
14. Tensioner "B
15. ◀E▶ ▶G◀ Timing belt "B"
16. ◀F▶ ▶F◀ Counterbalance shaft' sprocket
17. ▶E◀ Spacer
18. ◀G▶ Crankshaft sprocket "B"
19. ▶D◀ Rocker cover
20. ▶C◀ Semi-circular packing
21. ▶B◀ Engine support bracket
22. ◀H▶ ▶A◀ Camshaft sprocket bolt
23. Camshaft sprocket
24. Timing belt rear right cover
25. Timing belt rear left upper cover
26. Timing belt rear left lower cover

TSB Revision

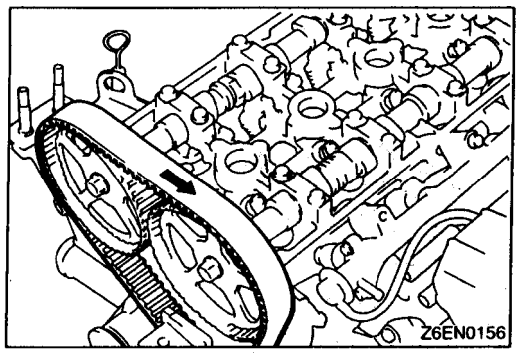

REMOVAL SERVICE POINTS

◀A▶ TIMING BELT REMOVAL

(1) Mark the belt running direction for reference in reinstallation.

NOTE

(1) Water or oil on the belt shorten its life drastically, so the removed timing belt, sprocket, and tensioner must be free from oil and water. These parts should not be washed. Replace parts if seriously contaminated.

(2) If there is oil or water on each part check front case oil seals, camshaft oil seal and water pump for leaks.

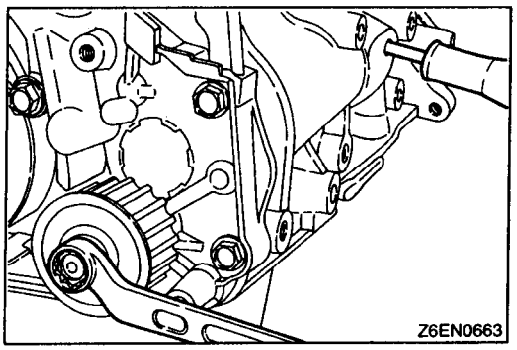

◀B▶ OIL PUMP SPROCKET REMOVAL

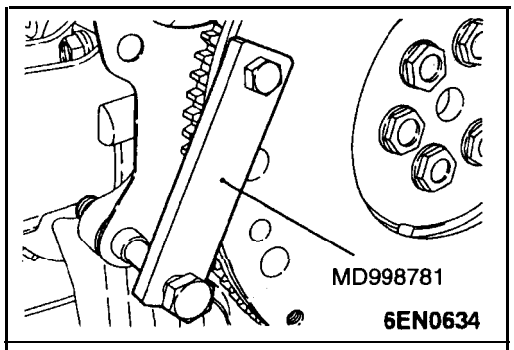

◀C▶ CRANKSHAFT BOLT LOOSENING

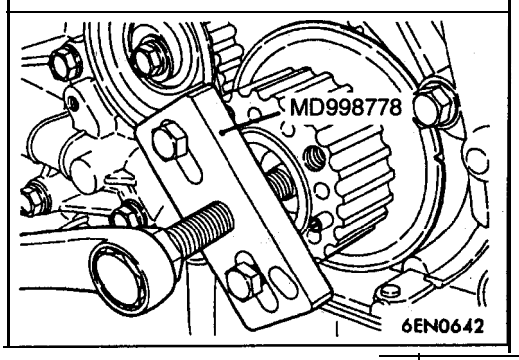

◀D▶ CRANKSHAFT SPROCKET REMOVAL

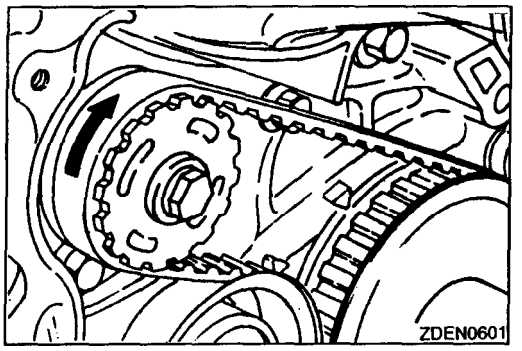

◀E▶ TIMING BELT "B" REMOVAL

(1) Make a mark on the back of the timing belt indicating the direction of rotation so it may be reassembled in the' same direction if it is to be reused.

NOTE
(1) Water or oil on the belt shortens its life drastically, so the removed timing belt, sprocket, and tensioner must be free from oil and water. These parts should not be washed. Replace parts if seriously contaminated.
(2) If there is oil or water on each part, check front case oil seals, camshaft oil seal and water pump for leaks.

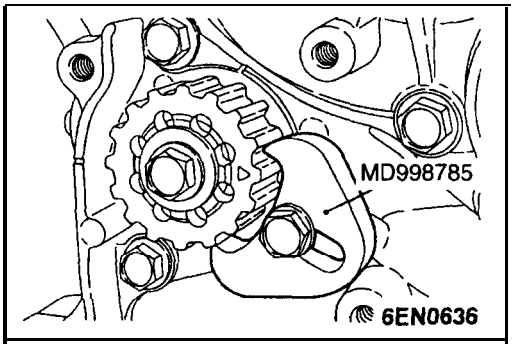

◀F▶ COUNTERBALANCE SHAFT SPROCKET REMOVAL

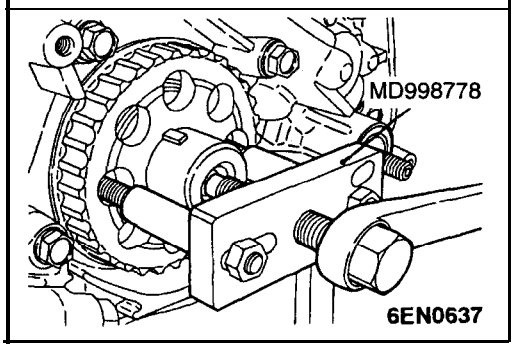

◀G▶ CRANKSHAFT SPROCKET "B" REMOVAL

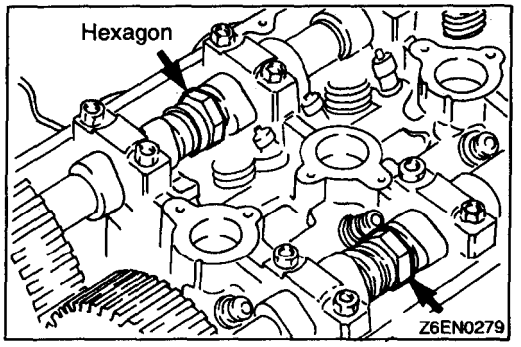

◀H▶ CAMSHAFT' SPROCKET BOLT LOOSENING

(1) Using a wrench, hold the camshaft at its hexagon (between the No. 2 and No. 3 journals) and remove the camshaft sprocket bolt.

Caution
Locking the camshaft sprocket with a tool damages the sprocket.

(2) Remove the camshaft sprockets.

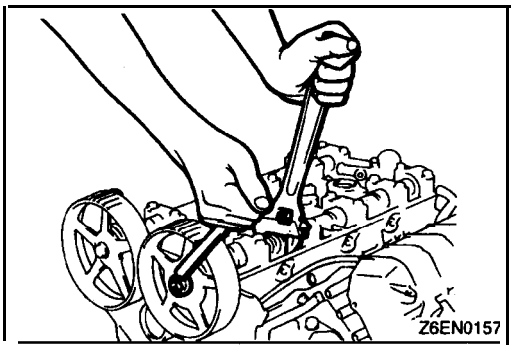

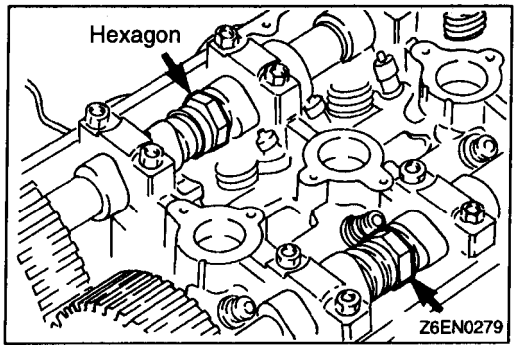

INSTALLATION SERVICE POINTS

▶A◀ CAMSHAFT SPROCKETS TIGHTENING

(1) Using a wrench, hold the camshaft at its hexagon (between the No. 2 and No. 3 journals) and tighten the bolt to the specification.

Caution
Locking the camshaft sprocket with a tool damages the sprocket.

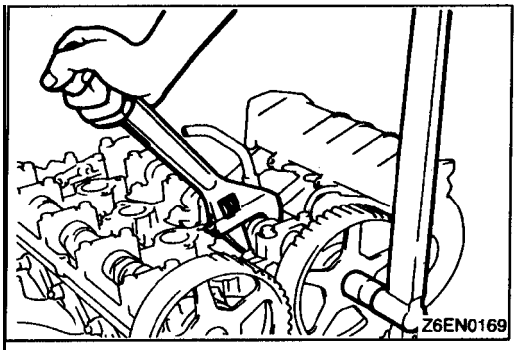

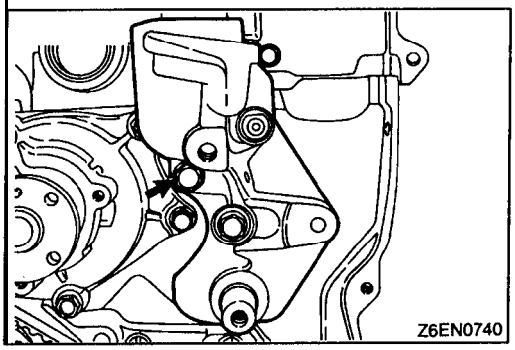

▶B◀ ENGINE SUPPORT BRACKET INSTALLATION

(1) Coat the bolts illustrated with sealant before tightening.

Specified sealant:
3M ATD Part No. 8660 or equivalent

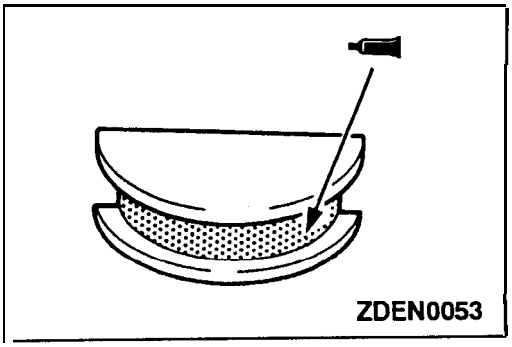

▶C◀ SEALANT APPLICATION ON SEMI-CIRCULAR PACKING

Specified sealant: 3M ATD Part No. 8660 or equivalent

TSB Revision

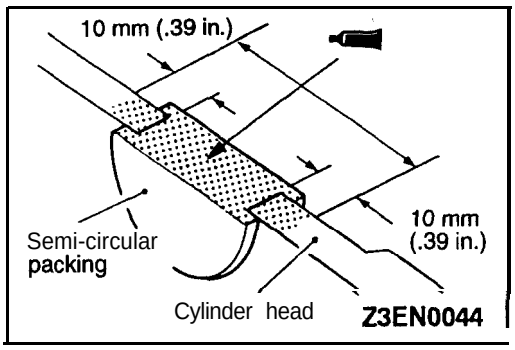

▶D◀ SEALANT APPLICATION ON ROCKER COVER

Apply the specified sealant to the areas indicated in the, illustration.

Specified sealant: 3M ATD Part No. 8660 or equivalent

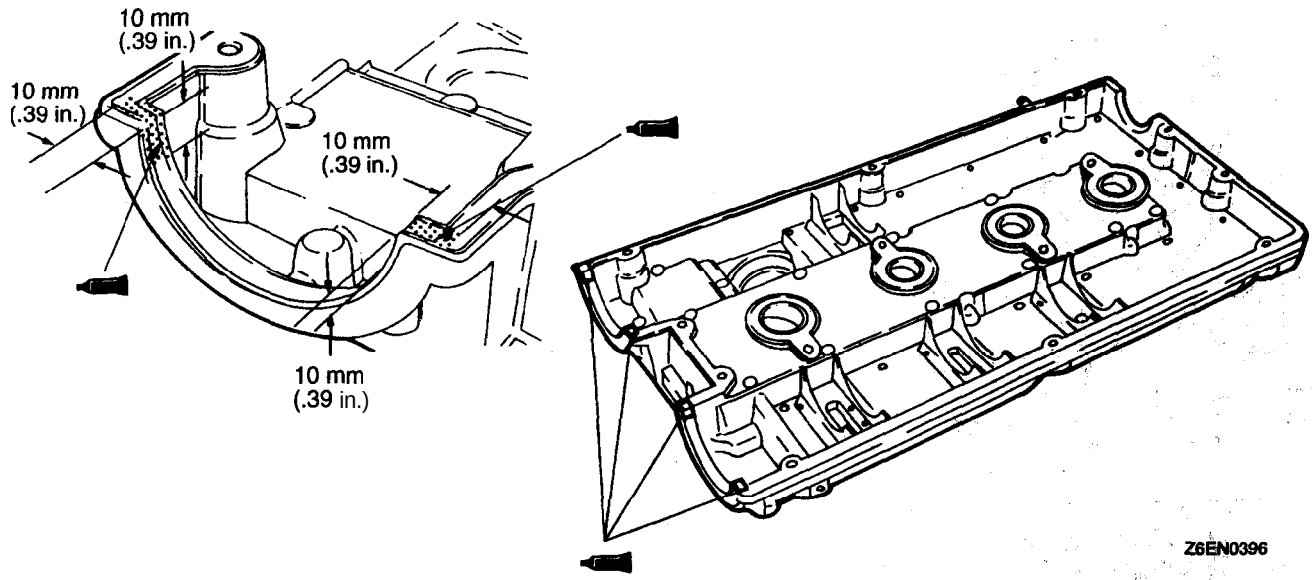

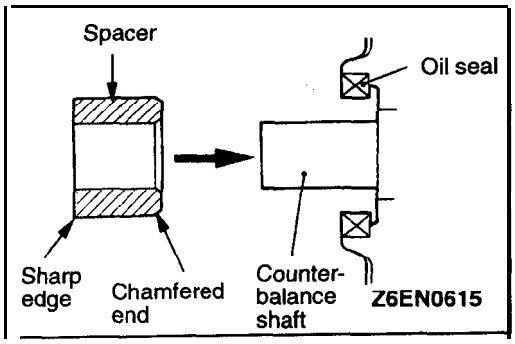

▶E◀ SPACER INSTALLATION

(1) Install the spacer with the chamfered end facing toward the oil seal.

TSB Revision

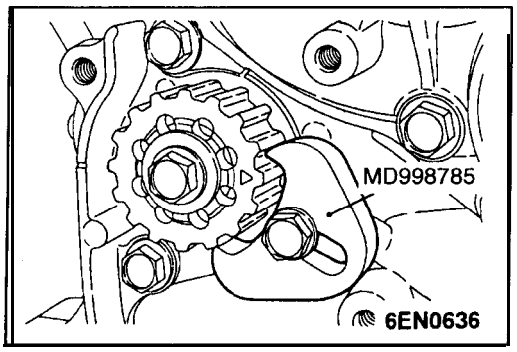

▶F◀ COUNTERBALANCE SHAFT SPROCKET INSTALLATION

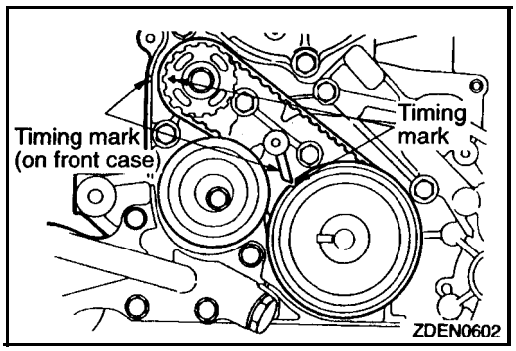

▶G◀ TIMING BELT "B" INSTALLATION

(1) Align timing marks on the crankshaft sprocket **"B"** and counterbalance shaft sprocket with the marks on the front case respectively.
(2) Install the timing belt **"B"** on the crankshaft sprocket **"B"** and counterbalance shaft sprocket. There should be no slack on the tension side.

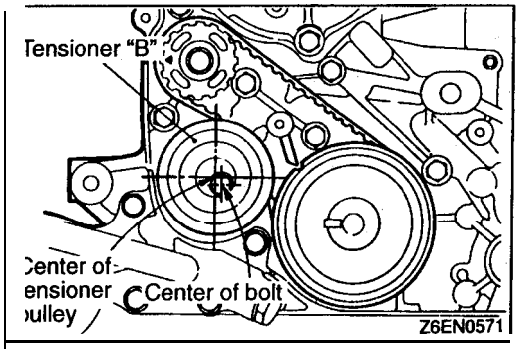

(3) Make sure that the relationship between, the tensioner pulley center and the bolt center is as shown in the illustration.

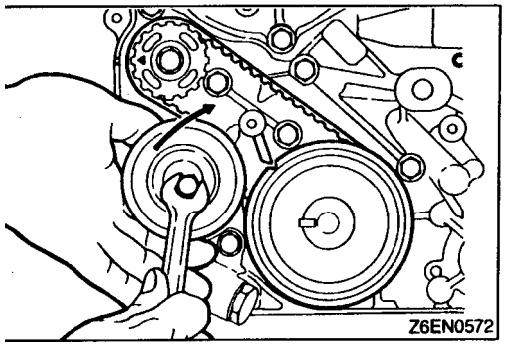

(4) Move the tensioner "B" in the direction of arrow while lifting with a finger to give a sufficient tension to the tension side of timing belt. In this condition, tighten bolt to secure tensioner **"B".** When the bolt is tightened, use care to prevent shaft from turning together. If shaft is turned together, belt will be **overtensioned.**

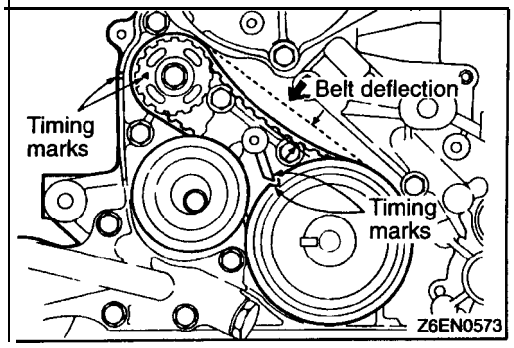

(5) Check to ensure that timing marks on sprockets and front case are in alignment.
(6) Press with index finger the center of span on **tension** side of timing belt "B". The belt must deflect 5-7 mm (.20–.28 in.).

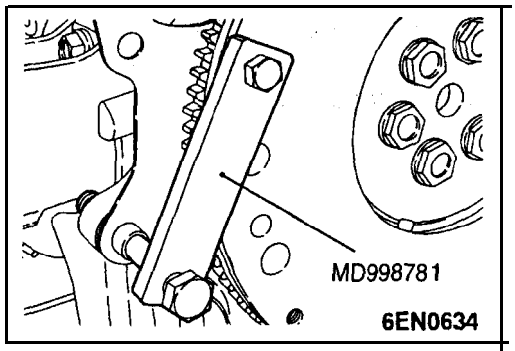

▶H◀ CRANKSHAFT BOLT TIGHTENING

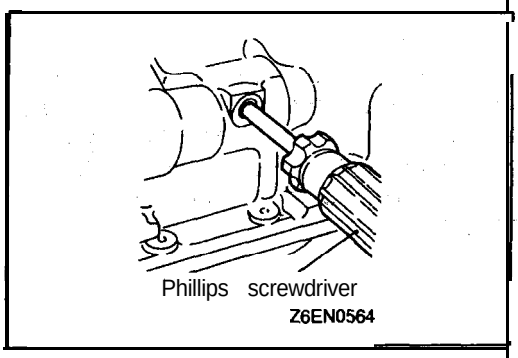

▶I◀ OIL PUMP SPROCKET INSTALLATION

(1) Insert a Phillips screwdriver [shank diameter 8 mm (.31 in.) shaft] through the plug hole on the left side of the cylinder block to block the left counterbalance shaft.
(2) Install the oil pump sprocket.
(3) Apply a proper amount of engine oil-to the bearing surfaces of the nuts.
(4) Tighten the nuts to the specified' torque.

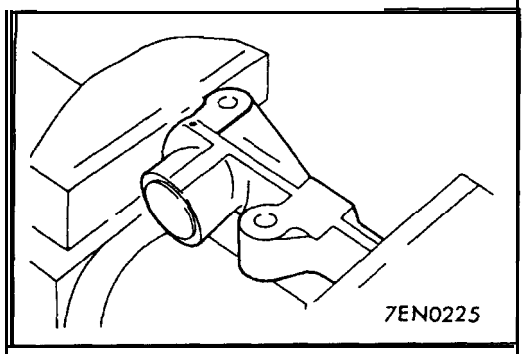

▶J◀ AUTO TENSIONER INSTALLATION

(1) If the auto tensioner rod is in its fully extended position, reset it as follows.
(2) Clamp the auto-tensioner in the vise with soft jaws.

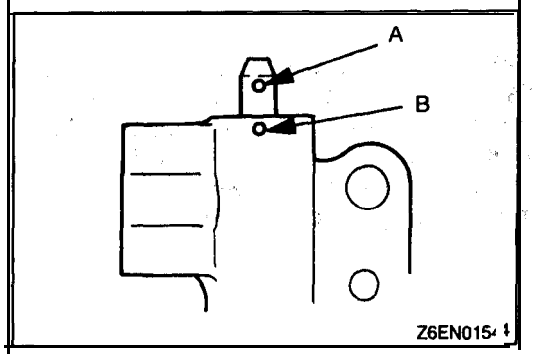

(3) Push in the rod little by little with the vise until the set hole A in the rod is aligned with the hole B in the cylinder.
(4) Insert a wire [1.4 mm (.055 in.) in diameter] into the set holes.
(5) Unclamp the auto tensioner from the vise.

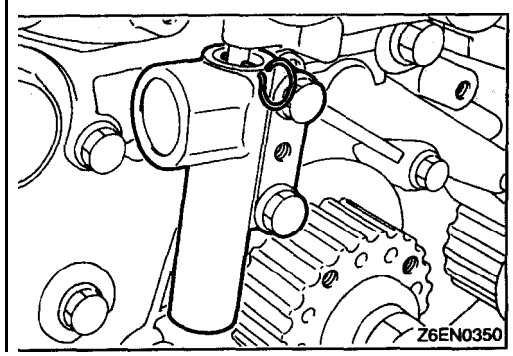

(6) Install the auto tensioner to front case and tighten. to the specified torque.

Caution
Leave the wire installed in the auto tensioner.

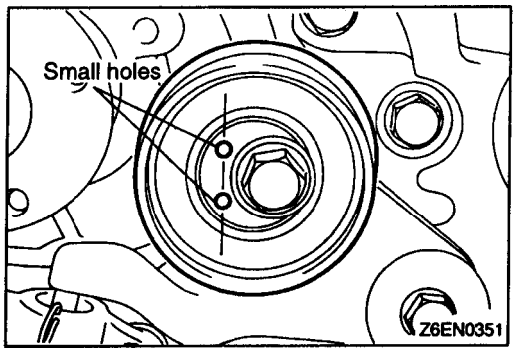

▶K◀ TENSIONER PULLEY INSTALLATION

(1) Install the tensioner pulley in such direction that its two small holes are arranged vertically.

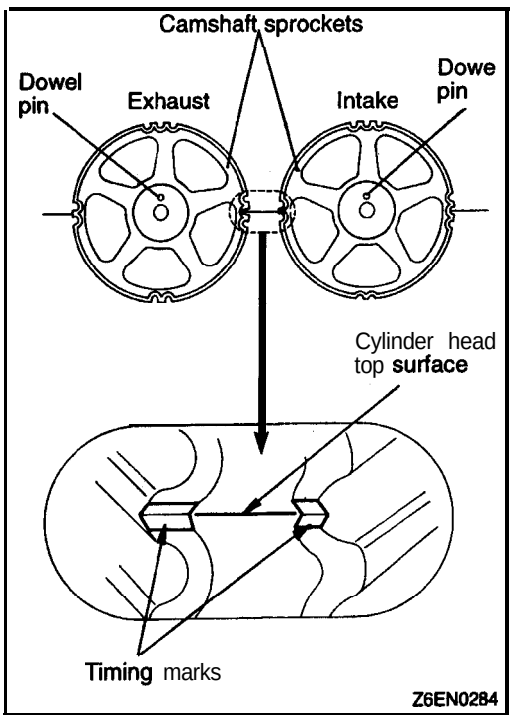

▶L◀ TIMING BELT INSTALLATION

(1) Turn the two sprockets so that their dowel pins are located on top. Then, align the timing marks facing each other with the top surface of the cylinder head. When you let go of the- exhaust camshaft **sprocket,** it will rotate one tooth counterclockwise. This should be taken into account when installing the timing belt on the sprockets.

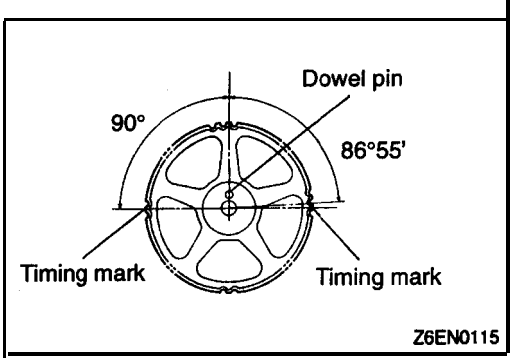

NOTE
The same camshaft sprocket is used, for the intake and exhaust camshafts and is provided with two timing marks. When the sprocket is mounted on the exhaust camshaft, use the timing mark on the right with the dowel 'pin hole on top. For the intake camshaft sprocket, use the one on the left with the dowel pin hole on top.

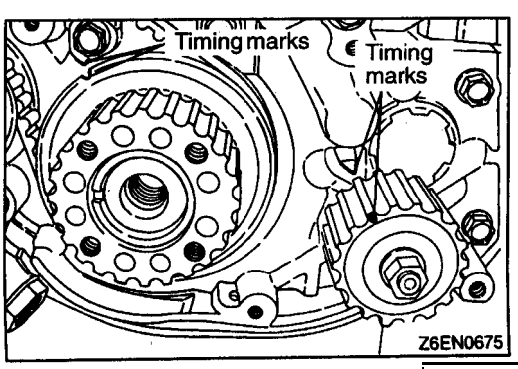

(2) Align the crankshaft sprocket timing marks.
(3) Align the oil pump sprocket timing marks (Engine with counterbalance **shafts).**

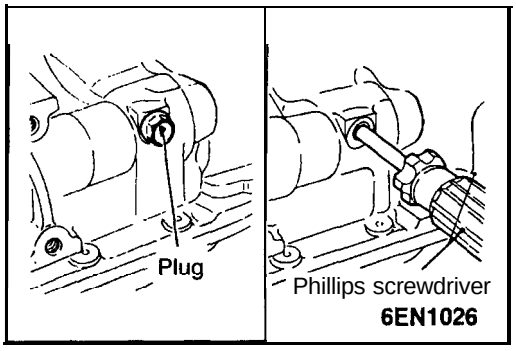

(4) Insert a Phillips screwdriver [shank diameter 8 mm (.31 in.)] through the hole.
If it can be inserted as deep as 60 mm (2.4 in.) or more; the timing 'marks are correctly aligned. If the inserted depth is only 20–25 mm (.8–1.0 in.), turn the oil' pump sprocket one turn and realign timing marks. Then check to ensure that the screwdriver can be inserted 60 mm (2.4 in.) or more. Keep the screwdriver inserted until the installation of the timing belt is finished.

NOTE
Step (4) is performed to ensure that the oil pump sprocket is correctly positioned with reference to the counterbalance shafts.

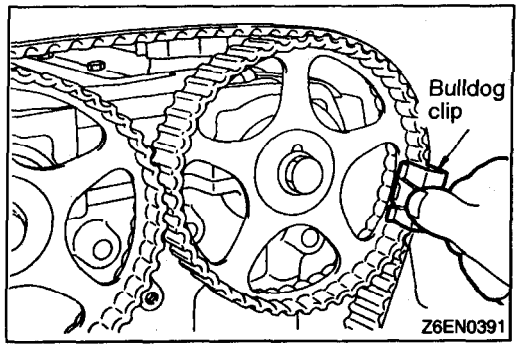

(5) Thread the timing belt over the intake side camshaft sprocket and fix it at indicated position by a bulldog clip.

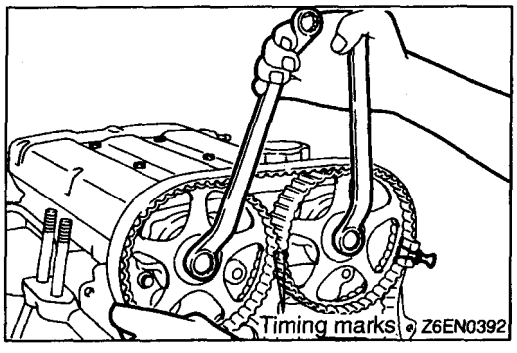

(6) Thread the timing belt over the exhaust side sprocket, aligning the timing marks with the cylinder head top surface using two wrenches.

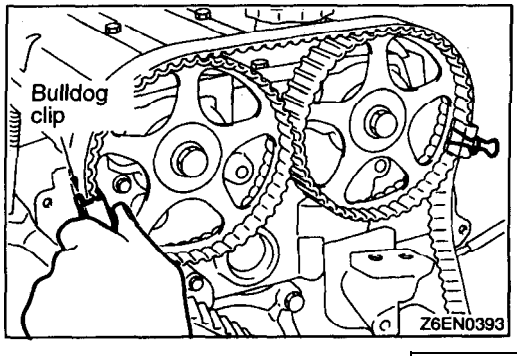

(7) Fix the belt at indicated, position by a bulldog clip.

TSB Revision

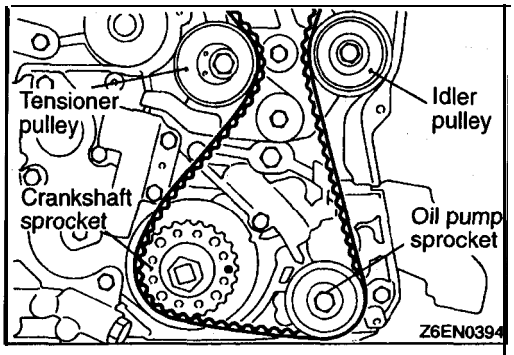

(8) Thread the timing belt over the idler pulley, the oil pump sprocket, the crankshaft sprocket and the tensioner pulley in the order shown.
(9) Remove the two clips.

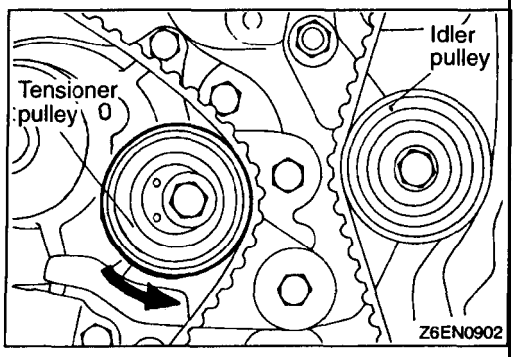

(lO) Lift up the tensioner pulley in the direction of arrow and tighten the center bolt.
(11) Check to see that all timing marks are lined up.
(12) Remove the screwdriver inserted in step (4) and fit the plug. (Engine with counterbalance shafts)
(13) Give the crankshaft a quarter counterclockwise turn. Then, turn it clockwise until the timing marks are lined up again.

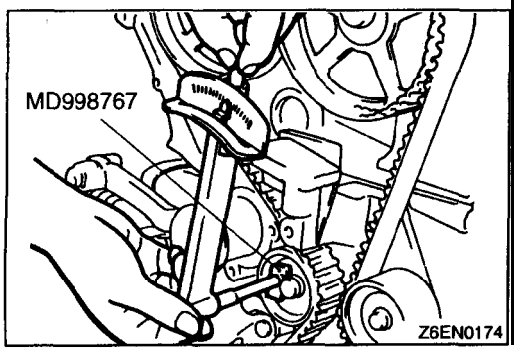

(14) Install the special tools, Socket Wrench and Torque. Wrench, on the tensioner pulley, and loosen the tensioner pulley center bolt.

NOTE
If the special tool is not available, use a commercially available torque wrench that is capable of measuring 0–5 Nm (0–3.6 ft.lbs.).

(15) Torque to 3.6 Nm (2.60 ft.lbs.) with the torque wrench.
(16) Holding the tensioner pulley with the special tool and torque wrench, tighten the center bolt to specification.,

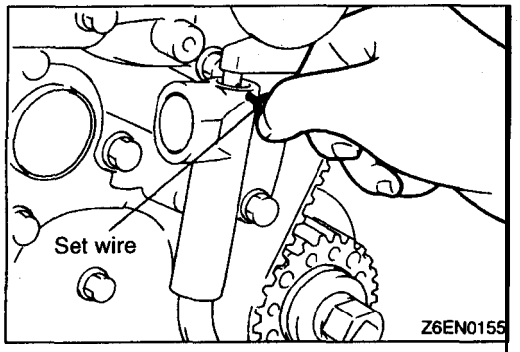

(17) After giving two clockwise turns to the crankshaft, let it alone for approx. 15 minutes. Then, make sure that the auto tensioner setting wire moves freely.

NOTE
If the wire does not move freely, repeat step (13) above' until it moves freely.

(18) Remove the auto tensioner setting wire.

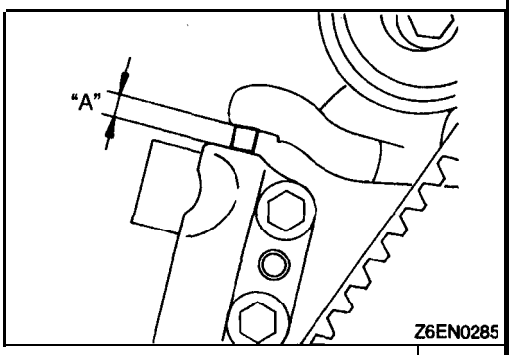

(19) Measure the distance "A" (between the tensioner arm and auto tensioner body).

Standard value: 3.8–4.5 mm (.15–.18 in.)

INSPECTION

11300200107

TIMING BELT

Replace belt if any of the following conditions exist.

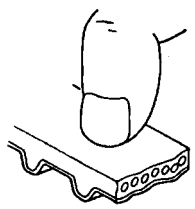

Z8EN0066

(1) Hardening of back rubber.
Back side is glossy without resilience and leaves no indent when pressed with fingernail.

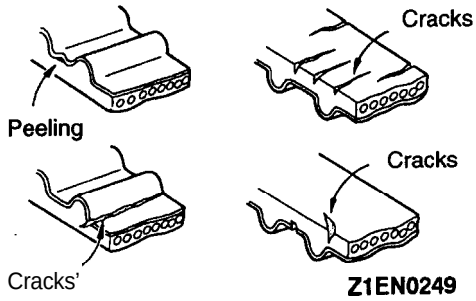

Z1EN0249

(2) Cracks on rubber back.
(3) Cracks or peeling of canvas.
(4) Cracks on rib root.
(5) Cracks on belt sides.

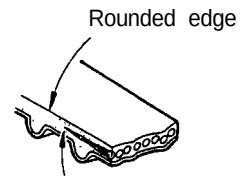

Z8EN0067

(6) Abnormal wear of belt sides. The sides are normal if they are sharp as if cut by a knife.

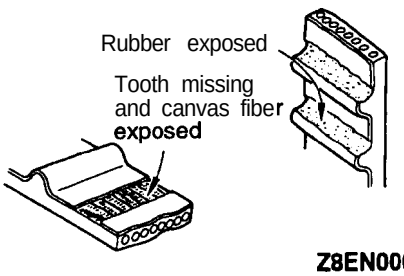

Z8EN0068

(7) Abnormal wear on teeth.
(8) Missing tooth.

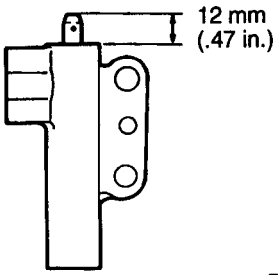

Z6EN0161

AUTO TENSIONER

(1) Check the auto tensioner for possible leaks and replace as necessary.
(2) Check the rod end for wear or damage and replace as necessary.
(3) Measure the rod protrusion. If it is out of specification, replace the auto tensioner.

Standard value: 12 mm (.47 in.)

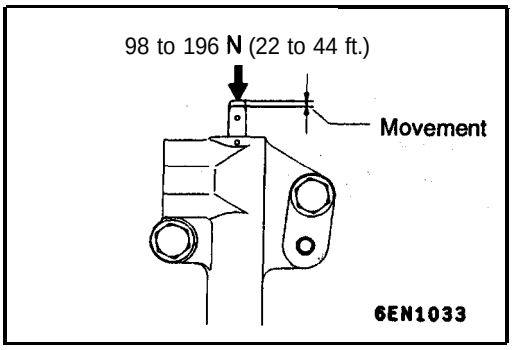

(4) Press the rod with a force of 98 to 196 N (22 to 44 ft.) and measure its protrusion.
(5) If the measured value is 1 mm (0.39 in) or more shorter than the value obtained in step (3), replace the auto tensioner.

FUEL AND EMISSION CONTROL PARTS

11300220127

REMOVAL AND INSTALLATION

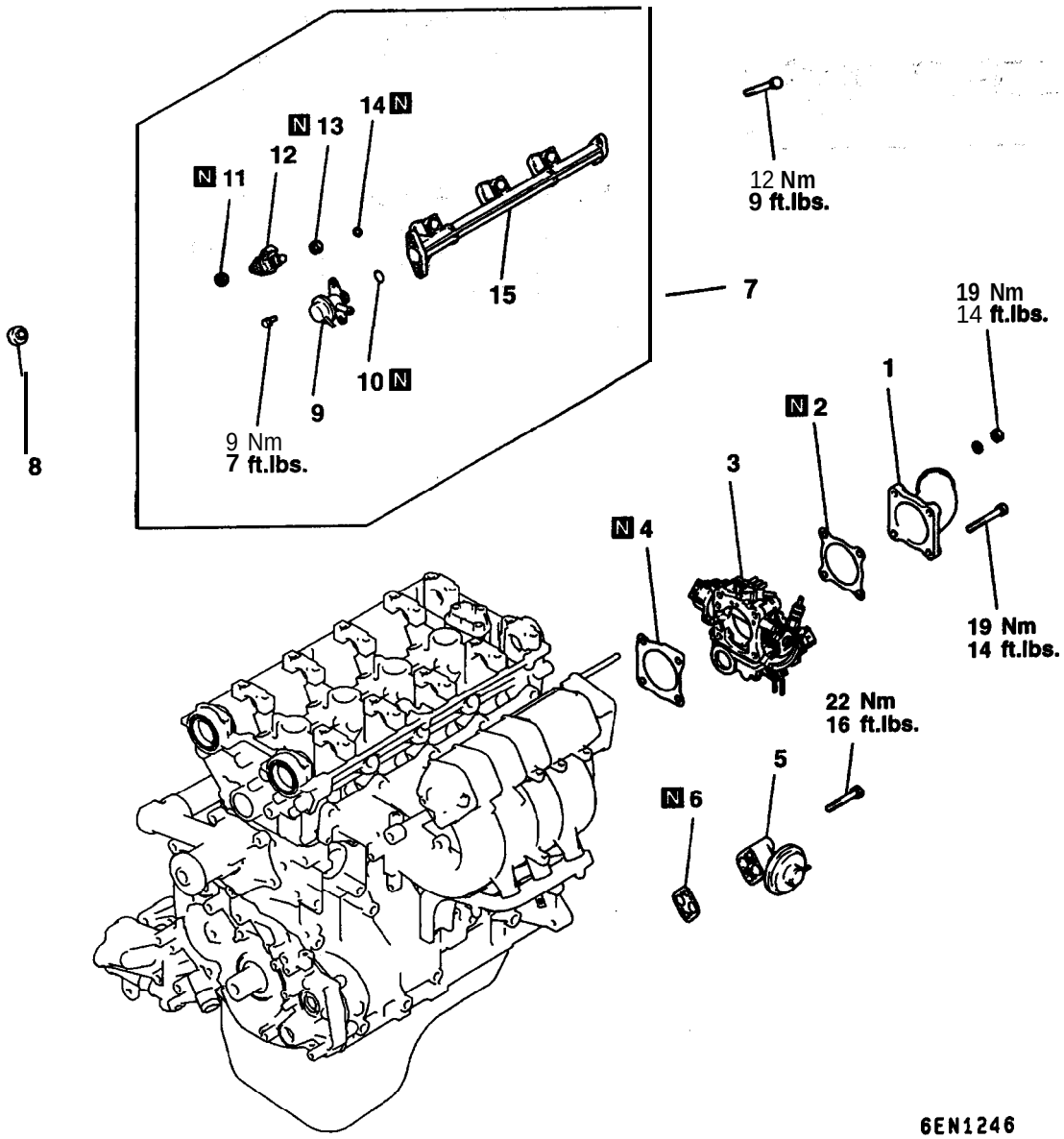

Removal steps

1. Air fitting
2. Air fitting gasket
3. Throttle body
4. Throttle body gasket
5. EGR valve
6. EGR valve gasket
7. Injectors and fuel rail
8. Insulator
9. Fuel pressure regulator
- ▶B◀ 10. O-ring
11. Insulator
- ▶A◀ 12. Injectors
13. O-ring
14. Grommet
15. Fuel rail

TSB Revision

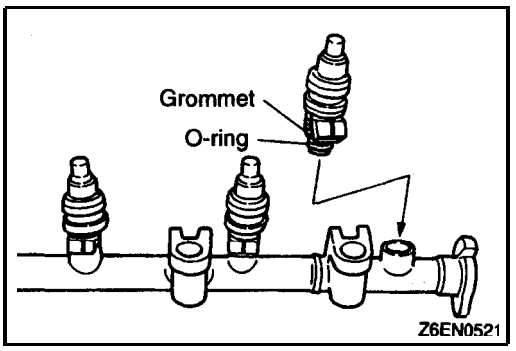

INSTALLATION SERVICE POINTS

▶A◀ INJECTOR INSTALLATION

(1) Before installing an injector the rubber O-ring must be lubricated with a drop of clean engine oil to aid in installation.
(2) Install injector top end into fuel rail.
Be careful not to damage the O-ring during installation.

▶B◀ FUEL PRESSURE REGULATOR INSTALLATION

(1) Before installing' pressure regulator the O-ring must be lubricated with a drop of clean engine O-ring to aid in installation.

INTAKE MANIFOLD

11300270047

REMOVAL AND INSTALLATION

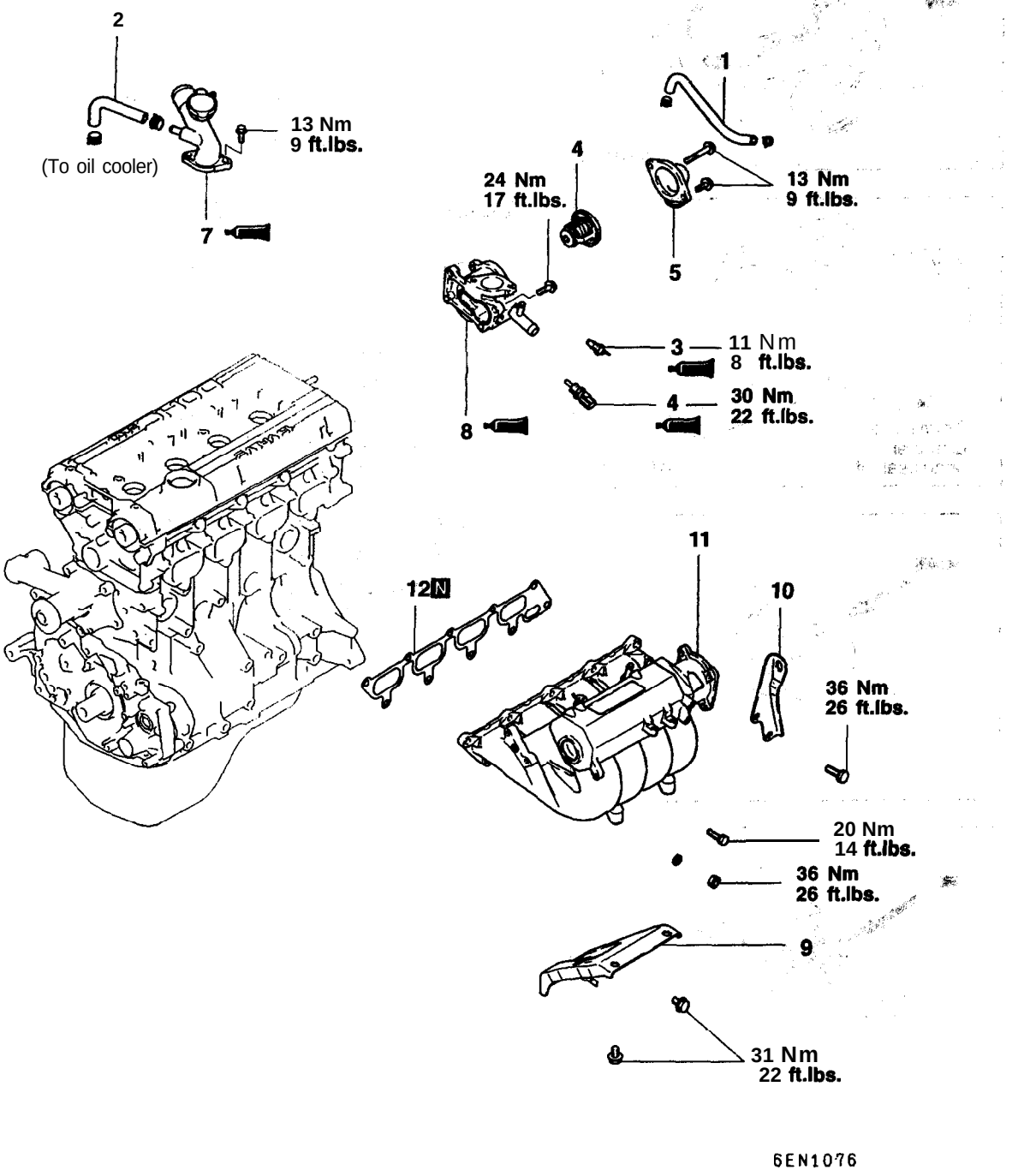

Removal steps

1. **Water hose**
2. Water hose
3. ▶D◀ Engine coolant temperature gauge unit
4. ▶C◀ Engine coolant temperature sensor
5. Water inlet fitting
6. Thermostat case
7. ▶B◀ Water outlet fitting
8. ▶A◀ Thermostat housing
9. Intake manifold stay
10. Engine hanger
11. Intake manifold
12. **Gasket**

TSB Revision

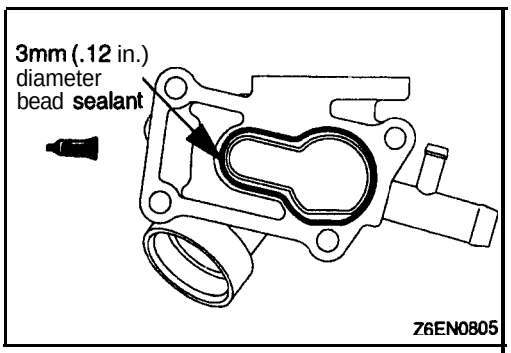

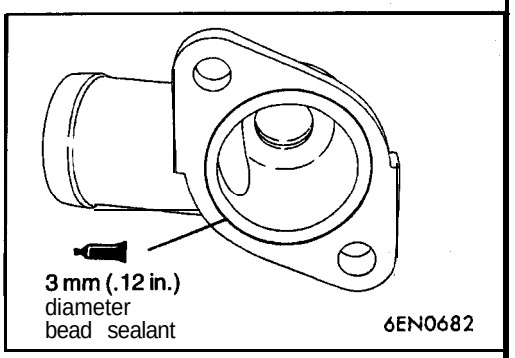

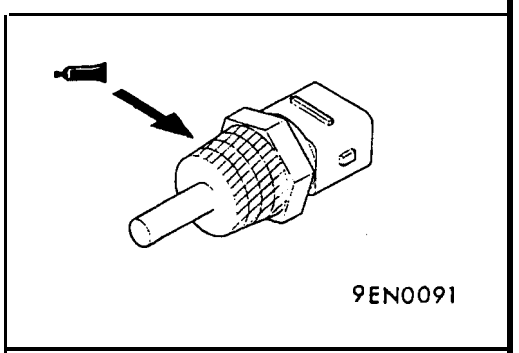

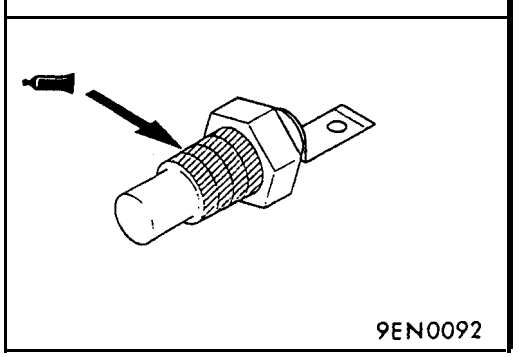

INSTALLATION SERVICE POINTS

▶A◀ SEALANT APPLICATION TO THERMOSTAT HOUSING

Specified sealant:

Mitsubishi Genuine Part No. MD970389 or equivalent

NOTE

(1) Be sure to install the housing quickly while the sealant is wet (within 15 minutes).

(2) After installation, keep the sealed area away from the oil and coolant for approx. 1 hour.

▶B◀ SEALANT APPLICATION TO WATER OUTLET FITTING

Specified sealant:

Mitsubishi Genuine Part No. MD970389 or equivalent

NOTE

(1) Be sure to install the housing quickly while the sealant is wet (within 15 minutes).

(2) After installation, keep the sealed area away from the oil and coolant for approx. 1 hour.

▶C◀ SEALANT APPLICATION TO ENGINE COOLANT TEMPERATURE SENSOR

Specified sealant:

3M Nut Locking 'Part No. 4171 or equivalent

▶D◀ SEALANT APPLICATION TO ENGINE COOLANT TEMPERATURE GAUGE UNIT

Specified sealant: 3M ATD Part No. 8660 or equivalent

EXHAUST MANIFOLD AND WATER PUMP

11300490108

REMOVAL AND INSTALLATION

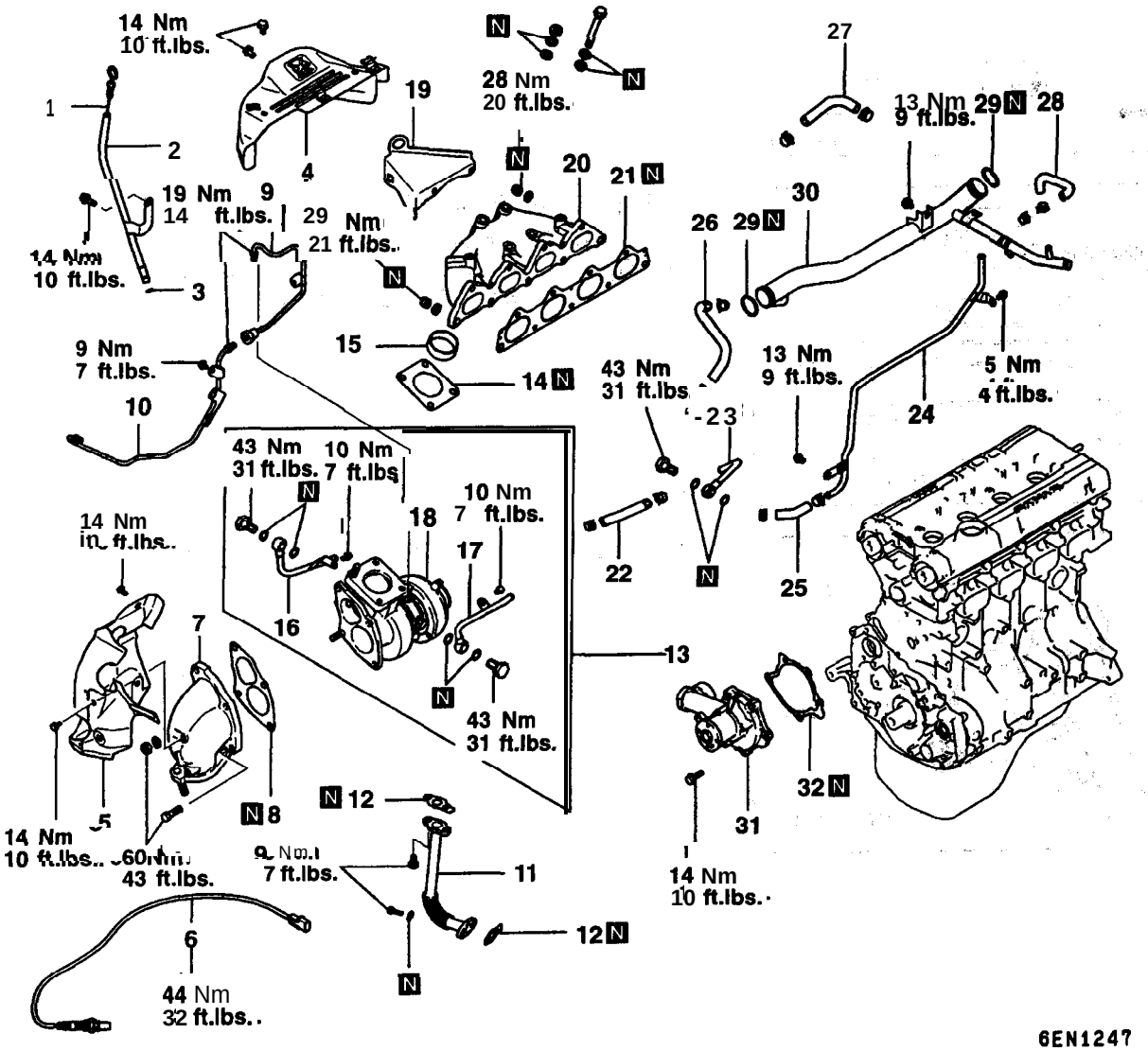

Removal steps

1. Oil dipstick
2. Oil dipstick guide
3. O-ring
4. Heat protector "A"
5. Heat protector "B"
6. Heated oxygen sensor
7. Exhaust fitting
8. Gasket
9. Oil pipe "A"
10. Oil pipe "B"
11. Oil return pipe
12. Gasket
13. ▶B◀ Turbocharger assembly
14. Gasket
15. Ring
16. Water pipe "A"
17. Water pipe "B"
18. Turbocharger
19. Engine hanger
20. Exhaust manifold
21. Gasket
22. Water hose
23. Water pipe "C
24. Water pipe
25. Water hose
26. Water hose
27. Water hose
28. Water hose
29. ▶A◀ O-ring
30. ▶A◀ Water inlet pipe
31. Water pump
32. Gasket

TSB Revision

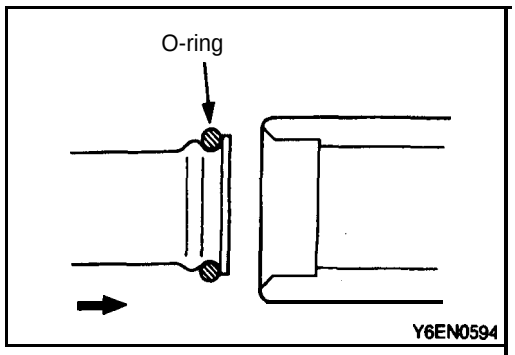

INSTALLATION SERVICE POINT

▶A◀ WATER PIPE/O-RING INSTALLATION

(1) Wet the O-ring (with water) to facilitate assembly.

Caution

Keep the O-ring free of oil or grease.

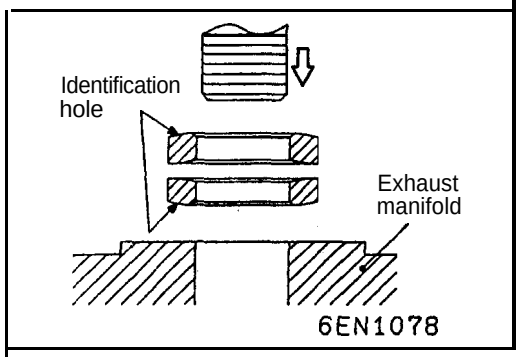

▶B◀ TURBOCHARGER ASSEMBLY INSTALLATION

(1) Install the cone disc spring in the shown direction.

(2) Tighten the turbocharger mounting bolts and nuts to **27 – 31** Nm **(20 –** 22 **ft.lbs.).**

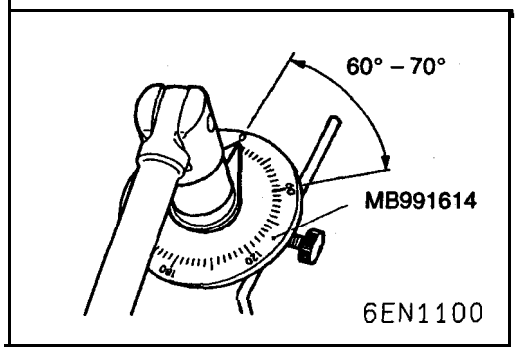

(3) Use the special tool *or* similar *to* tighten **60° – 70°** more.

ROCKER ARMS AND CAMSHAFT

11300540209

REMOVAL AND INSTALLATION

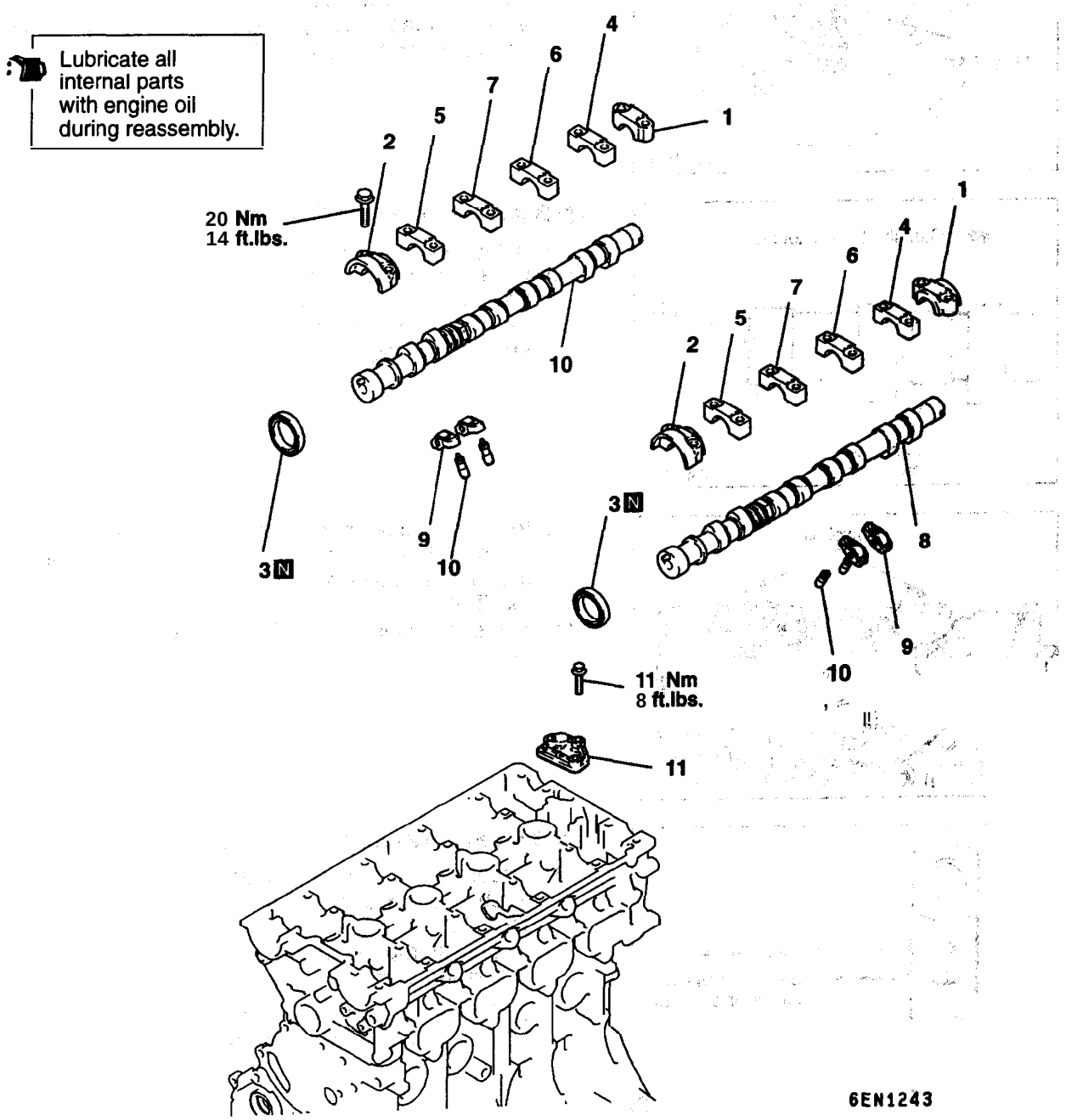

Removal steps

- ▶C◀ 1. Bearing cap rear
- ▶C◀ 2. Bearing cap front
- ▶D◀ 3. Camshaft oil seal
- ▶C◀ 4. Bearing cap No. 5
- ▶C◀ 5. Bearing cap No. 2
- ▶C◀ 6. Bearing cap No. 4
- ▶C◀ 7. Bearing cap No. 3
- ▶B◀ 8. Camshaft
- 9. Rocker arm
- ▶A◀ 10. Lash adjuster
- 11. Oil delivery body

TSB Revision

INSTALLATION SERVICE POINTS

▶A◀ LASH ADJUSTER INSTALLATION

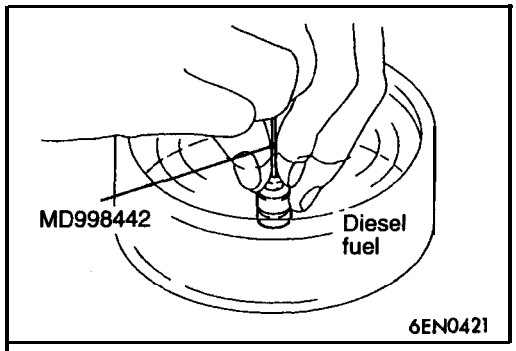

(1) Immerse the lash adjuster in clean diesel fuel.
(2) Using a special tool, move the plunger up and down 4 or 5 times while pushing down lightly on the check ball in order to bleed out the air.

▶B◀ CAMSHAFT INSTALLATION

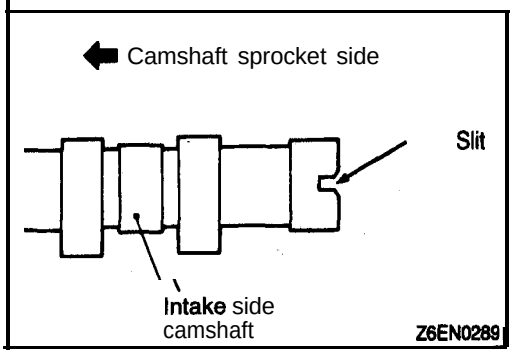

(1) Apply engine oil to journals and cams of the camshafts.
(2) Install the camshafts on the cylinder head.
Use care not to confuse the intake camshaft with the exhaust one. The intake camshaft has a slit on its rear end for driving the crankshaft position sensor.

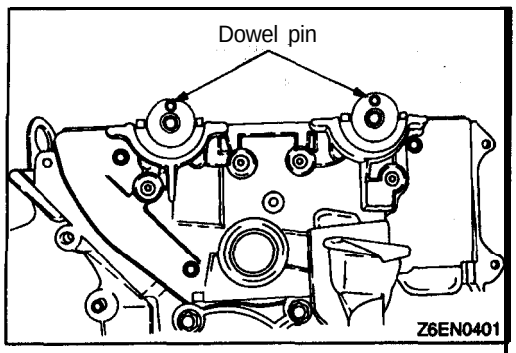

(3) Install the crankshaft sprocket B or spacer and flange to an end of the crankshaft, and turn the crankshaft until the timing marks are lined up, setting No. 1 cylinder to the TDC.
(4) Place the camshafts so that their dowel pins are positioned at top.

▶C◀ BEARING CAPS INSTALLATION

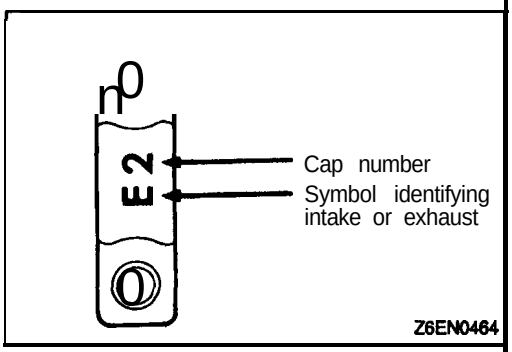

(1) According to the identification mark stamped on top of each bearing cap, install the caps to the cylinder head. Only "L" or "R" is stamped on No. 1 bearing cap. Cap No. is stamped on No. 2 to No. 5 bearing caps. No. 6 bearing cap has no stamping.

I: For intake camshaft side
E: For exhaust camshaft side

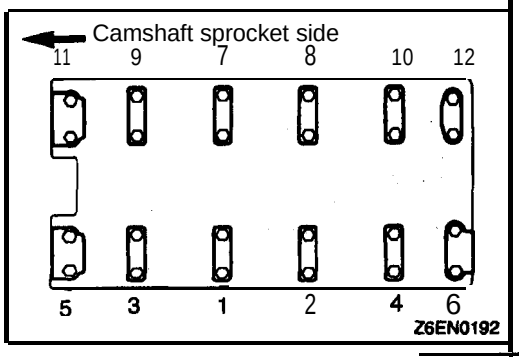

(2) Tighten the bearing caps in the order shown two. to three times by torquing progressively.
Tighten to specification in the final sequence.
(3) Check to ensure that the rocker arm is held in position on the lash adjuster and valve. stem end.

TSB Revision

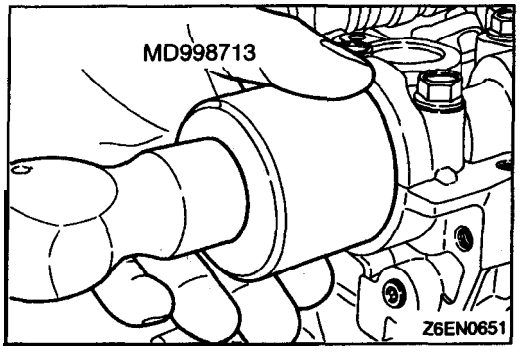

▶D◀ CAMSHAFT OIL SEAL CIRCULAR PACKING INSTALLATION

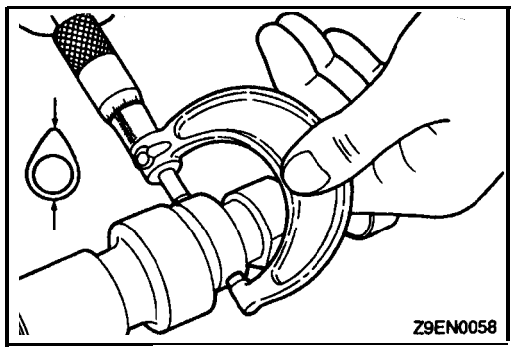

INSPECTION

11300550196

CAMSHAFT

(1) Measure the cam height.

Item	Standard value mm (in.)	Limit mm (in.)
Intake	34.91 (1.37)	34.41 (1.36)
Exhaust	34.91 (1.37)	34.41 (1.36)

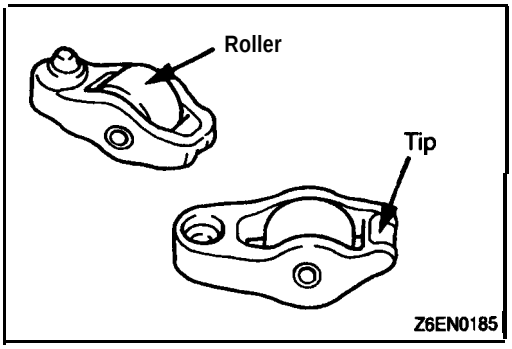

ROCKER ARM

(1) Check the roller surface. If any dents, damage or seizure is evident, replace the rocker arm.
(2) Check rotation of the roller. If it does not rotate smoothly or if looseness is evident, replace the rocker arm.
(3) Check the inside diameter. If damage or seizure is evident, replace the rocker arm.

LASH ADJUSTER LEAK DOWN TEST

Caution

1. The lash adjuster is a precision part. Keep it free from dust and other foreign matter.
2. Do not disassemble lash adjuster.
3. When cleaning lash adjuster, use clean diesel fuel only.

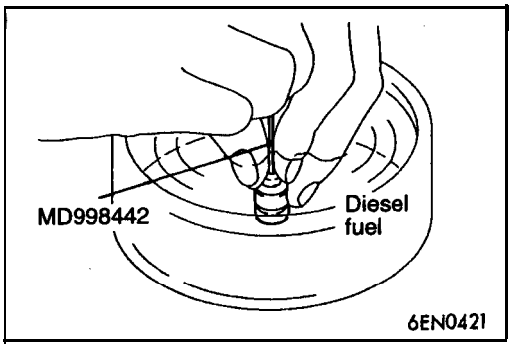

(1) Immerse the lash adjuster in clean diesel fuel.
(2) While lightly pushing down inner steel ball using the special tool, move the plunger up and down four or five times to bleed air.
Use of the special tool helps facilitate the air bleeding of the rocker arm mounted type lash adjuster.
(3) Remove the special tool and press the plunger. If the plunger is hard to be pushed in, the lash adjuster is normal. If the plunger can be pushed in all the way readily, bleed the lash adjuster again and test again. If the plunger is still loose, replace the lash adjuster.

Caution

Upon completion of air bleeding, hold lash adjuster upright to prevent inside diesel fuel from spilling.

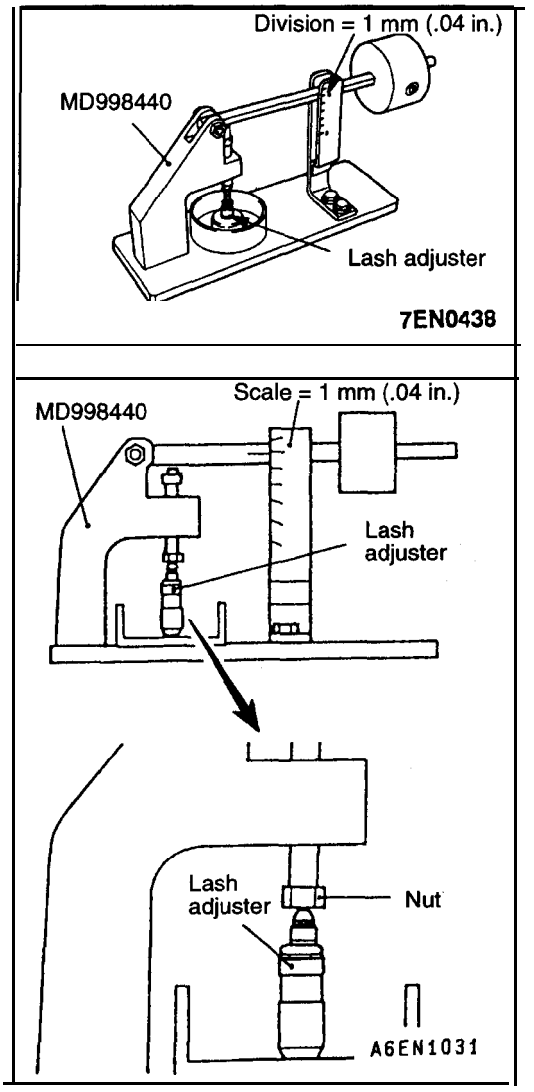

(4) After air bleeding, place lash adjuster on the special tool (Leak down tester).

(5) After plunger has gone down somewhat (.2–.5 mm), measure time taken for it to go down 1 mm. Replace if measured time is out of specification.

Standard value: 4–20 seconds / 1 mm (.04 in.) [Diesel fuel at 15–20°C (59–68°F)]

CYLINDER HEAD AND VALVES

11300690201

REMOVAL AND INSTALLATION

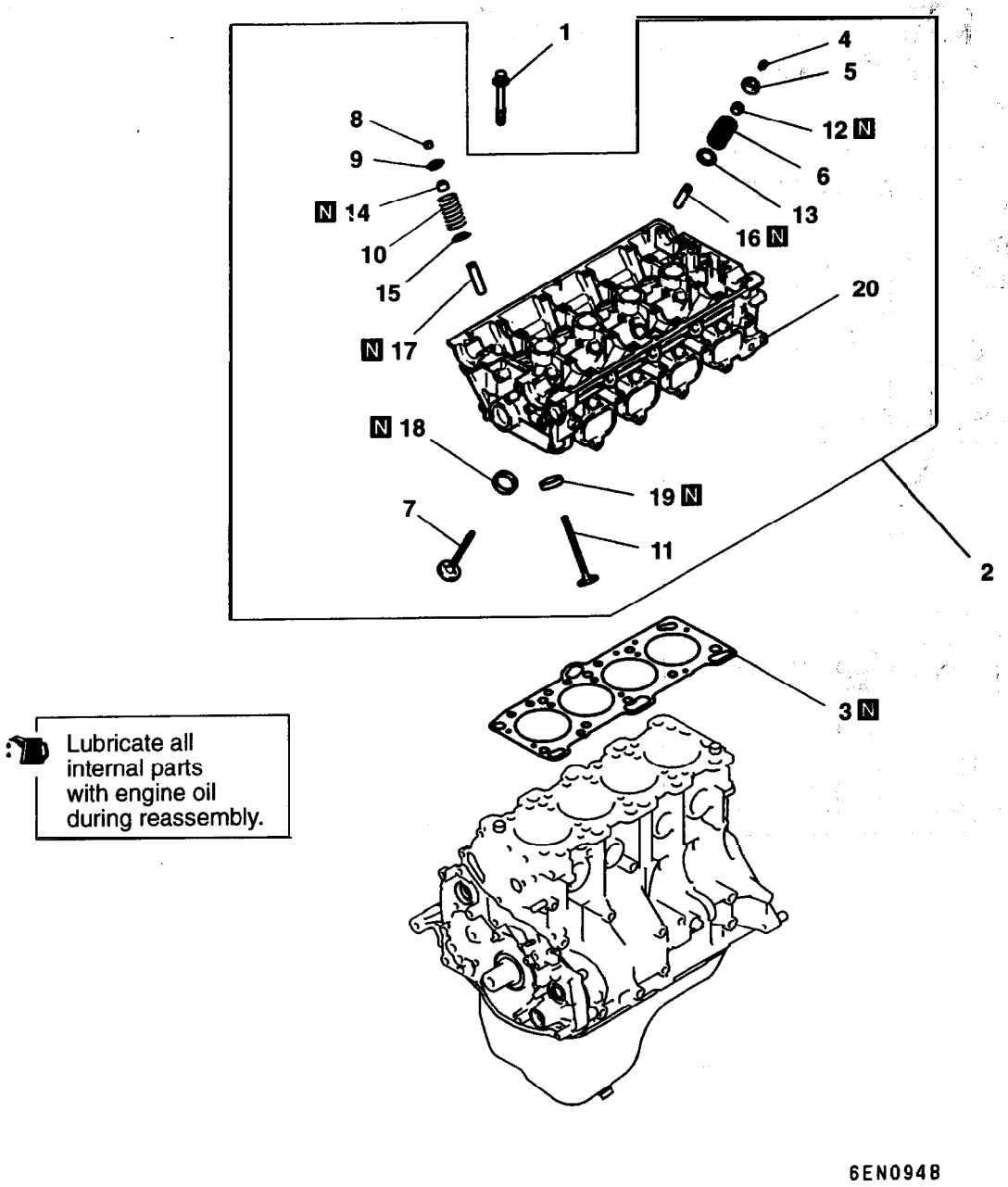

Removal steps

◀A▶ ▶E◀ 1. Cylinder head bolt
2. Cylinder head assembly
▶D◀ 3. Gasket
◀B▶ ▶C◀ 4. Retainer lock
5. Valve spring retainer
▶B◀ 6. Valve spring
7. Intake valve
◀B▶ ▶C◀ 8. Retainer lock
9. Valve spring retainer
▶B◀ 10. Valve spring
11. Exhaust valve
◀C▶ ▶A◀ 12. Valve stem seal
13. Valve spring seat
◀C▶ ▶A◀ 14. Valve stem seal
15. Valve spring seat
16. Intake valve guide
17. Exhaust valve guide
18. Intake valve seat
19. Exhaust valve seat
20. Cylinder head

TSB Revision

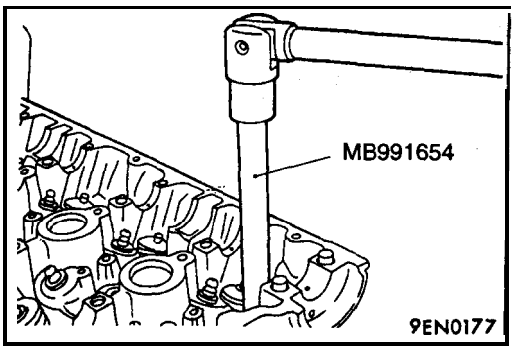

REMOVAL SERVICE POINTS

PRECAUTION FOR REMOVED PARTS

(1) Keep removed parts in order according to the cylinder, number and intake/exhaust.

◀A▶ CYLINDER HEAD BOLTS REMOVAL

(1) Using the special tool, loosen the cylinder head bolts. Loosen evenly, little by little.

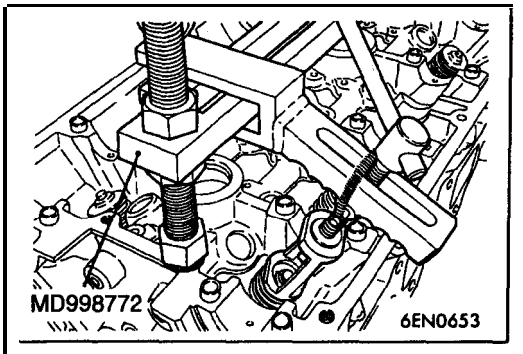

◀B▶ RETAINER LOCK REMOVAL

(1) Store removed valves, springs and other parts,' tagged to indicate their cylinder No. and location for reassembly.

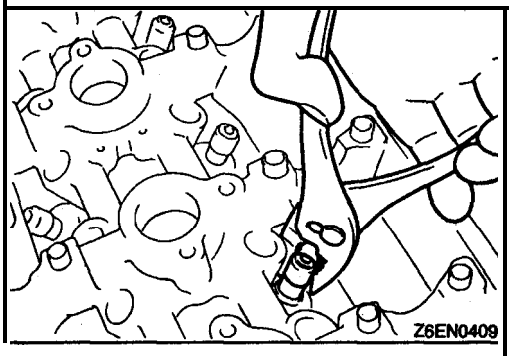

◀C▶ VALVE STEM SEAL REMOVAL

(1) Do not reuse valve stem seal.

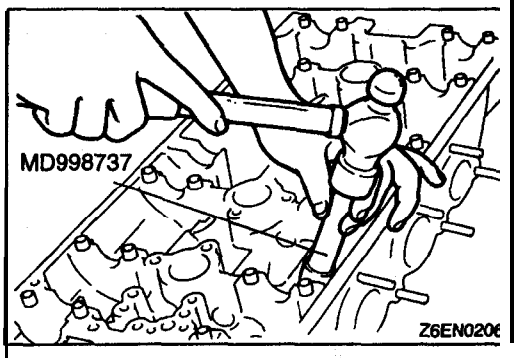

INSTALLATION SERVICE POINTS

▶A◀ VALVE STEM SEAL INSTALLATION

(1) Install the valve spring seat.
(2) The special tool must be used to install the valve stem seal. Improper installation could result in oil leaking 'past the valve guide.

Caution

Do not reuse the valve stem seal.

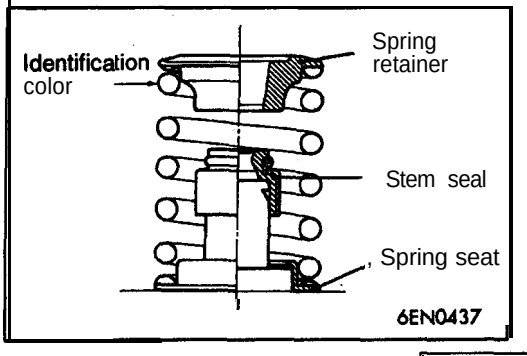

▶B◀ VALVE SPRINGS INSTALLATION

(1) Direct the valve spring end with identification color end toward the spring retainer.

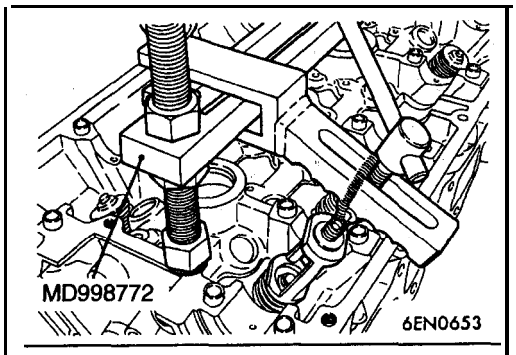

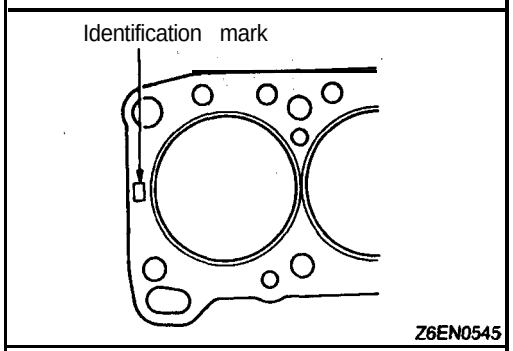

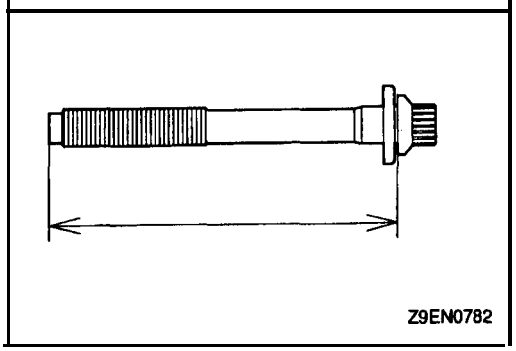

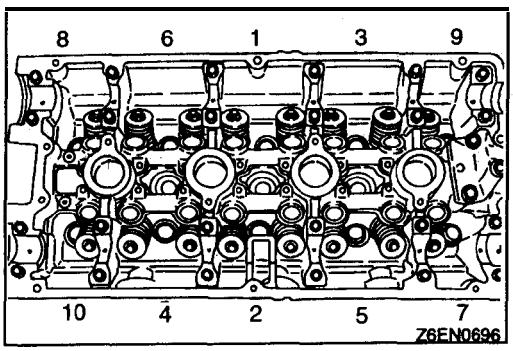

▶C◀ RETAINER LOCK INSTALLATION . .

(1) The 'valve spring, if excessively, compressed, causes the bottom end of retainer to be in contact with, and damage,: the stem seal.

▶D◀ CYLINDER HEAD GASKET IDENTIFICATION

Identification mark: 4G63K

▶E◀ CYLINDER HEAD BOLT INSTALLATION

(1) When installing the cylinder head bolts, check that the shank length of each bolt meets the limit. If the limit is exceeded, replace the' bolt.'

Limit: Max. 99.4 mm (3.91 in.)

(2) Apply engine oil to the threaded portions of bolts and to the washers.
(3) According to the tightening sequence, tighten' the bolts to the specified torque 78 Nm (58 ft.lbs.) using special tool (MB991654).
(4) Loosen bolts completely.
(5) Retighten the loosened bolts to 20 Nm (14.5 ft.lbs.) in the specified tightening sequence.
(6) Make a paint mark across each-'bolt head and cylinder head.
(7) Give a 90° turn to the bolts in the specified' tightening sequence.
(8) Give another 90° turn to the bolts and make sure that the paint mark on the head of each, bolt 'and that on the cylinder head are on the same straight line.

Caution

1. **If the bolt is turned less than 90°, proper fastening performance may not be expected. When tightening the bolt, therefore, be careful to give a sufficient turn to it.**
2. **If the bolt is overtightened, loosen the bolt completely and then retighten It by repeating the tightening procedure from step (1).**

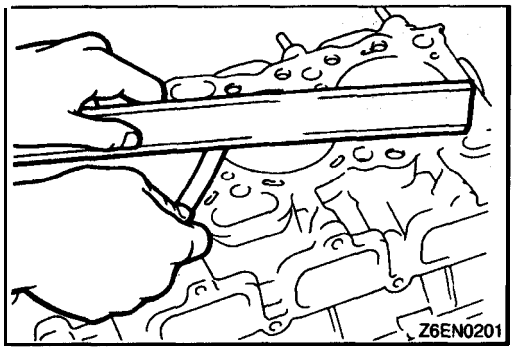

INSPECTION

11300700225

CYLINDER HEAD

(1) Check the cylinder head gasket surface for flatness by using a straightedge and feeler gauge.

Standard value: 0.05 mm (.0020 in.)
Limit: 0.2 mm (.008 in.)

(2) If the service limit is exceeded, correct to meet specification.

Grinding limit: *0.2 mm (.008 in.)

* Includes combined with cylinder block grinding.

Cylinder head height (Specification when new): 131.9-132.1 mm (5.193–5.201 in.)

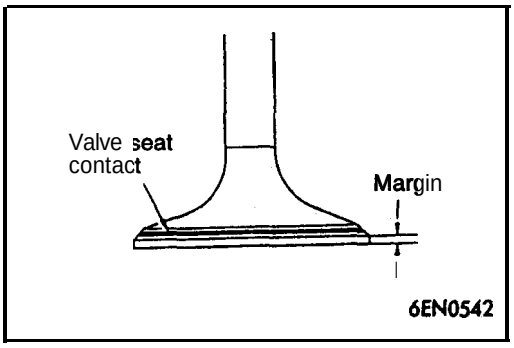

VALVE

(1) Check the valve face for correct contact. I/incorrect, reface using valve refacer. Valve seat contact should be maintained uniform at the center of valve face.

(2) If the margin exceeds the service limit, replace the valve.

Item	Standard value mm (in.)	Limit mm (in.)	Identification mark
Intake	1.0 (.039)	0.5 (.020)	6T
Exhaust	1.5 (.059)	1.0 (.039)	6T

(3) Measure the valve's total length. If the measurement is less than specified, replace the valve.

Item	Standard value mm (in.)	Limit mm (in.)
Intake	109.50 (4.3110)	109.00 (4.2913)
Exhaust	109.70 (4.3189)	109.20 (4.2992)

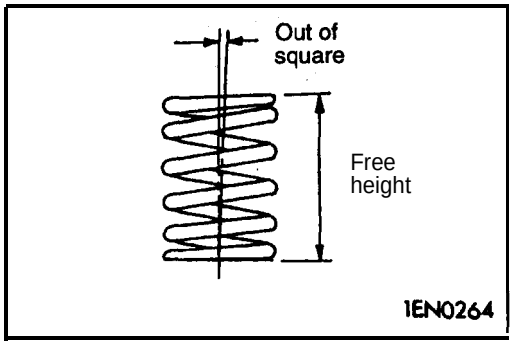

VALVE SPRING

(1) Measure the free height of spring and, if it is smaller than the limit, replace.

Standard value: 47.0 mm (1.850 in.)
Limit: 46.0 mm (1.811 in.)

(2) Measure the squareness of the spring and, if the limit is exceeded, replace.

Standard value: 1.5° or less
Limit: Max. 4°

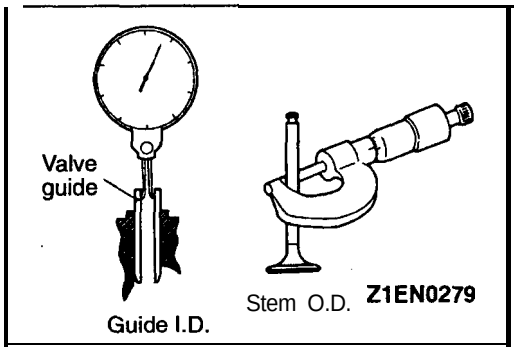

VALVE GUIDE

(1) Measure the clearance between the valve guide and valve stem. If the limit is exceeded, replace the valve guide or valve, or both.

Item	Standard value mm (in.)	Limit mm (in.)
Intake	0.02–0.05 (.0008–.0020)	0.10 (.004)
Exhaust	0.05–0.09 (.0020–.0035)	0.15 (.006)

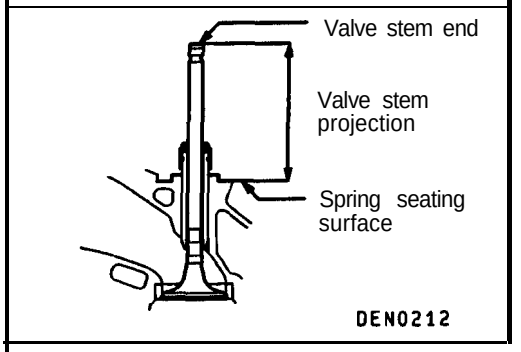

VALVE SEAT

(1) Assemble the valve, then measure the valve stem projection between the end of the valve stem and the spring seating surface. If the measurement exceeds the specified limit, replace the valve seat.

Item	Standard value mm (in.)	Limit mm (in.)
Intake	49.20 (1.9370)	49.80 (1.9606)
Exhaust	48.40 (1.9055)	48.90 (1.9252)

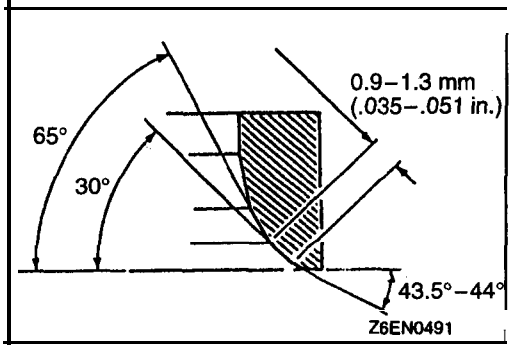

VALVE SEAT RECONDITIONING PROCEDURE

(1) Before correcting the valve seat, check for clearance between the valve guide and valve and, if necessary, replace the valve guide.
(2) Using the seat grinder, correct to obtain the specified seat width and angle.
(3) After correcting the valve seat, lap the valve and valve seat using lapping compound. Then, check the valve stem projection (refer to VALVE SEAT in INSPECTION).

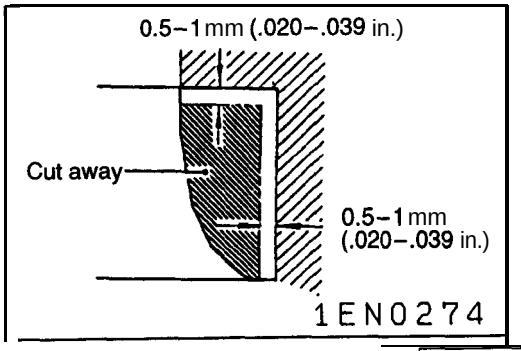

VALVE SEAT REPLACEMENT PROCEDURE

(1) Cut the valve seat to be replaced form the inside to thin the wall thickness. Then, remove the valve seat.

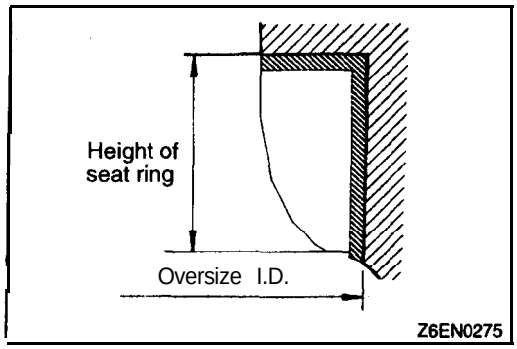

(2) Rebore the valve seat hole in the cylinder head to' a selected oversize valve seat diameter.

Intake seat ring hole' diameters
0.3 O.S. 35.30 – 35.33 mm (1.3989 – 1.3909 in.)
0.6 OS. 35.60 – 35.63 mm (1.4018 – 1.4028 in.)

Exhaust seat ring hole diameters
0.3 O.S. 33.30 – 33.33 mm (1.3110 – 1.3122 in.)
0.6 O.S. 33.60 – 36.63 mm (1.3228 – 1.3240 in.)

(3) Before fitting the valve seat, either heat the cylinder head up to approximately **250°C (482°F)** or cool the valve seat in liquid nitrogen, to prevent the cylinder head bore from galling.

(4) Using a valve seat cutter, correct the valve seat to the specified width and angle.
See "VALVE SEAT RECONDITIONING PROCEDURE".

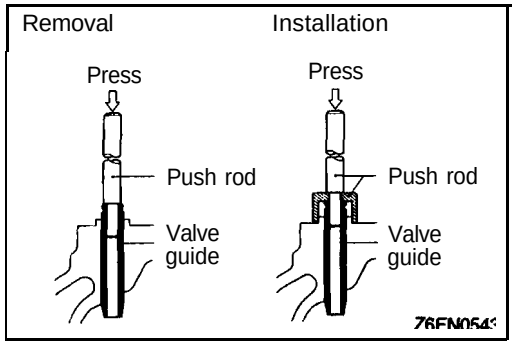

VALVE GUIDE REPLACEMENT PROCEDURE

(1) Using the push rod and a press, remove the valve guide toward cylinder head gasket surface.

(2) Rebore valve guide hole to the new oversize valve guide outside diameter.

Valve guide hole diameters
0.05 O.S. 12.05 – 12.07 mm (.4744 – .4752 in.)
0.25 O.S. 12.25 – 12.27 mm (.4823 – .4831 in.)
0.50 O.S. 12.50 – 12.52 mm (.4921 – .4929 In.)

NOTE
Do not install a valve guide of the same size again.

(3) Using the special tool, press-fit the valve guide, working from the cylinder head top surface.

(4) After installing valve guides, insert new valves in them to check for sliding condition.

(5) When valve guides have been replaced, check for valve contact and correct valve seats as necessary.

FRONT CASE, COUNTERBALANCE SHAFT AND OIL PAN

11300720092

REMOVAL AND INSTALLATION

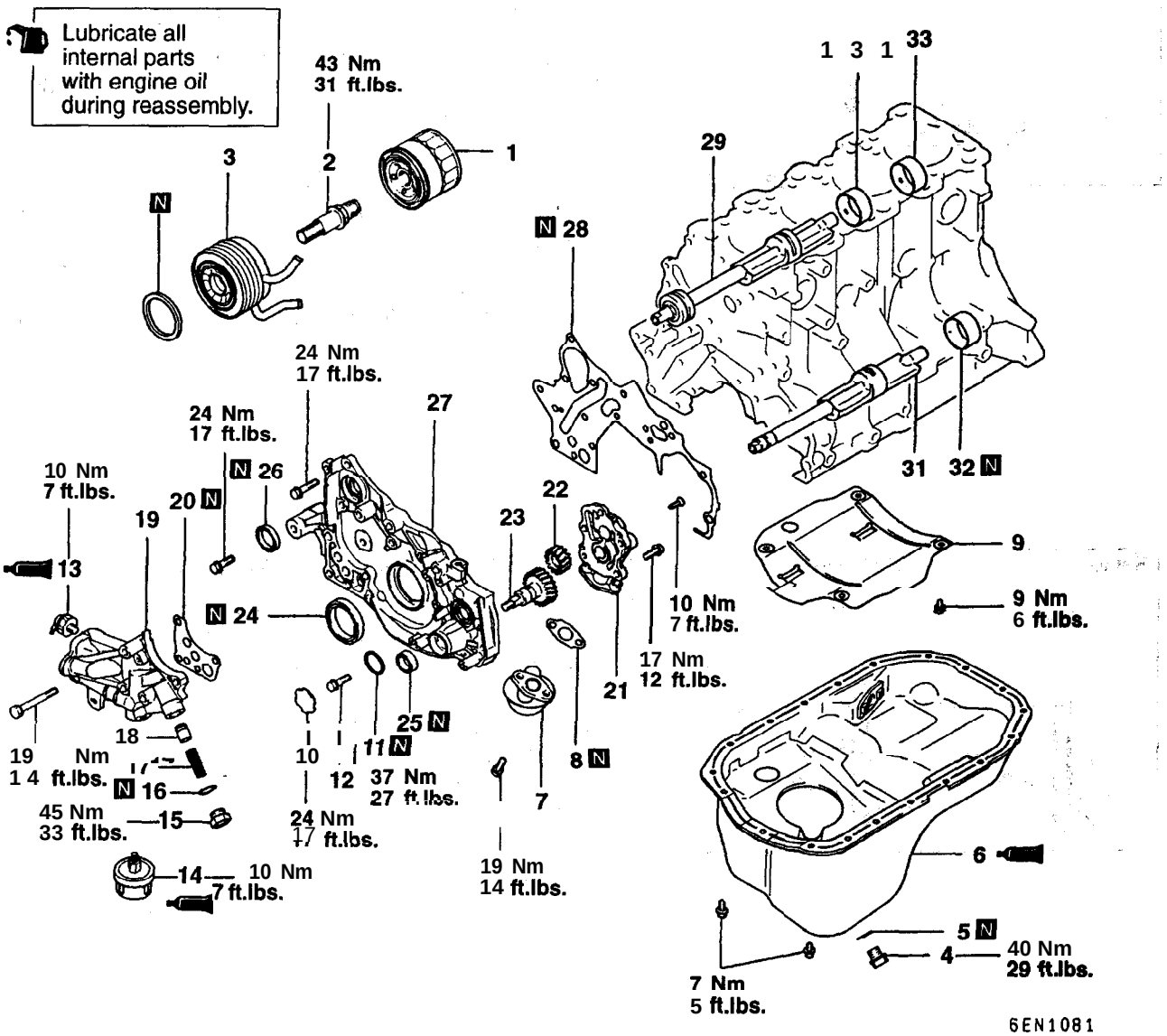

Removal steps

- ▶P◀ 1. Oil filter
- 2. Oil cooler bolt
- ▶O◀ 3. Oil cooler
- 4. Drain plug
- ▶N◀ 5. Drain plug gasket
- ◀A▶ ▶M◀ 6. Oil pan
- 7. Oil screen
- 8. Oil screen gasket
- 9. Baffle plate
- ◀B▶ ▶L◀ 10. Plug
- 11. O-ring
- ◀C▶ ▶K◀ 12. Flange bolt
- ▶J◀ 13. Oil pressure switch
- ▶I◀ 14. Oil pressure gauge unit
- 15. Relief plug
- 16. Gasket
- 17. Relief spring
- 18. Relief plunger
- 19. Oil filter bracket
- 20. Oil filter bracket gasket
- 21. Oil pump cover
- ▶H◀ 22. Oil pump driven gear
- ▶H◀ 23. Oil pump drive gear
- ▶G◀ 24. Crankshaft front oil seal
- ▶F◀ 25. Oil pump oil seal
- ▶E◀ 26. Counterbalance shaft oil seal
- ▶D◀ 27. Front case
- 28. Front case gasket
- 29. Counterbalance shaft, left
- 30. Counterbalance shaft, right
- ◀D▶ ▶C◀ 31. Counterbalance shaft, front bearing
- ◀E▶ ▶B◀ 32. Counterbalance shaft, rear bearing, left
- ◀E▶ ▶A◀ 33. Counterbalance shaft, rear bearing, right

TSB Revision

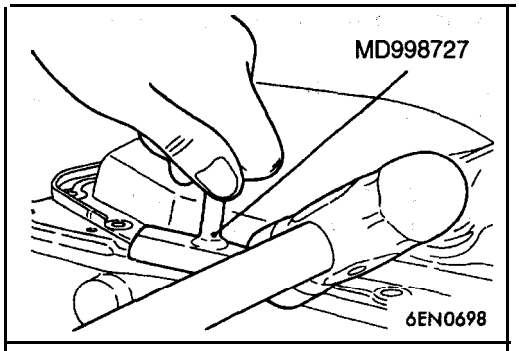

REMOVAL SERVICE POINTS

◀A▶ OIL PAN REMOVAL

(1) Remove all oil pan bolts.
(2) Drive in the special tool between the cylinder block and. oil pan.

NOTE
Never use a screwdriver or chisel, instead of the service tool, as a deformed oil pan flange will result in oil leakage.

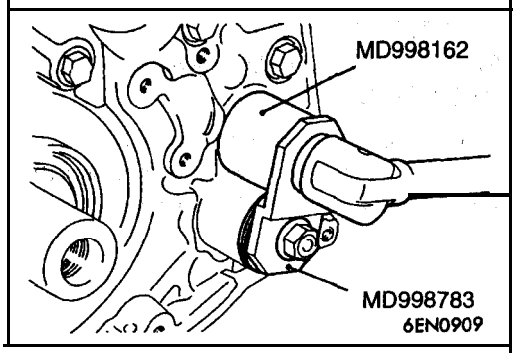

◀B▶ PLUG REMOVAL

(1) If the plug is too tight, hit the plug head with a hammer two to three times, and the plug will be easily loosened.

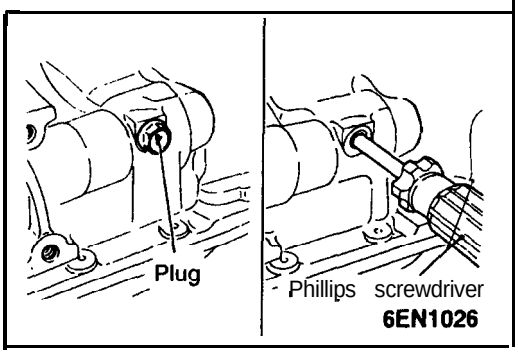

◀C▶ FLANGE BOLT REMOVAL

(1) Remove the plug on the side of cylinder block.
(2) Insert a Phillips screwdriver [shank diameter 8 mm (.32 in.)] into the plug hole to lock the counterbalance shaft.

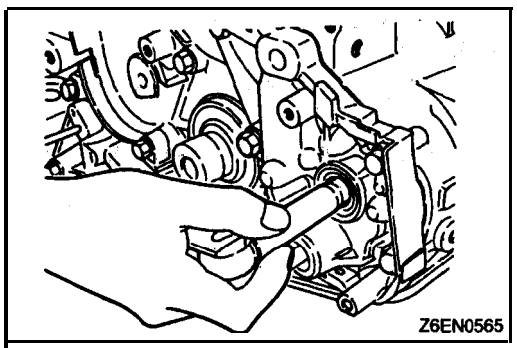

(3) Loosen the flange bolt.

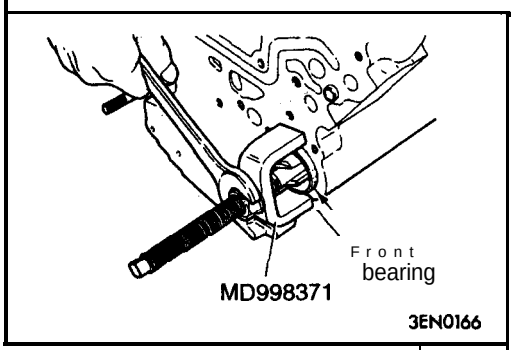

◀D▶ COUNTERBALANCE SHAFT FRONT BEARING REMOVAL

Using the special tool, remove the counterbalance shaft front bearing from the cylinder block.

NOTE
Be sure to remove the front bearing first.
If it has not been removed, the Rear Bearing Puller cannot be used.

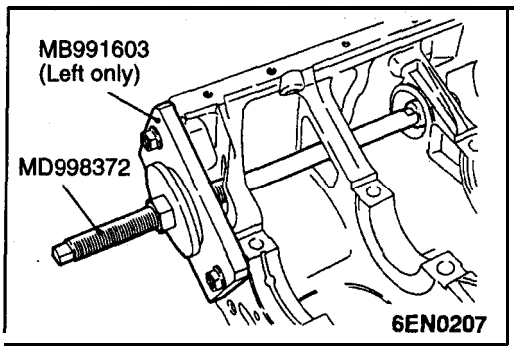

◀E▶ COUNTERBALANCE SHAFT REAR BEARING REMOVAL

Using the special tool, remove the counterbalance shaft rear bearing from the cylinder block.

NOTE
When removing the left counterbalance shaft, install the special tool (MB991603) to the front of the cylinder block.

INSTALLATION SERVICE POINTS

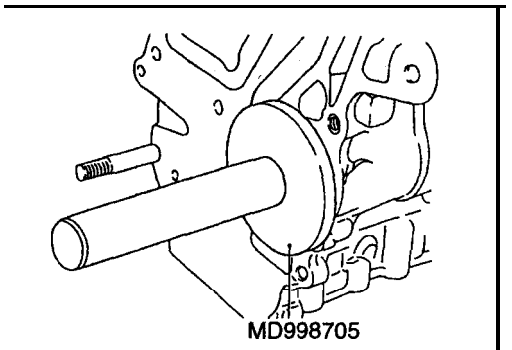

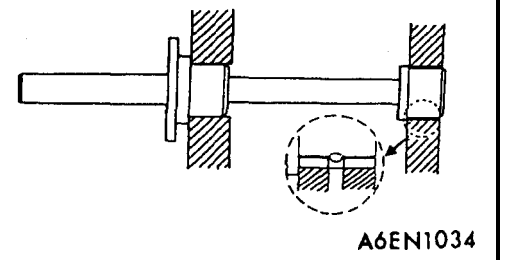

▶A◀ RIGHT COUNTERBALANCE SHAFT REAR BEARING INSTALLATION

(1) Apply engine oil to the outer surface of bearing.
(2) Using special tools, install right rear bearing. Make sure that oil hole of bearing is aligned with oil hole of cylinder block.

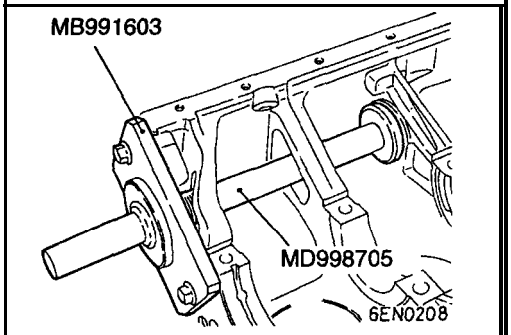

▶B◀ LEFT COUNTERBALANCE SHAFT REAR BEARING INSTALLATION

(1) Install the special tool (GUIDE PLATE) to the cylinder block.
(2) Apply engine oil to the rear bearing outer inside diameter and bearing hole in cylinder block.

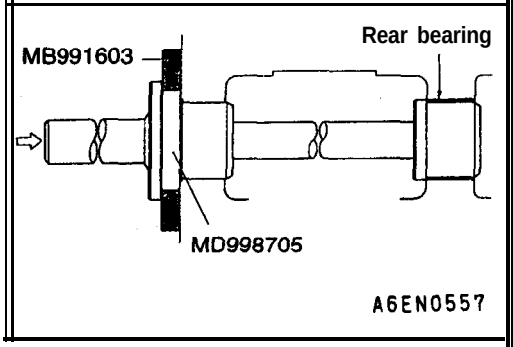

(3) Using the special tool, install' the rear bearing.

NOTE
The left rear bearing has no oil holes.

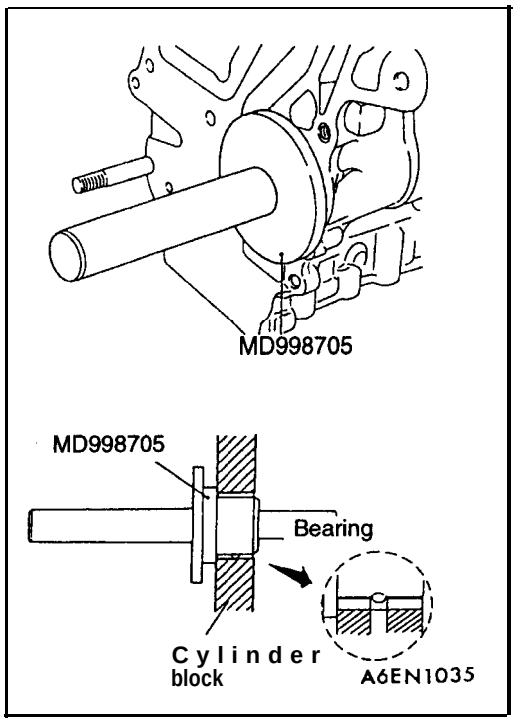

▶C◀ COUNTERBALANCE SHAFT FRONT BEARING INSTALLATION

(1) Using special tools, install front bearing.

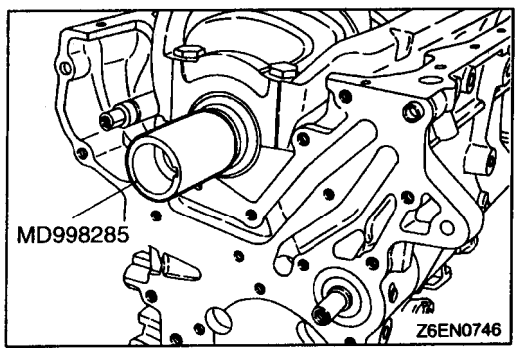

▶D◀ FRONT CASE INSTALLATION

(1) Place the special tool on the front end of crankshaft and apply a thin coat of engine oil to the outer inside diameter of the special tool to install the front case.

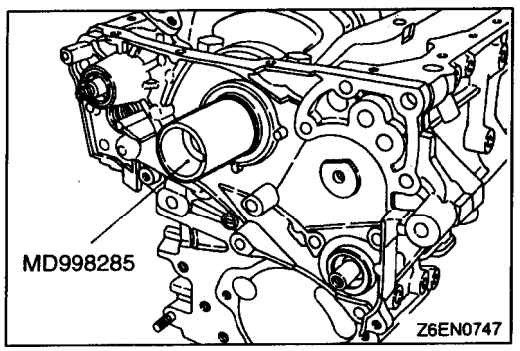

(2) Install the front case assembly through a new front case gasket and temporarily tighten the flange bolts (other than those for tightening the filter bracket).

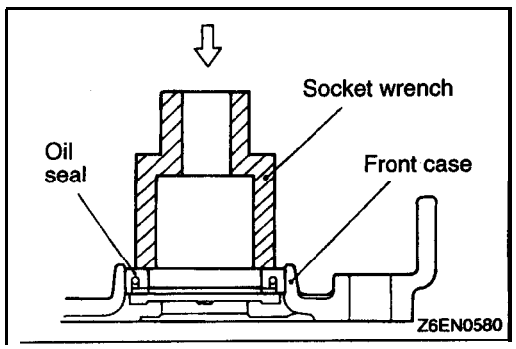

▶E◀ COUNTERBALANCE SHAFT OIL SEAL INSTALLATION

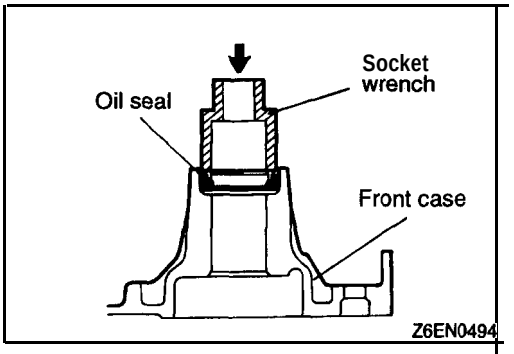

▶F◀ OIL PUMP OIL SEAL INSTALLATION

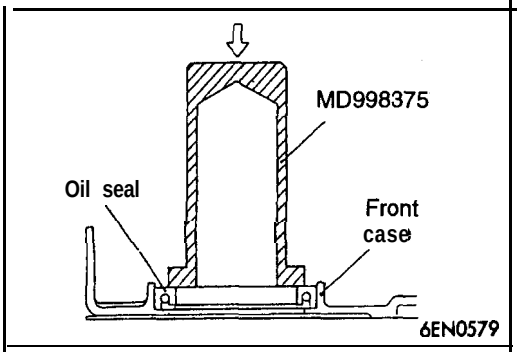

▶G◀ CRANKSHAFT FRONT OIL SEAL INSTALLATION

(1) Using the special tool, install the crankshaft front oil seal into the front case.

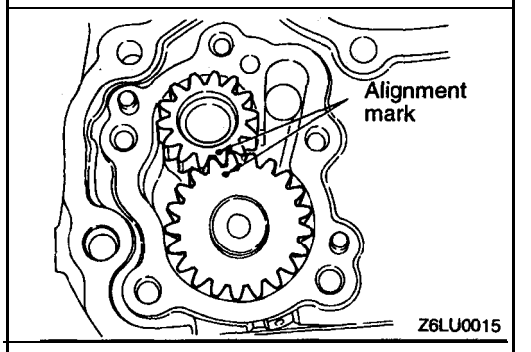

▶H◀ OIL PUMP DRIVEN GEAR / OIL PUMP DRIVE GEAR INSTALLATION

(1) Apply engine oil amply to the gears' and line up the alignment marks.

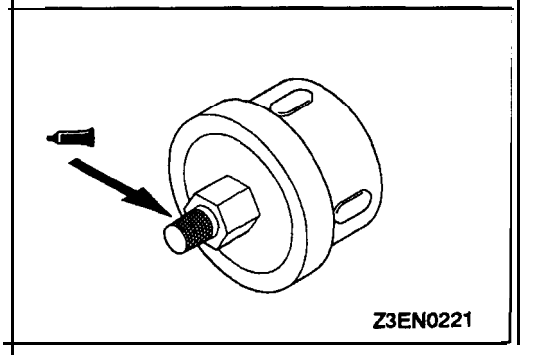

▶I◀ SEALANT APPLICATION TO OIL PRESSURE GAUGE UNIT

(1) Coat the threads of switch with sealant and install the switch using the special tool.

Specified sealant: 3M ATD Part No. 8660 or equivalent

Caution
1. **Keep the end of threaded portion clear of sealant.**
2. **Avoid an overtightening.**

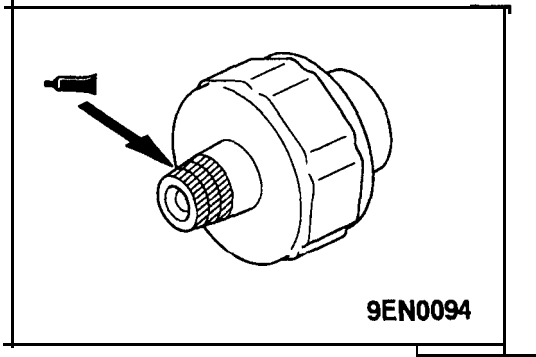

▶J◀ SEALANT APPLICATION TO OIL PRESSURE SWITCH

(1) Coat the threads of switch with sealant and install the switch using the special tool.

Specified sealant: 3M ATD Part No.8660 or equivalent

Caution
1. **Keep the end of threaded portion clear of sealant.**
2. **Avoid an overtightening.**

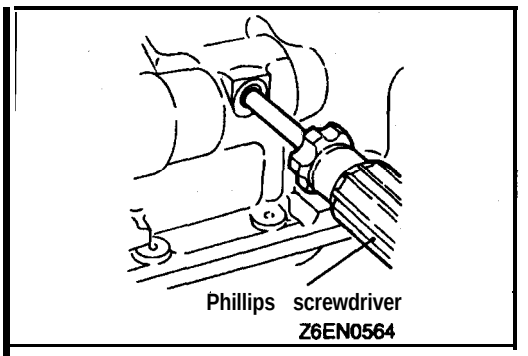

▶K◀ FLANGE BOLT INSTALLATION

(1) Insert a Phillips screwdriver into a hole in the left side of the cylinder block to lock the counterbalance shaft.

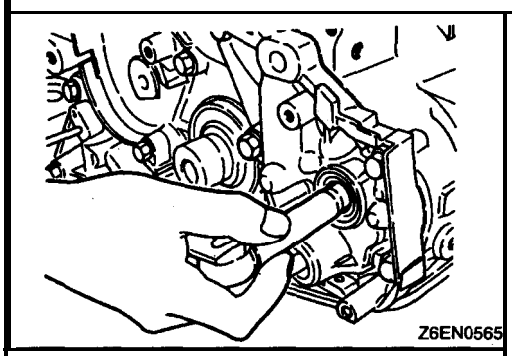

(2) Secure the oil pump driven gear onto the left counterbalance shaft by tightening the flange bolt to specified torque.

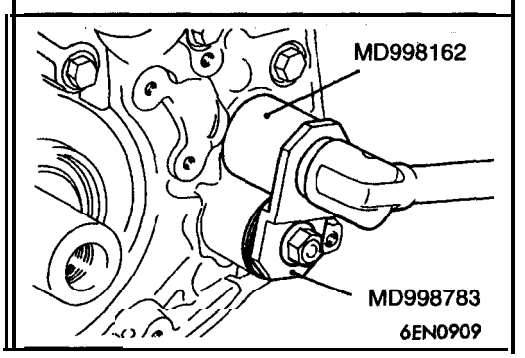

▶L◀ PLUG INSTALLATION

(1) Install a new O-ring to the groove of front case.
(2) Using the special tool, install the plug and tighten to specified torque.

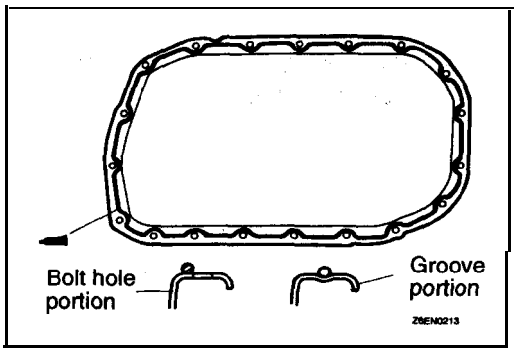

▶M◀ OIL PAN INSTALLATION

(1) Clean both mating surfaces of oil pan and cylinder block.
(2) Apply a 4 mm (.16 in.) wide bead of sealant to the entire circumference of the oil pan flange.

Specified sealant:
MITSUBISHI GENUINE PART No. MD970389 or equivalent

NOTE
(1) Be sure to install the oil pan quickly while the sealant' is wet (within 15 minutes);
(2) After installation, keep the sealed area away from,, the oil and coolant for approx. 1 hour.

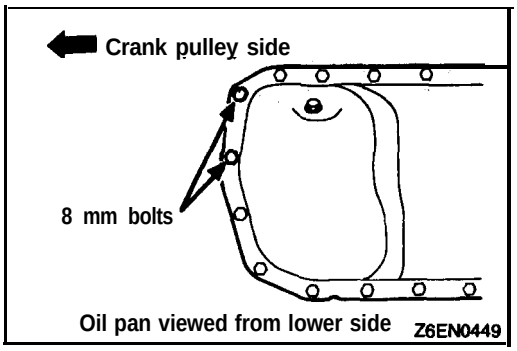

(3) Note the difference in bolt lengths at the location shown.

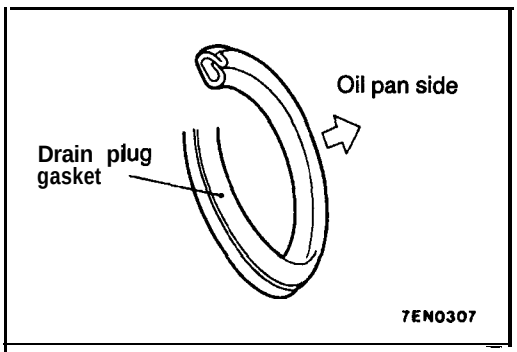

▶N◀ DRAIN PLUG GASKET INSTALLATION

Install the drain plug gasket in the direction shown in the illustration.

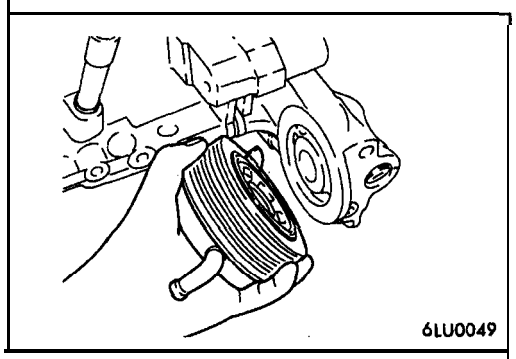

▶O◀ OIL COOLER INSTALLATION

First insert the oil cooler projecting stopper in the oil filter bracket groove and then tighten the oil cooler bolts.

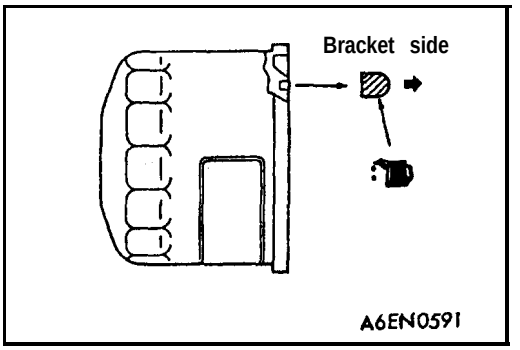

▶P◀ OIL FILTER INSTALLATION

(1) Clean the installation surface of the filter bracket.
(2) Apply engine oil to the O-ring of the oil filter.
(3) Screw the oil filter in until the O-ring contacts the bracket. Then tighten 3/4 turn [tightening torque: 17 Nm (12 ft.lbs)].

NOTE
For MD135737, tighten one turn [Tightening torque: 14 Nm (10 ft.lbs.] after the O-ring contacts the bracket.

INSPECTION

11300730040

FRONT CASE

(1) Check oil holes for clogging and clean if necessary.
(2)' Check left counterbalance shaft front bearing section for Wear, damage and seizure. If there is anything wrong' with the section, replace the front case.
(3) Check the front case for cracks and other damage. Replace cracked or damaged front case.

OIL SEAL

(1) Check the oil seal lip for wear and damage. Replace oil seal if necessary.
(2) Check the oil seal lip for deterioration. Replace oil seal if necessary.

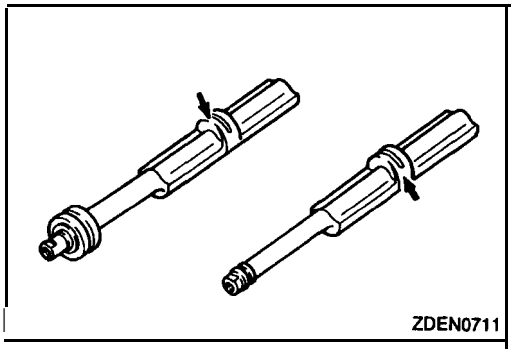
ZDEN0711

COUNTERBALANCE SHAFT

(1) Check oil holes for clogging.
(2) Check journal for seizure, damage and contact with bearing. If there is anything wrong with the journal, replace counterbalance shaft, bearing or front case assembly.

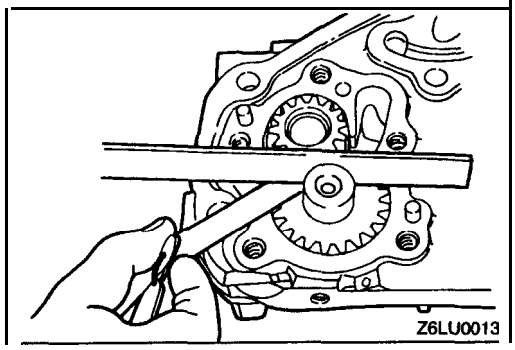
Z6LU0013

OIL PUMP

(1) Assemble the oil pump gear to the front case and rotate it to ensure smooth rotation with no looseness.
(2) Ensure that there is no ridge wear on the contact surface between the front case and the gear surface of the oil pump cover.
(3) Check the side clearance.

Standard value:
Drive gear 0.08–0.14 mm (.0031–.0055 in.)
Driven gear 0.06–0.12 mm (.0024–.0047 in.)

PISTON AND CONNECTING ROD

11300840194

REMOVAL AND INSTALLATION

Lubricate all internal parts with engine oil during reassembly.

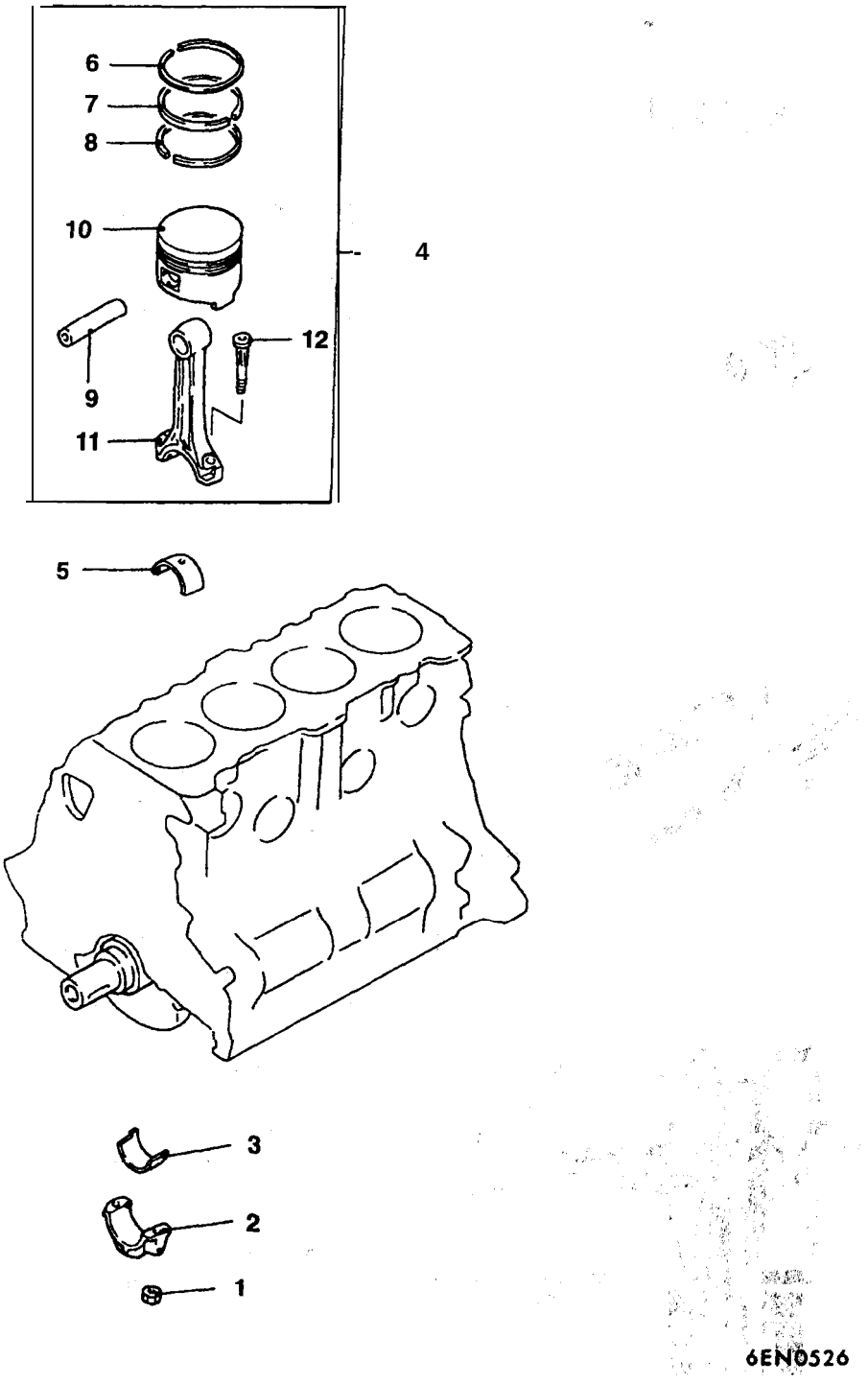

Removal steps

- ▶G◀ 1. Nut
- ◀A▶ ▶F◀ 2. Connecting rod cap
- ▶E◀ 3. Connecting rod bearing
- ▶D◀ 4. Piston and connecting rod assembly
- ▶E◀ 5. Connecting rod bearing
- ▶C◀ 6. Piston ring No. 1
- ▶C◀ 7. Piston ring No. 2
- ▶B◀ 8. Oil ring
- ◀B▶ ▶A◀ 9. Piston pin
- 10. Piston
- 11. Connecting rod
- 12. Bolt

TSB Revision

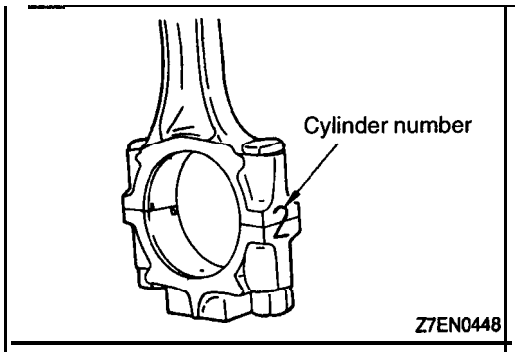

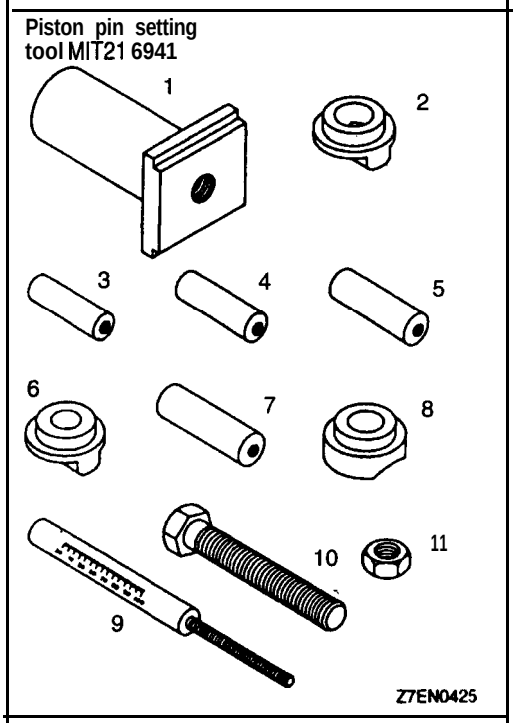

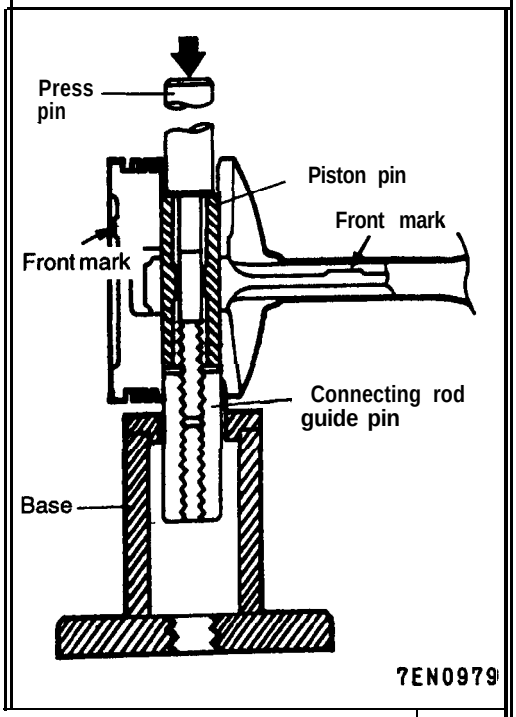

REMOVAL SERVICE POINTS

◀A▶ CONNECTING ROD CAP REMOVAL

(1) Mark the cylinder number on the side of the connecting rod big end for correct reassembly.
(2) Keep the removed connecting rods, caps, 'and bearings in order according to the cylinder number.

◀B▶ PISTON PIN REMOVAL

Item No.	Part No.	Description
1	MIT310134	Base
2	MIT31 0136	Piston Support
3	MIT31 0137	Connecting Rod Guide Pin
4	MIT31 0138	Connecting Rod Guide Pin
5	MIT310139	Connecting Rod Guide Pin
6	MIT31 0140	Piston Support
7	MIT310141	Connecting Rod Guide Pin
8	MIT31 0142	Piston Support
9	MIT48143	Press Pin
10	216943	Stop Screw
11	10396	Nut

(1) Remove the stop screw from the base.
(2) Select the correct piston support for your application (See above). Fit the piston support onto the base. Place the base on press support blocks.

(3) Insert the press pin through the piston pin hole. Select the correct connecting rod guide pin (See above). Thread the guide pin onto the threaded portion of the press pin.
(4) Position the piston assembly on the piston support in the press. With the press pin up as shown in Figure 4, insert the guide pin through the hole in the piston and through the hole in the piston support.
(5) Press the piston pin out of the assembly.

IMPORTANT: To avoid piston damage,
- **The piston support must seat squarely against the piston.**
- **Verify that the piston pin will slide through the hole in the piston support.**

(6) Remove the piston pin from the press pin.

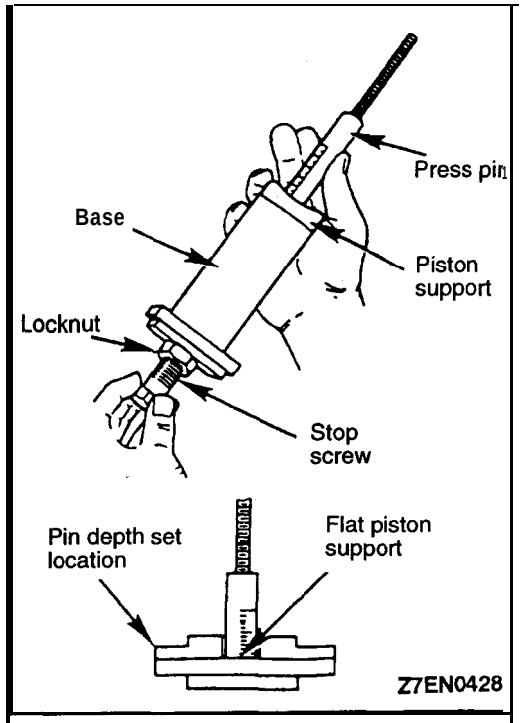

INSTALLATION SERVICE POINTS

▶A◀ PISTON PIN INSTALLATION

(1) Thread the stop screw and lock nut assembly into the base. Fit the correct piston support on top of the base, Insert the press pin, threaded end up, into the hole in the piston support until the press pin touches the stop screw.

(2) Using the markings on the press pin, adjust the stop screw to the depth as shown below.

Depth:
Refer to the operating instructions on the special tool.

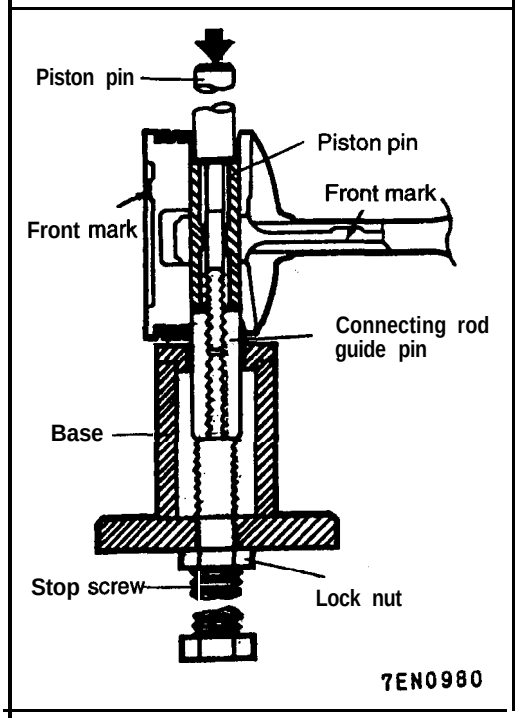

(3) Place the base on press support blocks.

(4) Slide the piston pin over the threaded end of the press pin, and thread the correct guide pin up against it.

(5) Coat the piston pin with oil, and with the connecting rod held in position, slide the guide pin through the piston' and connecting rod.

(6) Press the piston pin through' the connecting rod until the guide pin contacts the stop screw.

(7) Remove the piston assembly from the base. Remove the guide pin and press pin from the assembly.

IMPORTANT: Due to production tolerance variations, it is necessary to visually check the piston pin depth after installation to verify that the piston pin is centered. Adjust if necessary.

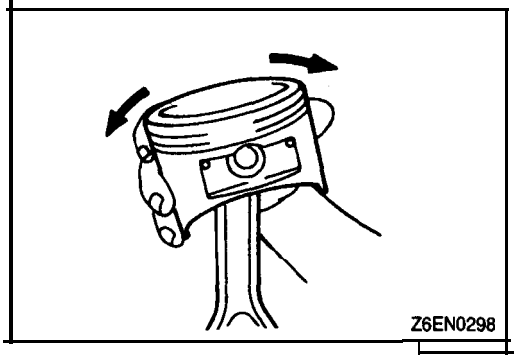

(8) Check that the piston moves smoothly.

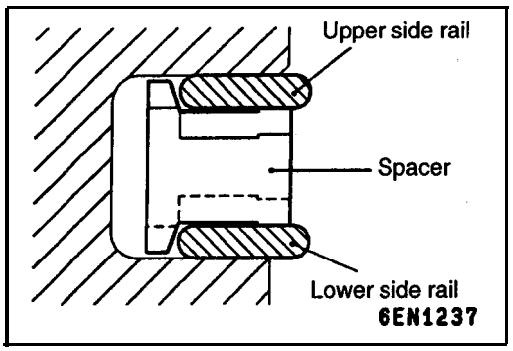

▶B◀ OIL RING INSTALLATION

(1) Fit the oil ring spacer into the piston ring groove.

NOTE
(1) The side rails and spacer may be installed in either direction.
(2) New spacer and side rails are colored for identification of their sizes.

Size	Identification color
Standard	None
0.50 mm oversize	Blue
1.00 mm oversize	Yellow

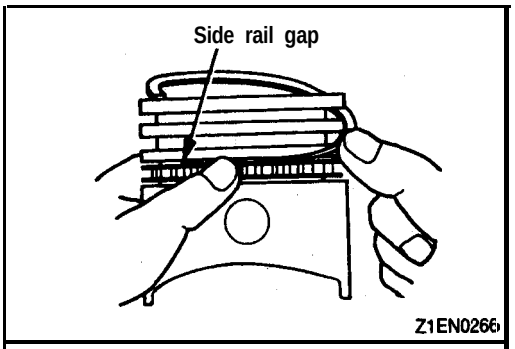

(2) Install the upper side rail.
To install the side rail, first fit one end of the rail into: the piston groove, then press the remaining-portion into position by finger. See illustration.

Caution
Do not use piston ring expander when installing side rail.

(3) Install the lower side rail in the same procedure as described in step (2).
(4) Make sure that the side rails move smoothly in either direction.

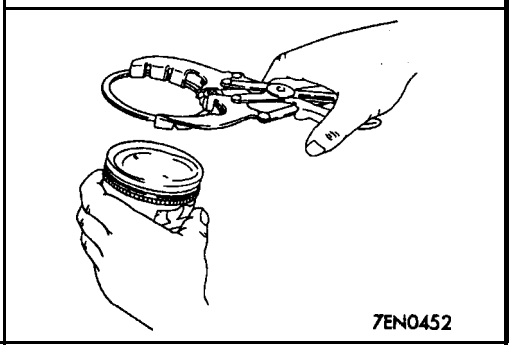

▶C◀ PISTON RING NO. 2 / PISTON RING NO. 1 INSTALLATION

(1) Using piston ring expander, fit No. 2 and then No. 1 piston, ring into position.

NOTE
(1) The ring end has an identification mark.

Item	Identification mark
No. 1 ring	1R
No. 2 ring	2R

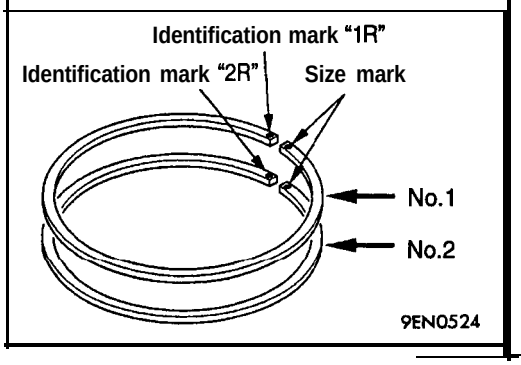

(2) install piston rings with identification mark facing up, to the piston crown side.
(3) Size marks on piston rings are as follows..

Size	Identification mark
Standard	None
0.50 mm oversize	50
1.00 mm oversize	100

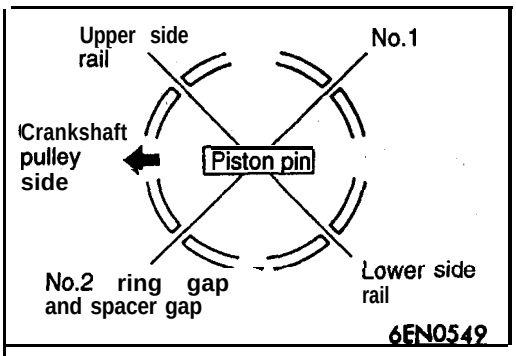

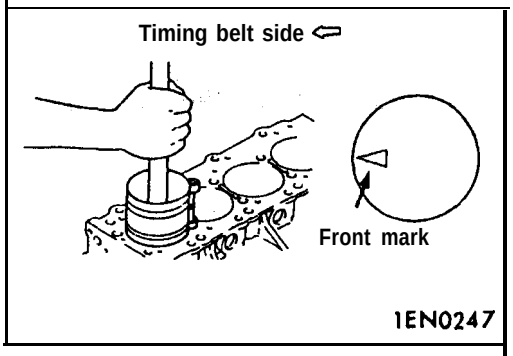

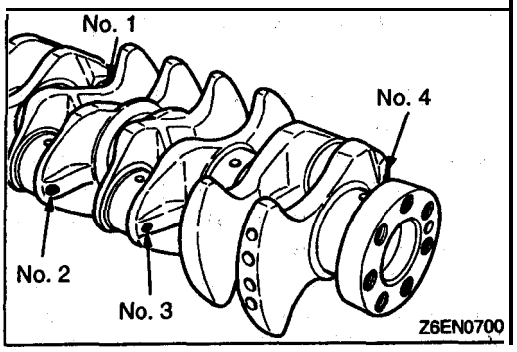

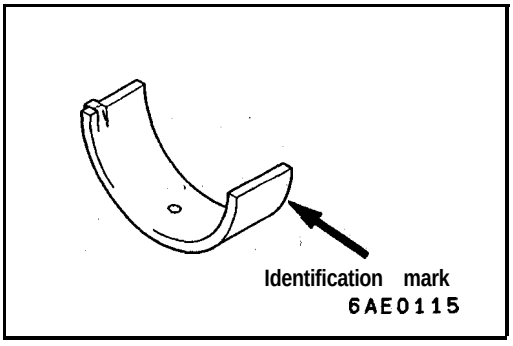

▶D◀ PISTON AND CONNECTING ROD INSTALLATION

(1) Liberally coat engine oil on the circumference of the piston,' piston ring, and oil ring.
(2) Arrange the piston ring and. oil ring gaps (side rail and spacer) as shown in the 'figure.
(3) Rotate crankshaft so that crank pin is on center of cylinder bore.

Identification mark: 63DTF

(4) Rotate crankshaft so that the crank pin is on the center of the cylinder bore.
(5) Use suitable thread protectors on the connecting rod bolts before inserting piston and connecting rod assembly into the cylinder block.
Care must be taken not to nick the crank pin.
(6) Using a suitable piston ring compressor tool, install the: piston and connecting rod assembly into the cylinder block.

▶E◀ CONNECTING ROD BEARINGS INSTALLATION

When the bearing needs replacing, select and install a proper bearing by the following procedure.
(1) Measure the crankshaft pin diameter and confirm its classification from the following table. In the case of a crankshaft supplied as a service part, identification colors of its pins are painted at the positions shown in the illustration.
(2) The connecting rod bearing identification mark is stamped at the position shown in the illustration.

Crankshaft pin				Connecting rod bearing	
Classification	Identification mark	Identification color	O.D. mm (in.)	Identification mark	Thickness mm (in.)
	Production part	Service part			
1	None	Yellow	44.995–45.000 (1.7715-1.7717)	1	1.478–1.491 (0.0582–0.0587)
2	None	None	44.985–44.995 (1.7711-1.7715)	2	1.491-1.495 (0.0587–0.0589)
3	None	White	44.980–44.985 (1.7709–1.7711)	3	1.495–1.499 (0.0589–0.0590)

Connecting rod I.D.: 48.000–48.015 mm (1.8900–1.8904 in.)
(3) Loosely tighten each nut to the bolt.
[Example]-
(1) If the measured value of a crankshaft pin outer diameter is between 44.995 and 45.000 mm (1.7715 and 1.7717 in.), the pin is classified as "1" in the table. In case the crankshaft is also replaced by a spare part, check the identification colors of the pins painted on the new crankshaft. If the color is yellow, for example, the pin is classified as "1". In the above cases, select the connecting rod bearing having identification mark "1".

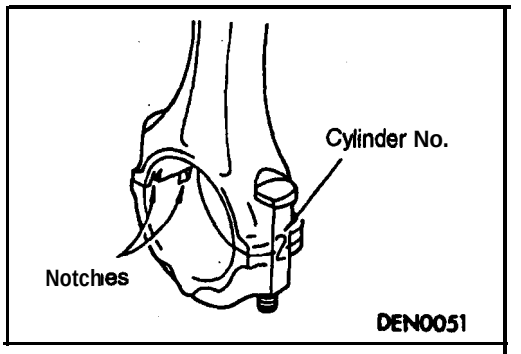

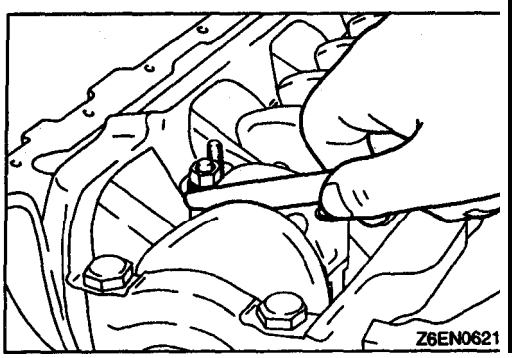

▶F◀ CONNECTING ROD CAP INSTALLATION

(1) Verifying the mark made during disassembly, install the bearing cap to the connecting rod. If the connecting rod is new with no index mark, make sure that. the bearing locking notches come on the same side as shown.

(2) Make sure that the connecting rod big end side clearance meets the specification.

Standard value: 0.10–0.25 mm (.0039–.0098 in.)
Limit: 0.4 mm (.016 in.)

▶G◀ CONNECTING ROD CAP NUT INSTALLATION

NOTE
The connecting rod nut should be installed' with the. 'cylinder head or the spark plug removed.

(1) Since the connecting rod bolts and nuts are torqued using the plastic area tightening 'method, the bolts should be examined BEFORE reuse. If the bolt threads are "necked down", the bolt should be replaced.
Necking can be checked by running 'a nut with fingers to the full length of the bolt threads. If the nut does not run down smoothly, the bolt should be replaced.

(2) Before installation of each nut, apply engine oil to the threaded portion and bearing surface of the nut.
(3) Loosely tighten each nut to the bolt.
(4) Then tighten the nuts alternately to a torque of 20 Nm (14.5 ft.lbs.) to install the cap properly.
(5) Make a paint mark on the head of each nut.
(6) Make a paint mark on the bolt end at the position 90" to 100° from the paint mark made on the nut in the direction of tightening the nut.
(7) Give a 90° to 100° turn to the nut and make sure that , the paint mark on the nut and that on the bolt are in alignment.

Caution
(1) If the nut is turned less than 90°, proper fastening performance may not be expected. When tightening the nut, therefore, be careful to give a sufficient turn to it.
(2) If the nut is overtightened (exceeding 100°), loosen the nut completely and then retlghten it by repeating the tightenlng procedure from step (1).

INSPECTION

11300850104

PISTON

(1) Replace the piston ii scratches or seizure is evident on its surfaces (especially the thrust surface). Replace the piston if it is cracked.

PISTON PIN

(1) Insert the piston pin into the piston pin hole with a thumb. You should feel a slight resistance. Replace the piston pin if it can be easily inserted or there 'is an excessive play.

(2) The piston and piston pin must be replaced as an assembly.

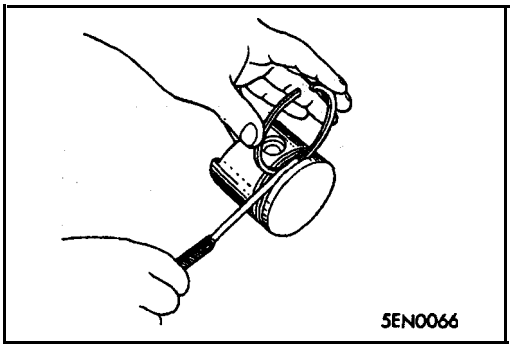

PISTON RING

(1) Check 'the piston ring for damage, excessive wear, and breakage and replace if defects are evident: If the piston has been replaced with a new one, the piston rings must also be replaced with new ones.

(2) Check for the clearance between the piston ring and ring groove. If the limit is exceeded, replace the ring or piston, or both.

Item	-Standard value mm (in.)
No. 1 ring	0.04–0.08 (.0016–.0031)
No.2 ring	0.02–0.06 (.0008–.0024)

Limit: 0.1 mm (.004 in.)

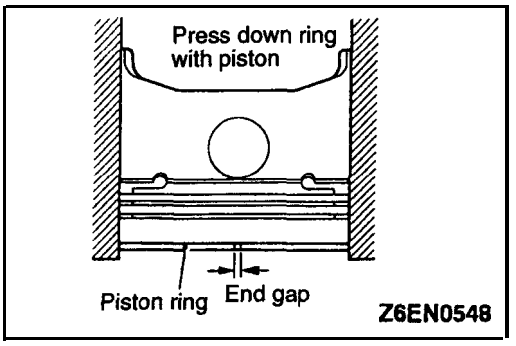

(3) Install the piston ring into the cylinder bore. Force it down with a piston, its crown being in contact with the ring, to correctly position it at right angles to the cylinder wall. Then, measure the end gap with a feeler gauge. If the ring gap is excessive, replace the piston ring.

Item	Standard value mm (in.)
No. 1 ring	0.25–0.35 (.0098–.0138)
No.2 ring	0.40–0.55 (.0157–.0217)
No.3 ring	0.10–0.40 (.0039–.0157)

Limit:
No. 1, No. 2 ring 0.8 mm (.031 in.)
Oil ring 1.0 mm (.039 in.)

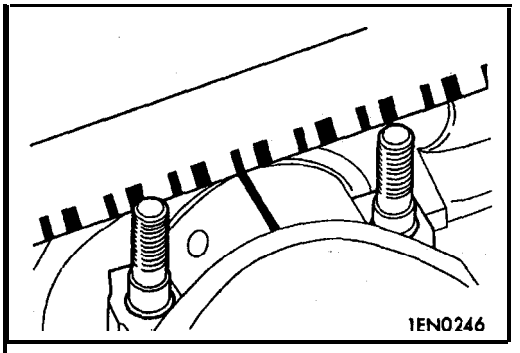

CRANKSHAFT PIN OIL CLEARANCE (PLASTIGAGE METHOD)

(1) Remove oil from crankshaft pin and connecting rod bearing.
(2) Cut the Plastigage to the same length as the width of bearing and place it on crankshaft pin in parallel with its axis.

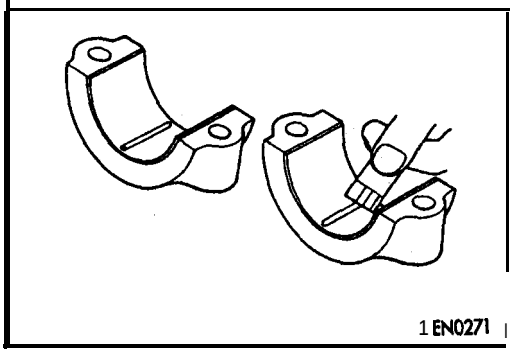

(3) Install the connecting rod cap carefully and tighten the nuts to specified torque.
(4) Carefully remove the connecting rod cap.
(5) Measure the width of the Plastigage at its widest part by using a scale printed on the Plastigage package.

Standard value:, 0.02–0.05 mm (.0008–.0020 in.)
Limit: 0.1 mm (.004 in.)

CRANKSHAFT, FLYWHEEL AND DRIVE PLATE

11300870209

REMOVAL AND INSTALLATION

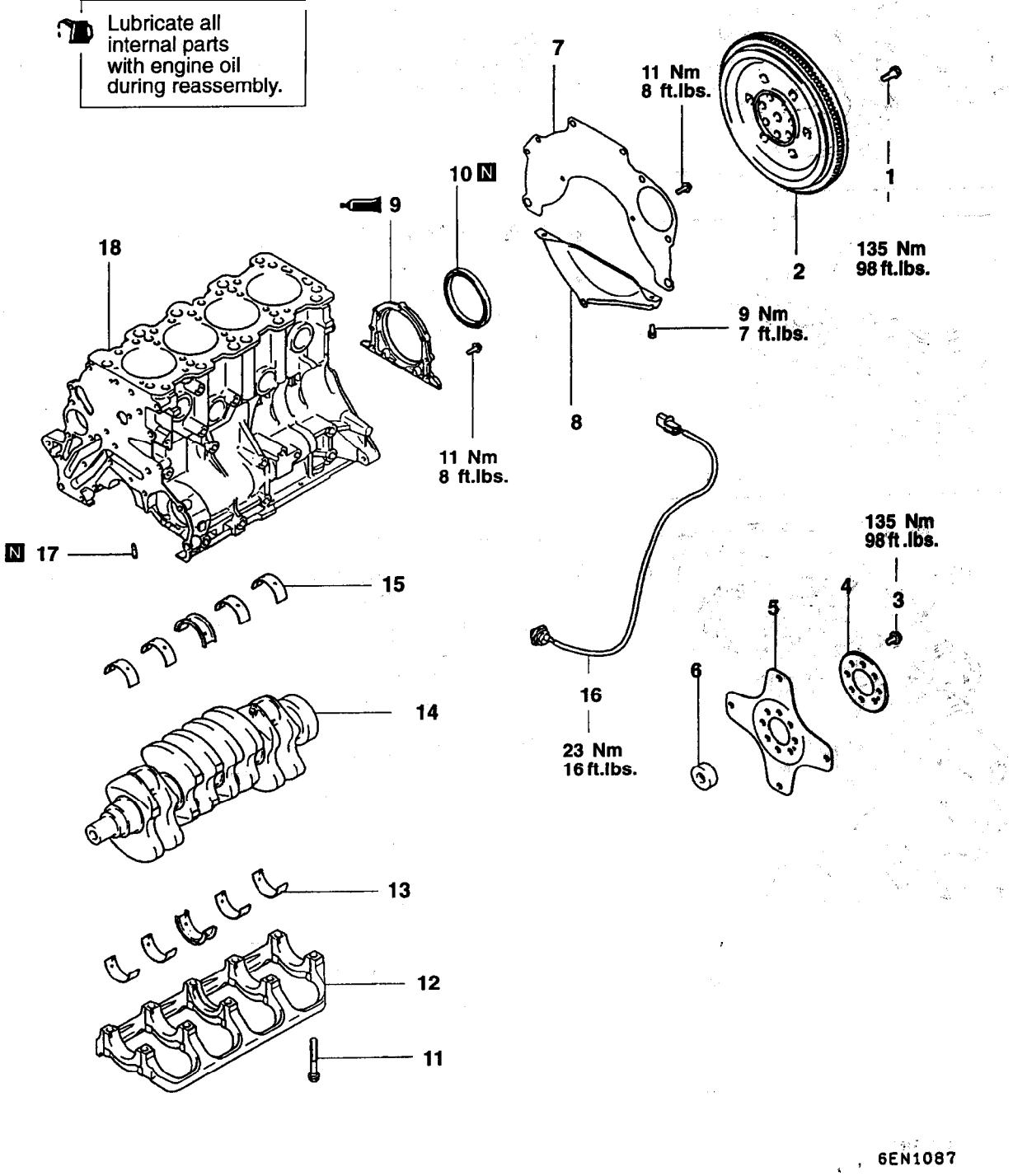

Removal steps

1. Flywheel bolt <M/T>
2. Flywheel <M/T>
3. Drive plate bolt
4. Adapter plate
5. Drive plate
6. Crankshaft bushing <A/T>
7. Rear plate
8. Bell housing cover
9. ▶E◀ Oil seal case
10. ▶D◀ Oil seal
11. ▶C◀ Bearing cap bolt
12. ▶C◀ Bearing cap
13. ▶B◀ Crankshaft bearing' (lower)
14. Crankshaft
15. ▶B◀ Crankshaft bearing (upper)
16. Knock sensor
17. ◀A▶ ▶A◀ Oil jet
18. Cylinder block

TSB Revision

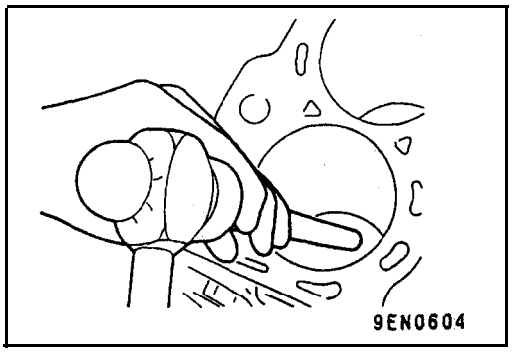

REMOVAL SERVICE POINT

◀A▶ OIL JET REMOVAL

Use an appropriate metal bar to press the oil jet out.

Caution

(1) Be careful not to damage the cylinder wall.

(2) Never reuse the removed oil jet.

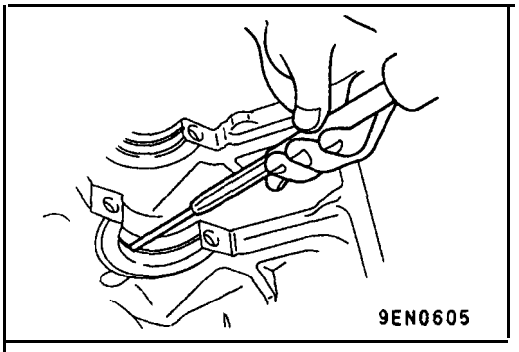

INSTALLATION SERVICE POINTS

▶A◀ OIL JET INSTALLATION

Use a pin punch of 4 – 5 mm (.15 – .20 in.) diameter to press the oil jet in from the crank journal until the oil jet bottoms on.

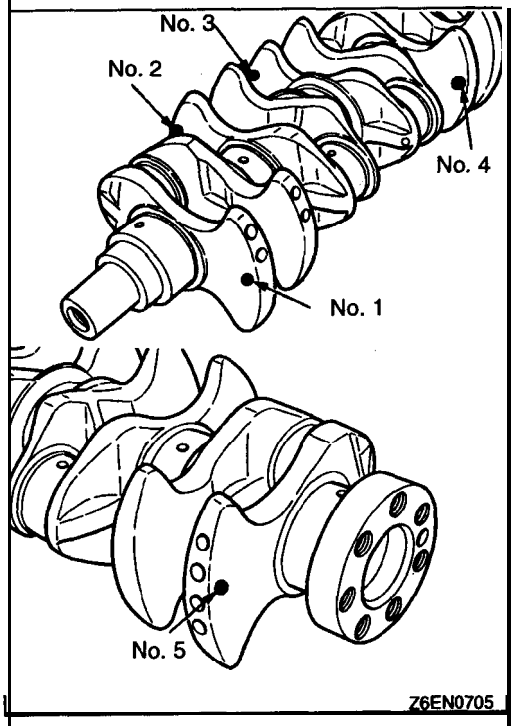

▶B◀ CRANKSHAFT BEARING INSTALLATION

When the bearing needs replacing, select and install a proper bearing by the following procedure.

(1) Measure the crankshaft journal diameter and confirm its classification from the following table. In the case of a crankshaft supplied as a service part, identification colors of its journals are painted at the positions shown in the illustration.

(2) The cylinder block bearing bore diameter identification marks are stamped at the position shown in the illustration from the front of engine, beginning at No. 1.

Crankshaft journal				Cylinder block bearing bore diameter	Crankshaft bearing
Classification	Identification mark (for production part)	Identification color (for service part)	Outer diameter mm (in.)	Identification mark	Identification mark (for service part)
1	None	Yellow	56.994–57.000 (2.2439–2.2441)	0	1
				1	2
				2	3
2	None	None	56.988–56.994 (2.2436-2.2439)	0	2
				1	3
				2	4
3	None	White	56.982–56.988 (2.2438–2.2436)	0	3
				1	4
				2	5

(3) Select a proper bearing from the above, table on the basis of the identification data confirmed under Items (1) and (2).

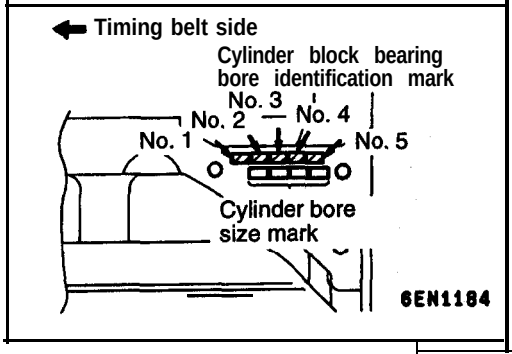

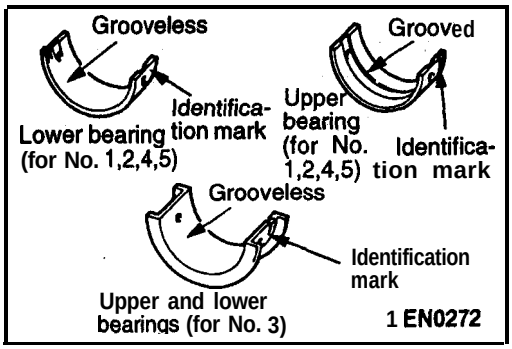

[Example]

(1) If the measured value of a crankshaft journal outer diameter is between 56.994 – 57.000 mm (2.2439 – 2.2441 in.), the journal is classified as "1" in the table. In case the crankshaft is also replaced by a spare part, check the identification colors of the journals painted on the new crankshaft. If the color is yellow, for example, the journal is classified as "1".

(2) Next, check the cylinder block bearing hole identification mark stamped on the cylinder block. If it is "O", read the "Bearing identification mark" column to find the identification mark of the bearing to be used. In this case, it is "1".

(4) Install the bearings having an oil groove to the cylinder block.

(5) Install the bearings having no oil groove to the bearing caps.

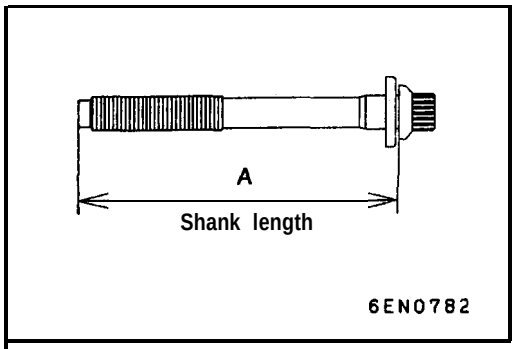

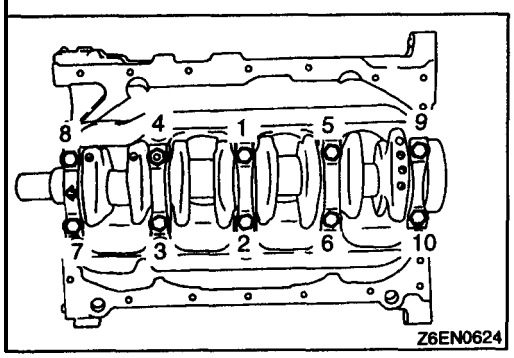

▶C◀ BEARING CAP / BEARING CAP BOLT INSTALLATION

(1) Install the bearing caps so that their arrows are directed to the timing belt side.

(2) Before installing the bearing cap bolts, check that the shank length of each bolt meets the limit. If the limit is exceeded, replace the bolt.

Limit (A): Max. 71.1 mm (2.79 in.)

(3) Apply engine oil to the threaded portion and bearing surface of the bolt.

(4) Tighten the bolts to 25 Nm (16 ft.lbs.) in the specified tightening sequence.

(5) Make a paint mark on the head of each bolt.

(6) Make a paint mark on the bearing cap at the position 90° to 100° from the paint mark made on the bolt in the direction of tightening the bolt.

(7) According to the specified tightening sequence, give a 90° to 100° turn to each bolt and make sure that the paint mark on the bolt and that on the cap are in alignment.

Caution

(1) If the bolt is turned less than 90°, proper fastening performance may not be expected. When tightening the bolt, therefore, be careful to give a sufficient turn to it.

(2) If the bolt is overtightened (exceeding 100°), loosen the bolt completely and then retlghten it by repeating the tightening procedure from step (1).

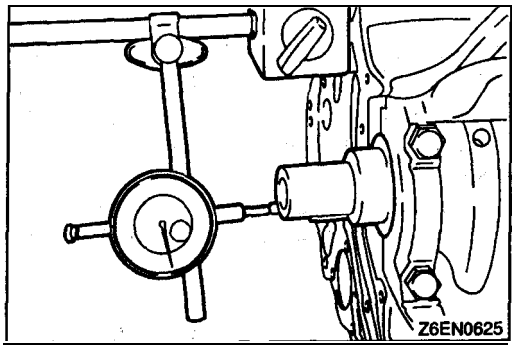

(8) After installing the bearing caps, make sure that the crankshaft turns smoothly and the end play is correct. If the end play exceeds the limit, replacer crankshaft bearings.

Standard value: 0.05–0.18 mm (.0020–.0071 in.)
Limit: 0.25 mm (.0098 in.)

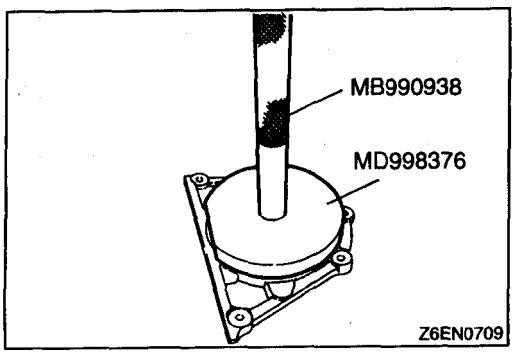

▶D◀ OIL SEAL INSTALLATION

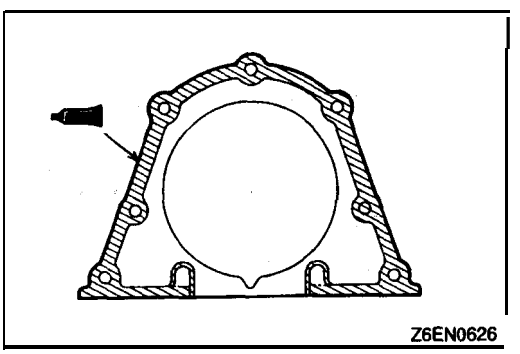

▶E◀ SEALANT APPLICATION TO OIL SEAL CASE

Specified sealant:
Mitsubishi Genuine Part No. MD970389 or equivalent

NOTE
(1) Be sure to install the case quickly while the sealant is wet (within, 15 minutes).
(2) After installation, keep the sealed area away from the oil and coolant for approx. 1 hour.

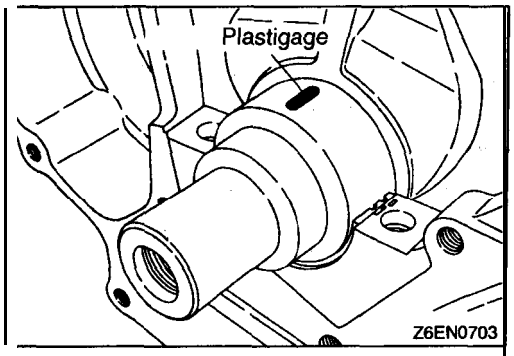

INSPECTION

11300880097

CRANKSHAFT OIL CLEARANCE (PLASTIGAGE METHOD)

(1) Remove oil from the crankshaft journal 'and crankshaft bearing.
(2) Install the crankshaft.
(3) Cut the Plastigage to the same length as the width of bearing and place it on journal in parallel with its axis.

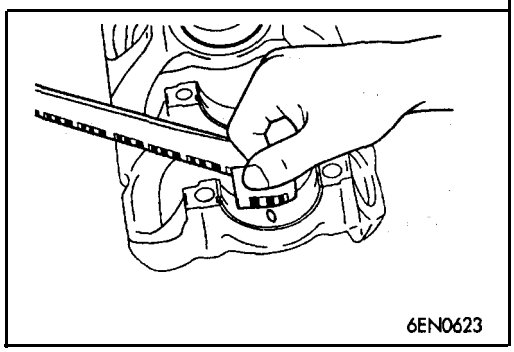

(4) Install the crankshaft bearing cap carefully and tighten the bolts to specified torque.
(5) Carefully remove the crankshaft bearing cap.
(6) Measure the width of the Plastigage at its widest part by using a scale printed on the Plastigage package.

Standard value: 0.02–0.04 mm (.0008–.0016 in.)
Limit: 0.1 mm (.004 in.)

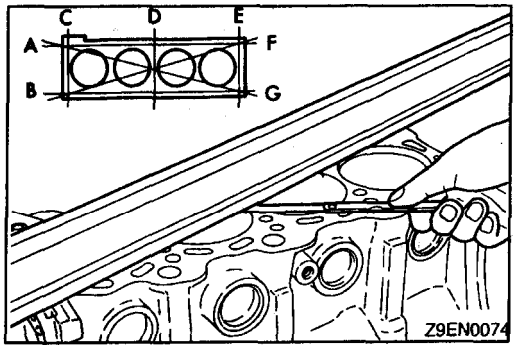

CYLINDER BLOCK

(1) Visually check for scratches, rust, and corrosion. Use also a flaw detecting agent for the check. If defects are evident, correct, or replace.
(2) Using a straightedge and feeler gauge, check the block top surface for warpage. Make sure that the surface is free from gasket chips and other foreign matter.

Standard value: 0.05 mm (.0020 in.)
Limit: 0.1 mm (.004 in.)

(3) If the distortion is excessive, correct within the allowable limit or replace.

Grinding limit: 0.2 mm (.008 in.)
Includes/combined with cylinder head grinding
Cylinder block height (when new):
283.9-284.1 mm (11.177-11.185 in.)

(4) Check cylinder walls for scratches and seizure. If defects are evident, correct (bored to oversize) or replace.
(5) Using cylinder gauge, measure the cylinder bore and cylindricity. If worn badly, correct cylinder to an oversize and replace piston and piston rings. Measure at the points shown in illustration.

Standard value:
Cylinder I.D.
85.00–85.03 mm (3.3465–3.3476 in.)
Cylindricity 0.01 mm (.0004 in.)

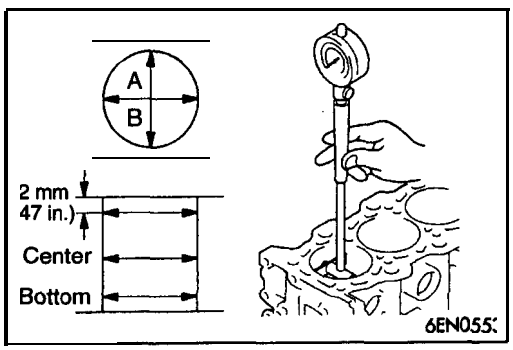

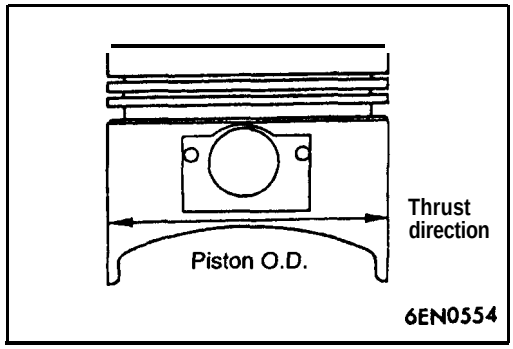

BORING CYLINDER

(1) Oversize pistons to be used should be determined on the basis of the largest bore cylinder.

Piston size identification

Size	Identification mark
0.50 O.S.	0.50
1.00 O.S.	1.00

NOTE
Size mark is stamped on piston top,

(2) Measure outside diameter of piston to be used. Measure it in thrust direction as shown.

(3) Based on measured piston O.D. calculate boring finish dimension.

Boring finish dimension = Piston O.D. + (clearance between piston O.D. and cylinder) – 0.02 mm (.0008 in.) (honing margin)

(4) Bore all cylinders to calculated boring finish dimension.

Caution
To prevent distortion that may result from temperature rise during honing, bore cylinders, working from No. 2 to No. 4 to No. 1 to No. 3.

(5) Hone to final finish dimension (piston O.D. + clearance between piston O.D. and cylinder).

(6) Check clearance between piston and cylinder.

Clearance between piston and cylinder: 0.03–0.05 mm (.0012–.0020 in.)

NOTE
When boring cylinders, finish all of four cylinders to same. oversize. Do not bore only one cylinder to an oversize.

BRACKET

11300900021

REMOVAL AND INSTALLATION

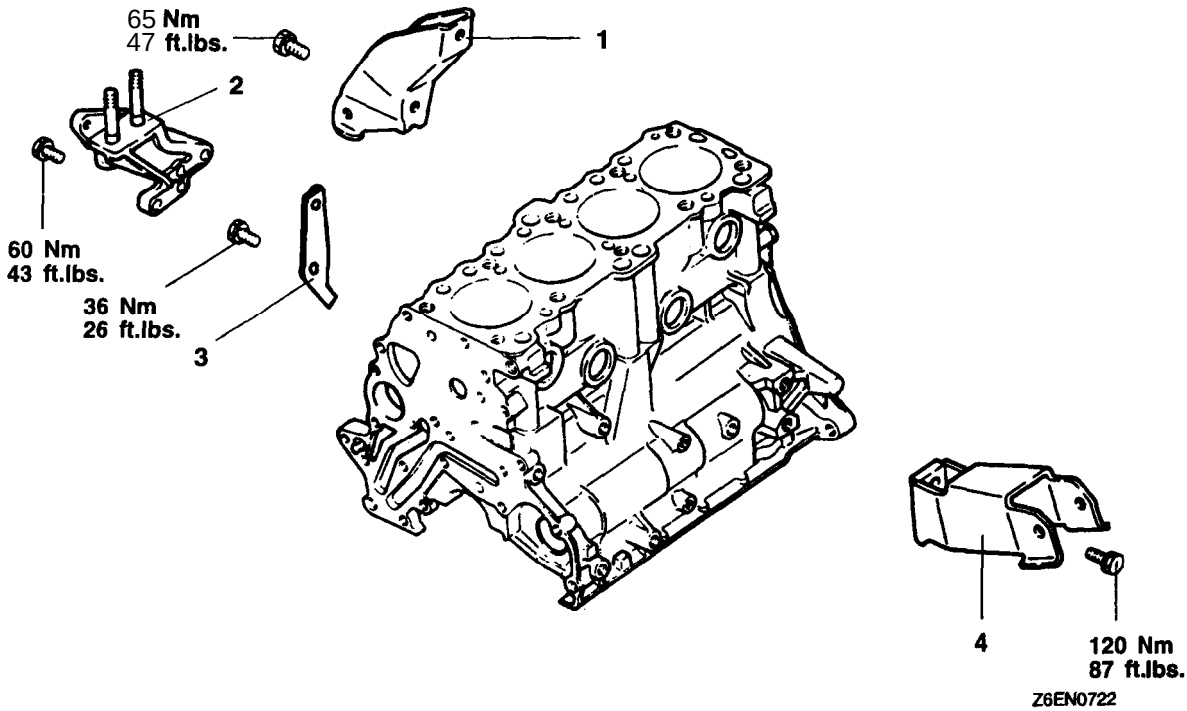

Removal steps

1. Roll stopper bracket, front
2. Engine support bracket, front
3. Exhaust pipe support bracket
4. Roll stopper bracket, rear

TSB **Revision**

NOTES

ENGINE <2.0L (420A)>

CONTENTS

11109000191

GENERAL INFORMATION

11100010131

items			Specifications
Type			In-line OHV, DOHC
Number of cylinder			4
Bore mm (in.)			87.5 (3.445)
Stroke mm (in.)			83.0 (3.287)
Piston displacement cm^3 (cu.in.)			1,996 (121.8)
Compression ratio			9.6
Firing order			1 – 3 – 4 – 2
Valve timing [Measured at 0.5 mm (.02 in.) lift.]	Intake	Opens	1.3" BTDC
		Closes	39.7" ABDC
	Exhaust	Opens	36" BBDC
		Closes	1.1" ATDC
Lubrication system			Pressure feed-full flow filtration
Oil pump type			Trochoid type

SERVICE SPECIFICATIONS

11100030205

Items			Standard value	Limit
Drive belt (For generator)	Tension N (lbs.)	When checked When a new belt is installed When a used belt is installed	400 – 490 (90 – 110) 490 – 712 (110 – 160) 400 – 490 (90 – 110)	–
	Deflection mm (in.) <Reference value>	Whenchecked When a new belt is installed When a used belt is installed	9.0 – 12.0 (.35 – .47) 7.5 – 10.5 (.30 – .41) 9.0 – 12.0 (.35 – .47)	–
Drive belt (For power steering oil pump) <Vehicles without A/C>	Tension N (lbs.)	Whenchecked When a new belt is installed When a used belt is installed	400 – 489 (90 – 110) 489 – 712 (110 – 160) 400 – 489 (90 – 110)	–
	Deflection mm (in.)	When checked When a new belt is installed When a used belt is installed	11.0 – 14.0 (.43 – .55) 6.5 – 9.5 (.26 – .37) 11.0 – 14.0 (.43 – .55)	–
Drive belt (For power steering oil pump and A/C compressor)	Tension N (lbs.)	Whenchecked When a new belt is installed When a used belt is installed	412 – 510 (92.6 – 114.6) 608 – 706 (136.7 – 158.7) 412 – 510 (92.8 – 114.6)	–
	Deflection mm (in.)	Whenchecked When a new belt is installed When a used belt is installed	10.0 – 11.0 (.39 – .43) 8.0 – 9.0 (.32 – .35) 10.0 – 11.0 (.39 – .43)	–
Curb idle speed r/min			800 ± 100	
dle mixture		CO contents %	0.5 or less	
		HC contents ppm	100 or less	
Compression pressure (at 250 – 400 r/min) kPa (psi)			1,172 – 1,551 (170 – 225)	min. 689 (100)
Compression pressure difference of all cylinder				max. 25%
ntake manifold vacuum kPa (in.Hg)				min. 60 (18)

SEALANTS

11100050188

Items	Specified sealant
Semi-circular packing	Loctite 5699 or equivalent
Oil pan gasket to bedplate	
Oil pump to bedplate	
Outside camshaft bearing cap	Loctite 518 or equivalent

TSB Revision

SPECIAL TOOLS

11100060198

Tool	Tool number and name	Supersession	Application
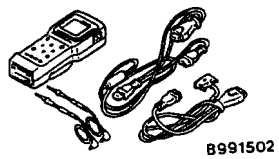 B991502	MB991 502 Scan tool (MUT-II)	MB991 502	Idle speed inspection
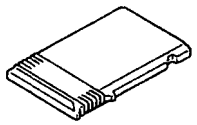 B991325	ROM Pack	–	
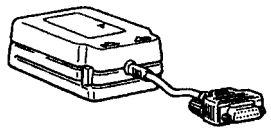	MB991544 MUT-II Interface cartridge	MB991 544	
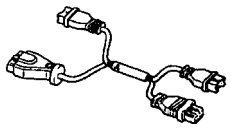	MB991 545 Adapter harness	MB991 545	
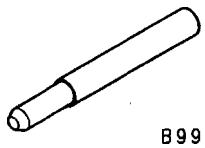 B995057	MB995057 Remover crankshaft damper/sprocket	5827-A	Crankshaft sprocket removal
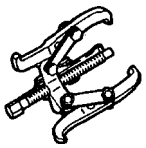	MB995055 Remover puller damper	1026	
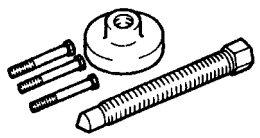	MB995027 Remover crankshaft sprocket	5793	

Tool	Tool number and name	Supersession	Application
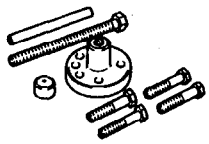	MB995035 Installer crankshaft damper/sprocket	C-4685-C	Crankshaft sprocket installation
	MB995026 Installer crankshaft sprocket	6792	
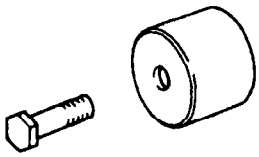	MD998713 Installer camshaft seal	MD998713-01	Camshaft oil seal installation
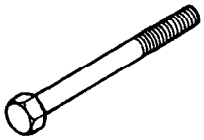	MB991554 Oil seal installer bolt	General service tool	
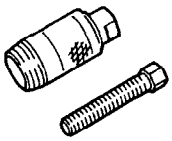	MB995020 Remover crankshaft seal	6771	Crankshaft front oil seal removal
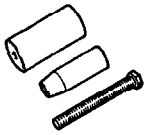	MB995022 Installer crankshaft seal	6780-1	Crankshaft front oil seal installation
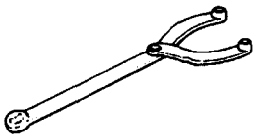	MB990767 End yoke holder	MB990767-01	Holding camshaft sprocket or crankshaft pulley when loosening and tightening bolt. Use with MD998754, MD998719
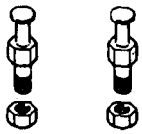	MD998719 or MD998754 Crankshaft pulley holder pin	MIT308239	Supporting the crankshaft pulley when crankshaft bolt and pulley are removed or reinstalled. Use together with MB990767 Crankshaft pulley supporting
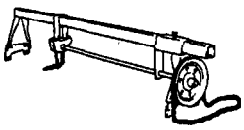 Z203827	GENERAL SERVICE TOOL MZ203827 Engine lifter	MZ203827-01	Supporting the engine assembly when removing and installing transaxle.

Tool	Tool number and name	Supersession	Application
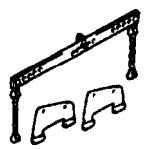 0991453	MB991 453 Engine hanger assembly	MZ203827-01	Supporting the engine assembly during removal and installation of the transaxle.
 6995059	MB995059 Oil seal pilot installer	6926-1	Crankshaft oil seal installation
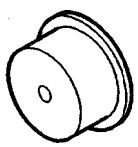 B995060	MB995060 Crankshaft oil seal installer	6926-2	

TROUBLESHOOTING

11100070078

Symptom	Probable cause	Remedy
Compression too low	Cylinder head gasket blown	Replace gasket
	Piston ring worn or damaged	Replace rings
	Piston or cylinder worn	Repair or replace piston and/or cylinder block
	Valve seat worn or damaged	Repair or replace valve and/or seat ring
Oil pressure drop	Engine oil level too low	Check engine oil level
	Oil pressure switch faulty	Replace oil pressure switch
	Oil filter clogged	Install new filter
	Oil pump gears or cover worn	Replace gears and/or cover
	Thin or diluted engine oil	Change engine oil to correct viscosity
	Oil relief valve stuck (open)	Repair relief valve
	Excessive bearing clearance	Replace bearings
Oil pressure too high	Oil relief valve stuck (closed)	Repair relief valve
Noisy valves	Incorrect lash adjuster	Bleed air or replace lash adjuster
	Thin or diluted engine oil (low oil pressure)	Change engine oil
	Valve stem or valve guide worn or damaged	Replace valve and/or guide
Connecting rod noise/ main bearing noise	Insufficient oil supply	Check engine oil level
	Low oil pressure	Refer to "Oil pressure drop"
	Thin or diluted engine oil	Change engine oil
	Excessive bearing clearance	Replace bearings
Timing belt noise	Incorrect belt tension	Adjust belt tension and/or replace-timing belt
Excessive engine rolling and vibration	Loose engine roll stopper (Front, Rear)	Retighten
	Loose transaxle mount bracket	Retighten
	Loose engine mount bracket	Retighten
	Loose center member	Retighten
	Broken transaxle mount insulator	Replace
	Broken engine mount insulator	Replace
	Broken roll stopper insulator	Replace

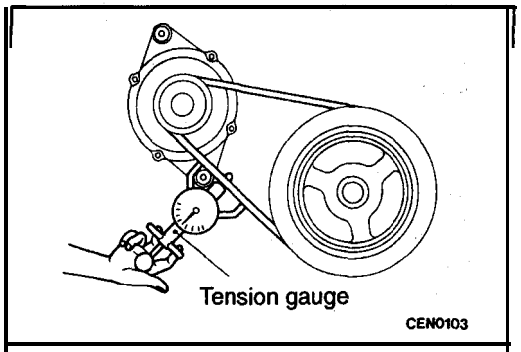

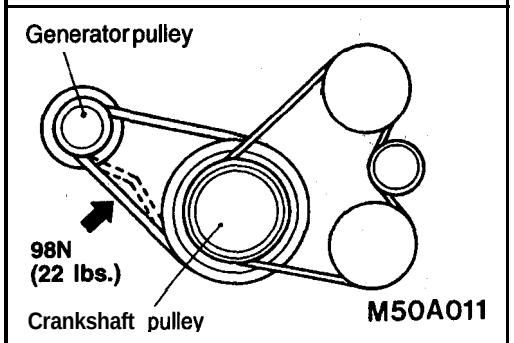

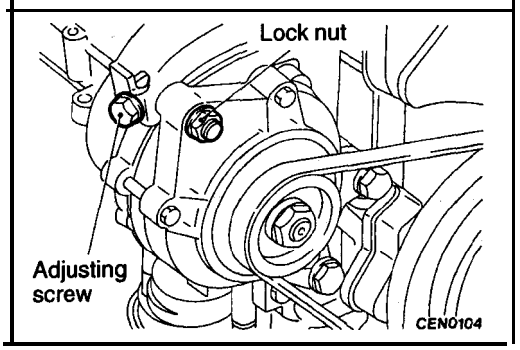

ON-VEHICLE SERVICE

11100090227

DRIVE BELT TENSION CHECK AND ADJUSTMENT

GENERATOR DRIVE BELT TENSION CHECK

Check the belt tension with the tension gauge, or check the belt deflection by pressing the middle point of the belt by a force of 98 N (22 ibs.).

Standard value:

Tension: 400 – 490 N (90 – 110 lbs.)
Deflection <Reference value>:
9.0 – 12.0 mm (.35 – .47in.)

GENERATOR DRIVE BELT TENSION ADJUSTMENT

1. Remove the under cover side panel (R.H.).
2. Loosen the generator pivot nut.
3. Loosen the lock nut.
4. Turn the adjusting screw to adjust the belt tension or deflection to the standard value.

NOTE
When installing a new belt, apply 310 N (70 ibs.) of tension' for 5 minutes or more, and then apply the final tension.

Standard value:

items	When a new belt is installed	When a used belt is installed
Tension N (lbs.)	490–712 (110–160)	400–490 (90–110)
Deflection mm (in.) <Reference value>	7.5–10.5 (.30–.41)	9.0–12.0 (.35–.47)

5. Tighten the generator pivot nut.

   Tightening torque: 54 Nm (40 ft.lbs.)

6. Tighten the lock nut.

   Tightening torque: 61 Nm (45 ft.lbs.)

7. Install the under cover side panel (R.H.).

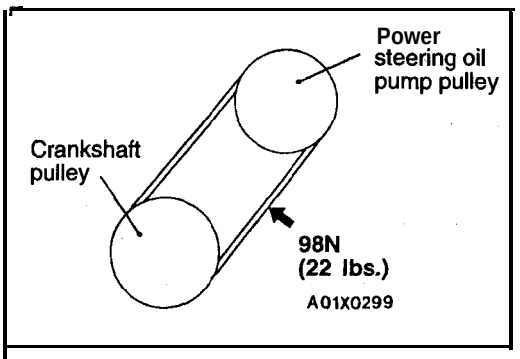

POWER STEERING OIL PUMP DRIVE BELT TENSION CHECK <Vehicle without A/C> 11100110121

Use the belt tension gauge to check belt tension at the shown point or check deflection by applying 98 N (22 lbs.) to the shown point.

Standard value:

Tension: 400 – 489 N (90 – 110 lbs.)
Deflection: 11 .0 – 14.0 mm (.43 – .55 in.)

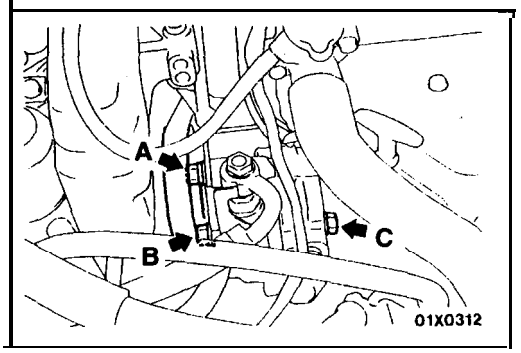

POWER STEERING OIL PUMP DRIVE BELT TENSION ADJUSTMENT <Vehicles without A/C>

1. Loosen power steering oil pump fixing bolt **(A, B, C).**
2. Move power steering oil pump, tension belt moderately and adjust tension.

Standard value:

Items	When a new belt is installed	when a used belt is installed
Tension N (lbs.)	489-712 (110–160)	400–489 (90–110)
Deflection mm (in.)	6.5-9.5 (.26–.37)	11.0–14.0 (.43–.55)

3. Tighten the fixing bolt (A).

   Tightening torque: 39 Nm (29 ft.lbs.)

4. Tighten the remaining fixing bolts (B and C).

   Tightening torque: 39 Nm (29 ft.lbs.)

5. Check the belt deflection mount and readjust if necessary.

   Caution
   Turn the crankshaft one full rotation or more clockwise before this check.

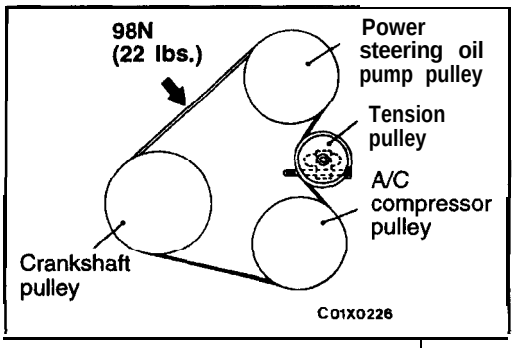

POWER STEERING OIL PUMP AND A/C COMPRESSOR DRIVE BELT TENSION CHECK 11100130059

Use the belt tension gauge to check belt tension at the shown point or check deflection by applying 98 N (22 lbs.) to the shown point.

Standard value:

Tension: 412 – 510 N (92.6 – 114.6 lbs.)
Deflection: 10.0 – 11.0 mm (.39 – .43 in.)

TSB Revision

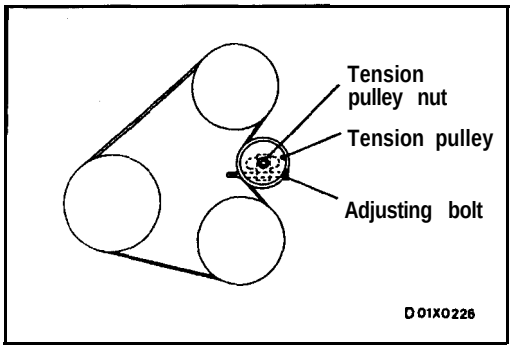

POWER STEERING OIL PUMP AND A/C COMPRESSOR DRIVE BELT TENSION ADJUSTMENT

1. Loosen the tension pulley nut.
2.. Adjust the belt deflection amount using the adjusting bolt.

Standard value:

Items	When a new belt is installed	When a used belt is installed
Tension N (lbs.)	608–706 (136.7-158.7).	412–510 (92.6-114.6)
Deflection mm (in.)	8.0–9.0 (.32–.35)	10.0–11.0 (.39–.43)

3. Tighten the tension pulley nut.

Caution
Fix the power steering oil pump at the closest position to the vehicle front.

IGNITION TIMING CHECK

11100170044

It is not necessary to check ignition timing using a timing light, because the crankshaft position is detected directly and ignition timing is controlled electronically.

CURB IDLE SPEED CHECK

11100190132

1. Before inspection and adjustment set vehicles in the following condition.
   - Engine coolant temperature: 80–95°C (176–203°F)
   - Light, electric cooling fan and all accessories: OFF
   - Transaxle: Neutral (P range on vehicles with A/T)
2. Connect the scan tool to the data link connector.
3. Start the engine and run it at idle.
4. Run the engine at idle for 2 minutes.
5. Check the curb idle speed.

   Standard value: 800 ± 100 r/min

   NOTE
   The idle speed is controlled automatically by the idle air control system.
   If the idle speed is outside the standard value, inspect the MFI components by referring to GROUP 13A – Troubleshooting.

IDLE MIXTURE CHECK

11100210081

1. Before inspection, set vehicles in the following condition:
   - Engine coolant temperature: 80–95°C (176–203°F)
   - Lights, electric cooling fan and all accessories: OFF
   - Transaxle: Neutral (P range on vehicles with A/T)
2. After turning the ignition switch to OFF, connect the scan tool to the data link connector.
3. Start the engine and run it at 2,500 r/min for 2 minutes.
4. Set the CO, HC tester.
5. Check the CO contents and the HC contents at idle.

   Standard value:
   CO contents: 0.5% or less
   HC contents: 100 ppm or less
6. If the idle speed is outside the standard value, check the following items:
   - Diagnostic output
   - Closed-loop control (When the closed-loop control is carried out normally, the output signal of the heated oxygen sensor repeats between 0–400 mV and 600–1,000 mV at idle.)
   - Fuel pressure
   - Injector
   - Ignition coil, spark plug cable, spark plug
   - EGR system and the EGR valve leak
   - Evaporative emission control system
   - Compression pressure

   NOTE
   Replace the three-way catalyst whenever the CO and HC contents do not remain inside the standard value. (even though the result of the inspection is normal on all items.)

COMPRESSION PRESSURE CHECK

11100260130

1. Before inspection, check that the engine oil, starter and battery are normal. Also, set the vehicle to the following condition:
   - Engine coolant temperature: 80–95°C (176–203°F)
   - Lights, electric cooling fan and all accessories: OFF
   - Transaxle: Neutral (P range on vehicle with A/T)
2. Disconnect the spark plug cables.
3. Remove all spark plugs.

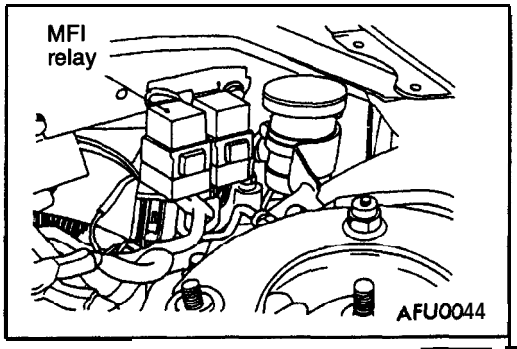

4. Disconnect the MFI relay (ASD relay) connector to prevent a spark.

5. Cover the spark plug hole with a shop towel etc., and after the engine has been cranked, check that no foreign material is adhering to the shop towel.

. Caution

1. **Keep away from the spark plug hole when cranking.**
2. **If compression is measured with water, oil, fuel, etc., that has come from cracks inside the cylinder, these materials will become heated and will gush out from the spark plug hole, which is dangerous.**

6. Set compression gauge to one of the spark plug holes.
7. Crank the engine with the throttle valve fully open and measure the compression pressure.

   Standard value (at engine speed of 250–400 r/min): 1,172–1,551 kPa (170–225 psi)
   Limit (at engine speed of 250–400 r/min): min. 689 kPa (100 psi)

8. Measure the compression pressure for all the cylinders, and check that the pressure differences of the cylinders are below the limit.

   Limit: max.25%

   NOTE
   The limit value can be derived by calculating the difference between the maximum and minimum values for the compression pressure and dividing this value by the maximum value.

9. If there is a cylinder with compression or a compression difference that is outside the limit, pour a small amount of engine oil through the spark plug hole, and **repeat** the operations in steps 7 and 8.
   (1) If the compression increases after oil is added, the cause of the malfunction is a worn or damaged piston ring and/or cylinder inner surface.
   (2) If the compression does not rise after oil is added, the cause is a burnt or defective valve seat, or pressure is leaking from the gasket.
10. Connect the MFI relay (ASD relay) connector.
11. Install the spark plug and spark plug cable.
12. Use the scan tool to erase the diagnostic trouble codes.

    NOTE
    This will erase the diagnostic trouble code resulting from the MFI relay (ASD relay) being disconnected.

MANIFOLD VACUUM CHECK 11100270126

1. Before inspection, set vehicles. in the following condition:
   - Engine coolant temperature: 80–95°C (176–203°F)
   - Lights, electric cooling fan, and accessories: OFF
   - Transaxle: Neutral (P range on vehicles with A/T)
2. Connect the scan tool to the data link connector.

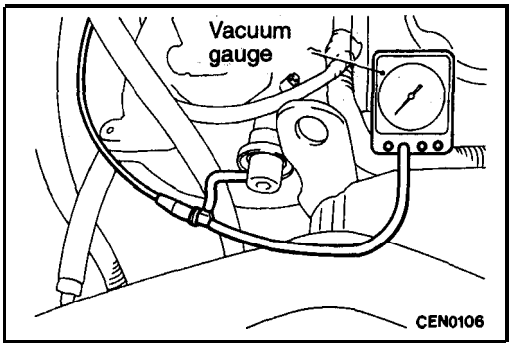

3. Attach a three-way joint to the vacuum hose between the fuel pressure regulator and the intake manifold, and connect a vacuum gauge.
4. Start the engine and check that idle speed is within specification.

   Standard value: 800 ± 100 r/min
5. Check the manifold vacuum.

   Limit: min. 60 kPa (18 in.Hg)

LASH ADJUSTER CHECK 11100290115

A tappet-like noise may be produced from several items. Check the following items.

1. Engine oil level too high or too low.
   This may cause, aerated oil to enter, the adjusters and cause them to be spongy.
2. Insufficient running time after rebuilding the cylinder head. Low speed running up to 1 hour may be required.
3. Low oil pressure.
4. The oil restrictor pressed in to the vertical oil passage to the cylinder head is plugged with debris.
5. Air ingested in to oil due to broken or cracked oil pump pick up.
6. Worn valve guide.
7. Faulty hydraulic lash adjuster.
   (1) Check for sponginess while still installed in engine. Depress part of the cam follower just over the adjuster. Normal adjusters should be free and very firm. Spongy adjusters can be depressed to the bottomed position easily.
   (2) Remove a suspected hydraulic lash adjuster assembly.
   (3) Clean out dirt and varnish with solvent.
   (4) Reassemble with engine oil.
   (5) Check for sponginess.
   (6) If still spongy, replace with a new hydraulic adjuster assembly.

ENGINE ASSEMBLY

11200100428

REMOVAL AND INSTALLATION

Pm-removal Operation
- Fuel Line Pressure Releasing
  (Refer to GROUP 13A – On-vehicle Service.)
- Hood Removal
- Engine Coolant Draining
  (Refer to GROUP 00 – Maintenance Service.)
- Transaxle Assembly Removal
  (M/T: Refer to GROUP 22A – Transaxle Assembly.)
  (A/T: Refer to GROUP 23A – Transaxle Assembly.)
- Radiator Removal (Refer to GROUP 14 – Radiator.)
- Under Cover Removal
  (Refer to GROUP 42 – Under Cover.)

Post-installation Operation
- Radiator Installation (Refer to GROUP 14 – Radiator.)
- Transaxle Assembly Installation
  (M/T: Refer to GROUP 22A – Transaxle Assembly.)
  (A/T: Refer to GROUP 23A – Transaxle Assembly.)
- Engine Coolant Supplying
  (Refer to GROUP 00 – Maintenance Service.)
- Hood Installation
- Accelerator Cable Adjustment
  (Refer to GROUP 17 – On-vehicle Service.)
- Under Cover Installation
  (Refer to GROUP 42 – Under-Cover.)
- Drive Belt Tension Adjustment
  <Power Steering and A/C>

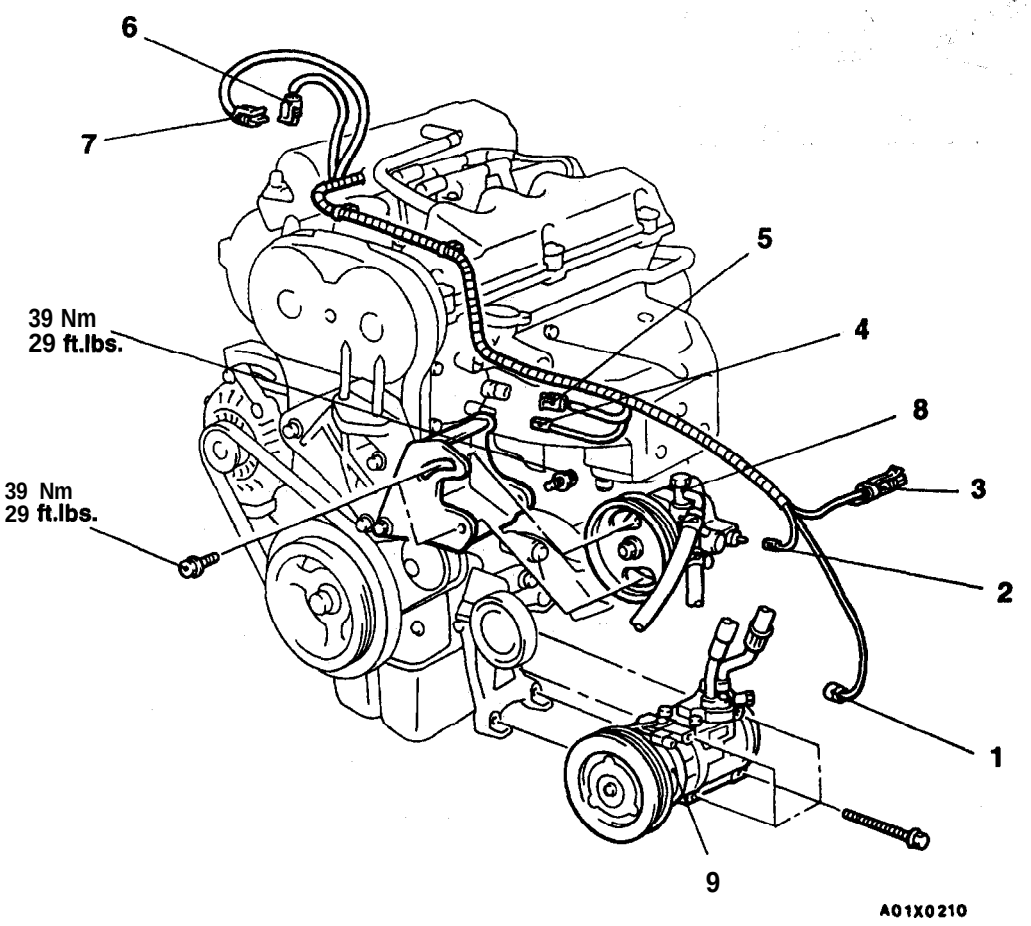

Removal steps

1. A/C compressor connector
2. Power steering pressure switch connector
3. Heated oxygen sensor connector
4. Engine coolant temperature gauge unit connector
5. Engine coolant temperature sensor connector
6. MAP sensor connector
7. Intake air temperature sensor connector
8. Power steering pump connection
9. A/C compressor connection

◀A▶ ◀B▶

TSB Revision

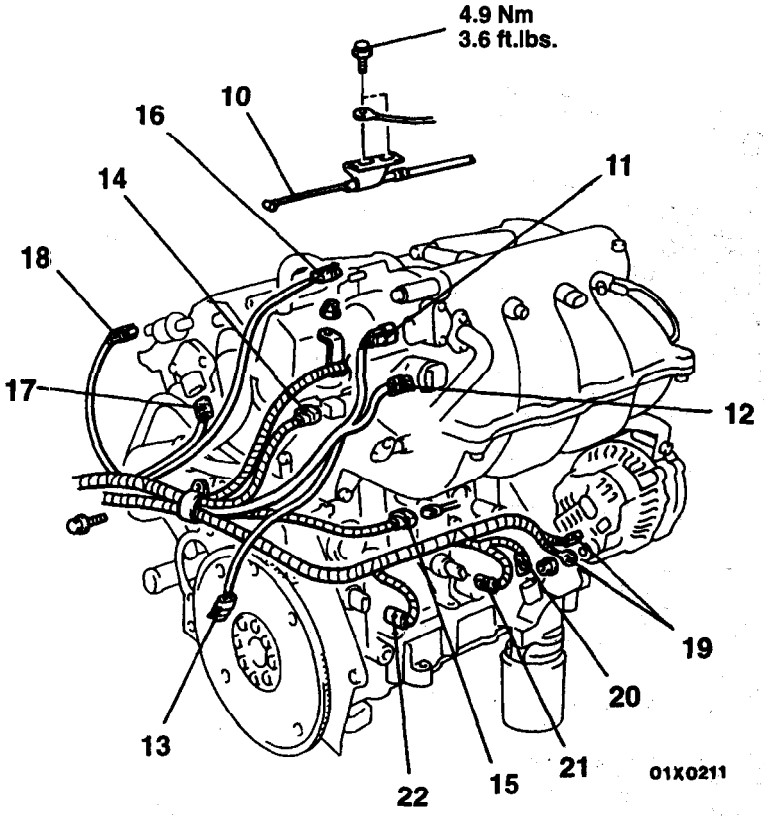

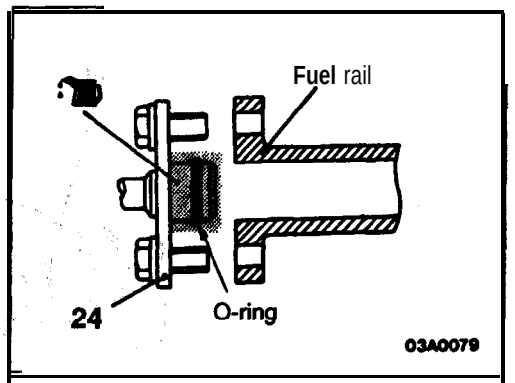

Engine oil

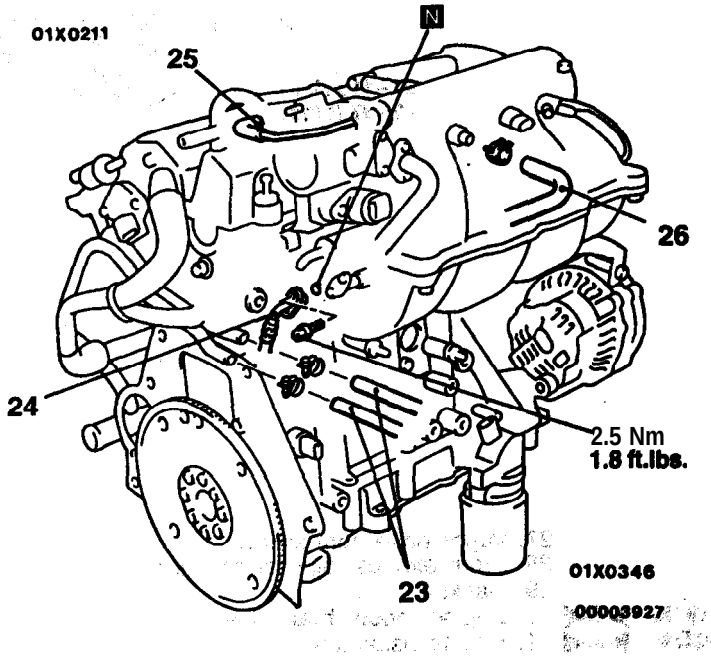

10. Accelerator cable connection
11. Throttle position sensor connector
12. Idle air control motor connector
13. Vehicle speed sensor connector <M/T>
14. injector harness connector
15. Generator harness connector
16. Ignition coil connector
17. Camshaft position sensor connector
18. EGR solenoid valve connector
19. Generator connector
20. Crankshaft position sensor connector
21. Knock sensor connector
22. Oil pressure switch connector
23. Heater hose connection
▶C◀ 24. High-pressure fuel hose connection
25. Purge air hose connection
26. Brake booster vacuum hose connection

TSB Revision

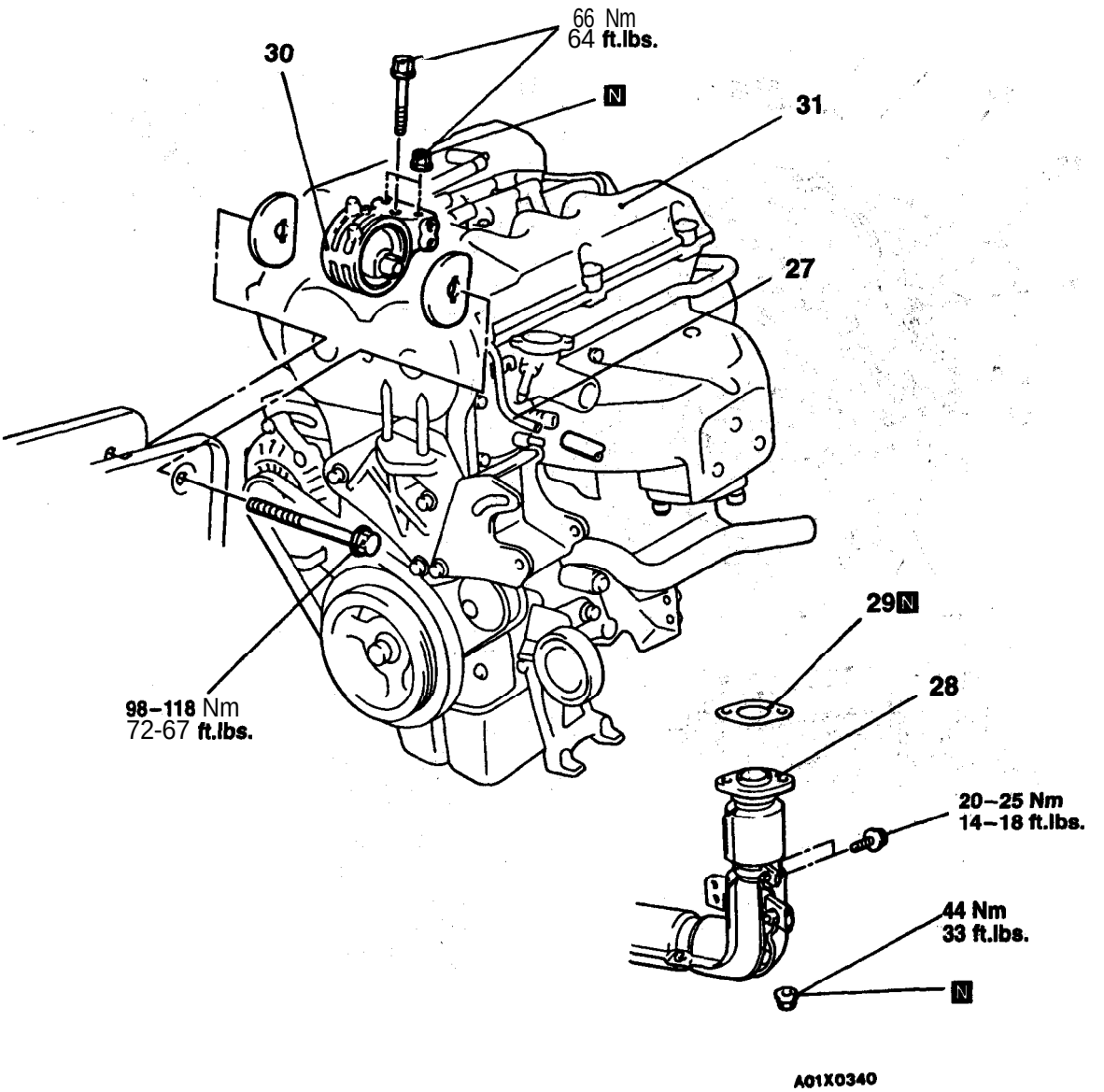

27. Vapor hose connection
28. Front exhaust pipe connection
29. Gasket
◀C▶ ▶B◀ 30. Engine mount bracket assembly
◀D▶ ▶A◀ 31. Engine assembly

REMOVAL SERVICE POINTS

◀A▶ POWER STEERING PUMP REMOVAL

Remove the power steering pump from the bracket with the hose attached.

NOTE
Place the removed power. steering pump in a place where it will not be a hindrance when' removing and installing the engine assembly, and 'tie it with a cord.

◀B▶ A/C COMPRESSOR REMOVAL

Disconnect the A/C compressor connector and remove the compressor from the compressor bracket with the hose still attached.

NOTE
Place the removed A/C compressor in a place where it will not be a hindrance when removing and installing the engine assembly, and tie it with a cord.

Caution
Do not bend the joint between the A/C hose and the A/C pipe by force.

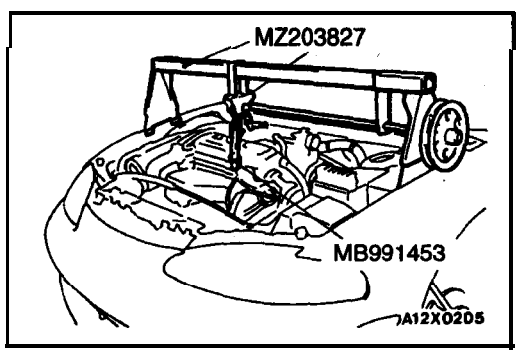

◀C▶ ENGINE MOUNT BRACKET ASSEMBLY REMOVAL

(1) Support the engine with a garage jack.
(2) Remove the special tool which was attached when the transaxle assembly was removed.
(3) Hold the engine assembly with a chain block or similar tool.
(4) Place a garage jack against the engine oil pan with a piece of wood in between, jack up the engine so that the weight of the engine is no longer being applied to the engine mount bracket, and then remove the engine mount bracket.

◀D▶ ENGINE ASSEMBLY REMOVAL

After checking that all cables, hoses and harness connectors, etc., are disconnected from the engine, lift the chain block slowly to remove the engine assembly upward from the engine compartment.

INSTALLATION SERVICE POINTS

▶A◀ ENGINE ASSEMBLY INSTALLATION

Install the engine assembly while checking that the cables, hoses, and harness connectors are not clamped.

▶B◀ ENGINE MOUNT BRACKET ASSEMBLY INSTALLATION

(1) Place a garage jack against the engine oil pan with a piece of wood in between, and install the engine mount bracket while adjusting the position of the engine.
(2) Support the engine with the garage jack.
(3) Remove the chain block and support the engine assembly with the special tool.

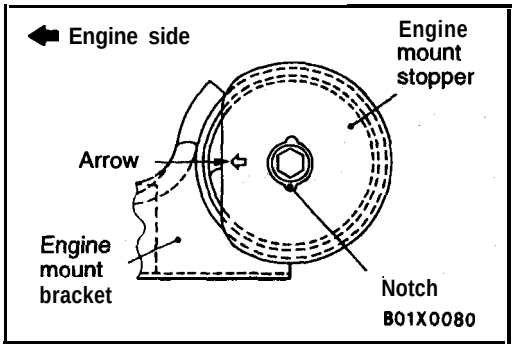

(4) Align the notches on the stopper with the engine mount bracket with the arrow mark facing toward the shown direction. Then install the stopper.

▶C◀ HIGH-PRESSURE FUEL HOSE CONNECTION

When connecting the high-pressure fuel hose to the fuel rail, apply a small amount of clean engine oil to the hose union, and then insert, being careful not to damage the O-ring.

Caution
Do not let the engine oil get into the fuel rail.

CRANKSHAFT PULLEY

11200160143

REMOVAL AND INSTALLATION

Pre-removal Operation
- Under Cover Removal
  (Refer to GROUP 42 – Under Cover.)

Post-installation **Operation**
- Drive Belt Tension **Adjustment**
- Under Cover Installation
  (Refer to GROUP 42 – Under Cover.),

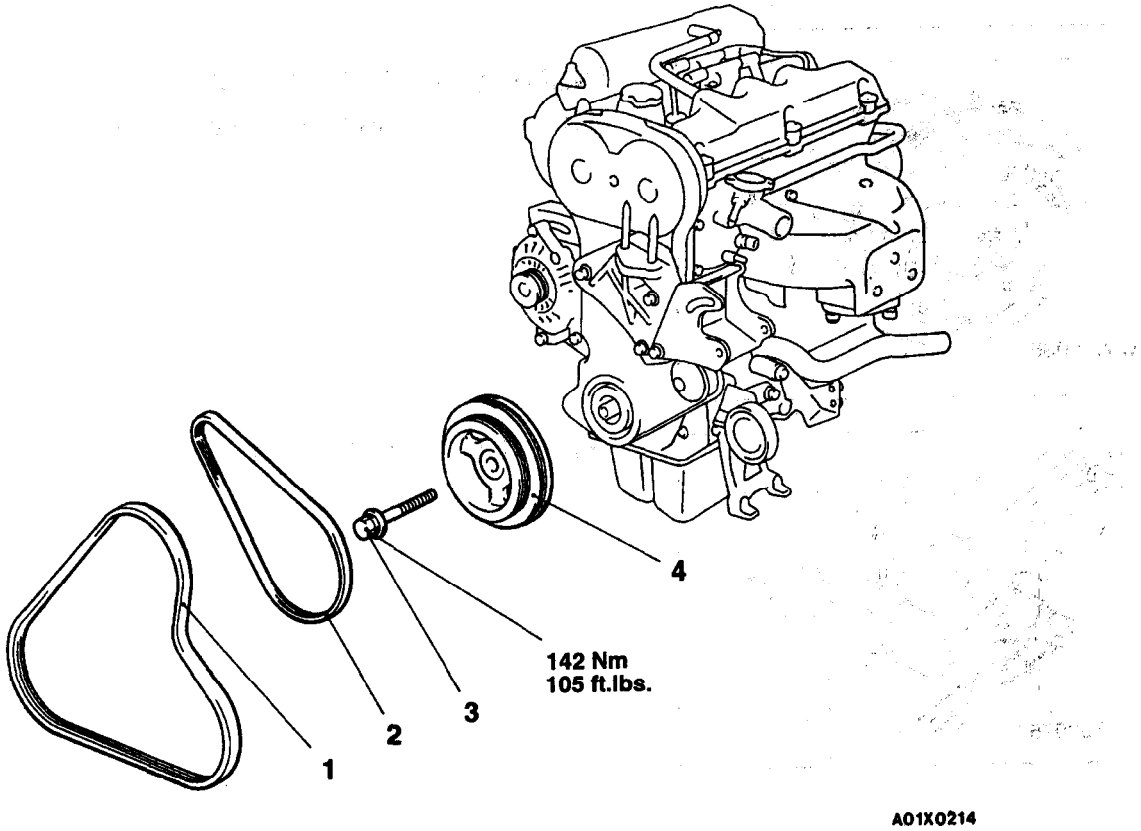

Removal steps

1. Drive belt (Power steering and A/C)
2. Drive belt (Generator)
3. ◀A▶ ▶B◀ Crankshaft bolt
4. ◀B▶ ▶A◀ Crankshaft pulley

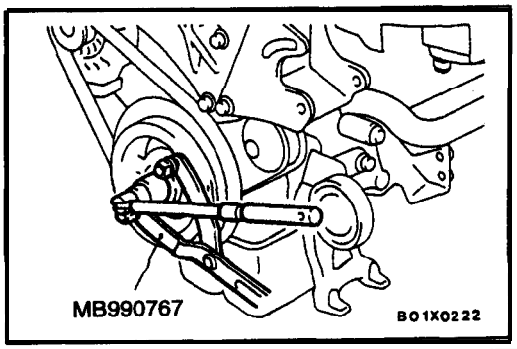

REMOVAL SERVICE POINTS

◀A▶ CRANKSHAFT BOLT REMOVAL

TSB Revision

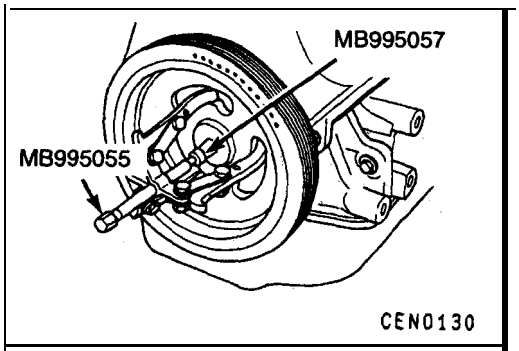

◀B▶ CRANKSHAFT PULLEY REMOVAL

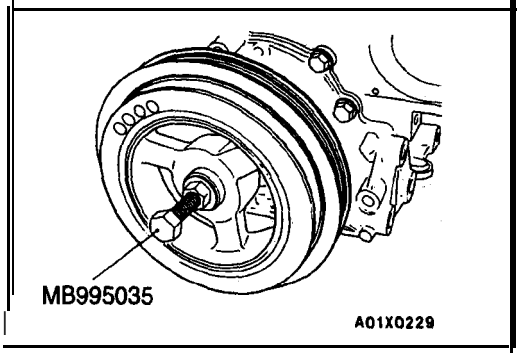

INSTALLATION SERVICE POINTS

▶A◀ CRANKSHAFT PULLEY INSTALLATION

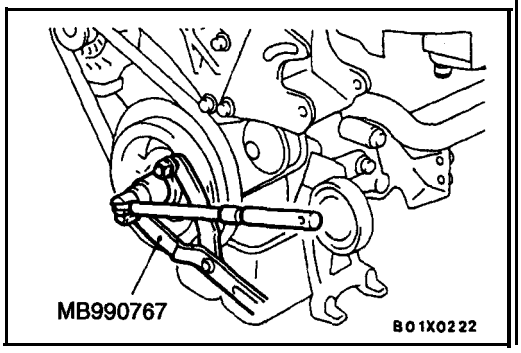

▶B◀ CRANKSHAFT BOLT INSTALLATION

CAMSHAFT AND CAMSHAFT OIL SEAL

11200190142

REMOVAL AND INSTALLATION

Post-installation Operation
● Engine Adjustment

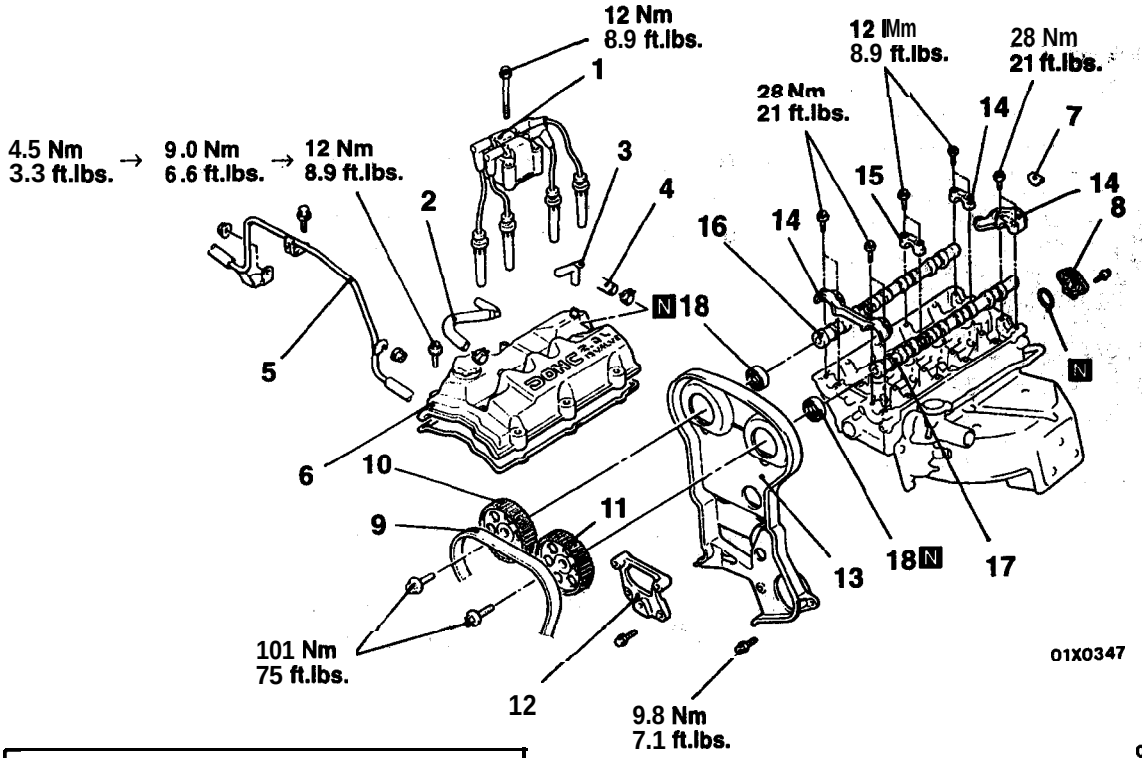

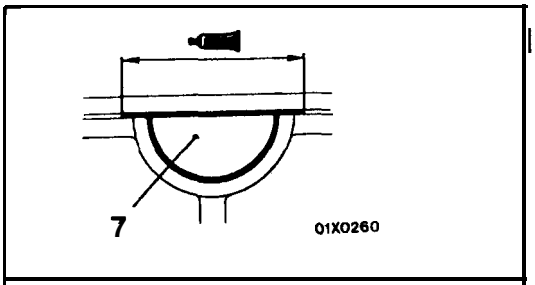

Specified sealant: Loctlte 5699 or equivalent

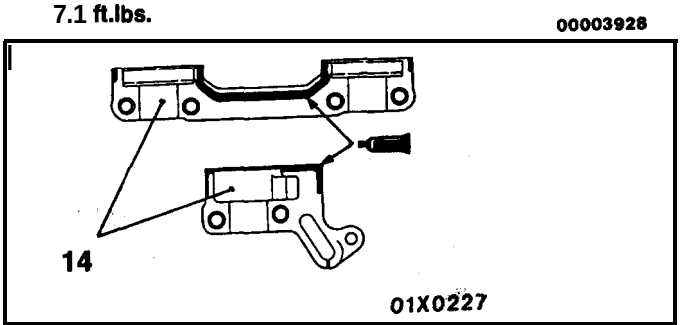

Specified sealant: Loctite 518 or equivalent

Camshaft removal steps

1. Ignition coil pack
2. PCV hose
3. Breather hose
4. Air hose
5. Vapor hose and pipe assembly connection
6. ▶D◀ Cylinder head cover
7. Semi-circular packing
8. Camshaft position sensor
9. Timing belt (Refer to P.11C-31.)
10. ◀A▶ ▶C◀ Intake camshaft sprocket
11. ◀A▶ ▶C◀ Exhaust camshaft sprocket
12. Bracket
13. Rear timing belt cover
14. Outside camshaft bearing Cad
15. ◀B▶ ▶B◀ Camshaft bearing cap
16. ◀C▶ Intake camshaft
17. ◀C▶ Exhaust camshaft

Camshaft oil seal removal steps

9. Timing belt (Refer to P.11C-31.)
10. ◀A▶ ▶C◀ Intake camshaft sprocket
11. ◀A▶ ▶C◀ Exhaust camshaft sprocket
12. Bracket
13. Rear timing, belt cover
18. ▶A◀ Camshaft oil seal

TSB Revision

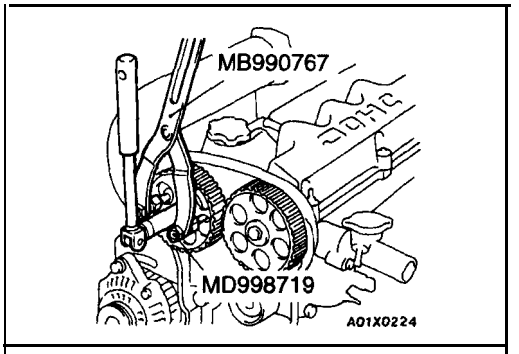

REMOVAL SERVICE POINTS

◀A▶ INTAKE CAMSHAFT SPROCKET/EXHAUST CAMSHAFT SPROCKET REMOVAL

Use the special tool not to let the. camshaft sprockets turn.

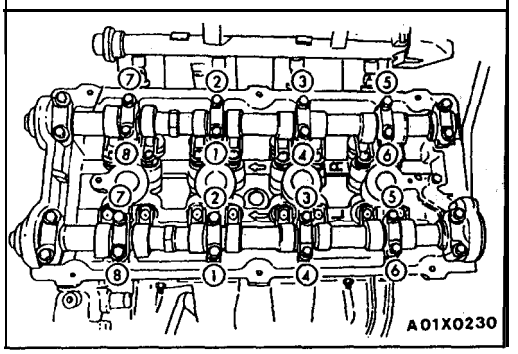

◀B▶ CAMSHAFT BEARING CAP REMOVAL

Loosen the camshaft bearing cap attaching fasteners in sequence shown in the figure (one camshaft at a time).

◀C▶ INTAKE CAMSHAFT/EXHAUST CAMSHAFT REMOVAL

Identify the camshafts before removing from the head. The camshafts are not interchangeable.

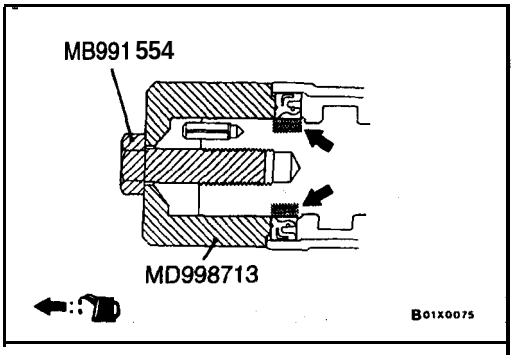

INSTALLATION SERVICE POINTS

▶A◀ CAMSHAFT OIL SEAL INSTALLATION

(1) Insert a piece of wood between a garage jack and the engine oil pan, and jack up the engine to set the special tool.
(2) Install the camshaft seal into the cylinder head using' the special tool until it is flush with the head.

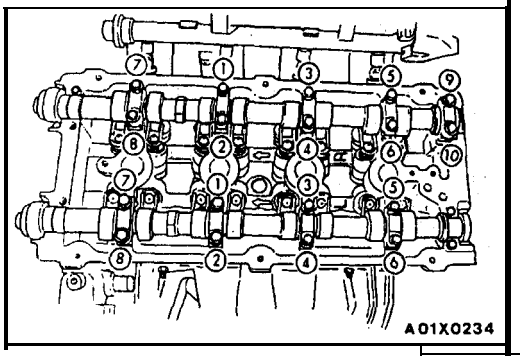

▶B◀ CAMSHAFT BEARING CAP INSTALLATION

Install the camshaft bearing caps in the order shown in the illustration.

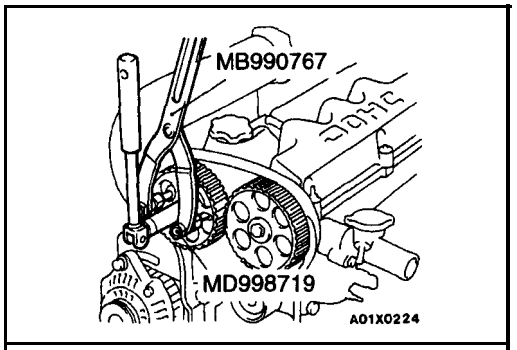

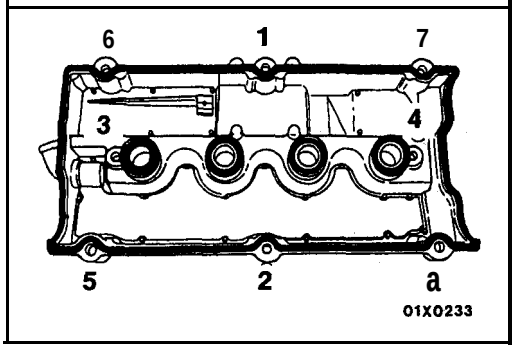

▶C◀ EXHAUST CAMSHAFT SPROCKET/INTAKE CAMSHAFT SPROCKET INSTALLATION

Use the special tool to stop the camshaft from turning, and then install the intake and exhaust camshaft, sprockets.

▶D◀ CYLINDER HEAD COVER INSTALLATION

Install the cylinder head cover assembly to the head and tighten fasteners in sequence shown in figure. Tighten all fasteners according to the 3–step torque method.

(1) Tighten to 4.5 Nm (3.3 ft.lbs.).
(2) Tighten to 9.0 Nm (6.6 ft.lbs.).
(3) Tighten to 12 Nm (6.9 ft.lbs.).

OIL PAN AND OIL SCREEN

11200250123

REMOVAL AND INSTALLATION

Pre-removal and Post-installation Operation
- Engine Oil Draining and Supplying
- **Oil Level Gauge Removal and** Installation
- **Front Exhaust Pipe Removal and Installation (Refer to GROUP 15—Exhaust Pipe and Muffler.)**

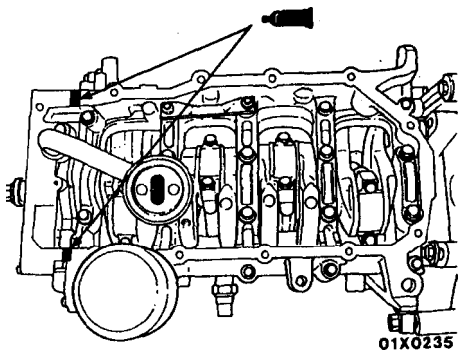

Specified sealant: Loctite 5699 or equivalent

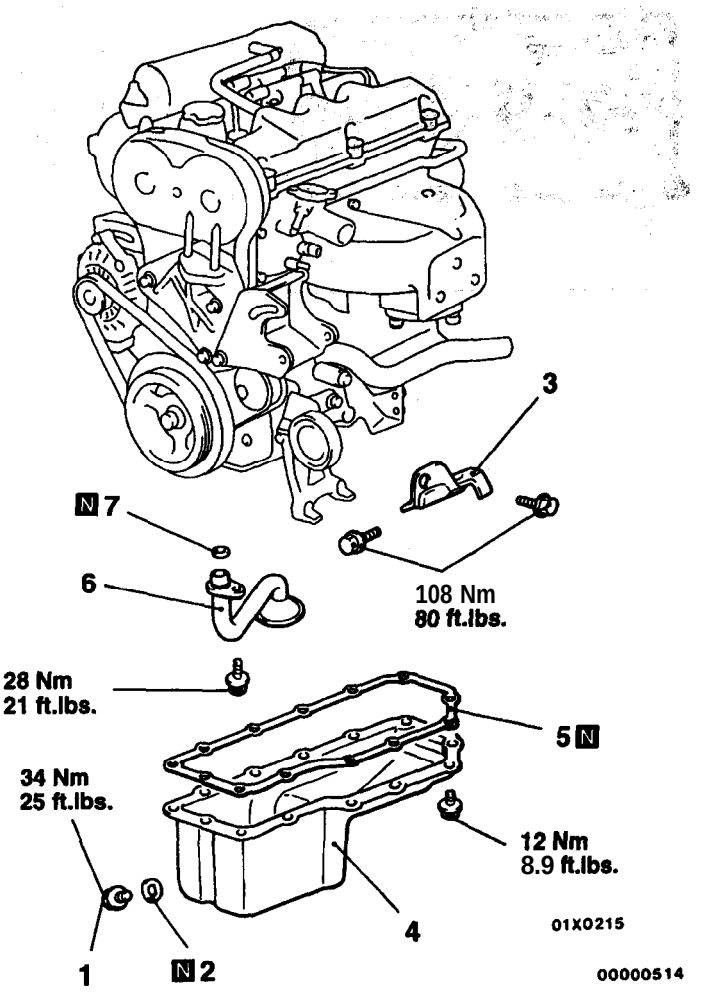

Removal steps

1. Drain plug
2. Gasket
3. Front plate
4. Oil pan
5. Oil pan gasket
6. Oil screen
7. **O-ring**

TSB Revision

CRANKSHAFT FRONT OIL SEAL

11200340172

REMOVAL AND INSTALLATION

Pre-removal and Post-installation Operatidn
- Timing Belt Removal and Installation (Refer to P.11C-34.)

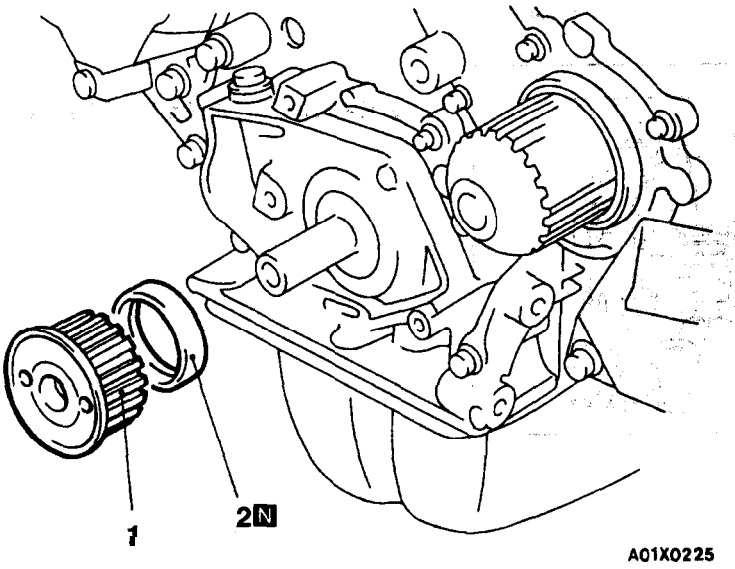

Removal steps

◀A▶ ▶B◀ 1. Crankshaft sprocket
◀B▶ ▶A◀ 2. Crankshaft front oil seal

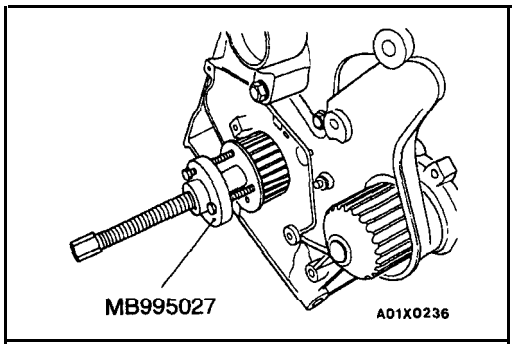

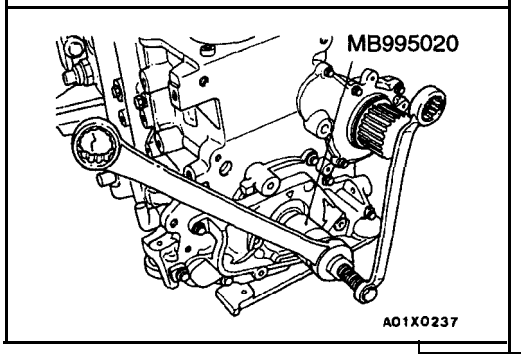

REMOVAL SERVICE POINTS

◀A▶ CRANKSHAFT SPROCKET REMOVAL

Caution
Do not nick the shaft seal surface or seal bore.

◀B▶ CRANKSHAFT FRONT OIL SEAL

Use the special tool to remove the crankshaft front oil seal. Be careful not to damage the seal surface of cover.

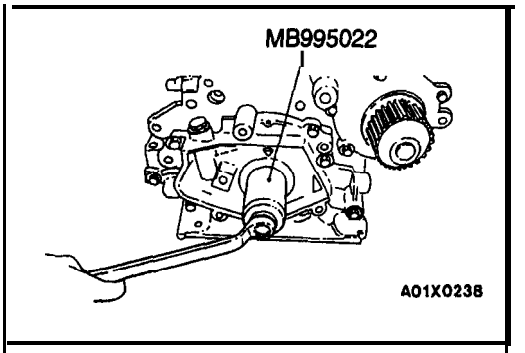

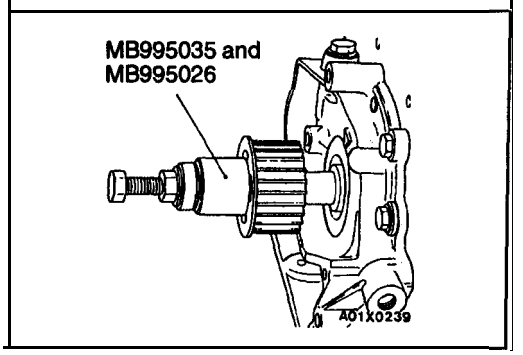

INSTALLATION SERVICE POINTS

▶A◀ CRANKSHAFT FRONT OIL SEAL INSTALLATION

Use the special tool to align the oil seal witti the' cover.

▶B◀ CRANKSHAFT SPROCKET INSTALLATION

CRANKSHAFT REAR OIL SEAL

11200370300

REMOVAL AND INSTALLATION

Pre-removal and Post-installation Operatidn
- Transaxle Assembly Removal and Installation
  (M/T: Refer to GROUP 22A – Transaxle Assembly.)
  (A/T: Refer to GROUP 23A -Transaxle Assembly.)
- Clutch Cover and Clutch Disc Removal and Installation <M/T>

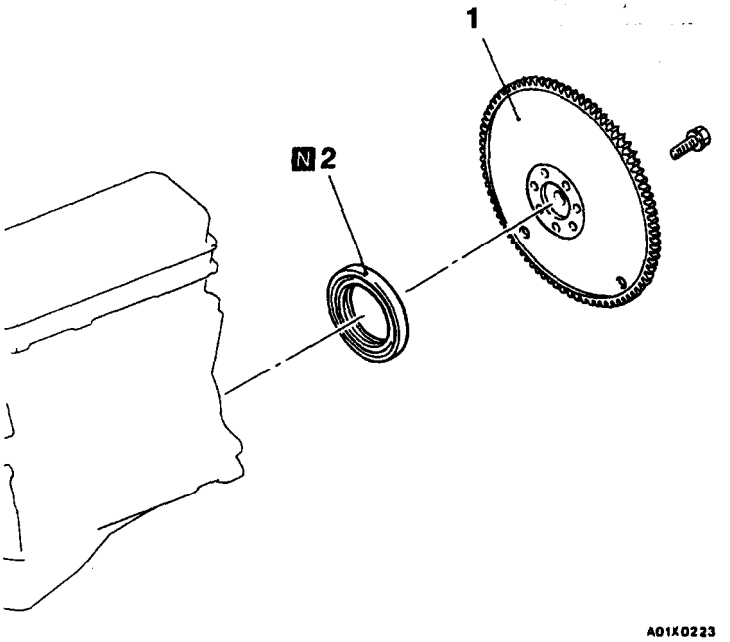

Removal steps
1. Flywheel
▶A◀ 2. Crankshaft rear oil seal

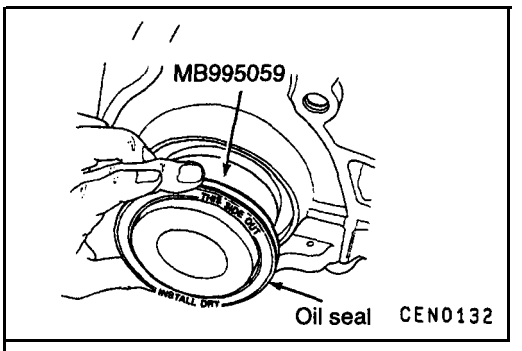

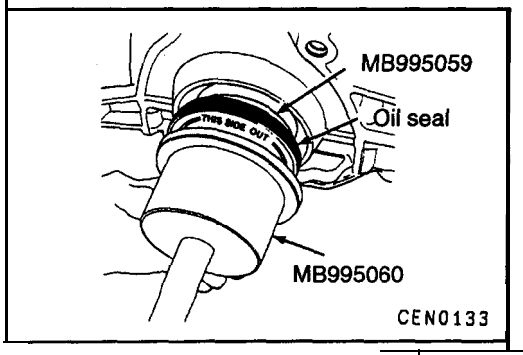

INSTALLATION SERVICE POINT

▶A◀ CRANKSHAFT REAR OIL SEAL INSTALLATION

Caution
If burr or scratch is present on the crankshaft edge (chamfer), cleanup with 400 grit sand paper to prevent seal damage during installation of new seal.

NOTE
When installing seal, no lube on seal is needed.

(1) Place special tool **MB995059** on crankshaft. This is **a** pilot tool with a magnetic base.
(2) Position seal over pilot tool. Make sure **you** can read the words THIS SIDE OUT on seal. Pilot tool should remain on crankshaft during installation of **seal.**

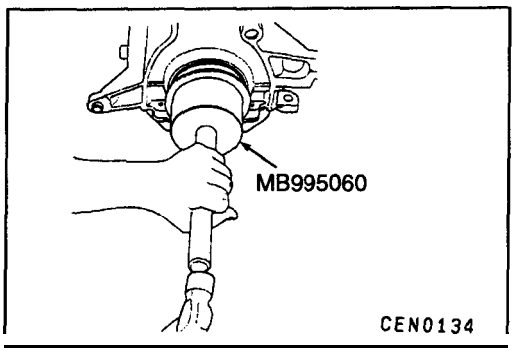

(3) Drive the seal into the block using special tool MB995060 and handle C-4171 until the tool bottoms out against the block.

. Caution

If the seal is driven into the block past flush, this may cause an oil leak.

CYLINDER HEAD GASKET

11200400214

REMOVAL AND INSTALLATION

Pre-removal Operation
- Fuel Line Pressure Releasing (Refer to GROUP 13A – On-vehicle Service.)
- Engine Coolant Draining (Refer to GROUP 00 – Maintenance Service.)
- Engine Oil Draining (Refer to GROUP 00 – Maintenance Service.)
- Air Cleaner Removal

Post-installation Operation
- Air Cleaner Installation
- Engine Oil Supplying (Refer to GROUP 00 – Maintenance Service.)
- Engine Coolant Supplying (Refer to GROUP 00 – Maintenance Service.)
- Accelerator Cable Adjustment (Refer to GROUP 17 – On-vehicle Service.)

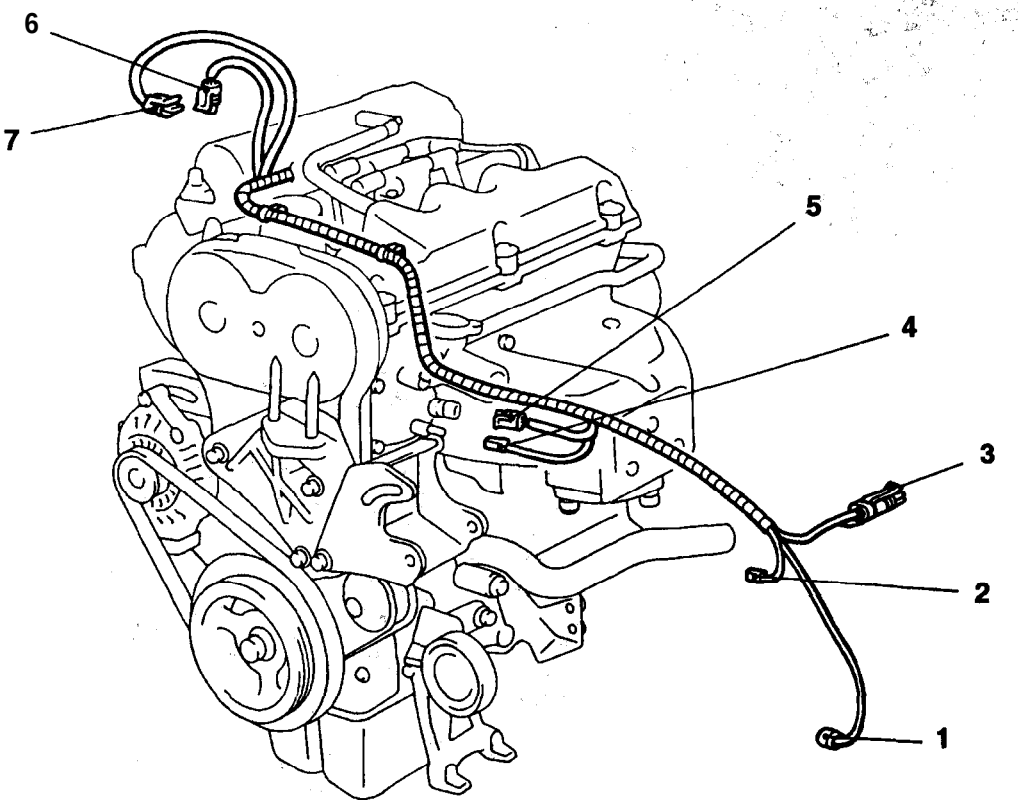

A01X0216

Removal steps

1. NC compressor connector
2. Power steering pressure switch connector
3. Heated oxygen sensor connector
4. Engine coolant temperature gauge unit connector
5. Engine coolant temperature sensor connector
6. MAP sensor connector
7. Intake air temperature sensor connector

TSB Revision

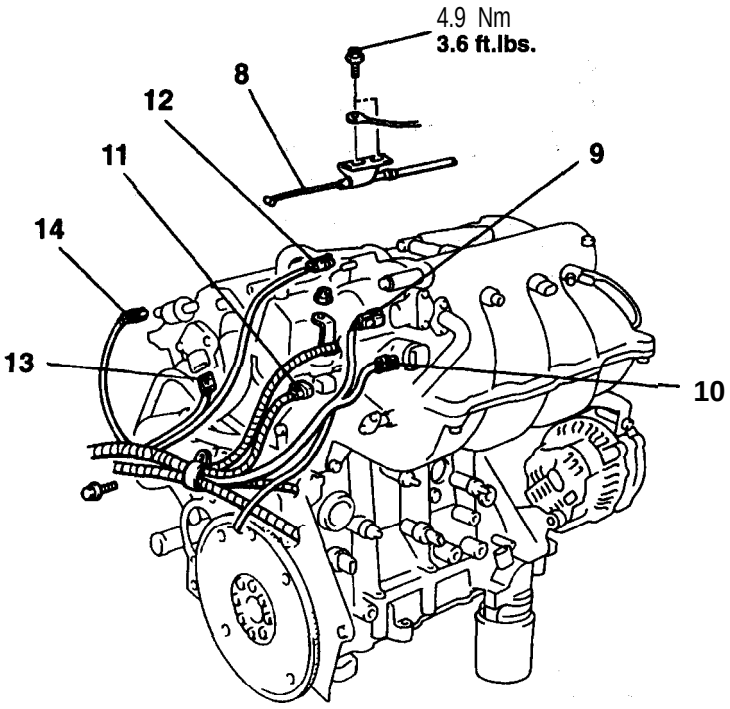

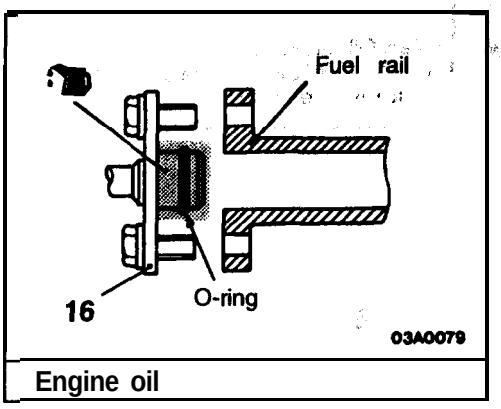

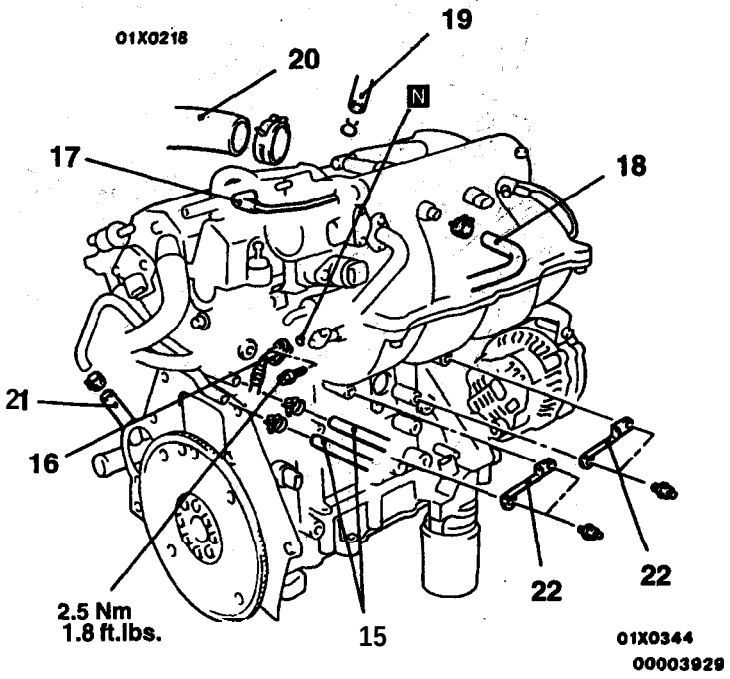

8. Accelerator cable connection
9. Throttle position sensor connector
10. Idle air control motor connector
11. Injector harness connector
12. Ignition coil connector
13. Camshaft position sensor connector
14. EGR solenoid valve connector
15. Heater hose connection

▶C◀ 16. High-pressure fuel hose connection
17. Purge air hose connection
18. Brake booster. vacuum hose connection
19. Overflow tube connection
◀A▶ ▶B◀ 20. Radiator upper hose connection
21. Water hose connection
22. Intake manifold stay

TSB Revision

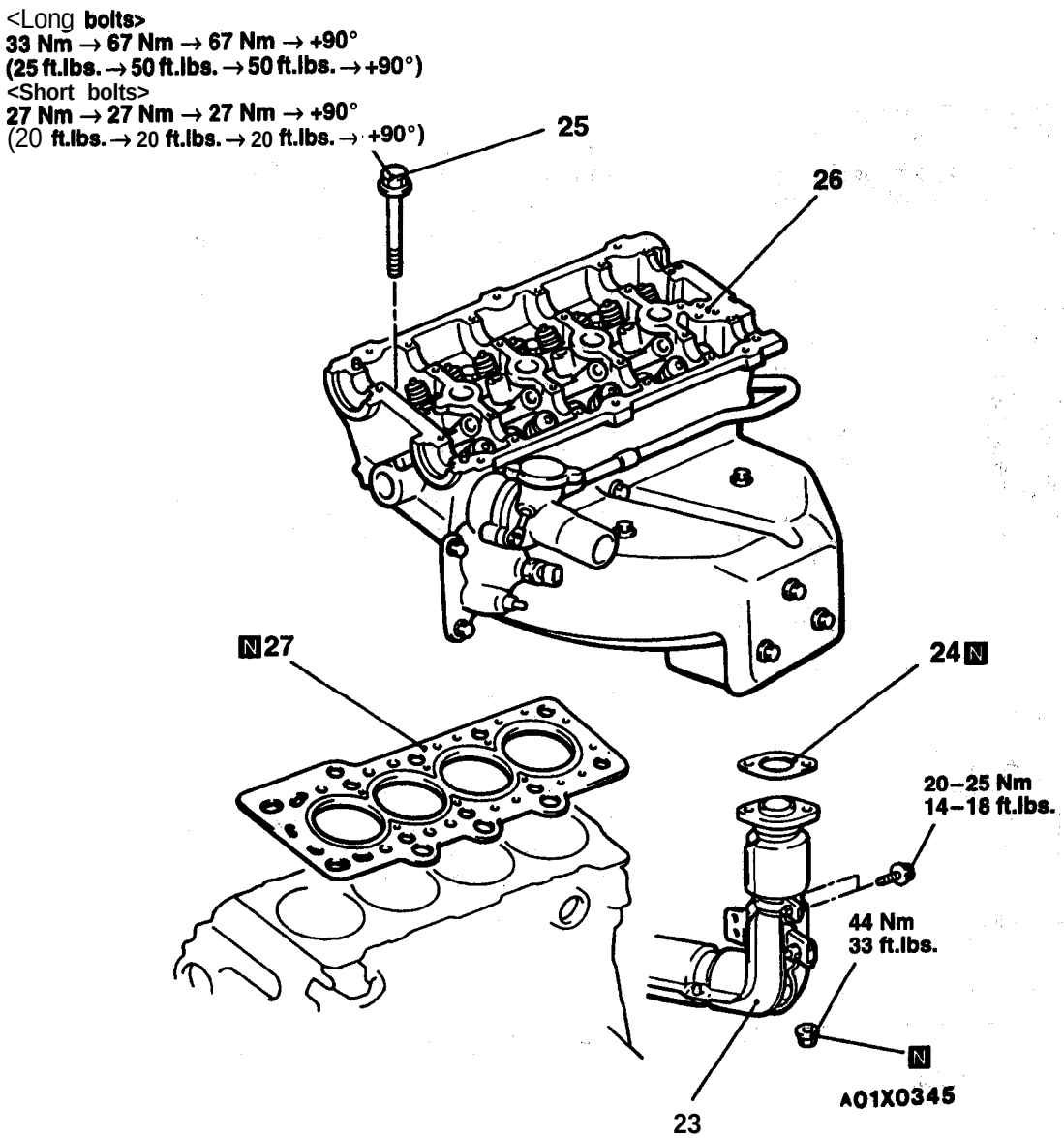

- Intake and exhaust camshafts (Refer to **P.11C-21.**)

23. Front exhaust pipe connection
24. Gasket

▶A◀ 25. Cylinder head bolt
26. Cylinder head
27. Cylinder head gasket

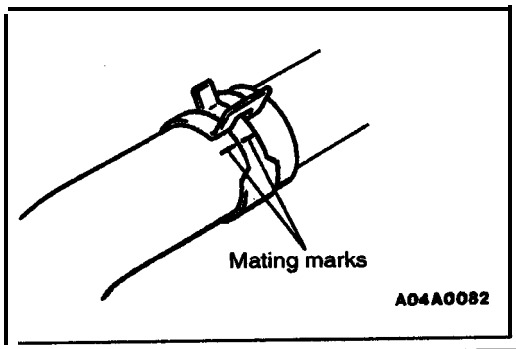

REMOVAL SERVICE POINT

(A, RADIATOR UPPER HOSE DISCONNECTION

Place mating **marks** on the radiator hose **and the** hose clamp, and then disconnect the radiator hose.

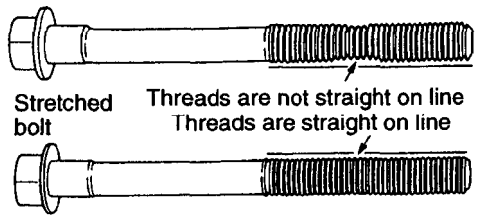

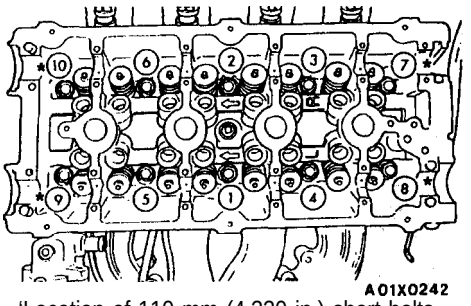

'Location of 110 mm (4.330 in.) short bolts.

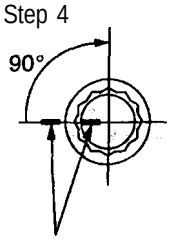

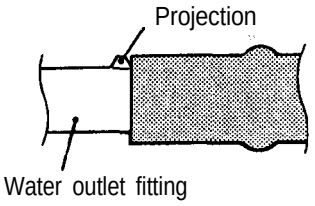

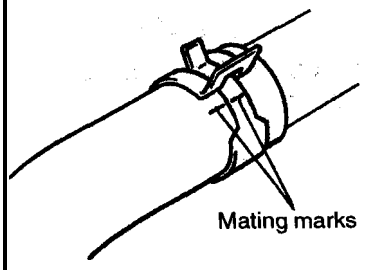

INSTALLATION SERVICE POINTS

▶A◀ CYLINDER HEAD BOLT INSTALLATION

(1) Cylinder head bolts should be carefully examined before reuse. If the threads are necked down, the bolts should be replaced.
Necking can be checked by holding a scale or straight edge against the threads. If all the threads do not contact the scale, the bolt should be replaced.

(2) Before installing the bolts, the threads should be oiled with clean engine oil.

(3) Tighten the cylinder head bolts in the sequence shown in figure. Using the 4 step torque turn method, tighten according to the following values.

1) 'Tighten center fasteners 1 thru 6 to 33 Nm (25 ft.lbs.). Then outer fasteners 7 thru 10 to 27 Nm (20 ft.lbs.).
2) Tighten center fasteners 1 thru 6 to 67 Nm (50 ft.lbs.). Then outer fasteners 7 thru 10 to 27 Nm (20 ft.lbs.).
3) Tighten center fasteners 1 thru 6 to 67 Nm (50 ft.lbs.). Then outer fasteners 7 thru 10 to 27 Nm (20 ft.lbs.).
4) Turn all fasteners 1 thru 10 90° turn. Do not use a torque wrench for this step.

Caution

1. **Always make a tightening angle just 90°. If it is less than 90°, the head bolt will be loosened.**
2. **If it is more than 90°, remove the head bolt and repeat the procedure froni step 1.**

▶B◀ RADIATOR UPPER HOSE CONNECTION

(1) Insert each hose as far as the projection of the water outlet fitting or water inlet fitting.

(2) Place mating marks on the radiator hose and the hose clamp, and then connect the radiator hose.

▶C◀ HIGH-PRESSURE FUEL HOSE CONNECTION

When connecting the high-pressure fuel hose to the fuel rail, apply a small amount of clean engine oil to the hose union, and then insert, being careful not to damage the O-ring.

Caution

Do not let the engine oil get into the fuel rail.

TIMING BELT

11200430213

REMOVAL AND INSTALLATION

Pre-removal Operation
- Cranckshaft Pulley Removal (Refer to P.11C-19.)

Post-installation Operation
- Crankshaft Pulley Installation (Refer to P.11C-19.)
- Engine Adjustment

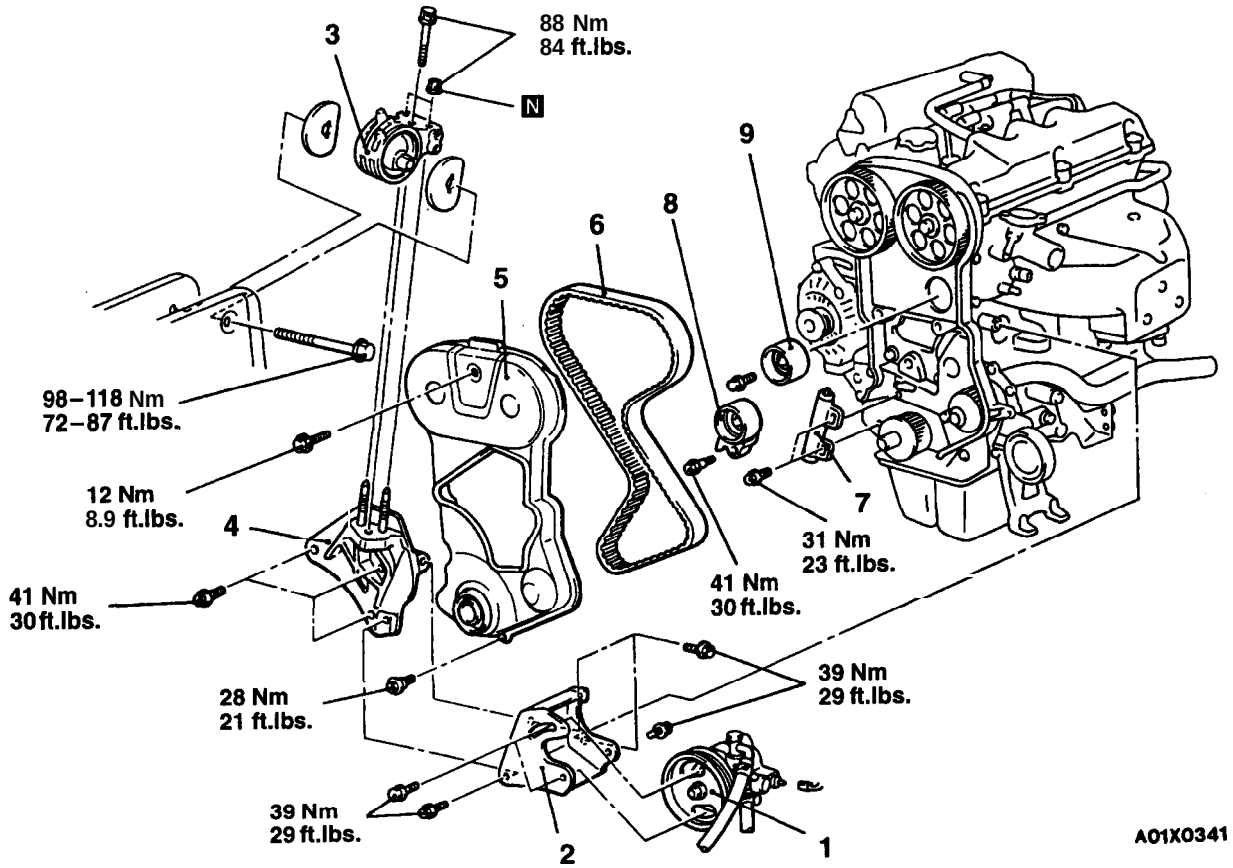

Removal steps

◀A▶ 1. Power steering oil pump connection
2. Power steering oil pump bracket
◀B▶ ▶B◀ 3. Engine mount bracket assembly
4. Engine mount bracket
5. Front timing belt cover
◀C▶ ▶A◀ 6. Timing belt
◀D▶ ▶A◀ 7. Timing belt tensioner
8. Tensioner pulley
9. Idle pulley

TSB Revision

REMOVAL SERVICE POINTS

◀A▶ POWER STEERING OIL PUMP DISCONNECTION

Remove the power steering oil pump from the bracket with the hose attached.

NOTE

Place the removed power steering oil pump in a place where it will not be a hindrance when removing and installing 'the timing belt, and tie it with a cord.

◀B▶ ENGINE MOUNT BRACKET ASSEMBLY REMOVAL

Place a garage jack against the engine oil pan with a piece of wood in between, jack up the engine so that the weight of the engine is no longer being applied to the engine mount bracket, and then remove the engine mount bracket.

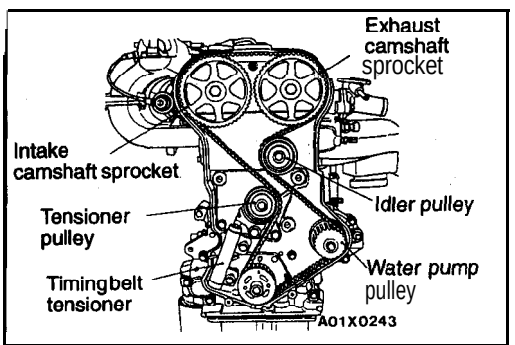

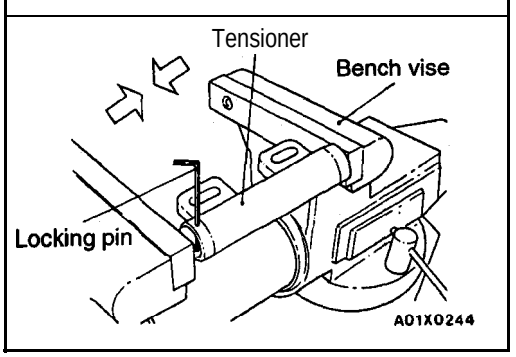

◀C▶ TIMING BELT REMOVAL

Align timing marks. Loosen the timing belt tensioner to remove timing belt.

Caution

Do not rotate the camshaft or crankshaft after removing the timing belt, or valve components may be damaged. Always align timing marks before removing timing 'belt.

◀D▶ TIMING BELT TENSIONER REMOVAL

(1) When the tensioner is removed from the engine, it is necessary to compress the plunger into the tensioner body.

(2) Place the tensioner into a vise and slowly compress the plunger.

Caution

Index the tensioner in the vise the same way it is installed on the engine. This is to ensure proper pin orientation when the tensioner is installed on the engine.

(3) When the plunger is compressed into the tensioner body, install a pin through the body and plunger to retain plunger in place until tensioner is installed.

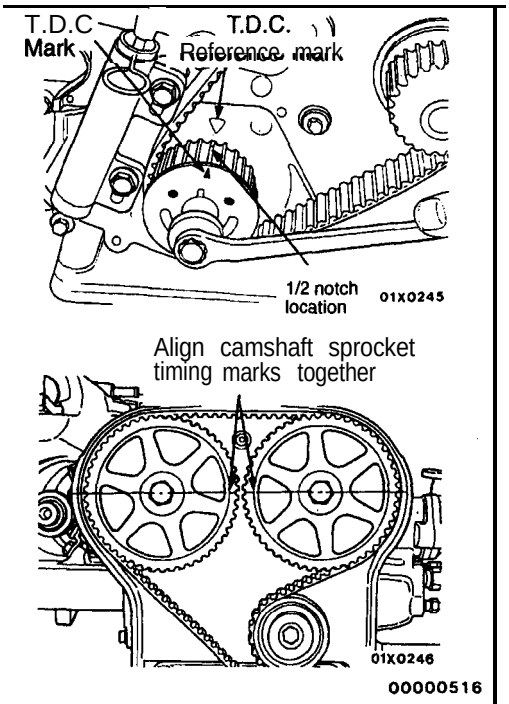

INSTALLATION SERVICE POINT

▶A◀ TIMING BELT TENSIONER/TIMING BELT INSTALLATION

(1) Set the crankshaft sprocket to TDC by aligning the sprocket with the arrow on the oil pump housing.
(2) Set the camshafts timing marks together by aligning notches on sprockets.
(3) Move the crankshaft to 1/2 notch before TDC.

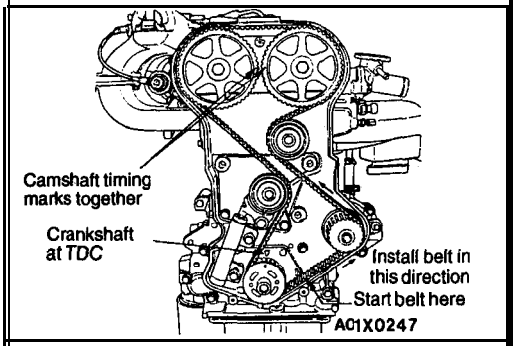

(4) Install the timing belt. Starting at the crankshaft, go around the water pump sprocket, idler pulley, camshaft sprockets and then around the tensioner pulley.
(5) Move the crankshaft sprocket to TDC to take up belt slack. Install the tensioner to block 'but do not tighten fasteners.

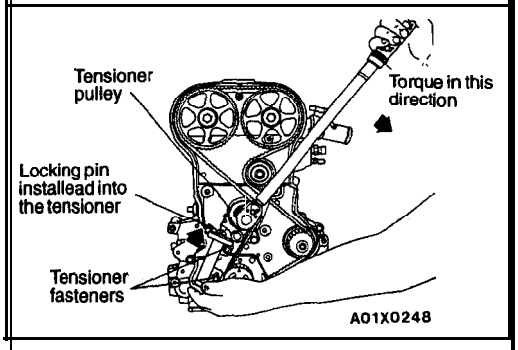

(6) Using a torque wrench on the tensioner pulley, apply 28 Nm (21 ft.lbs.) of torque to tensioner.
(7) With torque being applied to the tensioner pulley, move the tensioner up against the tensioner pulley bracket and tighten fasteners to 31 Nm (23 ft.lbs.).
(8) Pull the tensioner plunger pin. Pretension is correct when the pin can be removed and installed.
(9) Rotate the crankshaft 2 revolutions and check the alignment of the timing marks. If marks are not aligned correctly, do it again.

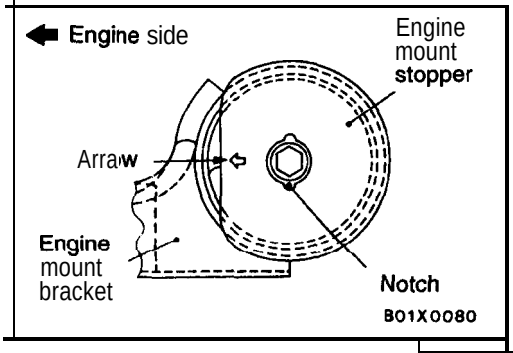

▶B◀ ENGINE MOUNT BRACKET ASSEMBLY INSTALLATION

Align the notches on the stopper with the engine mount bracket with the arrow mark facing toward the shown direction. Then install the stopper.

ENGINE OVERHAUL <2.0L (420A)>

CONTENTS

11309000159

GENERAL INFORMATION

11300010106

GENERAL SPECIFICATIONS

Descriptions			Specifications
Type			In-line OHV, DOHC
Number of cylinders			4
Cylinder bore mm (in.)			87.5 (3.445)
Piston stroke mm (in.)			83.0 (3.267)
Compression ratio			9.6
Valve timing [Measured at 0.5 mm (.02 in.) lift]	Intake valve	Opens (BTDC)	1.3”
		Closes (ABDC)	39.7”
	Exhaust valve	Opens (BBDC)	36°
		Closes (ATDC)	1.1 °
Lubrication system			Pressure feed, full-flow filtration,
Water pump type			Centrifugal impeller type
EGR type			Single type
Injector type and number			Electromagnetic, 4

SPECIFICATIONS

11300030119

SERVICE SPECIFICATIONS

Items		Standard value	Limit
Ignition coil system			
Spark plug cable resistence Ω		3000– 12000	–
Ignition coil resistence Ω	Primary	0.51–0.61	
	Secondary	11500–13500	–
Camshaft and cam follower			
Cam wear amount mm (in.)		0.0254 (.001)	0.254 (.01)
Camshaft bearing bore diameter mm (in.)		26.020–26.041 (1.024–1.025)	–
Camshaft diameter bearing clearance mm (in.)		0.069–0.071 (.0027–.0028)	–
Camshaft end play mm (in.)		0.15 (.006)	–
Camshaft bearing journal diameter mm (in.)		25.951–25.970 (1.0217–1.0224)	–
Camshaft lift mm (in.)	Intake	8.22 (.324)	
	Exhaust	7.00 (.276)	–
Hydraulic lash adjuster mm (in.)	Body diameter	22.949-22.962 (.9035–.9040)	–
	Plunger travel minimum (dry)	4.24 (.167)	
Cylinder head and valve			
Flatness of gasket surface mm (in.)		–	0.1 (.004)
Valve seat angle		44.5” -45”	–
Valve seat runout (max) mm (in.)		0.050 (.002)	–
Valve seat width (Finish) mm (in.)		0.9–1.3 (.035–.051)	–
Valve seat guide bore diameter mm (in.)		11.00–11.02 (.4330–.4338)	–
Intake valve seat diameter mm (in.)		34.50 (1.358)	–
Exhaust valve diameter mm (in.)		29.50 (1.161)	–
Valve face angle		45°–45.5°	–
Valve head diameter mm (in.)	Intake	34.67-34.93 (1.364–1.375)	–
	Exhaust	30.37–30.63 (1.195–1.205)	–

Items		Standard value	Limit
Valve margin mm (in.)	Intake	1.285–1.615 (.050–.063)	–
	Exhaust	0.985–1.315 (.038–.051)	–
Valve length (Overall) mm (in.)	Intake	111.49–111.99 (4.389–4.409)	–
	Exhaust	109.59–110.09 (4.314-4.334)	–
Valve stem tip height mm (in.)	Intake	48.04 (1.891)	–
	Exhaust	47.99 (1.889)	–
Valve stem diameter mm (in.)	Intake	5.934-5.952 (.233– .234)	–
	Exhaust	5.906–5.924 (.233–.233)	–
Valve stem to guide clearance mm (in.)	Intake	0.048–0.066 (.0019–.0026)	0.076 (.003)
	Exhaust	0.074–0.094 (.0029–.0037)	0.101 (.004)
Valve guide inner diameter mm (in.)		5.975–6.000 (.2352–.2362)	–
Valve spring free length mm (in.)		46 (1.811)	–
Valve spring tension (valve closed) N/mm (lbs./in.)		246–270/38.0 (55–60/1.496)	–
Valve spring tension (valve open) N/mm (lbs./in.)		549–611/29.3 (123–137/1.153)	–
Valve spring number of coils mm (in.)		7.35	–
Valve spring wire diameter mm (in.)		3.76 (.148)	–
Valve installed spring height mm (in.)		38.00 (1.496)	–
Oil pump			
Oil pump clearance over rotors mm (in.)			0.102 (.004)
Oil pump cover out of flat mm (in.)			0.076 (.003)
Oil pump inner rotor thickness mm (in.)			7.64 (.301)
Oil pump outer rotor clearance mm (in.)			0.39 (.015)
Oil pump outer rotor diameter mm (in.)			79.95 (3.148)
Oil pump outer rotor thickness mm (in.)			7.64 (.301)
Oil pump tip clearance between rotors mm (in.)		–	0.02 (.0008)
Oil pressure at curb idle speed kPa (psi)		25 (4)	

TSB Revision

Items		Standard value	Limit
Piston, connecting rod and cylinder block			
Piston standard piston size mm (in.)		87.463-87.481 (3.4434–3.4441)	–
Piston to bore clearance mm (in.)		0.012–0.044 (.0005–.0017)	–
From bottom of skirt mm (in.)		0.012–0.044 (.0005–.0017)	–
Land clearance (Diametrical) mm (in.)		0.740–0.803 (.029–.032)	–
Piston length mm (in.)		63.82 (2.513)	–
Piston ring groove depth mm (in.)	Top upper compression ring	3.983–4.132 (.157–.163)	–
	Intermediate compression ring	4.456–4.605 (.175–.181)	–
	Oil control (Steel ring) ring	3.841–4.075 (.151–.160)	–
Piston pin clearance in piston mm (in.)		0.008–0.020 (.0003–.0008)	–
Piston pin in rod (interference) mm (in.)		0.018–0.043 (.0007–.0017)	–
Piston pin diameter mm (in.)		20.998–21.003 (.8267–.8269)	–
Piston pin length mm (in.)		74.75-75.25 (2.943–2.963)	–
Piston ring gap mm (in.)	Top upper compression ring	0.23–0.52 (.009–.020)	0 . 8 (.031)
	Intermediate compression ring	0.49–0.78 (.019–.031)	1 .0 (.039)
	Oil control (Steel ring) ring	0.23–0.66 (.009–.026)	1 .0 (.039)
Piston ring side clearance mm (in.)	Top upper and intermediate compression ring	0.025–0.065 (.0010–.0026)	0.10 (.004)
	Oil control (Pack) ring	0.004–0.178 (.0002–.0070)	–
Piston ring width mm (in.)	Top upper and intermediate compression ring	1.17– 1 .19 (.046–.047)	–
	Oil control (Pack) ring	2.854–3.008 (.1124–.1184)	–
Cylinder block cylinder bore diameter mm (in.)		87.5 (3.445)	
Cylinder block cylinder bore out-of-round mm (in.)			0.051 (.002)
Cylinder block cylinder bore taper mm (in.)			0.051 (.002)

Items	Standard value	Limit
Connecting rod bearing oil clearance mm (in.)	0.026–0.059 (.0010–.0023)	0.075 (.015)
Connecting rod piston pin bore diameter mm (in.)	20.96–20.98 (.8252–.8260)	–
Connecting rod large end bore diameter mm (in.)	50.991–51.005 (2.0075–2.0081)	–
Connecting rod side clearance mm (in.)	0.13–0.38 (.0051–.0150)	0.37 (.015)
Main bearing journal diameter mm (in.)	51.9924–52.0076 (2.0469–2.0475)	–
Main bearing journal out-of-round mm (in.)	–	0.0035 (.0001)
Main bearing journal taper mm (in.)	–	0.0038 (.0001)
Crankshaft		
Crankshaft connecting rod journal diameter mm (in.)	47.9924–48.0076 (1.8894–1.8900)	–
Crankshaft out-of-round mm (in.)		0.0035 (.0001)
Crankshaft tape mm (in.)		0.0038 (.0001)
Crankshaft main bearing diameter clearance mm (in.)	0.022–0.062 (.0008–.0024)	–
Crankshaft end play mm (in.)	0.09–0.24 (.0035–.0094)	–

TORQUE SPECIFICATIONS

Items	Nm	ft.lbs.
Generator		
Pivot	54	39
Lock nut	61	44
Ignition system		
Spark plug	28	20
Camshaft position sensor	3	2.2
Timing belt		
Crankshaft damper bolt	62	45
Engine mount bracket	41	30
Timing belt inspection cover	12	8.7
Tensioner pulley	28	20
Timing belt tensioner	31	22
Tensioner arm bracket	31	22
Camshaft sprocket	101	73
Rear timing belt cover	9.6	6.9
Cooling system components		
Water pump	12	9
Thermostat housing	22	16

TSB Revision

Items		Nm	ft.lbs.
Engine coolant temperature sensor		7	5
Fuel and emission control parts			
EGR tube		11	8
EGR valve		22	16
Intake manifold			
Intake manifold air temperature sensor		7	5
Manifold absolute pressure sensor		2	1 . 4
Intake manifold		23	1 7 :
Exhaust manifold			
Exhaust manifold		23	17
Camshaft and cam follower			
Cvlinder head cover		12	9
Bearing head cover	No. 2, 3, 4, 5	12	9
	No. 1, 6	28	20
Cylinder head and valve			
Cylinder head bolt	Long bolt	87 + 1/4 turn	48 + 1/4 turn
	Short bolt	28 + 1/4 turn	20 + 1/4 turn
Oil pan and oil pump			
Oil filter		21	15
Adapter		55	40
Oil pan		12	9
Oil pick-up tube		2 8	20
Oil pump		23	17
Oil pump			
Relief valve retaining cap		54	39
Oil pump cover		1 2	9
Piston, connecting rod and cylinder block			
Connecting rod cap bolt		27 + 1/4 turn	20 + 1/4 turn
Knock sensor		10	7

SEALANTS

11300050207

	Specified sealant
Engine coolant temperature sensor	Loctite 24200 or equivalent
Thermo switch	Loctite 24200 or equivalent
Camshaft bearing cap No.1, No.6	Loctite 51817 or equivalent
Oil pump	Loctite 51817 or equivalent
Bed plate to oil pan gasket	Loctite 18718 or equivalent
Oil pressure switch	Loctite 24200 or equivalent
Bed plate to cylinder block	Loctite 19614 or equivalent

FORM-IN-PLACE GASKETS

11301810019

There are numerous places where form-in-place gaskets are used on the engine. Care must be taken when applying form-in-place gaskets to assure obtaining the desired results. Bead size, continuity, 'and location are of great importance. Too thin a bead can result in leakage while too much can result' in spill-over which can break off and obstruct fluid feed lines. A continuous bead of the proper width is essential to obtain a leak-free joint.

GASKET DISASSEMBLY

Parts assembled with form-in-place gaskets may be disassembled without unusual effort' In some instances, it may be necessary to lightly tap the part with a mallet or other suitable tool to break the seal between the mating surfaces. A flat gasket scraper may also be lightly tapped into the joint but care must be taken not to damage the mating surfaces.

SURFACE PREPARATION

Scrape clean or wire brush all gasket surfaces removing all loose material. Inspect stamped parts to assure gasket rails are flat. Flatten rails with a hammer on a flat plate if required. Gasket surfaces must be free of oil and dirt. Make sure old gasket material is removed from blind attaching holes.

FORM-IN-PLACE GASKET APPLICATION

Assembling parts using a form-in-place gasket requires care but it's easier than using precut gaskets. Gasket material should be applied sparingly 1 mm (.040 inch.) diameter or less of sealant to one gasket surface, Be certain the material surrounds each mounting hole. Excess material can easily be wiped 'off. Components should be torqued in place within 15 minutes. The use of a locating dowel is recommended during assembly, to prevent smearing the material off location.

Loctite 18718 gasket material or equivalent should be applied in a continuous bead approximately 3 mm (.120 inch.) in diameter. All mounting holes must be circled. For corner sealing, a 3.17 or 6.35 mm (1/8 or 1/4 inch.) drop is placed in the center of the gasket contact area. Uncured sealant may be removed with a shop towels. Components should be torqued in place while the sealant is still wet to the touch (within 10 minutes). The usage of a locating dowel is recommended during assembly to prevent smearing of material off location.

MOPAR TORQUE CURE GASKET MAKER

Mopar torque cure gasket maker is a unique anaerobic type gasket material to be used ONLY between the bedplate and engine block. The material cures in the absence of air when. torqued between two metallic surfaces. It will not cure if left in the uncovered tube. This anaerobic material is specially made to seal the area between the bedplate and cylinder block without disturbing the bearing' clearance or alignment of these components.

SPECIAL TOOLS

11300060217

Tool	Tool number and name	Supersession	Application
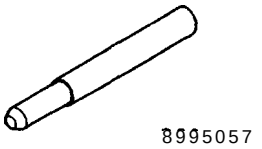 8995057	MB995057 Removal crankshaft damper/sprocket	6827-A	Removal of crankshaft dampe and crankshaft sprocket.
	MB995055 Removal puller damper	1026	Removal of crankshaft damper.
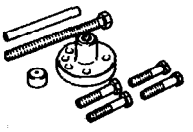	MB995035 Installer crankshaft damper/sprocket	C-4685-C	Installation of crankshaft damper and crankshaft sprocket.
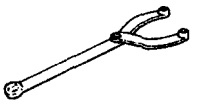	MB990767 End yoke holder	MB990767-01	Holding camshaft sprocket when loosening or torquing bolt.
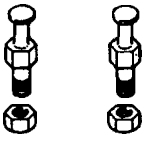	MD998719 Pin (2)		
	MB995026 Installer crankshaft sprocket	6792	Installation of crankshaft sprocket.
	MB995027 Installer crankshaft sprocket	6793	
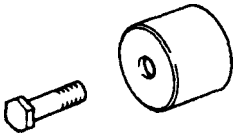	MD998713 Installer camshaft oil seal		Installation of crankshaft seal.
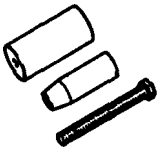	MB995022 Installer crankshaft seal	6780-1	

Tool	Tool number and name	Supersession	Application
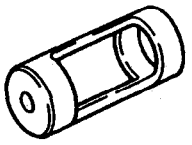	MB995021 Compressor valve spring adapter	6779	Compression of valve spring.
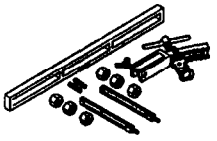	MD998772 Compressor valve spring	MD998772-A	
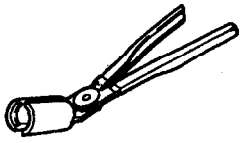	MB995037 Remover/ installer valve stem seal	C-4745	Removal of valve stem seal.
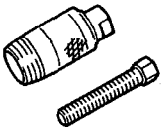	MB995020 Remover crankshaft seal	6771	Removal of crankshaft seal.
 B995059	MB995059	6926-1	Installation of crankshaft oil seal
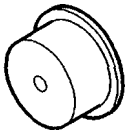 8995060	MB995060	6926-2	

GENERATOR

11301820012

REMOVAL

(1) Remove drive belt.
(2) Remove generator.
(3) Remove generator brace.
(4) Remove bracket.

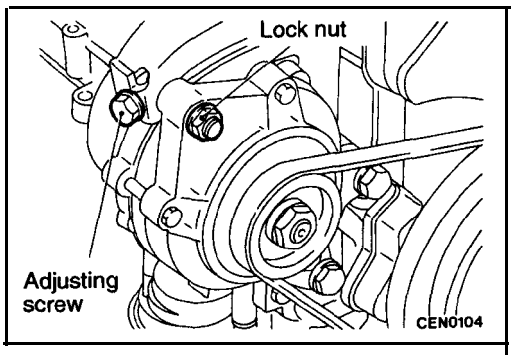

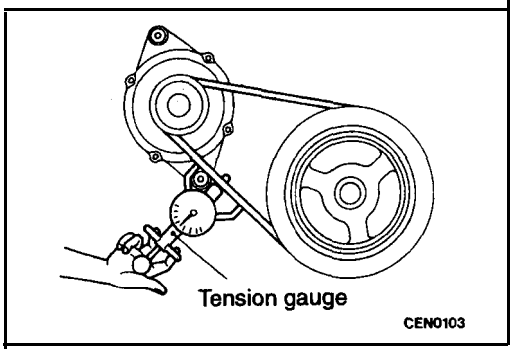

INSTALLATION

11301830015

(1) Install bracket.
(2) Install generator brace.
(3) Install generator.
(4) Install drive belt.
(5) Loosen the generator pivot nut.
(6) Loosen the lock nut.

(7) Turn the adjusting screw to adjust the belt tension to the standard value.

NOTE
When installing a new belt, apply 310 N (70 lbs.) of tension for 5 minutes or more, and then apply the final tension.

Standard value:
Used belt 400–490 N (90–110 lbs.)
New belt 490–712 N (110–160 lbs.)

(8) Tighten the generator pivot nut.

Tightening torque: 54 Nm (39 ft.lbs.)

(9) Tighten the lock nut.

Tightening torque: 61 Nm (44 ft.lbs.)

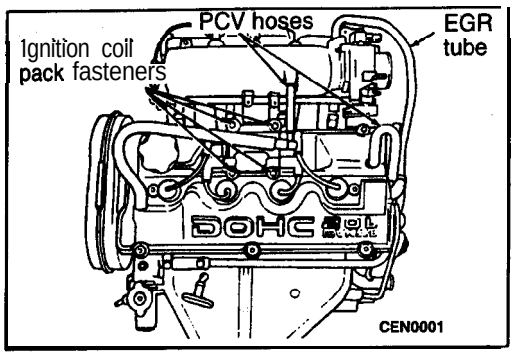

IGNITION SYSTEM

11301840018

REMOVAL

The electronic ignition coil pack attaches to the cylinder head cover.

(1) Disconnect electrical connector from coil pack.
(2) Remove coil pack mounting nuts.
(3) Remove coil.

(4) Remove spark plug cables.

(5) 'Remove the spark plug using a **quality** socket with 'a rubber or foam insert.
(6) Inspect the spark plug condition.. Refer to Spark Plug Condition in this section.

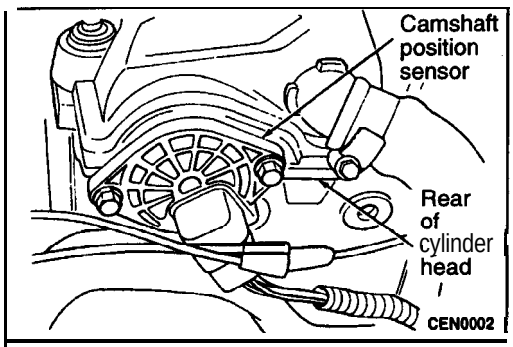

(7) Remove camshaft position sensor mounting screws on the rear of the cylinder head.
Remove sensor.

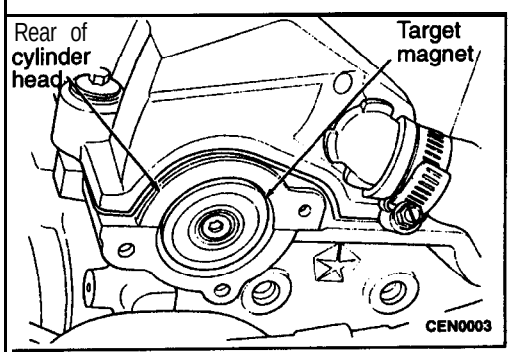

(8) Loosen screw attaching target magnet to rear of camshaft.

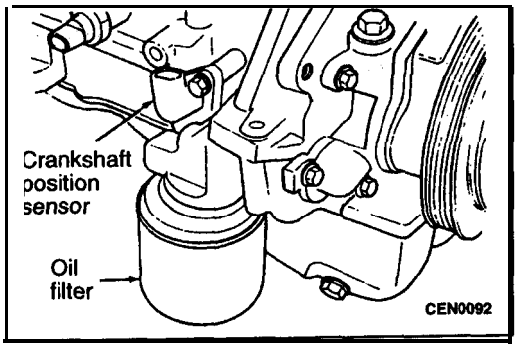

(9) Remove crankshaft position sensor mounting screw. Remove sensor

INSTALLATION

11301850011

(1) Install crankshaft position sensor.

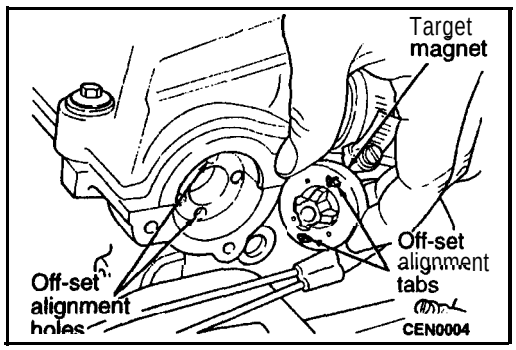

(2) The target magnet has locating dowels that fit into off-set machined locating holes in end of the camshaft. install target magnet in end of camshaft. Tighten mounting screw to 3 Nm (2.2 **ft.lbs.)** torque.
(3) Install camshaft position sensor. Tighten sensor mounting screws to 9 Nm (6.5 **ft.lbs.)** torque.

(4) To avoid cross threading, **start** the spark plug into the cylinder head by hand.
(5) Tighten spark plugs to 28 Nm (20 **ft.lbs.)** torque.
(6) Install spark plug insulators over spark plugs. Ensure the top of the spark plug insulator seals the upper end of the spark plug tube.

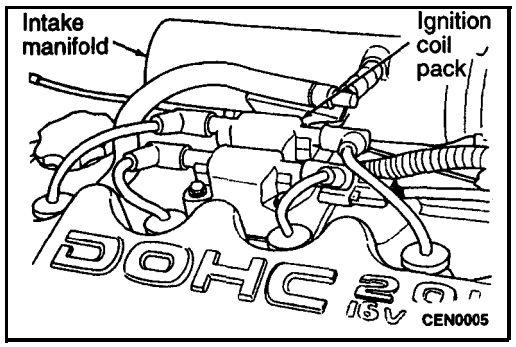

(7) Install ignition coil pack.
Connect spark plug cables to coil pack.
The coil pack towers are numbered with the cylinder identification.

INSPECTION

11300170019

SPARK PLUG CABLE

(1) Resistance must be between 3,000 to 12,000 ohms per foot of cable. Replace any cable not within tolerance.

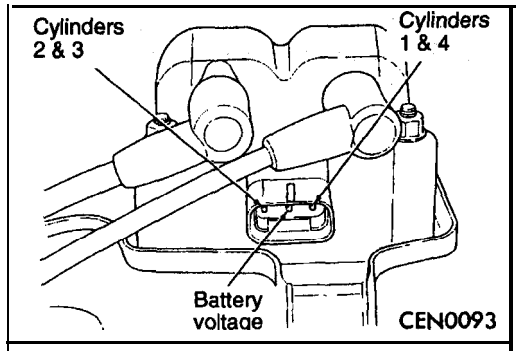

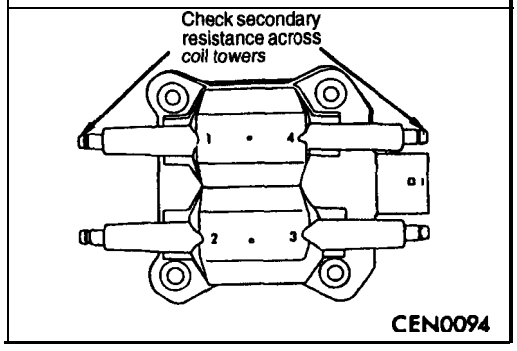

IGNITION COIL

(1) Measure the primary resistance of each coil. 'At the coil, connect an ohmmeter between the B + pin and the pin corresponding to the cylinders in question. Resistance on the primary side of each coil should be 0.51 –0.61 ohm. Replace the coil if resistance is not within tolerance.

(2) Remove ignition cables from the secondary towers of' the coil. Measure the secondary resistance of the coil between the towers of each individual coil. Secondary resistance should be 11,500–13,500 ohms. Replace the coil if resistance is not within tolerance.

TIMING BELT

11301860021

REMOVAL

Caution
Camshaft or crankshaft should not be rotate after timing belt is removed. Damage to valve components may occur. Always align timing marks before removing timlng belt.

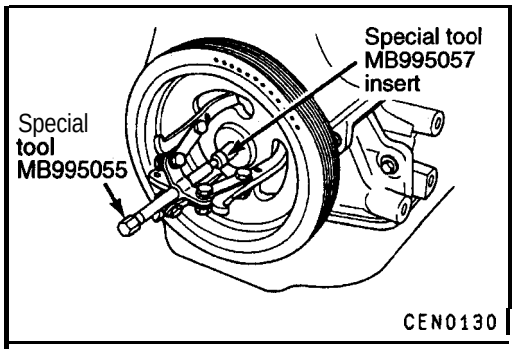

(1) Remove crankshaft damper bolt. Remove damper using Special Tool **MB995055** and insert **MB995057** or equivalent.

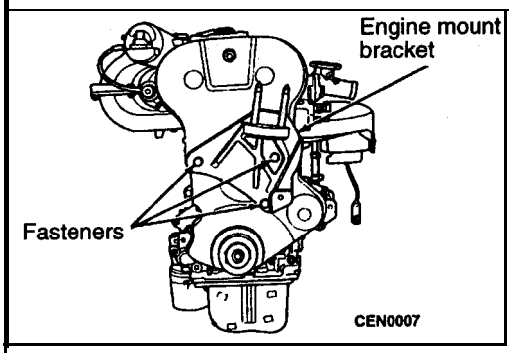

(2) Remove engine mount bracket.

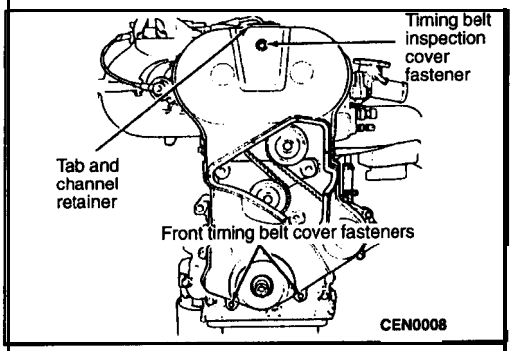

(3) Remove front half of timing belt cover.

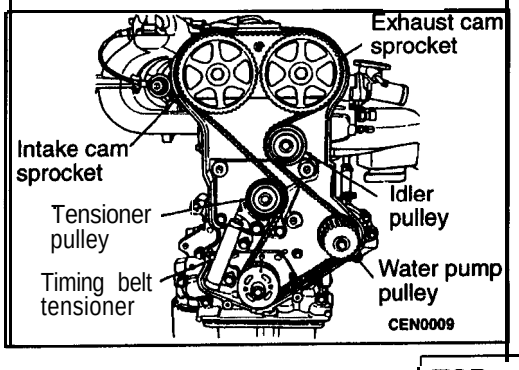

(4) Align timing marks. Loosen timing belt tensioner screws and remove timing belt.
(5) Remove tensioner pulley
(6) Remove timing belt tensioner.
(7) Remove tensioner arm bracket.
(8) Remove idler pulley.

TSB Revision

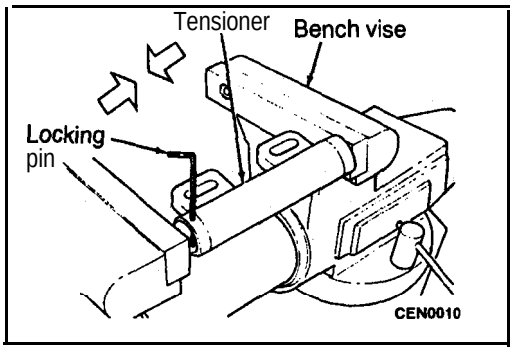

(9) When tensioner is removed from the engine, it is necessary to compress the plunger into the tensioner body.

(10) Place the tensioner into a vise and slowly compress the plunger.

Caution
Index the tensioner in the vise the same way it is installed on the engine. This is to ensure proper pin orientation when tensioner is installed on the engine.

(II) When plunger is compressed into the tensioner body install a pin through the body and plunger to retain plunger in place until tensioner is installed.

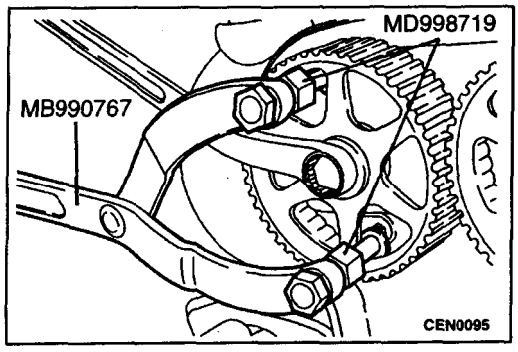

(12) Hold camshaft sprocket with Special Tools MB990767 and MD998719 while removing bolt.

(13) Remove support bracket.

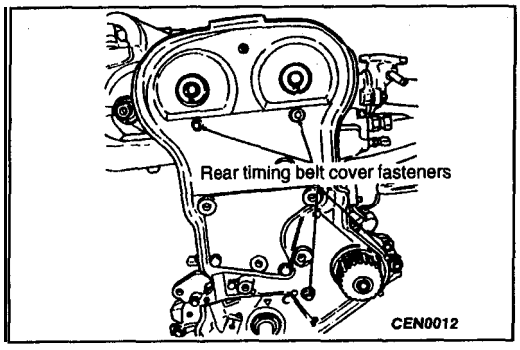

(14) Remove rear timing belt cover fasteners. Remove cover.

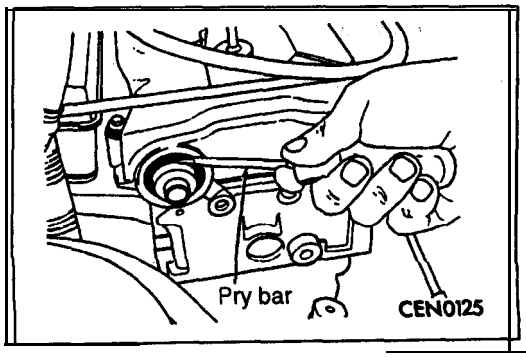

(15) Remove camshaft seal.

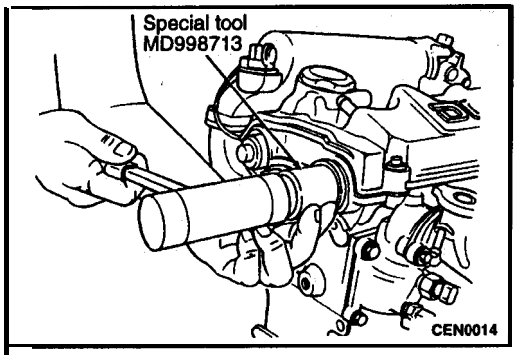

INSTALLATION

11301870017

(1) Install camshaft seal into cylinder head using **Special** Tool **MD998713** until flush with the head.

NOTE
Shaft seal lip surface must be free of varnish, **dirt or** nicks. Polish with 400 grit paper if necessary.

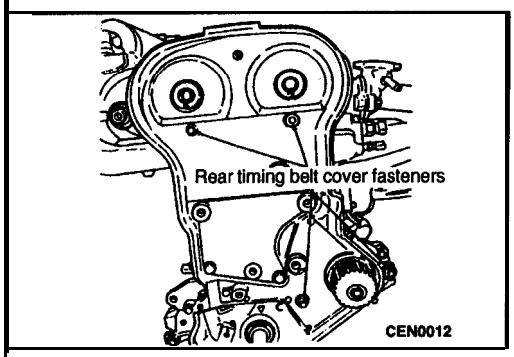

(2) Install rear timing belt cover.
Tighten fasteners to 9.6 Nm (6.9 **ft.lbs.).**
(3) Install support bracket.

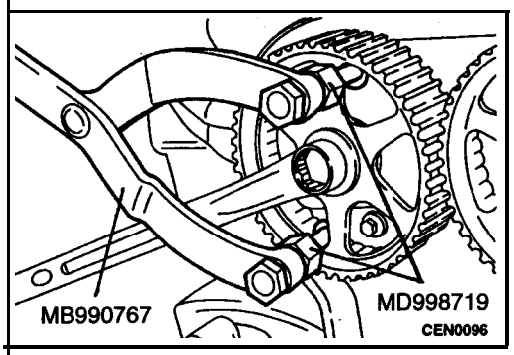

(4) Install camshaft sprockets and tighten attaching **bolts** to, 101 Nm (73 **ft.lbs.).**
(5) Install idler pulley.
(6) Install tensioner arm bracket.
(7) Install timing belt tensioner.
(8) Install tensioner pulley.

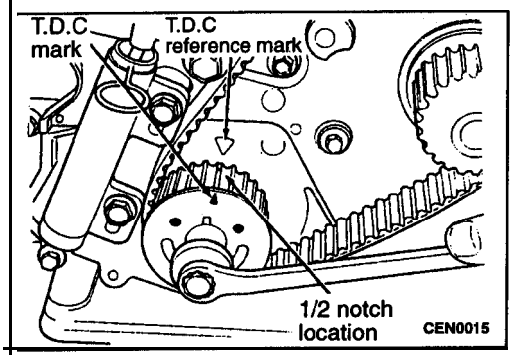

(9) Set crankshaft sprocket to TDC by aligning the sprocket with the arrow on the oil pump housing

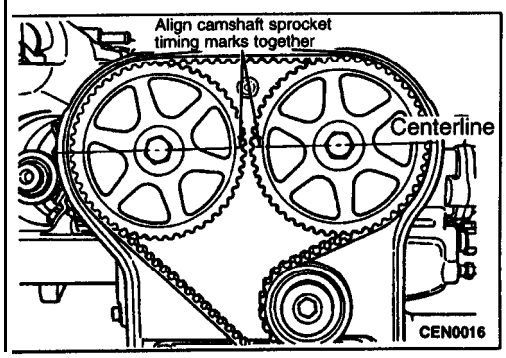

(IO)Set camshafts timing marks together by aligning **notches** on sprockets.
(Il)Move crankshaft to **1/2** notch before **TDC.**

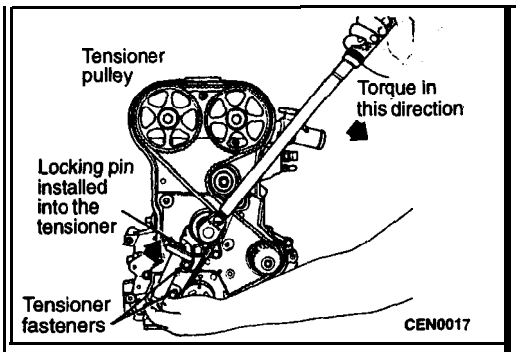

(12) **Install timing** belt. Starting at the crankshaft, go around the water pump sprocket, 'idler pulley, **camshaft sprockets** and then around the tensioner pulley.

(13) **Move** crankshaft sprocket to **TDC to take** up belt slack. Install tensioner to block but do not tighten fasteners.

(14) **Using** a torque wrench on the tensioner pulley, apply 28 Nm (20 **ft.lbs.)** of torque to tensioner.

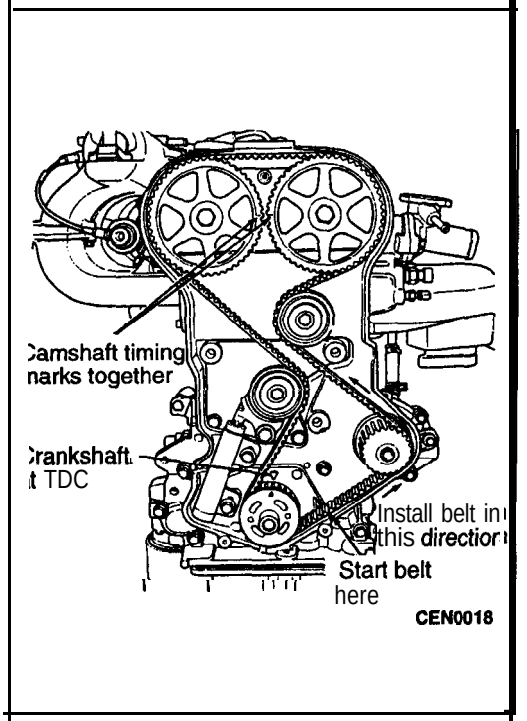

(15) **With** torque being applied to the tensioner pulley move the tensioner up against the tensioner pulley **bracket and** tighten fasteners to 31 Nm (22 **ft.lbs.).**

(16) **Pull** tensioner plunger pin, Pretension is correct when pin can be removed and installed.

(17) **Rotate** crankshaft 2 revolutions and check the alignment of the timing marks.

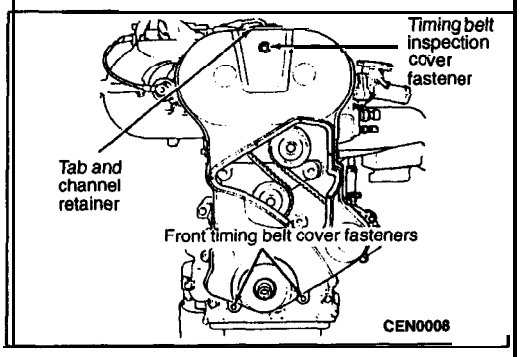

(18) **Install** front timing belt cover.

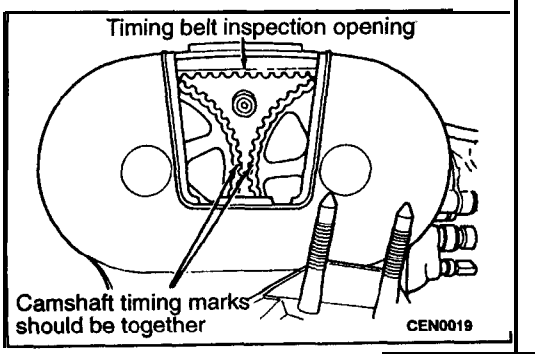

(19) **Valve** Timing Check; (timing belt cover installed), remove the inspection cover on timing belt cover. With number one cylinder at TDC, the timing marks on the camshaft sprocket should be aligned together. If marks are not aligned correctly, perform procedure again.

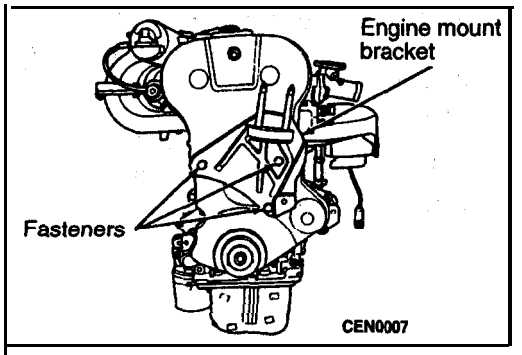

(20) Install engine mount bracket.
Tighten bolts to 41 Nm (30 ft.lbs.).

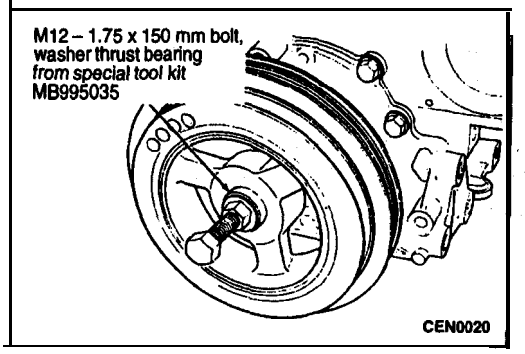

(21) Install crankshaft damper using MB995035.
Using Special Tools MB990767 and MD998719 to hold damper, tighten crankshaft bolt to 62 Nm (45 ft.lbs.).

COOLING SYSTEM COMPONENTS

11301880010

REMOVAL

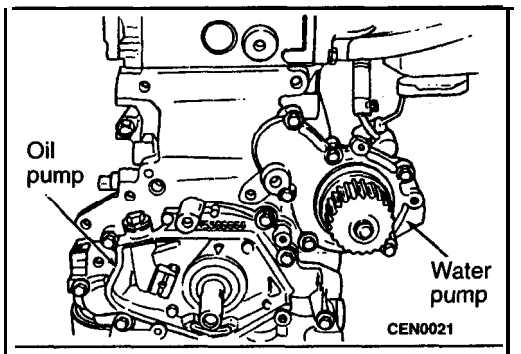

(1) Remove water pump attaching screws to engine.

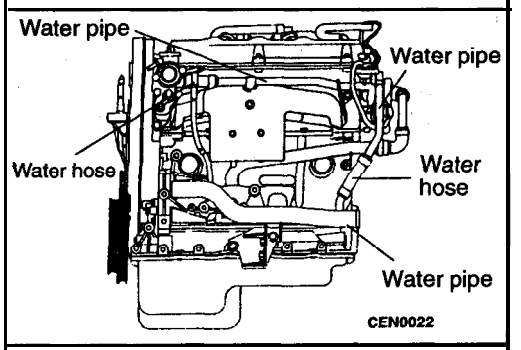

(2) Remove oil level gauge.
(3) Remove exhaust manifold cover.
(4) Remove water hose.
(5) Remove water pipe.
(6) Remove O-ring.

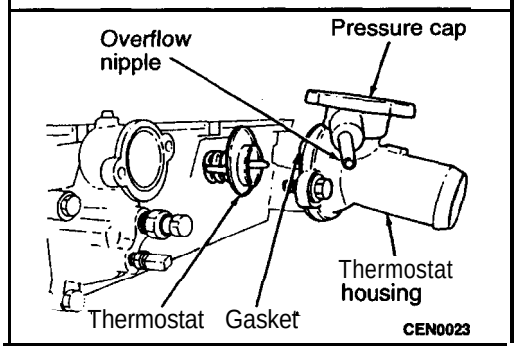

(7) Remove thermostat housing bolts and housing.
(8) Remove thermostat, discard gasket and clean both gasket sealing surfaces.

(9) Remove engine coolant temperature sensor.
(10) Remove thermo switch.

INSTALLATION

11301900013

(1) Install thermo switch.
(2) Install engine coolant temperature sensor. lighten sensor to 7 Nm (5 ft.lbs.) torque.

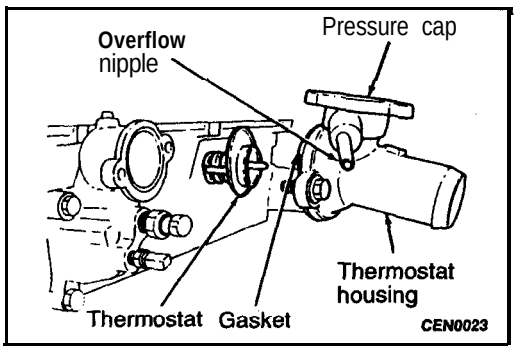

(3) Place a new gasket (dipped in clean water) on water box surface, center thermostat in water box on gasket. Place housing over gasket and thermostat; making sure thermostat is in the thermostat housing. Bolt housing to water box. Tighten bolts to 22 Nm (16 ft.lbs.).

(4) Install O-ring.
(5) Install water pipe.
(6) Install water hose.
(7) Install exhaust manifold cover:
(8) Install oil level gauge.

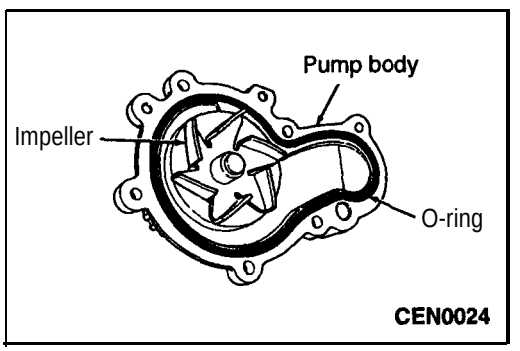

(9) Install new O-ring gasket in water pump body O-ring groove.

Caution
Make sure O-ring is properly seated in water pump groove before tightening screws. An improperly located O-ring may cause damage to the O-ring and cause a coolant leak.

(10) Assemble pump body to block and tighten screws to 12 Nm (9 ft.lbs.)
(ll) Rotate pump by hand to check for freedom of movement.

INSPECTION

11301890013

Replace water pump body assembly if it has any of these defects:
(1) Cracks or damage on the body.
(2) Coolant leaks from the shaft seal, evident by coolant traces on the pump body.
(3) Loose or rough turning bearing.
(4) Impeller rubs either the pump body or the engine block.
(5) Impeller loose or damaged.
(6) Sprocket or sprocket flange loose or damaged.

FUEL AND EMISSION CONTROL PARTS

11301910016

REMOVAL

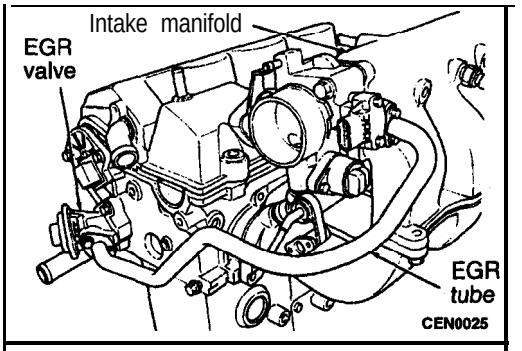

(1) Remove screws attaching EGR tube to intake manifold.

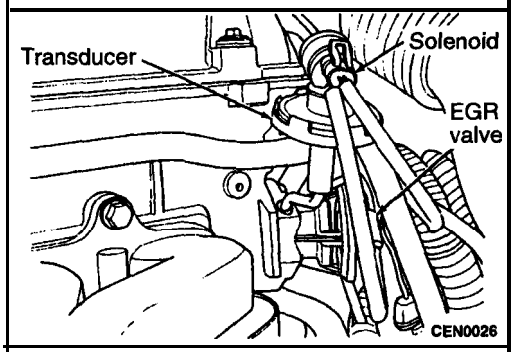

(2) Remove EGR valve mounting screws. Remove EGR valve and transducer.

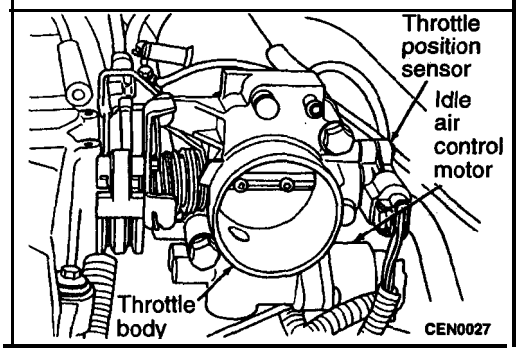

(3) Disconnect purge hose from throttle. body.
(4) Remove throttle body mounting bolts. Remove throffle body.
(5) Remove gaskets. Clean gasket mating surfaces.
(6) Release fuel system pressure. Refer to Fuel. System Pressure Release procedure in this section..

(7) Remove fuel rail mounting screws. Access screws through the space between the intake manifold plenum runners.

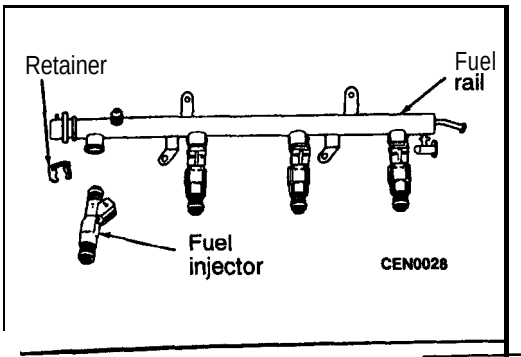

(8) Lift rail off of intake manifold. Cover the fuel injector openings in the intake manifold.
(9) Remove fuel injector retainer.
(10) Pull injector out of fuel rail. Replace fuel injector O-rings.

INSTALLATION

11301920019

(1) Apply a light coating of clean engine,, oil to the upper O-ring.
(2) Install injector in cup on fuel rail.
(3) Install retaining clip.
(4) Apply a light coating of clean engine oil to 'the -O-ring on the nozzle end of each injector.
(5) Insert fuel injector nozzle into openings in intake manifold. Seat the injectors in place. Tighten fuel rail mounting screws.
(6) Connect fuel supply tube to fuel rail.
(7) Install throttle body and new gasket on intake manifold. Tighten mounting bolts.

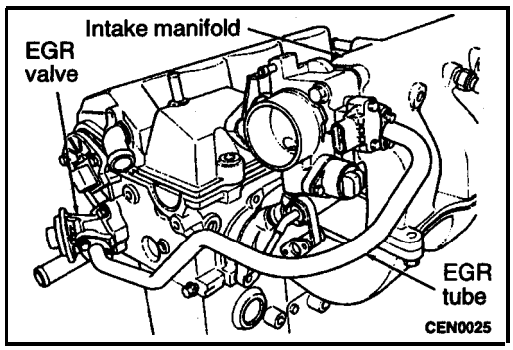

(8) Connect purge hose nipple on throttle body.
(9) Loosely install EGR valve with a new gasket. Install new gasket between EGR tube and EGR valve.
(lO)Finger tighten EGR tube fasteners.
(ll)Tighten EGR valve mounting screws to 22 Nm (16 ft.lbs.) torque.
(12)Tighten EGR tube fasteners to 11 Nm (8 ft.lbs.) torque.
(13)Connect vacuum supply tube to solenoid.;

TSB Revision

INTAKE MANIFOLD

11301930012

REMOVAL

(1) Remove intake air temperature sensor.

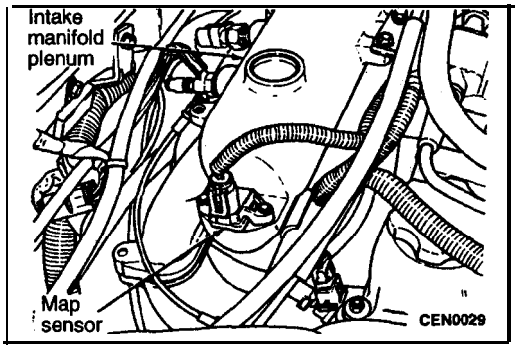

(2) Remove manifold absolute pressure (MAP) sensor mounting screws.
(3) Remove manifold absolute pressure (MAP) sensor.

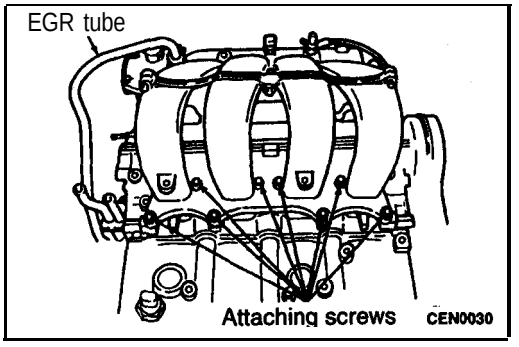

(4) Remove intake manifold stay.
(5) Remove EGR tube fasteners from the intake manifold and valve. Remove tube from engine.
(6) Remove vacuum hose and electrical connection from intake manifold.
(7) Remove attaching screws from engine and remove intake manifold from engine.

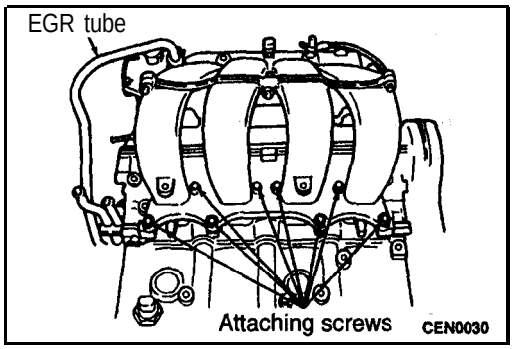

INSTALLATION

11661966616

(1) Install new manifold gasket. DO NOT APPLY SEALER.
(2) Set manifold in place. Tighten retaining fasteners, starting at center and progressing outward in both directions to 23 Nm (17 ft.lbs.). Repeat this procedure until all fasteners are at specified torque.

(3) Install vacuum hose and electrical' connection from intake manifold.
(4) Install new EGR tube gaskets at the intake manifold and valve.
(5) Install EGR tube and tighten fasteners to 8 Nm (6 ft.lbs.).
(6) Install intake manifold stay.

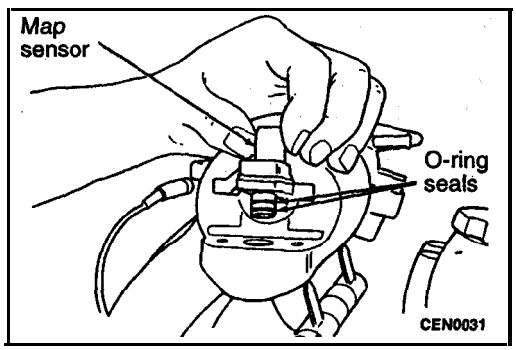

(7) Insert sensor into intake manifold while making sure not to damage O-ring seals.
(8) Tighten mounting screws to 2 Nm (1.4 ft.lbs.) torque.

(9) Install manifold air temperature sensor. Tighten sensor to 7 Nm (5 ft.lbs.) torque.

CLEANING AND INSPECTION

11301940015

(1) Discard gasket and clean gasket surfaces of manifold.
(2) Test manifold gasket surfaces for flatness with straight edge. Surface must be flat within 0.15 mm per 300 mm of manifold length.
(3) Inspect manifold for cracks or distortion. Replace manifold if necessary.

EXHAUST MANIFOLD

11301960011

REMOVAL

(1) Remove oil level gauge.
(2) Remove exhaust manifold. heat shield,.
(3) Remove 8 exhaust manifold retaining fasteners and remove exhaust manifold.

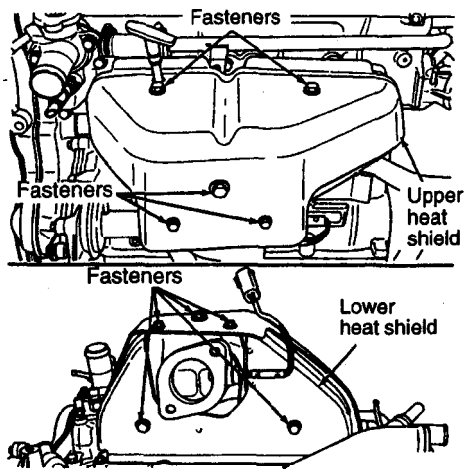

CEN0032

INSTALLATION

11301980017

(1) Install new manifold gasket. DO NOT APPLY-SEALER.
(2) Set exhaust manifold in place. Tighten retaining nuts and bolt, starting at center and progressing outward in both directions to 23 Nm (17 ft.lbs.) torque. Repeat this procedure until all fasteners are at specified torque.
(3) Install exhaust manifold heat shield, ,
(4) Install oil level gauge.

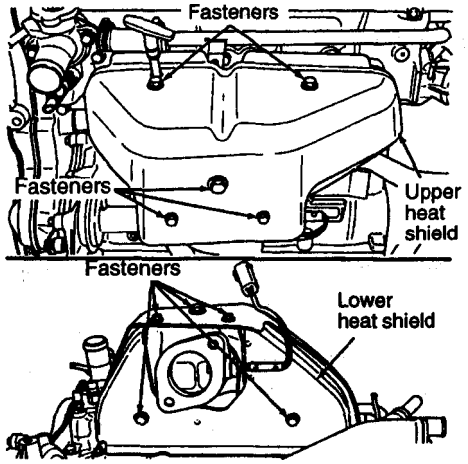

CEN0032

CLEANING AND INSPECTION

11301970014

(1) Discard gasket and clean all gasket surfaces of manifolds and cylinder head.
(2) Test manifold gasket surfaces for flatness with straight edge. Surface must be flat within 0.15 mm per 300 mm (.006 in. per foot) of manifold length.
(3) Inspect manifolds for cracks or distortion. Replace manifold if necessary.

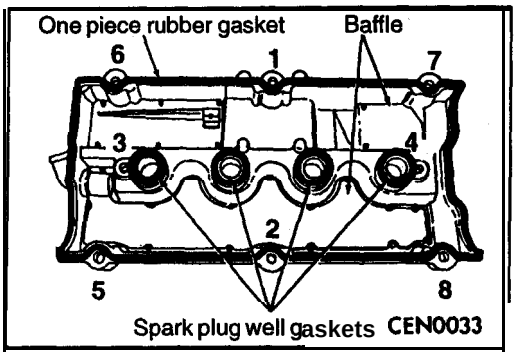

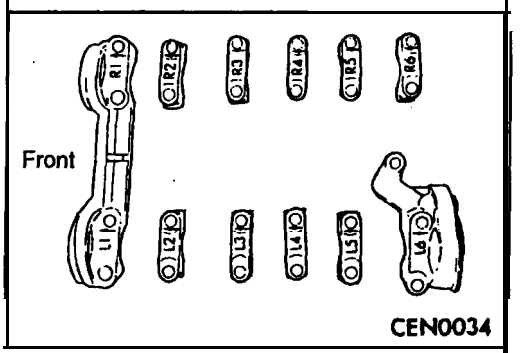

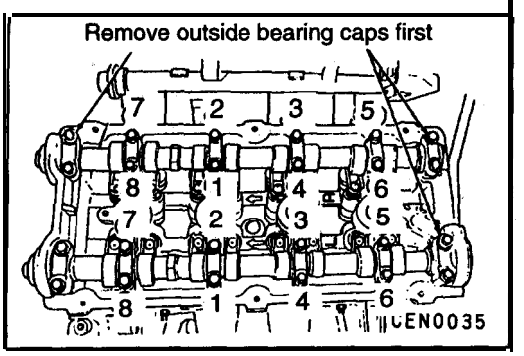

CAMSHAFT AND CAM FOLLOWER

11301990010

REMOVAL

(1) Remove the cylinder head cover fasteners.
(2) Remove cylinder head cover from cylinder head.

(3) Bearing caps are identified for location. Remove the outside bearing caps first.

(4) Loosen the camshaft bearing cap attaching fasteners in sequence shown in one camshaft at a time.

Caution
Camshafts are not interchangeable. The exhaust cam number 6 bearing journal is wider.

(5) Identify the camshafts before removing from the head. The cams are not interchangeable.
(6) Remove cam follower assemblies from cylinder head. Keep the cam followers in the order they have been removed from the head for reassembly.
(7) Mark hydraulic lash adjusters for reassembly in their original positions.
Lash adjusters are serviced as an assembly.

CLEANING

11302000019

Before installation, clean cylinder head and cover mating surfaces. Make certain the rails are flat.

INSTALLATION

11302020015

(1) Install hydraulic lash adjuster assembly making. sure that adjusters are at least partially full of oil. This is indicated by little or no plunger travel when the lash adjuster is depressed.

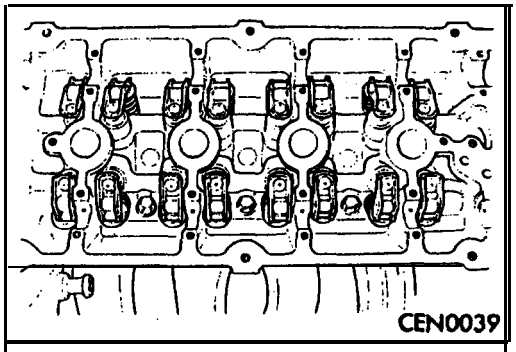

(2) Lubricate with clean oil and install cam follower assemblies in their original position on the hydraulic adjuster and valve stem.

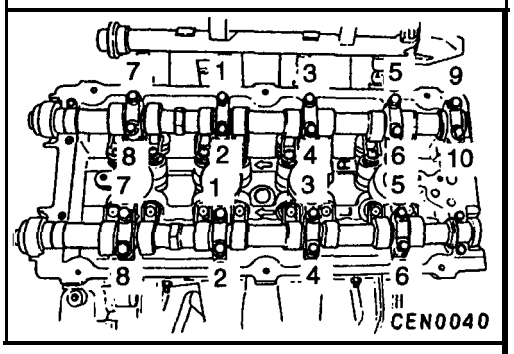

Caution
Piston should NOT be at top dead center when installing the camshaft.

(3) Lubricate bearing journals and cams with clean oil and install the camshafts. Install right and left camshaft bearing caps No. 2 thru No. 5 and right No.6. Tighten M6 fasteners to 12 Nm (9 ft.lbs.) in sequence shown in the figure.

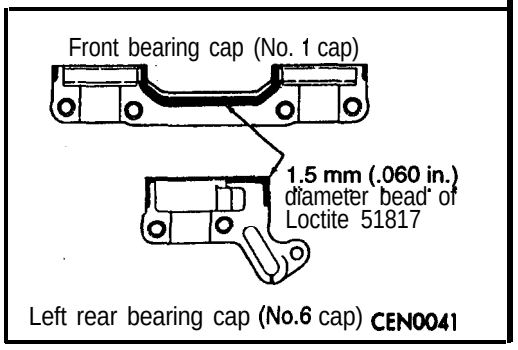

(4) Apply Loctite 51817 to No. 1 and No. 6 bearing caps. Install bearing caps and tighten M8 fasteners to 28 Nm (21 ft.lbs.).
(5) Bearing end caps must be installed before seals can be installed.
(6) Install timing belt, sprockets and timing covers. Refer to “Timing belt”.

Caution
Do not allow oil or solvents to contact the timing belt as they can deteriorate the rubber and cause tooth skipping.

(7) Install new cylinder head cover gaskets.
(8) Apply Loctite 18718 at the camshaft cap corners and at the top edge of the 1/2 round seal.

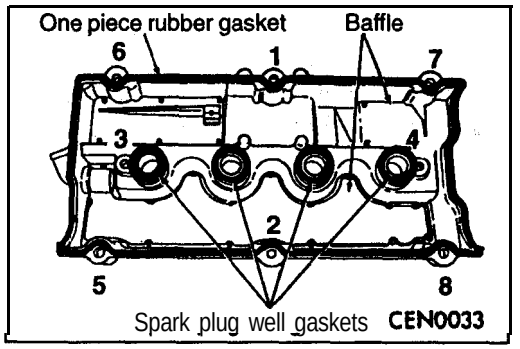

(9) Install cylinder head cover assembly to head and tighten fasteners in sequence shown in the figure. Using the 3 step torque method:

Step 1 Tighten all fasteners to 4.5 Nm (3.3 ft.lbs.)
Step 2 Tighten all fasteners to 9.0 Nm (6.5 ft.lbs.)
Step 3 Tighten all fasteners to 12 Nm (9 ft.lbs.)

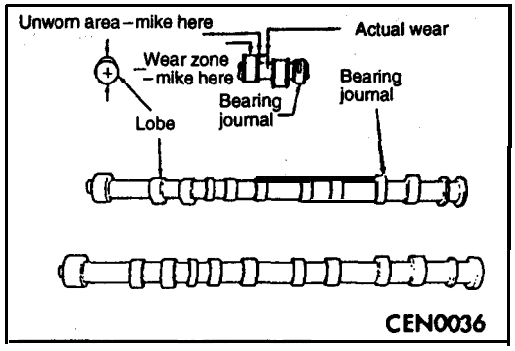

INSPECTION

11302010012

CAMSHAFT

(1) Inspect camshaft bearing journals for damage and binding.
If journals are binding, also check the cylinder head bearing surface for damage, and check the camshaft bearing oil feed holes in the cylinder head for clogging.

(2) Check the cam surface for abnormal wear and damage. Replace if defective. Also measure the cam height and replace if out of limit.

Standard value: 0.0254 mm (.001 in.)

Limit: 0.254 mm (.01 in.)

To measure cam lobe wear, measure lobe diameter in two places at the largest diameter (over the nose). Take first reading with micrometer in unworn area at the edge of the lobe. Take second reading in the worn area where cam follower contacts the lobe. Subtract second reading from the first. The difference is the cam lobe wear.

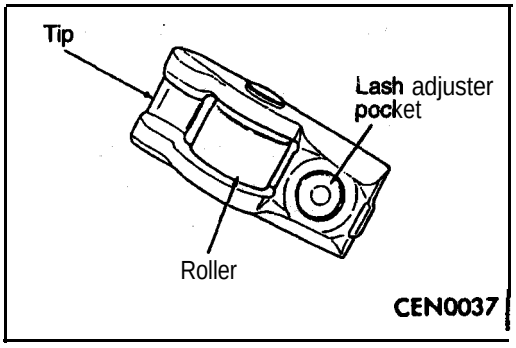

CAM FOLLOWER

(1) Inspect the cam follower assembly for wear or damage. Replace as necessary.

CAMSHAFT END PLAY

(1) Oil. camshaft journals and install camshaft without cam follower assemblies. Install rear cam caps and tighten screws to specified torque.

(2) Using a suitable tool, move camshaft as far rearward as it will go.

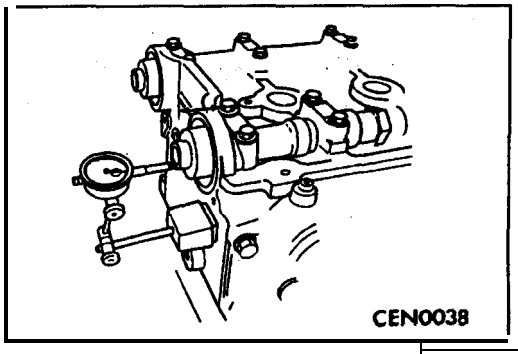

(3) Zero dial indicator.

(4) Move camshaft as far forward as it will go.

End play standard value: 0.15 mm (.006 in.)

CYLINDER HEAD AND V 11302030018

REMOVAL

(1) Remove cylinder head bolts.

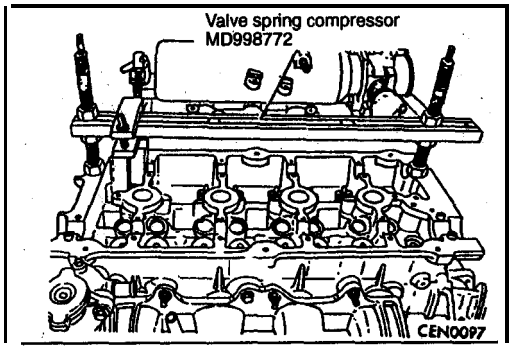

(2) With cylinder head removed, compress valve springs using Special Tool MD998772 or equivalent.

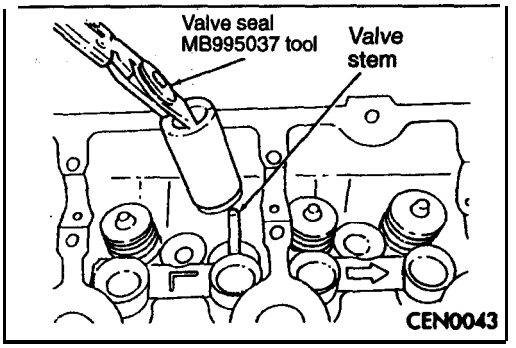

(3) Remove valve retaining locks, valve spring retainers and valve- spring.
(4) Remove valve stem seal/valve spring seat by using Special Tool MB995037 or equivalent.
(5) Before removing valves, remove any burrs from valve stem lock grooves to prevent damage to the valve guides. Identify valves to' insure installation in original location.

CLEANING 11302040011

CYLINDER HEAD

Caution
Be careful not to gouge or scratch the aluminum head sealing surface.

(1) Remove all gasket material from cylinder head and block.

VALVE ASSEMBLY

(1) Clean all valve guides, valves and valve spring assemblies thoroughly with suitable cleaning solution before reassembling.

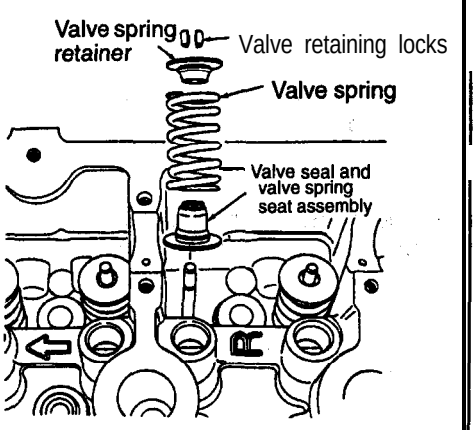

INSTALLATION

11302050014

(1) Coat valve stems with clean engine oil and insert them in cylinder head:

(2) If valves or seats have been reground,! check valve tip height (A).
Make sure of measurements from cylinder head surface to the top of valve stem.

(3) Install valve seal/spring seat assembly over valve guides on all valve stems. Ensure that the garter spring is intact around the top of the rubber seal. Install valve springs, valve retainers.

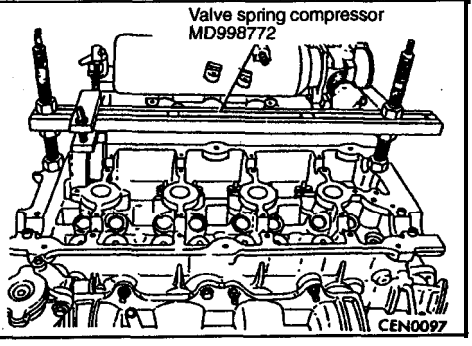

(4) Compress valve springs with a valve spring compressor. Install locks and release tool.

(5) Before installing the bolts, the threads should be oiled with clean engine oil.

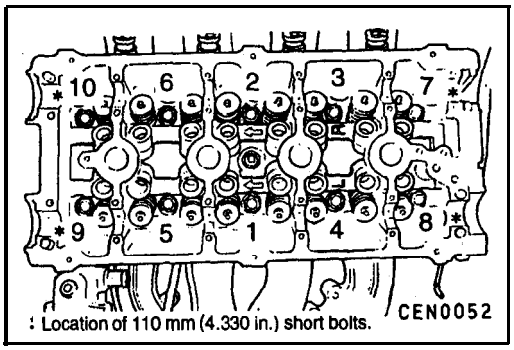

(6) Tighten the cylinder head bolts in the sequence shown in the figure.
Using the 4 step torque turn method, tighten according to the following values:

Step 1
Tighten center fasteners 1 thru 6 to 33 Nm (24 ft.lbs.), then outer fasteners 7 thru 10 to 26 Nm (20 ft.lbs.)

Step 2
Tighten center fasteners 1 thru 6 to 67. Nm (46 ft.lbs.), then outer fasteners' 7 thru 10 to 28 Nm (20 ft.lbs.).

Step 3
Tighten center fasteners 1 thru 6 to 67 Nm (46 ft.lbs.), then outer fasteners 7 thru 10 to 28 Nm (20 ft.lbs.).

Step 4
Turn all fasteners 1 thru 10 1/4 turn (90 degrees). Do not use a torque wrench for this step.

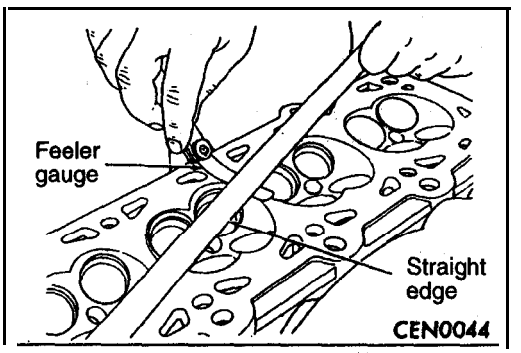

INSPECTION

11390790119

CYLINDER HEAD

(1) Check the cylinder head gasket surface for flatness by using a straightedge and feeler gauge.

Limit: 0.1 mm (.004 in.)

VALVE

(1) Clean valves thoroughly and discard burned, warped and cracked valves.
(2) Measure valve stems for wear.
(3) If valve stems are worn more than 0.05 mm (.002 in.), replace valve.

Standard value:
Intake 5.934–5.952 mm (.233 –.234 in.)
Exhaust 5.906–5.924 mm (.233–.233 in.)

VALVE GUIDES

(1) Remove carbon and varnish deposits from inside of valve guides with a reliable guide cleaner.

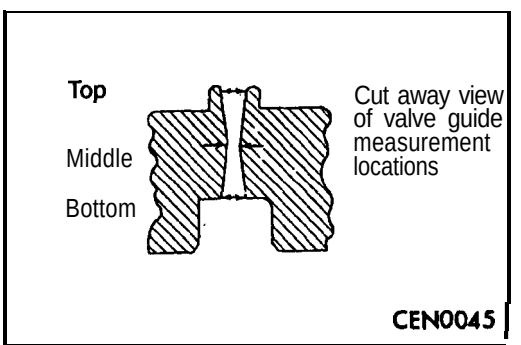

(2) Using a small hole gauge and a micrometer, measure valve guides in 3 places top, middle and bottom. Replace guides if they are not within specification.

Standard value:
Intake 0.048–0.066 mm (.0019 –.0026 in.)
Exhaust 0.074–0.094 mm (.0029–.0037 in.)

Limit:
Intake 0.076 mm (.003 in.)
Exhaust 0.101 mm (.004 in.)

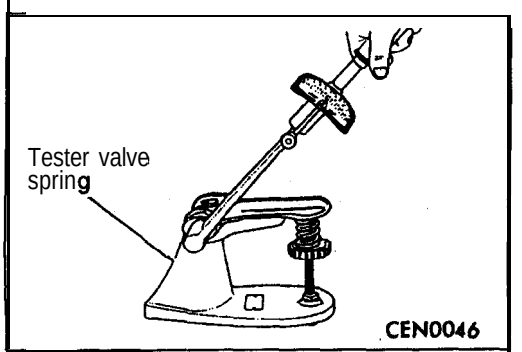

TESTING VALVE SPRINGS

(1) Whenever valves have been removed for inspection, reconditioning or replacement, valve springs should be tested. As an example, the compression length of the spring to be tested is 33.34 mm (1.313 in.).
Turn table of Tool until surface is in line with the 33.34 mm (1.313 in.) mark on the threaded stud and the zero mark on the front. Place spring over stud on the table and lift compressing lever to set tone device. Pull on torque wrench until ping is heard. Take reading on torque

wrench at this instant. Multiply this reading by two. This will give the spring load at test length. Fractional measurements are indicated on the table for finer adjustments. Refer to specifications to obtain specified height and allowable tensions. Discard the springs that do not meet specifications.

Standard value:

Free length 46 mm (1.811 in.)

Spring tension

Valve closed 246–270 N/38.0 mm (50–60 lbs./1.496 in.)

Valve open 459-611 N/29.3 mm (123-137 lbs./1.153 in.)

(2) inspect each valve spring for squareness with a steel square and surface plate, test springs from both ends. If the spring is more than 1.5 mm (.06 in.) out of square, install a new spring.

REFACING VALVES AND VALVE SEATS

(1) The intake and exhaust valve seats and valve face have a 45 degree angle.

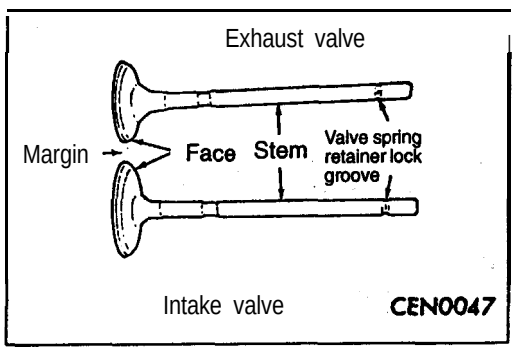

(2) Inspect the remaining margin after the valves are refaced. Exhaust valves with less than 0.95 mm (.0037 in.) margin and intake valves with less than 1.05 mm (.0413 in.) margin should be discarded and replaced.

Standard value:

Face Angle

Intake and Exhaust 45–45.5°

Head Diameter

Intake 34.67-34.93 mm (1.364–1.375 in.)

Exhaust 30.37–30.63 mm (1.195–1.205 in.)

Length (Overall)
Intake 111.49-111.99 mm (4.389-4.499 in.)
Exhaust 109.59–110.09 mm (4.314–4.334 in.)

Stem Diameter
Intake 5.934-5.952 mm (.233–.234 in.)
Exhaust 5.906–5.924 mm (.233–.233 in.)

Valve Margin
Intake 1.285-1.615 mm (.050–.063 in.)
Exhaust 0.985–1.315 mm (.038–.051 in.)

(3) When refacing valve seats, it is important that the correct size valve guide pilot be used for reseating stones. A true and complete surface must be obtained.

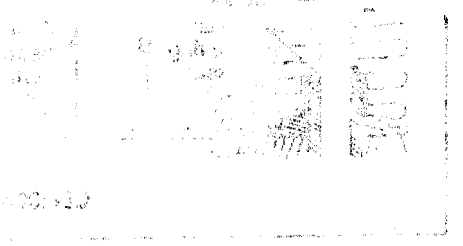

(4) Measure the concentricity of valve seat using a valve seat dial indicator. Circular runout should not exceed.

Limit:
0.05 mm (.002 in.) Indicator reading.

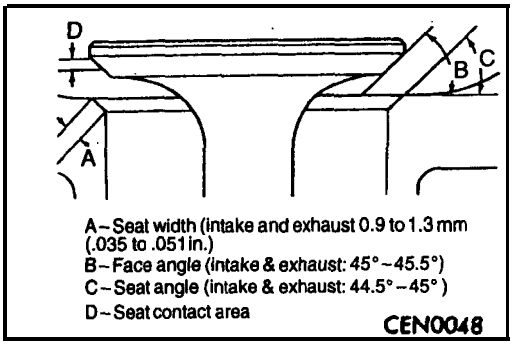

(5) Inspect the valve seat with Prussian blue to determine where the valve contacts the seat.
To do this, coat valve face LIGHTLY with Prussian blue then set valve in place. Rotate the valve with light pressure. If the blue is transferred to the center of valve face, contact is satisfactory. If the blue is transferred to top edge of the valve face, lower valve seat with a 15 degree stone. If the blue is transferred to the bottom edge of valve face raise valve seat with a 65 degree stone.

Intake valve seat diameter
34.50 mm (1.358 in.)

Exhaust valve seat diameter
29.50 mm (1.161 in.)

Valve seats which are worn or burned can be reworked if correct angle and seat width are maintained. Otherwise, cylinder head must be replaced.

(6) When seat is properly positioned, the width of intake and exhaust seats should be 0.9 to 1.3 mm (.035 to .051 in.).

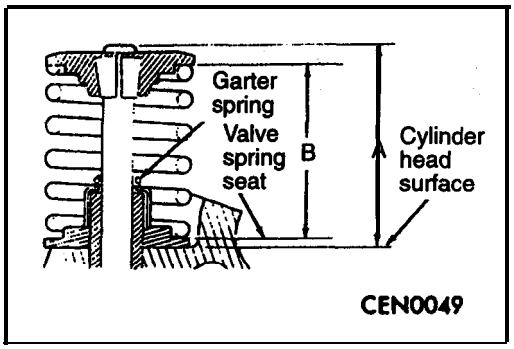

(7) Check valve tip to spring seat dimensions A after grinding the valve seats or faces. Grind valve tip until dimesion A is equal to 47.99 mm (1.889 in.) for exhaust valve and 48.04 mm (1.891 in.) for intake valve over spring seat when installed in the head.
The valve tip chamfer may need to be reground to prevent seal damage when the valve is installed.

(8) Check the valve spring installed height B after refacing the valve and seat. Make sure measurements are taken from top of spring seat to the bottom surface of spring retainer.
If height is greater than 38.00 mm (1.496 in.), install a 0.762 mm (.030 in.) spacer in head counterbore under the valve spring seat to bring spring height back within specification.

OIL PAN AND OIL PUMP

11302060017

REMOVAL

(1) Remove flywheel or drive plate:
(2) Remove rear plate.
(3) Remove oil filter.
(4) Remove adapter.

(5) Drain engine oil and remove oil pan.
(6) Clean oil pan and all gasket surfaces.
(7) Remove oil pick-up tube.

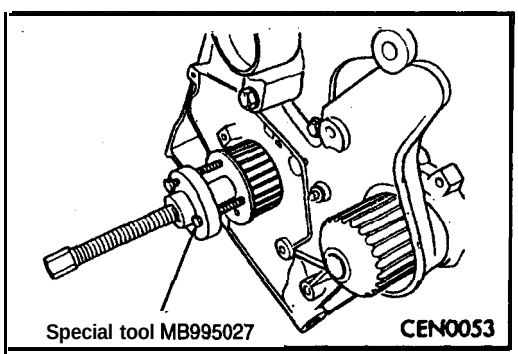

(8) Remove crankshaft sprocket using Special Tool, MB995027.

Caution
Do not nick shaft seal surface or seal bore.

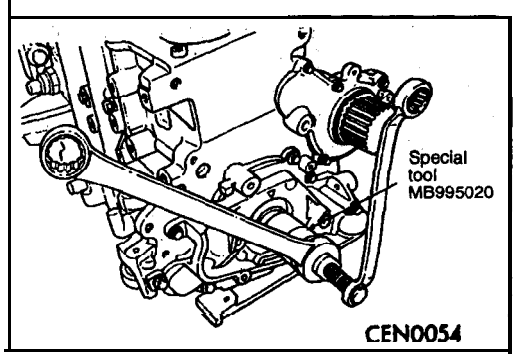

(9) Use Tool MB995020 to remove front, crankshaft oil seal. Be careful not damage the seal surface of cover.

(10) Remove oil pump.

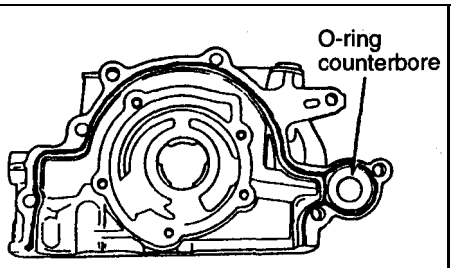

INSTALLATION

11302070010

(1) Apply Loctite 51817 to oil pump as shown in the figure. Install oil-ring into the counter bore on the oil pump body discharge passage.

(2) Install oil pump slowly onto crankshaft until seated to engine 'block. Tighten fasteners to 23 Nm (17 ft.lbs.).

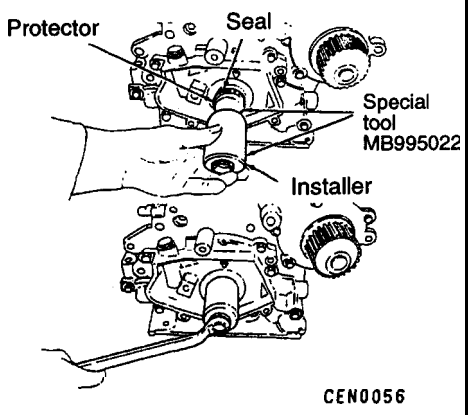

(3) Install new seal by using Tool MB995022.

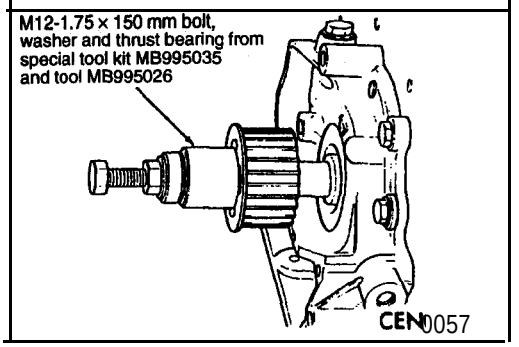

(4) Place seal into opening with seal spring toward the inside of engine. Install seal until flush with cover.

(5) Install crankshaft sprocket using M12-1.75 x 150 mm bolt, washer and thrust bearing from Special 'Tool Kii MB995035 and Tool MB995026.

(6) Install oil pick-up tube.

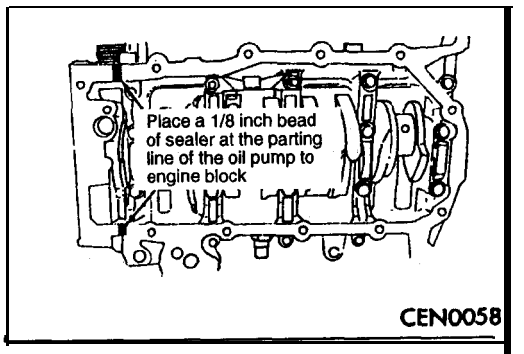

(7) Apply Loctite 18716 or equivalent at the oil pump to engine bed plate parting line.

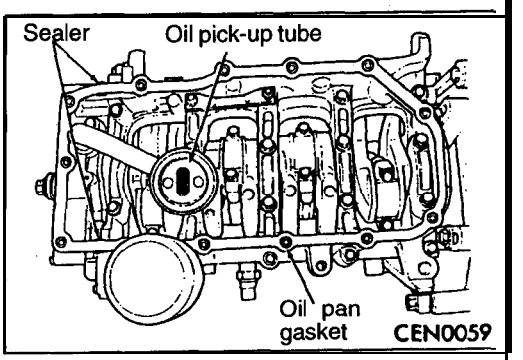

(8) Install the oil pan gasket to the bed plate. Use Mopar Silicone Rubber Adhesive Sealant or equivalent to hold in place.
(9) Install oil pan and tighten the screws to 12 Nm (9 ft.lbs.).

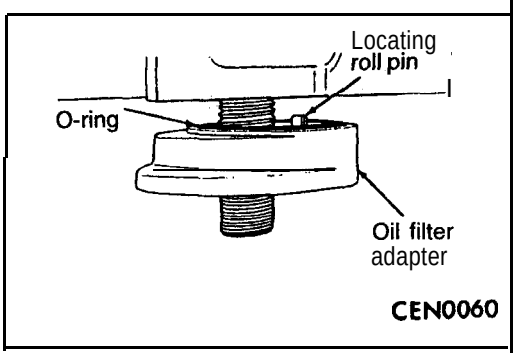

(IO) Ensure O-ring is in the groove on adapter. Align roll pin into engine block and tighten assembly to 55 Nm (40 ft.lbs.).

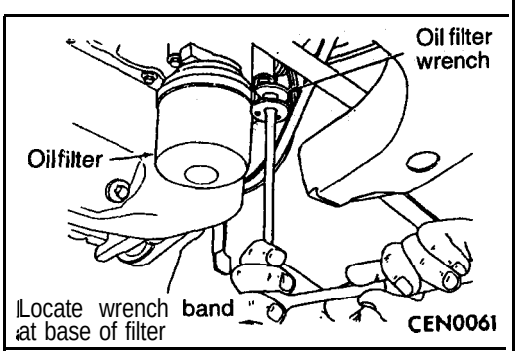

Caution
When servicing the oil filter avoid deforming the filter can by installing the remove/install tool band strap against the can-to-base lockseam. The lockseam joining the can to the base is reinforced by the base plate.

(11) Lubricate new filter gasket and install it on filter.
(12) Check filter mounting surface. The surface must be smooth, flat and free of debris or old pieces of rubber.
(13) Screw filter on until gasket contacts base. Tighten to 3/4 turn or Torque to 21 Nm (15 ft.lbs.).
(14) Install rear plate.
(15) Install flywheel or drive plate.

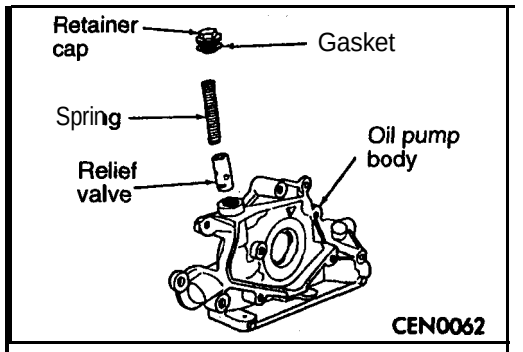

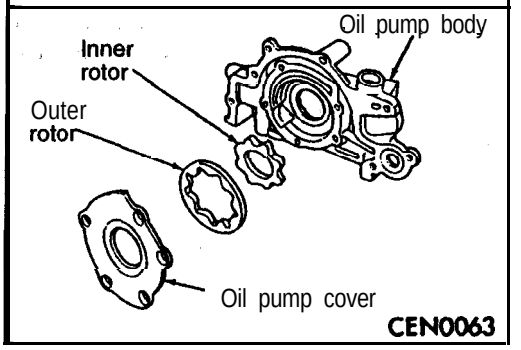

OIL PUMP

11302080013

DISASSEMBLY

(1) To remove the relief valve,' proceed as follows:
  (a) Remove the threaded plug and gasket from the oil pump.

  Caution
  Install oil pump pressure relief valve as shown in the figure, or serious damage may occur.

  (b) Remove spring and relief valve.
(2) Remove oil pump cover screws, and lift off cover.
(3) Remove pump rotors.

REASSEMBLY

11302090016

(1) Assemble pump, using new parts as required.
  Install the inner rotor with chamfer. facing the cast, iron oil pump cover.

(2) Tighten cover screws to 12 Nm (9 ft.lbs.).
(3) Install relief valve, spring, gasket and cap. Tighten cap to 54 Nm (39 ft.lbs.)
(4) Prime oil pump before installation by filling rotor cavity with engine oil.

INSPECTION

11302230012

(1) Wash all parts in a suitable solvent and inspect carefully for damage or wear.

(2) Mating surface of the oil pump should be smooth. Replace pump cover if scratched or grooved.

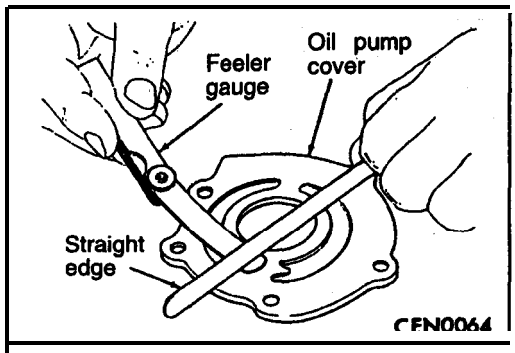

(3) Lay a straightedge across the pump cover surface. If a feeler gauge of 0.076 mm (.003 in.) or more can be inserted between cover and straightedge, cover should be replaced.

Limit: 0.076 mm (.003 in,)

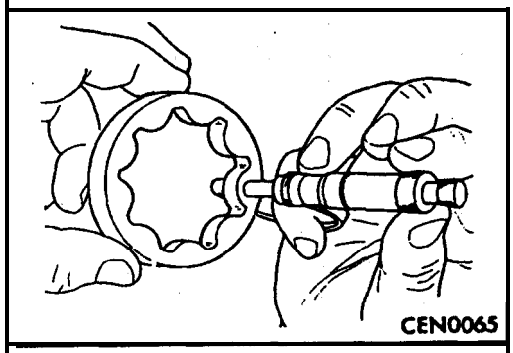

(4) Measure thickness and diameter of outer rotor. If outer rotor thickness measures 7.64 mm (.301 in.) or less, or if the diameter is 79.95 mm (3.148 in.) or less, replace outer rotor.

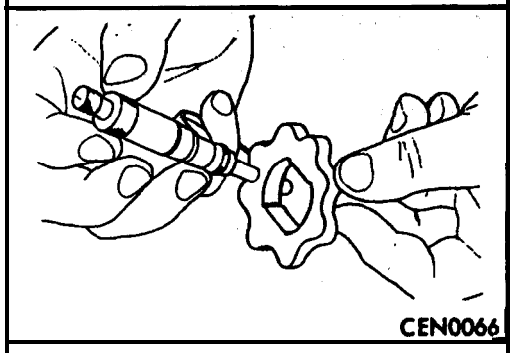

(5) If inner rotor measures limit or less, replace inner rotor.

Limit: 7.64 mm (.301 in.)

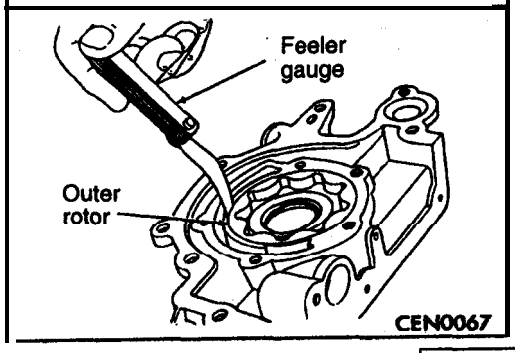

(6) Slide outer rotor into pump housing, press to one side with fingers and measure clearance between rotor and housing. If measurement exceeds the limit, replace housing only if outer rotor is in specification.

Limit: 0.39 mm (.015 in.)

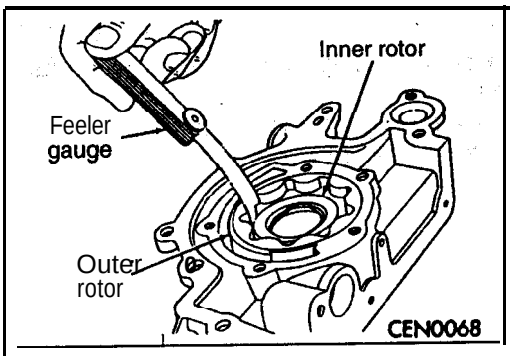

(7) Install inner rotor into pump housing. If clearance between inner and outer rotors exceeds the limit, replace both rotors.

Limit: 0.203 mm (.008 in.)

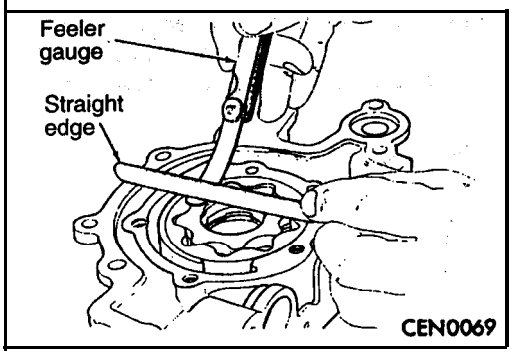

(8) Place a straightedge across the face of the pump housing, between bolt holes. If a feeler gauge of 0.102 mm (.004 in.) or more can be inserted between rotors and the straightedge, replace pump assembly.

Limit: 0.102 mm (.004 in.)

(9) Inspect oil pressure relief valve plunger for scoring-and. free operation in its bore. Small marks may. be removed, with 400-grit wet or dry sandpaper.

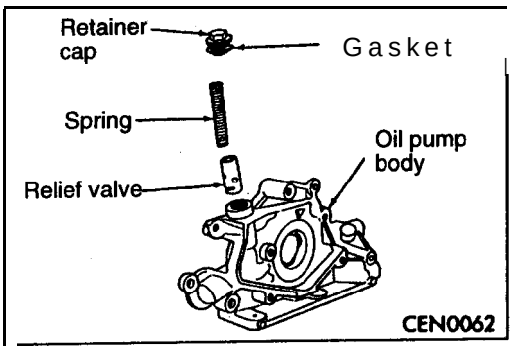

(10) The relief valve spring has a free length of approximately 60.7 mm (2.39 in.). It should test between 80 -and 84 N when compressed to 40.5 mm (1.60 in.). , Replace spring that fails to meet specifications.

(11) If oil pressure is low and pump is within specifications, inspect for worn engine bearings, or other reasons for oil pressure loss.

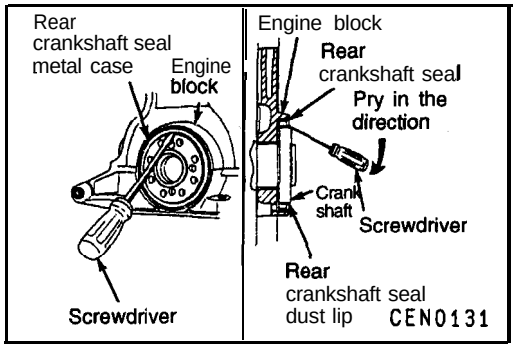

PISTON, CONNECTING ROD AND CYLINDER BLOCK

11302110026

REMOVAL

(1) insert a 3/16 flat bladed 'screwdriver between the dust lip and the metal case of the crankshaft seal. Angle the screwdriver through the dust lip against metal case of the seal. Pry out seal.

Caution
Do not permit the screwdriver blade to contact crankshaft seal surface. Contact of the screwdriver blade against crankshaft edge (chamfer) is permitted.

(2) Remove top ridge of cylinder bores with *a* reliable ridge reamer before removing pistons from cylinder block. Be sure to keep tops of pistons covered during this operation. Mark piston with matching cylinder number.

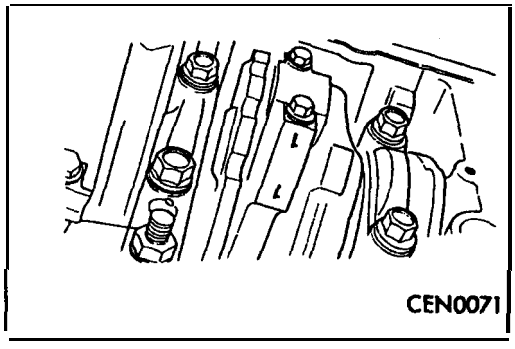

(3) Ensure connecting rods and connecting rod caps match and proper set for the cylinder number. Identify them if necessary.

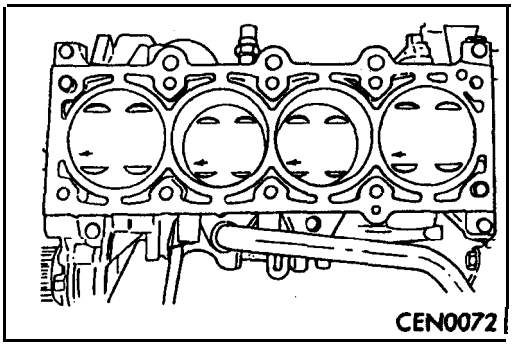

(4) Pistons and connecting rods must be removed from top of cylinder block. Rotate crankshaft so that each connecting rod is centered in cylinder bore.

(5) Remove connecting rod cap bolts. Push each piston and rod assembly out of cylinder bore. Be careful not to nick crankshaft journals.

(6) After removal, install bearing cap in the connecting orientation on the mating connecting *rod.*

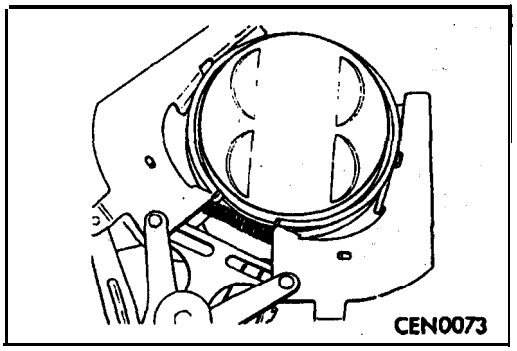

DISASSEMBLY

11302120012

(1) Separate piston from connecting rod by removing piston pin.
(2) Using a suitable ring expander,, remove upper and intermediate piston rings.

(3) Remove the upper oil ring side rail, lower oil ring side rail and then oil ring expander from piston.
(4) Clean ring grooves of any carbon deposits.

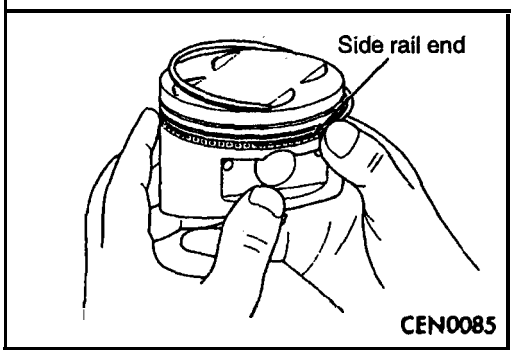

REASSEMBLY

11302140018

(1) Install rings with manufacturer's I.D. mark facing up, toward the top of the piston.

Caution
Install piston rings in the following order:

(a) Oil ring expander.
(b) Upper oil ring side rail.
(c) Lower oil ring side rail.
(d) No. 2 intermediate piston ring.
(e) No. 1 upper piston ring.

(2) Install the side rail by placing one end between the piston ring groove and the expander. Hold end firmly and press down the portion to be installed until side rail is in position. Do not use a piston ring expander.

(3) Install upper side rail first and then the lower side rail.

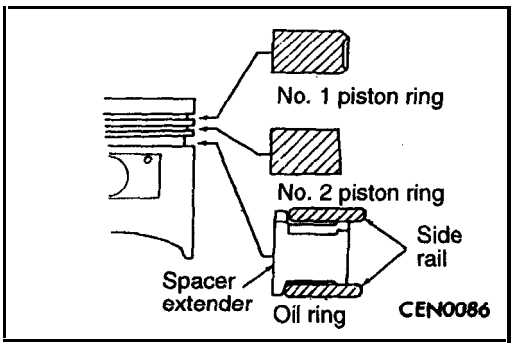

(4) Install No. 2 piston ring and then No. 1 piston ring.

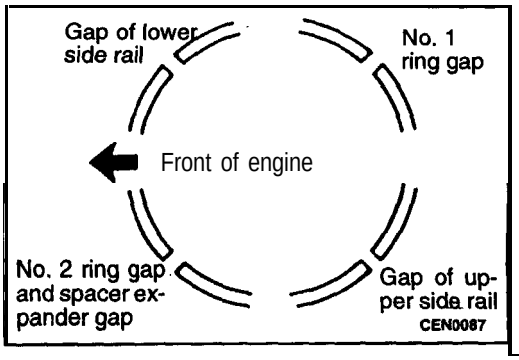

(5) Position piston ring end gaps as shown in the figure.

(6) Position oil ring expander gap at least 45 degrees from the side rail gaps but not on the piston pin canter or on the thrust direction. Staggering ring gap is important for oil control.

INSTALLATION

11302150028

(1) Before installing pistons and connecting rod assemblies into the bore, be sure that compression ring gaps are staggered so that neither is in line with oil ring rail gap.

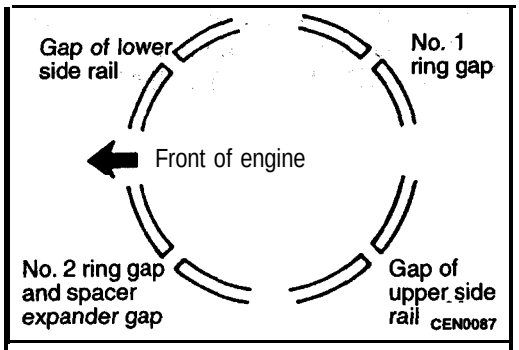

(2) Before installing the ring compressor, make sure the oil ring expander ends are butted and the rail gaps located as shown in the figure.

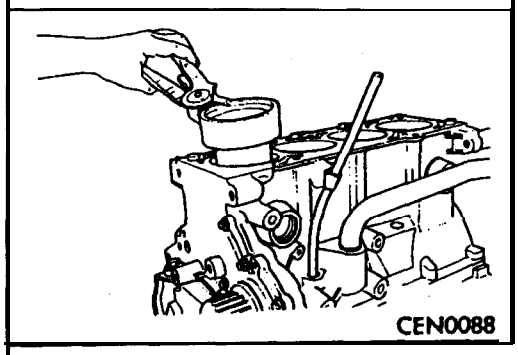

(3) Immerse the piston head and rings in clean engine oil, slide the ring compressor, over the piston. Be sure that position of rings does not change during this operation.

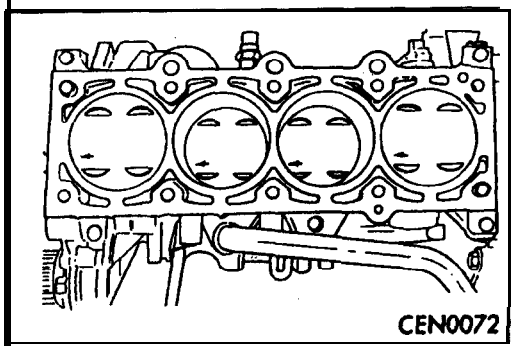

(4) The arrow should face toward the front of the engine. Install the pistons.

(5) Rotate crankshaft so that the connecting rod journal is on the center of the cylinder bore. Insert rod and piston assembly into cylinder bore and guide rod over the crankshaft journal.

(6) Tap the piston down in cylinder bore, using a hammer handle. At the same time, guide connecting rod into position on connecting rod journal.

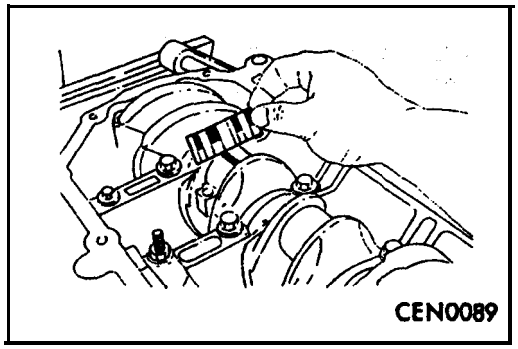

(7) Install connecting rod bearings selected based on the obtained connecting rod bearing clearance.
(Refer to CONNECTING ROD BEARING CLEARANCE.)

(8) Install each bolt finger tight then alternately torque each nut to. assemble the cap properly.
(9) Tighten the bolts to 27.0 Nm PLUS **1/4** turn (20 **ft.lbs.** PLUS **1/4** turn). Do not use a torque wrench for last step.

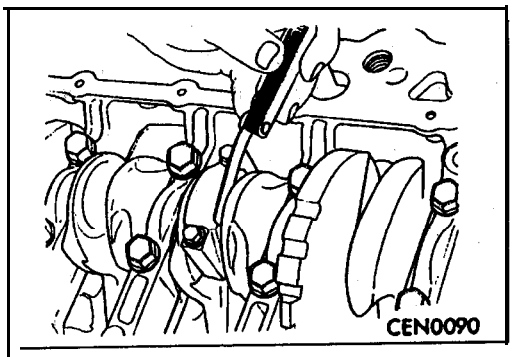

(lO) Using a feeler gauge, check connecting rod' side clear-' ance.

Standard value: 0.13–0.38 mm (.005–.015 in.)

Limit 0.37 mm (.015 in.)

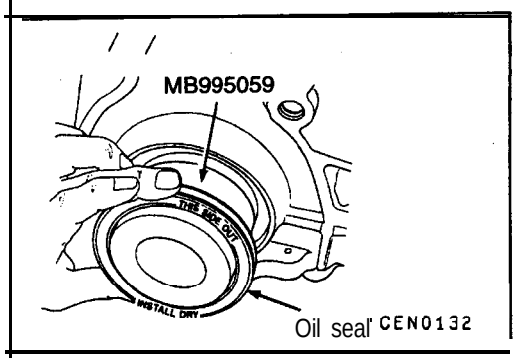

Caution
If burr'or scratch is present on the crankshaft edge (chamfer), cleanup with 400 grit sand paper to prevent seal damage during' installation of new' seal.

NOTE
When installing seal, no lube on seal is **needed.**

(11) Place Special Tool **MB995059** on crankshaft. This is a pilot tool with a magnetic base.
(12) Position seal over pilot tool. Make sure you can read the words THIS SIDE OUT on seal. Pilot tool should remain on crankshaft during installation of seal.

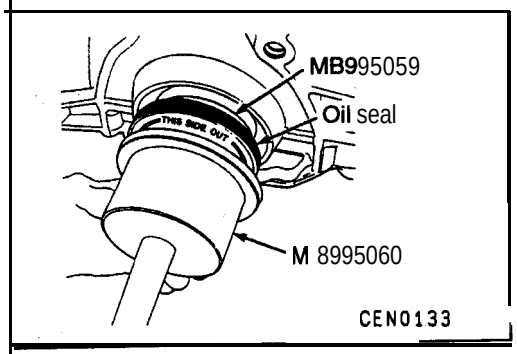

(13) Drive the seal into the block using Special Tool **MB995060** and handle **C-4171** until the tool bottoms out against the block.

Caution
If the seal is driven into the block past flush, this may cause an oil leak.

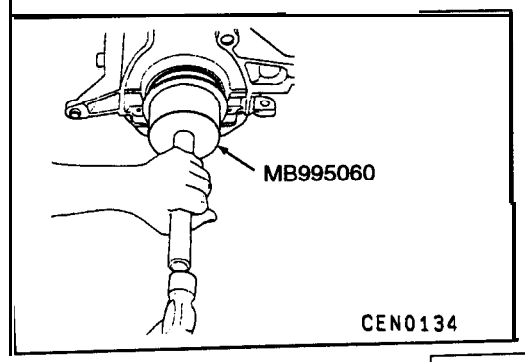

INSPECTION

11302130015

CYLINDER BLOCK

(1) Clean cylinder block thoroughly and check all core hole plugs for evidence of leaking.
(2) Examine block and cylinder bores for cracks or fractures.

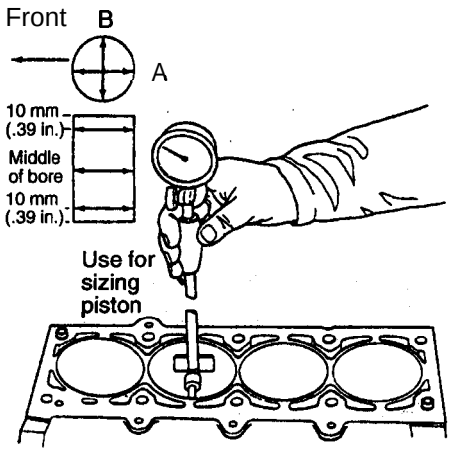

CEN0074

CYLINDER BORE

(1) The cylinder walls should be checked for out-of-round and taper with Tool C-119 or equivalent The cylinder bore out-of-round is 0.051 mm (.002 in.) maximum, and cylinder bore taper is 0.051 mm (.002 in.) maximum. If the cylinder walls are badly scuffed or'scored, the cylinder block should be rebored and honed, and new pistons and rings fitted. Whatever type of boring equipment is used, boring and honing should be closely coordinated with the fitting of pistons and rings so that specified clearances may be maintained.

(2) Measure the cylinder bore at three levels in directions A and B. Top measurement should be 10 mm (.39 in.) down and bottom measurement should be 10 mm (.39 in.) up from bottom of bore.

Standard value: 87.5 mm (3.445 in.)

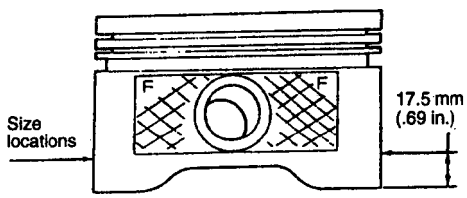

CEN0075

PISTONS

(1) Piston and cylinder wall must be clean and dry. Piston diameter should be measured 90 degrees to piston pin at size location shown in the figure. Cylinder bores should be measured halfway down the cylinder bore and transverse to the engine crankshaft center line. Correct piston to bore clearance must be established in order to assure quiet and economical operation.

Standard value: 0.012–0.044 mm (.0005–.0017 in.)

(2) Pistons and cylinder bores should be measured at normal room temperature, 21 °C. (70°F).

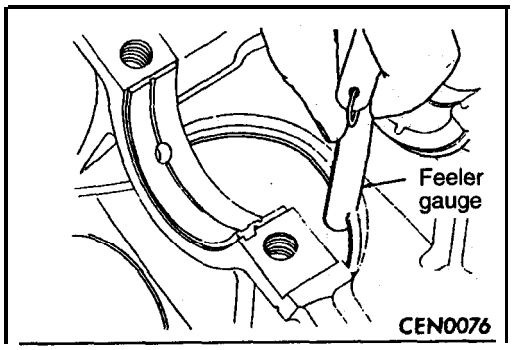

PISTON RING

(1) Wipe cylinder bore clean. Insert ring and push down with piston to ensure it is square in bore. The ring gap measurement must be made with the ring positioning at least 12 mm (.47 in.) from bottom of cylinder bore. Check gap with feeler gauge.

Standard value:
- **Upper ring 0.23–0.52 mm (.009–.020 in.)**
- **Intermediate ring 0.49–0.78 mm (.019–.031 in.)**
- **Oil control ring 0.23–0.66 mm (.009–.026 in.)**

Limit:
- **Upper ring 0.8 mm (.031 in.)**
- **Intermediate ring 1.0 mm (.039 in.)**
- **Oil control ring 1.0 mm (.039 in.)**

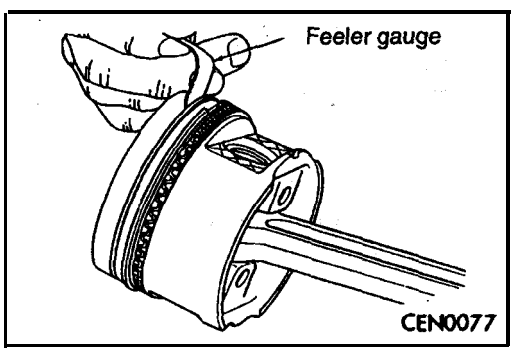

(2) Check piston ring to groove side clearance.

Standard value: 0.025–0.065 mm (.0010–.0026 in.)

Limit: 0.10 mm (.004 in.)

CRANKSHAFT MAIN BEARINGS

The crankshaft is supported in five main bearings. All upper bearing shells in the crankcase have oil grooves. All lower bearing shells installed in the (bedplate) main bearing caps are plain. Crankshaft end play is controlled by a flanged bearing on the number three main bearing journal.

CONNECTING ROD BEARING CLEARANCE

(1) Place a piece of Plastigage across the entire width of the bearing shell in the bearing cap approximately 6.35 mm off center and away from the oil hole. In addition, suspect areas can be checked, by placing Plastigage in the suspect area.

(2) Before assembling the rod cap with Plastigage in place; the crankshaft must be rotated until the connecting rod being checked starts moving toward the top of the engine., Only then should the cap be assembled and torqued to the specification.
Do not rotate the crankshaft while assembling the cap or the Plastigage may be smeared, giving inaccurate results.

(3) Remove the bearing cap and compare the width of the flattened Plastigage with the metric scale provided on the package.

Standard value: 0.026–0.059 mm (.001–.0023 in.)

Limit: 0.075 mm (.003 in.)

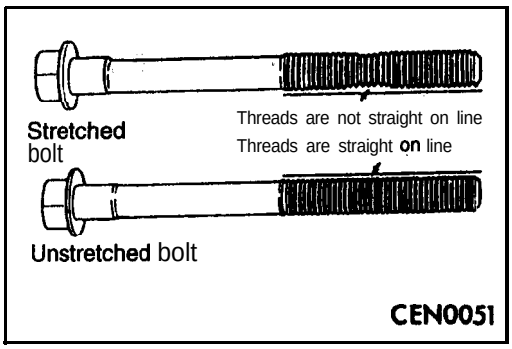

CONNECTING ROD BEARING CAP BOLT

(1) Since the connecting rod bearing cap bolts are torqued using a new procedure, they should be examined BEFORE reuse. If the threads are necked' down, replace the bolts.

(2) Necking can be checked by holding a scale or straight edge against the threads. If all the threads do not contact, the scale, the bolt should be replaced.

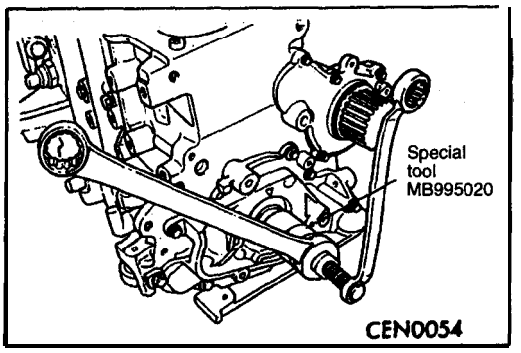

CRANKSHAFT

11302170017

REMOVAL

Procedures after removing crankshaft sprocket, oil pan, pistons and connecting rods.

(1) Using Tool MB995022, remove front crankshaft oil seal. Be careful not to damage the seal surface of cover.
(2) Pry out rear seal with screwdriver. Be careful not to nick or damage crankshaft flange seal surface or retainer *bore.*

(3) Remove main bearing cap bedplate.
(4) Remove bearing lower.
(5) Remove crankshaft.
(6) Remove bearing upper.
(7) Remove knock sensor.
(8) Remove oil pressure switch.
(9) Remove oil level gauge (dipstick).

INSTALLATION

11302190020

(1) Install oil level gauge (dipstick).
(2) Install oil pressure switch.

(3) Install knock sensor. Tighten knock sensor to 10 Nm (7 ft.lbs.) torque. Over or under tightening effects knock sensor performance, possibly causing improper spark control.

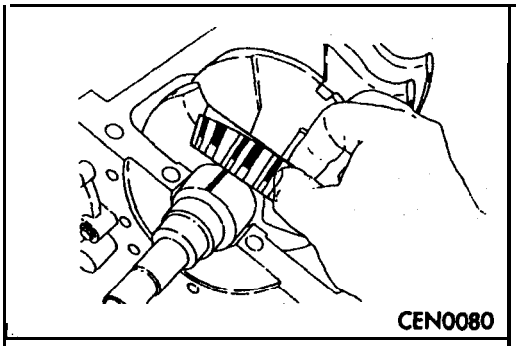

(4) Select proper thickness main bearing shells by referring to CRANKSHAFT BEARING CLEARANCE.

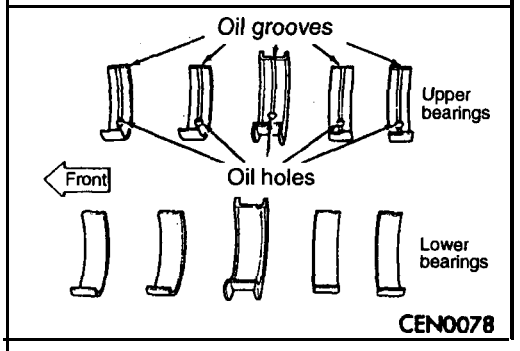

NOTE
Upper and lower No. 3 bearing halves are flanged to carry the crankshaft thrust loads and are NOT interchangeable with any other bearing halves in the engine. Bearing shells are available in standard and the following undersized:
0.016 mm, 0.032 mm, 0.250 mm.
Never install an undersize bearing that will reduce clearance below specifications.

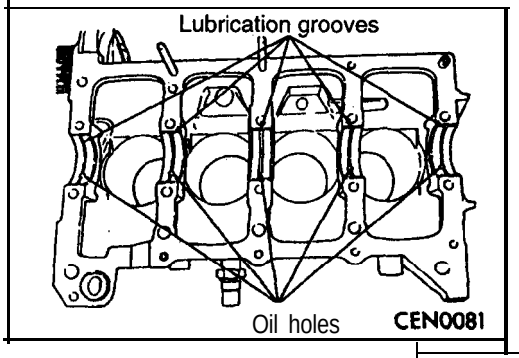

(5) Install the main bearing shells with the lubrication groove in the cylinder block.

NOTE
All upper bearing shells in the crankcase have oil grooves. All lower bearing shells installed in the (bedplate) main bearing caps are plain. Crankshaft end play is controlled by a flanged bearing on the number three main bearing journal.

(6) Make certain oil holes in block line up with oil hole in bearings and bearing tabs seat in the block tab slots.
(7) Oil the bearings and, journals and install crankshaft.

Caution
Do not get oil on bedplate mating surface. If may effect the sealer ability to seal the bedplate to cylinder block.

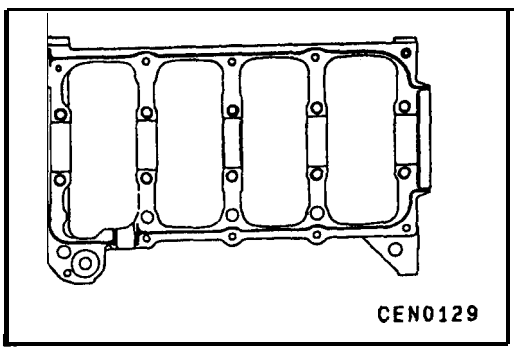

(8) Apply 1.5 to 2.0 mm (.059 to .078 in.) bead of Loctite 19614 to cylinder block as shown in the figure.
(9) Install main bearing cap bedplate together with lower' bearing shells.

Caution
Use only the specified anaerobic sealer "on the bedplate or damage may occur to the engine.

(10) Before installing the bolts, the threads should be oiled with engine oil.

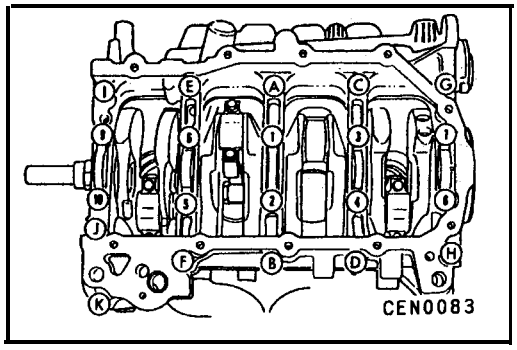

(11) Install main bearing bedplate to engine block bolts (1 thru 10) finger tight, then torque main bearing bolts to 75 Nm (55 ft.lbs.) in sequence shown in the figure.

(12) Install main bearing bedplate to engine block bolts (A thru K) finger tight, then torque each bolt to 28 Nm (20 ft.lbs.) in sequence shown in the figure.

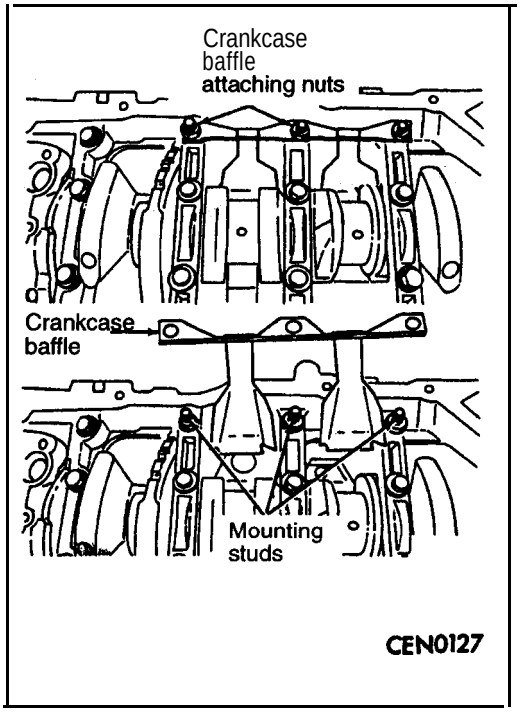

(13) Install crankcase baffle into the opening in the block. Attach baffle to main bearing cap fasteners.

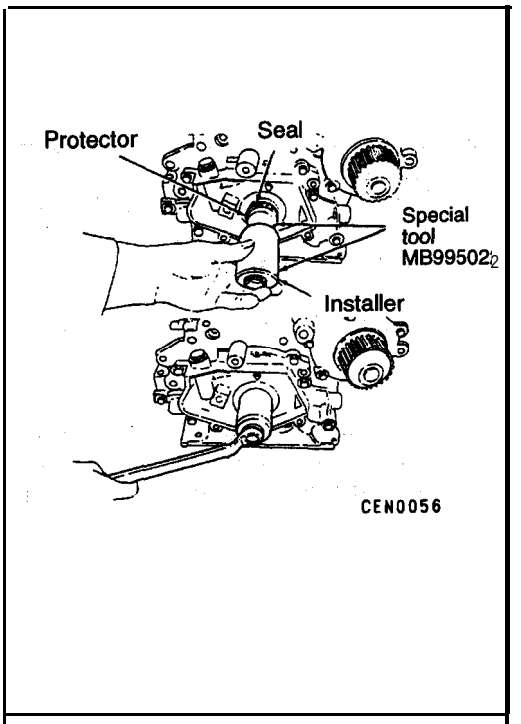

(14) **Place** new front seal into opening with seal spring towards the inside of engine. **Install** seal by using Tool **MB995022** until flush with oil pump cover.

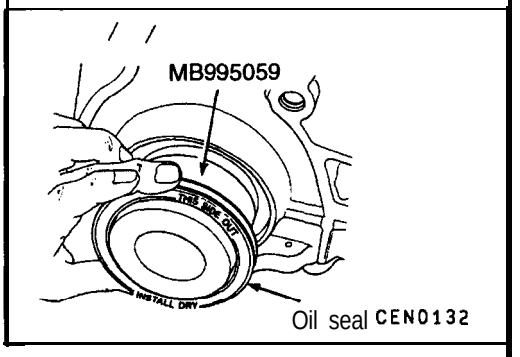

Caution
if burr or scratch is present on the crankshaft edge (chamfer), cleanup with 400 grit sand paper to prevent seal damage during installation of new seal.

NOTE
When installing seal, no lube on seal is needed.

(15) **Place Special** Tool **MB995059** on crankshaft. This is a pilot tool with a magnetic base.

(16) **Position** seal over pilot tool. Make sure you can read the words THIS SIDE OUT on seal. Pilot tool should remain on crankshaft during installation of seal.

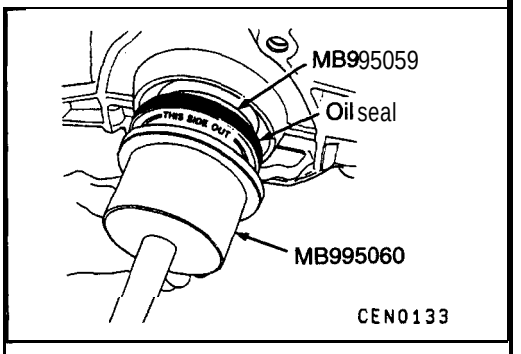

(17) **Drive** the seal into the block using Special Tool **MB995060** and handle **C-4171** until the tool bottoms out against the block.

Caution
If the seal is driven into the block past flush, this may cause an oil leak.

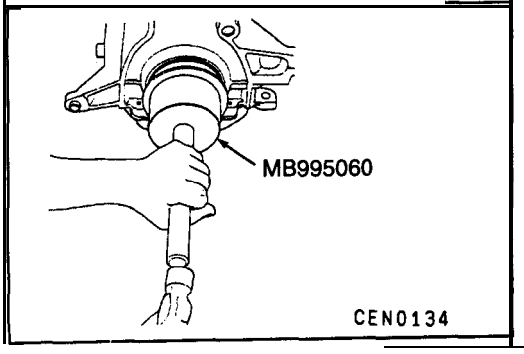

INSPECTION

11302160010

CRANKSHAFT MAIN JOURNALS

(1) The crankshaft journals should be checked for excessive wear, taper and scoring. Limits of taper or out-of-round on any crankshaft journals should be held. to 0.025 mm. (.001 in.). Journal grinding should not exceed 0.305 mm (.012 in.) under the standard journal diameter. Do NOT grind thrust faces of Number 3 main journal. Do NOT nick crank pin or journal fillets. After grinding, remove rough edges from crankshaft oil holes and clean out all passages.

Caution

With the nodular cast iron crankshafts used it is important that the final paper or cloth polish after any journal regrind be in the same direction as normal rotation' in the engine.

CRANKSHAFT BEARING CLEARANCE

(1) The. total: clearance of the main bearings can only be determined by removing the weight of the crankshaft. This is accomplished by having the engine turned upside down on the engine stand. This will remove all the crankshaft weight off the bearing surface.

(2) Place, a piece of Plastigage across the entire width of the bearing shell in the bedplate approximately 6.35 mm (.25 in.) off center and away from the oil holes. In addition, suspect areas can be checked by placing the Plastigage in the suspect area.
Torque the bedplate bolts of the bearing being checked to the proper specifications.

Caution
Do not rotate crankshaft, or the Plastigage may be smeared.

(3) Remove the bedplate and compare the width of the flattened Plastigage with the metric scale provided on the package.

Standard value: 0.022–0.062 mm (.0009–.0024 in.)

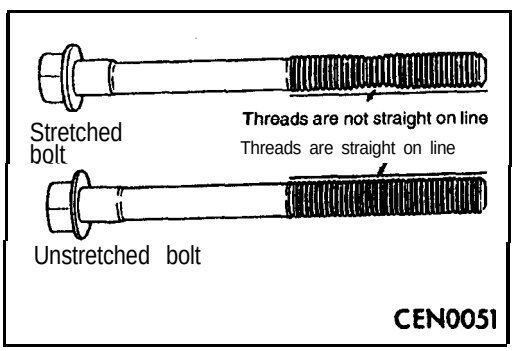

MAIN BEARING BOLTS

(1) Since the main bearing bolts are torqued using a new procedure, they should be examined BEFORE reuse. If the threads are necked down, replace the bolts.

(2) Necking can be checked by holding a scale or straight edge against the threads. If all the threads do not contact the scale, the bolt should be replaced.

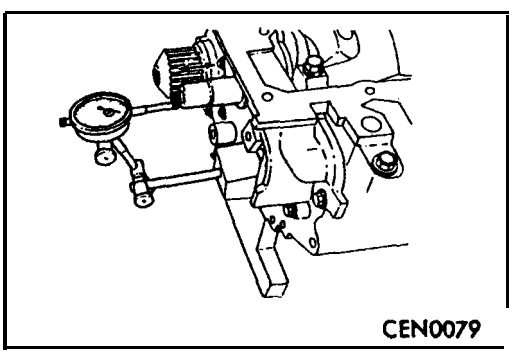

CHECKING CRANKSHAFT END PLAY

(1) Mount a dial indicator to front of engine, locating probe on nose of crankshaft.

(2) Move crankshaft all the way to the rear of its travel using a lever inserted between a main bearing cap and a crankshaft cheek, using care not to damage any bearing surface, Do not loosen main bearing cap.

(3) Zero the dial indicator.

(4) Move crankshaft all the way to the front and read the dial indicator.

Standard value: 0.09–0.24 mm (.0035–.0094 in.)

Limit: 0.37 mm (.015 in.)

(5) Replace No. 3 main bearing if limit is exceeded and remeasure.

(6) Replace crankshaft if limit is still exceeded.

OPTIONAL CRANKSHAFT END PLAY CHECK

(1) Move crankshaft all the way to the rear of its travel using a lever inserted between a main bearing cap and a crankshaft cheek, using care not to damage any bearing surface. Do not loosen main bearing cap.
(2) Use a feeler gauge between number three thrust bearing and machined crankshaft surface to determine end play.

ENGINE <2.4L>

CONTENTS

11109000207

GENERAL INFORMATION

11100010148

Items			Specifications
Type			In-line OHV, SOHC
Number of cylinders			4
Bore mm(in.)			86.5(3.41)
Stroke mm(in.)			1 00(3.94)
Piston displacement cm^3(cu.in.)			2,351(143.4)
Compression ratio			9.5
Firing order			1-3-4-2
Counterbalance shaft			Equipped
Valve timing	Intake valve	Opens	18" BTDC
		Closes	58" ABDC
	Exhaust valve	Opens	58" BBDC
		Closes	18" ATDC
Lubrication system			Pressure feed-full flow filtration

LUBRICATION SYSTEM

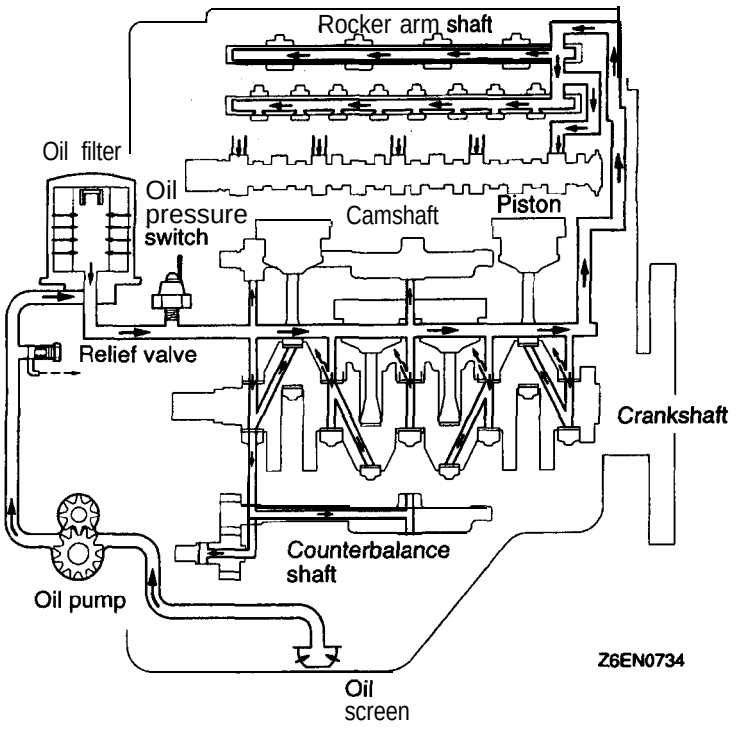

TSB Revision

SERVICE SPECIFICATIONS

11100030212

Items			Standard value	Limit
Drive belt (For generator)	Tension N (lbs.)	When checked When a new belt is installed When a used belt is installed	245 – 490 (55.1 – 110.2) 490 – 686 (110.2 – 154.3) 392 (88.2)	–
	Deflection mm (in.) <Reference value>	Whenchecked When a new belt is installed When a used belt is installed	9.0 – 11.5 (.35 – .45) 7.5 – 9.0 (.30 – .35) 10.0 (.39)	–
Drive belt (For power steering pump)	Tension N (lbs.)	When checked When a new belt is installed When a used belt is installed	245 – 490 (55.1 – 110.2) 490 – 686 (110.2 – 154.3) 343 – 441 (77.2 – 99.2)	–
	Deflection mm (in.)	Whenchecked When a new belt is installed When a used belt is installed	5.5 – 8.0 (.22 – .32) 4.5 – 5.5 (.18 – .22) 6.0 – 7.0 (.24 – .28)	–
Drive belt (For A/C compressor)	Tension N (lbs.)	When checked When a new belt is installed When a used belt is installed	255 – 333 (57.3 – 75.0) 382 – 441 (86.0 – 99.2) 255 – 333 (57.3 – 75.0)	–
	Deflection mm (in.)	Whenchecked When a new belt is installed When a used belt is installed	6.5 – 7.5 (.26 – .30) 5.5 – 6.0 (.22 – .24) 6.5 – 7.5 (.26 – .30)	–
Basic ignition timing at idle			5°BTDC ± 3"	–
Actual ignition timing at idle			Approx. 10° BTDC	–
Curb idle speed r/min			750 ± 100	
CO contents %			0.5 or less	
HC contents ppm			100 or less	–
Compression pressure (at 250 – 400 r/min) kPa (psi)			1,350 (192)	min. 1,020 (145)
Compression pressure difference of all cylinder kPa (psi)				max. 100 (14)
Intake manifold vacuum kPa (in. Hg)				min. 60 (18)
Cylinder head bolt length mm (in.)				99.4 (3.91)
Auto tensioner push rod movement mm (in.)			Within 1 (.04)	
Timing belt tension torque Nm (ft.lbs)			3.5 (2.6)	–
Auto tensioner rod protrusion mm (in.)			3.8 - 4.5 (.150 – .177)	–
Timing belt B tension mm (in.)			5 – 7 (.20 – .28)	

SEALANTS

11100050195

Items	Specified sealant
Oil pan, cylinder block and thermostat case assembly	MITSUBISHI GENUINE PART MD970389 or equivalent
Flywheel bolt or drive plate bolt	3M Stud locking 4170 or equivalent

SPECIAL TOOLS

11100060204

Tool	Tool number and name	Supersession	Application
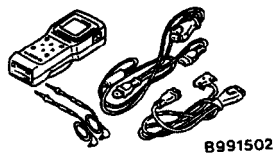	MB991502 Scan tool (MUT-II)	MB991 502	Idle speed inspection
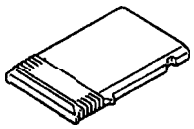	ROM pack		
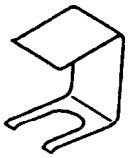	MD998443 Lash adjuster holder	MD998443-01	Supporting of the lash adjuster to prevent it from falling when rocker shaft assembly is removed or installed
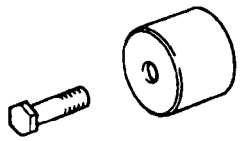	MD998713 Canshaft oil seal installer	MD998713-01	Camshaft oil seal installation
	MD998727 Oil pan gasket cutter	MD998727-01	Oil pan removal
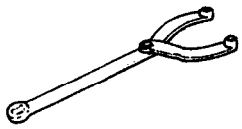	MB990767 End yoke holder	MB990767-01	Holding camshaft sprocket or crankshaft pulley when loosening and tightening of bolt. Use with MD998754, MD998719
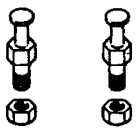	MD998719 or MD998754 Crankshaft pulley holder	MIT308239	Supporting the crankshaft pulley when crankshaft bolt and pulley are removed or reinstalled. Use together with MB990767 Camshaft pulley supporting
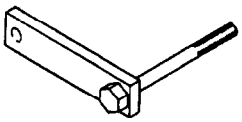	MD998781 Flywheel stopper	General service tool	Flywheel <M/T> or drive plate <A/T> supporting

Tool	Tool number and name	Supersession	Application
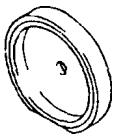	MD998776 Crankshaft rear oil seal installer	MD998776-01	Crankshaft rear oil seal installation
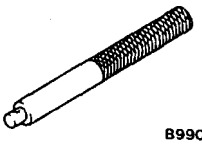	MB990938 Handle	MB990938-01	
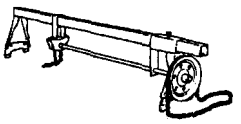	GENERAL SERVICE TOOL MZ203827 Engine lifter	MZ203827-01	Supporting engine assembly when removing and installing transaxle
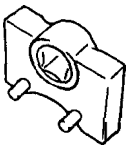	MD998767 Tensioner pulley wrench	MD998752-01	Auto tensioner installation
	MD998778 Crankshaft sprocket puller	General service tool	Crankshaft sprocket removal
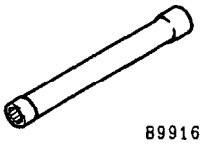	MB991 654 Cylinder head bolt wrench (12)	–	Removal and installation of cylinder head bolt

TROUBLESHOOTING

11100070085

Symptom	Probable cause	Remedy
Compression too low	Cylinder head gasket blown	Replace gasket
	Piston ring worn or damaged	Replace rings
	Piston or cylinder worn	Repair or replace piston and/or cylinder block
	Valve seat worn or damaged	Repair or replace valve and/or seat ring
Oil pressure drop	Engine oil level too low	Check engine oil level
	Oil pressure switch faulty	Replace oil pressure switch
	Oil filter clogged	Install new filter
	Oil pump gears or cover worn	Replace gears and/or cover
	Thin or diluted engine oil	Change engine oil to correct viscosity
	Oil relief valve stuck (open)	Repair relief valve
	Excessive bearing clearance	Replace bearings
Oil pressure too high	Oil relief valve stuck (closed)	Repair relief valve
Noisy valves	Incorrect lash adjuster	Bleed air or replace lash adjuster
	Thin or diluted engine oil (low oil pressure)	Change engine oil
	Valve stem or valve guide worn or damaged	Replace valve and/or guide
Connecting rod noise/ main bearing noise	Insufficient oil supply	Check engine oil level
	Low oil pressure	Refer to “Oil pressure drop”
	Thin or diluted engine oil	Change engine oil
	Excessive bearing clearance	Replace bearings
Timing belt noise	Incorrect belt tension	Adjust belt tension and/or replace timing belt
Excessive engine rolling and vibration	Loose engine roll stopper (Front, Rear)	Retighten
	Loose transaxle mount bracket	Retighten
	Loose engine mount bracket	Retighten
	Loose center member	Retighten
	Broken transaxle mount insulator	Replace
	Broken engine mount insulator	Replace
	Broken roll stopper insulator	Replace

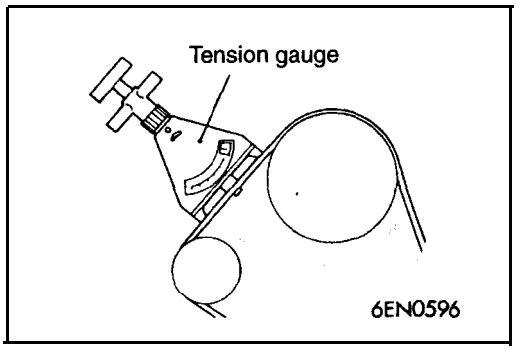

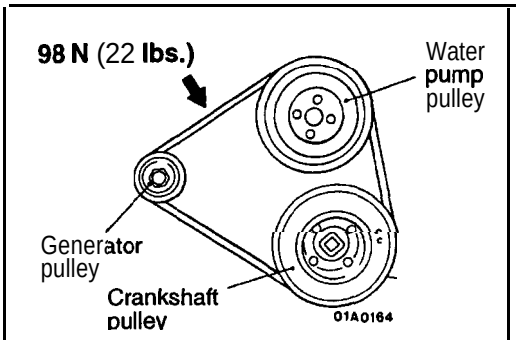

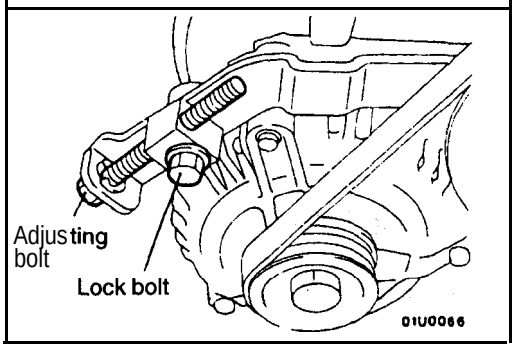

ON-VEHICLE SERVICE

11100090234

DRIVE BELT TENSION CHECK AND ADJUSTMENT

GENERATOR DRIVE BELT TENSION CHECK

Use the belt tension gauge to check belt tension at the shown point or check deflection by applying 98 N (22 lbs.) to the shown point.

Standard value:

Tension: 245 – 490 N (55.1 – 110.2 lbs.)
Deflection <Reference, value>:
9.0 – 11.5 mm (.35 – .45 in.)

GENERATOR DRIVE BELT TENSION ADJUSTMENT

1. Loosen the nut of the generator pivot bolt.
2. Loosen the lock bolt.
3. Turn the adjusting bolt to adjust the belt tension or deflection to the standard value.

Standard value:

Items	When a new belt is installed	When a used belt is installed
Tension N (lbs.)	490–686 (110.2–154.3)	392 (88.2)
Deflection mm (in.) <Reference value>	7.5–9.0 (.30–.35)	10.0 (.39)

4 Tighten the nut of the generator pivot bolt.

Tightening torque: 23 Nm (17 ft.lbs.)

5. Tighten the lock bolt.

Tightening torque: 23 Nm (17 ft.lbs.)

6. Tighten the adjusting bolt.

Tightening torque: 10 Nm (7 ft.lbs.)

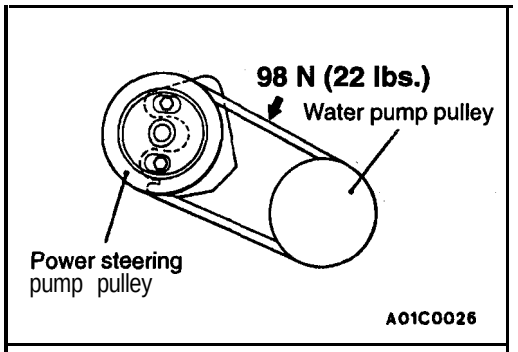

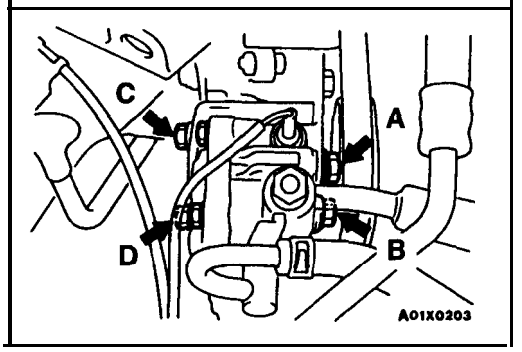

POWER STEERING PUMP DRIVE BELT TENSION CHECK

11100110138

Use the belt tension gauge to check belt tension at the shown point or check deflection by applying 98 **N** (22 **lbs.)** to the shown point.

Standard value:

Tension: 245 – 490 N (55.1 – 110.2 lbs.)
Deflection: 5.5 – 8.0 mm (.22 – .32 in.)

POWER STEERING PUMP DRIVE BELT TENSION ADJUSTMENT

1. Loosen power steering pump fixing bolt **(A, B, C, D).**
2. Move power steering pump, tension belt moderately and adjust tension.

   Standard value:

Items	When a new belt is installed	When a used **belt** is **installed**
Tension N (lbs.)	490–686 (110.2–154.3)	343–441 (77.2–99.2)
Deflection mm (in.)	4.5–5.5 (.18–.22)	6.0–7.0 (.24–.28)

3. Tighten fixing bolt (A).

   Tightening torque: 28 Nm (21 ft.lbs.)

4. Tighten the remaining fixing bolts **(B, C** and **D).**

   Tightening torque:
   Bolt B and D 28 Nm (21 ft.lbs.)
   Bolt C 22 Nm (16 ft.lbs.)

5. Check the belt deflection amount and readjust if necessary.

   Caution
   This check should be carried out after turning the crankshaft one full rotation or more in the forward direction (to the right).

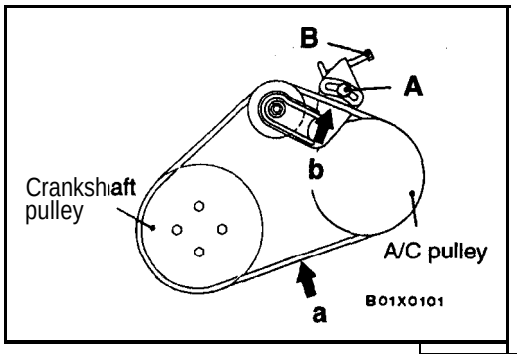

A/C COMPRESSOR DRIVE BELT TENSION CHECK

11100100098

Use the belt tension gauge to check belt tension at the shown point (a) or (b), or check deflection by applying 98 **N** (22 lbs.) to the shown point.

Standard value:

Tension: 255 – 333 N (57.3 – 75.0 lbs.)
Deflection: 6.5 – 7.5 mm (.26 – .30 in.)

A/C COMPRESSOR DRIVE BELT TENSION ADJUSTMENT

1. Loosen tension pulley fixing nut A.
2. Adjust belt tension with adjusting bolt B.

Standard value:

Items	When a new belt is installed	When a used belt is installed
Tension N (lbs.)	382-411 (86.0–99.2)	255-333 (57.3–75.0)
Deflection mm (in.)	5.5–6.0 (.22–.24)	8.5-7.5 (.26–.30)

3. Tighten fixing nut A.

   Tightening torque: 23-26 Nm (17–20 ft.lbs.)

4. Check the belt deflection amount and readjust if necessary.

   Caution
   This check should be carried out after turning the crankshaft one full rotation or more in the forward direction (to the right).

IGNITION TIMING CHECK

11100170198

1. Before inspection and adjustment set vehicle in the following condition.
   - Engine coolant temperature: 80–95°C (176–203°F)
   - Lights, electric cooling fan and all accessories: OFF
   - Transaxle: Neutral (P range on vehicles with A/T)
2. Turn the ignition switch to OFF and connect the scan tool to the data link connector.
3. Set up a timing light.
4. Start the engine and run at idle.
5. Select No. 22 of the SCAN TOOL DATA LIST.
6. Check that engine idle speed is within the standard value.

   Standard value: 750 ± 100 r/min

7. Select No. 17 of the SCAN TOOL ACTUATOR TEST.

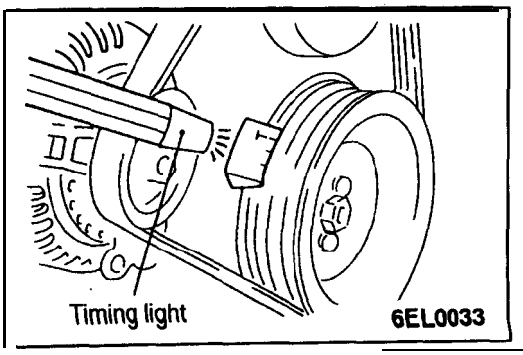

8. Check that basic ignition timing is within the standard value.

   Standard value: 5° BTDC ± 3°

9. If the basic ignition timing is outside the standard value, inspect the MFI components by referring to GROUP 13A – Troubleshooting.

10. Press the scan tool clear key (select a forced driving cancel mode) to release the ACTUATOR TEST

NOTE
If the test is not cancelled, a forced driving will continue for 27 minutes. Driving under this condition may damage the engine.

11. Check that the actual ignition timing is at the standard value.

Standard value: Approx. 10° BTDC

NOTE
1. Ignition timing is variable within about ±7°, even under normal operating.
2. And it is automatically further advanced by about 5° from 10° BTDC at higher altitudes.

CURB IDLE SPEED CHECK 11100190392

1. Before inspection and adjustment, set vehicles in the following condition.
   - Engine coolant temperature: 80–95°C (176–203°F)
   - Lights, electric cooling fan and all accessories: OFF
   - Transaxle: Neutral (P range on vehicles with A/T)
2. Turn the ignition switch to OFF and connect the scan tool to the data link connector.
3. Select No. 17 of the SCAN TOOL ACTUATOR TEST
4. Check the basic ignition timing.

Standard value: 5° BTDC ± 3°

5. Run the engine at idle for 2 minutes.
6. Select No. 22 of the SCAN TOOL DATA LIST.
7. Check the curb idle speed.

Standard value: 750 ± 100 **r/min**

NOTE
The idle speed is controlled automatically by the idle air control system.

8. If the idle speed is outside the standard value, check the MFI components by referring to GROUP 13A – Troubleshooting.

IDLE MIXTURE CHECK 11100210302

1. Before inspection, set vehicles in the following condition:
   - Engine coolant temperature: 80–95°C (176–203°F)
   - Lights, electric cooling fan and all accessories: OFF
   - Transaxle: Neutral (P range on vehicles with A/T)
2. Turn the ignition switch to OFF and connect the scan tool to the data link connector.
3. Select No. 17 of the SCAN TOOL ACTUATOR TEST.
4. Check that the basic ignition timing is within the standard value.

Standard value: 5° BTDC ± 3°

5. Run the engine.
8. Set the CO, HC tester.
7. Check the CO contents and the HC contents at idle.

Standard value:
CO contents: 0.5% or less
HC contents: 100 ppm or less

8. If the standard value is exceeded, check the following items:
   - Diagnostic output
   - Closed-loop control (When the closed-loop control is carried out normally, the output signal of the heated oxygen sensor repeats between 0–400 mV and 600–1,000 mV at idle.)
   - Fuel pressure
   - Injector
   - Ignition coil, spark plug cable, spark plug
   - EGR system and the EGR valve leak
   - Evaporative emission control system
   - Compression pressure

NOTE
Replace the three-way catalyst whenever the CO and HC contents do not remain inside the standard value. (even though the result of the" inspection is normal on all items.)

COMPRESSION PRESSURE CHECK 11100260147

1. Before inspection, check that the engine oil, starter and battery are normal. Also, set the vehicle to the following condition:
   - Engine coolant temperature: 80–95°C (176–203°F)
   - Lights, electric cooling fan and all accessories: OFF
   - Transaxle: Neutral (P range on vehicles with A/T)
2. Disconnect the spark plug cables.
3. Remove all of the spark plugs.

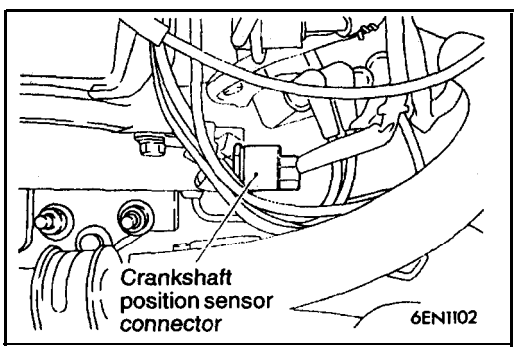

4. Disconnect the crankshaft position sensor connector.

NOTE
Doing this will prevent the engine control unit from carrying out ignition and fuel injection.

5. Cover the spark plug hole with a shop towel etc., and after the engine has been cranked, check that no foreign material is adhering to the shop towel.

Caution
1. **Keep away from the spark plug hole when cranking.**
2. **If compression is measured with water, oil, fuel, etc., that has come from cracks inside the cylinder, these materials will become heated and will gush out from the spark plug hole, which is dangerous.**

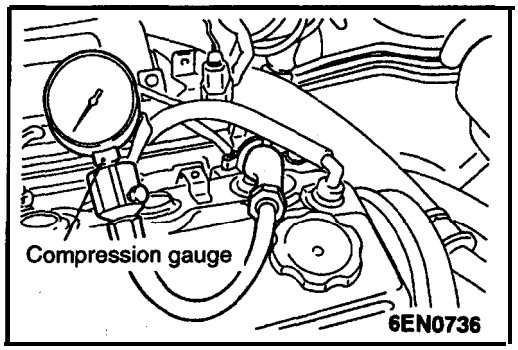

6. Set compression gauge to one of the spark plug holes.
7. Crank the engine with the throttle valve fully open and measure the compression pressure.

Standard value (at engine speed of 250–400 r/min): 1,350 kPa (192 psi)
Limit (at engine speed of 250–400 r/min): Min. 1,020 kPa (145 psi)

8. Measure the compression pressure for all the cylinders, and check that the pressure differences of the cylinders are below the limit.

Limit: Max. 100 kPa (14 psi)

9. If there is a cylinder with compression or a compression difference that is outside the limit, pour a small amount of engine oil through the spark plug hole, and repeat the operations in steps 7 and 8.
   (1) If the compression increases after oil is added, the cause of the malfunction is a worn or damaged piston ring and/or cylinder inner surface.
   (2) If the compression does not rise after oil is added, the cause is a burnt or defective valve seat, or pressure is leaking from the gasket.
10. Connect the crankshaft position sensor connector.
11. Install the spark plugs and spark plug cables.
12. Use the scan tool to erase the diagnostic trouble codes, or disconnect the negative battery cable for more than 10 seconds and reconnect it.

NOTE
This will erase the diagnostic trouble code resulting from the crankshaft position sensor connector being disconnected.

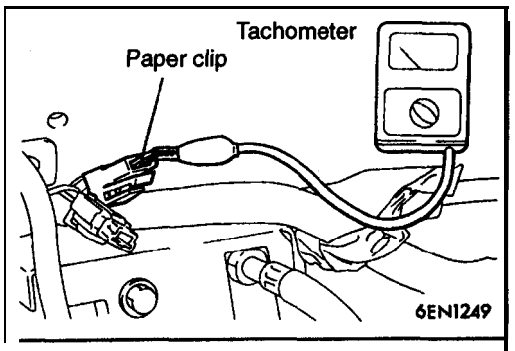

MANIFOLD VACUUM CHECK 11100270317

1. Before inspection, set vehicles in the following condition:
   - Engine coolant temperature: 80–95°C (176–203°F)
   - Lights, electric cooling fan, and accessories: OFF
   - Transaxle: Neutral (P range on vehicles with A/T)
2. Set up the tachometer or connect the scan tool to the data link connector.

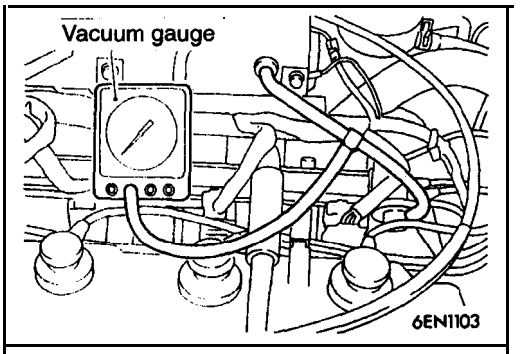

3. Attach a three-way joint to the vacuum hose connected between the intake manifold plenum and the fuel pressure solenoid valve and connect a vacuum gauge.
4. Start the engine, and check that the curb idle speed is within the standard value range.

   Standard value: 750 ± 100 r/min

5, Check the manifold vacuum.

   Limit: Min. 60 kPa (16 in.Hg)

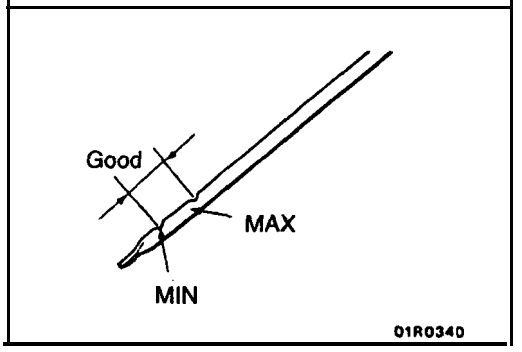

LASH ADJUSTER CHECK

11100290252

NOTE
If an abnormal noise (rattling noise) probably caused by the lash adjusters is heard and the noise does not stop, check as follows.

1. Check the engine oil, and if required, refuel or replace it.

   NOTE
   - If the amount of the engine oil is insufficient, air will be sucked in from the oil strainer and mix in the oil passage.
   - If the amount of the engine oil is more than the specified amount, it will be stirred by the crankshaft to make a lot of air mix in the oil.
   - If the oil is deteriorated, it will not easily separate from air and the amount of air mixed in the oil will increase.

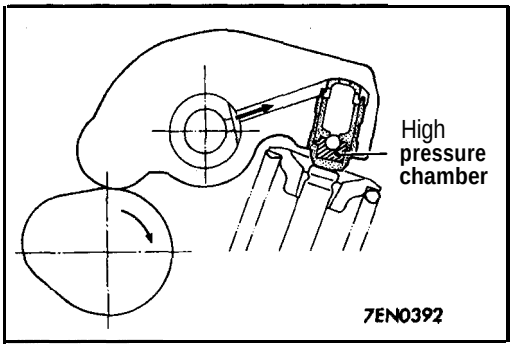

If the air which has mixed in the oil due to the above causes enters the high-pressure chamber in the lash adjusters, the air in the high-pressure chamber will be pressurized during opening of the valve, which causes the lash adjusters to shrink excessively, and an abnormal noise will be generated when the valve is closed. This is the same phenomenon as the one when the valve clearance has been excessively adjusted by mistake. In this case, if the air which has entered the lash adjusters is bled, things will be normalized.

2. Start the engine and perform gentle racing? several times (less than 10 times.)
   If the abnormal noise stops by racing, the air is bled from the high pressure chamber of the lash adjusters and the function of the lash adjusters is normalized.
   - After raising the engine speed from idling to 3,000 r/min gradually (in 30 seconds), drop the speed gradually (in 30 seconds) to idling.

NOTE
- If the vehicle is parked on a slope for long, the oil in the lash adjusters will be decreased and 'air may enter the high-pressure' chamber when the vehicle is started.
- After the vehicle is parked for long, air may enter the high-pressure chamber because, the oil in the oil passage will be gone and it will take a time before the oil is supplied to the lash adjusters.

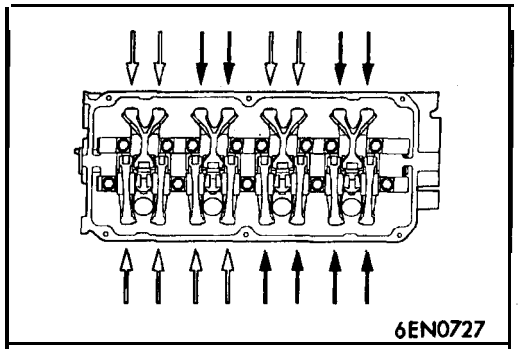

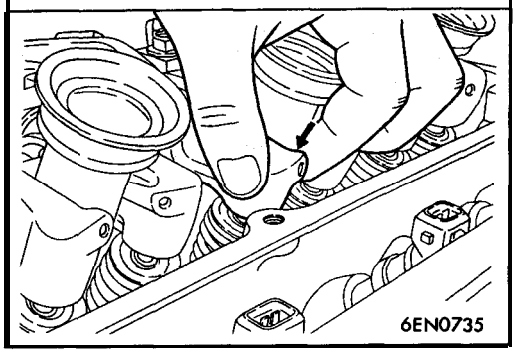

3. If an abnormal noise does not stop by racing, check the lash adjusters according to the following procedures.
   (1) Stop the engine.
   (2) Set the No. 1 cylinder of the engine to the compression top dead center.
   (3) Push the rocker arm indicated by the white arrow mark as shown in the illustration at left and check whether or not the arm lock goes down.
   (4) Turn slowly the crankshaft 360° clockwise.
   (5) Check the rocker arm indicated by the black arrow mark as shown in the illustration at left same as above (3).
   (6) If the rocker arm can be lowered easily when the part of the rocker arm which is directly above the top of the lash adjuster is pressed, the lash adjuster is defective and should be replaced with a new part. Furthermore, when replacing the lash adjuster, bleed all of the air from the lash adjuster and then install. After this, check that there is no problem by checking in steps (1) to (5).

   NOTE
   - A leak-down test can be carried out to accurately determine whether the lash adjuster is defective or not.
   - For the procedures for the leak-down test and air bleeding of the lash adjuster, refer to P. 11 F-32.

   Furthermore, if the rocker arm feels extremely stiff and cannot be lowered when it is pressed, the lash adjuster is normal, so investigate for some other cause of the abnormality.

ENGINE ASSEMBLY

11200100411

REMOVAL AND INSTALLATION

Pm-removal Operation
- Fuel Line Pressure Releasing
  (Refer to GROUP 13A – On-vehicle Service.)
- Hood Removal
- Engine Coolant Draining
  (Refer to GROUP 00 – Maintenance Service.)
- Transaxle Assembly Removal
  (M/T: Refer to GROUP 22A – Transaxle Assembly.)
  (A/T: Refer to GROUP 23A – Transaxle Assembly.)
- Radiator Removal (Refer to GROUP 14 -Radiator.)
- Under Cover Removal
  (Refer to GROUP 42 – Under Cover.)

Post-installation Operation
- Radiator Installation
  (Refer to GROUP 14 – Radiator.)
- Transaxle Assembly Installation
  (M/T: Refer to GROUP 22A – Transaxle Assembly.)
  (A/T: Refer to GROUP 23A -Transaxle Assembly.)
- Engine Coolant Supplying
  (Refer to GROUP 00 – Maintenance Service.)
- Hood Installation
- Accelerator Cable Adjustment
  (Refer to GROUP 17 – On-vehicle Service.)
- Under Cover Installation
  (Refer to GROUP 42 – Under Cover.)
- Drive Belt Tension Adjustment
  <Power Steering, A/C>

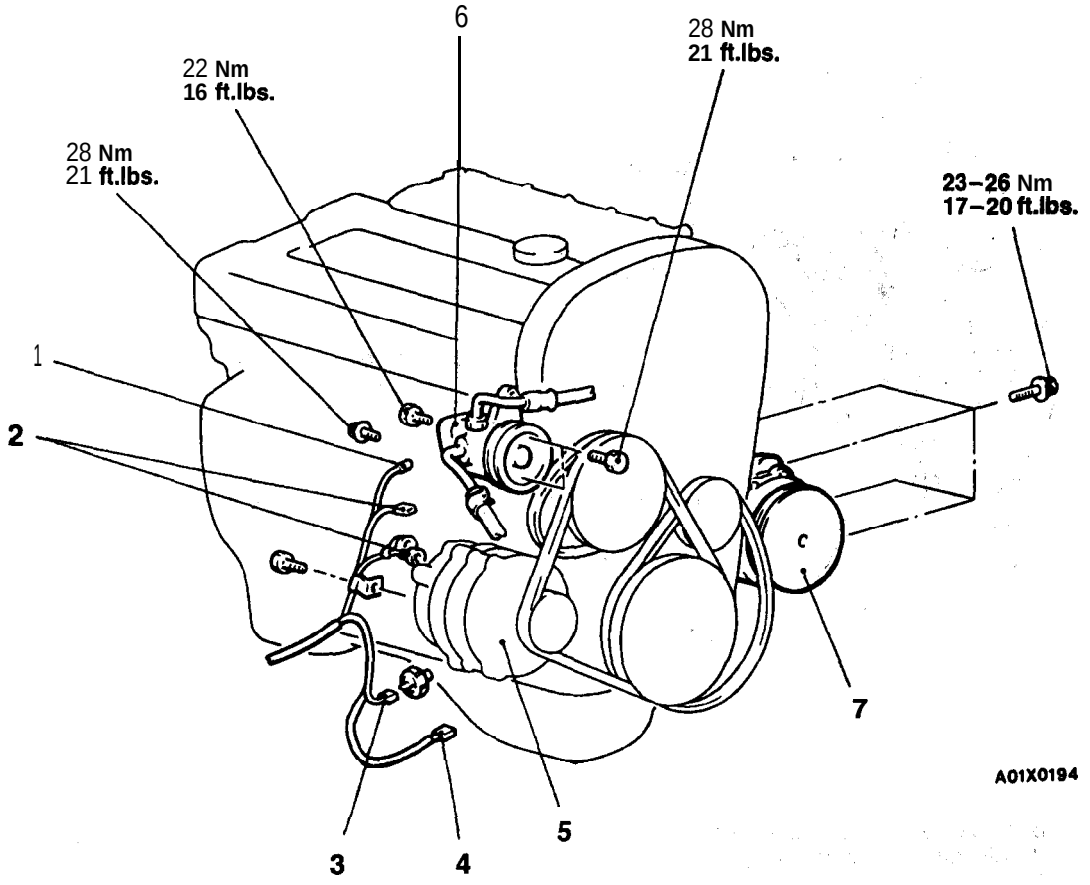

Removal steps
1. Power steering pressure switch connector
2. Generator connectors
3. Oil pressure switch connector
4. Oil pressure gauge unit connector
5. Generator
   (Refer to GROUP 16 – Generator.)
6. Power steering pump Connection
7. A/C compressor connection

◀A▶
◀B▶

TSB Revision

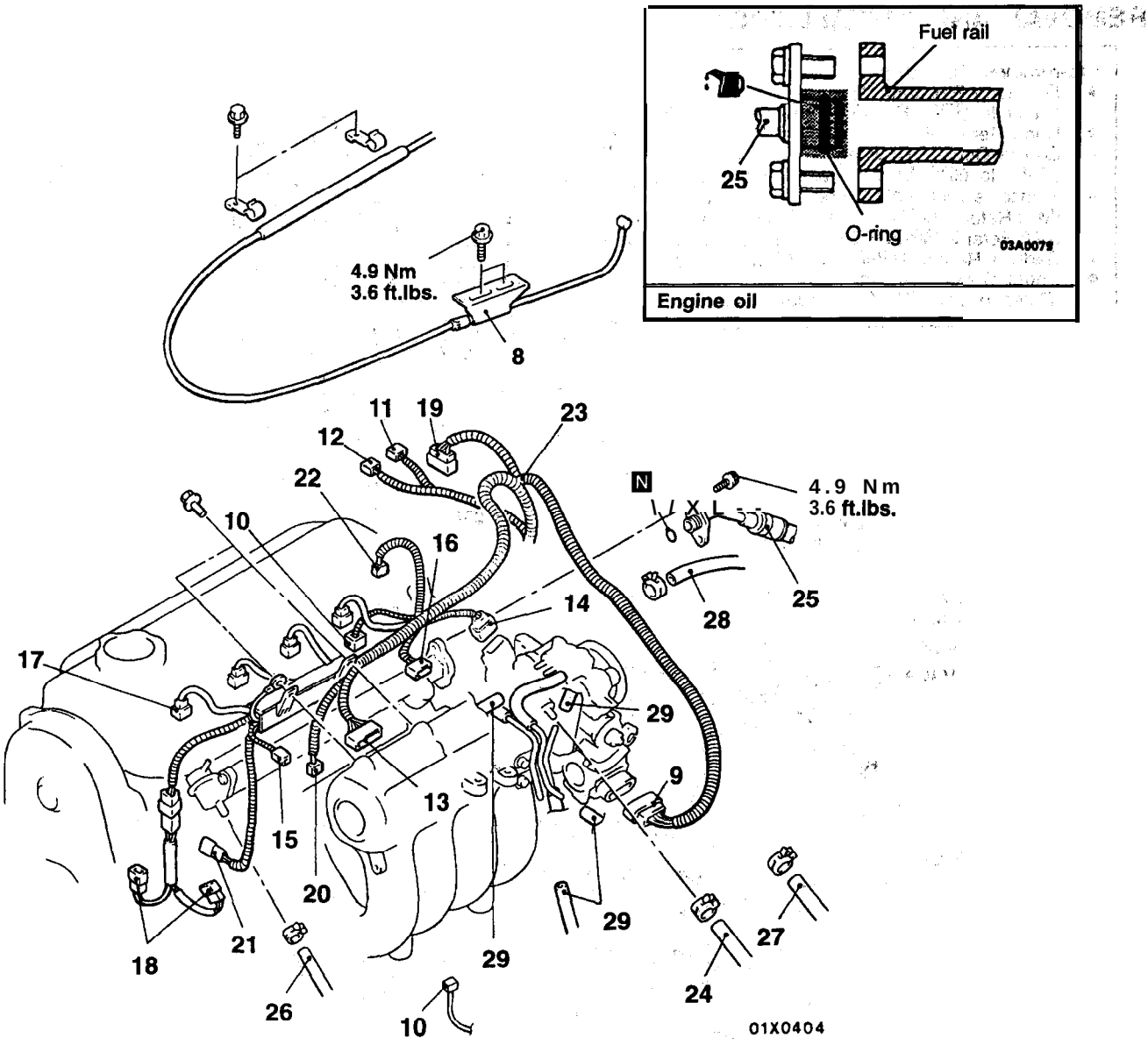

8. Accelerator cable connection
9. Idle air control motor connector
10. Heated oxygen sensor connector
11. Engine coolant temperature gauge unit connector
12. Engine coolant temperature sensor connector
13. Ignition power transistor connector
14. Throttle position sensor connector
15. Capacitor connector
16. Manifold differential pressure sensor connector
17. Injector connectors
18. Ignition coil connector
19. Camshaft position sensor connector
20. Crankshaft position sensor connector
21. Air conditioning compressor connector
22. Evaporative emission purge solenoid valve connector
23. Control wiring harness
24. Brake booster vacuum hose connection
▶C◀ 25. High-pressure fuel hose connection
26. Fuel return hose connection
27. Water hose A connection
28. Water hose B connection
29. Vacuum hoses connection

TSB Revision

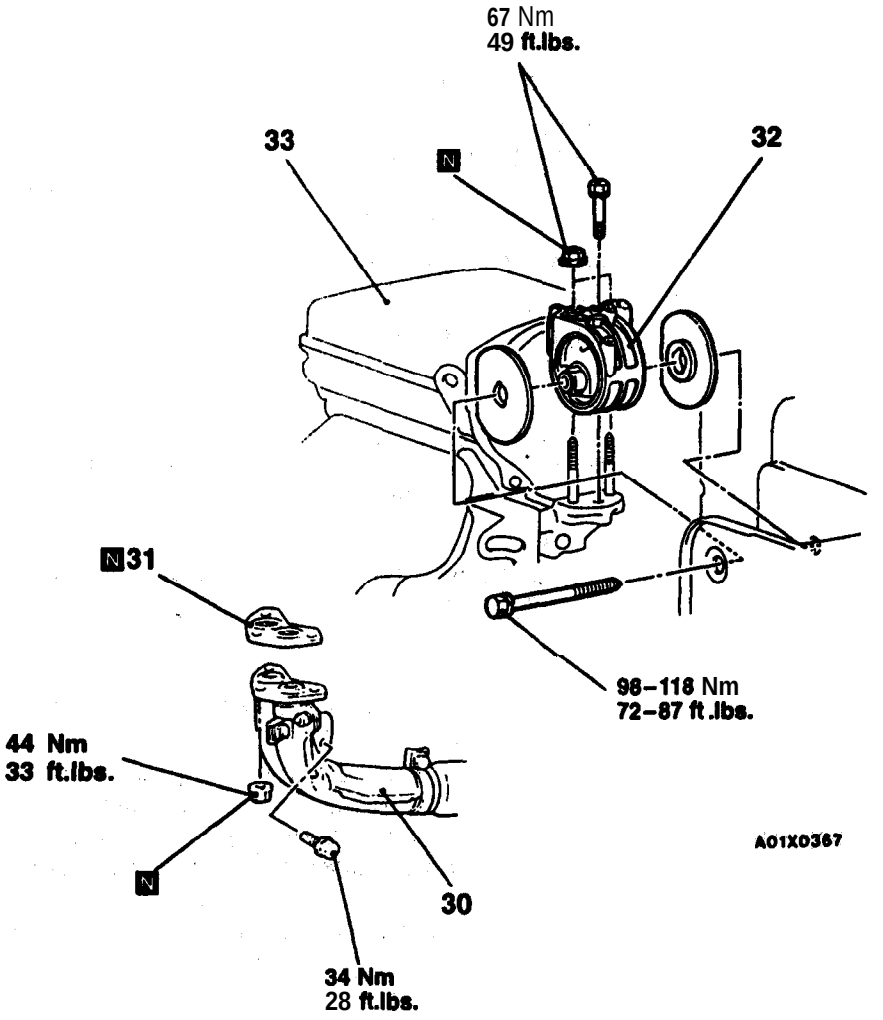

30. Front exhaust pipe connection
31. Gasket
◀C▶ ▶B◀ 32. Engine mount bracket assembly
◀D▶ ▶A◀ 33. Engine assembly

REMOVAL SERVICE POINTS

◀A▶ POWER STEERING PUMP REMOVAL

Remove the power steering pump from the bracket with the hose attached.

NOTE
Place the removed power steering pump in a place where it will not be a hindrance when removing and installing the engine assembly, and tie it with a cord.

◀B▶ A/C COMPRESSOR REMOVAL

Disconnect the A/C compressor connector and remove the compressor from the compressor bracket with the hose still attached.

NOTE:
Place the removed A/C compressor in a place where it will not be a hindrance when removing and installing the engine assembly, and tie it with a cord.

Caution
Do not bend the joint between the A/C hose and the A/C pipe by force.

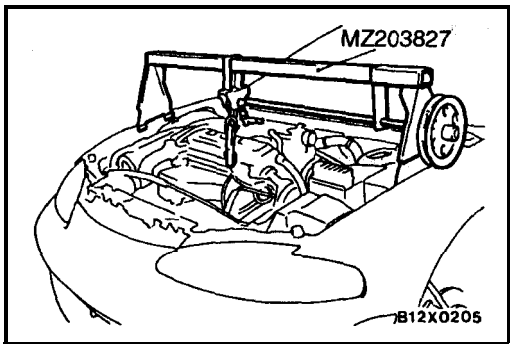

◀C▶ ENGINE MOUNT BRACKET ASSEMBLY REMOVAL

(1) Support the engine with a garage jack.
(2) Remove the special tool which was attached when the transaxle assembly was removed.
(3) Hold the engine assembly with a chain block or similar tool.
(4) Place a garage jack against the engine oil pan with a piece of wood in, between, jack up the engine so that the weight of the engine is no longer being applied to the engine mount bracket assembly, and then remove the engine mount bracket assembly.

◀D▶ ENGINE ASSEMBLY REMOVAL

After checking that all cables, hoses and harness connectors, etc., are disconnected from the engine, lift the chain block slowly to remove the engine assembly upward from the engine compartment.

INSTALLATION SERVICE POINTS

▶A◀ ENGINE ASSEMBLY INSTALLATION

Install the engine assembly while checking that the cables, hoses, and harness connectors are not clamped.

▶B◀ ENGINE MOUNT BRACKET ASSEMBLY INSTALLATION

(1) Place a garage jack against the engine oil pan with a piece of wood in between, and install the engine mount bracket assembly while adjusting the position of the engine.
(2) Support the engine with the garage jack.
(3) Remove the chain block and support the engine assembly with the special tool.

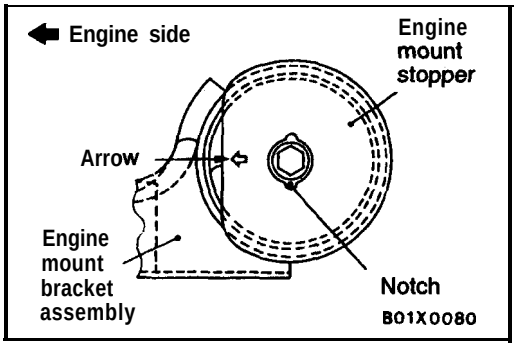

(4) Align the notches on the stopper with the engine mount bracket with the arrow mark facing toward the shown direction. Then install the stopper.

▶C◀ HIGH-PRESSURE FUEL HOSE CONNECTION

When connecting the high-pressure fuel hose to the fuel rail, apply a small amount of clean engine oil to the hose union and then insert, being careful not to damage the O-ring.

Caution
Do not let engine oil get into the fuel rail.

CRANKSHAFT PULLEY

11200160150

REMOVAL AND INSTALLATION

Pre-removal' Operation
- Under Cover Removal
  (Refer to GROUP 42 – Under Cover.)

Post-installation Operation
- Drive Belt Tension Adjustment
- Under Cover Installation
  (Refer to GROUP 42 – Under Cover.)

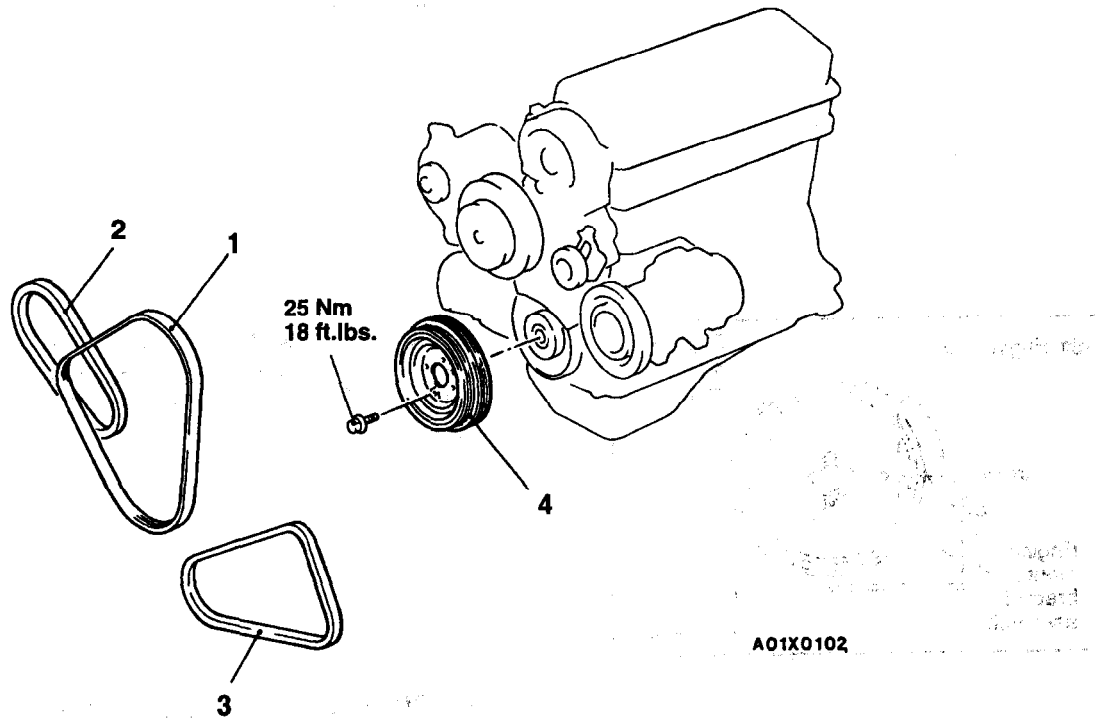

Removal steps

1. Drive belt (Generator)
2. Drive belt (Power steering)
3. Drive belt (NC)
4. Crankshaft pulley

TSB Revision

CAMSHAFT AND CAMSHAFT OIL SEAL

11200190326

REMOVAL AND INSTALLATION

Pm-removal Operation
- Battery Removal

Post-installation Operation
- Battery Installation
- Engine Adjustment

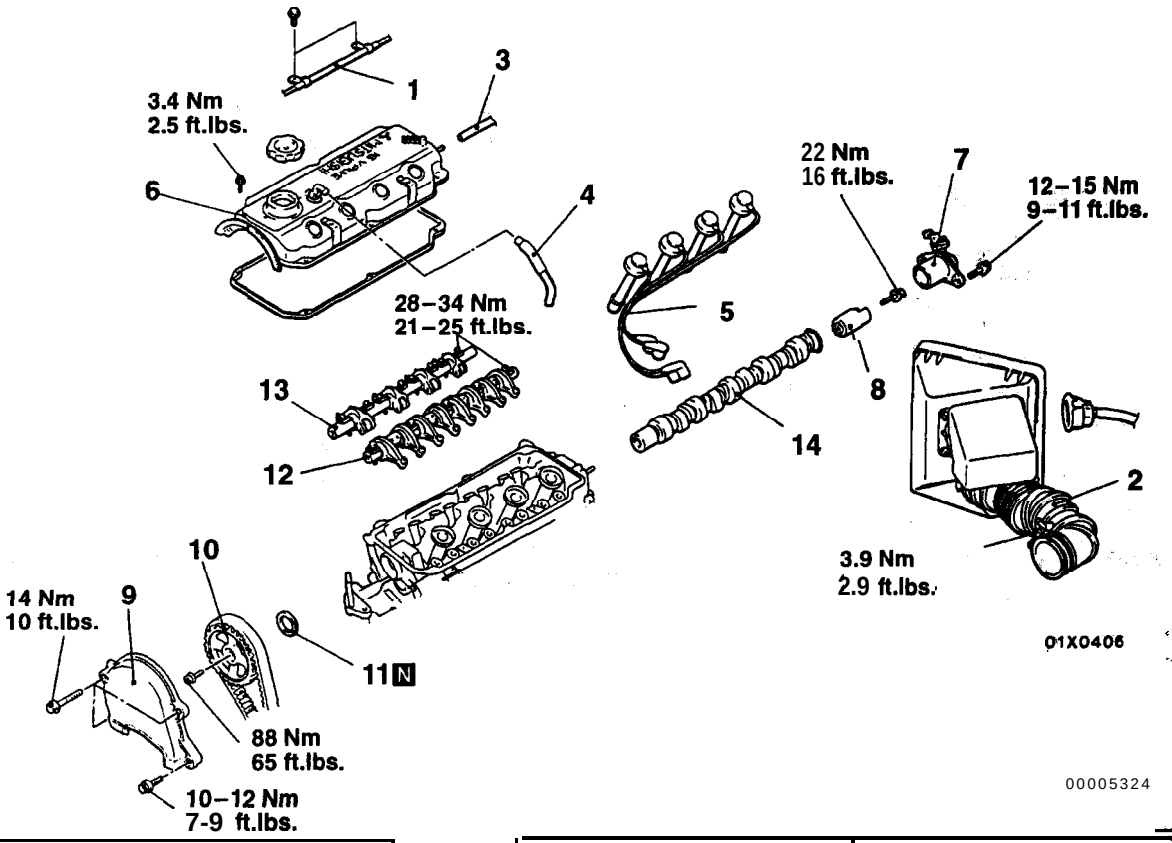

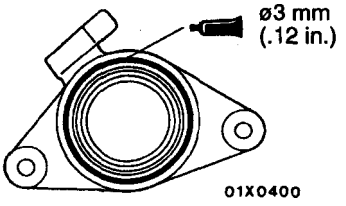

Sealant:
MITSUBISHI GENUINE PART MD970389 or equivalent

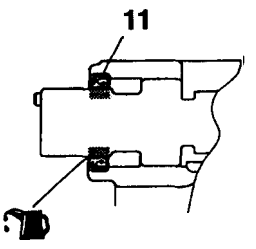

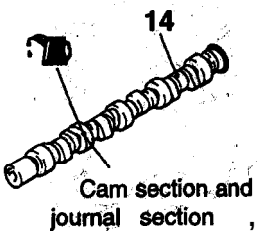

Engine oil

Removal steps

1. Accelerator cable connection
2. **Air intake hose**
3. Connection for breather hose
4. Connection for PCV hose
5. Spark plug cable
6. **Rocker cover**
7. Camshaft position sensor support
8. Camshaft position sensing cylinder
9. Timing belt **upper cover**

◀A▶ ▶C◀ 10. Camshaft **sprocket**

▶B◀ 11. Camshaft oil seal

◀B▶ ▶A◀ 12. **Rocker arm and shaft assembly (Intake side)**

◀B▶ ▶A◀ 13. **Rocker arm and shaft assembly** (Exhaust 'side)

14. Camshaft

TSB Revision

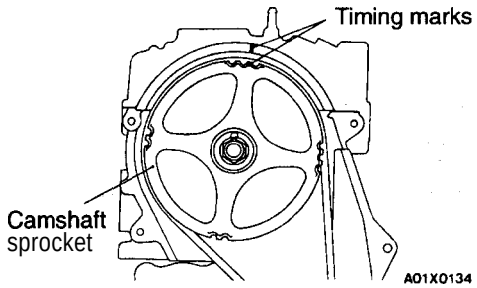

REMOVAL SERVICE POINTS

◀A▶ CAMSHAFT SPROCKET REMOVAL

(1) Rotate the crankshaft in the forward (right) direction and align the timing marks. (No.1 cylinder is the compression stroke top dead center position.)

Caution
The crankshaft must always be rotated in the forward direction only.

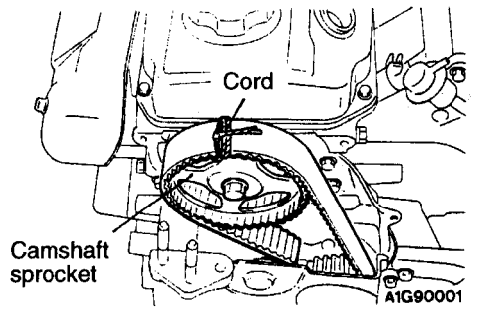

(2) Tie the camshaft sprocket and timing belt with a cord so that the position of the camshaft sprocket will not move with respect to the timing belt.

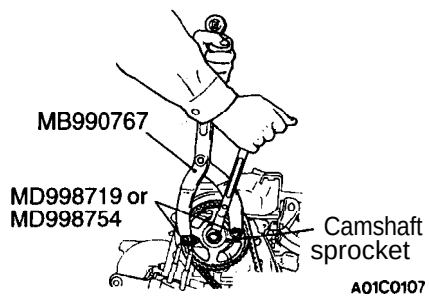

(3) Use the special tool to remove the camshaft sprocket with the timing belt attached.

Caution
After removing the camshaft sprocket, be sure not to rotate the crankshaft.

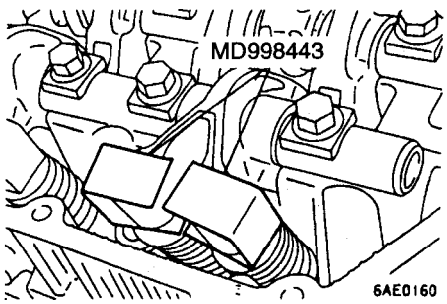

◀B▶ ROCKER ARM AND SHAFT ASSEMBLY REMOVAL

Before removing the rocker arm and shaft assembly, install the special tools as shown in the illustration so that the lash adjusters will not fall out.

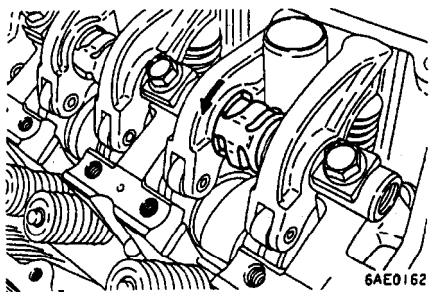

INSTALLATION SERVICE POINTS

▶A◀ ROCKER ARM AND SHAFT ASSEMBLY INSTALLATION

(1) Temporarily tighten the rocker shaft with the bolt so that all rocker arms on the inlet valve 'bide do not push the valves.

(2) Fit the rocker shaft spring from the above and position it so that it is right angles to the plug guide.

NOTE
Install the rocker shaft spring before installing the rocker arm and rocker arm shaft on the exhaust side.

(3) Remove the special tool for fixing the lash adjuster.

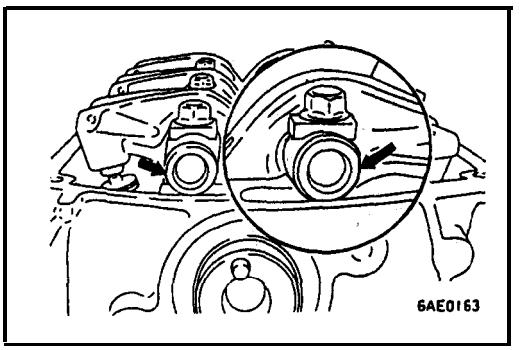

(4) Confirm that the rocker shaft notch is in the direction shown in the diagram.

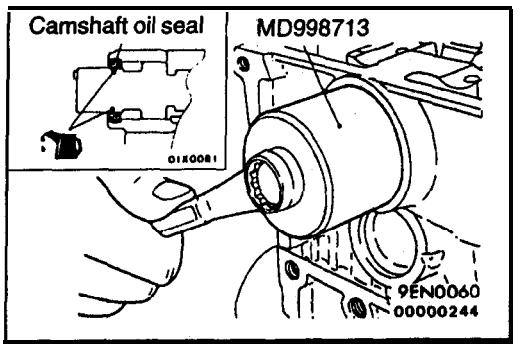

▶B◀ CAMSHAFT OIL SEAL INSTALLATION

(1) Apply engine oil to the camshaft oil seal lip.
(2) Use the special tool to press-fit the camshaft oil seal.

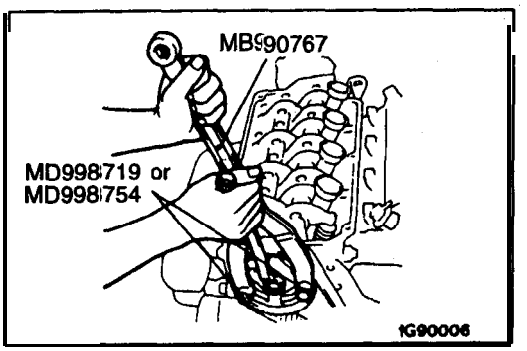

▶C◀ CAMSHAFT SPROCKET INSTALLATION

OIL PAN AND OIL SCREEN

11200250130

REMOVAL AND INSTALLATION

Pre-removal and Post-installation Operation
- Engine Oil Draining and Supplying (Refer to GROUP 00 – Maintenance service.)
- Oil Level Gauge Removal and Installation
- Front Exhaust Pipe Removal and Installation (Refer to GROUP 15 – Exhaust Pipe and Main Muffler.)

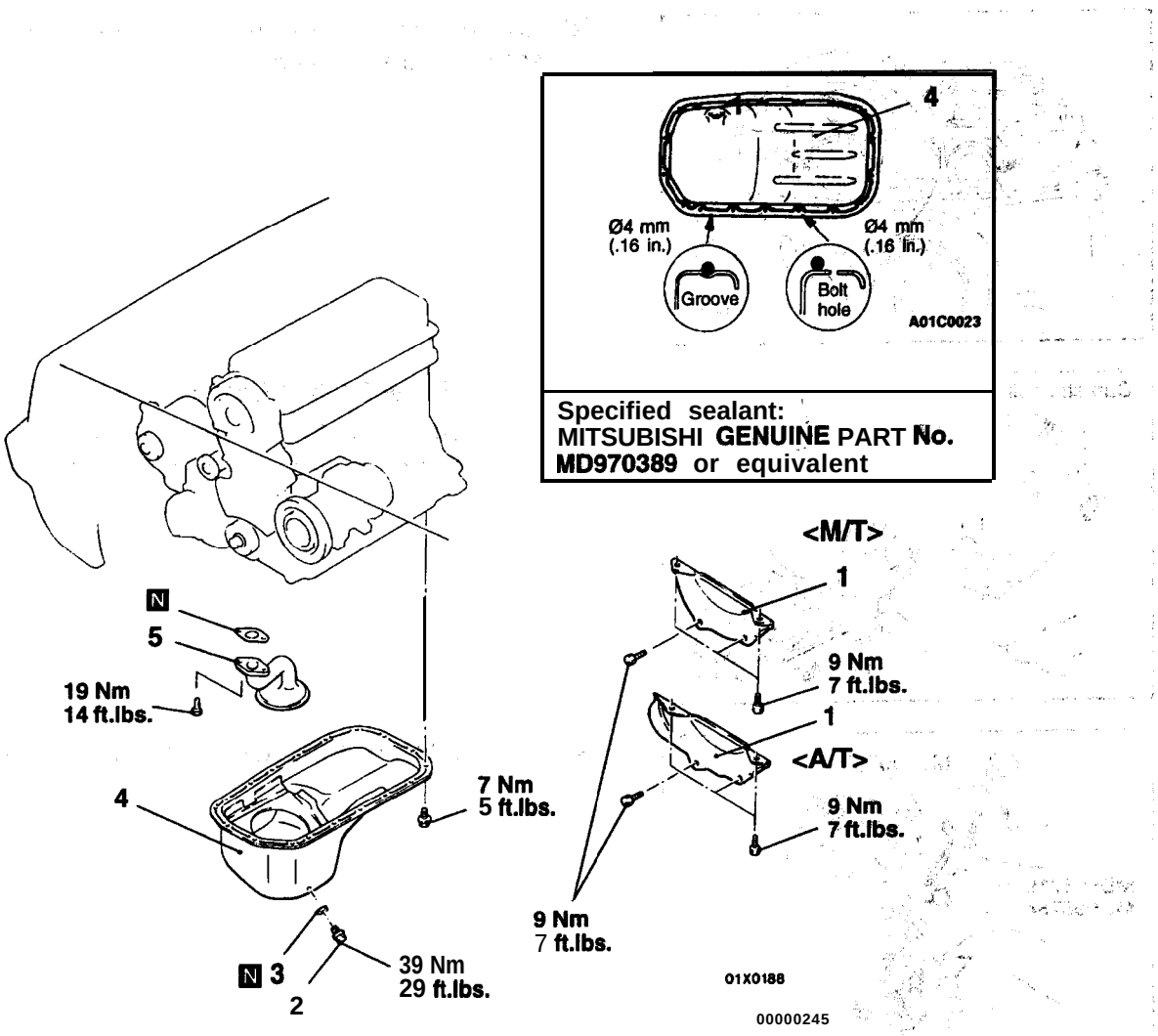

Removal steps

1. Bell housing cover
2. Drain plug
3. ▶B◀ Gasket
4. ◀A▶ ▶A◀ Oil pan
5. Oil screen

TSB Revision

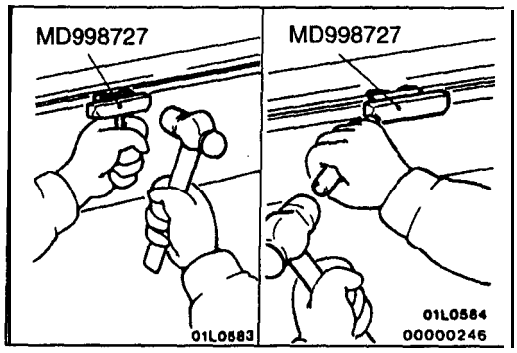

REMOVAL SERVICE POINT

◀A▶ OIL PAN REMOVAL

After removing the oil pan mounting bolts, remove the oil pan with the special tool and a brass bar.

Caution
Do it slowly to avoid deformation of the oil pan flange.

INSTALLATION SERVICE POINTS

▶A◀ OIL PAN INSTALLATION

Caution
After cleaning the oil pan mounting bolt holes in the oil seal case, the oil' pan should be installed.

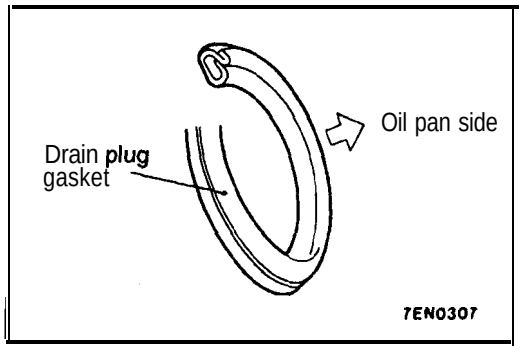

▶B◀ GASKET INSTALLATION

Replace the gasket and install, it in the direction shown in the illustration.

CRANKSHAFT FRONT OIL SEAL

11200340189

REMOVAL AND INSTALLATION

Pre-removal and Post-installation Operation
- Timing Belt B Removal and Installation (Refer to P.11E-41.)

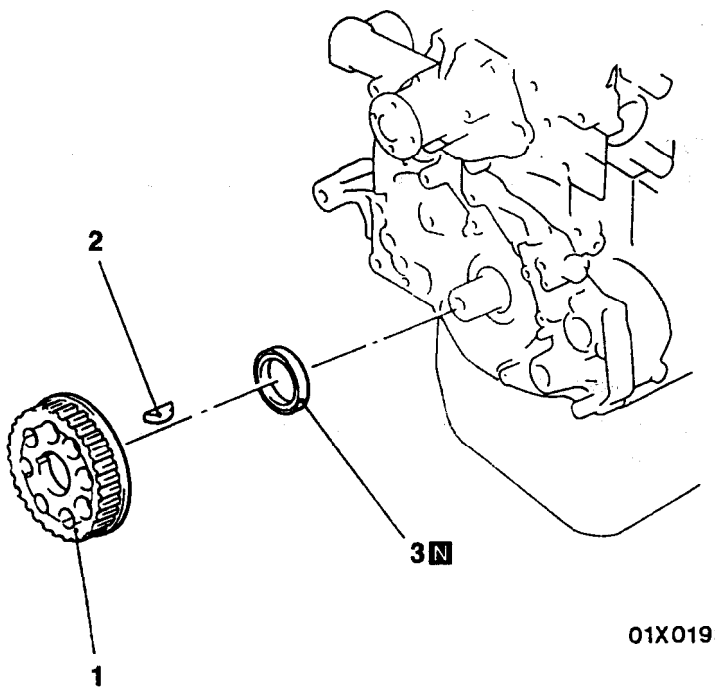

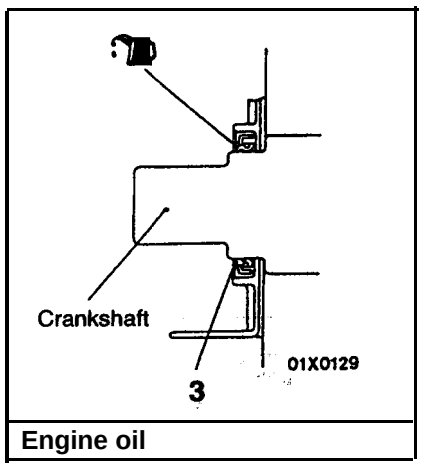

Removal steps
1. Crankshaft sprocket B
2. Key
▶A◀ 3. Crankshaft front oil seal

INSTALLATION SERVICE POINT

▶A◀ CRANKSHAFT FRONT OIL SEAL INSTALLATION

(1) Apply engine oil to the entire inside diameter of the oil seal lip.
(2) Press-fit the oil seal until it is flush with the oil pump case.

TSB Revision

CRANKSHAFT REAR OIL SEAL

11200370287

REMOVAL AND INSTALLATION

Pre-removal and Post-installation Operation
- **Transaxle** Assembly Removal and Installation
  (M/T: Refer to GROUP 22A–Transaxle Assembly.)
  (A/T: Refer to GROUP 23A–Transaxle Assembly.)
- Clutch Cover and Clutch Disc Removal and Installation <M/T>

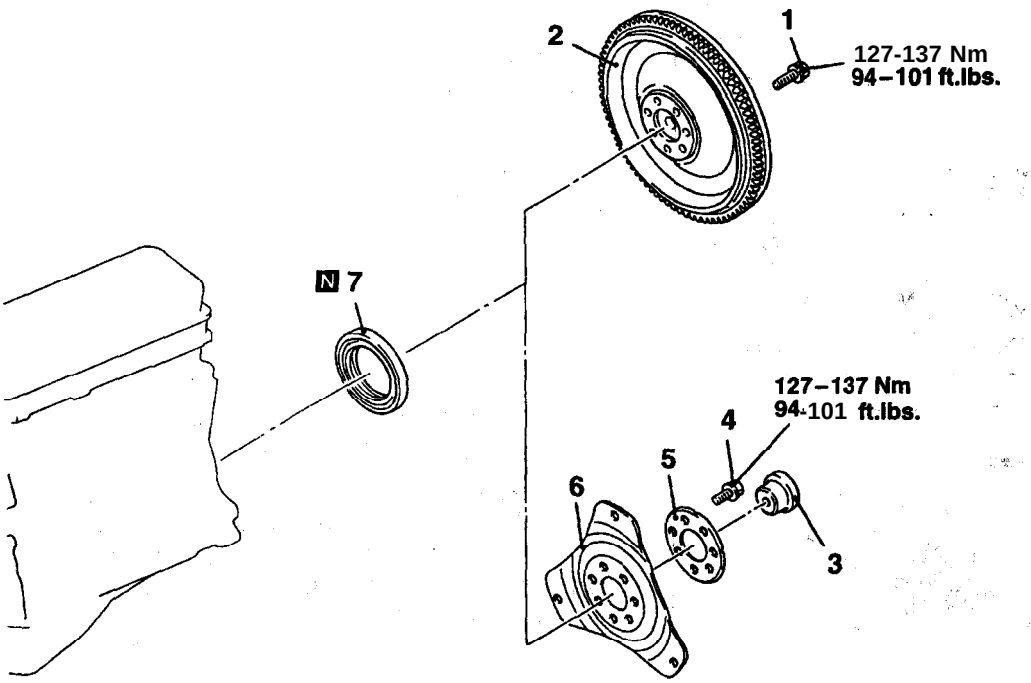

01X0094
00004206

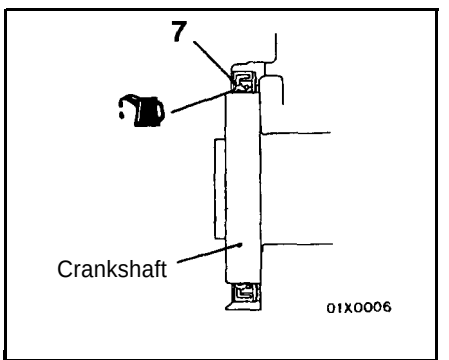

Engine oil

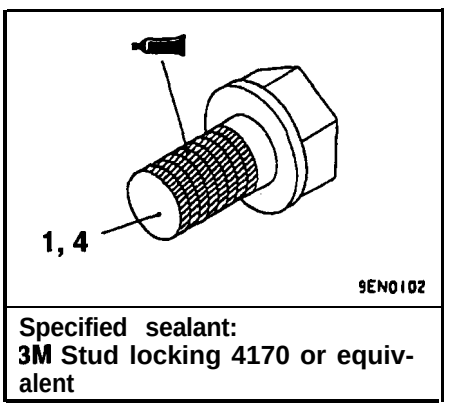

Specified sealant:
3M Stud locking 4170 or equivalent

Removal steps

◀A▶ ▶B◀ 1. Flywheel bolt <M/T>
2. Flywheel <M/T>
3. Crankshaft bushing <A/T>
◀A▶ ▶B◀ 4. Drive plate bolt <A/T>
5. Adapter plate <A/T>
6. Drive plate <A/T>
▶A◀ 7. Crankshaft rear oil seal

TSB Revision

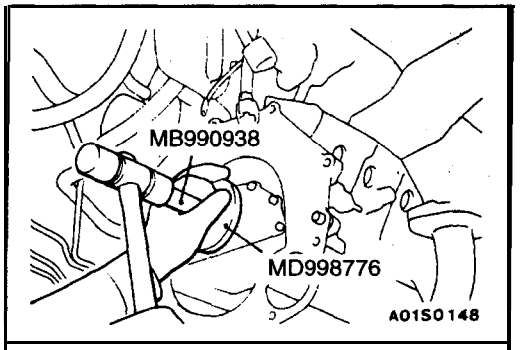

INSTALLATION SERVICE POINTS

▶A◀ CRANKSHAFT REAR OIL SEAL INSTALLATION

(1) Apply a small amount of engine oil to the entire inside diameter of the oil seal lip.
(2) Tap in the oil seal as shown in the illustration.

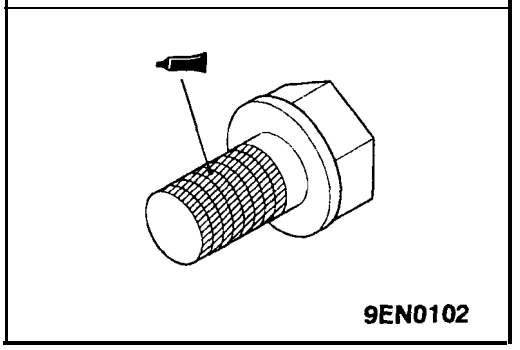

▶B◀ DRIVE PLATE BOLT <A/T>/FLYWHEEL BOLT <M/T> INSTALLATION

(1) Clean off all sealant, oil and other substances which are adhering to the threaded bolts, crankshaft thread holes and the flywheel <M/T> or drive plate <A/T>.
(2) Apply oil to the bearing surface of the flywheel <M/T> or drive plate <A/T> bolt.
(3) Apply oil to the crankshaft thread holes.
(4) Apply sealant to the threaded mounting bolts.

Specified sealant:
3M Stud locking 4170 or equivalent

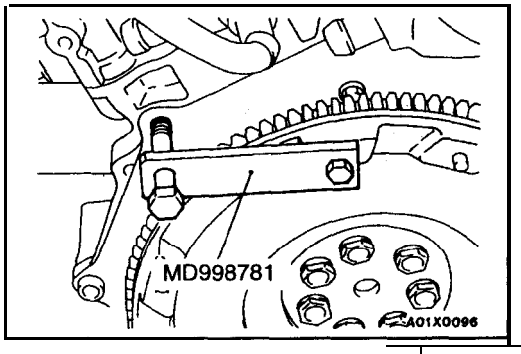

(5) Use the special tool to secure the flywheel <M/T> or drive plate <A/T>, and then tighten the bolts to the specified torque.

Specified torque:
127-137 Nm (94–101 ft.lbs.)

CYLINDER HEAD GASKET

11200400412

REMOVAL AND INSTALLATION

Pre-removal Operation
- Fuel Line Inner Pressure Release
  (Refer to GROUP 13A – On-vehicle Service.)
- Engine Coolant Draining
  (Refer to GROUP 00 – Maintenance Service.)
- Engine Oil Draining
  (Refer to GROUP 00 – Maintenance Service.)

Post-installation Operation
- Engine Oil Refilling
  (Refer to GROUP 00 – Maintenance Service.)
- Engine Coolant Refilling
  (Refer to GROUP 00 – Maintenance Service.)

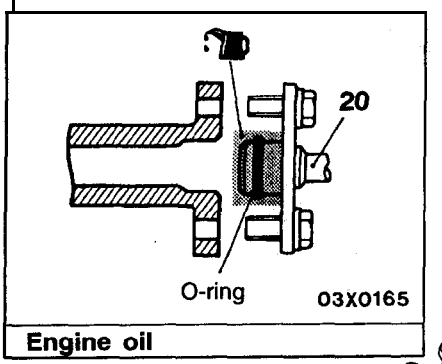

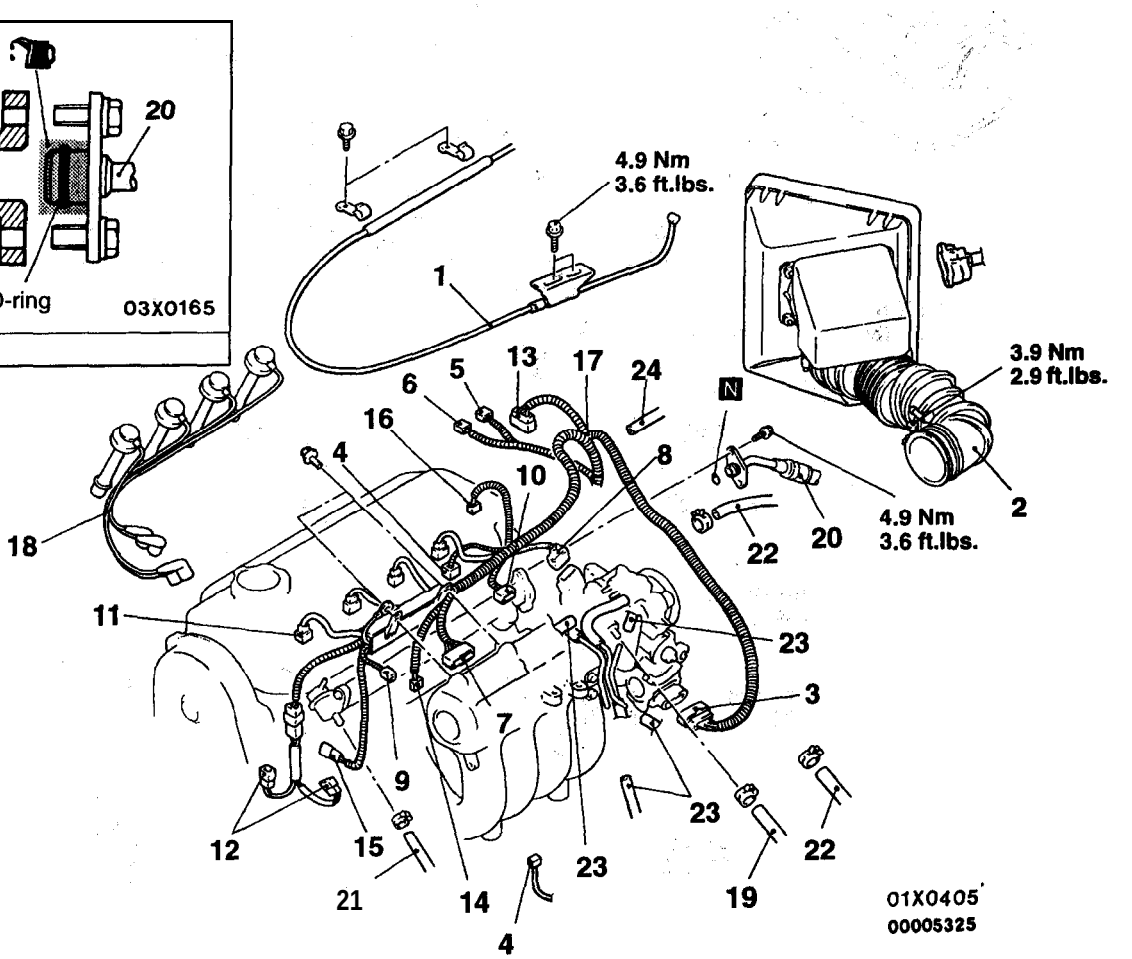

Removal steps

1. Accelerator cable connection (Refer to GROUP 17–On-vehicle Service.)
2. Air intake hose
3. Idle air control motor connector
4. Heated oxygen sensor connector
5. Engine coolant temperature gauge unit connector
6. Engine coolant temperature sensor connector
7. Ignition power transistor connector
8. Throttle position sensor connector
9. Capacitor connector
10. Manifold differential pressure sensor connector
11. Injector connectors
12. Ignition coil connector
13. Camshaft position sensor connector
14. Crankshaft position sensor connector
15. Air conditioning compressor connector
16. Evaporative emission purge solenoid valve connector
17. Control wiring harness
18. Spark plug cable
19. Brake booster vacuum hose connection
20. ▶F◀ High-pressure fuel hose connection
21. Fuel return hose connection
22. Water hose connection
23. Vacuum hoses connection
24. Breather hose connection

TSB Revision

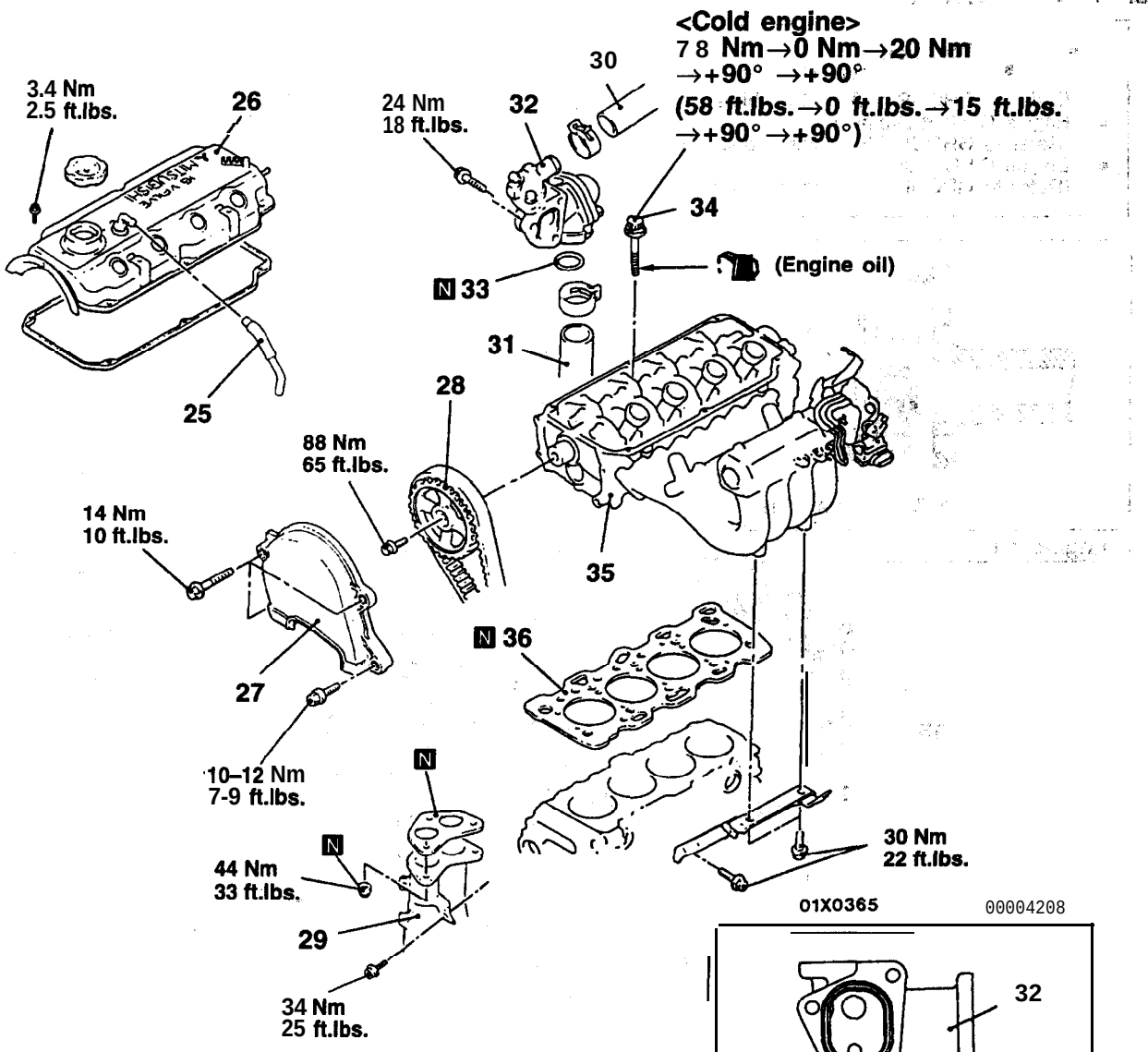

Specified sealant:
MITSUBISHI GENUINE PART
MD970389 or equivalent

25. PCV hose
26. Rocker cover
27. Timing belt upper cover
◀A▶ 28. Camshaft sprocket
29. Front exhaust pipe connection
◀B▶ ▶E◀ 30. Radiator upper hose connection
◀B▶ ▶E◀ 31. Radiator lower hose connection
▶D◀ 32. Thermostat case assembly
▶C◀ 33. O-ring
◀C▶ ▶B◀ 34. Cylinder head bolt
35. Cylinder head assembly
▶A◀ 36. Cylinder head gasket

TSB Revision

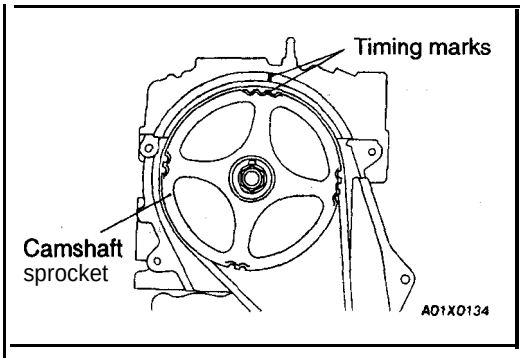

REMOVAL SERVICE POINTS

◀A▶ CAMSHAFT SPROCKET REMOVAL

(1) Rotate the crankshaft in the forward (right) direction and, align the timing marks. (No.1 cylinder is the compression stroke top dead center position.)

Caution
The crankshaft must always be rotated in the forward direction only.

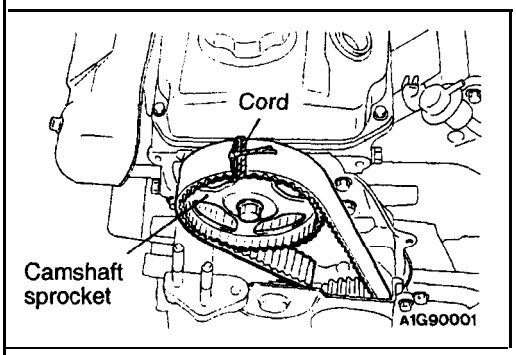

(2) Tie the camshaft sprocket and timing belt with a cord so that the position of the camshaft sprocket will not move with respect to the timing belt.

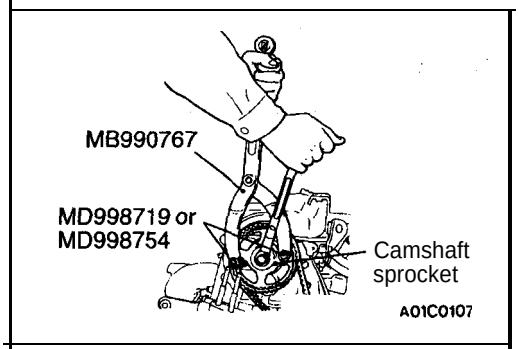

(3). Use the special tool to remove the camshaft sprocket with the timing belt attached.

Caution
After removing the camshaft sprocket, be sure not to rotate the crankshaft.

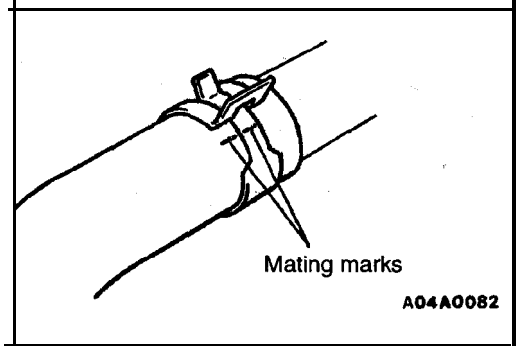

◀B▶ RADIATOR UPPER HOSE/RADIATOR LOWER HOSE DISCONNECTION

Place mating marks on the radiator hose and the hose clamp, and then disconnect the radiator hose.

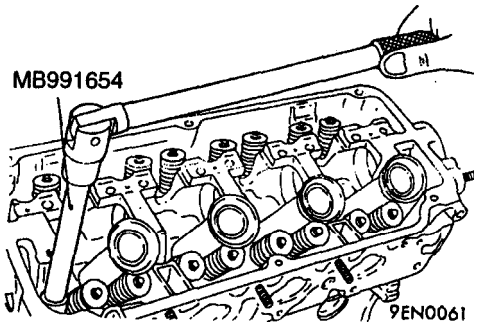

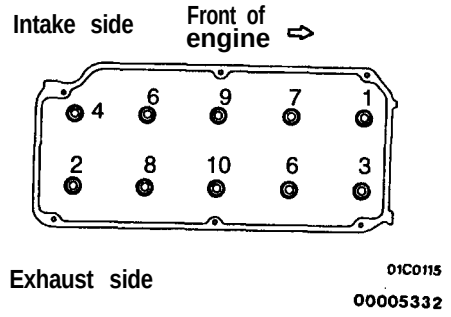

◀C▶ CYLINDER HEAD BOLT REMOVAL

Using the special tool, loosen the bolts in the order shown in the illustration (in 2 or 3 stages), and then remove the cylinder head assembly.

Caution

Because the plug guides cannot, be replaced by themselves, be careful not to damage or deform the plug guides when removing the cylinder head bolts.

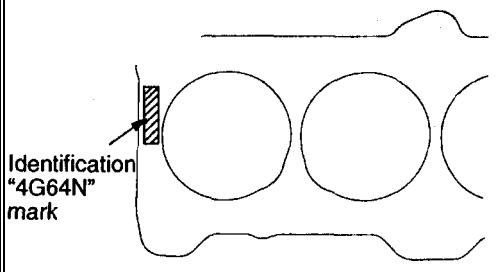

INSTALLATION SERVICE POINTS

▶A◀ CYLINDER HEAD GASKET INSTALLATION

(1) Wipe off all oil and grease from the gasket mounting surface.

(2) Install the gasket to the cylinder block with the identification mark facing upwards.

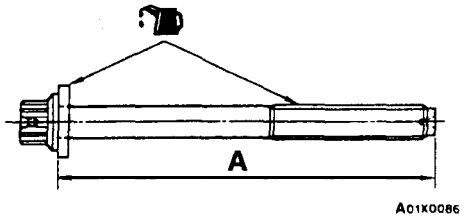

▶B◀ CYLINDER HEAD BOLT INSTALLATION

(1) When installing the cylinder head bolts, the length below the head of the bolts should be within the limit.
If it is outside the limit, replace the bolts.

Limit (A): 99.4 mm (3.91 in.)

(2) Apply engine oil to the bolt thread and the washer.

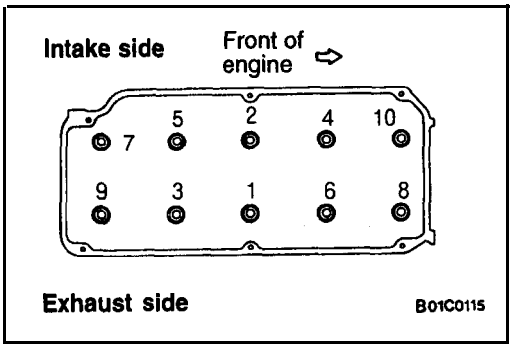

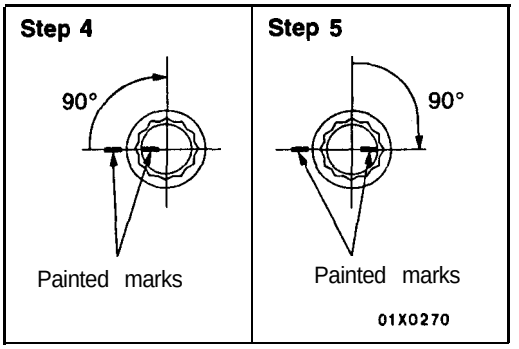

(3) Tighten the bolts by the following procedure.

Step	Operation	Remarks
1	Tighten to 78 Nm (58 ft.lbs.).	In the order shown in the illustration.
2	Loosen fully.	In the reverse order of that shown in the illustration.
3	Tighten to 20 Nm (15 ft.lbs.).	In the order shown in the illustration.
4	Tighten 90° of a turn.	In the order shown in the illustration. Mark the head of the cylinder head bolt and cylinder head by paint.
5	Tighten 90° of a turn.	In the order shown in the illustration. Check that the painted mark of the head bolt is lined up with that of the cylinder head.

Caution

1. **Always make a tightening angle just 90". If it is less than 90°, the head bolt will be loosened.**
2. **If it is more than 90°, remove the head bolt and repeat the 'procedure from step 1.**

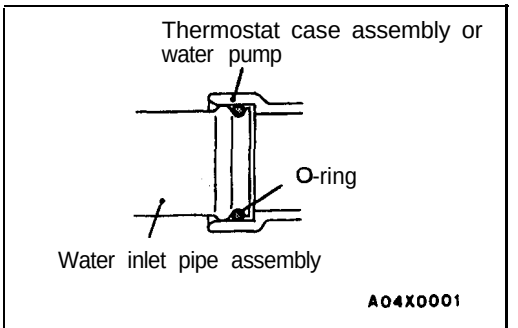

▶C◀ O-RING INSTALLATION

Insert the O-ring to the water inlet pipe, and coat the outer inside diameter of the O-ring with water or engine coolant.

Caution

Do not let engine oil or other greases contact with the O-ring.

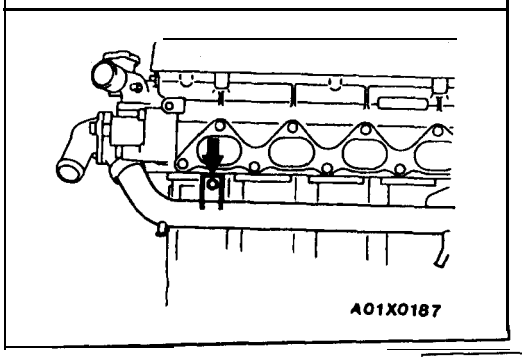

▶D◀ THERMOSTAT CASE ASSEMBLY INSTALLATION

(1) Loosen the water inlet pipe bolt shown in the illustration.

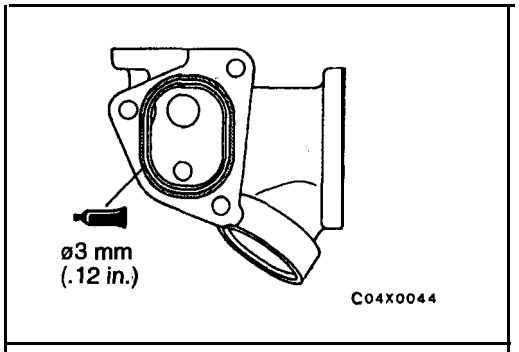

(2) Apply specified sealant to the thermostat case assembly in the places shown in the illustration.

Specified sealant:
MITSUBISHI GENUINE PART MD970389 or equivalent

(3) Apply a small amount of water to the O-ring of the water inlet pipe, and then press the thermostat case assembly into the water inlet pipe.
(4) Tighten the thermostat case assembly mounting, bolts.
(5) Tighten the water inlet pipe bolts.

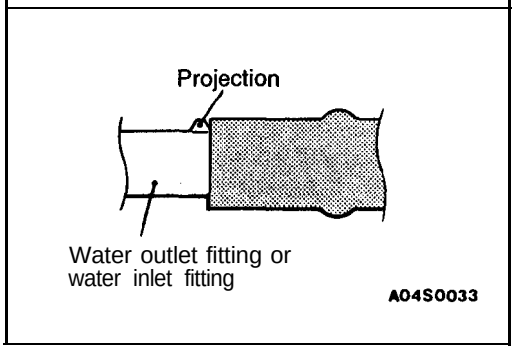

▶E◀ RADIATOR LOWER HOSE/RADIATOR UPPER HOSE CONNECTION

(1) Insert each hose as far as the projection of the water outlet fitting or water inlet fitting.

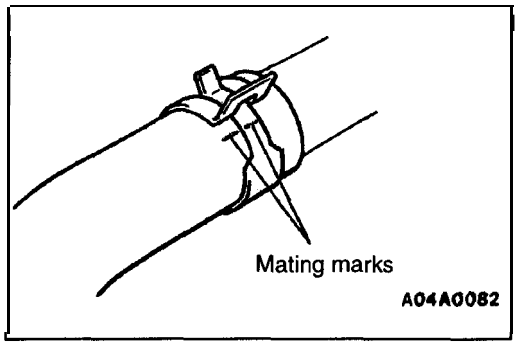

(2) Align the mating marks on the radiator hose and hose clamp, and then connect the radiator hose.

▶F◀ HIGH-PRESSURE FUEL HOSE CONNECTION

When connecting the high-pressure fuel hose to the fuel rail, apply a small amount of clean engine oil to the hose union' and then insert, being careful not to damage the O-ring.

Caution
Do not let engine oil get into the fuel rail.

TIMING BELT

11200430220

REMOVAL AND INSTALLATION

Pre-removal Operation
- Under Cover Removal
  (Refer to GROUP 42 – Under Cover.)
- Engine Mount Bracket Removal
  (Refer to GROUP 32 – Engine Mounting.)

Post-installation Operation
- Under Cover Installation
  (Refer to GROUP 42 – Under Cover.)
- Engine Adjustment
- Engine Mount Bracket Installation
  (Refer to GROUP 32 – Engine Mounting.)

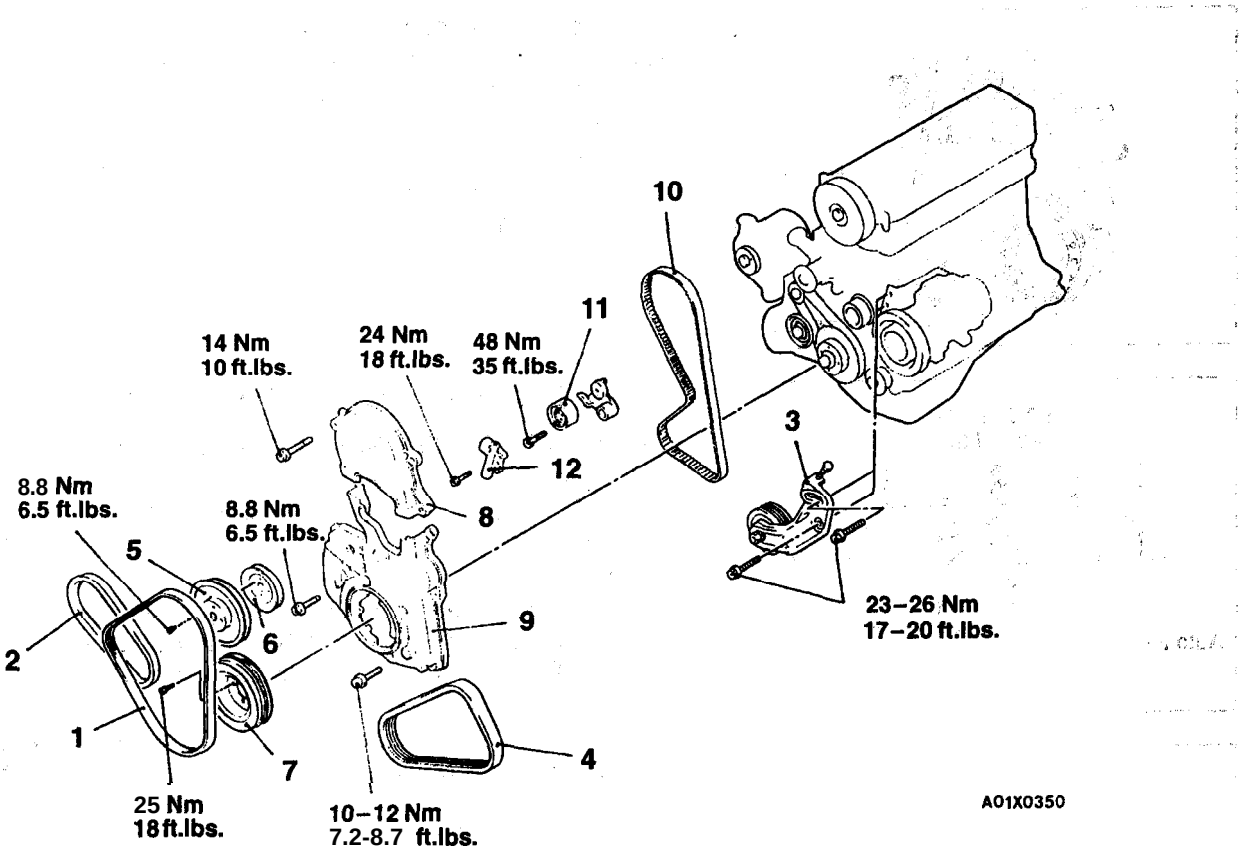

Removal steps
- Drive Belt Tension Adjustment

1. Drive belt (Generator)
2. Drive belt (Power steering)
3. Tensioner pulley bracket
4. Drive belt (A/C)
5. Water pump pulley
6. Water pump pulley (Power steering)
7. Crankshaft pulley

▶D◀ 8. Timing belt front upper cover
▶D◀ 9. Timing belt front lower cover
▶C◀ • liming belt tension adjustment
◀A▶ ▶B◀ 10. Timing belt
11. Tension pulley
▶A◀ 12. Auto tensioner

TSB Revision

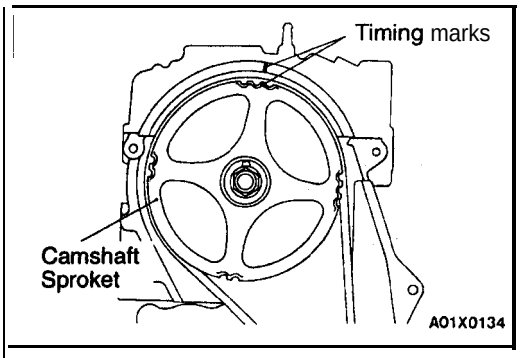

REMOVAL SERVICE POINT

◀A▶ TIMING BELT, REMOVAL

(1) Turn the crankshaft in the forward direction (to the right) to align the camshaft sprocket timing marks.

Caution
Always turn the crankshaft in the forward direction only.

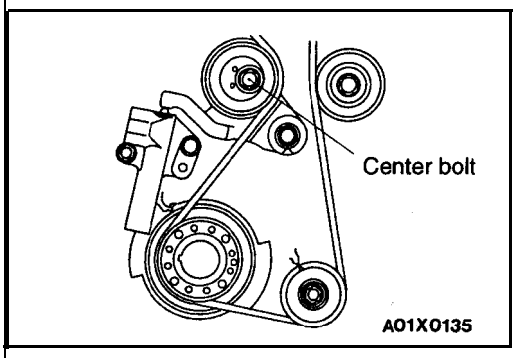

(2) Loosen the tension pulley center bolt.
(3) Move the tension pulley to the water pump side, and then remove the timing belt.

Caution
If the timing belt is to be reused, use chalk to mark (on its flat side) an arrow indicating the clock-wise direction.

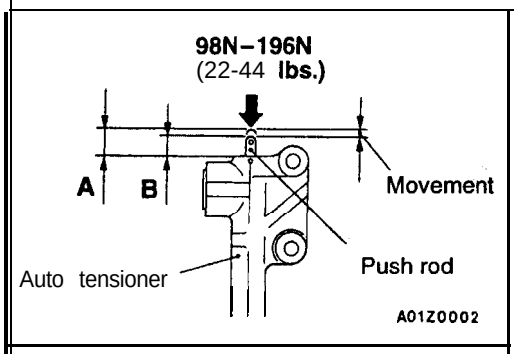

INSTALLATION SERVICE POINTS

▶A◀ AUTO TENSIONER INSTALLATION

(1) Apply 98-196 N (22-44 lbs.) force to the push rod of the auto tensioner by pressing it against a metal (cylinder block,..etc.), and measure the movement of the push rod.

Standard value: Within 1 mm (.04 in.)
A: Length when it is free (not pressed)
B: Length when it is pressed
A-B: Movement

(2) If it is out of the standard value, replace the auto tensioner.
(3) Use a press or vise to gently compress the auto tensioner push rod until pin hole A of the push rod and pin hole B of the tensioner cylinder are aligned.

Caution
If the compression speed is too fast, the rod may become damaged, so be sure to carry out this operation slowly.

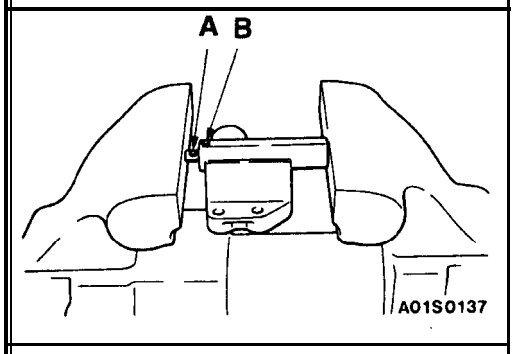

(4) Once the holes are aligned, insert the set pin.

NOTE
When replacing the auto tensioner with a new part, the pin will be in the auto tensioner.

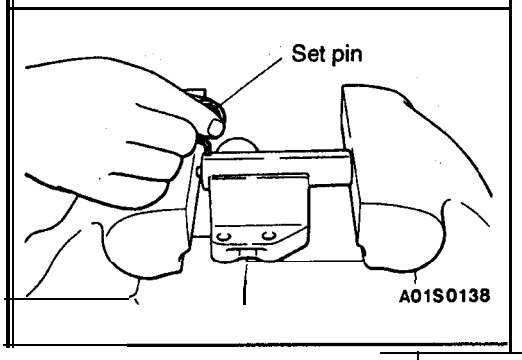

(5) Install the auto tensioner to the engine.

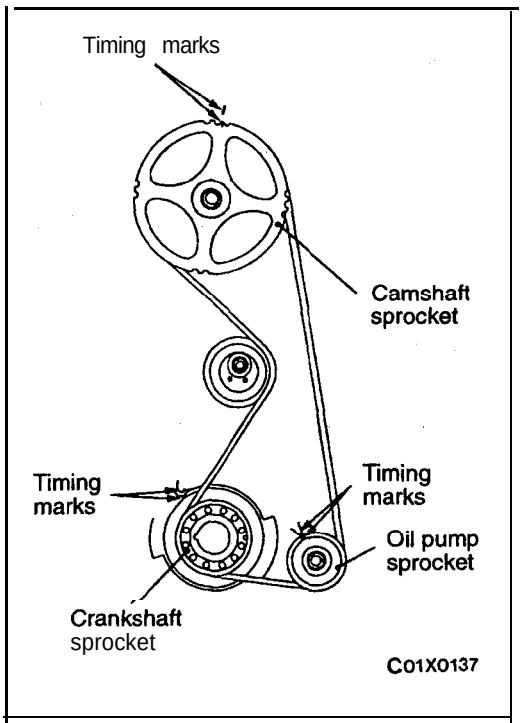

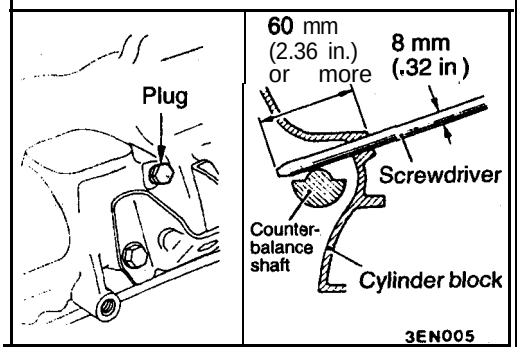

▶B◀ TIMING BELT INSTALLATION

(1) Align the timing marks on the camshaft sprocket; crankshaft sprocket and oil pump sprocket.

(2) After aligning the timing mark on the oil pump sprocket,' remove the cylinder block plug and insert a Phillips screwdriver with a diameter of 8 mm (.32 in.), and check to be sure that the screwdriver goes in 60 mm (2.36 in.) or more. If the screwdriver will only go in 20 – 25 mm (.79–.98 in,) before striking the counterbalance shaft, turn the sprocket once, realign the timing mark and check that the screwdriver goes in 60 mm (2.36 in.) or more. Do not take out the screwdriver until the timing 'belt is installed.

(3) Install the timing belt so as not to be loosened among the sprockets, by the following procedure.

Caution
If the timing belt is to be reused, install it so that the mark indicates the clockwise direction.

(4) Set the tension pulley so that the pin holes are at the bottom, press the tension pulley lightly against the timing belt.

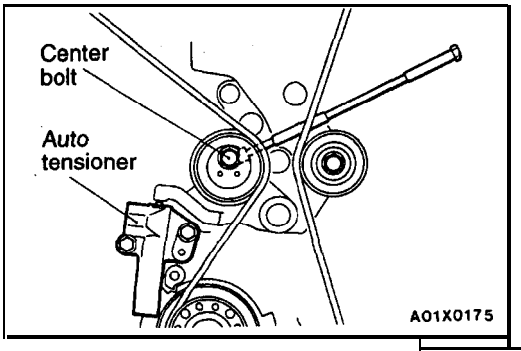

(5) Screw the tool into the engine left support bracket until its end makes contact with the tensioner arm. At that point, screw the tool in some more and then remove the set wire attached to the auto tensioner.
(6) Remove the tool.
(7) Tighten the center bolt to the specified torque.

Specified torque: 48 Nm (35 ft.lbs.)

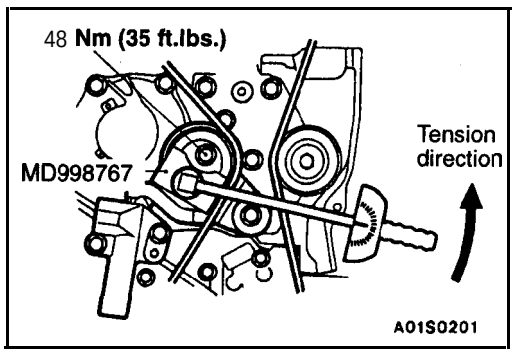

▶C◀ TIMING BELT TENSION ADJUSTMENT

(1) After turning the crankshaft 1/4 of a revolution counter-clockwise, turn it clockwise until the timing marks are aligned.

(2) Loosen the tension pulley fixing bolt, and then use the special tool and a torque wrench to tighten the fixing bolt to the specified torque while applying tension to the timing belt.

Standard value:
3.5 **Nm (2.6 ft.lbs.)**
<Timing belt tension torque>

Caution
When tightening the fixing bolt, do not let the tension pulley turn with the bolt.

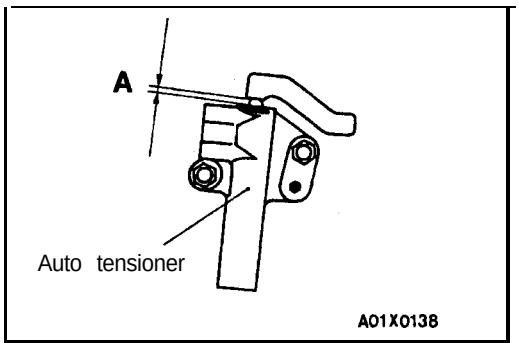

(3) Turn the crankshaft two revolutions 'clockwise so that the timing marks are aligned. After leaving it for 15 minutes, measure the amount of protrusion of the auto tensioner.

Standard value (A): 3.8-4.5 mm (.150–.177 in.)

(4) If the amount of protrusion is outside the standard value,, repeat the operation in steps '(1) to, (3).

(5) Check again that the timing marks of each sprocket are aligned.

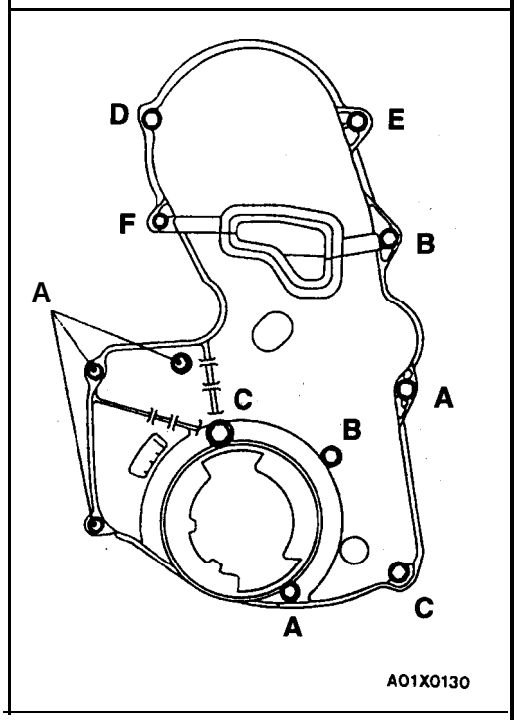

▶D◀ TIMING BELT FRONT LOWER COVER/TIMING BELT FRONT UPPER COVER INSTALLATION

Install the bolts, being careful not to mistake the bolt sizes.

	Thread diameter × thread length mm (in.)	Bolt classification	Tightening torque Nm (ft.lbs.)
A	6 × 18 (.24 × .71)	Flange bolt	10–12 (7.2-8.7)
B	6 × 25 (.24 × .98)	Flange bolt	10–12 (7.2-8.7)
C	6 × 25 (.24 × .98)	Washer assembled bolt	8.8 (6.5)
D	8 × 50 (.31 × 1.97)	Flange bolt	14 (10)
E	8 × 28 (.31 × 1.10)	Flange bolt	14 (10)
F	8 × 35 (.31 × 1.38)	Flange bolt	14 (10)

TIMING BELT B

11200460069

REMOVAL AND INSTALLATION

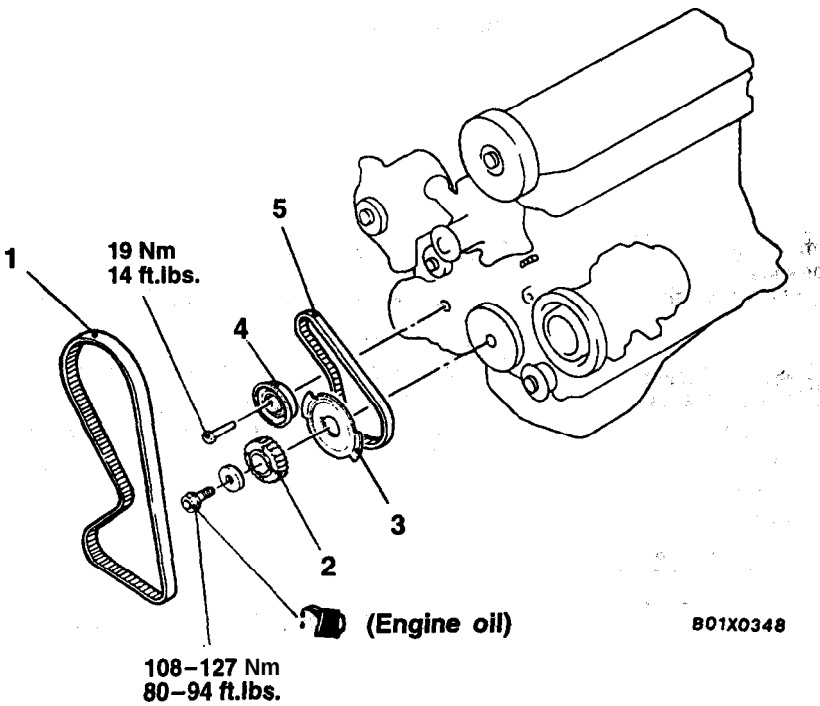

Removal steps

1. Timing belt (Refer to P.11 E-35.)
◀A▶ ▶D◀ 2 . Crankshaft sprocket
▶C◀ 3. Crankshaft sensing blade
▶B◀ • Timing belt B tension adjustment
4. Timing belt B tensioner
◀B▶ ▶A◀ 5. Timing belt B

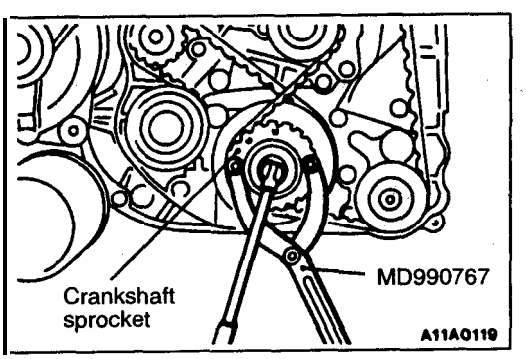

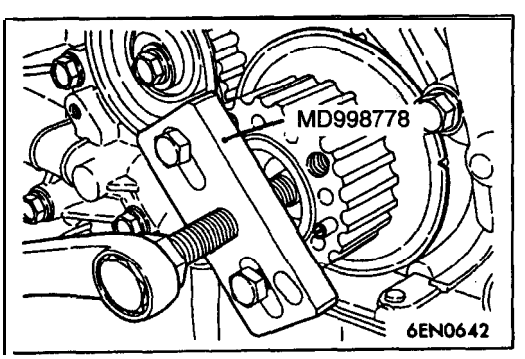

REMOVAL SERVICE POINTS

◀A▶ CRANKSHAFT SPROCKET REMOVAL

(1) Use the special tool to remove the bolt.

(2) Use the special tool to remove the crankshaft sprocket.

TSB Revision

◀B▶ TIMING BELT B REMOVAL,,

Caution
If timing belt "B" is to be reused, use chalk to mark it with an arrow on its flat side indicating the turning direction (to the right).

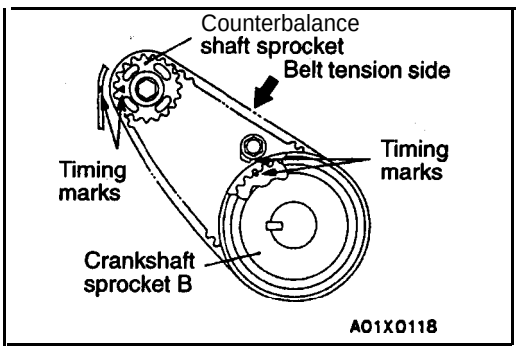

INSTALLATION SERVICE POINTS

▶A◀ TIMING BELT B INSTALLATION

Install timing belt **"B"** by the following procedure.
(1) Ensure that crankshaft sprocket "B" timing mark and the counterbalance shaft sprocket timing mark are aligned.
(2) Fit timing belt **"B"** over crankshaft sprocket "B" and the silent shaft sprocket. Ensure that there is no slack in the belt.

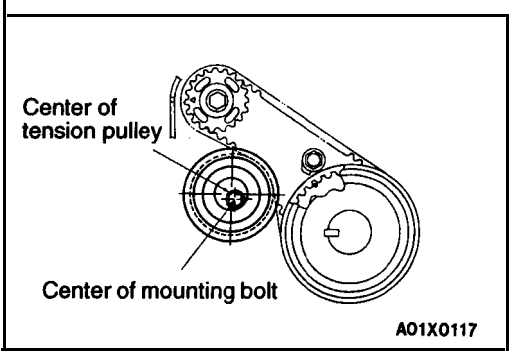

▶B◀ TIMING BELT B TENSION ADJUSTMENT

Adjust the tension of timing belt **"B"** by the following procedure.
(1) Temporarily fix the timing belt **"B"** tensioner such that the center of the tensioner pulley is to the left and above the center of the installation bolt, and temporarily attach the tensioner pulley so that the flange is toward the front of the engine.

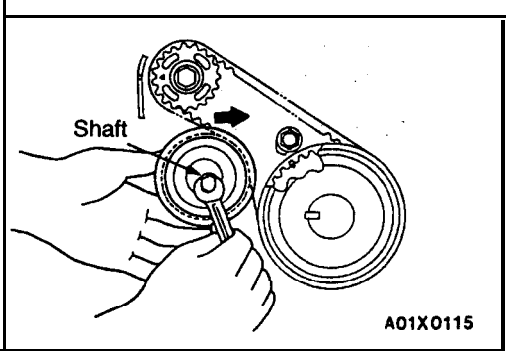

(2) Holding the timing belt "B" tensioner up with your finger in the direction of the arrow, place pressure on the timing belt so that the tension side of the belt is taut. Now tighten the bolt to fix the tensioner.

Caution
When tightening the bolt, ensure that the tensioner pulley shaft does not rotate, with the bolt. Allowing it to rotate with the bolt can cause excessive tension on the belt.

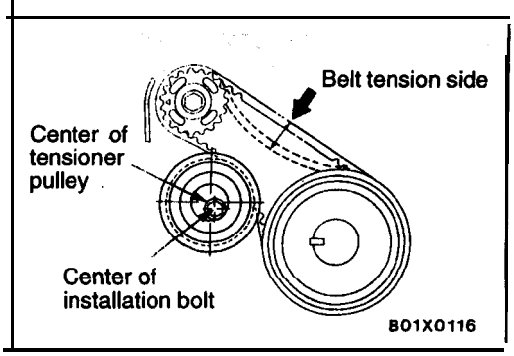

(3) Press the belt at the shown point by a finger to check belt tension. If not, adjust.

Standard value: 5-7 mm (.20–.28 in.)

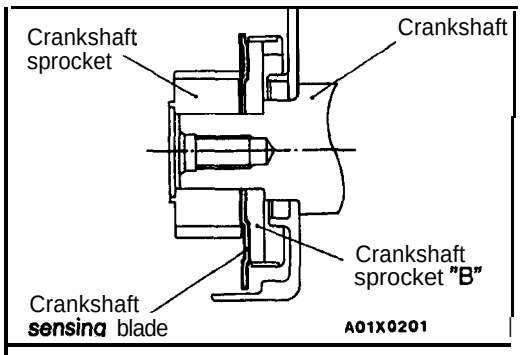

▶C◀ CRANKSHAFT SENSING BLADE INSTALLATION

When installing, make sure the direction is correct. See figure.

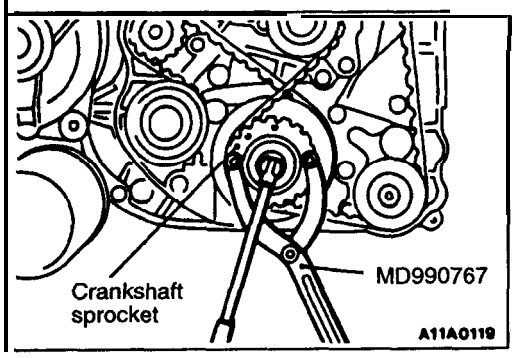

▶D◀ CRANKSHAFT SPROCKET INSTALLATION

Use the special tool to install the crankshaft sprocket and bolt.

NOTE

Apply the minimum amount of engine oil to the bearing surface and thread of the crankshaft bolt.

NOTES

ENGINE OVERHAUL. <2.4L>

CONTENTS

11309000142

GENERAL INFORMATION

11300010113

GENERAL SPECIFICATIONS

Descriptions			Specifications
Type			In-line OHV, SOHC
Number of cylinders			4
Combustion chamber			Pentroof type
Total displacement cm^3 (cu.in.)			2,350 (143.4)
Cylinder bore mm (in.)			86.5 (3.41)
Piston stroke mm (in.)			100.0 (3.94)
Compression ratio			9.5
Valve timing (Camshaft identification mark: 1)	Intake valve	Opens (BTDC)	18°
		Closes (ABDC)	58°
	Exhaust valve	Opens (BBDC)	58°
		Closes (ATDC)	18°
Lubrication system			Pressure feed, full-flow filtration
Oil pump type			Involute gear type

TSB Revision

SPECIFICATIONS

11300030225

SERVICE SPECIFICATIONS

Items		Standard value	Limit
Timing belt			
Autotensioner rod projection length mm (in.)		12 (.47)	–
Autotensioner rod pushed-in amount [when pushed with a force of 98 – 196 N (22 – 44 lbs.)] mm (in.)		1.0 (.039) or less	–
Rocker arms and camshaft			
Camshaft cam height mm (in.) (Identification mark: 1)	Intake	37.39 (1.4720)	36.89 (1.4524)
	Exhaust	37.47 (1.4752)	36.97 (1.4555)
Camshaft journal O.D. mm (in.)		45 (1.77)	
Cylinder head and valves			
Cylinder head flatness of gasket surface mm (in.)		Less than 0.05 (.0020)	0.2 (.008)
Cylinder head grinding limit of gasket surface mm (in.) *Total resurfacing depth of both cylinder head and cylinder block		–	*0.2 (.008)
Cylinder head overall height mm (in.)		119.9 – 120.1 (4.720 – 4.728)	–
Cylinder head bolt shank length mm (in.)		–	Max. 99.4 (3.91)
Valve thickness of valve head (Margin) mm (in.)	Intake	1.0 (.039)	0.5 (.020)
	Exhaust	1.2 (.047)	0.7 (.028)
Valve overall height mm (in.)	Intake	112.30 (4.4213)	111.80 (4.4016)
	Exhaust	114.11 (4.4925)	113.61 (4.4728)
Valve stem O.D. mm (in.)	Intake	6.0 (.236)	–
	Exhaust	5.9 (.232)	–
Valve thickness to valve guide clearance mm (in.)	Intake	0.02 – 0.05 (.0008 – .0020)	0.10 (.0039)
	Exhaust	0.03 – 0.07 (.0012 – .0028)	0.15 (.0059)
Valve face angle		45 – 45.5°	–
Valve spring free length mm (in.)		51.0 (2.008)	50.0 (1.969)
Valve spring load/installed height N (lbs.)/mm(in.)		267 (60)/44.2 (1.74)	–
Valve spring out-of-squareness		2° or less	Max. 4°
Valve seat valve contact width mm (in.)		0.9 – 1.3 (.035 – .051)	–
Valve guide I.D. mm (in.)		6.0 (.236)	–
Valve guide projection from cylinder head upper surface mm (in.)		14.0 (.55)	–
Valve stem projection mm (in.)		49.30 (1.9409)	49.80 (1.9606)
Front case, counterbalance shaft and oil pan			
Oil pump side clearance mm (in.)	Drive gear	0.08 – 0.14 (.0031 – .0055)	–
	Driven gear	0.06 – 0.12 (.0024 – .0047)	–
Oil pressure at curb idle speed kPa (psi) [Oil temperature is 75 to 90°C (167 to 194 °F)]		78 (11.4) or more	
Piston and connecting rod			
Piston O.D. mm (in.)		86.5 (3.41)	–
Piston ring side clearance mm (in.)	No. 1	0.03 – 0.07 (.0012 – .0028)	0.1 (.004)
	No. 2	0.03 – 0.07 (.0012 – .0028)	0.1 (.004)
Piston ring end gap mm (in.)	No. 1	0.25 – 0.35 (.0098 – .0138)	0.8 (.031)
	No. 2	0.40 – 0.55 (.0157 – .0217)	0.8 (.031)
	Oil ring side rail	0.10 – 0.40 (.0039 – .0157)	1.0 (.039)
Piston pin O.D. mm (in.)		22.0 (.87)	–
Piston pin press-in load N (lbs.) (Room temperature)		7,350 – 17,200 (1,653 – 3,858)	–
Crankshaft pin oil clearance mm (in.)		0.02 – 0.05 (.0008 – .0020)	0.1 (.004)
Connecting rod big end side clearance mm (in.)		0.10 – 0.25 (.0039 – .0098)	0.4 (.016)

Items	Standard value	Limit
Crankshaft, flywheel and drive plate		
Crankshaft end play mm (in.)	0.05 – 0.18 (.0020 – .0071)	0.25 (.0098)
Crankshaft journal O.D. mm (in.)	57 (2.24)	–
Crankshaft pin O.D. mm (in.)	45 (1.77)	–
Crankshaft journal oil clearance mm (in.)	0.02 – 0.04 (.0008 – .0016)	0.1 (.004)
Cylinder block		
Bearing cap bolt shank length mm (in.)		Max. 71.1 (2.80)
Piston to cylinder clearance mm (in.)	0.02 – 0.04 (.0008 – .0016)	–
Cylinder block flatness of gasket surface mm (in.)	0.05 (.0020)	0.1 (.004)
Cylinder block grinding limit of gasket surface mm (in.) *Total resurfacing depth of both cylinder head and cylinder block		*0.2 (.008)
Cylinder block overall height mm (in.)	289.9 – 290.1 (11.413 – 11.421)	–
Cylinder block I.D. mm (in.)	86.50 (3.4055)	–
Cylindricity mm (in.)	0.01 (.0004) or less	–

REWORK DIMENSIONS

Items		Standard value
Cylinder head and valve		
Oversize rework dimensions of valve guide hole mm (in.) (both intake and exhaust)	0.05 O.S.	11.05 – 11.07 (.4350 – .4358)
	0.25 O.S.	11.25 – 11.27 (.4429 – .4437)
	0.50 O.S.	11.50 – 11.52 (.4528 – .4535)
Intake oversize rework dimensions of valve seat hole mm (in.)	0.30 O.S.	34.30 – 34.33 (1.3504 – 1.3516)
	0.60 O.S.	34.60 – 34.63 (1.3622 – 1.3634)
Exhaust oversize rework dimensions of valve seat hole mm (in.)	0.30 O.S.	31.80 – 31.83 (1.2520 –1.2531)
	0.60 O.S.	32.10 – 32.13 (1.2638 – 1.2650)
Crankshaft, flywheel and drive plate		
Crankshaft out-of-roundness and taper of journal pin mm (in.)		0.01 (.0004) or less

NOTE
O.D. : Outer diameter
I.D. : Inner diameter
O.S. : Oversize diameter

TORQUE SPECIFICATIONS

Items	Nm	ft. lbs.
Generator and ignition system		
Water pump pulley	11	8
Lock bolt	14	10
Generator brace	24	17
Generator pivot nut	23	17
Crankshaft pulley	25	18
Ignition coil assembly	10	7
Ignition power transistor assembly	5	3.6
Spark plug	25	18

TSB Revision

Items	Nm	ft. lbs.
Camshaft position sensor	10	7
Camshaft position sensor support	14	10
Camshaft position sensing cylinder	22	16
Timing belt		
Timing belt front cover M6 flange bolt	11	8
Timing belt front cover M6 washer assembled bolt	9	7
Timing belt front cover M8	14	10
Crankshaft position sensor	9	7
Tensioner arm	21	15
Auto tensioner	24	17
Idler pulley	36	26
Oil pump sprocket	55	40
Crankshaft bolt	120	87
Tensioner B	19	14
Counterbalance shaft sprocket	46	33
Engine support bracket	45	33
Camshaft sprocket bolt	90	65
Timing belt rear cover M8	14	10
Timing belt rear cover M10	31	22
Fuel and emission parts		
Throttle body	19	14
EGR valve	22	16
Fuel pressure regulator	9	7
Fuel rail	12	9
Intake manifold		
Engine coolant temperature gauge unit	11	8
Engine coolant temperature sensor	30	22
Water inlet fitting	13	9
Water outlet fitting	13	9
Thermostat housing	24	18
Manifold differential pressure sensor	9	7
Intake manifold stay	31	22
Intake manifold	18	13
Exhaust manifold and water pump		
Oil dipstick guide	60	43
Heat protector	14	10
Exhaust manifold M8	28	20
Exhaust manifold M10	30	22
Water inlet pipe	14	10
Water pump	14	10
Rocker arms and camshaft		
Rocker cover	3.3	2.4
Rocker arm shaft	32	23

Items	Nm	ft. lbs.
Cylinder head and valves		
Cylinder head bolt [Tighten to 78 Nm (58 ft. lbs.) and then completely loosen before finally tightening with above procedure.]	20 + 90° + 90°	14.5 + 90° + 90°
Front case, counterbalance shaft and oil pan		
Drain plug	40	29
Oil pan	7	5
Oil screen	19	14
Oil pressure switch	10	7
Relief plug	45	33
Oil filter bracket	19	14
Plug	24	17
Flange bolt	37	27
Oil pump cover screw	10	7
Oil pump cover bolt	17	12
Front case	24	17
Piston and connecting rod		
Connecting rod cap	20 + 90° – 100°	14.5 + 90° – 100°
Crankshaft, flywheel and drive plate		
Flywheel bolt	135	98
Drive plate bolt	135	98
Rear plate	11	8
Bell housing cover	9	7
Oil seal case	11	8
Bearing cap bolt	25 + 90° – 100°	14.5 + 90° – 100°

SEALANTS

11300050184

Items	Specified sealant
Camshaft position sensor support	Mitsubishi Genuine Part No. MD970389 or equivalent
Engine support bracket	3M ATD Part No. 8660 or equivalent
Thermostat housing	Mitsubishi Genuine Part No. MD970389 or equivalent
Water outlet fitting	Mitsubishi Genuine Part No. MD970389 or equivalent
Engine coolant temperature sensor	3M NUT Locking Part No. 4171 or equivalent
Engine coolant temperature gauge unit	3M ATD Part No. 8660 or equivalent
Oil pressure switch	3M ATD Part No. 8660 or equivalent
Oil pan	Mitsubishi Genuine Part No. MD970389 or equivalent
Oil seal case	Mitsubishi Genuine Part No. MD970389 or equivalent

SPECIAL TOOLS

11300060200

Tool	Tool number and name	Supersession	Application
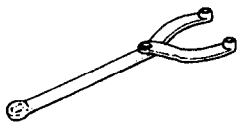	MB990767 End yoke holder	MB990767-01	Holding camshaft sprocket wher loosening or torquing bolt.
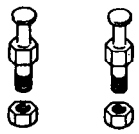	MD998719 Pulley holding pins (2)	MIT308239	Holding camshaft sprocket wher loosening or torquing bolt.
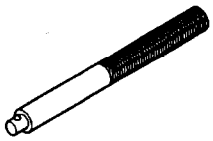	MB990938 Handle	MB990938-01	Installation of crankshaft rear oil seal
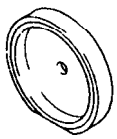	MD998776 Crankshaft rear oil seal installer	MD998376-01	Installation of crankshaft rear oil seal
	MD998162 Plug wrench Use with MD998783	MD998162-01	Removal and installation of front case cap plug
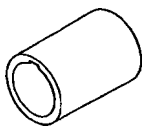	MD998285 Crankshaft front oil seal guide	MD998285-01	Installation of crankshaft front oil seal
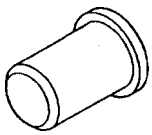	MD998375 Crankshaft front oil seal installer	MD998375-01	Installation of crankshaft front oil seal
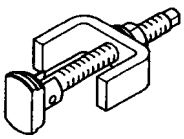	MD998371 Silent shaft bearing puller	MD998371-01 Use with MIT304204	Removal of counterbalance shaft rear bearing
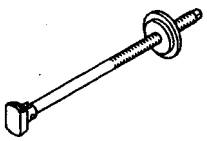	MD998372 Silent shaft bearing puller	MD998372-01 Use with MIT304204	Removal of counterbalance shaft rear bearing

Tool	Tool number and name	Supersession	Application
	MD998441 Lash adjuster retainer	–	Air bleed of lash adjuster
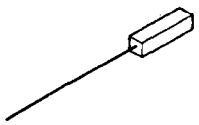	MD998442 Air bleed wire	–	Air bleed of lash adjuster
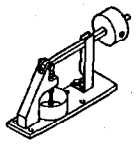	MD998440 Leak-down tester	–	Leak-down test of lash adjuster
	MD998443 Lash adjuster holder (8)	MD998443-01	Supporting of the lash adjuster to prevent it from falling when rocker shaft assembly is removed or installed
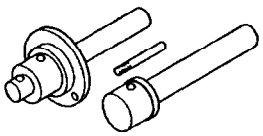	MD998705 Silent shaft bearing installer	MD998373-01 Use with MB990938-01	Installation of counterbalance shaft bearing
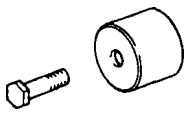	MD998713 Camshaft oil seal installer	MD998713-01	Installation of camshaft oil seal
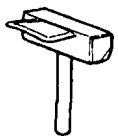	MD998727 Oil pan remover	MD998727-01	Removal of oil pan
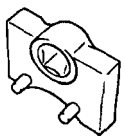	MD998767 Tension pulley wrench	MD998752-01	Installation of auto tensioner
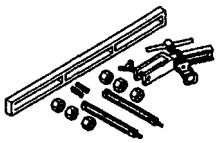	MD998772 Valve spring compressor	General service tool	Compression of valve spring

Tool	Tool number and name	Supersession	Application
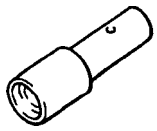	MD998774 Valve steam seal installer	MD998774-01	Installation of valve steam seal
	MD998778 Crankshaft sprocket puller		Removal of crankshaft sprocket
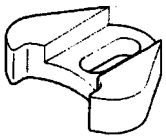	MD998785 Sprocket stopper		Supporting counterbalance shaft sprocket
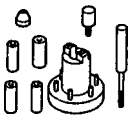	MD998780 Piston pin setting tool	MIT216941	Removal and installation of piston pin
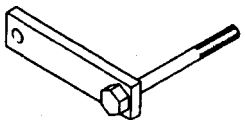	MD998781 Flywheel stopper	–	Supporting flywheel and driv plate
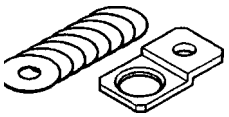	MD998783 Plug wrench retainer Use with MD998162	–	Removal and installation of front case cap plug
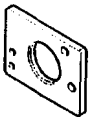	MB991603 Bearing installer stopper		Removal and installation of rear bearing
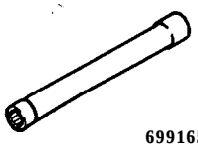 6991654	MB991654 Cylinder head bolt wrench (12)		Removal and installation of cylinder head bolt

TSB Revision

GENERATOR AND IGNITION SYSTEM

11300100148

REMOVAL AND INSTALLATION

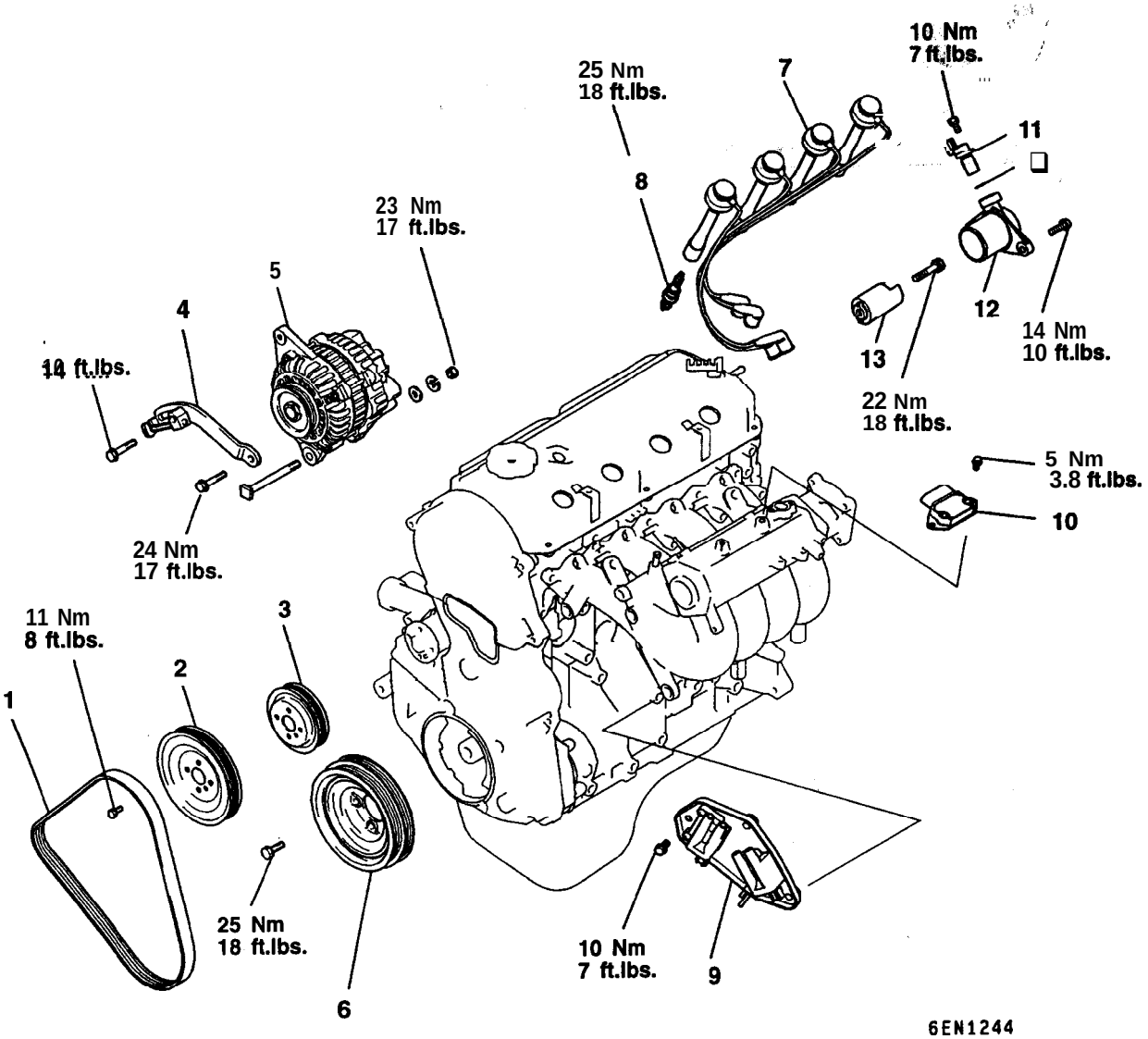

Removal steps

1. Drive belt
2. Water pump pulley
3. Power steering pump pulley
4. Generator brace
5. Generator
6. Crankshaft pulley
7. Spark plug cable
8. Spark plug
9. Ignition coil assembly
10. Ignition power transistor assembly
11. Camshaft position sensor
▶A◀ 12. Camshaft position sensor support
13. Camshaft position sensing cylinder

TSB Revision

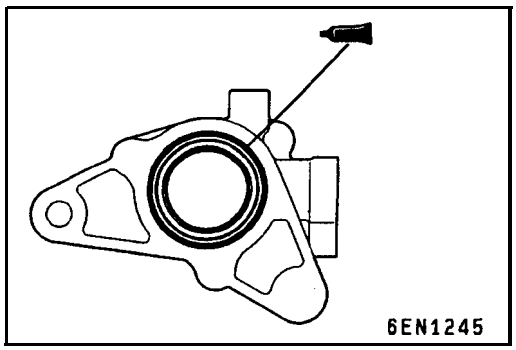

INSTALLATION SERVICE POINTS

▶A◀ CAMSHAFT POSITION SENSOR SUPPORT INSTALLATION

(1) Apply a 3 mm bead of form-in-place gasket (FIPG) to the area shown.

Specified sealant:
Mitsubishi Genuine Part No. MD970389 or equivalent.

TSB Revision

TIMING BELT

11300190114

REMOVAL AND INSTALLATION

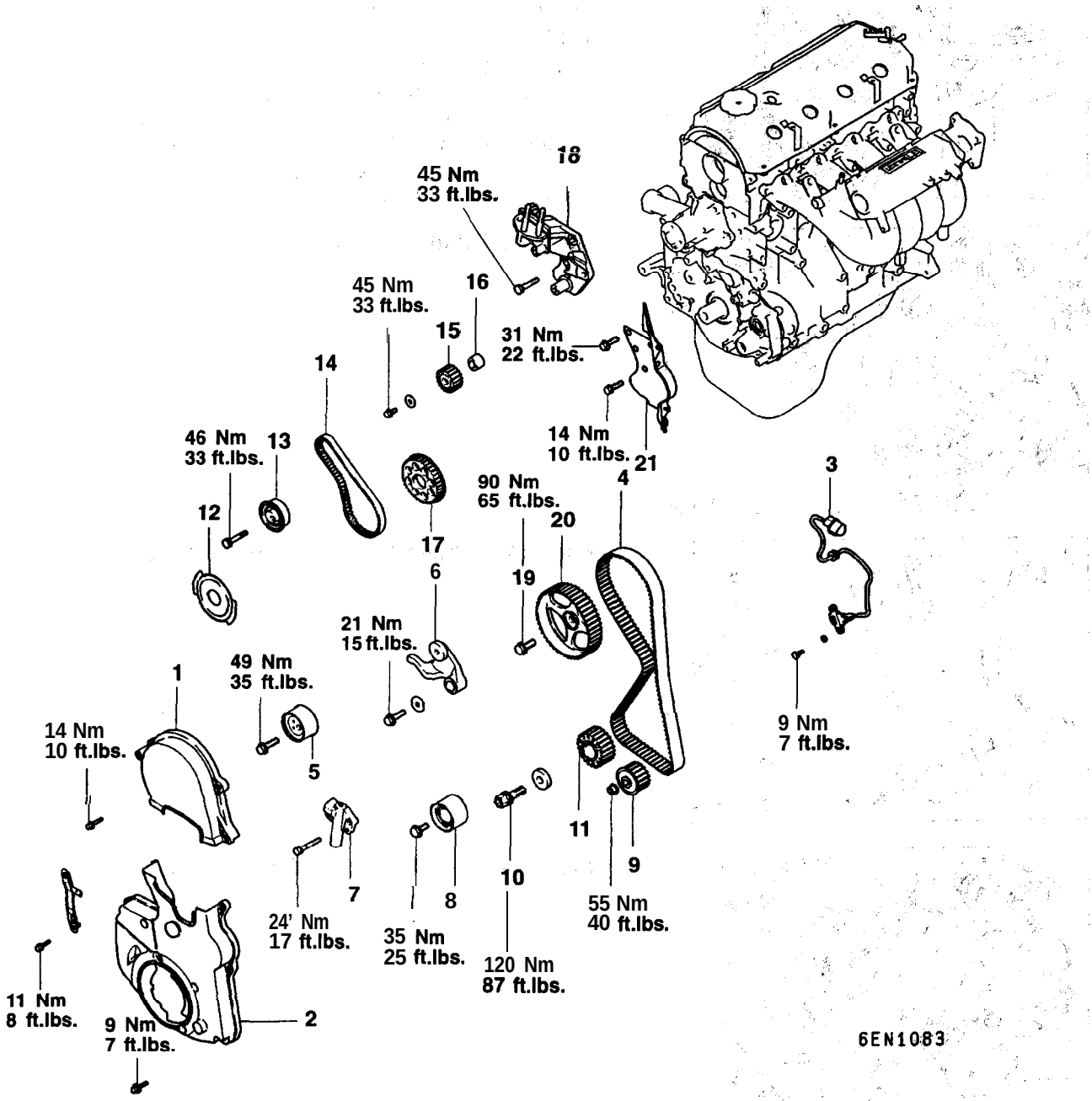

Removal steps

1. Timing belt front upper cover
2. Timing belt front lower cover
3. Crankshaft position sensor
◀A▶ ▶J◀ 4. Timing belt
▶I◀ 5. Tensioner pulley
6. Tensioner arm
▶H◀ 7. Auto tensioner
8. Idler pulley
◀B▶ ▶G◀ 9. Oil pump sprocket
◀C▶ ▶F◀ 10. Crankshaft bolt
◀D▶ 11. Crankshaft sprocket
12. Flange
13. Tensioner "B"
◀E▶ ▶E◀ 14. Timing belt "B"
◀F▶ ▶D◀ 15. Counterbalance shaft sprocket
▶C◀ 16. Spacer
◀G▶ 17. Crankshaft sprocket "B
▶B◀ 18. Engine support bracket
◀H▶ ▶A◀ 19. Camshaft sprocket bolt
20. Camshaft sprocket
21. Timing belt rear, cover

TSB Revision

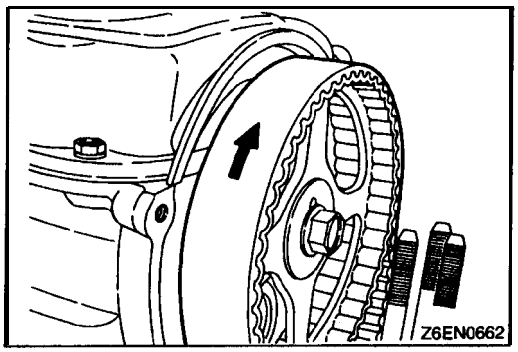

REMOVAL SERVICE POINTS

◀A▶ TIMING BELT REMOVAL

Mark belt running direction for reinstallation.

NOTE
(1) Water or oil on the belt shorten its life drastically, so the removed timing belt, sprocket, and tensioner must be free from oil and water. These parts should not be washed. Replace parts if seriously contaminated.
(2) If there is oil or water on each part check front case oil seals, camshaft oil seal and water pump for leaks.

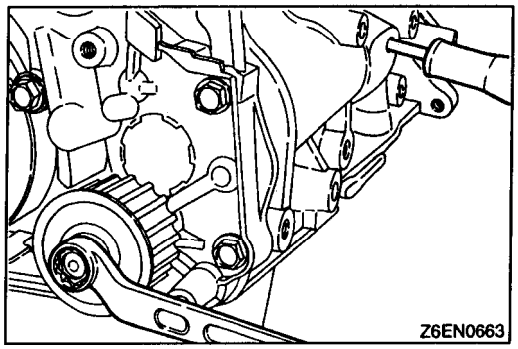

◀B▶ OIL PUMP SPROCKET REMOVAL

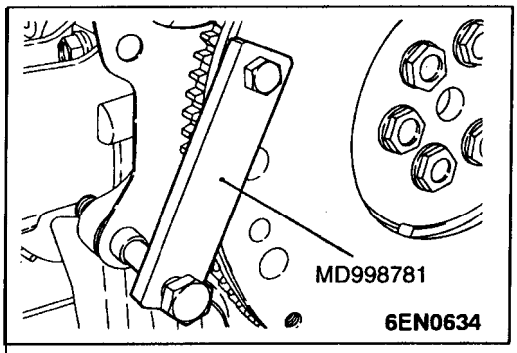

◀C▶ CRANKSHAFT BOLT LOOSENING

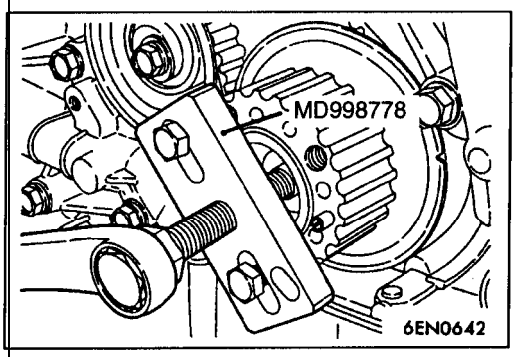

◀D▶ CRANKSHAFT SPROCKET REMOVAL

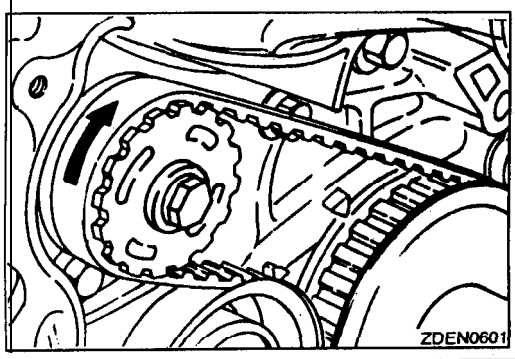

◀E▶ TIMING BELT "B" REMOVAL

(1) Make a mark on the back of the timing belt indicating the direction of rotation so it may be reassembled in the same direction if it is to be reused.

NOTE
(1) Water or oil on the belt shortens its life drastically, so the removed timing belt, sprocket, and tensioner must be free from oil and water. These parts should not be washed. Replace parts if seriously contaminated.

(2) If there is oil or water on each part check front case oil seals, camshaft oil seal and water pump for leaks.'

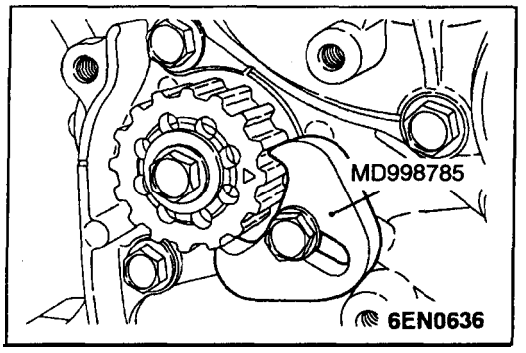

◀F▶ COUNTERBALANCE SHAFT SPROCKET REMOVAL

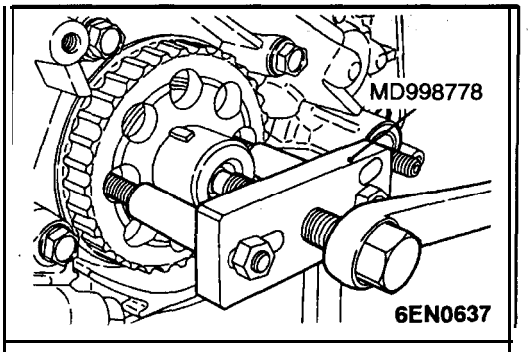

◀G▶ CRANKSHAFT SPROCKET "B" REMOVAL

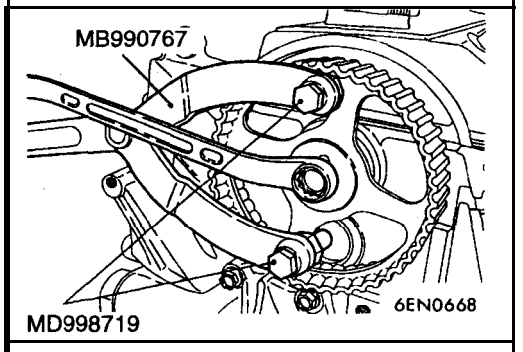

◀H▶ CAMSHAFT SPROCKET BOLT LOOSENING

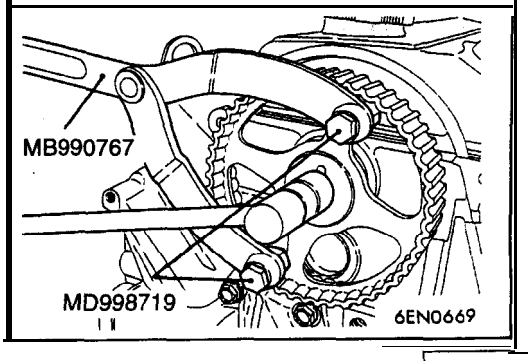

INSTALLATION SERVICE POINTS

▶A◀ CAMSHAFT SPROCKET TIGHTENING

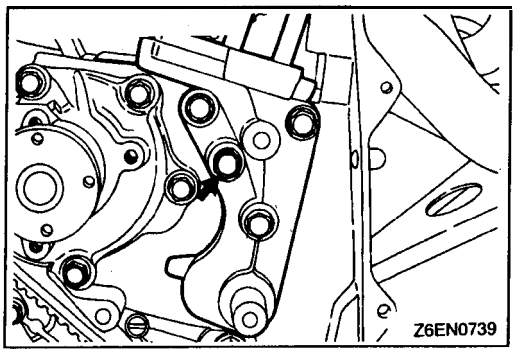

▶B◀ ENGINE SUPPORT BRACKET INSTALLATION

Coat the bolts illustrated with sealant before tightening.

Specified sealant:
3M ATD Part No. 8660 or equivalent

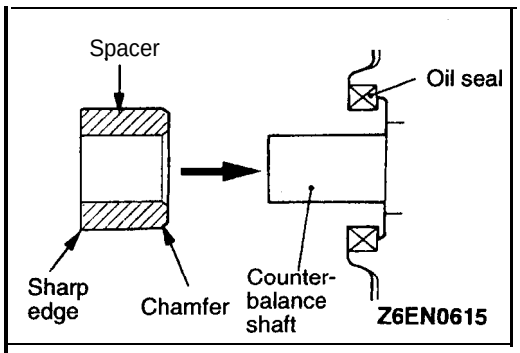

▶C◀ SPACER INSTALLATION

Install the spacer with the chamfered end toward the oil seal.

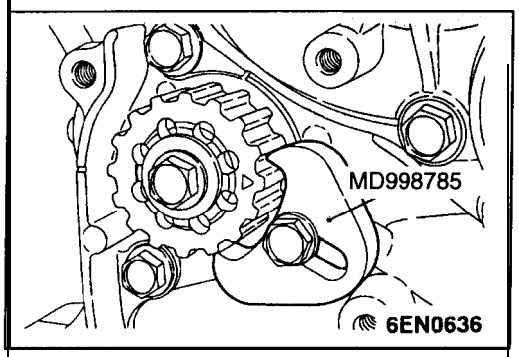

▶D◀ COUNTERBALANCE SHAFT SPROCKET INSTALLATION

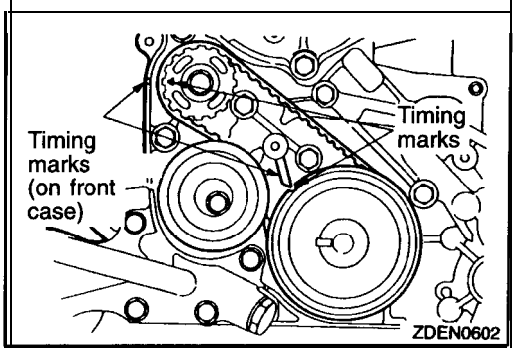

▶E◀ TIMING BELT "B" INSTALLATION

(1) Align timing marks on the crankshaft sprocket "B" and counterbalance shaft sprocket with the marks on the front case respectively.
(2) Install the timing belt "B" on the crankshaft sprocket "B" and counterbalance shaft sprocket. Thgre should be no slack on the tension side.

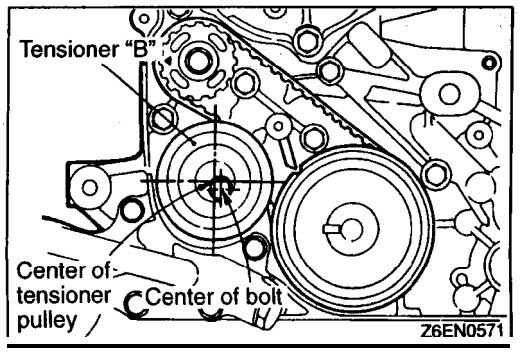

(3) Make sure that the relationship between the tensioner pulley center and the bolt center is as shown in the illustration.

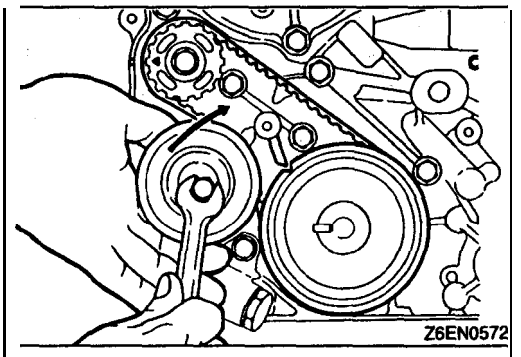

(4) Move the tensioner "B" in the direction of arrow while lifting with a finger to give a sufficient tension to the tension side of timing belt. In this condition, tighten bolt to secure tensioner "B". When the bolt is tightened, use care to prevent shaft from turning together. If shaft is turned together, belt will be overtensioned.

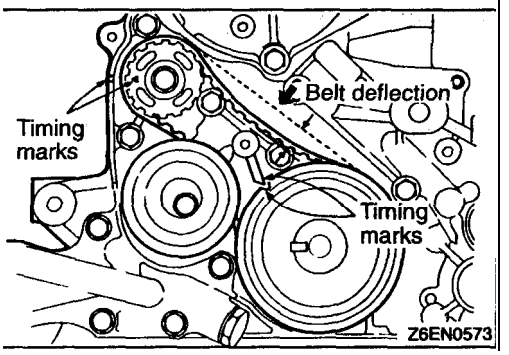

(5) Check to ensure that timing marks on sprockets and front case are in alignment.
(6) Press with index finger the center of span on tension side of timing belt "B". The bolt must deflect 5–7 mm (.20–.28 in.).

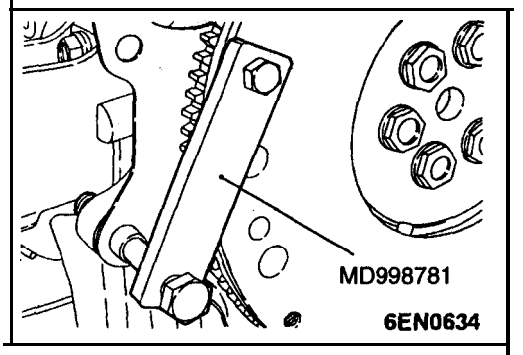

▶F◀ CRANKSHAFT BOLT TIGHTENING

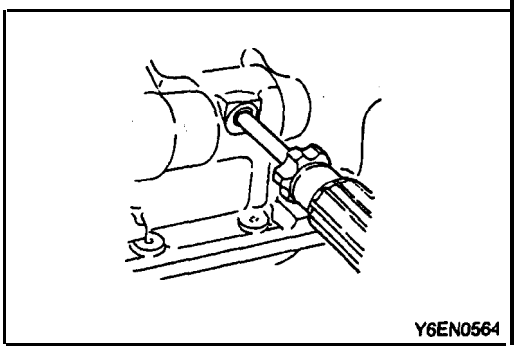

▶G◀ OIL PUMP SPROCKET INSTALLATION

(1) Insert a Phillips screwdriver [shank diameter 8 mm (.31 in.) shaft] through. the plug hole on the left side of the cylinder block to block the left counterbalance shaft.
(2) Install the oil pump sprocket.
(3) Apply a proper amount of engine oil to the bearing surfaces of the nuts.
(4) Tighten the nuts to the specified torque.

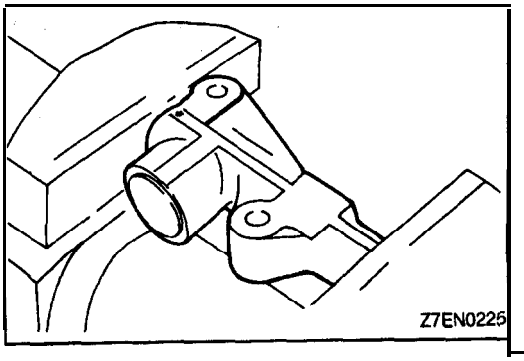

▶H◀ AUTO TENSIONER INSTALLATION.

(1) If the auto tensioner rod is 'in its fully extended position, reset it as follows.
(2) Clamp the auto-tensioner in the vise with, soft jaws.

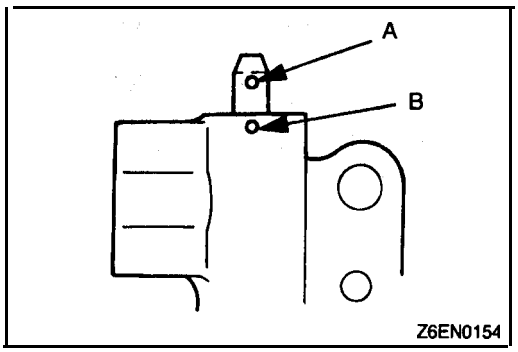

(3) Push in the rod little by little with the vise until the set hole A in the rod is aligned with the hole B in the cylinder.
(4) Insert a wire [1.4 mm' (.055 in.) in diameter] into the set holes.
(5) Unclamp the auto tensioner from the vise.

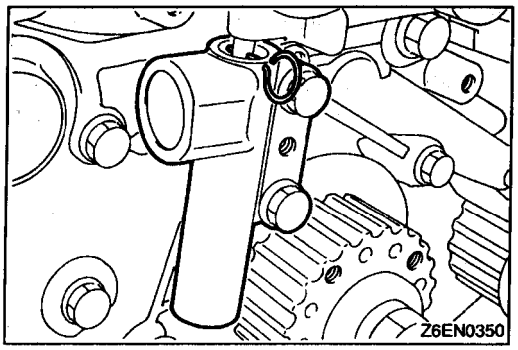

(6) Install the auto tensioner to front case and tighten to the specified torque.

Caution
Leave the wire installed in the auto tensioner.

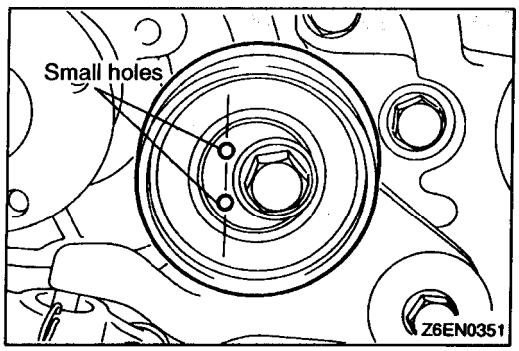

▶I◀ TENSIONER PULLEY INSTALLATION

Install the tensioner pulley in such direction that its two small holes are arranged vertically.

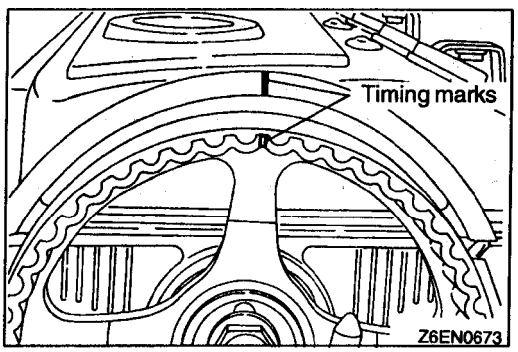

▶J◀ TIMING BELT INSTALLATION

(1) Check that the timing belt tensioner and have been, installed in position. (See ▶I◀)
(2) Align timing mark on camshaft sprocket with timing mark on cylinder head.

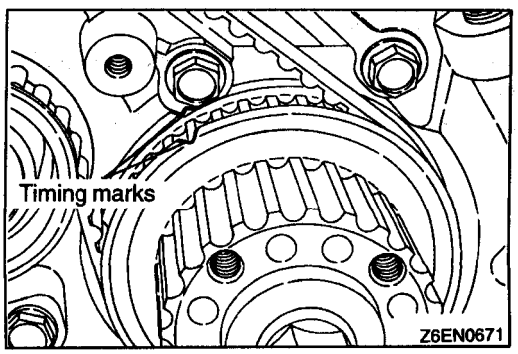

(3) Align timing mark on crankshaft sprocket with timing mark on front case.

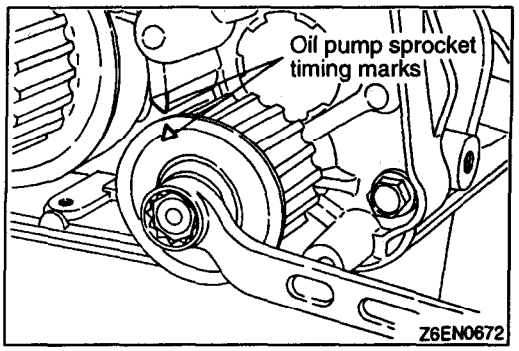

(4) Align the timing mark on oil pump sprocket with its mating mark.

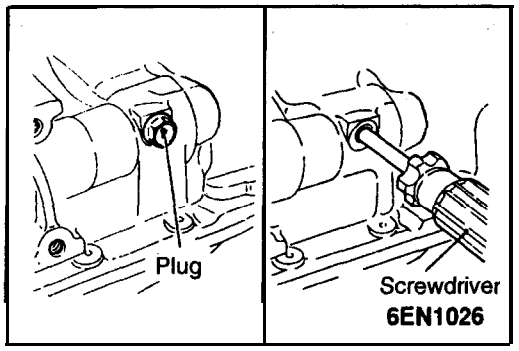

(5) Remove the plug on cylinder block and insert a Phillips, screwdriver [shank diameter 8 mm. (.31 in.)] through the' hole (Engine with counterbalance shafts).
If it can be inserted as deep as 60 mm (2.4 in.) or more, the timing marks are correctly aligned. If the inserted depth is only 20–25 mm (.8–1.0 in.), turn the oil pump sprocket one turn and realign timing marks. Then check to ensure that the screwdriver can be inserted 60 mm (2.4 in.) or more. Keep the screwdriver inserted' until installation of timing belt is finished.

(6) Install the timing belt on the crankshaft sprocket, idler pulley, camshaft sprocket, and tensioner pulley in that order.

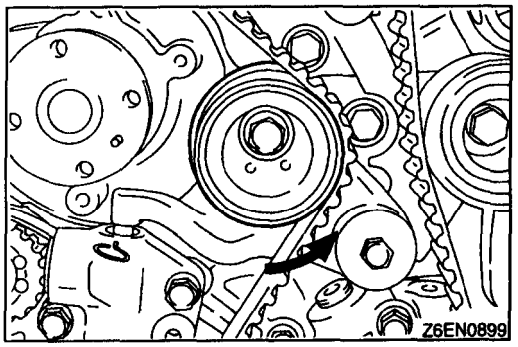

(7) Lift up the tensioner pulley in the direction of arrow and tighten the center bolt.
(8) Check that all timing marks are lined up.
(9) Remove the screwdriver inserted in step (5) and fit the plug.
(10) Give the crankshaft a quarter counterclockwise turn. Then, turn it clockwise until the timing marks are lined up again.

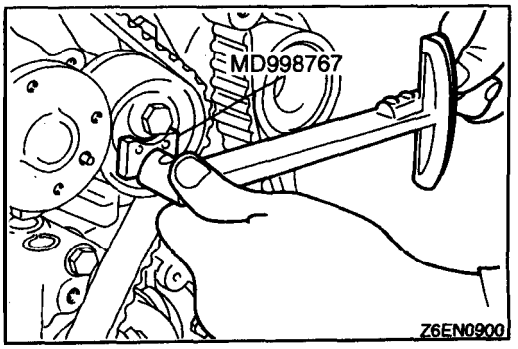

(11) Install the special tools, Socket Wrench and Torque Wrench, on the tensioner pulley, and loosen the tensioner pulley center bolt.

NOTE
If the special tool is not available, use a commercially available torque wrench that is capable of measuring 0–5 Nm (0–3.6 ft.lbs.).

(12) Torque to 3.5 Nm (2.5 ft.lbs.) with the torque wrench.
(13) Holding the tensioner pulley with the special tool and torque wrench, tighten the center bolt to specification.

TSB Revision

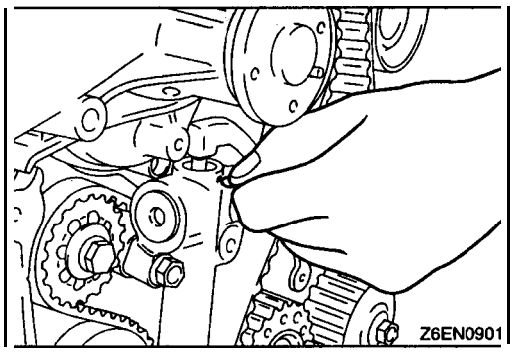

(14) After giving two clockwise turns to the crankshaft, 'let it alone for approx. 15 minutes. Then, make sure that the auto tensioner setting wire moves freely.

NOTE
If the wire does not move freely, repeat step (10) above until it moves freely.

(15) Remove the auto tensioner setting wire.

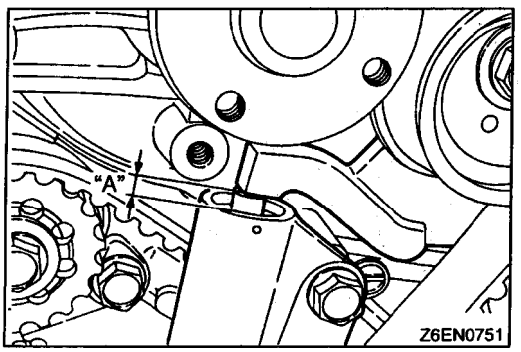

(16) Measure the distance "A" (between the tensioner arm and auto tensioner body).

Standard value: 3.8-4.5 mm (.15–.18 in.)

INSPECTION

11300200114

TIMING BELT

Replace belt if any of the following conditions exist.

(1) Hardening of back rubber.
Back side is glossy without resilience, and leaves no indent when pressed with fingernail.:'

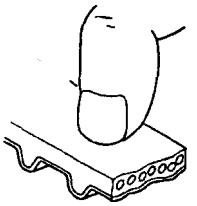
Z8EN0066

(2) Cracks on rubber back.
(3) Cracks or peeling of canvas.
(4) Cracks on rib root.
(5) Cracks on belt sides.

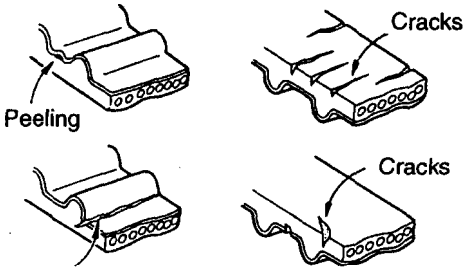

Z1EN0249

(6) Abnormal wear of belt sides. The sides are normal if they are sharp as if cut by a knife.

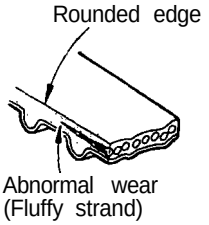

Z8EN0067

(7) Abnormal wear on teeth.
(8) Missing tooth.

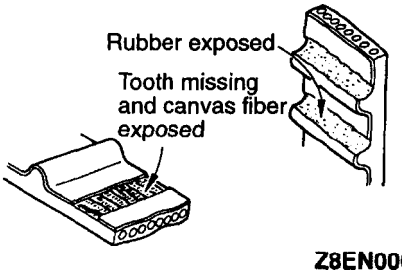

Z8EN0068

AUTO TENSIONER

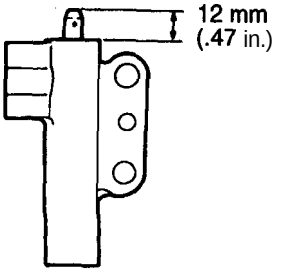

Z6EN0161

(1) Check the auto tensioner for possible leaks and replace as necessary.
(2) Check the rod end for wear or damage and replace as necessary.
(3) Measure the rod protrusion. If it is out of specification, replace the auto tensioner.

Standard value: 12 mm (.47 in.)

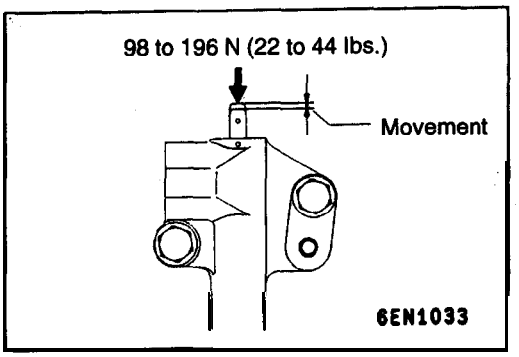

(4) Press the rod with a force of 98 to 196 N (22 to 44 lbs.) and measure its protrusion.
(5) If the measured value is 1 mm (0.39 in) or more shorter than the value obtained in step (3), replace the auto tensioner.

FUEL AND EMISSION CONTROL PARTS

11300220080

REMOVAL AND INSTALLATION

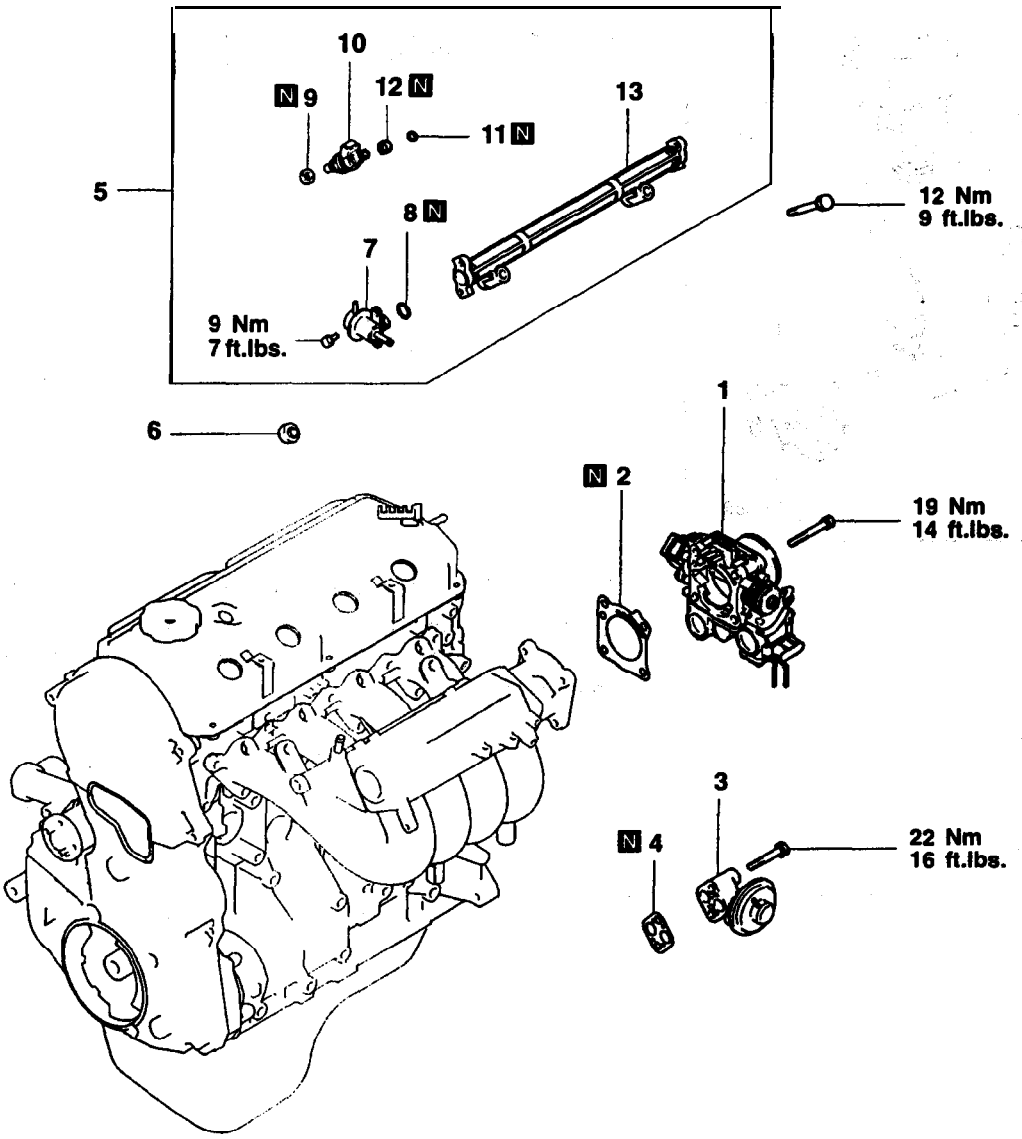

Removal steps

1. Throttle body
2. Throttle body gasket
3. EGR valve
4. EGR valve gasket
5. Injectors and fuel rail
6. Insulator
7. Fuel pressure regulator
8. ▶B◀ O-ring
9. Insulator
10. ▶A◀ Injectors
11. O-ring
12. Grommet
13. Fuel rail

TSB Revision

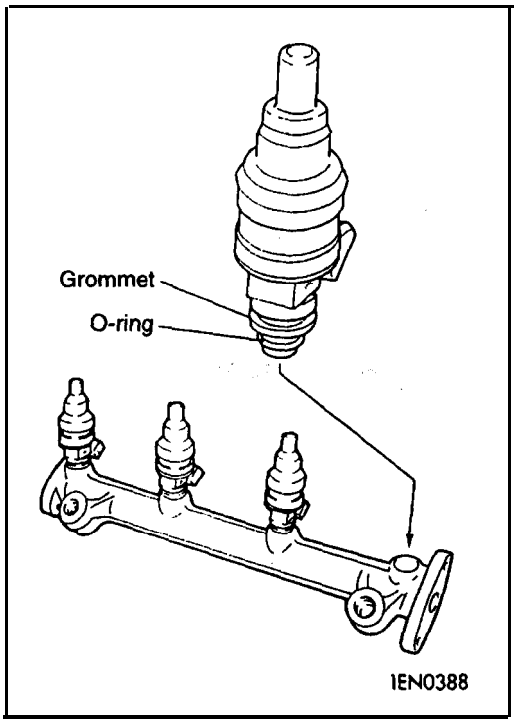

INSTALLATION SERVICE POINTS

▶A◀ INJECTORS / INJECTOR CLIP INSTALLATION

(1) Before installing an injector, the rubber O-ring must be lubricated with a drop of clean engine oil to aid in installation.
(2) Install injector top end into fuel rail. Be careful not to damage O-ring during installation.

▶B◀ FUEL 'PRESSURE REGULATOR INSTALLATION

Before installing the pressure regulator, the O-ring must be lubricated with a drop of clean engine. O-ring to aid in installation.

INTAKE MANIFOLD

11300270054

REMOVAL AND INSTALLATION

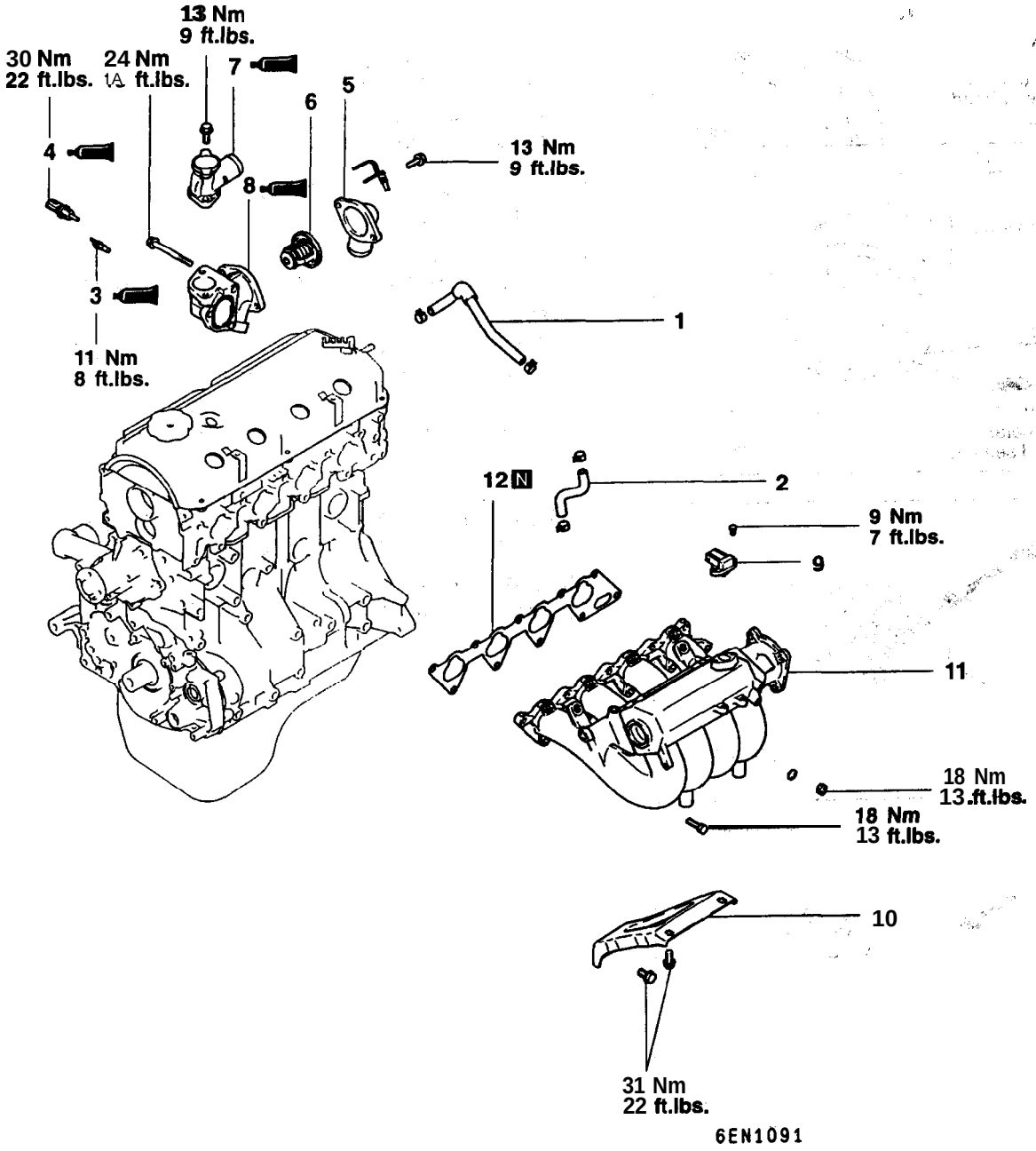

Removal steps

1. Water hose
2. Water hose
▶D◀ 3. Engine coolant temperature gauge unit
▶C◀ 4. Engine coolant temperature sensor
5. Water inlet fitting
6. Thermostat
▶B◀ 7. Water outlet fitting
▶A◀ 8. Thermostat housing
9. Manifold differential pressure sensor
10. Intake manifold stay
11. Intake manifold
12. Intake manifold gasket

TSB Revision

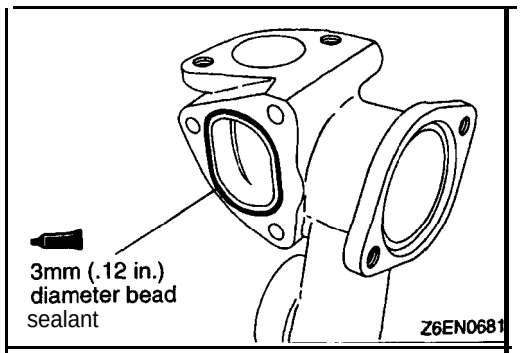

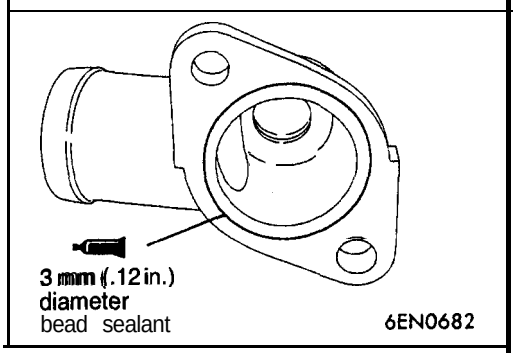

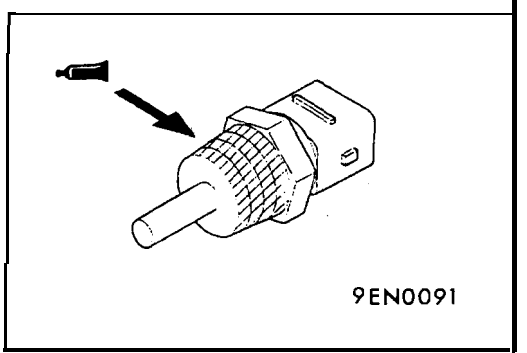

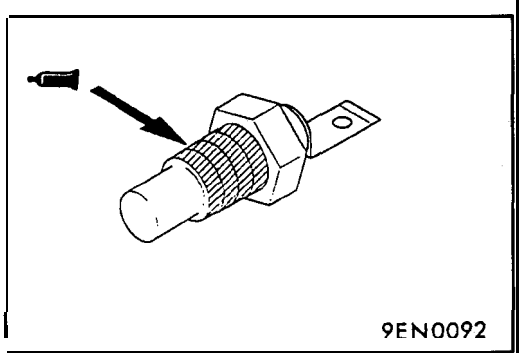

INSTALLATION SERVICE POINTS

▶A◀ SEALANT APPLICATION TO THERMOSTAT HOUSING

Specified sealant:
Mitsubishi Genuine Part No. MD970389 or equivalent

NOTE
(1) Be sure to install the housing quickly while the sealant is wet (within 15 minutes).
(2) After installation, keep the sealed area away from the oil and coolant for approx. one hour.

▶B◀ SEALANT APPLICATION TO WATER OUTLET FITTING

Specified sealant:
Mitsubishi Genuine Part No.' MD970389 or equivalent

NOTE
(1) Be sure to install the housing quickly while the sealant is wet (within 15 minutes).
(2) After installation, keep the sealed area away from the oil and coolant for approx. one hour.

▶C◀ SEALANT APPLICATION TO ENGINE COOLANT TEMPERATURE SENSOR

Specified sealant:
3M Nut Locking Part No. 4171 or equivalent

▶D◀ SEALANT APPLICATION TO ENGINE COOLANT TEMPERATURE GAUGE UNIT

Specified sealant: 3M ATD Part No. 8680 or equivalent

EXHAUST MANIFOLD AND WATER PUMP

11300490054

REMOVAL AND INSTALLATION

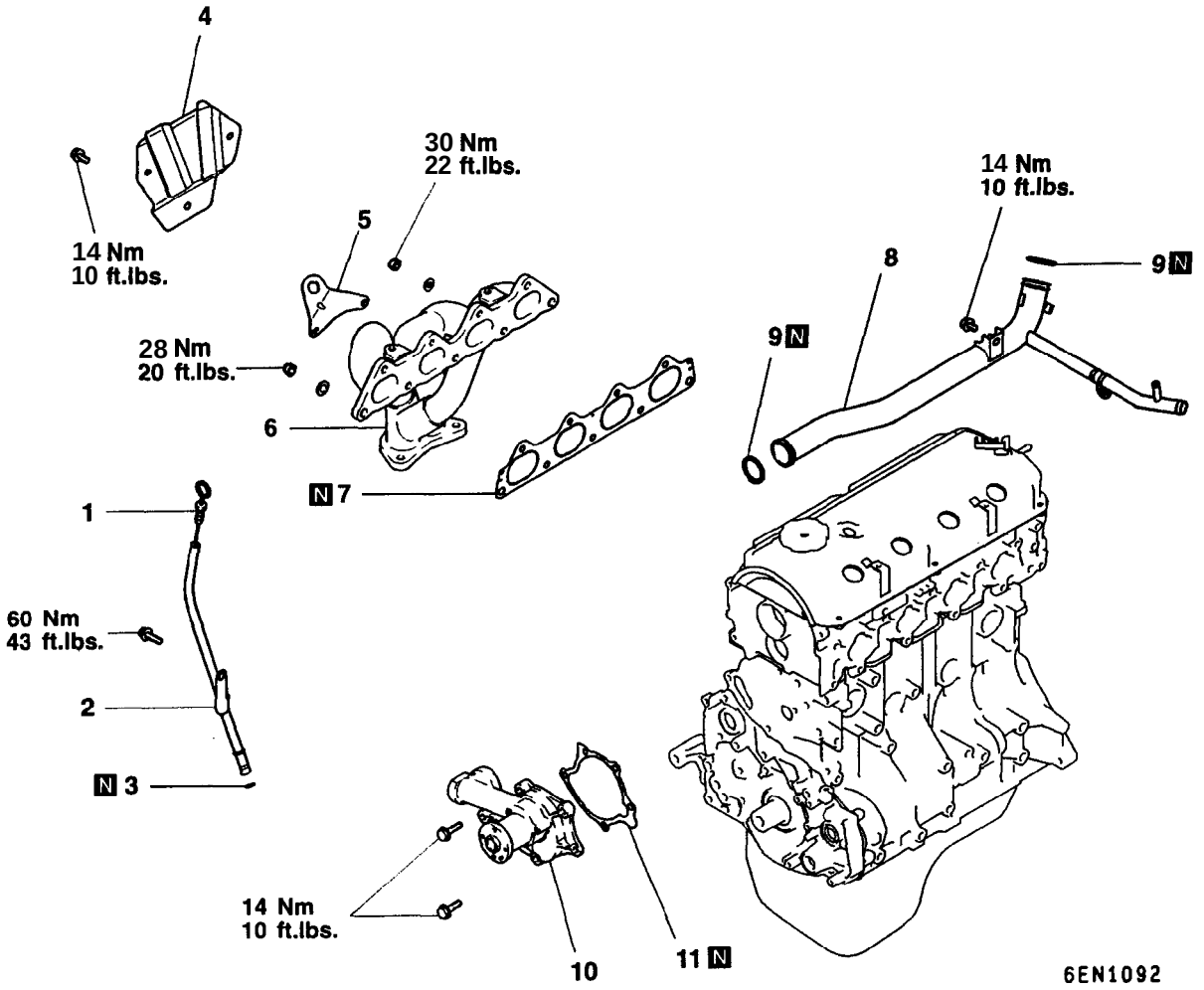

Removal steps

1. Oil dipstick
2. Oil dipstick guide
3. O-ring
4. Heat protector
5. Engine hanger
6. Exhaust manifold
7. Exhaust manifold gasket
▶A◀ 8. Water inlet pipe
▶A◀ 9. O-ring
10. Water pump
11. Water pump gasket

TSB Revision

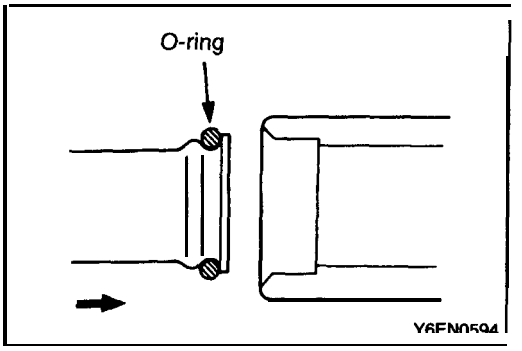

INSTALLATION SERVICE POINT

▶A◀ WATER PIPE/O-RING INSTALLATION

(1) Wet the O-ring (with water) to facilitate assembly.

Caution
Keep the O-ring free of oil or grease.

ROCKER ARMS AND CAMSHAFT

11300540193

REMOVAL AND INSTALLATION

Lubricate all internal parts with engine oil during reassembly.

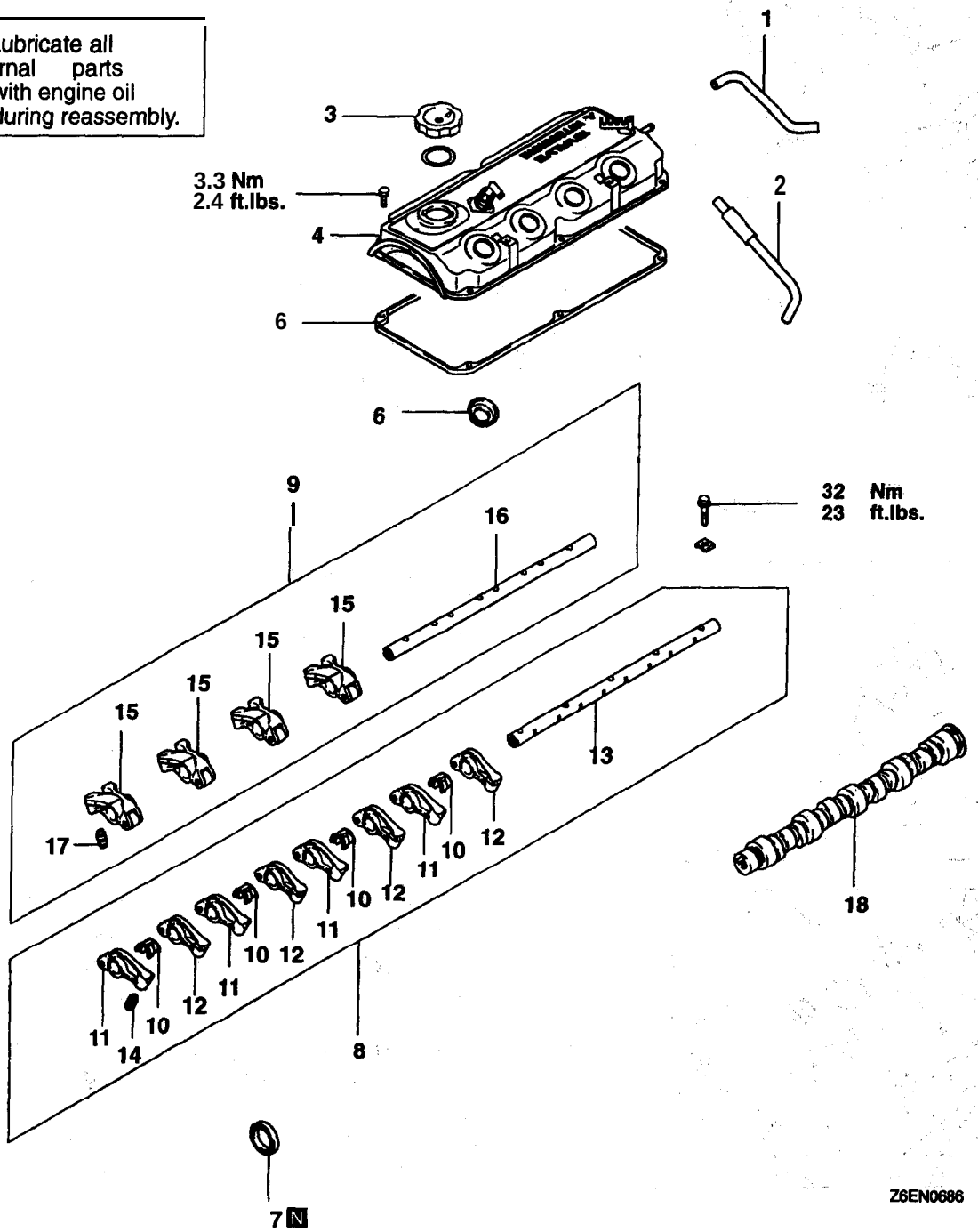

Removal steps

1. Breather hose
2. P.C.V. hose
3. Oil filler cap
4. Rocker cover
5. Rocker cover gasket
6. Oil seal
7. ▶C◀ Oil seal
8. ◀A▶ ▶B◀ Rocker arms and rocker arm shaft
9. ◀A▶ ▶B◀ Rocker arms and rocker arm shaft
10. ▶B◀ Rocker shaft spring
11. Rocker arm A
12. Rocker arm B
13. Rocker arm shaft (Intake side)
14. ▶A◀ Lash adjuster
15. Rocker arm C
16. Rocker arm shaft (Exhaust side)
17. ▶A◀ Lash adjuster
18. Camshaft

TSB Revision

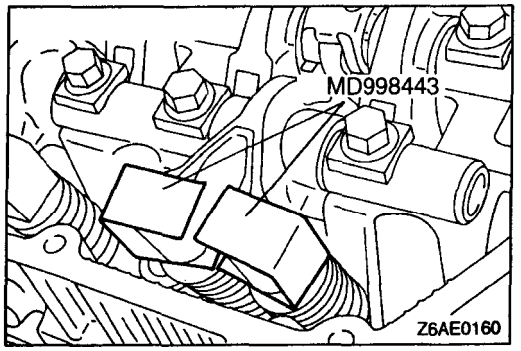

REMOVAL SERVICE POINT

◀A▶ ROCKER ARMS AND ROCKER ARM SHAFTS REMOVAL

Before removing rocker arms and shafts **assembly, install** the special tool as illustrated to prevent adjuster **from dropping.**

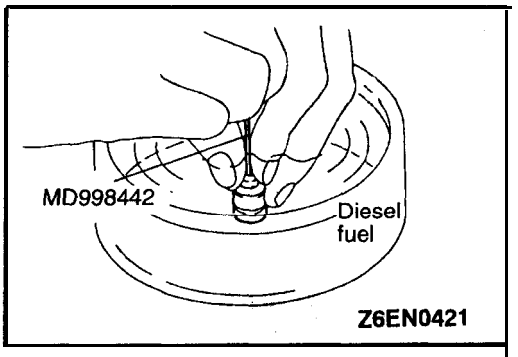

INSTALLATION SERVICE POINTS

▶A◀ LASH ADJUSTER INSTALLATION

(1) Immerse the' lash adjuster in clean diesel fuel.
(2) Using a special tool, move the plunger up and down 4 or 5 times while pushing down lightly on the check bail in order to bleed out the air.

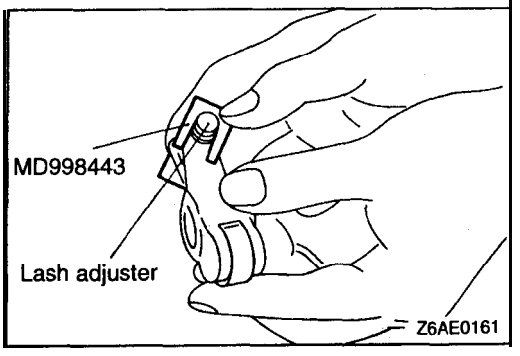

(3) Insert the lash adjuster to rocker arm, being careful not to spill the diesel fuel. Then use the special tool to prevent adjuster from falling while installing it.

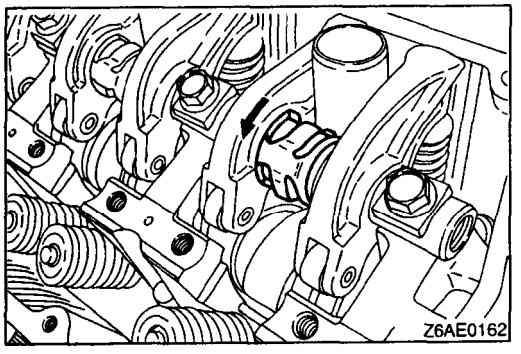

▶B◀ ROCKER SHAFT SPRING/ROCKER ARMS AND ROCKER ARM SHAFT INSTALLATION

(1) Temporarily tighten the rocker shaft with the bolt so that all rocker arms on the inlet valve side do not **push the** valves.
(2) Fit the rocker shaft spring from the above and position it so that it is right angles to the plug **guide.**

NOTE
Install the rocker shaft spring before installing the exhaust side rocker arms and 'rocker arm shaft.

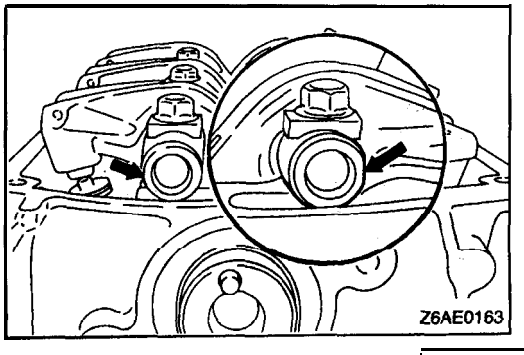

(3) Remove the special tool for securing the lash adjuster.
(4) Make sure that the notch in the rocker arm shaft is in the direction as illustrated.

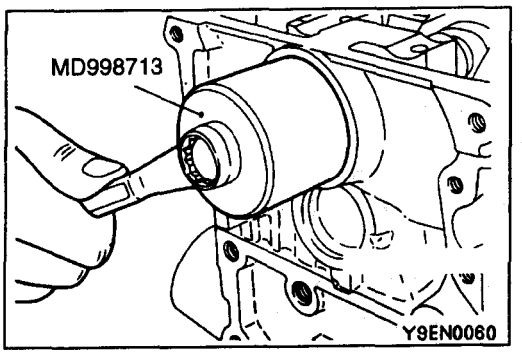

▶C◀ CAMSHAFT OIL SEAL INSTALLATION

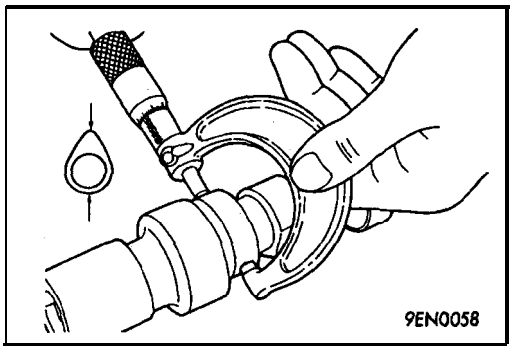

INSPECTION

11300550189

CAMSHAFT

(1) Measure the cam height.

Standard value:
Intake 37.39 mm (1.4720 in.)
Exhaust 37.47 mm (1.4752 in.)

Limit:
Intake 36.69 mm (1.4524 in.)
Exhaust 36.97 mm (1.4655 in.)

NOTE
The camshaft identification mark is stamped on the opposite end of the camshaft sprocket side.

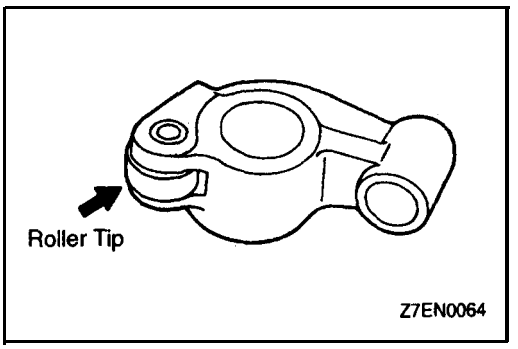

ROCKER ARM

(1) Check the roller surface. If any dents, damage or seizure is evident, replace the rocker arm.
(2) Check rotation of the roller. If it does not rotate smoothly or if looseness is evident, replace the rocker arm.
(3) Check the inside diameter. If damage or seizure is evident, replace the rocker arm.

LASH ADJUSTER LEAK-DOWN TEST

Caution
1. The lash adjuster is a precision part. Keep it free from dust and other foreign matter.
2. Do not disassemble lash adjuster.
3. When cleaning lash adjuster, use clean diesel fuel only.

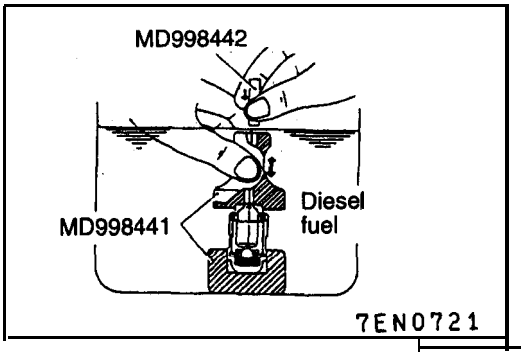

(1) Immerse the lash adjuster in clean diesel fuel..
(2) While lightly pushing down inner steel ball using the special tool, move the plunger up and down four or five times to bleed air.
Use of the special tool helps facilitate the air bleeding. of the rocker arm mounted type lash adjuster.
(3) Remove the special tool and press the plunger. If the plunger is hard to be pushed in, the lash adjuster is normal. If the plunger can be pushed in all the way readily, bleed the lash adjuster again and test again. If the plunger is still loose, replace the lash adjuster.

Caution
Upon completion of air bleeding, hold lash adjuster upright to prevent inside' diesel fuel from spilling.

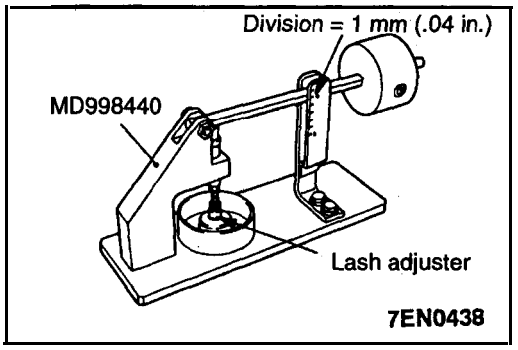

(4) After air bleeding, set lash adjuster on the special tool (Leak down tester).
(5) After plunger has gone down somewhat (.2–.5 mm), measure time taken for it to go down 1. mm. Replace if measured time is out of specification.

Standard value: 4–20 seconds / 1 mm (.04 in.)
[Diesel fuel at 15–20°C (59–68°F)]

CYLINDER HEAD AND VALVES

11300690195

REMOVAL AND INSTALLATION

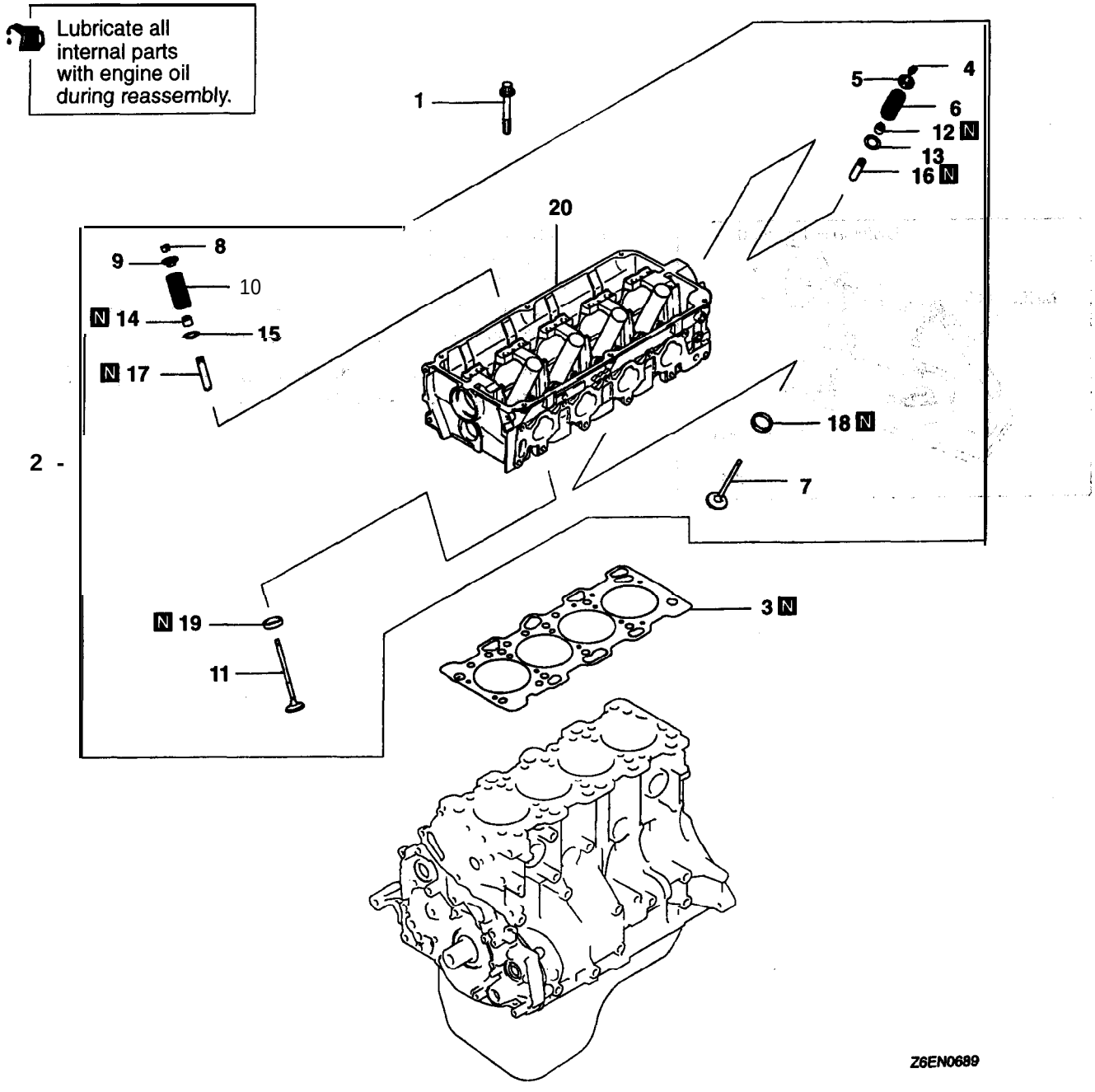

Removal steps

◀A▶ ▶E◀ 1. Cylinder head bolt
2. Cylinder head assembly
▶D◀ 3. Cylinder head gasket
◀B▶ ▶C◀ 4. Retainer lock
5. Valve spring retainer
▶B◀ 6. Valve spring
7. Intake valve
◀B▶ ▶C◀ 8. Retainer lock
9. Valve spring retainer
▶B◀ 10. Valve spring
ii. Exhaust valve
◀C▶ ▶A◀ 12. Valve stem seal
13. Valve spring seat
◀C▶ ▶A◀ 14. Valve stem **Seal**
15. Valve spring seat
16. Intake valve guide
17. Exhaust valve guide
18. Intake valve seat
19. Exhaust valve seat
20. Cylinder head

TSB Revision

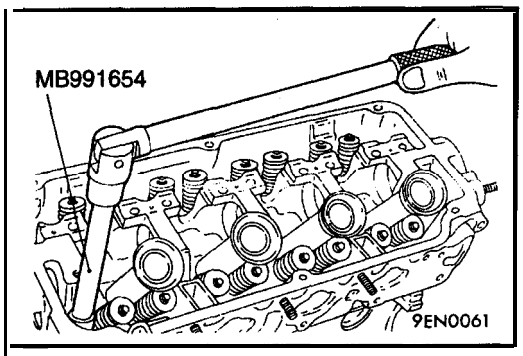

REMOVAL SERVICE POINTS

PRECAUTION FOR REMOVED PARTS

Keep removed parts in order according to the cylinder number and intake/exhaust.

◀A▶ CYLINDER HEAD BOLTS REMOVAL

Using the special tool, loosen the cylinder head bolts. Loosen evenly, little by little.

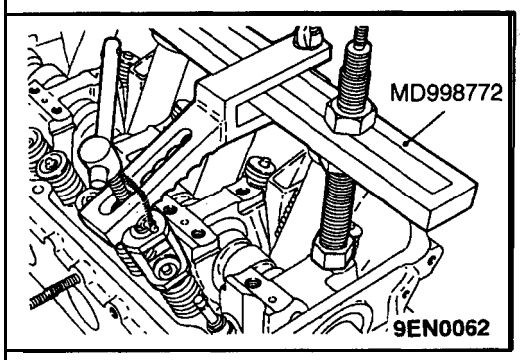

◀B▶ RETAINER LOCK REMOVAL

Store removed valves, springs and other parts, tagged to indicate their cylinder No. and location for reassembly.

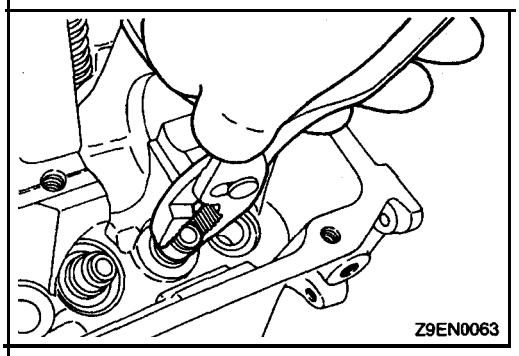

◀C▶ VALVE STEM SEAL REMOVAL

Do not reuse valve stem seal.

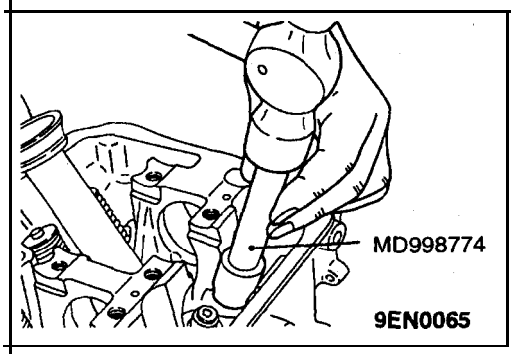

INSTALLATION SERVICE POINTS

▶A◀ VALVE STEM SEAL INSTALLATION

(1) Install' the valve spring seat.
(2) The special tool must be'used to install the valve stem seal. Improper installation could result in oil leaking past the valve guide.

Caution
Do **not reuse the valve stem seal.**

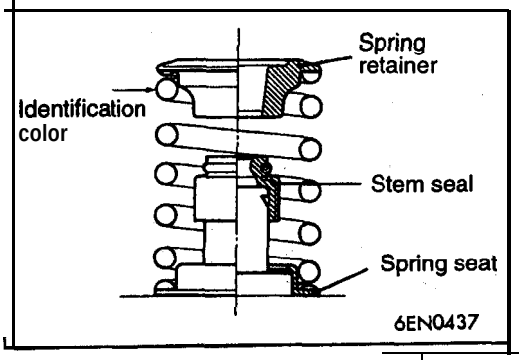

▶B◀ VALVE SPRINGS INSTALLATION

Direct the valve spring end with identification color end toward the spring retainer.

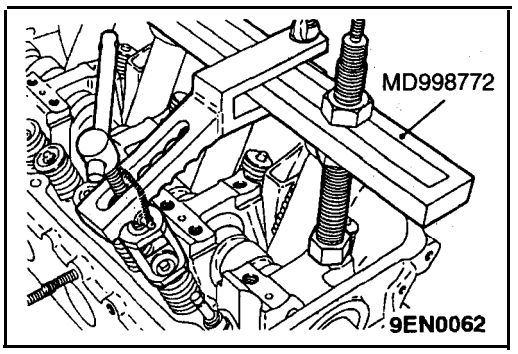

▶C◀ RETAINER LOCK INSTALLATION

The valve spring, if excessively compressed, causes the bottom end of retainer to be, in contact, with, and damage, the stem seal.

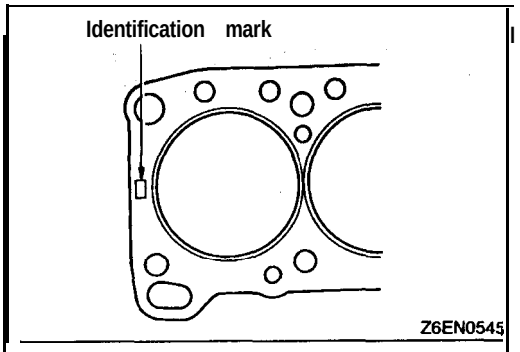

▶D◀ CYLINDER HEAD GASKET IDENTIFICATION

Identification mark: 4G64N

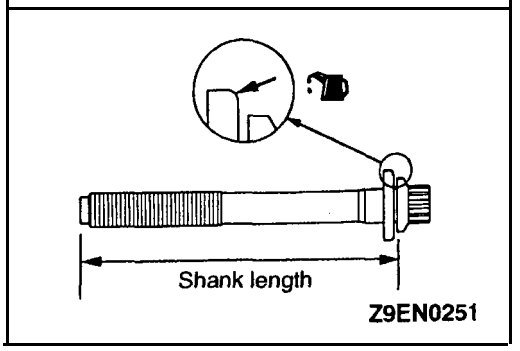

▶E◀ CYLINDER HEAD BOLT INSTALLATION

(1) When installing the cylinder head bolts, check that the shank length of each bolt meets the limit. If the limit is exceeded, replace the bolt.

Limit: Max. 99.4 mm (3.91 in.)

(2) Apply engine oil to the threaded portions of bolts and to the washers.

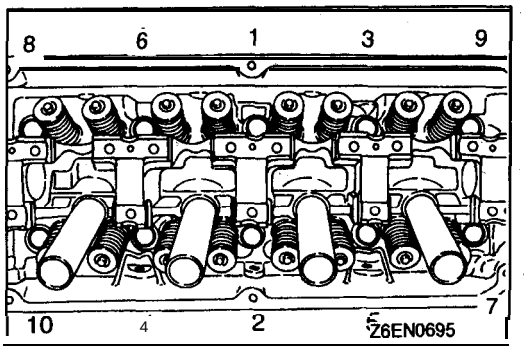

(3) According to the tightening sequence, tighten the bolts to the specified torque 78 Nm (58 ft.lbs.) using the special tool (MB991 654).
(4) Loosen bolts completely.
(5) Retighten the loosened bolts to 20 Nm (14.5 ft.lbs.) in the specified tightening sequence.
(6) Make a paint mark across each bolt head and cylinder head.
(7) Give a 90° turn to the bolts in the specified tightening, sequence.
(8) Give another 90° turn to the bolts and make sure that the paint mark on the, head of each bolt. and that on the cylinder head are on the same straight line.

Caution

1. **If the bolt is turned less than 90°, proper fastening performance may not be expected. When tightening the bolt, therefore, be careful to give a sufficient turn to it.**
2. **If the bolt is overtightened, loosen the bolt completely and then retighten it by repeating the tightening procedure from. step (1).**

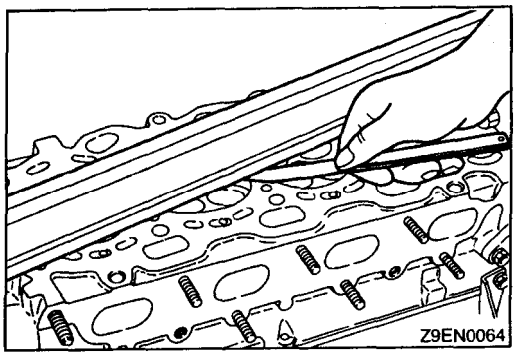

INSPECTION

11300700218

CYLINDER HEAD

(1) Check the cylinder head gasket surface for flatness by using a straightedge and thickness gauge.

Standard value: 0.05 mm (.0020 in.)
Limit: 0.2 mm (.008 in.)

(2) If the service limit is exceeded, correct to meet specification.

Grinding limit: ● 0.2 mm (.008 in.)

* Includes combined with cylinder block grinding.

Cylinder head height (Specification when, new): 119.9–120.1 mm (4.720–4.73 in.)

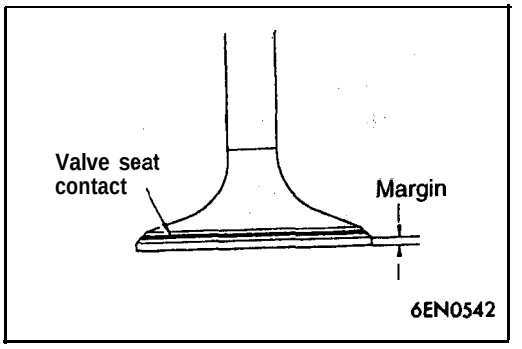

VALVE

(1) Check the valve face for correct contact. If incorrect, reface using valve refacer. Valve seat contact should be maintained uniform at the center of valve face.

(2) If the margin exceeds the service limit, replace the valve.

Standard value:
Intake 1.0 mm (0.39 in.)
Exhaust 1.2 mm (.047 in.)

Limit:
Intake 0.5 mm (.020 in.)
Exhaust 0.7 mm (.028 in.)

(3) Measure the valve's total length. If the measurement is less than specified, replace the valve.

item	Standard value mm (in.)	Limit mm (in.)
Intake	**112.30 (4.4213)**	**111.80 (4.4016)**
Exhaust	**114.11 (4.4925)**	113.61 (4.4728)

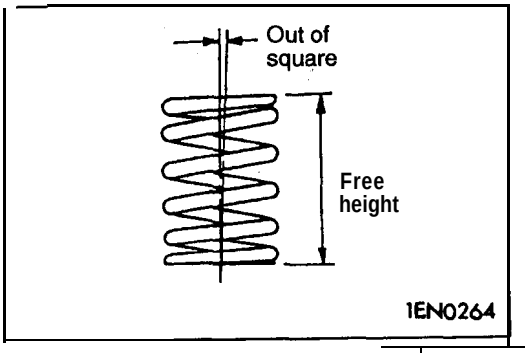

VALVE SPRING

(1) Measure the free height of spring and, if it is smaller than the limit, replace.

Standard value: 51.0 mm (2.008 in.)

Limit: 50.0 mm (1.969 in.)

(2) Measure the squareness of the spring and, if the limit is exceeded, replace.

Standard value: 2° or less
Limit: Max. 4°

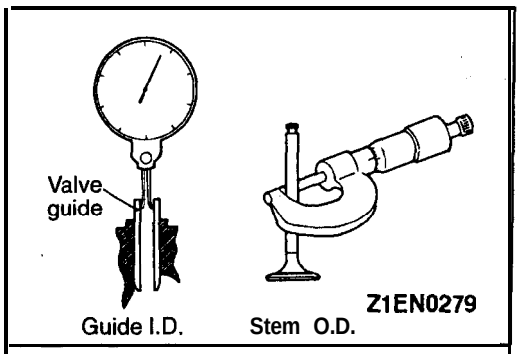

VALVE GUIDE

(1) Measure the clearance between the valve guide and valve stem. If the limit is exceeded, replace the valve guide or valve, or both.

Standard value:
Intake 0.02–0.05 mm (.0008–.0020 in.)
Exhaust 0.03–0.07 mm (.0012–.0028 in.)

Limit:
Intake 0.10 mm (.0039 in.)
Exhaust 0.15 mm (.0059 in.)

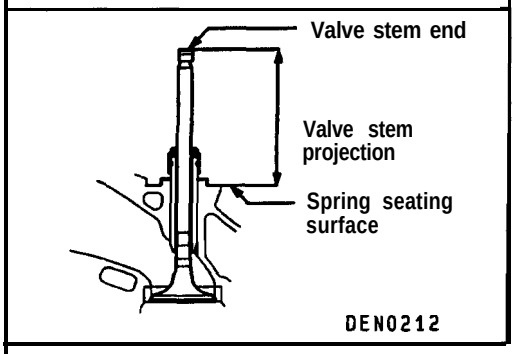

VALVE SEAT

(1) Assemble the valve, then measure the valve stem projection between the end of the valve stem and the spring seating surface. If the measurement exceeds the specified limit, replace the valve seat.

Standard value: 49.30 mm (1.9409 in.)
Limit: 49.80 mm (1.9606 in.)

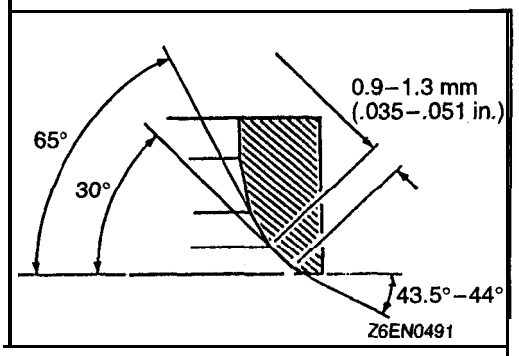

VALVE SEAT RECONDITIONING PROCEDURE

(1) Before correcting the valve seat, check for clearance between the valve guide and valve and, if necessary, replace the valve guide.
(2) Using the seat grinder, correct to obtain the specified seat width and angle.
(3) After correcting the valve seat, lap the valve and valve seat using lapping compound. Then, check the valve stem projection (refer to VALVE SEAT in INSPECTION).

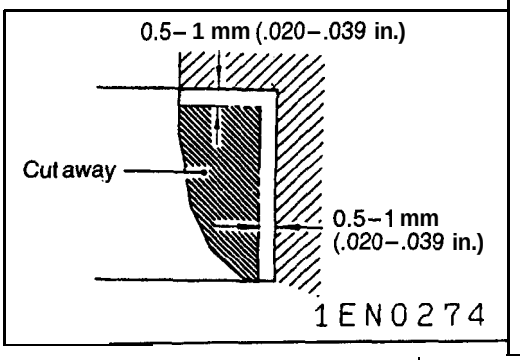

VALVE SEAT REPLACEMENT PROCEDURE

(1) Cut the valve seat to be replaced form the inside to thin the wall thickness. Then, remove the valve seat.

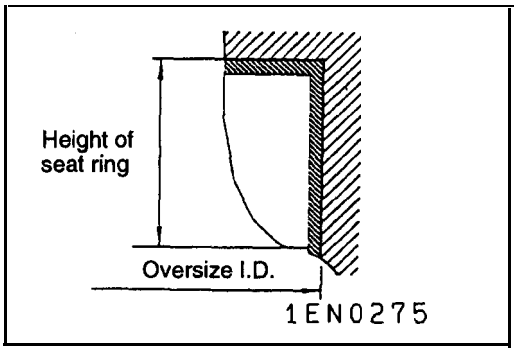

(2) Rebore the valve seat hole in the cylinder head to a selected oversize valve seat diameter.

Intake seat ring hole diameters'

0.3 O.S.	34.30–34.33 mm (1.3504–1.3516 in.)
0.6 O.S.	34.60–34.63 mm (1.3622-1.3634 in.)

Exhaust seat ring hole diameters

0.3 O.S.	31.80–31.83 mm (1.2520–1.2531 in.)
0.6 O.S.	32.10–32.13 mm (1.2638–1.2650 in.)

(3) Before fitting the valve seat, either heat the cylinder head up to approximately 250°C (482°F) or cool the valve seat in liquid nitrogen, to prevent the cylinder head bore from galling.

(4) Using a valve seat cutter, correct the valve seat to the specified width and angle.
See "VALVE SEAT RECONDITIONING PROCEDURE".

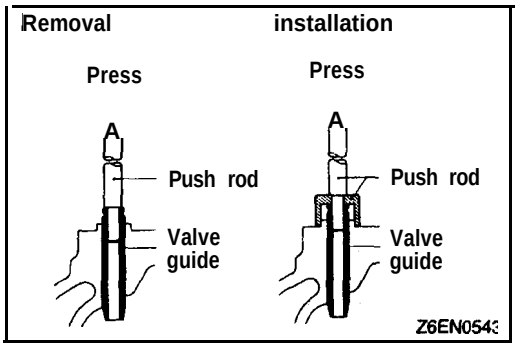

VALVE GUIDE REPLACEMENT PROCEDURE

(1) Using the push rod and a press, remove the valve guide toward cylinder head gasket surface.
(2) Rebore valve guide hole to the new oversize valve guide outside diameter.

Valve guide hole diameters

0.05 O.S.	11.05–11.07 mm (.4350–.4358 in.)
0.25 O.S.	11.25-11.27 mm (.4429–.4437 in.)
0.50 O.S.	11.50–11.52 mm (.4528–.4535 in.)

NOTE
Do not install a valve guide of the same size again.

(3) Using the special tool, press-fit the valve guide, working from the cylinder head top surface.
(4) After installing valve guides, insert new valves in them to check for sliding condition.
(5) When valve guides have been, replaced, check for valve contact and correct valve seats as necessary.

FRONT CASE, COUNTERBALANCE SHAFT AND OIL PAN 11300720085

REMOVAL AND INSTALLATION

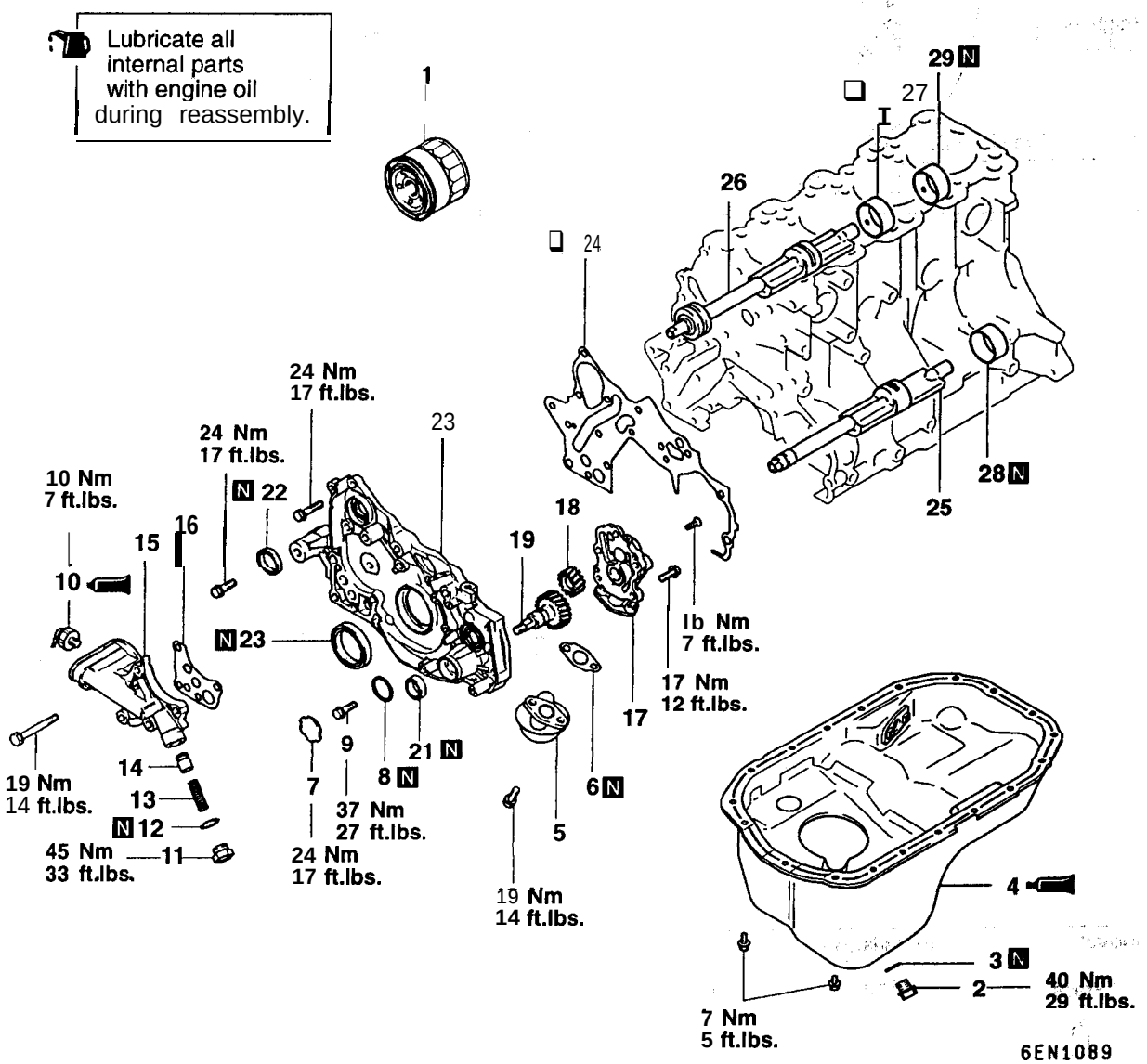

Removal steps

- ▶N◀ 1. Oil filter
- 2. Drain plug
- ▶M◀ 3. Drain plug gasket
- ◀A▶ ▶L◀ 4. Oil pan
- 5. Oil screen
- 6. Oil screen gasket
- ◀B▶ ▶K◀ 7. Plug
- 8. O-ring
- ◀C▶ ▶J◀ 9. Flange bolt
- ▶I◀ 10. Oil pressure switch
- 11. Relief plug
- 12. Gasket
- 13. Relief spring
- 14. Relief plunger
- 15. Oil filter bracket
- 16. Oil filter bracket gasket
- 17. Oil pump cover
- ▶H◀ 18. Oil pump driven gear
- ▶H◀ 19. Oil pump drive gear
- ▶G◀ 20. Crankshaft front oil seal
- ▶F◀ 21. Oil pump oil seal
- ▶E◀ 22. Counterbalance shaft oil seal
- ▶D◀ 23. Front case
- 24. Front case gasket
- 25. Counterbalance shaft, left
- 26. Counterbalance shaft, right
- ◀D▶ ▶C◀ 27. Counterbalance shaft, front bearing
- ◀E▶ ▶B◀ 28. Counterbalance shaft, rear bearing, left
- ◀E▶ ▶A◀ 29. Counterbalance shaft, rear bearing, right

TSB Revision

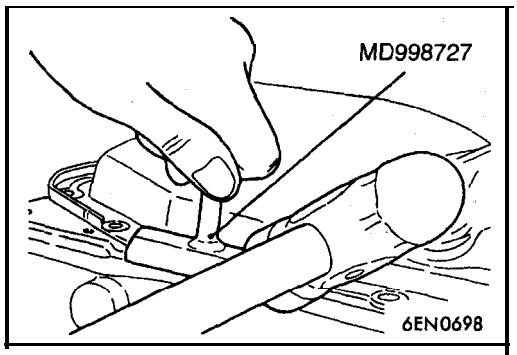

REMOVAL SERVICE POINTS

◀A▶ OIL PAN REMOVAL

(1) Remove all oil pan bolts.
(2) Drive in the special tool between the cylinder, block and oil pan.

NOTE
Never use a screwdriver or chisel, instead of the service tool, as a deformed oil pan flange will result in oil leakage.

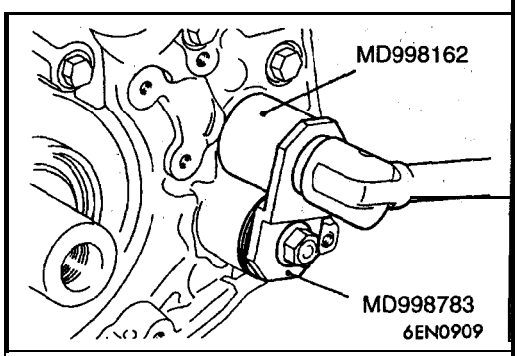

◀B▶ PLUG REMOVAL

If the plug is too tight, hit the plug head with a hammer two to three times, and the plug will be easily loosened.

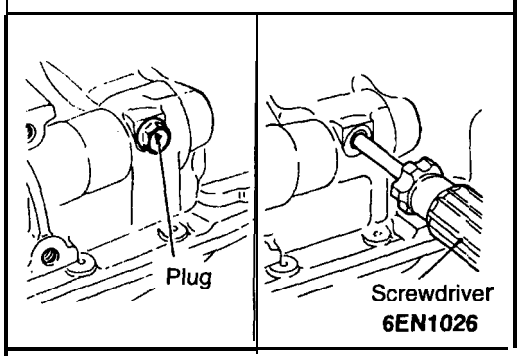

◀C▶ FLANGE BOLT REMOVAL

(1) Remove the plug on the side of cylinder block.
(2) Insert a Phillips screwdriver [shank diameter 8 mm (.32 in.)] into the plug hole, to lock the counterbalance shaft.

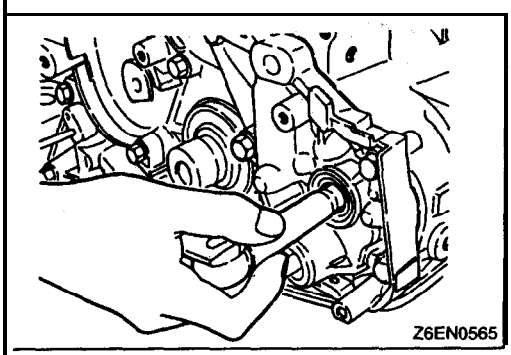

(3) Loosen the flange bolt.

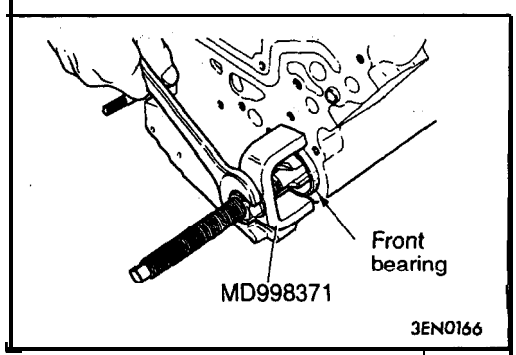

◀D▶ COUNTERBALANCE SHAFT FRONT BEARING REMOVAL

Using the special tool, remove the counterbalance shaft front bearing from the cylinder block.

NOTE
Be sure to remove the front bearing first.
If it has not been removed, the Rear Bearing Puller cannot be used.

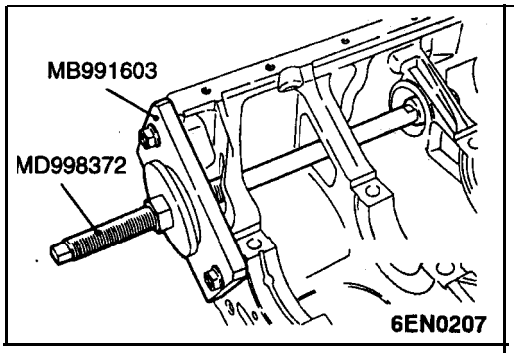

◀E▶ COUNTERBALANCE SHAFT REAR BEARING REMOVAL

Using the special tool, remove the left counterbalance shaft rear bearing from the cylinder block.

NOTE
When removing the left counterbalance shaft rear bearing, install the special tool (MB991603) in front of the cylinder block.

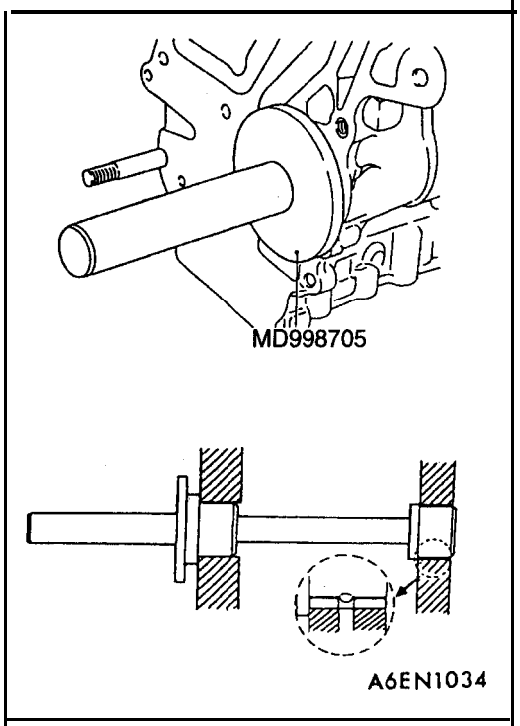

INSTALLATION SERVICE POINTS

▶A◀ RIGHT COUNTERBALANCE SHAFT REAR BEARING INSTALLATION

(1) Apply engine oil to the outer surface of bearing.
(2) Using special tools, install right rear bearing. Make sure that oil hole of bearing is aligned with oil hole of cylinder block.

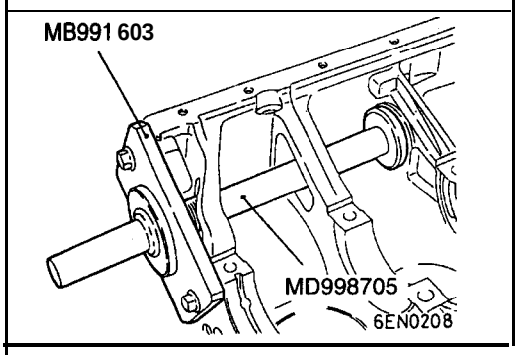

▶B◀ LEFT COUNTERBALANCE SHAFT REAR BEARING INSTALLATION

(1) Install the special tool (GUIDE PLATE) tool to the cylinder block.
(2) Apply engine oil to the rear bearing outer circumference and bearing hole in cylinder block.

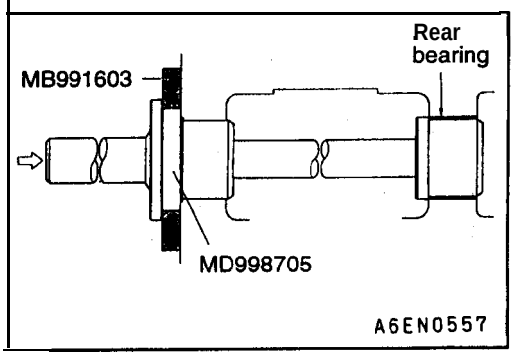

(3) Using the special tool, install the rear bearing..

NOTE
The left rear bearing has no oil holes.

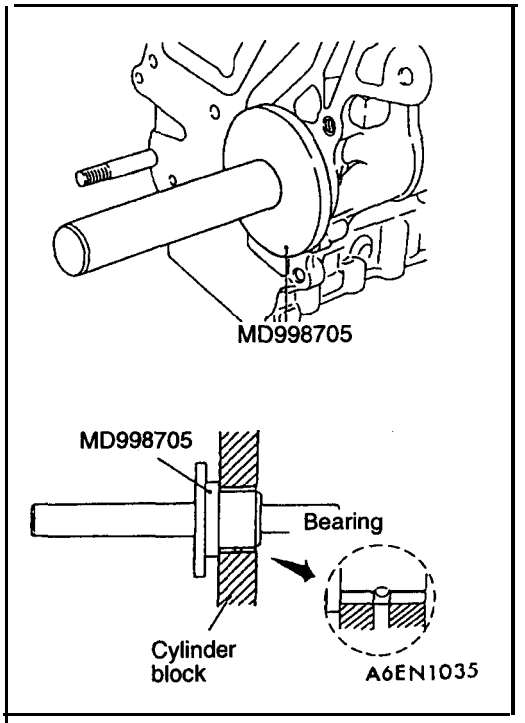

▶C◀ COUNTERBALANCE SHAFT FRONT BEARING INSTALLATION

Using special tools, install front bearing,

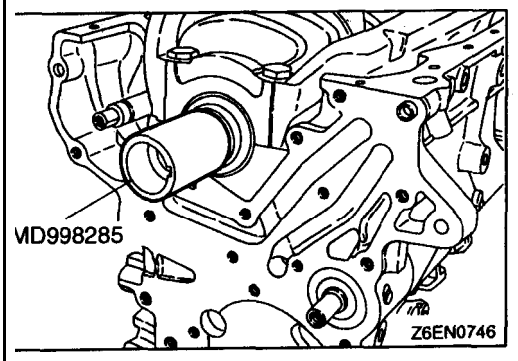

▶D◀ FRONT CASE INSTALLATION

(1) Set the special tool on the front end of crankshaft and apply a thin coat of engine oil to the outer circumference of the special tool to install the front case.

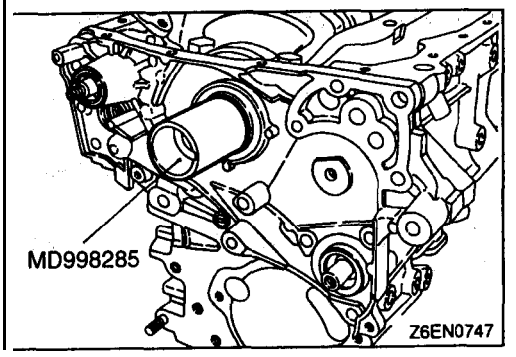

(2) Install the front case assembly through a new front case gasket and temporarily tighten, the flange bolts (other than those for tightening the filter bracket).

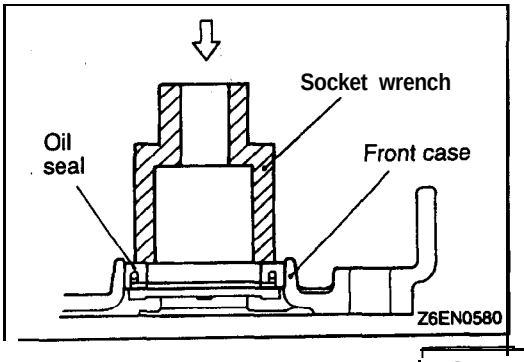

▶E◀ COUNTERBALANCE SHAFT OIL SEAL INSTALLATION

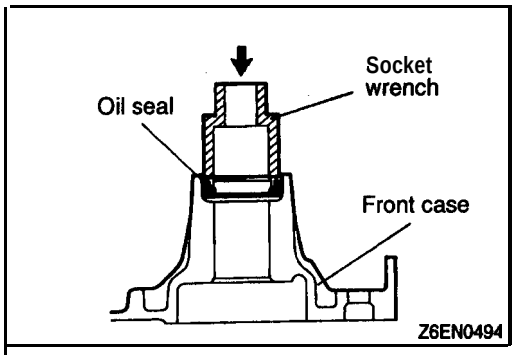

▶F◀ OIL PUMP OIL SEAL INSTALLATION

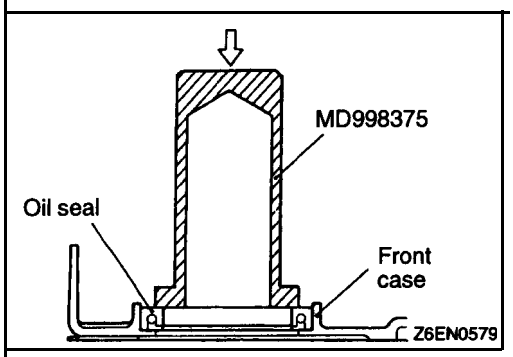

▶G◀ CRANKSHAFT FRONT OIL SEAL INSTALLATION

Using the special tool, install the crankshaft front oil seal into the front case.

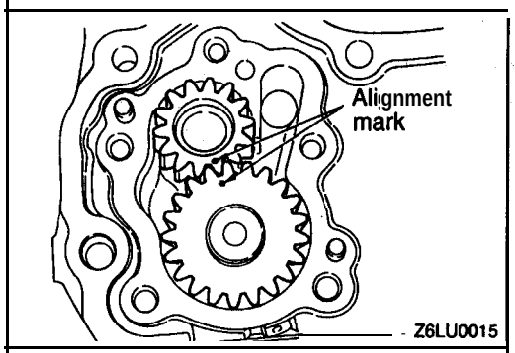

▶H◀ OIL PUMP DRIVEN GEAR / OIL PUMP DRIVE GEAR INSTALLATION

Apply engine oil amply to the gears and line up the alignment marks.

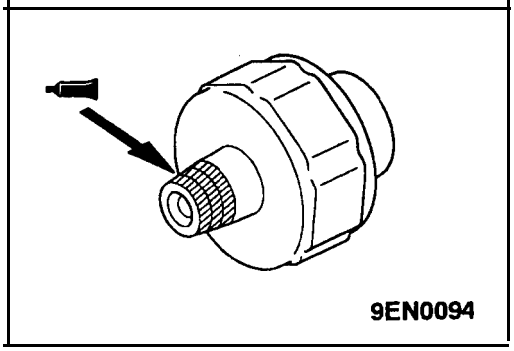

▶I◀ SEALANT APPLICATION TO OIL PRESSURE SWITCH

Coat the threads of switch with sealant and install the switch using the special tool.

Specified sealant: 3M ATD Part No.8660 or equivalent

Caution

1. Keep the end of threaded portion clear of sealant.
2. Avoid an overtightening.

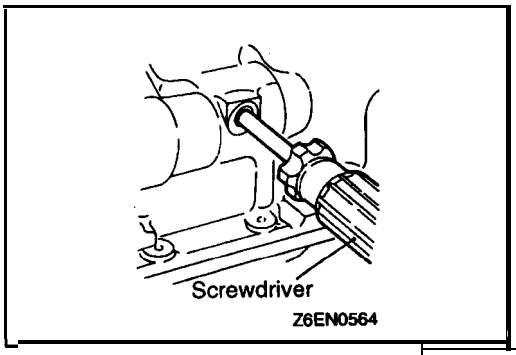

▶J◀ FLANGE BOLT INSTALLATION

(1) Insert a Phillips screwdriver into a hole in the left side of the cylinder block to lock the silent shaft.

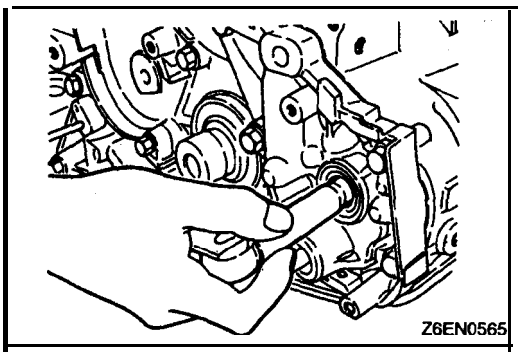

(2) Secure the oil pump driven gear onto the left counterbalance shaft by tightening the flange bolt to specified torque.

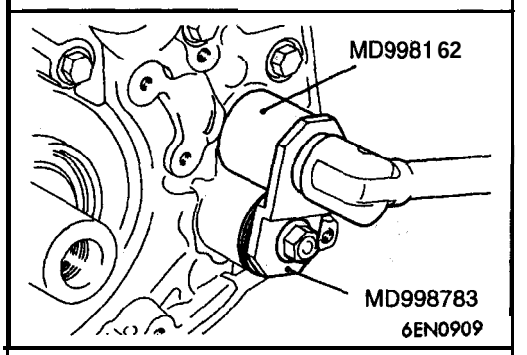

▶K◀ PLUG INSTALLATION

(1) Install a new O-ring to the groove of front case.
(2) Using the special tool, install the plug and tighten to specified torque.

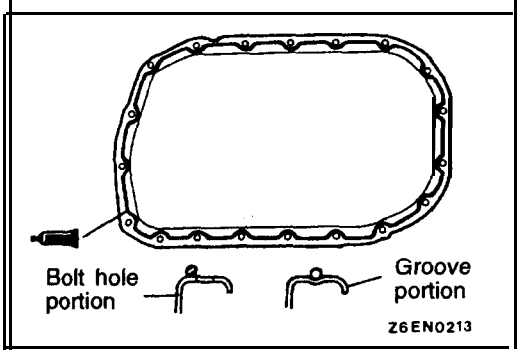

▶L◀ OIL PAN INSTALLATION

(1) Clean both mating surfaces of oil pan and cylinder block.
(2) Apply a 4 mm (.16 in.) wide bead of sealant to the entire circumference of the oil pan flange.

Specified sealant:
MITSUBISHI GENUINE PART No. MD970389 or equivalent

NOTE
(1) Be sure to install the oil pan quickly while the sealant is wet (within 15 minutes).
(2) After installation, keep the sealed area away from the oil and coolant for approx. one hour.

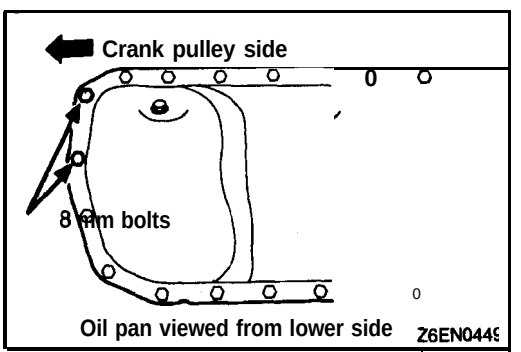

(3) Note the difference in bolt lengths at the location shown.

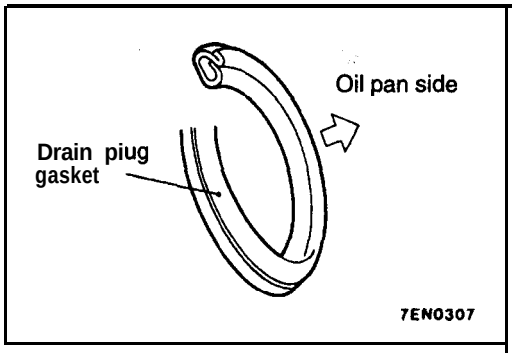

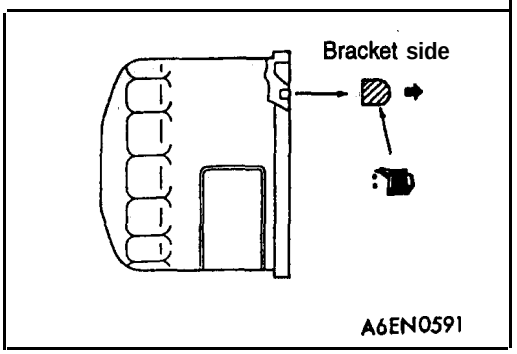

▶M◀ DRAIN PLUG GASKET INSTALLATION

Install the drain plug gasket in the shown direction.

▶N◀ OIL FILTER INSTALLATION

(1) Clean the installation surface of the filter bracket.
(2) Apply engine oil to the O-ring of, the oil filter.
(3) Screw the oil filter in until the O-ring contacts the bracket. Then tighten 3/4 turn [tightening torque: 17 Nm (12, ft.lbs)].

NOTE
For MD1 35737, tighten one turn [Tightening torque: 14 Nm (10 ft.lbs.] after the O-ring contacts the bracket.

INSPECTION

11300730057

FRONT CASE

(1) Check oil holes for clogging and -clean if necessary.
(2) Check left counterbalance shaft front bearing section for wear, damage and seizure. If there is anything 'wrong with the section, replace the front case.
(3) Check the front case for cracks and other 'damage. Replace cracked or damaged front case.

OIL SEAL

(1) Check the oil seal lip for wear and damage. **Replace** oil seal if necessary.
(2) Check the oil seal lip for deterioration. Replace oil seal if necessary.

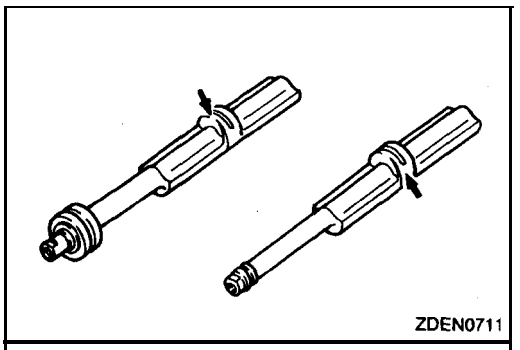

COUNTERBALANCE SHAFT

(1) Check oil holes for clogging.
(2) Check journal for seizure, damage and contact with bearing. If there is anything wrong with the journal, replace counterbalance shaft, bearing or front case assembly.

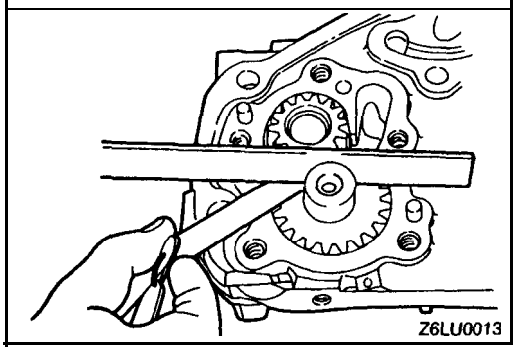

OIL PUMP

(1) Assemble the-oil pump gear to the front case and rotate it to ensure smooth rotation with no looseness.
(2) Ensure that there is no ridge wear on the contact surface between the front case and the gear surface of the oil pump cover,
(3) Check the side clearance

Standard value:

Drive gear	**0.08–0.14 mm (.0031–.0055 in.)**
Driven gear	**0.06–0.12 mm (.0024–.0047 in.)**

PISTON AND CONNECTING ROD

11300840187

REMOVAL AND INSTALLATION

Lubricate all internal parts with engine oil during reassembly.

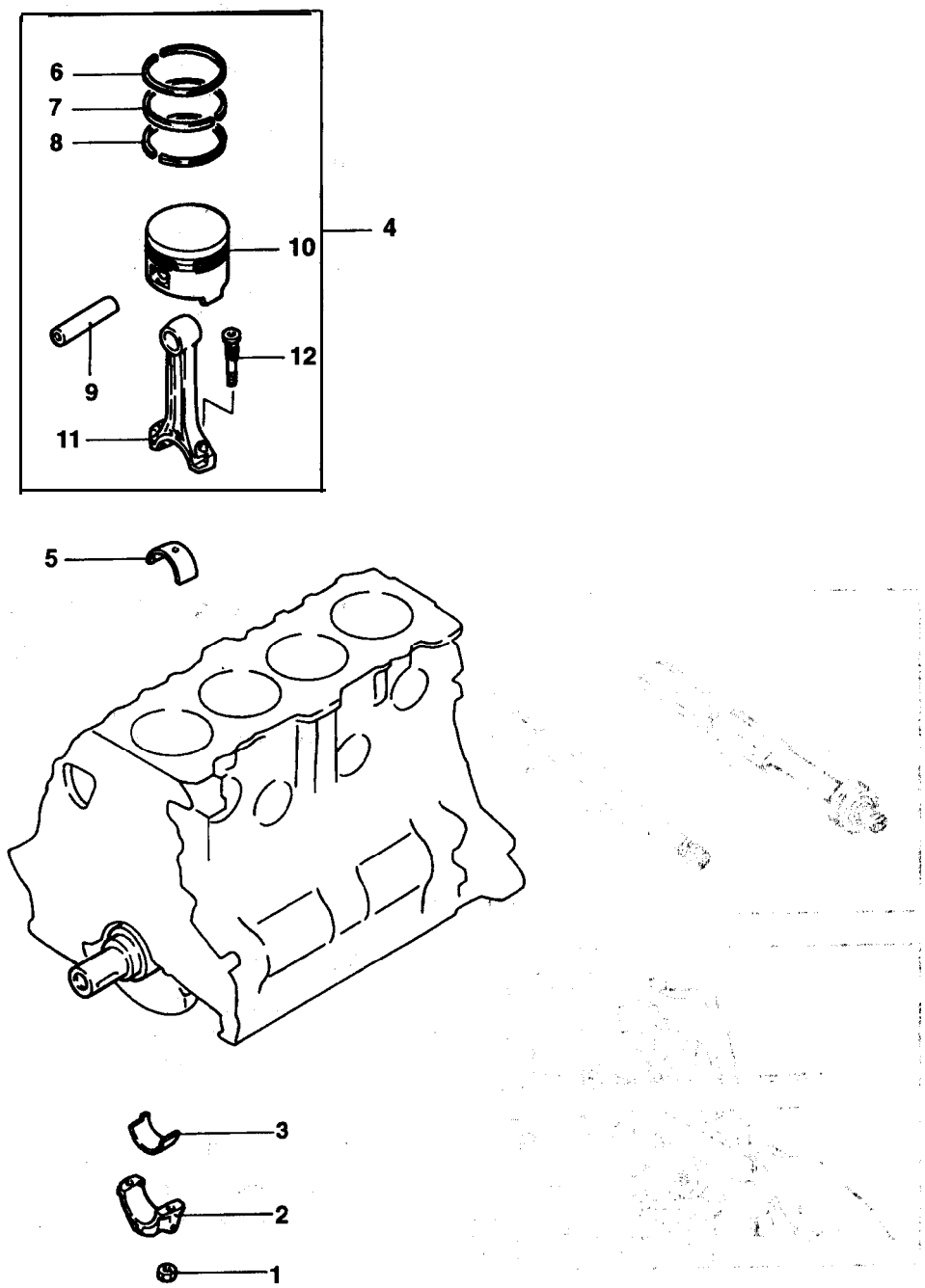

Z6EN0526

Removal steps

- ▶G◀ 1. Nut
- ◀A▶ ▶F◀ 2. Connecting rod cap
- ▶E◀ 3. Connecting rod bearing
- ▶D◀ 4. Piston and connecting rod assembly
- ▶E◀ 5. Connecting rod bearing
- ▶C◀ 6. Piston ring No. 1
- ▶C◀ 7. Piston ring No. 2
- ▶B◀ 8. Oil ring
- ◀B▶ ▶A◀ 9. Piston pin
- 10. Piston
- 11. Connecting rod
- 12. Bolt

TSB Revision

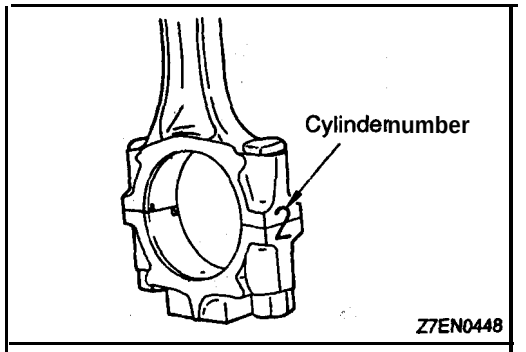

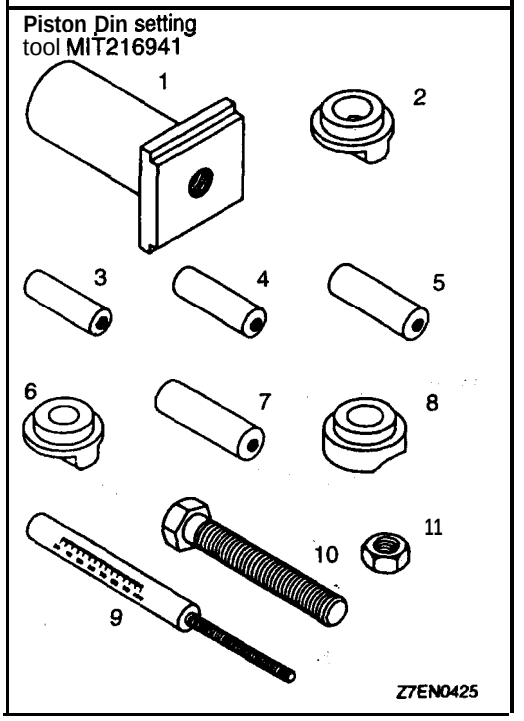

REMOVAL SERVICE POINTS

◀A▶ CONNECTING ROD CAP REMOVAL

(1) Mark the cylinder number on the side of the connecting rod big end for correct reassembly.
(2) Keep the removed connecting rods, caps, and bearings in order according to the cylinder number.

◀B▶ PISTON PIN REMOVAL

Item No.	Part No.	Description
1	MIT310134	Base
2	MIT310136	Piston Support
3	MIT310137	Connecting Rod Guide Pin
4	MIT310138	Connecting Rod Guide Pin
5	MIT310139	Connecting Rod Guide Pin
6	MIT310140	Piston Support
7	MIT310141	Connecting Rod Guide Pin
8	MIT310142	Piston Support
9	MIT481 43	Press Pin
10	216943	Stop Screw
11	10396	Nut

(1) Remove the stop screw from the base.
(2) Select the correct piston support for your application (See above). Fit the piston support onto the base. Place the base on press support blocks.

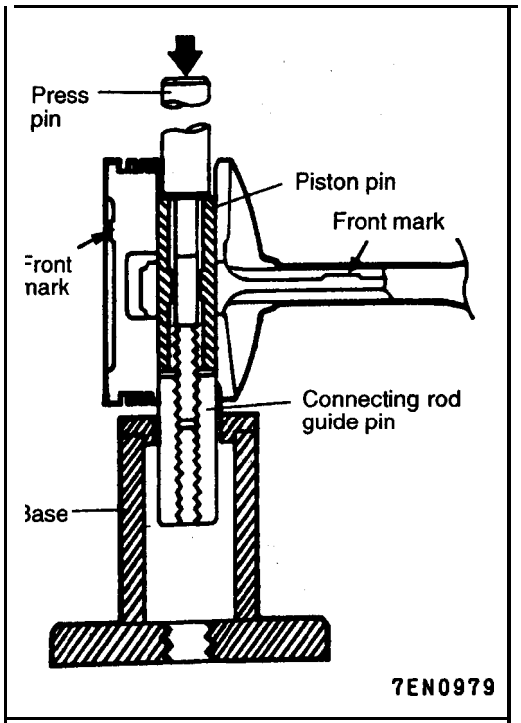

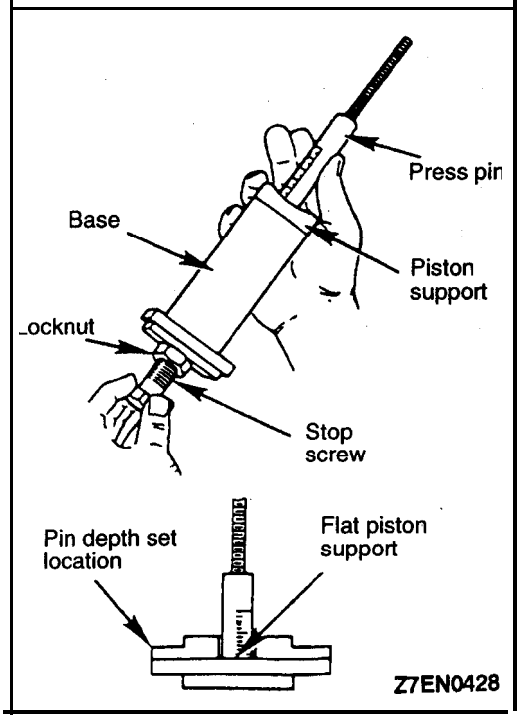

(3) Insert the press pin through the piston! pin hole. Select the correct connecting rod guide pin (See above). Thread the guide pin onto the threaded portion of the press pin.
(4) Position the piston assembly on the piston., support in the press. With the press pin up as shown in Figure 4, insert the guide pin through the hole, in the piston and through the hole in the piston support.
(5) Press the piston pin out of the assembly.

IMPORTANT: To avoid piston damage,
- **The piston support must seat squarely against the piston.**
- **Verify that the piston pin will slide through the hole in the piston support.**

(6) Remove the piston pin from the press pin.

INSTALLATION SERVICE POINTS

▶A◀ PISTON PIN INSTALLATION

(1) Thread the stop screw and lock nut assembly into the base. Fit the correct piston support on top of the base. Insert the press pin, thregded end up, into the hole in the piston support until the press pin touches the stop screw.
(2) Using the markings on the press pin, adjust the stop screw to the depth as shown below:

Depth:
Refer to **the operating instructions on the special tool.**

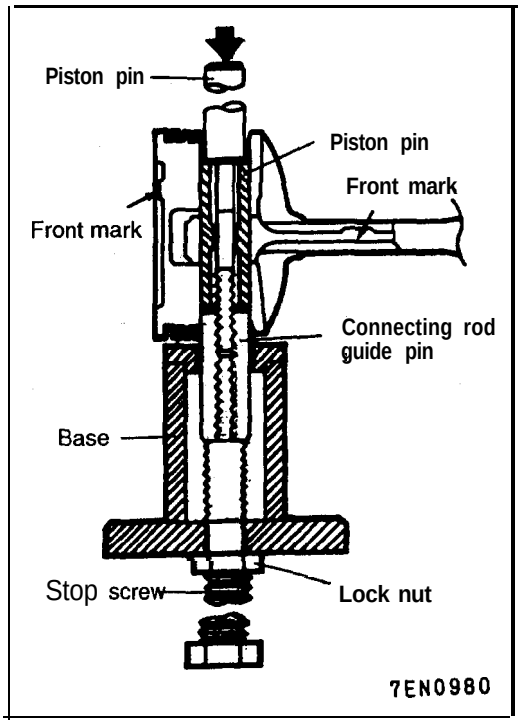

(3) Place the base on press support blocks.
(4) Slide the piston pin over the threaded end of the press pin, and thread the correct guide pin up against it.
(5) Coat the piston pin with oil, aiid with the connecting rod held in position, slide the guide pin through the piston and connecting rod.
(6) Press the piston pin through the connecting rod until the guide pin contacts the stop screw.
(7) Remove the piston assembly from the base. Remove the guide pin and press pin from the assembly.

IMPORTANT: Due to production tolerance variations, it is necessary to visually inspect the piston pin depth after installation to verify that the piston pin is centered. Adjust if necessary.

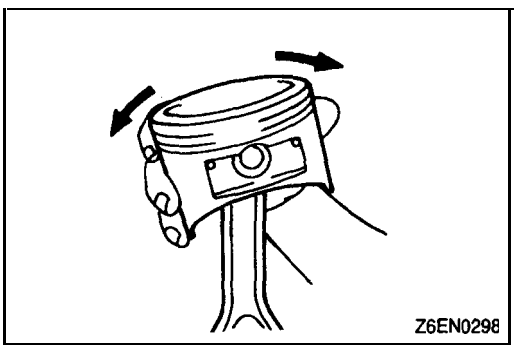

(8) Check that the piston moves. smoothly.

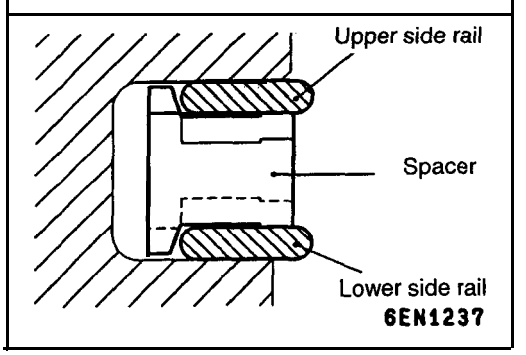

▶B◀ OIL RING INSTALLATION

(1) Fit the oil ring spacer into the piston rihg groove.

NOTE
1. The side rails and spacer may be installed in either direction.
2. New spacers and side rails are colored for identification of their sizes.

Size	Identification color
Standard	None
0.50 mm oversize	Blue
1.00 mm oversize	Yellow

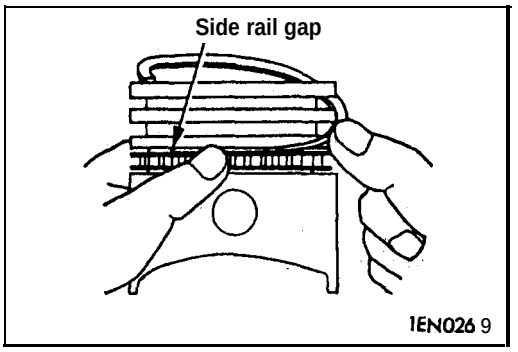

(2) Install the upper side rail.
To install the side rail, first fit one end of the rail into the piston groove, then press the remaining portion into position by finger. See illustration.
Use of ring expander to expand the side rail end gap can break the side rail, unlike other piston rings.

Caution
Do not use piston ring expander when installing side rail.

(3) Install the lower side rail in the same procedure as described in step (2).
(4) Make sure that the side rails move smoothly in either direction.

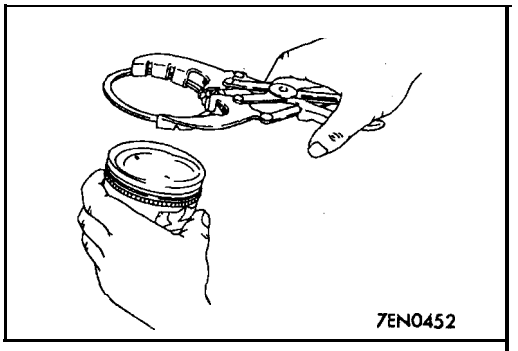

▶C◀ PISTON RING NO. 2 / PISTON RING NO. 1 INSTALLATION

Using piston ring expander, fit No. 2 and 'then No. 1 piston ring into position.

NOTE
1. The ring end is provided with identification mark.

Identification mark:
No.1 ring 1R
No.2 ring 2R

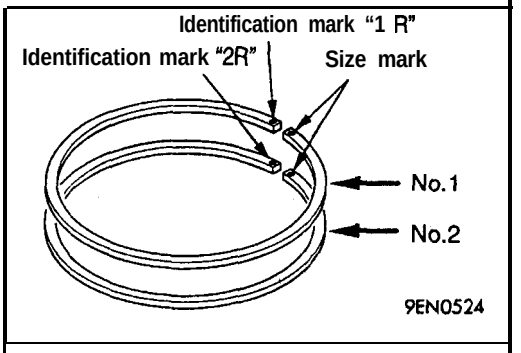

2. Install piston rings with identification mark facing up, to' the piston crown side.
3. Size marks on piston rings are as follows..

Size	Size mark
Standard	**NONE**
0.50 mm oversize	**50**
1.00 mm oversize	**100**

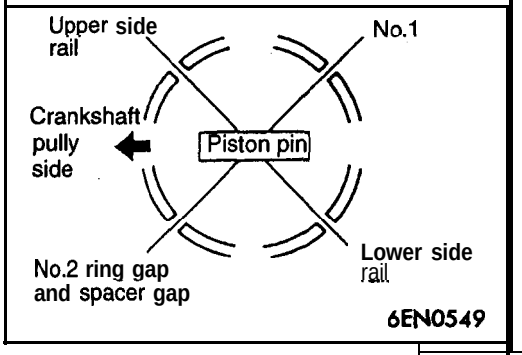

▶D◀ PISTON AND CONNECTING ROD INSTALLATION

(1) Liberally coat engine oil on the circumference of the piston, piston ring, and oil ring.
(2) Arrange the piston ring and oil ring gaps (side rail and spacer) as shown in the figure.
(3) Rotate crankshaft so that crank pin is on center of cylinder bore.

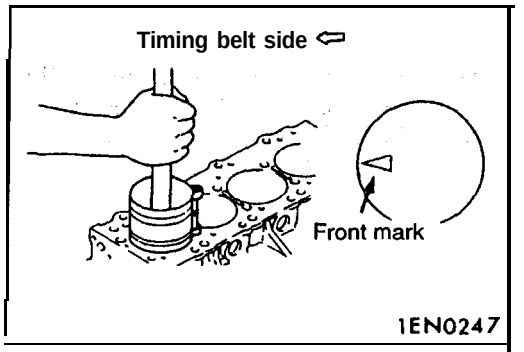

(4) Use suitable thread protectors on the connecting rod bolts before inserting piston and connecting rod assembly into the. cylinder block.
Care' must be taken not to nick the crank pin.

(5) Using a suitable piston. ring compressor tool, install the piston and connecting rod assembly into the cylinder block.

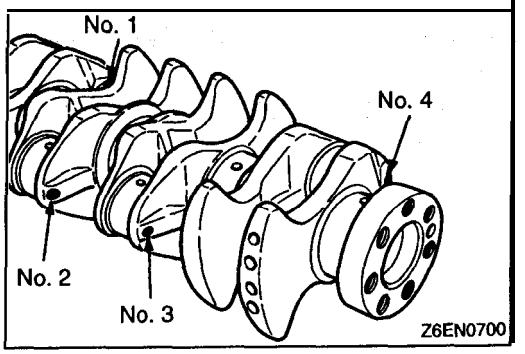

▶E◀ CONNECTING ROD BEARINGS INSTALLATION

When the bearing needs replacing, select and install a, proper bearing by the following procedure.

(1) Measure the crankshaft pin diameter and confirm its classification from the following table. In the case of a crankshaft supplied as a service part, identification colors of its, pins are painted at the positions shown in the illustration.

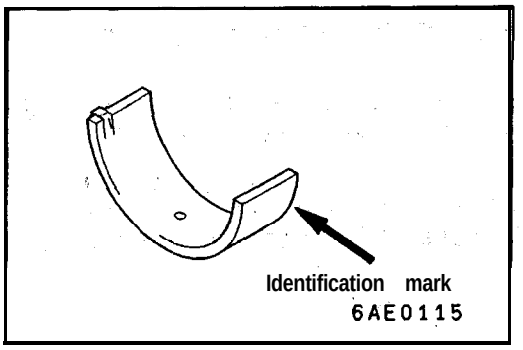

(2) The connecting rod bearing identification mark is stamped at the position shown in the illustration.

Crankshaft pin				Connecting rod bearing	
Classification	Identification mark	Identification color	O.D. mm (in.)	Identification mark	Thickness mm (in.)
	Production part	Service part			
1	None	Yellow	44.995–45.000 (1.7715–1.7717)	1	1.478–1.491 (0.0582–0.0587)
2	None	None	44.985–44.995 (1.7711-1.7715)	2	1.491-1.495 (0.0587–0.0589)
3	None	White	44.980–44.985 (1.7709–1.7711)	3	1.495–1.499 (0.0589–0.0590)

Connecting rod I.D.: 48.000–48.015 mm (1.8900–1.8904 in.)

(3) Select a proper bearing from the above table on the basis of the identification data confirmed under Items (1) and (2).

[Example]

(1) If the measured value of a crankshaft pin outer diameter is between 44.995 and 45.000 mm (1.7715 and 1.7717 in.), the pin is classified as "1" in the table. In case the crankshaft is also replaced by a spare part, check the identification colors of the pins painted on the new crankshaft. If the color is yellow, for example, the pin is classified as "1". In the above cases, select, the connecting rod bearing having identification mark "1".

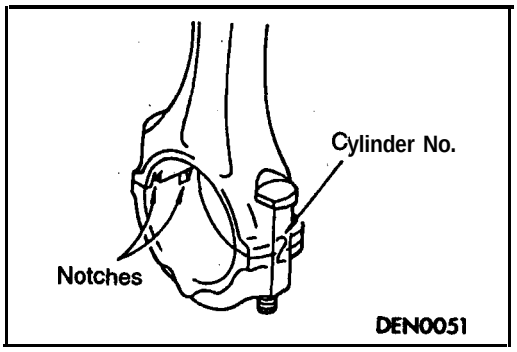

▶F◀ CONNECTING ROD CAP INSTALLATION

(1) Verifying the mark made during disassembly, install the bearing cap to the connecting rod. If the connecting rod is new with no index mark, make sure that the bearing locking notches come on the same side as shown.

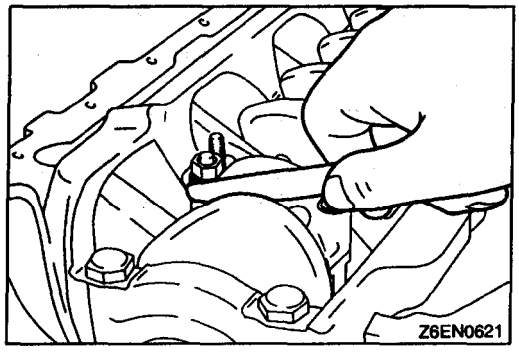

(2) Make sure that the connecting rod big end side clearance meets the specification.

Standard value: 0.1 0–0.25 mm (.0039–.0098 in.)
Limit: 0.4 mm (.016 in.)

▶G◀ CONNECTING ROD CAP NUT INSTALLATION

NOTE
Installation of the connecting rod nut should be performed with the cylinder head or the spark plug removed.

(1) Since the connecting rod bolts and nuts are torqued using the plastic area tightening method, the bolts should be examined BEFORE reuse. If the bolt threads are "necked down", the bolt should be replaced.
Necking can be checked by running a nut with fingers to the full length of the bolt threads. If the nut does not run down smoothly, the bolt should be replaced.
(2) Before installation of each nut, apply engine oil to the threaded portion and bearing surface of the nut.
(3) Loosely tighten each nut to the bolt.
(4) Then tighten the nuts alternately to a torque of 20 Nm (14.5 ft.lbs.) to install the cap properly.
(5) Make a paint mark on the head of each nut.
(6) Make a paint mark on the bolt end at the position 90° to 100° from the paint mark made on the nut in the direction of tightening the nut.
(7) Give a 90° to 100° turn to the nut and make sure that the paint mark on the nut and that on the bolt are in alignment.

Caution
1. **If the nut is turned less than 90°, proper fastening performance may not be expected. When tightening the nut, therefore, be careful to give a sufficient turn to it.**
2. **If the nut is overtightened (exceeding 100°), loosen the nut completely and then retighten it by repeating the tightening procedure from step (1).**

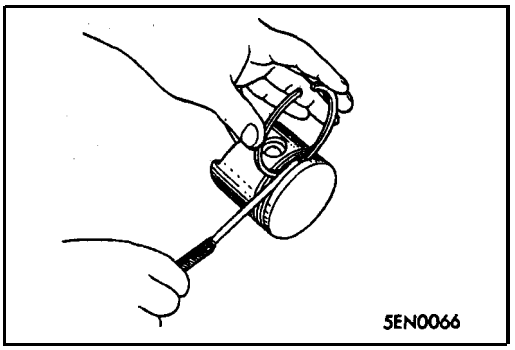

INSPECTION

11300850111

PISTON RING

(1) Check the piston ring for damage, excessive wear, and breakage and replace if defects. are evident. If the' piston has been replaced with ,a new one, the piston rings must also be replaced with, new. ones.

(2) Check for the clearance between the piston ring and ring groove. If the limit is exceeded, replace the ring or piston, or both.

Standard value: 0.03–0.07 mm (.0012–.0028 in.)

Limit: 0.1 mm (.004 in.)

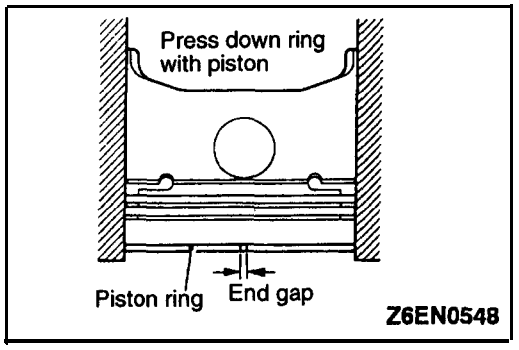

(3) Install the piston ring into the cylinder bore. Force it down with a piston, its crown being in contact with the ring, to correctly position it at right angles to the cylinder wall. Then, measure the end gap with a feeler gauge. If the ring gap is excessive, replace the piston ring.

Standard value:
No.1 ring 0.25–0.35 mm (.0098–.0138 in.)
No.2 ring 0.40–0.55 mm (.0157–.0217 in.)
Oil ring 0.10–0.40 mm (.0039–.0157 in.)

Limit:
No. 1, No. 2 ring 0.8 mm (.031 in.)
Oil ring 1.0 mm (.039 in.)

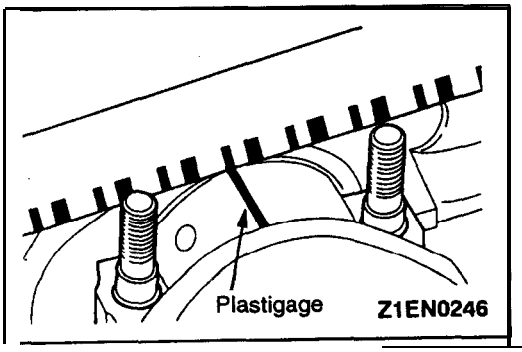

CRANKSHAFT PIN OIL CLEARANCE (PLASTIGAGE METHOD)

(1) Remove oil from crankshaft pin and connecting rod bearing.

(2) Cut the Plastigage to the same length as the width of bearing and place it on crankshaft pin in parallel with its axis.

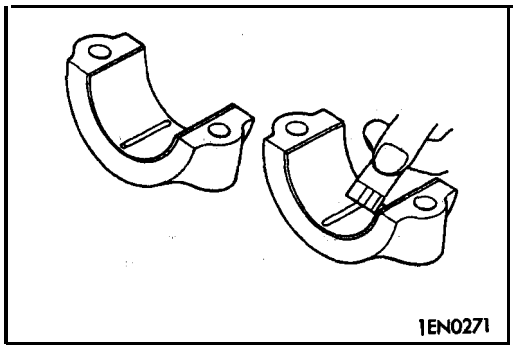

(3) Install the connecting rod cap carefully and tighten' the nuts to specified torque.
(4) Carefully remove the connecting rod cap.
(5) Measure the width of the Plastigage at its widest part by using a scale printed on the Plastigage package.

Standard value: 0.02–0.05 mm (.0008–.0020 in.)
Limit: 0.1 mm (.004 in.)

CRANKSHAFT, FLYWHEEL AND DRIVE PLATE

11300870193

REMOVAL AND INSTALLATION

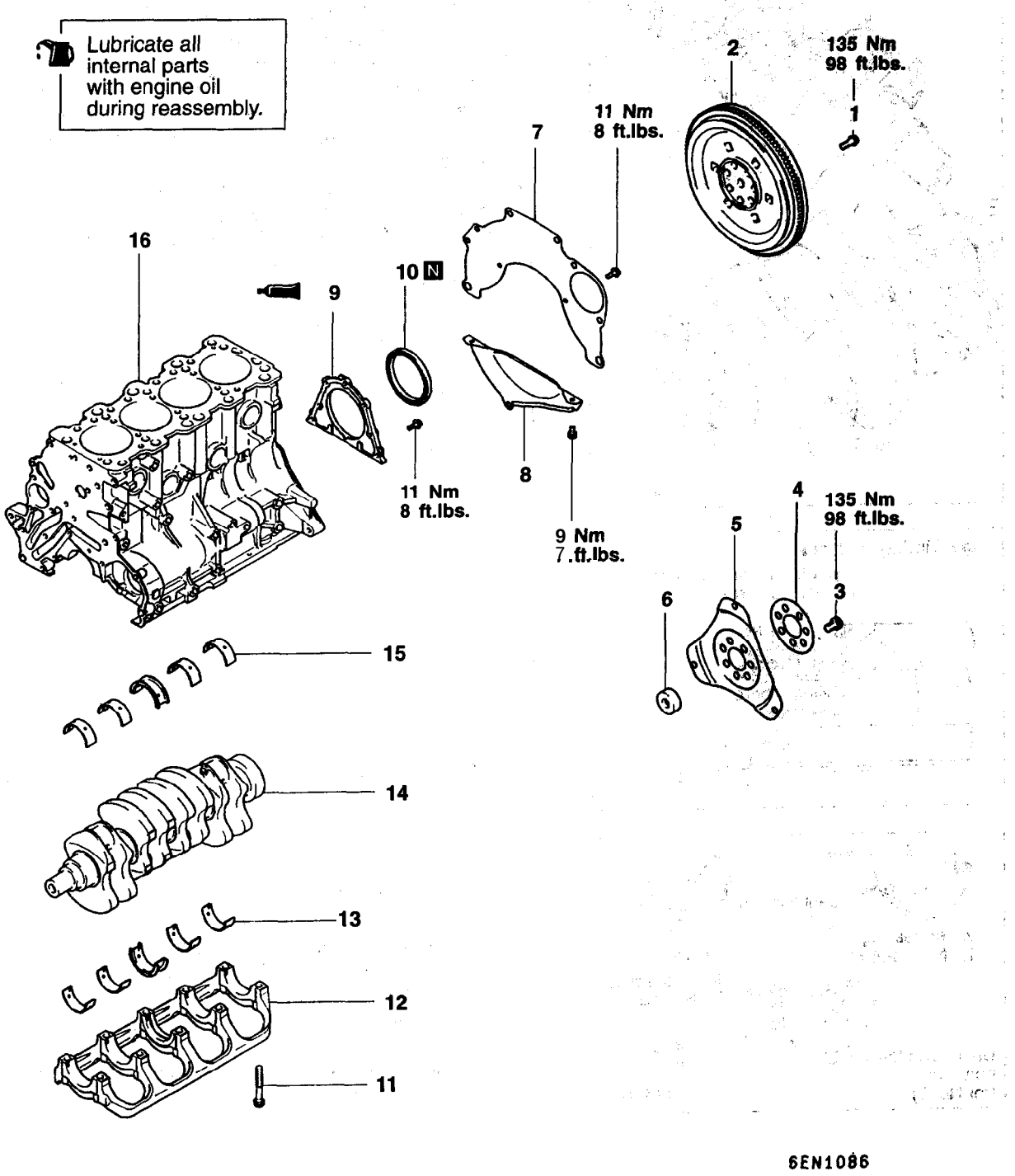

Removal steps

1. Flywheel bolt <M/T>
2. Flywheel <M/T>
3. Drive plate bolt <A/T>
4. Adapter plate <A/T>
5. Drive plate <A/T>
6. Crankshaft bushing <A/T>
7. Rear plate
8. Bell housing cover
9. ▶D◀ Oil seal case
10. ▶C◀ Oil seal
11. ▶B◀ Bearing cap bolt
12. ▶B◀ Bearing cap
13. ▶A◀ Crankshaft bearing (lower)
14. Crankshaft
15. ▶A◀ **Crankshaft bearing (upper)**
16. Cylinder block

TSB Revision

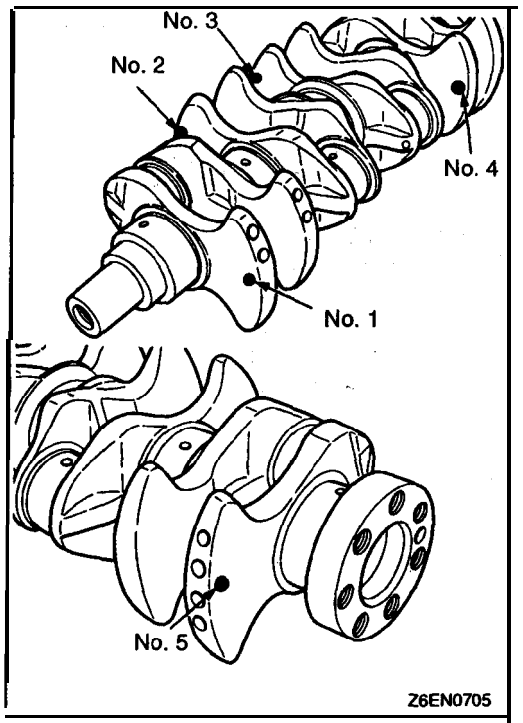

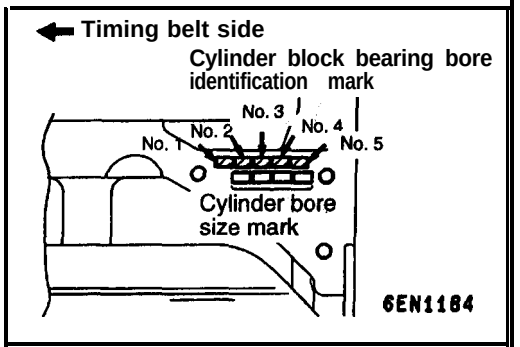

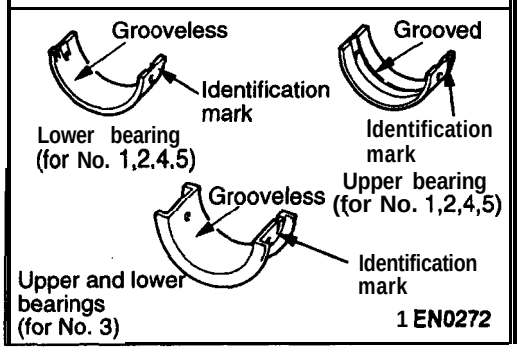

REASSEMBLY SERVICE POINTS

▶A◀ CRANKSHAFT BEARING INSTALLATION

When the bearing needs replacing, select and install a proper bearing by the following procedure.

(1) Measure the crankshaft journal diameter and confirm its classification from the following table. In the case of a crankshaft supplied as a service part, identification colors of its journals are painted at the positions shown in the illustration.

(2) The cylinder block bearing bore diameter identification marks are stamped at the position shown in the illustration from the front of engine, beginning at No. 1.

Crankshaft journal				Cylinder block bearing bore	Crankshaft bearing
Classification	Identification mark (for production part)	Identification color (for service part)	Outer diameter mm (in.)	Identification mark	Identification mark (for service part)
1	None	Yellow	56.994–57.000 (2.2439–2.2441)	0	1
				1	2
				2	3
2	None	None	56.988–56.994 (2.2436–2.2439)	0	2
				1	3
				2	4
3	None	White	56.982–56.988 (2.2438–2.2436)	0	3
				1	4
				2	5

(3) Select a proper bearing from the above table on the basis of the identification data confirmed under Items (1) and (2).

[Example]

1. If the measured value of a 'crankshaft journal outer diameter is between 56.994 – 57.000 mm (2.2439 – 2.2441 in.), the journal is classified as "1" in the table. In case the crankshaft is also replaced by a spare part, check the identification colors of the journals painted on the new crankshaft. If the color is yellow, for example, the journal is classified as "1".
2. Next, check the cylinder' block bearing hole identification mark stamped on the cylinder block. If it is "0", read the "Bearing iderititification mark" column to find the identification mark of the bearing to be used. In this case, it is "1".

(4) Install the bearings having an oil groove to the cylinder block.

(5) Install the bearings having no oil groove to the bearing cap.

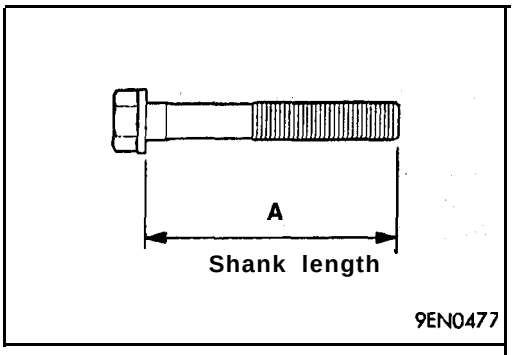

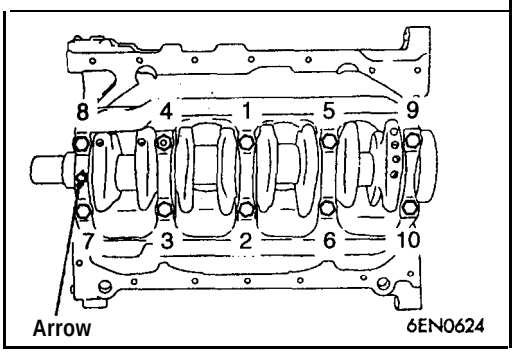

▶B◀ BEARING CAP / BEARING CAP BOLT INSTALLATION

(1) Install the bearing caps so that the arrow points to the timing belt side.
(2) Before installing the bearing cap bolts, check that the shank length of each bolt "meets the limit., If, the limit" is exceeded, replace the bolt.

Limit (A): Max. 71.1 mm (2.80 in.)

(3) Apply engine oil to the threaded portion and bearing surface of the bolt.
(4) Tighten the bolts to 25 Nm (18 ft.lbs.) in 'the' specified tightening sequence.
(5) Make a paint mark on the head of each bolt.
(6) Make a paint mark on the bearing cap at the position 90° to 100° from the paint mark made on the bolt in the direction of tightening the bolt.
(7) According to the specified tightening sequence, give a 90° to 100° turn to each bolt and make sure that the paint mark on the bolt and that on the cap are in alignment.

Caution

1. **If the bolt is turned less than 90°, proper fastening performance may not be expected. When tightening the bolt, therefore, be careful to give a sufficient turn to it.**
2. **If the bolt is overtightened (exceeding 100°), loosen the bolt completely and then retighten it by repeating the tightening procedure from step (1).**

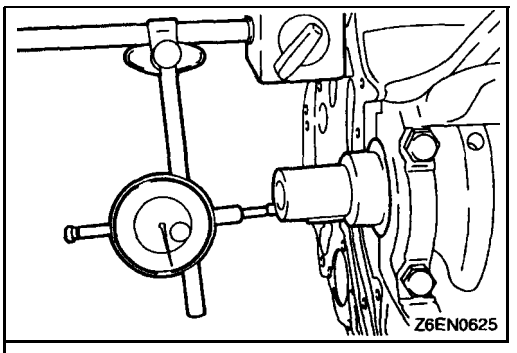

(8) After installing the bearing caps, make sure that the crankshaft turns smoothly and the end play is correct. If the end play exceeds the limit, replacer No.3 crankshaft bearings.

Standard value: 0.05–0.18 mm (.0020–.0071 in.)
Limit: 0.25 mm (.0098 in.)

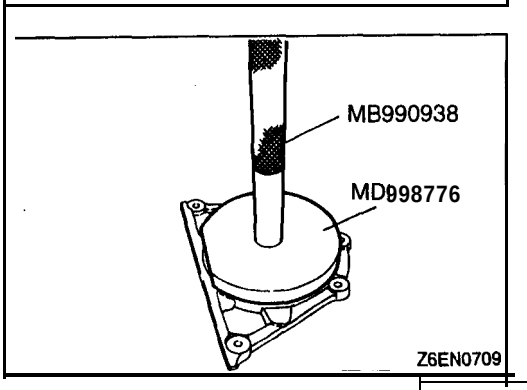

▶C◀ OIL SEAL INSTALLATION

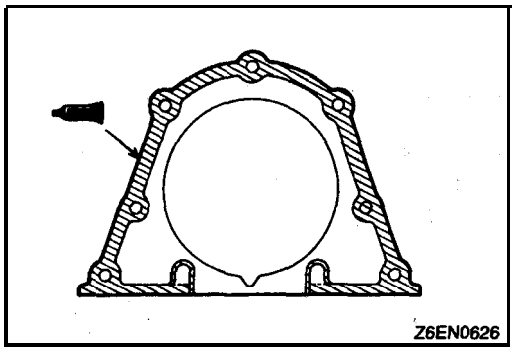

▶D◀ SEALANT APPLICATION TO OIL SEAL CASE

Specified sealant:
Mitsubishi Genuine Part No. MD970389 or equivalent

NOTE
(1) Be sure to install the case quickly while the sealant is wet (within 15 minutes).
(2) After installation, keep the sealed area away from the oil and coolant for approx. one hour.

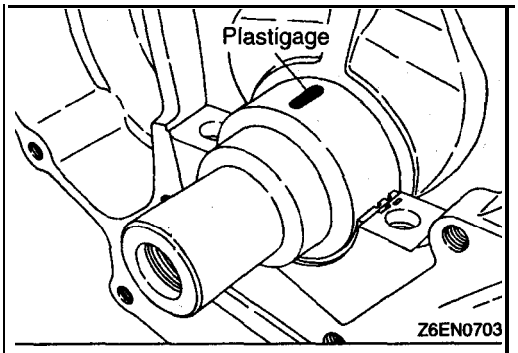

INSPECTION

11300880103

CRANKSHAFT OIL CLEARANCE (PLASTIGAGE METHOD)

(1) Remove oil from the crankshaft journal and crankshaft bearing.
(2) Install the crankshaft.
(3) Cut the Plastigage to the same length as the width of bearing and place it on journal in parallel -with its axis;

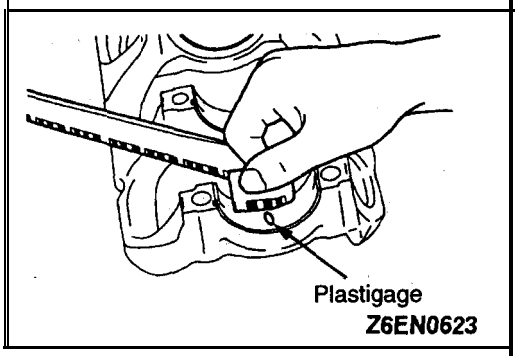

(4) Install the crankshaft bearing cap carefully and tighten the bolts to the specified torque.
(5) Carefully remove the crankshaft bearing cap.
(6) Measure the width of the Plastigage at its widest part by using a scale printed on the Plastigage package.

Standard value: 0.02–0.04 mm (.0008–.0016 in.)
Limit: 0.1 mm (.004 in.)

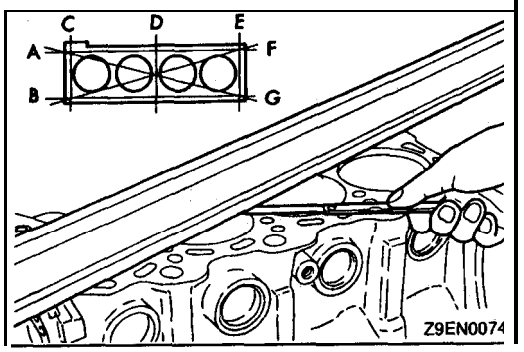

CYLINDER BLOCK

(1) Visually check for scratches, rust, and corrosion. Use also a flaw detecting agent for the check. If defects are evident, correct, or replace.
(2) Using a straightedge and feeler gauge, check the block top surface for warpage. Make sure that the surface is free from gasket chips and other foreign matter.

Standard value: 0.05 mm (.0020 in.)
Limit: 0.1 mm (.004 in.)

(3) If the distortion is excessive, correct within the allowable limit or replace.

Grinding limit: 0.2 mm (.008 in.)
Includes/combined with cylinder head grinding
Cylinder block height (when new):
289.9–290.1 mm (11.413-11.421 in.)

(4) Check cylinder walls for scratches and seizure. If defects are evident, correct (bored to oversize) or replace.

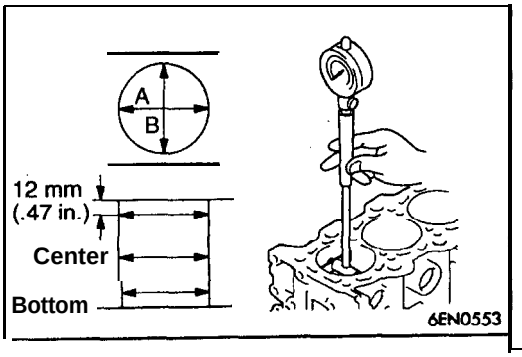

(5) Using cylinder gauge, measure the cylinder bore and cylindricity. If worn badly, correct cylinder to an oversize and replace piston and piston rings. Measure at the points shown in illustration.

Standard value:
Cylinder I.D. 86.50 mm (3.4055 in.)
Cylindricity 0.01 mm (.0004 in.) or less

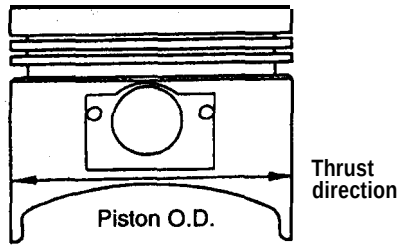

BORING CYLINDER

(1) Oversize pistons to be used should be determined on the basis of the largest bore cylinder.

Piston size identification

Size	Identification mark
0.50 O.S.	0.50
1.00 O.S.	1.00

NOTE
Size mark is stamped on piston top.

(2) Measure outside diameter of piston to be used. Measure it in thrust direction as shown.

(3) Based on measured piston O.D. calculate boring finish dimension.

Boring finish dimension = Piston O.D. + (clearance between piston O.D. and cylinder) – 0.02 mm (.0008 in.) (honing margin)

(4) Bore all cylinders to calculated boring finish dimension.

Caution
To prevent distortion that may result from temperature rise during honing, bore cylinders, working from No. 2 to No. 4 to No. 1 to No. 3.

(5) Hone to final finish dimension (piston O.D. + clearance between piston O.D. and cylinder).

(6) Check clearance between- piston and cylinder.

Clearance between piston and cylinder:
0.02–0.04 mm (.0008–.0016 in.)

NOTE
When boring cylinders, finish all of four cylinders to same oversize. Do not bore only one cylinder to an oversize.

ENGINE LUBRICATION

CONTENTS

12100000075

GENERAL INFORMATION

12100010077

The lubrication method is a fully force-fed, full-flow filtration type.

ENGINE OILS

Health Warning

Prolonged and repeated contact with mineral oil will result in the removal of natural fats from the skin, leading to dryness, irritation and dermatitis. In addition, used engine oil contains potentially harmful contaminants which may cause skin cancer. Adequate means of skin protection and washing facilities must be provided.

Recommended Precautions

The most effective precaution is to adapt working practices which prevent, as far as practicable, the risk of skin contact with mineral oils, for example by using enclosed systems for handling used engine oil and by degreasing components, where practicable, before handling them.

Other precautions:

- Avoid prolonged and repeated contact with oils, particularly used engine oils.
- Wear protective clothing, including impervious gloves where practicable.
- Avoid contaminating clothes, particularly underpants, with oil.
- Do not put oily rags in packets, the use of overalls without pockets will avoid this.
- Do not wear heavily soiled clothing and oil-impregnated foot-wear. Overalls must be cleaned regularly and kept separate from personal clothing.
- Where there is a risk of eye contact, eye protection should be worn, for example, chemical goggles or face shields; in addition an eye wash facility should be provided.
- Obtain First Aid treatment immediately for open cuts and wounds.
- Wash regularly with soap and water to ensure all oil is removed, especially before meals (skin cleansers and nail brushes will help). After cleaning, the application of preparations containing lanolin to replace the natural skin oil is advised.
- Do not use gasoline, kerosine, diesel fuel, gas oil, thinners or solvents for cleaning skin.
- Use barrier creams, applying them before each work period, to help the removal of oil from the skin after work.
- If skin disorders develop, obtain medical advice without delay.

LUBRICANTS

12100040090

Items		Engine oil (API classification)	Quantity dm^3 (qts.)
Oil filter	2.0L Engine (Non-turbo)	SH or higher	0.5 (.53)
	2.0L Engine (Turbo) and 2.4L Engine		0.3 (.32)
Oil cooler <2.0L Engine (Turbo)>			0.1 (.11)
Total quantity	2.0L Engine (Non-turbo) and 2.4L Engine		4.3 (4.5)
	2.0L Engine (Turbo)		4.4 (4.6)

EOLCS certification mark

M03A015

ENGINE OIL

Caution

Nevel use nondetergent or straight mineral oil.

Oil Identification Symbol

Use only engine oils displaying the EOLCS certification mark on the container.

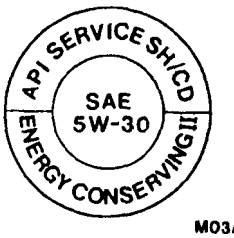

M03A014

If these oils are not available, an API classification **SH ECII** or **SH/CD ECII** can be used.'

ON-VEHICLE SERVICE

12100090040

ENGINE OIL INSPECTION

1. Pull out the oil dipstick slowly and check that the oil **level** is within the marks on the oil dipstick.
2. Check that the oil is **not excessively** dirty, that there is no coolant or gasoline mixed in, 'and that it has, sufficient viscosity.

ENGINE OIL REPLACEMENT

12100100095

1. After warming up the engine, remove the oil filler cap.
2. Remove the drain plug to allow the engine oil to drain.
3. Replace the drain plug gasket with a new one and tighten the drain plug.

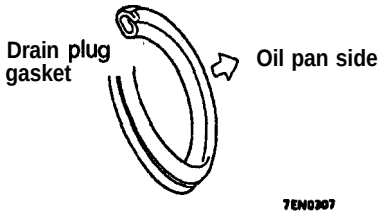

7EN0307

:2.0L Engine (Non-turbo)>

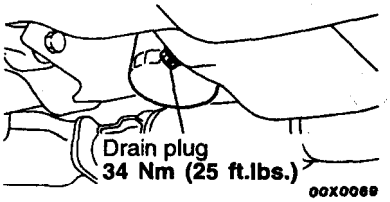

00X0069

:2.0L Engine (Turbo) and
:.4L Engine>

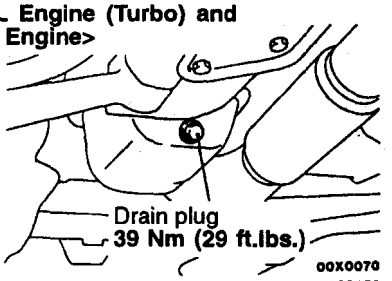

00X0070
00003670

TSB Revision

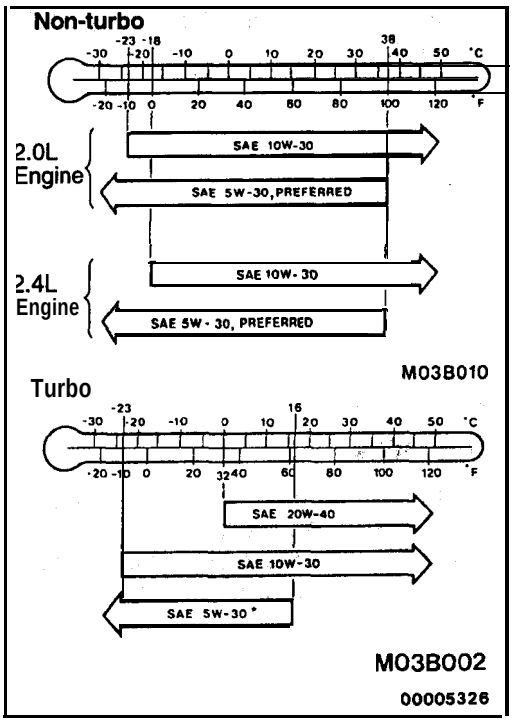

4. Supply new engine oil through the oil filler.

Engine oil total quantity:
[including oil filter and oil cooler]
<2.0L Engine (Non-turbo) arid 2.4L Engine>
4.3 **dm^3 (4 1/2 qts.)**
<2.0L Engine (Turbo)>
4.4 **dm^3 (4.6 qts.)**

5. Start and run the engine a few minutes.
6. Stop the engine and check the engine oil level is within the level range indicated on the oil dipstick.

NOTE
*: SAE 5W-30 may be used for operation in very cold weather areas where the lowest ambient temperature is below –10°F (–23°C).

OIL FILTER REPLACEMENT

12100110081

1. Remove the engine oil filler cap.
2. Remove the engine oil drain plug, and drain out the engine oil.
3. Remove the engine oil filter by using the oil filter wrench.
4. Clean the oil filter mounting, surface of the oil filter bracket.

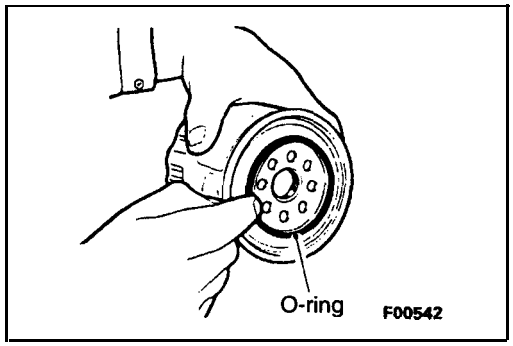

5. Coat engine oil to the O-ring of'new oil filter:
6. Screw on the oil filter by hand until it touchesthe surface of the flange and then tighten it with. the filter wrench: etc.
   <2.0L Engine (Turbo) and 2.4L Engine>
   - For MD135737: One full turn or 14 Nm (10 ft.lbs.)
   - For MD136466, MD325714: 3/4 turn or 17 Nm (12 ft.lbs.)
   <2.0L Engine (Non-turbo)>
   - For M05281 090: 3/4 turn or 21 Nm (15 ft.lbs.)
7. Add new engine oil through the oil filter.

8. Start and run engine and check for engine oil leaks.
9. After stopping engine, check oil level and replenish as necessary.

ENGINE OIL COOLER <2.0L ENGINE (4G6)>

12100130117

REMOVAL AND INSTALLATION

Pre-removal Operation
- Engine Coolant Draining
  (Refer to GROUP 00 – Maintenance Service.)

Post-installation Operation
- Engine Coolant Supplying.
  (Refer to GROUP 00 – Maintenance Service.)
- Engine Oil Checking and Supplying

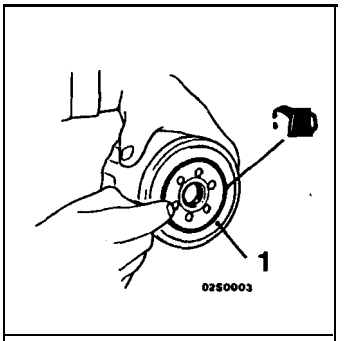

Engine oil

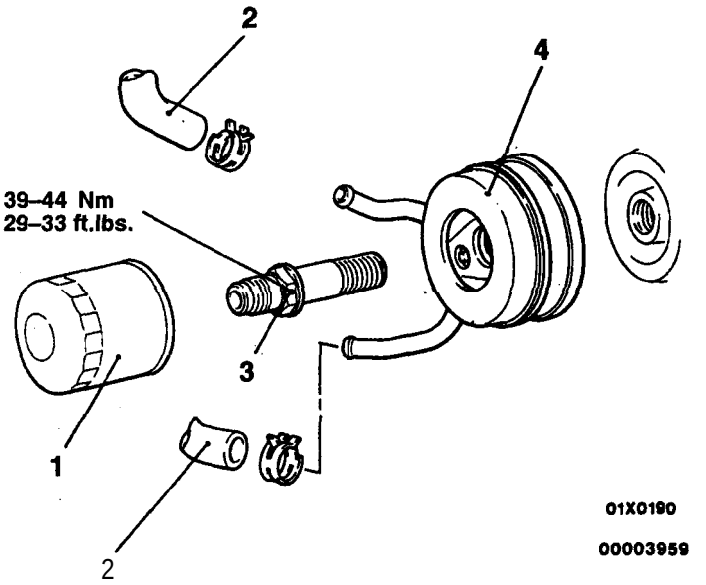

Removal steps

1. Oil filter
2. Water hose connection
3. Oil cooler bolt

▶A◀ 4. Engine oil cooler

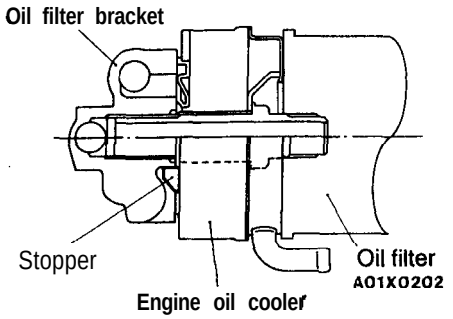

INSTALLATION SERVICE POINT

▶A◀ ENGINE OIL COOLER INSTALLATION

Insert the stopper into the groove of the oil filter bracket, and then tighten the oil cooler bolt.

TSB Revision

INSPECTION

12100140080

- Check the water hoses for cracks, damage, clogging, or deterioration.
- Check the oil cooler bolt for clogging or deformation.

FUEL

CONTENTS

13109000140

NOTE
Groups that have been shaded are not contained in this manual.

NOTES

MULTIPORT FUEL INJECTION (MFI)

CONTENTS

13109000300

CONTINUED ON NEXT PAGE

MULTIPORT FUEL INJECTION (MFI) <2.0L ENGINE (NON-TURBO)>

13100010302

GENERAL INFORMATION

The Multiport Fuel Injection System consists of sensors which detect the engine conditions, the POWERTRAIN CONTROL MODULE (PCM) which controls the system based on signals from these sensors, and actuators which operate under the control of the PCM.

The PCM carries out activities such as fuel injection control, idle air control and ignition timing control.
In addition, the PCM is equipped with several diagnostic test modes which simplify troubleshooting when a problem develops.

FUEL INJECTION CONTROL

The injector drive times and injector timing are controlled so that the optimum air/fuel mixture is supplied to the engine to correspond to the continually-changing engine operation conditions.
A single injector is mounted at the intake port of each cylinder. Fuel is sent under pressure from the fuel tank by the fuel pump, with the pressure regulated by the fuel pressure regulator. The regulated fuel is distributed to each of the injectors.
Fuel injection is normally carried out once for each cylinder for every two rotations of the crankshaft. The firing order is 1-3-4-2. This is called multiport. The PCM provides a richer air/fuel mixture by carrying out "open-loop" control when the engine is cold or operating under high load conditions in order to maintain engine performance.
In addition, when the engine is warm or operating under normal conditions, the PCM controls the air/fuel mixture by using the heated oxygen sensor signal to carry out "closed-loop" control in order to obtain the theoretical air/fuel mixture ratio that provides the maximum cleaning performance from the three way catalyst.

IDLE AIR CONTROL

The idle speed' is kept at the optimum speed by controlling the amount of air that bypasses the throttle valve in accordance with changes in idling conditions and engine load during idling.
The PCM drives the idle air control (IAC) motor to keep the engine running at the pre-set idle target speed in accordance with the engine coolant temperature and air conditioning load.
In addition, when the air conditioning switch is turned off and on while the engine is idling, the IAC motor operates to adjust the throttle valve bypass air amount in accordance with the engine load conditions in order to avoid fluctuations in the engine speed.

IGNITION TIMING CONTROL

The ignition power transistor is built into the PCM. It turns the ignition primary circuit on and off to respectively supply and cut off primary current flow to the ignition coil.

This controls the ignition timing in order to provide the optimum ignition timing with respect to the engine operating conditions. The ignition timing is determined by the PCM from the engine speed, intake air volume, engine coolant temperature and atmospheric pressure.

DIAGNOSTIC TEST MODE

- When an abnormality is detected in one of the sensors or actuators related to emission control, the CHECK ENGINE/ MALFUNCTION INDICATOR LAMP illuminates as a warning to the driver.
- When an abnormality is detected in one of the sensors or actuators, a diagnostic trouble code corresponding to the abnormality is output.
- The RAM data inside the PCM that is related to the sensors and actuators can be read by means of the scan tool.
  In addition, the actuators can be controlled under certain circumstances.

OTHER CONTROL FUNCTIONS

1. Fuel Pump Control
   Turns the fuel pump relay ON so that current is supplied to the fuel pump while the engine is cranking or running.
2. A/C Compressor Clutch Relay Control
   Turns the A/C compressor clutch ON and OFF.
3. Fan Relay Control
   The radiator fan and condenser fan speeds are controlled in response to the engine coolant temperature and vehicle speed.
4. Generator Charging Control
   Controls the generator field current in order to control the generated current.
5. Engine Speedometer or Tachometer Control
   Sends a pulse signal which 'corresponds to the engine speed to the' speedometer unit.
6. Evaporative Emission Purge Solenoid Control
   Refer to GROUP 17.
7. Electric EGR Transducer Solenoid Control
   Refer to GROUP 17.

Item		Specifications
Throttle body	Throttle bore mm (in)	52 (2.05)
	Throttle position sensor	Variable resistor type
	Idle air control motor	Stepper motor type [Stepper motor type bypass air control system]'
Sensors	Manifold absolute pressure sensor	Semiconductor type
	Intake air temperature sensor	Thermistor type
	Engine coolant temperature sensor	Thermistor type
	Heated oxygen sensor	Zircon type
	Vehicle speed sensor	Electromagnetic resistance element type <M/T> TCM output signal <A/T>
	Camshaft position sensor	Hall element type'
	Crankshaft position sensor	Hall element type
	Knock sensor	Piezoelectric type
	Power steering pressure switch	Contact switch type
Actuators	Multiport fuel injection (MFI) relay (ASD relay)	Contact switch type
	Fuel pump relay	Contact switch type
	Injector type and number	Electromagnetic type, 4
	Electric EGR transducer solenoid	ON/OFF type solenoid valve
	Evaporative emission purge solenoid	Duty cycle type solenoid valve

MULTIPORT FUEL INJECTION (MFI) SYSTEM DIAGRAM

★1 Heated oxygen sensor (Front) ★2 Manifold absolute pressure sensor ★3 Intake air temperature sensor ★4 Throttle position sensor ★5 Camshaft position sensor ★6 Crankshaft position sensor ★7 Engine coolant temperature sensor ★8 Knock sensor ★9 Heated oxygen sensor (Rear)	• Power supply • Vehicle speed sensor • A/C switch • Park/Neutral position switch (transaxle range switch) • Power steering pressure switch • ignition switch–IG (J2 sense) • Brake switch • MFI relay (ASD relay)	⇨	Powertrain control module (PCM)	⇨	★1 Injector ★2 Evaporative emission purge solenoid ★3 Idle air control motor ★4 EET solenoid ★5 Ignition coil ★6 "Evaporative emission ventilation solenoide • Fuel pump relay • Multiport fuel injection (MFI) relay (ASD relay) • Air conditioning compressor clutch relay • Check engine/Malfunction indicator lamp • Diagnostic output • Fan motor relay • Generator • Engine speedometer • Charging warning light • Warning light integrated in the combination meter

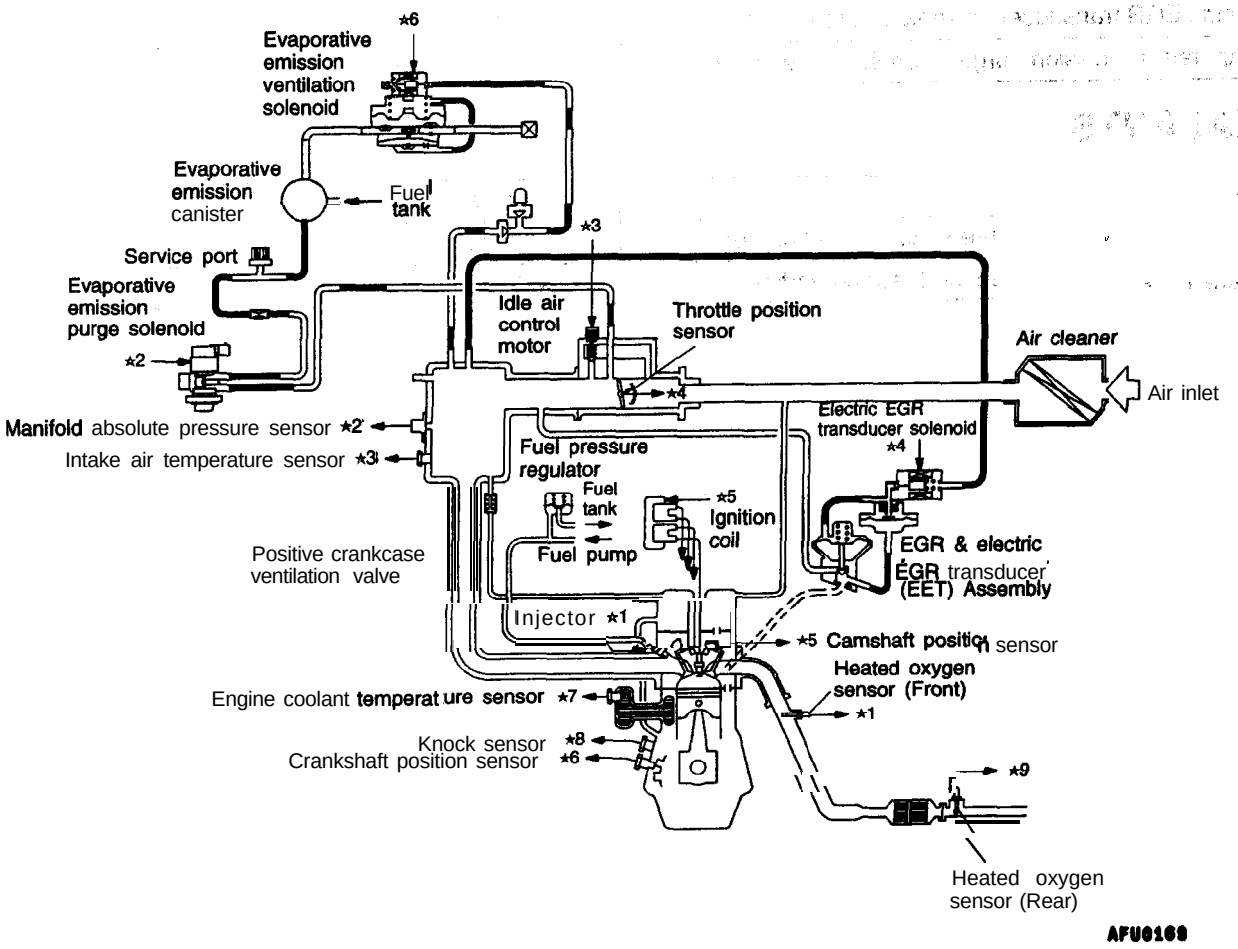

TSB Revision

SERVICE SPECIFICATIONS

13100030063

Items		Standard value
Ignition timing		12° BTDC. at curb idle (Nonadjustable)
Curb idle r/min		800 ± 100
Idle speed when A/C is ON r/min		850 ± 100 in Neutral
Throttle position sensor resistance, kΩ		3 . 5 – 8 . 5
Idle air control motor coil resistance Ω		38 – 52 [at 20°C (68°F)]
Intake air temperature sensor resistance kΩ	25°C (77°F)	9 - 1 1
	100°C (212°F)	0.6 – 0.8
Engine coolant temperature sensor resistance kΩ	25°C (77°F)	9-11
	100°C (212°F)	0.6 – 0.8
Heated oxygen sensor output voltage V		0.6 – 1.0
Fuel pressure kPa (psi)		330 – 350 (47 – 50) at curb idle
Injector coil resistance Ω		11 – 15 [at 20°C (68 °F)]
Electric EGR transducer solenoid coil resistance Ω		25 – 35 [at 20°C (68 °F)]
Evaporative emission purge solenoid coil resistance Ω		25 – 35 [at 20°C (68 °F)]

SEALANTS

13100050069

Items	Specified sealants
Engine coolant temperature sensor threaded portion	Loctite 24200 or equivalent
Intake air temperature sensor threaded portion	Loctite 24200 or equivalent

SPECIAL TOOLS

13100060246

Tool	Tool number and name	Supersession	Application
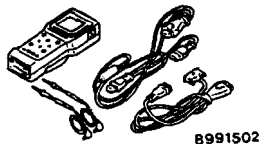 B991502	MB991502 Scan tool <MUT-II>	MB991502	• Reading diagnostic trouble code • MFI system inspection
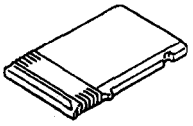 B991325	ROM pack	–	
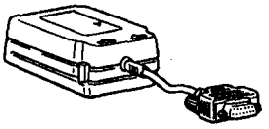	MB991544 MUT-II Interface cartridge	MB991544	
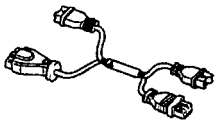	MB991545 Adapter harness	MB991545	
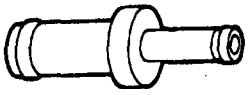	MB995050 Metering fitting	MB995050-01	Inspection of throttle body minimum air flow
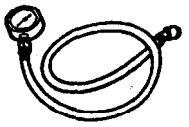	MB995051 Fuel pressure gauge	MIT220433 Use with MIT210196	Measurement of fuel pressure

TROUBLESHOOTING

13100850157

DIAGNOSTIC TROUBLESHOOTING FLOW CHART

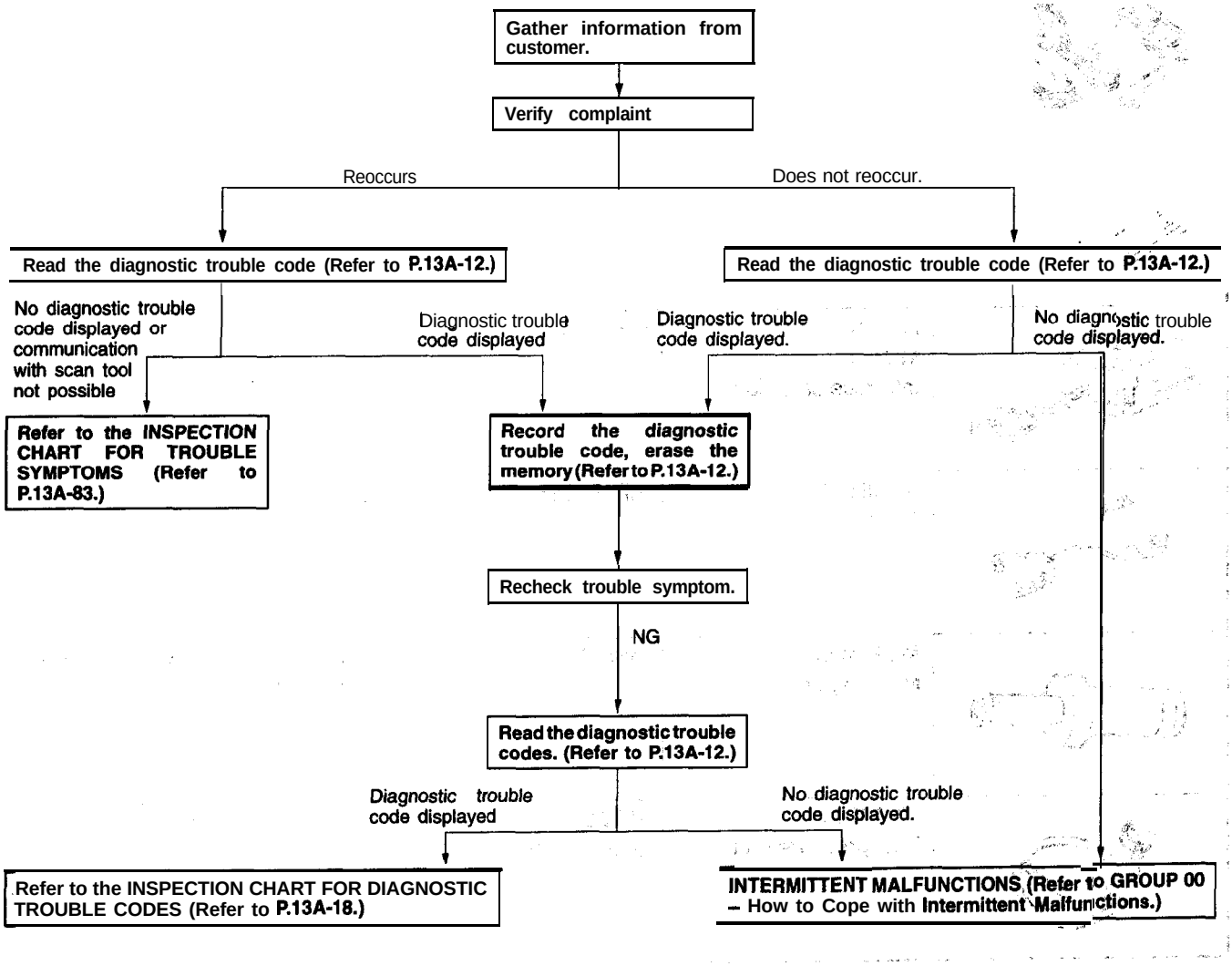

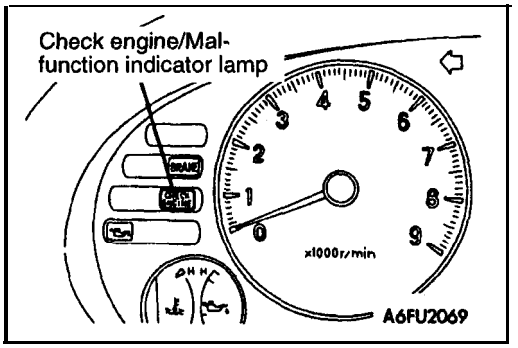

DIAGNOSTIC TEST MODE

13100860259

CHECK ENGINE/MALFUNCTION INDICATOR LAMP

As a functional test, the Malfunction Indicator Lamp (MIL) illuminates at key-on before engine cranking.
Whenever the Power-train Control Module (PCM) sets a diagnostic trouble code that effects vehicle emissions, it illuminates the MIL. The PCM illuminates the MIL only for diagnostic trouble codes that effect vehicle emissions. The MIL remains on until the diagnostic trouble code is erased. The MIL either flashes or illuminates continuously when the PCM detects active engine misfire.
During active misfire, the PCM records the current engine operating conditions. The engine operating conditions are recorded by the PCM.

Items Indicated **by the Check Engine/Malfunction Indicator Lamp**

DTC No.	Items
01 (P0340)	No cam signal at PCM
02 (P0605)	Internal controller failure
17 (P0403)	EGR solenoid circuit
18 (P0443)	EVAP solenoid circuit
19 (P0203)	Injector #3 control circuit
20 (P0202)	Injector #2 control circuit
21 (P0201)	Injector #1 control circuit
25 (P0505)	Idle air control motor circuit
26 (P0122)	Throttle position sensor voltage low
27 (P0123)	Throttle position sensor voltage high
30 (P0117)	Engine coolant temperature voltage too low
31 (P0118)	Engine coolant temperature voltage too high
32 (P0134)	Upstream H02S stays at center
35 (P0500)	No vehicle speed sensor signal
36 (P0107)	MAP sensor voltage too low
37 (P0108)	MAP sensor voltage too high
39 (P1297)	No change in MAP from start to run
42 (P0352)	Ignition coil No.2 primary circuit
43 (P0351)	Ignition coil No.1 primary circuit
46 (P0401)	EGR system failure
57 (P0112)	Intake air temperature sensor voltage low
58 (P0113)	Intake air temperature sensor voltage high
61 (P0204)	Injector #4 control circuit
62 (P0132)	Upstream H02S shorted to voltage
68 (P0605)	PCM failure SPI communications
71 (–)	Battery temperature volts out of limit
92 (PI 490)	Low speed fan control relay circuit
93 (P1489)	High speed fan control relay circuit
101 (P0220)	Fuel pump relay control circuit
102 (P0133)	Upstream H02S response
103 (P0135)	Upstream H02S heater failure
105 (P0141)	Downstream H02S heater failure
106 (P0300)*	Multiple cylinder misfire

TSB Revision

DTC No.	Items
107 (P0301)*	Cylinder #1 misfire
108 (P0302)*	Cylinder #2 misfire
109 (P0303)*	Cylinder #3 misfire
110 (P0304)*	Cylinder #4 misfire
112 (P0422)	Catalytic converter efficiency failure
113 (P0441)	EVAP purge flow monitor failure
114 (P1899)	Park/neutral position switch (transaxle range switch) failure <A/T>
118 (P0172)*	Fuel system rich
119 (P0171)*	Fuel system lean
126 (P0138)	Downstream H02S shorted to voltage
128 (P0125)	Closed loop temperature not reached
129 (P0140)	Downstream H02S stays at center
132 (P0121)	TPS voltage does not agree with MAP
133 (P1390)	Timing belt skipped 1 tooth or more
135 (P1296)	No 5 volts to MAP sensor
136 (P1295)	No 5 volts to throttle position sensor
137 (P0700)	EATX controller DTC present <A/T>
138 (P1294)	Taraet idle not reached (±200 r/min)
139 (P1487)	High speed radiator fan control relay
146 (P 1496)	5 volts supply output too low
153 (P1493)	Battery temperature sensor voltage too low
154 (P1492)	Battery temperature sensor voltage too high
155 (P0131)	Upstream H02S voltage grounded
156 (P0137)	Downstream H02S voltage grounded
157 (P1391)	Intermittent loss of CMP or CKP
160 (P0442)	EVAP leak monitor small leak detected
161 (P0455)	EVAP leak monitor large leak detected
183 (P1495)	Evaporative emission ventilation solenoid circuit
184 (P1494)	Evaporative emission ventilation solenoid switch or mechanical fault
187 (P1486)	EVAP leak monitor pinched hose found

NOTE
Following a detected malfunction of the Powertrain Control Module (PCM), the check engine lamp lights up the next time the engine is turned on if the malfunction is still detected. However, for items marked with an asterisk (*) in the table above, the check engine lamp goes on' the first time a malfundin is detected.
Once the check engine lamp is lit, any one of the following conditions will turn it off.

- When the PCM has found no malfunction after monitoring the power train three times (One time is from engine start to engine stop).
- A misfire of fuel abnormality when engine speed, coolant temperature, etc. are similar to those prevailing when the malfunction was first recorded, and the PCM has detected no malfunction.

Caution
If the check engine lamp is turned on by a malfunction of the PCM, the scan tool cannot communicate with the PCM, and the diagnostic trouble code cannot be read.

ON-BOARD DIAGNOSTICS

The Powertrain Control Module (PCM) monitors many different circuits in the fuel injection system. If the PCM senses a problem with a monitored circuit often enough to indicate an actual problem, it stores a diagnostic trouble code in the PCM's memory.

After the PCM first detects a malfunction, a diagnostic trouble code is recorded when the engine is restarted and the same malfunction is re-defected. However, for items marked with a "*", a diagnostic trouble code is recorded on the first detection of the malfunction.

After that, if the PCM does not re-detect the malfunction for 40 drives* (51 engine start for non-emission related faults), the diagnostic trouble code will be erased from the PCM memory.

NOTE

*: A drive indicates from engine start to stop and monitors the power train component.

However, for misfiring or a fuel system rich/lean, the diagnostic trouble codes will be erased under the following conditions.

- When driving conditions (engine speed, engine coolant temperature, etc.) are similar, to those when the malfunction was first recorded.
- When the PCM does not re-detect the malfunction for 80 drives*.

Technicians can display stored diagnostic trouble codes by two different methods.

The first is to cycle the ignition switch On-Off-On-Off-On within 5 seconds. Then count the number of times the malfunction indicator lamp (check engine lamp) on the instrument panel flashes on and off. The number of flashes represents the diagnostic trouble code. There is a slight pause between the flashes representing the first and second digits of the code. Longer pauses separate individual trouble codes. The second method of reading diagnostic trouble codes uses the scan tool. Connect the scan tool to the data link (diagnostic) connector in the vehicle.

FREEZE FRAME DATA

The PCM records the diagnostic trouble code and also the engine operating conditions at the time the malfunction was detected. These data are called "freeze frame" data.

This data indicates the engine operating condition from when nothing at all is detected to the initial detection of the malfunction. However, misfiring or fuel trim malfunction data are always. replaced with the latest data.

This data can be read by using the scan tool, and can then be used in simulation tests for troubleshooting.

Data items are as follows.

Data	Unit
Engine coolant temperature	°C or °F
Engine speed	r/min or RPM
Vehicle speed	km/h or mph
Long-term fuel compensation (Long-term fuel trim)	%
Short-term fuel compensation (Short-term fuel trim)	%
Fuel control condition	• Open loop • Closed loop • Open loop-Drive condition • Open loop-DTC set • Malfunction of closed loop-O_2 (rear)
Calculated load value	%
MAP vacuum	in.Hg (vacuum)
Diagnostic trouble code during data recording	–

HOW TO READ AND ERASE DIAGNOSTIC TROUBLE CODES

Caution

1. **If battery voltage is low, diagnostic trouble codes. may not be output. Be sure to check the, battery and charging system before continuing.**
2. **If the battery is disconnected or if the PCM connector is disconnected, the diagnostic trouble code memory will be erased. Do not disconnect the battery or PCM until after the diagnostic trouble codes are recorded.**
3. **Turn the ignition switch, off before connecting or disconnecting the scan. tool.**

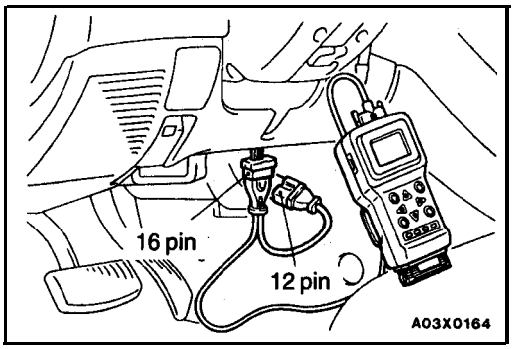

When using the scan tool

NOTE

1. When carrying out inspection in General 'Scan Tool, mode, the interface cartridge (I/F cartridge) and adaptor harness do not need to be installed.
2. The following items cannot be checked in scan tool mode; they can only be checked in General Scan Tool mode.

   SENSOR READ TEST
   - Long/short term fuel trim
   - Calculated load vlaue

   FREEZ FRAME DATA
   READINESS TESTS
3. When diagnostic trouble codes (DTC) are' erased, the freeze frame data and readiness test status will be erased at the same time. Therefore, this data should be recorded if necessary before erasing DTCs.
4. If the automatic transaxle DTC (137/P0700/45) has been stored, the DTC for the PCM should be erased after the DTC for the TCM is erased:

1. Install the interface cartridge (I/F cartridge) to the scan tool <MUT-II>.
2. Use the I/F cartridge adapter harness to connect the scan tool <MUT-II> to the data link connector. If possible, start the engine and turn on the air-conditioning switch (if applicable). Shut off the engine.
3. Read the diagnostic trouble codes.
4. Repair the malfunction while referring to the INSPECTION CHART FOR DIAGNOSTIC TROUBLE CODES.
5. Turn the ignition switch to OFF and then back to ON again.
6. Erase the diagnostic trouble codes using the scan tool.
7. Check that the diagnostic trouble code is normal.

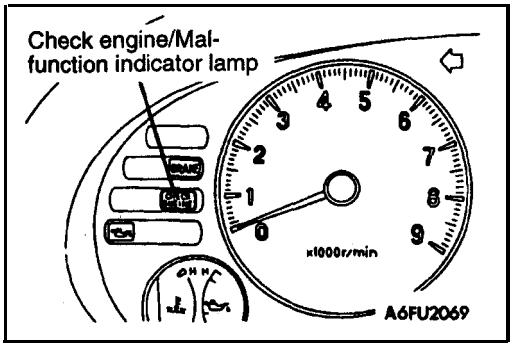

If scan tool not available

1. Cycle the ignition key On-Off-On-Off-On within **5** seconds.
2. Count the number of times the malfunction indicator lamp (check engine lamp) on the instrument panel flashes on and off. The number **of** flashes represents the trouble code. There is a slight pause between the flashes representing the first and second digits of the' code. Longer pauses (approx. 4 seconds) separate individual trouble codes.
3. Repair the malfunction while referring to the inspection chart for diagnostic trouble codes.
4. After disconnecting the battery cable from the battery (–) terminal for a few minutes, reconnect the **cable.**
5. Start the engine and run it at **idle** for about **15** minutes after the engine has warmed up.

LEAK DETECTION PUMP MONITOR

Related diagnosis trouble codes (DTC)

- 160/P0442/31 EVAP leak monitor small leak detected
- 161/P0455/31 EVAP leak monitor large leak detected
- 187/P1486/31 EVAP leak monitor pinched hose found

Operation

The leak detection assembly incorporates two primary functions: it must detect a leak in the evaporative system and seal the evaporative system so the leak detection test can be run.

The' primary components within the assembly are: A three port solenoid that activates 'both of the functions listed above; a pump which contains a switch; two check valves and a spring/diaphragm, a' canister vent valve (CVV) seal which contains a spring loaded vent seal valve.

Immediately after a cold start, between predetermined temperature thresholds limits, the three port solenoid is briefly energized. This initializes the pump by drawing air into the pump cavity and also closes the vent seal. During non test conditions the vent seal is held open by the pump diaphragm assembly which pushes it open at the full travel position. The vent seal will remain closed while the pump is cycling due to the reed switch triggering of the three port solenoid that prevents the diaphragm assembly from reaching full travel. After the brief initialization period, the solenoid is de-energized allowing atmospheric pressure to enter the pump cavity, thus permitting the spring to drive the diaphragm which forces air out of the pump cavity and into the vent system. When the solenoid is energized and de-energized, the cycle is repeated creating flow in typical diaphragm pump fashion. The pump is controlled in 2 modes:

Pump Mode: The pump is cycled at a fixed rate to achieve a rapid pressure build in order to shorten the overall test length.

Test Mode: The solenoid is energized with a fixed duration pulse. Subsequent fixed pulses occur when the diaphragm reaches the Switch closure point.

The spring in the pump is set so that the system will achieve an equalized pressure of about 7.5" H_2O. The cycle rate of pump strokes is quite rapid as the system begins to pump up to this pressure. As the pressure increaes, the cycle rate starts to drop off. If there is no leak in the system, the pump would eventually stop pumping at the equalized pressure. If there is a leak, it will continue to pump at a rate representative of the flow characteristic of the size of the leak. From this information we can determine if the leak is larger than the required detection limit (currently set at .040" orifice by CARB). If a leak is revealed during the leak test portion of the test, the test is terminated at the end of the mode and no further system checks will be performed.

After passing the leak detection phase of the test, system pressure is maintained by turning on the LDP's solenoid until the purge system is activated. Purge activation in effect creates a leak. The cycle rate is again interrogated and when it increases due to the flow through the purge system, the leak check portion of the diagnostic is complete.

The canister vent valve will unseal the system after completion of the test sequence as the pump diaphragm assembly moves to the full travel position.

Evaporative system functionality will be verified by using the stricter evap purge flow monitor. At an appropriate warm idle the LDP will be energized to seal the canister vent. The purge flow will be clocked up from some small value in an attempt to see a shift in the 02 control system. If fuel vapor, indicated by a shift in the 02 control, is present the test is passed. If not, it is assumed that the purge system is not functioning in some respect. The LDP is again turned off and the test is ended.

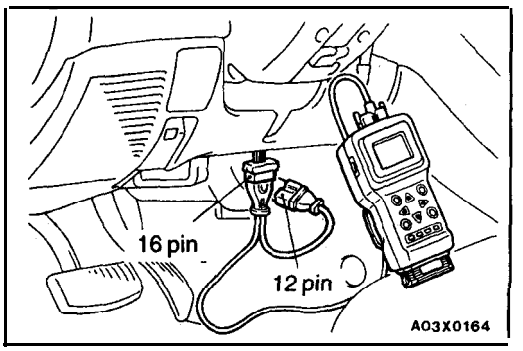

INSPECTION USING SCAN TOOL – SENSOR READ TEST, INPUT STATE TEST,, OUTPUT STATE TEST AND ACTUATOR TEST AND SPECIAL FUNCTION

1. Carry out inspection by means:' of the data list 'and the actuator test function.
   If there is a malfunction, check and repair the chassis harnesses and components.
2. Recheck using the scan tool and check that the malfunction has been eliminated as a result of the repairs.
3. Erase the diagnostic trouble code from memory.
4. Remove the scan tool.
5. Start the engine again and carry out a road test to confirm. that the problem has disappeared. . .

NOTE
Refer to P.13A-112 for Sensor Read Tests.
Refer to P.13A-115 for Input State Tests.
Refer to P.13A-116 for Output State Tests.
Refer to P.13A-117 -for Actuator Tests.

Caution
If in the following condition, access the SPECIAL FUNCTION screen to the IAC.

In the following case, reset the IAC.
- The throttle body or IAC motor has been replaced.
- The IAC motor related circuit has been opened during engine running or IAC motor operation test.

FAIL-SAFE-BACUP FUNKTION (Limp-In Mode) TABLE

13100910107

When the PCM detects the following malfunction (s), the PCM carries out' fail safe/back-up control. In addition, the corresponding DTC number (s) can be identified by using the scan tool.

Diagnostic item	Control during malfunction
No cam signal at PCM	The PCM uses the crankshaft position sensor signal only to control fuel injection timing, etc. (Accordingly, normal sequential multiport fuel injection may not be carried out.)
Throttle position sensor voltage low	The PCM uses the value calculated from the MAP sensor signal instead of the throttle valve opening angle (voltage).
Throttle position sensor voltage high	The PCM uses the value calculated from the MAP sensor signal instead of the throttle valve opening angle (voltage).
Engine coolant temperature (ECT) sensor voltage too low	• The PCM uses the default value [45°C (114°F)] as the engine coolant temperature. • The PCM operates the radiator fan. • The PCM carries out open loop control.
Engine coolant temperature (ECT) sensor voltage too high	• The PCM uses the default value [45°C (114°F)] as the engine coolant temperature. • The PCM operates the radiator fan. • The PCM carries out open loop control.
Upstream H02S stays at center	The PCM carries out open loop control.
No vehicle speed sensor signal	The PCM controls the engine as if the vehicle speed were 0 mph.
MAP sensor voltage too low	The PCM uses the value calculated from the throttle position sensor and the engine speed signals instead of the MAP value (mV).
MAP sensor voltage too high	The PCM uses the value calculated from the throttle position sensor and the engine speed signals instead of the MAP value (mV).
No change in MAP from start t0 run	The PCM uses the value calculated from the throttle position sensor and the engine speed signals instead of the MAP value (mV.)
Intake air temperature sensor voltage low	The PCM uses the engine coolant temperature instead of the intake air temperature.
Intake air temperature sensor voltage high	The PCM uses the engine coolant temperature instead of the intake air temperature.
Knock sensor	The PCM retards ignition timing according to the knock sensor signal.
Upstream H02S shorted to voltage	The PCM carries out open loop control.
Battery temperature sensor volts out of limit	The PCM uses the default value [62°C (144°F)] as the battery temperature.
Low speed fan control relay circuit	The PCM turns on the high speed fan control relay instead of the low speed fan control relay
Upstream H02S response	The PCM carries out open loop control.
Downstream H02S shorted to voltage	The PCM carries out open loop control.
Downstream H02S stays at center	The PCM carries out open loop control.

TSB Revision

Diagnostic item	Control during malfunction
TPS voltage does not agree with MAP	The PCM uses the value calculated from the MAP sensor signal instead of the throttle valve opening angle (voltage)>
Timing belt skipped 1 tooth or more	The PCM uses the crankshaft position sensor signal only to control fuel injection timing, etc. (Accordingly, normal sequential multiport fuel injection may not be carried out.)
No 5 volts to MAP sensor	The PCM uses the value calculated from the throttle position sensor and the engine speed signals instead of the MAP value (mV).
No 5 volts to throttle position sensor	The PCM uses the value calculated from the MAP sensor signal instead of the throttle valve opening angle (voltage).
High speed radiator fan control relay circuit	The PCM turns on the high speed fan control relay instead of the low speed fan control relay
Upstream H02S voltage shorted to grounded	The PCM carries out open loop control.
Downstream H02S voltage shorted to grounded	The PCM carries out open loop control.
Intermittent loss of CMP or CKP	The PCM uses the crankshaft position sensor signal only to control fuel injection timing, etc. (According, normal sequential multiport fuel injection may not be carried out.)

INSPECTION CHART FOR DIAGNOSTIC TROUBLE CODES (FAULT TREE) 13100870252

NOTE
Diagnostic trouble code (DTC) memory is not deleted even after the ignition switch is turned off.

DTC No. <Scan tool (MUT-II) mode>	DTC No. <General scan tool mode>	DTC No. <MIL pulses mode>	Diagnostic items	Check items, (Remedy)	Memory	Referance Page
01	P0340	54	No cam signal at PCM	• Harness and connector (If harness and connector are not defective, replace; camshaft position sensor.)	Retained	13A-24
02	P0601	53	Internal controller failure	• Replace the PCM.	Retained	13A-24
05	–	47	Charging system voltage too low	• Generator drive belt • Harness and connector • Generator	Retained	1 3A-25
06	–	46	Charging system voltage too high	• Generator drive belt • Harness and connector • Generator	Retained	13A-26
10	–	42	MFI relay (ASD relay) control circuit	• Harness and connector • MFI relay (ASD relay)	Retained	13A-27
11		41	Generator field not switching properly	• Harness and connector • Generator	Retained	13A-28
16	–	33	A/C clutch relay circuit	• Harness and connector • A/C clutch relay	Retained	13A-29
17	P0403	32	EGR solenoid circuit	• Harness and connector • EGR solenoid	Retained	13A-30
18	P0443	31	EVAP solenoid circuit	• Harness and connector • EVAP solenoid	Retained	13A-31
19	P0203	27	Injector #3 control circuit	• Harness and connector • Injector #3	Retained	13A-32
20	P0202	27	Injector #2 control circuit	• Harness and connector • Injector #2	Retained	13A-33
21	P0201	27	Injector #1 control circuit	• Harness and connector • Injector #1	Retained	13A-34
25	P0505	25	Idle air control motor circuits	• Harness and connector • Idle air control motor	Retained	13A-35
26	P0122	24	Throttle Position sensor voltage low	• Harness and connector • Throttle position sensor	Retained	13A-36
27	P0123	24	Throttle position sensor voltage high	• Harness and connector • Throttle position sensor	Retained	13A-37

MIL: Check engine/Malfunction Indicator Lamp (MIL)
The number shown represents the number of pulses observed at the MIL.

TSB Revision

DTC No. <Scan tool (MUT-II) mode>	DTC No. <General scan tool mode>	DTC No. <MIL pulses mode>	Diagnostic items	Check items (Remedy)	Memory	Referanc Page
30	P0117	22	Engine coolant temperature sensor voltage too low	• Harness and connector • Engine coolant temperature sensor	Retained	13A-37
31	P0118	22	Engine coolant temperature sensor voltage too high	• Harness and connector • Engirie coolant temperature sensor	Retained	13A-38
32	P0134	21	Upstream HO2S stays at center	• Harness and connector • Upstream HO2S	Retained	13A-38
33	–	17	Engine is cold too long	• Engine coolant temperature sensor circuit and connector • Engine coolant temperature sensor • Thermostat	Retained	13A-39
35	P0500	15	No vehicle speed sensor signal	• Harness and connector • Vehicle speed sensor	Retained	13A-40
36	P0107	14	MAP sensor voltage too low	• Harness and connector (If harness and connector are not defective, replace MAP sensor.)	Retained	13A-41
37	P0108	14	MAP sensor voltage too high	• Harness and connector (If harness and connector are not defective, replace MAP sensor.)	Retained	13A-42
39	P1297	13	No change in MAP from start to run	• Harness and connector (If harness and connector are not defective, replace MAP sensor.)	Retained	13A-43
40	P0335	11	No crankshaft reference signal at PCM	• Harness and connector (If harness and connector are' not defective, replace crankshaft position sensqr.)	Retained	13A-44
42	P0352	43	Ignition coil #2 primary circuit	• Harness and connector • Ignition coil #2	Retained	13A-45
43	P0351	43	Ignition coil #1 primary circuit	• Harness and connector • Ignition coil #1	Retained	13A-46
44	–	42	No MFI relay (ASD relay) output voltage at PCM	• Harness and connector • MFI relay (ASD relay)	Retained	13A-47
46	P0401	32	EGR system failure	• Harness and connector • Electric EGR transducer solenoid • EGR valve • EGR tube clogged • Vacuum hoses	Retained	13A-48

MIL: Check engine/Malfunction Indicator Lamp (MIL)
The number shown represents the number of pulses observed at the MIL.

DTC No. <Scan tool (MUT-II) mode>	DTC No. <General scan tool mode>	DTC No. <MIL pulses mode>	Diagnostic items	Check items (Remedy)	Memory	Referance Page
48	P1697	62	PCM failure SRI mile not stored	• Replace the PCM	Retained	13A-48
49	P1696	63	PCM failure EEPROM write denied	• Replace the PCM	Retained	13A-49
57	P0112	23	Intake air temperature sensor voltage low	• Harness and connector • Intake air temperature sensor	Retained	13A-49
58	P0113	23	Intake air temperature sensor voltage high	• Harness and connector • Intake air temperature sensor	Retained	13A-50
59	P0325	16	Knock sensor #1 circuit	• Harness and connector (If harness and connector are not defective, replace knock sensor.)	Retained	13A-51
61	P0204	27	Injector #4 control circuit	• Harness and connector • Injector #4	Retained	13A-52
62	P0132	21	Upstream HO2S shorted to voltage	• Harness and connector • Upstream HO2S	Retained	13A-53
68	P0600	53	PCM failure SPI communications	• Replace the PCM	Retained	13A-53
71	–	44	Battery temperature volts out of limit	• Replace the PCM	Retained	13A-53
32	P1490	35	Low speed fan control relay circuit	• Harness and connector • Low speed fan relay	Retained	13A-54
33	P1489	35	High speed condenser fan control relay circuit	• Harness and connector • High speed condenser fan relay	Retained	13A-55
96	P1698	66	No CCD messages from TCM <A/T>	• Harness and connector	Retained	13A-56
101	P0220	42	Fuel pump relay control circuit	• Harness and connector • Fuel pump relay	Retained	13A-57
102	P0133	21	Upstream HO2S response	• Harness and connector • Upstream HO2S	Retained	13A-58
103	P0135	21	Upstream HO2S heater failure	• Harness and connector • Upstream HO2S	Retained	13A-59

MIL: Check engine/Malfunction Indicator Lamp (MIL)
The number shown represents the number of pulses observed at the MIL.

DTC No. <Scan tool (MUT-II) mode>	DTC No. <General scan tool mode>	DTC No. <MIL pulses mode>	Diagnostic items	Check items (Remedy)	Memory	Referanc Page
105	P0141	21	Downstream HO2S heater failure	• Harness and connector • Downstream HO2S	Retained	13A-60
106	P0300	43	Multiple cylinder misfire*	• Ignition coil • Spark plug • Ignition circuit • Injector • Upstream HO2S • Compression pressure • Timing belt • Crankshaft position sensor • Air intake • Fuel pressure • Crankshaft position sensor circuit and connector	Retained	13A-61
107	P0301	43	Cylinder #1 misfire*	• Spark plug • Injector • Compression pressure • Air intake	Retained	13A-62
108	P0302	43	Cylinder #2 misfire*	• Spark plug • Injector • Compression pressure • Air intake	Retained	13A-62
109	P0303	43	Cylinder #3 misfire*	• Spark plug • Injector • Compression pressure • Air intake	Retained	13A-62
110	P0304	43	Cylinder #4 misfire*	• Spark plug • Injector • Compression pressure • Air intake	Retained	13A-62
112	P0422	64	Catalytic converter efficiency failure	• Exhaust manifold (If there are no cracks, etc., replace the catalytic converter.)	Retained	13A-63
113	P0441	31	Evaporative purge flow monitor failure	• Evaporative purge solenoid • Clogged purge line • Vacuum hose • Evaporative emission canister clogged	Retained	13A-64
114	P1899	37	Park/Neutral position (PNP) switch (transaxle range switch) failure <A/T>	• Replace the PCM	Retained	13A-63

MIL: Check engine/Malfunction Indicator Lamp (MIL)
The number shown represents the number of pulses observed at the MIL.
*: A diagnostic trouble code is recorded on the first detection of the malfunction.

DTC No. <Scan too (MUT-II) mode>	DTC No. <General scan tool mode>	DTC No. <MIL pulses mode>	Diagnostic items	Check items (Remedy)	Memory	Reference Page
115	P0551	65	Power steering pressure (PSP) switch failure	• Harness and connector • Power steering pressure switch	Retained	13A-66
118	P0172	52	Fuel system rich*	• MAP sensor output • Injector • Fuel pressure • Intake air leaks • Heated oxygen sensor	Retained	13A-67
119	P0171	51	Fuel system lean*	• Intake air temperature sensor • Engine coolant temperature sensor • Exhaust manifold cracked	Retained	13A-68
126	P0138	21	Downstream HO2S shorted to voltage	• Harness and connector • Downstream HO2S	Retained	13A-69
128	P0125	17	Closed loop temperature not reached	• Engine coolant temperature sensor circuit and connector • Engine coolant temperature sensor • Thermostat	Retained	13A-69
129	P0140	21	Downstream H02S stays at center	• Harness and connector • Downstream H02S	Retained,	13A-70
132	P0121	24	Throttle position sensor voltage does not agree with MAP	• Harness and connector • Throttle position sensor output • MAP sensor output	Retained	13A-70
133	P1390	11	Timing belt skipped 1 tooth or more	• Timing belt • Crankshaft position sensor and camshaft position sensor • Connector	Retained	13A-71
135	P1296	14	No 5 volts to MAP sensor	• Harness and connector • MAP sensor	Retained	13A-72
136	P1295	24	No 5 volts to throttle position sensor	• Harness and connector • Throttle position sensor	Retained	13A-73
37	P0700	45	EATX controller DTC present	• Automatic transaxle control system • Harness and connector	Retained	13A-73
38	P1294	25	Target idle not reached (±200 r/min)	• Harness and connector • Idle air control motor	Retained	13A-74

MIL: Check engine/Malfunction Indicator Lamp (MIL)
The number shown represents the number of pulses observed at 'the, MIL.
*: A diagnostic trouble code is recorded on the first detection of the malfunction.

TSB Revision

DTC No. <Scan tool (MUT-II) mode>	DTC No. <General scan tool mode>	DTC No <MIL pulses mode>	Diagnostic items	Check items (Remedy)	Memory	Referanc Page
139	P1487	35	High speed radiator fan control relay circuit	• Harness and connector • High speed radiator fan relay	Retained	13A-74
146	P1496	14	5 volt supply output too low	• Harness and connector	Retained	13A-75
149	–	42	Fuel level sending unit volts too low	• Harness and connector • Fuel level. sensor	Retained	13A-76
150	–	42	Fuel level sending unit volts too high	• Harness and connector • Fuel level sensor	Retained	13A-76
151	–	42	Fuel level unit no change over miles	• Harness and connector • Fuel level sensor	Retained	13A-77
153	P1493	44	Battery temperature sensor voltage too low	• Replace the PCM.	Retained	13A-77
154	P1492	44	Battery temperature sensor voltage too high	• Replace the PCM.	Retained	13A-78
155	P0131	21	Upstream H02S voltage grounded	• Harness and connector • Upstream H02S	Retained	13A-78
156	P0137	21	Downstream H02S voltage grounded	• Harness and connector • Downstream H02S	Retained	13A-79
157	P1391	11	Intermittent loss of CMP or CKP	• Crankshaft position sensor and camshaft position sensor connector	Retained	13A-79
60	P0442	31	EVAP leak monitor small leak detected	• Fuel tank • Purge line • Evaporative emission ventilation solenoid	Retained	13A-80
61	P0455	31	EVAP leak monitor large leak detected	• Fuel tank • Purge line • Evaporative emission ventilation solenoid	Retained	13A-80
83	P1495	31	Evaporative emission ventilation solenoid circuit	• Harness and connector • Evaporative emission ventilation solenoid	Retained	13A-81
84	P1494	31	Evaporative emission ventilation solenoid switch or mechanical fault	• Harness and connector • Vacuum hose routing • Evaporative emission ventilation solenoid	Retained*	13A-82
87	P1486	31	EVAP leak monitor pinched hose found	• Purge line • Evaporative emission ventilation solenoid	Retained	13A-82

MIL: Check engine/Malfunction Indicator Lamp (MIL)
The number shown represents the number of pulses observed at the MIL.
*: A diagnostic trouble code is recorded on the first detection of the malfunction.

INSPECTION PROCEDURE FOR DIAGNOSTIC TROUBLE CODES

Code No.	Scan tool 01 General scan tool P0340 MIL 54	No Cam Sync Signal at PCM	Probable cause
[Comment] Background • The PCM uses information from both the camshaft position sensor and crankshaft position sensor to determine ignition timing. • When the camshaft position sensor signal is lost, the PCM relies on the crankshaft position sensor signal to allow engine operation. • This could result in fuel injection being 180° out of phase, which would result in deterioration of engine performance and emissions. Range of Check • Ignition switch: ON • Crankshaft position sensor signal (High or low) is input (Engine: Cranking). Set Condition • Camshaft position sensor signal (High or low) isn't input for 2 seconds.			• Open 9-volt supply circuit • Open sensor ground • Open or shorted signal circuit • Damaged camshaft target magnet • Sensor failed, • PCM failed

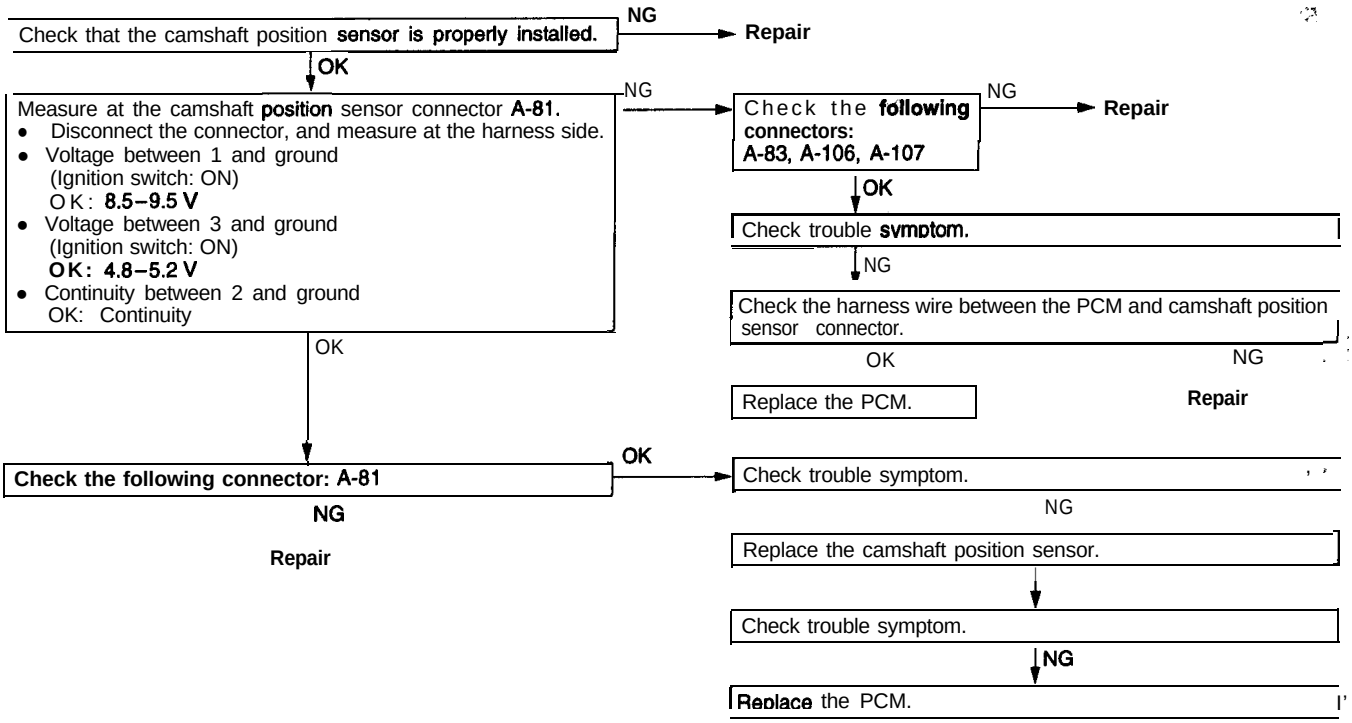

Code No.	Scan tool 02 General scan tool P0601 MIL 53	Internal Controller Failure	Probable cause
[Comment] Set Condition • An internal fault has been detected in the PCM			• PCM failed

Replace the PCM.

TSB Revision

Code No.	Scan tool 05 General scan tool – MIL 47	Charging System Voltage Too Low	Probable cause
[Comment] Background The PCM tries to maintain charging system voltage of between 13,2 and 15 volts. • This code indicates: The battery voltage input is below the target charging voltage during engine operation. and No significant change in voltage has been detected during active testing of the generator output circuit. Range of Check • Engine speed: 1500 r/min or more for approx. one minute • Battery positive voltage is at least 1 V lower than the target charging voltage for approx. 60 seconds. Set Condition • Battery positive voltage does not change even if the generator field current is cut off.			• Defects in generator drive belt or adjustment • High resistance between battery B (+) and generator B (+) • High resistance between battery B (–) and generator ground • PCM failed

Check that the generator drive belt is properly installed.
- NG → Repair
- OK ↓

Measure the voltage between the generator B terminal and the battery positive terminal.
(• Engine: 1600 r/min)
(• Headlight: High beam ON)
OK: Less than 0.5V
- NG → Check the harness wire and terminal connections between the generator B terminal and battery positive terminal. Repair, if necessary.
- OK ↓

Measure the voltage between the generator body and battery negative terminal.
(• Engine: 1600 r/min)
(• Headlight: High beam ON)
OK: Less than 0.5 V
- NG → Check the generator grounded line: Repair, if necessary.
- OK ↓

Measure at the generator connector A-03.
• Disconnect the connector, and measure at the harness side.

SCAN TOOL Actuator test
10 MFI relay (ASD relay)
MFI relay (ASD relay) isturnedonandoff everyapprox. 1.4 seconds.
• Voltage between 1 and ground
[Measure when the MFI relay (ASD relay) is turned on.]
OK: Battery positive voltage
- NG → Check the harness wire between the generator and the MFI relay (ASD relay) connector. Repair, if necessary.
- OK ↓

Check the harness wire between the PCM and the generator connector.
- NG → Repair
- OK ↓

SCAN TOOL SENSOR READ TEST (Data list)
10 Battery voltage
OK: Voltage indicated on the scan tool and actual battery positive voltage are the same.
- NG → Check the harness wire between the PCM and the battery as well as the ignition switch. Repair, if necessary.
- OK ↓

Repair or replace the generator.
- OK ↓

Check trouble symptom.
- NG → Replace the PCM.

TSB Revision

Code No.	Scan tool 06 General scan tool – MIL 46	Charging System Voltage Too High	Probable cause
[Comment] Background • The PCM tries to maintain charging system voltage of between 13.2 and 15 volts. • This code indicates that the battery voltage input is above the target charging voltage during engine operation and PCM efforts to regulate the generator field do not prevent the voltage from rising. Range of Check • Engine speed: 1500 r/min or more for approx. one minute Set Condition • Battery positive voltage is at least 1V higher than target charging voltage for approx. 12 seconds.			• Generator internal shorted • Generator field driver shorted to 'ground • PCM failed

SCAN TOOL SENSOR READ TEST (Data list)
36 Charging system goal
OK: 13V or more

NG → Replace the PCM.

OK ↓

SCAN TOOL SENSOR READ TEST (Data list)
10 Battery voltage
OK: **Voltage indicated** on the scan tool and actual battery positive **voltage** are the same.

NG →
- **Check the harness wire between the PCM and the battery as well as me ignition switch. Repair, if necessary.**
- Check the **harness** wire between the PCM **and the ground.** Repair, if necessary.

OK ↓

Measure at the generator connector **A-03.**
- Disconnect the connector and measure at the equipment side.
- Continuity between 2 and generator body.

OK: No continuity

NG → Repair **me** genera tor. and **replace** if necessary.

OK ↓

Check **me following connectors: A-06, A-106**

NG → **Repair**

OK

Check trouble symptom.

NG ↓

Check the harness wire **between the PCM and generator connector.**

NG → **Repair**

OK

Replace the PCM.

TSB Revision

Code No.	Scan tool 10 General scan tool – MIL 42	MFI relay (ASD relay) Control Circuit	Probable cause
[Comment] Background • The MFI relay (ASD relay) controls the battery voltage supplied to the fuel injectors, ignition coils, and generator. • The PCM provides a ground path for the MFI relay (ASD relay). • This DTC indicates an open or short-circuit condition in the control circuit. Range of Check • Battery voltage: 10V or more • Ignition switch: ON Set Condition • Open or short circuit is detected in the MFI relay (ASD relay) for 3 seconds.			• Relay coil open or shorted • MFI relay (ASD relay) control circuit open or shorted • Inoperative circuit driver in PCM

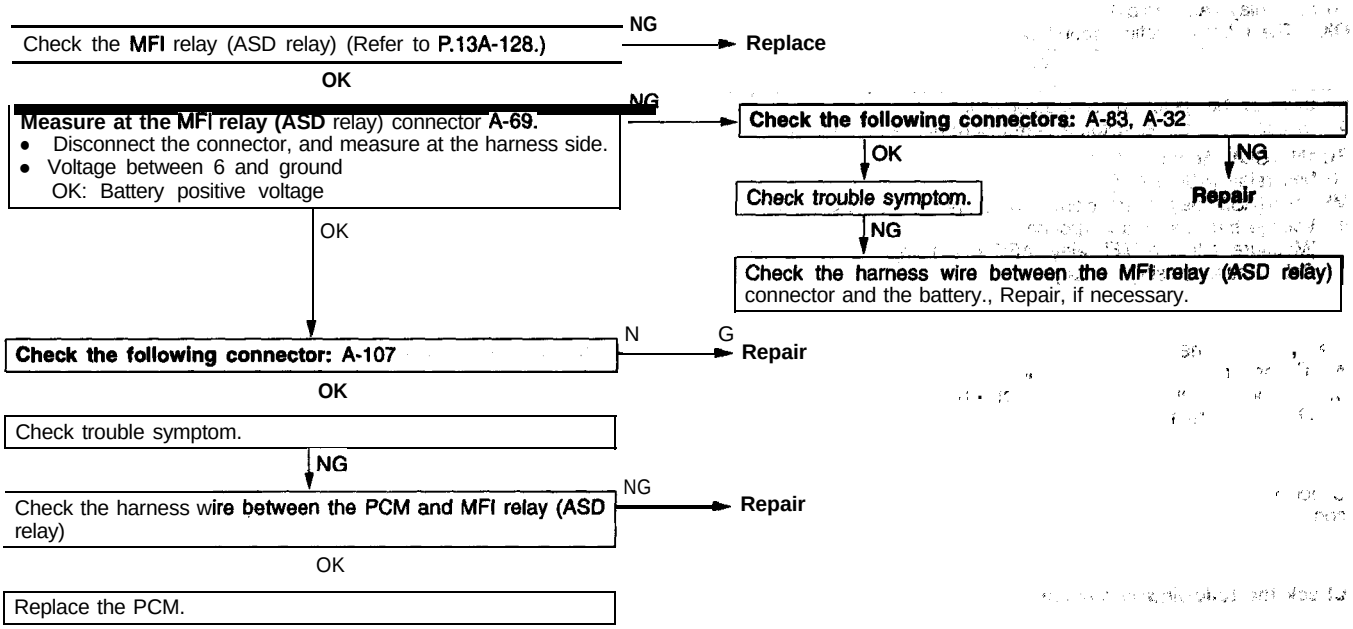

Code No.	Scan tool 11 General scan tool – MIL 41	Generator Field Not Switching Properly	Probable cause
[Comment] Background • The PCM receives generator field input. • Battery voltage is supplied to the generator through the MFI relay (ASD relay). Range of Check • Ignition switch: ON • MFI relay (ASD relay): ON Set Condition • Open or short circuit is detected in the generator field control circuit.			• Field driver circuit open or shorted • Generator internal open or short • PCM failed

SCAN TOOL Actuator test
10 MFI relay (ASD relay)
OK: The relay operating sound can be heard

NG → Repair the MFI relay (ASD relay) related circuit.

OK ↓

Measure at the generator connector A-03.
• Disconnect the connector, and measure at the harness side.

SCAN TOOL Actuator test
10 MFI relay (ASD relay)
MFI relay (ASD relay) is turned on and off every approx. 1.4 seconds.
• Voltage between 1 and ground
[Measure with the MFI relay (ASD relay) on]
OK: Battery positive voltage

NG → Check the harness wire between the generator and the ASD relay (MFI relay) connector. Repair, if necessary.

OK ↓

Measure at the generator connector A-03.
• Disconnect the connector and measure at the component side.
• Continuity between 2 and generator body
OK: No continuity

NG → Repair the generator, and replace if necessary

OK ↓

Check the harness wire between the PCM and the generator connector.

NG → Repair

OK ↓

Check the following connectors: A-06, A-106

OK → Check trouble symptom.

NG → Repair the generator, and replace if necessary.

NG → Repair

TSB Revision

Code No.	Scan tool 16 General scan tool MIL 33	A/C Clutch Relay Circuit	Probable cause
[Comment] Background • The PCM provides a switched ground to the A/C clutch relay. • The PCM can prevent operation of the A/C clutch in selected situations such as during wide-open throttle or for a brief period at start-up. • This DTC indicates an open or short-circuit condition in the circuit. Range of Check • Ignition switch: ON • Battery voltage: 10V or more • 30 seconds or more after starting the engine Set Condition • Open or short circuit is detected in the A/C clutch relay control circuit for 3 seconds.			• Coinpressor clutch relay open or shorted • A/C control circuit defective • Inoperative circuit driver in PCM

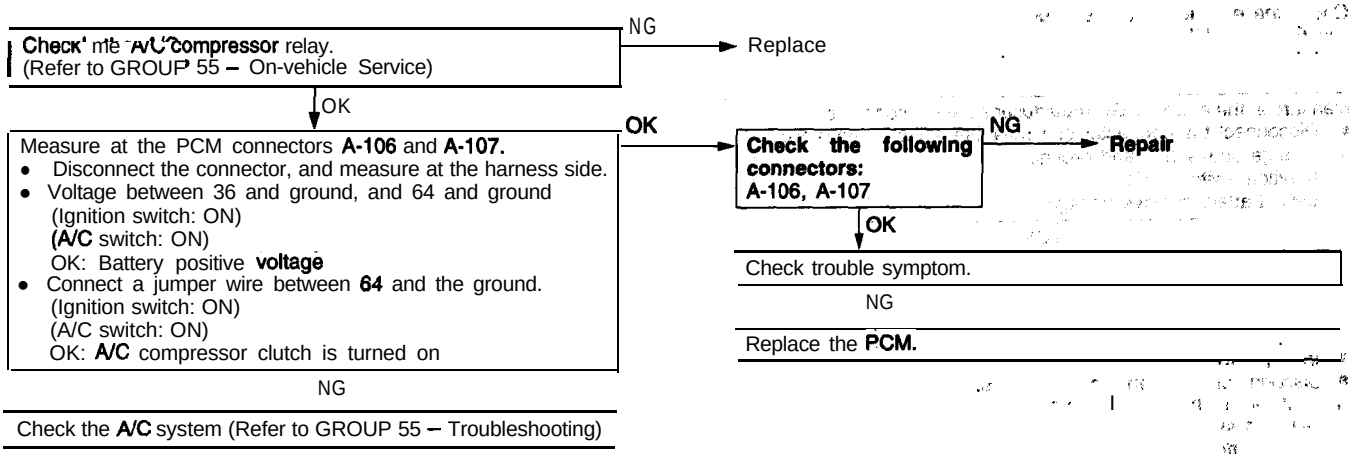

TSB Revision

Code No.	Scan tool 17 General scan tool P0403 MIL 32	EGR Solenoid Circuit	Probable cause
[Comment] Background • The PCM provides a switched ground path to the solenoid. • This DTC indicates an open or short-circuit condition in the EGR control circuit. Range of Check • Battery voltage: 10V or more • Ignition switch: ON Set Condition • Open or short circuit is detected in the electric EGR transducer solenoid for 3 seconds.			• Open or short control circuit • Open fused ignition switch output circuit • Open or shorted solenoid coil • PCM failed

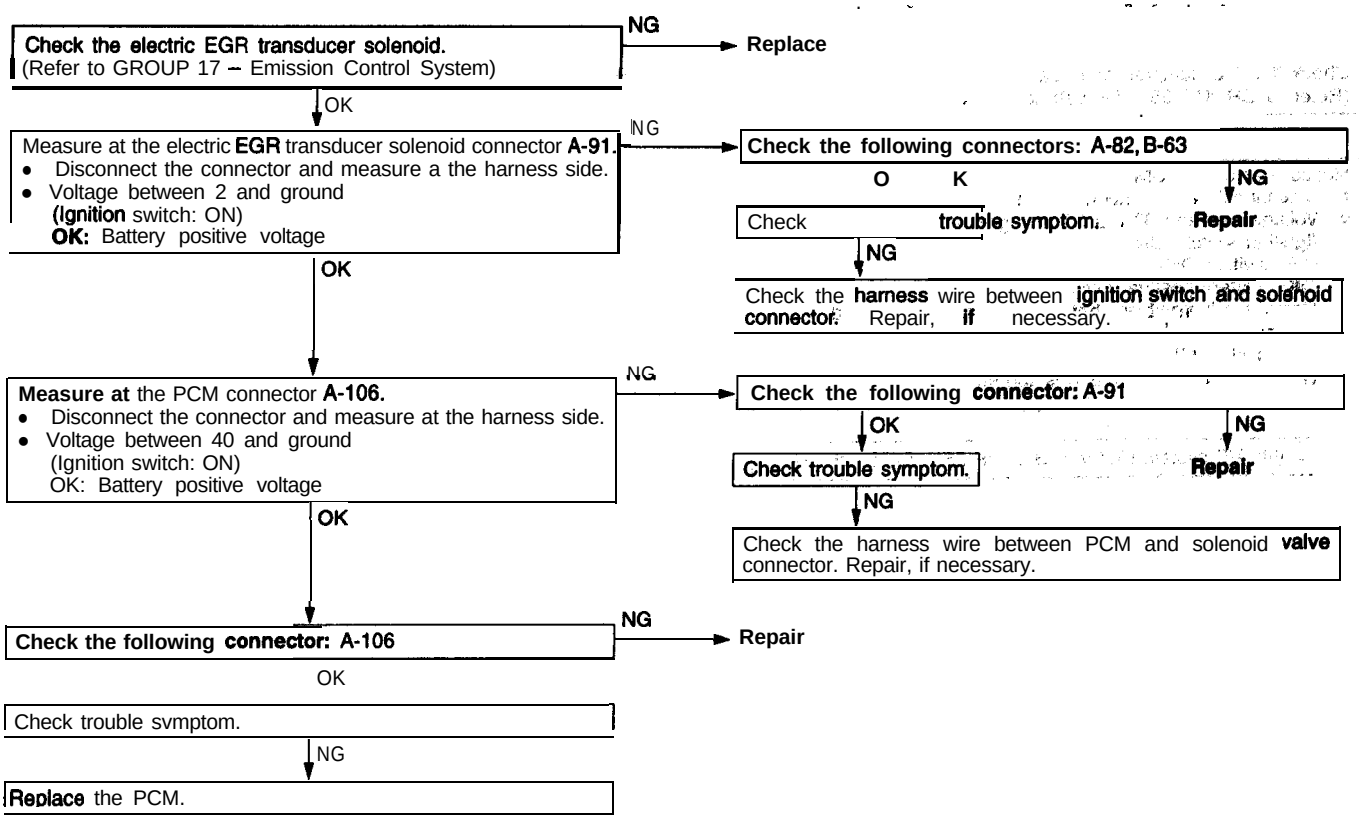

TSB Revision

Code No.	Scan tool 18 General scan tool P0443 MIL 31	EVAP Solenoid Circuit	Probable cause
[Comment] Background • It is operated as a PCM output providing a switched ground path once the vehicle enters closed loop operation. • This DTC indicates a short or open-circuit condition in the circuit. Range of Check • Battery voltage: 10V or more • Ignition switch: ON Set Condition • Open or short circuit is detected in the EVAP purge control solenoid control circuit for 3 seconds.			• Open or short control circuit • Open fused ignition switch output circuit • Open or shorted solenoid coil • PCM failed

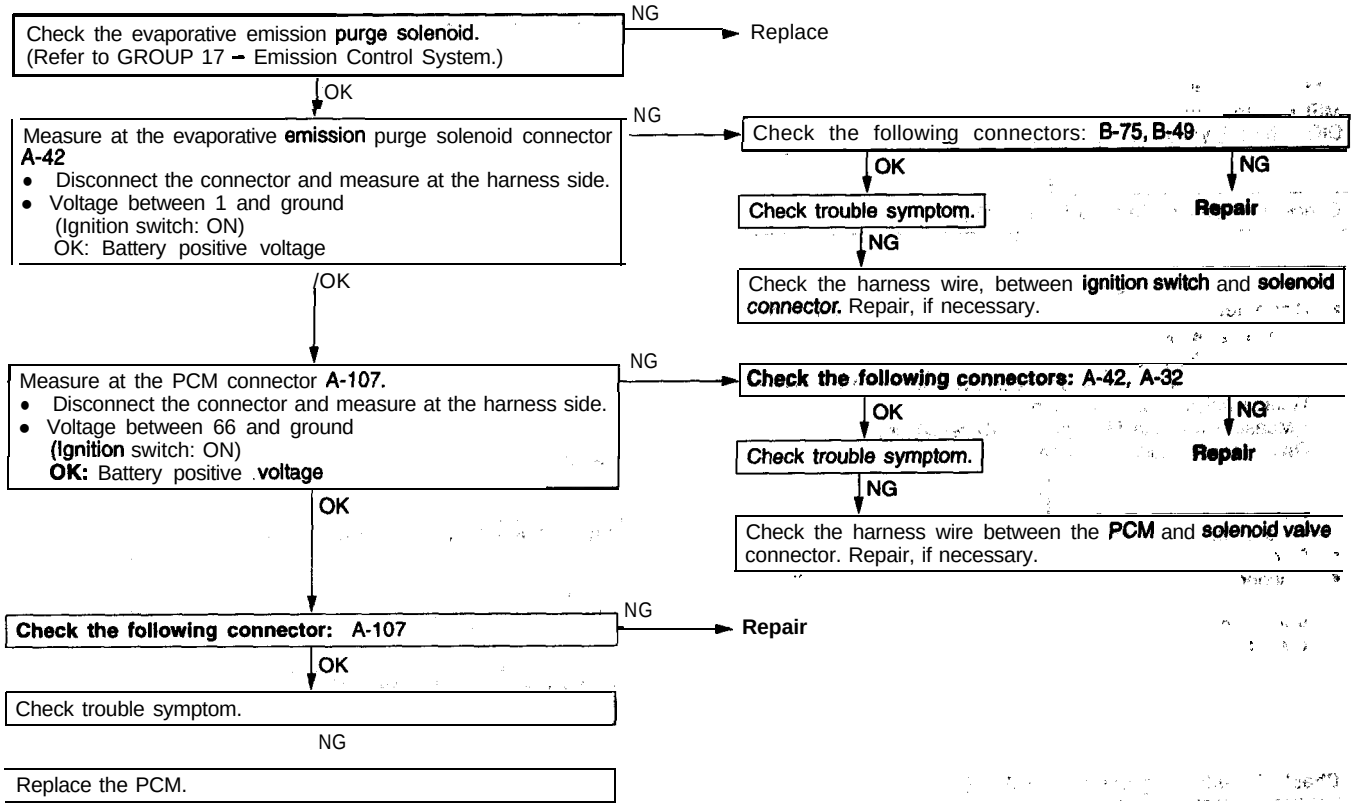

TSB Revision

Code No.	Scan tool 19 / General scan tool P0203 / MIL 27	Injector #3 Control Circuit	Probable cause
[Comment] Background • Grounds for the injector circuits are provided by the PCM. • Battery power is provided through the MFI relay (ASD relay) • This DTC is set if an open or short-circuit condition is detected in the control circuit for the individual injector. Range of Check • Battery voltage: 12V or more • MFI relay (ASD relay): ON • Engine: 3000 r/min or less Set Condition • Counterelectromotive force is not detected for 3 seconds immediately after injectors turn off.			• Open or shorted injector control circuit • Open injector • Open MFI (ASD) voltage supply at injector • Driver in PCM failed

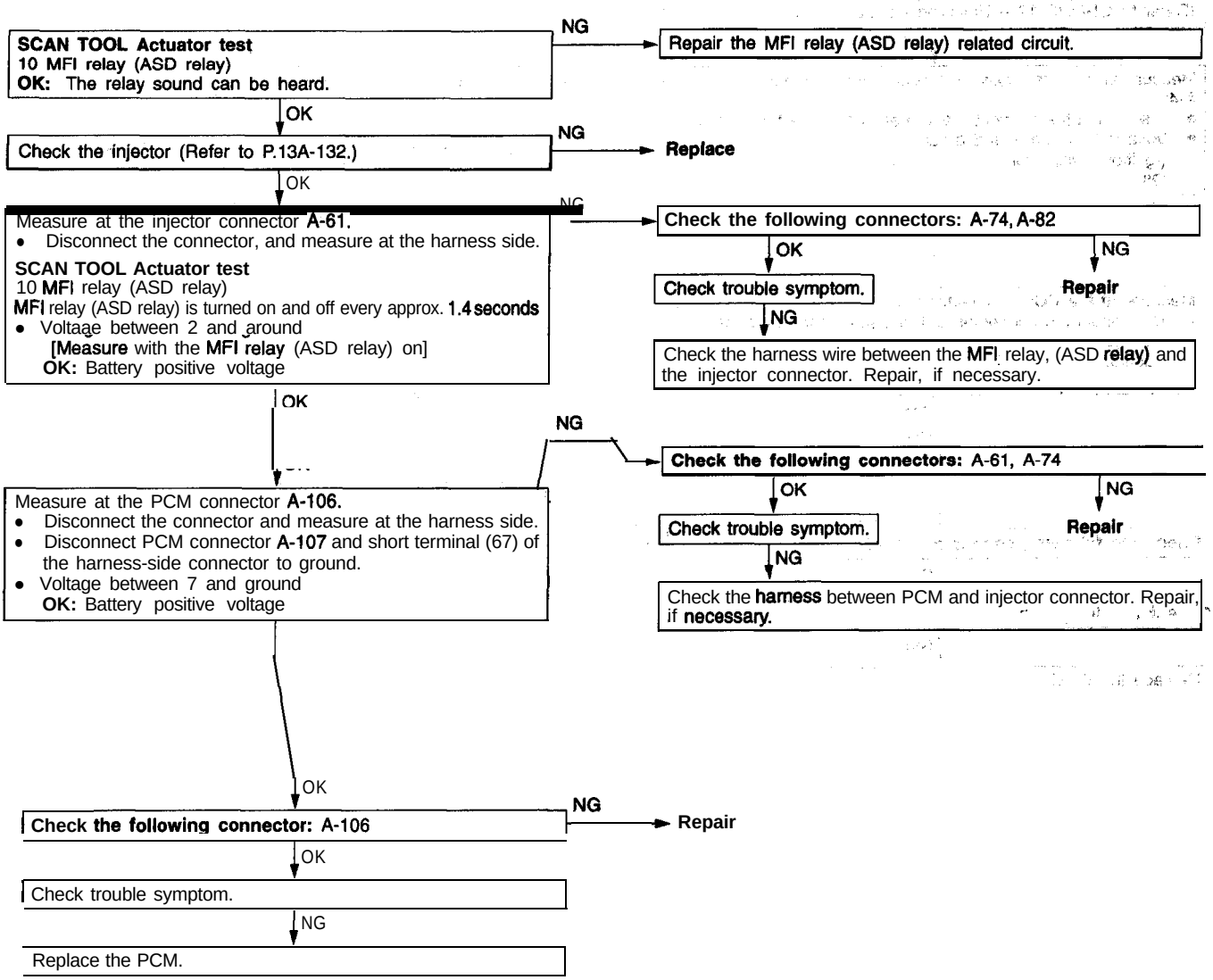

TSB Revision

Code No.	Scan tool 20 / General scan tool P0202 / MIL 27	Injector #2 Control Circuit	Probable cause
[Comment] Background • Grounds for the injector circuits are provided by the PCM. • Battery power is provided through the MFI relay (ASD relay). • This DTC is set if an open or short-circuit condition is detected in the control circuit for the individual injector. Range of Check • Battery voltage: 12V or more • MFI relay (ASD relay): ON • Engine: 3000 r/min or less Set Condition • Counterelectromotive force is not detected for 3 seconds immediately after injectors turn off.			• Open or shorted injector control circuit • Open injector • Open MFI (ASD) voltage supply at injector • Driver in PCM tailed

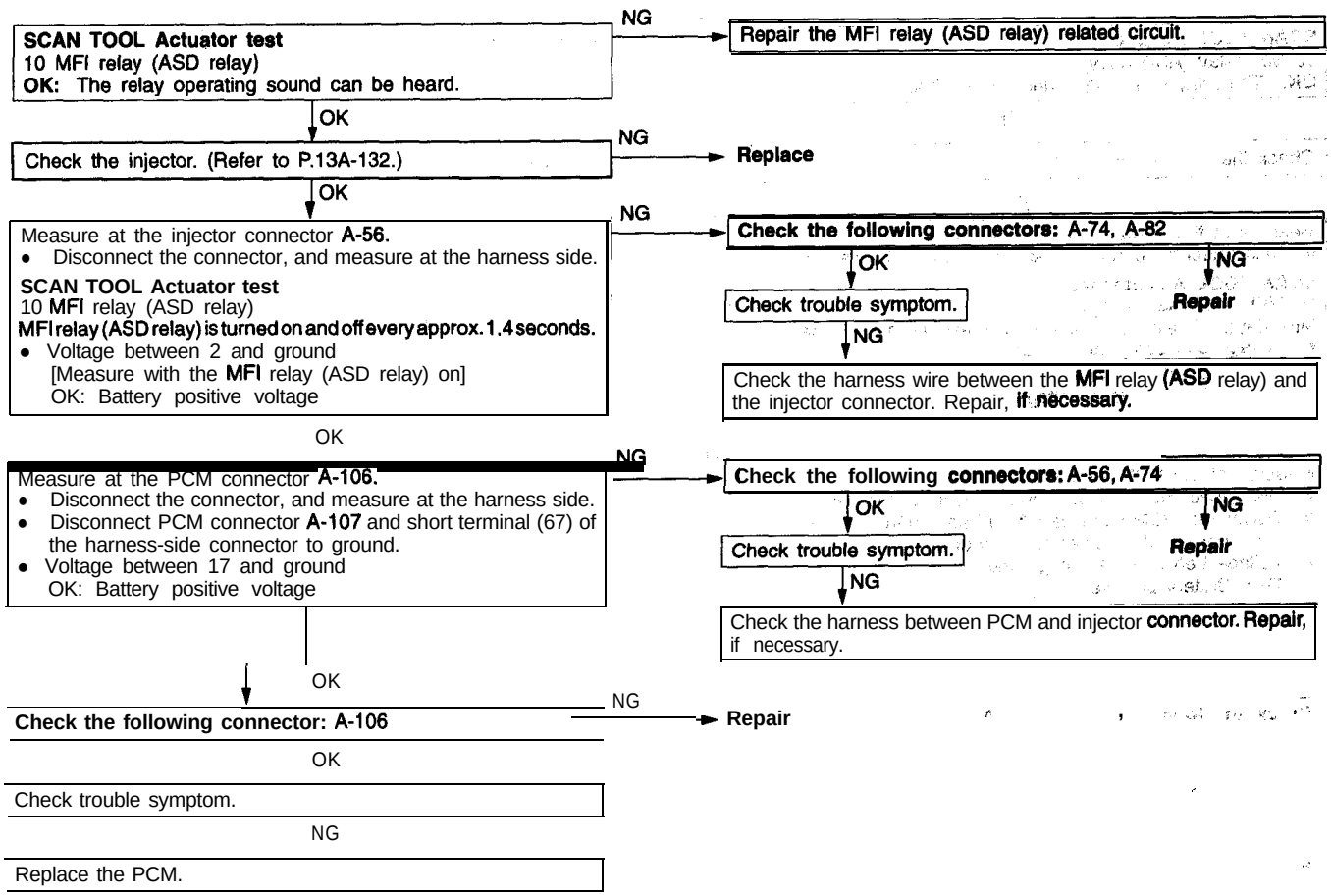

TSB Revision

Code No.	Scan tool 21 / General scan tool P0201 / MIL 27	Injector #1 Control Circuit	Probable cause
[Comment] Background • Grounds for the injector circuits are provided by the PCM. • Battery power is provided through the MFI relay (ASD relay). • This DTC is set if an open or short-circuit condition is detected in the control circuit for the individual injector. Range of Check • Battery voltage: 12V or more • MFI relay (ASD relay): ON • Engine: 3000 r/min or less Set Condition • Counterelectromotive force is not detected for 3 seconds immediately after injectors turn off.			• Open or shorted injector control circuit • Open injector • Open MFI (ASD) voitage supply at injector • Driver in PCM failed

SCAN TOOL Actuator test
10 MFI relay (ASD relay)
OK: The reiav operating sound can be heard.

NG → Repair the MFI relay (ASD relay) related circuit.

OK ↓

Check the injector. (Refer to P.13A-132.)

NG → Replace

OK

Measure at the injector connector A-50.
• Disconnect the connector, and measure at the harness side.

SCAN TOOL Actuator test
10 MFI relay (ASD relay)
MFI relay (ASD relay) isturnedonandoff everyapprox. 1.4 seconds.
• Voltage between 2 and ground
[Measure with the MFI relay (ASD relay) on]
OK: Battery positive voltage

NG → **Check the following connectors: A-74, A-82**
- OK → Check trouble symptom.
  - NG → Check the harness wire between the MFI relay (ASD relay) and the injector connector. Repair, if necessary.
- NG → Repair

OK

Measure at the PCM connector A-106.
• Disconnect the connector, and measure at the harness side.
• Disconnect PCM connector A-l 07 and short terminal (67) of the harness-side connector to ground.
• Voltage between 13 and ground
OK: Battery positive voltage

NG → **Check the following connectors: A-50, A-74**
- OK → Check trouble symptom.
  - NG → Check the harness between PCM and injector connector. Repair, if necessary.
- NG → Repair

OK ↓

Check the following connector: A-106

NG → Repair

OK

Check trouble symptom.

NG

Replace the PCM.

TSB Revision

Code No.	Scan tool 25 General scan tool P0505 MIL 25	Idle Air Control Motor Circuits	Probable cause
[Comment] Background • The idle air control (IAC) stepper motor is used to prevent the engine from stalling at idle. With the throttle plate completely closed, placing a load on the engine (A/C or power steering operation) might cause the engine to stall or run rough. • As the PCM anticipates load, it operates the IAC motor, opening the throttle bypass passage and allowing more air into the intake manifold. • Malfunction of this system could cause rough idle and unstable emissions. • The PCM cannot detect an open circuit or determine if the stepper motor is stuck in one position. Range of Check • Battery voltage: 10 V or more • ignition switch: ON Set Condition • A short or open circuit condition is detected in a motor circuit for 3 seconds.			• Driver circuit shorted to ground • Driver circuit shorted to battery • Driver circuits shorted to together • PCM failed • Shorted IAC motor

Check the idle air control (IAC) motor. (Refer to P.13A-132.) — NG → Replace
↓ OK
Check the following connectors: A-72, A-107 — NG → Repair
↓ OK
Check trouble symptom.
↓ NG
Check the harness wire between PCM and the IAC motor connector. — NG → Repair
↓ OK
Replace the PCM.

TSB Revision

Code No.	Scan tool 26 General scan tool P0122 MIL 24	Throttle Position Sensor Voltage Low	Probable cause
[Comment] Background • The sensor consists of a variable resistor that provides a voltage signal to the PCM based on the position of the throffle blade. • The PCM uses throffle body position information to adjust fuel injector pulse width. Range of Check • ignition switch: ON Set Condition • Throttle position sensor output voltage remains less than 0.2V for 1 second.			• Sensor signal circuit shorted to ground • Throttle position sensor failed • Loss of 5-volt supply

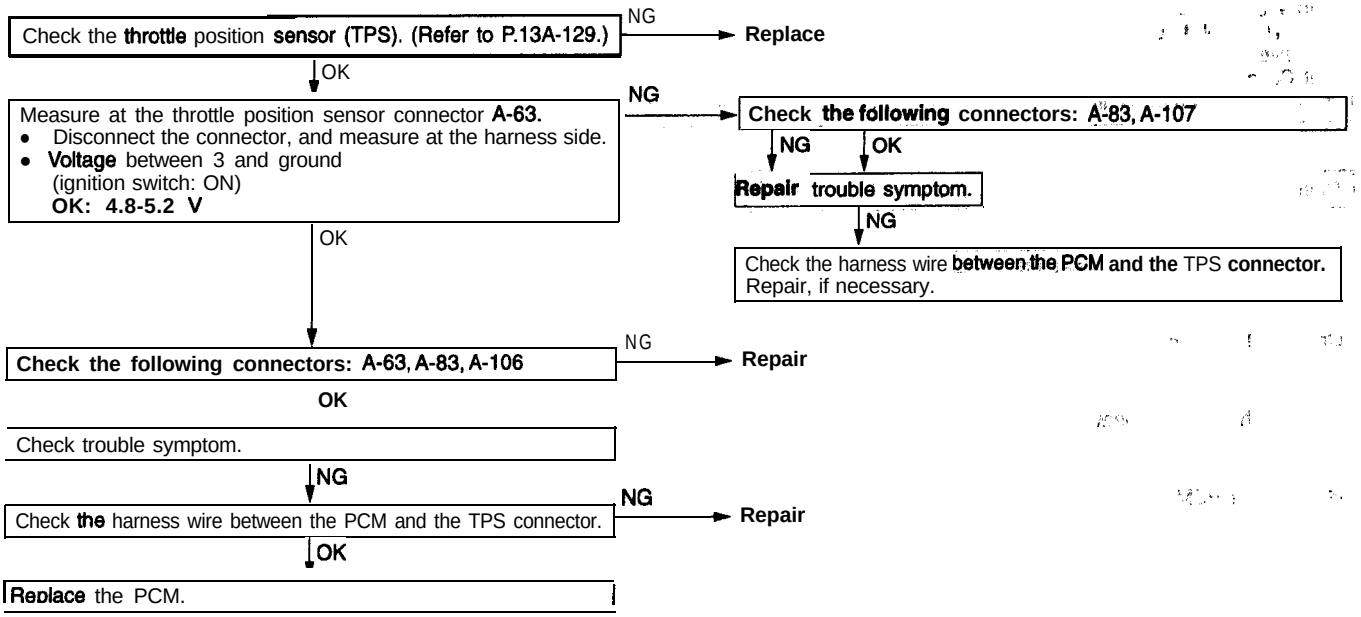

TSB Revision

Code No.	Scan tool 27 General scan tool P0123 MIL 24	Throttle Position Sensor Voltage High	Probable cause
[Comment] Background • The sensor consists of a variable resistor that provides a voltage signal to the PCM based on the position of the throttle blade. • The PCM uses throttle body position information to adjust fuel injector pulse width. Range of Check • ignition switch: ON Set Condition • Throttle position sensor output voltage remains more than 4.7V for 1 second.			• Sensor signal circuit open • Throttle position sensor failed • Sensor ground circuit open

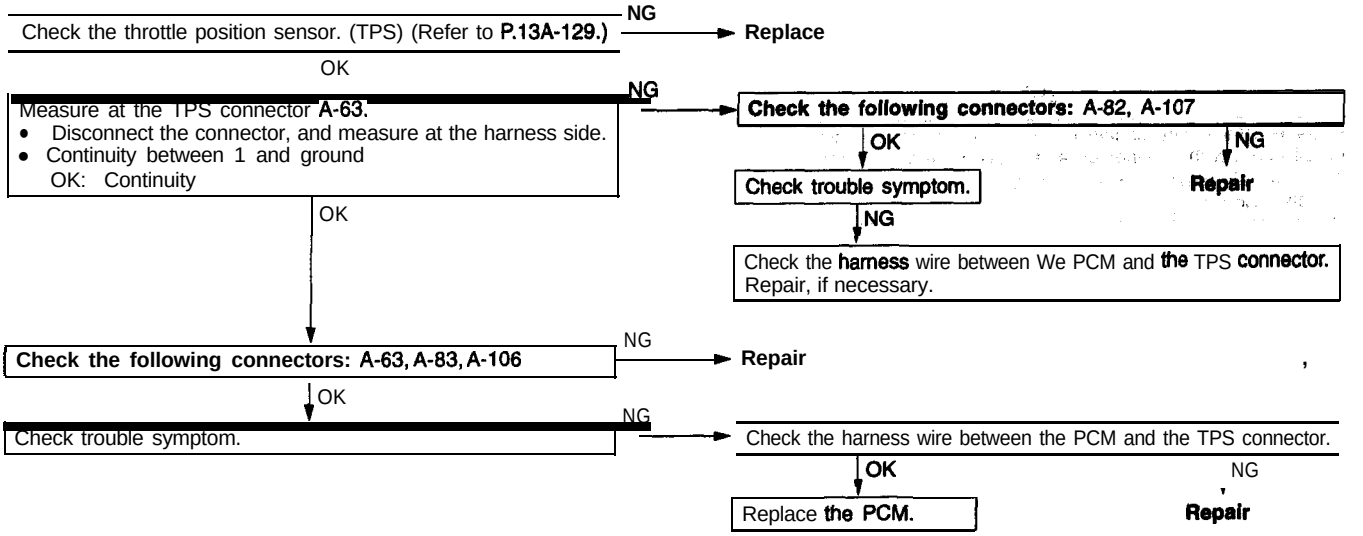

Code No.	Scan tool 30 General scan tool P0117 MIL 22	Engine Coolant Temperature Sensor Voltage Too Low	Probable cause
[Comment] Background • Data from the engine coolant temperature sensor is used in most fuel and spark related control functions. Range of Check • Ignition switch: ON Set Condition • Engine coolant temperature sensor output voltage remains less than 0.51 V for 3 seconds.			• Sensor signal shorted to ground • Sensor internally shorted • PCM failed

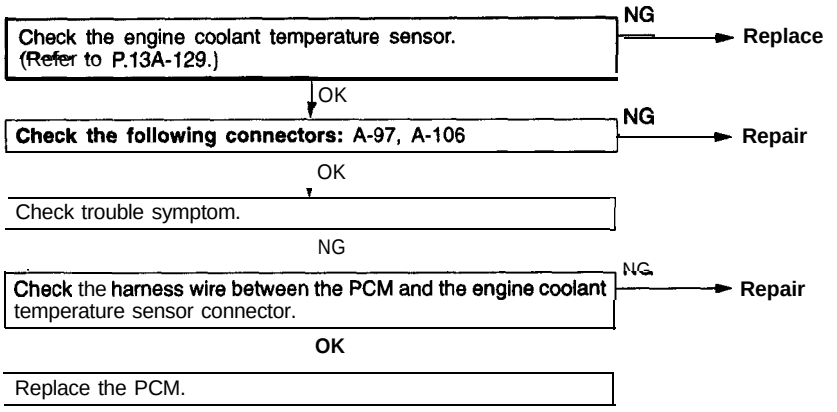

TSB Revision

Code No.	Scan tool 31 General scan tool P0118 MIL 22	Engine Coolant Temperature Sensor Voltage Too High	Probable cause
[Comment] Background • Data from the engine coolant temperature sensor is used in most fuel and spark related control functions. • When DTC is set, the PCM uses a default value as the engine coolant temperature, and the vehicle enters the limp-in mode. Range of Check • Ignition switch: ON Set Condition • Engine coolant temperature sensor output voltage remains more than 4.96V for 3 seconds.			• Sensor signal circuit open • Sensor internally open • Sensor ground circuit open • PCM failed

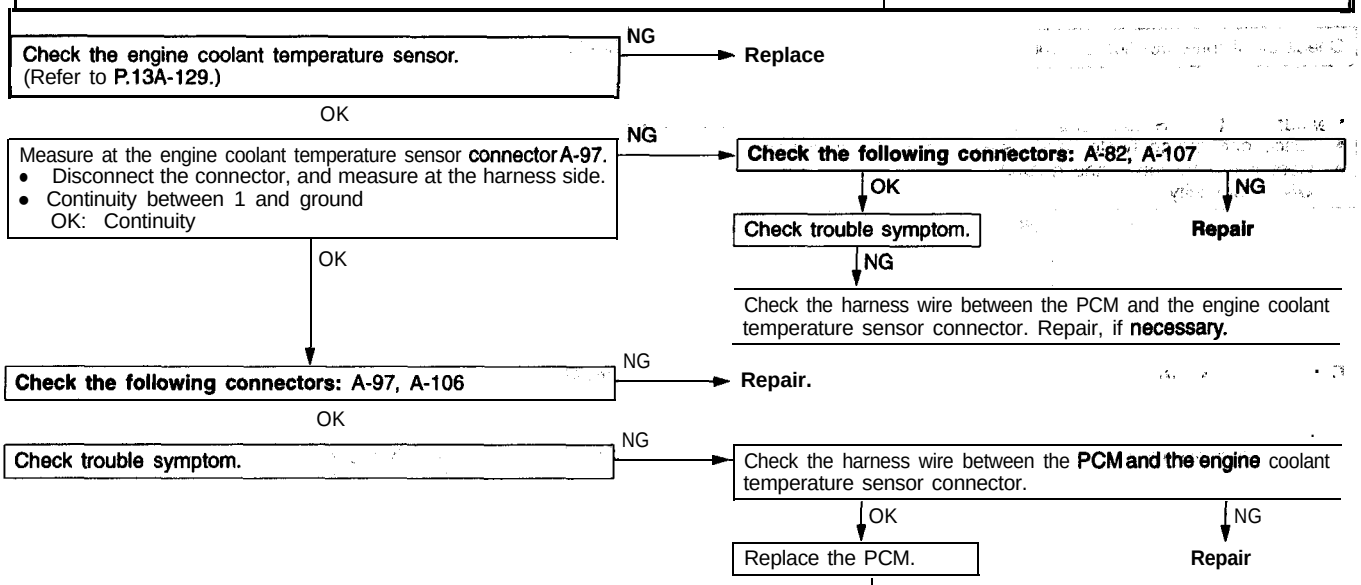

Code No.	Scan tool 32 General scan tool P0134 MIL 21	Upstream HO2S Stays at Center	Probable cause
[Comment] Background • Sensor output voltage is checked. • If voltage stays at center instead of switching, an open circuit is likely. Range of Check • 2 minutes after starting engine • Engine coolant temperature: More than 80°C (176°F) Set Condition • Neither rich nor lean condition is detected from the upstream heated oxygen sensor input. (Voltage is 0.5 volts for 1.5 minutes)			• Heated oxygen sensor (front) failed • Sensor signal circuit open • PCM failed

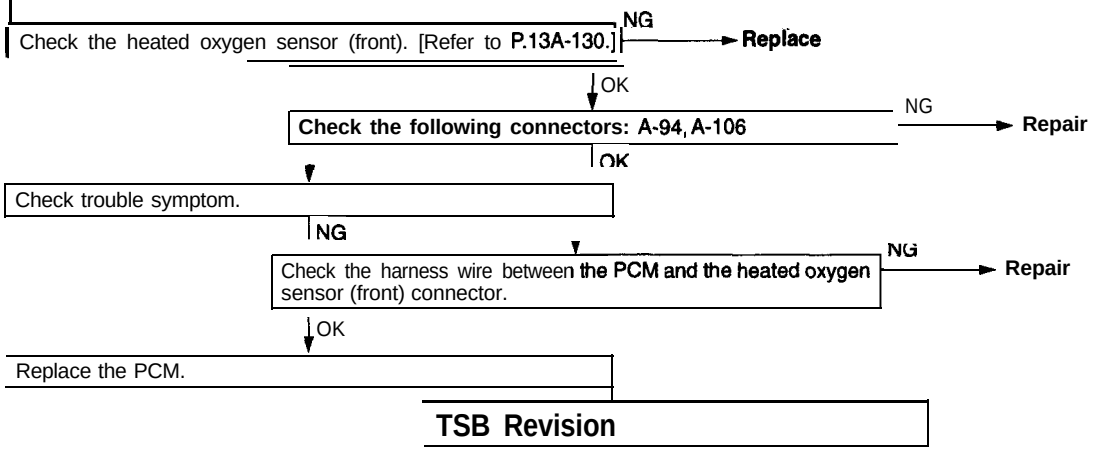

TSB Revision

Code No.	Scan tool 33 General scan tool – MIL 17	Engine is Cold Too Long	Probable cause
[Comment] Background • When the engine is started, the engine coolant temperature rises. The PCM checks that the engine coolant rises to the specified value within a sufficient period after the engine is started. Range of Check • Vehicle speed: More than 28 mph • 20 minutes after starting engine Set Condition • Engine coolant temperature does not rise to 71 °C (160°F)			• Thermostat fully open • Engine coolant temperature sensor failed • Engine coolant temperature sensor connector improperly connected • PCM failed

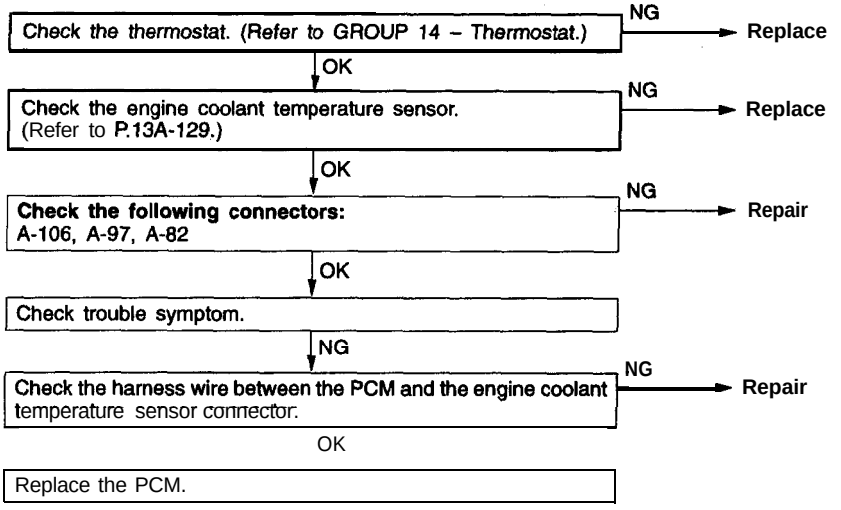

TSB Revision

Code No.	Scan tool 35 / General scan tool P0500 / MIL 15	No Vehicle Speed Sensor Signal	Probable cause
[Comment] Background • The vehicle speed sensor serves as a PCM input switching voltage between 0 and 5 volts. • Once the vehicle is in motion and the throttle is open, information from the sensor is sampled every 11 milliseconds and compared to a minimum threshold equal to 1 mph. • If the sensors output voltage indicates a speed higher than this threshold, the sensor is considered to be operating normally. • Failure of the sensor would be quite noticeable because the speedometer would fail to operate. • Diagnostic features that depend on the speed sensor may never execute if this component fails. Range of Check • Engine coolant temperature: 83°C (180°F) or more • Transaxle: Other than N or P range (A/T only). • 31 seconds after starting engine • Brakes not applied • Throffle valve: Open • Engine: 1600 r/min or more • Difference between the atmospheric pressure and intake manifold pressure: 34 kPa (10 in.Hg) or more Set Condition • Vehicle speed: Less than lmph for 11 seconds			• Open or shorted. signal circuit • Speedometer pinion damaged • Open 9-volt supply circuit • Open sensor ground circuit • Vehicle speed sensor failed • PCM failed

<M/T>

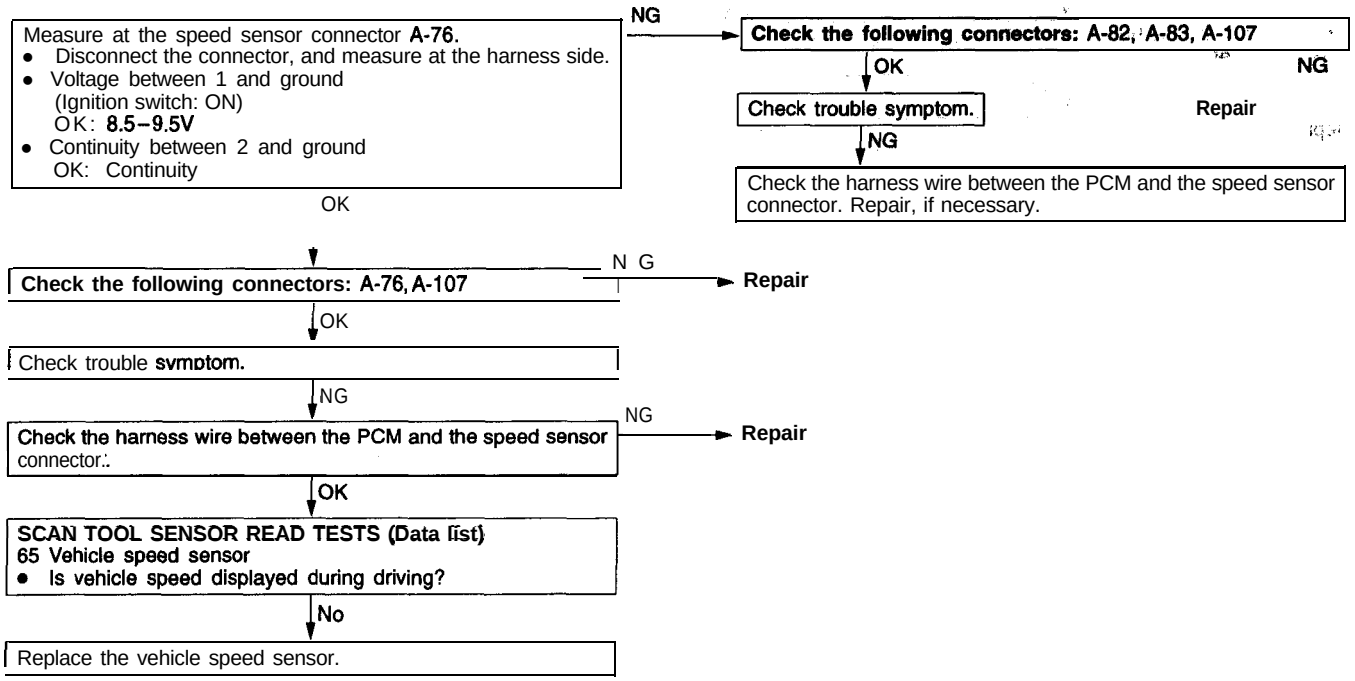

TSB Revision

<A/T>

SCAN TOOL SENSOR READ TEST (Data list)
65 Vehicle speed sensor
- Is vehicle speed displayed during driving?

Yes → **Replace the PCM.**

No

Check the following connectors: A-106, A-107, B-85 — NG → **Repair**

OK

Check trouble symptom.

OK

Check the harness wire between the PCM and the transaxle control module connector. — NG → **Repair**

OK

Check the automatic transaxle control system.

Code No.	Scan tool 36 General scan tool P0107 MIL 14	MAP Sensor Voltage Too Low	Probable cause
[Comment] Background • When this code is produced, the MAP sensor voltage has fallen below the minimum acceptable voltage of 0.02 volts. • As in the situation above, the PCM estimates MAP value to allow the engine to run. Range of Check • Engine: 400–1500 r/min • Throttle position sensor output voltage: Less than 1.3V Set Condition • MAP sensor output voltage remains less than 0.02V for 2 seconds.			• Open 5-volt supply circuit • Signal circuit shorted to ground • Sensor failed • PCM failed

Measure at the MAP sensor connector A-53.
- Disconnect the connector, and measure at the harness side.
- Voltage between 2 and ground (Ignition switch: ON)
  OK: 4.8–5.2 V

NG → **Check the following connectors: A-83, A-107**
- OK → Check trouble symptom.
  - NG → Check the harness wire between the PCM and MAP sensor connector Repair, if necessary.
- NG → **Repair**

OK

Check the following connectors: A-53, A-106 — NG → **Repair**

OK

Check trouble symptom.

NG

Check the harness wire between the PCM and MAP sensor connector. — NG → **Repair**

OK

Replace the MAP sensor.

TSB Revision

Code No.	Scan tool 37 General scan tool P01 08 MIL 14	MAP Sensor Voltage Too High	Probable cause
[Comment] Background • This code is generated when the MAP sensor voltage exceeds the maximum voltage of 4.7 volts. Range of Check • Engine: 400– 1500 r/min • Throttle position sensor output voltage: Less than 1.3V Set Condition • MAP sensor output voltage remains less than 4.7 V for 2 seconds.			• Signal circuit open • Sensor open internally • Sensor ground circuit open • Sensor signal circuit shorted to voltage • PCM failed

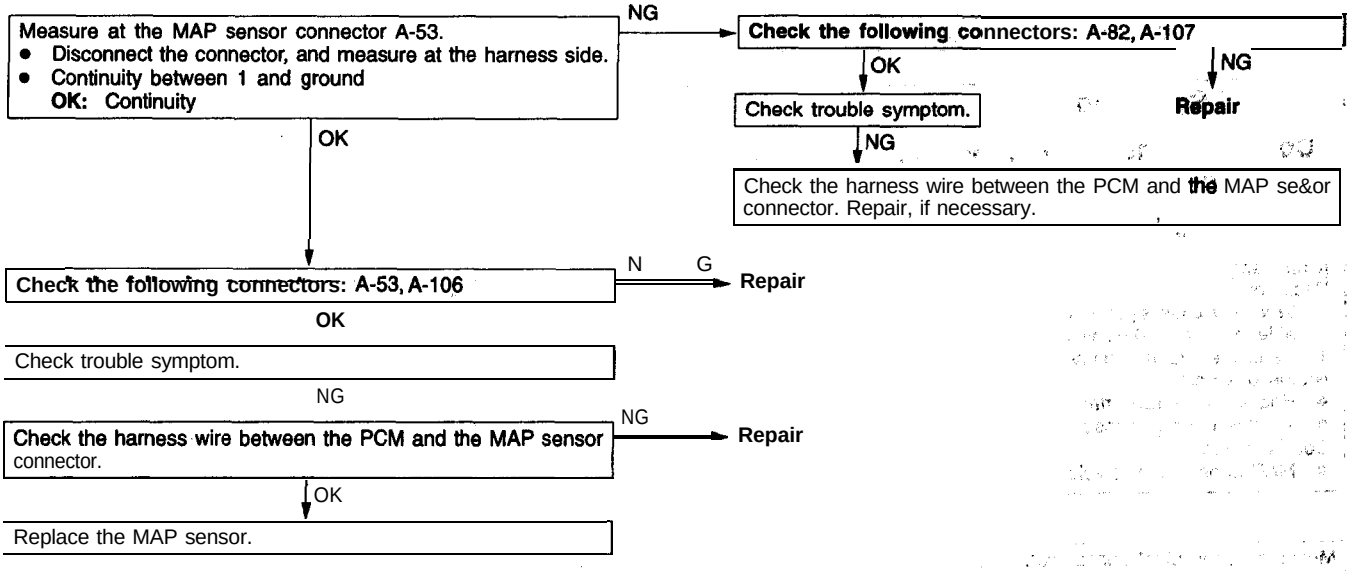

TSB Revision

Code No.	Scan tool 39 General scan tool P1297 MIL 13	No Change in MAP From Start to Run	Probable cause
[Comment] Background • The MAP sensor is mounted to intake manifold vacuum. • This information provides an important PCM input for determining fuel injector pulse wide. • The sensor should measure a difference in manifold pressure between key ON and after the engine is running. Range of Check • Vehicle is not moving • Engine: The engine idle speed is almost identical to the target idle speed while the engine is idling. Set Condition • Diagnostic trouble code (DTC) memory is not deleted even after the ignition switch is turned off. • The difference between the two following MAP values is small. The value immediately after the ignition switch is turned to ON. The value while the engine is at idle for two seconds.			• Ice in sensor • Sensor failed • PCM failed

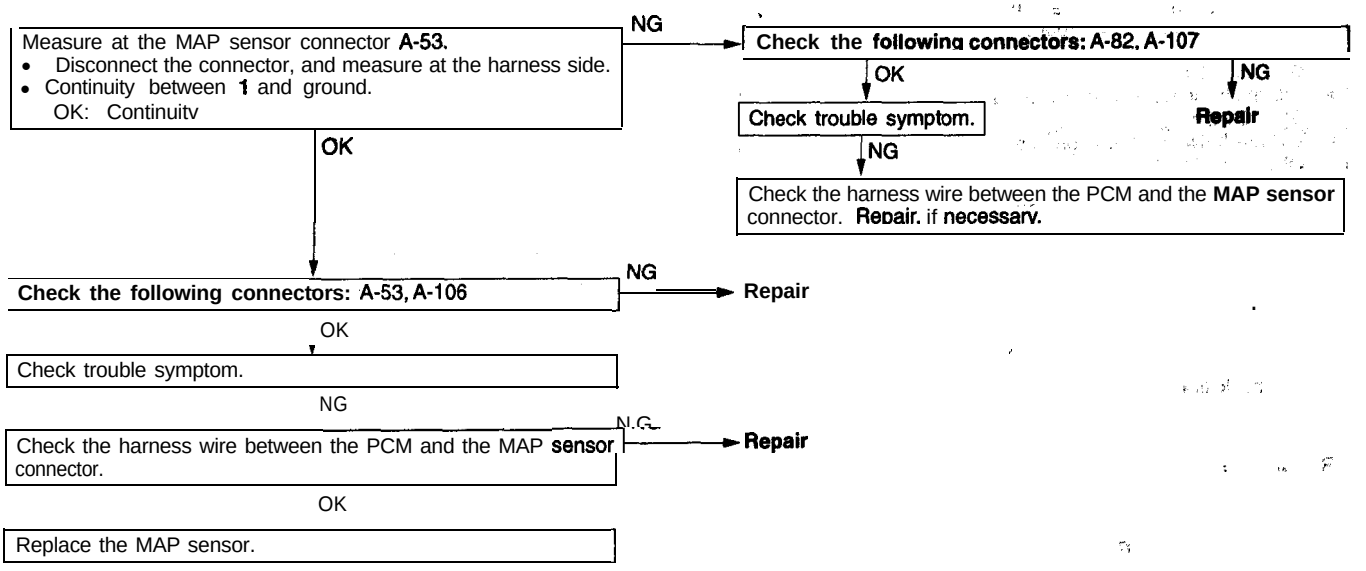

TSB Revision

Code No.	Scan tool 40 General scan tool P0335 MIL 11	No Crank Reference Signal at PCM	Probable cause
[Comment] Background • The crankshaft position sensor is a Hall-effect sensor that provides a voltage signal to the PCM. • Voltage alternates between 0 and 5 volts as the crankshaft turns. • This DTC would indicate a failure of the ***sensor*** or its circuit. Range of Check • The test is run at start-up. • Camshaft position sensor indicates that the camshaft is rotating. Set Condition • Crankshaft position sensor signal (High or Low) is not input.			• Open or shorted 9-volt supply circuit • Open sensor ground • Open or shorted signal circuit • Excessive clearance between the sensor and rotor • Sensor failed • PCM failed

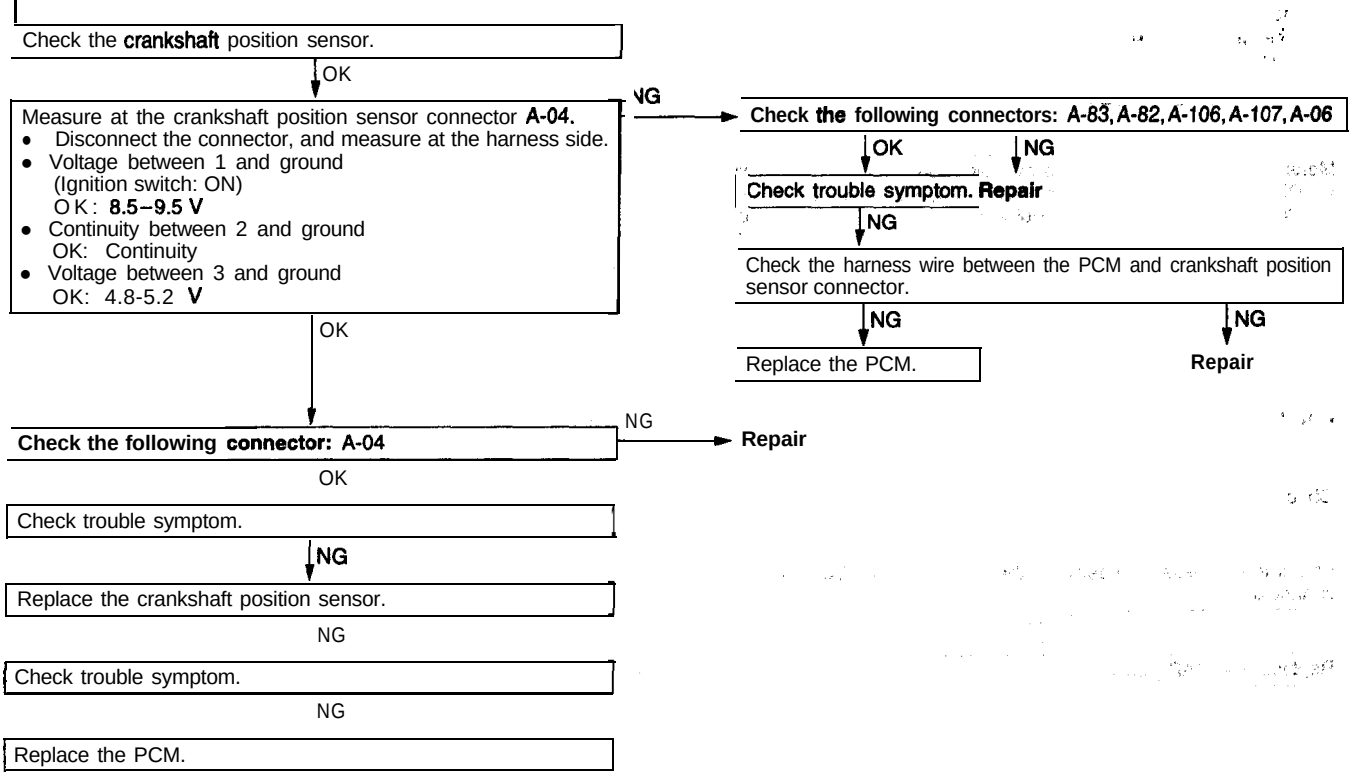

TSB Revision

Code No.	Scan tool 42 General scan tool P0352 MIL 43	Ignition Coil #2 Primary Circuit	Probable cause
[Comment] Background • The PCM provides the ground control circuit for the primary side of ignition coil. • Battery voltage is supplied through the MFI relay (ASD relay). Range of Check • Battery voltage: 13 V or more (engine is running) • MFI relay (ASD relay): ON • Engine: 3000 r/min or less • Engine speed and ignition timing are always stable. Set Condition • The primary circuit is not achieving peak current with maximum dwell for 3 seconds.			• Ignition coil No.2 wiring harness or connector failed • Open circuit in ignition coil • PCM failed

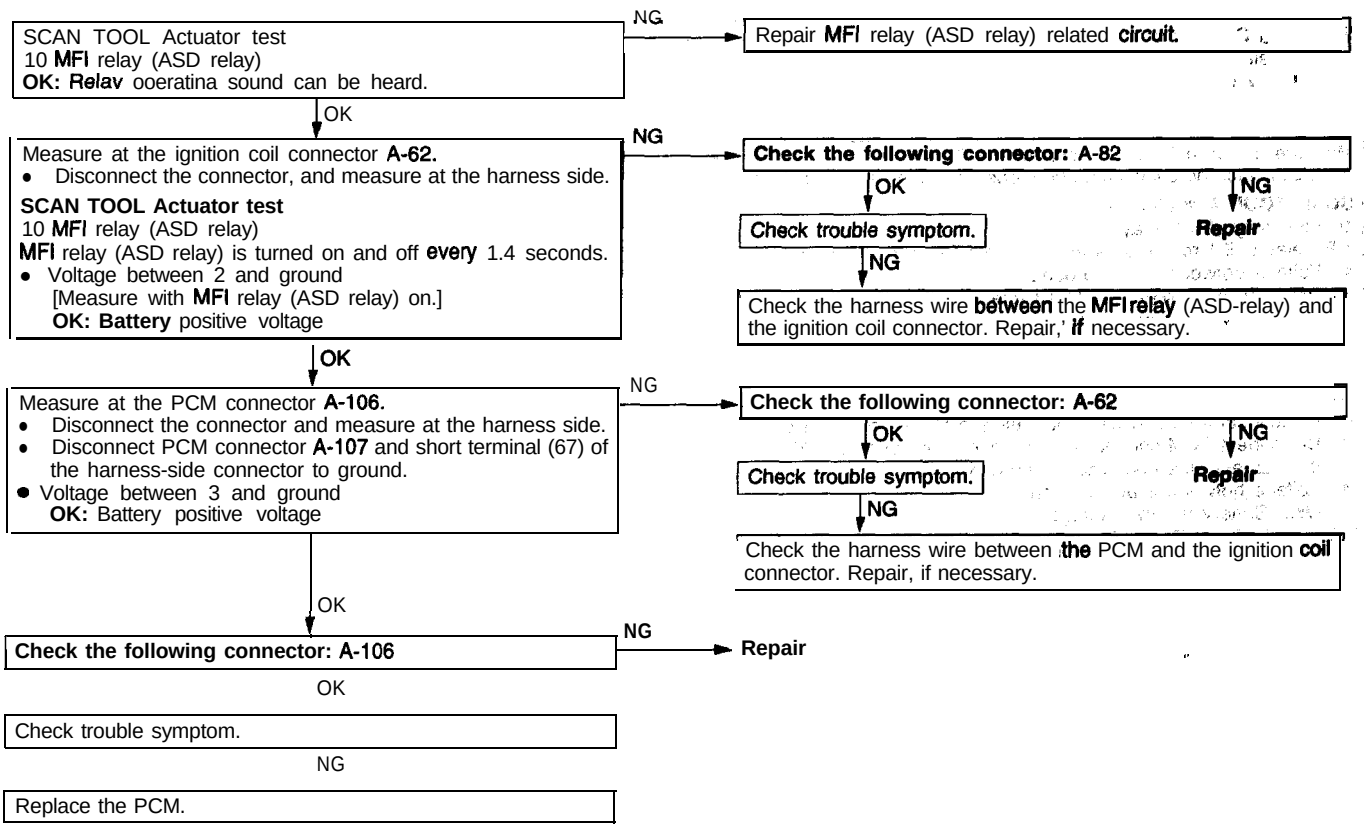

Code No.	Scan tool 43 General scan tool P0351 MIL 43	Ignition Coil #1 Primary Circuit	Probable cause
[Comment] Background • The PCM provides the ground control circuit for the primary side of ignition coil. • Battery voltage is supplied through the MFI relay (ASD relay). Range of Check • Battery voltage: 13 V or more (engine is running) • MFI relay (ASD relay): ON • Engine: 3000 r/min or less • Engine speed and ignition timing are always stable. Set Condition • The primary circuit is not achieving peak current with maximum dwell for 3 seconds.			• Ignition coil No.1 wiring harness or connector failed • Open circuit in ignition coil • PCM failed

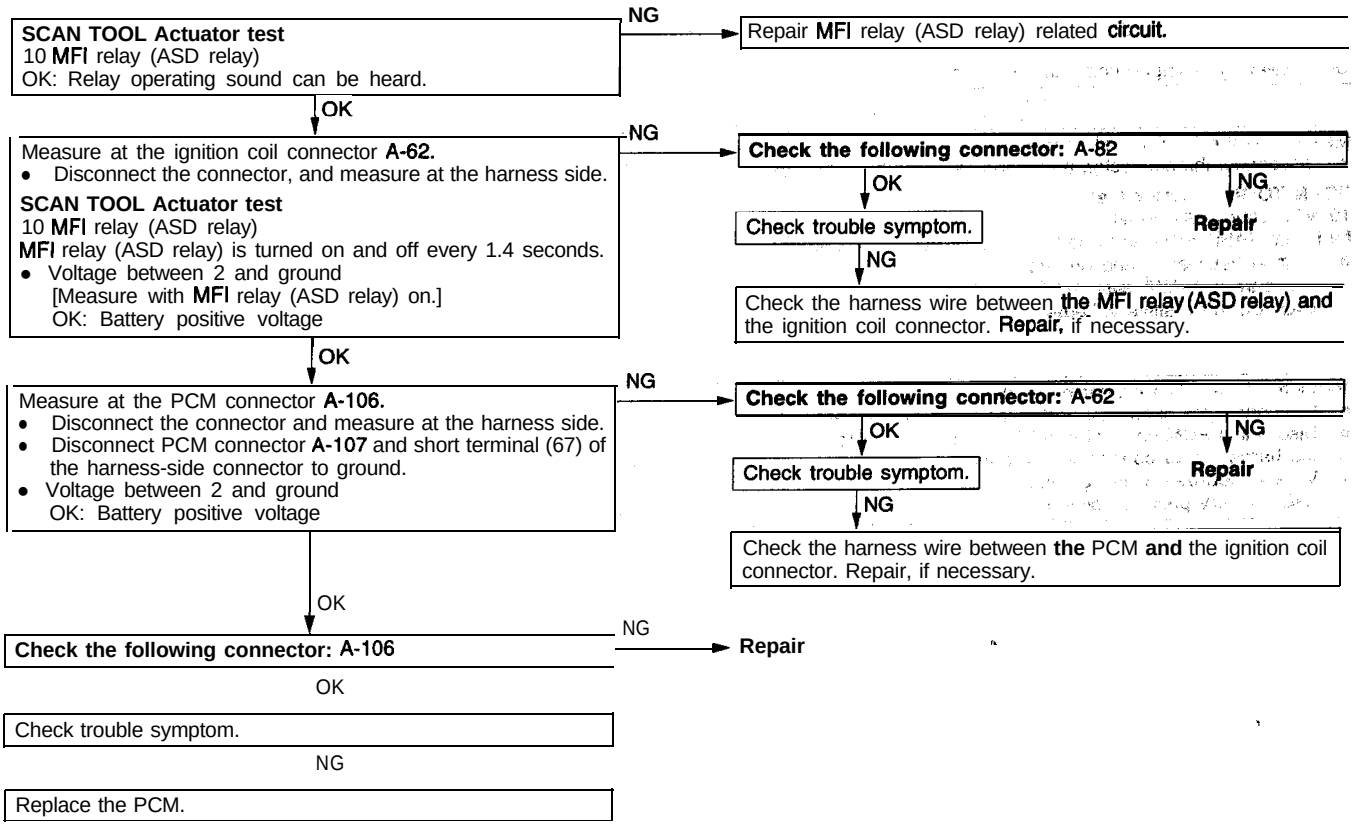

TSB Revision

Code No.	Scan tool 44 General scan tool – MIL 42	No MFI Relay (ASD relay) output Voltage at PCM	Probable cause
[Comment] Background • The PCM senses operation of the MFI relay (ASD relay) by measuring relay voltage. (If relay turns to ON, voltage is high). • This DTC indicates that no voltage is being sensed when the MFI relay (ASD relay) is being energized. Range of Check • Battery voltage: 8 V or more • Ignition switch: ON • Unless the engine is cranking Set Condition • The relay voltage is low for 1 second.			• MFI relay (ASD relay) output circuit open • Fused B(+) circuit open • MFI relay (ASD reiay) failed • Circuit in PCM faked

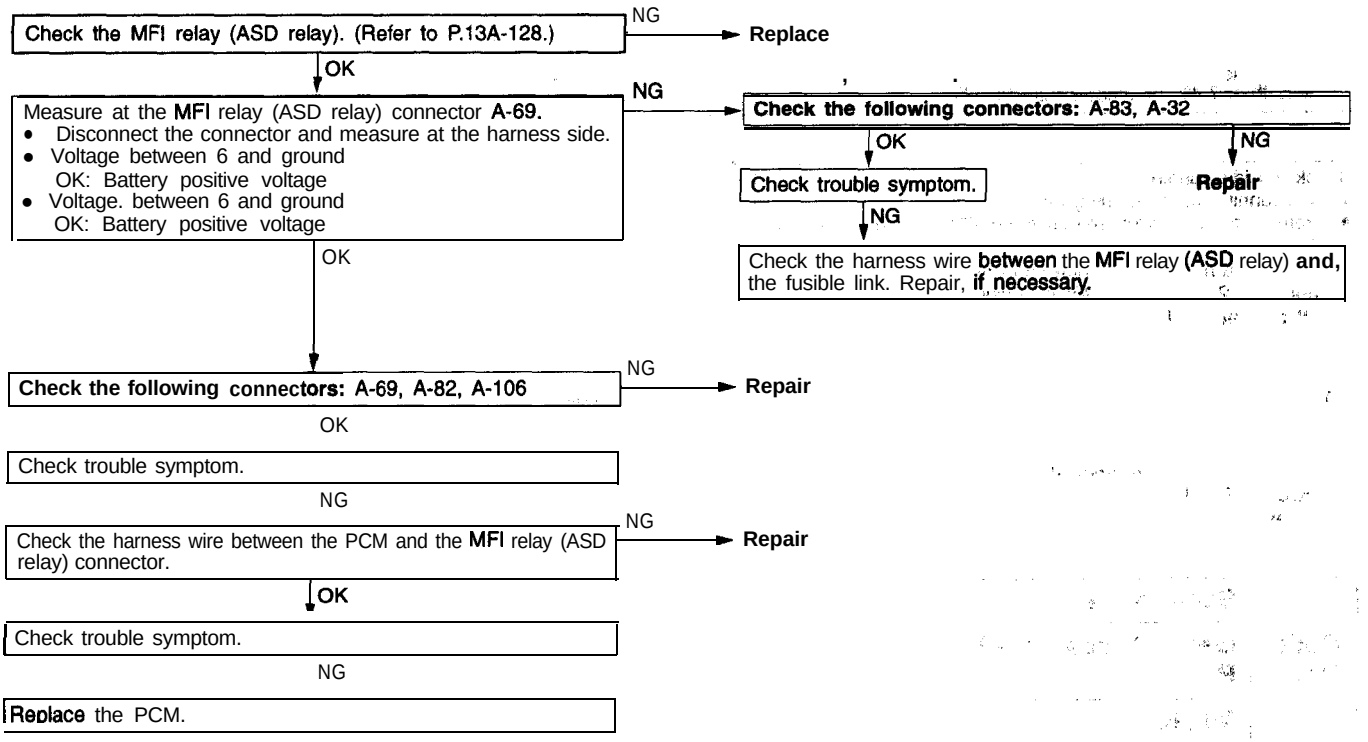

TSB Revision

Code No.	Scan tool 46 General scan tool P0401 MIL 32	EGR System Failure	Probable cause
[Comment] Background • Once per vehicle trip the PCM monitors the EGR system fiow rate. • If the flow rate is above or below the acceptable limits, the PCM stores a' diagnostic trouble code. Range of Check • Engine temperature is greater than 76°C.(170°F) • More than three minutes have passed since start-up. • Engine r/min is between 1952 and 2400. • MAP voltage is between 1.80 and 2.70. • TPS voltage is between 0.6 and 1.8. • Vehicle speed exceeds 3 mph. • Short term fuel compensation value is exhibiting less than +4.4% • During air/fuel ratio closed loop control Set Condition • The measured change in the short-term fuel compensation value shift during the test is less than 7.4% or greater than 20.5%.			• EGR valve assembly failed • EGR tube clogged • Wiring harness and connectors failed • Vacuum hoses' failed

Check the idle running.
- Idle running after warming up
- Remove the vacuum hose from the EGR valve nipple and plug it.
- Connect a hand vacuum pump to the EGR valve nipple, and apply a 12 kPa (3.5 in.Hg) of vacuum.

OK: Idle speed becomes unstable or the engine stalls.

NG →
- Check the EGR valve and clean or replace it if necessary.
- Check the EGR tube for clogging and clean or replace it if necessarv.

OK ↓

Check the vacuum hose for routing and damage.

NG → Repair

OK

Check the EGR solenoid circuit. (Refer to P.13A-30, INSPECTION PROCEDURE FOR DIAGNOSTIC TROUBLE CODES 17/P0403/32.)

Code No.	Scan tool 46 General scan tool P1697 MIL 62	PCM Failure SRI Mile Not Stored	Probable cause
[Comment] • Unsuccessful attempt to update service reminder indicator (SRI or EMR) mileage in the control module EEPROM.			• PCM failed

Replace the PCM.

TSB Revision

Code No.	Scan tool 49 / General scan tool P1696 / MIL 63	PCM Failure EEPROM Write Denied	Probable cause
[Comment) • Unsuccessful attempt to write to an EEPROM location by the control module.			• PCM failed

Replace the PCM.

Code No.	Scan tool 57 / General scan tool P0112 / MIL 23	Intake Air Temperature Sensor Voltage Low	Probable cause
[Comment] Background • When the fuel system is in the open loop mode, the heated oxygen sensor cannot be used for injector pulse width calculation. • In this instance, the system uses information on air mass to determine the correct pulse width necessary to achieve the proper air/fuel ratio. • Because air mass is related to temperature, information from the intake air temperature sensor is necessary. Range of Check • Ignition switch: ON Set Condition • Intake air temperature sensor output voltage is less than 0.2 V for 3 seconds.			• Sensor signal shorted to ground • Sensor internally shorted • PCM failed

Check the intake air temperature sensor. (Refer to P.13A-128.) — NG → Replace

OK

Check the following connectors: A-57, A-106 — NG → Repair

OK

Check trouble symptom.

NG

Check the harness wire between the PCM and the intake air temperature sensor connector. — NG → Repair

OK

Replace the PCM.

TSB Revision

Code No.	Scan tool 58 General scan tool P0113 MIL 23	Intake Air Temperature Sensor Voltage High	Probable cause
[Comment] Background • When the fuel system is in the open loop mode, the heated oxygen sensor cannot be used for injector pulse width calculation. • In this instance, the system uses information on air mass to determine the correct pulse width necessary to achieve the proper air/fuel ratio. • Because air mass is related to temperature, information from the intake air temperature sensor is necessary. Range of Check • Ignition switch: ON Set Condition • Intake air temperature sensor output voltage is more than 4.96V for 3 seconds.			• Sensor signal circuit open • Sensor internally open • Sensor ground circuit open • PCM failed

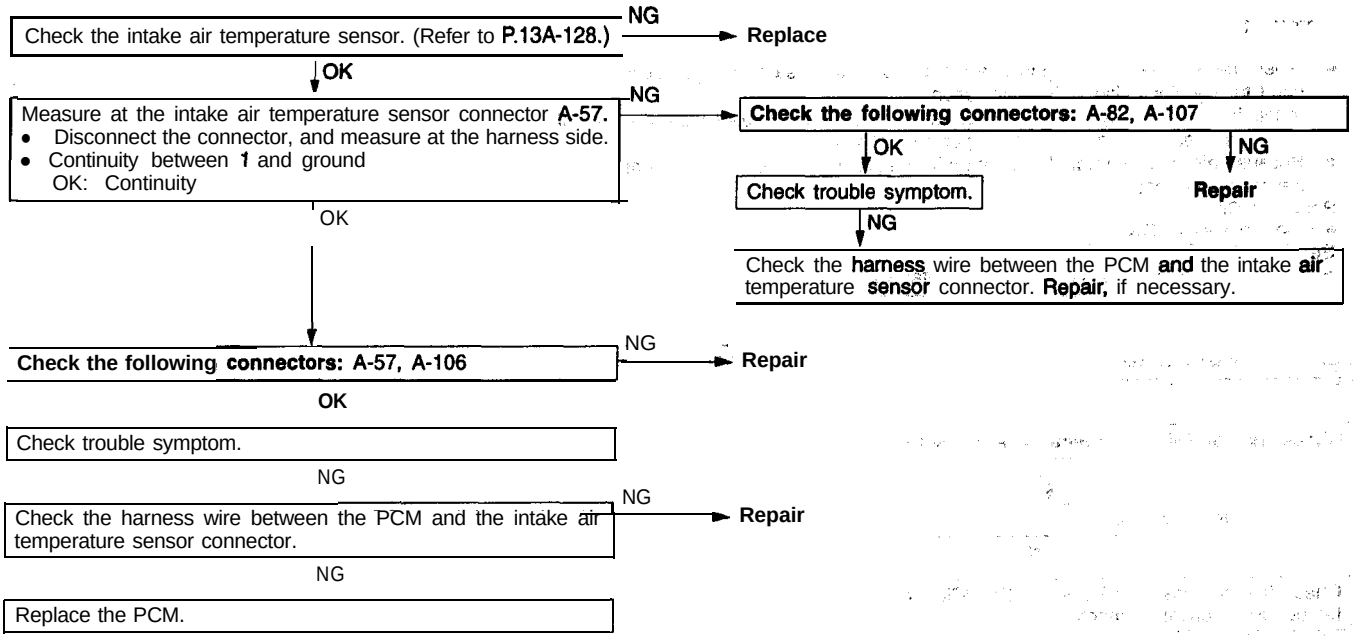

TSB Revision

Code No.	Scan tool 59 / General scan tool P0325 / MIL 16	Knock Sensor #1 Circuit	Probable cause
[Comment] Background • The sensor consists of a piezoelectric material that constantly vibrates, sending a voltage signal to the PCM when the engine is operating. • When the signal exceeds a threshold, the PCM retards engine ignition timing to reduce knock. Set Condition • Knock sensor signal below minimum acceptable threshold voltage. or • Knock sensor output voltage is above 5.0 volts.			• Knock sensor failed • Open or shorted knock sensor circuit • PCM failed

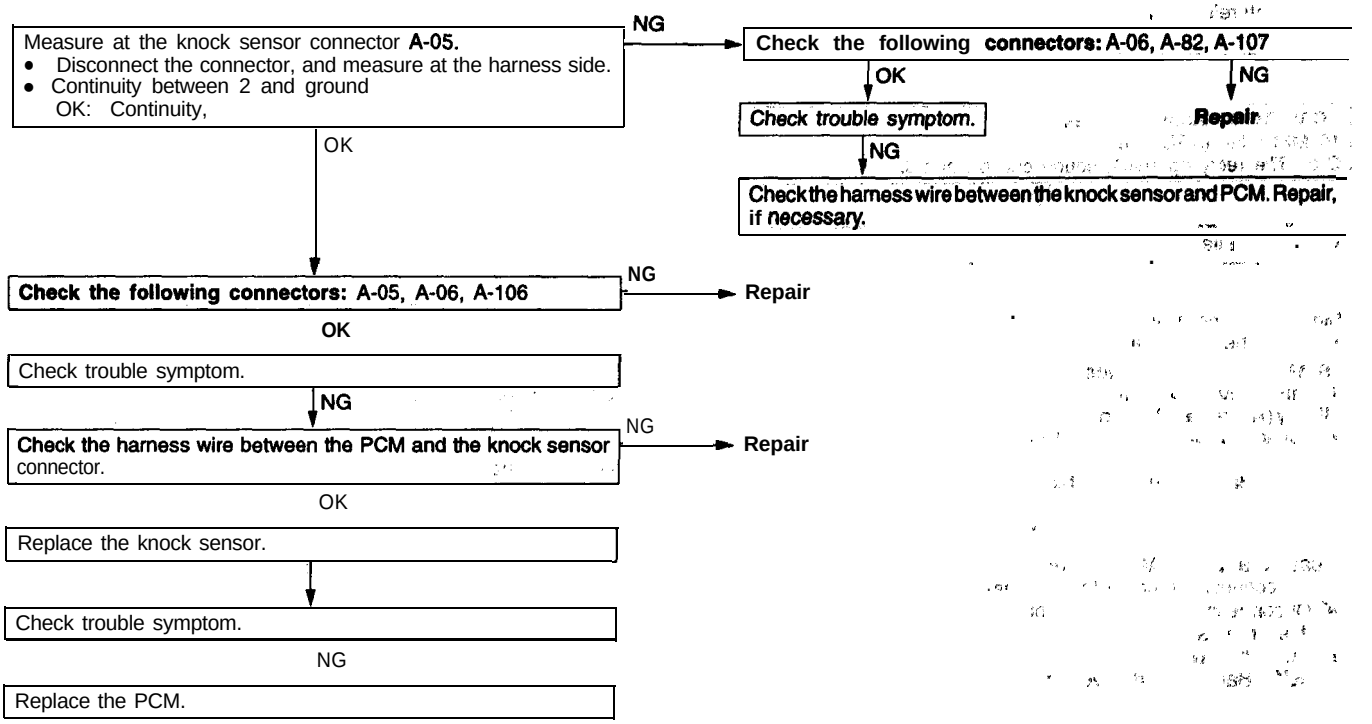

TSB Revision

Code No.	Scan tool 61 General scan tool P0204 MIL 27	Injector #4 Control Circuit	Probable cause
[Comment] Background • Grounds for the injector circuits are provided by the PCM. • Battery power is provided through the MFI relay. (ASD relay) • This DTC is set if an open or short-circuit condition is detected in the control circuit for the individual injector. Range of Check • Battery voltage: 12V or more • MFI relay (ASD relay): ON • Engine: 3000 r/min or less Set Condition • Counterelectromotive force is not detected for three seconds immediately after injectors turn off.			• Open or shorted injector control circuit • Open injector • Open MFI (ASD) supply at injector • Driver in PCM failed

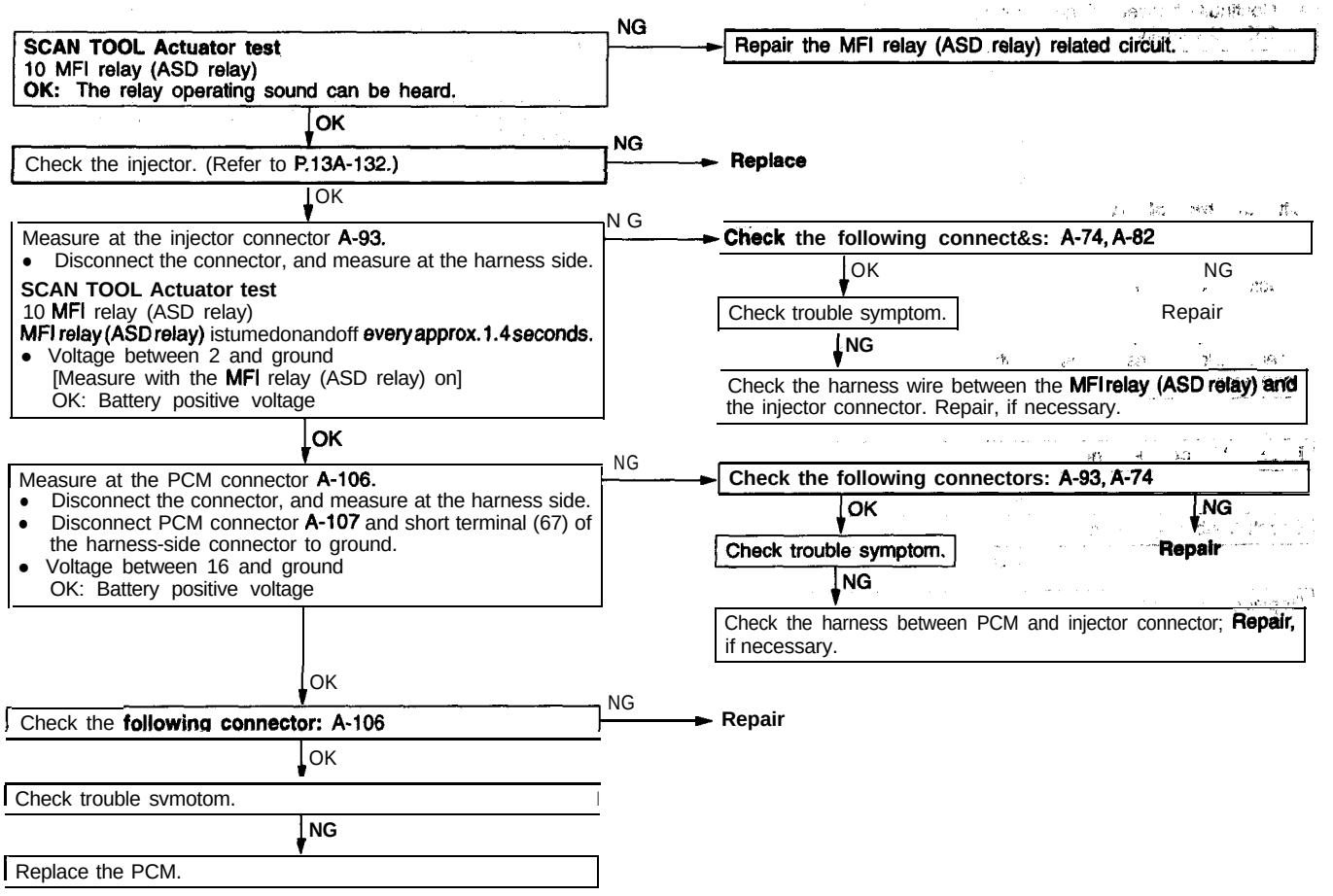

TSB Revision

Code No.	Scan tool 62 General scan tool P0132 MIL 21	Upstream HO2S Shorted to Voltage	Probable cause
[Comment] Background • Upstream heated oxygen sensor requires a heater circuit for proper operation. • The heater circuit is supplied with battery voltage through the MFI relay (ASD relay): • A failure in the sensors heater circuit prevents it from providing accurate data to the PCM. • If the PCM monitors more than 1.2 volts, the sensor has shorted to heater circuit voltage. Range of Check • Two or more minutes after the engine starts • Engine coolant temperature: 80°C (176°F) or more Set Condition • Heated oxygen sensor output voltage is more than 1.2 V for 3 seconds.			• Heated oxygen sensor failed • Wiring harness and connectors failed • PCM failed

Check the heated oxygen sensor (front). (Refer to P.13A-130.) — NG → Replace
↓ OK
Check the following connectors: A-94, A-106 — NG → Repair
OK
Check trouble symptom.
NG
Check the harness wire between the PCM and the heated oxygen sensor (front). — NG → Repair
OK
Replace the PCM.

Code No.	Scan tool 68 General scan tool P0600 MIL 53	PCM Failure SPI Communications	Probable cause
[Comment] Set Condition • There is no communication between coprocessors in the control module.			• PCM failed

Replace the PCM.

Code No.	Scan tool 71 General scan tool – MIL 44	Battery Temperature Sensor Volts Out Of Limit	Probable cause
[Comment] Background • Battery temperature input is used to adjust the generator charging rate based upon the ambient temperature around the battery. Range of Check • Ignition switch: ON Set Condition • The sensor voltage is not within the acceptable range of 0.3 to 4.9 volts for 3 seconds or more.			• Battery temperature sensor failed • PCM failed

Replace the PCM.

TSB Revision

Code No.	Scan tool 92 General scan tool P1490 MIL 35	Low Speed Fan Control Relay Circuit	Probable cause
[Comment] Background • The low speed radiator fan relay controls the low speed operation of the radiator fan. • One side of the relay control coil is supplied with 12 volts when the ignition switch is turned to the ON position. • The circuit is completed when the other side of the relay coil is grounded by the PCM. • The PCM grounds the relay control circuit depending on engine coolant temperature etc. Range of Check • Battery voltage: 10 V or more • Ignition switch: ON Set Condition • An open or short-circuit condition is detected in the low speed radiator fan relay control circuit for 3 seconds.			• Relay coil open or shorted • Ignition switch output circuit open • Low speed radiator fan relay control circuit open or shorted • PCM failed

Measure at the PCM connector A-107.
- Disconnect the connector, and measure at the harness side.
- Voltage between 55 and ground
  (ignition switch: ON)
  OK: Battery positive voltage
- Connect a jumper wire between 55 and ground.
  (Ignition switch: ON)
  OK Radiator fan runs at low speed.

NG → Check the radiator fan relay drcuit.

OK

Check the following connector: A-107

NG → Repair

OK

Check trouble symptom.

NG

Replace the PCM.

TSB Revision

Code No.	Scan tool 93		Probable cause
	General scan tool P1489	High Speed Condenser Fan Control Relay Circuit	
	MIL 35		
[Comment] Background • The high speed condenser fan relay controls the high speed operation of the condenser fan. • One side of the relay control coil is supplied with 12 volts when the ignition switch is turned to the ON position. • The circuit is completed when the other side of the relay coil is grounded by the PCM. • The PCM grounds the relay control circuit depending on engine coolant temperature and other conditions. Range of Check • Battery voltage: 10 V or more • Ignition switch: ON Set Condition • An open or shorted condition is detected in the high speed A/C condenser fan relay control circuit for 3 seconds.			• Relay, coil open, or shorted • Ignition switch output circuit open • High speed condenser fan relay control circuit open or shorted • PCM failed

Measure at the PCM connector A-106.
- Disconnect the connector, and measure at the harness side.
- Voltage between 19 and ground
  (Ignition switch: ON)
  OK: Battery positive voltage
- Connect a jumper wire between 19 and ground.
  (Ignition switch: ON)
  OK A/C condenser fan runs at high speed.

NG → Check the condenser fan circuit.

OK ↓

Check the following connector: A-106 — NG → Repair

OK ↓

Check trouble symptom.

NG ↓

Replace the PCM.

TSB Revision

Code No.	Scan tool 96 General scan tool P1698 MIL 66	No CCD Messages From TCM	Probable cause
[Comment] • The TCM outputs no CCD messages.			• Communication line between PCM and TCM failed • TCM failed • PCM failed

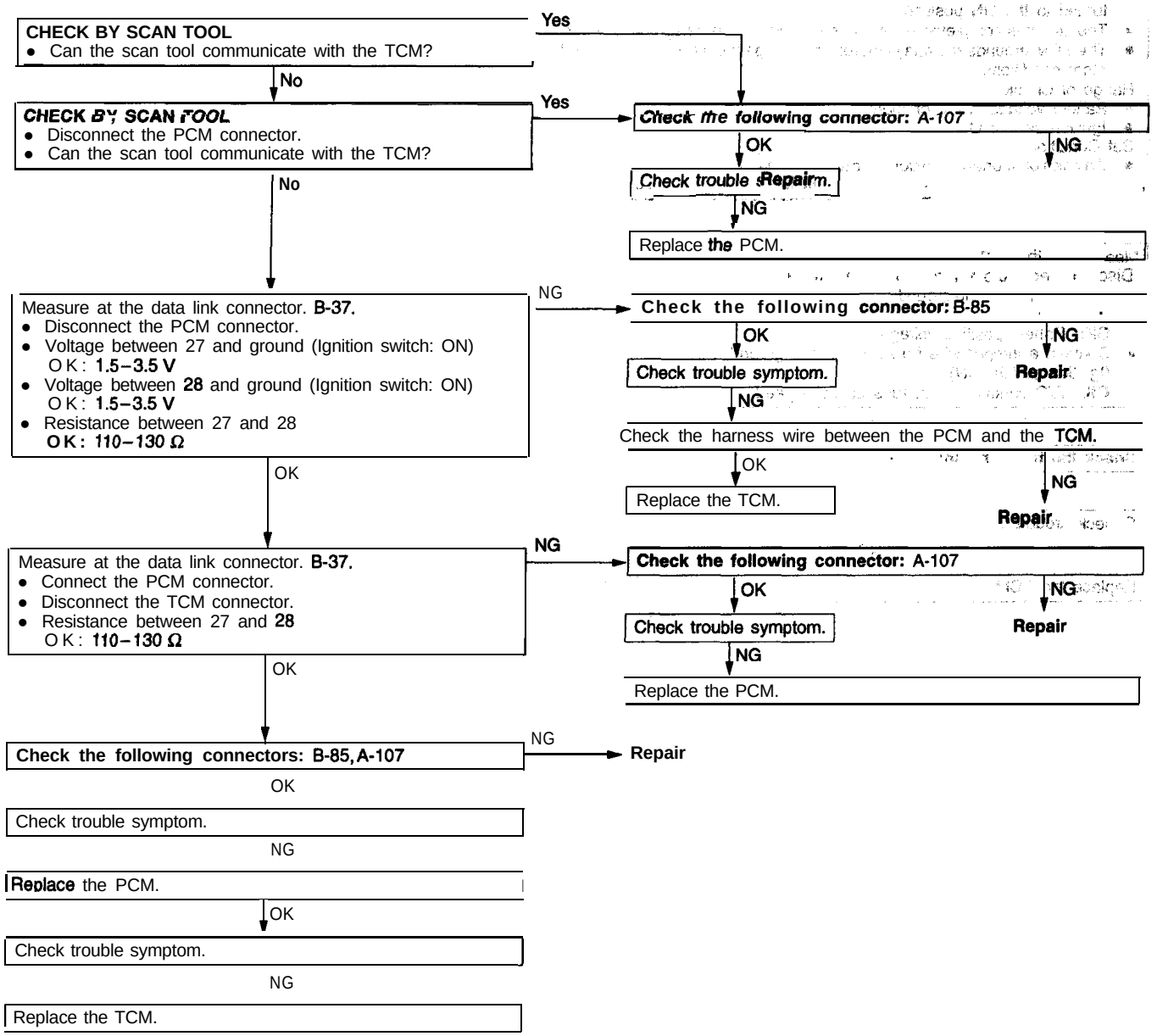

TSB Revision

Code No.	Scan tool 101 / General scan tool P0220 / MIL 42	Fuel Pump Relay Control Circuit	Probable cause
[Comment] Background • The fuel pump relay control the battery voltage supplied to the fuel pump. • The PCM provides a ground path for the fuel pump relay. • This DTC indicates an open or short-circuit in the control circuit. Range of Check • Battery voltage: 10 V or more • Ignition switch: ON Set Condition • Open or short circuit is detected in fuel pump relay control circuit for 3 seconds.			• Relay coil open or shorted • Fuel pump relay control circuit open or shorted • Inoperative circuit driver in PCM

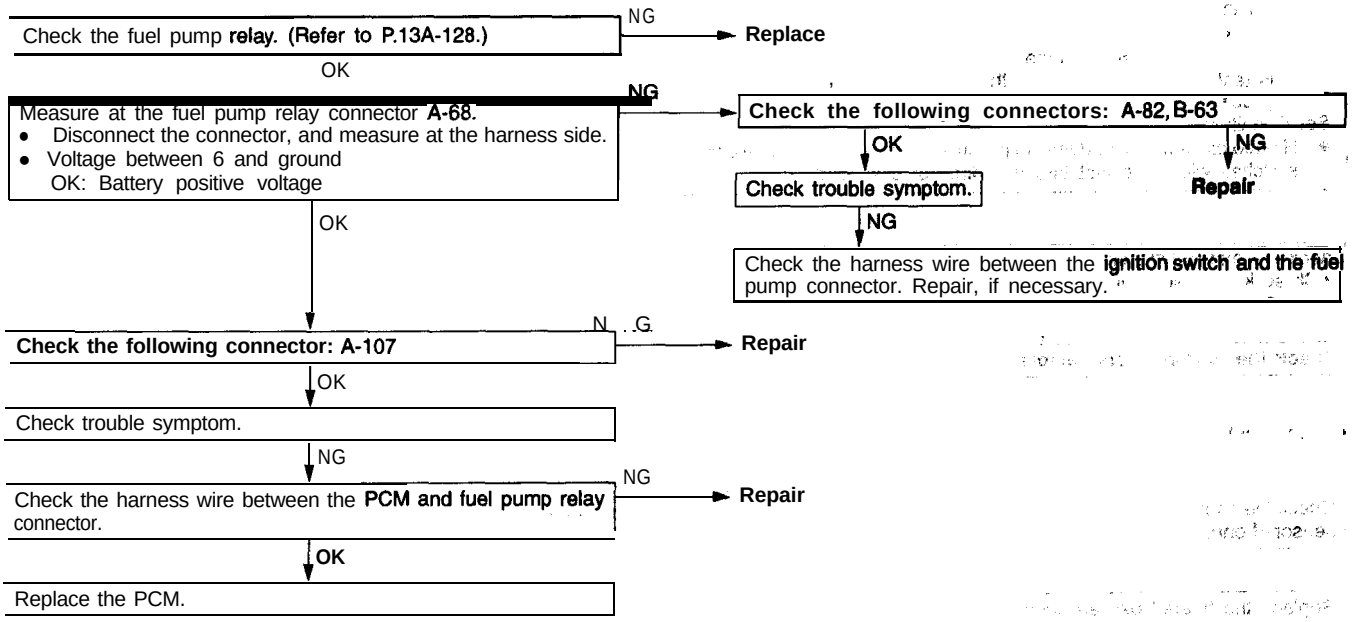

TSB Revision

Code No.	Scan tool 102 General scan tool P0133 MIL 21	Upstream HO2S Response	Probable cause
[Comment] Background • During closed-loop operation the PCM monitors the heated oxygen sensor response rate for proper operation. • Response rate is the time required for the heated oxygen sensor to switch from lean-to-rich once the sensor is exposed to a richer than the ideal air fuel mixture. • If the response rate is below the acceptable limit, the PCM stores a diagnostic trouble code. Range of Check • Engine coolant temperature greater than 76°C.(170°F) • Approximately three minutes elapsed time after start-up. • Vehicle has operated at more than 24mph for 75 seconds with engine coolant temperature at 76°C.(170°F) • Power steering pressure switch is off • Vehicle is at idle with engine speed between 512 and 864 r/min • This test may be inhibited if the A/C is cycling too rapidly. (Testing with the A/C off is suggested) Set Condition • Heated oxygen sensor does not produce 0.67 volt output and/or does not perform enough switches within the test threshold time of 6 seconds.			• Heated oxygen sensor failed • Exhaust system failed -Pipes -Manifold -seals • Wiring harness and connectors failed • PCM failed

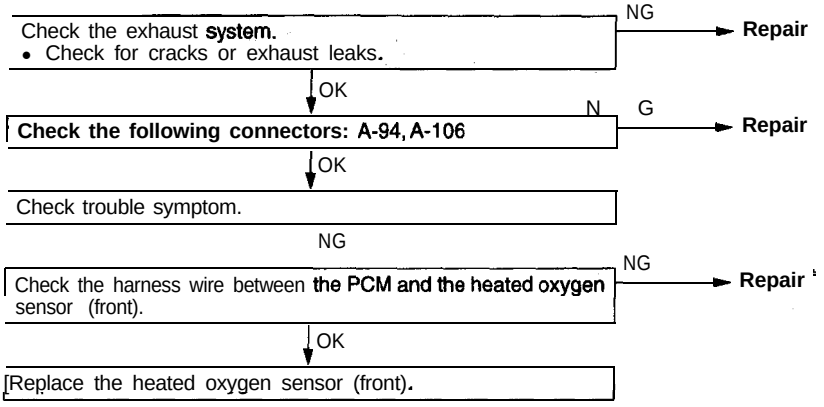

TSB Revision

Code No.	Scan tool 103 General scan tool P0135 MIL 21	Upstream HO2S Heater Failure	Probable cause
[Comment] Background • The PCM continues to monitor this system after the key is OFF. • The PCM waits some periods to allow the heated oxygen sensors to cool. • Once the PCM calculates that the heated oxygen sensor is cooled, it energizes the MFI relay (ASD relay) and tests for the heated oxygen sensor operation. Range of Check • 5 seconds or more after turning the ignition switch to OFF. • Battery positive voltage: 10 V *or more* • The heated oxygen sensor output line voltage rises by 0.49 V or more within 144 seconds after turning the ignition switch to OFF. • The initial rise of the output line voltage is less than 1.57 V. Set Condition • Heated oxygen sensor's circuit does not show the appropriate decrease of voltage during the test.			• Heated oxygen sensor heater open • Wiring harness and connectors failed

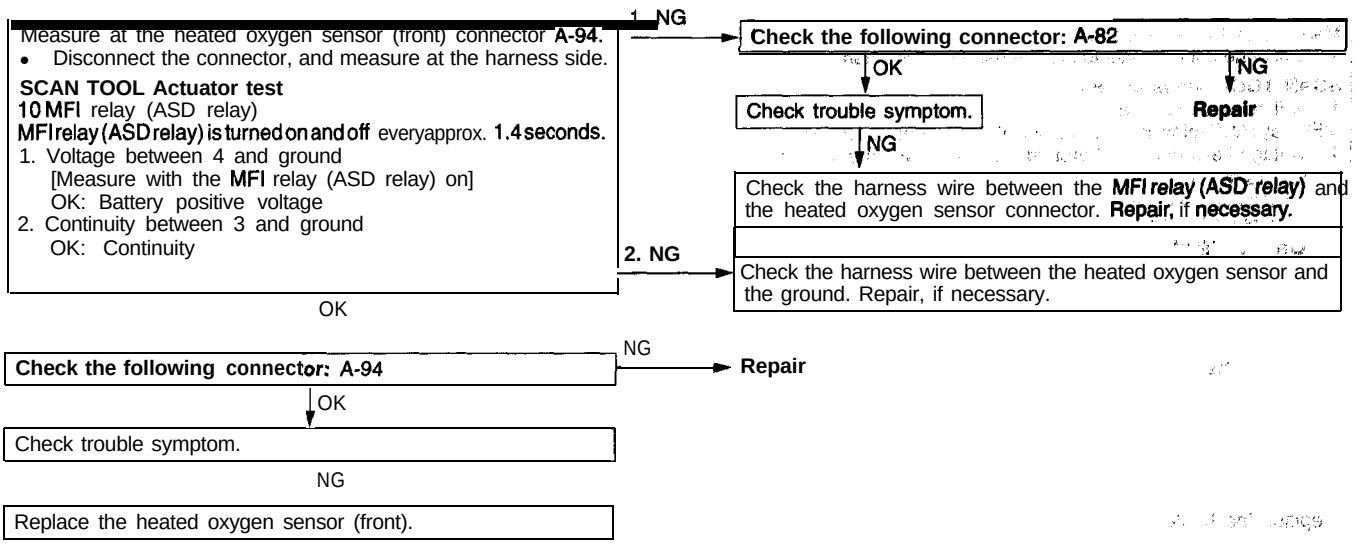

TSB Revision

Code No.	Scan tool 105 General scan tool P0141 MIL 21	Downstream HO2S Heater Failure	Probable cause
[Comment] Background • The PCM continues to monitor this system after the key is OFF. • The PCM waits some periods to allow the heated oxygen sensors to cool. • Once the PCM calculates that the heated oxygen sensor is cooled, it energizes the MFI relay (ASD relay) and tests for the heated oxygen sensor operation. Range of Check • 5 seconds or more after turning the ignition switch to OFF. • Battery positive voltage: 10 V or more • The heated oxygen sensor output line voltage rises by 0.49 V or more within 144 seconds after turning the ignition switch to OFF. • The initial rise of the output line voltage is less than 1.57 V. Set Condition • Heated oxygen sensor's circuit does not show the appropriate decrease of voltage during the test.			• Heated oxygen sensor heater open circuit • Wiring harness and connectors failed

Measure at the heated oxygen sensor (rear) connector C-15:
- Disconnect the connector, and measure at the harness side.

SCAN TOOL Actuator test
10 MFI relay (ASD relay)
MFI relay (ASD relay) is turned on and off everyapprox. 1.4 seconds.
1. Voltage between 3 and ground [Measure with the MFI relay (ASD relay) on]
   OK: Battery positive voltage
2. Continuity between 4 and ground
   OK: Continuity

1. NG → **Check the following connector: A-82**
   - OK → Check trouble symptom.
     - NG → Check the harness wire between the MFI relay (ASP relay) and the heated oxygen sensor connector. Repair, if necessary.
   - NG → Repair
2. NG → Check the harness wire between the heated oxygen sensor and the ground. Repair, if necessary.

OK ↓

Check the following connector: C-15 → NG → Repair

OK ↓

Check trouble symptom.

NG ↓

Replace the heated oxygen sensor (rear).

TSB Revision

Code No.	Scan tool 106 / General scan tool P0300 / MIL 43	Multiple Cylinder Mlsfire	Probable cause
[Comment] Background • Excessive engine misfire results in increased catalyst temperature. • Severe misfire could cause catalyst damage. • To prevent catalytic converter damage, the PCM monitors engine misfire. • The PCM monitors for misfire during most engine operating conditions. • When a misfire is detected, the PCM stores a diagnostic trouble code and causes the MIL to either flash or illuminate continuously during active misfire. Range of Check • MAP voltage is less than 1.60 V. • Engine speed is between 2200 and 2800 r/min • Engine coolant temperature is greater than 80°C. (176°F) • Vehicle speed less than 3mph Set Condition • 1000 Rev Misfire The PCM detects misfire in more than 1.6% of the engine cycles in a 1000 revolution period. • 200 Rev Misfire The PCM detects misfire in more than 15% of the engine cycles in a 200 revolution period.			• Spark plugs or wires failed • Ignition coil failed • Crankshaft position sensor failed • Worn piston rings • Worn valves • Head gasket failed • Cracked head • Fuel lines and filter failed • Fuel pressure regulator failed • Injectors failed • Wiring harness and connectors failed • Engine coolant temperature sensor failed • Timing belt tooth broken, • EGR valve failed

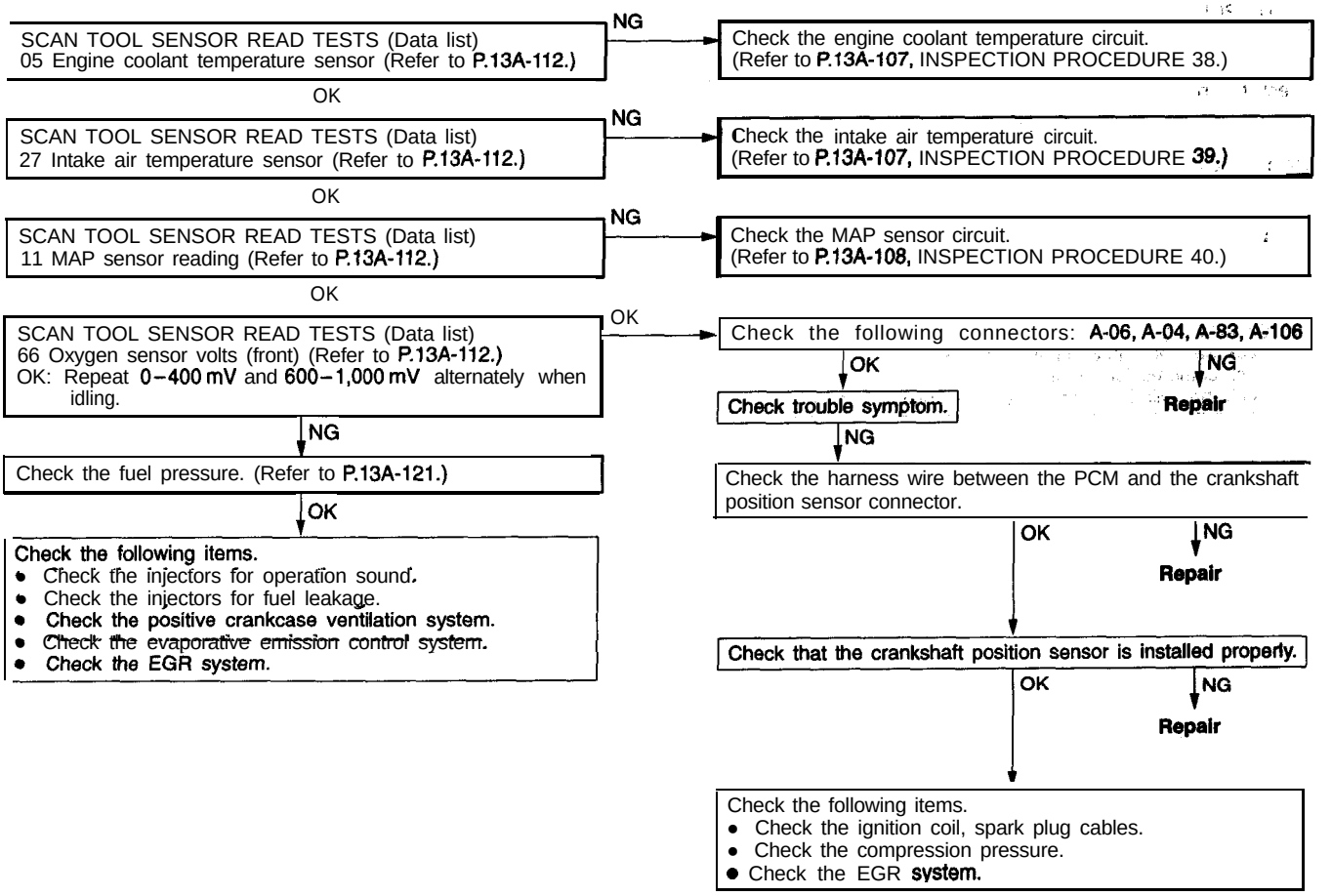

TSB Revision

Code No.	Scan tool 107, 108, 109, 110 General scan tool P0301, P0302, P0303, P0304 MIL 43	Cylinder #1 Misfire Cylinder #2 Misfire Cylinder #3 Misfire Cylinder #4 Misfire	Probable cause
[Comment] Background • Excessive engine misfire results in increased catalyst temperature. • Severe misfire could cause catalyst damage. • To prevent catalytic converter damage, the PCM monitors engine' misfire. • The PCM monitors for misfire during most engine operating conditions. • When a misfire is detected, the PCM stores a diagnostic trouble code and causes the MIL to either flash or illuminate continuously during active misfire. Range of Check • MAP voltage is less than 1.60 V • Engine speed is between 2200 and 2800 r/min • Engine coolant temperature is greater than 80°C.(176°F) • Vehicle speed less than 3mph Set Condition • 1000 Rev Misfire The PCM detects misfire in more than 1.6% of the engine cycles in a 1000 revolution period. • 200 Rev Misfire The PCM detects misfire in more than 15% of the engine cycles in a 200 revolution period.			• Spark plugs or wires failed • Worn piston rings • Worn valves • Head gasket failed • Cracked head • Injector failed • Wiring harness and connectors failed

Check the injector (Refer to P.13A-132.) — NG → Replace
↓ OK
Check the following connectors: A-50, A-56, A-61, A-74, A-93, A-106 — NG → Repair
↓ OK
Check the harness wire between the ECM and the injector connector. — NG → Repair
↓ OK

Check the following items.
- Check the spark plug, spark plug cables.
- Check compression pressure.
- Check the cylinder head gasket and intake manifold gasket for damage.

TSB Revision

Code No.	Scan tool 112 General scan tool P0422 MIL 64	Catalytic Converter Efficiency Failure	Probable cause
[Comment] Background • During normal closed-loop operation, the PCM monitors the catalytic converter for hydrocarbon conversion (HC) efficiency. • When HC conversion drops below 60 percent efficiency, the PCM stores a diagnostic trouble code. Range of Check • Engine coolant temperature greater than 76°C (170°F) • Vehicle speed greater than 20mph for 2 minutes • Open throttle • Closed loop operation • Engine speed between 1248 and 2400 r/min • MAP voltage between 1.50 and 2.60 V Set Condition • The switch (Lean/Rich) rate of the rear heated oxygen sensor reaches 70% of the front sensors switch rate.			• Catalytic converter failed • Heated oxygen sensor failed • Exhaust manifold failed (leaks) • Wiring harness/connector failed • PCM failed

Check the exhaust system.
- Check for cracks or exhaust leaks.

NG → Replace the exhaust manifold.

OK ↓

SCAN TOOL SENSOR READ TESTS (Data list)
63 Downstream heated oxygen sensor volts
(Refer to P.13A-112).
- Transaxle: L range
- Drive with wide-open throttle
  OK: 600 – 1000 mV

NG → Check the heated oxygen sensor (rear) circuit (Refer to P.13A-108, INSPECTION PROCEDURE 41).

OK ↓

SCAN TOOL SENSOR READ TESTS (Data list)
02 Upstream heateed oxygen sensor volts
(Refer to P.13A-112).
OK: 600 – 1000 mV during sudden racing

NG → Check the heated oxygen sensor (front) circuit (Refer to P.13A-109, INSPECTION PROCEDURE 42).

OK ↓

SCAN TOOL SENSOR READ TESTS (Data list)
02 Upstream heated oxygen sensor volts
(Refer to P.13A-112).
OK Repeat 0 – 400 mV and 600 – 1000 mV alternately when idling.

NG → Replace the heated oxygen sensor (front).

OK ↓

Replace the heated oxygen sensor (rear).

↓

Check trouble symptom.

NG

Replace the catalytic converter.

NG ↓

Check trouble symptom.

NG ↓

Replace the PCM.

TSB Revision

Code No.	Scan tool 113 General scan tool P0441 MIL 31	Evaporative Purge Flow Monitor Failure	Probable cause
[Comment] Background • This is a functionality test. • If the fuel control doesn't sense purge vapor flow from the canister, this code will be set. Range of Check • Difference between the long-ten adaptive memory values (fuel injection compensation value) is less than 5 % shift injector pulse width when the evaporative purge solenoid is turned on and off. • Engine speed: less than 2048 r/min • MAP sensor output voltage: 1.38–2.0 V • MAP sensor value pressure right after ignition switch ON: lees than 87 kPa (12.6 psi) • Vehicle speed: 28-48 mph • Driving at a constant speed • The above conditions continue for at least 1 minute. Set Condition • There is little difference (1 failed count) between the MAP sensor output voltages (on the average for 2 seconds) when the evaporative purge solenoid is turned on and off. • Failures counted exceed 6 times while engine starts and then stops.			• Purge line clogged • Vacuum hose failed • Evaporative purge solenoid failed • Evaporative emission canister clogged

Check the vacuum hoses. (Refer to GROUP 17 – Emission Control System.) —NG→ Repair

↓ OK

Check the purge control system. (Refer to GROUP 17 – Emission Control System.)

TSB Revision

Code No.	Scan tool 114 General scan tool P1899 MIL 37	Park/Neutral Position (PNP) Switch (transaxle range switch) Failure	Probable cause
[Comment] Background • The diagnostics for the transaxle range sensor are divided into two categories. • The first is trying to identify if the transaxle range sensor is indicating park or neutral while driving. • The second involves identifying a condition in which the vehicle is in park or neutral but the PCM indicates drive or reverse. Range of Check • Vehicle speed greater than 80 km/h (50 mph) • Engine speed between 1984 and 4480 r/min • Throttle position sensor voltage is greater than 0.49 volts above minimum throttle position sensor. • MAP is greater than 66% of barometric pressure Set Condition • Transaxle range sensor output voltage: Low Range of Check • MFI relay (ASD relay): ON • Engine is cranking Set condition • Transaxle range sensor output voltage: High			• Transaxle range sensor failed • Transaxle range sensor related circuit failed • PCM failed'

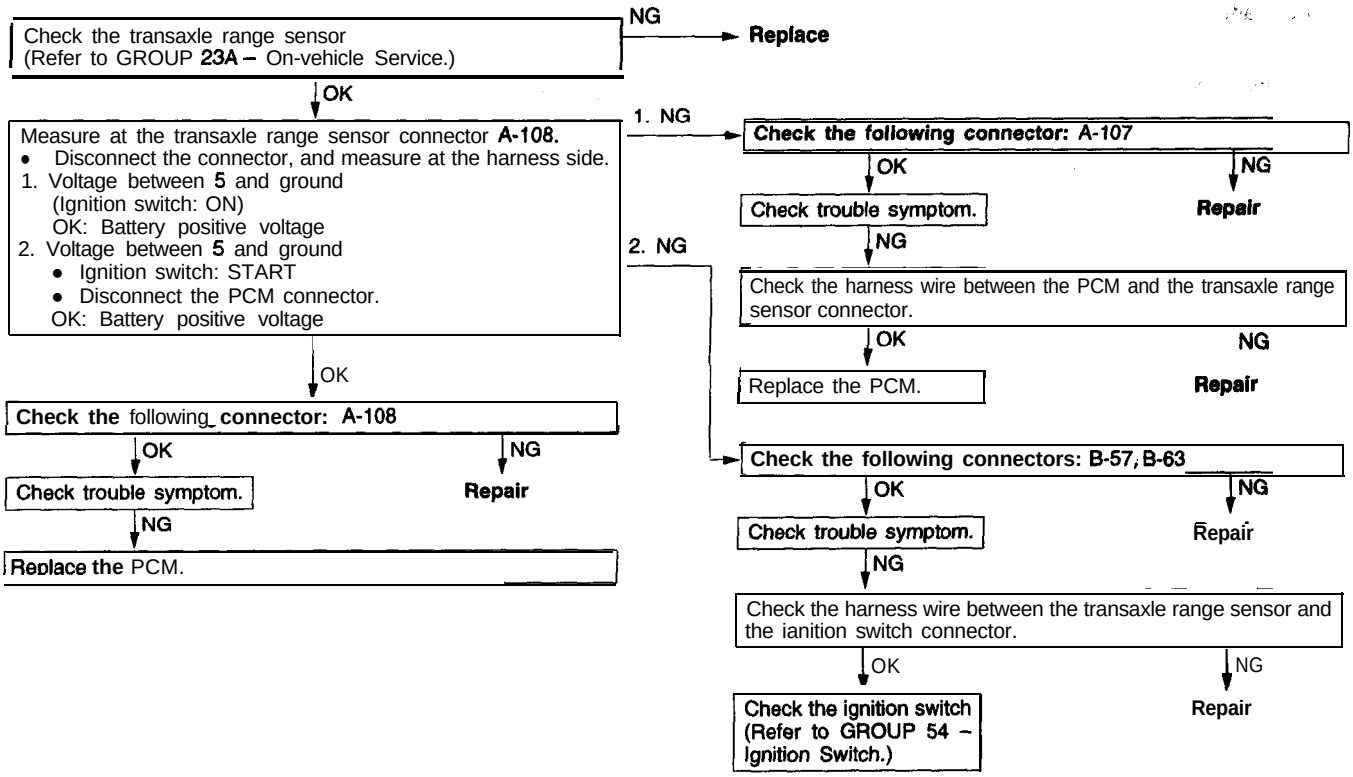

Code No.	Scan tool 115 / General scan tool MIL 65	Power Steering Pressure (PSP) Switch Failure	Probable cause
P0551			

[Comment]
Background
- Data from the PSP switch allows the PCM to compensate for the additional load put on the engine during steering maneuvers that require high steering pump pressure.

Range of Check
- Vehicle speed: 90 km/h (56 mph)

Set Condition
- PSP switch output voltage: High for 30 seconds

Probable cause
- PSP switch failed
- Wiring harness and connectors failed

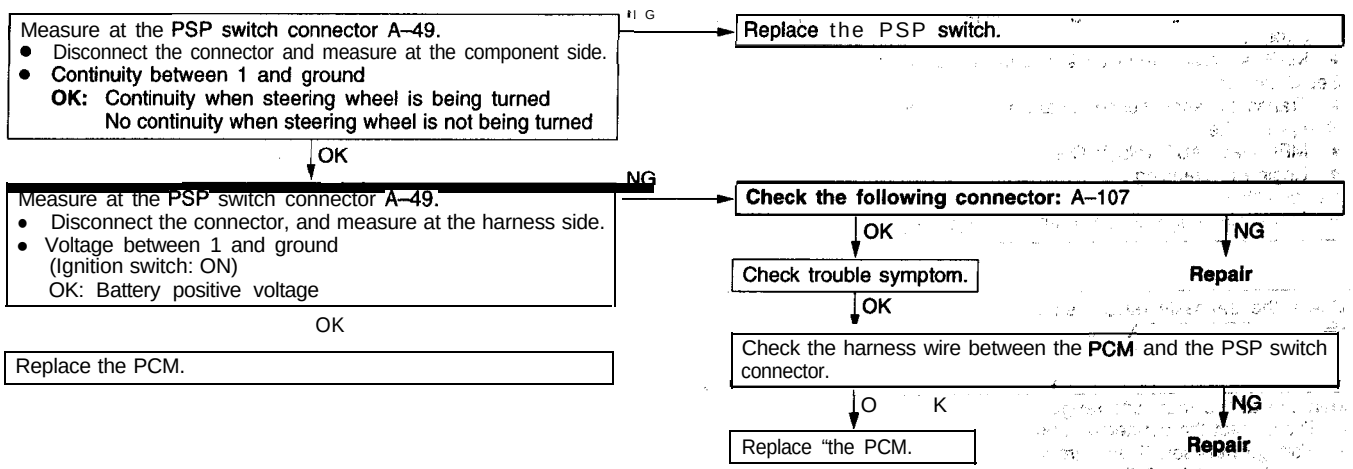

TSB Revision

Code No.	Scan tool 118 / General scan tool P0172 / MIL 52	Fuel System Rich	Probable cause
[Comment] Background • The PCM monitors the fuel system for compliance with emission standards:' Range of Check • Engine coolant temperature is greater than 76°C.(170°F). • Closed loop operation Set Condition • The test fails if the fuel control system reduces pulse width by 25% long term memory and 7% short term compensation due to a rich condition.			• Engine coolant temperature sensor failed • Intake air temperature sensor failed • Head gasket 'failed • Exhaust manifold cracked • , Injectors failed • MAP sensor failed • Heated oxygen sensor failed, • Fuel pressure regulator failed • Wiring harness/connectors failed • Incorrect fuel used • PCM failed

SCAN TOOL SENSOR READ TESTS (Data list)
05 Engine coolant temperature sensor. (Refer to P.13A-112.)

NG → Check the engine coolant temperature circuit. (Refer to P.13A-107, INSPECTION -PROCEDURE 38.)

OK ↓

SCAN TOOL SENSOR READ TESTS (Data list)
27 Intake air temperature sensor (Refer to P.13A-112.)

NG → Check the intake air temperature circuit. (Refer to P.13A-107 INSPECTION PROCEDURE 39.)

OK ↓

SCAN TOOL SENSOR READ TESTS (Data list)
11 MAP sensor reading (Refer to P.13A-112.)

NG → Check the MAP sensor circuit. (Refer to P.13A-108, INSPECTION PROCEDURE 40.)

OK ↓

SCAN TOOL SENSOR READ TESTS (Data list)
63 Oxygen sensor volts (rear) (Refer to P.13A-112)
• Transaxle: 2nd gear <M/T>, L range <A/T>
• Drive with wide-open throttle
OK: 600–1,000 mV

NG → Check the heatedoxygen sensor (rear) circuit. (Refer to P.13A-108, INSPECTION PROCEDURE 41.)

OK ↓

SCAN TOOL SENSOR READ TESTS (Data list)
02 Oxygen sensor volts (front) (Refer to P.13A-112.)
OK: 600–1,000 mV during sudden racing

NG → Check the heated oxygen sensor (front) circuit. (Refer to P.13A-109, INSPECTION PROCEDURE 42.)

OK ↓

SCAN TOOL SENSOR READ TESTS (Data list)
02 Oxygen sensor volts (front) (Refer to P.13A-112.)
OK: Repeat 0–400 mV and 600–1,000 mV alternately when idling.

OK → Check the following items.

NG ↓

Check the fuel pressure. (Refer to P.13A-121.)

OK ↓

Check the following items.
• Check the injectors for operation sound.
• Check the injectors for leakage.
• Check the evaporative emission control system.
• Check for contamination (water, kerosene, etc.) in the fuel.

TSB Revision

Code No.	Scan tool 119 General scan tool P0171 MIL 51	Fuel System Lean	Probable cause
[Comment] Background • The PCM monitors the fuel system for compliance with emission standards. Range of Check • Engine coolant temperature is greater than 76°C(170°F). • Closed loop operation Set Condition • The test fails if the fuel control system increases pulse width by 25% long term memory and 12% short term compensation due to a lean condition.			• Engine coolant temperature sensor failed • Intake air temperature sensor failed • Head gasket failed • Exhaust manifold cracked • Injectors failed • MAP sensor failed • Heated oxygen sensor failed • Fuel pressure regulator failed • Wiring harness/connectors failed • Fuel filter or fuel line blocked • Fuel pump failed (insufficient discharge) • Incorrect fuel used • PCM failed

SCAN TOOL SENSOR READ TESTS (Data list)
05 Engine coolant temperature sensor (Refer to P.13A-112.)

NG → Check the engine coolant temperature circuit. (Refer to P.13A-107, INSPECTION PROCEDURE 38.)

OK ↓

SCAN TOOL SENSOR READ TESTS (Data list)
27 Intake air temperature sensor (Refer to P.13A-112.)

NG → Check the intake air temperature circuit. (Refer to P.13A-107, INSPECTION PROCEDURE 39.)

OK ↓

SCAN TOOL SENSOR READ TESTS (Data list)
11 MAP sensor reading (Refer to P.13A-112.)

NG → Check the MAP sensor circuit. (Refer to P.13A-108, INSPECTION PROCEDURE 40.)

OK ↓

SCAN TOOL SENSOR READ TESTS (Data list)
63 Oxygen sensor volts (rear) (Refer to P.13A-112.)
- Transaxle: 2nd gear <M/T>, L range <A/T>
- Drive with wide-open throttle

OK: 600–1,000 mV

NG → Check the heated oxygen sensor (rear) circuit. (Refer to P.13A-108, INSPECTION PROCEDURE 41.)

OK ↓

SCAN TOOL SENSOR READ TESTS (Data list)
02 Oxygen sensor volts (front) (Refer to P.13A-112.)
OK: 600–1,000 mV during sudden racing

NG → Check the heated oxygen sensor (front) circuit. (Refer to P.13A-109, INSPECTION PROCEDURE 42.)

OK ↓

SCAN TOOL SENSOR READ TESTS (Data list)
02 Oxygen sensor volts (front) (Refer to P.13A-112.)
OK: Repeat 0–400 mV and 600–1,000 mV alternately when idling.

OK → Check the following items.

NG ↓

Check the fuel pressure. (Refer to P.13A-121.)

OK ↓

Check the following items.
- Check the injectors for operation sound.
- Clean the injectors.
- Check the positive crankcase ventilation system.
- Check the fuel pump.
- Check the fuel filter and fuel line for blockages.
- Check for exhaust gas leaks.
- Check for contamination (water, kerosene, etc.) in the fuel.

TSB Revision

Code No.	Scan tool 126 General scan tool P01 38 MIL 21	Downstream HO2S Shorted to Voltage	Probable cause
[Comment] Background • Downstream heated oxygen sensor requires a heater circuit for proper operation. • The heater circuit is supplied with battery voltage through the MFI relay (ASD relay). • A failure in the sensors heater circuit prevents it from providing accurate data to the PCM. • If the PCM monitors more than 1.2 volts, the sensor has shorted to heater circuit voltage. Range of Check • Two or more minutes after the engine starts • Engine coolant temperature: 80°C (176°F) or more Set Condition • Heated oxygen sensor output voltage is more than 1.2 V for 3 seconds.			• Heated oxygen sensor failed • Wiring harness and connectors failed • PCM failed

Check the heated oxygen sensor (rear). (Refer to P.13A-130.) — NG → Replace
↓ OK
Check the following connectors: C–15, A–107 — NG → Repair
OK
Check trouble symptom.
↓ NG
Check the harness wire between the PCM and the heated oxygen sensor (rear) connector. — NG → Repair
OK
Replace the PCM.

Code No.	Scan tool 128 General scan tool P0125 MIL 17	Closed Loop Temperature Not Reached	Probable cause
[Comment] Background • The fuel control system remains in open loop due to low engine temperature. • This DTC will be stored if engine temperature remains below/16°C (60°F) for 10 minutes of operation and no engine coolant temperature sensor code has been set. Range of Check • Engine: running Set Condition • Engine coolant temperature does not exceed 16°C (60°F) after 10 minutes have passed since starting the engine.			• Thermostat fully open • Engine coolant temperature sensor failed • Engine coolant temperature sensor connector improperly connected • PCM failed,

Check the thermostat. (Refer to GROUP 14 – Thermostat.) — NG → Replace
OK
Check the engine coolant temperature sensor. (Refer to P.13A-129.) — NG → Replace
↓ OK
Check the following connectors: A-106, A-97 — NG → Repair
↓ OK
Check trouble symptom.
↓ NG
Check the harness wire between the PCM and the engine coolant temperature sensor connector. — NG → Repair
OK
Replace the PCM.

TSB Revision

Code No.	Scan tool 129 General scan tool P0140 MIL 21	Downstream HO2S Stays at Center	Probable cause
[Comment] Background • Sensor output voltage is checked. • If voltage stays at center instead of switching, an open circuit is likely. Range of Check • 2 minutes after starting engine • Engine coolant temperature: More than 80°C (176°F) Set Condition • Neither rich nor lean condition is detected from the downstream heated oxygen sensor input. (Voltage is 0.5 volts for 1.5 minutes)			• Heated oxygen sensor (rear) failed • Sensor signal circuit open • PCM failed

Check the heated oxygen sensor (rear). (Refer to P.13A-130.) — NG → Replace
OK
Check the following connectors: A-94, A-107 — NG → Repair
OK
Check trouble svmptom.
NG
Check the harness wire between the PCM and the heated oxygen sensor (rear) connector. — NG → Repair
OK
Replace the PCM.

Code No.	Scan tool 132 General scan tool P0121 MIL 24	Throttle Position Does Not Agree With Map	Probable cause
[Comment] Background • This DTC indicates a failure in the rationality check comparing MAP values to throffle position. Range of Check • Engine speed: less than 1,500 r/min • Subtract MAP value from atmospheric pressure: more than 13 kPa (19 psi) [when atmospheric pressure is more than 77 kPa (11 psi)] more than 6 kPa (0.9 psi) [when atmospheric pressure is less than 77 kPa (11 psi)] Set Condition • Throttle position sensor output voltage is 3.75-4.71 V. Range of Check • Engine speed: more than 1,500 r/min • Vehicle speed: more than 25 mph • Subtract MAP value from atmospheric pressure: less than 13 kPa (19 psi) Set Condition • Throttle position sensor output voltage is 0.16–0.70 V.			• Throttle position sensor failed • Throttle position sensor related circuit failed • MAP sensor failed • MAP sensor related circuit failed

SCAN TOOL SENSOR READ TESTS (Data list) 07 Throffle position (Refer to P.13A-112.) — NG → Check the throffle position sensor system. (Refer to P.13A-36, INSPECTION PROCEDURE FOR DIAGNOSTIC TROUBLE CODE 26/P0122/24) (Refer to P.13A-37, INSPECTION PROCEDURE FOR DIAGNOSTIC TROUBLE CODE 27/P0123/24)
OK
SCAN TOOL SENSOR READ TESTS (Data list) 69 MAP gauge reading (Refer to P.13A-112.) — NG → Check the MAP sensor system. (Refer to P.13A-41, INSPECTION PROCEDURE FOR DIAGNOSTIC TROUBLE CODE 36/P0107/14) (Refer to P.13A-42, INSPECTION PROCEDURE FOR DIAGNOSTIC TROUBLE CODE 37/P0108/14)
OK
Replace the PCM.

TSB Revision

Code No.	Scan tool 133 General scan tool P1390 MIL 11	Timing Belt Skipped 1 Tooth or More	Probable cause
[Comment] Background • The PCM uses voltage signals generated by the camshaft position sensor and crankshaft position sensors to determine engine synchronization. • if these signals become out of sync, this DTC is produced. Range of Check • With the engine running, every 44 ms an inhibit condition is looked for as follows: wide-open throttle, large change in MAP, cold engine, insufficient start to run time, r/min outside given windows • if an inhibit condition does not exist, the misalignment between the camshaft and crankshaft is monitored. Set Condition • When the camshaft position sensor is offset from the crankshaft position sensor one tooth or more.			• Timing belt improperly installed • Crankshaft position sensor improperly installed • Camshaft position sensor improperly installed. • Camshaft position sensor connector improperly connected • Crankshaft position sensor connector improperiy connected • Camshaft's relative position not relearned after one of the following have been serviced: camshaft, camshaft sprocket, timing. belt, tensioner, cylinder head, head gasket, crankshaft sprocket, crankshaft, cylinder block or the PCM

Check the following connectors: A-81, A-04, A-106, A-107 → NG → Repair

↓ OK

Check the camshaft position sensor. (Refer to GROUP 16 – Ignition System.) → NG → Repair

OK

Check the crankshaft position sensor. (Refer to GROUP 16 – Ignition System.) → NG → Repair

OK

Check the timing belt. (Refer to GROUP 11 – Timing Belt.)

Caution

When the following parts are replaced with new ones, be sure to use the scan tool to synchronize the camshaft position sensor with the crankshaft position sensor again or disconnect the negative battery cable for 10 seconds or more:
camshaft, camshaft sprocket, timing belt, tensioner, cylinder head, head gasket, crankshaft sprocket, crankshaft, cylinder block, etc.

TSB Revision

Code No.	Scan tool 135 General scan tool P1296 MIL 14	No 5 Volts to MAP Sensor	Probable cause
[Comment] Background • The voltage of 5 volts is supplied to the MAP sensor. if this voltage is extremely low, the MAP sensor output deviates from standard value. Range of Check • Before starting engine and immediately after stopping engine Set Condition • The output voltage of MAP sensor is lower than the specified value.			• Open 5-volts supply circuit • Signal circuit grounded • Sensor failed • PCM failed

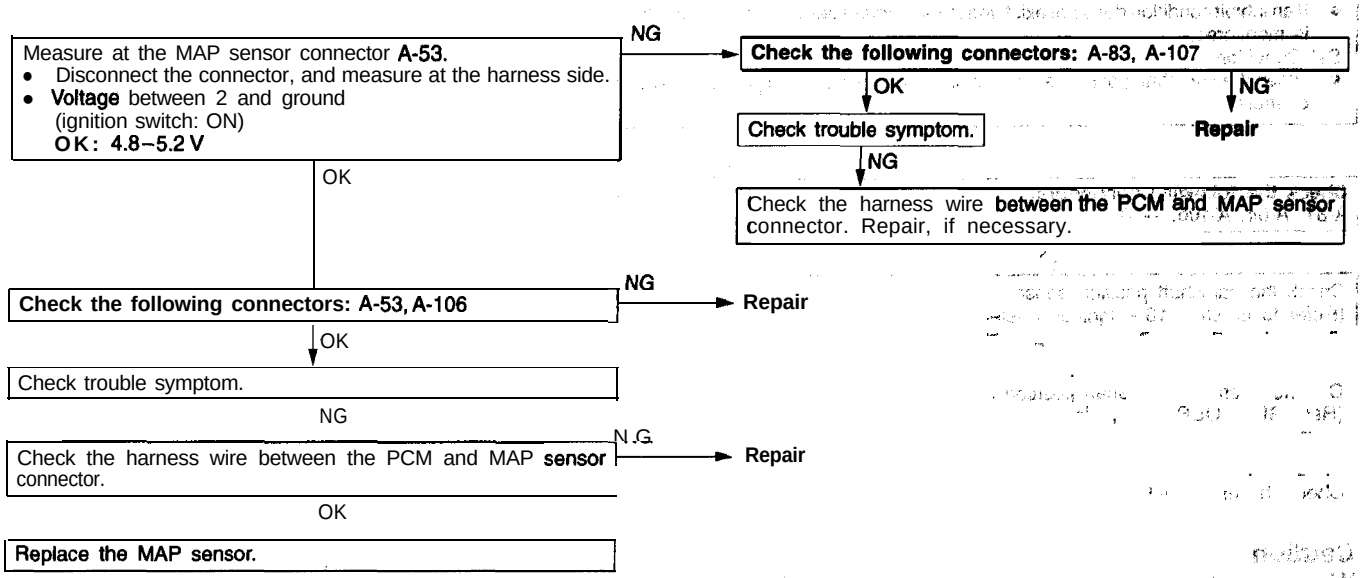

Code No.	Scan tool 136 General scan tool P1295 MIL 24	No 5 Volts to Throttle Position Sensor	Probable cause
[Comment] Background • The voltage of 5 volts is supplied to the TPS. if this voltage is extremely low, the TPS output deviates from standard value. Range of Check • Vehicle speed: More than 20 mph • Engine speed: 1500 r/min or more • Manifold vacuum: Less than 13 kPa (4 in.Hg) Set Condition • The output voltage of TPS is lower than the specified value.			• Sensor signal circuit grounded • Throttle position sensor failed . Loss of 5-volt supply

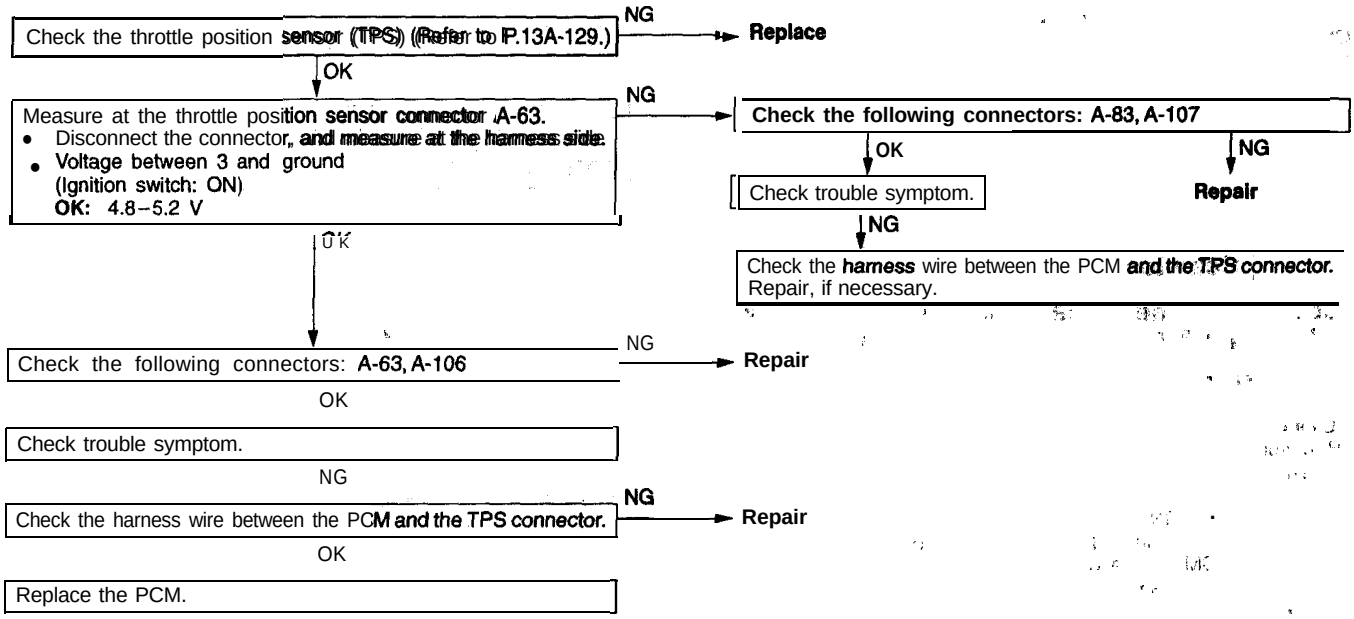

Code No.	Scan tool 137 General scan tool P0700 MIL 45	EATX Controller DTC Present	Probable cause
[Comment] Background The transaxle control module (TCM) monitors the malfunctions of sensors and actuators regarding the transaxle control. if any malfunction is detected, the TCM informs the PCM by sending a signal. Range of Check, Set Conditions A malfunction signal is input from the TCM.			• Sensors and actuators related to transaxle control • TCM failed • PCM failed

Check the TCM (Refer to GROUP 23A – Troubleshooting.)

TSB Revision

Code No.	Scan tool 138 General scan tool P1294 MIL 25	Target Idle Not Reached	Probable cause
[Comment] Range of Check • Engine: Idle • Vehicle at rest and the brake applied Set Condition • Idle speed differs from target idle by 200 r/min for 12 seconds.			• Idle air control motor failed • IAC (AIS) motor related circuit failed

SCAN TOOL SENSOR READ TESTS (Data list)
12 IAC (AIS) position (Refer to P.13A-112.)

NG → Check the idle air control motor. (Refer to P.13A-132.)

OK → NG → Replace

Check the idle air control motor system. (Refer to P.13A-35 INSPECTION PROCEDURE FOR DIAGNOSTIC TROUBLE CODE 25/P0505/25)

OK

Check the throttle body minimum air flow. (Refer to P.13A-119.)

Code No.	Scan tool 139 General scan tool P1487 MIL 35	High Speed Radiator Fan Control Relay Circuit	Probable cause
[Comment] Background • The high speed radiator fan relay controls the high speed operation of the radiator fan. • One side of the relay control coil is supplied with 12 volts when the ignition switch is turned to the ON position. • The circuit is completed when the other side of the relay coil is grounded by the PCM. • The PCM grounds the relay control circuit depending on engine coolant temperature and/ or A/C compressor condition, etc. Range of Check • Battery voltage: 10 V or more • Ignition switch: ON Set Condition • An open or shorted condition is detected in the high speed radiator fan relay control circuit for 3 seconds.			• Relay coil open or shorted • Ignition switch output circuit open • Low speed radiator fan relay control circuit open or shorted • PCM failed

Measure at the PCM connector A-107.
• Disconnect the connector, and measure at the harness side.
• Voltage between 69 and ground
(Ignition switch: ON)
OK: Battery positive voltage
• Connect a jumper wire between 69 and ground
(Ignition switch: ON)
OK: Radiator fan runs at high speed.

NG → Check the radiator fan circuit.

OK ↓

Check the following connector: A-107

NG → Repair

OK ↓

Check trouble symptom. 1

NG ↓

Replace the PCM.

TSB Revision

Code No.	Scan tool 146 General scan too! P1496 MIL 14	5 Volts Supply output Too Low'	Probable cause
[Comment] Background • The PCM supplies a regulated B-volts to the TPS, and MAP sensor. • This DTC is set when both the TPS and MAP sensors have the sensing circuit indicating too low of voltage. Range of Check • Ignition switch: ON Set Condition • 5-volts feed circuit drops below 4 volts for over four seconds.			• 5-volts supply circuit grounded • PCM failed

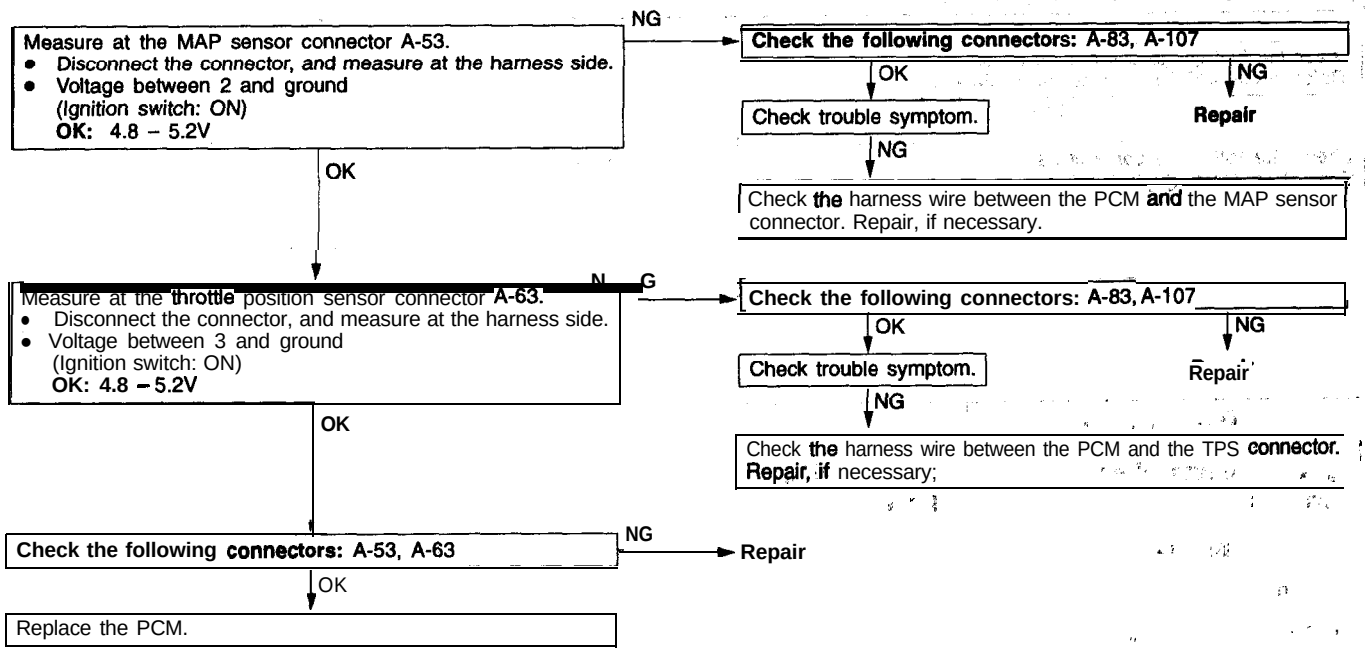

TSB Revision

Code No.	Scan tool 149 General scan tool – MIL 42	Fuel Level Sending Unit Volts Too Low	Probable cause
[Comment] Background • The fuel level sensor, which is installed in the fuel tank, informs the PCM of fuel level (amount). • The PCM does not carry out a specific OBD-II monitor when the fuel amount is small or large. Range of Check • Battery positive voltage: 13 – 15 V • Engine is running Set Conditions The fuel level sensor output voltage is less than 0.1 V.			• Sensor signal line is grounded. • Fuel level sensor failed • Loss of voltage supply

Check the fuel gauge unit and its circuit.
(Refer to GROUP 54 – Combination Meters.)

↓ OK

Check the following connectors:
E-36, B-71, C-24, C-22, A-106

NG → **Repair**

↓ OK

Check trouble symptom.

NG → Check the harness wire between the PCM and fuel level sensor connector.

↓ OK → Replace the PCM.

↓ NG → **Repair**

Code No.	Scan tool 150 General scan tool – MIL 42	Fuel Level Sending Unit Volts Too High	Probable cause
[Comment] Background • The fuel level sensor, which is installed in the fuel tank, informs the PCM of fuel level (amount.) • The PCM does not carry out a specific OBD-II monitor when the fuel amount is small or large. Range of Check • Battery positive voltage: 13 – 15 V • Engine is running Set Conditions The fuel level sensor output voltage is less than 4.5 V.			• Sensor signal line is grounded. • Fuel level sensor failed • Open sensor ground circuit

Check the fuel gauge unit and its circuit.
(Refer to GROUP 54 – Combination Meters.)

↓ OK

Check the following connectors: E-36, B-71, C-24, C-22, A-I 06

NG → **Repair**

↓ OK

Check trouble symptom.

NG → Check the harness wire between the PCM and fuel level sensor connector.

↓ OK → Replace the PCM.

↓ NG → **Repair**

TSB Revision

Code No.	Scan tool 151	Fuel Level Unit No Change Over Miles	Probable cause
	General scan tool –		
	MIL 42		

[Comment]
Background
- The fuel level sensor, which is installed in the fuel tank, informs the PCM of fuel level (amount).
- The PCM does not carry out a specific OBD-II monitor when the fuel amount is small or large.

Range of Check
- Battery positive voltage: 13 – 15 V
- Engine is running

Set Conditions
The fuel level signal does not change according to the fuel consumption by driving.

- Fuel level sensor failed
- PCM failed

Check the fuel gauge unit and its circuit.
(Refer to GROUP 54 – Combination Meters.)

↓ OK

Check the following connectors: E-36, B-71, C-24, C-22, A-I 06 → NG → **Repair**

↓ **OK**

Check trouble symptom.

↓ NG

Check the harness wire between the PCM and fuel level sensor connector. → NG → **Repair**

↓ OK

Replace the PCM.

Code No.	Scan tool 153	Battery Temperature Sensor Voltage Too Low	Probable cause
	General scan tool P1493		
	MIL 44		

[Comment]
Background
Battery temperature input is used to adjust the generator charging rate based upon the ambient temperature around the battery.
Range of Check
Ignition switch: ON
Set Conditions
The sensor voltage remains less than 0.3 V for 3 seconds.

- Battery temperature sensor failed
- PCM failed

Replace the PCM.

TSB Revision

Code No.	Scan tool 154 General scan tool P1492 MIL 44	Battery Temperature Sensor Voltage Too High	Probable cause
[Comment] Background Battery temperature input is used to adjust the generator charging rate based upon the ambient temperature around the battery. Range of Check Ignition switch: ON Set Conditions The sensor voltage remains more than 4.9 V for 3 seconds.			• Battery temperature sensor failed • PCM failed

Replace the PCM.

Code No.	Scan tool 155 General scan tool P0131 MIL 21	Upstream HO2S Shorted to Ground	Probable cause
[Comment] Background • When the heated oxygen sensor temperature is low, the sensor has the same electrical characteristics as an insulator. • The heated oxygen sensor output signal line is restricted to 5V. That is why the line voltage is approx. 5V when the heated oxygen sensor temperature is low. • If the heated oxygen sensor output signal line is grounded, its voltage will become low. Range of Check • Engine coolant temperature when the engine starts: 49°C (120°F) or less • Within three seconds after the engine starts Set Conditions The heated oxygen sensor output signal line is 0.16V or less.			• Upstream, heated oxygen sensor failed • Wiring harness and connectors failed • PCM failed

Check the harness wire between the PCM and upstream heated oxygen sensor connector. —NG→ Repair

↓OK

Replace the PCM.

TSB Revision

Code No.	Scan tool 156 General scan tool P0137 MIL 21	Downstream HO2S Shorted to Ground	Probable cause
[Comment] Background • When the heated oxygen sensor temperature is low, the sensor has the same electrical characteristics as an insulator. • The heated oxygen sensor output signal line is restricted to 5V. That is why the line voltage is approx. 5V when the heated oxygen sensor temperature is low. • If the heated oxygen sensor output signal line is grounded, its voltage will become low. Range of check • Engine coolant temperature when the engine starts: 49°C (120°F) or less • Within three seconds after the engine starts Set Conditions The heated oxygen sensor output signal line is 0.16V or less.			• Downstream heated oxygen sensor failed • Wiring harness and connectors failed • PCM failed

Check the harness wire between the PCM and downstream heated oxygen sensor connector. —NG→ Repair

↓ OK

Replace the PCM.

Code No.	Scan tool 157 General scan tool P1391 MIL 11	Intermittent Loss of CMP or CKP	Probable cause
[Comment] Background • After the engine has been started, the PCM maintains an expected camshaft port level value. • At every 69-degree crankshaft leading edge, this value is updated to reflect the expected change in the cam level. • At every crankshaft trailing edge, this value is compared to the true camshaft port level. • If there is a disagreement between the two values, then the diagnostic trouble code is set. Range of Check • Engine: running Set Condition • Cam and crank signals have been out of sync, more than 5 times.			• Camshaft position sensor connector improperly connected • Crankshaft position sensor connector improperly connected • Camshaft position sensor related circuit failed • Crankshaft position sensor related circuit faed • Camshaft position sensor improperly installed • Crankshaft position sensor improperly installed

Check the following connectors:
A-81, A-04, A-I 06 —NG→ Repair

OK

Check no cam sync. signal at PCM. (Refer to P.13A-24, INSPECTION PROCEDURE FOR DIAGNOSTIC TROUBLE CODE. 01/P0340/54)
Check no crank reference signal at PCM. (Refer to P.13A-44, INSPECTION PROCEDURE FOR DIAGNOSTIC TROUBLE CODE. 40/P0335/11)

TSB Revision

Code No.	Scan tool 160 General scan tool P0442 MIL 31	EVAP Leak Monitor Small Leak Detected	Probable cause
[Comment] Background • The PCM monitors that the fuel tank, purge lines, etc. are sealed well. • When monitoring, the PCM pressurizes the purge lines by activating the evaporative emission ventilation solenoid with the canister ventilation valve (incorporated in the solenoid) closed. • If the fuel tank and purge lines are sealed correctly, the pressure will rise well by activating the solenoid specific times • After the pressure rises well, the diaphragm inside the solenoid will not work any more. • If the purge air leaks slightly, the solenoid will be activated more than specific times. Range of Check, Set Condition • The solenoid has been activated more than specific times.			• Fuel tank filler cap screwed on incorrectly • Fuel tank and purge lines, improperly sealed • Evaporative emission ventilation solenoid failed • Leaking from evaporative emission purge solenoid • PCM failed

Check the evaporative emission ventilation solenoid. (Refer to GROUP 17 – Emission Control System.) → NG → Replace

↓ OK

Check the evaporative emission purge solenoid. (Refer to GROUP 17 – Emission Control System.) → NG → Replace

↓ OK

Check the fuel tank and purge line for leakage.

Code No.	Scan tool 161 General scan tool P0455 MIL 31	EVAP Leak Monitor Large Leak Detected	Probable cause
[Comment] Background • The PCM monitors that the fuel tank, purge lines, etc. are sealed well. • When monitoring, the PCM pressurizes the purge lines by activating the evaporative emission ventilation solenoid with the canister ventilation valve (incorporated in the solenoid) closed. • If the fuel tank and purge lines are sealed correctly, the pressure will rise well by activating the solenoid specific times. • After the pressure rises well, the diaphragm inside the solenoid will not work any more. • If the purge air leaks excessively, the solenoid should be activated much more than specific times. Range of Check, Set Condition • The solenoid has been activated much more than specific times.			• Fuel tank filler cap screwed on incorrectly • Fuel tank and purge lines, improperly seated • Evaporative emission ventilation solenoid failed • Leaking from evaporative emission purge solenoid • PCM failed

Check the evaporative emission ventilation solenoid. (Refer to GROUP 17 – Emission Control System.) → NG → Replace

↓ OK

Check the evaporative emission purge solenoid. (Refer to GROUP 17 – Emission Control System.) → NG → Replace

↓ OK

Check the fuel tank and purge line for leakage.

TSB Revision

Code No.	Scan tool 183 General scan tool P1495 MIL 31	Evaporative Emission Ventilation Solenoid Circuit	Probable cause
[Comment] Background • The PCM provides a switched ground path to the solenoid. • This DTC indicates an open or short-circuit condition in the evaporative emission ventilation solenoid control circuit. Range of Check • Battery voltage: 10V or more • Ignition switch: ON Set Condition • Open or short circuit is detected in the evaporative emission ventilation solenoid for 3 seconds.			• Open or short control drcuit • Open fused ignition switch output circuit • Open or shorted solenoid coil • PCM failed

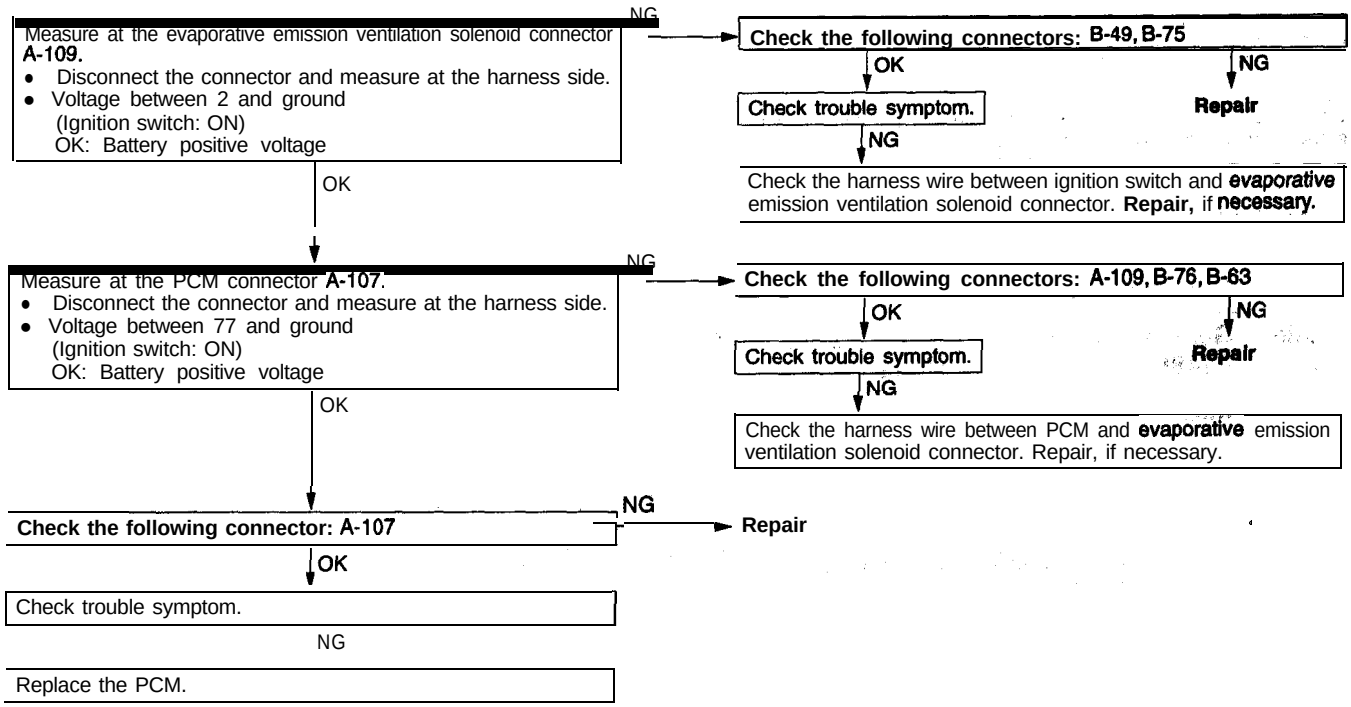

TSB Revision

Code No.	Scan tool 184 General scan tool P1494 MIL 31	Evaporative Emission Ventilation Switch or Mechanical Fault	Probable cause
[Comment] Background • When the solenoid diaphragm moves up and down by activating the evaporative emission solenoid, the solenoid switch turns on and off. • The PCM detects how often the solenoid is activated by counting the ON and OFF conditions of the solenoid switch. Range of Check, Set Condition • The solenoid is activated, but the solenoid switch does not turn on and off.			• Evaporative emission ventilation solenoid failed • Open or short circuit • Vacuum hose clogged • PCM failed

Check the following connectors: A-109, B-76, B-63, A-107 → NG → Repair
↓ OK
Check trouble symptom.
↓ NG
Check the harness wire between the PCM and the evaporative emission ventilation solenoid connector. → NG → Repair
↓ OK
Replace the PCM.

Code NO.	Scan tool 187 General scan tool P1486 MIL 31	EVAP Leak Monitor Pinched Hose Found	Probable cause
[Comment] Background • The PCM monitors that the fuel tank, purge lines, etc. are sealed well. • When monitoring, the PCM pressurizes the purge lines by activating the evaporative emission ventilation solenoid with the canister ventilation valve (incorporated in the solenoid) closed. • If the fuel tank and purge lines are sealed correctly, the pressure will rise well by activating the solenoid specific times. • After the pressure rises well, the diaphragm inside the solenoid will not work any more. • If the hoses are pinched, the pressure will rise well by activating the solenoid only fewer times. Range of Check, Set Condition • The evaporative emission ventilation solenoid has been activated less than specific times.			• Clogged hoses between the evaporative emission ventilation solenoid and the fuel tank • Evaporative emission ventilation solenoid failed • PCM failed

Check the clogged hoses between the evaporative emission ventilation solenoid and the fuel tank. Clean, if necessary. → OK → Replace the PCM.

TSB Revision

INSPECTION CHART FOR TROUBLE SYMPTOMS

13100880255

Trouble symptom		Inspection procedure No.
Communication with scan tool is impossible.	Communication with all systems is not possible.	1
	Communication with PCM only is not possible.	2
Check engine/ malfunction indicator lamp and related parts	The check engine/malfunction indicator lamp does not illuminate right after the ignition switch is turned to the ON position.	3
	The check engine/malfunction indicator lamp remains illuminated and never goes out.	4
Starting	Cranks, won't start	5
	Fires up and dies	6
	Hard starting	7
Idling stability (Improper idling)	Unstable idle. (Rough idle, hunting)	6
	Idle speed is high. (Improper idle speed)	9
	Idle speed is low. (Improper idle speed)	10
Idling stability (Engine stalls)	When the engine is cold, it stalls at idle (Die out)	11
	When the engine becomes hot, it stalls at idle. (Die out)	12
	The engine stalls when accelerating. (Pass out)	13
	The engine stalls when decelerating.	14
Driving	Hesitation, sag or stumble	15
	Acceleration shock	16
	Deceleration shock	17
	Poor acceleration	16
	Surge	19
	Knocking	20
Dieseling		21
Too high CO and HC concentration when idling		22

TSB Revision

PROBLEM SYMPTOMS TABLE (FOR YOUR INFORMATION)

Items		Symptom
Starting	Won't start	The starter is used to crank the engine, but there is no combustion within the cylinders, and the engine won't start.
	Fires up and dies	There is combustion within the cylinders, but then the engine soon stalls.
	Hard starting	Engine starts after cranking a while.
Idling stability	Hunting	Engine speed doesn't remain constant; changes at idle.
	Rough idle	Usually, a judgement can be based upon the movement of the tachometer pointer, and the vibration transmitted to the steering wheel, shift lever, body, etc. This is called rough idle.
	Incorrect idle speed	The engine doesn't idle at the usual correct Speed."
	Engine stall (Die out)	The engine stalls when the foot is taken 'from the accelerator pedal, regardless of whether the vehicle is moving or not.
	Engine stall (Pass out)	The engine stalls when the accelerator pedal is depressed or while it is being used.
Driving	Hesitation Sag	"Hesitation" is the delay in response of the vehicle speed (engine speed) that occurs when the accelerator is depressed in order to accelerate from the speed at which the vehicle is now traveling, or a temporary drop in vehicle speed (engine speed) during such acceleration. Serious hesitation is called "sag". (Refer to Fig. 1)
	Poor acceleration	Poor acceleration is inability to obtain an acceleration corresponding to the degree of throttle opening, even though acceleration is smooth, or the inability to reach maximum speed.
	Stumble	Engine speed increase is delayed when the accelerator pedal is initially depressed for acceleration. (Refer to Fig. 2)
	Shock	The feeling of a comparatively large impact or vibration when the engine is accelerated or decelerated.
	Surge	This is slight acceleration and deceleration feel usually at steady, light throttle cruise. Most notable under light loads.
	Knocking	A sharp sound like a hammer striking the cylinder walls during driving and which adversely affects driving.
Stopping	Run on ("Dieseling")	The condition in which the engine continues to run after the ignition switch is turned to OFF. Also called "Dieseling".

Fig. 1

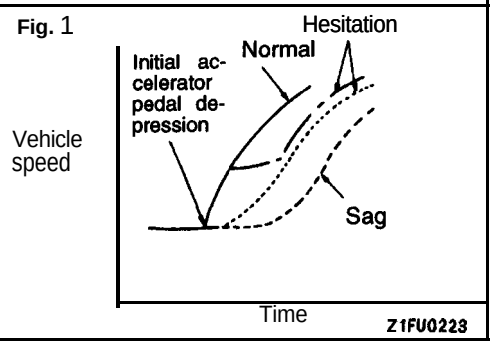

Fig. 2

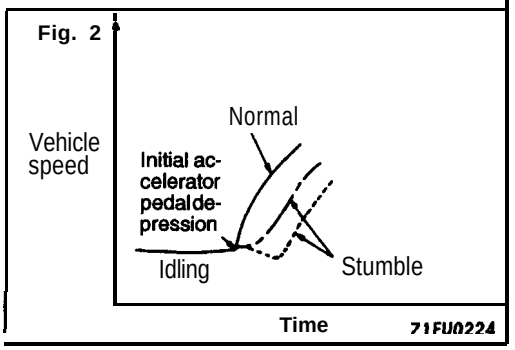

INSPECTION PROCEDURE FOR TROUBLE SYMPTOMS

INSPECTION PROCEDURE 1

Communication with scan tool is not possible. (Communication with all systems is not possible.)	Probable cause
[Comment] The cause is probably a defect in the power supply system (including ground) for the on-board diagnostic test mode line.	• Malfunction of the connector • Malfunction of the harness wire

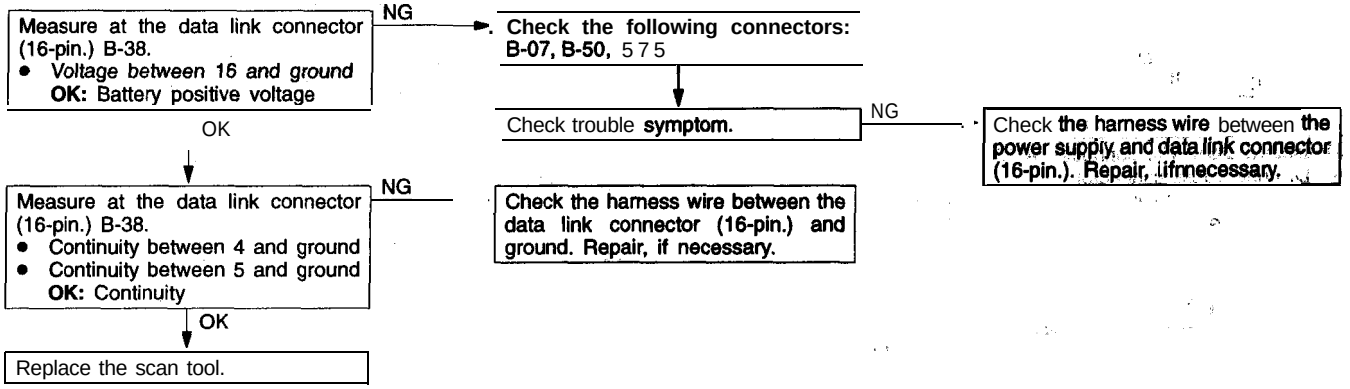

INSPECTION PROCEDURE 2

Scan tool communication with PCM is not possible.	Probable cause
[Comment] One of the following causes may be suspected. • No power supply to PCM * Defective ground circuit of PCM • Defective PCM • Improper communication line between PCM and scan tool	• Malfunction of PCM power supply circuit • Malfunction of the PCM • Open circuit between PCM and data link connector

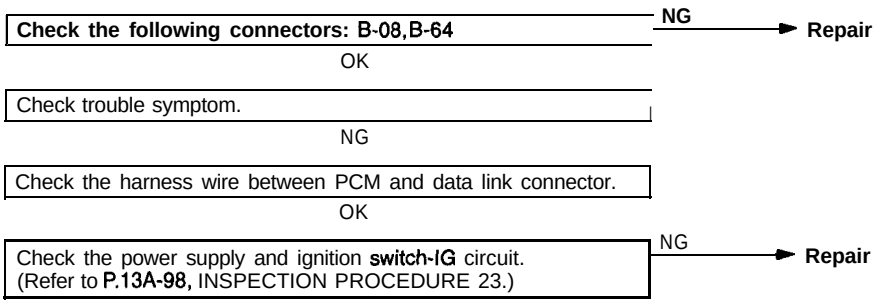

TSB Revision

INSPECTION PROCEDURE 3

The check engine/malfunction indicator lamp does not illuminate right after the ignition switch is turned to the ON position.	Probable cause
[Comment] The PCM causes the check engine/malfunction indicator lamp to illuminate for three seconds, immediately after the ignition switch is turned to ON. If the check engine/malfunction indicator lamp does not illuminate immediately after the ignition switch is turned to ON, one of the malfunctions listed at right has probably occurred.	• Burnt-out bulb • Defective check engine/malfunction indicator lamp circuit • Malfunction of the PCM

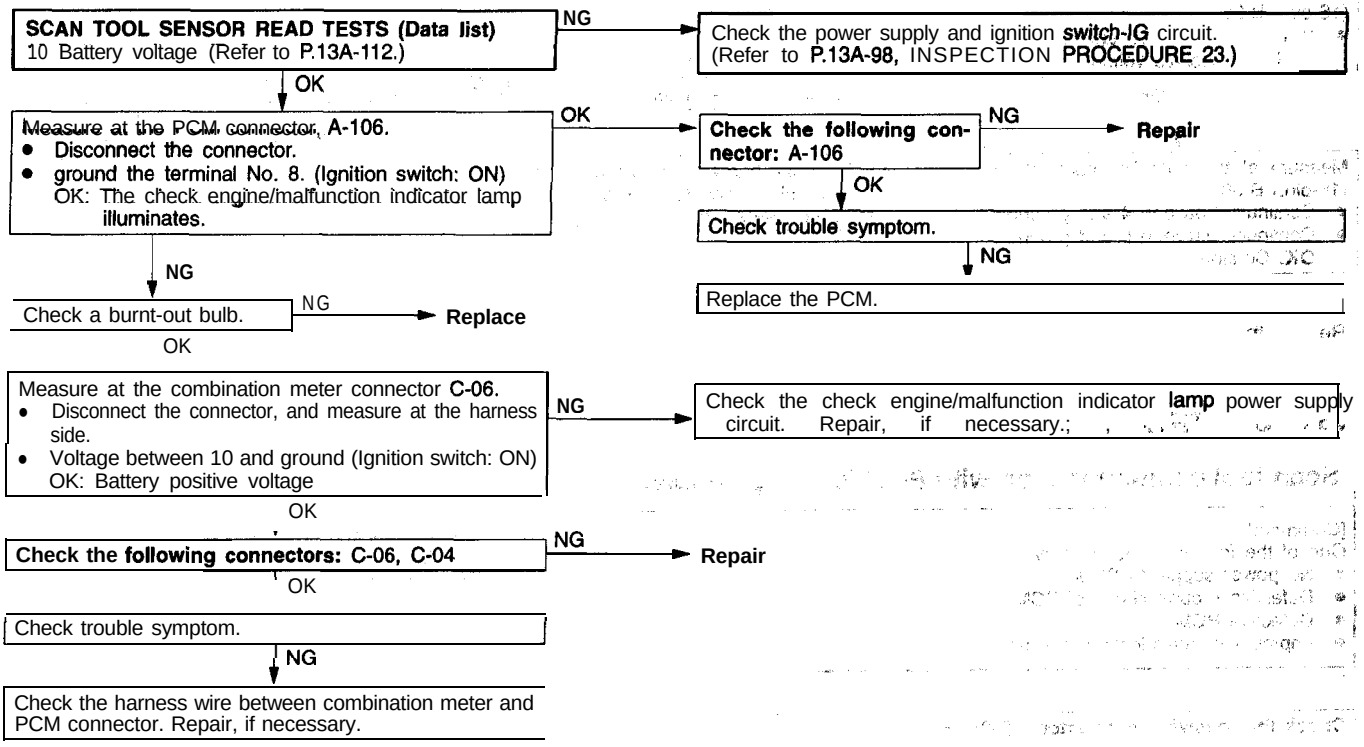

TSB Revision

INSPECTION PROCEDURE 4

The check engine/malfunction indicator lamp remains illuminated and never goes out.	Probable cause
[Comment] In cases such as the above, the cause is probably that the PCM is detecting a problem in a sensor or actuator, or that one of the malfunctions listed at right has occurred.	• Short-circuit between the check engine/malfunction indicator lamp and PCM • Malfunction of the PCM

SCAN TOOL DTC
Are diagnostic trouble codes output?

YES → Refer to P.13A-18, INSPECTION CHART FOR DIAGNOSTIC TROUBLE CODES

NO ↓

Measure at the combination meter connector C-04.
- Disconnect the connector, and measure at the harness side.
- Disconnect the PCM connector.
- Continuity between 51 and ground
  OK: No continuity

NG → Check the harness wire between combination meter and PCM connector. Repair, if necessary.

O K

Replace the PCM.

INSPECTION PROCEDURE 5

Cranks, won't start	Probable cause
[Comment] In cases such as the above, the cause is probably that a spark plugs are fouled defective, or that the supply of fuel to the combustion chamber is defective. in addition, foreign materials (water, kerosene, etc.) may be mixed with the fuel.	• Malfunction of the ignition system • Malfunction of the fuel pump system • Malfunction of the injector system • Malfunction of the PCM • Foreign materials in fuel

Check battery positive voltage when cranking.
OK: 8 V or hiaher

NG → Check the battery. (Refer to GROUP 54 – Battery)

OK

Scan tool: Inspection when no initial combustion occurs.
(Refer to P.13A-101, INSPECTION PROCEDURE 29.)

OK

Can any sound be heard from the injectors when cranking?
(Refer to P.13A-132.)

No → Check the injector control circuit. Carry out procedures 19, 20, 21, 61/P0203, P0202, P0201, P0204/27 in "INSPECTION PROCEDURE FOR DIAGNOSTIC TROUBLE CODES".

Yes

Check ignition circuit system.
(Refer to P.13A-100, INSPECTION PROCEDURE 28.)

OK

Check the following items.
- Check the ignition coil, spark plugs, spark plug cables.
- Clean the injectors.
- Check if foreign materials (water, alcohol, etc.) got into fuel.
- Check the compression pressure.

INSPECTION PROCEDURE 6

Fires up and dies.	Probable cause
[Comment] In such cases as the above, the cause is probably that the spark plugs are generating sparks but the sparks are weak, or the initial mixture for starting is not appropriate.	• Malfunction of the ignition system • Malfunction of the injector system • Foreign materials in fuel • Poor compression • Malfunction of the PCM

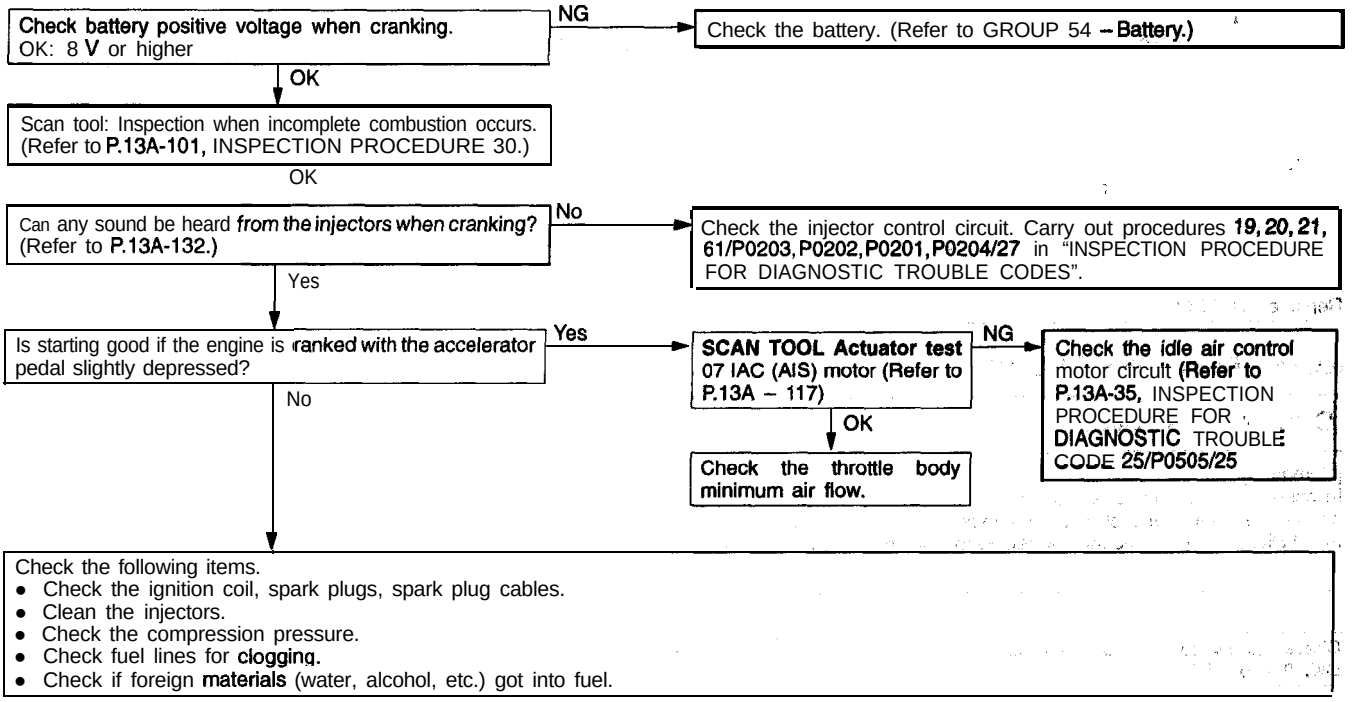

INSPECTION PROCEDURE 7

Hard starting	Probable cause
[Comment] In cases such as the above, the cause is probably that the spark is weak and ignition is difficult, the initial mixture for starting is not appropriate, or sufficient compression pressure is not being obtained.	• Malfunction of the ignition system • Malfunction of the injector system • Inappropriate gasoline use • Poor compression

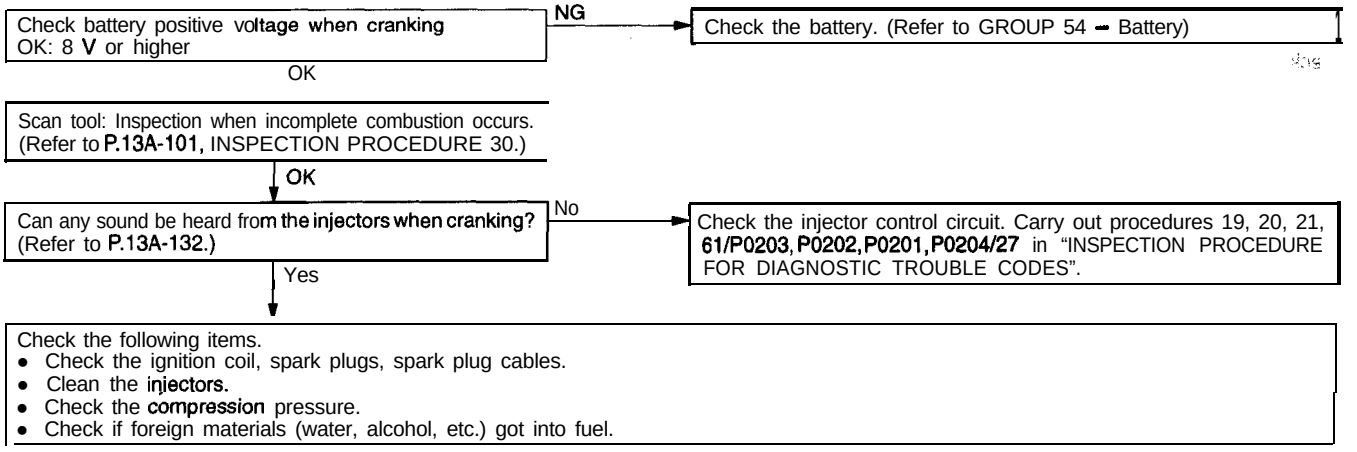

TSB Revision

INSPECTION PROCEDURE 8

Unstable idle (Rough idle, hunting)	Probable cause
[Comment] In cases such as the above, the cause is probably that the ignition system, air/fuel mixture, idle air control motor or compression pressure is defective. Because the range of possible causes is broad, inspection is narrowed down to simple items.	• Malfunction of the ignition system • Malfunction of air-fuel ratio control system • Malfunction of the IAC system • Malfunction of the evaporative emission purge solenoid system • Malfunction of the EGR system • Poor compression • Drawing air into exhaust system

Were the battery terminals disconnected recently?
- YES → After warming-up, let the engine run at idle for 10 minutes.
- NO ↓

SCAN TOOL DTC
Are diagnostic trouble codes output ?
- YES → Refer to P.13A-18, INSPECTION CHART FOR DIAGNOSTIC TROUBLE CODES.
- NO ↓

Does idle speed fluctuate excessively ?
- YES → Inspection when hunting occurs. (Refer to P.13A-101, INSPECTION PROCEDURE 31.)
- NO ↓

SCAN TOOL Actuator test
07 IAC (AIS) motor (Refer to P.13A-117.)
- NG → Check the idle air control motor circuit. (Refer to P. 13A-35, INSPECTION PROCEDURE FOR DIAGNOSTIC TROUBLE CODE 25/P0505/25)
- OK ↓

SCAN TOOL Special **function**
"Reset IAC

↓

Check trouble symptoms.
- NG ↓

Check the injector for operation sound. (Refer to P.13A-132.)
- NG → Check the injector control circuit: (Carry out procedures 19, 20, 21 61/P0203, P0202, P0201, P0204/27 in "INSPECTION PROCEDURE FOR DIAGNOSTIC TROUBLE CODES".)
- OK ↓

Scan tool: Inspection when idle speed is unstable. (Refer to P.13A-102, INSPECTION PROCEDURE 32.)
- OK ↓

Check the following items.
- Check the ignition coil, spark plugs, spark plug cables.
- Check the purge control system.
- Check the EGR svstem.
- Check the compression pressure.
- Check if foreign materials (water, alcohol, etc.) got into fuel.

INSPECTION PROCEDURE 9

Idle speed is high. (Improper idle speed)	Probable cause
[Comment] In such cases as the above, the cause is probably that the intake air volume during idle is too great.	• Malfunction of the idle air control motor system • Intake manifold vacuum leak • Malfunction of the throttle body

SCAN TOOL DTC
Are diagnostic trouble codes output ?
- YES → Refer to P.13A-18, INSPECTION CHART FOR DIAGNOSTIC TROUBLE CODES.
- NO ↓

SCAN TOOL Actuator test
07 IAC (AIS) motor (Refer to P.13A-117.)
- NG → Checktheidleaircontrolmotorcircuit. (Refer to P. 13A-35, INSPECTION PROCEDURE FOR DIAGNOSTIC TROUBLE CODE 25/P0505/25.)
- OK ↓

SCAN TOOL Special function
"Reset IAC

↓

Check trouble symptoms.
- NG ↓

SCAN TOOL SENSOR READ TESTS (Data list)
05 Engine coolant temperature sensor (Refer to P.13A-112.)
- NG → Check the engine coolant temperature circuit. (Refer to P.13A-107, INSPECTION PROCEDURE 38)
- OK ↓

SCAN TOOL OUTPUT STATE TESTS (Data list)
D1 A/C clutch relay (Refer to P.13A-116.)
- NG → Check the A/C switch and A/C compressor clutch relay system.(Refer to P.13A-99, INSPECTION PROCEDURE 26.)
- OK ↓

Check the throttle body minimum air flow.
(Refer to P.13A-119.)

INSPECTION PROCEDURE 10

Idle speed is low. (Improper idle speed)	Probable cause
[Comment] In cases such as the above, the cause is probably that the intake air volume during idling is too small.	• Malfunction of the idle air control system • Malfunction of the' throttle body

SCAN TOOL DTC
Are diagnostic trouble codes output ?
- YES → Refer to P.13A-18, INSPECTION CHART FOR DIAGNOSTIC TROUBLE CODES.
- OK ↓

SCAN TOOL Actuator test
07 IAC (AIS) motor. (Refer to P.13A-117.)
- NG → Check the idle air control motor circuit. (Refer to P.13A-35, INSPECTION PROCEDURE FOR DIAGNOSTIC TROUBLE CODE 25/P0505/25.)
- OK ↓

SCAN TOOL Special function
"Reset IAC

↓

Check trouble symptoms.
- NG ↓

SCAN TOOL SENSOR READ TESTS (Data list)
05 Engine coolant temperature sensor (Refer to P.13A-112.)
- NG → Check the engine coolant temperature circuit. (Refer to P.13A-107, INSPECTION PROCEDURE 36.)
- OK ↓

SCAN TOOL INPUT STATE TESTS (Data list)
A6 Park/neutral position switch (transaxle range switch) (Refer to P.13A-115.)
- NG → Checktransaxle range sensorcircuit. (Refer to P.13A-99, INSPECTION PROCEDURE 25.)
- OK ↓

Check the throttle body minimum air flow.
(Refer to P.13A-119.)

TSB Revision

INSPECTION PROCEDURE 11

When the engine is cold, it stalls at idle. (Die out)	Probable cause
[Comment] In such cases as the above, the cause is probably that the air/fuel mixture is inappropriate when the engine is cold, or that the intake air volume is insufficient.	• Malfunction of the idle air control motor system • Malfunction of the fhroffle body • Malfunction of the injector System • Malfunction: of the ignition system

Were the battery terminals disconnected recently?
- YES → After warming-up, let the engine run at idling for 10 minutes.
- NO ↓

SCAN TOOL DTC
Are diagnostic trouble codes output?
- YES → Refer to P.13A-18, INSPECTION CHART FOR DIAGNOSTIC TROUBLE CODES
- N O ↓

Does the engine stall right after the accelerator pedal is released ?
- YES → Check the throffle body minimum air flow. (Refer to P.13A-119.)
- NO ↓

Is engine-idling stable after the warming-up?
- NO → Check for unstable idle (Rough idle, hunting) (Refer to P.13A-89, INSPECTION PROCEDURE 8.)
- YES ↓

SCAN TOOL Actuator test
07 IAC (AIS) motor (Refer to P.13A-117.)
- NG → Check the idle air control motor circuit. (Refer to P.13A-35, INSPECTION PROCEDURE FOR DIAGNOSTIC TROUBLE CODE 25/P0505/25.)
- OK ↓

SCAN TOOL Special function
"Reset IAC ↓

Check trouble symptoms.
- NG ↓

Check the injector for operation sound. (Refer to P.13A-132.)
- NG → Check the injector control circuit. Carry out procedures 19, 20, 21, 61/P0203, P0202, P0201, P0204/27 in "INSPECTION PROCEDURE FOR DIAGNOSTIC TROUBLE CODES".
- OK ↓

SCAN TOOL SENSOR READ TESTS (Data list)
05 Engine coolant temperature sensor (Refer to P.13A-112.)
- NG → Check the engine coolant temperature sensor circuit. (Refer to P.13A-107; INSPECTION PROCEDURE 38.)
- OK ↓

Check the fuel pressure. (Refer to P.13A-121.)
- OK ↓

Check the following items.
- Check the ignition coil, spark plugs, spark plug cables.
- Check the compression pressure.
- Check the engine oil viscosity.

TSB Revision

INSPECTION PROCEDURE 12

When the engine is hot, it stalls at idle. (Die out)	Probable cause
[Comment] In cases such as the above, the cause is probably that ignition system, air/fuel mixture, idle air control motor or compression pressure is defective. In addition, if the engine suddenly stalls, the cause may also be a defective connector contact.	• Malfunction of the ignition system • Malfunction of air-fuel ratio control system • Malfunction of the IAC system • Drawing air into intake system • Improper connector contact

Were the battery terminals disconnected recently? — YES → After warming-up, let the engine run at idling for 10 minutes.

NO ↓

SCAN TOOL DTC
Are diagnostic trouble codes output? — YES → Refer to P.13A-18, INSPECTION CHART FOR DIAGNOSTIC TROUBLE CODES.

NO ↓

SCAN TOOL Actuator test
07 IAC (AIS) motor. (Refer to P.13A-117.) — NG → Checktheidleaircontrolmotorcircuit. (Refer to P.13A-35, INSPECTION PROCEDURE FOR DIAGNOSTIC TROUBLE CODE 25/P0505/25.)

OK ↓

SCAN TOOL Special function
"Reset IAC"

↓

Check trouble symptoms.

NG ↓

Check the injector for operation sound.
(Refer to P.13A-132.) — NG → Check the injector control circuit. Carry out procedures 19, 20, 21, 61/P0203, P0202, P0201, P0204/27 in "INSPECTION PROCEDURE FOR DIAGNOSTIC TROUBLE CODES".

OK ↓

Does the engine stall right after the accelerator pedal is released? — YES → Check the throttle body minimum air flow (Refer to P.13A-119.)

NO. ↓

Does the engine stall easily again? — NO → While carrying out an intermittent malfunction simulation test (Refer to GROUP 00 – How to Cope with Intermittent Malfunctions), check for sudden changes in the signals shown below.
- Crankshaft position sensor signal
- MAP sensor signal
- Injector drive signal
- Primary and secondary ignition signal
- Fuel pump drive signal
- PCM power supply voltage

YES ↓

Scan tool: Inspection when engine stalls when the engine is warm and idling (Refer to P.13A-103, INSPECTION PROCEDURE 33.)

OK ↓

Check the following items.
- Check the ignition coil, spark plugs, spark plug cables.
- Clean the injectors.
- Check the compression pressure.
- Check if foreign materials (water, alcohol, etc.) got into fuel.

INSPECTION PROCEDURE 13

The engine stalls when accelerating. (Pass out)	Probable cause
[Comment] In cases such as the above, the cause is probably misfiring due to a weak spark, or an inappropriate air/fuel mixture when the accelerator pedal is depressed.	• Injectors failed • Malfunction of the ignition system

SCAN TOOL DTC
Are diagnostic trouble codes output? — YES → Refer to P.13A-18, INSPECTION CHART FOR DIAGNOSTIC TROUBLE CODES.

NO ↓

Check the following items.
- Check the ignition coil, spark plugs, spark plug cables.
- Clogged injectors

TSB Revision

INSPECTION PROCEDURE 14

The engine stalls when decelerating.	Probable cause
[Comment] In cases such as the above, the cause is probably that the intake air volume is insufficient due to a defective idle air control motor system.	• Malfunction of the IAC system

Were the battery terminals disconnected recently? — YES → After warming-up, let the engine run at idling for 10 minutes.

↓ NO

SCAN TOOL DTC
Are diagnostic trouble codes output? — YES → Refer to P.13A-18, INSPECTION CHART FOR DIAGNOSTIC TROUBLE CODES.

↓ OK

SCAN TOOL SENSOR READ TESTS (Data list)
07 Throttle position (Refer to P.13A-112.) — NG → Check the throttle position sensor circuit. (Refer to P.13A-109, INSPECTION PROCEDURE 43.)

↓ NO

Check the following items.
- Check the ignition coil, spark plugs, spark plug cables.
- Check the throttle body minimum air flow.

INSPECTION PROCEDURE 15

Hesitation, sag or stumble	Probable cause
[Comment] In cases such as the above, the cause is probably that ignition system, air/fuel mixture or compression pressure is defective.	• Malfunction of the ignition system • Malfunction of air-fuel ratio control system • Malfunction of the fuel supply system • Malfunction of the EGR. solenoid system • Poor compression

SCAN TOOL DTC
Are diagnostic trouble codes output ? — YES → Refer to P.13A-18, INSPECTION CHART FOR DIAGNOSTIC TROUBLE CODES.

↓ NO

Check the injectors for operation sound. (Refer to P.13A-132.) — NG → Check the injector control circuit. Carry out procedures 19, 20, 21, 61/P0203, P0202, P0201, P0204/27 in "INSPECTION PROCEDURE FOR DIAGNOSTIC TROUBLE CODES".

↓ OK

Scan Tool: Inspection when hesitation, sag, stumble or poor acceleration occur. (Refer to P.13A-104, INSPECTION PROCEDURE 34.)

OK

Check the fuel pressure. (Refer to P.13A-121.)

OK

Check the following items.
- Check the ignition coil, spark plugs, spark plug cables.
- Check the EGR system.
- Check the compression pressure.
- Check the fuel filter or fuel line for clogging.

INSPECTION PROCEDURE 16

Acceleration shock	Probable cause
[Comment] In cases such as the above, the cause is probably that there is an ignition leak accompanying the increase in the spark plug demand voltage during acceleration.	• Malfunction of the ignition system • Improper control of torque reduction during stiifting

SCAN TOOL DTC
Are diagnostic trouble codes output ?
- YES → Refer to P.13A-18, INSPECTION CHART FOR DIAGNOSTIC TROUBLE CODES.
- NO ↓

Check the following items.
- Check the ignition coil, spark plugs, spark plug cables.
- Check for occurrence of ignition leak.
- Check the torque reduction link (wire) between the PCM and TCM.

INSPECTION PROCEDURE 17

Deceleration shock	Probable cause
[Comment] Malfunction of the IAC system is suspected.	• Malfunction of the IAC 'system

SCAN TOOL DTC
Are diagnostic trouble codes output ?
- YES → Refer to P.13A-18, INSPECTION CHART FOR DIAGNOSTIC TROUBLE CODES.
- NO ↓

SCAN TOOL Actuator test
07 IAC (AIS) motor. (Refer to P.13A-117.)
- NG → Check the idle air control motor circuit. (Refer to P.13A-35, INSPECTION PROCEDURE FOR DIAGNOSTIC TROUBLE CODES 25/P0505/25.)
- OK ↓

SCAN TOOL Special function
"Reset IAC"

↓

Check trouble svmptoms.
- NG ↓

SCAN TOOL SENSOR READ TESTS (Data list)
07 Throttle position (Refer to P.13A-112.)
- NG → Check the throttle position sensor circuit. (Refer to P.13A-109, INSPECTION PROCEDURE 43.)
- OK ↓

Check the throttle body minimum air flow.
(Refer to P.13A-119.)

TSB Revision

INSPECTION PROCEDURE 18

Poor acceleration	Probable cause
[Comment] Defective ignition system, abnormal air-fuel ratio, poor compression pressure, etc. are suspected.	• Malfunction of the ignition system • Malfunction of air-fuel ratio control system • Malfunction of the fuel supply system • Poor acceleration • Clogged exhaust system

SCAN TOOL DTC
Are diagnostic trouble codes output ?

YES → Refer to P.13A-18, INSPECTION CHART FOR DIAGNOSTIC TROUBLE CODES.

NO ↓

Check the injectors for operation sound. (Refer to P.13A-132.)

NG → Check the injector control circuit. Carry out procedures 19, 20, 21, 61/P0203, P0202, P0201, P0204/27 in "INSPECTION PROCEDURE FOR DIAGNOSTIC TROUBLE CODES".

OK ↓

Scan tool: inspection when hesitation, sag, stumble or poor acceleration occur. (Refer to P.13A-104, INSPECTION PROCEDURE 34.)

OK ↓

Check the fuel pressure. (Refer to P.13A-121.)

OK ↓

Check the following items.
- Check the ignition coil, spark plugs, spark plug cables.
- Check the compression pressure.
- Check the fuel filter or fuel line for clogging.
- Clogged air cleaner
- Clogged exhaust system

INSPECTION PROCEDURE 19

Surge	Probable cause
[Comment] Defective ignition system, abnormal air-fuel ratio,etc. are suspected.	• Malfunction of the ignition system • Malfunction of air-fuel ratio control system • Malfunction of the EGR solenoid system

SCAN TOOL DTC
Are diagnostic trouble codes output ?

YES → Refer to P.13A-18, INSPECTION CHART FOR DIAGNOSTIC TROUBLE CODES.

NO ↓

Check the injectors for operation sound. (Refer to P.13A-132.)

NG → Check the injector control circuit. Carry out procedures 19, 20, 21, 61/P0203, P0202, P0201, P0204/27 in "INSPECTION PROCEDURE FOR DIAGNOSTIC TROUBLE CODES".

OK

Scan Tool: Inspection when surge occurs. (Refer to P.13A-105, INSPECTION PROCEDURE 35.)

OK ↓

Check the fuel pressure. (Refer to P.13A-121.)

OK ↓

Check the following items.
- Check the ignition coil, spark plugs, spark plug cables.
- Check the EGR system.

TSB Revision

INSPECTION PROCEDURE 20

Knocking	Probable cause
[Comment] In cases such as the above, the cause is probably that the detonation control is defective or the heat value of the spark plug is inappropriate.	• Defective knock sensor • Inappropriate heat value of the spark plug

SCAN TOOL DTC
Are diagnostic trouble codes output ?

YES → Refer to P.13A-18, INSPECTION CHART FOR DIAGNOSTIC TROUBLE CODES.

NO ↓

SCAN TOOL SENSOR READ TESTS (Data list)
09 Knock sensor volts (Refer to P.13A-112.)

NG → Check the knock sensor #1 circuit (Refer to P.13A-51, INSPECTION PROCEDURE FOR DIAGNOSTIC TROUBLE CODE 59/P0325/16.)

OK ↓

Check the following items.
- Spark plugs heat range
- Check 'if foreign materials (water, alcohol, etc.) got into fuel.

INSPECTION PROCEDURE 21

Dieseling	Probable cause
[Comment] Fuel leakage from injectors is suspected.	• Fuel leakage from injectors

Check the injectors for fuel leakage.

INSPECTION PROCEDURE 22

Too high CO and HC concentration when idling	Probable cause
[Comment] Abnormal air-fuel ratio is suspected.	• Malfunction of the air-fuel ratio control system. • Deteriorated catalyst

SCAN TOOL DTC
Are diagnostic trouble codes output ?
- YES → Refer to P.13A-18, INSPECTION CHART FOR DIAGNOSTIC TROUBLE CODES.
- OK ↓

SCAN TOOL SENSOR READ TESTS (Data list)
05 Engine coolant temperature sensor.
(Refer to P.13A-112.)
- NG → Check the engine coolant temperature sensor circuit. (Refer to P.13A-107, INSPECTION PROCEDURE 38.)
- OK ↓

SCAN TOOL SENSOR READ TESTS (Data list)
27 Intake air temperature sensor. (Refer to P.13A-112.)
- NG → Check the intake air temperature sensor circuit. (Refer to P.13A-107, INSPECTION PROCEDURE 39.)
- OK ↓

SCAN TOOL SENSOR READ TESTS (Data list)
11 MAP sensor reading. (Refer to P.13A-112.)
- NG → Check the MAP sensor circuit (Refer to P.13A-108, INSPECTION PROCEDURE 40.)
- OK ↓

SCAN TOOL SENSOR READ TESTS (Data list)
83 O_2 sensor volts (rear) (Refer to P.13A-112.)
- Transaxle : 2nd gear <M/T>,
  L range <A/T>
- Driving with the throttle wide open

OK: 600–1,000 mV
- NG → Check the heated oxygen sensor (rear) circuit. (Refer to P.13A-108, INSPECTION PROCEDURE 41.)
- OK ↓

SCAN TOOL SENSOR READ TESTS (Data list)
02 O_2 sensor volts (front) (Refer to P.13A-112.)
OK: 600–1,000 mV when racing suddenly
- NG → Check the heated oxygen sensor (front) circuit. (Refer to P.13A-109, INSPECTION PROCEDURE 42.)
- OK ↓

SCAN TOOL SENSOR READ TESTS (Data list)
02 O_2 sensor volts (front) (Refer to P.13A-112.)
OK: Repeat 0–400 mV and 600–1,000 mV alternately when idling.
- OK → Replace the heated oxygen sensor (front). → Check trouble symptom. → NG ↓
- NG ↓

Check the fuel pressure. (Refer to P.13A-121.)
- OK ↓

Check the following items.
- Check the injectors for operation sound.
- Check the injectors for fuel leakage.
- Check the ignition coil, spark plugs, spark plug cables.
- Check the compression pressure.
- Check the positive crankcase ventilation system.
- Check the evaporative emission control system.
- Check the EGR system.

- NG ↓

Check trouble symptom.
- NG ↓

Replace the three-way catalytic converter.

INSPECTION PROCEDURE 23

Power supply system and ignition switch-IG circuit	Probable cause
[Comment] When an ignition switch turns ON, battery positive voltage is supplied to the PCM.	• Malfunction of the ignition switch • Improper connector contact, open circuit or short-circuited harness wire • Disconnected PCM ground wire • Malfunction of the PCM

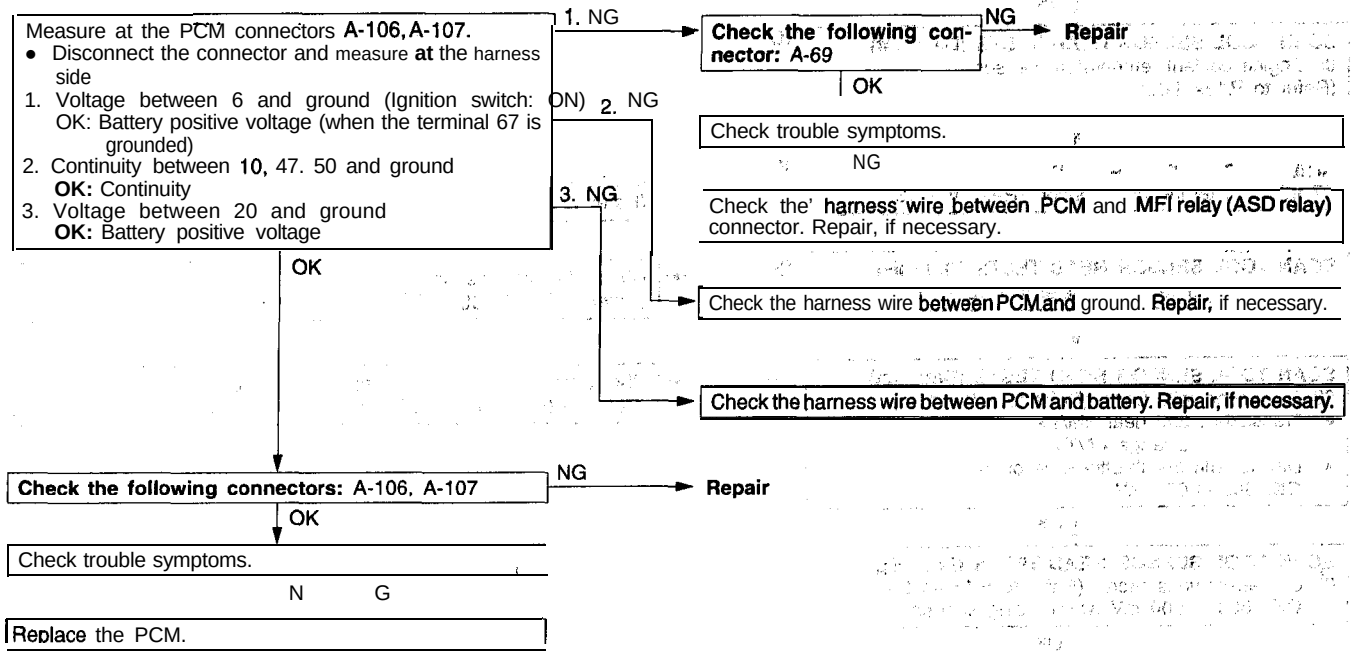

INSPECTION PROCEDURE 24

Fuel pump system	Probable cause
[Comment] The PCM turns the fuel pump relay ON when the engine is cranking or running, and this supplies power to drive the fuel pump.	• Malfunction of the fuel pump relay • Malfunction of the fuel pump • Improper connector contact, open circuit or short-circuited harness wire • Malfunction of the PCM

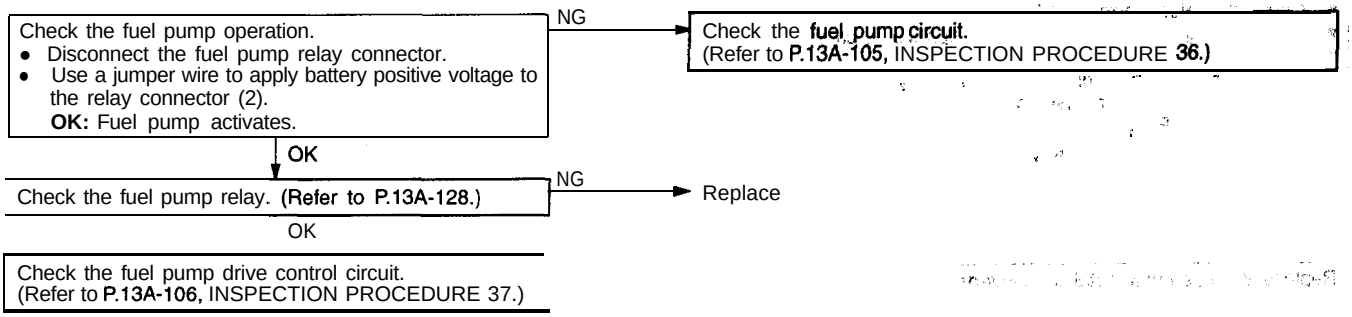

TSB Revision

INSPECTION PROCEDURE 25

Transaxle range sensor circuit <A/T>	Probable cause
[Comment] The transaxle range sensor inputs the condition of the selector lever, i.e. whether it is in P or N range or in some other range, to the PCM. The PCM controls the idle air control motor based on this input.	• Malfunction of transaxle range sensor • Improper connector contact, open circuit or short-circuited harness wire • Malfunction of the PCM.

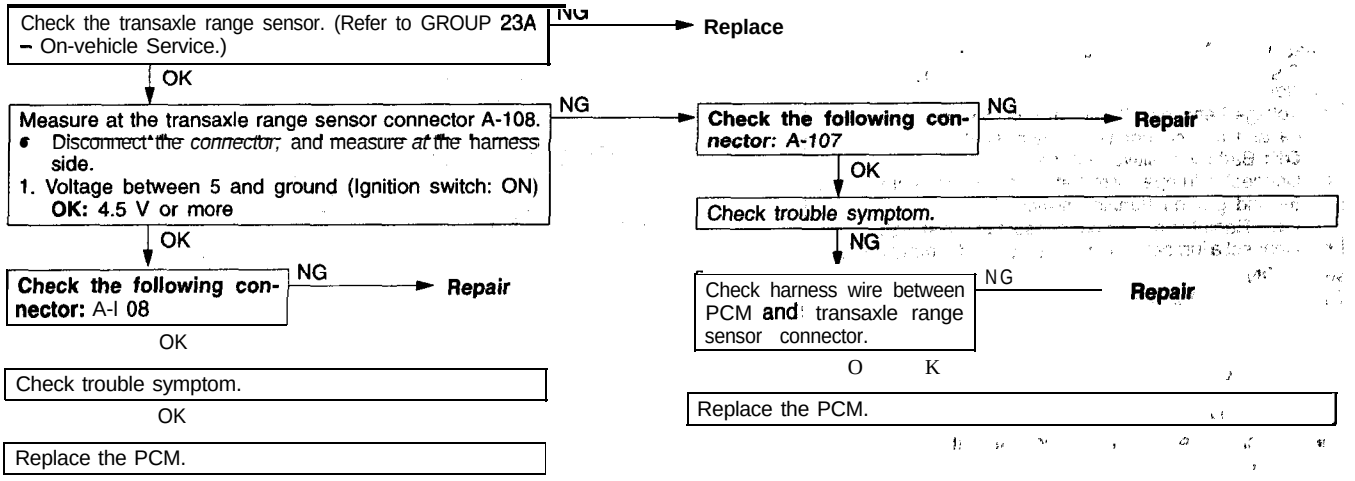

INSPECTION PROCEDURE 26

A/C switch and A/C compressor clutch relay system	Probable cause
[Comment] When an A/C ON signal is input to the PCM, the PCM carries out control of the idle air control motor, and also operates the A/C compressor magnetic clutch.	• Malfunction of A/C control system • Malfunction of A/C switch • Improper connector contact, open circuit or short-circuited harness wire • Malfunction of PCM

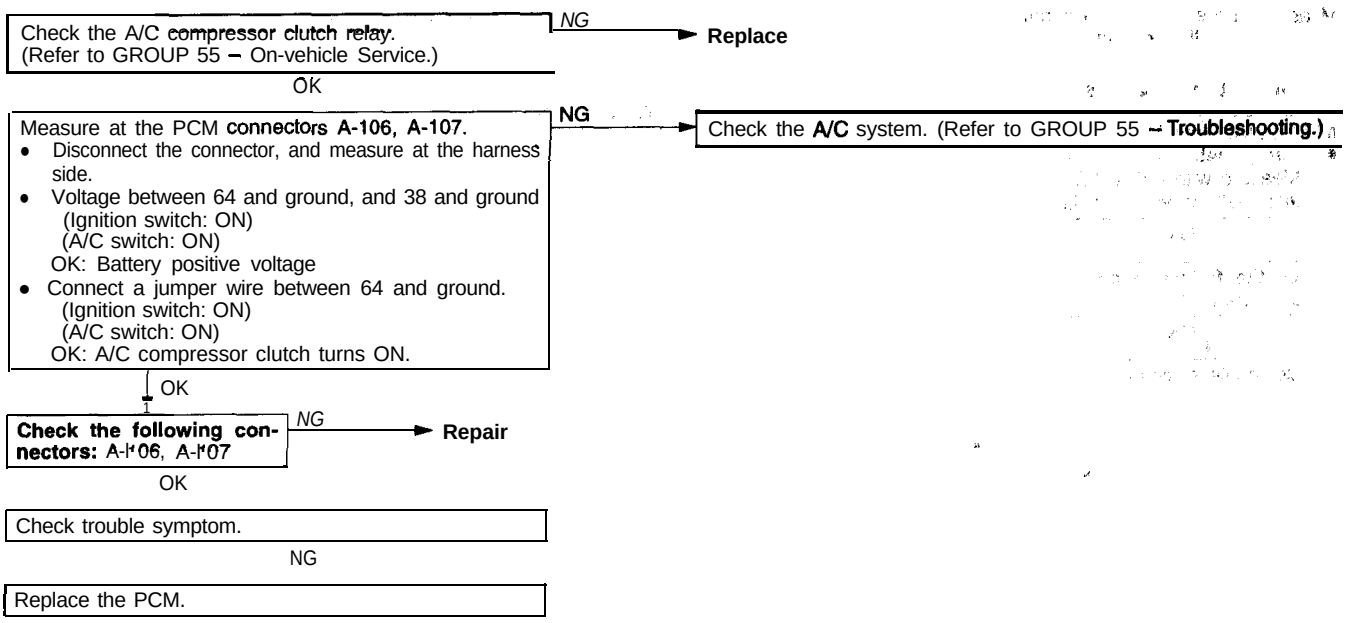

TSB Revision

INSPECTION PROCEDURE 27

Fan motor relay system (Radiator fan, A/C condenser fan)	Probable cause
[Comment] The fan motor relay is controlled by the power transistor inside the PCM turning ON and OFF	• Malfunction of fan motor relay • Malfunction of fan motor • improper connector contact, open circuit or short-circuited harness wire • Malfunction of the PCM

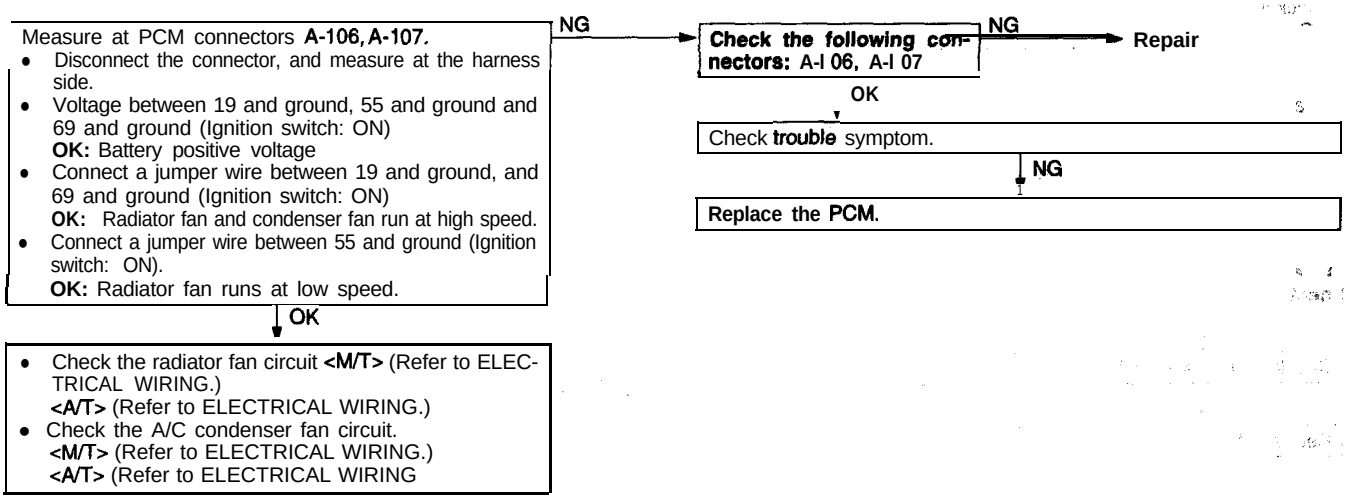

INSPECTION PROCEDURE 28

Ignition circuit system	Probable cause
[Comment] The PCM interrupts the ignition coil primary current by turning the ignition power transistor inside the PCM ON and OFF.	• Malfunction of MFI relay (ASD relay) • Improper connector contact, open circuit Or short-circuited harness wire • Malfunction of the PCM

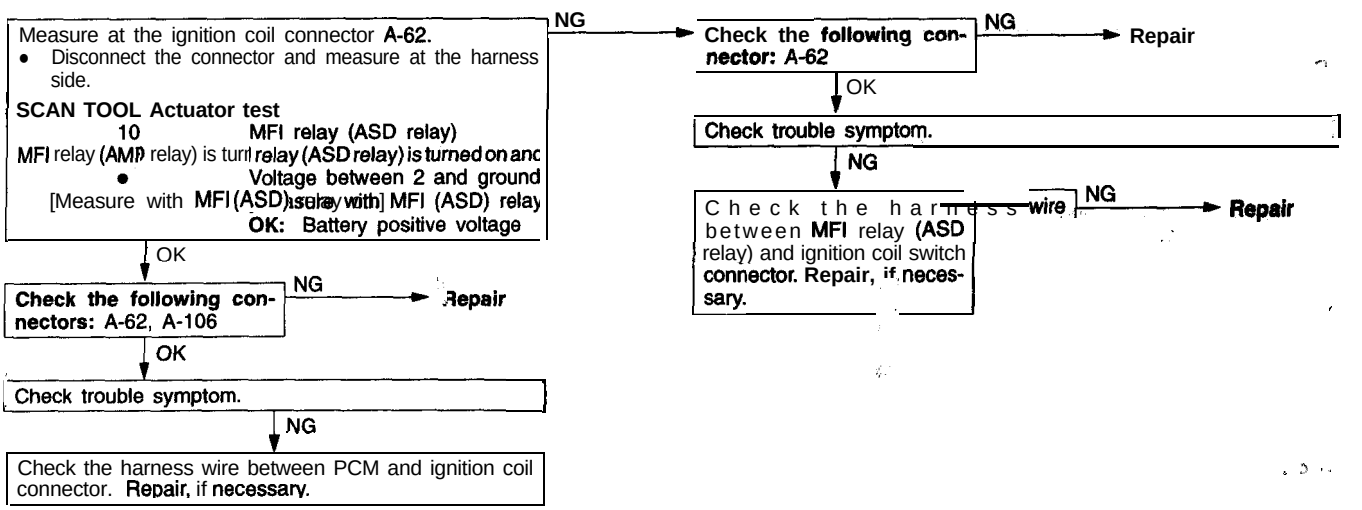

TSB Revision

INSPECTION PROCEDURE 29

Scan tool: Inspection when no initial combustion occurs.

SCAN TOOL SENSOR READ TESTS (Data list)
10 Battery voltage (Refer to **P.13A-112.**)
- NG → Check the power supply system and **ignition switch-IG** circuit. (Refer to **P.13A-98**, INSPECTION PROCEDURE 23.)
- OK ↓

Does the camshaft rotate, while cranking the engine ? (When oil filler cap is removed.)
- No → Check fming belt for breakage.'
- YES ↓

SCAN TOOL **DTC**
Are the diagnostic trouble codes output ?
- Yes → INSPECTION PROCEDURE FOR DIAGNOSTIC TROUBLE CODES. (R e f e r t o **P.13A-18.**)
- NO ↓

SCAN TOOL SENSOR READ TESTS (Data list)
17 Engine speed
OK: Cranking speed is displayed.
- NG → Check no crank reference signal at' **PCM** (Refer to **P.13A-44,** INSPECTION **PROCEDURE FOR DIAGNOSTIC** TROUBLE CODES **40/P0335/11)**
- OK ↓

SCAN TOOL Actuator test
51 Fuel pump relay (Refer to **P.13A-117.**)
- NG → Check the fuel pump system: (Refer to **P.13A-98**, INSPECTION **PROCEDURE** 24.)
- OK ↓

SCAN TOOL SENSOR READ TESTS (Data list)
05 Engine coolant temperature sensor (Refer to P.13A-112.)
- NG → Check the engine coolant temperature Sensor **circuit.** (Refer to **P.13A-107,** INSPECTION PROCEDURE 38.)

INSPECTION PROCEDURE 30

Scan tool: Inspection when incomplete combustion occurs.

SCAN TOOL DTC
Are diagnostic trouble code output ?
- YES → Refer to **P.13A-18, INSPECTION** CHART FOR **DIAGNOSTIC** TROUBLE CODES.
- NO ↓

SCAN TOOL Actuator test
51 Fuel pump relay (Refer to **P.13A-117.**)
- NG → Check the fuel pump system. (Refer to **P.13A-98**, INSPECTION PROCEDURE 24.)
- OK ↓

SCAN TOOL SENSOR READ TESTS (Data list)
05 Engine coolant temperature sensor (Refer to P.13A-112.)
- NG → Check the engine coolant temperature sensor circuit. (Refer to **P.13A-108,** INSPECTION PROCEDURES 38.)

INSPECTION PROCEDURE 31

Inspection when hunting occurs.

Check the **throttle** body minimum air flow. (Refer to **P.13A-119.**)
↓
Check trouble symptom.
- NG →

Inspect air intake system for vacuum leaks.
- Broken intake manifold gasket
- Broken air intake hose
- Broken vacuum hose
- Positive crankcase ventilation valve does not operate.

INSPECTION PROCEDURE 32

Scan tool: Inspection when idle speed is unstable.

SCAN TOOL SENSOR READ TESTS (Data list)
27 Intake air temperature (Refer to P.13A-112.)
- NG → Check the intake air temperature circuit. (Refer to P.13A-107, INSPECTION PROCEDURE 39.)
- OK ↓

SCAN TOOL SENSOR READ TESTS (Data list)
11 MAP sensor reading (Refer to P.13A-112.)
- NG → Check the MAP sensor circuit. (Refer to P.13A-108, INSPECTION PROCEDURE 40.)
- OK ↓

SCAN TOOL SENSOR READ TESTS (Data list)
05 Engine coolant temperature sensor (Refer to P.13A-112.)
- NG → Check the engine coolant temperature sensor circuit. (Refer to P.13A-107, INSPECTION PROCEDURE-%)
- OK ↓

SCAN TOOL Actuator test
11 Evaporative purge solenoid (Refer to P.13A-117.)
- NG → Check the EVAP solenoid circuit. (Refer to P.13A-31. INSPECTION PROCEDURE FOR DIAGNOSTIC TROUBLE CODE 18/P0443/31.)
- OK ↓

SCAN TOOL SENSOR READ TESTS (Data list)
63 O_2 sensor volts (rear) (Refer to P.13A-112.)
- Transaxle : 2nd gear <M/T>, L range <A/T>
- Drive with wide open throttle

OK: 600 – 1,000 mV
- NG → Check the heated oxygen sensor (rear) circuit. (Refer to P. 13A-108, INSPECTION PROCEDURE 41.)
- OK ↓

SCAN TOOL SENSOR READ TESTS (Data list)
02 O_2 sensor volts (front) (Refer to P.13A-112.)
OK: 600–1,000 mV during sudden racing
- NG → Check the heated oxygen 'sensor (front) circuit. (Refer to P.13A-109, INSPECTION PROCEDURE 42.)
- OK ↓

SCAN TOOL SENSOR READ TESTS (Data list)
02 O_2 sensor volts (front) (Refer to P.13A-112.)
OK: Changes between **0–400 mV** and **600–1,000 mV** during idling
- NG → Check the fuel pressure. (Refer to P.13A-121
  - OK → Check the injectors for clogging.
- OK ↓

SCAN TOOL INPUT STATE TESTS (Data list)
A1 Power steering switch (Refer to P.13A-115.)
- NG → Check the power steering switch system. (Refer to P.13A-66, INSPECTION PROCEDURE FOR DIAGNOSTIC TROUBLE CODE 115/P0551/65.)
- OK ↓

SCAN TOOL OUTPUT STATE TESTS (Data list)
D1 A/C clutch relay (Refer to P.13A-116.)
- NG → Check the A/C switch and A/C relay system. (Refer to P.13A-99, INSPECTION PROCEDURE 26.)
- OK ↓

SCAN TOOL INPUT STATE TESTS (Data list)
A6 Park/neutral switch (transaxle range switch) (Refer to P.13A-115.)
- NG → Check the transaxle range sensor system. (Refer to P.13A-99, INSPECTION PROCEDURE 25.)
- OK ↓

Check the throffle body minimum air flow. (Refer to P.13A-119.)

TSB Revision

INSPECTION PROCEDURE 33

Scan tool: Inspection when engine. stalls when, the engine is warm and idling.

SCAN TOOL SENSOR READ TESTS (Data list)
27 Intake air temperature sensor (Refer to P.13A-112.)

NG → Check the intake air temperature circuit. (Refer to P.13A-107, INSPECTION PROCEDURE 39.)

OK ↓

SCAN TOOL SENSOR READ TESTS (Data list)
11 MAP sensor reading (Refer to P.13A-112.)

NG → Check the MAP sensor circuit (Refer to P.13A-108, INSPECTION PROCEDURE 40.)

OK ↓

SCAN TOOL SENSOR READ TESTS (Data list)
05 Engine coolant temperature sensor (Refer to P.13A-112.)

NG → Check the engine coolant temperature sensor circuit. (Refer to P.13A-107, INSPECTION PROCEDURE 38.)

OK ↓

SCAN TOOL SENSOR READ TESTS (Data list)
63 O_2 sensor volts (rear) (Refer to P.13A-112.)
- Transaxle : 2nd gear <M/T>,
  L range <A/T>
- Drive with wide open throttle

OK: 600 – 1,000 mV

NG → Check the heated oxygen sensor (rear) circuit. (Refer to P.13A-108, INSPECTION PROCEDURE 41.)

OK ↓

SCAN TOOL SENSOR READ TESTS (Data list)
02 O_2 sensor volts (front) (Refer to P.13A-112.)
OK: Changes between 600 – 1,000 mV during sudden racing

NG → Check the heated oxygen sensor (front) circuit. (Refer to P.13A-109, INSPECTION PROCEDURE 42.)

OK ↓

SCAN TOOL SENSOR READ TESTS (Data list)
02 O_2 sensor volts (front) (Refer to P.13A-112.)
OK: Changes between 0 – 400 mV and 600 – 1,000 mV during idling

NG → Check the fuel pressure. (Refer to P.13A-121.) → OK → Check the injectors for clogging.

OK ↓

SCAN TOOL INPUT STATE TESTS (Data list)
A1 Power steering switch (Refer to P.13A-115.)

NG → Check the power steering switch system. (Refer to P.13A-66, INSPECTION PROCEDURE FOR DIAGNOSTIC TROUBLE CODE 115/P0551/65.)

OK ↓

SCAN TOOL OUTPUT STATE TESTS (Data list)
D1 A/C clutch relay (Refer to P.13A-116.)

NG → Check the A/C switch and A/C compressor clutch relay system. (Refer to P.13A-99, INSPECTION PROCEDURE 26.)

OK ↓

SCAN TOOL INPUT STATE TESTS (Data list)
A6 Park/neutral switch (transaxle range switch) (Refer to P.13A-115.)

NG → Check the transaxle range sensor system. (Refer to P.13A-99, INSPECTION PROCEDURE 25.)

OK ↓

Check the throttle body minimum air flow. (Refer to P.13A-119.)

INSPECTION PROCEDURE 34

Scan tool: Inspection when hesitation, sag, stumble or poor acceleration occurs.'

SCAN TOOL SENSOR READ TESTs (Data list)
27 Intake air temperature (Refer to P.13A-112.)

NG → Check the intake air temperature system. (Refer to P.13A-107, INSPECTION PROCEDURE 39.)

OK ↓

SCAN TOOL SENSOR READ TESTS (Data list)
11 MAP sensor reading. (Refer to P.13A-112.)

NG → Check the MAP sensor circuit. (Refer to P.13A-108, INSPECTION PROCEDURE 40.)

OK ↓

SCAN TOOL SENSOR READ TESTS (Data list)
05 Engine coolant temperature sensor (Refer to P.13A-112.)

NG → Check the engine coolant temperature sensor circuit. (Refer to P.13A-107, INSPECTION PROCEDURE 38.)

OK ↓

SCAN TOOL SENSOR READ TESTS (Data list)
07 Throttle position sensor (Refer to P.13A-112.)

NG → Check the throttle position sensor circuit. (Refer to P.13A-109, INSPECTION PROCEDURE 43.)

OK ↓

SCAN TOOL Actuator test
16 EGR solenoid (Refer to P.13A-117.)

NG → Check the EGR solenoid circuit. (Refer to P.13A-30, INSPECTION PROCEDURE FOR DIAGNOSTIC TROUBLE CODE 17/P0403/320.)

OK ↓

SCAN TOOL SENSOR READ TESTS (Data list)
63 O_2 sensor volts (rear) (Refer to P.13A-112.)
- Transaxle : 2nd gear <M/T>, L range <A/T>
- Drive with wide open throttle
  OK: 600–1,000 mV

NG → Check the heated oxygen sensor (rear) circuit. (Refer to P. 13A-108, INSPECTION PROCEDURE 41.)

OK ↓

SCAN TOOL SENSOR READ TESTS (Data list)
02 O_2 sensor volts (front) (Refer to P.13A-112.)
OK: Changes between 600–1,000 mV during sudden racing

NG → Check the heated oxygeri sensor (front) circuit. (Refer to P.13A-109, INSPECTION PROCEDURE 42.)

OK ↓

SCAN TOOL SENSOR READ TESTS (Data list)
02 O_2 sensor volts (front) (Refer to P.13A-112.)
OK: Changes between 0–400 mV and 600–1,000 mV during idling

NG → Check the fuel pressure. (Refer to P.13A-121) → OK → Check the injectors for clogging.

TSB Revision

INSPECTION PROCEDURE 35

Scan tool: Inspection when surge occurs.

SCAN TOOL SENSOR READ TESTS (Data list)
27 Intake air temperature sensor (Refer to P.13A-112.)
- NG → Check the intake air' temperature sensor circuit. (Refer to P.13A-107, INSPECTION. PROCEDURE 39.)
- OK ↓

SCAN TOOL SENSOR READ TESTS (Data list)
11 MAP sensor reading (Refer to P.13A-112.)
- NG → Check the MAP sensor circu it. (Refer to P.13A-108, INSPECTION PROCEDURE 40.)
- OK ↓

SCAN TOOL SENSOR READ TESTS (Data list)
05 Engine coolant temperature sensor (Refer to P.13A-112.)
- NG → Check the engine coolant temperature sensor circuit. (Refer to P.13A-107, INSPECTION PROCEDURE 38.)
- OK ↓

SCAN TOOL SENSOR READ TESTS (Data list)
07 Throttle position sensor (Refer to P.13A-112.)
- NG → Check the throttle position sensor circuit. (Refer to P.13A-109, INSPECTION PROCEDURE 43.)
- OK ↓

SCAN TOOL Actuator test
16 EGR solenoid (Refer to P.13A-117.)
- NG → Check the EGR solenoid circuit- (Refer to P.13A-30, INSPECTION PROCEDURE FOR DIAGNOSTIC TROUBLE CODE 17/P0403/32.)
- OK ↓

SCAN TOOL SENSOR READ TESTS (Data list)
63 O_2 sensor volts (rear) (Refer to P.13A-112.)
- Transaxle : 2nd gear <M/T>, L range <A/T>
- Drive with wide open throttle

OK: 600–1,000 mV
- NG → Check the heated oxygen sensor (rear) circuit (Refer to P. 13A-108, INSPECTION PROCEDURE 41.)
- OK ↓

SCAN TOOL SENSOR READ TESTS (Data list)
02 O_2 sensor volts (front) (Refer to P.13A-112.)
OK: Changes between 600– 1,000 mV during sudden racing
- NG → Check the heated oxygen sensor (front) circuit. (Refer to P.13A-109, INSPECTION PROCEDURE 42.)
- OK ↓

SCAN TOOL SENSOR READ TESTS (Data list)
02 O_2 sensor volts (front) (Refer to P.13A-112.)
OK: Changes between 0–400 mV and 600–1,000 mV during idling
- NG → Check the fuel pressure. (Refer to P.13A-121.)
  - OK → Check the injectors for clogging.

INSPECTION PROCEDURE 36

Check the fuel pump circuit.

Measure at the fuel pump connector E-36.
- Disconnect the connector and measure at the harness side.
- Continuity between 2 and ground

OK: Continuity
- NG → Check the harness wire between fuel pump-and ground. Repair, if necessary.
- OK ↓

Check the following connector: E-36
- NG → Repair
- OK ↓

Check trouble symptom.
- NG ↓

Check the harness wire between terminal for fuel pump relay and fuel pump connector.
- NG → Repair
- OK ↓

Replace the fuel pump.

INSPECTION PROCEDURE 37

Check the fuel pump drive control circuit.

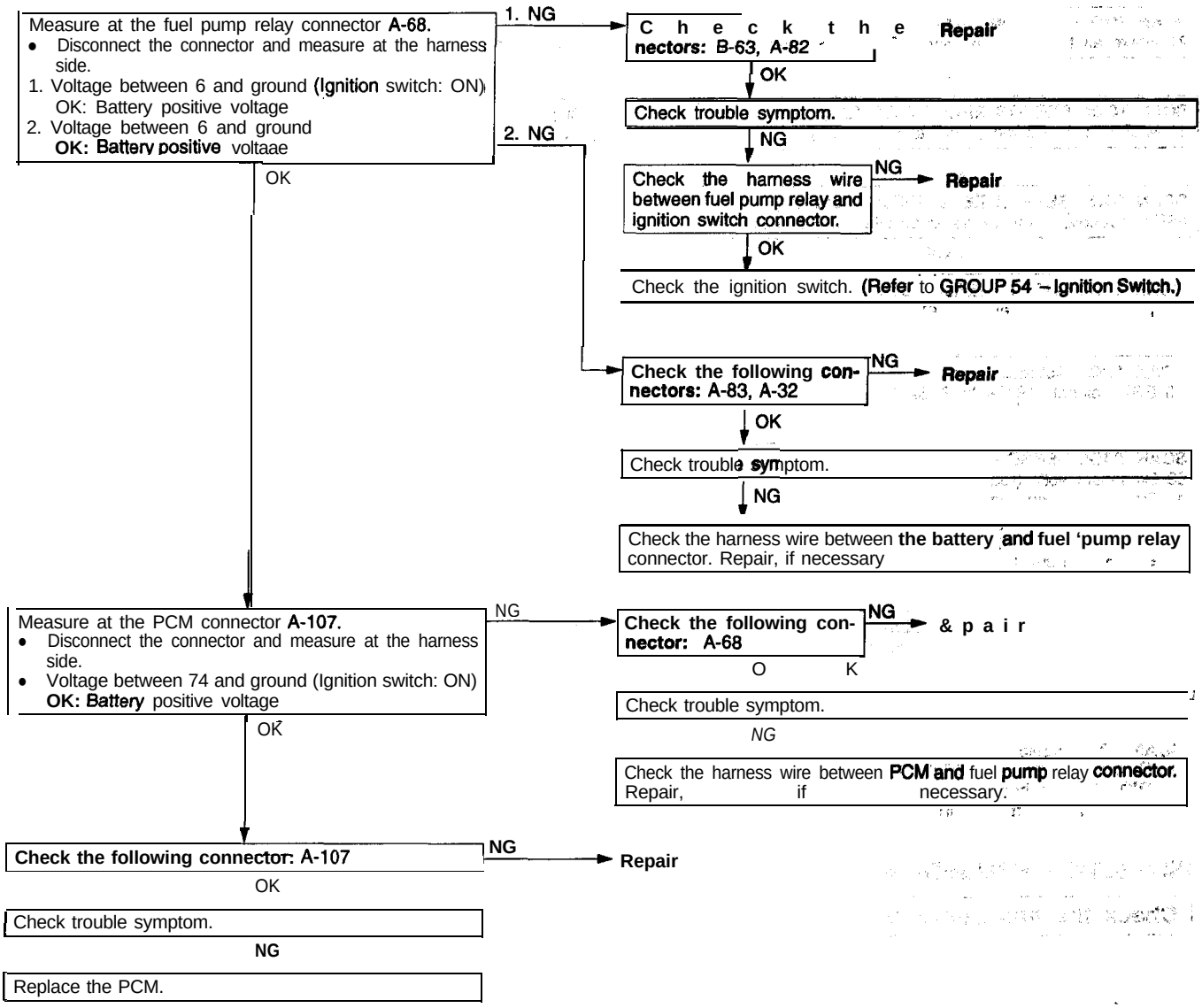

TSB Revision

INSPECTION PROCEDURE 38

Check the engine coolant temperature sensor circuit.

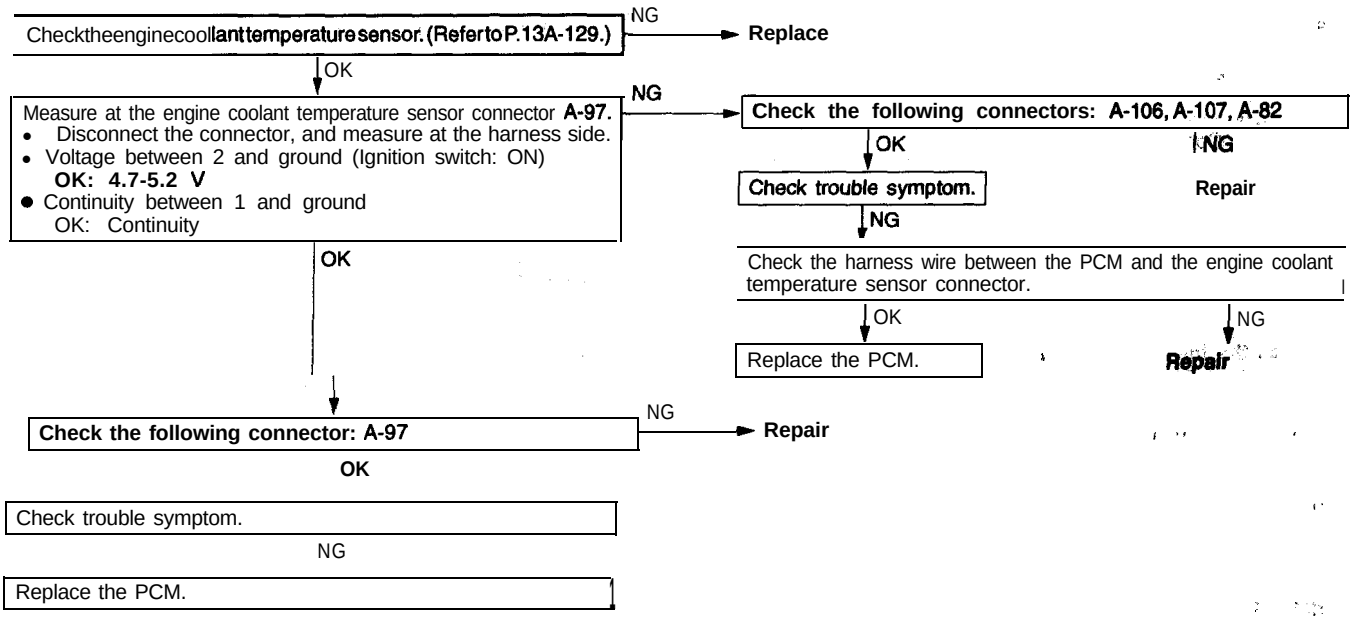

INSPECTION PROCEDURE 39

Check the intake air temperature sensor circuit.

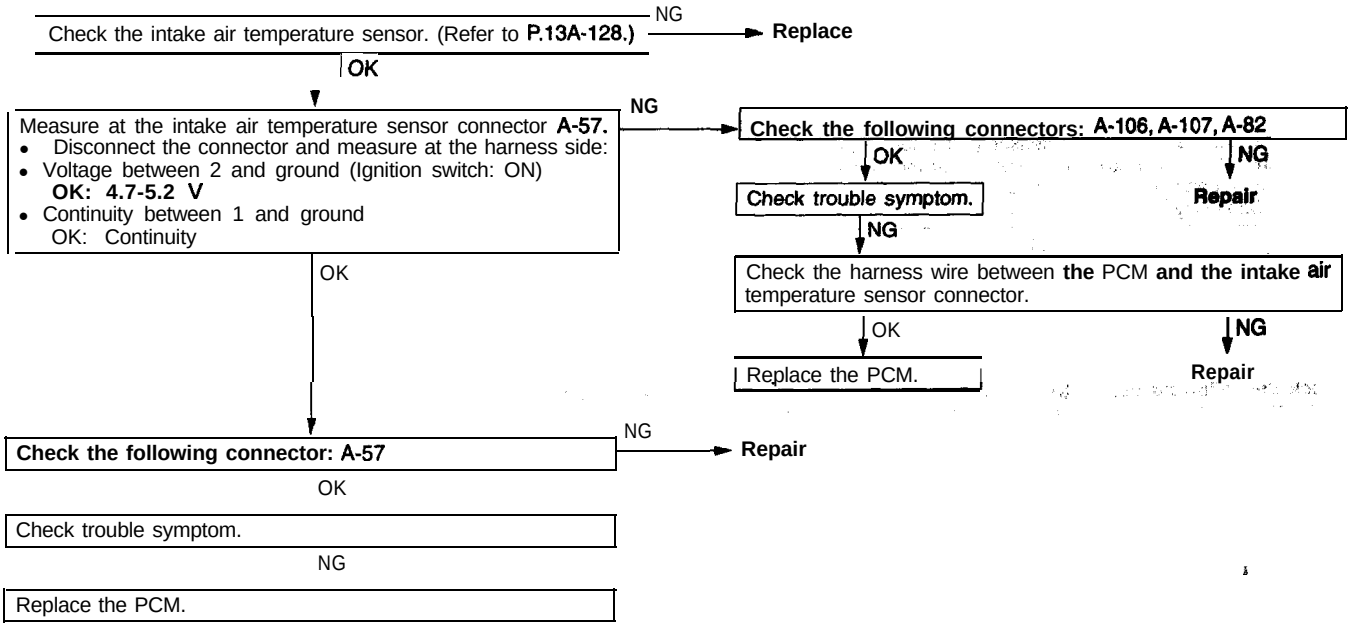

TSB Revision

INSPECTION PROCEDURE 40

Check the MAP sensor circuit.

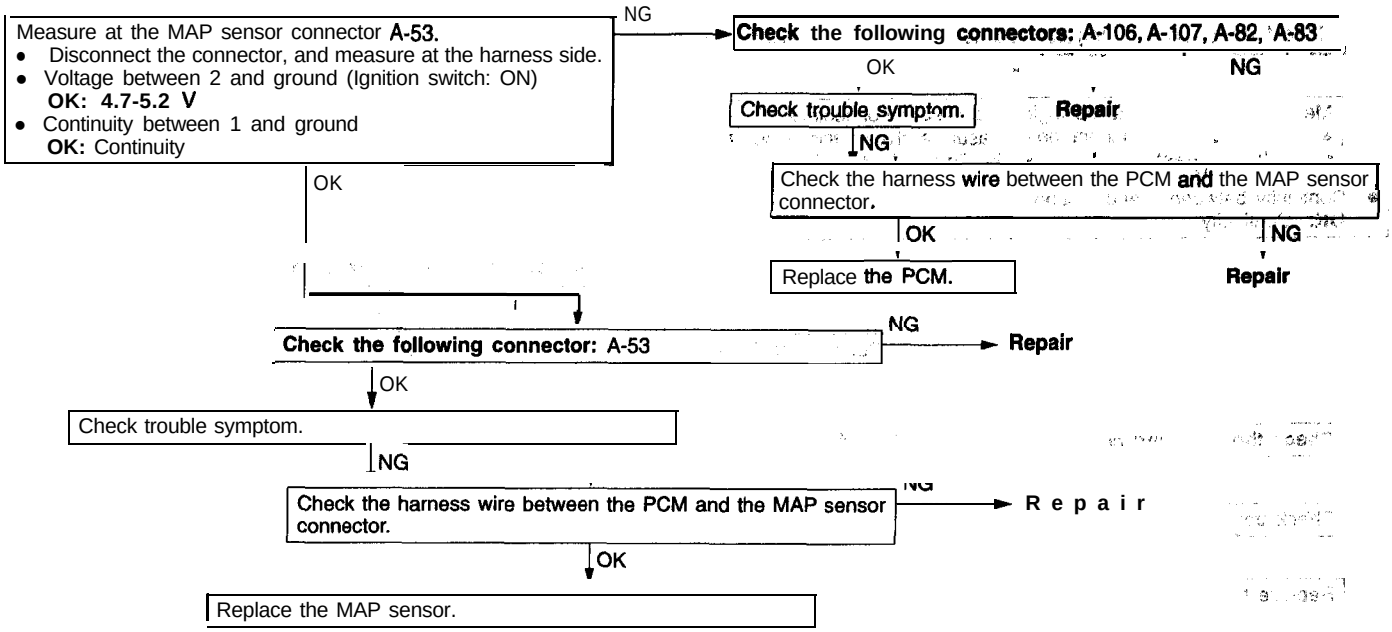

INSPECTION PROCEDURE 41

Check the heated oxygen sensor (rear) circuit.

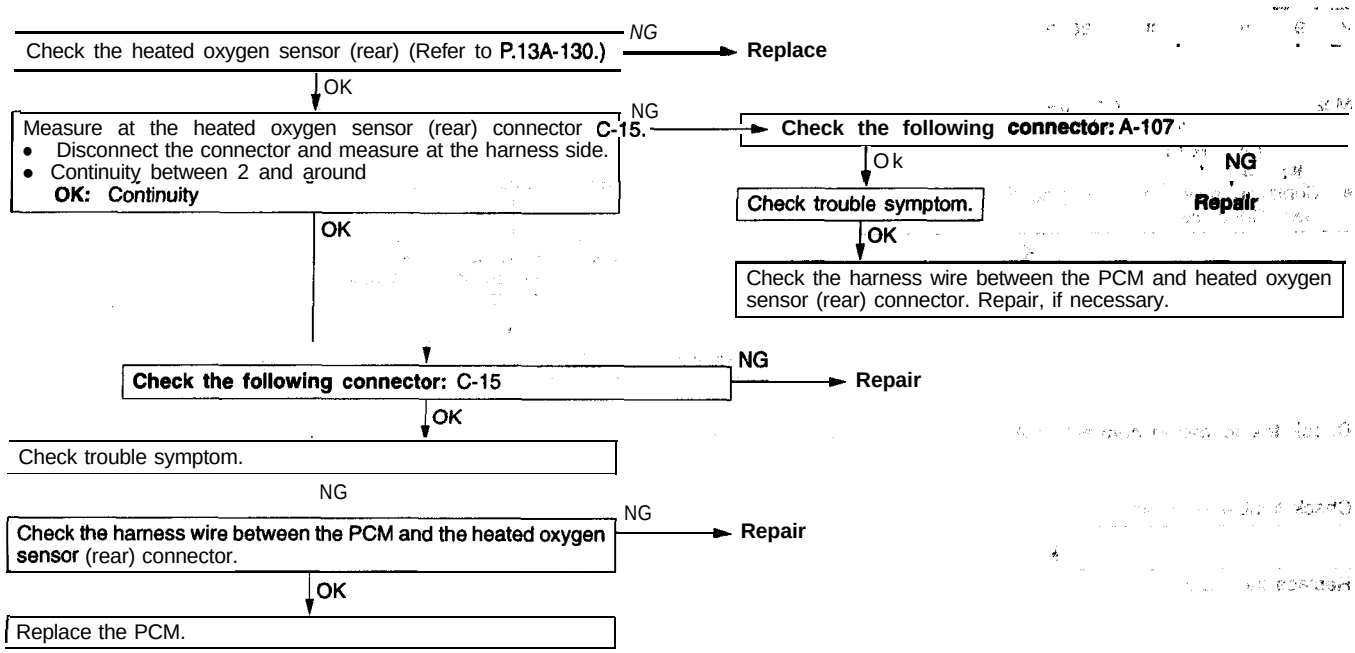

TSB Revision

INSPECTION PROCEDURE 42

Check the heated oxygen sensor (front) circuit.

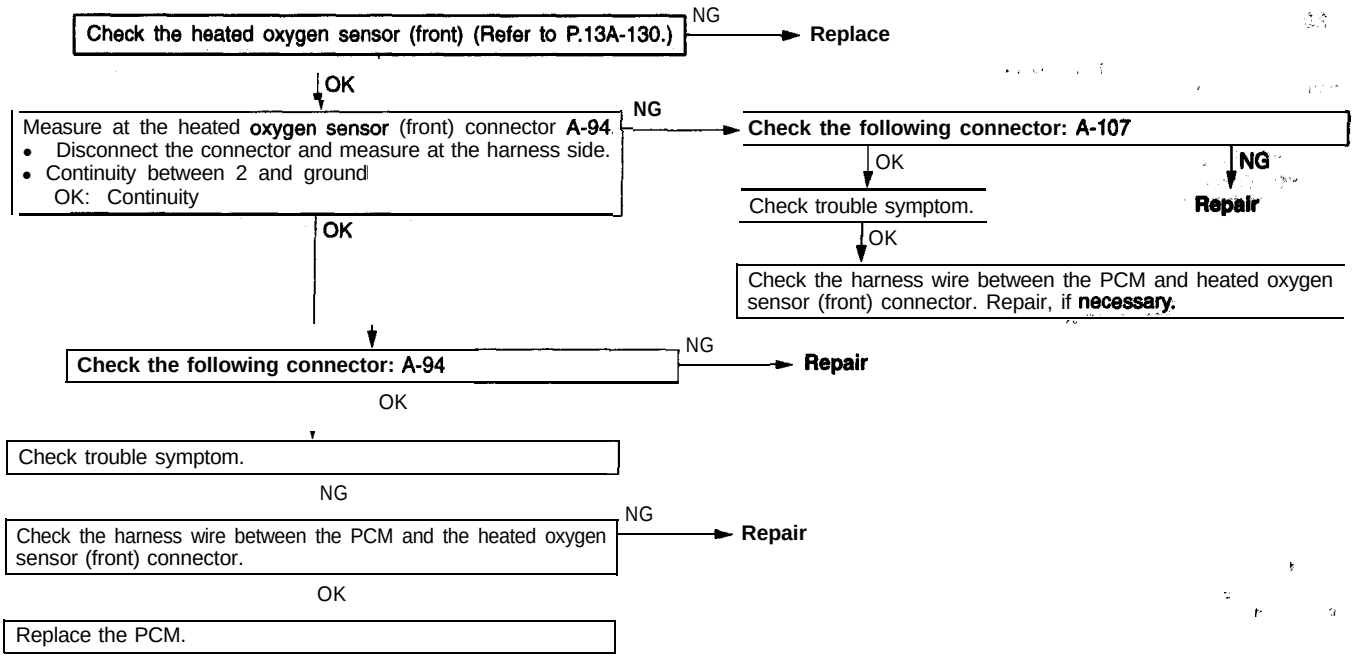

INSPECTION PROCEDURE 43

Check the throttle position sensor circuit.

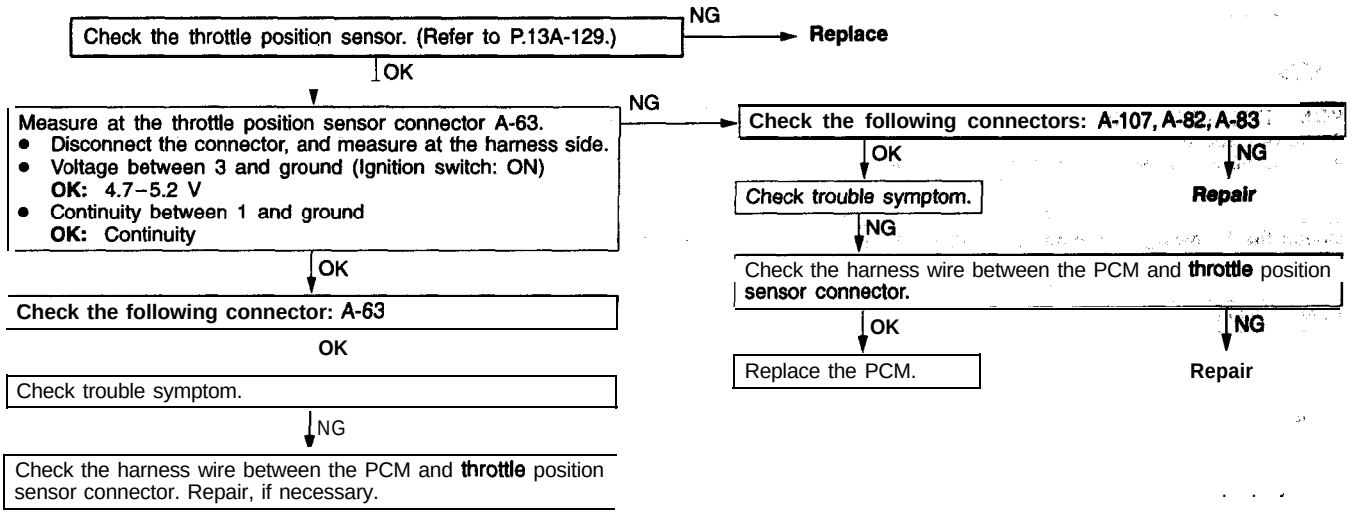

TSB Revision

INSPECTION PROCEDURE 44

Check the vehicle-speed sensor and speedometer.

<M/T>

Measure at the speed sensor connector A-76.
- Disconnect the connector and measure at the harness side.
- Voltage between 1 and ground (Ignition switch: ON)
  OK: 8.5-9.5 V
- Continuity between 2 and ground
  OK: Continuity

NG → **Check the following connectors: A-107, A-82, A-83**
- OK → Check trouble symptom.
  - NG → Check the harness wire between the PCM and the speed sensor connector. Repair, if necessary.
- NG → **Repair**

OK ↓

Check the followina connector: A-76 — NG → **Repair**

↓ OK

Check trouble symptom.

↓ NG

Check the harness wire between the PCM and the speed sensor connector. — NG → **Repair**

↓ OK

SCAN TOOL SENSOR READ TESTS (Data list)
65 Vehicle speed
- Is actual vehicle soeed indicated durina drivina?

↓ No

Check the speedometer circuit.
(Refer to **P.13A-111,** INSPECTION PROCEDURE 45.)

↓ OK

Replace the vehicle speed sensor.

<A/T>

SCAN TOOL SENSOR READ TESTS (Data list)
65 Vehicle speed
- Is actual vehicle speed indicated during driving?

Yes → Replace the PCM.

No ↓

Check the following connectors: A-106, A-107, B-85 — NG → **Repair**

↓ OK

Check trouble symptom.

↓ OK

Check the harness wire between the PCM and the transaxle control module connector. — NG → **Repair**

OK ↓

Check the speedometer circuit. (Refer to **P.13A-111,** INSPECTION PROCEDURE 45.)

OK ↓

Check the automatic transaxle control system.

TSB Revision

INSPECTION PROCEDURE 45

Check the speedometer.

Check the following connectors: A-I 06, A-I 07, C-04, C-05, C-06 —NG→ **Repair**

↓OK

Check trouble symptom.

NG

Check the harness wire between the PCM and the combination meter. Repair, if necessary.

SENSOR READ TESTS (DATA LIST) REFERENCE TABLE

13101010042

Caution

1. **When shifting the select lever to D range, the brakes should be applied so that the vehicle does not move forward.**
2. **When checking while driving the vehicle, always be sure to have two people riding in the vehicle.**

Item No.	Inspection item	Inspection contents		Normal condition	Inspection procedure No.	Reference page
02	O_2 sensor volts (Heated oxygen sensor – front)	Engine: Warm Air/fuel mixture made leaner when decelerating, and is made richer when racing.	When at 4000 r/min engine is suddenly decelerated.	200 mV or less	Procedure No.42	13A-109
			When engine is suddenly raced.	600– 1,000 mV		
		Engine: Warm The heated oxygen sensor signal is used to check the air/fuel mixture ratio, and control condition is also checked by the PCM.	Engine: Idle	400 mV or less to 600– 1,000 mV (Changes)		
			Engine: 2000 r/min			
05	Engine coolant temperature sensor	Ignition switch: ON or with engine running	When engine coolant temperature is –20°C (–4°F)	–20°C	Procedure No.38	13A-107
			When engine coolant temperature is 0°C (32°F)	0°C		
			When engine coolant temperature is 20°C (68°F)	20°C		
			When engine coolant temperature is 40°C (104°F)	40°C		
			When engine coolant temperature is 80°C (176°F)	80°C		
07	Throttle position	Ignition switch: ON	Set to idle position.	400 mV or more	Procedure No.43	13A-109
			Open fully	3,800 mV or less		
08	Minimum throttle	Engine: Idle (more than one minute)		400– 1,000 mV	Procedure No.43	13A-109
09	Knock sensor volts	Engine: Idle → Sudden racing		voltage increases temporarily.	Code No.59/ P0325/16	13A-51
0	Battery voltage	Ignition switch: ON		B+	Procedure No.23	13A-98
1	MAP sensor reading	Ignition switch: ON	Altitude: Om (0 ft.)	101 kPa (30 in.Hg)	Procedure No.40	13A-108
			Altitude: 1,200m (3937 ft.)	88 kPa (26 in.Hg)		

TSB Revision

Item No.	Inspection item	Inspection contents		Normalcondition	Inspection procedure No.	Referenc page
12	IAC (AIS) position	• Engine: Idle • A/C switch: OFF → ON (A/C compressor activated)		Step value increases.	Procedure No.26	13A-99
14	Adaptive fuel factor	• Engine: Warm, 2,500 r/min • Disconnect any injector connector.		Increases gradually	–	
15	Barometric pressure	Ignition switch: ON	Altitude: Om (0 ft.)	101 kPa (30 in.Hg)	Procedure No.40.	13A-1 0 8
			Altitude: 1,200m (3,937 ft.)	88 kPa (26 in.Hg)		
17	Engine speed	Engine: Warm, idle		800 ± 100 r/min	Code No.40/ P0335/11	13A-44
27	Intake air temperature	Ignition switch: ON or with engine running	When intake air temperature is –20°C (–4°F)	–20°C	Procedure No.39	13A-107
			When intake air temperature is 0°C (32°F)	0°C		
			When intake air temperature is 20°C (68°F)	20°C		
			When intake air temperature is 40°C (104°F)	40°C		
			When intake air temperature is 80°C (176°F)	80°C		
36	Charging system goal	Engine: 2,500 r/min		Indicates battery voltage	Code No. 05/–/47 or 06/–/46	13A-25 or 13A-26
45	Battery temperature	Ignition switch: ON		Roughly the same temperature as the battery area	–	
59	Fuel control status	Engine: 2,500 r/min	Engine coolant temperature: Less than 30°C (86°F)	OPEN-LOOP		
			Engine coolant temperature: More than 80°C (176°F)	CLOSED-LOOP		
63	O_2 sensor volts (Heated oxygen sensor – rear)	• Transaxle: 2nd gear <M/T> L range <A/T> • Drive with wide-open throttle	Engine: 3,500 r/min or more	600–1,000 mV	Procedure No.41	13A-108
65	Vehicle speed	Drive at a constant speed.		Actual vehicle speed and the speedometer are the same.	Procedure No.44	13A-110

Item No.	Inspection item	Inspection contents			Normal condition	inspection procedure No.	Reference page
66	O_2 sensor state (Heated oxygen sensor -front)	Engine: Warm Air/fuel mixture made leaner when decelerating, and is made richer when racing.	When at 4,000 r/min engine is suddenly decelerated.		Lean	Procedure No.42	13A-109
			When engine is suddenly raced.		Rich		
		Engine: Warm The heated oxygensensor signal is used to check the air/fuel mixture ratio. and control condition is also checked by the PCM.	Engine: Idle		Lean ↔ Center ↔ Rich (Changes)		
			Engine: 2,000 r/min				
39	MAP gauge reading	• Engine: Warm, idle • Use a vacuum gauge to measure the manifold plenum vacuum.			The same indication as the vacuum gauge	Procedure No.40	P.13A-108
71	Total spark advance	Engine: Warm, idle			Approx. 12° BTDC	–	–
'4	O_2 sensor state (Heated oxygen sensor – rear)	• Transaxle: 2nd gear <M/T> L range <A/T> • Drive with wide-open throttle	Engine: 3,500 r/min or more		Rich	Procedure No.41	13A-108
'8	Fuel level sensor	Fuel tank: Full			3500–5000 mV	Code No. 149/–/42 or 150/–/42	P13A-76
		Fuel tank: Empty			)–1500 mV		
'9	Fuel level	Fuel tank: Full			0/8–2/8	Code No. 149/–/42 or 150/–/42	P13A-76
		Fuel tank: Empty			0/8–2/8		
31*	Long term fuel trim	• Engine: Warm, 2,500 r/min • Disconnect any injector connector.			Increases gradually	Code No.119/ P0171/51	13A-68
32*	Short term fuel trim	• Engine: Warm, 2,500 r/min • Disconnect any injector connector.			Increases temporarily and returns to the original state.	Code No.119/ P0171/51	13A-68
37*	Calculated load value	Engine: Warm	Idle	M/T	2–7 %		–
				A/T	3–9 %		
			2,500 r/min	M/T	6-12 %		
				A/T	9-14 %		

★: General Scan Tool (GST) mode

TSB Revision

INPUT STATE TESTS (DATA LIST) REFERENCE TABLE

13101020045

Item No.	Inspection item	Inspection contents		Normal condition	Inspection procedure No.	Reference page
AI	Power steering switch	Engine: Warm, idle	When steering wheel is stationary	OFF	Code No.115/ P0551/65	13A-66
			When steering wheel is turned	ON		
A6	Park/Neutral switch <A/T>	Ignition switch: ON	Transaxle: P or N range	P, N	Procedure .No.25	13A-99
			Transaxle: Other than P or N range	L, D, 2, R		
A7	Brake switch	Depress the brake pedal		ON	–	
		Do not depress the brake pedal		OFF		
B1	MFI (ASD) voltage sense [MFI relay (ASD relay) operation checking voltage]	Ignition switch: ON		OFF	Code No. 44/–/42	13A-47
		Engine: Cranking or idle		ON'		
B4	INV J2 voltage sense (Ignition switch – IG voltage)	Ignition switch: OFF		OFF	Procedure No.23	13A-98
		Ignition switch: ON/START		START, ON		

OUTPUT STATE TESTS (DATA LIST) REFERENCE TABLE

13101030048

Item No.	Inspection item	Inspection contents		Normal condition	Inspection procedure No.	Reference page
B3	Torque reduction link	When running at constant speed		–	–	
		When shifting		UP, DOWN		
D1	A/C clutch relay	Engine: Idle	A/C switch: OFF	OFF		
			A/C switch: ON (A/C compressor activated)	ON		
D2	MFI relay (ASD relay)	Ignition switch: ON		OFF		
		Engine: Cranking or idle		ON		
D3	Evaporative purge solenoid	Engine: Warm	Right after starting engine	OFF		
		Engine: Warm	10 seconds or more after starting engine	ON		
D5	EGR solenoid	Engine: Warm, idle		ON	–	–
		Slight racing (Engine: 2,000 r/min or more)		OFF (momentarily)		
E8	Radiator fan low speed relay	Radiator fan: Not activated [Engine coolant temperature: Less than approx. 80°C (176" F)]		OFF		–
		Radiator operates at low speed [Engine coolant temperature is 99°C (210°F) or less, A/C switch: ON]		ON		
E9	Radiator fan high speed relay	Radiator fan: Not activated [Engine coolant temperature: Less than approx. 93°C (200°F)]		OFF		
		Radiator operates at high speed. [Engine coolant temperature is 104°C (220" F) or more, A/C switch: ON]		ON		
F1	Fuel pump relay	Ignition switch: ON		OFF	–	
		Engine: Cranking or idle		ON		
F5	MIL (Check engine) lamp	Ignition switch: OFF → ON (Everything is OK and DTC is not memorized)		ON → OFF (Several minutes later)	–	–

TSB Revision

ACTUATOR TEST REFERENCE TABLE

13100900258

Item No.	Inspection item	Drive contents	Inspection contents	Normal condition	Inspection procedure No.	Reference page
01	Ignition coil #1	Ignites every 1.4 seconds	• Ground the spark plugs • Ignition switch: ON • Connect new spark plugs to the cable	Spark plugs ignite	Procedure No.28	13A-100
02	Ignition coil #2				Procedure No.28	13A-100
04	Injector #1	Injects every 1.4 seconds	Ignition switch: ON	Operating sound can be heard.	Code No.21/ P0201/27	13A-34
05	Injector #2				Code No.20/ P0202/27	13A-33
06	Injector #3				Code No.19/ P0203/27	13A-32
29	Injector #4				Code No.61/ P0204/27	13A-52
07	IAC (AIS) motor	Step fluctuates every 2.8 seconds.	gnition switch: ON	Motor operating sound can be heard.	Code No.25/ P0505/25	13A-35
08	Radiator fan relay	Fan speed changes between off, low and high every 2.8 seconds.	gnition switch: ON	When energized, radiator fan and condenser fan operates at low and high speeds	Procedure No.27	13A-100
09	A/C clutch relay	Turned on and off every 1.4 seconds.	• Ignition switch: ON • A/C switch: ON	AWC clutch operating sound can be heard.	Procedure No.26	13A-99
10	MFI relay (ASD relay).	Turned on and off every 1.4 seconds	gnition switch: ON	Operating sound can be heard.	Code No. 1 0/-/42	13A-27
11	Evaporative purge solenoid.	Turned on and off every 1.4 seconds	gnition switch: ON	Operating sound can be heard	Code No.18/ P0443/31	13A-31
14	Tachometer output	Generates 45.5 Hz signal	gnition switch: ON	Engine tachometer display reads Approx. 2300 r/min.	Procedure No.45	13A-111
16	EGR solenoid	Turned on and off every 1.4 seconds.	gnition switch: ON	Operating sound can be heard.	Code No.17/ P0403/32	13A-30
46	Low speed fan relay	Fan speed changes between off and low every 0.7 seconds.	gnition switch: ON	When energized, the radiator fan operates	Code No. 92/P1490/ 35	13A-54

Item No.	Inspection item	Drive contents	Inspection contents	Normal condition	Inspection procedure No.	Reference page
47	High speed condenser fan relay	Fanspeedchanges between off and high every 0.7 seconds.	Ignition switch: ON	When energized, the radiator fan and condenser fan operates	Code No. 139/P1487 /35	13A-74
51	Fuel pump relay	Turned on and off every 1.4 seconds.	Ignition switch: ON	The fuel pump operating sound can be heard.	Procedure No.24	13A-98

NOTE
If an injector operates properly, it releases fuel when activated by the PCM. Prolonged injector actuation; particularly on vehicles equipped with multi-port systems may cause excessive amounts of fuel to be deposited in the intake manifold. Hydrostatic lock may result.

ON-VEHICLE SERVICE

13101040010

THROTTLE BODY MINIMUM AIR FLOW CHECK

1. Start the engine and warm it up until the engine coolant is heated to 80°C (176°F) or higher and then stop the engine.

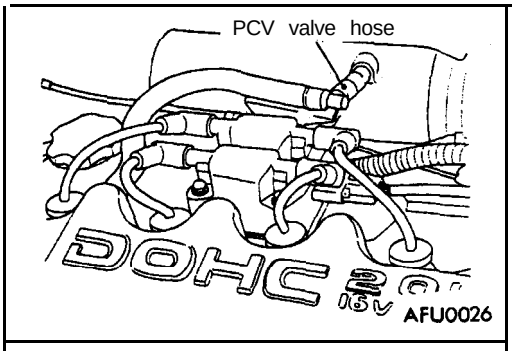

2. Disconnect the PCV valve hose from the intake manifold nipple.
3. Attach Air Metering Fitting MB995050 (0.125 in. orifice) to the intake manifold nipple.
4. Disconnect the 3/16 inch idle purge line from the throttle body nipple. Cap the 3/16 inch nipple.
5. Connect the scan tool to the data link connector.
6. Restart the engine. Allow engine to idle for at least one minute. All accessories should be off.

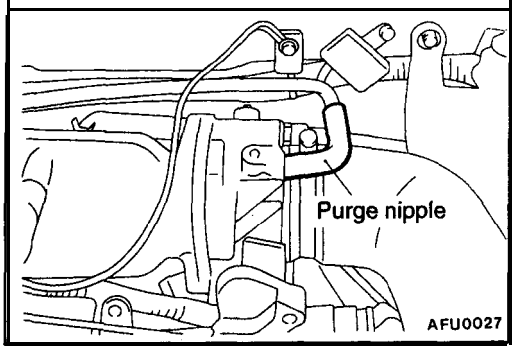

7. Using the scan tool, access the ACTUATOR TEST "Minimum Airflow Idle Speed" screen.
8. The following will then occur:
   - Idle air control motor will fully close.
   - Idle spark advance will become fixed.
   - Scan tool displays engine speed.
9. If idle speed is within the range shown in the Idle Specification chart, throttle body minimum airflow is set correctly.

   Standard value:
   450–1,100 r/min (Less than 1,000 miles)
   500–1,100 r/min (More than 1,000 miles)

   If idle speed is not within the standard value, use the scan tool to access the special function "Reset IAC" screen and reset the IAC. Then carry out step 7 again.
10. If idle speed is above specifications, use the scan tool to check idle air control motor operation. If idle air control motor is OK, replace the throttle body.

    NOTE
    If the throttle body is replaced, reset the IAC.
    If idle speed is below specifications, shut off the engine and clean the throttle body as follows:
    (a) Remove the throttle body from engine.

    WARNING:
    CLEAN THROTTLE BODY IN A WELL-VENTILATED AREA. WEAR RUBBER OF BUTYL GLOVES, DO NOT LET CLEANER COME IN CONTACT WITH EYES OR SKIN. AVOID INGESTING THE CLEANER. WASH THOROUGHLY AFTER USING CLEANER.

    (b) While holding the throttle open, spray the entire throttle body bore and the manifold side of the throttle plate with cleaner.

(c) Using a soft scuff pad, clean the top and bottom of throttle body bore and the edges and manifold side of, 'the throttle blade. The edges of the throttle blade and portions of the throttle bore that are closest to the throttle blade when closed, must be free of deposits.

(d) Use compressed air to dry the throttle body.

(e) Inspect throttle body for foreign material.

(f) Install throttle body on manifold.

(g) Repeat steps 1 through 14. If the minimum air flow is still not within specifications, the problem is not caused by the throttle body.

11. Shut off engine.
12. Remove Air Metering Fitting MB995050 from, the intake manifold PCV nipple. Reinstall the PCV valve hose.
13. Uncap the throttle body idle purge nipple and connect the idle purge line.
14. Remove the scan tool.

FUEL PRESSURE TEST

13100190068

WARNING:
FUEL SYSTEM PRESSURE MUST BE RELEASED BEFORE A FUEL SYSTEM HOSE OR COMPONENT' "IS DISCONNECTED.

The specifications listed in the Fuel System Pressure Chart are determined without vacuum applied to the fuel 'pressure, regurator.

1. Fuel system pressure must be released each time a fuel' hose is to be disconnected. Release fuel system pressure.,

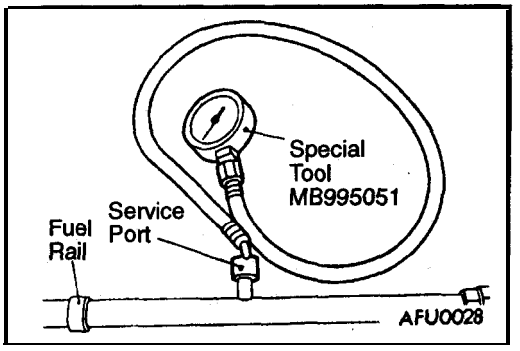

2. Remove protective cover from service valve on the fuel rail.
3. Connect Fuel Pressure Gauge MB995051 to fuel rail service valve.

Caution
When using the scan tool Fuel System Test, fuel pump relay will remain energized for 7 minutes or until the test is stopped, or until the ignition switch is turned to the Off position.

4. Place the ignition key in the ON position. Using the scan tool! access actuator test "Fuel System Test.". The Fuel System Test will activate the fuel pump and pressurize the system.

   Standard value:'
   330–350 kPa (47–50 psi)

5. Use the scan tool "Fuel System Test" to pressurize the system. Ensure fuel does not leak from the fuel rail service valve.

6. If pressure is not correct, troubleshoot and repair according to the table below.

Symptom	Probable cause	Remedy
• Fuel pressure too low • No fuel pressure in fuel return hose	Clogged fuel filter	Replace fuel filter
	Fuel leaking to return side due to poor fuel regulator valve seating or settled spring	Replace fuel pressure regulator
	Low fuel pump delivery pressure	Replace fuel pump
Fuel pressure too high	Binding valve in fuel pressure regulator	Replace fuel pressure regulator
	Clogged fuel return hose or pipe	Clean or replace hose or 'pipe

7. Using the scan tool, with 'the ignition key in the ON position, repeat the "Fuel System Test."
8. Turn the ignition switch off and observe fuel pressure 'gauge reading. Normal if the reading does not drop within 2 minutes! If it does, observe the rate of drop and troubleshoot and repair-according to the table below.

Symptom	Probable cause	Remedy
Fuel pressure drops gradually after engine is stopped	Leaky injector	Replace injector
	Leaky fuel regulator valve seat	Replace fuel pressure regulator
Fuel pressure drops sharply immediately after engine is stopped	Checkvalve in fuel pump is held open	Replace fuel pump

9. Remove fuel pressure gauge and reinstall protective cover onto fuel rail service valve.

FUEL PUMP CONNECTOR DISCONNECTION (HOW TO REDUCE FUEL LINE PRESSURE)

13100090092

When removing the fuel pipe, hose., etc., since fuel pressure in the fuel pipe line is high, do the following operation so as to release fuel pressure in the line and prevent fuel from running out.

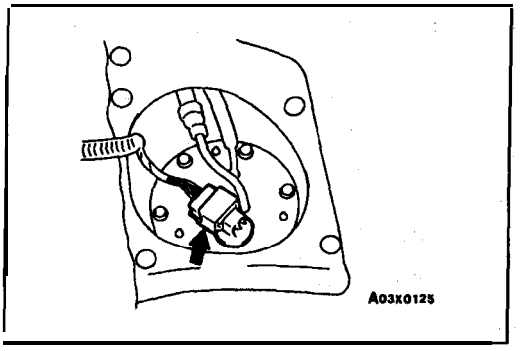

1. Remove the rear seat cushion. (Refer to GROUP 52A – Seat.)
2. Remove the protector to' disconnect the fuel pump connector.
3. Start the engine and let it run until it stops naturally, turn the ignition switch to OFF.
4. Connect the fuel pump connector to install the protector.
5. Install the rear seat cushion.

ON-VEHICLE INSPECTION OF MFI COMPONENTS

13100210139

COMPONENT LOCATION

Name	Symbol	Name	Symbol
Air conditioning compressor clutch relay	T	Idle air control motor	G
Air conditioning switch	W	Ignition coil	D
Camshaft position sensor	I	Injector	N
Check engine/Malfunction indicator lamp	U	Intake air temperature sensor	C
Crankshaft position sensor	B	Knock sensor	F
Data link connector	V	Multiport fuel injection (MFI) relay (Auto shutdown relay)	J
Electric EGR transducer solenoid	R		
Engine coolant temperature sensor	M	Manifold absolute pressure (MAP) sensor	A
Evaporative emission purge solenoid	K	Park/Neutral position switch (Transaxle range switch)	Q
Evaporative emission ventilation solenoid	K	Power steering pressure switch	L
Fuel pump relay	J	Powertrain control module (PCM)	S
Heated oxygen sensor (Front)	0	Throttle position sensor	H
Heated oxygen sensor (Rear)	E	Vehicle speed sensor	P

NOTE
The "Name" column is in alphabetical order.

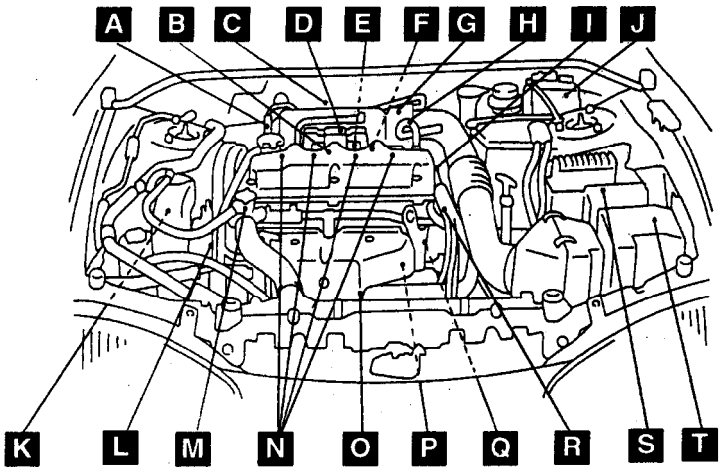

AFU0029

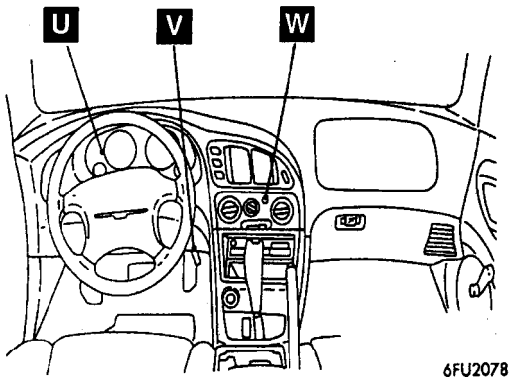

6FU2078

AFU0177

TSB Revision

A

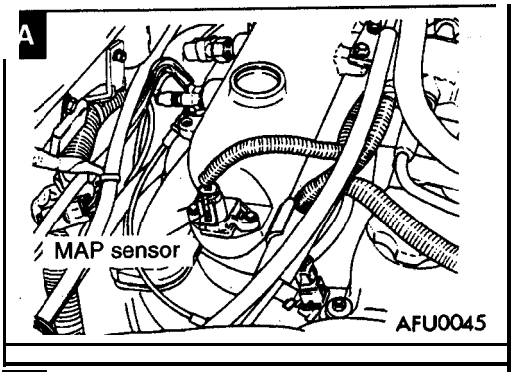
MAP sensor
AFU0045

B

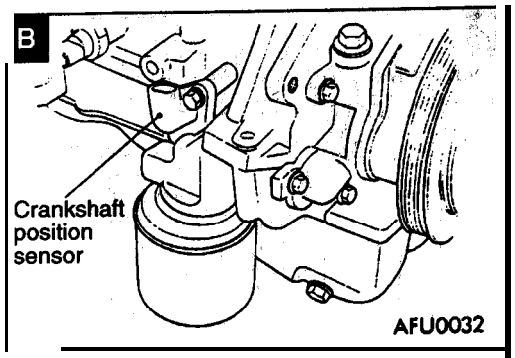
Crankshaft position sensor
AFU0032

C

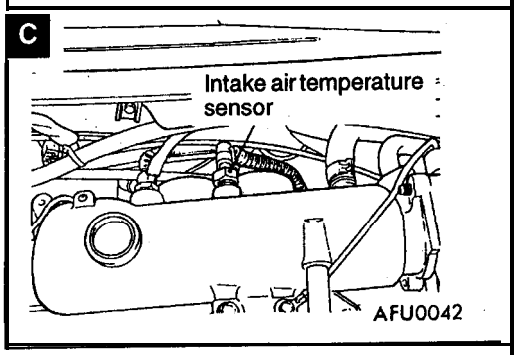
Intake air temperature sensor
AFU0042

D

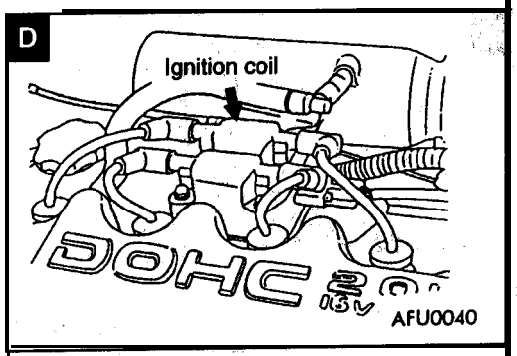
Ignition coil
DOHC
AFU0040

E

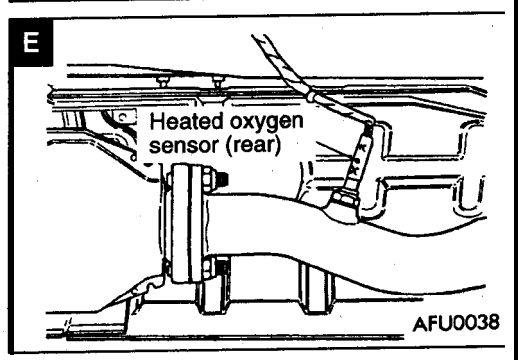
Heated oxygen sensor (rear)
AFU0038

F

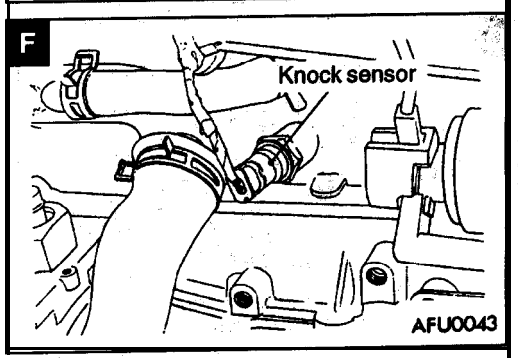
Knock sensor
AFU0043

G

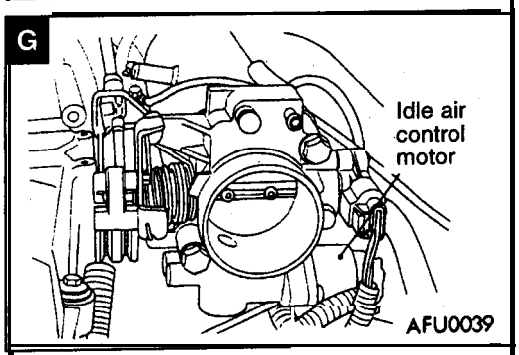
Idle air control motor
AFU0039

H

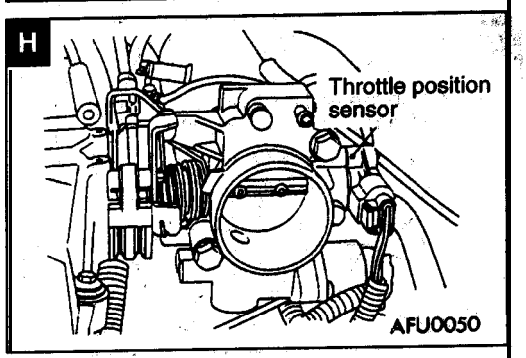
Throttle position sensor
AFU0050

I

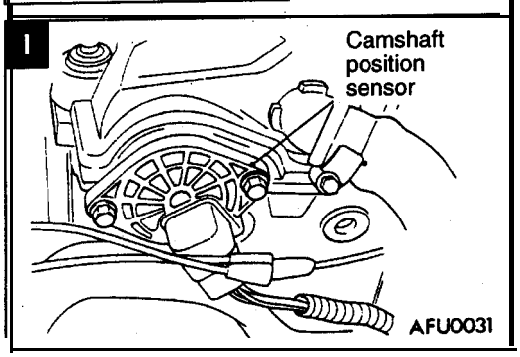
Camshaft position sensor
AFU0031

J

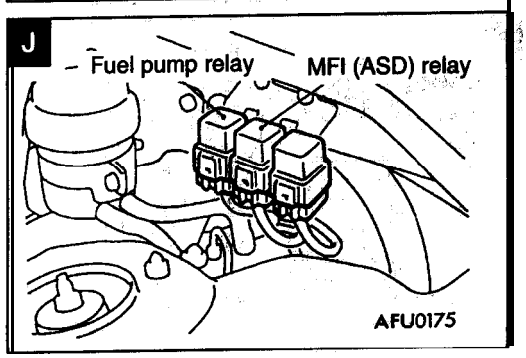
Fuel pump relay
MFI (ASD) relay
AFU0175

K

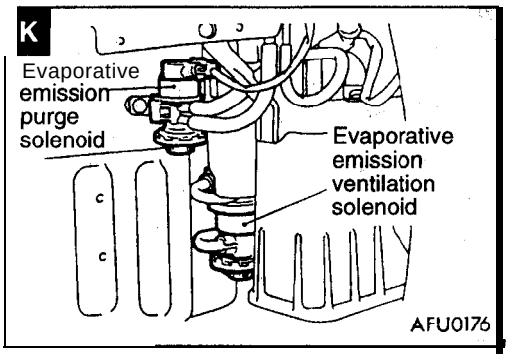
Evaporative emission purge solenoid
Evaporative emission ventilation solenoid
AFU0176

L

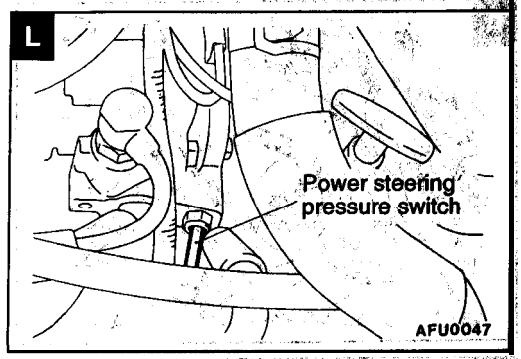
Power steering pressure switch
AFU0047

M

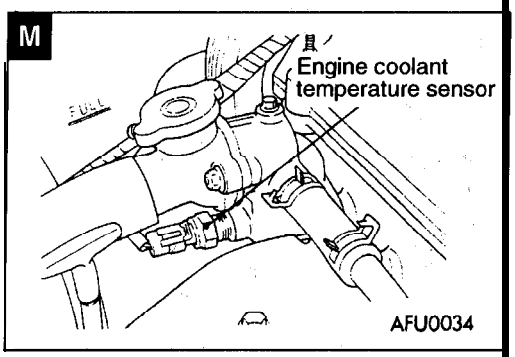
Engine coolant temperature sensor
AFU0034

N

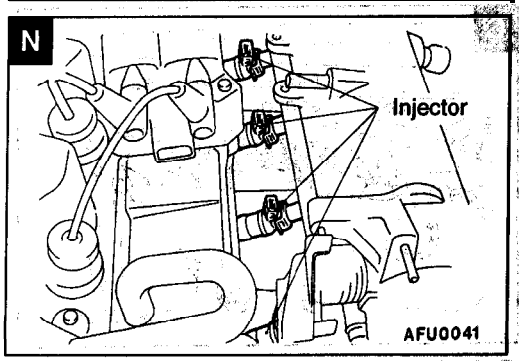
Injector
AFU0041

O

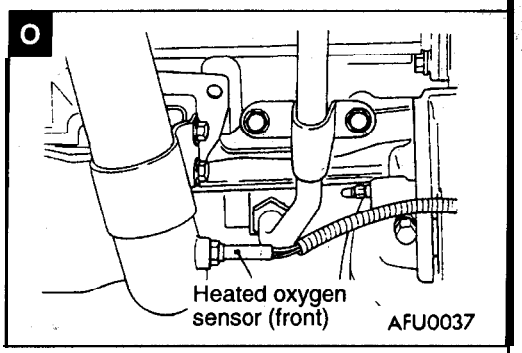
Heated oxygen sensor (front)
AFU0037

P

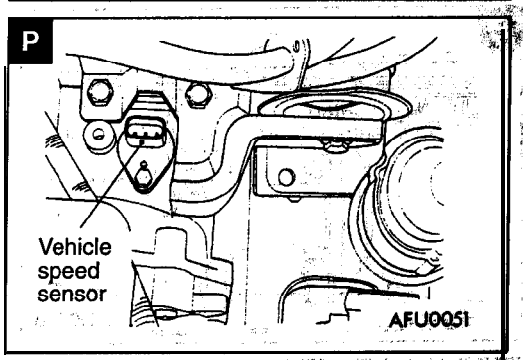
Vehicle speed sensor
AFU0051

Q

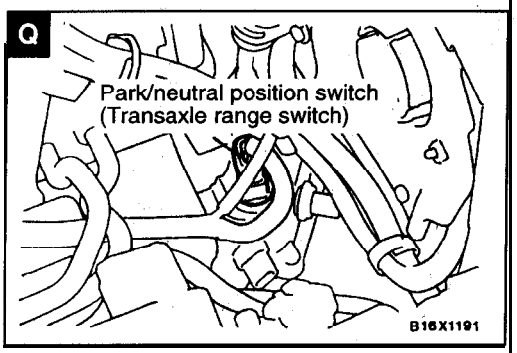
Park/neutral position switch (Transaxle range switch)
B16X1191

R

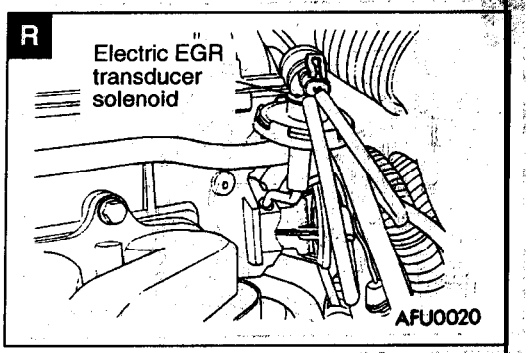
Electric EGR transducer solenoid
AFU0020

S

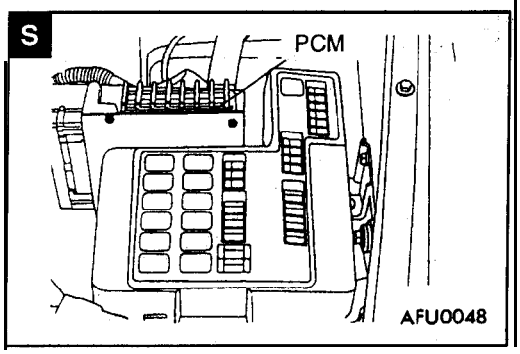
PCM
AFU0048

T

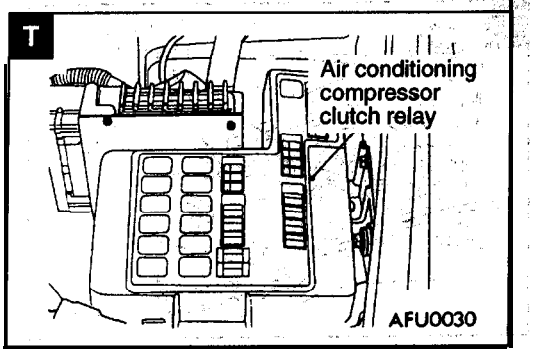
Air conditioning compressor clutch relay
AFU0030

U

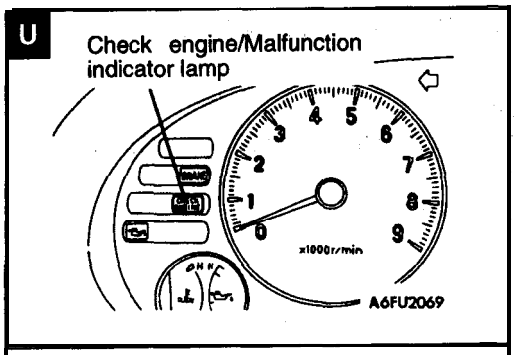
Check engine/Malfunction indicator lamp
x1000r/min
A6FU2069

V

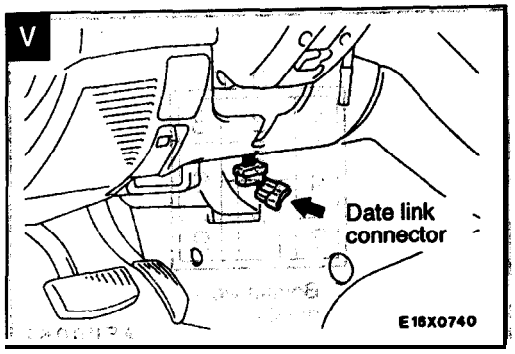
Date link connector
E16X0740

W

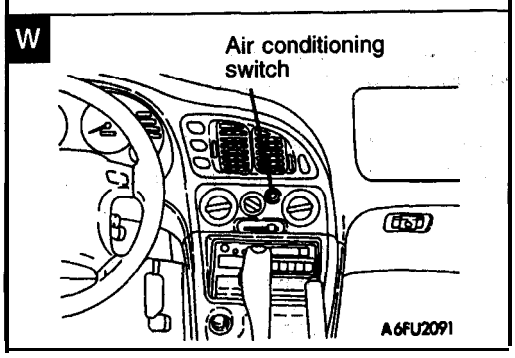
Air conditioning switch
A6FU2091

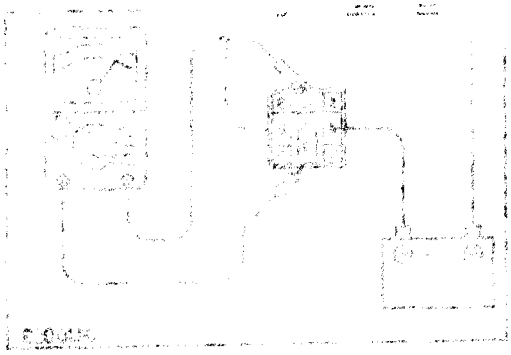

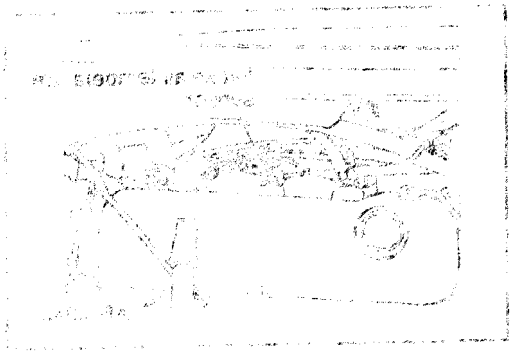

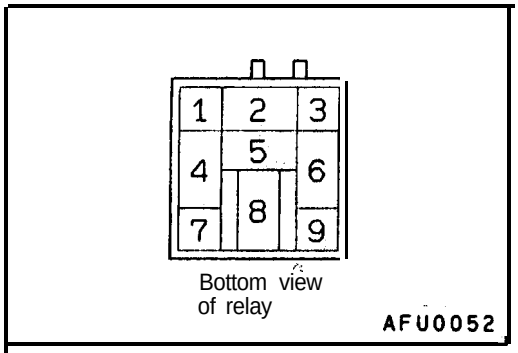

MFI RELAY (ASD RELAY) AND FUEL PUMP RELAY CHECK

13100990019

1. Remove the relay.
2. Check that there is continuity between (4) , and (6) terminals.

   Standard value: 35–75 Ω

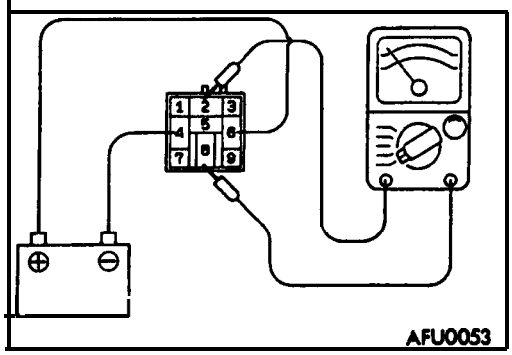

3. Use jumper leads to connect relay terminal No.6 to the battery (+) terminal and terminal No.4 to the battery (–) terminal.
   Check the continuity between relay terminal No.2–8 while connecting and disconnecting the jumper lead, at the, battery (–) terminal.

Jumper lead	Continuity between terminal No.2–8
Connected	Continuity (0 Ω)
Disconnected	No continuity

4. If there is a defect, replace the MFI (ASD) relay or fuel pump relay.

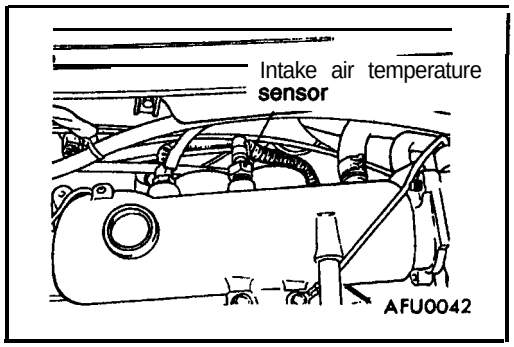

INTAKE AIR TEMPERATURE SENSOR CHECK

13100280062

1. Disconnect the intake air temperature sensor connector.
2. Measure the resistance between the sensor terminals.

Temperature [°C (°F)]	Resistance (kΩ)
25 (77)	9-11
100 (212)	0.6–0.8

INSTALLATION

1. Apply sealant to threaded portion.

   Specified sealant: Loctite 24200 or equivalent

2. Install intake air temperature sensor and tighten it to specified torque.

   Sensor tightening torque: 7 Nm (5 ft.lbs.)

3. Fasten harness connectors securely.

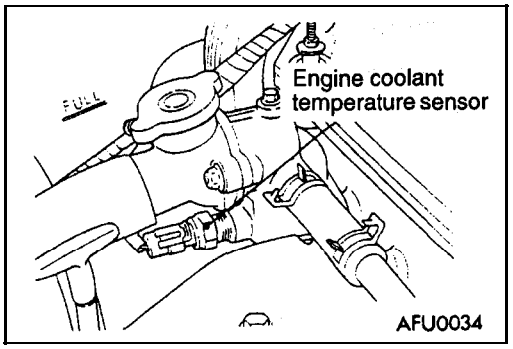

ENGINE COOLANT TEMPERATURE SENSOR CHECK 13100310068

1. Disconnect the engine coolant temperature sensor connector.
2. Measure the resistance between the sensor terminals.

Temperature [°C (°F)]	Resistance (kΩ)
25(77)	9–11
100(212)	0.6–0.8

INSTALLATION

1. Apply sealant to threaded portion.

   Specified sealant: Loctite 24200 or equivalent
2. Install engine coolant temperature sensor and tighten it to specified torque.

   Sensor tightening torque: 7 Nm (5 ft.lbs.)
3. Fasten harness connectors securely.

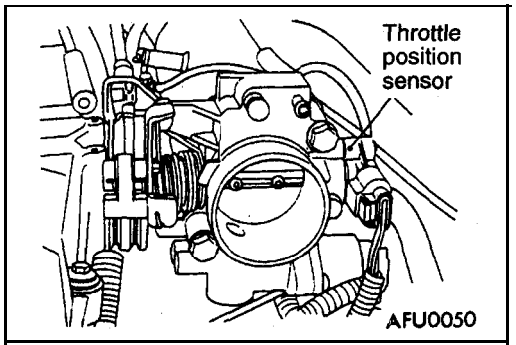

THROTTLE POSITION SENSOR CHECK 13100320061

1. Disconnect the throttle position sensor connector.

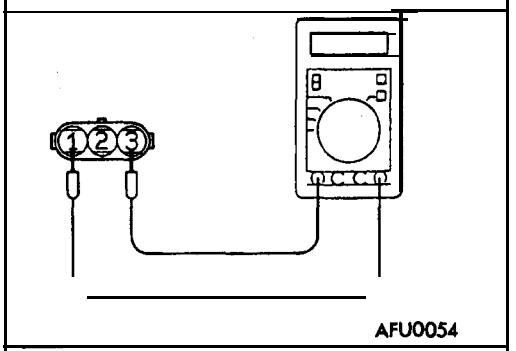

2. Measure the resistance between the throttle position sensor side connector terminal 1 and terminal 3.

   Standard value: 3.5–6.5 kΩ

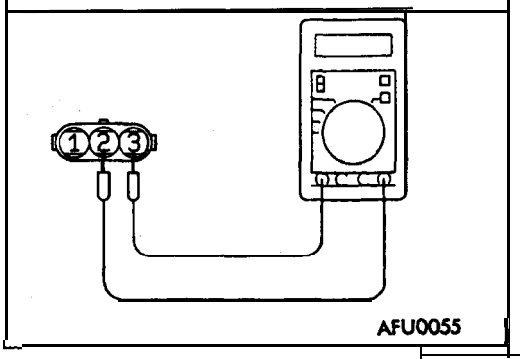

3. Measure the resistance between the throttle position sensor side, connector terminal 2 and terminal 3.

Throttle valve slowly open until fully open from the idle position	Changes smoothly in proportion to the opening angle of the throttle valve

4. If the resistance is outside the standard value, or if it doesn't change smoothly, replace the throttle position sensor.

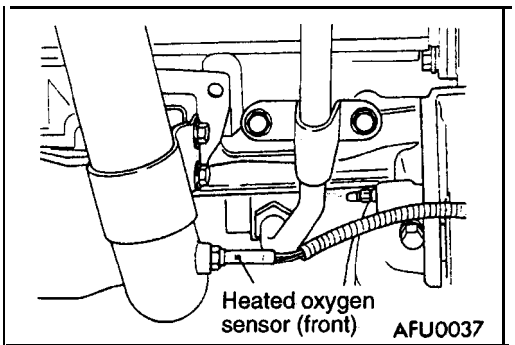

HEATED OXYGEN SENSOR CHECK

13100500045

<Heated oxygen sensor (front)>

1. Disconnect the heated oxygen sensor connector.

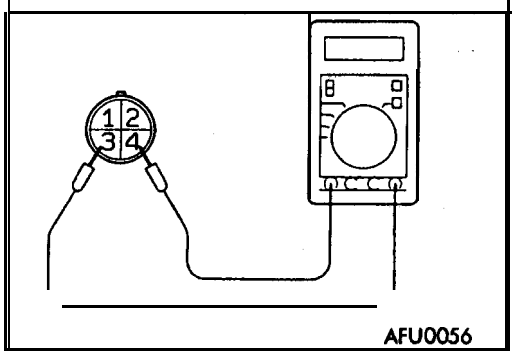

2. Check that there is continuity between terminal 3 and terminal 4 on the heated oxygen sensor connector.
3. If there is no continuity, replace the heated oxygen sensor.
4. Warm up the engine until engine coolant is 80°C (176°F) or higher.
5. Use the jumper wires to connect terminal 3 of the heated oxygen sensor connector to the battery (+) terminal and terminal 4 to the battery (–) terminal.

Caution
Be very careful when connecting the jumper wires, or the heated oxygen sensor can be damaged.

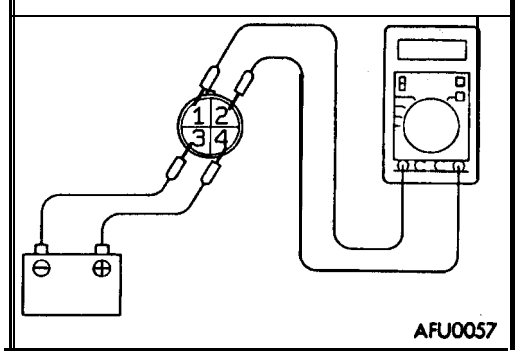

6. Connect a digital voltmeter between terminal 1 and terminal 2.
7. While repeatedly racing the engine, measure the heated oxygen sensor output voltage.

Standard value:

Engine	Heated oxygen sensor output voltage	Remarks
When racing engine	0.6–1.0 V	If you make the air/fuel ratio rich by racing the engine repeatedly, a normal heated oxygen sensor will output a voltaae of 0.6–1.0 V.

8. If the sensor is defective, replace the heated oxygen sensor.

NOTE
For removal and installation of the heated oxygen sensor, refer to GROUP 15 – Exhaust Pipe, Main Muffler.

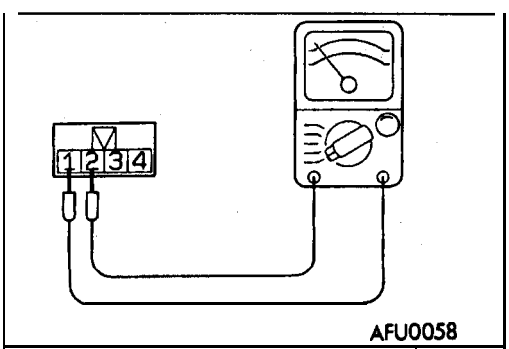

<Heated oxygen sensor (rear)>

1. Disconnect the heated oxygen sensor connector.
2. Check that there is continuity between terminal 1 and terminal 2 on the heated oxygen, sensor connector.
3. If there is no continuity, replace the heated oxygen sensor.

NOTE
1. If the scan tool does not display the standard value although no malfunction is found by the above-mentioned continuity test and harness check, replace the heated oxygen sensor (rear).

2. For removal and installation of the oxygen sensor, refer to GROUP 15 – Exhaust Pipe, Main Muffler.

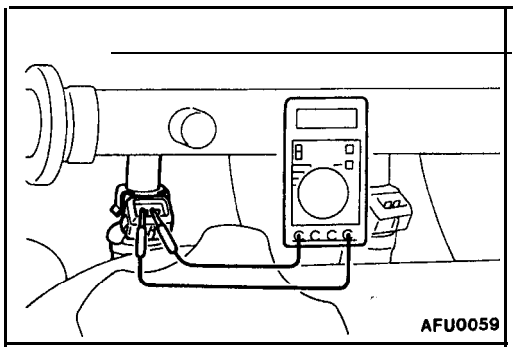

INJECTOR CHECK

13100520065

Measurement of Resistance between Terminals

1. Remove the injector connector.
2. Measure the resistance between terminals.

   Standard value: 11–15 Ω [at 20°C (68°F)]

3. Install the injector connector

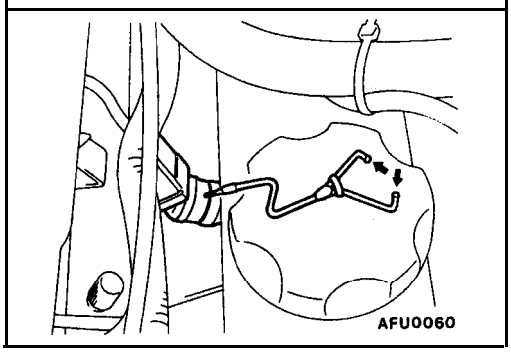

Checking operation sound

Using a stethoscope or long blade screwdriver, check the operation sound ("tick-tick-tick") of injectors during idling or during cranking

Check that as the engine speed increases, the frequency of the operating sound also increases.

Caution

Note that even if the injector you are checking is not operating, you will hear the operating sound of the other injectors.

NOTE

If no operating sound is heard from the injector that is being checked, check the injector drive circuit. If there is nothing wrong with the circuit, a defective injector or PCM is suspected

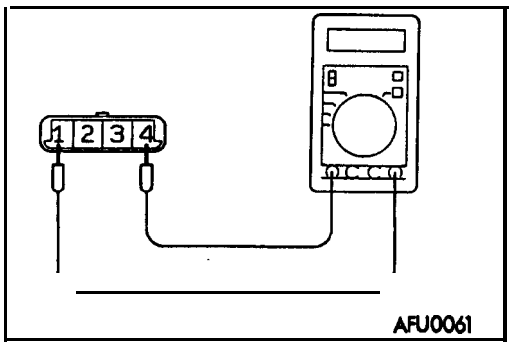

IDLE AIR CONTROL MOTOR (STEPPER MOTOR) CHECK

13100540085

Coil Resistance Check

1. Disconnect the idle air control motor connector.
2. Measure the resistance between terminal 1 and terminal 4 of the connector at the idle air control motor side.

   Standard value: 36-52 Ω [at 20°C (68°F)]

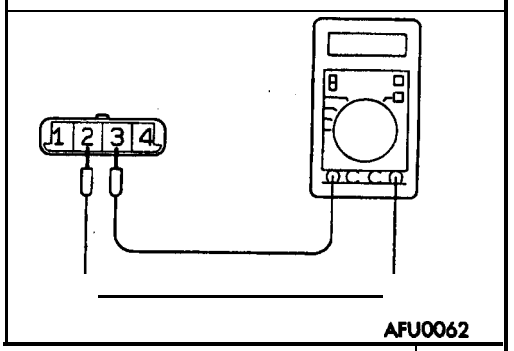

3. Measure the resistance between terminal 2 and terminal 3 of the connector at the idle air control motor side.

   Standard value: 36-52 Ω [at 20°C (68°F)]

EVAPORATIVE EMISSION PURGE SOLENOID CHECK

13100560166

Refer to GROUP 17' – Emission Control System.

ELECTRIC EGR TRANSDUCER SOLENOID CHECK

13101070026

Refer to GROUP 17 – Emission Control System.

INJECTOR

13100710097

REMOVAL AND INSTALLATION

Pre-removal Operation
- Fuel Line Pressure Reduction (Refer to P. 13A-118.)
- Battery and Air Intake Hose Removal

Post-Installation Operation
- Battery and Air Intake Hose Installation
- Fuel Leakage Inspection

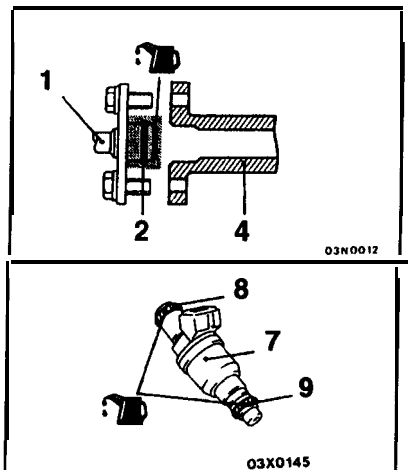

Engine oil

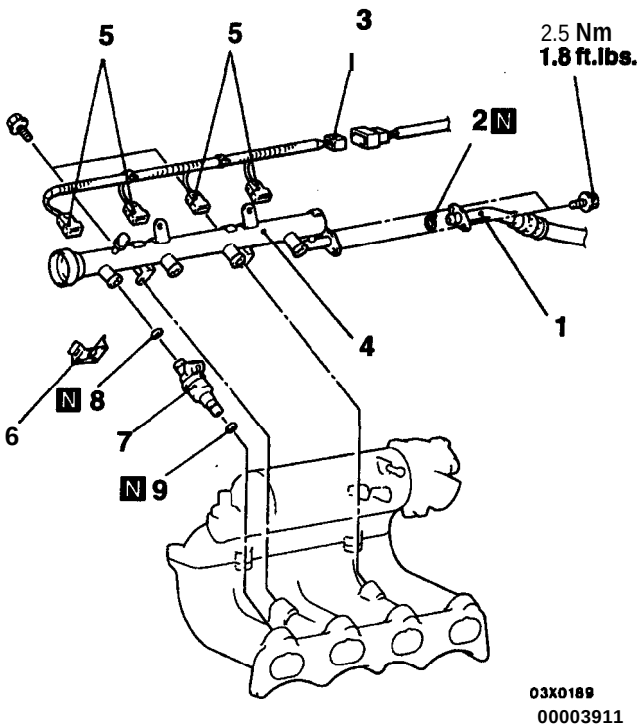

Removal steps

▶B◀ 1. High-pressure fuel hose connection
2. O-ring
3. Injector harness connector
◀A▶ 4. Fuel rail
5. Injector connectors
6. Retainers
◀A▶ ▶A◀ **7. Injectors**
8. O-rings
9. O-rings

TSB Revision

REMOVAL SERVICE POINT

◀A▶ FUEL RAIL/INJECTORS REMOVAL

Remove the fuel rail (with the injectors attached' to it.)

Caution
Do not drop the injector.

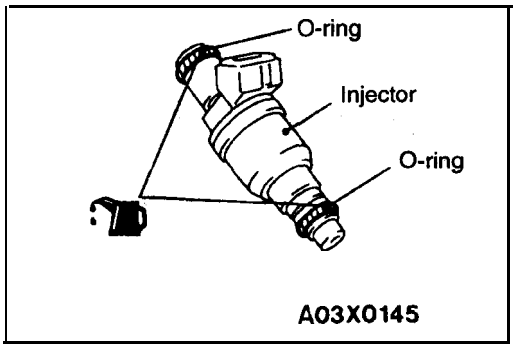

INSTALLATION SERVICE POINTS

▶A◀ INJECTORS INSTALLATION

(1) Apply a small amount of clean engine oil to the O-ring.

Caution
Do **not let the engine oil get into the fuel rail.**

(2) While turning the injector to the left and right, install it to the fuel rail.

(3) Check to be sure that the injector turns smoothly.
If it does not turn smoothly, the O-ring may be trapped, remove the injector and then reinsert it into the fuel rail and check again.

▶B◀ HIGH-PRESSURE FUEL HOSE CONNECTION

When connecting the high-pressure fuel hose to the fuel rail, apply a small amount of engine oil to the hose union, and then insert, being careful not to damage the O-ring.

Caution
Do not let the engine oil get into the fuel rail.

THROTTLE BODY

13100770071

REMOVAL AND INSTALLATION

Pm-removal Operation
- Battery Removal

Post-installation Operation
- Battery Installation
- Accelerator Cable Adjustment
  (Refer to GROUP 17 – On-vehicle Service.)

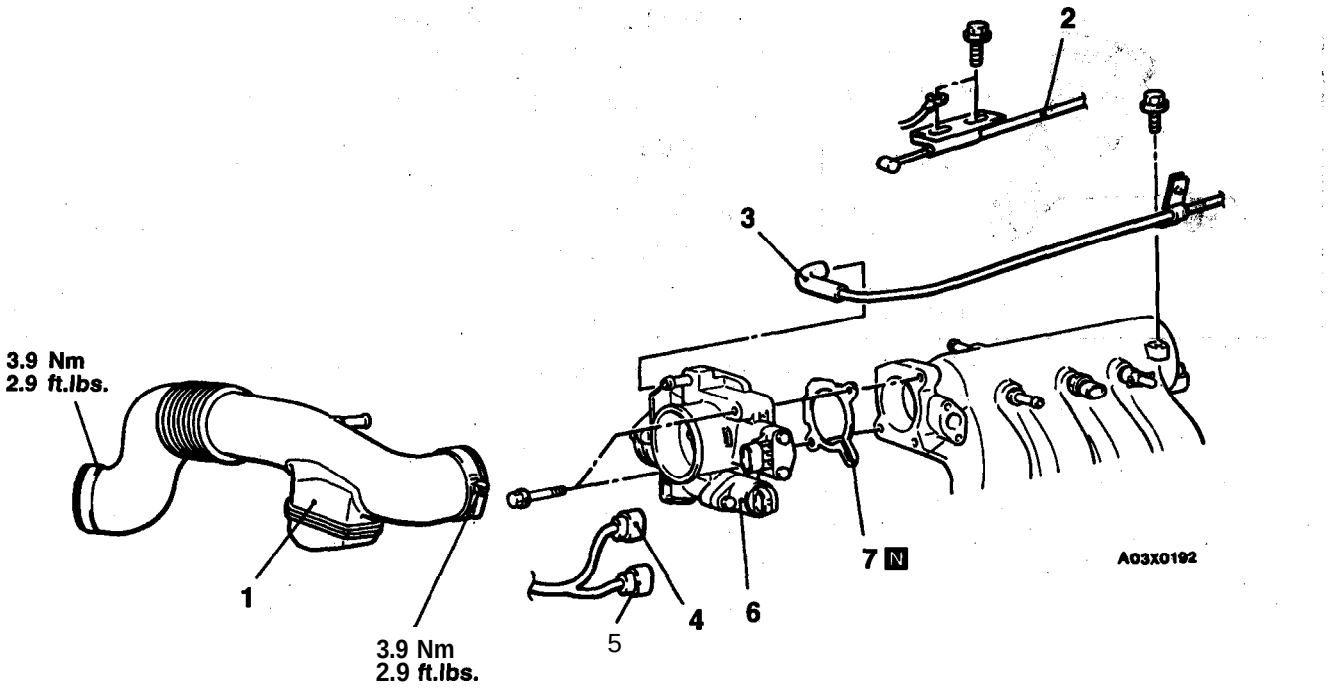

Removal steps

1. Air intake hose
2. Accelerator cable connection
3. Vacuum hose connection
4. TPS connector
5. AIS motor connector
6. Throttle
7. Throttle body body gasket

TSB Revision

DISASSEMBLY AND REASSEMBLY

13100970020

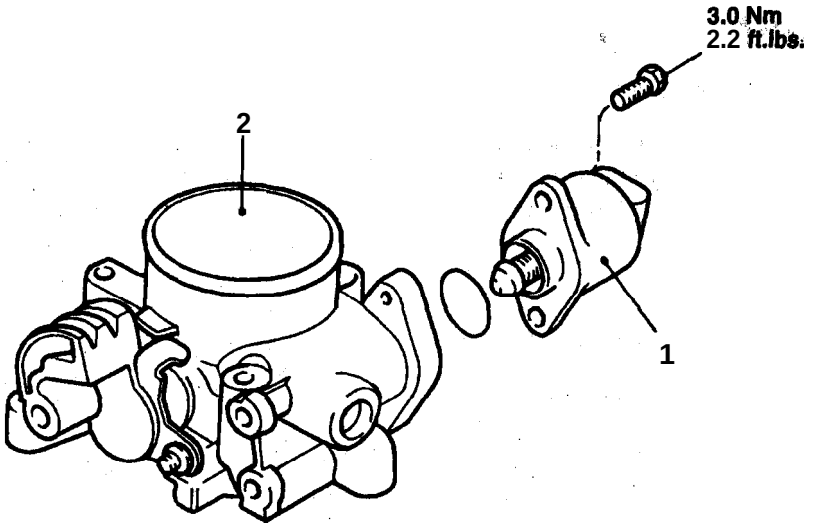

AFU0100

Disassembly steps

◀A▶ 1. IAC (AIS) motor assembly
◀B▶ 2. Throttle body

DISASSEMBLY SERVICE POINT

◀A▶ IAC (AIS) MOTOR REMOVAL

1. Do not disassemble the motor.
2. Do not immerse solvent to clean the sensor and motor. Clean them with shop towel.

◀B▶ THROTTLE BODY REMOVAL

1. Do not remove the throttle valve.
2. Check if the vacuum port or passage is clogged. Use compressed air to clean the **vacuum passage.**

MULTIPORT FUEL INJECTION (MFI) <2.0L ENGINE (TURBO) AND 2.4L ENGINE>

13199910319

GENERAL INFORMATION

The Multiport Fuel Injection System consists of sensors which detect the engine conditions, the ENGINE CONTROL MODULE (ECM) which controls the system based on signals from these sensors, and actuators which operate under the control of the ECM.

The ECM carries out activities such as fuel injection control, idle air control and ignition timing control.

In addition, the ECM is equipped with several diagnostic test modes which simplify trouble-shooting when a problem develops.

FUEL INJECTION CONTROL

The injector drive times and injector timing are controlled so that the optimum air/fuel mixture is supplied to the engine to correspond to the continually-changing engine operation conditions.

A single injector is mounted at the intake port of each cylinder. Fuel is sent under pressure from the fuel tank by the fuel pump, with the pressure regulated by the fuel pressure regulator. The regulated fuel is distributed to each of the injectors.

Fuel injection is normally carried out once for each cylinder for every two rotations of the crankshaft. The firing order is 1-3-4-2. This is called multiport. The ECM provides a richer air/fuel mixture by carrying out "open-loop" control when the engine is cold or operating under high load conditions in order to maintain engine performance.

In addition, when the engine is warm or operating under normal conditions, the ECM controls the air/fuel mixture by using the heated oxygen sensor signal to carry out "closed-loop" control in order to obtain the theoretical air/fuel mixture ratio that provides the maximum cleaning performance from the three way catalyst.

IDLE AIR CONTROL

The idle speed is kept at the optimum speed by controlling the amount of air that bypasses the throttle valve in accordance with changes in idling conditions and engine load during idling.

The ECM drives the idle air control (IAC) motor to keep the engine running at the pre-set idle target speed in accordance with the engine coolant temperature and air conditioning load. In addition, when the air' conditioning switch is turned off and on while the engine is idling, the IAC motor operates to adjust the throttle valve bypass air amount in accordance with the engine load conditions in order to avoid fluctuations in the engine speed.

IGNITION TIMING CONTROL

The ignition power transistor located in the ignition primary circuit turns ON and OFF to control the primary current flow to the ignition coil. This controls the ignition timing in order to provide the optimum ignition timing with respect to the engine operating conditions. The ignition timing is determined by the ECM from the engine speed, intake air volume, engine coolant temperature and atmospheric pressure.

DIAGNOSTIC TEST MODE

- When an abnormality is detected in one of the sensors or actuators related to emission control, the CHECK ENGINE/MALFUNCTION INDICATOR LAMP illuminates as a warning to the driver.
- When an abnormality is detected in one of the' sensors or actuators, a diagnostic trouble code corresponding to 'the,, abnormality is output.
- The RAM data inside the ECM that is related to the sensors and actuators can be read' by means of the scan' tool.
  In addition, the actuators can be controlled under certain circumstances.

OTHER CONTROL FUNCTIONS

1. Fuel Pump Control
   Turns the fuel pump relay ON so that current is supplied to the fuel pump while the engine is cranking or running.
2. A/C Compressor Clutch Relay Control
   Turns the A/C compressor clutch ON and OFF.
3. Fan Relay Control
   The radiator fan and condenser fan speeds are controlled in response to the engine coolant temperature and vehicle speed.
4. Fuel Pressure Control
   Supplies current to fuel pressure solenoid coil to raise the fuel pressure so that the fuel does not vaporize when the engine is started while it is warm.
5. Intake Charge Pressure Control
   Controls the intake charge pressure by controlling the duty of the turbocharger waste gate solenoid!
6. Intake Pressure Gauge' Control
   Indicates the intake charge pressure on the instrument panel.
7. Generator Output Current Control
   Prevents generator output current from increasing suddenly and idle speed from dropping at times such as when the headlights are turned on.
8. Evaporative Emission Purge Solenoid Control <2.0L Engine (TURBO)>
   Refer to GROUP 17.
   Evaporative Emission Purge Solenoid Control <2.4L Engine> Refer to GROUP 17.
9. EGR Solenoid' Control
   Refer to GROUP 17.

<2.0L Engine (Turbo)>

Item		Specifications
Throttle body	Throttle bore mm (in.)	5 4 (2.13)
	Throttle position sensor	Variable resistor type
	Idle air control motor	Stepper motor type [Stepper, motor type 'by-pass' air control system with the fast idle air valve (FIAV)]
	Closed throttle position switch	Rotary contact type, within throttle position sensor
Engine control module (ECM)	Identification model No.	E2T61687 <2WD> E2T61683 <4WD>
Sensors	Volume air flow sensor	Karman vortex type
	Barometric pressure sensor	Semiconductor type
	Intake air temperature sensor	Thermistor type
	Engine coolant temperature sensor	Thermistor type
	Heated oxygen sensor	Zircon type
	Vehicle speed sensor	Electromagnetic resistance element 'type
	Park/neutral position switch	Contact switch type
	Camshaft position sensor	Hall element type
	Crankshaft position sensor	Hall element type
	Knock sensor	Piezoelectric type
	Power steering pressure switch	Contact switch type
	Manifold differential pressure sensor	Semiconductor type
Actuators	Multiport fuel injection (MFI) relay	Contact switch type
	Fuel pump relay	Contact switch type
	Injector type and number	Electromagnetic type, 4
	Injector identification mark	MDL450
	EGR solenoid	Duty cycle type solenoid valve
	Evaporative emission purge solenoid	Duty cycle type solenoid valve
	Fuel pressure solenoid	ON/OFF type solenoid valve
	Turbocharger waste gate solenoid	Duty cycle type solenoid valve
Fuel pressure egulator	Regulator pressurekPa (psi)	294 (43)

<2.4L Engine>

Item		Specifications
Throttle body	Throttle bore mm (in.)	54 (2.13)
	Throttle position sensor	Variable resistor type
	Idle air control motor	DC motor type [DC motor type by-pass air control system with the fast idle air valve (FIAV)]
	Closed throttle position switch	Rotary contact type, within throttle position sensor
	Idle air control valve position sensor	Hall element type
Engine control module (ECM)	Identification model No.	E2T61686
Sensors	Volume air flow sensor	Karman vortex type
	Barometric pressure sensor	Semiconductor type
	Intake air temperature sensor	Thermistor type
	Engine coolant temperature sensor	Thermistor type
	Heated oxygen sensor	Zircon type
	Vehicle speed sensor	Electromagnetic resistance element type
	Park/neutral position switch	Contact switch type
	Camshaft position sensor	Hall element type
	Crankshaft position sensor	Hall element type
	Power steering pressure switch	Contact switch type
Actuators	Multiport fuel injection (MFI) relay	Contact switch type
	Fuel pump relay	Contact switch type
	Fuel pump relay module	Electronic control module type
	Injector type and number	Electromagnetic type, 4
	Injector identification mark	MDH275
	EGR solenoid	Duty cycle type solenoid valve
	Evaporative emission purge solenoid	Duty cycle type solenoid valve
Fuel pressure Regulator	Regulator pressurekPa (psi)	335 (48)

MULTI-PORT FUEL INJECTION (MFI) SYSTEM DIAGRAM

<2.0L Engine (Turbo)>

★1 Heated oxygen sensor (front) ★2 Volume air flow sensor ★3 Intake air temperature sensor ★4 Throttle position sensor ★5 Closed throttle position switch ★6 Camshaft position sensor ★7 Crankshaft position sensor ★8 Barometric pressure sensor ★9 Engine coolant temperature sensor ★10 Knock sensor ★11 Heated oxygen sensor (rear) ★12 Manifold differential pressure sensor	• Power supply • Vehicle speed sensor • A/C switch • Park/neutral position switch <A/T> • Power steering pressure switch • Ignition switch – ST	⇨ Engine control module (ECM) ⇨	★1 Injector ★2 Evaporative emission purge solenoid ★3 Idle air control motor ★4 EGR solenoid ★5 Fuel pressure solenoide ★6 Turbocharger waste gate solenoid	• Fuel pump relay • Multiport fuel injection (MFI) relay • A/C compressor clutch relay • Check engine/Malfunction indicator lamp • Diagnostic output • Ignition coil, ignition cower transistor

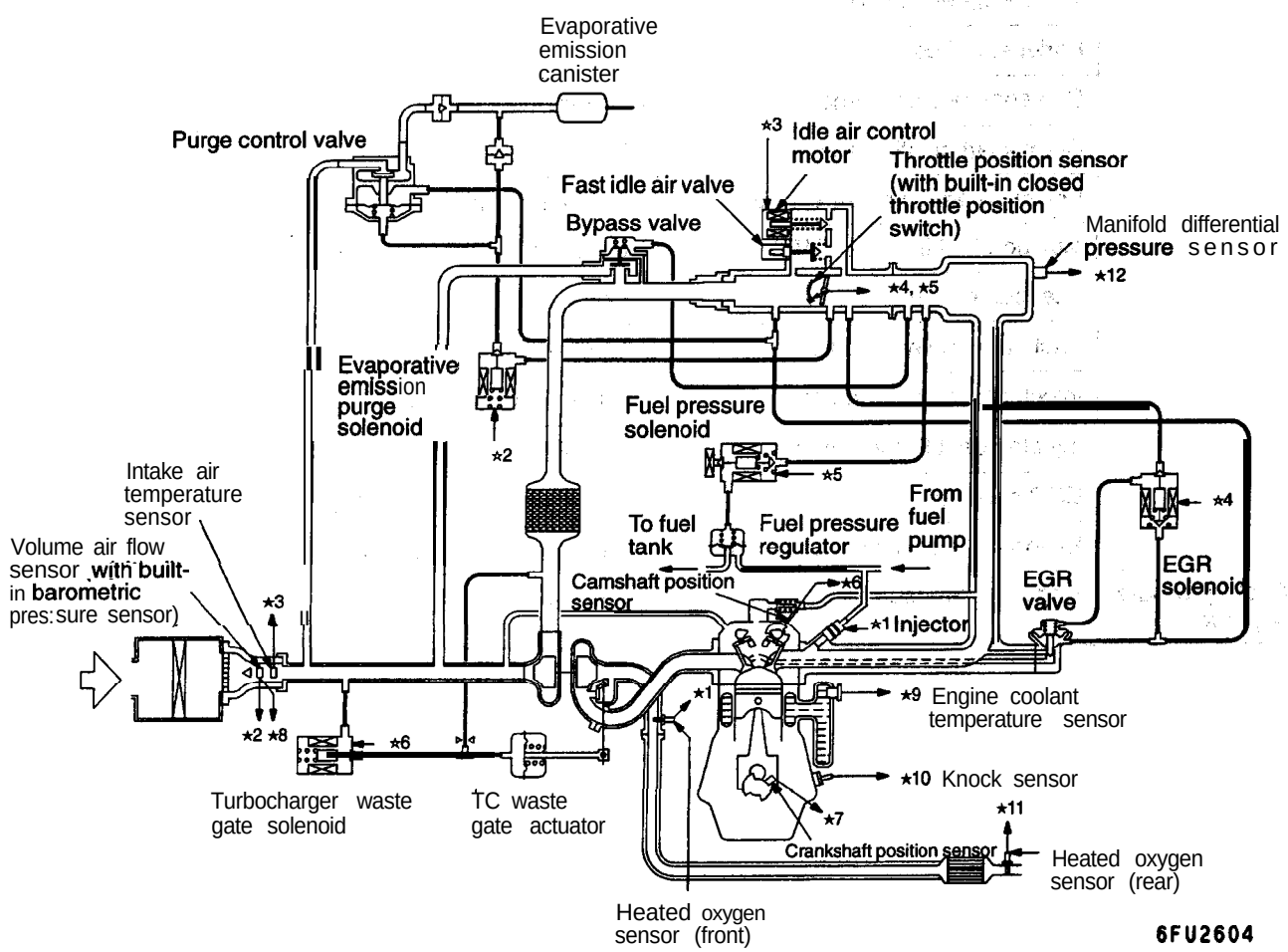

TSB Revision

<2.4L Engine>

★1 Heated oxygen sensor (front) ★2 Volume air flow sensor ★3 Intake air temperature sensor ★4 Throttle position sensor ★5 Closed throttle position switch ★6 Camshaft position sensor ★7 Crankshaft position sensor ★8 Barometric pressure sensor ★9 Engine coolant temperature sensor ★10 IAC valve position sensor ★11 Heated oxygen sensor (rear) ★12 Manifold differential pressure sensor ★13 Fuel tank differential pressure sensor	• Power supply • Vehicle speed sensor • A/C switch • Park/neutral position switch <A/T> • Power steering pressure switch • Ignition switch – ST	⇨ Engine control module (ECM) ⇨	★1 Injector ★2 Evaporative emission purge solenoid ★3 Idle air control motor ★4 EGR solenoid ★5 Evaporative emission ventilation solenoid	• Fuel pump relay • Fuel pump relay module • Multiport fuel injection (MFI) relay • A/C compressor clutch relay • Check engine/Malfunction indicator lamp • Diagnostic output • Ignition coil, ignition power transistor.

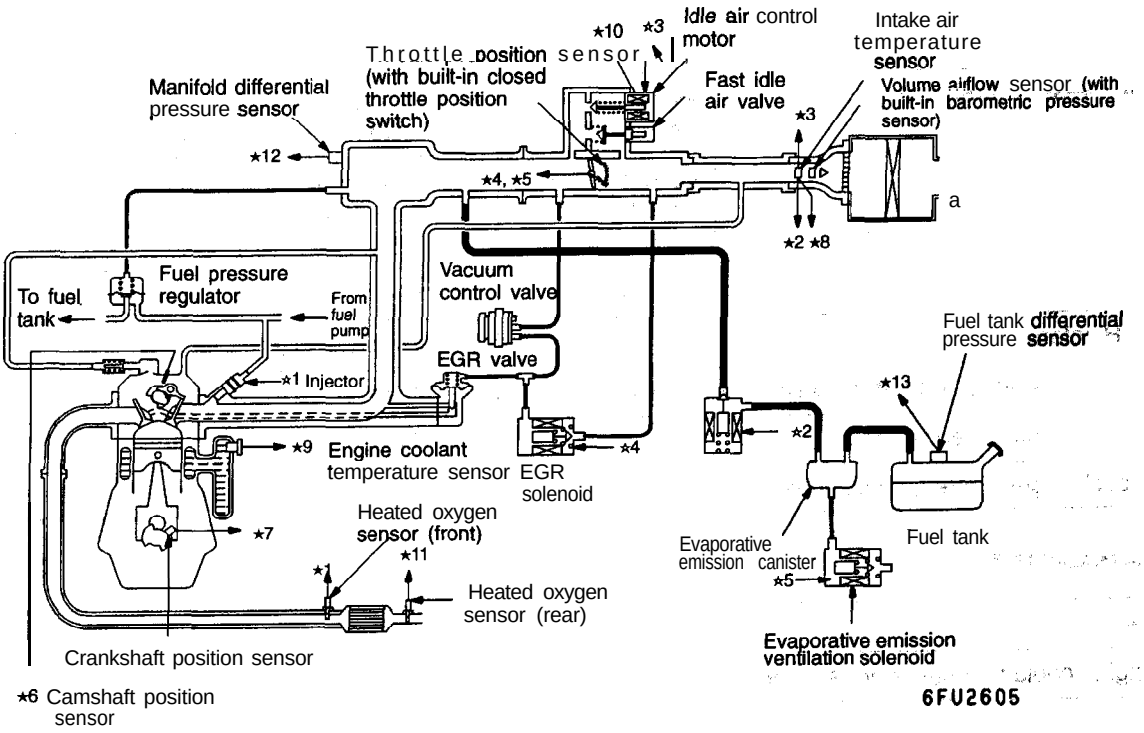

TSB Revision

SERVICE SPECIFICATIONS

13100030254

Items		Standard value
Basic ignition timing		5°BTDC ± 3° at curb idle
Curb idle r/min		750 ± 100
Idle speed when A/C is ON r/min		850 ± 100 in Neutral
Basic idle speed r/min		750 ± 50
Throttle position sensor adjusting voltage mV		400 – 1,000
Throttle position sensor resistance kΩ		3.5 – 6.5
Idle air control motor coil resistance Ω		28 – 33 [at 20°C (68°F)]
Intake air temperature sensor resistance kΩ	20°C (68°F)	2.3 – 3.0
	80°C (176°F)	0.30 – 0.42
Engine coolant temperature sensor resistance kΩ	20°C (68°F)	2.1 – 2.7
	80°C (176°F)	0.26 – 0.36
Heated oxygen sensor output voltage V		0.6 – 1.0
Fuel pressure kPa (psi)	Vacuum hose disconnected	289 – 309 (42 – 45) at curb idle <2.0L Engine (Turbo)> 330 – 350 (47 – 50) at curb idle <2.4L Engine>
	Vacuum hose connected	Approx. 230 (33) at curb idle <2.0L Engine (Turbo)> Approx. 270 (38) at curb idle <2.4L Engine>
Injector coil resistance Ω		2 – 3 [at 20°C (68°F)] <2.0L Engine (Turbo)> 13 – 16 [at 20°C (68°F)] <2.4L Engine>
EGR solenoid coil resistance Ω		36 – 44 [at 20°C (68°F)]
Ivaporative emission purge solenoid coil resistance Ω		36 – 44 [at 20°C (68°F)]
Fuel pressure solenoid Ω		36 – 44 [at 20°C (68°F)] <2.0L Engine (Turbo)>
Turbocharger waste gate solenoid Ω		36 – 44 [at 20°C (68°F)] <2.0L Engine (Turbo)>

SEALANT

13100050076

Item	Specified sealant
Engine coolant temperature sensor threaded portion	3M Nut Locking Part No. 4171 or equivalent

SPECIAL TOOLS

13100060253

Tool	Tool number and name	Supersession	Application
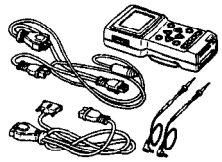	MB991502 Scan tool <MUT-II>	MB991502	• Reading diagnostic trouble code • MFI system inspection
	ROM pack	–	
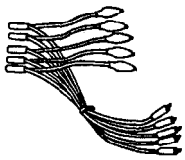	MB991348 Test harness set	Tool not available	• Adjustment of closed throttle position switch, throttle position sensor • Inspection using an analyzer
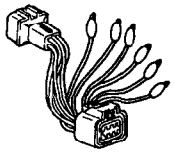	MD998463 Test harness (6 pin, square)	MD998463-01	• Inspection of idle air control motor • Inspection using an analyze
	MD998464 Test harness (4 pin, square)	MD998464-01	• Inspection of heated oxygen sensor
	MD998478 Test harness (3 pin, triangle)	Tool not available	Inspection using an analyzer
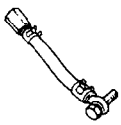	MD998709 Adaptor hose	MIT210196	Measurement of fuel pressure
	MD998742 Hose adaptor	MD998742-01	

TROUBLESHOOTING

13100850164

DIAGNOSTIC TROUBLESHOOTING FLOW CHART I:--

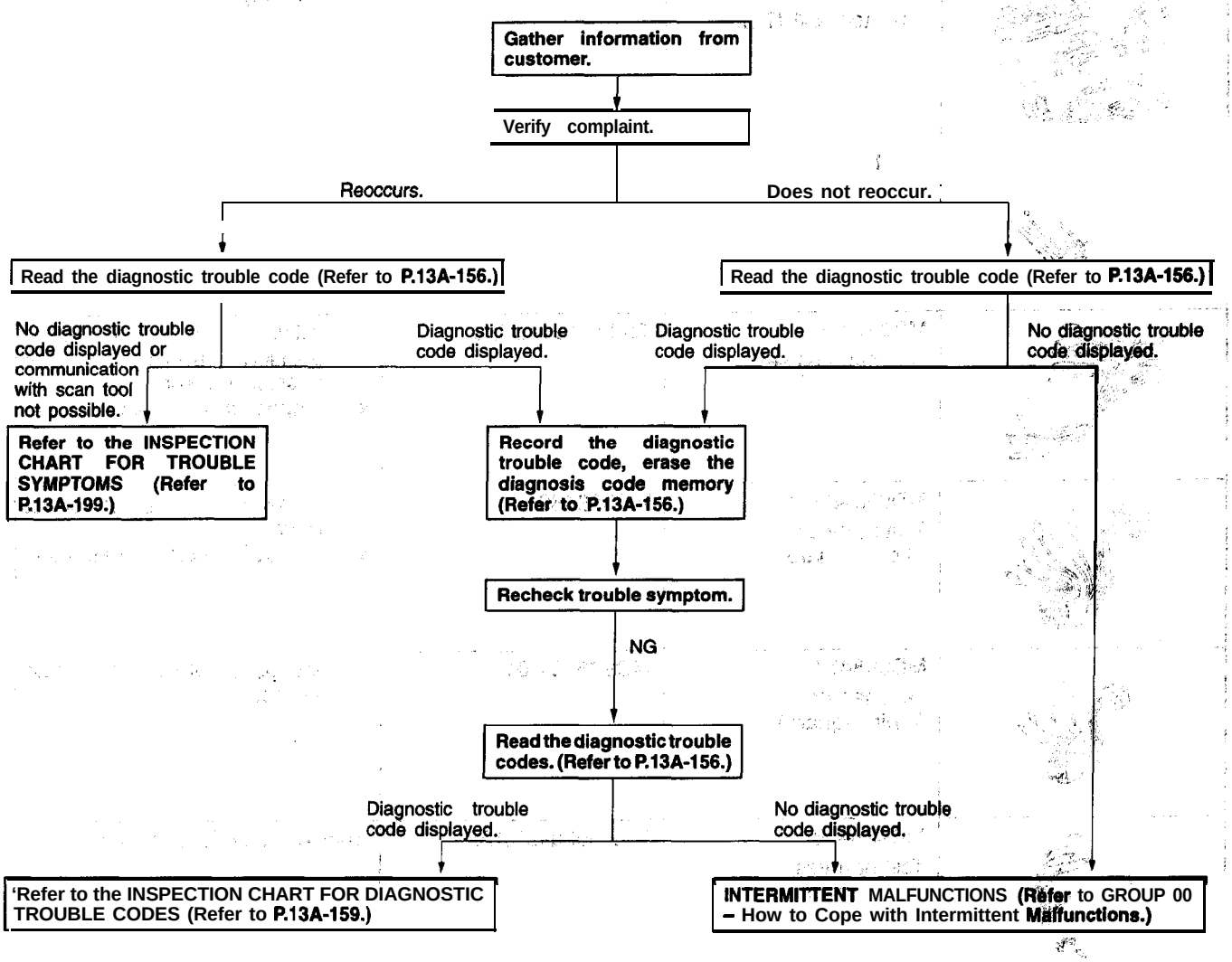

TSB Revision

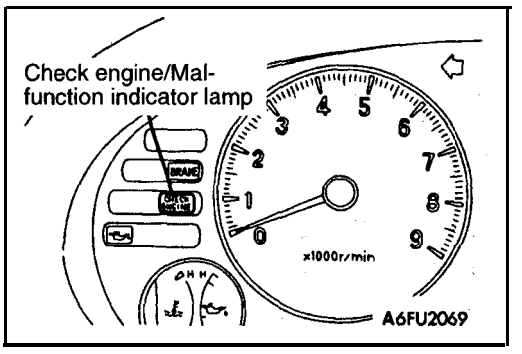

DIAGNOSTIC TEST MODE

13100860266

CHECK ENGINE/MALFUNCTION INDICATOR LAMP

Among the on-board diagnostic items, a check engine/malfunction indicator lamp illuminates to notify the driver of the emission control items when 'a malfunction is detected. However, when an 'irregular signal returns to normal and the engine control module judges, that it has returned to normal, the check. engine/malfunction indicator lamp is switched off. Moreover, when the ignition switch is turned off, the lamp is switched off. Even if the ignition switch is turned on again, the lamp does not illuminates until the malfunction is detected. Here, immediately after the ignition switch is turned on, the check engine/malfunction, indicator lamp is lit for 5 seconds to indicate that the, check engine/malfunction indicator lamp operates normally.

Items Indicated by The Check Engine/Malfunction Indicator Lamp

DTC No.	Items
	Engine control module (ECM) malfunction
P0100	Volume air flow circuit malfunction
P0105	Barometric pressure circuit malfunction
P0110	Intake air temperature circuit malfunction
P0115	Engine coolant temperature circuit malfunction
P0120	Throttle position circuit malfunction
P0125*	Excessive time to enter closed loop fuel control
P0130	O_2 sensor circuit malfunction (bank 1 sensor 2)
P0135	O_2 sensor heater circuit malfunction (bank 1 sensor 1)
P0136	O_2 sensor circuit malfunction (bank 1 sensor 2)
P0141	O_2 sensor heater circuit, malfunction (bank 1 sensor 2)
P0170	Fuel trim malfunction (bank 1)
P0201	Injector circuit malfunction -cylinder 1
P0202	Injector circuit malfunction -cylinder 2
P0203	Injector circuit malfunction – cylinder 3
P0204	Injector circuit malfunction -cylinder 4
P0300*	Random misfire detected
P0301*	Cylinder 1 misfire detected
P0302*	Cylinder 2 misfire detected
P0303*	Cylinder 3 misfire detected
P0304*	Cylinder 4 misfire detected
P0335	Crankshaft position sensor circuit malfunction
P0340	Camshaft position sensor circuit malfunction
P0400	Exhaust gas recirculation flow malfunction
P0403	Exhaust gas recirculation solenoid malfunction
P0420	Catalyst system efficiency below threshold (bank 1)
P0440	Evaporative emission control system malfunction <2.0L Engine (Turbo)>
P0443	Evaporative emission control system purge control valve circuit malfunction
P0442	Evaporative emission control system leak detected <2.4L Engine>
P0446	Evaporative emission control system vent control malfunction <2.4L Engine>
P0450	Evaporative emission control system pressure sensor malfunction <2.4L Engine>
P0505	Idle control system malfunction

DTC No.	Items
P0510	Closed throttle position switch malfunction
P0551	Power steering pressure sensorcircuit range/performance
P0705	Transaxle range sensor circuit malfunction (RPNDL Input)
P0710	Transaxle fluid temperature sensor circuit malfunction
P1103	Turbocharger waste gate actuator malfunction <2.0L Engine (Turbo)>
P1104	Turbocharger waste gate solenoid malfunction <2.0L Engine (Turbo)>
P1105	Fuel pressure solenoid malfunction <2.0L Engine (Turbo)>
P1400	Manifold differential pressure sensor circuit malfunction
P1600	Serial communication link malfunction
P1715	PG assy malfunction
P1750	Solenoid assy malfunction
P1791	Enaine coolant temoerature level input circuit (to TCM) malfunction

NOTE

1. After the Engine Control Module (ECM) detects a malfunction, the check engine/malfunction indicator lamp illuminates when the engine is next turned on and the same malfunction is re-detected.
   However, for items marked with a "*", the check engine/malfunction indicator lamp illuminates on the first detection of the malfunction.
2. After the check engine/malfunction indicator lamp illuminates, it will be switched off under the following conditions.
   - When the ECM monitored the powertrain malfunction three times* and detected no malfunction.
     *: In this case, one time indicates from engine start to stop.
   - For misfiring or a fuel trim malfunction, when driving conditions (engine speed, engine coolant temperature, etc.) are similar to those when the malfunction was first recorded.

Caution

If the check engine/malfunction indicator lamp illuminates because of a malfunction of the PCM, transmission between the scan tool and the PCM cannot occur. In this case, the diagnostic trouble code cannot be read.

ON-BOARD DIAGNOSTICS

The engine control module monitors the input/output signals (some signals at all times and the others under specified conditions) of the engine control module.

When a malfunction has continued for a specified time or longer since the irregular signal is initially monitored, the engine control module judges that a malfunction has occurred.

After the ECM first detects a malfunction, a diagnostic trouble code is recorded when the engine is restarted and the same malfunction is re-detected. However, for items marked with a "*", a diagnostic trouble code is recorded on the first detection of the malfunction.

There are 45 diagnostic items, and the diagnostic results can be read out with a scan tool.

Moreover, since memorization of the diagnostic trouble codes is backed up directly by the battery, the diagnostic results are memorized even if the ignition key is turned off. The diagnostic trouble codes will, however, be erased when the battery terminal or the engine control module connector is disconnected.

In addition, the diagnostic trouble code can also be erased by turning the ignition switch to ON and sending the diagnostic trouble code erase signal from the scan tool to the engine control module.

Caution

If the sensor connector 'is disconnected wlth the' ignition switch turned on, the diagnostic trouble code is memorized. In this case, send the diagnostic trouble code erase signal to the engine control module in order to erase the diagnostic memory.

The 45 diagnostic items are provided as follows, and if plural items are activated, they are all indicated sequentially from the smallest code number.

Caution

The diagnostic trouble code of ignition timing adjustment signal is output whenever terminal for ignition timing adjustment Is grounded. Therefore, it is not a malfunction that the code is output when adjusting ignition timing.

The ECM records the diagnostic, trouble code and the engine operating conditions at the time the malfunction was detected.' These data are called "freeze frame" data.

This data indicates the engine operafing condition from when nothing at all is detected to the initial detection of malfunction.

This data can be read by using the scan tool, and can then be used in simulation tests for troubleshooting. Data items are as follows.,,

Data	Unit
Engine coolant temperature	°C
Engine speed	r/min
Vehicle speed	km/h
Long-term fuel compensation (Long-term fuel trim)	%
Short-term fuel compensation (Short-term fuel trim)	%
Fuel control condition	• Open loop • Closed loop • Open loop-drive condition • Open loop-DTC set • Closed loop-O_2 (rear) failed
Calculation load value	%
Diagnostic trouble code during data recording	–

OBD-II DRIVE CYCLE

All kinds of diagnostic trouble code can be monitored by carrying out a short drive test in accordance with the following six drive cycle patterns. In other words, carrying out such a drive test makes it possible to reproduce any kind of trouble which involves causing the check engine/malfunction indicator lamp to illuminate and to check that the repair procedure has eliminated the trouble (i.e that the check engine/malfunction indicator lamp no longer illuminates). In other words, doing such a drive allows to regenerate any kind of trouble which involves illuminating the check engine/malfunction indicator lamp and to check the repair procedure has eliminated the trouble (the check engine/malfunction indicator lamp is no more illuminated).

Caution
Make sure that there are two people in the vehicle when carrying out the drive test.

1. Catalytic converter monitor (P0420)

Test conditions/procedure

1. All of the following conditions should be satisfied when the drive test is carried out.
   (1) Outside air temperature: –10°C (14°F) or higher
   (2) A/T condition:
   - Selector lever position: D range
   - Overdrive switch: ON
   - Power/economy changeover switch: Power

   (3) A/C switch: OFF
2. Carry out one trip monitoring according to the following drive pattern (from' starting of the engine until ignition is turned off). (Takes approximately 20 minutes.)
   ☆1: Start the engine and quickly accelerate to a speed of 72 km/h (45 mph) or more.
   ☆2: Monitor pre-preparation period: drive for 300 seconds or more while maintaining the vehicle Speed, at between 72 – 97 km/h (45 – 60 mph). Braking (lasting several seconds) can be carried out during this period.
   ☆3: Decelerate until the vehicle speed is between 56 – 64 km/h (35 – 40 mph).
   ★4: Monitoring period: drive for 90 seconds or more on a level surface while maintaining the throttle. opening angle at a constant angle (keeping throttle variations as small as absolutely possible) and the vehicle speed at between 56 – 64 km/h (35 – 40 mph).
   ☆5: Fully close the throttle to make the vehicle decelerate. (Braking is allowed at this time.)
   After the vehicle has been decelerating continuously for 10 seconds, quickly accelerate back to a speed of between 56 - 64 km/h (35 - 40 mph).
   Repeat steps ● 4 and *5 six times. (The procedure in steps *4 and *5 should be completed a total of six times.)
   ☆6: Decelerate to a stop. After the vehicle has stopped, turn the ignition switch to OFF.

Drive cycle pattern

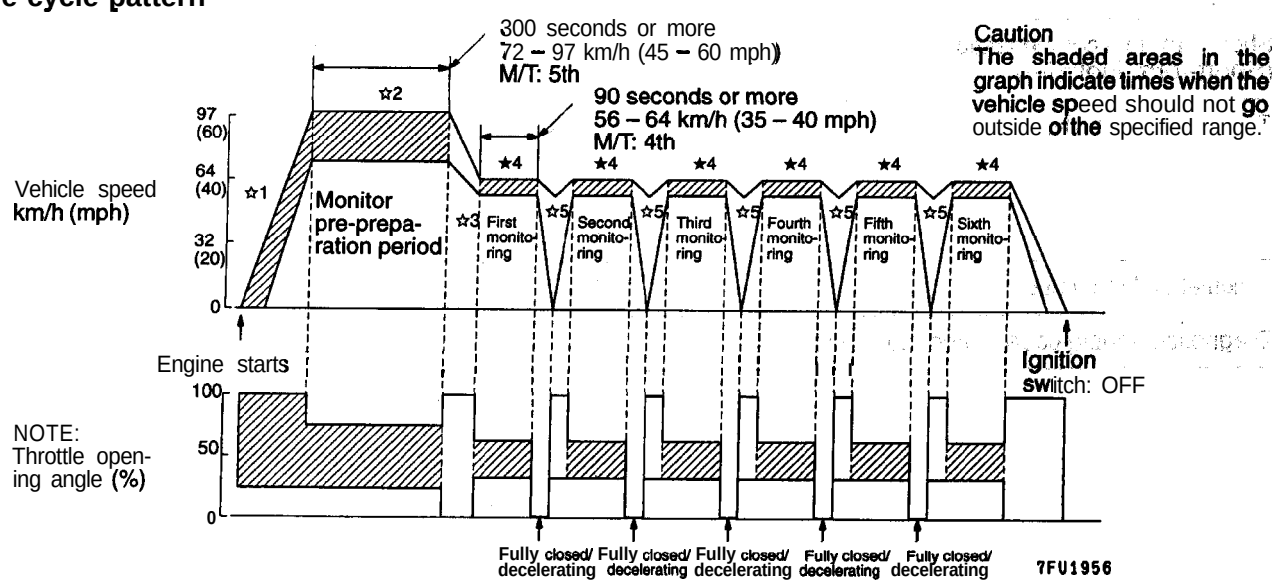

TSB Revision

2. Evaporative emission control system leak monitor (P0442, P0450) <2.4L Engine>

Test conditions/procedure

1. All of the following conditions should be satisfied 'when the drive test is carried out.
   (1) Engine coolant temperature: 45°C (113°F) or lower (before carrying out testing while engine is stopped)
   (2) Outside air temperature: 5°C (41°F) or higher, 45°C (113°F) or lower
   (3) A/T condition:
   - Selector lever position: D range
   - Overdrive switch: ON
   - Power/economy changeover switch: Power
2. Carry out one trip monitoring according to the following drive pattern (from starting of the engine until ignition is turned off). (Takes approximately 8 minutes.)
   ☆1: Check that both the engine coolant temperature' and intake air temperature 'satisfy the conditions in 1. above (when engine is stopped).
   ☆2: Monitor pre-preparation period: start the engine and accelerate' to a speed of between 89 – 97 km/h (55 – 60 mph). Acceleration, deceleration and braking can be carried out during this period. Drive for 60 seconds or more while maintaining the vehicle speed at between 89 - 97 km/h (55 - 60 mph). Braking and throttle 'operations can be carried out during this time as long as the vehicle speed remains within the specified range.
   ★3: Monitoring period: drive for 150 seconds or more while maintaining the throttle opening' angle at a constant angle (keeping throttle variations as small as absolutely possible) and the vehicle speed at between 89 – 97 km/h (55 – 60 mph). Drive as consistently as possible during this time, without making any sudden steering wheel' movements.
   ★4: Decelerate to a stop. After the vehicle has stopped, turn the ignition switch to OFF.

Drive cycle pattern

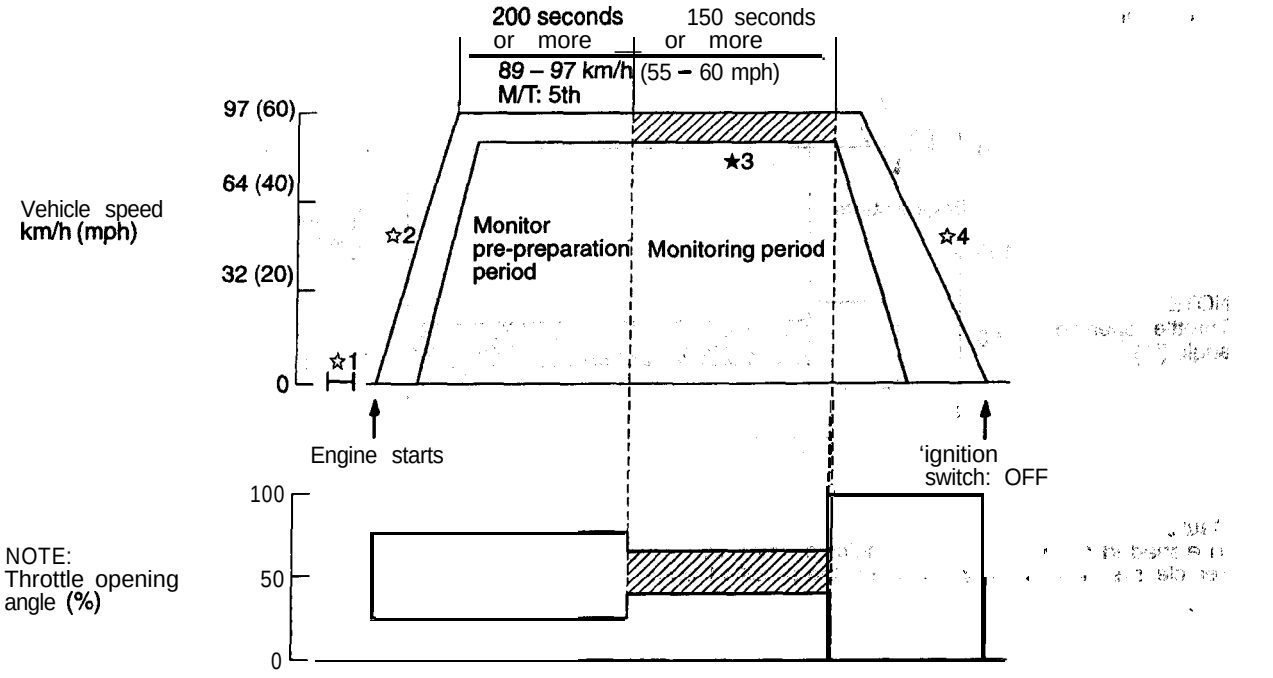

Caution
The shaded areas in the graph indicate times when the vehicle speed should not go outside of the specified range.

TSB Revision

3. Heated oxygen sensor monitor (P0130, P0136)

Test conditions/procedure

1. All of the following conditions should be satisfied when the drive test is carried out.
   (1) Engine coolant temperature: 80°C (176°F) or higher (when engine is fully warmed up)
   (2) Outside air temperature: –10°C (14°F) or higher
   (3) A/T condition:
   - Selector lever position: D range
   - Overdrive switch: ON
   - Power/economy changeover switch: Power
2. Carry out one trip monitoring according to the following drive pattern (from starting of the engine until ignition is turned off). (Takes approximately 5 minutes.)
   ☆1: After the engine is fully warmed up, turn the ignition switch to OFF.
   ☆2: Start the engine and accelerate to a speed of between 56 – 64 km/h (35 – 40 mph).
   ★3: Monitoring period: drive for 120 seconds or more while maintaining the throttle opening angle at a constant angle (keeping throttle variations as small as absolutely possible) and the vehicle speed at between 56 – 64 km/h (35 – 40 mph). Drive as consistently as possible during this time, without making any sudden steering wheel movements.
   ☆4: Decelerate to a stop. After the vehicle has stopped, turn the ignition switch to OFF.

Drive cycle pattern

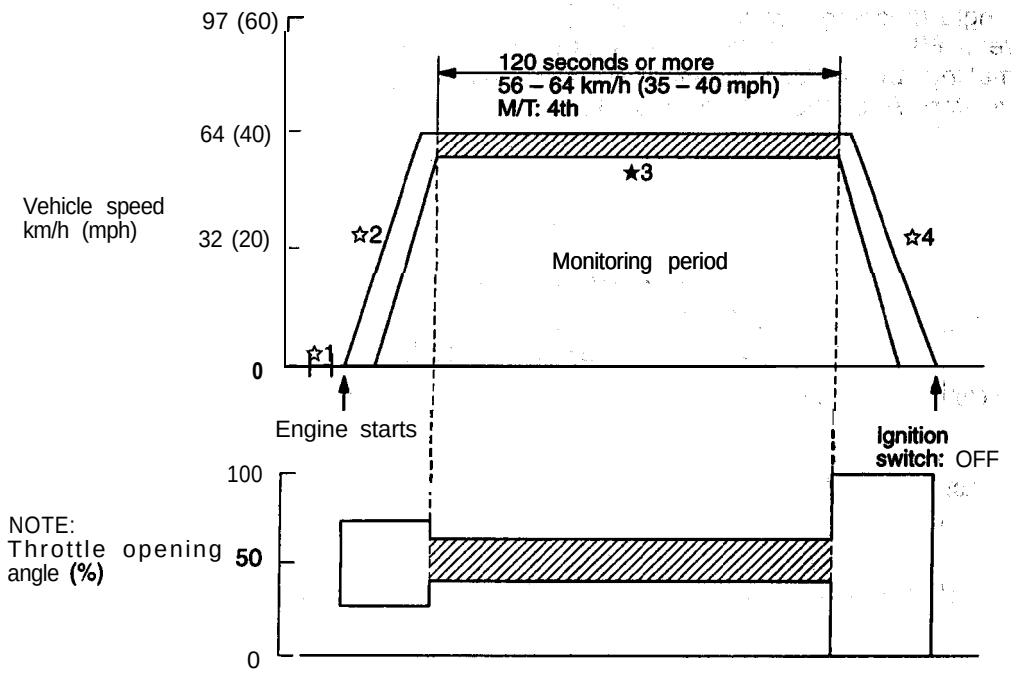

Caution
The shaded areas in the graph indicate times when the vehicle speed should not go outside of the specified range.

4. Exhaust gas recirculation (EGR) system monitor (P0400)

Test conditions/procedure

1. All of the following conditions should be satisfied when the drive test is carried **out.**

(1) Engine coolant temperature: **80°C (176°F)** or higher (when engine is **fully warmed up)**

(2) Outside air temperature: **–10°C (14°F)** or higher

(3) A/T condition:

- Selector lever position: D range
- Overdrive switch: ON
- Power/economy changeover switch: Power

(4) A/C switch: **OFF**

2. Carry out one trip monitoring according to the following drive pattern (from starting of **the** engine until ignition is turned off). (Takes approximately 10 minutes.)'

☆1: **After** the engine is fully warmed up, turn the ignition switch to OFF.

☆2: **Start** the engine and accelerate to a. speed of between 56 – 64 km/h **(35** – 40 mph).

★3: Monitoring period: with the engine speed at between 2,000 – 3,000 **r/min** and the clutch still engaged **<M/T>,** fully close the -throttle and let the vehicle decelerate to an engine speed of 900 **r/min** without applying the brakes.

The steering wheel should not be turned and no lights or accessories **should** be turned on or off during this time.

☆4: **Accelerate** to between 56 – 64 **km/h** (35 – 40 mph) and drive at this speed for 20 seconds or more.

[After the first monitoring (deceleration), an interval of 20 seconds or more is necessary before the next monitoring (deceleration) is made.]

Repeat steps ***3** and '4 a total of 8 times.

☆5: Decelerate to a stop. After the vehicle has stopped, turn the ignition switch to OFF

Drive cycle pattern

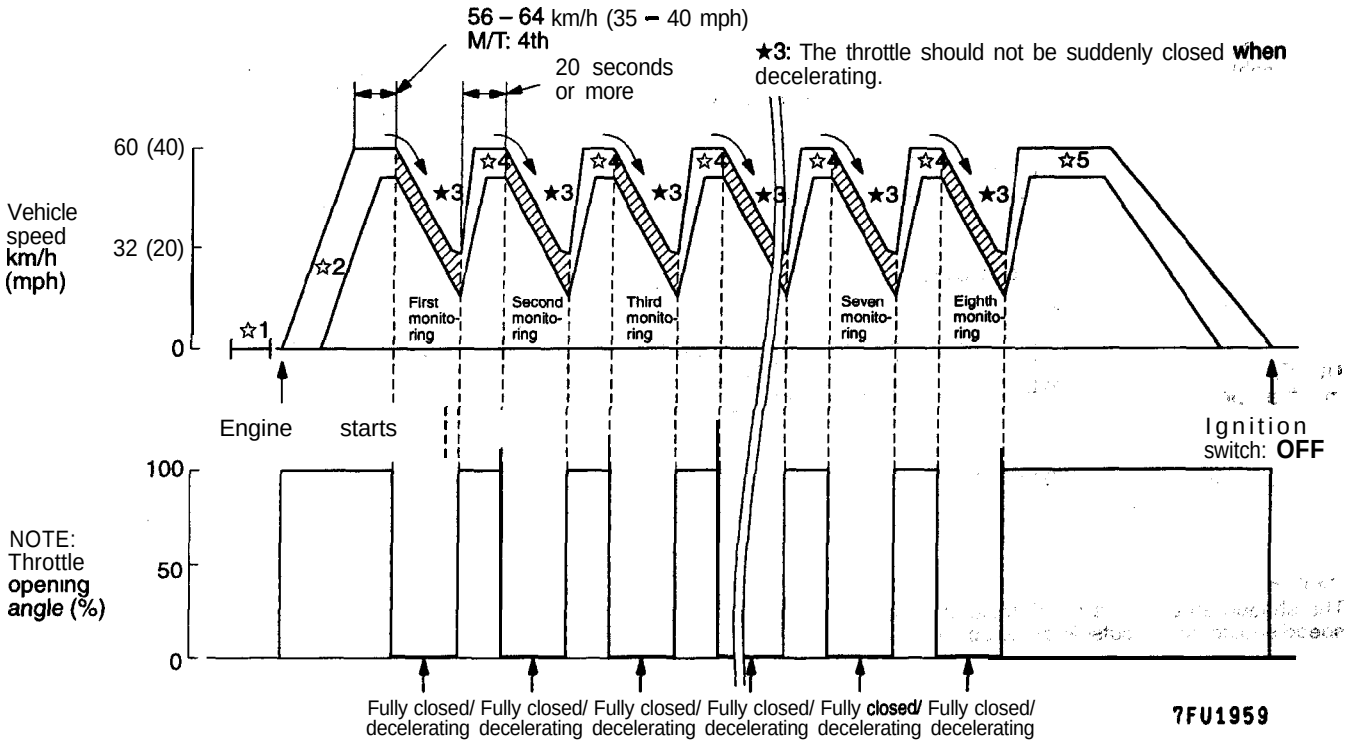

Caution
The shaded areas in the graph indicate times when the vehicle speed should not go outside of the specified range.

5. Fuel trim monitor (P0170)

Test conditions/procedure

1. All of the following conditions should be satisfied when the drive test is carried out.
   (1) Engine coolant temperature: 80°-97°C (176° – 207°F) (when engine is fully warmed up)
   (2) Outside air temperature: –10°C (14°F) or higher, 60°C (140°F) or lower
   (3) A/T condition:
   - Selector lever position: D range
   - Overdrive switch: ON
   - Power/economy changeover switch: Power
2. Carry out one trip monitoring according to the following drive pattern (from starting of the engine until ignition is turned off). (Takes approximately 35 minutes.)
   ☆1: After the engine is fully warmed up, turn the ignition switch to OFF.
   ☆2: Start the engine and accelerate to a speed of between 89 – 97 km/h (55 – 60 mph).
   ★3: Monitoring period: drive for 30 minutes or more while maintaining the vehicle speed at between 89 – 97 km/h (55 – 60 mph). Do not drive consistently for a continuous period of any more than 120 seconds during this time. (Gentle acceleration and deceleration and braking can be carried out, but sudden acceleration and deceleration should be avoided.)
   ☆4: Decelerate to a stop. After the vehicle has stopped, turn the ignition switch to OFF.

Drive cycle pattern

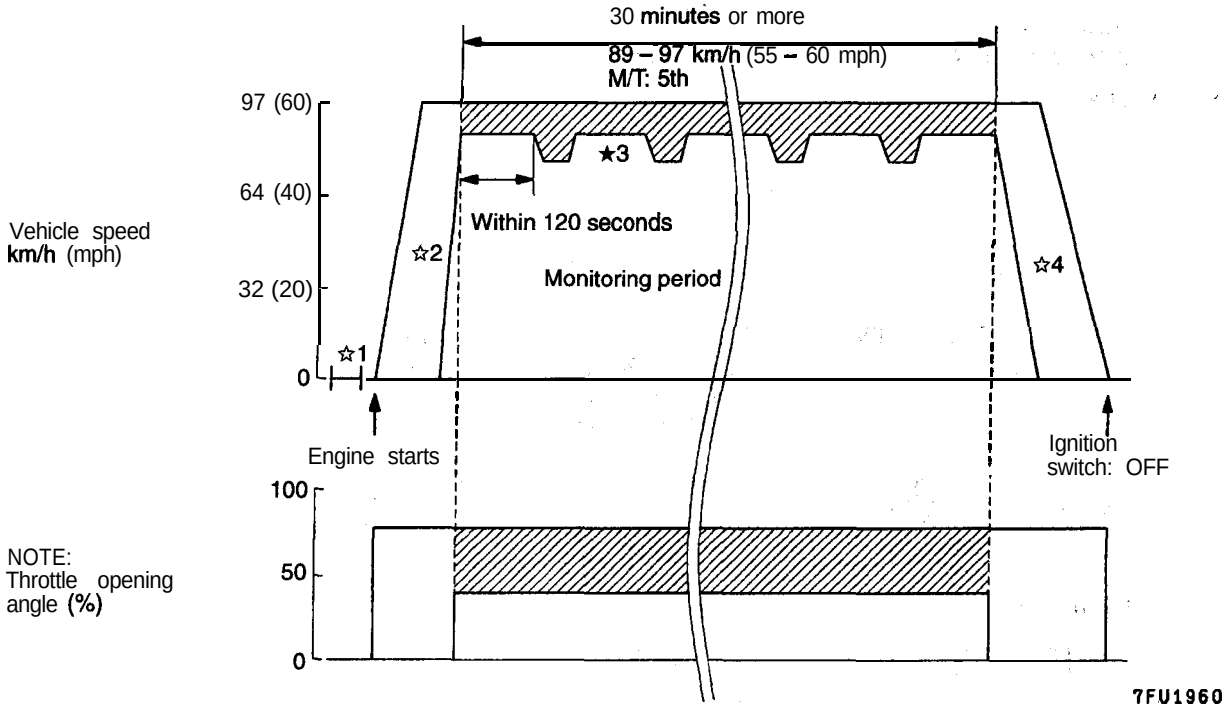

Caution
The shaded areas in the graph indicate times when the vehicle speed should not go outside of the specified range.

TSB Revision

6. Other monitoring

- Misfire (P0300, P0301, P0302, P0303, P0304)
- Evaporative emission control system (P0440)
- Idle air control system (P0505)
- Manifold differential pressure sensor (P1400)
- Excessive time to enter closed loop fuel control (P0125)
- Throttle position sensor (P0120)
- Barometric pressure sensor (P0105)
- Intake air temperature sensor (P0110)
- Serial communication link <A/T> (P1600)
- Crankshaft position sensor (P0335)
- Camshaft position sensor (P0340)
- Volume air flow sensor (P0100)
- Engine coolant temperature sensor (P0115)
- Closed throttle position switch (P0510)
- Generator FR terminal circuit (P1500)
- O_2 sensor circuit (P0130, P0136)
- O_2 sensor heater circuit (P0135, P0141)
- Turbocharger waste gate solenoid (P1104)
- EGR solenoid (P0403)
- Evaporative emission purge solenoid (P0443)
- Evaporative emission purge ventilation solenoid (P0446) <2.4L Engine>
- Fuel pressure solenoid (P1105)
- Injector circuit (P0201, P0202, P0203, P0204)

Test conditions/procedure

1. All of the following conditions should be satisfied when the drive test is carried out.
   (1) Engine coolant temperature: 80°C (176°F) or higher (when engine is fully warmed up)
   (2) Outside air temperature: 5°C (41°F) or higher
   (3) A/T condition:
   - Selector lever position: D range
   - Overdrive switch: ON
   - Power/economy changeover switch: Power
2. Carry out one trip monitoring according to the following drive pattern (from starting of the engine until ignition is turned off). (Takes approximately 10 minutes.)
   ☆1: After the engine is fully warmed up, turn the ignition switch to OFF.
   ☆2: Start the engine, accelerate to between 56 - 64 km/h (35 - 40 mph) and drive at this speed for 300 seconds or more. Then stop the vehicle. Braking and throttle operations can be carried out during this time.
   ☆3: After stopping the vehicle, let the engine run at idle for 300 seconds or more, and then turn the ignition switch to OFF.
   The vehicle should be set to the following condition for idling.
   - A/C switch: OFF
   - Lights, electric cooling fan and all accessories: OFF
   - Transmission: Neutral (A/T for P range)
   - Steering wheel: Straightforward position

Drive cycle pattern

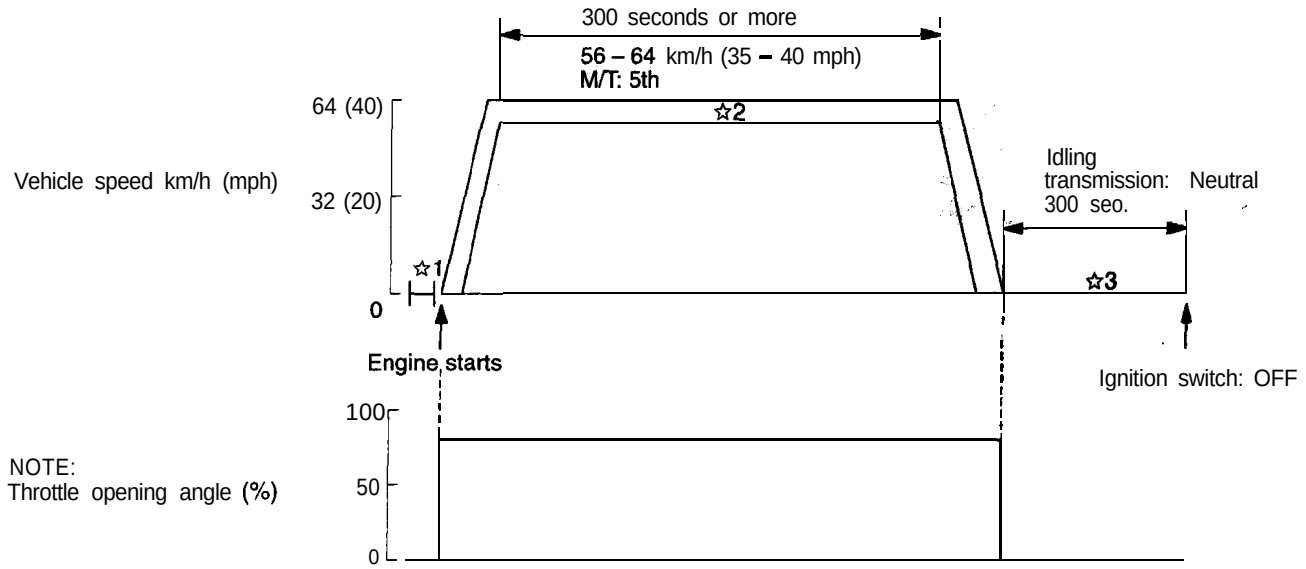

Caution
The shaded areas in the graph indicate times when the vehicle speed should not go outside of the specified range.

TSB Revision

HOW TO READ AND ERASE DIAGNOSTIC TROUBLE CODES

Caution

1. **If battery voltage is 'low, diagnostic trouble 'codes may not be output, Be sure to check the' battery and charging system before continuing.**
2. **If the battery is disconnected or if the ECM connector is disconnected, the diagnostic trouble code memory will be erased. Do not disconnect the battery or ECM until after the diagnostic trouble codes are recorded.**
3. **Turn the ignition switch off before connecting or disconnecting the scan tool.**

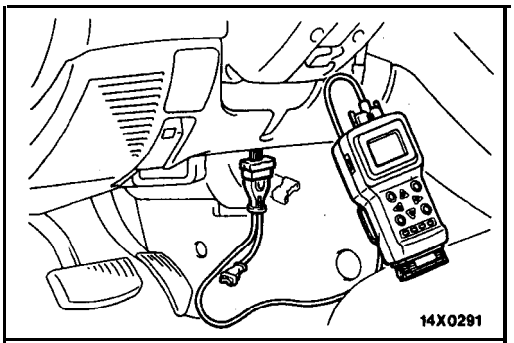

1. Connect the scan tool to the data link connector, and read the diagnostic trouble. codes.
2. Repair the malfunction while referring to the INSPECTION CHART FOR DIAGNOSTIC TROUBLE 'CODES.
3. Turn the ignition switch to OFF and then back to ON again.
4. Erase the diagnostic trouble codes using the scan tool.
5. 'Check that the diagnostic trouble code is normal.

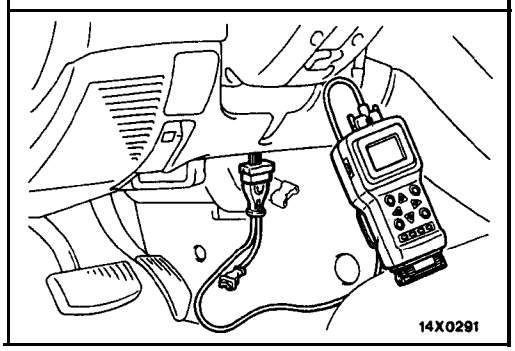

INSPECTION USING SCAN TOOL DATA LIST AND ACTUATOR TESTING

1. Carry out inspection by means of the data list and the actuator test function.
   If there is a malfunction, check and repair the chassis harnesses and components.
2. Recheck using the scan tool and check that the malfunction has been eliminated as a result of the repairs.'
3. Erase the diagnostic trouble code from memory.
4. Remove the scan tool.
5. Start the engine again and carry out a road test to confirm that the problem has disappeared.

   NOTE

   Refer to P.13A-238 for Data List.
   Refer to P.13A-244 for Actuator Tests.

DIAGNOSTIC BY DIAGNOSTIC TEST MODE II (INCREASED SENSITIVITY)

When mode II is selected using the MUT-II, the check engine/malfunction indicator lamp illuminates at the point when the ECM detects a problem (except if the problem is related to emissions), and at the same time the corresponding diagnostic trouble codes are stored.

Furthermore, in the case of comprehensive component electrical faults (opens/shorts), the time from the occurrence of the fault to the storing of the DTC is compressed (4 seconds → 1 second).

As a result of this, checking of the trouble symptoms and checking after repairs have been completed are both made easier.

Once mode II has been selected, it is necessary to turn the ignition switch to OFF or to use the MUT-II to select mode I once more before mode I operation can be resumed. However, all DTCs, readiness test status and freeze frame data will be erased after returning to mode I, so this data should be recorded beforehand if necessary.

(1) Using the scan tool, changeover the diagnostic test mode of the engine control module to DIAGNOSTIC TEST MODE II. (INCREASED SENSITIVITY)
(2) Road test the vehicle.
(3) Read the diagnostic trouble code in the same manner as "READ OUT OF DIAGNOSTIC TROUBLE CODE" and repair the malfunctioning part.
(4) Turn off the ignition switch.

NOTE
Turning OFF the ignition switch will cause the engine control module to changeover the ECM from the diagnostic test mode II to the diagnostic test mode I.

FAIL-SAFE/BACKUP FUNCTION TABLE

13100910077

When the main sensor malfunctions are detected by the diagnostic test mode, the vehicle is controlled by means of the following defaults.

Malfunctioning item	Control contents during malfunction
Volume air flow sensor	1. Uses the throttle position sensor signal and engine speed signal (crankshaft position sensor signal) for basic injector drive timing and basic ignition timing from the pre-set mapping. 2. Fixes the IAC motor in the appointed position so idle air control is not performed.
Intake air temperature sensor	Controls as if the intake air temperature is 25°C (77°F).
Throttle position sensor (TPS)	No increase in fuel injection amount during acceleration due to the unreliable throttle position sensor signal.
Engine coolant temperature sensor	Controls as if the 'engine coolant temperature is 80°C (176°F).
Camshaft position sensor	1. Injects fuel into the cylinders in the order 1-3-4-2 with irregular timing. (After the ignition switch is turned to ON, the No. 1 cylinder top dead center is not detected at all.) 2. Cuts off the fuel supply 4 seconds after a problem is detected. (After the ignition switch is turned to ON, the No. 1 cylinder top dead center is not detected at all.)
Barometric pressure sensor	Controls as if the barometric pressure is 101 kPa (30 in.Hg) (sea level).
Knock sensor <2.0L Engine (Turbo)>	Switches the ignition timing from ignition timing for high octane to ignition timing for standard octane fuel.
Ignition coil, power transistor unit	Cuts off the fuel supply to cylinders with an abnormal ignition signal.
Heated oxygen sensor <front>	Air/fuel ratio closed loop control is not performed
Heated oxygen sensor <rear>	Performs the closed loop control of the air/fuel ratio by using only the signal of the heated oxygen sensor (front) installed on the front side of the catalytic converter.
Misfire detection	The ECM stops supplying fuel to the cylinder with the highest misfiring rate if a misfiring that could damage the catalytic converter is detected.
Turbocharger waste gate actuator <2.0L Engine (Turbo)>	Shuts off fuel in case of overcharge.
Generator FR terminal	Does not restrict the generator output with respect to electrical load.

INSPECTION CHART FOR DIAGNOSTIC TROUBLE CODES (FAULT TREE) 13100870269

DTC No.	Diagnostic items	Check items (Remedy)	Memory	Reference page
P0100	Volume air flow circuit malfunction	• Harness and connector (If harness and connector are not defective, replace volume air flow sensor assembly.)	Retained	13A-162
P0105	Barometric pressure circuit malfunction	• Harness and connector (If harness and connector are not defective, replace volume air flow sensor assembly.)	'Retained	13A-163
P0110	Intake air temperature circuit malfunction	• Harness and connector • Intake air temperature sensor	Retained	13A-164
P0115	Engine coolant temperature circuit malfunction	• Harness and connector • Engine coolant temperature sensor	Retained	13A-165
P0120	Throttle position circuit malfunction	• Harness and connector • Throttle position sensor • Closed throttle posit& switch	Retained	13A-166
P0125	Excessive time to enter closed Loop Fuel Control*	• O_2 sensor (front) • O_2 sensor harness and connector • Injector	Retained	13A-167
P0130	O_2 sensor circuit malfunction (Bank 1 Sensor 1)	• Harness and connector (If harness and connector are not defective, replace O_2 sensor (front).)	Retained	13A-168
P0135	O_2 sensor heater circuit malfunction (Bank 1 Sensor 1)	• Harness and connector • O_2 sensor (front)	Retained	13A-169
P0136	O_2 sensor circuit malfunction (Bank 1 Sensor 2)	• Harness and connector • O_2 sensor (rear)	Retained	13A-170
P0141	O_2 sensor heater circuit malfunction (Bank 1 Sensor 2)	• Harness and connector • O_2 sensor (rear) heater	Retained	13A-171
P0170	Fuel trim malfunction (Bank 1)	• Volume air flow sensor output frequency • Injector • Fuel pressure • Intake air leaks • Engine coolant temperature sensor • Intake air temperature sensor • Barometric pressure sensor • O_2 Sensor • Exhaust manifold cracks	Retained	13A-172
P0201	Injector circuit malfunction – Cylinder 1	• Harness and connector • Injector	Retained	13A-173
P0202	Injector circuit malfunction – Cylinder 2			
P0203	Injector circuit malfunction – Cylinder 3			
P0204	Injector circuit malfunction – Cylinder 4	• Harness and connector • Injector	Retained	13A-173

DTC No.	Diagnostic items	Check items (Remedy}	Memory	Reference page
P0300	Random misfire detected*	• Ignition coil • Ignition power transistor • Spark plug • Ignition circuit • Injector • O_2 Sensor • Compression pressure • Timing belt • Crankshaft position sensor • Air intake • Fuel pressure • Crankshaft position sensor circuit and connector	Retained	13A-174
P0301	Cylinder 1 misfire detected*		Retained	13A-175
P0302	Cylinder 2 misfire detected*			
P0303	Cylinder 3 misfire detected*			
P0304	Cylinder 4 misfire detected*			
P0325	Knock sensor 1 circuit malfunction <2.0L Engine (Turbo)>	• Harness and connector (If harness and connector are not defective, replace knock sensor.)	Retained	13A-175
P0335	Crankshaft position sensor circuit malfunction	• Harness and connector (If harness and connector are not defective, replace crankshaft position sensor.)	Retained	13A-176
P0340	Camshaft position sensor circuit malfunction	• Harness and connector (If harness and connector are not defective, replace camshaft position sensor.)	Retained	13A-178
P0400	Exhaust gas recirculation flow malfunction	• Harness and connector • EGR valve • EGR solenoid • EGR valve control vacuum • Manifold differential, pressure sensor	Retained	13A-179
P0403	Exhaust gas recirculation solenoid malfunction	• Harness and connector • EGR solenoid	Retained	13A-180
P0420	Catalyst system efficiency below threshold (Bankl)	• Exhaust manifold (Replace the catalytic converter if there is no cracks)	Retained	13A-181
P0440	Evaporative emission control system malfunction <2.0L Engine (Turbo)>	• Harness and connector • Evaporative emission purge Solenoid • Purge control valve • Vacuum hoses routing	Retained	13A-182
P0442	Evaporative emission control system leak detected <2.4L Engine>	• Harness and connector • Evaporative emission purge solenoid • Evaporative emission ventilation solenoid • Vacuum hoses routing	Retained	13A-183
P0443	Evaporative emission control system purge control valve circuit malfunction	• Harness and connector • Evaporative emission purge solenoid	Retained	13A-184
P0446	Evaporative emission control system vent control malfunction <2.4L Engine>	• Harness and connector • Evaporative emission ventilation.. solenoid	Retained	13A-185

DTC No.	Diagnostic items	Check items (Remedy)	Memory	Reference page
P0450	Evaporative emission control system pressure sensor malfunction <2.4L Engine>	• Harness and connector • Fuel tank differential pressure sensor	Retained	13A-186
P0500	Vehicle speed sensor malfunction	• Harness and connector • Vehicle speed sensor	Retained	13A-187
P0505	Idle control system malfunction	• Harness and connector • Idle air control motor	Retained	13A-188
P0510	Closed throttle position switch malfunction	e Harness and connector • Closed throttle position switch	Retained	13A-190
P0551	Power steering pressure sensor circuit range/performance	• Harness and connector • Power steering pressure switch	Retained	13A-191
P0705	Transaxle range sensor circuit malfunction (RPNDL Input)	e Harness and connector • Park/neutral position switch	Retained	13A-191
P1103	Turbocharger waste gate actuator malfunction <2.0L Engine (Turbo)>	• Harness and connector • Turbocharger waste gate solenoid • Turbocharger waste gate actuator • Vacuum hose routing	Retained	13A-191
P1104	Turbocharger waste gate solenoid malfunction <2.0L Engine (Turbo)>	• Harness and connector • Turbocharger waste gate solenoid	Retained	13A-192
P1105	Fuel pressure solenoid malfunction <2.0L Engine (Turbo)>	• Harness and connector • Fuel pressure solenoid	Retained	13A-193
P1400	Manifold differential pressure (MDP) sensor circuit malfunction	• Harness and connector • MDP sensor	Retained	13A-194
Pi 500	Generator FR terminal circuit malfunction	• Harness and connector	Retained	13A-196
P1600	Serial communication link malfunction	• Harness and connector	Retained	13A-196
P1715	PG assy malfunction	• Harness and connector • Pulse generator	Retained	13A-197
'1750	Solenoid assy malfunction	• Harness and connector • Converter clutch solenoid • Shift control solenoid • Pressure control solenoid	Retained	13A-197
'1791	Engine coolant temperature level input circuit (to TCM) malfunction	• Harness and connector	Retained	13A-197

NOTE

1. Do not replace the engine control module (ECM) until a thorough terminal check reveals there are no short/open circuits.
2. After the ECM detects a malfunction, a diagnostic trouble code is recorded when the engine is next started and the same malfunction is re-detected. However, for items marked with a "*", the diagnostic trouble code is recorded on the first detection of the malfunction.
3. O_2 : Heated oxygen sensor
4. Sensor 1: indicates sensors which are mounted closest to the engine.
5. Sensor 2: indicates sensors which are mounted next-closest to the engine.

INSPECTION PROCEDURE FOR DIAGNOSTIC TROUBLE CODES

Code No. P0100 Volume Air Flow Circuit Malfunction	Probable cause
[Comment] Background • While the engine is running, the volume air flow sensor outputs a pulse signal which corresponds to the volume of air flow. • The engine control module checks whether the frequency of this signal output by the volume air flow sensor while the engine is running is at or above the set value. Check Area, Judgement Criteria **1. Check Area** • Engine speed is not lower than 500 r/min. **Judgement Criteria** • Sensor output frequency has continued to be 3.3 Hz or lower for 4 sec. **2. Check Area** • Throttle position sensor voltage is 2 V or lower. • Engine speed is not higher than 2000 r/min. **Judgement Criteria** • Sensor output freauency has continued to be 1000 Hz or hiaher for 4 sec. <2.0L Engine (Turbo)> • Sensor output frequency has continued to be 800 Hz or higher for 4 sec. <2.4L Engine> **3. Check Area** • Throttle position sensor voltage is 1.5 V or higher. • Engine speed is 2000 r/min or higher. **Judgement Criteria** • Sensor output frequency is 60 Hz or lower for 4 seconds.	• Volume air, flow sensor failed • Open or shorted volume airflow sensor circuit, or loose connector • Engine control module failed

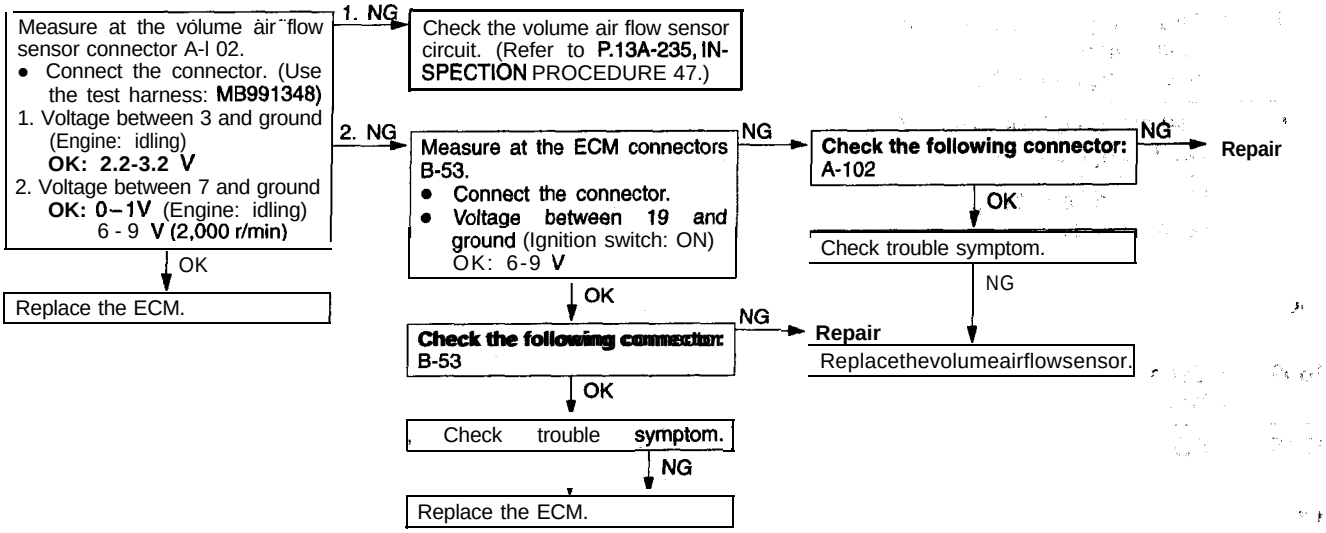

TSB Revision

Code No. P0105 Barometric Pressure Circuit Malfunction	Probable cause
[C o m m e n t] Background • The barometric pressure sensor outputs a voltage which corresponds to the barometric pressure. • The engine control module checks whether this voltage is within a specified range. **Check Area** • 60 sec or more have passed since the starting sequence was completed. • Battery voltage is not lower than 8 V. **Judgement Criteria** • Sensor output voltage has continued to be 4.5 V or higher [corresponding to a barometric pressure of 114 kPa (17 psi) or higher] for 4 sec. or • Sensor output voltage has continued to be 1.95 V or lower [corresponding to a barometric pressure of 50 kPa (7.4 psi) or lower] for 4 sec.	• Barometric pressure sensor failed • Open or shorted barometric pressure sensor circuit, or loose connector • Engine control module failed

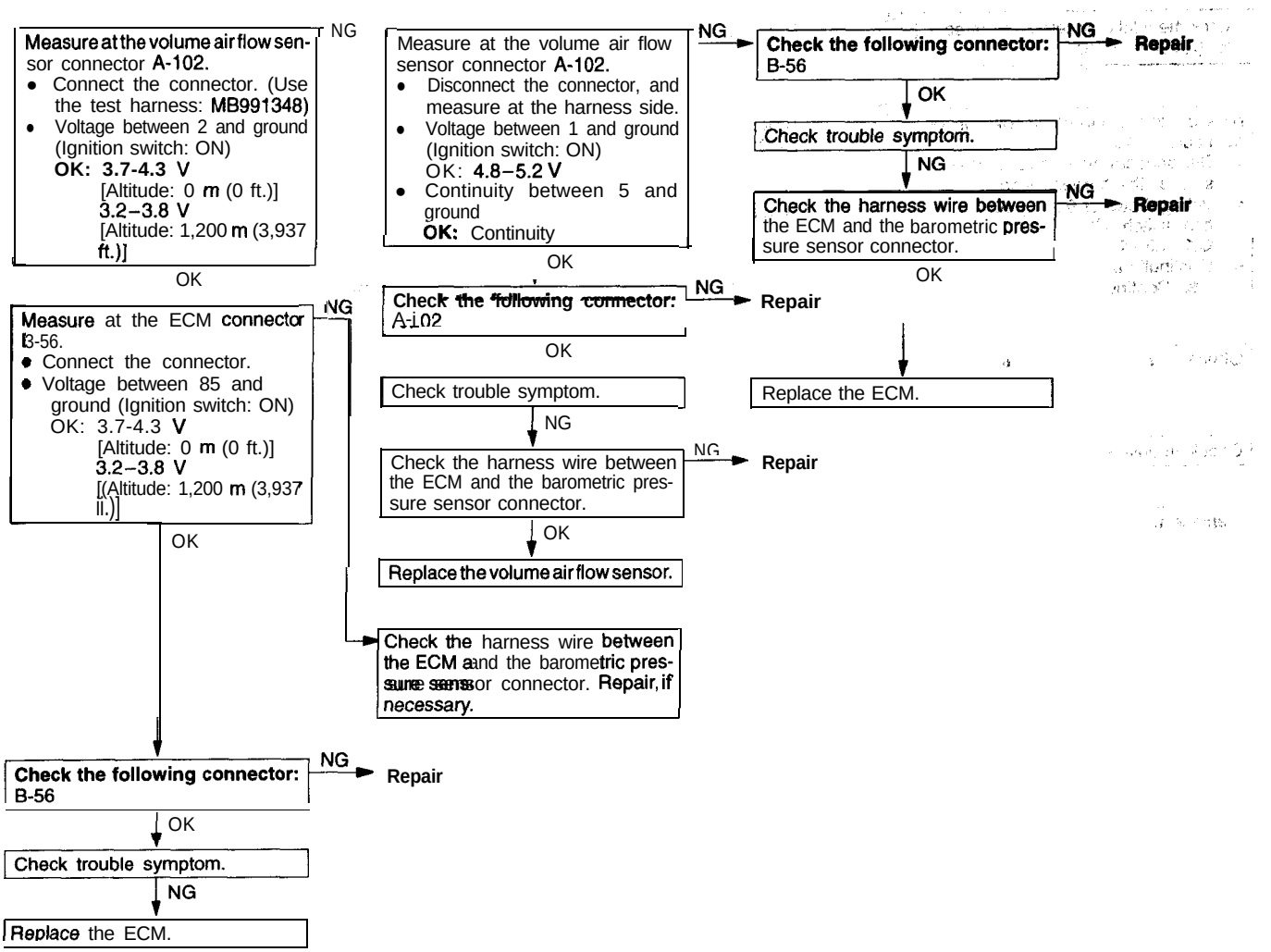

Code No. P0110 Intake Air Temperature Circuit Malfunction	Probable cause
[Comment] Background • The intake air temperature sensor converts the intake air temperature to a voltage and outputs it. • The engine control module checks whether the voltage is within a specified range. Check Area • 60 sec or more have passed since the starting sequence was completed. **Judgement Criteria** • Sensor output voltage has continued to be 4.6 V or higher [corresponding to an intake air temperature of –45°C (–49°F) or lower] for 4 sec. or • Sensor output voltage has continued to be 0.2 V or lower [corresponding to an intake air temperature of 125°C (257°F) or higher] for 4 sec.	• Intake air temperature sensor failed • Open or shorted intake air temperature sensor circuit, or loose connector • Engine control module failed

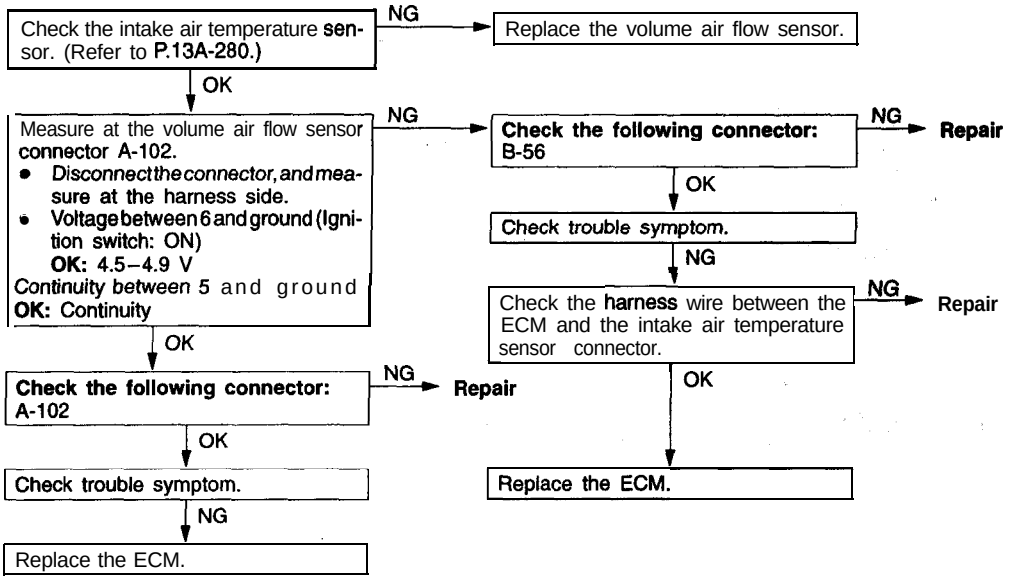

TSB Revision

Code No. P011 5 Engine Coolant Temperature Circuit Malfunction	Probable cause
[Comment] Background • The engine coolant temperature sensor converts theenginecoolanttemperature to a voltage and outputs it. • The engine control module checks whether the voltage is within a specified range. In addition, it checks that the engine coolant temperature (signal) does not drop while the engine is warming up. **Check Area, Judgement Criteria** **1. Check Area, Judgement Criteria** • Sensor output voltage has continued to be 4.6 V or higher [corresponding to an engine coolant temperature of –45°C (–49°F) or lower] for 4 sec. or • Sensor output voltage has continued to be 0.1 V or lower [corresponding to an engine coolant temperature of 140°C (284°F) or higher] for 4 sec. **2. Check Area, Judgement Criteria** • Sensor output voltage increased from a value lower than 1.6 V to a value higher than 1.6 V [Engine coolant temperature decreases from a higher than 40°C (104°F) temperature to a lower than 40°C (104°F) temperature.] • Then the sensor output voltage has continued to be 1.6 V or higher for 5 min. **3. Check Area** • Engine coolant temperature is approximately 40°C (104°F) immediately after engine is started. **Judgement Criteria** • About 60 – 300 sec have passed for the engine coolant temperature to rise to about 40°C (104°F) after starting sequence was completed.	• Engine coolant temperature sensor failed • Open or shorted engine coolant temperature sensor circuit, or loose connector • Engine control module failed

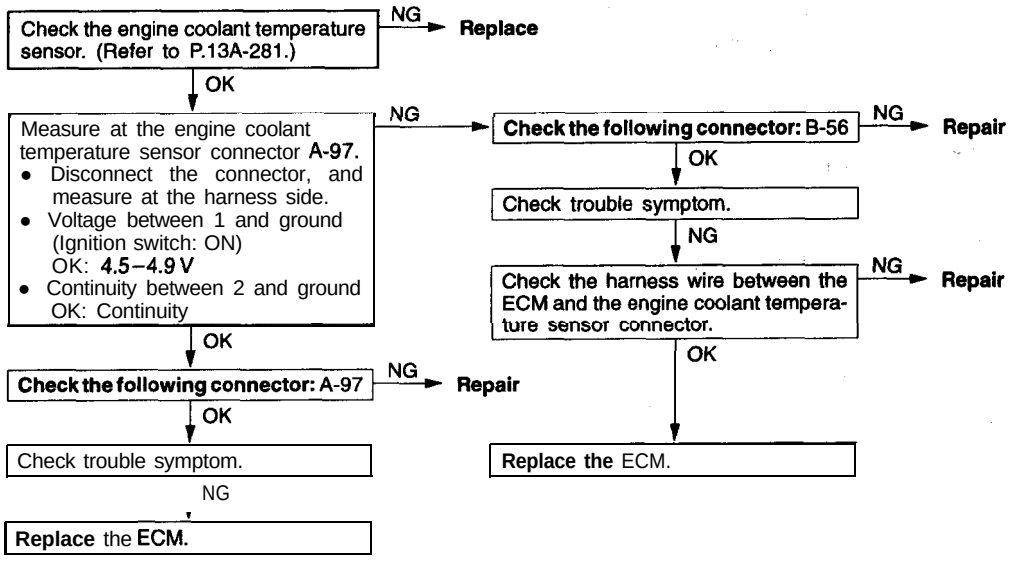

TSB Revision

Code No. P0120 Throttle Position Circuit Malfunction	Probable cause'
[Comment] Background • The throttle position sensor outputs a voltage which corresponds to the throttle valve opening angle. • The engine control module checks whether the voltage is within a specified range. In addition, it checks that the voltage output does not become too large while the engine is at idle. **Check Area, Judgement Criteria** **1. Check Area, Judgement Criteria** • With the close throttle position switch set to ON, the sensor output voltage has continued to be 2 V or higher for 4 sec. or • Sensor output voltage has continued to be 0.2 V or lower for 4 sec. **2. Check Area** • Engine speed is at between 500 and 3000 r/min. • Volumetric efficiency is 30% or lower. **Judgement Criteria** • Sensor output voltage has continued to be 4.6 V or higher for 4 sec. **3. Check Area** • Engine speed is higher than 2000 r/min. • Volumetric efficiency is 60% or higher. **Judgement Criteria** • **Sensor output voltage** is 0.8 V or less for 4 seconds.	• Throttle position sensor failed or maladjusted • Open or shorted throttle position sensor circuit, or loose connector • Closed throttle position switch ON malfunction • Closed throttle position switch signal wire shorted • Engine control module failed

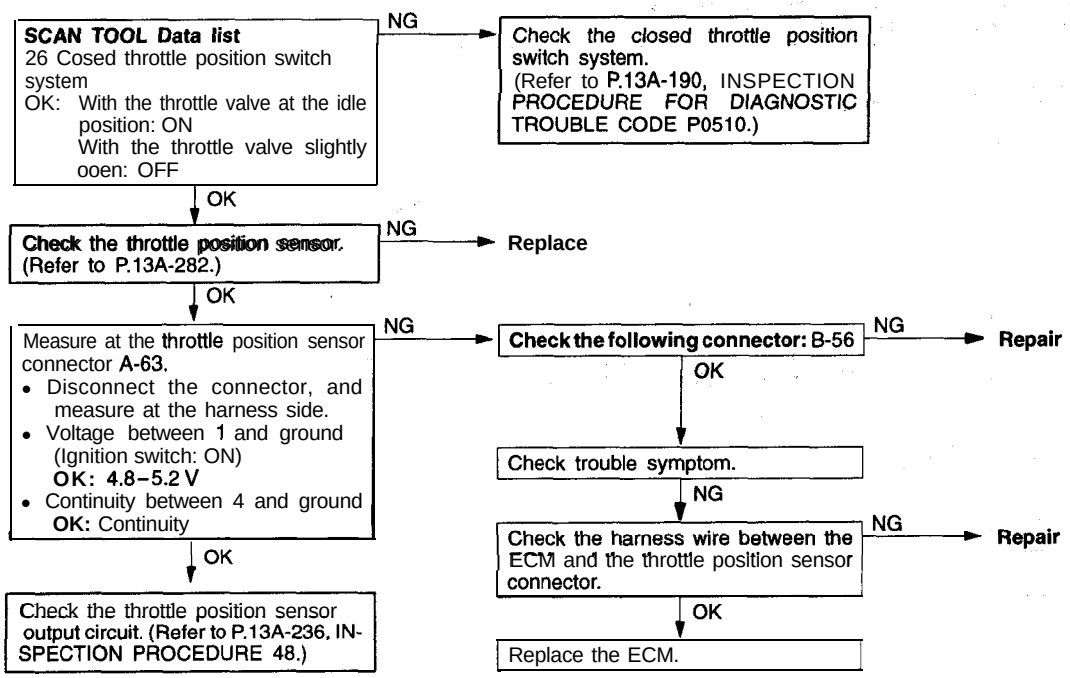

TSB Revision

Code No. P0125 Excessive Time to Enter Closed Loop Fuel Control	Probable cause
[Comment] Background • The MFI system reduces exhaust emissions by means of closed-loop fuel control. • The engine control module checks the time taken until closed-loop fuel control commences. **Check Area** • Engine coolant temperature is higher than 80°C (176°F). • Intake air temperature is –10°C (14°F) or higher • Barometric pressure is 76 kPa (11 psi.) or higher. • Engine speed is at between about 1800 and 3500 r/min. • Volumetric efficiency is 16 – 62%. • Running within air/fuel mixture ratio feedback zone. • Monitoring time: 128 sec **Judgement Criteria** • Multiport fuel injection system doesn't enter the closed loop control within about 30 sec. • Monitored only once per trip.	• Heated oxygen sensor failed • Injector failed • Fuel pressure regulator failed • Fuel pump failed • Fuel filter blocked, • Air drawn into air intake system- • Exhaust-gas leak • Engine control module failed

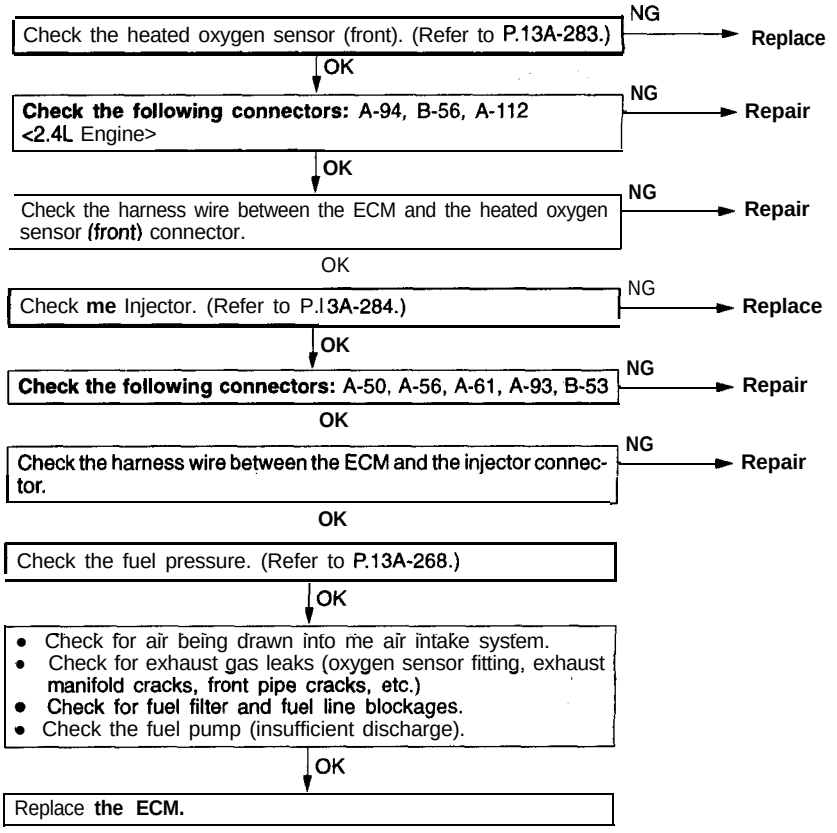

TSB Revision

Code No. P0130 O_2 (Heated Oxygen) Sensor Circuit Malfunction (Bank 1 Sensor 1)	Probable cause
[Comment] Background • When the heated oxygen sensor begins to deteriorate the oxygen sensor signal response becomes poor. • The engine control module forcibly varies the air/fuel mixture to make it leaner and richer, and checks the response speed of the heated oxygen sensor. In addition, the engine control module also checks for an open circuit in the heated oxygen sensor output line. **Check Area, Judgement Criteria** **1. Check Area** • Engine coolant temperature sensor: normal • Heated oxygen sensor signal voltage has continued to be 0.1 V or lower for 3 min or more after the starting sequence was completed. • Engine coolant temperature is higher than 80°C (176°F). • Engine speed is higher than 1200 r/min. • Volumetric efficiency is not lower than 25%. • intake air temperature is –10°C (14°F) or higher • Barometric pressure is 76 kPa (11 psi.) or higher. **Judgement Criteria** • Input voltage supplied to the engine control module interface circuit is not lower than 4.5 V when 5 V is applied to the heated oxygen sensor output line via a resistor. **2. Check Area** • Engine coolant temperature sensor: Normal • Engine coolant temperature is not lower than 50°C (122°F). • Engine speed is between 1500 and 3000 r/min. <M/T> • Engine *speed* is between 1100 and 3000 r/min. <A/T> • Volumetric efficiency is 25 – 60%. • Intake air temperature is –10°C (14°F) or higher • Barometric pressure is 76 kPa (11 psi.) or higher. • Under the closed loop air-fuel control. • Monitoring time: 6 sec **Judgement Criteria** • When the air-fuel ratio is forcibly changed (lean to rich and rich to lean), the heated oxygen sensor signal doesn't provide response within 1.2 sec. • Monitored only once per trip.	• Heated oxygen sensor deteriorated • Open circuit in heated oxygen sensor output line • Engine control module failed

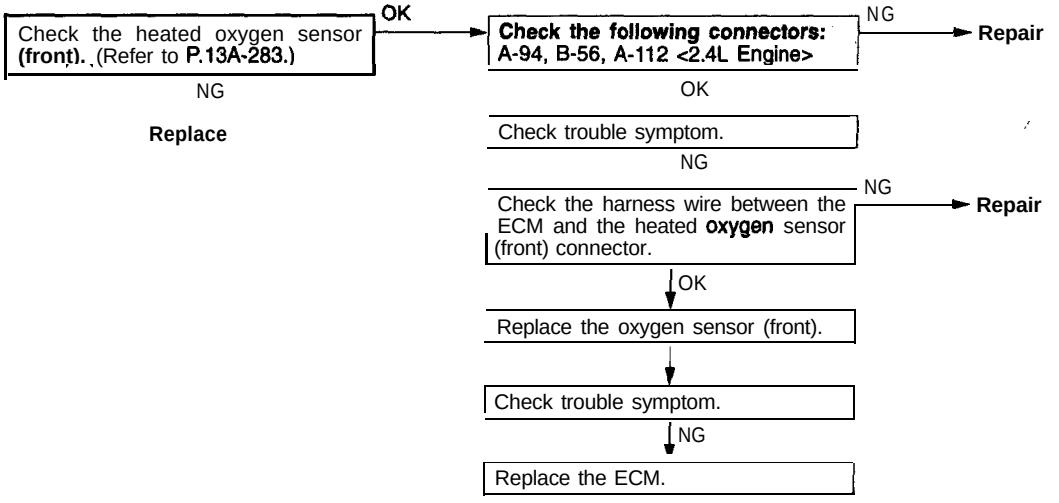

TSB Revision

Code No. P0135 O_2 (Heated Oxygen) Sensor Heater Circuit Malfunction (Bank 1 Sensor 1)	Probable cause
[Comment] Background • The engine control module checks whether the heater current Is within a specified range when the heater is energized. **Check Area** • Battery voltage is between 11 and 16 V. **Judgement Criteria** • Heater current of the front heated oxygen sensor heater (Bank 1 Sensor 1) has continued to be not higher than 0.2 A or not lower than 3.5 A for 6 sec. • Monitored only once per trip.	• Open or shorted oxygen sensor heater circuit • Open circuit in oxygen sensor heater • Engine control module failed

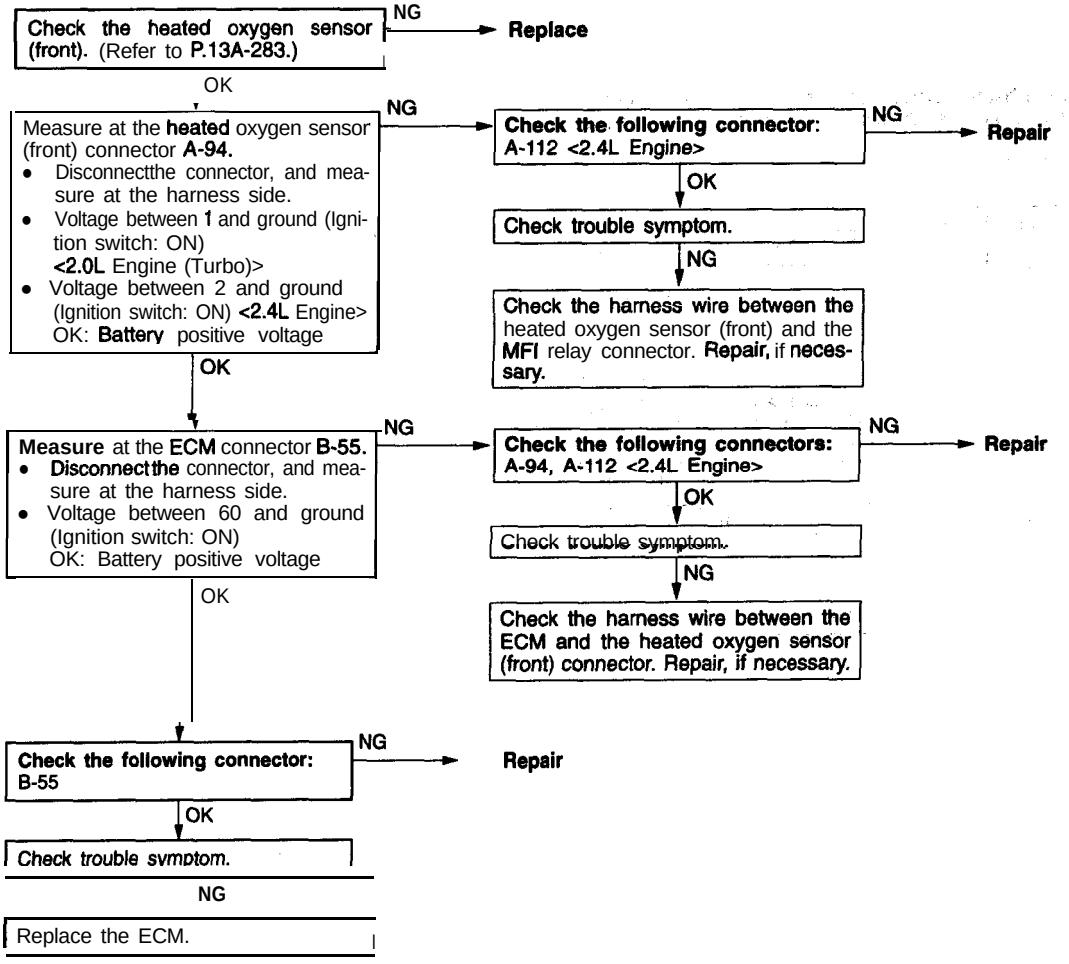

TSB Revision

Code No. P0136 O_2 (Heated Oxygen) Sensor Circuit Malfunction (Bank 1 Sensor 2)	Probable cause
[Comment] Background • The engine control module checks for an open circuit in the heated oxygen sensor output line. **Check Area** • Coolant temperature sensor: normal • Heated oxygen sensor signal voltage has continued to be 0.1 V or lower for 3 min or more after the starting sequence was completed. • Engine coolant temperature is not lower than 80°C (176°F) • Engine speed is higher than 1200 r/min. • Volumetric efficiency is not lower than 25%. • Intake air temperature is –10°C (14°F) or higher • Barometric pressure is 76 kPa (11 psi.) or higher. • Monitoring Time: 7–10 sec **Judgement Criteria** • Input voltage supplied to the engine control module interface circuit is not lower than 4.5 V when 5 V is applied to the heated oxygen sensor output line via a resistor. • Making the air-fuel ratio 15% richer doesn't result in raising the heated oxygen sensor output voltage beyond 0.1 V.	• Heated oxygen sensor failed • Open circuit in heated oxygen sensor output line • Engine control module failed

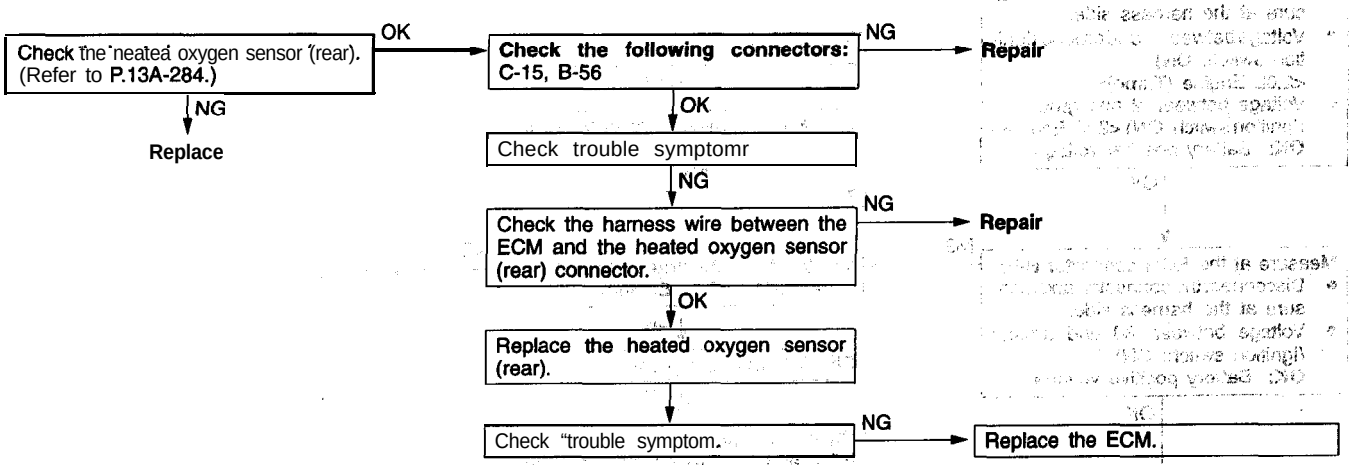

TSB Revision

Code No. P0141 O_2 (Heated Oxygen) Sensor Heater Circuit Malfunction (Bank 1 Sensor 2)	Probable cause
[Comment] Background • The engine control module checks whether the heater current is within a specified range when the heater is energized. Check Area • Battery voltage is between 11 and 16 V. **Judgement Criteria** • Heater current of the front heated oxygen sensor heater (Bank 1 Sensor 2) has continued to be not higher than 0.2 A or not lower than 3.5 A for 6 sec. • Monitored only once per trio.	• Open or shorted oxygen sensor heater circuit • Open circuit in oxygen sensor heater' • Engine control module failed

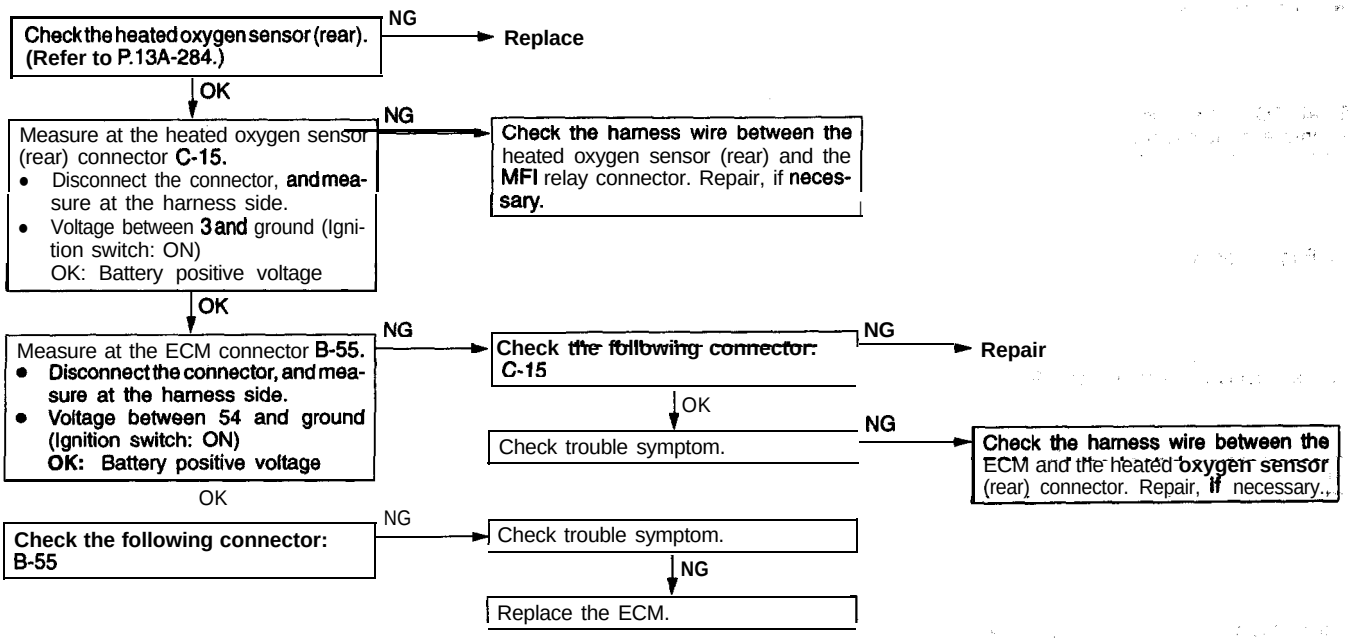

Code No. P0170 Fuel Trim Malfunction (Bank 1)

[Comment]
Background
- If a malfunction occurs in the fuel system, the fuel compensation value becomes too large or too small.
- The engine control module checks whether the fuel compensation value is within a specified range.

Check Area
- Under the closed loop air-fuel ratio control
- Intake air temperature is –10°C (14°F) or higher
- Barometric pressure is 76 kPa (11 psi.) or higher.

Judgement Criteria
- Long-range fuel correction has continued to be not lower than +12.5% or not higher than -12.5% for 10 sec.
- Short-range fuel correction has continued to be not lower than +10.0% or not higher than -10.0% for 10 sec.

Probable cause

- Volume 'air flow sensor failed'
- Injector failed
- Incorrect fuel pressure
- Air drawn in from gaps in gasket seals,' etc.
- Heated oxygen sensor failed
- Engine coolant temperature sensor failed,
- Intake air, temperature sensor failed
- Barometric pressure sensor failed
- Exhaust gas leaks
- Incorrect fuel used
- Engine control module failed

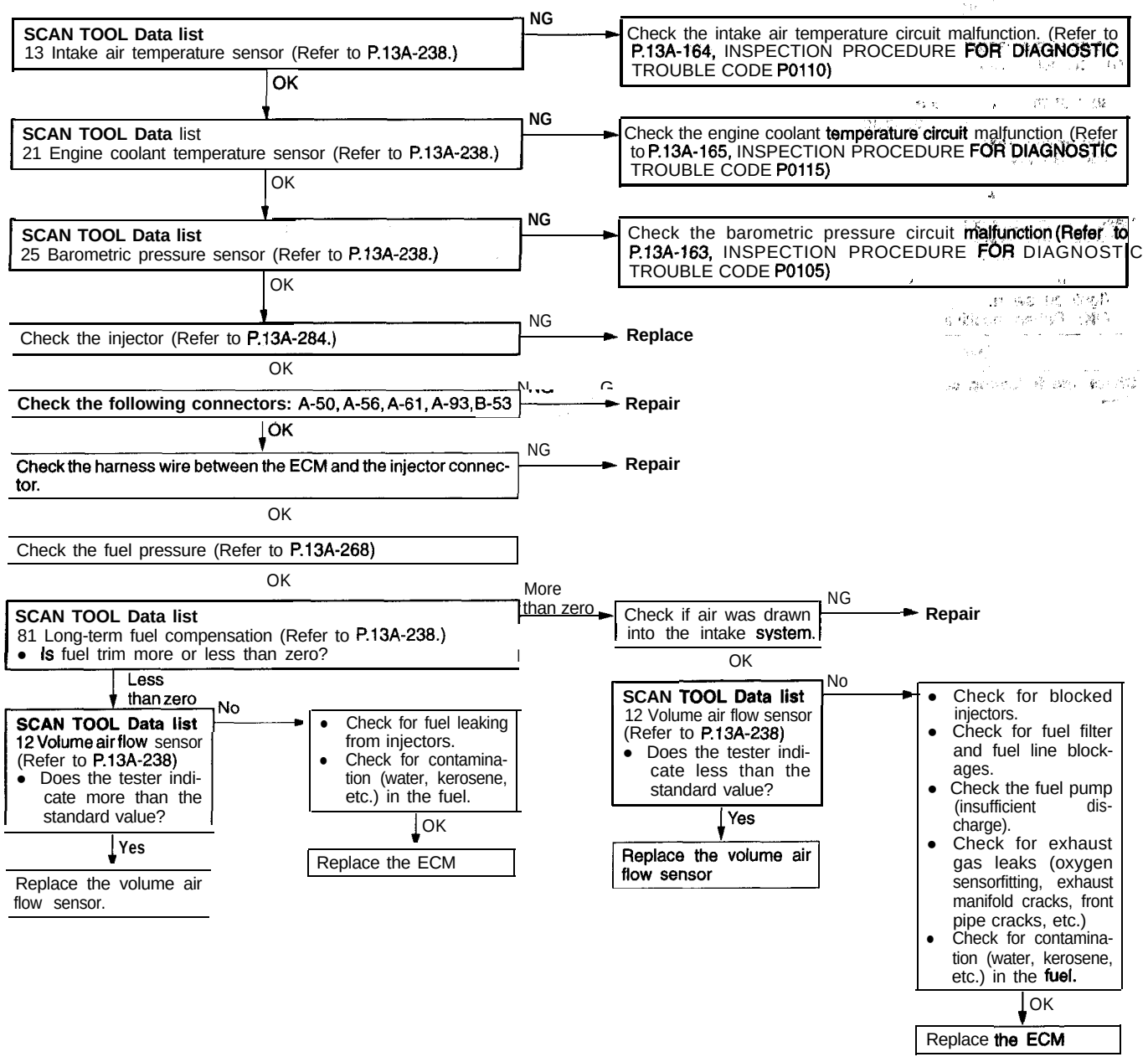

TSB Revision

Code No. P0201, P0202, P0203, P0204 Injector Circuit Malfunction (Cylinder-l, Cylinder-2, Cylinder-3, Cylinder-4)	Probable cause
[Comment] Background • A surge voltage is generated when the injectors are driven and the current flowing to the injector coil is shut off. • The engine control module checks this surge voltage. **Check Area** • Engine speed is between 50 and 1000 r/min. • Throttle position sensor output voltage is not higher than 1.16 V • Monitoring Time: 4 sec **Judgement Criteria** • Injector coil surge voltage (system voltage +2 V) has not been detected for 4 sec.	• Injector failed • Open or shorted injector circuit, or loose connector • Engine control module failed

<2.0L Engine (Turbo)>

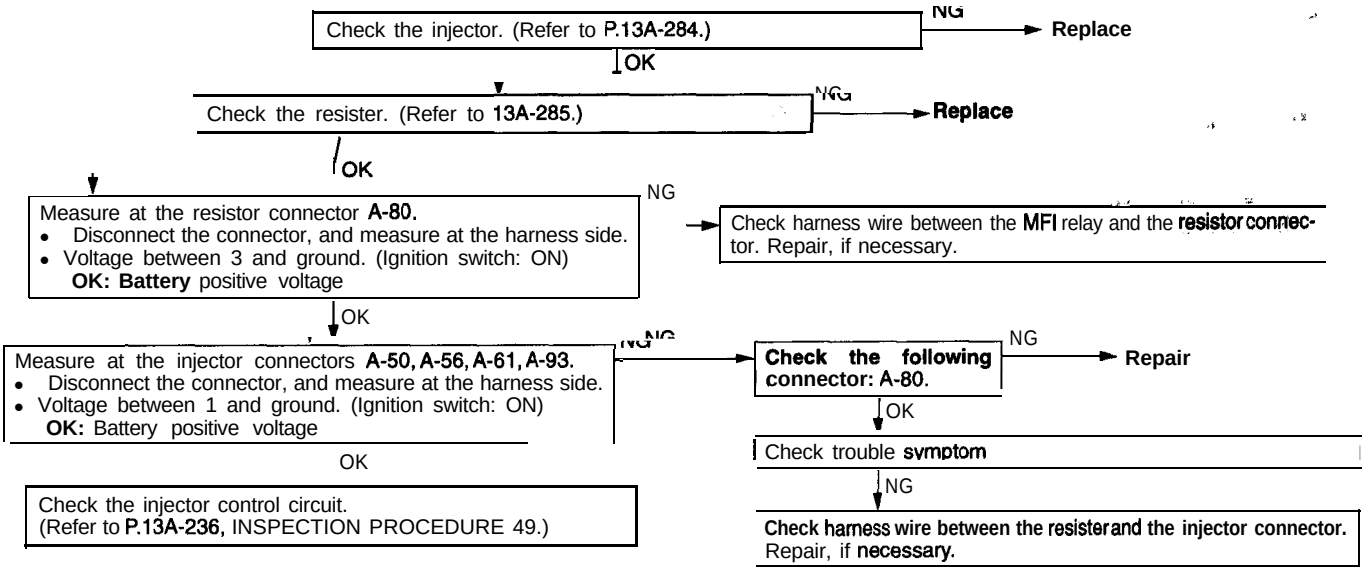

<2.4L Engine>

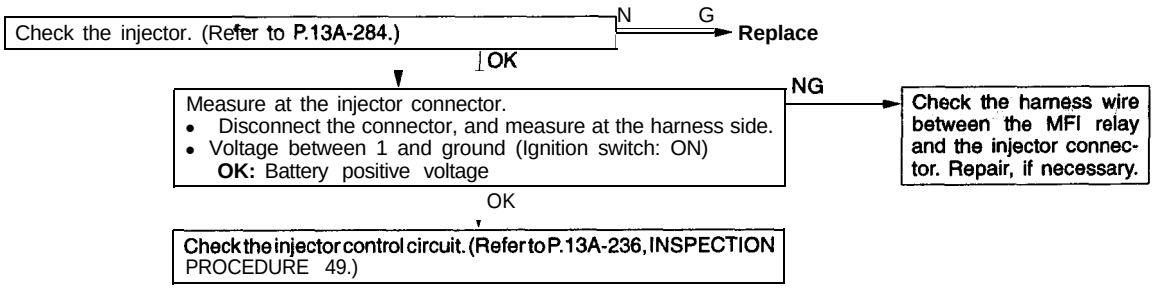

TSB Revision

Code No. P0300 Random Misfire Detected	Probable cause
[Comment] Background • If a misfiring occurs while the engine is running, the engine speed suddenly changes. • The engine control module checks for changes in the engine speed. Check Area • 5 sec or more have passed after the engine was started. • Engine speed is at between 500 and 6000 r/min. • Engine coolant temperature is –10°C (14°F) or higher, • Intake air temperature is –10°C (14°F) or higher • Barometric pressure is 76 kPa (11 psi.) or higher. • Running free from sudden accelerations/decelerations such as shift change. **Judgement Criteria** (change in the angular acceleration of the crankshaft is used for misfire detection.) • Misfire has occurred more frequently than allowed during the last 200 revolutions [when the catalyst temperature is higher than 950°C (1742°F)]. or • Misfire has occurred in 20 or more of the last 1000 revolutions (corresponding to 1.5 times the limit of emission standard.)	• Ignition system related part(s) failed • Poor crankshaft position sensor signal • Incorrect air/fuel ratio • Low compression pressure • Engine coolant temperature sensor: failed • liming belt teeth broken • Injector failed • EGR valve failed • Engine control module failed

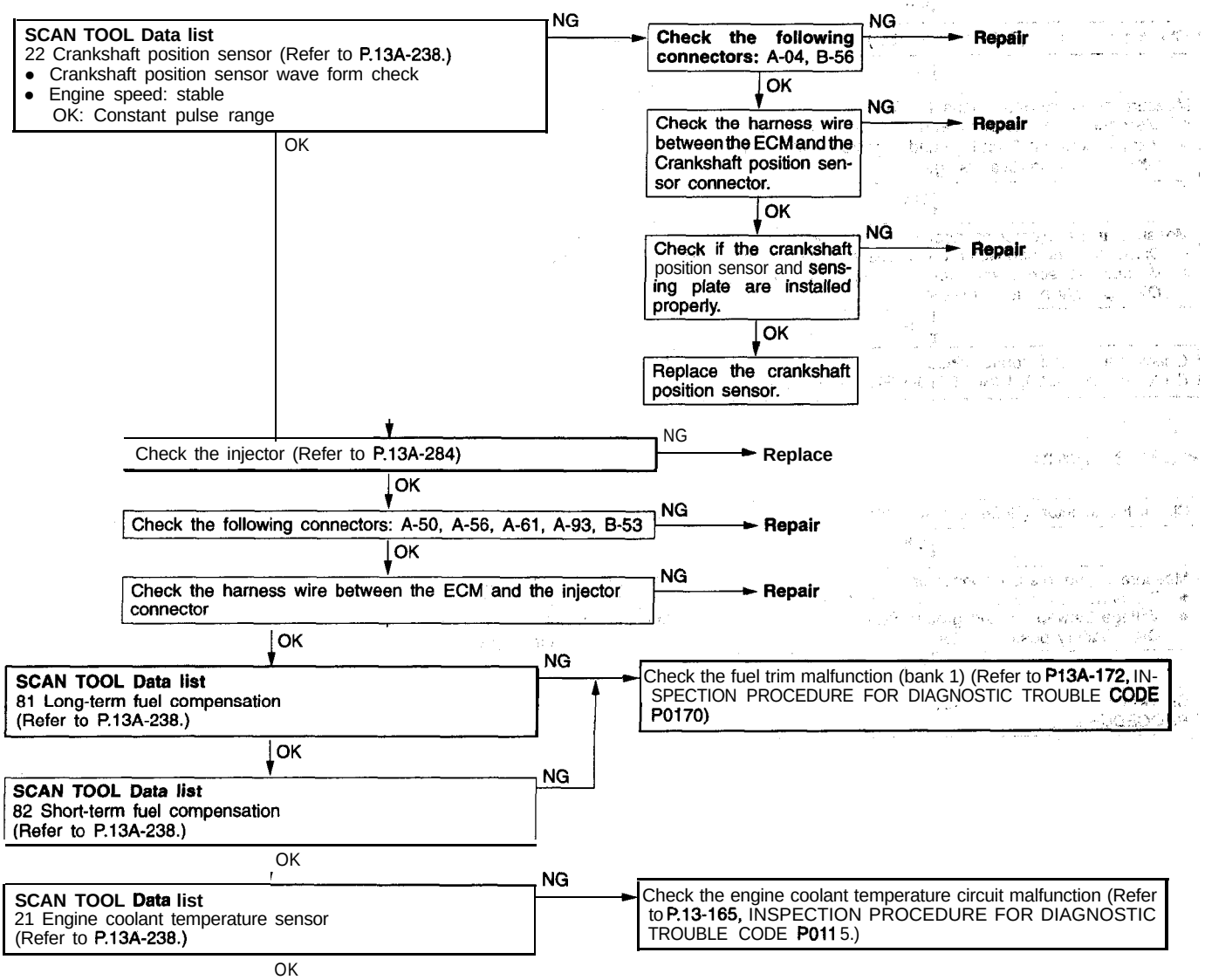

Check the following items.
- Check the ignition coil, spark plugs, spark plug cables.
- Check the compression pressure.
- Check for broken timing belt teeth.
- Check the EGR system and the EGR valve.

TSB Revision

Code No. P0301, P0302, P0303, P0304 Misfire Detected (Cylinder-I, Cylinder-2, Cylinder-3, Cylinder-4)	Probable cause
[Comment] Background • if a misfiring occurs while the engine is running, the engine speed suddenly changes. • The engine control module checks for changes in the engine speed. **Check Area** • 5 sec or more have passed after the engine was started. • Engine speed is at between 500 and 6000 r/min. • Engine coolant temperature is –10°C (14°F) or higher. • Intake air temperature is –10°C (14°F) or higher • Barometric pressure is 76 kPa (11 psi.) or higher. • Running free from sudden accelerations/decelerations such as shift change. **Judgement Criteria** (change in the angular acceleration of the crankshaft is used for misfire detection.) • Misfire has occurred more frequently than allowed during the last 200 revolutions [when the catalyst temperature is higher than 950°C (1742°F)]. or • Misfire has occurred in 20 or more of the last 1000 revolutions (corresponding to 1.5 times the limit of emission standard.)	• Ignition system related part(s) failed • Low compression pressure • Injector failed • Engine control module failed

Check the injector (Refer to P.13A-284) — NG → Replace
↓ OK
Check the following connectors: A-50, A-56, A-61, A-93, B-53 — NG → Repair
↓ OK
[Check the harness wire between the ECM and the injector connector — NG → Repair
OK

Check the following items.
• Check the spark plugs, spark plug cables.
• Check the compression pressure

Code No. P0325 Knock Sensor 1 Circuit Malfunction <2.0L Engine (Turbo)>	Probable cause
[Comment] Background • The knock sensor converts the vibration of the cylinder block into a voltage and outputs it. If there is a malfunction of the knock sensor, the voltage output will not change. • The engine control module checks whether the voltage output changes. **Check Area** • Ignition switch: ON • 60 sec or more have passed after the ignition switch was turned on or the starting sequence was completed. • Engine speed is higher than 2000 r/min. **Judgement Criteria** • Knock sensor output voltage (knock sensor peak voltage in each 180 deg period of the crankshaft) has not changed more than 0.06 V in the last consecutive 200 periods.	• Knock sensor failed • Open or shorted knock sensor circuit, or loose connector • Engine control module failed

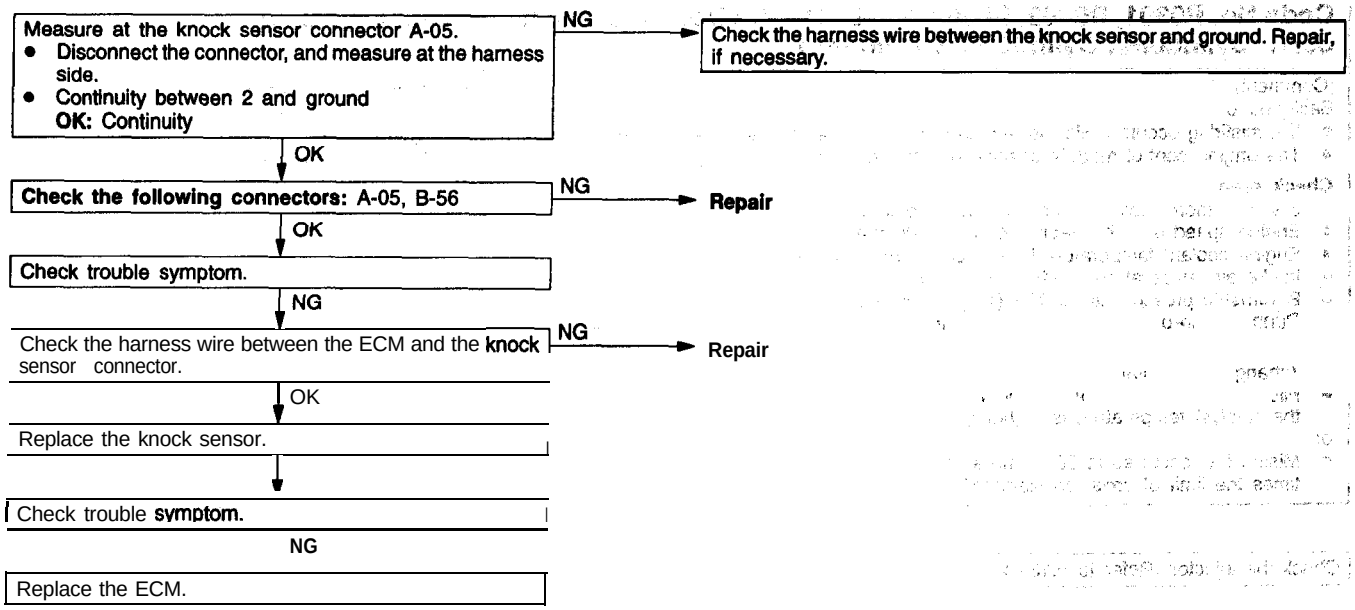

Code No. P0335 Crankshaft Position Sensor Circuit Malfunction	Probable cause
[Comment] Background • When the engine is running, the crankshaft position sensor outputs a pulse signal. • The engine control module checks whether the pulse signal is input while the engine is cranking. **Check Area, Judgement Criteria** **1. Check Area** • Engine is being changed. **Judgement Criteria** • Sensor output voltage has not changed (no pulse signal is input) for 4 sec. **2. Check Area, Judgement Criteria** • Normal signal pattern has not been input for cylinder identification from the crankshaft position sensor signal and camshaft position sensor signal for 4 sec.	• Crankshaft position sensor failed • Open or shorted crankshaft position sensor circuit, or loose connector • Engine control module failed

TSB Revision

Measure at the crankshaft poition sensor connector A-04.
- Connect the connector. (Use the test harness: MD998478.)
- Voltage between 2 (black clip) and ground (Engine: cranking)
  OK: 0.4–4.0 V
- Voltage between 2 (black clip) and ground (Engine: idling)
  OK: 1.5-2.5 V

OK → Replace the ECM.

NG

Measure at the crankshaft poition sensor connector A-04.
- Disconnect the connector, and measure at the harness side.

1. Voltage between 3 and ground (Ignition switch: ON)
   OK: Battery positive voltage
2. Voltage between 2 and ground (Ignition switch: ON)
   OK: 4.6-5.2 V
3. Continuity between 1 and ground
   OK: Continuity

1. NG → Check the harness wire between the crankshaft poition sensor and the MFI relay connector. Repair, if necessary.

2. NG → Check the following connector: B-56 → NG → Repair
   OK → Check trouble symptom.
   NG → Check the harness wire between the ECM and the crankshaft poition sensor connector. → NG → Repair
   OK → Replace the ECM.

3. NG → Check the harness wire between the crankshaft position sensor and the ground. Repair, if necessary.

OK → Check the following connector: A-04 → NG → Repair
OK → Check trouble symptom.
NG → Replace the crankshaft poition sensor.

Code No. P0340 Camshaft Position Sensor Circuit Malfunction

[Comment]
Background
- When the engine is running, the camshaft position sensor outputs a pulse signal.
- The engine control module checks whether the pulse signal is input.

Check Area, Judgement Criteria

1. Check Area, Judgement Criteria
- Sensor output voltage has not changed (no pulse signal is input) for 4 sec.

2. Check Area, Judgement Criteria
- Normal signal pattern has not been input for cylinder identification from the crankshaft position sensor and camshaft position sensor signal for 4 sec.

Probable cause

- Camshaft position sensor malfunction
- Open or shorted camshaft position sensor circuit or loose connector
- Engine control module failed

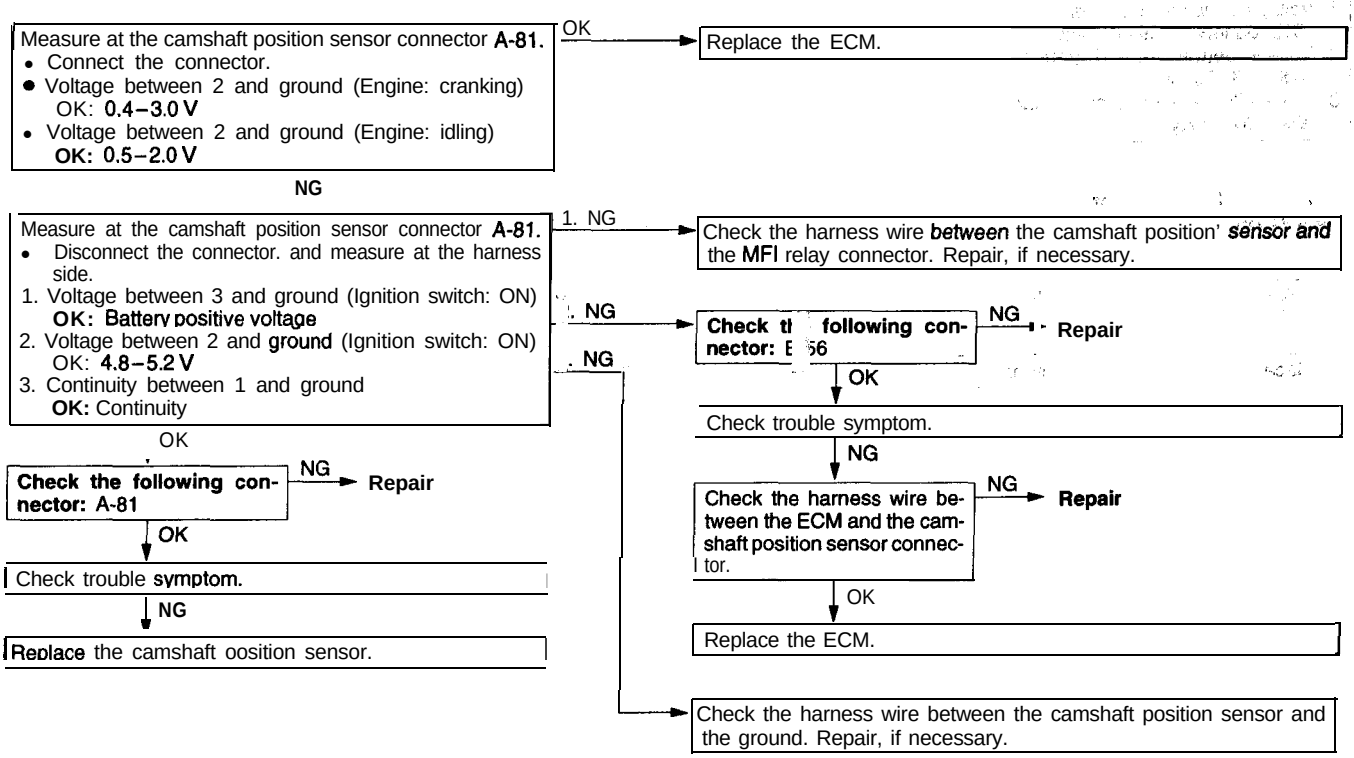

TSB Revision

Code No. P0400 Exhaust Gas Recirculation Flow Malfunction	Probable cause
[Comment] Background • When the EGR solenoid switches from OFF to ON while the engine is running, EGR gas flows. • The engine control module checks how the EGR gas flow signal changes. **Check Area** • Engine coolant temperature is higher than 80°C (176°F). • Engine speed is between 1000 and 2000 r/min. <M/T> • Engine speed is between 940 and 2000 r/min. <A/T> • Intake air temperature is 5°C (41°F) or higher. • Barometric pressure is 76 kPa (11 psi.) or higher. • Closed throttle position switch: ON • Volumetric efficiency is 15% <M/T> or 27% <A/T> or lower. <2.0 L engine (turbo)> • Volumetric efficiency is 15% <M/T> or 20% <A/T> or lower. <2.4 L engine> • Monitoring Time: 2 sec **Judgement Criteria** • There is no change in the condition of the air intake system when the EGR solenoid is turned on. • Monitored only once per trip.	• EGR valve does not open • EGR control vacuum is too low • EGR solenoid failed • Open or shorted EGR solenoid circuit, or loose connector • Manifold differential pressure sensor failed • Engine control module failed

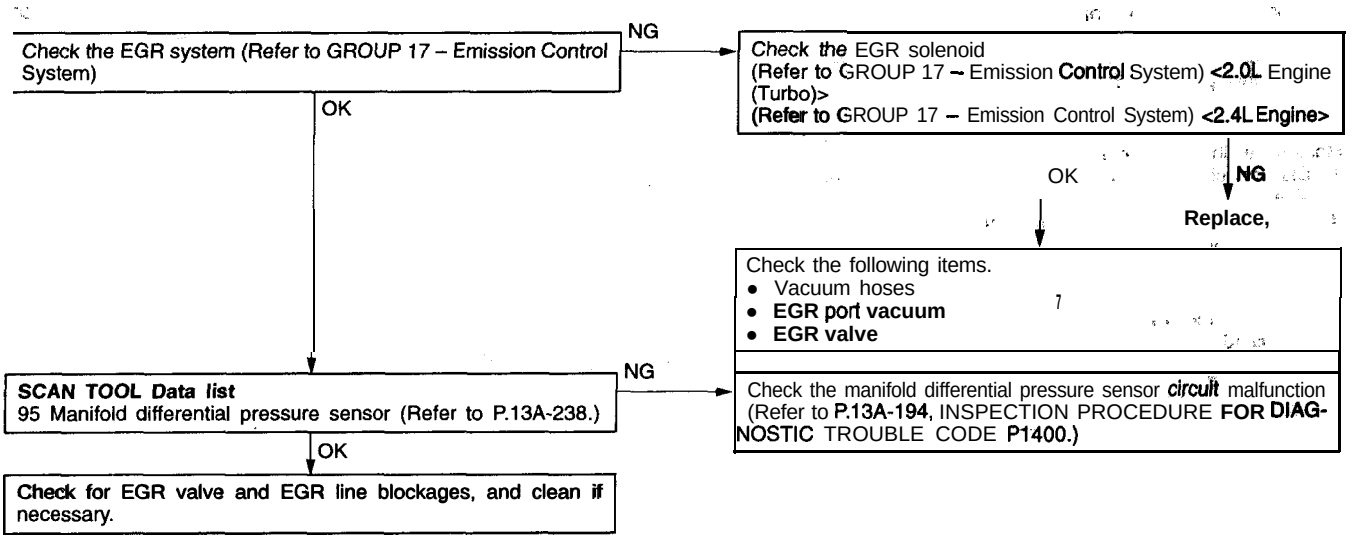

TSB Revision

Code No. P0403 Exhaust Gas Recirculation Solenoid Malfunction	Probable cause
[Comment] Background • The engine control module checks current flows in the EGR solenoid drive circuit when the solenoid is on and off. Check Area • Battery voltage is not lower than 10 V. **Judgement Criteria** • Solenoid coil surge voltage (system voltage +2 V) is not detected when the EGR solenoid is turned on/off.	• EGR solenoid failed. • Open or shorted EGR solenoid circuit, or loose connector. • Engine control module failed.

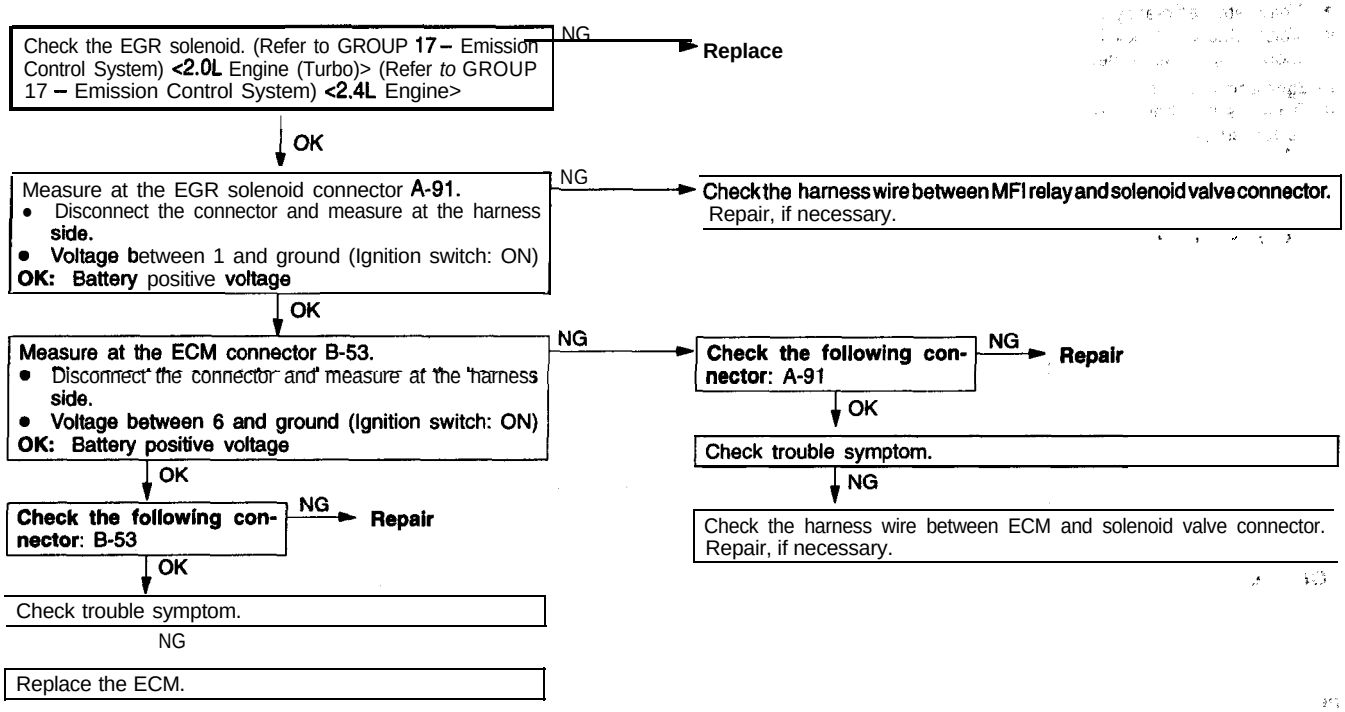

TSB Revision

Code No. P0420 Catalyst System Efficiency Below Threshold (Bank 1)	Probable cause
[Comment] Background • The signal from the heated oxygen sensor which follows the catalytic' converter differs from that which precedes the catalytic converter. That is because the catalytic converter purifies exhaust gas. When the catalytic converter has deteriorated, the signal from the heated oxygen sensor which follows the catalytic converter becomes similar to that which precedes the catalytic converter. • The engine control module checks the output of the heated oxygen sensor signals. **Check Area** • Engine speed is not less than 2600 <2.0L Engine (Turbo)> or 2500 <2.4L Engine> r/min. • Volume air flow sensor output frequency is between 36 and 262 Hz <M/T> or 50 and 300 Hz <A/T>. <2.0L Engine (Turbo)> • Volume air flow sensor output frequency is between 50 and 240 Hz. <2.4L Engine> • Intake air temperature is –10°C (14°F) or higher • Barometric pressure is 76 kPa (11 psi.) or higher. • Closed throffle position switch: OFF • Under the closed loop air-fuel ratio control. • Monitoring Time: 140 sec **Judgement Criteria** • Oxygen sensor (rear) signal and oxygen sensor (front) signal are abnormal.	• Catalytic converter deteriorated • Heated oxygen sensor failed • Engine control module failed

Check the exhaust manifold. (Are there any cracks?) — NG → Replace

↓ OK

SCAN TOOL Data list
59 Heated oxygen senosr (rear) (Refer to P.13A-238)
• Transaxle: 2nd gear <M/T>, L range <A/T>
• Drive with wide open throttle
OK: 600 – 10 00 mV

NG → Check the oxygen sensor circuit malfunction (bank 1 sensor 2) (Refer to P.13A-170, INSPECTION PROCEDURE FOR DIAGNOSTIC TROUBLE CODE P0136)

↓ OK

SCAN TOOL Data list
1 1 Heated oxygen sensor (front) (Refer to P.13A-238)
When engine is suddenly raced
OK: 600 –. 1000 mV

NG → Check the oxygen sensor circuit malfunction (bank 1 sensor 1) (Refer to P.13A-168, INSPECTION PROCEDURE FOR DIAGNOSTIC TROUBLE CODE P0130)

↓ OK

SCAN TOOL Data list
11 Heated oxygen sensor (front) (Refer to P.13A-238)
• Engine: 2000 r/min
OK: Switches between 0 – 400 ↔ 600 – 1,000 mV 15 or more times in 10 seconds

NG → Replace the heated oxygen sensor (front)

↓ OK

Replace the heated oxygen sensor (rear)

↓

Check the trouble symptom

↓ NG

Replace the catalytic converter.

↓

Check trouble symptom.

↓ NG

Replace the ECM.

Code No. P0440 Evaporative Emission Control System Malfunction <2.0L Engine (Turbo)>	Probable cause
[Comment] Background • The evaporative emission purge solenoid opens and closes while the engine is idling. Then the fuel compensation value changes according to whether the evaporative emission canister emits purge air or not. • The engine control module checks for this change. Check Area • 3 min or more have passed after the starting sequence was completed. • Engine coolant temperature is higher than 80°C (176°F). • Power steering switch: OFF • Under the closed loop air-fuel ratio control. • Under the close loop idle speed control • Monitoring time: 3 sec **Judgement Criteria** • There is a small amount of variation (3% or less) *in* the short-term fuel compensation value (average value) when the EVAP purge solenoid is turned on.	• Evaporative emission purge solenoid failed • Open or shorted evaporative emission purge solenoid circuit or loose connector • Purge hose connection or routing is defective • Idle air control motor failed • Park/neutral position switch failed • Engine control module failed

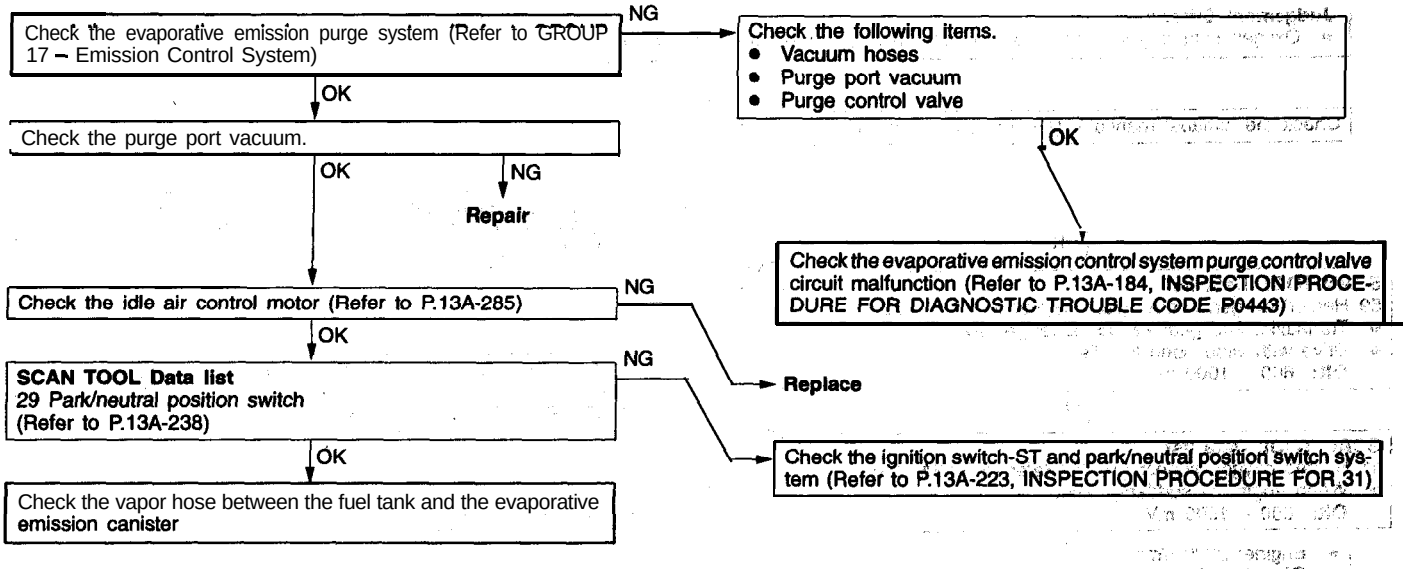

TSB Revision

Code No. P0442 Evaporative Emission Control System Leak Detected Malfunction <2.4L Engine>	Probable cause
[Comment] Background • The engine control module turns the evaporative emission ventilation solenoid on in order to shut off the outside air port of the evaporative emission canister. Next, the evaporative emission purge solenoid is driven at the specified duty (approximately 25%) to generate a negative pressure in the fuel tank and purge line, etc. When a negative pressure is generated in the fuel tank and purge line, etc., the evaporative emission purge solenoid turns off and the fuel tank and purge line, etc. are sealed. After they are sealed, monitoring of pressure differences inside the fuel tank starts, and if there is a large drop in pressure over a given time (if the negative pressure is leaking out into the atmosphere and the pressure has approached barometric pressure), the engine control module judges that there is a leak in the fuel tank, purge line or vapor line. Furthermore, if the fuel tank internal pressure does not drop even if the evaporative emission purge solenoid is driven while the outside air port of the canister is shut off (because of a blockage in the purge line or because the fuel tank filler tube cap has not been tightened correctly), the engine control module judges that there is a problem with the system and the check engine/malfunction indicator lamp illuminates. Check Area • Engine coolant is not lower than 60°C (140°F). • Engine speed is at between 1600 – 3500 r/min. • Power steering pressure switch: OFF • Ambient pressure is not lower than 76 kPa (11.0 psi). • Volumetric efficiency: 20 – 80% • Intake air temperature is not lower than –10°C (14°F) • Pressure increase when evaporative emission purge solenoid and evaporative emission ventilation solenoid are closed is 50 mmAq or less. • Pressure variation range is 66 mmAq or less. • Monitoring time: 50 – 100 sec. **Judgement Criteria** • Internal pressure of the fuel tank has not changed more than 100 mmAq in 20 sec after the tank and vapor line were closed.	• Improper tightening of fuel tank filler tube cap • Fuel vent valve failed • Purge line or vapor line blocked • Broken seal in fuel tank, purge line or vapor line • Evaporative emission, purge solenoid failed • Evaporative emission ventilation solenoid failed • Fuel tank differential pressure sensor failed • Engine coolant temperature sesnor failed • Intake air temperature sensor failed • Power steering pressure switch failed • Incorrect fuel used

Check if the fuel tank filler tube cap is attached correctly. — NG → **Attach correctly.**

OK ↓

Check the fuel vent valve. — NG → **Repair or replace**

OK ↓

SCAN TOOL Actuator test
06 Evaporative emission purge solenoid (Refer to P.13A-244) — NG → Check the evaporative emission control system purge control valve circuit malfunction (Refer to P.13A-184, INSPECTION PROCEDURE FOR DIAGNOSTIC TROUBLE CODE P0443)

OK ↓

SCAN TOOL Actuator test
29 Evaporative emission ventilation solenoid (Refer to P.13A-244) — NG → Check the evaporative emission control system vent control malfunction (Refer to P.13A-185, INSPECTION PROCEDURE FOR DIAGNOSTIC TROUBLE CODE P0446)

OK ↓

SCAN TOOL Data list
73 Fuel tank differential pressure sensor (Refer to P.13A-238) — NG → Check the evaporative emission control system pressure sensor malfunction (Refer to P.13A-186, INSPECTION PROCEDURE FOR DIAGNOSTIC TROUBLE CODE P0450)

OK ↓

SCAN TOOL Data list
21 Engine coolant temperature sensor (Refer to P.13A-238) — NG → Check the engine coolant temperature sensor circuit malfunction (Refer to P.13A-165, INSPECTION PROCEDURE FOR DIAGNOSTIC TROUBLE CODE P0115)

OK ↓

SCAN TOOL Data list
13 Intake air temperature sensor (Refer to P.13A-238) — NG → Check the intake air temperature sensor circuit malfunction (Refer to P.13A-164, INSPECTION PROCEDURE FOR DIAGNOSTIC TROUBLE CODE P0110)

OK ↓

SCAN TOOL Data list
27 Power steering pressure switch (Refer to P.13A-238) — NG → Check the power steering pressure sensor circuit range/performance (Refer to P.13A-191, INSPECTION PROCEDURE FOR DIAGNOSTIC TROUBLE CODE P0551)

OK ↓

Check the following items
- Check for contamination (water, kerosene, etc.) in the fuel.
- *Check if any of the fuel tank, purge line or vapor line seals have failed.* [Refer to the Emission Diagnosis Manual (Pub. No. MSSP-240B-96).]

TSB Revision

Code No. P0443 Evaporative Emission Control System Purge Control Valve Circuit Malfunction	Probable cause
[Comment] Background • The engine control module checks whether current flows in the evaporative emission purge solenoid drive circuit when the solenoid is driven. Check Area • Battery voltage is not lower than 10 V. **Judgement Criteria** • Solenoid coil surge voltage (system voltage + 2 V) is not detected when the EVAP purge solenoid is turned on/off.	• Evaporative emission purge solenoid failed • Open or shorted evaporative emission purge solenoid circuit, or loose connector • Engine control module failed

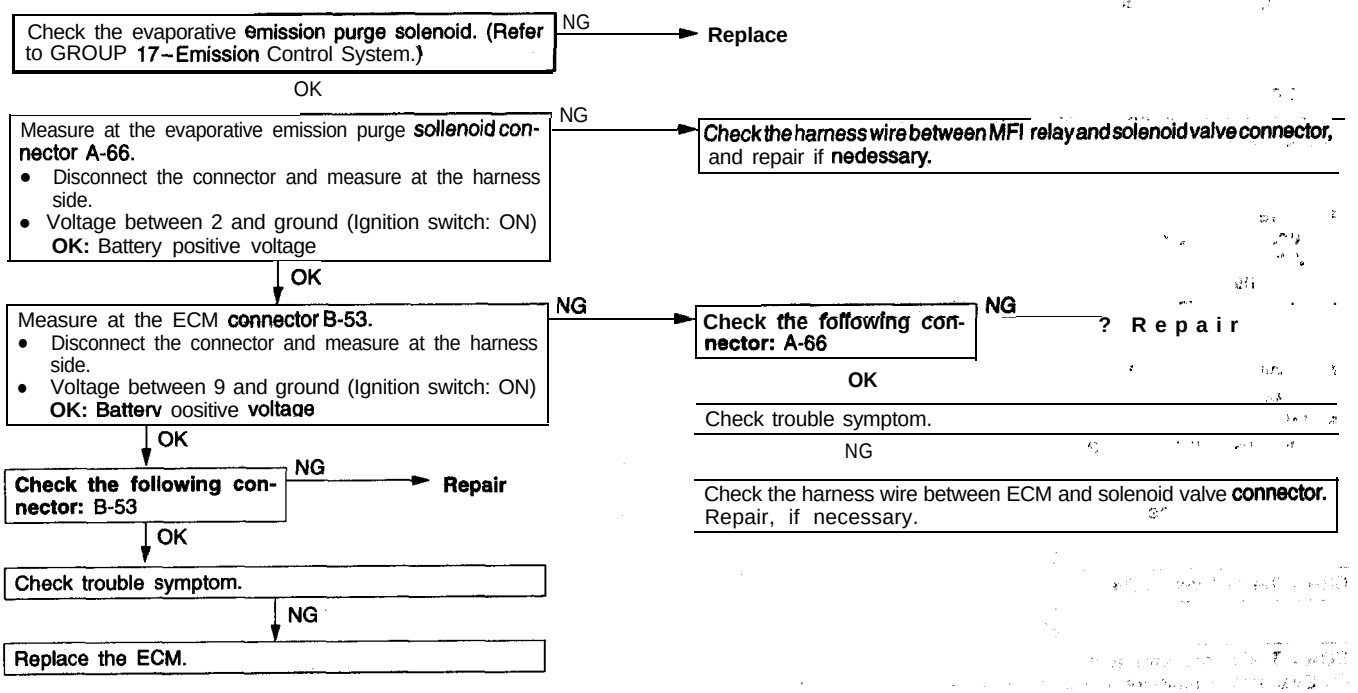

TSB Revision

Code No. P0446 Evaporative Emission Control System Vent Control Malfunction <2.4L Engine>	Probable cause
[Comment] Background • The engine control module checks current flows in the evaporative emission ventilation solenoid drive circuit when the solenoid is ON and OFF **Check Area** • **Battery voltage** is not lower than 10 V. **Judgement Criteria** • Solenoid coil surge voltage (system voltage +2V) is not detected when the Evaporative emission vent solenoid is turned on/off.	• Evaporative emission vent **solenoid failed.** • **Open or** shorted **evaporative emission vent** solenoid circuit, or loose connector. • Engine control module failed.

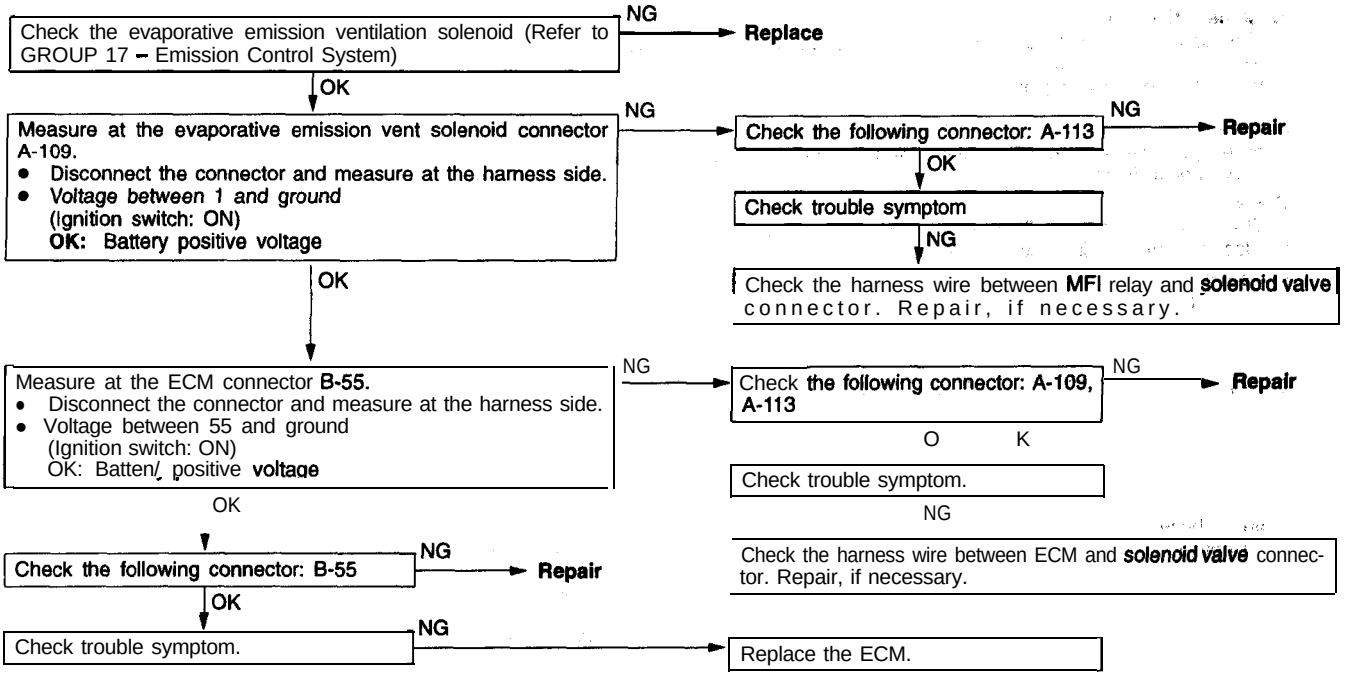

TSB Revision

Code No. P0450 Evaporative Emission Control System Pressure Sensor Malfunction <2.4L Engine>

[Comment]
Background
- The fuel tank differential pressure sensor outputs the voltage in proportion to the pressure in the fuel tank. (differential pressure against the barometric pressure)
- The engine control module checks whether the output voltage of the fuel tank differential pressure sensor is within the specified range

Check Area, Judgement Criteria

1. Check **Area**
- Engine speed is not lower than 1500 *r/min.*
- Volumetric efficiency is between 25 – 80%

Judgement Criteria
- The sensor output voltage is 4.5 V or higher for 10 seconds even though the intake air temperature is between 5" - 40°C (41° – 113°F) and the evaporative emission purge solenoid is being driven at 100% duty.

or
- The sensor output voltage is 0.5 V or lower for 10 seconds even though the intake air temperature is 5° (41 °F) or higher and the evaporative emission purge solenoid is not being driven.

2. Check Area
- The pressure fluctuates 20 times or more at 0.2 V or higher.
- Closed throttle position switch: ON

Judgement Criteria
- The pressure fluctuates 20 times or more (0.2 V or higher) for 15 consecutive idle operations.

Probable cause

- Fuel tank differential pressure sensor failed.
- Open or shorted fuel tank differential pressure sensor circuit, o r loose connector.
- Engine control module failed.

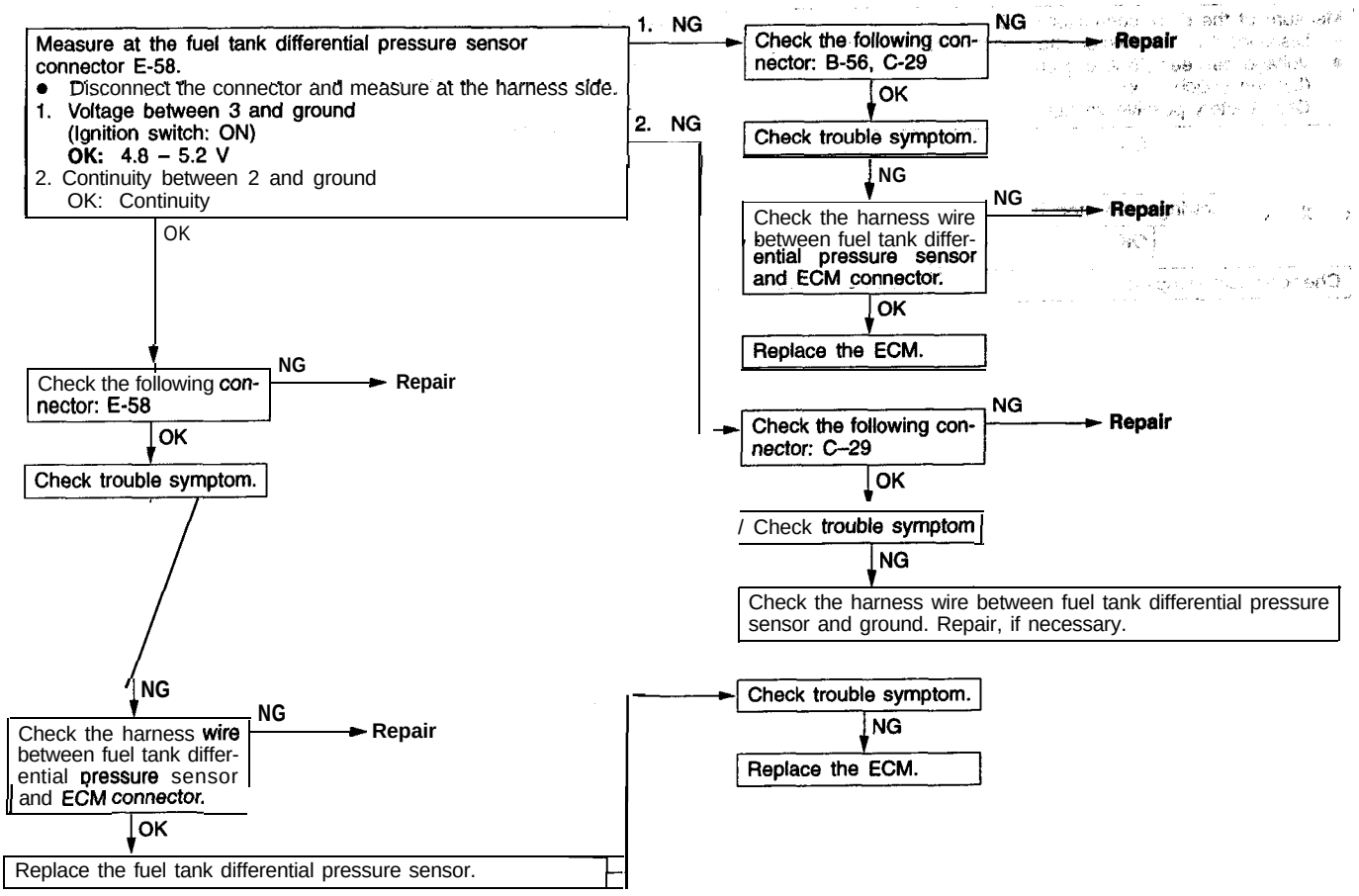

TSB Revision

Code No. P0500 Vehicle Speed Sensor Malfunction

[Comment]
Background
- The vehicle speed sensor outputs a pulse signal while the vehicle is driven.
- The engine control module checks whether the pulse signal is output.

Check Area
- Engine speed is not lower than 3000 r/min.
- Volumetric efficiency is 70% or higher.

Judgement Criteria
- Sensor output voltage has not changed (no pulse signal is input) for 4 sec.

Probable cause

- Vehicle speed sensor failed
- Open or shorted vehicle-speed sensor circuit, or loose connector
- Engine control module failed

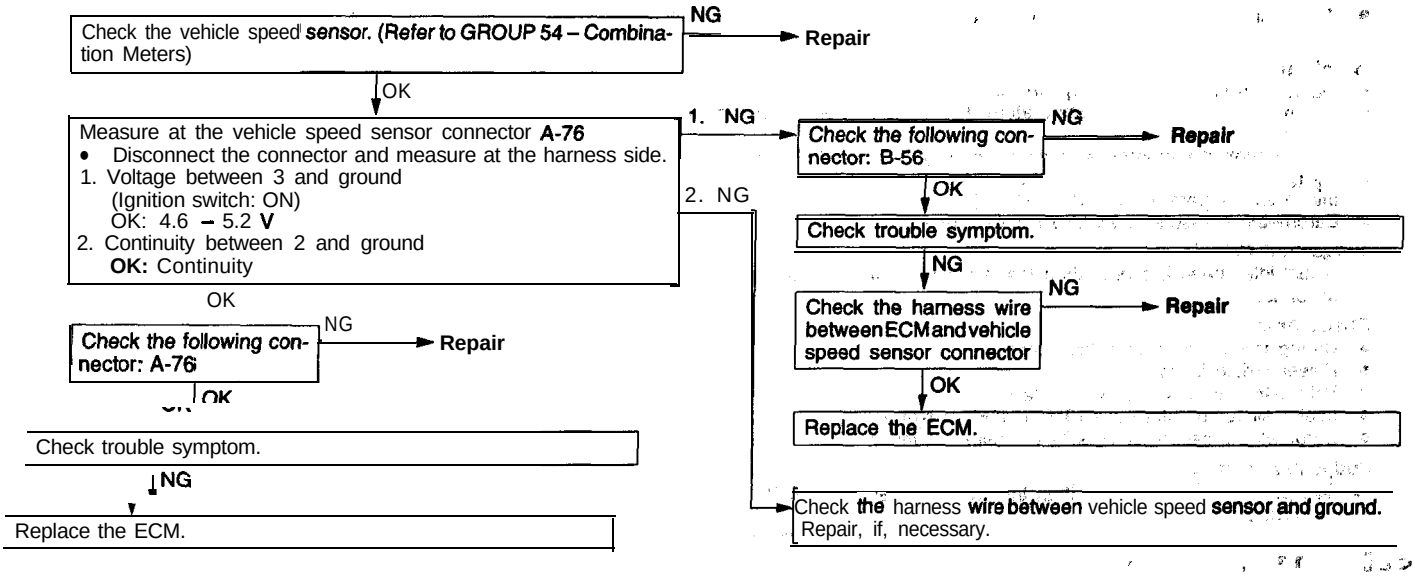

Code No. P0505 Idle Control System Malfunction	Probable cause
[Comment] Background • If there is a malfunction of the IAC system, the actual engine speed will not be identical to the target engine speed. • The engine control module checks the difference between the actual engine speed and the target engine speed. **Check Area, Judgement Criteria** **1. Check Area** • Under the closed loop idle speed control. **Judgement Criteria** • Actual idle speed has continued to be higher than the target idle speed by 300 r/min or more for 10 sec. **2. Check Area** • During idle speed closed loop control. • The maximum outside air temperature during the last operation was 45°C (113°F) or more. • Engine coolant temperature is approximately 80°C (176°F) or higher. • System voltage is 10 V or higher. • Intake air temperature is –10°C (14°F) or higher • Barometric pressure is 76 kPa (11 psi.) or higher. **Judgement Criteria** • Actual idle speed is higher than the target idle speed by 200 r/min or more for 10 seconds. **3 . Check Area** • During idle speed closed loop control. • Power switch is off. • Volumetric efficiency is 40% or less. • Intake air temperature is –10°C (14°F) or higher • Barometric pressure is 76 kPa (11 psi.) or higher. **Judgement Criteria** • Actual idle speed is higher than the target idle speed by 200 r/min or more for 10 seconds.	• Idle air control motor failed • Open or shorted idle-air control motor circuit, or loose connector • , Engine control module failed

<2.0L Engine (Turbo)>

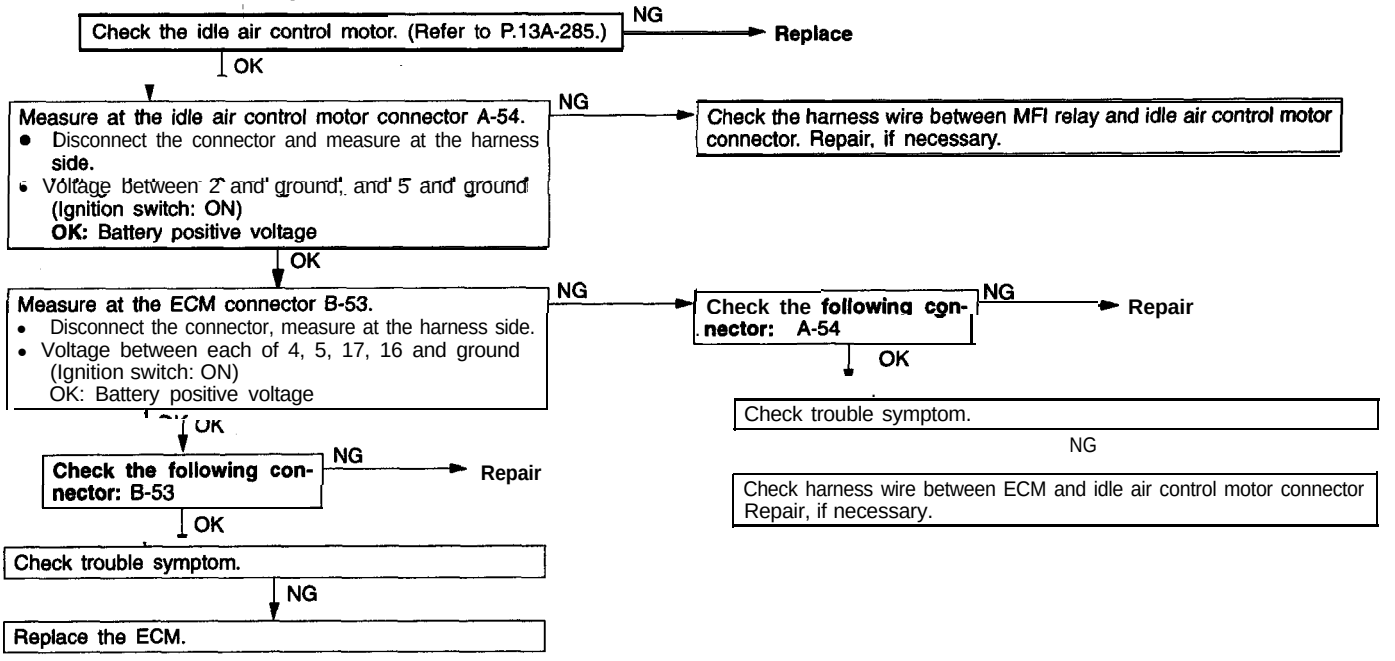

<2.4L Engine>

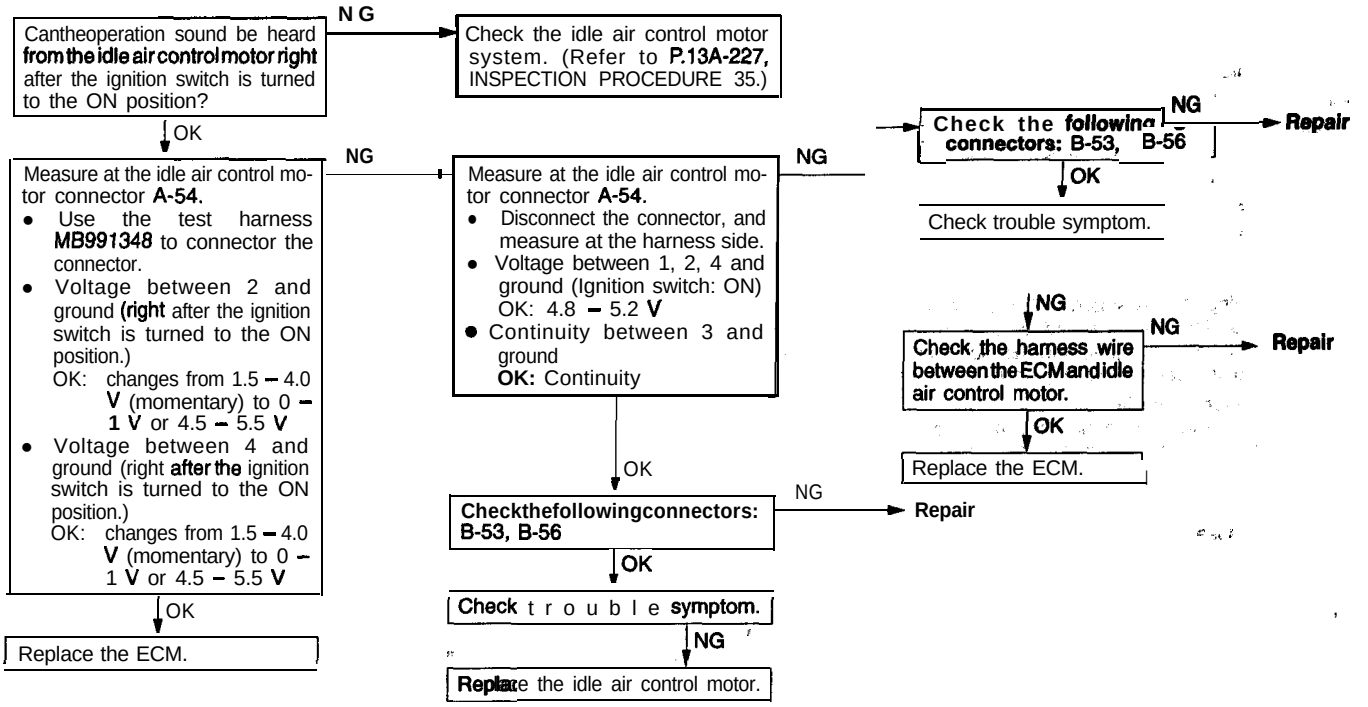
Cantheoperation sound be heard from the idle air control motor right after the ignition switch is turned to the ON position?
NG
Check the idle air control motor system. (Refer to P.13A-227, INSPECTION PROCEDURE 35.)
OK
Measure at the idle air control motor connector A-54.
• Use the test harness MB991348 to connector the connector.
• Voltage between 2 and ground (right after the ignition switch is turned to the ON position.)
OK: changes from 1.5 – 4.0 V (momentary) to 0 – 1 V or 4.5 – 5.5 V
• Voltage between 4 and ground (right after the ignition switch is turned to the ON position.)
OK: changes from 1.5 – 4.0 V (momentary) to 0 – 1 V or 4.5 – 5.5 V
NG
Measure at the idle air control motor connector A-54.
• Disconnect the connector, and measure at the harness side.
• Voltage between 1, 2, 4 and ground (Ignition switch: ON)
OK: 4.8 – 5.2 V
• Continuity between 3 and ground
OK: Continuity
NG
Check the following connectors: B-53, B-56
NG
Repair
OK
Check trouble symptom.
OK
Checkthefollowingconnectors: B-53, B-56
NG
Repair
OK
Check trouble symptom.
NG
Replace the idle air control motor.
OK
Replace the ECM.
NG
Check the harness wire between the ECM and idle air control motor.
NG
Repair
OK
Replace the ECM.

Code No. P0510 Closed Throttle Position Switch Malfunction	Probable cause
[Comment] Background • While the engine is idling without pressing the accelerator pedal, "ON" signal can be input from the closed throttle position switch top the engine control module. • The engine control module is used for checking the input signal during the engine idling. **Check Area, Judgement Criteria** **1. Check Area** • Throttle position sensor output voltage is 2.0 V or higher. **Judgement Criteria** • Closed throttle position switch is on. **2. Check Area** • Driving '1 and stopping '2 are repeated 15 times or more. '1 driving: Engine speed is 1,500 /min or higher, air flow sensor output frequency is 100 Hz or higher, and this condition continues for 2 seconds or more. • Engine speed is not higher than 800 r/min. **Judgement Criteria** • Closed throttle position switch has continued to be OFF.	• Closed throttle position switch failed. • Open or shorted closed throttle position switch circuit, or loose connector. • Engine control module failed.

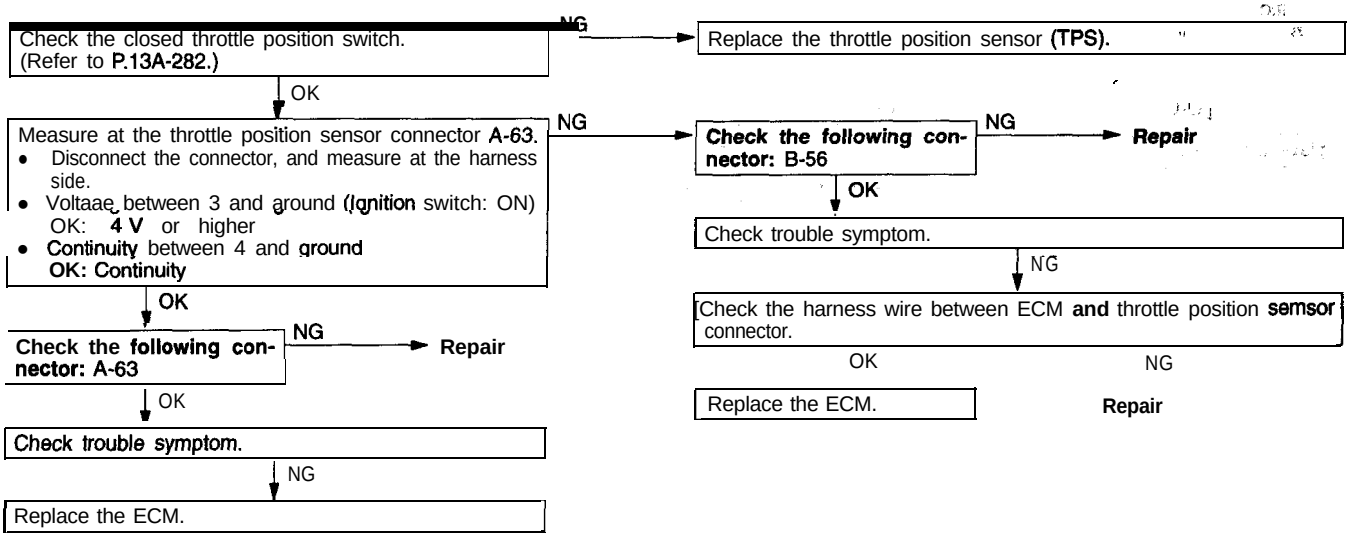

TSB Revision

Code No. P0551 Power Steering Pressure Sensor Circuit Range/Performance	Probable cause
[Comment] Background • When the steering wheel is kept in the straight-forward position during driving, the power steering pressure switch will be momentarily turned off. • The enginecontrol module checks whetherthe powersteering pressure switch momentarily turns off during driving. **Check Area** • Engine coolant temperature is 10°C (50°F) or higher. • Driving *1 and stopping '2 are repeated 10 times or more. "1: Engine speed is 2,500 /min or higher, volumetric efficiency is 55% or higher, and this condition continues for 2 seconds or more. • 2: Engine speed is 600 r/min or lower. **Judgement Criteria** • Power steering pressure switch stays on without changing.	• Power steering pressure switch failed. • Open or shorted power steering pressure switch circuit, or loose connector.' • Engine control module failed'

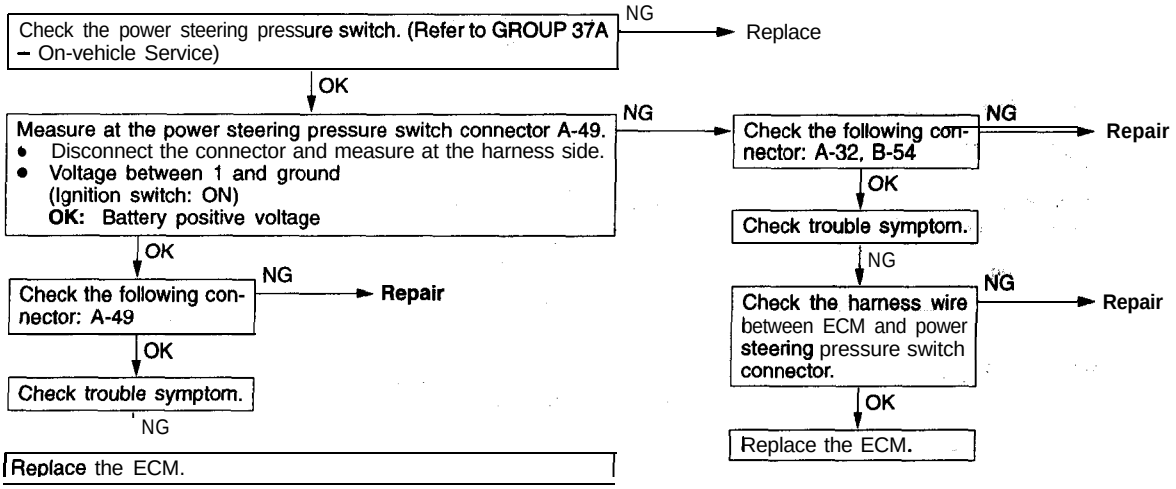

Code No. P0705 Transmission Range Sensor Circuit Malfunction (RPNDL Input)	Probable cause
[Comment] Background • When a malfunction of the park/neutral position switch is detected, the transaxle control module outputs a malfunction signal to the engine control module. **Check Area, Judgement Criteria** • Park/neutral position switch fail signal is input to the engine control module from the transaxle control module.	• Park/neutral position switch failed • Open or shorted park/neutral position switch circuit, or loose connector. • Engine control module failed.

Check the TCM. (Refer to GROUP 23A – Troubleshooting.)

Code No. P1103 Turbocharger Waste Gate Actuator Malfunction <2.0L Engine (Turbo)>	Probable cause
[Comment] Background • The engine control module checks that the engine is not overcharged by always monitoring intake air volume. • The engine control module protects the engine by shutting off fuel when an overcharged condition is detected. **Check Area** • Engine coolant temperature is higher than 80°C (176°F) **Judgement Criteria** • Volumetric efficiency has continued to be not lower than 200% for 1.5 sec.	• Turbocharger waste gate actuator failed. • Charging pressure control system failed. • Engine control module failed.

Check the turbocharger supercharging.
(Refer to GROUP 15 – On-vehicle Service.)

TSB Revision

Code No. P1104 Turbocharger Waste Gate Solenoid Malfunction <2.0L Engine (Turbo)>	Probable cause
[Comment] Background • The engine control module checks current flows in the turbocharger waste gate solenoid drive circuit when the solenoid is ON and OFF. Check Area • Battery voltage is not lower than 10 V. **Judgement Criteria** • Solenoid coil surge voltage (system voltage +2 V) is not detected when the turbocharger waste gate solenoid is turned on/off.	• Turbocharger waste gate solenoid failed. • Open or shorted turbocharger waste gate solenoid circuit, or loose connector. • Engine control module failed.

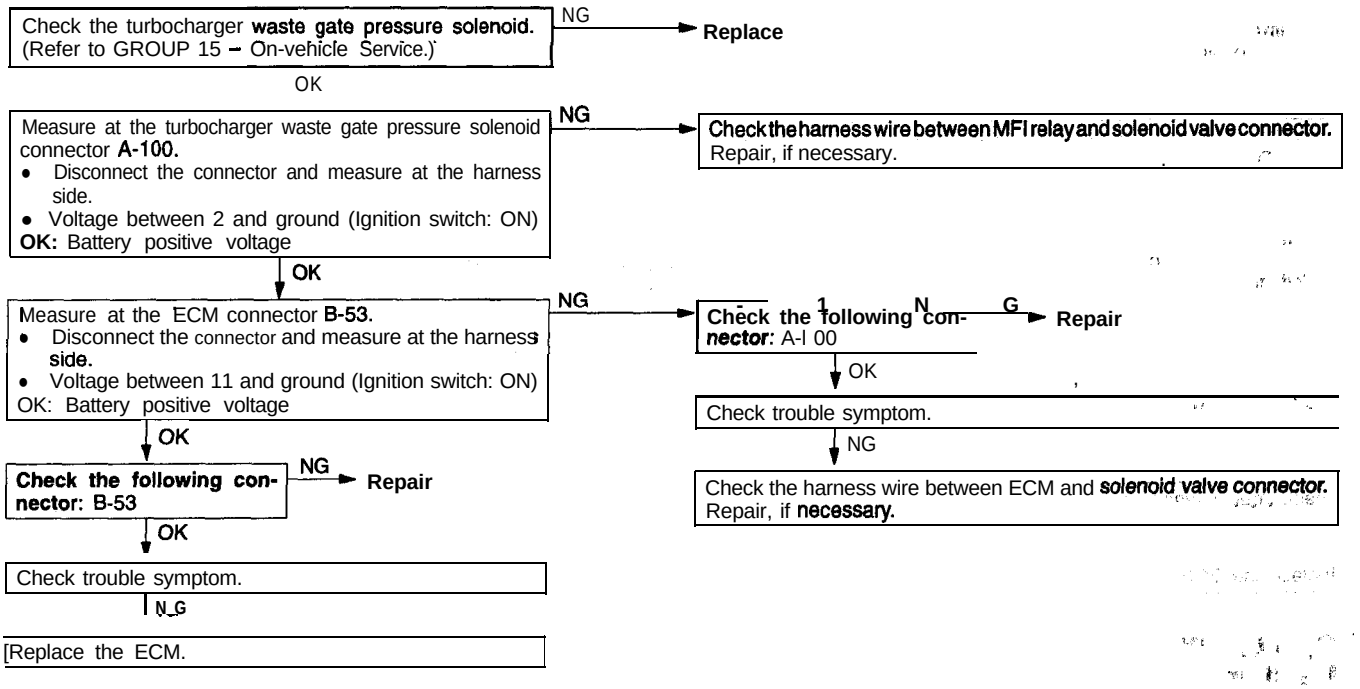

TSB Revision

Code No. P1105 Fuel Pressure Solenoid Malfunction <2.0L Engine (Turbo)>	Probable cause
[Comment] Background • The engine control module checks current flows in the fuel pressure solenoid drive circuit when the solenoid is on and off. Check Area • Battery voltage is not lower than 10 V. Judgement Criteria • Solenoid coil surge voltage (system voltage + 2 V) is not detected when the fuel pressure solenoid is turned on/off.	• Fuel pressure solenoid failed. • Open or shorted fuel pressure solenoid circuit, or loose connector • Engine control module failed.

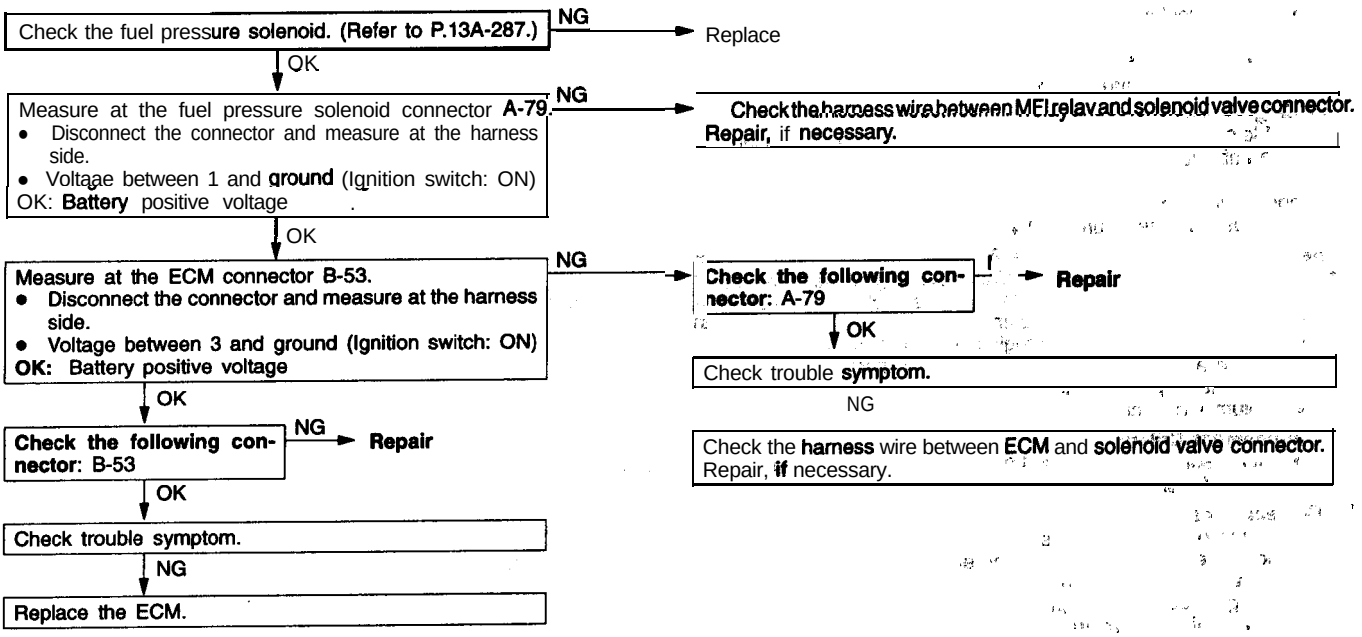

TSB Revision

Code No. P1400 Manifold Differential Pressure Sensor Circuit Malfunction	Probable cause
[Comment] Background • The manifold differential pressure sensor outputs a voltage which corresponds to the negative pressure in the intake manifold. • The engine control module checks whether the voltage output by manifold differential pressure sensor is within a specified range. **Check Area, Judgement Criteria** **1. Check Area** • 8 min or more have passed after the engine was started. [However, this is only when the engine coolant temperature is 0°C (32°F) or lower when the engine is started.] • Engine coolant temperature is not lower than 45°C (113°F). • Intake air temperature is not lower than 5°C (41°F). • Barometric pressure is 76 kPa (11 psi.) or higher. • Volumetric efficiency is 30% – 55%. **Judgement Criteria** • Sensor output voltage has continued to be not lower than 4.6 V [corresponding to an absolute pressure of 118 kPa (17 psi) or higher] for 4 sec. or • Sensor output voltage has continued to be not higher than 0.1 V [corresponding to an absolute pressure of 2.4 kPa (0.3 psi) or lower] for 4 sec. **2. Check Area** • 8 min or more have passed after the engine was Started. [However, this is only when the engine coolant temperature is 0°C (32°F) or lower when the engine is started.] • Engine coolant temperature is not lower than 45°C (113°F). • Intake air temperature is not lower than 5°C (41°F). • Barometric pressure is 76 kPa (11 psi.) or higher. • Volumetric efficiency is 30% or lower. **Judgement Criteria** • Sensor output voltage is 4.2 V or higher for 4 seconds [absolute pressure is 108 kPa (16 psi.) or more] **3. Check Area** • 8 min or more have passed after the engine was started. [However, this is only when the engine coolant temperature is 0°C (32°F) or lower when the engine is started.] • Engine coolant temperature is not lower than 45°C (113°F). • Intake air temperature is not lower than 5°C (41°F). • Barometric pressure is 76 kPa (11 psi.) or higher. • Volumetric efficiency is 70% or higher. **Judgement Criteria** • Sensor output voltage is 1.8 V or lower for 4 seconds [absolute pressure is 46 kPa (6.7 psi.) or less]	• Manifold differential pressure sensor failed • Open or shorted manifold differential pressure sensor circuit, or loose connector • Engine control module failed

TSB Revision.

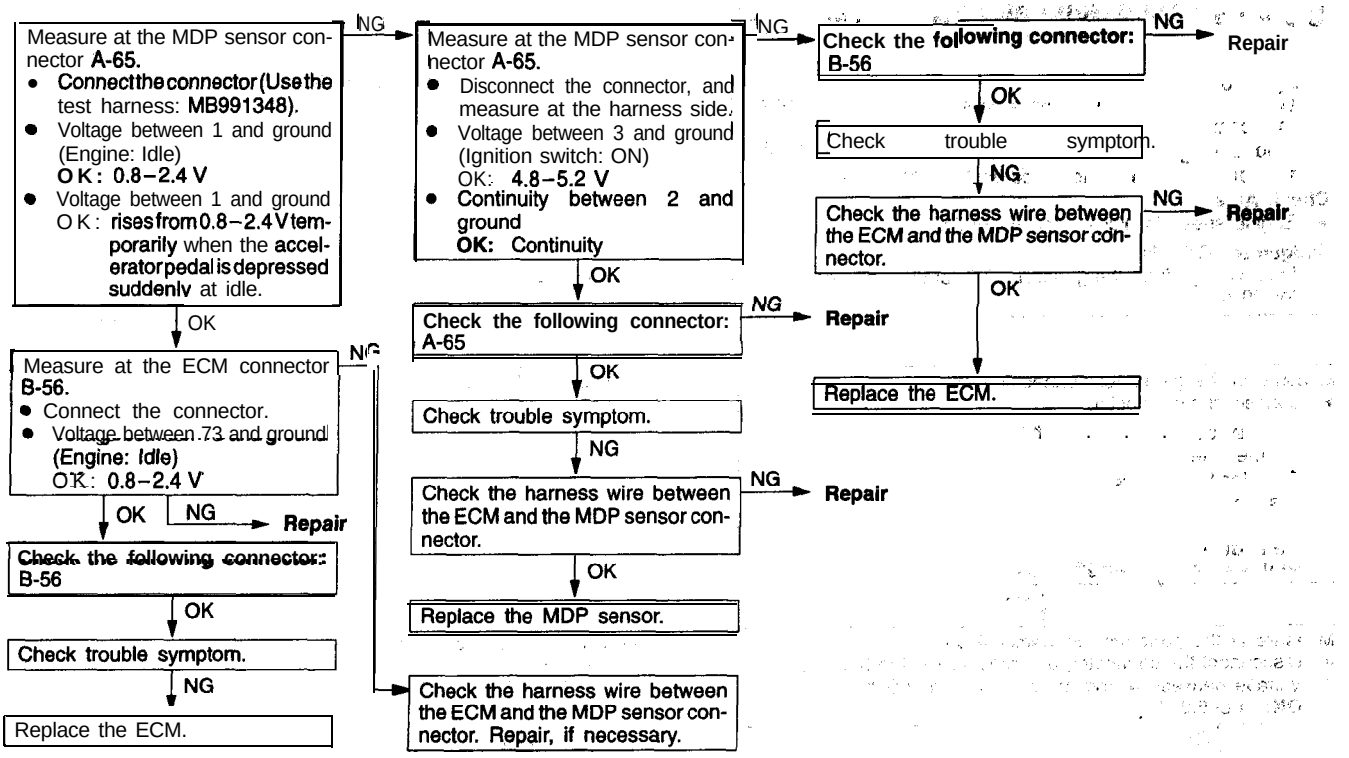
Measure at the MDP sensor connector A-65.
• Connect the connector (Use the test harness: MB991348).
• Voltage between 1 and ground (Engine: Idle)
OK: 0.8–2.4 V
• Voltage between 1 and ground
OK: rises from 0.8–2.4 V temporarily when the accelerator pedal is depressed suddenly at idle.
NG
OK
Measure at the ECM connector B-56.
• Connect the connector.
• Voltage between 73 and ground (Engine: Idle)
OK: 0.8–2.4 V
NG
OK
NG
Repair
Check the following connector: B-56
OK
Check trouble symptom.
NG
Replace the ECM.
Check the harness wire between the ECM and the MDP sensor connector. Repair, if necessary.
Measure at the MDP sensor connector A-65.
• Disconnect the connector, and measure at the harness side.
• Voltage between 3 and ground (Ignition switch: ON)
OK: 4.8–5.2 V
• Continuity between 2 and ground
OK: Continuity
NG
OK
Check the following connector: A-65
NG
Repair
OK
Check trouble symptom.
NG
Check the harness wire between the ECM and the MDP sensor connector.
NG
Repair
OK
Replace the MDP sensor.
Check the following connector: B-56
NG
Repair
OK
Check trouble symptom.
NG
Check the harness wire between the ECM and the MDP sensor connector.
NG
Repair
OK
Replace the ECM.

Code No. P1500 Generator FR Terminal Circuit Malfunction	Probable cause
[Comment] Background • When the generator field coil is controlled, the generator FR terminal inputs a signal to the engine control module. • The engine control module detects the generator output with the input signal, and controls the idle air control motor according to the generator output. Check Area • Engine speed is higher than 50 r/min. **Judgement Criteria** • Input voltage from the generator FR terminal has continued to be not lower than 4.5 V for 20 sec.	• Open circuit in generator FR terminal circuit • Engine control module failed

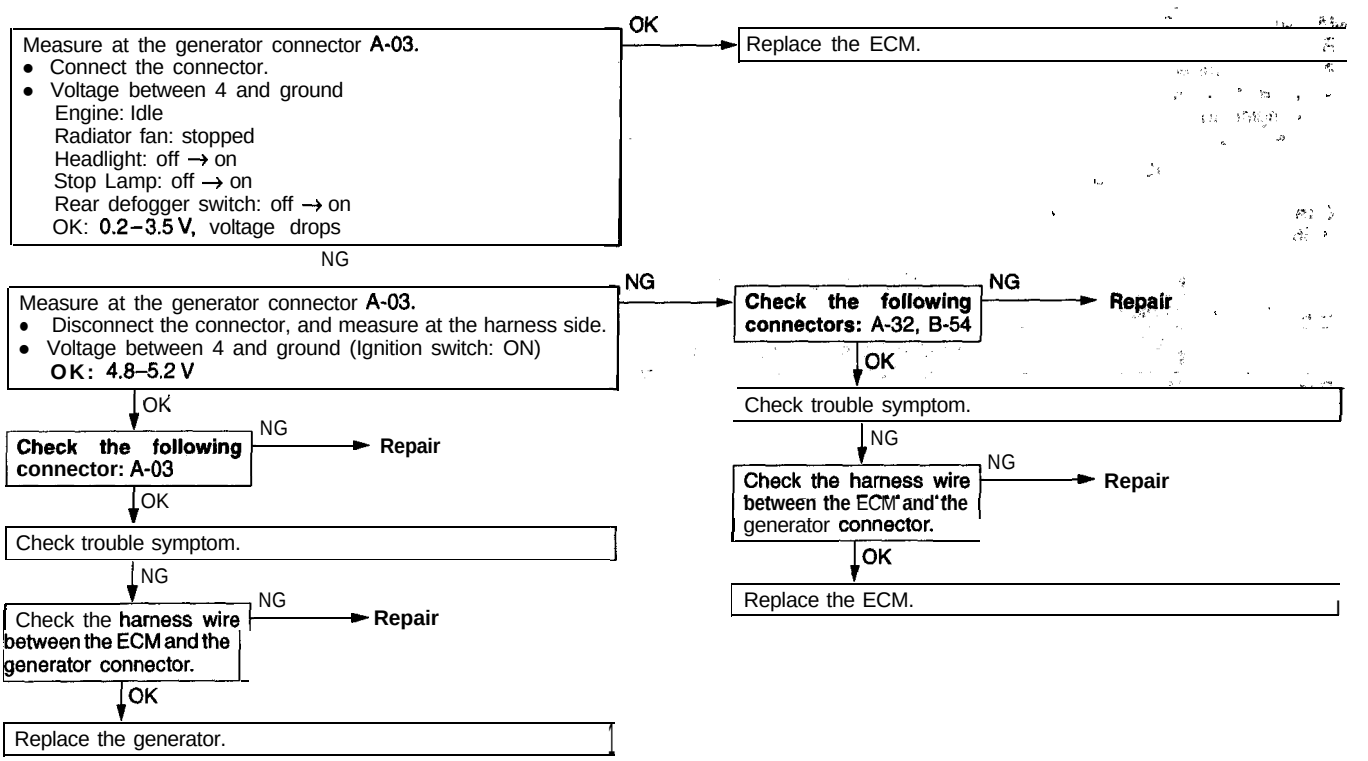

Code No. P1600 Serial Communication Link Malfunction (with 4A/T)	Probable cause
[Comment] Background • The engine control module receives message signals from the transaxle control module via the communication line. • The engine control module monitors abnormalities in the message signals resulting from a broken communication line or transaxle control module problems. **Check Area** • 2 seconds or more have passed since starting was completed. **Judgement Criteria** • Abnormality in communication line (TCM to ECM) with transaxle control module (TCM). • Problem with transaxle control module (TCM).	• Automatic transaxle control system failed • Open or short circuit in communication line between engine control module and transaxle control module, or poor connector contact • Transaxle control module failed. • Engine control module failed.

TSB Revision

Check the following connectors: B-54, B-61 → NG → Repair

↓ OK

Check trouble symptom.

NG

Check the harness wire between the ECM and the transaxle control module connector. → NG → Repair

OK

There is probably a problem in the automatic transaxle control system. Carry out automatic transaxle troubleshooting. (Refer to GROUP 23A – Troubleshooting)

OK

Replace the ECM.

Code No. P1715 PG Assy Malfunction	Probable cause
[Comment] Background • The transaxle control module monitors the pulse signals of the pulse generators "A" and "B". • When the pulse generators "A" and "B" faile, the transaxle control module inputs the pulse generator failure signal to the engine control module. **Check Area, Judgement Criteria** • Pulse generator fail signal is input to the engine control module from the transaxle control module.	• Pulse generator failed. • Engine control module failed.

Check the TCM. (Refer to GROUP 23A – Troubleshooting.)

Code No. P1750 Solenoid Assy Malfunction	Probable cause
[Comment] Background • The transaxle control module monitors the torque converter clutch solenoid, shift control solenoid and pressure control solenoid. • When some one of these solenoids has failed, the transaxle control module inputs these failure signals to the engine control module. **Check Area, Judgement Criteria** • Torque converter clutch solenoid, shift control solenoid or pressure control solenoid fail signal is input to the engine control module from the transaxle control module.	• Converter clutch solenoid failed. • Shift control solenoid failed. • Pressure control solenoid failed. • Engine control module failed.

Check the TCM. (Refer to GROUP 23A – Troubleshooting.)

Code No. P1791 Engine Coolant Temperature Level Input Circuit (to TCM) Malfunction	Probable cause
[Comment] Background • The transaxle control module uses the engine coolant temperature which is input from the engine control module to carry out shift control. • If no engine coolant temperature signal is input from the engine control module, the transaxle control module sends a trouble code to the engine control module. **Check Area, Judgement Criteria** • Transaxle control module (TCM) communication line trouble signal (engine coolant temperature signal is not being input from engine control module) is input to the engine control module (ECM).	• Open or short circuit in communication line between engine control module and transaxle control module, or poor connector contact • Transaxle control module failed. • Engine control module failed.

TSB Revision

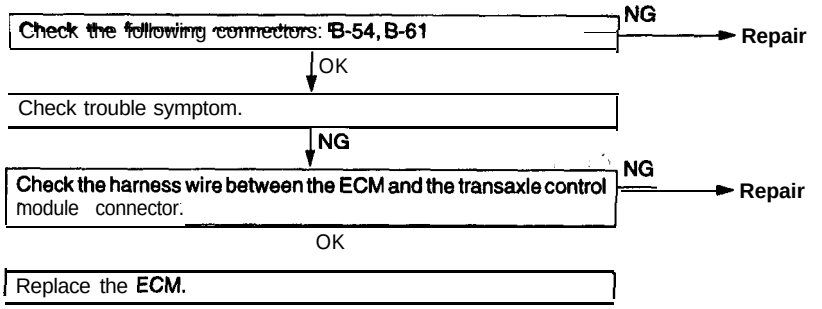

TSB Revision

INSPECTION CHART FOR TROUBLE SYMPTOMS

13100880262

Trouble symptom		Inspection procedure No.
Communication with scan tool is impossible.	Communication with all systems is not possible.	1
	Communication with ECM only is not possible.	2
Check engine/malfunction indicator lamp and related parts	The check engine/malfunction indicator lamp does not illuminate right after the ignition switch is turned to the ON position.	3
	The check engine/malfunction indicator lamp remains illuminated and never goes out.	4
Starting	Cranks, won't start	5
	Fires up and dies	6
	Hard starting	7
Idling stability (Improper idling)	Unstable idle. (Rough idle, hunting)	8
Idling stability (Improper idling)	Idle speed is high. (Improper idle speed)	9
	Idle speed is low. (Improper idle speed)	10
Idling stability (Engine stalls)	When the engine is cold, it stalls at idle (Die out)	11
	When the engine becomes hot, it stalls at idle. (Die out)	12
	The engine stalls when accelerating. (Pass out)	13
	The engine stalls when decelerating.	14
Driving	Hesitation, sag or stumble	15
	Acceleration shock	16
	Deceleration shock	17
	Poor acceleration	18
	Surge	19
	Knocking	20
Dieseling		21
Too high CO and HC concentration when idling		22
Generator output voltage is low (approx. 12.3V)		23
IM240 test failed	Transient mass emission tailpipe test failed	24
	Purge flow test for evaporative canister failed	25
	Pressure test for evaporative system failed	26

PROBLEM SYMPTOMS TABLE (FOR YOUR INFORMATION)

Items		Symptom
Starting	Won't start	The starter is used to crank the engine, but there is no combustion within the cylinders, and the engine won't start.
	Fires up and dies	There is combustion within the cylinders, but then the engine soon stalls.
	Hard starting	Engine starts after cranking a while.
Idling stability	Hunting	Engine speed doesn't remain constant; changes at idle.
	Rough idle	Usually, a judgement can be based upon the movement of the tachometer pointer, and the vibration transmitted to the steering wheel, shift lever, body, etc. This is called rough idle.
	Incorrect idle speed	The engine doesn't idle at the usual correct speed.
	Engine stall (Die out)	The engine stalls when the foot is taken from the accelerator pedal, regardless of whether the vehicle is moving or not.
	Engine stall (Pass out)	The engine stalls when the accelerator pedal is depressed or while it is being used.
Driving	Hesitation Sag	"Hesitation" is the delay in response of the vehicle speed (engine speed) that occurs when the accelerator is depressed in order to, accelerate from the speed at which the vehicle is now traveling, or a temporary drop in vehicle speed (engine speed) during such acceleration. Serious hesitation is called "sag".(Refer to Fig.1)
	Poor acceleration	Poor acceleration is inability to obtain an acceleration corresponding to the degree of throttle opening, even though acceleration is smooth, or the inability to reach maximum speed.
	Stumble	Engine speed increase is delayed when the accelerator pedal is initially depressed for acceleration.(Refer to Fig.2)
	Shock	The feeling of a comparatively large impact or vibration when the engine is accelerated or decelerated.
	Surge	This is slight acceleration and deceleration feel usually at steady, light throttle cruise. Most notable under light loads.
	Knocking	A sharp sound like a hammer striking the cylinder walls during driving and which adversely affects driving.
Stopping	Run on ("Dieseling")	The condition in which the engine continues to run after the ignition switch is turned to OFF. Also called "Dieseling".

Fig.1

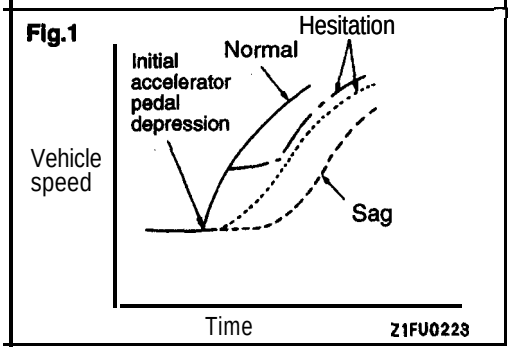

Fig.2

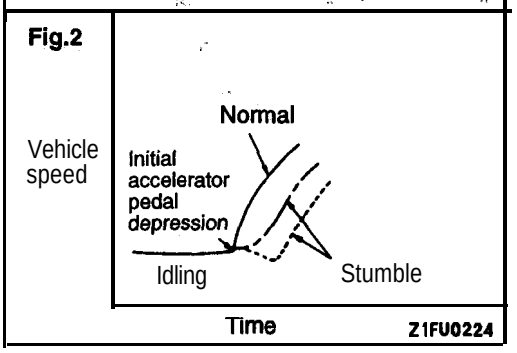

INSPECTION PROCEDURE FOR TROUBLE SYMPTOMS

INSPECTION PROCEDURE 1

Communication with scan tool is not possible. (Communication with all systems is not possible.)	Probable cause
[Comment] The cause is probably a defect in the power supply system [including ground) for the on-board diagnostic test mode line.	• Malfunction of the connector • Malfunction of the harness wire

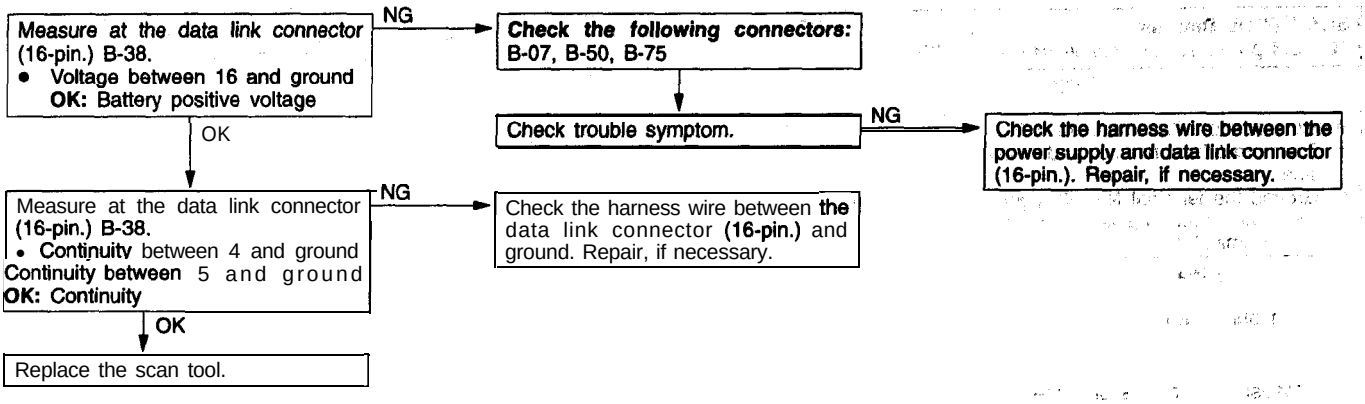

INSPECTION PROCEDURE 2

Scan tool communication with ECM is not possible.	Probable cause
[Comment] One of the following causes may be suspected. • No power supply to ECM • Defective ground circuit of ECM • Defective ECM • Improper communication line between ECM and scan tool	• Malfunction of ECM power supply circuit • Malfunction of the ECM • Open circuit between ECM and data link connector

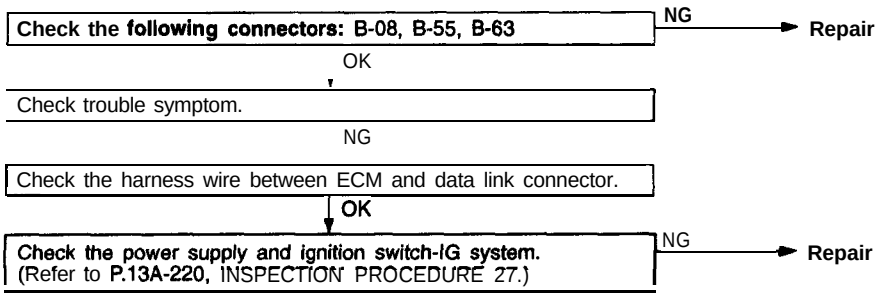

TSB Revision

INSPECTION PROCEDURE 3

The check engine/malfunction indicator lamp does not illuminate right after the ignition switch is turned to the, ON position.	Probable cause
[Comment] The ECM causes the check engine/malfunction indicator lamp to illuminate for five seconds immediately after the ignition switch is turned to ON. If the check engine/malfunction indicator lamp does not illuminate immediately after the ignition switch is turned to ON, one of the malfunctions listed at right has probably occurred.	• Burnt-out bulb • Defective check engine/malfunction indicator lamp circuit • Malfunction of the ECM

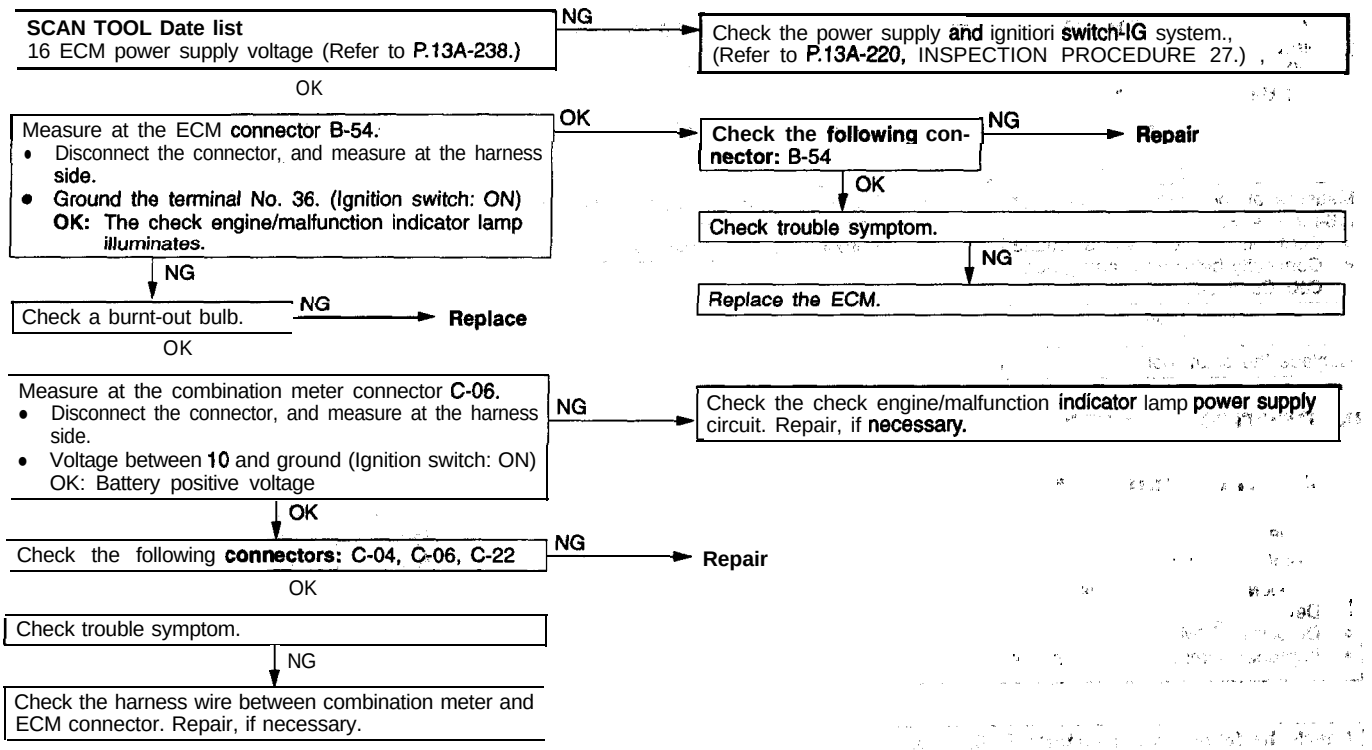

INSPECTION PROCEDURE 4

The check engine/malfunction indicator lamp remains illuminated and never goes out.	Probable cause
[Comment] In cases such as the above, the cause is probably that the ECM is detecting a problem in a sensor or actuator, or that one of the malfunctions listed at right has occurred.	• Short-circuit between the check engine/malfunction indicator lamp and ECM • Malfunction of the ECM

SCAN TOOL DTC
Are diagnostic trouble codes output?
- YES → Refer to P.13A-159, INSPECTION CHART FOR DIAGNOSTIC TROUBLE CODES.
- NO ↓

Measure at the combination meter connector C-04.
- Disconnect the connector, and measure at the harness side.
- Disconnect the ECM connector.
- Continuity between 51 and ground
  OK: No continuity

- NG → Check the harness wire between-combination meter and ECM connector. Repair, if necessary.
- OK ↓

Replace the ECM.

INSPECTION PROCEDURE 5

Cranks, won't start	Probable cause
[Comment] In cases such as the above, the cause is probably that the spark plugs are fouled defective, or that the supply of fuel to the combustion chamber is defective. In addition, foreign materials (water, kerosene, etc.) may be mixed with the fuel.	• Malfunction of the ignition system • Malfunction of the fuel pump system • Malfunction of the injector system • Malfunction of the ECM • Foreign materials in fuel

Check battery positive voltage when cranking.
OK: 8 V or hiaher
- NG → Check the battery. (Refer to GROUP 54 -Battery.)
- OK ↓

Scan tool: Inspection when no initial combustion occurs. (Refer to P.13A-227, INSPECTION PROCEDURE 36.)
- OK ↓

Can any sound be heard from the injectors when cranking? (Refer to P.13A-284.)
- No → Check the injector circuit malfunction (Refer to P.13A-173, INSPECTION PROCEDURE FOR DIAGNOSTIC TROUBLE CODES P0201, P0202, P0203, P0204.)
- Yes ↓

Ignition system: Inspection when no initial combustion occurs. (Refer to P.13A-228, INSPECTION PROCEDURE 37.)
- OK ↓

Check the following items.
- Check the ignition coil, spark plugs, spark plug cables.
- Check if the injectors are clogged.
- Check if foreign materials (water, alcohol, etc.) got into fuel.
- Check the compression pressure.

INSPECTION PROCEDURE 6

Fires up and dies.	Probable cause
[Comment] In such cases as the above, the cause is probably that the spark plugs are generating sparks but the sparks are weak, or the initial mixture for starting is not appropriate.	• Malfunction of the ignition system • Malfunction of the injector system • Foreign materials in fuel • Poor compression • Malfunction of the ECM

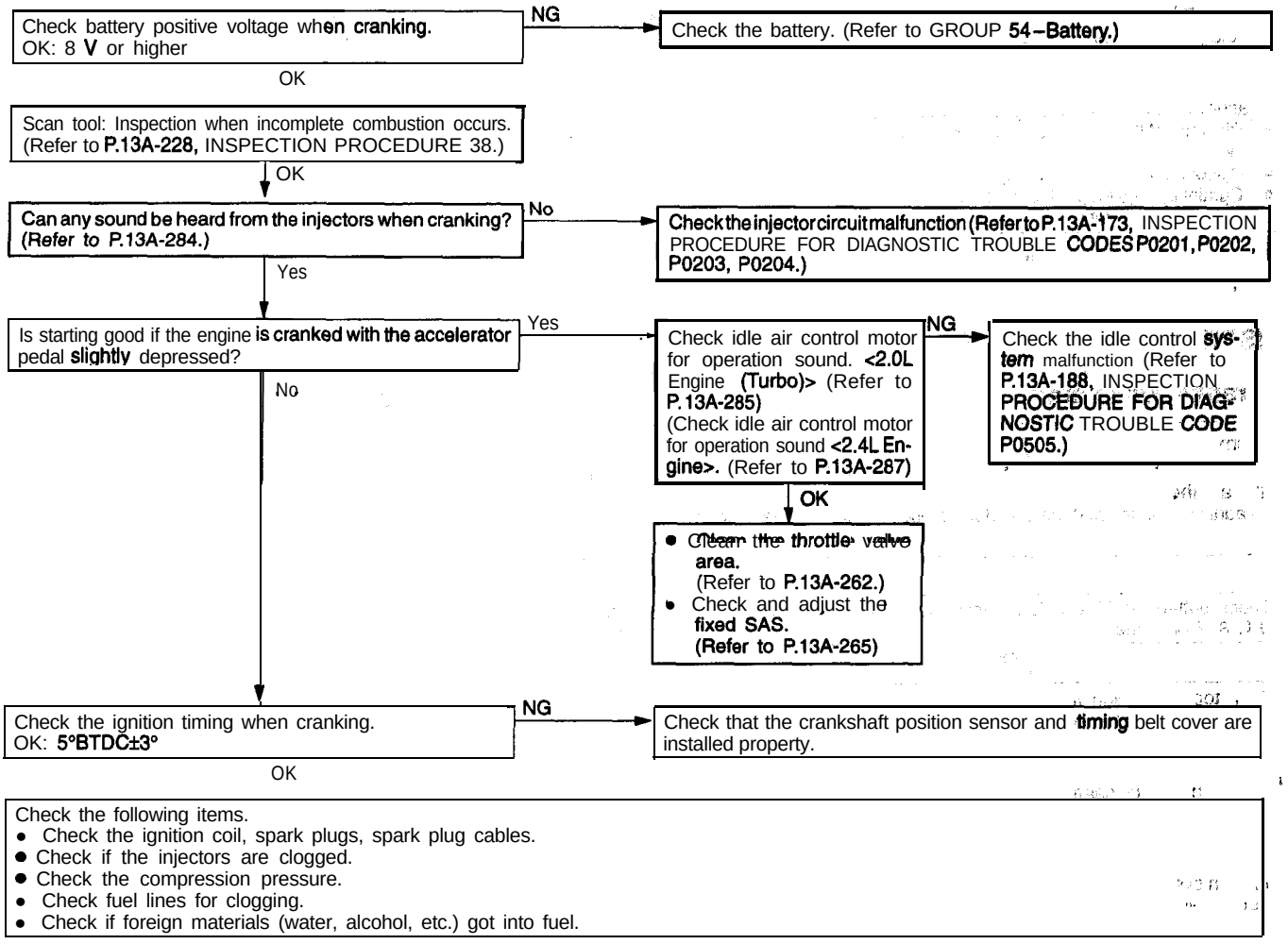

Check the following items.
- Check the ignition coil, spark plugs, spark plug cables.
- Check if the injectors are clogged.
- Check the compression pressure.
- Check fuel lines for clogging.
- Check if foreign materials (water, alcohol, etc.) got into fuel.

TSB Revision

INSPECTION PROCEDURE 7

Hard starting	Probable cause
[Comment] In cases such as the above, the cause is probably that the spark is weak and ignition is difficult, the initial mixture for starting is not appropriate, or sufficient compression pressure is not being obtained.	• Malfunction of the ignition system • Malfunction of the injector system • Inappropriate gasoline use • Poor compression

Check battery positive voltage when cranking
OK: 8 V or higher

NG → Check the battery. (Refer to GROUP 54 -Battery)

OK ↓

Scan tool: Inspection when incomplete combustion occurs. (Refer to P.13A-228, INSPECTION PROCEDURE 38.)

OK ↓

Can any sound be heard from the injectors when cranking? (Refer to P. 13A-284.)

No → Check the injector circuit malfunction (Refer to P.13A-173, INSPECTION PROCEDURE FOR DIAGNOSTIC TROUBLE CODES P0201, P0202, P0203, P0204.)

Yes ↓

Check the ignition timing when cranking.
OK: 5°BTDC±3°

NG → Check that the crankshaft position sensor and timing belt cover are installed properly.

OK ↓

Check the following items.
- Check the ignition coil, spark plugs, spark plug cables.
- Check if the injectors are clogged.
- Check the compression pressure.
- Check if foreign materials (water, alcohol, etc.) got into fuel.

INSPECTION PROCEDURE 8

Unstable idle (Rough idle, hunting)	Probable cause
[Comment] In cases such as the above, the cause is probably that the ignition system, air/fuel mixture, idle air control motor or compression pressure is defective. Because the range of possible causes is broad, inspection is narrowed down to simple items.	• Malfunction of the ignition system • Malfunction of air-fuel ratio control system • Malfunction of the IAC system • Malfunction of the evaporative emission purge solenoid system- • Poor compression • Drawing air into exhaust system • Malfunction of the EGR solenoid system

Were the battery terminals disconnected recently ?
- YES → After warming-up, let the engine run at idle for 10 minutes.'
- NO ↓

SCAN TOOL DTC
Are diagnostic trouble codes output ?
- YES → Refer to P.13A-159, INSPECTION CHART FOR DIAGNOSTIC TROUBLE CODES.
- NO ↓

Does idle speed fluctuate excessively ?
- YES → Inspection when hunting occurs. (Refer to P.13A-228, INSPECTION PROCEDURE 39.)
- NO ↓

Check the idle air control motor for operation sound <2.0L Engine (Turbo)>. (Refer to P.13A-285.) Check the idle air control motor for operation sound <2.4L engine>. (Refer to P.13A-287)
- NG → Check the idle control system malfunction (Refer to P.13A-188, INSPECTION PROCEDURE FOR DIAGNOSTIC TROUBLE CODE P0505.)
- ↓

Checktheinjectorforoperation sound. (Refer to P.13A-284.)
- NG → Check the injector circuit malfunction (Refer to P.13A-173, INSPECTION PROCEDURE FOR DIAGNOSTIC TROUBLE-CODES P0201, P0202, P0203, P0204.)
- ↓

Scan tool: Inspection when idle speed is unstable. (Refer to P.13A-229, INSPECTION PROCEDURE 40.)
- OK ↓

Check the ignition timing. <2.0L Engine (Turbo)> (Refer to GROUP 11A – On-vehicle Service.) Check the ignition timing. <2.4L Engine> (Refer to GROUP 11E – On-vehicle Service.)
- NG → Check that the crankshaft position sensor and timing belt cover are installed properly.
- OK ↓

SCAN TOOL Actuator test
10 EGR solenoid (Refer to P.13A-244.)
- NG → Check the exhaust gas recirculation solenoid malfunction. (Refer to P.13A-180, INSPECTION PROCEDURE FOR DIAGNOSTIC TROUBLE CODE P0403.)
- OK ↓

Check the following items.
- Check the ignition coil, spark plugs, spark plug cables.
- Check the purge control System.
- Check the compression pressure.
- Check if foreign materials (water, alcohol, etc.) got into fuel.
- Check the EGR system.

INSPECTION PROCEDURE 9

Idle speed is high. (Improper idle speed)	Probable cause
[Comment] In such cases as the above, the cause is probably that the intake air volume during idle is too great.	• Malfunction of the IAC motor system • Malfunction of the throttle body

SCAN TOOL DTC
Are diagnostic trouble codes output ?

- YES → Refer to P.13A-159, INSPECTION CHART FOR DIAGNOSTIC TROUBLE CODES.
- NO ↓

Check the idle air control motor for operation sound <2.0L Engine (Turbo)>. (Refer to P.13A-285.)
Check the idle air control motor for operation sound <2.4L Engine>. (Refer to P.13A-287)

- NG → Check the idle control system malfunction (Refer to P.13A-188, INSPECTION PROCEDURE FOR DIAGNOSTIC TROUBLE CODE P0505.)
- OK ↓

SCAN TOOL Data list
26 Closed throttle position switch (Refer to P.13A-238.)

- NG → Check the closed throttle position switch system. (Refer to P.13A-190, INSPECTION PROCEDURE FOR DIAGNOSTIC TROUBLE CODE P0510.)
- OK ↓

SCAN TOOL Data list
21 Engine coolant temperature sensor (Refer to P.13A-238.)

- NG → Check the engine coolant' temperature circuit malfunction. (Refer to P.13A-165, INSPECTION PROCEDURE FOR DIAGNOSTIC TROUBLE CODES P0115.)
- OK ↓

SCAN TOOL Data list
28 A/C switch (Refer to P.13A-238.)

- NG → Check the A/C switch and A/C compressor clutch relay system. (Refer to P.13A-224, INSPECTION PROCEDURE 32.)
- OK ↓

Adjust the basic idle speed. (Refer to P.13A-266.)

↓

Check trouble symptom.

N G

Clean the throttle valve area. (Refer to P.13A-262.)

↓

Check and adjust the fixed SAS. (Refer to P.13A-265.)

INSPECTION PROCEDURE 10

Idle speed is low. (Improper idle speed)	"Probable cause
[Commentj In cases such as the above, the cause is probably that the intake air volume during idling is too small.	• Malfunction of the IAC system • Malfunction of the throttle body

SCAN TOOL DTC
Are diagnostic trouble codes output ?

YES → Refer to P.13A-159, INSPECTION CHART FOR DIAGNOSTIC TROUBLE CODES.

NO ↓

Check the idle air control motor for operation sound <2.0L Engine (Turbo)>. (Refer to P.13A-285.)
Check the idle air control motor for operation sound <2.4L Engine>. (Refer to P.13A-287)

NG → Check the idle control system malfunction (Refer to P.13A-188, INSPECTION PROCEDURE FOR DIAGNOSTIC TROUBLE CODE P0505.)

OK ↓

SCAN TOOL Data list
26 Closed throttle position switch (Refer to P.13A-238.)

NG → Check the closed throttle position switch system. (Refer to P.13A-190, INSPECTION PROCEDURE FOR DIAGNOSTIC TROUBLE CODE P0510.)

OK ↓

SCAN TOOL Data list
21 Engine coolant temperature sensor (Refer to P.13A-238.)

NG → Check the engine coolant temperature circuit malfunction. (Refer to P.13A-165, INSPECTION PROCEDURE FOR DIAGNOSTIC TROUBLE CODES P0115.)

OK ↓

SCAN TOOL Data list
29 Park/neutral position switch (Refer to P.13A-238.)

NG → Check the ignition switch-ST and park/neutral position switch system. (Refer to P.13A-223, INSPECTION PROCEDURE 31.)

OK ↓

Adjust the basic idle speed. (Refer to P.13A-266.)

↓

Check trouble symptom.

NG ↓

Clean the throttle valve area. (Refer to P.13A-262.)

↓

Check and adjust the fixed SAS. (Refer to P.13A-265.)

INSPECTION PROCEDURE 11

When the engine is cold, it stalls at idle. (Die out)	Probable cause
[Comment] In such cases as the above, the cause is probably that the air/fuel mixture is inappropriate when the engine is cold, or that the intake air volume is insufficient.	• Malfunction of the IAC system • Malfunction of the throttle body • Malfunction of the injector system • Malfunction of the ignition system

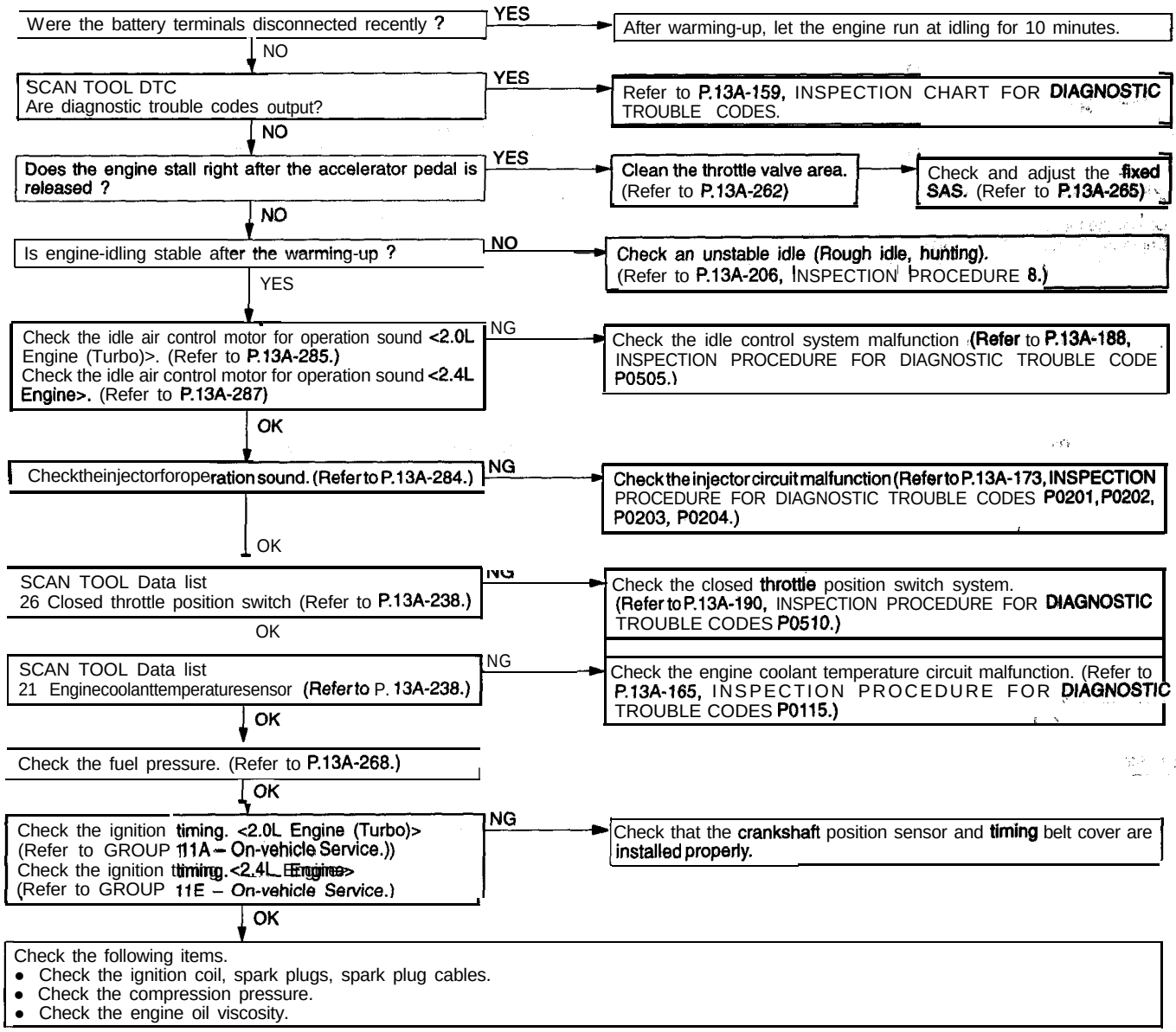

INSPECTION PROCEDURE 12

When the engine is hot, it stalls at idle. (Die out)	Probable cause
[Comment] In cases such as the above, the cause is probably that ignition system, air/fuel mixture, idle air control motor or compression pressure is defective. In addition, if the engine suddenly stalls, the cause may also be a defective connector contact.	• Malfunction of the ignition system • Malfunction of air-fuel ratio control system • Malfunction of the IAC system • Drawing air into intake system • Improper connector contact

Were the battery terminals disconnected recently ?
- YES → After warming-up, let the engine run at idling for 10 minutes.
- NO ↓

SCAN TOOL DTC
Are diagnostic trouble codes output?
- YES → Refer to P.13A-159, INSPECTION CHART FOR DIAGNOSTIC TROUBLE CODES.
- NO ↓

Check the idle air control motor for operation sound <2.0L Engine (Turbo)>. (Refer to P.13A-285.)
Check the idle air control motor for operation sound <2.4L Engine>. (Refer to P.13A-287)
- NG → Check the idle control system malfunction (Refer to P.13A-188, INSPECTION PROCEDURE FOR DIAGNOSTIC TROUBLE CODE P0505.)
- OK ↓

Checktheinjectorforoperati ion sound. (Refer to P.13A-284.)
- NG → Check the injector circuit malfunction (Refer to P.13A-173, INSPECTION PROCEDURE FOR DIAGNOSTIC TROUBLE CODES P0201, P0202, P0203, P0204.)
- OK ↓

Does the engine stall right after the accelerator pedal is released ?
- YES → Clean the throttle valve area. (Refer to P.13A-262) → Check and adjust the fixed SAS. (Refer to P.13A-265)
- NO ↓

Does the engine stall easily again ?
- NO → While carrying out an intermittent malfunction simulation test (Refer to GROUP 00 – How to Cope with Intermittent Malfunctions, check for sudden changes in the signals shown below.
  - Crankshaft position sensor signal
  - Volumeairflowsensorsignal
  - Injector drive signal
  - Primary and secondary ignition signal
  - Fuel pump drive signal
  - ECM power supply voltage
- YES ↓

Scan tool: Inspection when engine stalls when the engine is warm and idling (Refer to P.13A-230, INSPECTION PROCEDURE 41.)
- OK ↓

Check the ignition timing. <2.0L Engine (Turbo)>
(Refer to GROUP 11A – On-vehicle Service.)
Check the ignition timing. <2.4L Engine>
(Refer to GROUP 11E – On-vehicle Service.)
- NG → Check that the crankshaft position sensor and timing belt cover are installed properly.
- OK ↓

Check the following items.
- Check the ignition coil, spark plugs, spark plug cables.
- Check if the injectors are clogged.
- Check the compression pressure.
- Check if foreign materials (water, alcohol, etc.) got into fuel.

INSPECTION PROCEDURE 13

The engine stalls when accelerating. (Pass out)	Probable cause
[Comment] In cases such as the above, the cause is probably misfiring due to a weak spark, or an inappropriate air/fuel mixture when the accelerator pedal is depressed.	• Drawing air into intake system • Malfunction of the ignition system

SCAN TOOL DTC
Are diagnostic trouble codes output ?
- YES → Refer to P.13A-159, INSPECTION CHART FOR DIAGNOSTIC TROUBLE CODES.
- NO →

Check the following items.
- Check the ignition coil, spark plugs, spark plug cables.
- Check if air was drawn into the intake system.
  - Broken intake manifold gasket
  - Broken or disconnected vacuum hose
  - Improper operation of the PCV valve
  - Broken air intake hose

INSPECTION PROCEDURE 14

The engine stalls when decelerating.	Probable cause
[Comment] In cases such as the above, the cause is probably that the intake air volume is insufficient due to a defective idle air control motor system.	• Malfunction of the IAC system

Were the battery terminals disconnected recently ?
- YES → After warming-up, let the engine run at-idling for 10 minutes.
- NO ↓

SCAN TOOL DTC
Are diagnostic trouble codes output?
- YES → Refer to P.13A-159, INSPECTION CHART FOR DIAGNOSTIC TROUBLE CODES.
- NO ↓

SCAN TOOL Data list
26 Closed throttle position switch (Refer to P.13A-238.)
- NG → Check the closed throttle position switch system. (Refer to P.13A-190, INSPECTION PROCEDURE FOR DIAGNOSTIC TROUBLE CODE P0510.)
- OK ↓

SCAN TOOL Data list
14 Throttle position sensor (Refer to P.13A-238.)
- NG → Check the throttle position circuit malfunction (Refer to P.13A-166, INSPECTION PROCEDURE FOR DIAGNOSTIC TROUBLE CODE P0120.)
- OK ↓

SCAN TOOL Data list
45 Idle air control motor position <2.0L Engine (Turbo)>
55 Idle air control valve position sensor <2.4L Engine>
- Is the idle speed control motor position drops to 0–2 steps when decelerating (engine rpm less than 1 ,000)?
- YES → Check the vehicle speed sensor malfunction (Refer to P.13A-187, INSPECTION PROCEDURE FOR DIAGNOSTIC TROUBLE CODE P0500.)
- NO ↓

Check the following items.'
- Check the ignition coil, spark plugs, spark plug cables.
- Clean the throttle valve area.
- Check and adjust the fixed SAS.

INSPECTION PROCEDURE 15

Hesitation, sag or stumble	Probable cause
[Comment] In cases such as the above, the cause is probably that ignition system, air/fuel mixture or compression pressure is defective.	• Malfunction of the ignition system • Malfunction of air-fuel ratio control system • Malfunction of the fuel supply system • Malfunction of the EGR solenoid system • Poor compression • Malfunction of the turbocharger, system

SCAN TOOL DTC
Are diagnostic trouble codes output ?
- YES → Refer to P.13A-159, INSPECTION CHART FOR DIAGNOSTIC TROUBLE CODES.
- NO ↓

Check the injectors for operation sound. (Refer to P.13A-284.)
- NG → Check the injector circuit malfunction (Refer to P.13A-173, INSPECTION PROCEDURE FOR DIAGNOSTIC TROUBLE CODES P0201, P0202, P0203, P0204.)
- OK ↓

Check the ignition timing. <2.0L Engine (Turbo)> (Refer to GROUP 11A – On-vehicle Service.)
Check the ignition timing. <2.4L Engine> (Refer to GROUP 11 E – On-vehicle Service.)
- NG → Check that the crankshaft position sensor and timing belt cover are installed properly.
- OK ↓

Scan Tool: Inspection when hesitation, sag, stumble or poor acceleration occurs. (Refer to P.13A-231, INSPECTION PROCEDURE 42.)
- OK ↓

Check the fuel pressure. (Refer to P.13A-268.)
- OK ↓

Check the following items.
- Check the ignition coil, spark plugs, spark plug cables.
- Check supercharging pressure.
- Check intake charge pressure control system.
- Check rotating resistance of turbocharger turbine wheel. (Does the wheel rotate smoothly?)
- Check the EGR system.
- Check the compression pressure.
- Check the fuel filter or fuel line for clogging.

INSPECTION PROCEDURE 16

Acceleration shock	Probable cause
[Comment] In cases such as the above, the cause is probably that there is an ignition leak accompanying the increase in the spark plug demand voltage during acceleration.	• Malfunction of the ignition system

SCAN TOOL DTC
Are diagnostic trouble codes output ?
- YES → Refer to P.13A-159, INSPECTION CHART FOR DIAGNOSTIC TROUBLE CODES.
- NO ↓

Check the following items.
- Check the ignition coil, spark plugs, spark plug cables.
- Check for occurrence of ignition leak.

INSPECTION PROCEDURE 17

Deceleration shock	Probable cause
[Comment] Malfunction of the IAC system is suspected.	• Malfunction of the IAC system

SCAN TOOL DTC
Are diagnostic trouble codes output ?
- YES → Refer to P.13A-159, INSPECTION CHART FOR DIAGNOSTIC TROUBLE CODES.
- NO ↓

Check the idle air control motor for operation sound <2.0L Engine (Turbo)>. (Refer to P.13A-285.)
Check the idle air control motor for operation sound <2.4L Engine>. (Refer to P.13A-287)
- NG → Check the idle control system malfunction (Refer to P.13A-188, INSPECTION PROCEDURE FOR DIAGNOSTIC TROUBLE CODE P0505.)
- ↓

SCAN TOOL Data list
14 Throttle position sensor (Refer to P.13A-238.)
- NG → Check the throttle position circuit malfunction (Refer to P.13A-166, INSPECTION PROCEDURE FOR DIAGNOSTIC TROUBLE CODE P0120.)
- OK ↓

SCAN TOOL Data list
26 Closed throttle position switch (Refer to P.13A-238.)
- NG → Check closed throttle position switch system. (Refer to P.13A-190, INSPECTION PROCEDURE FOR DIAGNOSTIC TROUBLE CODE P0510.)
- OK ↓

Clean the throttle valve area. (Refer to P.13A-262.)

INSPECTION PROCEDURE 18

Poor acceleration	Probable cause
[Comment] Defective ignition system, abnormal air-fuel ratio, poor compression pressure, etc. are suspected.	• Malfunction of the Ignition system • Malfunction of air-fuel ratio control system • Malfunction of the fuel supply system • Poor acceleration • Clogged exhaust system • Malfunction 'of turbocharger system

SCAN TOOL DTC
Are diagnostic trouble codes output ?
- YES → Refer to P.13A-159, INSPECTION CHART FOR DIAGNOSTIC TROUBLE CODES.
- NO ↓

Check the injectors for operation sound. (Refer to P.13A-284.)
- NG → Check the injector circuit malfunction (Refer to P.13A-173, INSPECTION PROCEDURE FOR DIAGNOSTIC TROUBLE CODES P0201, P0202, P0203, P0204.)
- OK ↓

Check the ignition timing. <2.0L Engine (Turbo)> (Refer to GROUP 11A – On-vehicle Service.)
Check the ignition timing. <2.4L Engine> (Refer to GROUP 11E – On-vehicle Service.)
- NG → Check that the crankshaft position sensor and timing belt cover are installed properly.
- OK ↓

Scan tool: Inspection when hesitation, sag, stumble or poor acceleration occur. (Refer to P.13A-231, INSPECTION PROCEDURE 42.)
- OK ↓

Check the fuel pressure. (Refer to P.13A-268.)
- OK ↓

Check the following items.
- Check the ignition coil, spark plugs, spark plug cables.
- Check supercharging pressure.
- Check intake charge pressure control system.
- Check rotating resistance of turbocharger turbine wheel. (Does the wheel rotate smoothly?)
- Check the compression pressure.
- Check the fuel filter or fuel line for clogging.
- Broken air intake hose
- Clogged air cleaner
- Clogged exhaust system

TSB Revision

INSPECTION PROCEDURE 19

Surge	Probable cause
[Comment] Defective ignition system, abnormal air-fuel ratio,etc. are suspected.	• Malfunction of the ignition system • Malfunction of air-fuel ratio control system • Malfunction of the EGR solenoid system

SCAN TOOL DTC
Are diagnostic trouble codes output ?
- YES → Refer to P.13A-159, INSPECTION CHART FOR DIAGNOSTIC TROUBLE CODES.
- NO ↓

Check the injectors for operation sound. (Refer to P.13A-284.)
- NG → Check the injector circuit malfunction (Refer to P.13A-173, INSPECTION PROCEDURE FOR DIAGNOSTIC TROUBLE CODES P0201, P0202, P0203, P0204.)
- OK ↓

Check the ignition timing. <2.0L Engine (Turbo)> (Refer to GROUP 11A – On-vehicle Service.)
Check the ignition timing. <2.4L Engine> (Refer to GROUP 11E – On-vehicle Service.)
- NG → Check that the crankshaft position sensor and timing belt cover are installed properly.
- OK ↓

Scan Tool: Inspection when surge occurs. (Refer to P.13A-232, INSPECTION PROCEDURE 43.)
- OK ↓

Check the fuel pressure. (Refer to P.13A-268.)
- OK ↓

Check the following items.
- Check the ignition coil, spark plugs, spark plug cables.
- Check the EGR system.
- Check the turbocharger waste gate actuator.

INSPECTION PROCEDURE 20

Knocking	Probable cause
[Comment] In cases such as the above, the cause is probably that the detonation control is defective or the heat value of the spark plug is inappropriate.	• Defective knock sensor • Inappropriate heat value of the spark plug

SCAN TOOL DTC
Are diagnostic trouble codes output ?
- YES → Refer to P.13A-159, INSPECTION CHART FOR' 'DIAGNOSTIC TROUBLE CODES.
- NO ↓

Does knocking occur when driving with the sensor disconnected?
At this time, use the scan tool to check if the timing is retarded compared to when the knock sensor connector is connected.
- NO → Check the knock sensor 1 circuit malfunction (Refer to P.13A-175, INSPECTION PROCEDURE FOR DIAGNOSTIC TROUBLE CODE P0325)
- YES ↓

Check the following items.
- Spark plugs heat range
- Check if foreign materials (water, alcohol, etc.) got into fuel.

INSPECTION PROCEDURE 21

Dieseling	Probable cause
[Comment] Fuel leakage from injectors is suspected.	• Fuel leakage from injectors

Check the injectors for fuel leakage.

TSB Revision

INSPECTION PROCEDURE 22

Too high CO and HC concentration when idling	Probable cause
[Comment] Abnormal air-fuel ratio is suspected.	• Malfunction of the air-fuel ratio control system. • Deteriorated catalyst

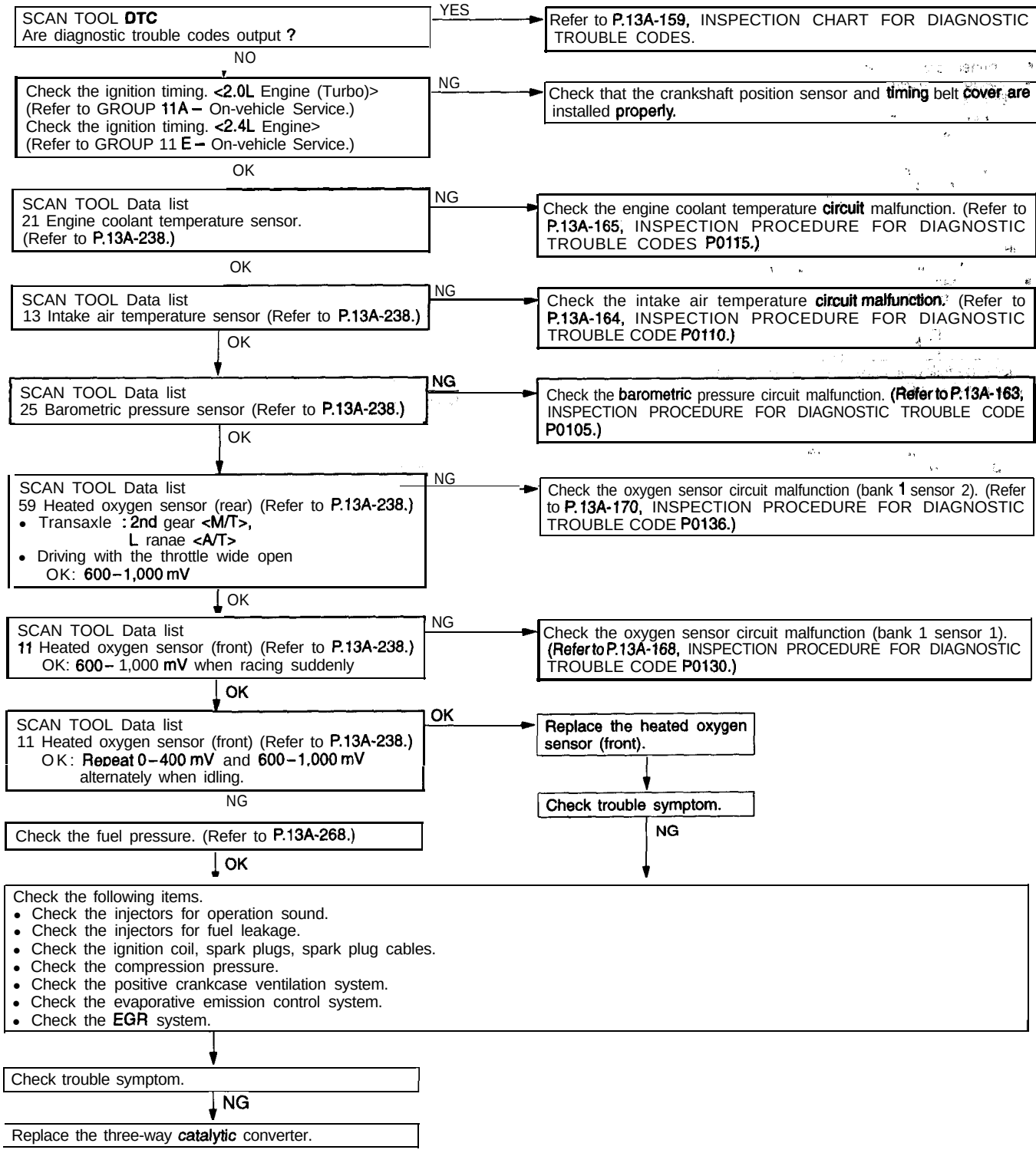

TSB Revision

INSPECTION PROCEDURE 23

Generator output voltage is low (approx. 12.3V)	Probable cause
[Comment] The cause may be a malfunction of the generator or one of the problems listed at right.	• Malfunction of charging system. • Short circuit in harness between generator G terminal ECM. • Malfunction of the ECM.

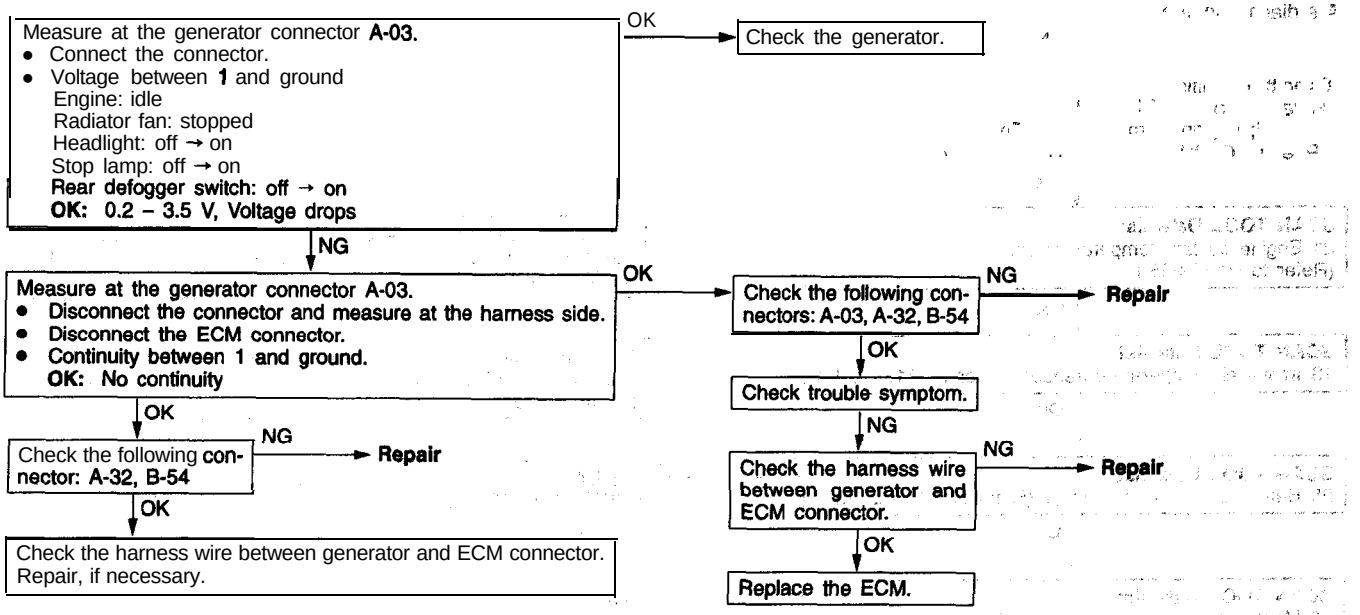

TSB Revision

INSPECTION PROCEDURE 24

Transient, mass emission tailpipe test IM240 test failed	Probable cause
[Comment] The test is failed if the air/fuel ratio is not controlled to the theoretical air/fuel ratio by means of the feedback control from the oxygen sensor signal, if the EGR flow volume is insufficient, or if the catalyst has deteriorated.	• Malfunction of the air-fuel ratio control system • Malfunction of the EGR system • Deteriorated catalyst

NOTE
If the temperature of the three-way catalyst is low when the exhaust gas is tested, the three-way catalyst cannot effectively clean the exhaust. Accordingly, the engine needs to be sufficiently warmed up before the exhaust gas is tested, and the gas should then be tested immediately.

Has the engine warmed up sufficiently when the exhaust gas is tested? (Check with owner.)
- No → Let the engine warm up sufficiently before testing the exhaust gas.
- Yes ↓

- Check all vacuum hoses and connectors.
- Check electrical wires and connectors for obvious problems.
- Check the exhaust system for missing or
- NG → Repair
- OK ↓

Does the vehicle fail any drivability test items?
- Yes → Refer to P.13A-199, INSPECTION CHART FOR TROUBLE SYMPTOMS.
- No ↓

DTC
- Yes → Refer to P.13A-159, INSPECTION CHART FOR DIAGNOSTIC TROUBLE CODE.
- No ↓

Check the ignition timing <2.0L Engine (Turbo)>. 11A –
Check the ignition timing <2.4L Engine>.
(Refer to GROUP 11A –
- NG → Check that the crankshaft position sensor and timing belt cover are installed properly.
- OK ↓

SCAN TOOL Data list
21 Engine coolant temperature sensor
(Refer to P. 13A-238)
- NG → Check the engine coolant temperature sensor circuit malfunction. (Refer to P.13A-165, INSPECTION PROCEDURE FOR DIAGNOS- P0115)
- OK ↓

SCAN TOOL Data list
P.13A-238)
- NG → Check the intake air temperature sensor circuit malfunction. (Refer to P.13A-164, INSPECTION PROCEDURE FOR DIAGNOSTIC TROUBLE CODE P0110)
- OK ↓

SCAN TOOL Data list
25 Barometric pressure sensor (Refer to P.13A-238)
- NG → Check the barometric pressure sensor circuit malfunction. (Refer to P.13A-163, INSPECTION PROCEDURE FOR DIAGNOSTIC TROUBLE CODE P0105)
- OK ↓

SCAN TOOL Data list
59 Heated oxygen sensor (rear)' (Refer to P.13A-238)
- Transaxle: 2nd gear <M/T>, L range <A/T>
- Drive with wide open throttle

OK: 600 – 1000 mV
- N G → Check the oxygen sensor circuit malfunction (bank 1 sensor 2). (Refer to P.13A-170, INSPECTION PROCEDURE FOR DIAGNOSTIC TROUBLE CODE P0136)
- OK ↓

SCAN TOOL Data list
11 Heated oxygen sensor (front) (Refer to P.13A-238)
OK: 600 – 1000 mV when racing suddenly
- NG → Check the oxygen sensor circuit malfunction (bank 1 sensor 1). (Refer to P.13A-168, INSPECTION PROCEDURE FOR DIAGNOSTIC TROUBLE CODE P0130)
- OK ↓

SCAN TOOL Data list
11 Heated oxygen sensor (front) (Refer to P.13A-238)
OK: 0 – 400 mV and 600 – 1000 mV alternately when idling and 2500 r/min
- OK → Check the EGR system. (Refer to GROUP 17 – Emission Control System)
  - OK ↓
  - Measure the CO concentration when idling. OK: 0.5% or less
    - NG → Replace the heated oxygen sensor (front)
    - OK ↓
- NG ↓

Check the fuel pressure. (Refer to P.13A-268)
- OK ↓

Check the following items.
- Check the injectors for operation sound.
- Check the injector for fuel leakages.
- Check the ignition coil, spark plugs, spark plug cables.
- Check the compression pressure.
- Check the positive crankcase ventilation system.
- Check the evaporative emission control system.

- OK → Check troub le symptom.
  - NG ↓
  - Replace the three-way catalytic converter.

TSB Revision

INSPECTION PROCEDURE 25

Purge flow test of the evaporative canister IM240 test failed	Probable cause
[Comment] The test is failed if there is a blockage in the purge line or purge port, or a malfunction of the evaporative emission purge solenoid.	• Blocked purge line or purge port • Malfunction of the evaporative emission purge solenoid • Blocked evaporative emission canister

SCAN TOOL DTC
Are diagnostic trouble code output?

→ Yes: Refer to P.13A-159, INSPECTION CHART FOR DIAGNOSTIC TROUBLE CODE.

↓ No:

Check the evaporative emission purge system <2.0L Engine (Turbo)>.
(Refer to GROUP 17 – Emission Control System)
Check the evaporative emission purge system <2.4L Engine>.
(Refer to GROUP 17 – Emission Control System)

INSPECTION PROCEDURE 26

Pressure test of the evaporative system failed	Probable cause
[Comment] The test is failed if there is a leak in the fuel tank or vapor line.	• Improper tighting of fuel tank filler tube cap. • Broken seal in fuel tank, vapor line evaporative emission canister

Check the evaporative emission purge solenoid.
(Refer to GROUP 17 – Emission Control System)

→ NG: Replace,

↓ OK:

Check the evaporative emission ventilation solenoid <2.4L Engine>.
(Refer to GROUP 17 – Emission Control System)

→ NG: Replace

↓ OK:

Check the following items.
- Check for leaks from the vapor line and evaporative emission canister.
- Check for leaks from the fuel tank.

INSPECTION PROCEDURE 27

Power supply system and ignition switch-IG system	Probable cause
[Comment] When an ignition switch ON signal is input to the ECM, the ECM turns the MFI relay ON. This causes battery positive voltage to be supplied to the ECM, injectors and volume air flow sensor.	• Malfunction of the ignition switch • Malfunction of the MFI relay • Improper connector contact, open circuit or short-circuited harness wire • Disconnected ECM ground wire • Malfunction of the ECM

Check the MFI relay. (Refer to P.13A-280.)
- NG → Replace
- OK ↓

Measure at the MFI relay connector B-87.
- Disconnect the connector, and measure at the harness side.
- Voltage between 3, 4 and around
  OK: Battery positive voltage

- NG → Check the harness wire between battery and MFI relay connector. Repair, if necessary.
- OK ↓

Check the ECM power supply and around circuit. (Refer to P.13A-233, INSPECTION PROCEDURE 44.)

INSPECTION PROCEDURE 28

Fuel pump system <2.0L Engine (Turbo)>	Probable cause
[Comment] The ECM turns the fuel pump relay ON when the engine is cranking or running, and this supplies power to drive the fuel pump.	• Malfunction of the fuel pump relay • Malfunction of the fuel pump • Improper connector contact, open circuit or short-circuited harness wire • Malfunction of the ECM

Check the fuel pump operation. (Refer to P.13A-271.)
- NG → Check the fuel pump circuit. (Refer to P.13A-233, INSPECTION PROCEDURE 45.)
- OK ↓

Check the fuel pump relay. (Refer to P.13A-280.)
- NG → Replace
- OK ↓

Measure at the fuel pump relay connector B-86.
- Connect the connector.
- Voltage between 1 and ground
- SCAN TOOL Actuator test: Fuel pump drive
  OK: Battery positive voltage

- NG → Check the fuel pump drive control circuit. (Refer to P.13A-234, INSPECTION PROCEDURE 46.)
- OK ↓

Check the harness wire between fuel pump relay connector and fuel pump drive terminal. Repair, if necessary.

INSPECTION PROCEDURE 29

Fuel pump system <2.4L Engine>	Probable cause
[Comment] The ECM judges the engine rpm (Low, Middle, High), and outputs the result of this judgement to the fuel pump relay module. The fuel pump relay module controls the operation of the fuel pump in accordance with the engine rpm which is input from the ECM. When the engine rpm is high, the fuel pump operates at high speed, and when the engine rpm is low, the fuel pump operates at low speed.	• Malfunction of the fuel pump relay • Malfunction of the fuel pump • Malfunction, of the fuel pump relay module • Improper connector contact, open circuit or short-circuited harness wire • Malfunction of the ECM

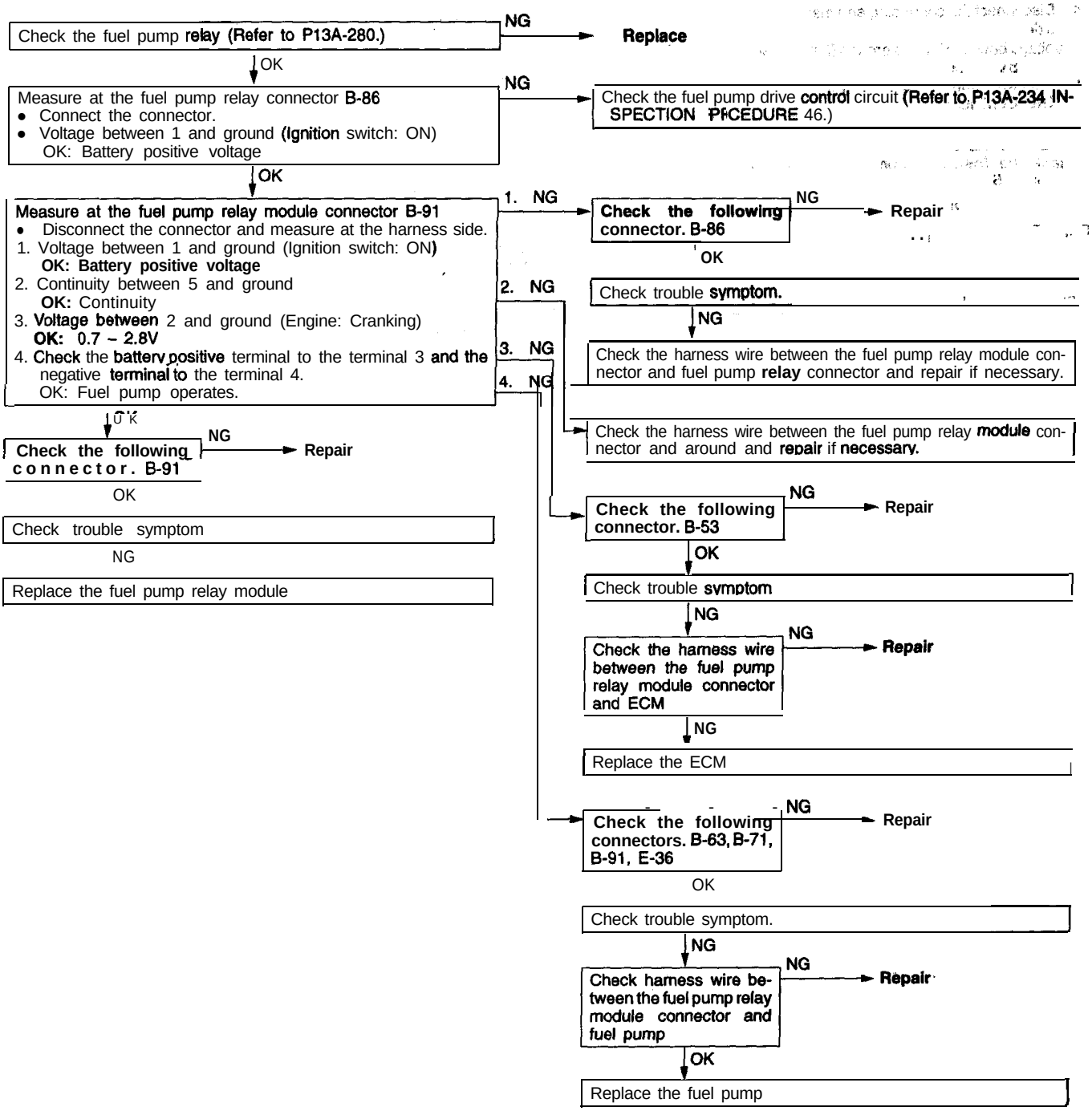

TSB Revision

INSPECTION PROCEDURE 30

Ignition switch-ST system <M/T>	Probable cause
[Comment] The ignition switch – ST inputs a HIGH signal to the ECM while the engine is cranking. The ECM controls fuel injection, etc. during starting based on this input.	• Malfunction, of ignition switch • Improper connector contact, open circuit or shortcircuited harness wire • Malfunction of the ECM

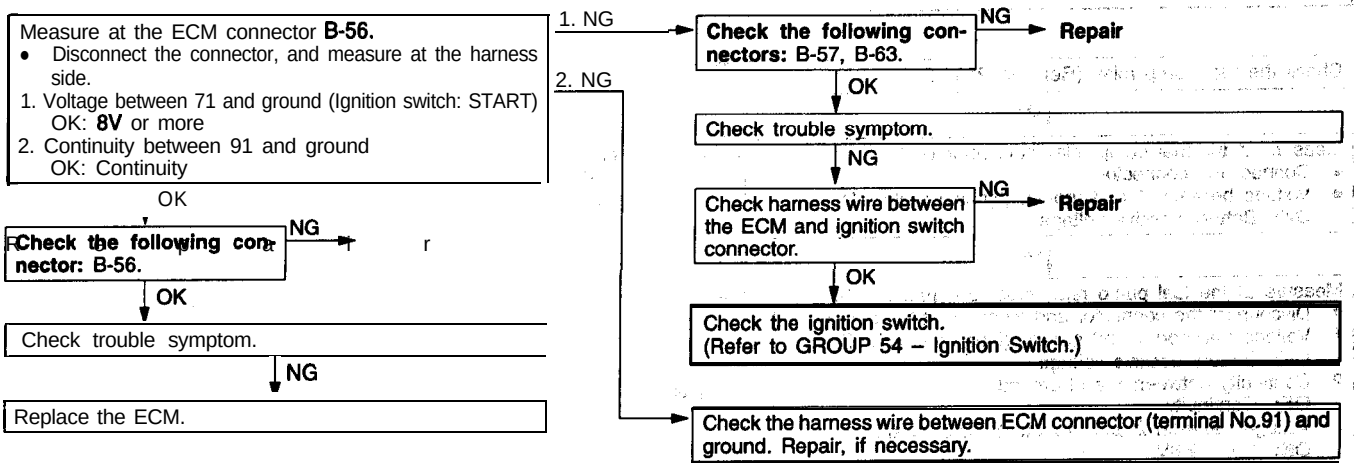

INSPECTION PROCEDURE 31

Ignition switch-ST and park/neutral position switch system <A/T>	Probable cause
[Comment] • The ignition switch – ST inputs a HIGH signal to the ECM while the engine is cranking. The ECM controls fuel injection, etc. during starting based on this input. • The park/neutral position switch inputs the condition of the select lever, i.e. whether it is in P or N range or in some other range, to the ECM. The ECM controls the idle air control motor based on this input.	• Malfunction of ignition switch • Malfunction of park/neutral position switch • Improper connector contact, open circuit or shortcircuited harness wire • Malfunction of the ECM.

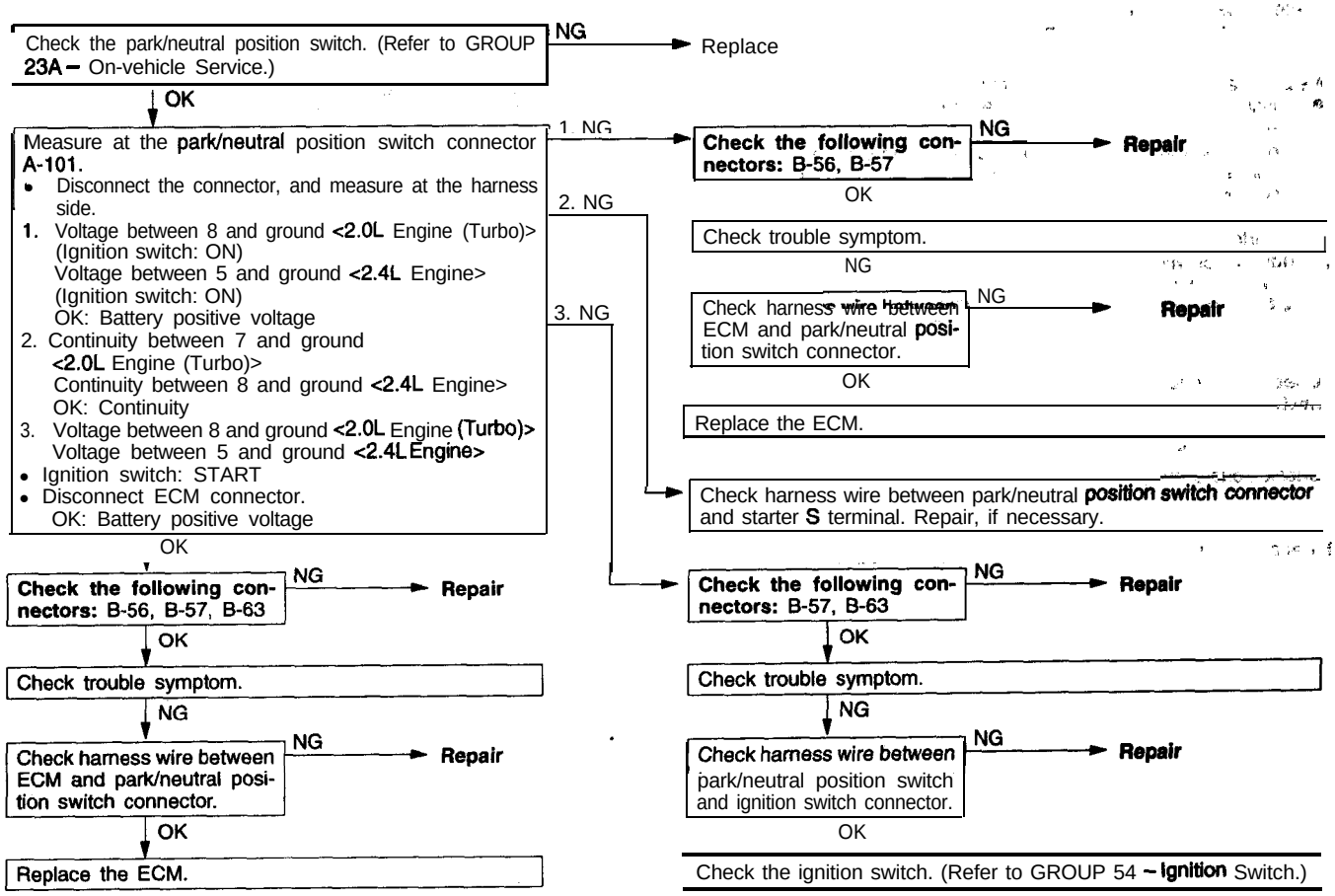

TSB Revision

INSPECTION PROCEDURE 32

A/C switch and A/C compressor clutch relay system	Probable cause
(Comment] When an A/C ON signal is input to the ECM, the ECM carries out control of the idle air control motor, and also operates the A/C compressor magnetic clutch.	• Malfunction of A/C control system • Malfunction of A/C switch • Improper connector contact, open circuit or shortcircuited harness wire • Malfunction of the ECM

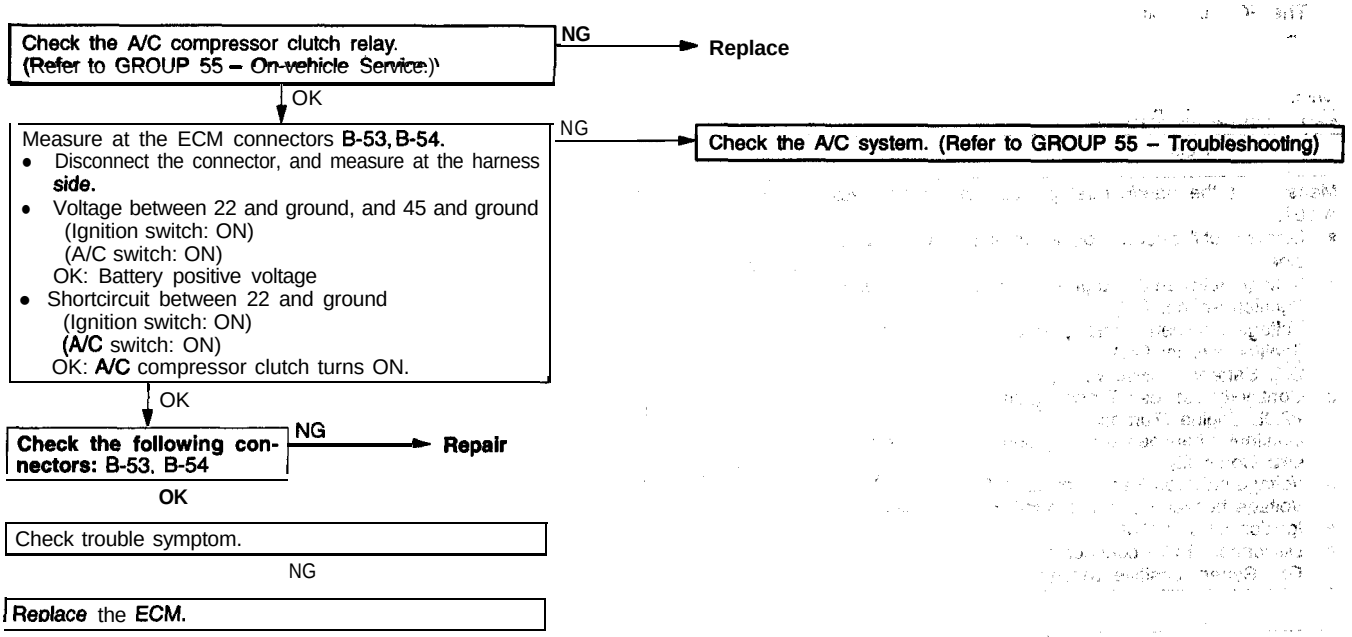

INSPECTION PROCEDURE 33

Fan motor relay system (Radiator fan, A/C condenser fan)	Probable cause
[Comment] The fan motor relay is controlled by the power transistor inside the ECM turning ON and OFF.	• Malfunction of fan motor relay • Malfunction of fan motor • Improper connector contact, open circuit or shortclrcuited harness wire • Malfunction of the ECM

Measure at ECM connector B-53.
- Disconnect the connector, and measure at the harness side.
- Voltage between 20 and ground, and 21 and ground (Ignition switch: ON)
  OK: Battery positive voltage
- Shortcircuit between 20 and ground (Ignition switch: ON)
  OK: Radiator fan and condenser fan rotate at high speed.
- Shortcircuit between 21 and ground (Ignition switch: ON)
  OK: Radiator fan and condenser fan rotate at low speed.

OK → Check the **following connector: B-53**

NG → **Repair**

O K → Check trouble symptom.

NG → **Replace the ECM.**

NG

- Check the radiator fan circuit
- Check the A/C condenser fan circuit.

TSB Revision

INSPECTION PROCEDURE 34

Ignition circuit system	Probable cause'
[Comment] The ECM interrupts the ignition coil primary current by turning the ignition power transistor inside the ECM ON and OFF.	• Malfunction of ignition switch • Malfunction of ignition power transistor unit • Improper connector contact, open circuit or, shortcircuited harness wire • Malfunction of the ECM

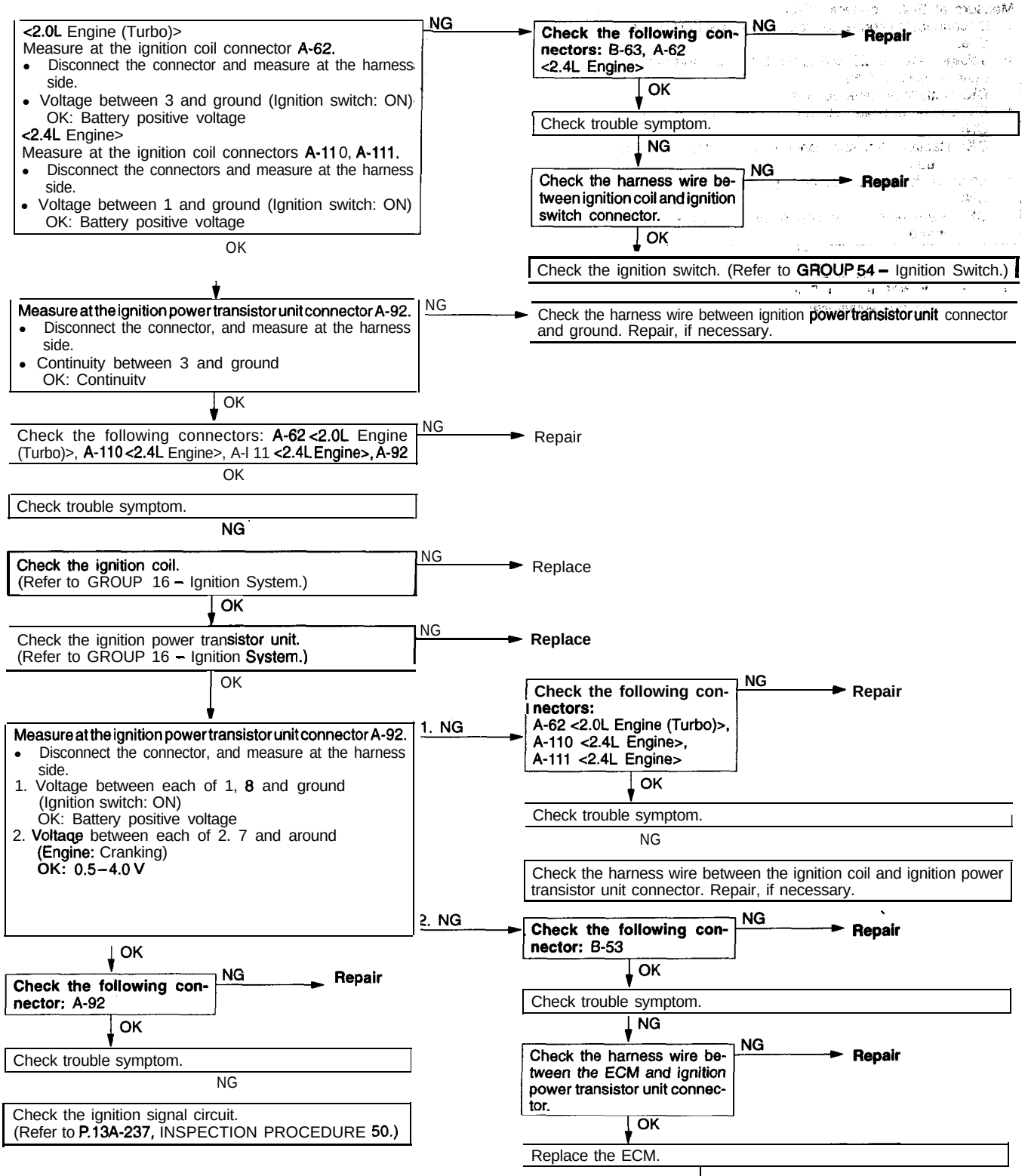

TSB Revision

INSPECTION PROCEDURE 35

Idle air control motor (DC motor) <2.4L Engine>	Probable cause
[Comment] The ECM controls the intake air volume during idling by opening and closing the servo valve located in the bypass passage.	• Malfunction of idle air control motor • Improper connector contact, open "circuit' or • Malfunction of the ECM

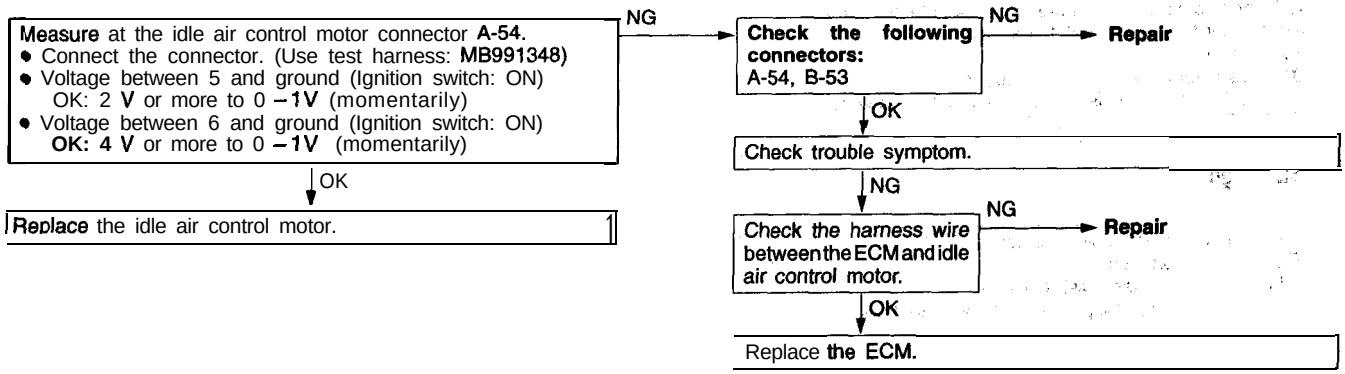

INSPECTION PROCEDURE 36

Scan tool: Inspection when no initial combustion occurs

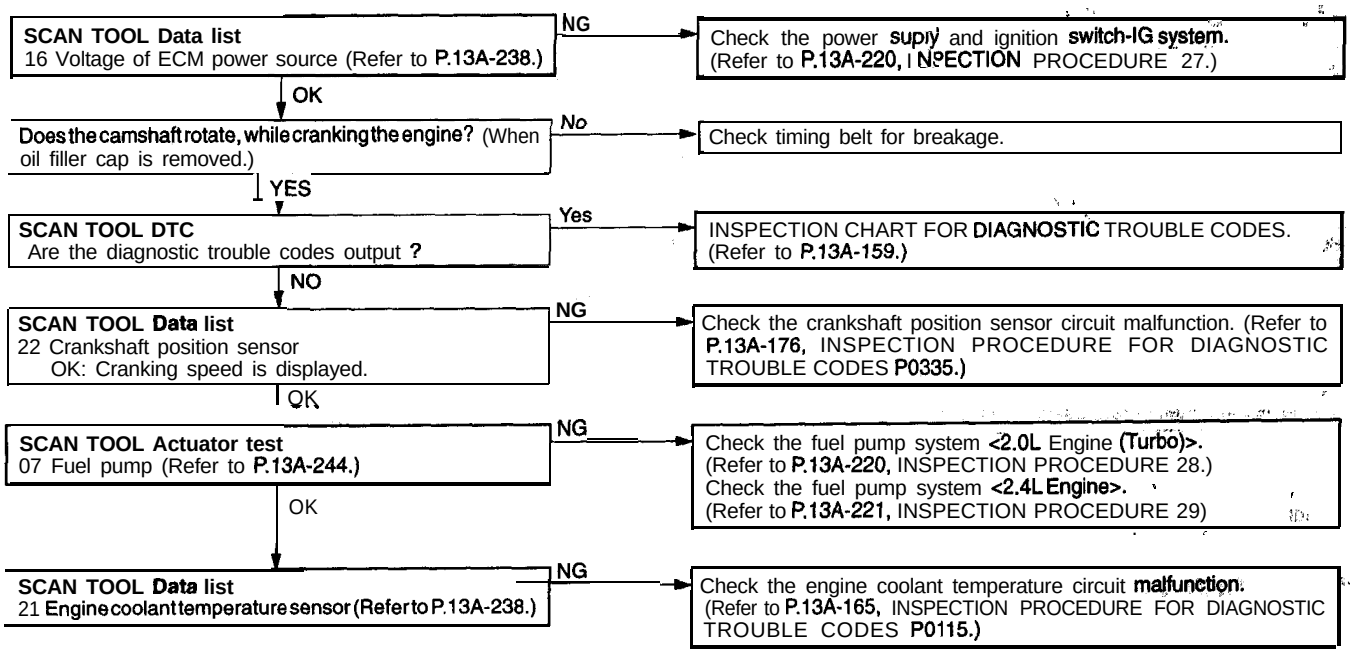

TSB Revision

INSPECTION PROCEDURE 37

Ignition system: Inspection when no initial combustion occurs

<2.0L Engine (Turbo)>

Measure at the ignition coil connector A-62.
- Connect the connector. (Use the test harness: MD998478.)
- To inspect, connect the primary voltage detection-type tachometer to the terminal 1 (red clip) and terminal 2 (black clip).

OK: Each terminal displays a speed on the engine tachometer that is 1/2 of the cranking speed.

NG → Check ignition circuit system. (Refer to P.13A-226, INSPECTION PROCEDURE 34.)

OK

<2.4L Engine>

Measure at the ignition coil connectors A-110, A-111.
- Connect the connector. (Use the test harness: MD991348)
- To inspect, connect the primary voltage detection-type tachometer to the terminal 2.

OK: Each terminal displays a speed on the engine tachometer that is 1/2 of the cranking speed.

NG → Check the ignition circuit system. (Refer to P.13A-226, INSPECTION PROCEDURE 34.)

OK

Check the ignition timing when cranking.
OK: 5°BTDC±3°

NG → Check that the crankshaft position sensor and timing belt cover are properly installed.

INSPECTION PROCEDURE 38

Scan tool: Inspection when incomplete combustion occurs.

SCAN TOOL DTC
Are diagnostic trouble code output ?

YES → INSPECTION CHART FOR DIAGNOSTIC TROUBLE CODES (Refer to P.13A-159.)

NO

SCAN TOOL Actuator test
07 Fuel pump (Refer to P.13A-244.)

NG → Check the fuel pump system <2.0L Engine (Turbo)>. (Refer to P.13A-220, INSPECTION PROCEDURE 28.) Check the fuel pump system <2.4L Engine>. (Refer-to P.13A-221, INSPECTION PROCEDURE 29.)

OK

SCAN TOOL Date list
21 Engine coolant temperature sensor (Refer to P.13A-238.)

NG → Check the engine coolant temperature circuit malfunction. (Refer to P.13A-165, INSPECTION PROCEDURE FOR DIAGNOSTIC TROUBLE CODE P0115.)

SCAN TOOL Data list
18 Ignition switch-ST (Refer to P.13A-238.)

NG → Check the ignition switch-ST system<M/T>. (Refer to P.13A-222, INSPECTION PROCEDURE 30.) Check the ignition switch-ST and park/neutral position switch system<A/T> (Refer to P.13A-223, INSPECTION PROCEDURE 31.)

INSPECTION PROCEDURE 39

Inspection when huntina occurs.

Clean the throttle body. (Refer to P.13A-262.)

↓

Check and adjust the fixed SAS. (Refer to P.13A-265.)

↓

Check trouble symptom.

NG

Inspect air into the air intake system for vacuum leaks.
- Broken intake manifold gasket
- Broken air intake hose
- Broken vacuum hose
- Positive crankcase ventilation valve does not operate.

TSB Revision

INSPECTION PROCEDURE 40

Scan tool: Inspection when idle speed is unstable.

SCAN TOOL Data list
26 Closed throttle position switch (Refer to P.13A-238.)
- NG → Check the closed throttle position switch system. (Refer to P.13A-190, INSPECTION PROCEDURE FOR DIAGNOSTIC TROUBLE CODE P0510.)
- OK ↓

SCAN TOOL Data list
13 Intake air temperature sensor (Refer to P.13A-238.)
- NG → Check the intake air temperature circuit malfunction. (Refer to P.13A-164, INSPECTION' PROCEDURE FOR DIAGNOSTIC TROUBLE CODE P01 10.)
- OK ↓

SCAN TOOL Date list
25 Barometric pressure sensor (Refer to P.13A-238.)
- NG → Check the barometric pressure circuit malfunction. (Refer to P.13A-163, INSPECTION PROCEDURE FOR DIAGNOSTIC TROUBLE CODE P0105.)
- OK ↓

SCAN TOOL Data list
21 Engine coolant temperature sensor (Refer to P.13A-238.)
- NG → Check the engine coolant temperature circuit malfunction. (Refer to P.13A-165, INSPECTION PROCEDURE FOR DIAGNOSTIC TROUBLE CODE P01 15.)
- OK ↓

SCAN TOOL Actuator test
08 Evaporative emission purge solenoid (Refer to P. 13A-244.)
- NG → Check the evaporative emission control system purge control valve circuit malfunction. (Refer to P.13A-184, INSPECTION PROCEDURE' FOR DIAGNOSTIC TROUBLE CODE P0443.)
- ↓

SCAN TOOL Data list
59 Heated oxygen sensor (rear) (Refer to P.13A-238.)
- Transaxle : 2nd gear <M/T>, L range <A/T>
- Drive with wide open throttle

OK: 600– 1,000 mV
- NG → Check the oxygen sensor circuit malfunction (bank 1 sensor 2) '(Refer to P. 13A-170, INSPECTION PROCEDURE FOR DIAGNOSTIC TROUBLE CODE P0136.)
- OK ↓

SCAN TOOL Date list
11 Heated oxygen sensor (front) (Refer to P.13A-238.)
OK: 600–1,000 mV during sudden racing
- NG → Check the oxygen sensor circuit malfunction (bank 1 sensor 1) (Refer to P.13A-168, INSPECTION PROCEDURE' FOR DIAGNOSTIC TROUBLE CODE P0130.)
- OK ↓

SCAN TOOL Data list
11 Heated oxygen sensor (front) (Refer to P.13A-238.)
OK: Chanaes between 0–400 mV and 600–1,000 mV during idling
- NG → Check the fuel pressure. (Refer to P.13A-268)
  - OK → 1. Inspect the intake of air into the air intake system.
    - Broken intake. manifold gasket
    - Broken vacuum hose
    - PCV valve dose not operate.
    - Broken air intake hose
    2. Check the injector for clog.
- OK ↓

SCAN TOOL Data list
27 Power steering pressure switch (Refer to P.13A-238.)
- NG → Check the power steering pressure sensor circuit range/performance. (Refer to P13A-191, INSPECTION PROCEDURE FOR DIAGNOSTIC TROUBLE CODE P0551.)
- OK ↓

SCAN TOOL Data list
28 A/C switch (Refer to P.13A-238.)
- NG → Check the A/C switch and A/C relay system. (Refer to P.13A-224, INSPECTION PROCEDURE 32.)
- OK ↓

SCAN TOOL Data list
29 Park/neutral position switch (Refer to P.13A-238.)
- NG → Check the ignition switch-ST and park/neutral position switch system. (Refer to P.13A-223, INSPECTION PROCEDURE 31.)
- OK ↓

SCAN TOOL Data list
45 Idle air control motor position <2.0L Engine (Turbo)> (Refer to P.13A-238.)
55 Idle air control valve position sensor <2.4L Engine> (Refer to P.13A-238.)
- NG → Adjust the basic idle speed. (Refer to P.13A-266.)

TSB Revision

INSPECTION PROCEDURE 41

Scan tool: Inspection when engine stalls when the engine is warm and idling.

SCAN TOOL Data list
26 Closed throttle position switch (Refer to P.13A-238.)
- NG → Check the closed throttle position switch system. (Refer to P.13A-190, INSPECTION PROCEDURE FOR DIAGNOSTIC TROUBLE CODE P0510.)
- OK ↓

SCAN TOOL Data list
13 Intake air temperature sensor (Refer to P.13A-238.)
- NG → Check the intake air temperature circuit malfunction. (Refer to P.13A-164, INSPECTION PROCEDURE FOR DIAGNOSTIC TROUBLE CODE P0110.)
- OK ↓

SCAN TOOL Data list
25 Barometric pressure sensor (Refer to P.13A-238.)
- NG → Check the barometric pressure circuit malfunction. (Refer to P.13A-163, INSPECTION PROCEDURE FOR DIAGNOSTIC TROUBLE CODE P0105.)
- OK ↓

SCAN TOOL Data list
21 Engine coolant temperature sensor (Refer to P.13A-238.)
- NG → Check the engine coolant temperature circuit malfunction. (Refer to P.13A-165, INSPECTION PROCEDURE FOR DIAGNOSTIC CODE P0115.)
- OK ↓

SCAN TOOL Data list
59 Heated oxygen sensor (rear) (Refer to P.13A-238.)
- Transaxle : 2nd gear <M/T>, L range <A/T>
- Drive with wide open throttle

OK: 600–1,000 mV
- NG → Check the oxygen sensor circuit malfunction (bank 1 sensor 2) (Refer to P. 13A-170, INSPECTION PROCEDURE FOR DIAGNOSTIC TROUBLE CODE P0136.)
- OK ↓

SCAN TOOL Data list
11 Heated oxygen sensor (front) (Refer to P.13A-238.)
OK: Changes between 600–1,000 mV during sudden racing
- NG → Check the oxygen sensor circuit malfunction (bank 1 sensor 1) (Refer to P. 13A-168, INSPECTION PROCEDURE FOR DIAGNOSTIC TROUBLE CODE P0130.)
- OK ↓

SCAN TOOL Data list
11 Heated oxygen sensor (front) (Refer to P.13A-238.)
OK: Changes between 0–400 mV and 600–1,000 mV during idling
- NG → Check the fuel pressure. (Refer to P.13A-268)
  - OK → 1. Inspect the intake of air into the air intake system
    - Broken intake manifold gasket
    - Broken vacuum hose
    - PCV valve dose not operate.
    - Broken air intake hose
    2. Check the injector for clog.
- OK ↓

SCAN TOOL Data list
27 Power steering pressure switch (Refer to P.13A-238.)
- NG → Check the power steering pressure sensor circuit range/performance. (Refer to P.13A-191, INSPECTION PROCEDURE FOR DIAGNOSTIC TROUBLE CODE P0551.)
- OK ↓

SCAN TOOL Data list
28 A/C switch (Refer to P.13A-238.)
- NG → Check the A/C switch and A/C compressor clutch relay system. (Refer to P.13A-224, INSPECTION PROCEDURE 32.)
- OK ↓

SCAN TOOL Data list
29 Park/neutral position switch (Refer to P.13A-238.)
- NG → Check the ignition switch-ST and park/neutral position switch system. (Refer to P.13A-223, INSPECTION PROCEDURE 31.)
- OK ↓

SCAN TOOL Data list
45 Idle air control motor position <2.0L Engine (Turbo)> (Refer to P.13A-238.)
55 Idle air control valve position sensor <2.4L Engine> (Refer to P13A-238.)
- NG → Adjust the basic idle speed. (Refer to P.13A-266.)

TSB Revision

INSPECTION PROCEDURE 42

Scan tool: Inspection when hesitation, sag, stumble or poor acceleration occurs.

SCAN TOOL Data list
26 Closed throttle position switch (Refer to P.13A-238.)
- NG → Check the closed throttle position switch system. (Refer to P.13A-190, INSPECTION PROCEDURE FOR DIAGNOSTIC TROUBLE CODE P0510.)
- OK ↓

SCAN TOOL Data list
13 Intake air temperature sensor (Refer to P.13A-238.)
- NG → Check the intake air temperature circuit malfunction. (Refer to P.13A-164, INSPECTION PROCEDURE FOR DIAGNOSTIC TROUBLE CODE P0110.)
- OK ↓

SCAN TOOL Data list
25 Barometric pressure sensor (Refer to P.13A-238.)
- NG → Check the barometric pressure circuit malfunction. (Refer to P.13A-163, INSPECTION PROCEDURE FOR DIAGNOSTIC TROUBLE CODE P0105.)
- OK ↓

SCAN TOOL Data list
21 Engine coolant temperature sensor (Refer to P.13A-238.)
- NG → Check the engine coolant temperature circuit malfunction. (Refer to P.13A-165, INSPECTION PROCEDURE FOR DIAGNOSTIC CODE P0115.)
- OK ↓

SCAN TOOL Data list
14 Throttle position sensor (Refer to P.13A-238.)
- NG → Check the throttle position circuit malfunction. (Refer to P.13A-166, INSPECTION PROCEDURE FOR DIAGNOSTIC TROUBLE CODE P0120.)
- OK ↓

SCAN TOOL Actuator test
10 EGR solenoid (Refer to P.13A-244.)
- NG → Check the EGR solenoid. (Refer to P.13A-180, INSPECTION PROCEDURE FOR DIAGNOSTIC TROUBLE CODE P0403.)
- OK ↓

SCAN TOOL Data list
59 Heated oxygen sensor (rear) (Refer to P.13A-238.)
- Transaxle : 2nd gear <M/T>, L range <A/T>
- Drive with wide open throttle

OK: 600–1,000 mV
- NG → Check the oxygen sensor circuit malfunction (bank 1 sensor 2) (Refer to P. 13A-170, INSPECTION PROCEDURE FOR DIAGNOSTIC TROUBLE CODE P0136.)
- OK ↓

SCAN TOOL Data list
11 Heated oxygen sensor (front) (Refer to P.13A-238.)
OK: Changes between 600–1,000 mV during sudden racing
- NG → Check the oxygen sensor circuit malfunction (bank 1 sensor 1) (Refer to P. 13A-168, INSPECTION PROCEDURE FOR DIAGNOSTIC TROUBLE CODE P0130.)
- OK ↓

SCAN TOOL Data list
11 Heated oxygen sensor (front) (Refer to P.13A-238.)
OK: Changes between 0–400 mV and 600–1,000 mV during idling
- NG → Check the fuel pressure. (Refer to P.13A-268)
  - OK → 1. Inspect the intake of air into the air intake system
    - Broken intake manifold gasket
    - Broken vacuum hose
    - PCV valve dose not operate
    - Broken air intake hose
    2. Check the injector for clog.
- OK ↓

SCAN TOOL Actuator test
12 Turbocharger waste gate solenoid <2.0L Engine (Turbo)> (Refer to P.13A-244.)
- NG → Check the turbocharger waste gate solenoid system. (Refer to P.13A-192, INSPECTION PROCEDURE FOR DIAGNOSTIC TROUBLE CODE P1104.)
- OK ↓

SCAN TOOL Actuator test
09 Fuel pressure solenoid <2.0L Engine (Turbo)> (Refer to P.13A-244.)
- NG → Check the fuel pressure solenoid system (Refer to P.13A-193, INSPECTION PROCEDURE FOR DIAGNOSTIC TROUBLE CODE P1105.)

INSPECTION PROCEDURE 43

Scan tool: Inspection when surge occurs.

SCAN TOOL Data list
26 Closed throttle position switch (Refer to P.13A-238.)
- NG → Check the closed throttle position switch system. (Refer to P.13A-190, INSPECTION PROCEDURE FOR DIAGNOSTIC TROUBLE CODE P0510.)
- OK ↓

SCAN TOOL Data list
13 Intake air temperature sensor (Refer to P.13A-238.)
- NG → Check the intake air temperature circuit malfunction. (Refer to P.13A-164, INSPECTION PROCEDURE FOR DIAGNOSTIC TROUBLE CODE P0110.)
- OK ↓

SCAN TOOL Data list
25 Barometric pressure sensor (Refer to P.13A-238.)
- NG → Check the barometric pressure circuit malfunction. (Refer to P.13A-163, INSPECTION PROCEDURE FOR DIAGNOSTIC TROUBLE CODE P0105.)
- OK ↓

SCAN TOOL Data list
21 Engine coolant temperature sensor (Refer to P.13A-238.)
- NG → Check the engine coolant temperature circuit malfunction. (Refer to P.13A-165, INSPECTION PROCEDURE FOR DIAGNOSTIC CODE P0115.)
- OK ↓

SCAN TOOL Data list
14 Throttle position sensor (Refer to P.13A-238.)
- NG → Check the throttle position circuit malfunction. (Refer to P.13A-166, INSPECTION PROCEDURE FOR DIAGNOSTIC TROUBLE CODE P0120.)
- OK ↓

SCAN TOOL Actuator test
10 EGR solenoid (Refer to P.13A-244.)
- NG → Check the EGR solenoid. (Refer to P.13A-180, INSPECTION PROCEDURE FOR DIAGNOSTIC TROUBLE CODE P0403.)
- OK ↓

SCAN TOOL Data list
59 Heated oxygen sensor (rear) (Refer to P.13A-238.)
- Transaxle : 2nd gear <M/T>, L range <A/T>
- Drive with wide open throttle

OK: 600–1,000 mV
- NG → Check the oxygen sensor circuit malfunction (bank 1 sensor 2) (Refer to P. 13A-170, INSPECTION PROCEDURE FOR DIAGNOSTIC TROUBLE CODE P0136.)
- OK ↓

SCAN TOOL Data list
11 Heated oxygen sensor (front) (Refer to P.13A-238.)
OK: Changes between 600–1,000 mV during sudden racing
- NG → Check the oxygen sensor circuit malfunction (bank 1 sensor 1) (Refer to P. 13A-168, INSPECTION PROCEDURE FOR DIAGNOSTIC TROUBLE CODE P0130.)
- OK ↓

SCAN TOOL Data list
11 Heated oxygen sensor (front) (Refer to P.13A-238.)
OK: Changes between 0–400 mV and 600–1,000 mV during idling
- NG → Check the fuel pressure. (Refer to P.13A-268)
  - OK →
    1. Inspect the intake of air into the air intake system
       - Broken intake manifold gasket
       - Broken vacuum hose
       - PCV valve dose not operate
       - Broken air intake hose
    2. Check the injector for clog.

TSB Revision

INSPECTION PROCEDURE 44

Check the ECM power supply and ground circuit.

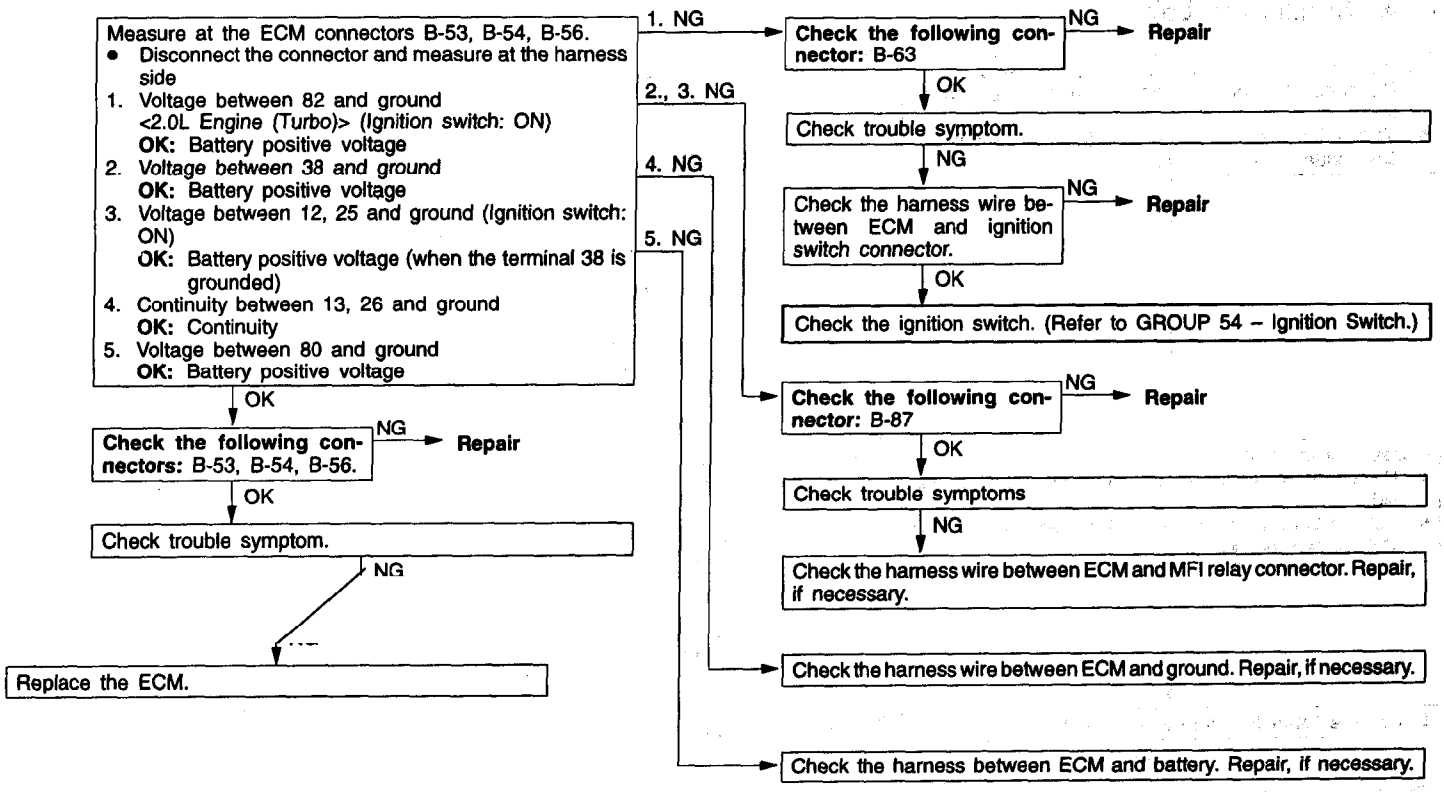

INSPECTION PROCEDURE 45

Check fuel pump circuit.

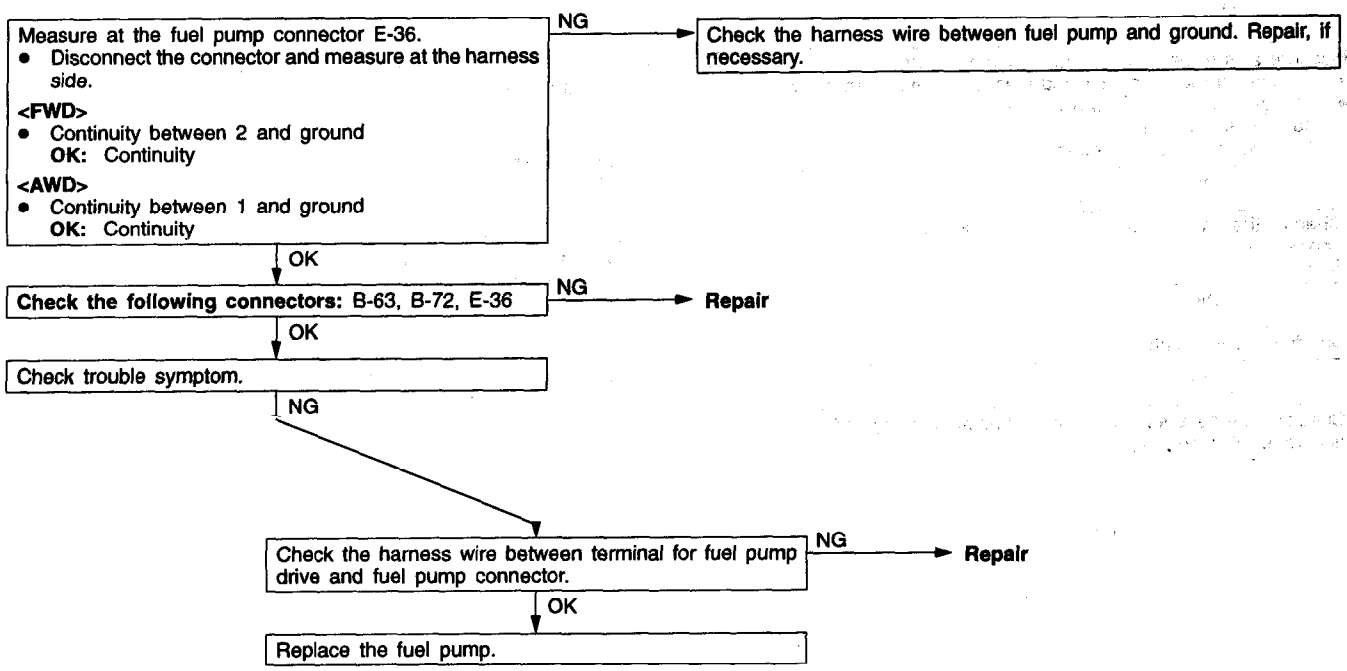

TSB Revision

INSPECTION PROCEDURE 46

Check the fuel pump drive control circuit.

<2.0L Engine (Turbo)>

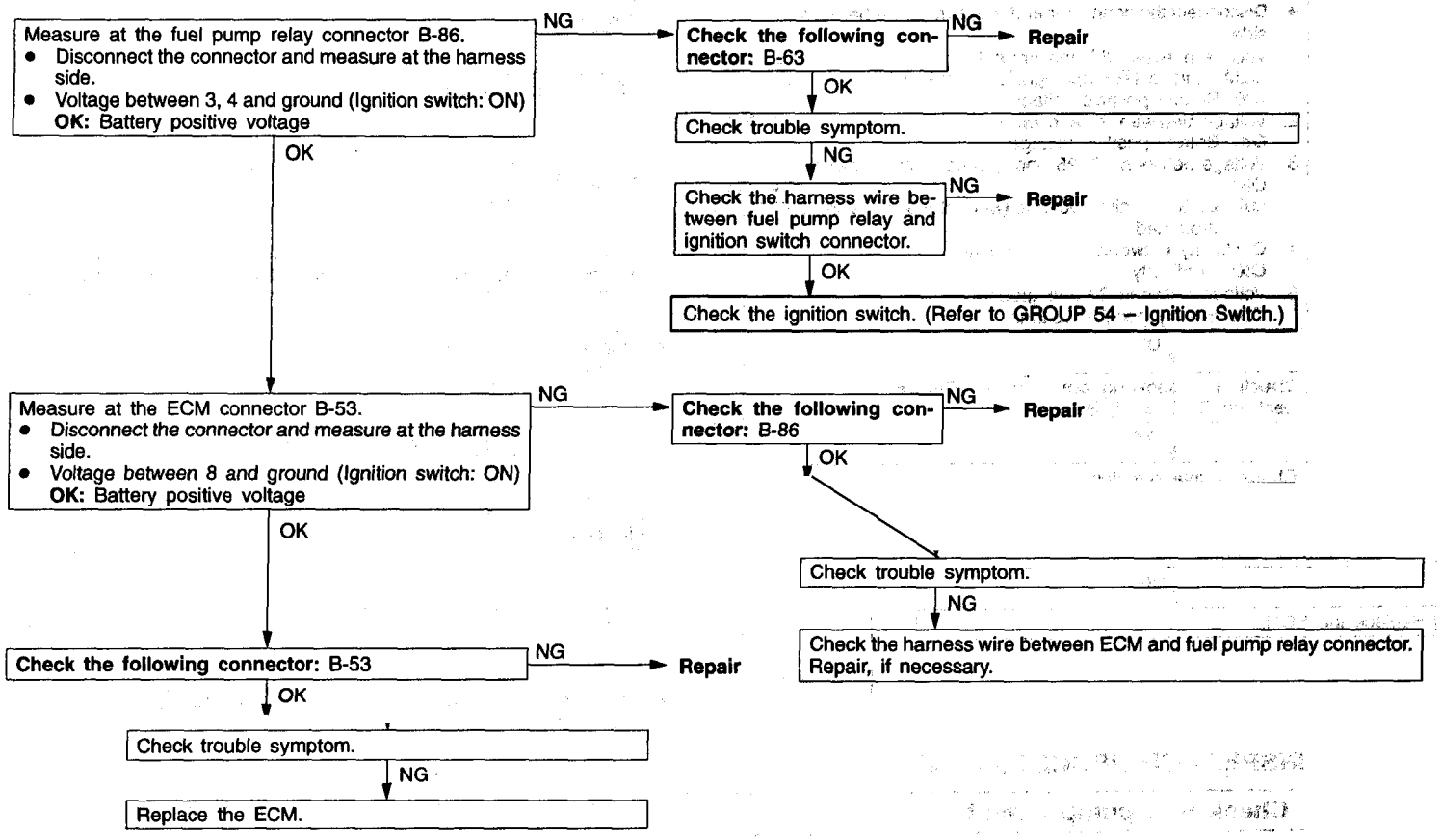

<2.4L Engine>

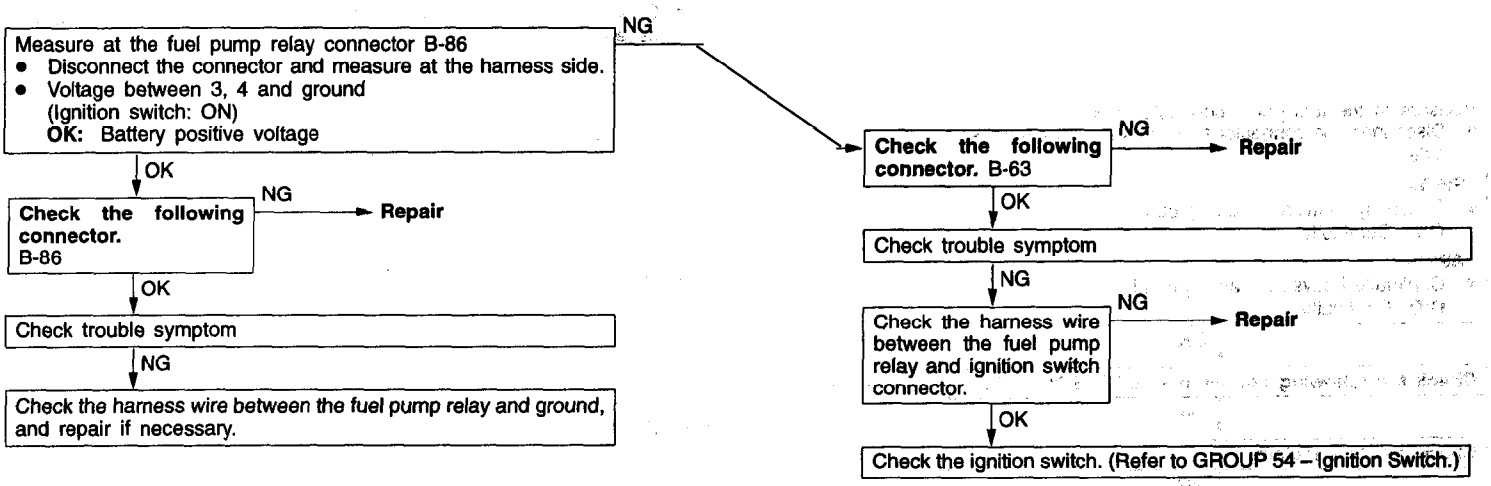

TSB Revision

INSPECTION PROCEDURE 47

Check volume air flow sensor control circuit.

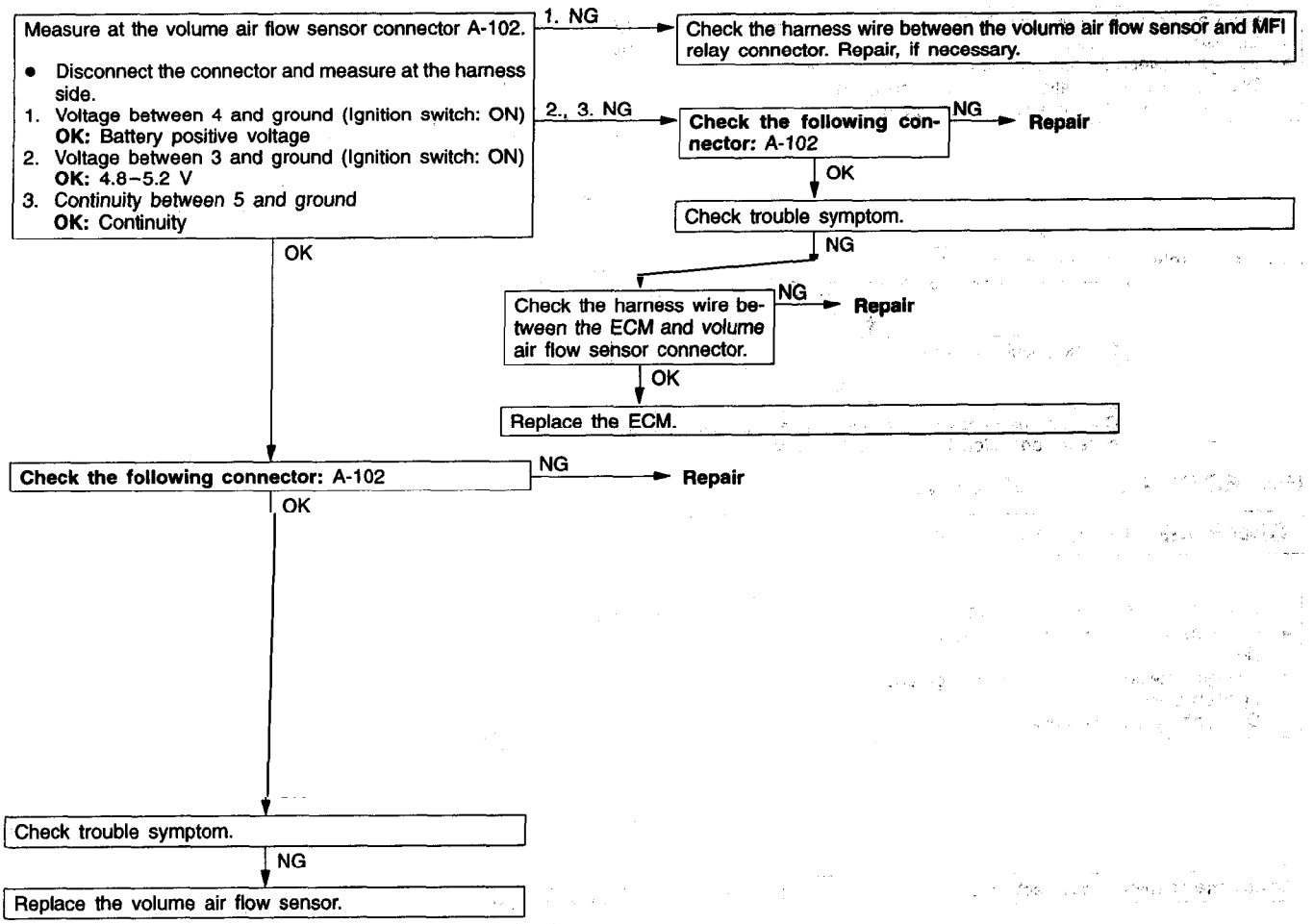

INSPECTION PROCEDURE 48

Check throttle position sensor (TPS) output circuit.

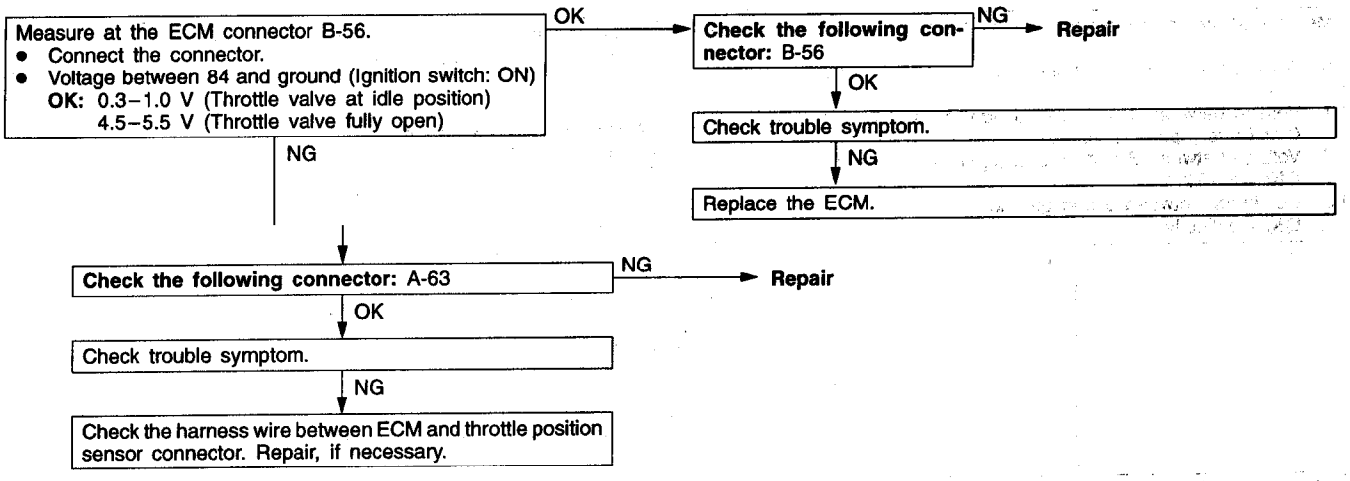

INSPECTION PROCEDURE 49

Check injector control circuit

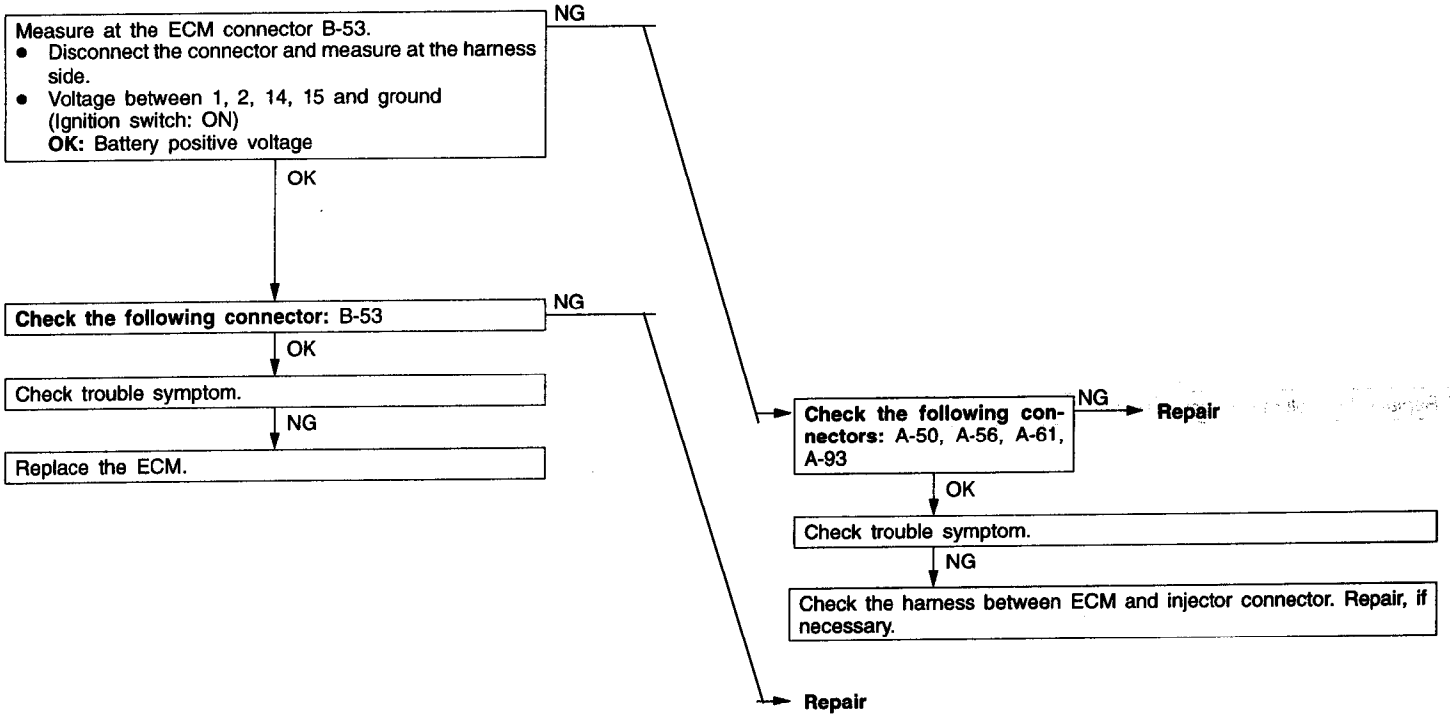

TSB Revision

INSPECTION PROCEDURE 50

Check the ignition signal circuit.

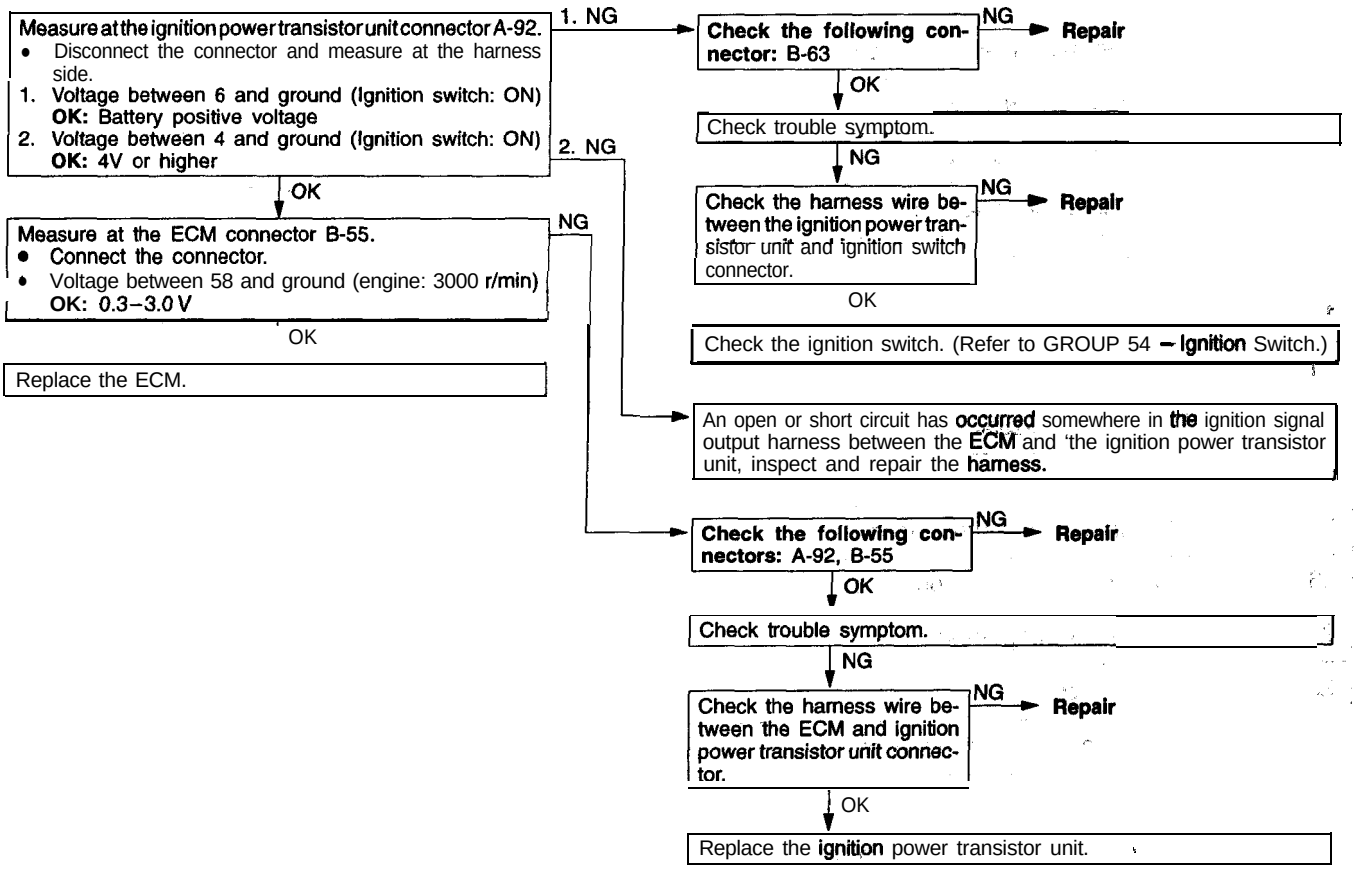

INSPECTION PROCEDURE 51

Check the boost meter circuit <2.0L Engine (Turbo)>

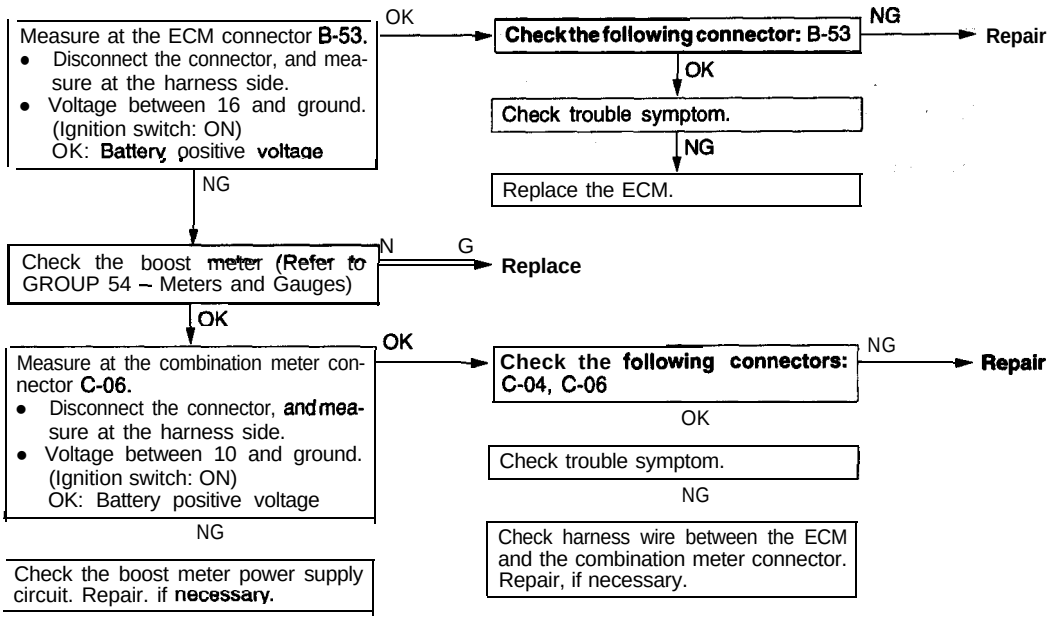

TSB Revision

DATA LIST REFERENCE TABLE

13100890227

Item No.	Inspection item	General-scan tool	Scan tool (MUT-II)
11	Heated oxygen sensor (Front)	×	×
12	Volume air flow sensor	×	×
13	Intake air temperature sensor	×	×
14	Throttle position sensor	×	×
16	Power supply voltage		×
18	Cranking signal (Ignition switch-ST)		×
21	Engine coolant temperature sensor	×	×
22	Crankshaft position sensor	×	×
24	Vehicle speed sensor	×	×
25	Barometric pressure sensor	–	×
26	Closed throttle position switch	–	×
27	Power steering pressure switch	–	×
28	A/C switch	–	×
29	Park/Neutral position switch <A/T>	–	×
41	Injectors	–	×
44	Ignition coils and ignition power transistor	–	×
45	Idle air control (stepper) position <2.0L Engine (Trubo)>	–	×
49	A/C compressor clutch relay	–	×
55	IAC motor position sensor <2.4L Engine>	–	×
59	Heated oxygen sensor (Rear)	×	×
81	Long-term fuel compensation – Bank 1	×	×
82	Short-term fuel compensation – Bank 1	×	×
87	Calculation load	×	×
88	Fuel control condition	×	×
95	Manifold differential pressure sensor	×	×

Caution

1. **Always apply the brakes when shifting the selector lever to D ran&, or vehicle will move forward.**
2. **Driving tests always need another personnel.**

NOTE

*1: In a new vehicle [driven approximately 500 km (300 mile) or less], the volume air flow sensor output frequency is sometimes 10 % higher than the standard frequency.

*2: The injector drive time represents the time when the cranking speed is at 250 r/min or below when the power supply voltage is 11 V.

*3: In a new vehicle [driven approximately 500 km (300 mile) or less], the injector drive time is sometimes 10 % longer than the standard time.

*4: Fuel is injected into all cylinders simultaneously.

*5: In a new vehicle [driven approximately 500 km (300 mile) or less], the step of the stepper motor is sometimes 30 steps greater than the standard value.

*6: If the throttle position sensor voltage rises 50 – 100 mV from the voltage when the engine is at idle and the closed throttle position switch turns from on to off at this time, the sensors are normal. If the throttle position sensor voltage rises 100 mV from the voltage when the engine is at idle, the throttle valve opens, and the closed throttle position switch turns from on to off at this, time, the sensors should be adjusted.

Item No.	Inspection item	Inspection contents		Normal contents	Inspection procedure No.	Reference page
11	Heated oxygen sensor (Front)	Engine: Warm (Air/fuel mixture is made leaner when decelerating, and is made richer when racing.)	When at 4000 r/min, engine is suddenly decelerated	200 mV or less	Code No. P0130	13A-168
			When engine is suddenly raced	600–1,000 mV		
		Engine: Warm (The heated oxygen sensor signal is used to check the air/fuel mixture ratio.)	Engine is idling	400 mV or less ↔ 600– 1,000 mV (Changes)		
			2,500 r/min			
12	Volume air flow sensor (Mass air flow rate) *1	• Engine coolant temperature • Lights, electric cooling fan and all accessories: OFF • Transaxle: Neutral (A/T: P range)	Engine is idling	22-46 Hz' (4.3-5.3 g/s) <2.0L Engine (Turbo)> 18–44 Hz (1.0–5.0 g/s) <2.4L Engine>	–	–
			2,500 r/min	60–100 Hz (9.8-12.1 g/s) <2.0L Engine (Turbo)> 63–103 Hz (5.0–11.0 g/s) <2.4L Engine>		
			Engine is raced	Frequency (or air flow volume) increases in response to racing.		

Item No.	Inspection item	Inspection contents			Normal contents	Inspection procedure No.	Reference page
13	Intake air temperature sensor	Ignition switch: ON or with engine running	Intake air temperature	At –20°C (–4°F)	–20°C	Code No. P0110	13A-164
				At 0°C (32°F)	0°C		
				At 20°C (68°F)	20°C		
				At 40°C (104°F)	40°C		
				At 80°C (176°F)	80°C		
14	Throttle position sensor	Ignition switch: ON	Set to idle position		300–1,000 mV (6–20 %)	Code No. P0120	13A-166
			Gradually open		Voltage increases in proportion to throttle opening angle		
			Open fully		4,500–5,500 mV (80–100 %)		
16	Power supply voltage	Ignition switch: ON			Battery positive voltage	procedure No. 27	13A-220
8	Cranking signal (Ignition switch-ST)	Ignition switch: ON	Engine: Stopped		OFF	procedure No. 30	13A-224
			Engine: Cranking		ON		
21	Engine coolant temperature sensor	Ignition switch: ON or with engine running	Engine coolant temperature	At –20°C (–4°F)	–20°C	Code No. P0115	P.13A-165
				At 0°C (32°F)	0°C		
				At 20°C (68°F)	20°C		
				At 40°C (104°F)	40°C		
				At 80°C (176°F)	80°C		
2	Crankshaft position sensor	• Engine: Cranking • Tachometer: Connected			Engine speeds displayed on the scan tool and tachometer are identical.	Code No. P0335	13A-176
		• Engine: Idle • Closed throttle position switch: ON	Engine coolant temperature	At –20°C (–4°F)	1,300–1,500 rpm		
				At 0°C (32" F)	1,200–1,400 rpm		
				At 20°C (68°F)	1,100–1,300 rpm		

Item No.	Inspection item	Inspection contents			Normal contents	Inspection procedure No.	Reference page
22	Crankshaft position sensor	• Engine: Idle • Closed throttle position switch: ON	Engine coolant temperature	At 40°C (104° F)	950–1,150 rpm	Code No. P0335	13A-176
				At 80°C (176°F)	650–850 rpm		
24	Vehicle speed sensor	Drive at 40 km/h (25 miles/h)			Approx. 40 km/h	Code No. P0500	13A-187
25	Barometric pressure sensor	Ignition switch: ON	Height	At 0 m (0 ft.)	101 kPa	Code No. P0105	13A-163
				At 600 m (1,969 ft.)	95 kPa		
				At 1200 m (3,937 ft.)	88 kPa		
				At 1800 m (5,906 ft.)	81 kPa		
26	Closed throttle position switch	• Ignition switch: ON • Depress accelerator pedal repeatedly	Throttle valve: Set to idle position		ON	Code No. P0510	13A-190
			Throttle valve: Slightly open		OFF*6		
27	Power steering pressure switch	Engine: Idle	Steering wheel stationary		OFF	Code No. P0551	13A-191
			Steering wheel turning		ON		
28	A/C switch	Engine: Idle (When A/C switch is ON, A/C compressor should be operating)	A/C switch: OFF		OFF	procedure No. 32	13A-224
			A/C switch: ON		ON		
29	Park/Neutral position switch <A/T>	Ignition switch: ON	P or N		P or N	procedure No. 31	13A-223
			D, 2, L or R		D, 2, L or R		
1	Injectors**	Engine: Cranking	When engine coolant temperature is 0°C (32°F)		37–45 ms*4 <2.0L Engine (Turbo)> 15-22 ms*4 <2.4L Engine>	–	–

Item No.	Inspection item	Inspection contents		Normal contents	Inspection procedure No.	Reference page
41	Injectors**	Engine: Cranking	When engine coolant temperature is 20°C (68°F)	20–24 ms <2.0L Engine (Turbo)> 31–46 ms <2.4L Engine>		–
			When engine coolant temperature is 80°C (176°F)	5.3–6.5 ms <2.0L Engine (Turbo)? 7.2-11 ms <2.4L Engine>		
	Injectors*3	• Engine coolant temperature: 80–95°C (176–203°F) • Lights, electric cooling fan and all accessories: OFF • Transaxle: Neutral (A/T: P range)	Engine is idling	1.8–2.2 ms <2.0L Engine (Turbo)> 2.2-3.4 ms <2.4L Engine>		
			2,500 r/min	1.45– 1.75 ms <2.0L Engine (Turbo)> 2.1–3.3 ms <2.4L Engine>		
			When engine is suddenly raced	Increases		
44	Ignition coils and ignition power transistor	• Engine: Warm • Timing light is set (The timing light is set in order to check actual ignition timing)	Engine is idling	0–13° BTDC <2.0L Engine (Turbo)> 2–18° BTDC <2.4L Engine>	–	–
			2,500 r/min	20–40° BTDC <2.0L Engine (Turbo)> 27–47° BTDC <2.4L Engine>		
45	Idle air control (stepper) position*5 <2.0L Engine (Turbo)>	• Engine coolant temperature: 80–95°C (176–203°F) • Lights, electric cooling fan and all accessories: OFF • Transaxle: Neutral (A/T: P range) • Closed throttle position switch: ON • Engine: Idle (When A/C switch is ON, A/C compressor should be operating)	A/C switch: OFF	2-25 steps	–	–
			A/C switch: OFF → ON	Increases by 10–70 steps		
			• A/C switch: OFF • Select lever: N → D range	Increases by 5–50 steps		
49	A/C compressor clutch relay	Engine: Warm, idle	A/C switch: OFF	OFF (Compressor clutch is not operating)	procedure No. 32	13A-224
			A/C switch: ON	OFF (Compressor clutch is operating)		

TSB Revision

Item No.	Inspection item	Inspection contents		Normal contents	Inspection procedure No.	Reference page
55	IAC motor position sensor *5 <2.4L Engine>	• Engine coolant temperature: 80 – 95°C (176 – 203°F) • Lights, electric cooling fan and all accessories: OFF • Transaxle: Neutral (A/T: P range) • Closed throttle position switch: ON • Engine: at idle (When the A/C switch is on, the compressor should be operating.)	A/C switch: OFF	Increases by 2 – 20 steps	–	–
			A/C switch: from OFF to ON	Increases by 8 – 50 steps		
			• A/C switch: OFF • Selector lever: from N range to D range	Increases by 3 – 40 steps		
59	Heated oxygen sensor (Rear)	• Transaxle: 2nd gear <M/T> L range <A/T> • Drive with wide open throttle	3,500 r/min	600– 1,000 mV	Code No. P0136	13A-170
31	Long-term fuel compensation	Engine: Warm, 2,500 r/min without any load (during closed loop)		-12.5-12.5 %	Code No. P0170	13A-172
32	Short-term fuel compensation	Engine: Warm, 2,500 r/min without any load (during closed loop)		–17–17 % <2.0L Engine (Turbo)> –25–17 % <2.4L Engine>	Code No. P0170	P.13A-172
37	Calculation load value	• Engine: Warm • Driving range (from idle to maximum output)	Engine is idling	12-19 % <2.0L Engine (Turbo)> 10–30 % <2.4L Engine>		–
			2,500 r/min	12–19 % <2.0L Engine (Turbo)> 10–30 % <2.4L Engine>		
18	Fuel control condition	Engine: Warm	2,500 r/min	Closed loop	Code No. P0125	13A-1 6 7
			When engine is suddenly raced	Open loop – drive condition		
15	Manifold differential pressure sensor	Engine: Warm; idle		32.8-46.2 kPa <2.0L Engine (Turbo)> 55.3-68.7 kPa <2.4L Engine>	Code No. P1400	13A-1 94

ACTUATOR TEST REFERENCE TABLE

13100900265

iter No	Inspection item	Drive contents	inspection contents		Normal condition	inspection procedure No.	Referenc page
01	Injectors	Cut fuel to No. 1 injector	Engine: Warm, idle (Cut the fuel supply to each injector in turn and check cylinders which don't affect idling.)		Idle speed drops equally for each injector	Code No. P0201, P0202, P0203, P0204	13A-173
02		Cut fuel to No. 2 injector					
03		Cut fuel to No. 3 injector					
04		Cut fuel to No. 4 injector					
07	Fuel pump	Fuel pump operates and fuel is recirculated.	• Engine: Cranking • Fuel pump: Activated inspect according to both the above conditions.	Pinch the return hose with fingers to feel the pulse of the fuel being recirculated.	Pulse is felt.	Procedure No. 28 <2.0L Engine (Turbo)>	13A-220
				Listen near the fuel tank for the sound of fuel pump operation.	Typical electric fuel pump whine.	Procedure No. 29 <2.4L Engine>	13A-221
08	Evaporative emission purge solenoid	Solenoid valve turns from OFF to ON.	Ignition switch: ON		Clicks when solenoid valve is driven.	Code No. P0443	13A-184
09	Fuel pressure solenoid <2.0L Engine (Turbo)>	Solenoid valve turns from OFF to ON.	ignition switch: ON		Clicks when solenoid valve is driven.	Code No. P1105	13A-193
10	EGR solenoid	Solenoid valve turns from OFF to ON.	ignition switch: ON		Clicks when solenoid valve is driven.	Code No. P0403	13A-180
12	Turbocharger waste gate solenoid <2.0L Engine (Turbo)>	Solenoid valve turns from OFF to ON.	Ignition switch: ON		Clicks when solenoid valve is driven.	Code No. P1104	13A-192
17	Basic ignition timing	Set to ignition timing adjustment mode'	• Engine: Idling • Timing light is set		5° BTDC	-	
20	Radiator fan (Hi) Condenser fan (Hi)	Drive the fan motors (radiator and condenser).	• Ignition switch: ON • A/C switch: ON		Fan motor operates at low speed	Procedure No. 33	3A-225
21	Radiator fan (Hi) Condenser fan (Low)	Drive the fan motors (radiator and condenser).	• Ignition switch: ON • A/C switch: ON		Fan motor operates at low speed.	Procedure No. 33	3A-225

TSB Revision

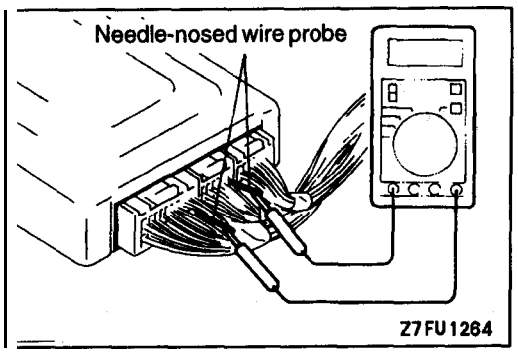

CHECK AT THE ENGINE CONTROL MODULE (ECM)

13100920223

TERMINAL VOLTAGE CHECK CHART

1. Connect a needle-nosed wire probe (paper clip etc.) to a voltmeter probe.
2. insert the needle-nosed wire probe into each of the ECM connector terminals from the wire side, and measure the voltage while referring to the check chart.

   NOTE
   1. Measure voltage with the ECM connectors connected.
   2. You may find it convenient to pull out the ECM to make it easier to reach the connector terminals.'
   3. Checks don't have to be carried out in the order given in the chart.

   Caution
   Short-circuiting the positive (+) probe between a connector terminal and ground could damage the vehicle wiring, the sensor, ECM, or all three. Use care to prevent this!

3. If voltmeter shows any division from standard value, check the corresponding sensor, actuator and related electrical wiring, then repair or replace.
4. After repair or replacement,, recheck with the voltmeter to confirm that the repair has corrected the problem.

ECM Connector Terminal Arrangement

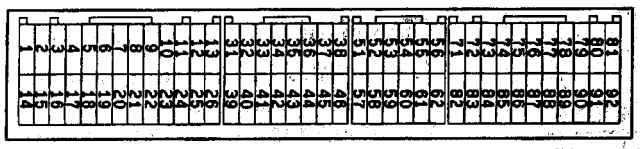

9FU0393

Terminal No. <2.0L Engine (Turbo)>	Terminal No. <2.4L Engine>	Check item	Check condition (Engine condition)	Normal condition
1	1	No. 1 injector	• Engine: Warm, idle • Suddenly depress the accelerator pedal.	From 11–14 V momentarily drops slightly
14	14	No. 2 injector		
2	2	No. 3 injector		
15	15	No. 4 injector		
3	–	Fuel pressure solenoid	Ignition switch: ON	B+
			Engine: From cranking to idling (Within approx. 2 minutes)	0–3 V → B+
4		Stepper motor coil <A1>	• Engine: Warm, idle • Check immediately after hot restart	0–6 V (repeats)
17		Stepper motor coil <A2>		
5	–	Stepper motor coil <B1>		
18		Stepper motor coil <B2>		
–	4	Idle air control motor (Closed)	Ignition switch: Immediately after turning ON	2V or more (Momentartly) → O-l V
–	17	Idle air control motor (Open)	Ignition switch: Immediately after turning ON	4V or more (Momentartly) → O-l V
–	5	Idle air control motor valve position sensor No.1	Ignition switch: Immediately after turning ON	1.5–4V (Momentarily) → O-l V or 4.5-5.5 V
	18	Idle air control motor valve position sensor No.2	Ignition switch: Immediately after turning ON	1.5–4V (Momentarily) → O-l V or 4.5-5.5 V
6	6	EGR solenoid	Ignition switch: ON	B+
			• Engine: Idle • Suddenly depress the accelerator pedal.	From B+, momentarily drops
7	7	Engine/transaxle general control torque reduction request signal 1	Engine: Idle	4.5-5.5 V
			During driving and speed-changing after engine warming up	0–1 V
8		Fuel pump relay	Ignition switch: ON	B+
			Engine: Idle	0–3 V
	8	Fuel pump relay module	Ignition switch: ON	0–0.5 V
			Engine: Cranking	0.7–2.8 V
			Engine: Idle	
9	9	Evaporative emission purge solenoid	Ignition switch: ON	B+
			Engine: Warm, 3,000 r/min	0–3 V

Terminal No. <2.0L Engine (Turbo)>	Terminal No. <2.4L Engine>	Check item	Check condition (Engine condition)	Normal condition
10	10	Ignition power transistor <A>	Engine: 3,000 r/min	0.3–3.0 V
23	23	Ignition power transistor <B>		
11	–	Turbocharger waste gate solenoid	Ignition switch: ON	B+
			Engine: Idle (When the premium gasoline is used)	0–3 V
12	12	Power supply	Ignition switch: ON	B+
25	25			
16	–	Boost meter	Ignition switch: ON	4–13V
			• Engine: Idle • Suddenly depress the accelerator pedal.	From B+, momentarily drops
19	19	Volume air flow sensor reset signal	Engine: Idle	Q-I V
			Engine: 3,000 r/min	6-9 V
20	20	Fan motor relay (High)	Radiator fan is not operating [Engine coolant temperature is 90°C (194°F) or less]	B+
			Radiator fan is operating at high speed [Engine coolant temperature is 105°C (221°F) or more]	0–3 V
21	21	Fan motor relay (Low)	Radiator fan is not operating [Engine coolant temperature is 90°C (194°F) or less]	B+
			Radiator. fan is operating at low speed [Engine coolant temperature is 90–105°C (194–221°F) or more]	0–3 V
22	22	A/C compressor clutch relay	• Engine: Idle • A/C switch: OFF → ON (A/C compressor is operating)	B+ or momentarily 6 V or more → 0–3 V as A/C clutch cycles
33	33	Generator G terminal	• Engine: idle after warm-up (radiator fan: OFF) • Headlight: OFF → ON • Rear defogger switch: OFF → ON • Stop lamp: OFF → ON	0.2–3.5 V, voltage drops
36	36	Check engine/Malfunction indicator lamp	Ignition switch: OFF → ON	0–3 V → 9–13 V (after several seconds have passed)
37	37	Power steering pressure switch	Engine: Warm, idle; When steering wheel is stationary	B+
			Engine: Warm, idle; When steering wheel is turned	0–3 V
38	38	MFI relay (Power supply)	Ignition switch: OFF	B+
			Ignition switch: ON	0–3 V

Terminal No. <2.0L Engine (Turbo)>	Terminal No. <2.4L Engine>	Check item	Check condition (Engine condition)		Normal condition
41	41	Generator FR Terminal	• Engine: idle after warm-up (radiator fan: OFF) • Headlight: OFF → ON • Rear defogger switch: OFF → ON • Stop lamp: OFF → ON		0.2–3.5 V, voltage drops
42	42	A/C refrigerant intermediate pressure switch	A/C refrigerant pressure (High-pressure side)	1,373 kPa (199 psi) or less	B+
				1,863 kPa (270 psi) or more	0–3 V
43	43	Engine/transaxle general control torque reduction request signal 2	Engine: Idle		0–1 V
			During driving and speed-changing after engine warming up		1–5.5 V
45	45	A/C switch	Engine: Idle	Turn the A/C switch OFF	0–3 V
				Turn the A/C switch ON (A/C compressor is operating)	B+
46	46	Engine/transaxle general control torque execution signal	Engine: Idle at the coolant temperature of 50°C (122°F) or lower		b-l V
			Engine: Warm, idle		1–4 V
54	54	Heated oxygen sensor heater (Rear)	Engine: Warm, idle		0–3 V
			Engine: 5,000 r/min		B+
-	55	Evaporative emission ventilation solenoid	Ignition switch: ON		B+
			After the engine has warmed up, drive the vehicle at a constant speed 88 km/h (55 mph) (OBD-II monitoring conditions).		Momentarily 0–3V
58	58	Engine ignition signal	Engine: 3,000 r/min		0.3–3.0 V
60	60	Heated oxygen sensor heater (Front)	Engine: Warm, idle		0–3 V
			Engine: 5,000 r/min		B+
	61	Fuel tank differential pressure sensor	Engine: Idle		1.2–3.8 V
71	71	Ignition switch-ST	Engine: Cranking		8V or more
72	72	Intake air temperature sensor	Ignition switch: ON	When intake air temperature is 0°C (32°F)	3.2–3.8 V
				When intake air temperature is 20°C (68°F)	2.3-2.9 V
				When intake air temperature is 40°C (104°F)	1.5–2.1 V
				When intake air temperature is 80°C (176°F)	0.4–1.0 V

Terminal No. <2.0L Engine (Turbo)>	Terminal No. <2.4L Engine>	Check item	Check condition (Engine condition)		Normal condition
73	73	Manifold differential pressure sensor	Engine: Idle		0.8–2.4 V
			• Engine: Idle • Suddenly depress the accelerator pedal		'rises from 0.8–2.4 V suddenly
75	75	Heated oxygen sensor (Rear)	• Transaxle: 2nd <M/T>, L range <A/T> • Driving with the throttle widely open • Engine: 3,500 r/min or more		0.6–1.0 V
76	76	Heated oxygen sensor (Front)	Engine: Warm, 2,500 r/min (Use a digital-type voltmeter)		0 ↔ 0.8V (repeats)
80	80	Backup power supply	Ignition switch: OFF		B+
81	81	Sensor impressed voltage	Ignition switch: ON		4.5-5.5 V
92	–	Ignition switch-IG	Ignition switch: ON		B+
33	83	Engine coolant temperature sensor	Ignition switch: ON	When engine coolant temperature is 0°C (32°F)	3.2-3.8 V
				When engine coolant temperature is 20°C (68° F)	2.3-2.9 V
				When engine coolant temperature is 40°C (104°F)	1.3–1.9 V
				When engine coolant temperature is 80°C (176°F)	0.3–0.9 V
14	84	Throttle position sensor	Ignition switch: ON (Check for smooth voltage increase as throttle valve is moved from idle position to wide open throttle.)	Idle	0.3–1.0 V
				Wide open throttle valve	4.5-5.5 V
15	85	Barometric pressure sensor	Ignition switch: ON	When altitude is 0 m (0 ft.)	3.7-4.3 V
				When altitude is 1,260 m (3937 ft.)	3.2-3.8 V
16	86	Vehicle speed sensor	• Ignition switch: ON • Move the vehicle slowly forward		0 ↔ 5 V (repeats)

Terminal No. <2.0L Engine (Turbo)>	Terminal No. <2.4L Engine>	Check item	Check condition (Engine condition)		Normal condition
87	87	Closed throttle position switch	Ignition switch: ON	Set throttle valve to idle position	O-I V
				Slightly open throttle valve	4 V or more
88	88	Camshaft position sensor	Engine: Cranking		0.4–3.0 V
			Engine: Idle		0.5–2.0 V
89	89	Crankshaft position sensor	Engine: Cranking		0.4–4.0 V
			Engine: Idle		1.5–2.5 V
90	90	Volume air flow sensor	Engine: Idle		2.2-3.2 V
			Engine: 2,500 r/min		
91	91	Park/Neutral position switch <A/T>	Ignition switch: ON	Set selector lever to P or N	0–3 V
				Set-selector lever. to D, 2, L or R	8-14 V

TERMINAL RESISTANCE AND CONTINUITY CHECKS

1. Turn the ignition switch off.
2. Disconnect the ECM connector.
3. Measure the resistance and check for continuity between the terminals of the ECM harness-side connector while referring to the check chart.

   NOTE
   1. When measuring resistance and checking continuity' a harness for checking contact pin pressure should' be used instead of inserting a test probe.
   2. Checks do not have to be carried out in the order given in this chart.

   Caution
   If resistance or continuity checks are performed on the wrong terminals, damage to the vehicle wiring, sensors, ECM, and/or ohmmeter may occur. Use care to prevent this!

4. If the ohmmeter shows any deviation from the normal condition, check the corresponding sensor, actuator and related electrical wiring, and then repair or replace.
5. After repair or replacement, recheck with the ohmmeter to confirm that the repair or replacement has corrected the problem.

ECM Harness Side Connector Terminal Arrangement

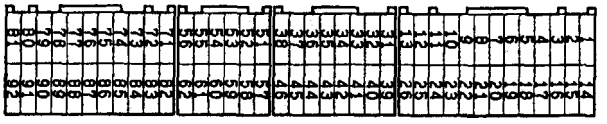

9FU0392

Terminal No.	Inspection item	Normal condition (Check condition)
1–12	No. 1 injector	2-3 Ω [At 20°C (68°F)] <2.0L Engine (Turbo)> 13-16 Ω [At 20°C (68°F)] <2.4L Engine>
14-12	No. 2 injector	
2-12	No. 3 injector	
15-12	No. 4 injector	
3-12	Fuel pressure solenoid	36-44 Ω [At 20°C (68°F)]
4-12	Stepper motor coil (Al) <2.0L Engine (Turbo)>	28-33 Ω [At 20°C (68°F)]
17-12	Stepper motor coil (A2) <2.0L Engine (Turbo)>	
5-12	Stepper motor coil (B1) <2.0L Engine (Turbo)>	
18-12	Stepper motor coil (B2) <2.0L Engine (Turbo)>	
4-17	IAC motor <2.4L Engine>	Continuity

Terminal' No.	Inspection item	Normal condition (Check condition)
6-12	EGR solenoid	36-44 Ω [At 20°C (68°F)]
9-12	Evaporative emission purge solenoid	36-44 Ω [At 20°C (68°F)]
11-12	Turbocharger waste gate solenoid <2.0L Engine (Turbo)>	36-44 Ω [At 20°C (68°F)]
13–Body ground	E C M g r o u n d	Continuity (0Ω)
26–Body ground	ECM ground	
54-12	Heated oxygen sensor heater (rear)	Approx. 12 Ω [At 20°C (68°F)]
55-12	Evaporative emission ventilation solenoid	36-44 Ω [At 20°C (68°F)]
60–12	Heated oxygen sensor heater (front)	Approx. 12 Ω [At 20°C (68°F)]
72-92	Intake air temperature sensor	5.3-6.7 kΩ [When intake air temperature is 0°C (32°F)]
		2.3–3.0 kΩ [When intake air temperature is 20°C (68°F)]
		1.0– 1.5 kΩ [When intake air temperature is 40°C (104°F)]
		0.30–0.42 kΩ [When intake air temperature is 80°C (176°F)]
33–92	Engine coolant temperature sensor	5.1–6.5 kΩ [When coolant temperature is 0°C (32°F)]
		2.1–2.7 kΩ [When coolant temperature is 20°C (68° F)]
		0.9– 1.3 kΩ [When coolant temperature is 40°C (104°F)]
		0.26–0.36 kΩ [When coolant temperature is 80°C (176°F)]
17-92	Closed throttle position switch	Continuity (when throttle valve is at idle position)
		No continuity (when throttle valve is slightly open)
1 -Body ground	Park/Neutral position switch <A/T>	Continuity (when select lever is at P or N)
		No continuity (when select lever is at D, 2, L or R)

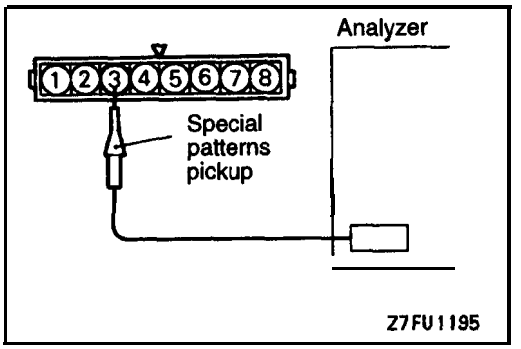

INSPECTION PROCEDURE USING AN ANALYZER

13100930165

VOLUME AIR FLOW SENSOR

Measurement method

1. Disconnect the volume air flow sensor connector, and connect the special tool (test harness: MB991348) in between. (All terminals should be connected.)
2. Connect the analyzer special patterns pickup to volume air flow sensor connector terminal 3.

Alternate method (lest harness not available)

1. Connect the analyzer special patterns pickup to ECM terminal 90.

Standard Wave Pattern
Observation conditions

Function	Special patterns
Pattern height	Low
Pattern selector	Display
Engine r/min	Idle

Standard wave pattern

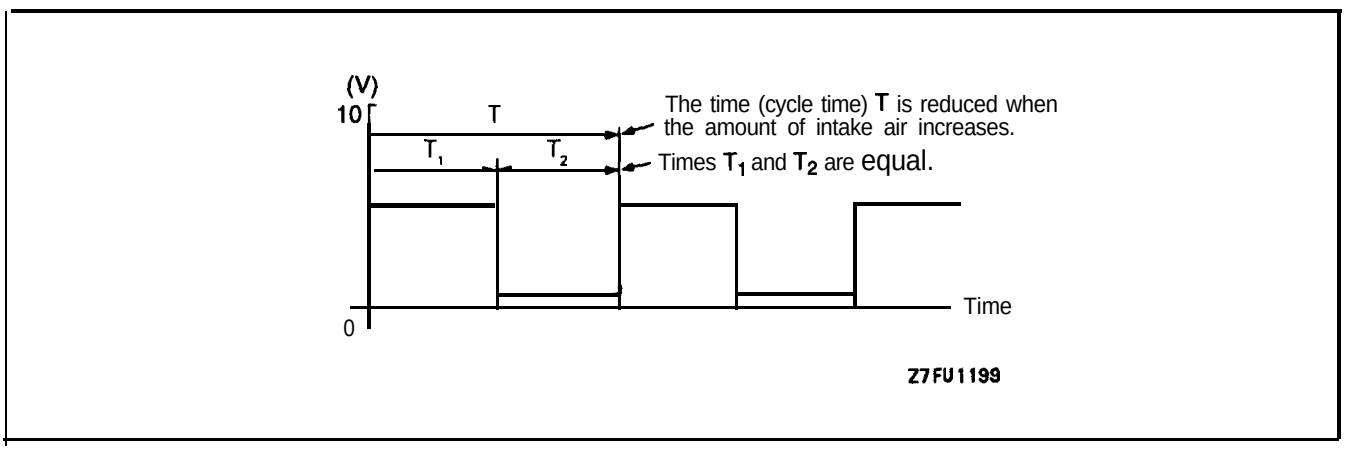

Observation conditions (pattern changes with engine **speed** changes.)

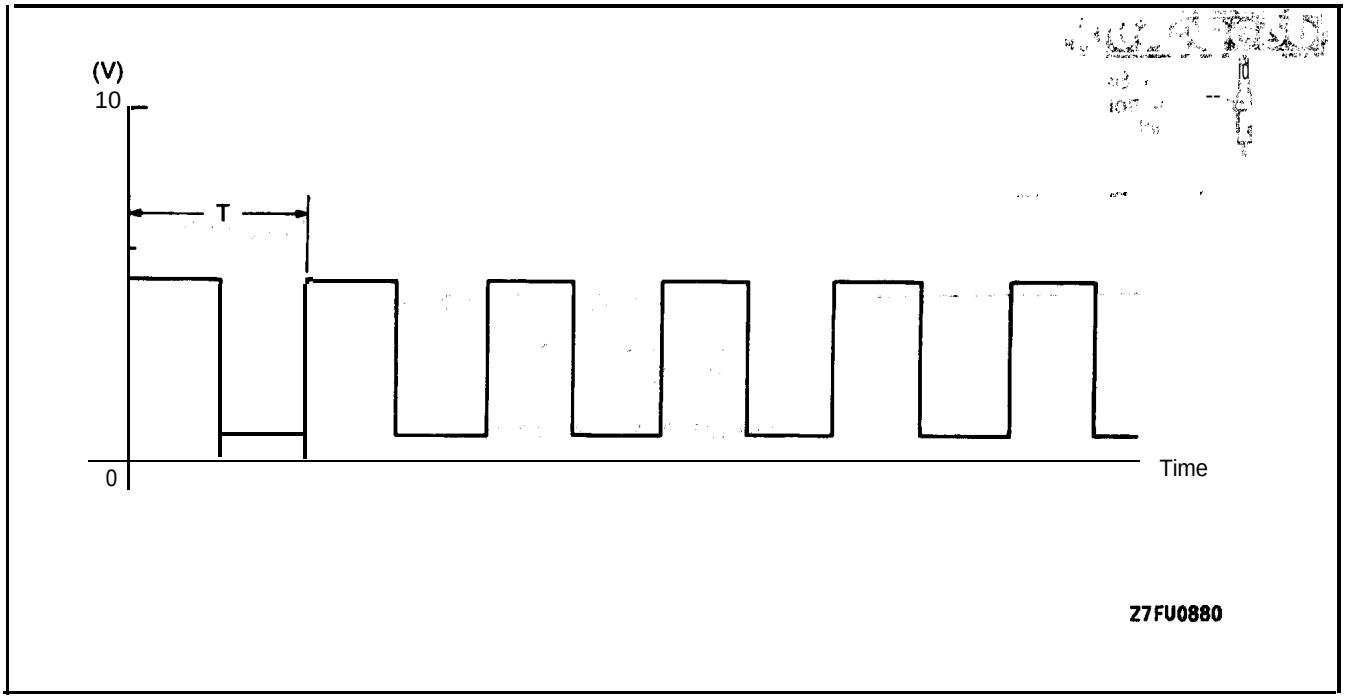

Wave pattern observation points

Check to be sure that cycle time **T** becomes shorter and the frequency increases when **the engine** speed is increased.

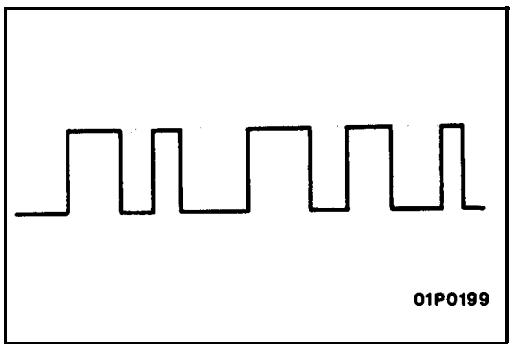

Examples of abnormal wave patterns

- Example 1

  Cause of problem

  Sensor interface malfunction

  Wave pattern characteristics

  Rectangular wave pattern is output even when the engine is not started.

- Example 2

  Cause of problem

  Damaged rectifier or vortex generation column .

  Wave pattern characteristics

  Unstable wave pattern with non-uniform frequency. However, when an ignition leak occurs during acceleration, the wave pattern will be distorted temporarily, even if the volume air flow sensor is normal.

TSB Revision

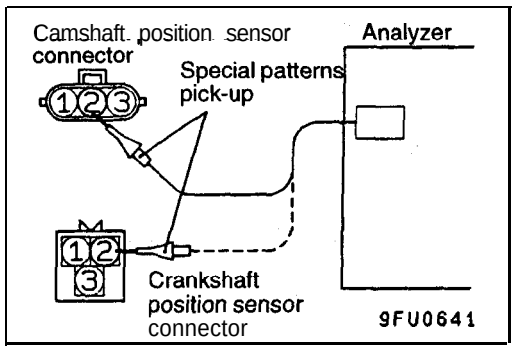

CAMSHAFT POSITION SENSOR AND CRANKSHAFT POSITION SENSOR

Measurement method

1. Connect the analyzer special patterns pickup to camshaft position sensor terminal 2.
2. Disconnect the crankshaft position sensor connector and connect the special tool (test harness: MD998478) in. between.
3. Connect the analyzer special patterns pickup to crankshaft position sensor terminal 2.

Alternate method (Test harness not available)

1. Connect the analyzer special patterns pickup. to ECM terminal 88. (When checking the camshaft position sensor. signal wave pattern)
2. Connect the analyzer special patterns pickup to ECM' terminal 89. (When checking the crankshaft position sensor signal wave pattern)

Standard Wave Pattern Observation conditions

Function	Special patterns
Pattern height	Low
Pattern selector	Display
Engine r/min	Idle

Standard wave pattern

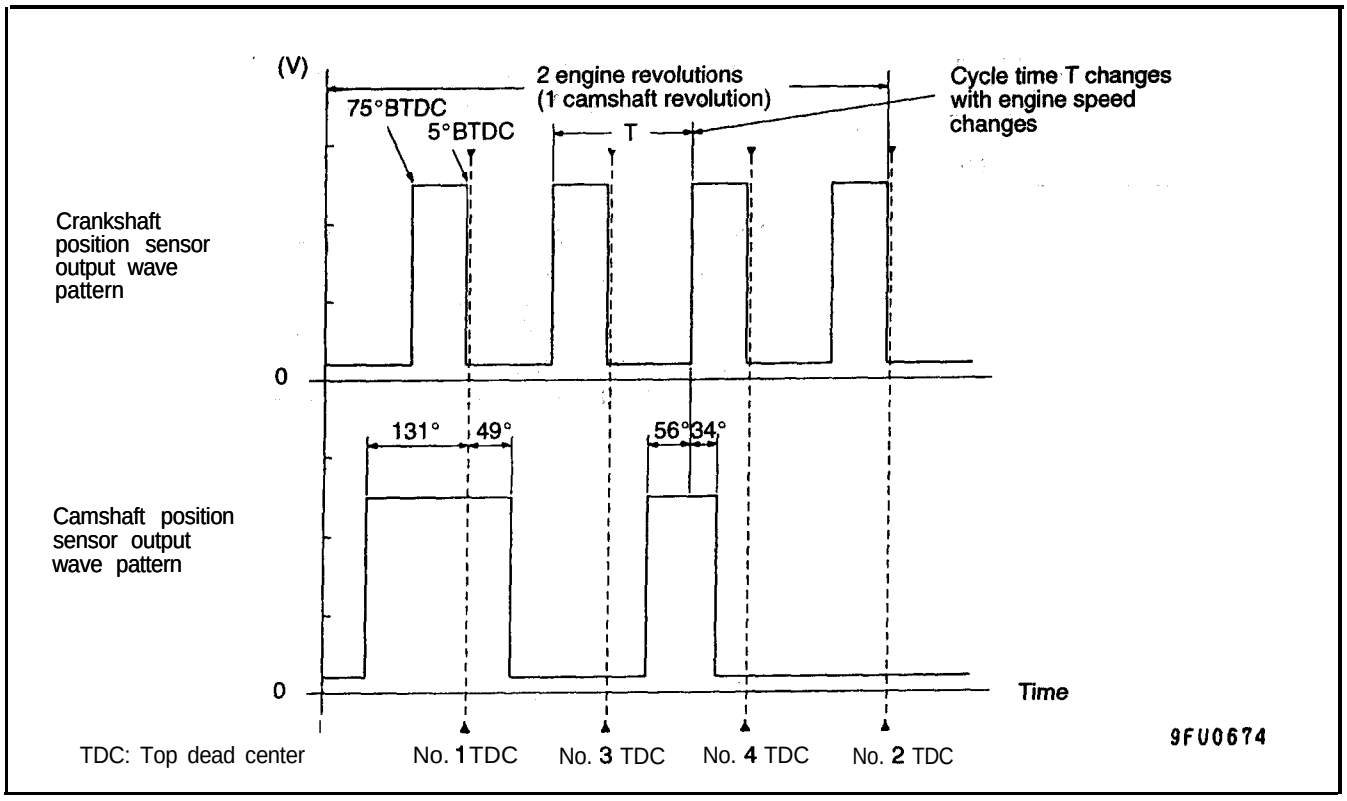

Wave Pattern Observation Points

Check that cycle time T becomes shorter when the engine speed increases.

TSB Revision

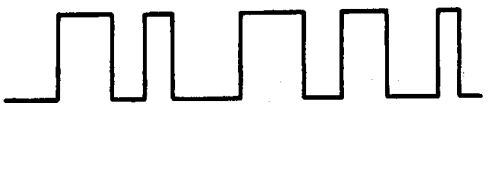

01P0199

Examples of abnormal wave patterns

- Example 1

  Cause of problem

  Sensor interface malfunction

  Wave pattern characteristics

  Rectangular wave pattern is output even when the engine is not started.

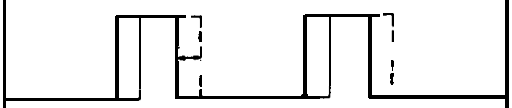

7FU1192

- Example 2

  Cause of problem

  Loose timing belt
  Abnormality in sensor disk

  Wave pattern characteristics

  Wave pattern jumps to the left or right.

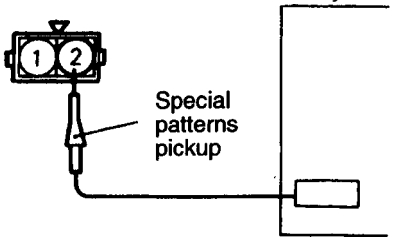

Z7FU1201

INJECTOR

Measurement method

1. Disconnect the injector connector and connect the special tool (test harness: MB991 348) in between. (Both the terminal on the engine control module side and the terminal on the power supply side should be connected.)
2. Connect the analyzer special patterns pickup to the test harness clip on the engine control module side.

Alternate method (Test harness not available)

1. Connect the analyzer special patterns pickup' to ECM terminal 1 to analyze the No.1 cylinder, connection terminal 2 to analyze the No.3 cylinder, connection terminal 14 to analyze the No.2 cylinder and connection terminal 15 to analyze the No.4 respectively.

Standard Wave Pattern Observation conditions

Function	Special patterns
Pattern height	Variable
Variable knob	Adjust while viewing the wave pattern
Pattern selector	Display
Engine r/min	Idle

Standard wave pattern

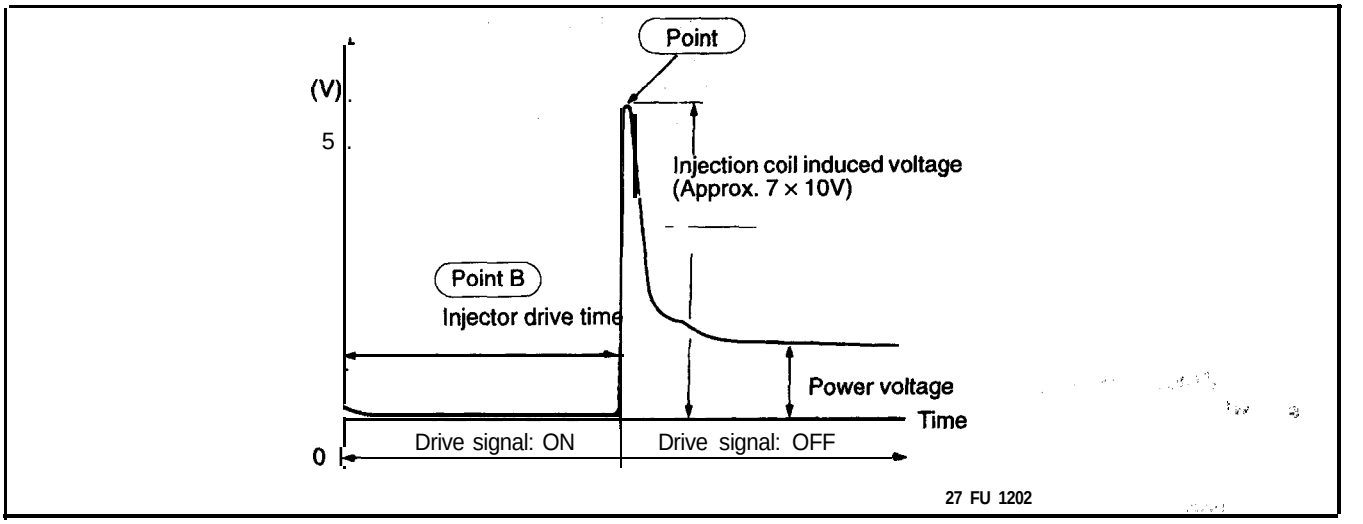

Wave pattern observation points

Point A: Height of injector coil induced voltage

Contrast with standard wave pattern	Probable cause
Injector coil induced voltage is low or doesn't appear at all.	Short in the injector solenoid

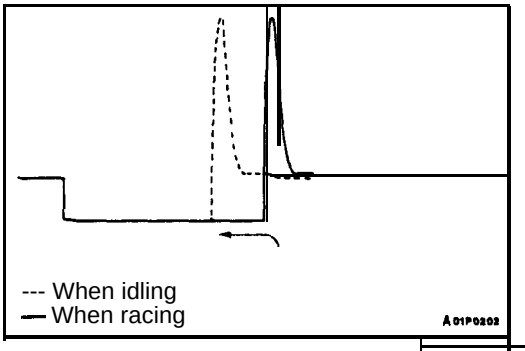

Point B: Injector drive time

- The injector drive time will be synchronized with the scan tool tester display.
- When the engine is suddenly raced, the drive time will be greatly extended at first, but the drive time will soon match the engine speed.

TSB Revision

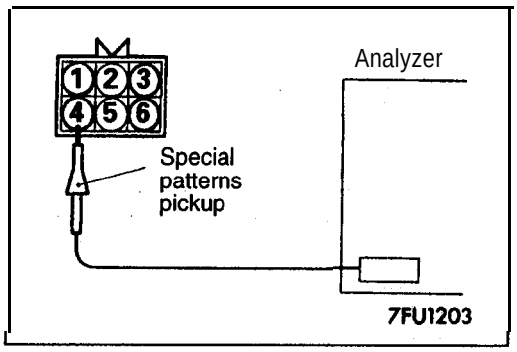

STEPPER MOTOR <2.0L Engine (Turbo)>

Measurement method

1. Disconnect the stepper motor connector, and connect the special tool (test harness: MD998463) in between.
2. Connect the analyzer special patterns pickup to the stepper motor-side connector terminal 1 (red clip on the special tool), terminal 3 (blue clip), terminal 4 (black clip) and terminal 6 (yellow clip) respectively.

Alternate method (Test harness not available) .

1. Connect the analyzer special patterns pickup to ECM terminal 4, connection terminal 5, connection terminal 17, and' connection terminal 18 respectively.

Standard Wave Pattern
Observation conditions

Function	Special patterns
Pattern height	High
Pattern selector	Display
Engine condition	When the engine coolant temperature is 20°C (68°F) or below, turn the ignition switch from OFF to ON (without starting the engine).
	While the engine is idling, turn the A/C switch to ON.
	Immediately after starting the warm engine (approx. 1 minute).

Standard wave pattern

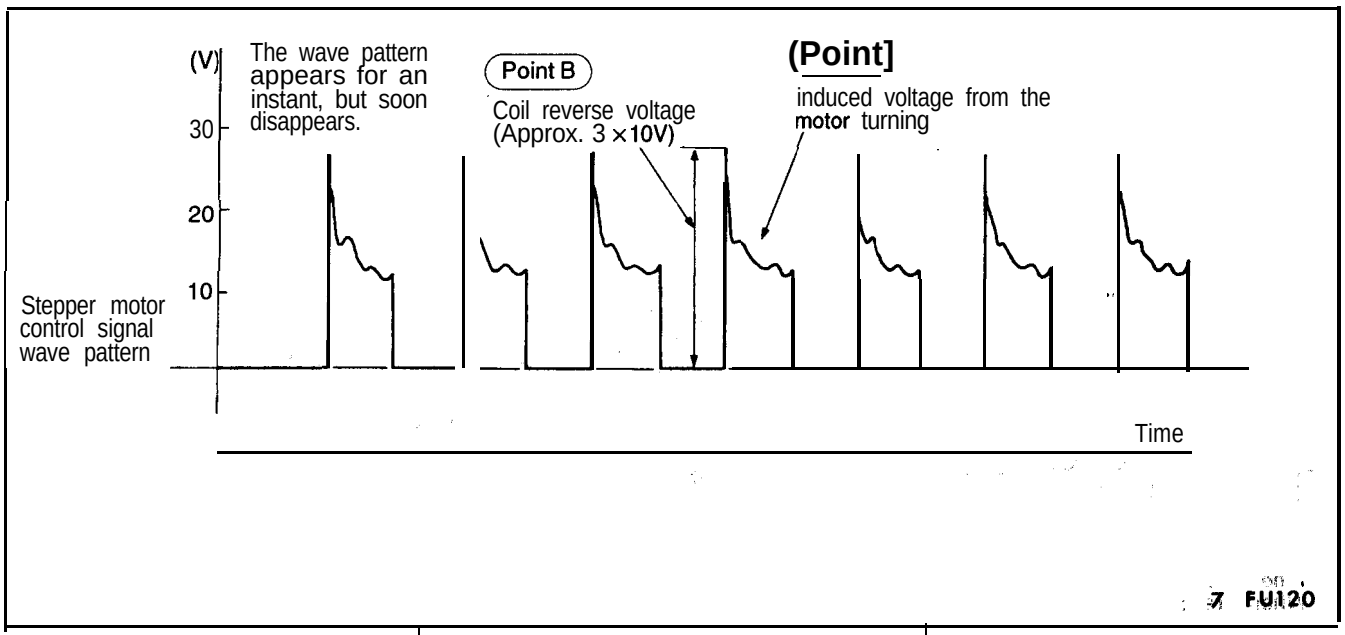

TSB Revision

Wave pattern observation points

Check that the standard wave pattern appears when the stepper motor is operating.

Point A: Presence or absence of induced voltage from the motor turning. (Refer to the abnormal wave pattern.)

Contrast with standard wave pattern	Probable cause
Induced voltage does not appear or is extremely small.	Motor is malfunctioning

Point B: Height of coil reverse voltage

Contrast with standard wave pattern	-Probable cause
Coil reverse voltage does not appear or is extremely small.	Short in the coil

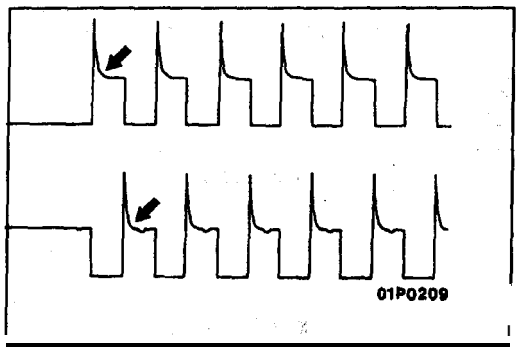

Examples of abnormal wave pattern

Cause of problem

Motor is malfunctioning. (Motor is not operating.)

Wave pattern characteristics

Induced voltage from the motor turning does not appear.

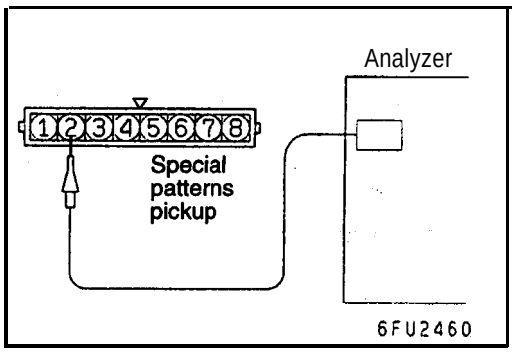

IGNITION COIL AND IGNITION POWER TRANSISTOR

- Ignition coil primary signal
  Refer to GROUP 16 – Ignition System.
- Ignition power transistor control signal.

Measurement method

1. Disconnect the ignition power transistor connector, and connect the special tool (test harness:. MB991348) in between. (All terminals should be connected.)
2. Connect the analyzer special patterns pickup to the ignition power transistor connector terminal 2 (No. 2 – No. 3) and terminal 7 (No. 1 – No. 4) respectively.

Alternate method (Test harness not available)

1. Connect the analyzer special patterns pickup to ECM terminal 10 and connection terminal 23 respectively.

Standard Wave Pattern Observation conditions

Function	Special patterns
Pattern height	Low
Pattern selector	Display
Engine r/min	Approx. 1,200 r/min

Standard wave pattern

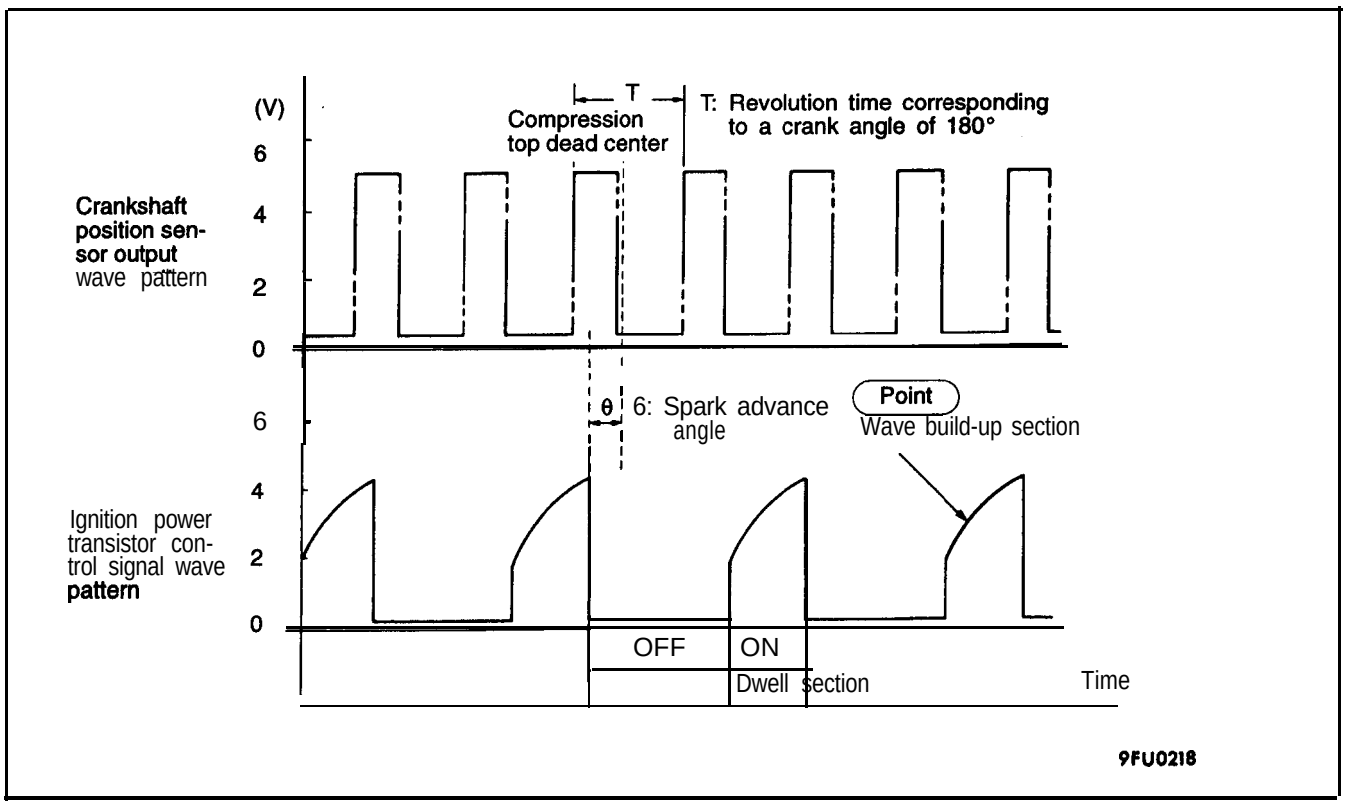

Wave pattern observation points

Point: Condition of wave pattern build-up section and maximum voltage (Refer to abnormal **wave** pattern examples 1 and 2.)

Condition of wave pattern build-up section and maximum voltage	Probable cause
Rises from approx. **2V** to approx. **4.5V** at the top-right	Normal
2V rectangular wave	Open-circuit in ignition primary circuit
Rectangular wave at power voltage	Ignition power transistor malfunction

--- Normal wave pattern

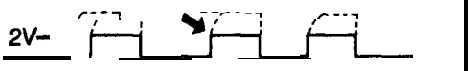

-- Normal wave pattern

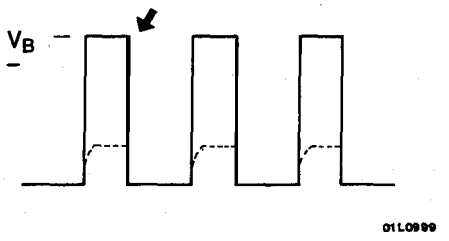

Examples of abnormal wave patterns

- Example 1

  Wave pattern during engine cranking

  Cause of problem

  Open-circuit in ignition primary circuit

  Wave pattern characteristics

  Top-right part of the build-up section cannot be seen, and voltage value is approxiinatety 2V too low.

- Example 2

  Wave pattern during engine cranking

  Cause of problem

  Malfunction in ignition power transistor

  Wave pattern characteristics

  Power voltage results when the ignition power transistor is ON.

ON-VEHICLE SERVICE

13100100221

THROTTLE BODY (THROTTLE VALVE AREA) CLEANING

1. Start the engine and warm it up until the coolant is heated to 80°C (176°F) or higher and then stop the engine.
2. Remove the air intake hose from the throttle body.

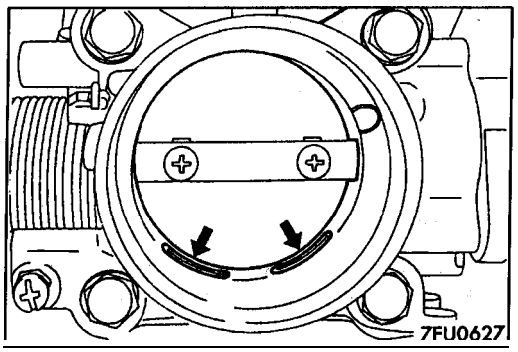

3. Plug the bypass passage inlet (arrow) of the throttle body.

   Caution
   Do not allow cleaning solvent to enter the bypass passage.

4. Spray cleaning solvent into the valve through the throttle' body intake port and leave it for about 5 minutes.
5. Start the engine, race it several times and idle it for about 1 minute. If the idling speed becomes unstable (or if the engine stalls) due to the bypass passage being plugged,, slightly open the throttle valve to keep the engine running.
6. If the throttle valve deposits are not removed, repeat steps 4 and 5.
7. Unplug the bypass passage inlet.
8. Attach the air intake hose.
9. Use the scan tool to erase the diagnostic trouble code.
10. Adjust the basic idle speed. (Refer to P.13A-266.)

NOTE
If the engine hunts while idling after adjustment of the basic idle speed, disconnect the (–) cable from the battery for 10 seconds or more, and then reconnect it and run the engine at idle for about 10 minutes.

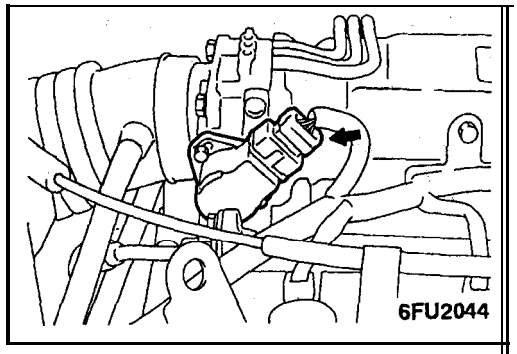

CLOSED THROTTLE POSITION SWITCH AND THROTTLE POSITION SENSOR ADJUSTMENT

13100130060

NOTE
When using the scan tool, proceed to service data item 26 and observe the ON/OFF changes to the closed throttle position switch instead of performing ohmmeter tests. If the scan tool is not available, follow the steps bellow.

1. Disconnect the connector of the throttle position sensor.

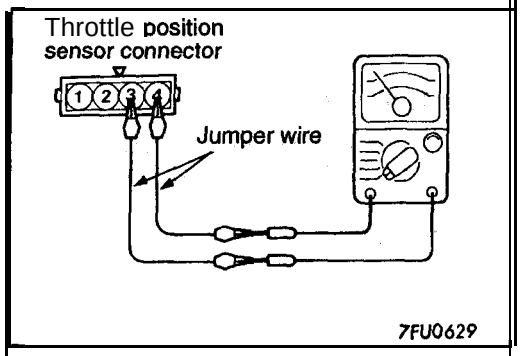

2. Connect an ohmmeter between terminal 3 (closed throttle position switch) and 4 (sensor ground) by using jumper wires.

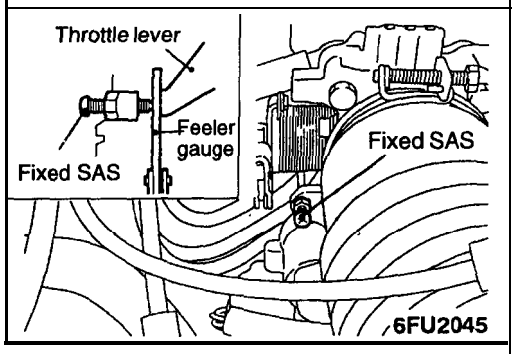

3. Insert a feeler gauge with a thickness of 0.45 mm (.0177 in.) between the fixed SAS and the throttle lever.

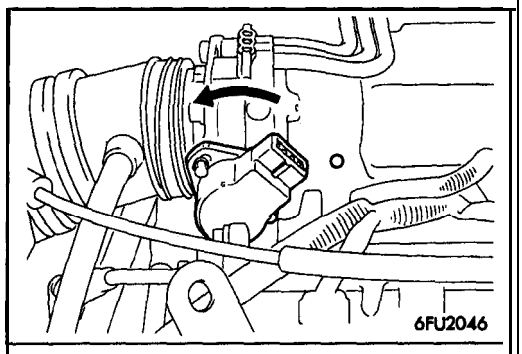

4. Loosen the throttle position sensor mounting bolt; then turn the throttle position sensor body fully counter clockwise.
5. In this condition, check for continuity between terminals 3 and 4.

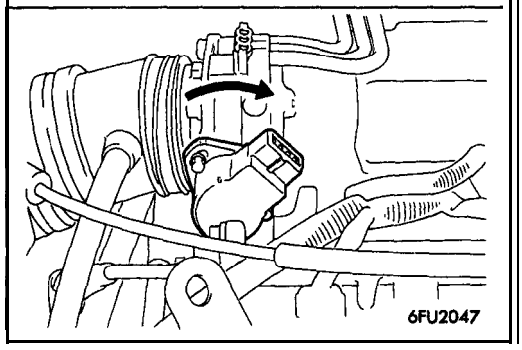

6. Slowly turn the throttle position sensor clockwise until the point at which continuity between terminals 3 and 4 changes to non-continuity is found.
   Tighten the throttle position sensor installation bolt at that position.
7. Connect the connector of the throttle position sensor.
8. Connect the scan tool to the data link connector (16-pin).

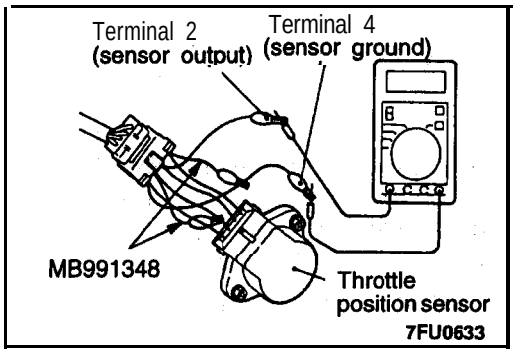

9. When not using the scan tool, proceed as follows:
   (1) Disconnect the throttle position sensor connectors and connect the special tool. Test harness set, between the disconnected connectors.
   (2) Connect a digital voltmeter between the throttle position sensor terminal 2 (sensor output) and terminal 4 (sensor ground.)
10. Turn the ignition switch ON (but do not start the engine).:
11. Check the throttle position sensor output voltage.

    Standard value: 400–1,000 mV
12. If there is a deviation from the' standard value, check the throttle position sensor and the related harness.
13. Remove the feeler gauge.
14. Switch OFF the ignition switch.

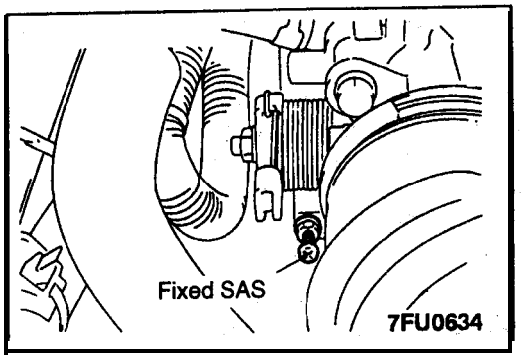

FIXED SAS ADJUSTMENT

13100150066

NOTE
1. The fixed SAS should not be moved unnecessarily; it has been precisely adjusted by the manufacturer.
2. If the adjustment is disturbed for any reason, readjust as follows.

1. Loosen the tension of the accelerator cable sufficiently.
2. Back out the fixed SAS lock nut.
3. Turn the fixed SAS counterclockwise until it is sufficiently backed out, and fully close the throttle valve.
4. Turn the fixed SAS clockwise until the throttle lever is touched (i.e., the point at which the throttle valve begins to open).
   From that point, turn the fixed SAS clockwise another 1-1/4 turn.
5. While holding the fixed SAS so that it doesn't move, tighten the lock nut securely.
6. Adjust the tension of the accelerator cable.
7. Adjust the basic idle speed.
8. Adjust the closed throttle position switch and the throttle position sensor. (Refer to P.13A-263.)

BASIC IDLE SPEED ADJUSTMENT

13100180263

NOTE

1. The standard idle speed has been adjusted, by, the engine speed adjusting screw by the manufacturer, and there should usually be no need for readjustment.
2. The adjustment, if made, should be made after first: confirming that the spark plugs; the injectors, the idle air control servo, the compression pressure, etc., are all normal.

1.. The vehicle should be prepared as follows before the inspection and adjustment.

- Engine coolant temperature: 80–95°C (176–203°F)
- Lights, cooling fan and accessories: OFF
- Transaxle: Neutral (A/T for P range)

'2. Connect the scan tool to the data link connector (16-pin)

N O T E

When the scan tool is connected, the diagnostic test mode control terminal should be grounded.

3. Start the engine and run at idle.
4. Select the item No. 30 of the SCAN TOOL (MUT-II) Actuator test.

NOTE

This holds the IAC motor at the basic step to adjust the basic idle speed.

5. Check the idle speed.

Standard value: 750 ± 50 r/min

NOTE

1. The engine speed may be 20 to 100 r/min lower than indicated above for a new vehicle [driven approximately 500 km (300 mile) or less], but no adjustment is necessary.
2. If the engine stalls or the r/min is low even though the vehicle has been driven approximately 500 km (300 mile) or more, it is probable that deposits are adhered to the throttle valve, so clean it. (Refer to P.13A-262.)

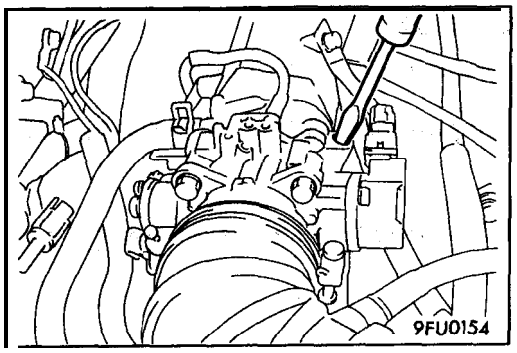

6. If not within the standard value range, turn the engine speed adjusting screw to make the necessary adjustment.

   NOTE
   If the idling speed is higher than the standard value range even when the engine speed adjusting screw' is fully closed, check whether or not there is any indication that the fixed SAS has been moved. If there is an indication that it 'has been moved, adjust the fixed SAS. If there; are no indications that it has been moved, it is possible that there is leakage as a result of deterioration of the fast idle air valve (FIAV), and, if so, the throttle body should be replaced.

7. Press the scan tool clear key, and release the IAC motor from the Actuator test' mode.

   NOTE
   Unless the IAC motor is released, the Actuator test mode. will continue 27 minutes.

8. Switch OFF the ignition switch.
9. Disconnect the scan tool.
10. Start the engine again and let it run at idle speed for about 10 minutes; check to be sure that the idling condition is normal.

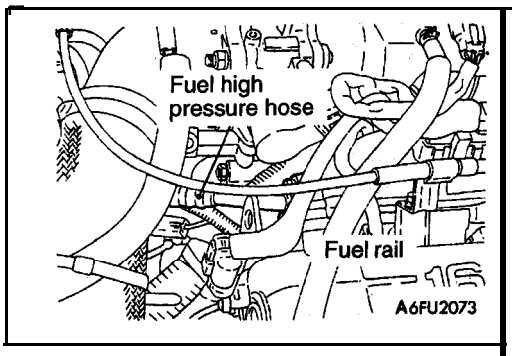

FUEL PRESSURE TEST

13100190228

1. Release residual pressure from the fuel line. (Refer to P.13A-271.)
2. Disconnect the high-pressure,, fuel. hose -at the fuel rail' side.

Caution
Cover the hose with a shop towel not to let pressurized fuel gush out.

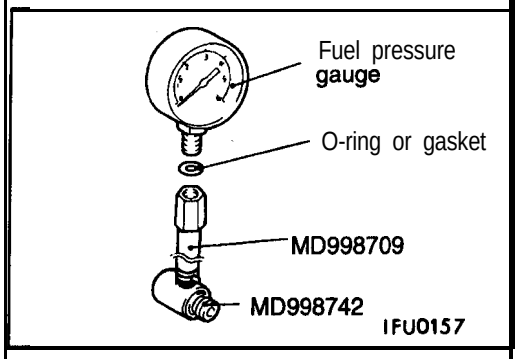

3. Remove the union joint and bolt from the special tool (adapter hose MD998709) and instead attach the special tool (hose adapter MD998742) to the adapter hose.
4. Install a fuel pressure gauge on the adapter hose that was set up in step 3.
   Use a suitable O-ring or gasket between the fuel pressure gauge and the special tool so as to seal in order to prevent fuel leakage at this time.

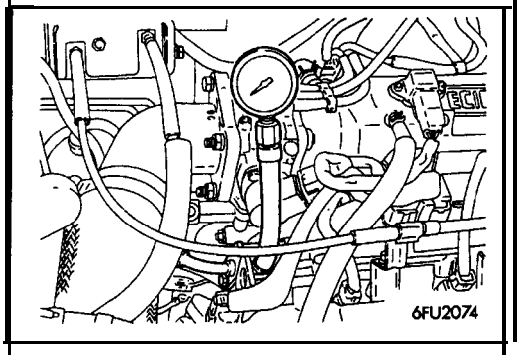

5. Install the special tool, which was assembled in steps 3 and 4 between the fuel rail and the high pressure hose.

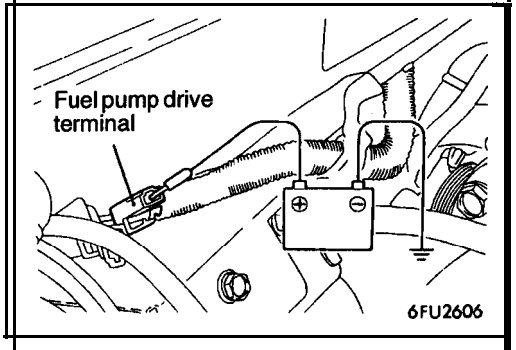

6. Connect the fuel pump drive terminal to the battery (+) terminal using a jumper wire to drive the fuel pump. Check the fuel pressure gauge and special tool connections for leaks.
7. Disconnect the jumper wire from the fuel pump drive terminal to stop the fuel pump.
8. Start the engine and run at idle.

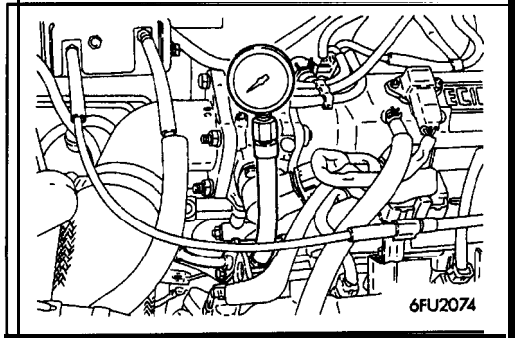

9. Measure fuel pressure while the engine is running at idle.

   Standard value:
   Approx. 230 kPa (33 psi) at curb idle <2.0L Engine (Turbo)>
   Approx. 270 kPa (38 psi) at curb idle <2.4L Engine>

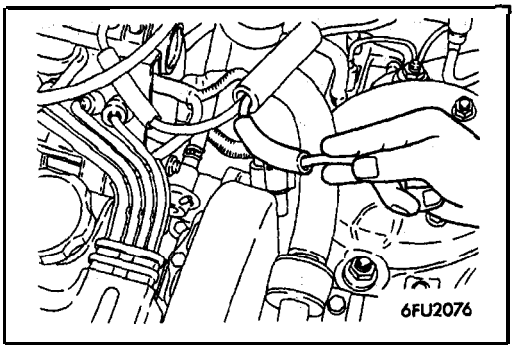

10. Disconnect and plug the vacuum hose from the fuel pressure regulator and measure fuel pressure with the hose end closed by a finger.

    Standard value:
    289–309 kPa (42-45 psi) at curb idle <2.0L Engine (Turbo)>
    330–350 kPa (47–50 psi) at curb idle <2.4L Engine>

11. Check to see that fuel pressure at idle does not drop even after the engine has been raced several times.
12. Racing the engine repeatedly, hold the,, fuel return hose lightly with fingers to feel that fuel pressure is present in the return hose.

    NOTE
    If the fuel flow rate is low, there will be no fuel pressure in the return hose.

13. If any of fuel pressure measured in steps 9 to 12 is out of specification, troubleshoot and repair according to the table below.

Symptom	Probable cause	Remedy
• Fuel pressure too low • Fuel pressure drops after racing • No fuel pressure in fuel return hose	Clogged fuel filter	Replace fuel filter
	Fuel leaking to return side due to poor fuel regulator valve seating or settled spiing	Replace fuel pressure regulator
	Low fuel pump delivery pressure	Replace fuel pump
Fuel pressure too high	Binding valve in fuel pressure regulator	Replace fuel pressure regulator
	Clogged fuel return hose or pipe	Clean or replace hose or pipe
Same fuel pressure when vacuum hose is connected and when disconnected	Damaged vacuum hose or clogged nipple	Replace vacuum hose or clean nipple
	Malfunction of the fuel pressure control system	Checking the fuel pressure control system

14. Stop the engine and observe fuel pressure gauge reading. Normal if the reading does not drop within 2 minutes. If it does, observe the rate of drop and troubleshoot and repair according to "the table, below.

Symptom	Probable cause	Remedy
Fuel pressure drops gradually after engine is stopped	Leaky injector	Replace inject&
	Leaky fuel regulator valve seat	Replace fuel pressure regulator
Fuel pressure drops sharply immediately after engine is stopped	Check valve in fuel pump is held open	Replace fuel pump

15. Release residual pressure from the fuel pipe line. (Refer to P.13A-271.)
16. Remove the fuel pressure gauge and special tool from the fuel rail.

Caution
Cover the hose connection with a shop towel to prevent splash of fuel that could be caused by some residual pressure in the fuel pipe line.

17. Replace the O-ring at the end of the fuel high pressure hose with a new one.
16. Fit the fuel high pressure hose into the fuel rail and tighten the bolts to specified torque.

Tightening torque: 5 Nm (3.6 ft.lbs.)

19. Check for fuel leaks.
    (1) 'Apply the battery positive voltage to the fuel pump drive terminal to drive the fuel pump.
    (2) Check the fuel line for leaks, repair as needed.

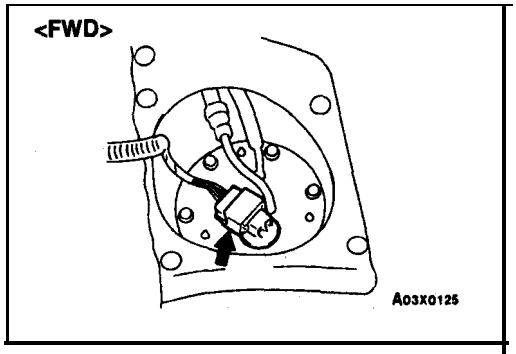

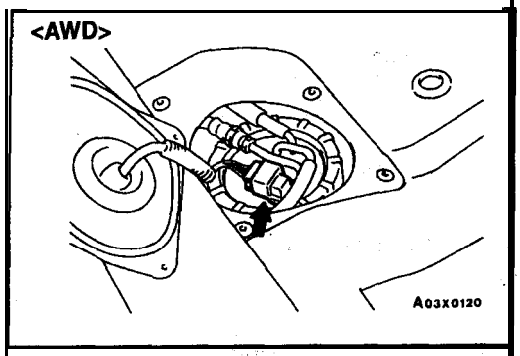

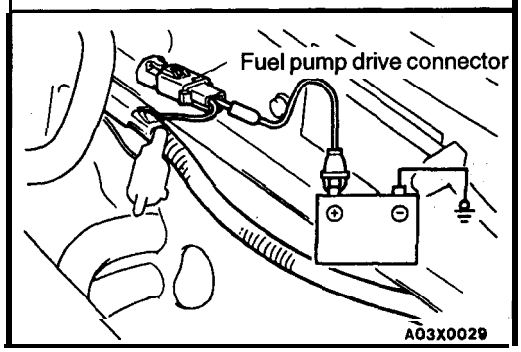

FUEL PUMP CONNECTOR" DISCONNECTION (HOW TO REDUCE FUEL LINE PRESSURE)

13100090108

When removing the fuel pipe, hose, etc., since fuel pressure in the fuel pipe line is high, do the following operation so as to release fuel pressure in the line and prevent fuel from running out.

1. Remove the rear seat cushion.
   (Refer to GROUP 52A – Seat.)
2. Remove the protector to disconnect the fuel pump connector.
3. Start the engine and let it run until it stops naturally, turn off the ignition switch.
4. Connect the fuel pump connector to install the protector.
5. Install the rear seat cushion.

FUEL PUMP OPERATION CHECK'

13100200082

1. Check the operation of the fuel pump by using the scan tool to force-drive the fuel pump.
2. If the fuel pump will not operate, check by using the following procedure. If normal, check the fuel pump drive circuit.
   (1) Turn off the ignition switch.
   (2) When the fuel,, pump drive connector (black) is attached directly to the battery, check if the sound of the fuel pump operation can be heard.

   NOTE
   As the fuel pump is an in-tank type, the fuel pump sound is hard to hear, so remove the fuel tank filler tube cap and check from the tank inlet.

   (3) Check the fuel pressure by pinching the fuel hose with the fingertips.

ON-VEHICLE INSPECTION OF MFI COMPONENTS

13100210276

COMPONENT LOCATION

<2.0L Engine (Turbo)>

Name	Symbol	Name	Symbol
Air conditioning compressor clutch relay	A	Injector	Q
Air conditioning switch	W		
Camshaft position sensor	R	Knock sensor	L
Check engine/Malfunction indicator lamp	U	Manifold differential pressure (MDP) sensor	H
Crankshaft position sensor	N		
Data link connector	V	Multiport fuel injection (MFI) relay	Y
EGR solenoid	J	Park/Neutral position switch	T
Engine control module (ECM)	X	Power steering pressure switch	Q
Engine coolant temperature sensor	D	Resistor	I
Evaporative emission purge solenoid	J	Throttle position sensor (with built-in closed throttle position switch)	G
Fuel pressure solenoid	M		
Fuel pump check terminal	E	Turbocharger waste gate solenoid	S
Fuel pump relay	Y	Vehicle speed sensor	C
Heated oxygen sensor (Front)	P		
Heated oxygen sensor (Rear)	Z	Volume air flow sensor (with built-in intake air temperature sensor and barometric pressure sensor)	B
Idle air control motor	F		
Ignition coil (Ignition power transistor)	K		

NOTE
The "Name" column is in alphabetical order.

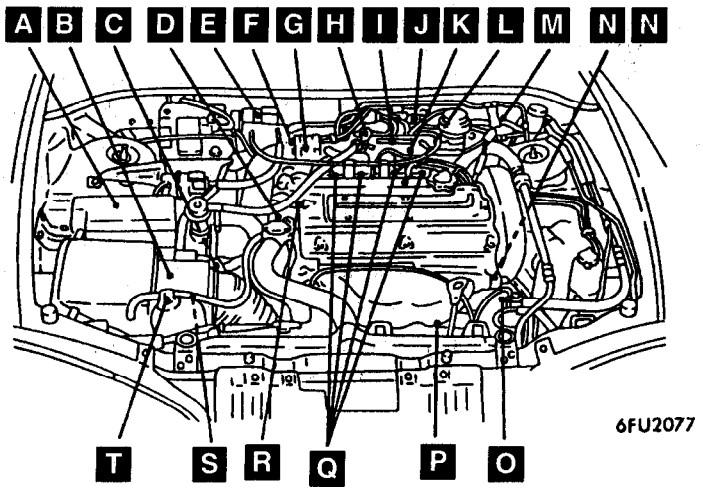

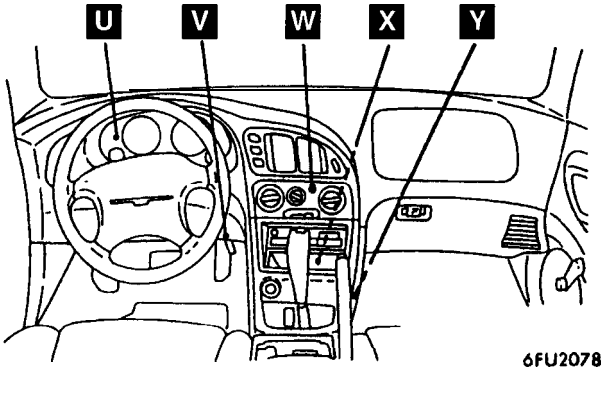

A6FU2480

A

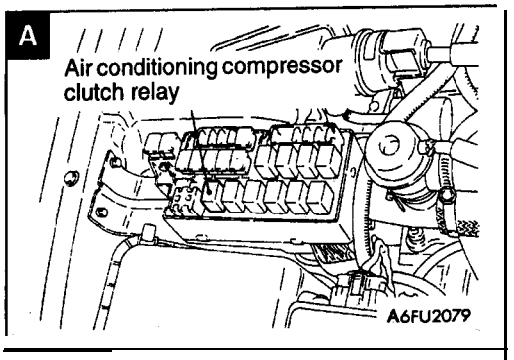
Air conditioning compressor clutch relay
A6FU2079

B

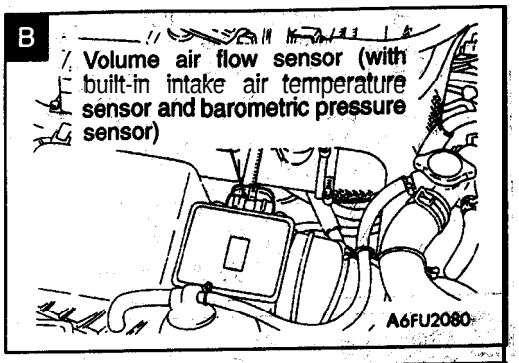
Volume air flow sensor (with built-in intake air temperature sensor and barometric pressure sensor)
A6FU2080

C

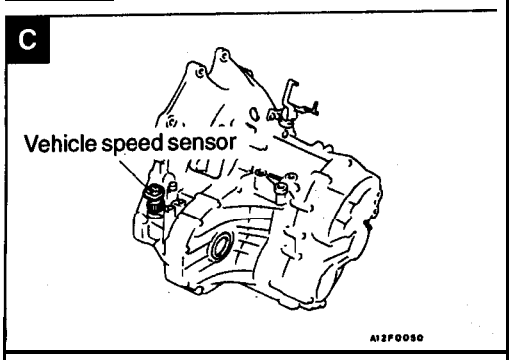
Vehicle speed sensor
AI2F0050

D

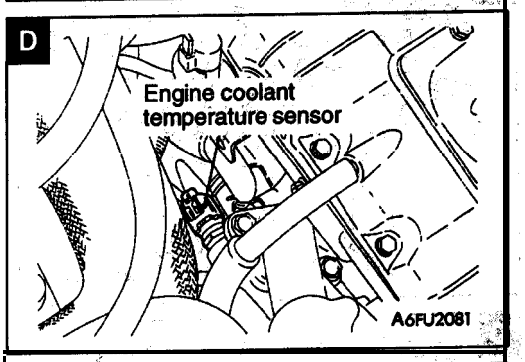
Engine coolant temperature sensor
A6FU2081

E

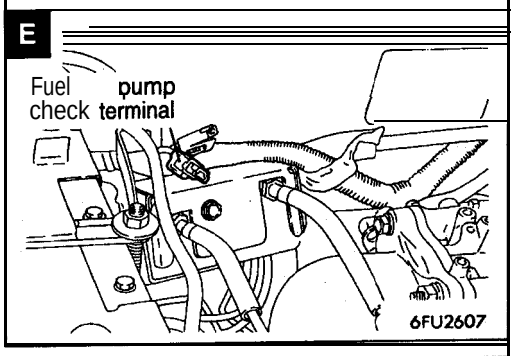
Fuel pump check terminal
6FU2607

F

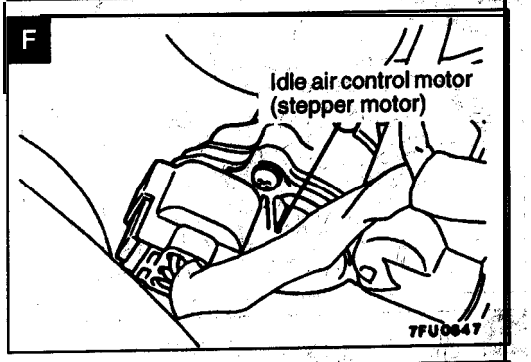
Idle air control motor (stepper motor)
7FU0847

G

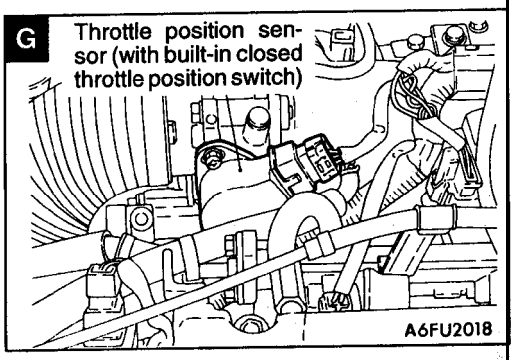
Throttle position sensor (with built-in closed throttle position switch)
A6FU2018

H

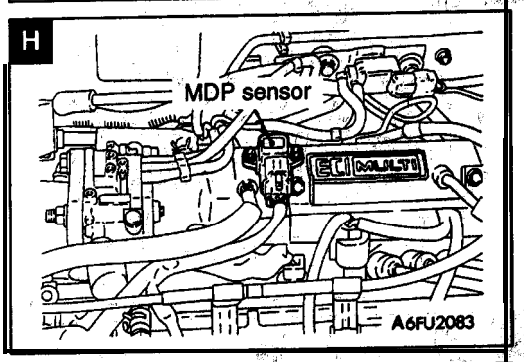
MDP sensor
ECI MULTI
A6FU2083

I

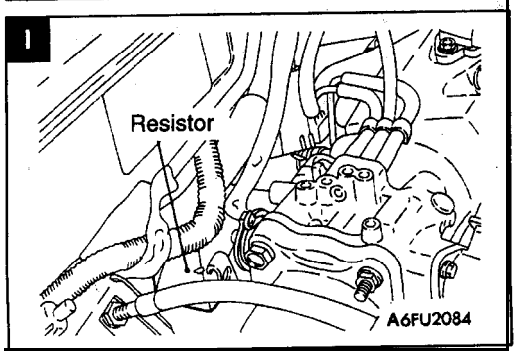
Resistor
A6FU2084

J

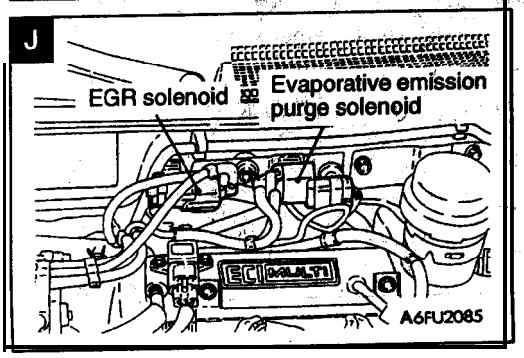
EGR solenoid
Evaporative emission purge solenoid
ECI MULTI
A6FU2085

K

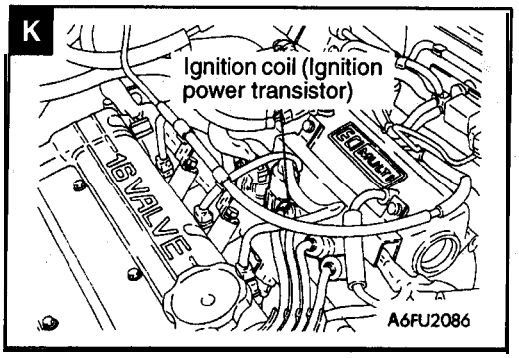
Ignition coil (Ignition power transistor)
16 VALVE
A6FU2086

L

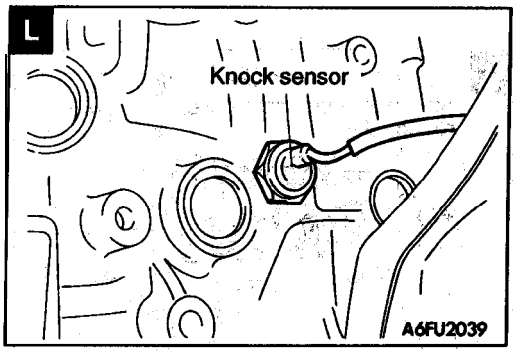
Knock sensor
A6FU2039

M

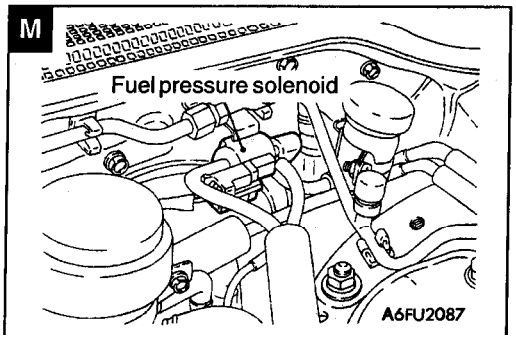
Fuel pressure solenoid
A6FU2087

N

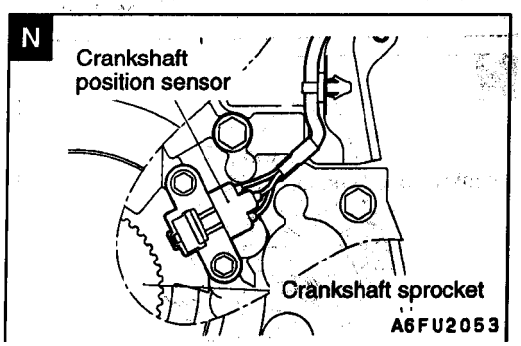
Crankshaft position sensor
Crankshaft sprocket
A6FU2053

O

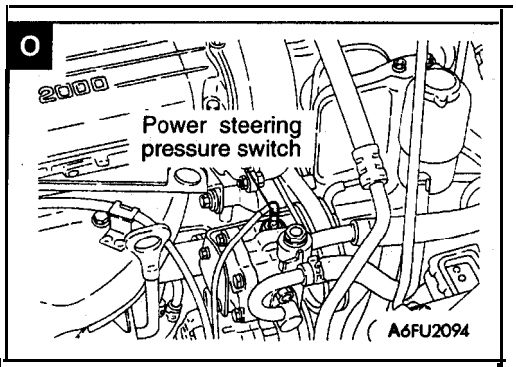
Power steering pressure switch
A6FU2094

P

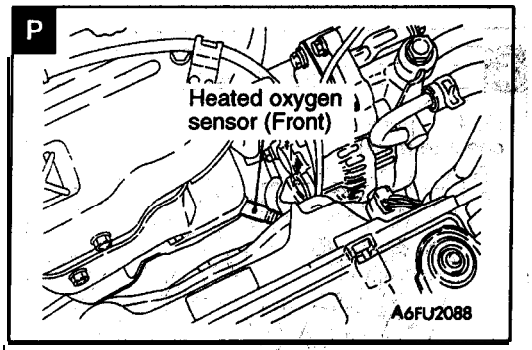
Heated oxygen sensor (Front)
A6FU2088

Q

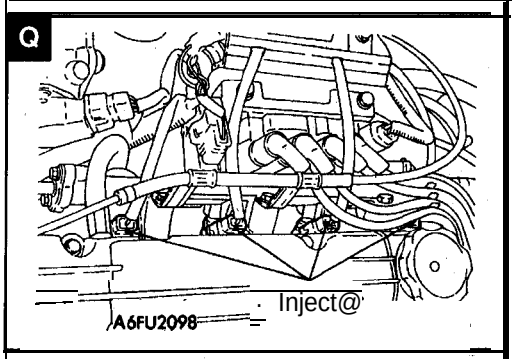
Inject@
A6FU2098

R

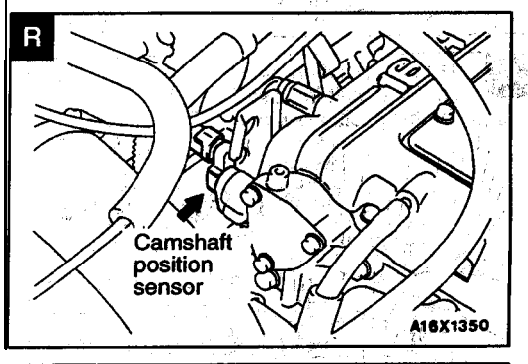
Camshaft position sensor
A16X1350

S

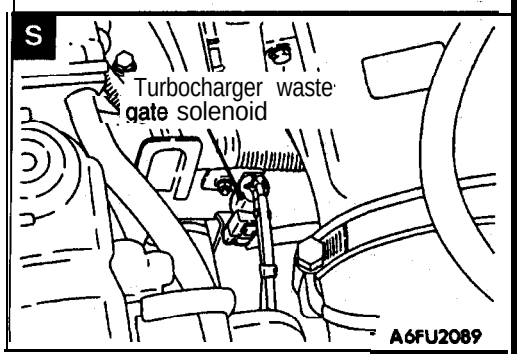
Turbocharger waste gate solenoid
A6FU2089

T

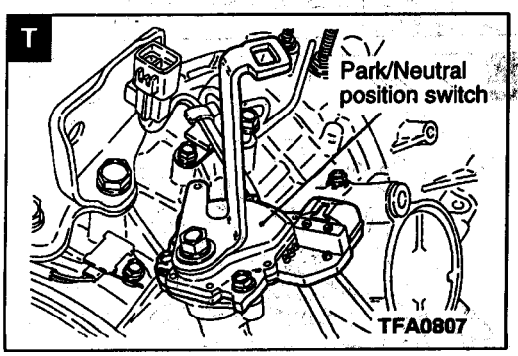
Park/Neutral position switch
TFA0807

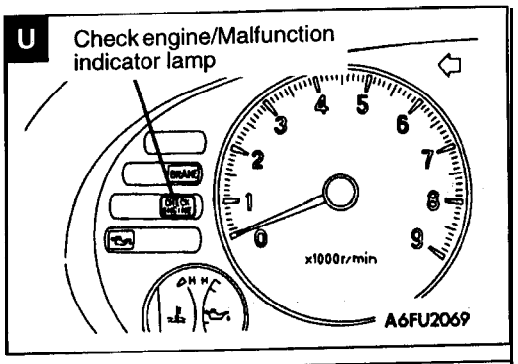
U
Check engine/Malfunction indicator lamp
x1000r/min
A6FU2069

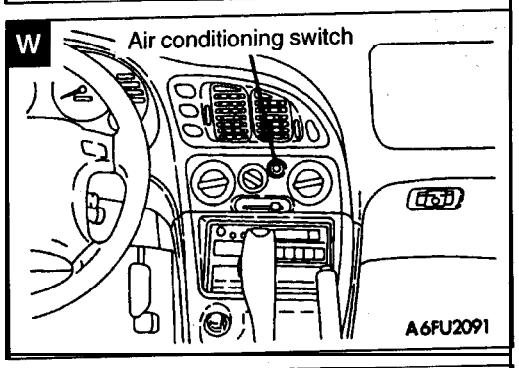
W
Air conditioning switch
A6FU2091

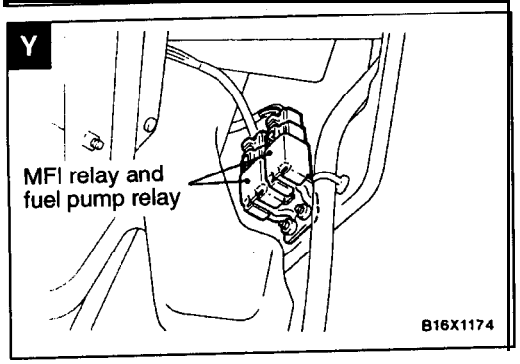
Y
MFI relay and fuel pump relay
B16X1174

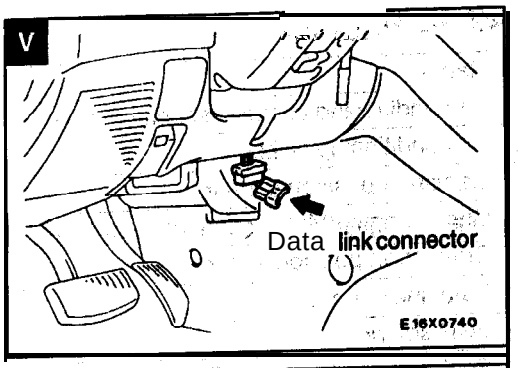
V
Data link connector
E16X0740

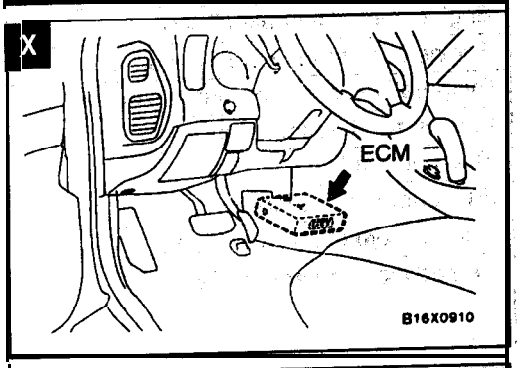
X
ECM
B16X0910

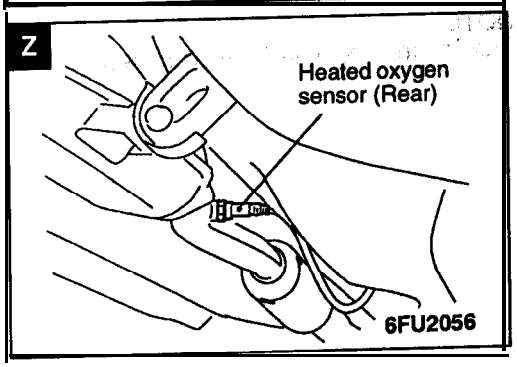
Z
Heated oxygen sensor (Rear)
6FU2056

<2.4L Engine>

13100210283

Name	Symbol	Name	Symbol
Air conditioning compressor clutch relay	P	Idle air control motor	D
Air conditioning switch	S	Ignition coil (Ignition power transistor)	I
Camshaft position sensor	N	Ignition power transistor	G
Check engine/Malfunction indicator lamp	Q		
Crankshaft position sensor	K	injector	L
Data link connector	R	Manifold differential pressure (MDP) sensor	F
EGR solenoid	H	Multiport fuel injection (MFI) relay	U
Engine control module (ECM)	T	Park/Neutral position switch	O
Engine coolant temperature sensor	M	Power steering pressure switch	J
Evaporative emission purge solenoid	H	Throttle position sensor (with built-in closed throttle position switch)	E
Fuel pump check terminal	C		
Fuel pump relay	U	Vehicle speed sensor	A
Fuel pump relay module	T		
Heated oxygen sensor (Front)	V	Vehicle speed sensor	A
Heated oxygen sensor (Rear)	W	Volume air flow sensor (with built-in intake air temperature sensor and barometric pressure sensor)	B

NOTE
The "Name" column is in alphabetical order.

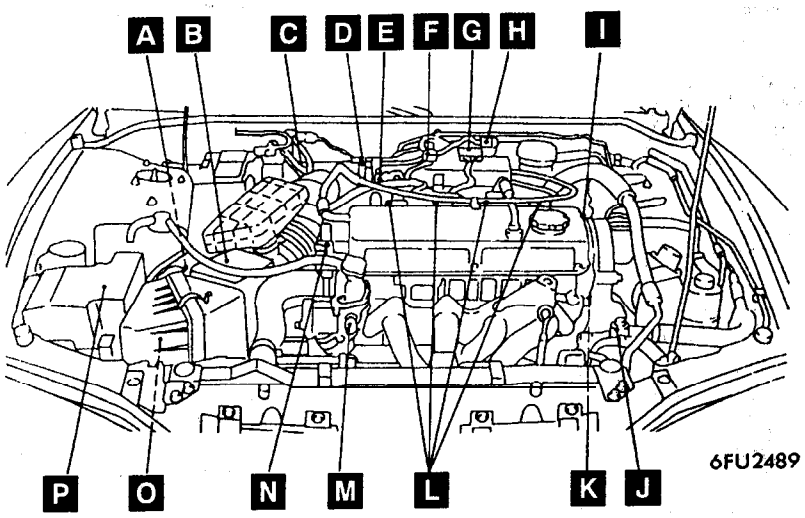
A
B
C
D
E
F
G
H
I
P
O
N
M
L
K
J
6FU2489

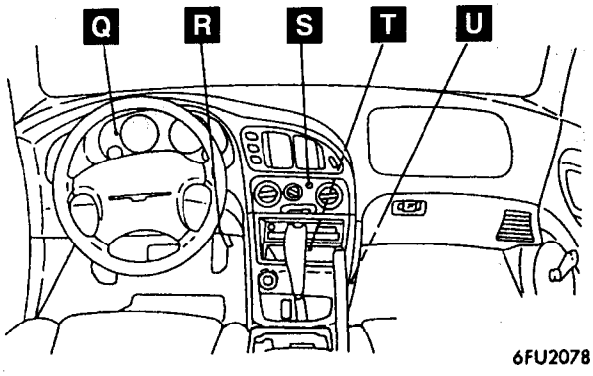
Q
R
S
T
U
6FU2078

6FU2506

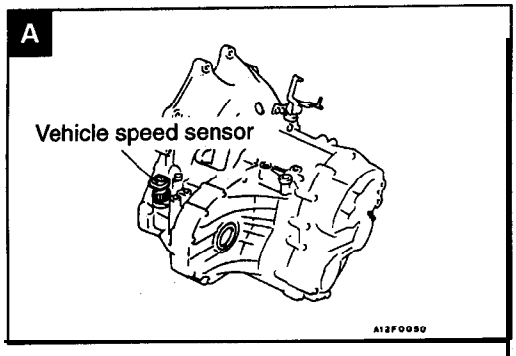
A
Vehicle speed sensor
A12F0050

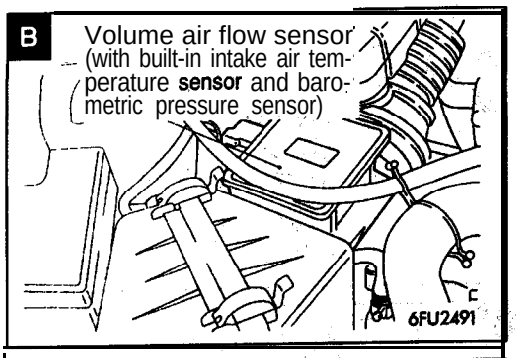
B
Volume air flow sensor (with built-in intake air temperature sensor and barometric pressure sensor)
6FU2491

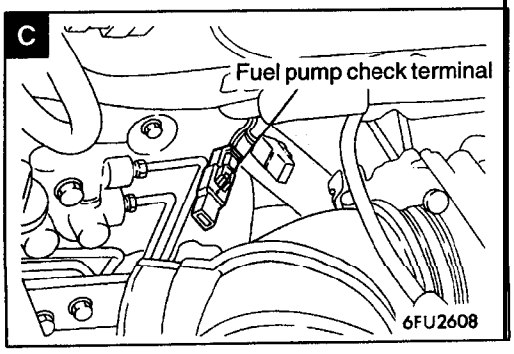
C
Fuel pump check terminal
6FU2608

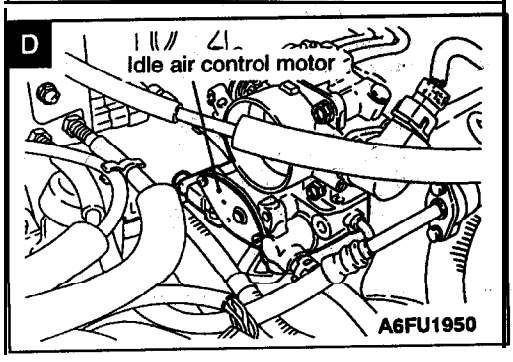
D
Idle air control motor
A6FU1950

E

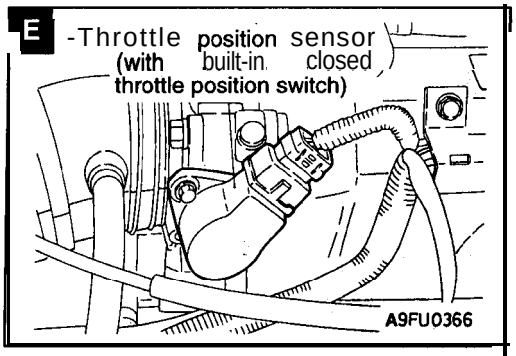
-Throttle position sensor
(with built-in closed throttle position switch)
A9FU0366

F

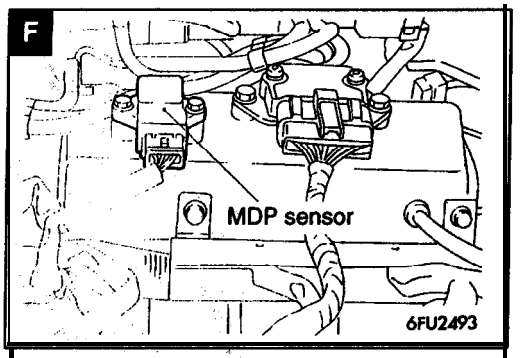
MDP sensor
6FU2493

G

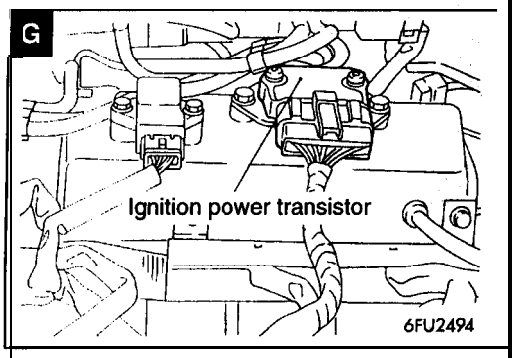
Ignition power transistor
6FU2494

H

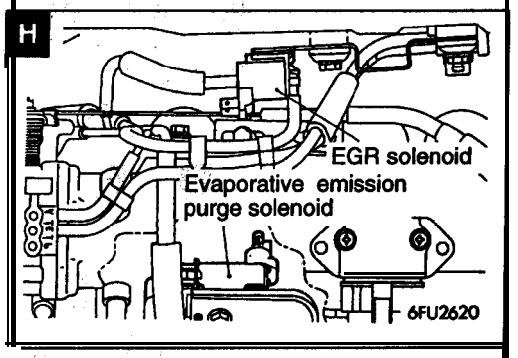
EGR solenoid
Evaporative emission purge solenoid
6FU2620

I

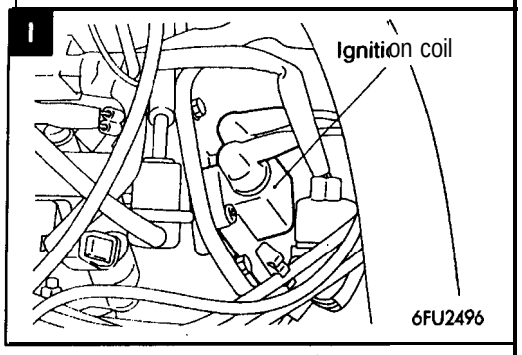
Ignition coil
6FU2496

J

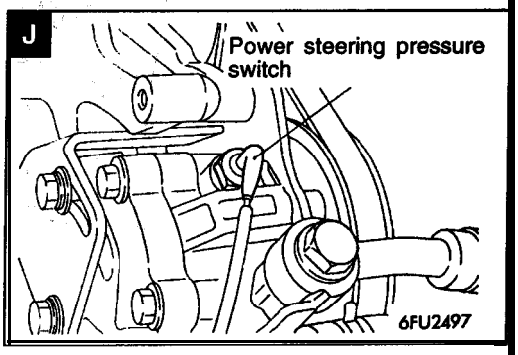
Power steering pressure switch
6FU2497

K

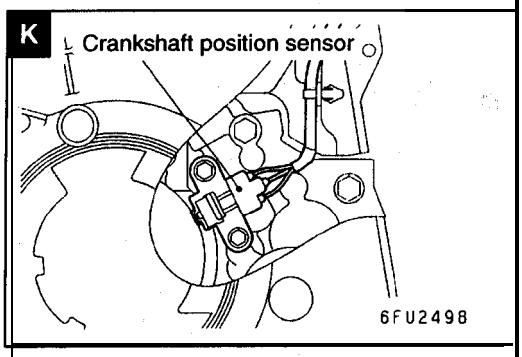
Crankshaft position sensor
6FU2498

L

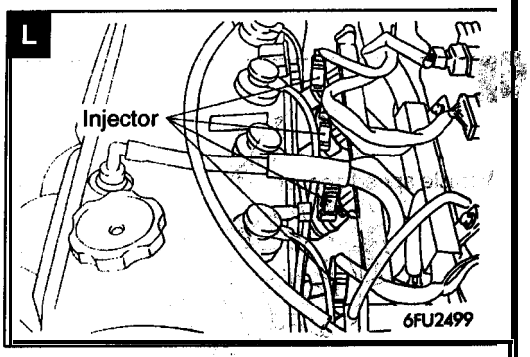
Injector
6FU2499

M

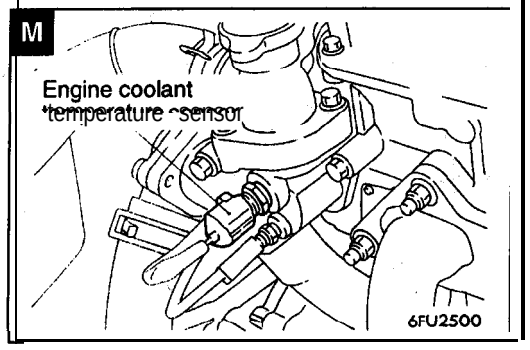
Engine coolant temperature sensor
6FU2500

N

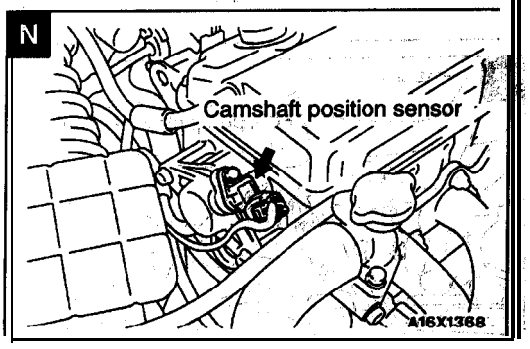
Camshaft position sensor
A16X1368

O

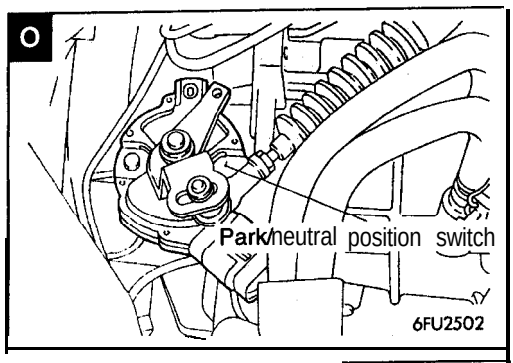
Park/neutral position switch
6FU2502

P

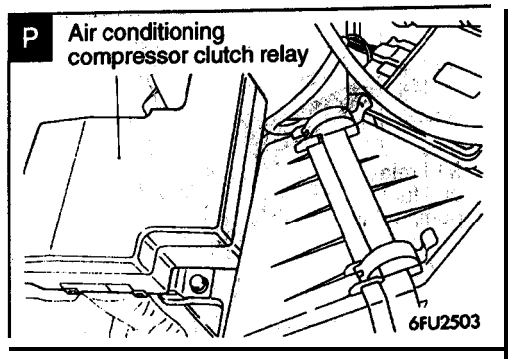
Air conditioning compressor clutch relay
6FU2503

Q

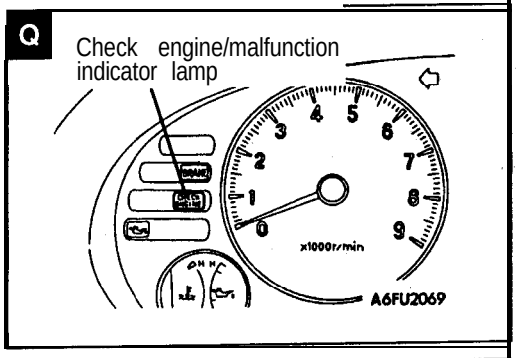
Check engine/malfunction indicator lamp
x1000r/min
A6FU2069

R

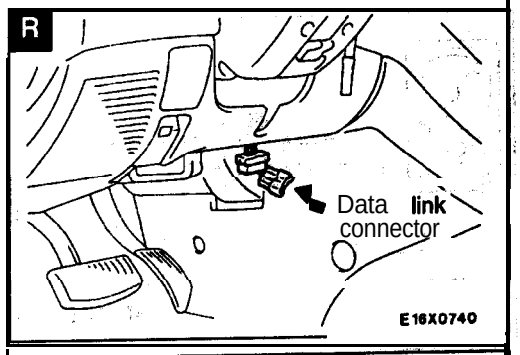
Data link connector
E16X0740

S

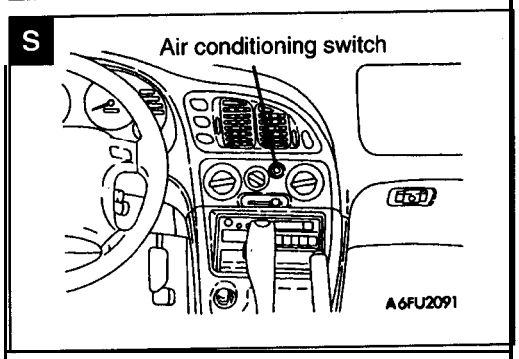
Air conditioning switch
A6FU2091

T

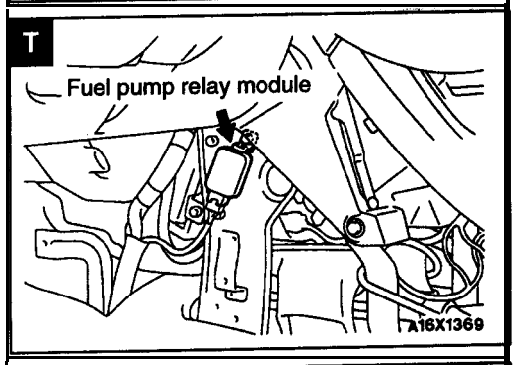
Fuel pump relay module
A16X1369

U

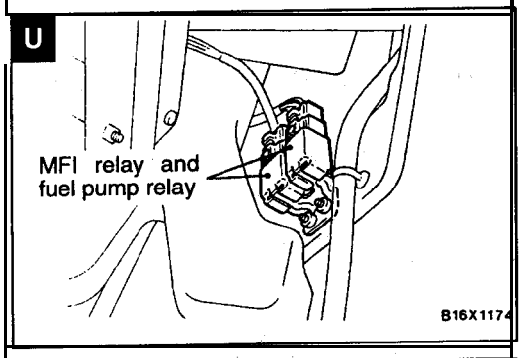
MFI relay and fuel pump relay
B16X1174

V

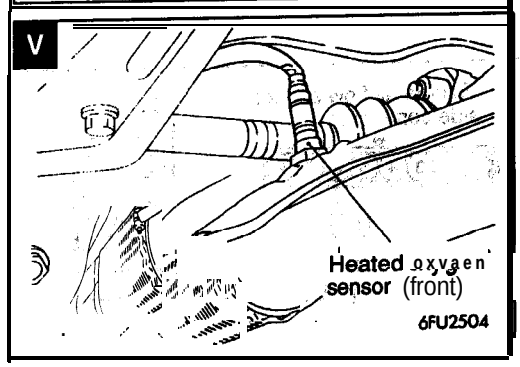
Heated oxygen sensor (front)
6FU2504

W

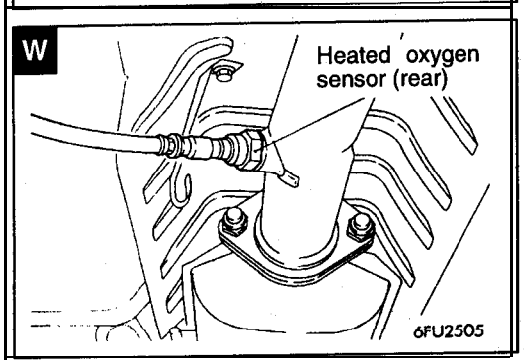
Heated oxygen sensor (rear)
6FU2505

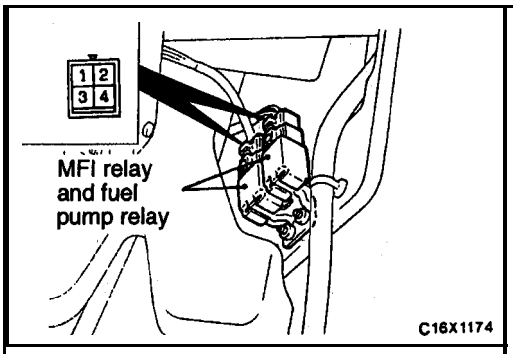

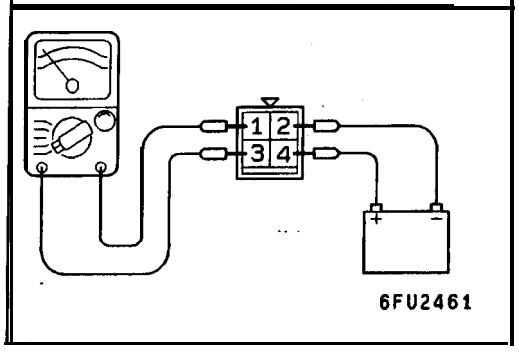

MULTIPORT FUEL INJECTION (MFI) RELAY AND FUEL PUMP RELAY CHECK

13100990026

1. Remove the relay.
2. Check the continuity between the MFI relay terminals.

Inspection terminals	Continuity
2-4	Continuity (Approx. 70 Ω)

3. Use the jumper leads to connect relay terminal 4 to the battery (+) terminal and terminal 2 to the battery (–) terminal.
4. Check the continuity between relay terminals 1 – 3 while connecting and disconnecting the jumper lead at the battery (–) terminal.

Jumper lead	Continuity between terminals 1 – 3
Connected	Continuity (0Ω)
Disconnected	No continuity

5. If there is a defect, replace the MFI relay or fuel pump relay.

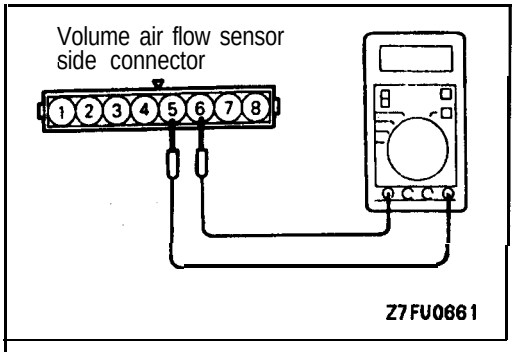

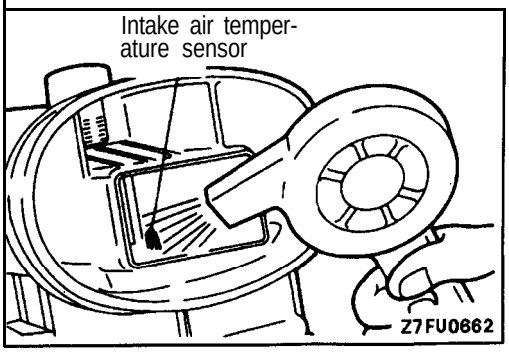

INTAKE AIR TEMPERATURE SENSOR CHECK

13106260676

1. Disconnect the volume air flow, sensor connectors.
2. Measure resistance between terminals 5 and 6.

Temperature [°C(°F)]	Resistance (kΩ)
0 (32)	5.3-6.7
20 (66)	2.3–3.0
60 (176)	0.30–0.42

3. Measure resistance while heating the sensor using a hair drier.

Temperature	Resistance
Higher	Smaller

4. If resistance does not decrease as heat increases the resistance remains unchanged, replace the volume air flow sensor assembly.

ENGINE COOLANT TEMPERATURE SENSOR CHECK

13100310075

Caution

Be careful not to touch the tool against the connector (resin section) when removing and installing.

1. Remove engine coolant temperature sensor from the in-, take manifold.

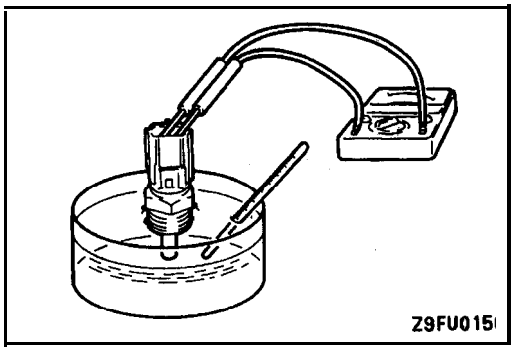

2. With temperature sensing portion of engine coolant temperature sensor immersed in hot water, check resistance.

Temperature [°C (°F)]	Resistance (kΩ)
0 (32)	5.1–6.5
20 (66)	2.1-2.7
40 (104)	0.9–1.3
60 (176)	0.26–0.36

3. If the resistance deviates from the standard value greatly, replace the sensor.

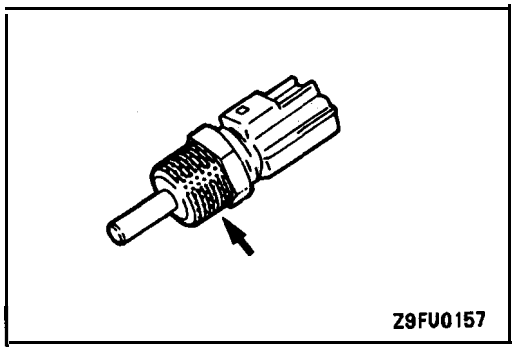

4. Apply sealant threaded-'portion.

   Specified sealant:
   3M NUT locking Part No. 4171 or equivalent,

5. Install engine coolant temperature sensor and tighten it to specified torque.

   Sensor tightening torque: 30 Nm (22 ft.lbs.)

6. Fasten harness connectors securely.

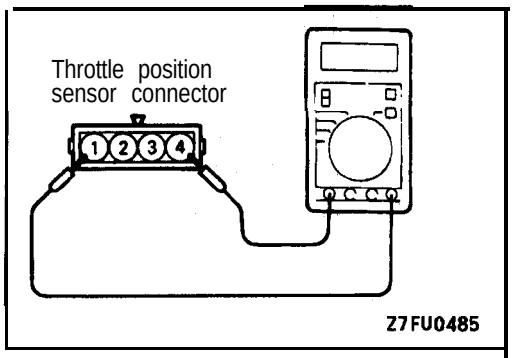

THROTTLE, POSITION SENSOR CHECK 13100320078

1. Disconnect the throttle position sensor connector.
2. Measure the resistance between the throttle position sensor side connector terminal 1 and terminal 4.

   Standard value: 3.5-6.5 kΩ

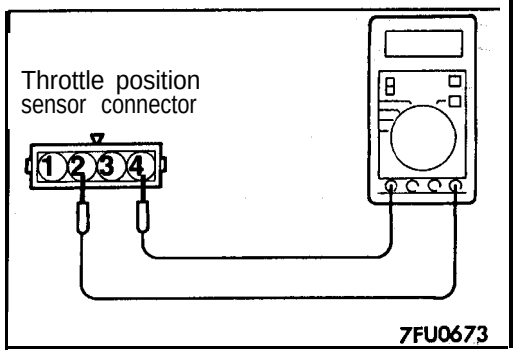

3. Measure the resistance between the throttle position sensor side connector terminal 2 and terminal 4.

Throttle valve slowly open until fully open from the idle position	Changes smoothlv, in proportion to the opening angle of the throttle valve

4. If the resistance is outside the standard value, or if it doesn't change smoothly, replace the throttle position sensor.

   NOTE
   Always adjust the throttle position sensor after replacement.

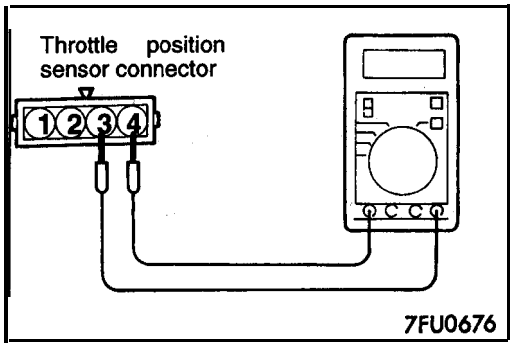

CLOSED THROTTLE POSITION SWITCH CHECK

13100330033

1. Disconnect the throttle position sensor connector.
2. Check the continuity between the throttle position sensor connector side terminal 3 and terminal 4.

Accelerator pedal	Continuity
Depressed	Non-conductive
Released	Conductive (0 Ω)

3. If out of specification, replace the throttle position sensor.

   NOTE
   After replacement, the closed throttle position switch and throttle position sensor should be adjusted.
   (Refer to P.13A-263.)

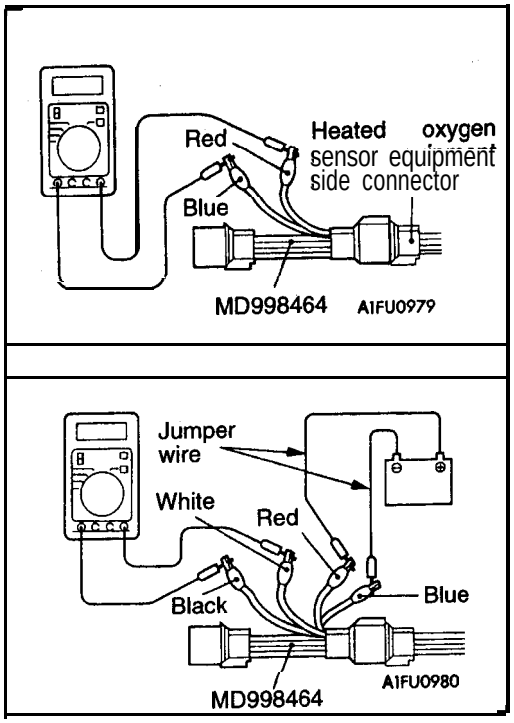

HEATED OXYGEN SENSOR CHECK

13100500120

<Heated oxygen sensor (front)>

1. Disconnect the heated oxygen sensor connector and connect the special tool (test harness) to the connector on, the heated oxygen sensor side.
2. Make sure that there is continuity [Approx. 12 Ω at 20°C (68°F)] between terminal 1 (red clip of special tool) and terminal 3 (blue clip of special tool) on the heated oxygen sensor connector.
3. If there is no continuity, replace the heated oxygen sensor.
4. Warm up the engine until engine coolant is 80°C (176°F) or higher.
5. Use the jumper wires to connect terminal 1 (red clip) of the heated oxygen sensor connector to the battery (+) terminal and terminal 3 (blue clip) to the battery (–) terminal.

   Caution
   Be very careful when connecting the jumper wires; incorrect connection can damage the heated oxygen sensor.

6. Connect a digital voltage meter between terminal 2 (black clip) and terminal 4 (white clip).
7. While repeatedly racing the engine, measure the heated oxygen sensor output voltage.

   Standard value

Engine	Heated oxygen sensor output voltage	Remarks
When racing engine	0.6–1.0V	If you make the air/fuel ratio rich by racing the engine repeatedly, a normal heated oxygen sensor will output a voltage of 0.6–1.0V.

8. If the sensor is defective, replace the heated oxygen sensor.

   NOTE
   For removal and installation of the heated oxygen sensor, refer to the following sections:
   - GROUP 15 – Exhaust Manifold <2.0L Engine (Turbo)>
   - GROUP 15 – Exhaust Pipe and Main Muffler<2.4L Engine>

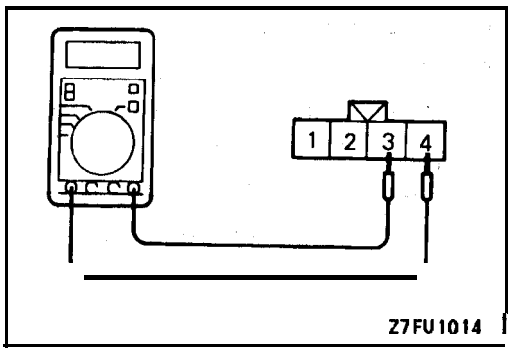

<Heated oxygen sensor (rear)>

1. Disconnect the heated oxygen sensor connector.
2. Make sure that there is continuity [approx. 12 Ω at 20°C (68°F)] between terminal 3 and terminal 4 on the heated oxygen sensor connector.
3. If there is no continuity, replace the heated oxygen sensor.

NOTE

1. If the scan tool dose not display 'the standard value although no abnormality is found by the above mentioned continuity test and harness check, replace the heated oxygen sensor (rear).
2. For removal and installation of the oxygen sensor, refer to GROUP 15 – Exhaust Pipe, Main-Muffler.

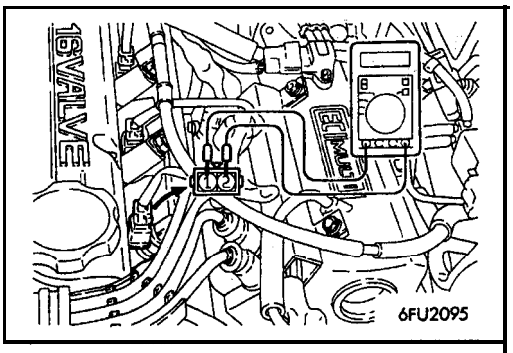

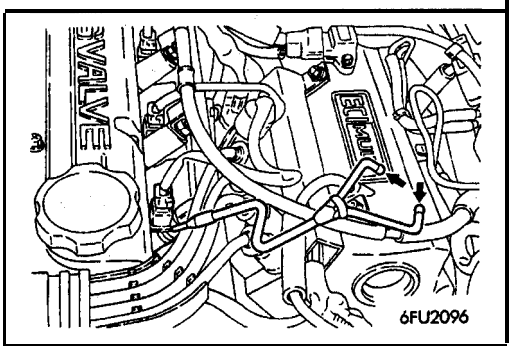

INJECTOR CHECK

13100520072

Measurement of Resistance between Terminals

1. Remove the injector connector.
2. Measure the resistance between terminals.

Standard value: 2-3 Ω [at 20°C (68°F)]
<2.0L Engine (Turbo)>
13-16 Ω [at 20°C (68°F)]
<2.4L Engine>

3. Install the injector connector

Checking operation sound

Using a stethoscope or long blade screwdriver, check the operation sound ("tick-tick-tick") of injectors during idling or during cranking

Check that as the engine speed increases, the frequency of the operating sound also increases.

Caution

Note that even if the injector you are checking is not operating, you will hear the operating sound of the other injectors.

NOTE

If no operating sound is heard from the injector that is being checked, check the injector drive circuit. If there is nothing wrong with the circuit, a defective injector or ECM is suspected

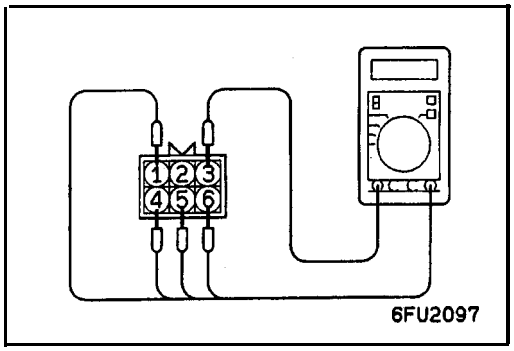

RESISTOR CHECK <2.0L Engine (Turbo)>;

13101050020

Measurement of Resistance between Terminals

1. Disconnect the resistor connector.
2. Measure the resistance between terminals.

Measuring terminals	Resistance
1-3 4-3 5-3 6-3	5.5–6.5Ω [At 20°C (68°F)]

3. If the resistance is out of specification, replace the resistor.

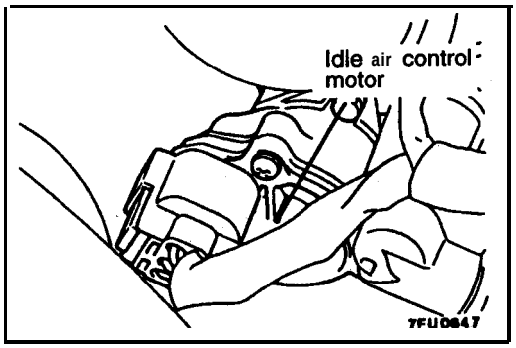

IDLE AIR CONTROL MOTOR (STEPPER MOTOR) CHECK <2.0L Engine (Turbo)>

13100540092

Checking the Operation Sound

1. Check to be sure that the engine coolant temperature is 20°C (68°F) or below.

   NOTE
   Disconnecting the engine coolant temperature sensor connector and connecting the harness-side of the connector to another engine coolant temperature sensor that is at 20°C (68°F) or below is also okay.

2. Check that the operation sound of the stepper motor can be heard after the ignition is switched ON (but without starting the motor), then OFF.
3. If the operation sound cannot be heard, check the stepper motor's activation circuit.
   If the circuit is normal, it is probable that there, is a malfunction of the stepper motor or of the engine control module.

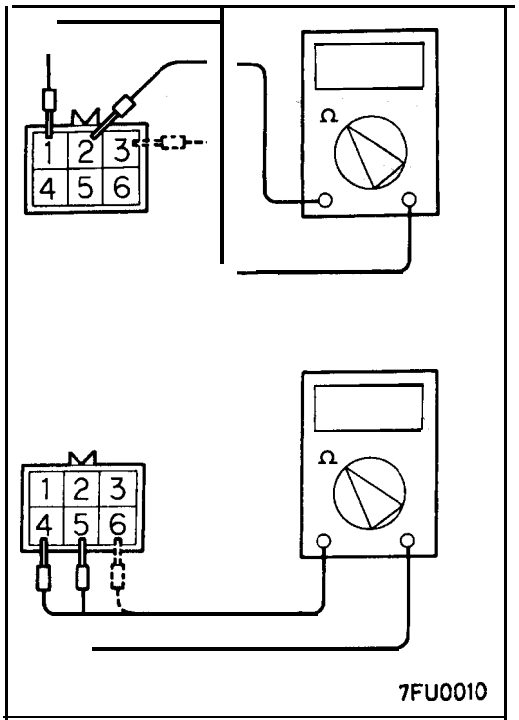

Checking the Coil Resistance

1. Disconnect the idle air control motor connector and connect the special tool (test harness).
2. Measure the resistance between terminal 2 (white, clip of the special tool) and either terminal 1 (red clip) or terminal 3 (blue clip) of the connector at the idle air control motor side.

   Standard value: 28–33 Ω [at 20°C (68°F)]

3. Measure the resistance, between terminal 5 (green clip of the special tool) and either terminal 6 (yellow clip.) or terminal 4 (black clip) of the connector at the idle air control motor side.

   Standard value: 28–33 Ω [at 20°C (68°F)]

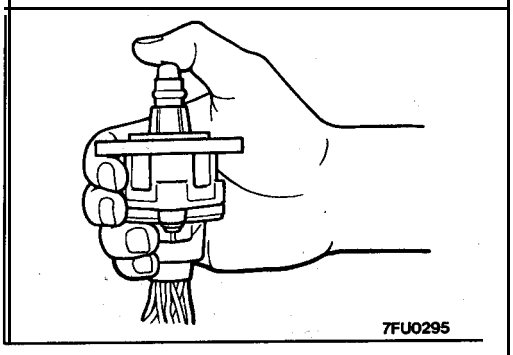

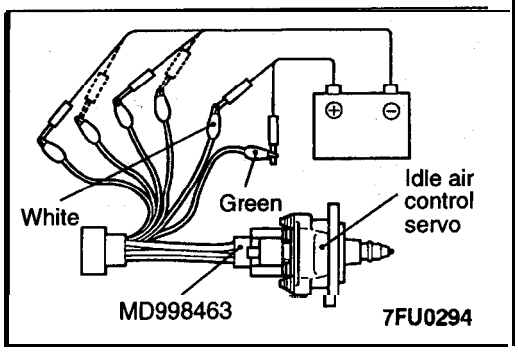

Operational Check

1. Remove the throttle body.
2. Remove the stepper motor.
3. Connect the special tool (test harness) to the idle air control motor connector.
4. Connect the positive (+) terminal of a power supply (approx. 6V) to the white clip and the green clip.
5. With the idle air control motor as shown'in the illustration, connect the negative (–) terminal. of the power supply to each clip as described in the following steps, and check whether or not a vibrating'feeling (a-feeling of very slight vibration of the stepper motor) is generated as a result of the activation of the stepper motor.
   (1) Connect the negative (–) terminal of the power supply to the red and black clip.
   (2) Connect the negative (–) terminal of the power supply to the blue and black clip.
   (3) Connect the negative (–) terminal of the power supply to the blue and yellow clip.
   (4) Connect the negative (–) terminal of the power supply to the red and yellow clip.
   (5) Connect the negative (–) terminal of the power supply to the red and black clip.
   (6) Repeat the tests in sequence from (5) to' (1).
6. If, as a result of these tests, vibration is detected, the stepper motor can be considered to be normal.

IDLE AIR CONTROL MOTOR (DC: MOTOR) CHECK <2.4L Engine>

13100540108

Use a stethoscope or long blade screwdriver to check if the operating sound of the idle air control' motor can be heard immediately after the ignition switch is turned to "ON".

NOTE
If the motor operation cannot be heard, check the motor drive circuit and the idle air control motor.

FUEL PRESSURE SOLENOID CHECK <2.0L Engine (Turbo)>

13100580025

NOTE
When disconnecting the vacuum hose, always make a mark' so that it can be reconnected at original position!

1. Disconnect the vacuum hose from the solenoid valve.
2. Disconnect the harness connector.

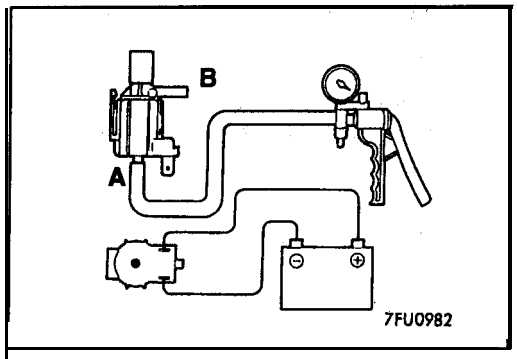

3. Connect a hand vacuum pump to the nipple.
4. Connect a battery to the solenoid valve and apply a vacuum to check air-tightness.

Battery voltage	B nipple	Normal condition
Not applied	Open	Vacuum leaks
	Closed	Vacuum maintained
Applied	Open	Vacuum maintained

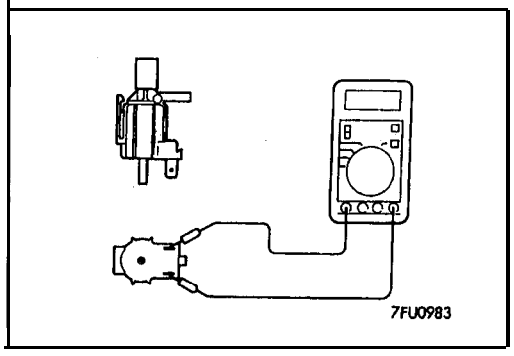

5. Measure the resistance between the terminals of the solenoid valve.

   Standard value: 36-44 Ω [at 20°C (68°F)]

EVAPORATIVE EMISSION PURGE SOLENOID CHECK 13100560173

Refer to GROUP 17 – Emission Control System.

EGR SOLENOID CHECK 13100570152

Refer to GROUP 17 – Emission control System. <2.0L Engine (Turbo)>
Refer to GROUP 17 – Emission Control System. <2.4L Engine>

TURBOCHARGER WASTE GATE SOLENOID CHECK 13100590028

Refer to GROUP 15 – On-vehicle Service.

INJECTOR

13100710103

REMOVAL AND INSTALLATION

Pre-removal Operation
- Fuel Line Pressure Reduction (Refer to P.13A-271.)
- Spark Plug Cable Removal

Post-installation Operation
- Spark Plug Cable Installation
- Fuel Leakage Inspection

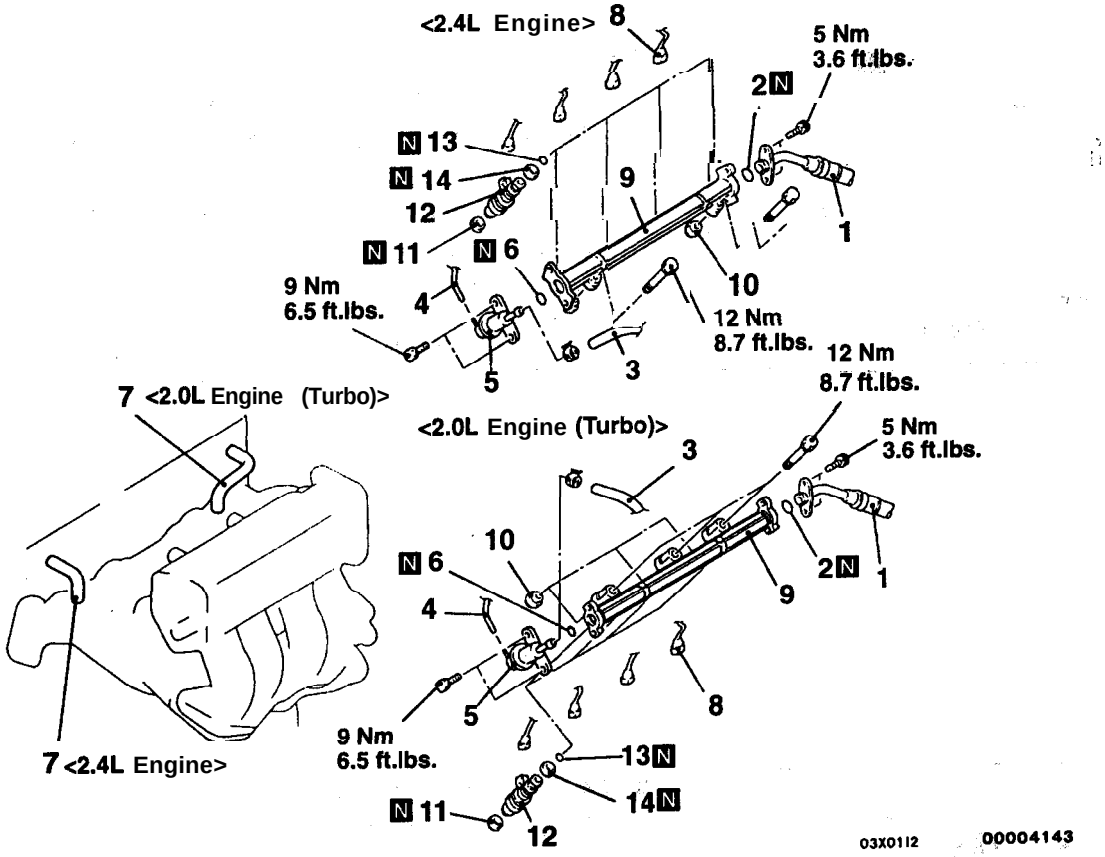

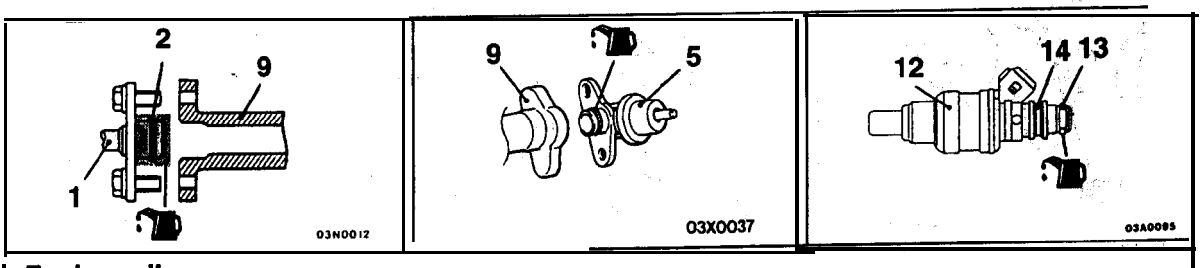

Engine oil

Removal steps

▶C◀ 1. High-pressure fuel hose connection
2. O-ring
3. Fuel return hose connection
4. Vacuum hose connection
▶B◀ 5. Fuel pressure regulator
6. O-ring
7. PCV hose
8. Injector connectors
9. Fuel rail
◀A▶ 10. Insulators
11. Insulators
◀A▶ ▶A◀ 12. Injectors
13. O-rings
14. Grommets

REMOVAL SERVICE POINT

◀A▶ FUEL RAIL/INJECTORS REMOVAL

Remove the fuel rail (with the injectors attached to it.)

Caution
Do not drop the injector.

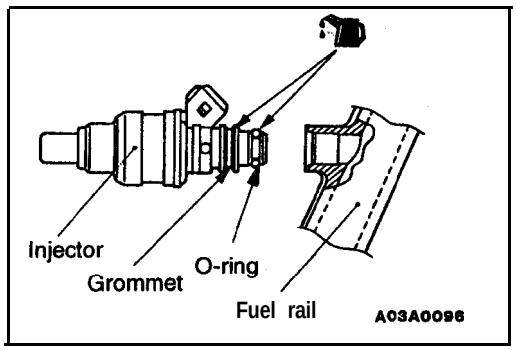

INSTALLATION SERVICE POINTS

▶A◀ INJECTORS INSTALLATION

(1) Apply a small amount of clean engine oil to the O-ring.

Caution
Do **not let the engine oil get into the fuel rail.**

(2) While turning the injector to the left and right, install it to the fuel rail.
(3) Check to be sure that the injector turns smoothly.
If it does not turn smoothly, the O-ring may be trapped, remove the injector and then, re-insert it into the fuel rail and check once again.

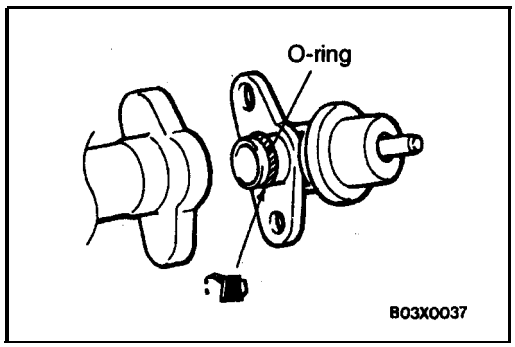

▶B◀ FUEL PRESSURE REGULATOR INSTALLATION

(1) Apply a small amount of clean engine oil to a new O-ring and insert it to the fuel rail carefully.

Caution
Do not let the engine oil get into the fuel rail.

(2) If the fuel pressure regulator does not move smoothly, the O-ring may be folded. Then, remove the regulator to check the O-ring for damage.
(3) Tighten the regulator to the specified torque.

Tightening torque: 8.8 Nm '(6.5 ft.lbs.)

▶C◀ HIGH-PRESSURE FUEL HOSE CONNECTION

When connecting the high-pressure fuel hose to the fuel rail, apply a small amount of clean engine oil to the hose union, and then insert, being careful not to damage 'the O-ring.

Caution
Do not let the engine oil get into the fuel rail.

THROTTLE BODY

13100770088

REMOVAL AND INSTALLATION

Pre-removal Operation
- Engine Coolant Draining (Refer to GROUP 00 – Maintenance Service.)
- Battery Removal

Post-installation Operation
- Battery Installation
- Engine Coolant Supplying (Refer to GROUP 00 – Maintenance Service.)
- Accelerator Cable Adjustment (Refer to GROUP 17 – On-vehicle Service.)

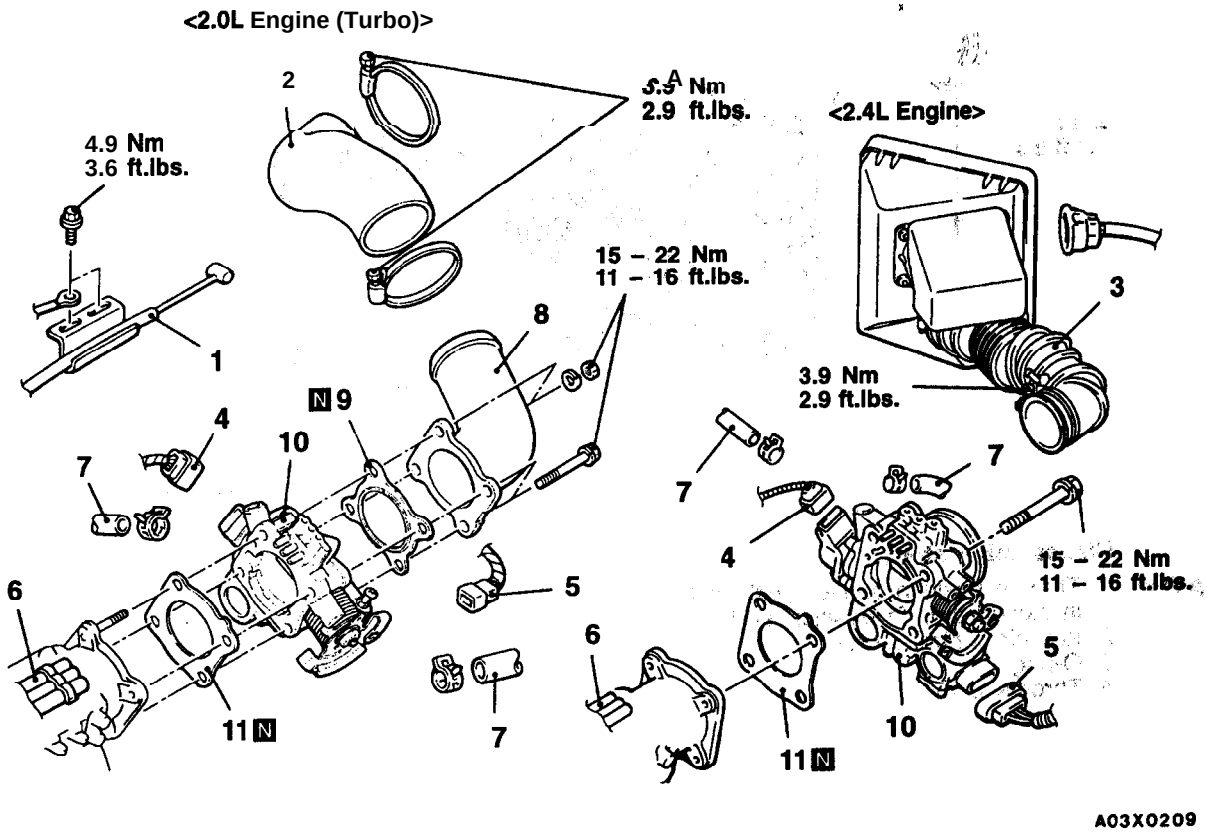

Removal steps

1. Accelerator cable connection
2. Air hose "C" <2.0L Engine (Turbo)>
3. Air intake hose <2.4L Engine>
4. TPS connector
5. IAC motor connector
6. Vacuum hose connection
7. Heater hose connection
8. Charge air cooler fitting <2.0L Engine (Turbo)>
9. Gasket <2.0L Engine (Turbo)>
10. Throttle body
11. ▶A◀ Throttle body gasket

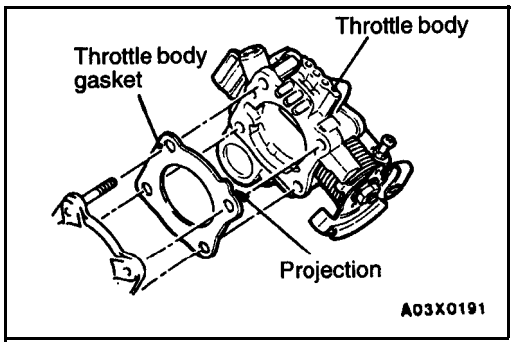

INSTALLATION SERVICE POINT

▶A◀ THROTTLE BODY GASKET INSTALLATION

Install the throttle body gasket so that the projection is where shown in the illustration.

Caution

Poor idling etc. may result if the throttle body gasket is installed incorrectly.

DISASSEMBLY AND REASSEMBLY

13100970051

<2.0L Engine (Turbo)>

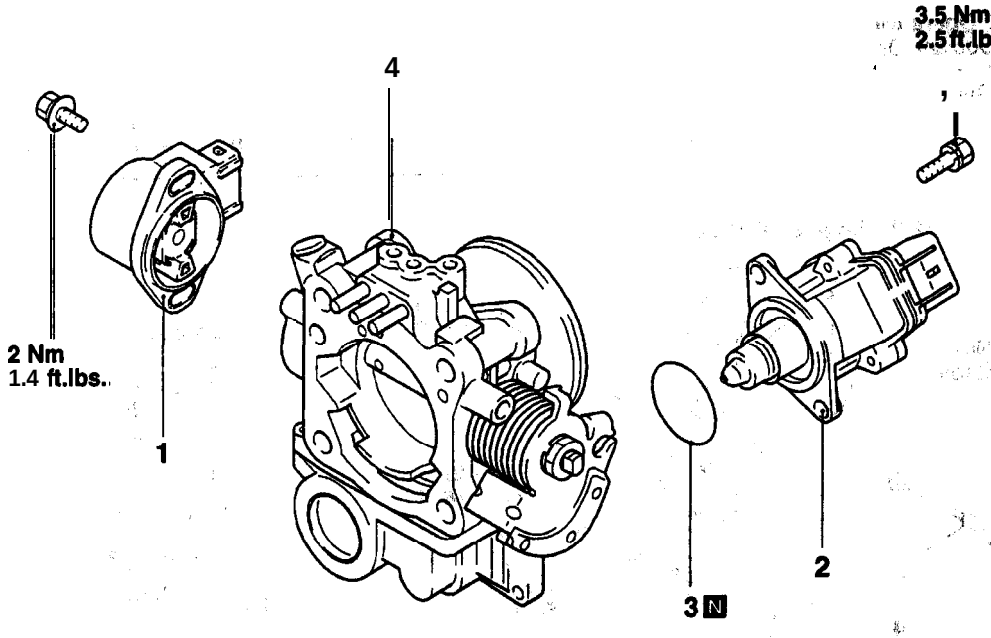

A7FU1282

Disassembly steps

◀A▶ ▶A◀ 1. Throttle position Sensor (with built-in closed throttle position switch)

◀A▶ 2. Idle air control motor

3. O-ring

◀B▶ 4. Throttle body

<2.4L Engine>

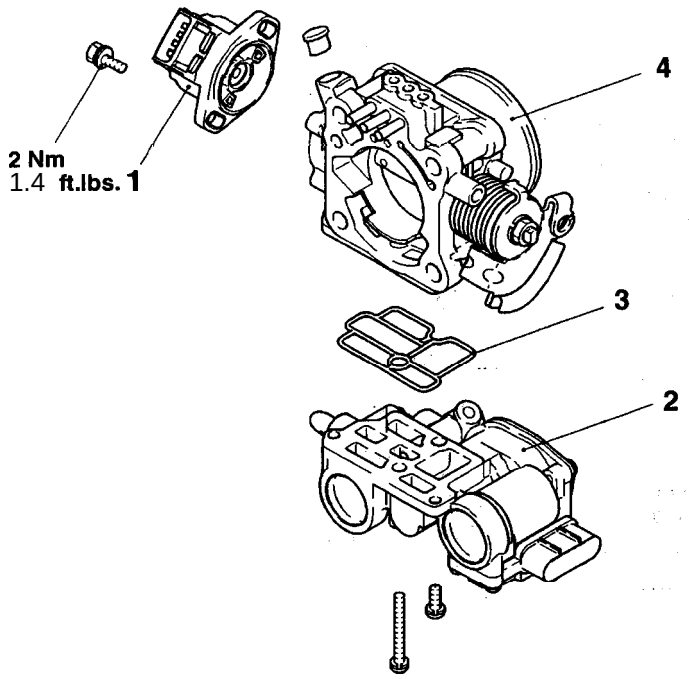

6EN1114

Disassembly steps

◀A▶ ▶A◀ 1. Throttle position sensor (with built-in closed throttle position switch)
◀A▶ 2. Idle air control motor
3. Gasket
◀B▶ 4. Throttle body

DISASSEMBLY SERVICE POINTS

◀A▶ THROTTLE POSITION SENSOR AND IDLE AII? CONTROL MOTOR REMOVAL

1. Do not disassemble the sensor and motor.
2. Do not immerse solvent to clean the sensor and motor. Clean then with shop towel.

◀B▶ THROTTLE BODY REMOVAL

1. Do not remove the throttle valve.
2. Check if the vacuum port or passage is clogged. Use compressed air to clean the vacuum passage.

REASSEMBLY SERVICE POINT

▶A◀ THROTTLE POSITION SENSOR INSTALLATION

(1) Install the throttle position sensor to the throttle body as shown in the diagram.

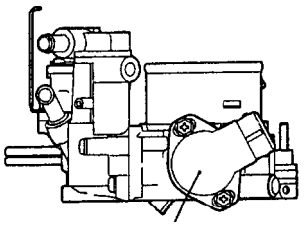

A6FU2099

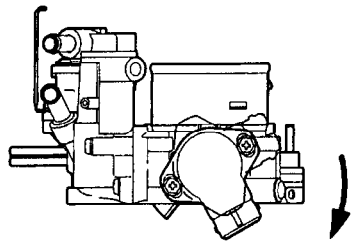

6FU2100

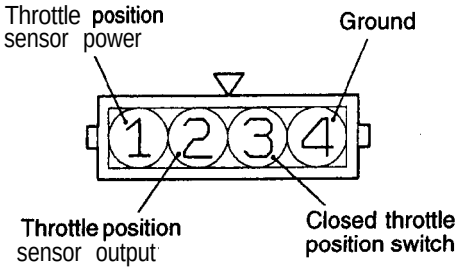

A7FU0535

(2) Turn throttle position sensor 90° clockwise to set it, and tighten screws.

(3) Check for continuity between terminals No. 3 (closed throttle position switch) and No. 4 (ground).

Throttle valve position	Continuity
Fully closed	Conductive
Fully open	Non-conductive

If there is not continuity with the throttle valve fully closed, turn the throttle position sensor counterclockwise, and then check again.

FUEL PUMP RELAY MODULE <2.4L ENGINE>

13100950031

REMOVAL AND INSTALLATION

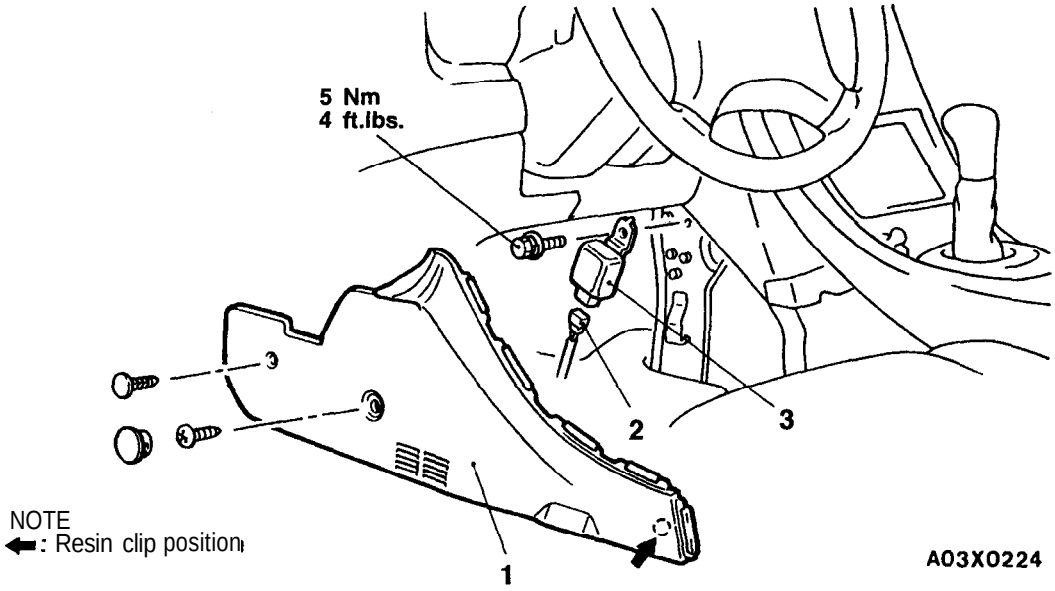

Removal steps

1. Console side cover
2. Harness connector
3. Fuel pump relay module

NOTES

FUSUPPLY

CONTENTS

13509000135

FUEL TANK

13500010032

GENERAL INFORMATION

(1) The fuel tank is located under the floor of the rear seats to provide increased safety.
(2) A fuel cut-off valve has been'adopted to prevent fuel from leaking out in the event of a collision.
(3) The fuel tank for AWD is made from a high density: polyethylene (HDPE) material and blow-formed into an integral 'tank.

Items	Specifications
Fuel tank capacity dm^3 (gals.)	64 (16.9)
Fuel pump type	Electrical, in-tank type

SERVICE SPECIFICATION

13500030010

Items	Standard value
Fuel tank differential pressure sensor output voltage V	2.0 – 3.0

SPECIAL TOOL

13500060064

Tool	Tool number and name	Supersession	Application
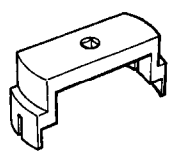	MB991480 Tank cap wrench	–	Cap installation <AWD>
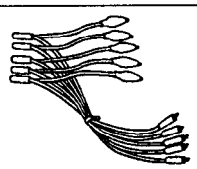	MB991348 Test harness set	–	For checking fuel tank differential pressure sensor

TROUBLESHOOTING

13500070043

Symptom	Probable cause	Remedy
Engine malfunctions due to insufficient fuel supply	Bent or kinked fuel pipe or hose	Repair or replace
	Clogged fuel pipe or hose	Clean or replace
	Clogged fuel filter or in-tank fuel filter	Replace
	Water in fuel filter	Replace the fuel filter or clean the fuel tank and fuel line
	Dirty or rusted fuel tank interior	Clean or replace
	Malfunctioning fuel pump (Clogged filter in the pump)	Replace
Evaporative emission control system malfunctions (When tank filler tube cap is removed, pressure releasing noise is heard)	Mispiping of vapor line	Correct
	Disconnected vapor line piping joint	Correct
	Folded, bent, cracked or clogged vapor line	Replace
	Faulty fuel tank filler tube cap	Replace

FUEL TANK

13500190176

REMOVAL AND INSTALLATION

<FWD-2.0L Engine (Non-turbo)>

Pre-removal Operation
- Fuel Draining
- Reduce the Inner Pressure of Fuel Line and Hose. (Refer to GROUP 13A – On-vehicle Service.)

Post-installation Operation
- Fuel Refilling
- Checking for Fuel Leaks

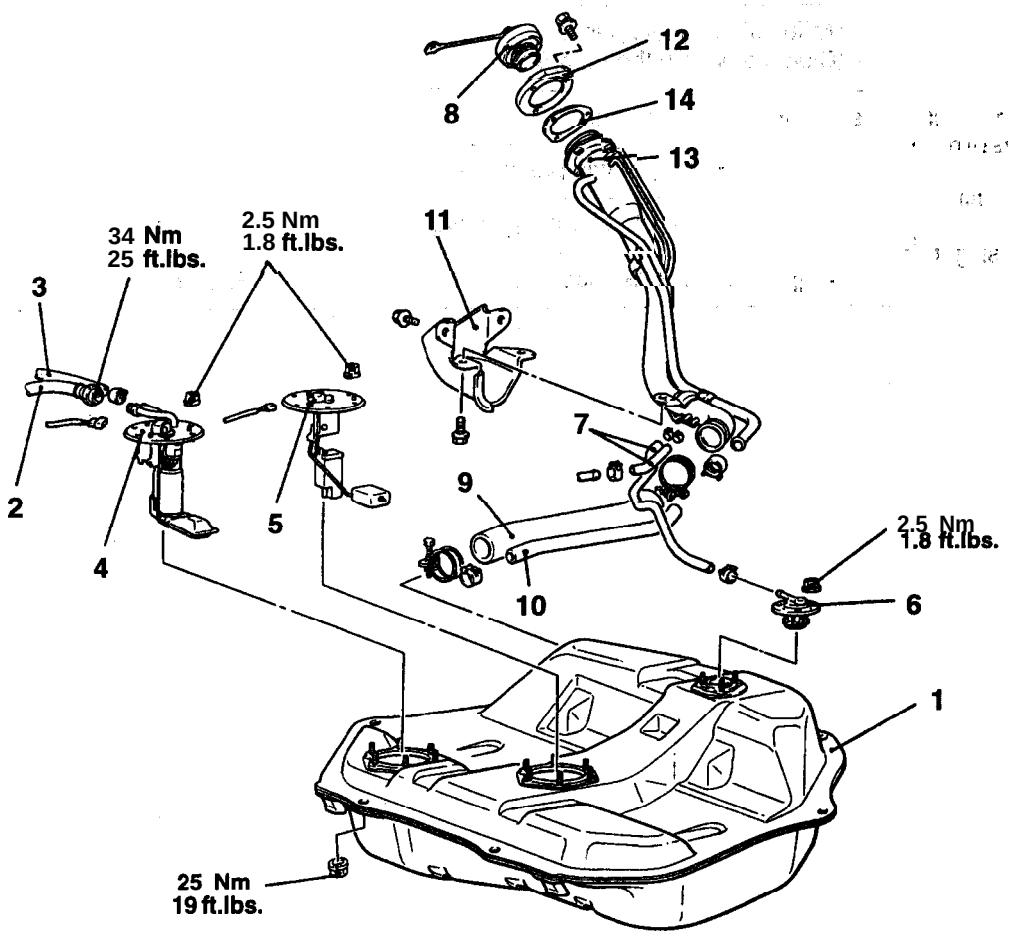

A03X0186

Removal steps

1. Fuel tank
2. High-pressure fuel hose
3. Return hose
4. Fuel pump assembly
5. Fuel gauge unit
6. Fuel cut-off valve assembly
7. Vapor hose
8. **Fuel tank filler tube cap**
9. Filler hose
10. Vapor hose
11. Fuel tank filler tube protector
12. Reinforcement
13. Fuel tank filler tube assembly
14. Packing

NOTE
When replacing the fuel pump assembly or the fuel gauge **unit only, it is possible to work from the service hales** underneath the rear seat cushion without having to remove the fuel tank. (Refer to **P.13F-10.)**

TSB Revision

<FWD-2.0L Engine (Turbo)>

Pre-removal Operation
- Fuel Draining
- Reduce the Inner Pressure of Fuel Line and Hose. (Refer to GROUP 13A – On-vehicle Service.)

Post-installation Operation
- Fuel Refilling
- Checking for Fuel Leaks

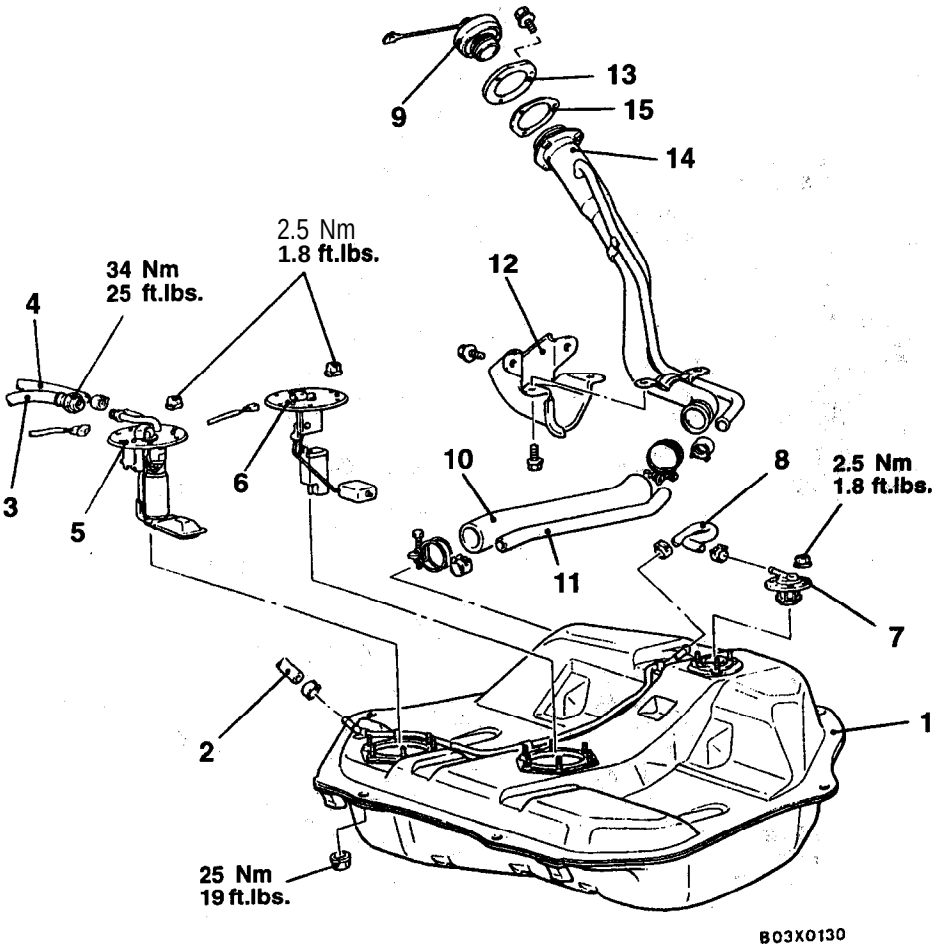

Removal steps

1. Fuel tank
2. Vapor hose
3. High-pressure fuel hose
4. Return hose
5. Fuel pump assembly
6. Fuel gauge unit
7. Fuel cut-off valve assembly
6. Vapor hose
9. Fuel tank filler tube cap
10. Filler hose
11. Vapor hose
12. Fuel tank filler tube protector
13. Reinforcement
14. Fuel tank' filler tube assembly
15. Packing

NOTE
When replacing the fuel pump assembly or the fuel gauge unit only, it is possible to work from the service holes underneath the rear seat cushion without having to remove the fuel tank. (Refer to P.13F-10.)

TSB Revision

<2.4L Engine>

Pre-removal Operation
- Fuel Draining
- Reduce the Inner Pressure of Fuel Line and Hose. (Refer to GROUP 13A– On-vehicle Service.)

Post-installation Operation
- Fuel Refilling
- Checking for Fuel Leaks

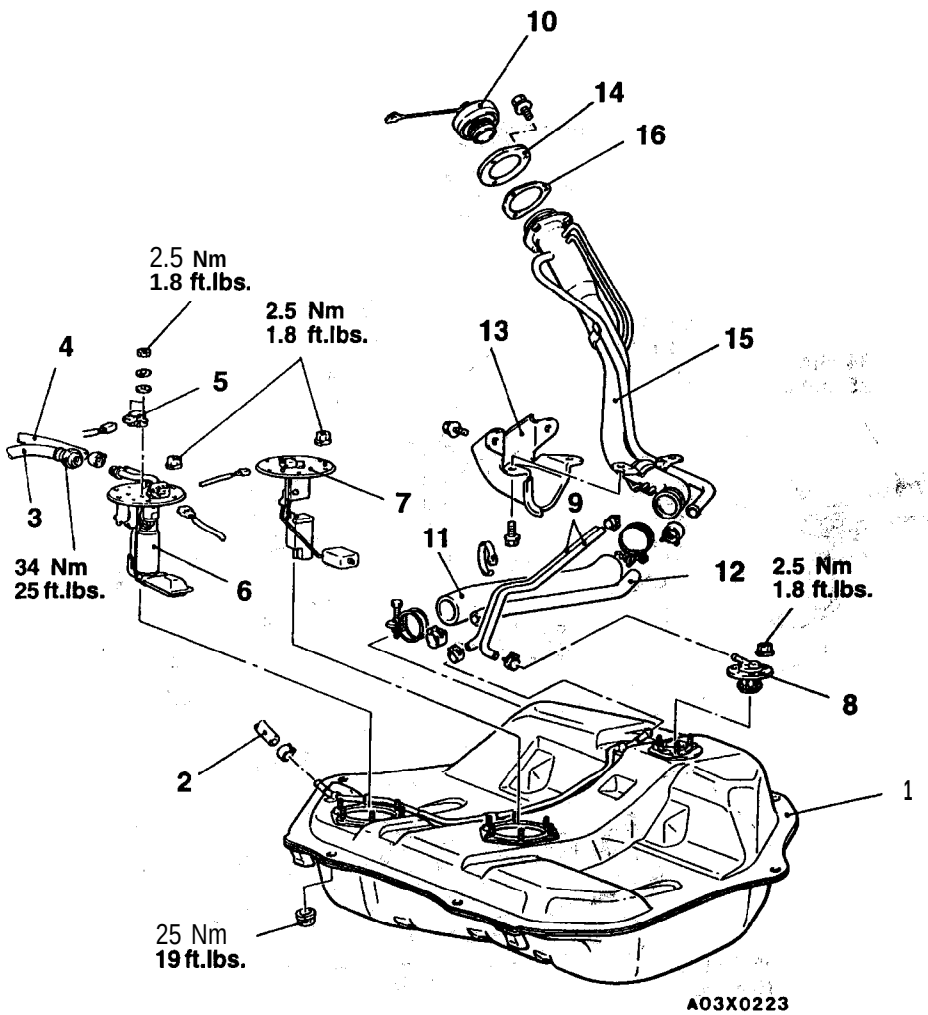

Removal steps
1. Fuel tank
2. Vapor hose
3. High-pressure fuel hose
4. Return hose
▶B◀ 5. Fuel tank differential pressure sensor
6. Fuel pump assembly
7. Fuel gauge unit
8. Fuel cut-off valve assembly
9. Vapor hose
lo. Fuel tank filler tube cap
11. Filler hose
12. Vapor hose
13. Fuel tank filler tube protector
14. Reinforcement
15. Fuel tank filler tube assembly
16. Packing

NOTE
When replacing the fuel pump assembly or the fuel gauge unit only, it is possible to work from the service holes underneath the rear seat, cushion without having to remove the fuel tank. (Refer to P.13F-10.)

TSB Revision

<AWD>

Pre-removal Operation
- Fuel Draining
- Reduce the Inner Pressure of Fuel Line and Hose. (Refer to GROUP 13A – On-vehicle Service.)
- Propeller Shaft Removal (Refer to GROUP 25 – Propeller Shaft.)

Post-installation Operation
- Propeller Shaft Installation (Refer to GROUP 25 – Propeller Shaft.)
- Fuel Refilling
- Checking for Fuel Leaks

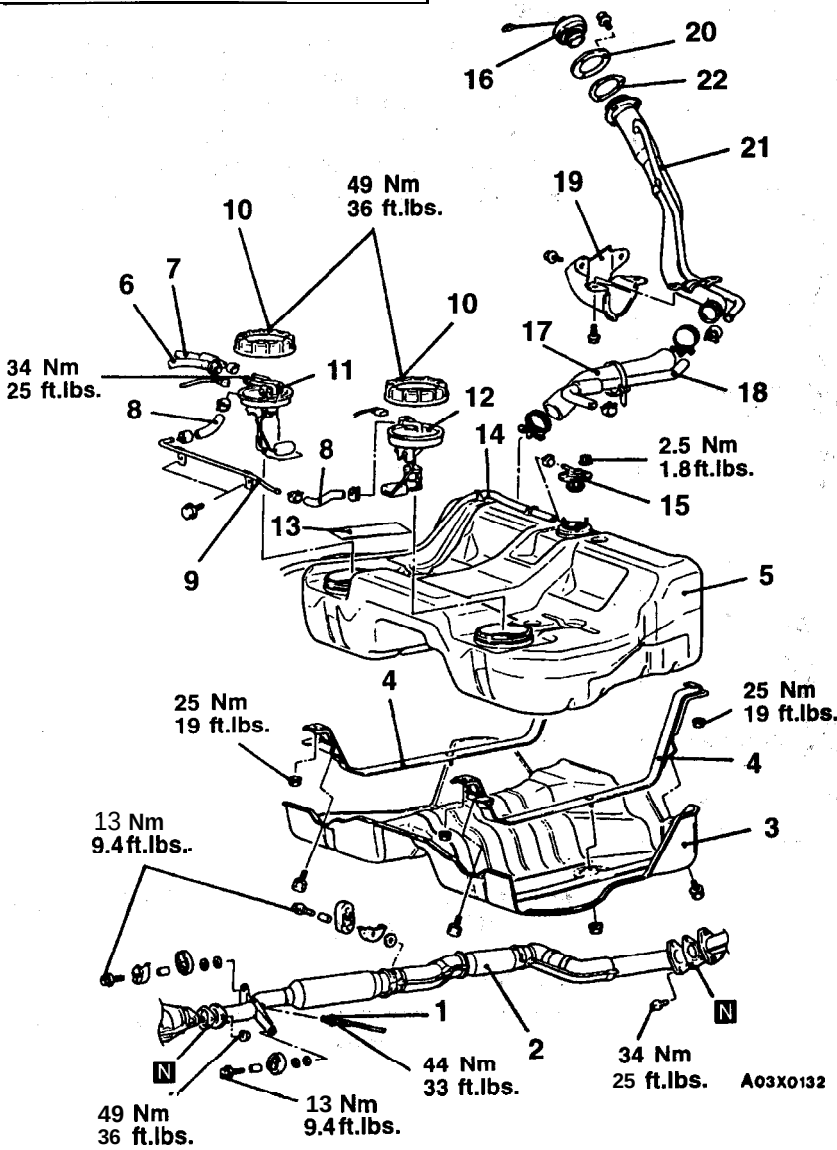

Removal Steps

1. Heated oxygen sensor connection
2. Center exhaust pipe
3. Protector
4. Band
5. Fuel tank
6. High-pressure fuel hose
7. Return hose
8. Suction hose
9. Pipe
10. ▶A◀ Cap
11. Fuel gauge unit and pump assembly
12. Fuel gauge unit and pipe assembly
13. Tape
14. Vapor hose
15. Fuel cut-off valve assembly
16. Fuel tank filler tube cap
17. Filler hose
18. Vapor hose
19. Fuel tank filler tube protector
20. Reinforcement
21. Fuel tank filler tube assembly
22. Packing

NOTE
When replacing the fuel gauge unit and pump assembly or the fuel gauge unit and pipe assembly only, it is possible to work from the service holes underneath the rear seat cushion without having to remove the fuel tank. (Refer to P.13F-10.)

TSB Revision

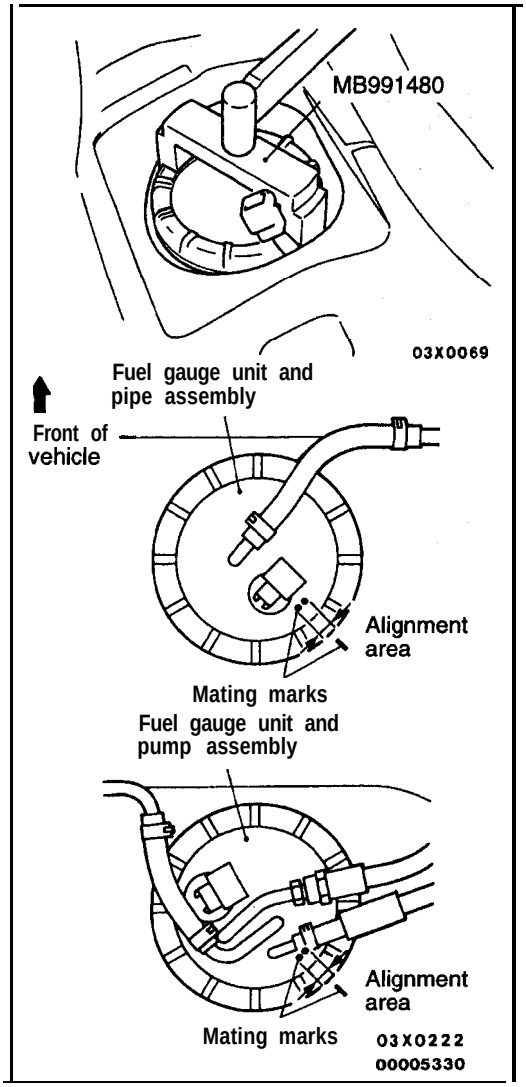

INSTALLATION SERVICE POINT

▶A◀ CAP INSTALLATION

Use the special tool to tighten the cap to the specified torque so that the marks on the fuel tank and the, fuel gauge unit and pump assembly (or the fuel gauge unit and pipe assembly) are aligned.

Caution

Make sure that the fuel gauge unit and pump assembly (or the fuel gauge unit and pipe assembly) does not turn together with the cap when tightening the cap.
If the mating marks are not aligned, the position of the float will not be correct and the fuel gauge indicator light and the fuel level gauge will not operate properly.

▶B◀ FUEL TANK DIFFERENTIAL PRESSURE SENSOR INSTALLATION

Caution

When removing or installing the sensor, take care not to damage sealing.

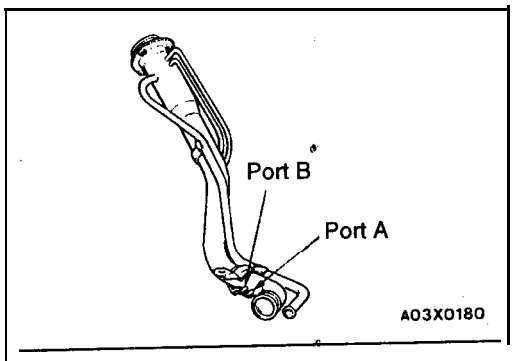

INSPECTION

13500200077

FUEL TANK FILLER TUBE ASSEMBLY CHECK <FWD-2.0L Engine (Non-turbo) and 2.4L Engine>

(1) Connect a clean rubber hose to the port A of the fuel tank filler tube assembly.

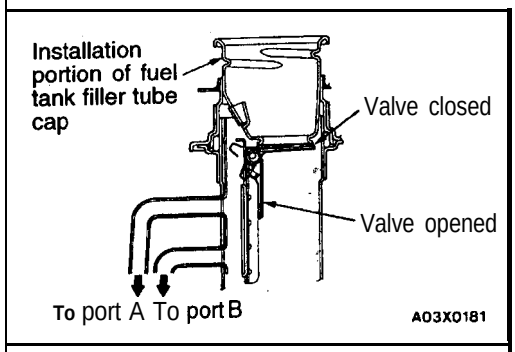

(2) Blow air into the hose. Check that the air flows out of the port B.
(3) Use a screwdriver or similar tool to close the valve. Blow air into the hose in this condition. Check that the air does not flow out of the port B.

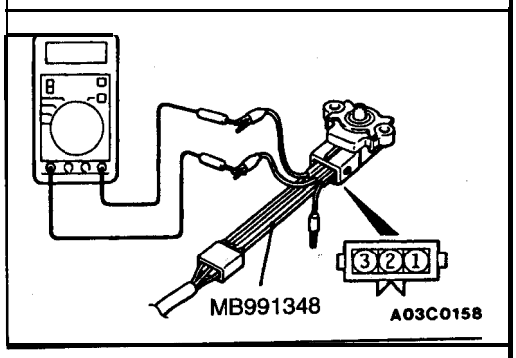

FUEL TANK DIFFERENTIAL PRESSURE SENSOR CHECK <2.4L Engine>

13500320025

(1) Disconnect the fuel tank differential pressure sensor connector and connect the special tool between the terminals of the disconnected connector.
(2) Turn the ignition switch to ON and take a reading of the following output voltage.
Between terminals (2) and (3)

Standard value: 2.0 – 3.0 V

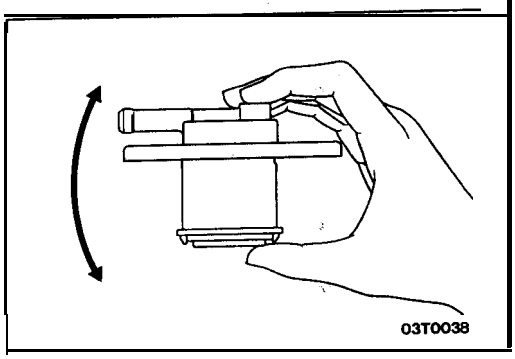

FUEL CUT OFF VALVE CHECK

13500300036

If the sound of the float valve moving (knocking sound) can be heard when the valve assembly is gently shaken up and down, then the valve is okay.

FUEL GAUGE UNIT CHECK

13500310046

Refer to GROUP 54 – Combination Meter.

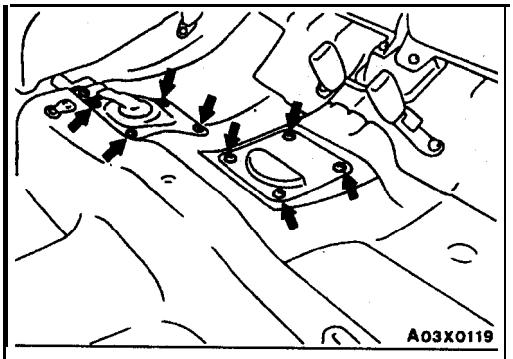

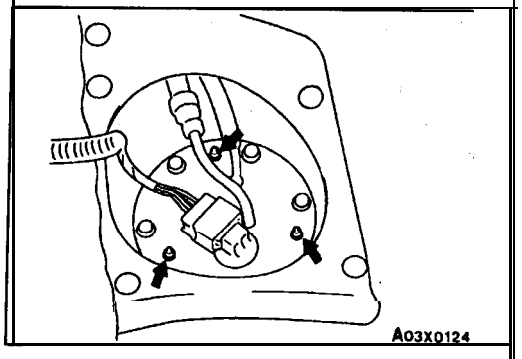

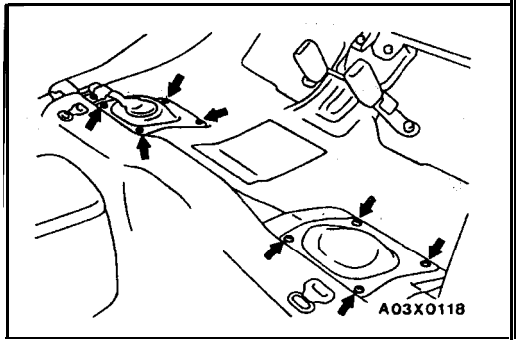

FUEL GAUGE UNIT AND PUMP ASSEMBLY REPLACEMENT

13500160061

<FWD>

(1) Remove the rear seat cushion. (Refer to, GROUP 52A – Seat.)
(2) Remove the protector.

(3) Disconnect the hoses and connectors to remove the fuel pump assembly or fuel gauge unit.
(4) Align the packing positioning projections with. the holes in the fuel pump assembly.

<AWD>

(1) Remove the rear seat cushion. (Refer to GROUP 52A – Seat.)
(2) Remove the protector.
(3) Bleed the residual pressure from inside the fuel pipe line to prevent the fuel from spraying' out.
(Refer to GROUP 13A – On-vehicle Service.)
(4) Disconnect the hose and connector 'connections,' and then remove the fuel gauge unit and pump assembly or the fuel gauge unit and pipe assembly.
(5) Check to be sure that the fuel tank packing is not damaged or deformed, and then securely install the packing.

NOTE
If the packing is damaged or deformed? replace with new packing.

(6) Apply soapy water to the inside of the packing, and "then install the fuel gauge unit and pump assembly or the fuel gauge unit and pipe assembly..

Caution
Do not tilt the fuel gauge unit and pump assembly or the fuel gauge unit and pipe assembly when installing.

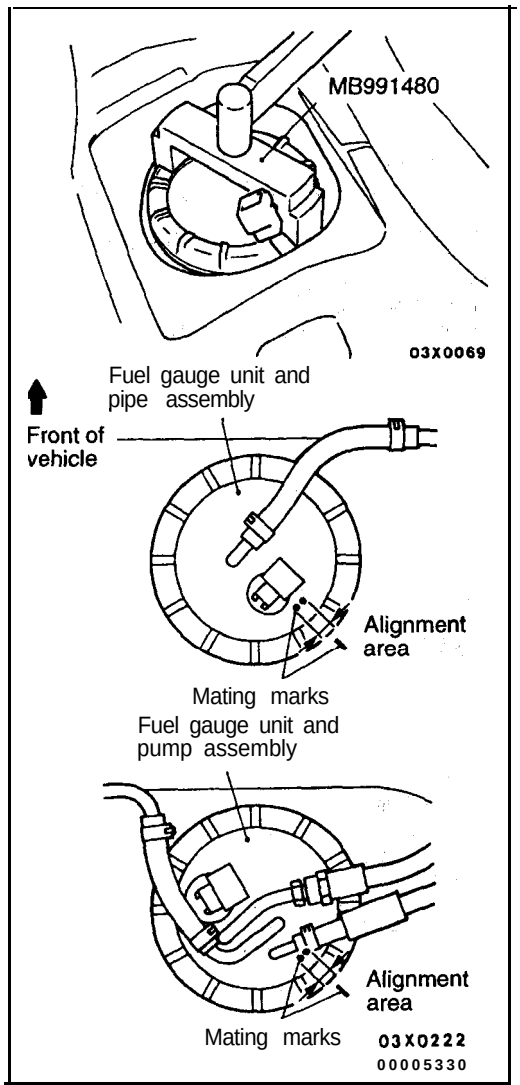

(7) After applying soapy water to the outside thread of the fuel tank. Use the special tool to tighten the cap to the specified torque so that the marks on the fuel tank and the fuel gauge unit and pump assembly (or the fuel gauge unit and pipe assembly) are aligned.

Caution
Make sure that the fuel gauge unit and pump assembly (or the fuel gauge unit and pipe assembly) does not turn together with the cap 'when tightening the cap. If the mating marks are not aligned, the position of the float will not be correct and the fuel gauge indicator light and the fuel level gauge will not operate properly.

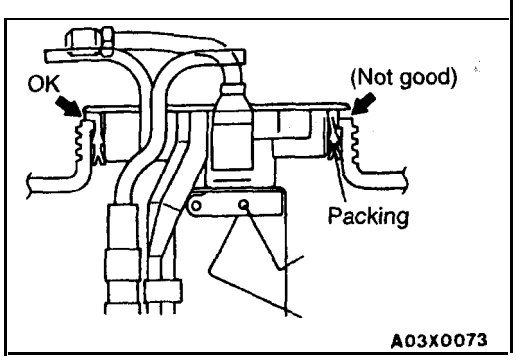

Caution
The packing should be installed as shown in the illustration.

(8) Check for leaks from the installation section of the fuel gauge unit and pump assembly or the fuel gauge unit and pipe assembly by the following procedure.
1. Apply soapy water to the circumference of the cap.
2. Choke the vapor hose and main hose, apply an internal pressure of 10 kPa (1.5psi) or less from the return hose and check to be sure that no bubbles form in the soapy water.

FUEL FILTER

13500280064

REMOVAL AND INSTALLATION

Pre-removal Operation
- Reduce Residual Pressure from High Pressure Hose
  <2.0L Engine (Non-turbo)>
  (Refer to GROUP 13A – On-vehicle Service.)
  <2.0L Engine (Turbo) and 2.4L Engine>
  (Refer to GROUP 13A – On-vehicle Service.)
- Battery Removal <2.0L Engine (Turbo) and 2.4L Engine>
- Air Intake Hose Removal <2.0L Engine (Turbo) and 2.4L Engine>

Post-installation Operation
- Air Intake Hose Installation <2.0L Engine (Turbo) and 2.4L Engine>
- Battery Installation <2.0L Engine (Turbo) and 2.4L Engine>
- Fuel Pressure Measurement
  <2.0L Engine (Non-turbo)>
  (Refer to GROUP 13A – On-vehicle Service.)
  <2.0L Engine (Turbo) and 2.4L Engine>
  (Refer to GROUP 13A – On-vehicle Service.)

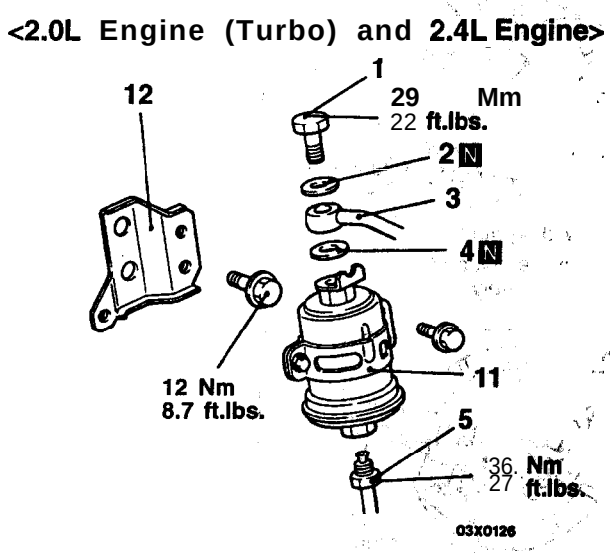

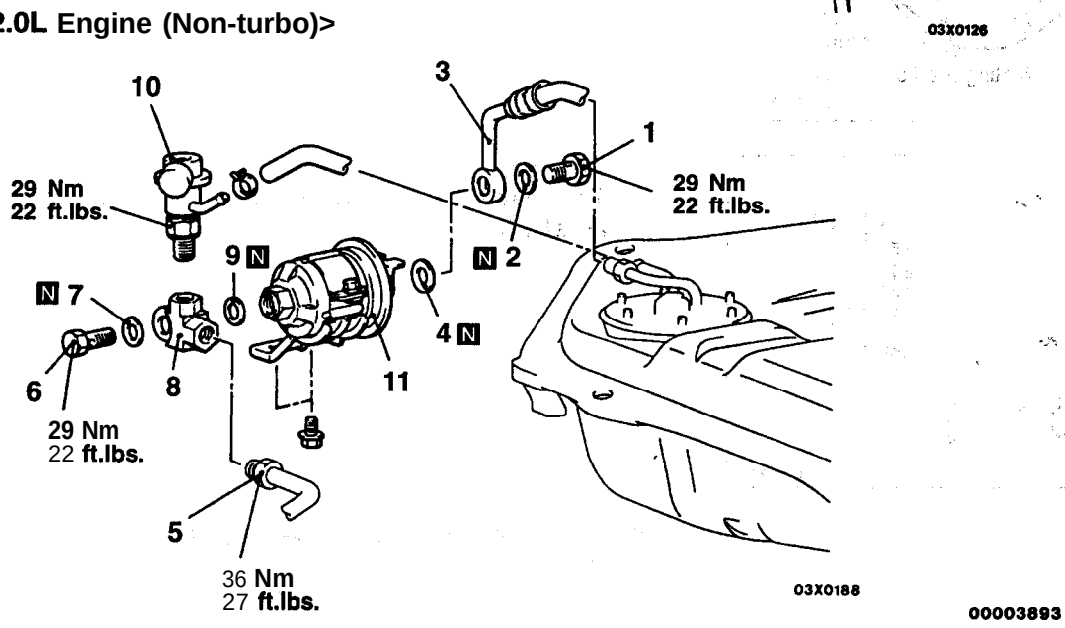

Removal steps

◀A▶
1. Eye bolt
2. Gasket
3. High-pressure fuel hose connection
4. Gasket
◀B▶ 5. Fuel main pipe connection
◀A▶ 6. Eye bolt
7. Gasket
8. Connector
9. Gasket
10. Pressure regulator
11. Fuel filter
12. Fuel filter bracket

TSB Revision

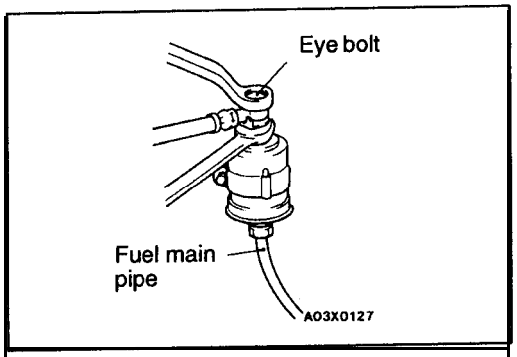

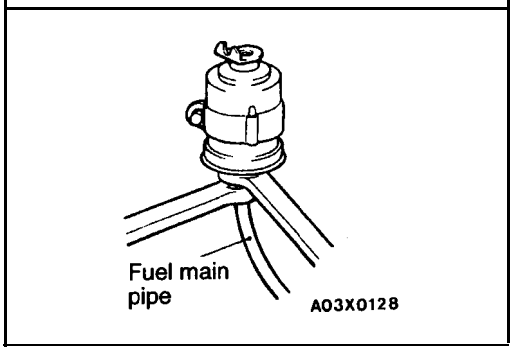

REMOVAL SERVICE POINTS

◀A▶ EYE BOLT REMOVAL

Hold the fuel filter with a spanner and remove the eye bolt.

Caution

As there will be some pressure remaining in the fuel pipe line, cover **it with a shop towel to prevent fuel from spraying out.**

◀B▶ FUEL MAIN PIPE DISCONNECTION

Hold the fuel filter with a spanner and loosen the flare nut. Then disconnect the fuel main pipe.

NOTES

ENGINE COOLING

CONTENTS

14109000079

GENERAL INFORMATION

14100010064

The cooling system is designed to keep every part of the engine at appropriate temperature in whatever condition the engine may be operated.
The cooling method is of the water-cooled, pressure forced circulation type in which the water pump pressurizes coolant and circulates it throughout the engine: If the coolant temperature exceeds the prescribed temperature, the thermostat opens to circulate the coolant through the radiator as well so that the heat absorbed by the coolant may be radiated into the air.
The water pump is of the centrifugal type and is driven by the timing belt or the drive belt from the crankshaft.
The radiator is the corrugated fin, down flow type and is cooled by the electrical radiator fan.

CONSTRUCTION DIAGRAM

<2.0L Engine (Non-turbo)>

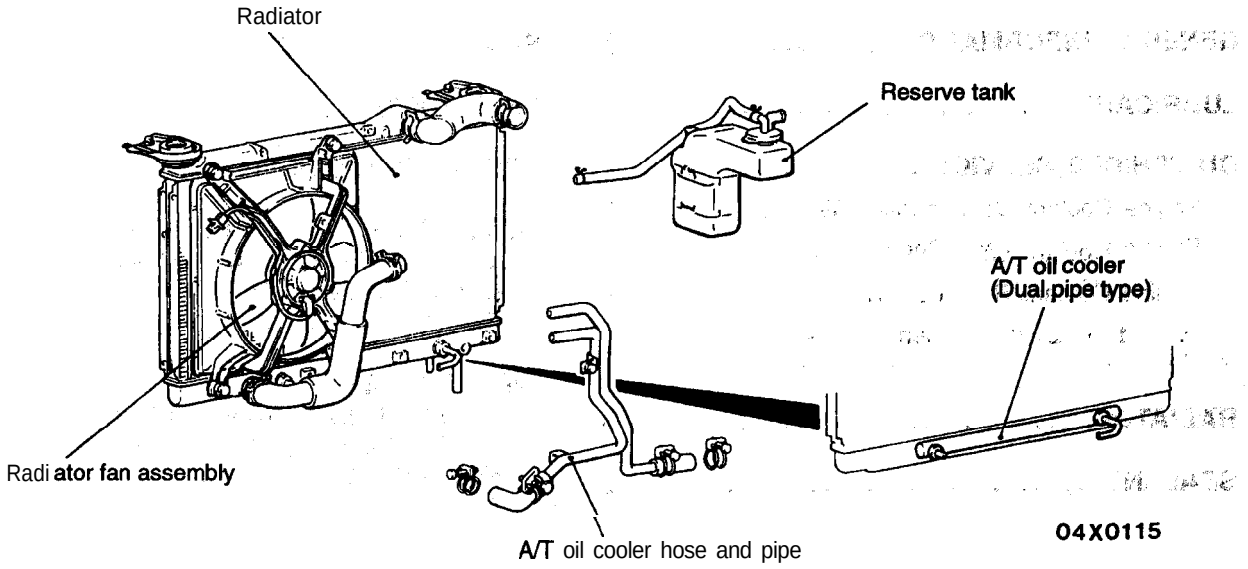

<2.0L Engine (Turbo)>

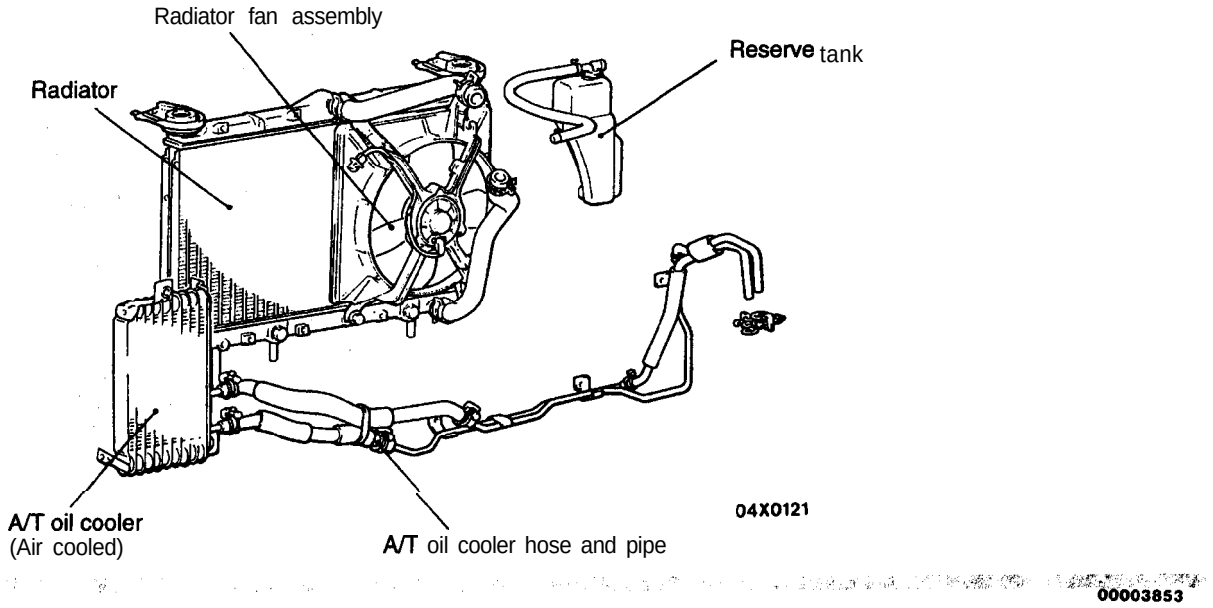

TSB Revision

<2.4L Engine>

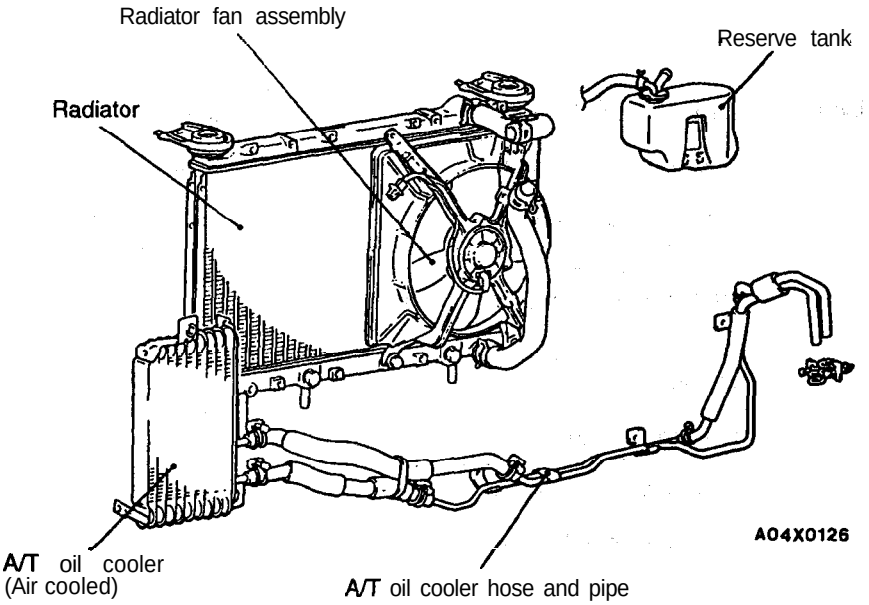

SERVICE SPECIFICATIONS

14100030060

Items			Standard value	Limit
Thermostat	Valve opening temperature of thermostat °C (°F)	2.0L Engine (Non-turbo)	90.5 (195)	–
		2.0L Engine (Turbo) and 2.4L Engine	82 (180)	–
	Full-opening temperature of thermostat °C (°F)	2.0L Engine (Non-turbo)	102 (216)	–
		2.0L Engine (Turbo) and 2.4L Engine	95 (203)	
Radiator cap valve opening pressure kPa (psi)		2.0L Engine (Non-turbo)	94-122 (14-18)	–
		2.0L Engine (Turbo) and 2.4L Engine	75–105 (11–15)	65 (9.2)

LUBRICANT

14100040063

Item		Quantity dm^3 (qts.)
Engine coolant	HIGH QUALITY ETHYLENE GLYCOL ANTIFREEZE COOLANT	7.0 (7.4)

SEALANT

14100050066

Item	Specified sealant
Thermostat case <2.0L Engine (Turbo) and 2.4L Engine>	Mitsubishi Genuine Parts No. MD970389 or equivalent:

TSB Revision

TROUBLESHOOTING

14100070109

OVERHEAT

Probable cause		Remedy
Inoperative electric cooling fan	Faulty electrical motor ,	Replace
	Faulty radiator fan relay	Replace
Water leaks	Damaged radiator core joint	Replace
	Corroded or cracked hoses (radiator hose, heater hose, etc.)	Replace
	Faulty radiator cap valve or setting of spring	Replace
	Cracked intake manifold	Replace
	Cracked thermostat housing	Replace
	Loose bolts or leaking gasket in water outlet fitting	Torque bolts again or replace gasket
	Loose bolts or leaking gasket in water inlet fitting	Torque bolts again or replace gasket
	Loose water pump mounting bolts or leaking gasket	Torque bolts again or replace gasket
	Loose thermostat housing bolts or leaking gasket	Torque bolts again or replace gasket
Faulty automatic transaxle oil cooler operation	Blocked or collapsed hose and pipe	Replace
	Loose hose and pipe connection	Correct
Others	Insufficient engine coolant	Fill
	Too high an anti-freeze concentration	Correct anti-freeze concentration
	Loose or broken drive belt	Replace
	Damaged or blocked (insufficiently ventilated) radiator fins	Correct
	Faulty thermostat operation	Replace
	Faulty water pump operation	Replace
	Water passage clogged with slime or rust deposit or foreign substance	Clean

NO RISE IN TEMPERATURE

Probable cause	Remedy
Faulty thermostat	Replace

TROUBLESHOOTING HINTS

<2.0L Engine (Non-turbo)>

1. Only the radiator fan does not operate.
   - Check fusible link No. 7.
2. Only the condenser fan does not operate.
   - Check dedicated fuse No. 9.
3. The radiator fan and condenser fan do' not operate in the low speed mode, but operate otherwise.
   - Check the radiator fan motor relay (LO) and condenser fan motor relay (LO).
   - Check the powertrain control module.
4. The radiator fan and condenser fan **do not** operate in the high speed mode, 'but **operate** otherwise.
   - Check the radiator fan motor relay **(HI)** and condenser fan motor relay (HI).
   - Check the power-train control module.

Fan Operating Mode

Air conditioning switch	Vehicle speed sensor km/h (mph)	Engine coolant temperature sensor °C (°F)	Fan revolving operation condition		
			Radiator fan motor		Condenser fan motor
			M/T	A/T	
OFF	45 (28) or less	95 (203) or less	OFF	OFF	OFF
		95 (203)–100 (210)	HIGH	Medium	OFF
		100 (210) or more	HIGH	HIGH	Medium
OFF	45 (28)–80 (50)	90 (194) or less	OFF	OFF	OFF
		90 (194)–100 (210)	HIGH	Medium	OFF
		100 (210) or more	HIGH	HIGH	Medium
OFF	80 (50) or more	100 (210) or less	OFF	OFF	Medium
		100 (210) or more	HIGH	HIGH	OFF
ON	20 (12) or less	100 (210) or less	HIGH	Medium	Medium
		100 (210)–115 (242)	HIGH	HIGH	HIGH
		115 (242) or more	HIGH	HIGH	HIGH
ON	20 (12)–80 (50)	100 (210) or less	HIGH	Medium	Medium
		100 (210)–115 (242)	HIGH	HIGH	HIGH
		115 (242) or more	HIGH	HIGH	HIGH
ON	80 (50) or more	100 (210) or less	HIGH	Medium	Medium
		100 (210)–115 (242)	HIGH	HIGH	HIGH
		115 (242) or more	HIGH	HIGH	HIGH

<2.0L Engine (Turbo) and 2.4L Engine>

1. Only the radiator fan does not operate.
   - Check fusible link No. 7.
2. Only the condenser fan does not operate.
   - Check dedicated fuse No. 9.
3. The radiator fan and condenser fan do not operate in the low speed mode, but operate otherwise.
   - Check the radiator fan motor relay (LO) and condenser fan motor relay (LO).
   - Check the engine control module. (Refer to GROUP 13A – Troubleshooting.)
4. The radiator fan and condenser fan do not operate in the high speed mode, but operate otherwise.
   - Check the, radiator' fan motor relay (HI) and condenser fan motor relay (HI).
   - Check the engine control module. (Refer to, GROUP 13A – Troubleshooting.)

Fan Operating Mode

Air conditioning switch	Vehicle speed sensor km/h (mph)	Engine coolant temperature sensor °C (°F)	Fan revolving operation condition		
			Radiator fan motor		Condenser fan motor
			M/T	A/T	
OFF	45 (28) or less	95 (203) or less	OFF	OFF	OFF
		95 (203)–100 (210)	Medium	LOW	OFF
		100 (210) or more	HIGH	HIGH	Medium
OFF	45 (28)–80(50)	90 (194) or less	OFF	OFF	OFF
		90 (194)–100 (210)	Medium	LOW	OFF
		100 (210) or more	HIGH	HIGH	Medium
OFF	80 (50) or more	100 (210) or less	OFF	OFF	OFF
		100 (210) or more	HIGH	HIGH	Medium
ON	20 (12) or less	100 (210) or less	Medium	LOW	Medium
		100 (210)–115 (242)	HIGH	HIGH	HIGH
		115 (242) or more	HIGH	HIGH	HIGH
ON	20 (12)–80(50)	100 (210) or less	Medium	LOW	Medium
		100 (210)–115 (242)	HIGH	HIGH	HIGH
		115 (242) or more	HIGH	HIGH	HIGH
ON	80 (50) or more	100 (210) or less	Medium	LOW	Medium
		100 (210)–115 (242)	HIGH	HIGH	HIGH
		115 (242) or more	HIGH	HIGH	HIGH

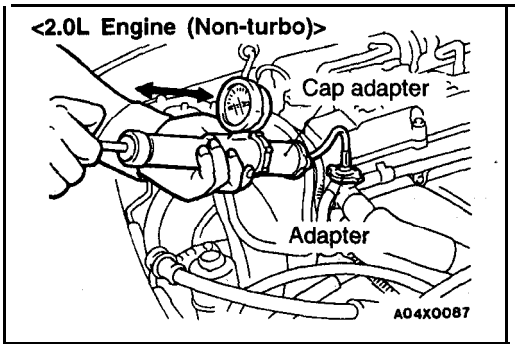

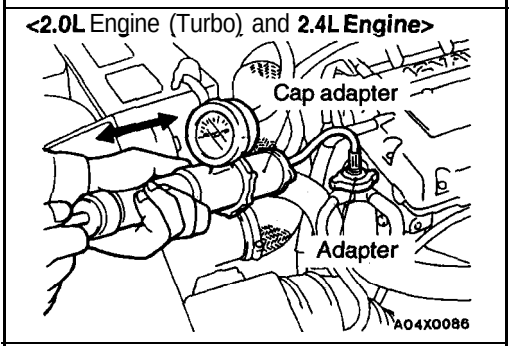

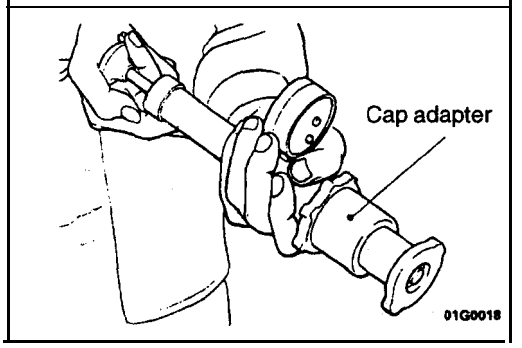

ON-VEHICLE SERVICE

14100100051

ENGINE COOLANT LEAK CHECK

1. Confirm that the coolant level is. up **to the filter neck.** Install a radiator cap tester and apply 160 **kPa** (23 psi) pressure, and then check for leakage from **the** radiator hose or connections.

   Caution
   1. After testing, clean up all coolant seepage from areas of leakage.
   2. When the tester is removed, be careful not to spill any coolant.
   3. During tester usage, do not deform the filler neck of the radiator.

2. If leakage is present, repair or replace the appropriate part.

RADIATOR CAP VALVE OPENING PRESSURE CHECK

14100130067

1. Use 'a cap adapter to attach the radiator cap to the tester.
2. Increase the pressure until the indicator of the gauge stops moving.

   Standard value:
   <2.0L Engine (Non-turbo)>
   94-122 kPa (14–18 psi)
   <2.0L Engine (Turbo) and 2.4L Engine>
   75–105 kPa (11–15 psi)

   Limit:
   <2.0L Engine (Turbo) and 2.4L Engine>
   65 kPa (9.2 psi)

3. Replace the radiator cap if the reading does not remain at or above the limit.

   NOTE
   Be sure that the radiator cap is clean before testing, since rust or other foreign material on the radiator cap seal may cause an improper reading.

ENGINE COOLANT REPLACEMENT

14100120088

Refer to GROUP 00 – Maintenance Service.

ENGINE COOLANT CONCENTRATION TEST

14100110085

Refer to GROUP 00 – Recommended Lublicants and Lublicant Capacities Table.

RADIATOR

14100150209

REMOVAL AND INSTALLATION

<2.0L Engine (Non-turbo)>

Pre-removal Operation
- Engine Coolant Draining (Refer to GROUP 00 – Maintenance Service.)

Post-installation Operation
- Engine Coolant Supplying and Checking (Refer to GROUP 00 – Maintenance Service.)
- A/T Fluid Checking and Refilling if Necessary <Vehicles with A/T> (Refer to GROUP 00 – Maintenance Service.)

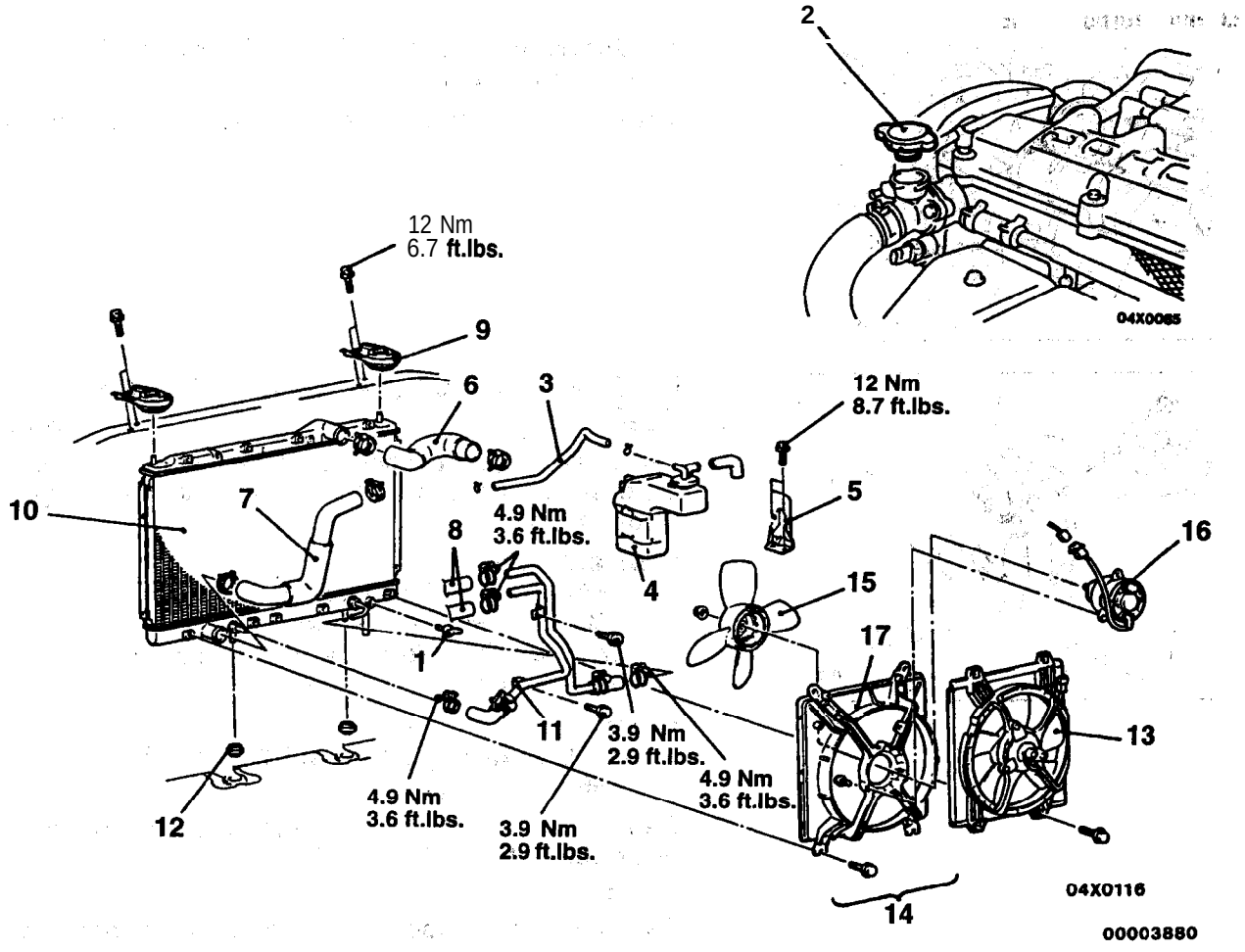

Radiator removal steps

1. Drain plug
2. Radiator cap
3. Overflow tube
4. Reserve tank
5. Reserve tank bracket
6. ◀A▶ ▶A◀ Radiator upper hose
7. ◀A▶ ▶A◀ Radiator lower hose
8. ◀B▶ Transaxle fluid cooler hose, connection <Vehicles with A/T>
9. Upper insulator
10. Radiator assembly
11. ◀B▶ Transaxle fluid cooler hose and pipe assembly <Vehicles with A/T>
12. Lower insulator
13. Condenser fan motor assembly <Vehicles with A/C>
14. Radiator fan motor assembly
15. Fan
16. Radiator fan motor
17. Shroud

Radiator fan motor removal steps

11. ◀B▶ Transaxle fluid cooler hose and pipe assembly <Vehicles with A/T>
14. Radiator fan motor assembly
15. Fan
16. Radiator fan motor
17. Shroud

TSB Revision

<2.0L Engine (Turbo)>

Pre-removal Operation
- Engine Coolant Draining (Refer to GROUP 00 – Maintenance Service.)

Post-installation Operation
- Engine Coolant Supplying and Checking (Refer to GROUP 00 – Maintenance Service.)
- A/T Fluid Checking and Refilling if Necessary <Vehicles with A/T> (Refer to GROUP 00 – Maintenance Service.)

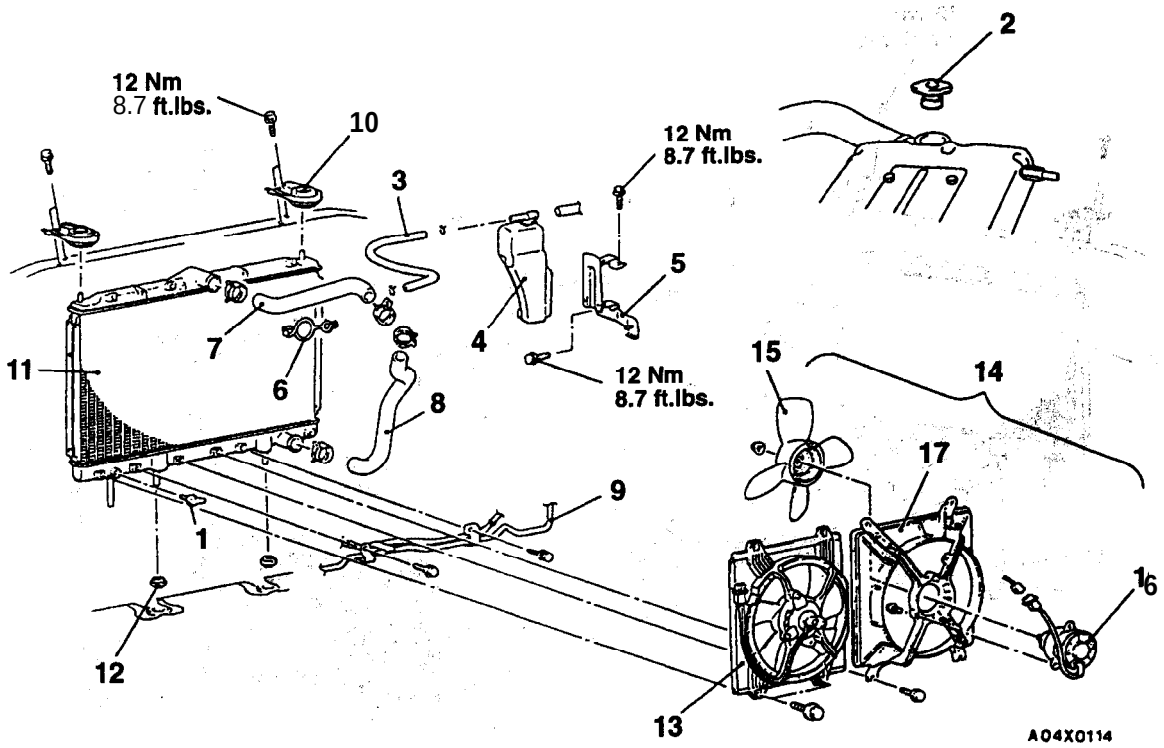

Radiator removal steps

1. Drain plug
2. Radiator cap
3. Overflow tube
4. Reserve tank
5. Reserve tank bracket
6. Clip
7. ◀A▶ ▶A◀ Radiator upper hose
8. ◀A▶ ▶A◀ Radiator lower hose
9. ◀B▶ Transaxle fluid cooler hose and pipe assembly <Vehicles with A/T>
10. Upper insulator
11. Radiator assembly
12. Lower insulator
13. Condenser fan motor assembly <Vehicles with A/C>
14. Radiator fan motor assembly
15. Fan
16. Radiator fan motor
17. Shroud

Radiator fan motor removal steps

4. Reserve tank
9. ◀B▶ Transaxle fluid cooler hose and pipe. assembly <Vehicles with A/T>
14. Radiator fan motor assembly
15. Fan.
16. Radiator fan motor
17. Shroud

TSB Revision

<2.4L Engine>

Pm-removal Operation
- Engine Coolant Draining
  (Refer to GROUP 00 – Maintenance Service.)

Post-installation Operation
- Engine Coolant Supplying and Checking (Refer to GROUP 00 – Maintenance Service.)
- A/T Fluid Checking -and Refilling ti Necessary <Vehicles with A/T>
  (Refer to GROUP 00 – Maintenance Service.)

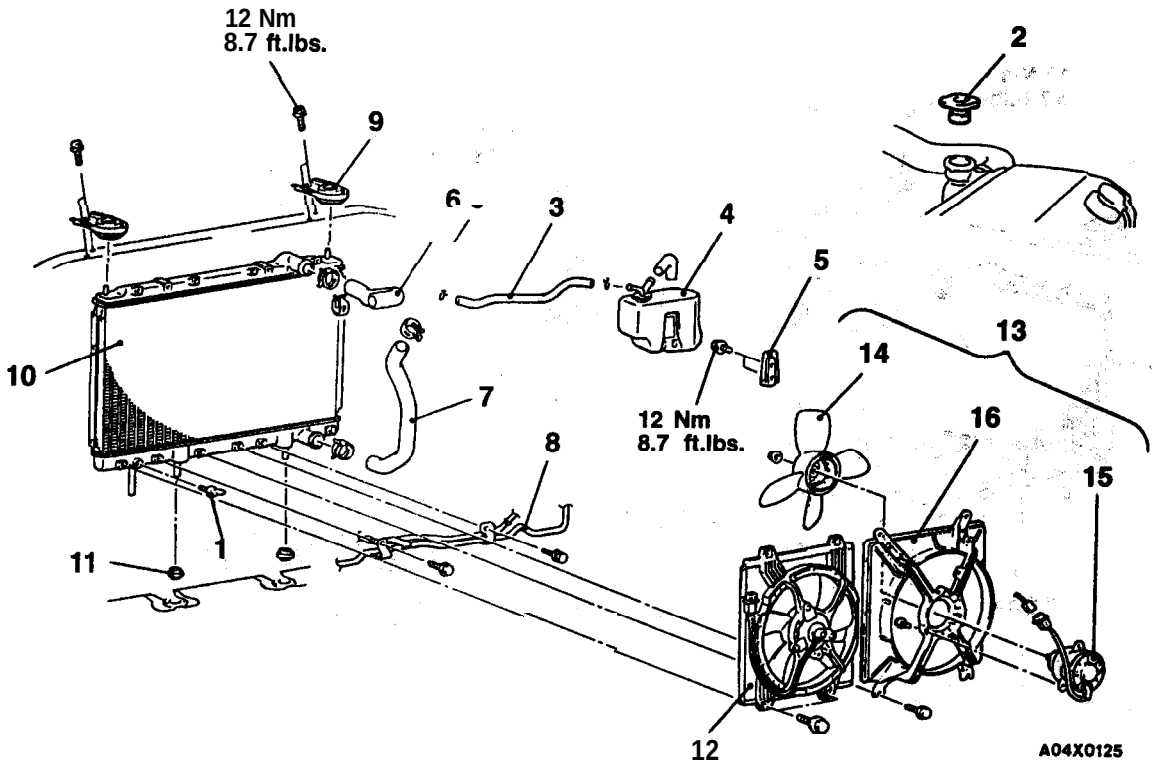

Radiator removal steps

1. Drain plug
2. Radiator cap
3. Overflow tube
4. Reserve tank
5. Reserve tank bracket
◀A▶ ▶A◀ 8. Radiator upper hose
◀A▶ ▶A◀ 7. Radiator lower hose
◀B▶ 8. Transaxle fluid cooler hose and pipe assembly <Vehicles with A/T>
9. Upper insulator
10. Radiator assembly
11. Lower insulator
12. Condenser fan motor assembly <Vehicles with A/C>
13. Radiator fan motor assembly
14. Fan
15. Radiator fan motor
16. Shroud

Radiator fan motor removal steps

◀B▶
4. Reserve tank
8. Transaxle fluid cooler hose and pipe assembly <Vehicle with A/T>
13. Radiator fan motor assembly
14. Fan
15. Radiator fan motor
16. Shroud

TSB Revision

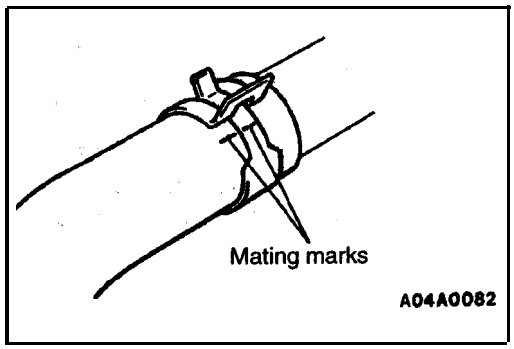

REMOVAL SERVICE POINTS

◀A▶ RADIATOR UPPER HOSE/RADIATOR LOWER HOSE DISCONNECTION

After making mating marks on the radiator hose and the hose clamp, disconnect the radiator hose.

◀B▶ TRANSAXLE FLUID COOLER HOSE/TRANSAXLE FLUID COOLER HOSE AND PIPE ASSEMBLY REMOVAL

After removing the hose from the radiator, plug the hose and the radiator nipple to prevent dust or foreign particles from getting in.

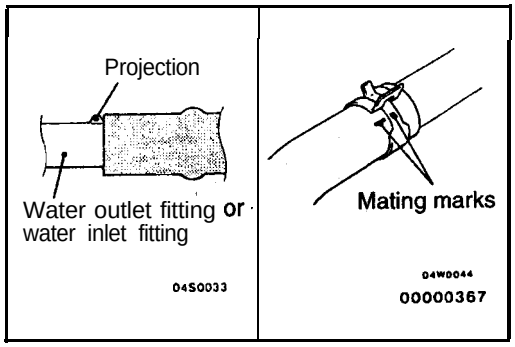

INSTALLATION SERVICE POINT

▶A◀ RADIATOR LOWER HOSE/RADIATOR UPPER HOSE CONNECTION

(1) Insert each hose as far as the projection of the water outlet fitting or water inlet fitting.
(2) Align the mating marks on the radiator hose and hose clamp, and then connect the radiator hose.

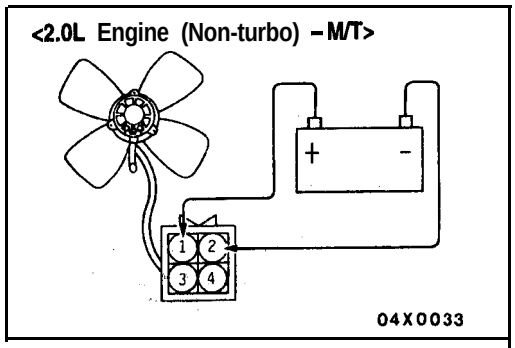

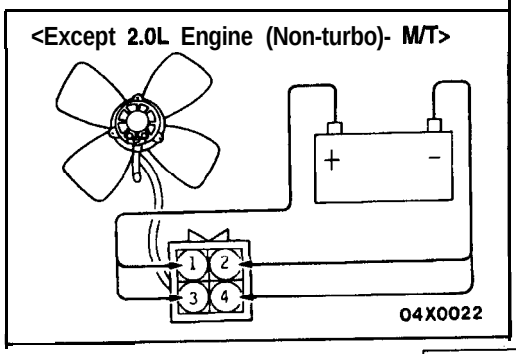

INSPECTION

14100190065

RADIATOR FAN MOTOR CHECK

(1) Check to be sure that the radiator fan rotates when battery, voltage is applied between terminals (as shown in the figure).
(2) Check to see that abnormal noises are not produced, while motor is turning.

<2.0L Engine (Non-Turbo)>

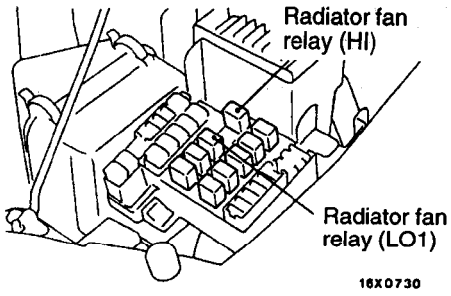

<2.0L Engine (Turbo)>

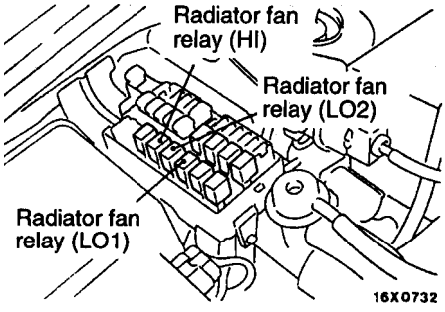

2.4L Engine>

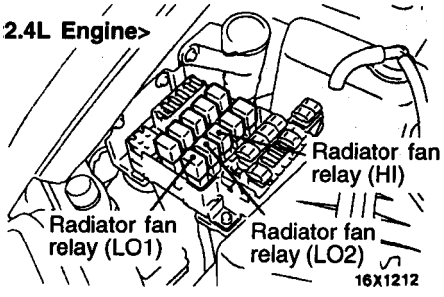

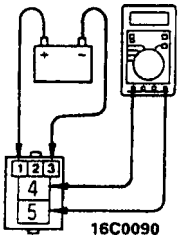

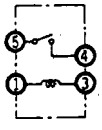

00004041

RADIATOR FAN RELAY CONTINUITY CHECK 14100440061

Battery voltage	Terminal No.			
	1	3	4	5
Power is not supplied	○	○		
Power is supplied	⊕	⊖	○	○

TSB Revision

THERMOSTAT

14100240197

REMOVAL AND INSTALLATION

Pre-removal and Post-installation Operation
- Engine Coolant Draining and Supplying (Refer to GROUP 00 – Maintenance Service.)
- Air Hose(C) Removal and Installation <2.0L Engine (Turbo)> (Refer to GROUP 15 -Charge Air Cooler.)

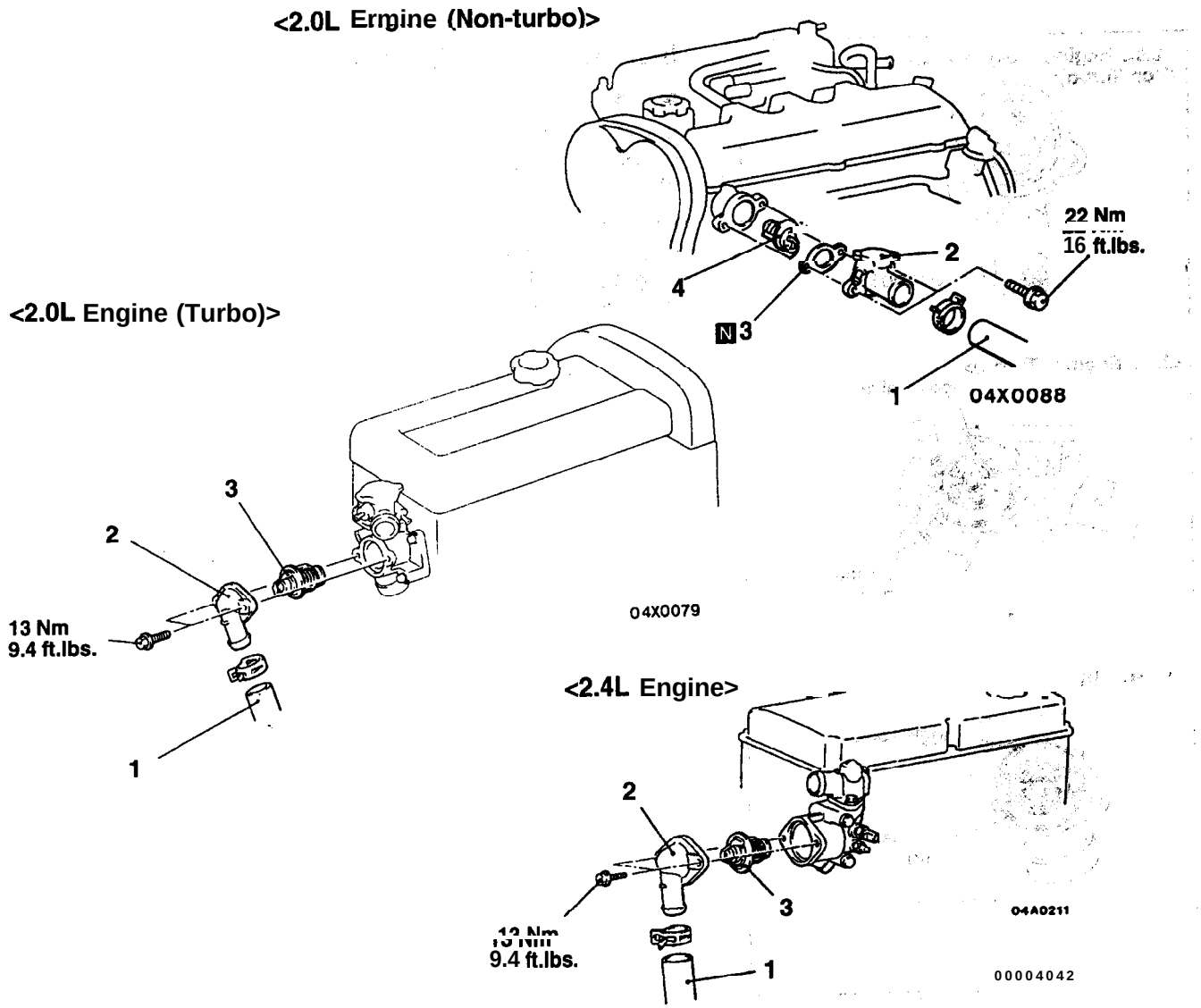

Removal steps

◀A▶ ▶B◀ 1. Radiator upper hose connection <2.0L Engine (Non-turbo)> or radiator lower hose connection <2.0L Engine (Turbo) and 2.4L Engine>

2. Water outlet fitting <2.0L Engine (Non-turbo)> or water inlet fitting <2.0L Engine (Turbo) and 2.4L Engine>

3. Gasket <2.0L Engine (Non-turbo)>

▶A◀ 4. Thermostat

TSB Revision

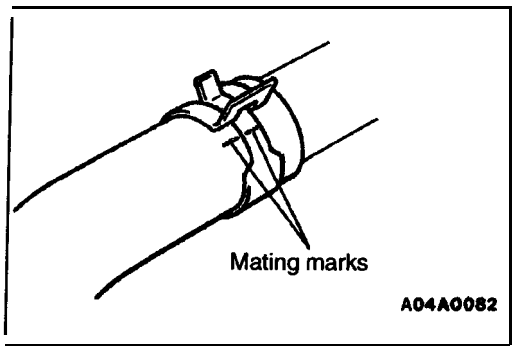

REMOVAL SERVICE POINT

◀A▶ RADIATOR UPPER HOSE <2.0L Engine (Non-turbo)> OR RADIATOR LOWER ROSE <2.0L Engine (Turbo) and. 2.4L Engine> , DISCONNECTION

Place a mating mark on the radiator hose and the hose clamp. Then, disconnect the radiator hose.

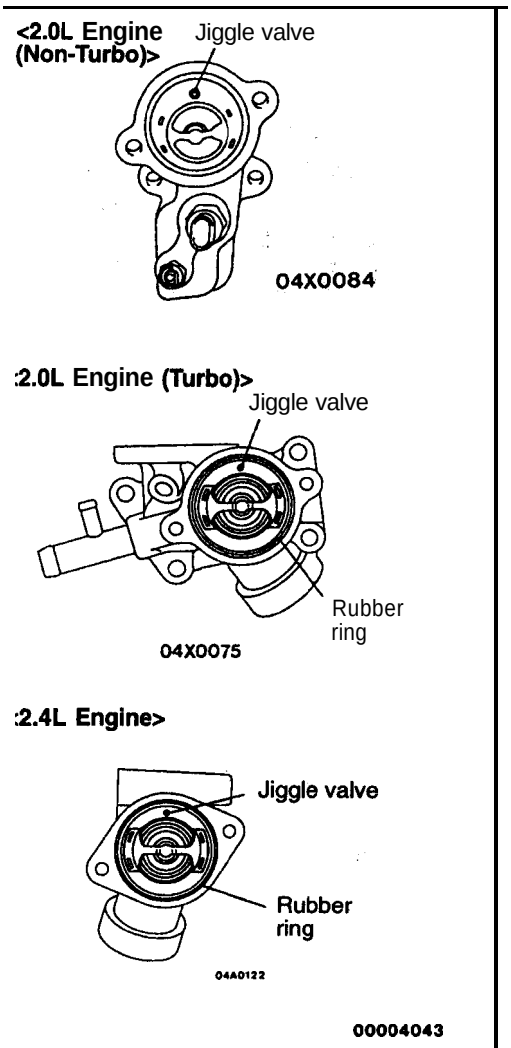

INSTALLATION SERVICE POINTS

▶A◀ THERMOSTAT INSTALLATION

Install the thermostat so that the jiggle valve is facing straight up and is aligned with the mark on the thermostat case as shown in the illustration.

Caution

Make absolutely sure that no oil is adhering to the rubber ring of the thermostat. In addition, be careful not to fold over or scratch the rubber ring when inserting.

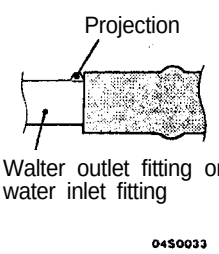

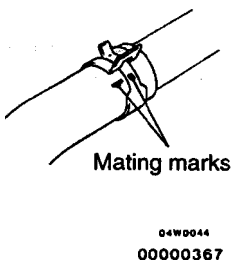

▶B◀ RADIATOR UPPER HOSE <2.0L Engine (Non-Turbo)> OR RADIATOR LOWER HOSE <2.0L Engine (Turbo) and 2.4L Engine> CONNECTION

(1) Insert each hose as far as the projection of the water outlet fitting or water inlet fitting.
(2) Align the mating marks on the radiator hose and hose clamp, and then connect the radiator hose.

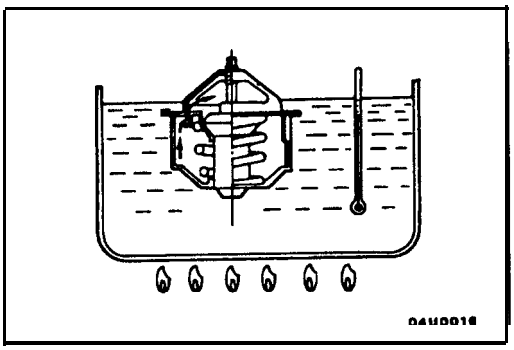

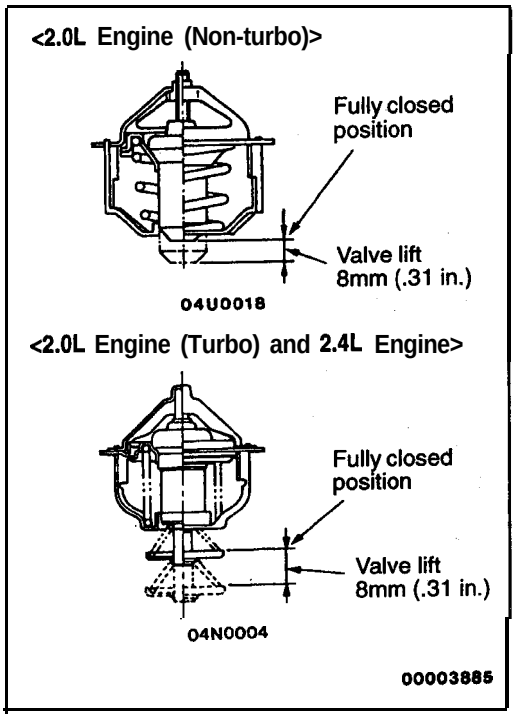

INSPECTION

14100250107

THERMOSTAT CHECK

- Check that the valve closes 'tightly-at room temperature.
- Check for defects or damage.
- Check for rust or other contamination on the valve. Remove, if any.
- Immerse thermostat in container of hot water. Stir to raise water temperature and check that the thermostat valve opening temperature and the water temperature with valve fully open [valve lift: 8 mm (.31 in.)] are at the standard value.

Standard value:
Valve opening temperature:
<2.0L Engine (Non-turbo)> 90.5°C (195°F)
<2.0L Engine (Turbo) and 2.4L Engine> 82°C (180°F)
Full-opening temperature:
<2.0L Engine (Non-turbo)> 102°C (216°F)
<2.0L Engine (Turbo) and 2.4L Engine> 95°C (203°F)

NOTE
Measure valve height when fully closed. Calculate lift by measuring the height when fully open.

Replace the thermostat if it does not open properly, or does not have the correct valve lift.

WATER PUMP <2.0L ENGINE (NON-TURBO)>

14100270158

REMOVAL AND INSTALLATION

Pre-removal and Post-Installation Operation
- Engine Coolant Draining and Supplying (Refer to GROUP 00 – Maintenance Service.)
- Timing Belt Rear Cover Removal and Installation (Refer to GROUP 11D – Timing Belt.)

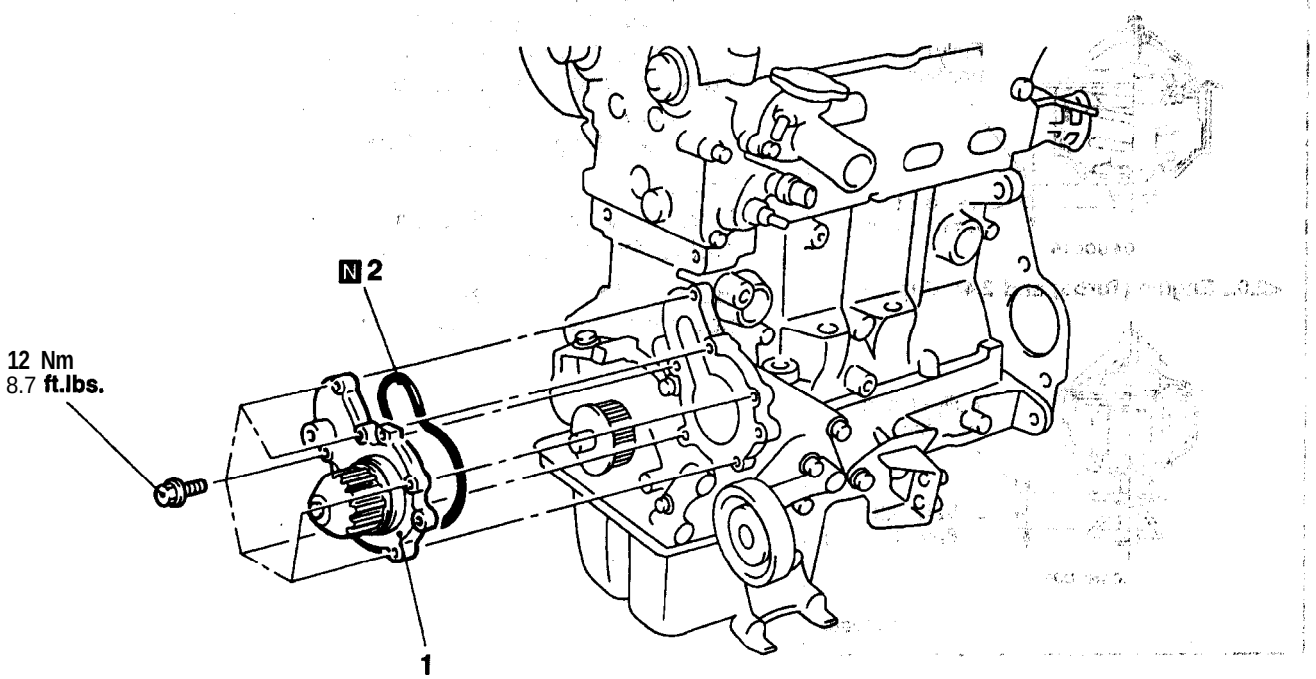

A04X0082

Removal steps
1. Water pump
▶A◀ 2. O-ring

TSB Revision

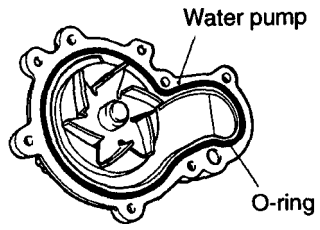

INSTALLATION SERVICE POINT

▶A◀ O-RING INSTALLATION

Insert the O-ring to the water pump groove, and coat the circumference of the O-ring with water or engine coolant. By coating with water or engine coolant, the insertion to the cylinder block will become easier.

Caution

1. **Do not allow engine oil or othei grease to adhere to the O-ring.**
2. **When inserting the water pump, check that there is no sand, dirt, etc. on its inner surface'.**

WATER PUMP <2.0L ENGINE (TURBO) AND 2.4L ENGINE>

14100270155,

REMOVAL AND INSTALLATION

Pm-removal and Post-installation Operation
- Engine Coolant Draining and Supplying (Refer to GROUP 00 – Maintenance Service.)
- For Timinig Belt Removal and Installation, Refer to the Following Groups:
  GROUP 11A – Timing Belt.
  GROUP 11E – Timing Belt.

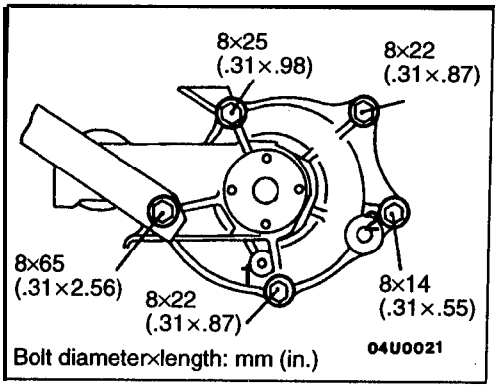

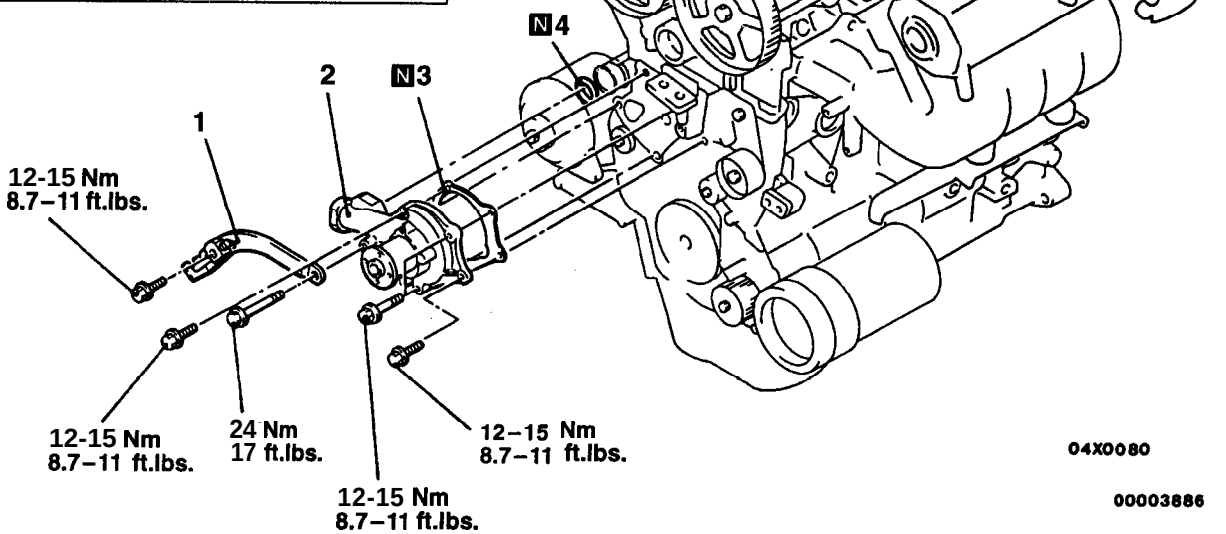

Removal steps
1. Generator brace
2. Water pump
3. Water pump gasket
4. O-ring ▶A◀

TSB Revision

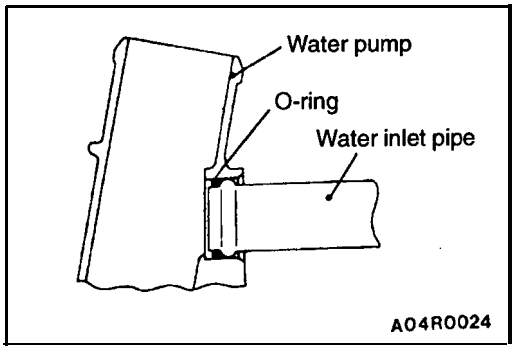

INSTALLATION SERVICE POINT

▶A◀ O-RING INSTALLATION

Insert the O-ring to the water inlet pipe, and coat the outer circumference of the O-ring with water or engine coolant. By coating with Water or engine coolant, the insertion to the water pump will become easier.

Caution

1. **Do not allow engine oil or other grease to adhere to the O-ring.**
2. **When inserting the pipe, check that there is' no sand, dirt, etc. on its inner surface.**

WATER HOSE AND WATER PIPE <2.0L ENGINE (NON-TURBO)>

~4100550115

REMOVAL AND INSTALLATION

Pre-removal and Post-installation Operation
- Engine Coolant Draining and Supplying (Refer to GROUP 00 – Maintenance Service.)
- Under Cover Removal and Installation (Refer to GROUP 42 – Under Cover.)

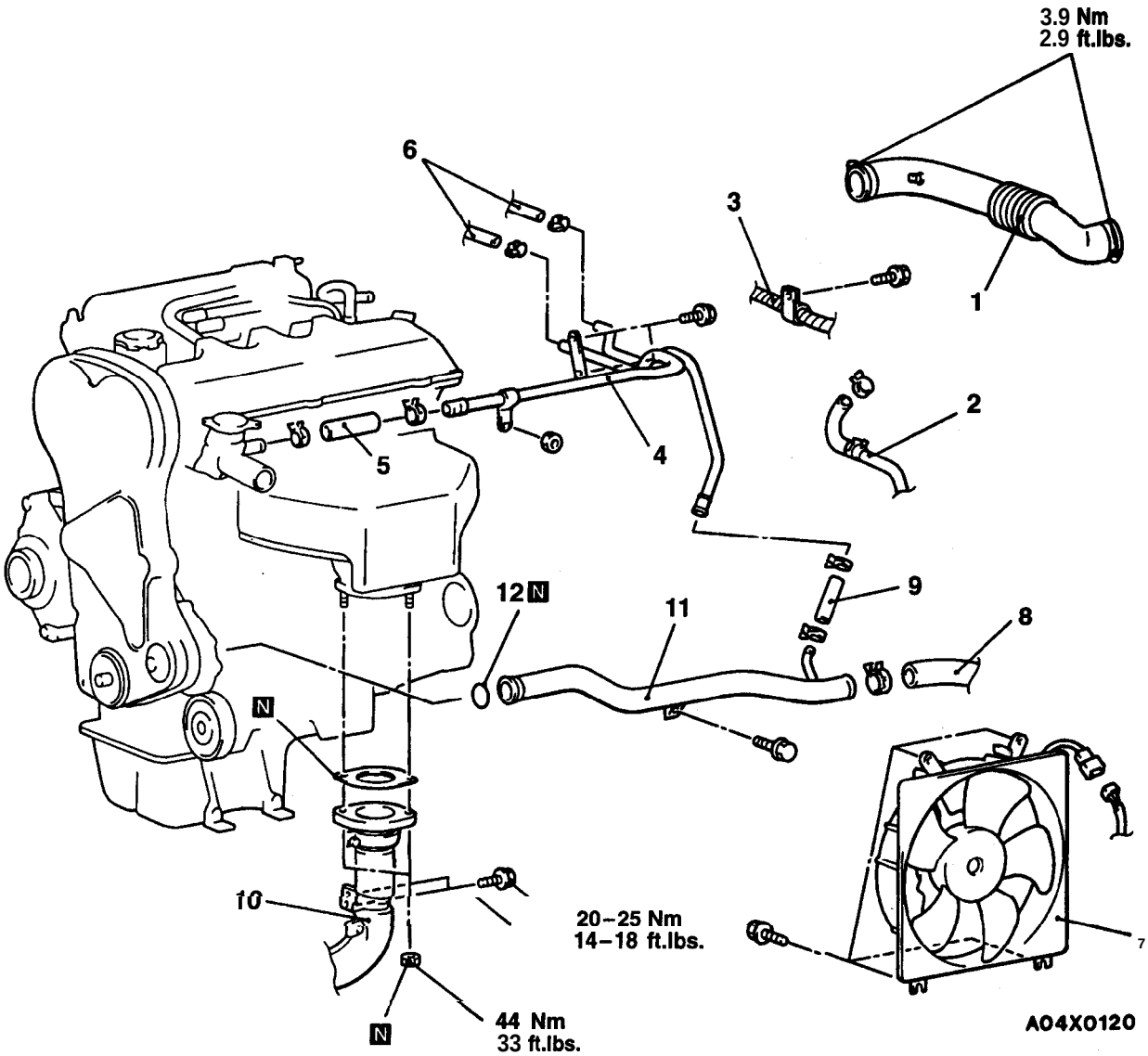

Removal steps

1. Air intake hose
2. Air hose connection
3. Control wiring harness connection
4. Water pipe assembly
5. Water hose
◀A▶ 6. Heater hose connection
7. Radiator fan motor assembly <A/T>
◀B▶ ▶B◀ 8. Radiator lower hose connection
9. Water hose
10. Front exhaust pipe connection
11. Water inlet pipe assembly
▶A◀ 12. O-ring

TSB Revision

REMOVAL SERVICE POINTS.

◀A▶ HEATER HOSE DISCONNECTION

Caution
For M/T, cover the vehicle speed sensor with a shop towel before removing a heater hose, because the sensor is below the hoses.

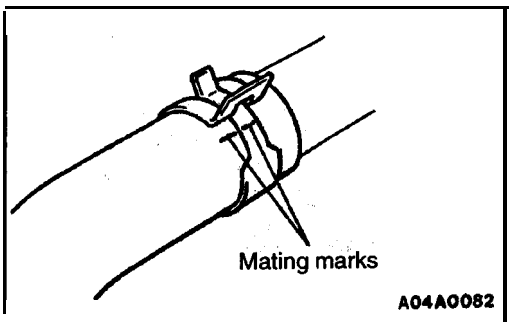

◀B▶ RADIATOR LOWER HOSE DISCONNECTION

After making mating marks on the radiator hose and the hose clamp, disconnect the radiator hose.

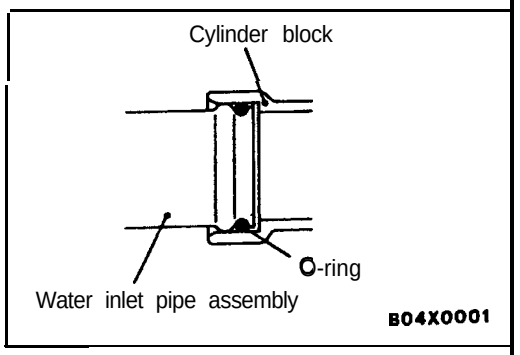

INSTALLATION SERVICE POINTS

▶A◀ O-RING INSTALLATION

Insert the O-ring to the water inlet pipe, and coat the outer circumference of the O-ring with water or engine coolant.

Caution
Do not allow engine oil or other grease to adhere to the O-ring.

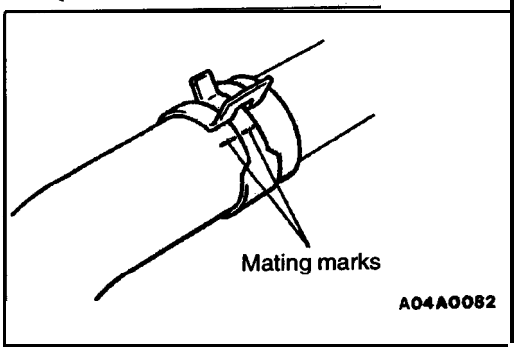

▶B◀ RADIATOR LOWER HOSE CONNECTION

Align the mating marks on the radiator hose and hose clamp, and then connect the radiator hose.

INSPECTION

14100340071

WATER PIPE AND HOSE CHECK'

Check the water pipe and hose' for cracks, damage,' clogs and replace them if necessary.

WATER HOSE AND WATER PIPE <2.0L ENGINE (TURBO) AND 2.4L ENGINE>

14100330245

REMOVAL AND INSTALLATION

<2.0L Engine (Turbo)>

Pre-removal and Post-installation Operation
- Engine Coolant Draining and Supplying (Refer to GROUP 00 – Maintenance Service.)
- Air Hose (C) Removal and Installation (Refer to GROUP 15 – Charge Air Cooler.)
- Turbocharger Removal and Installation (Refer to GROUP 15 – Exhaust Manifold.)

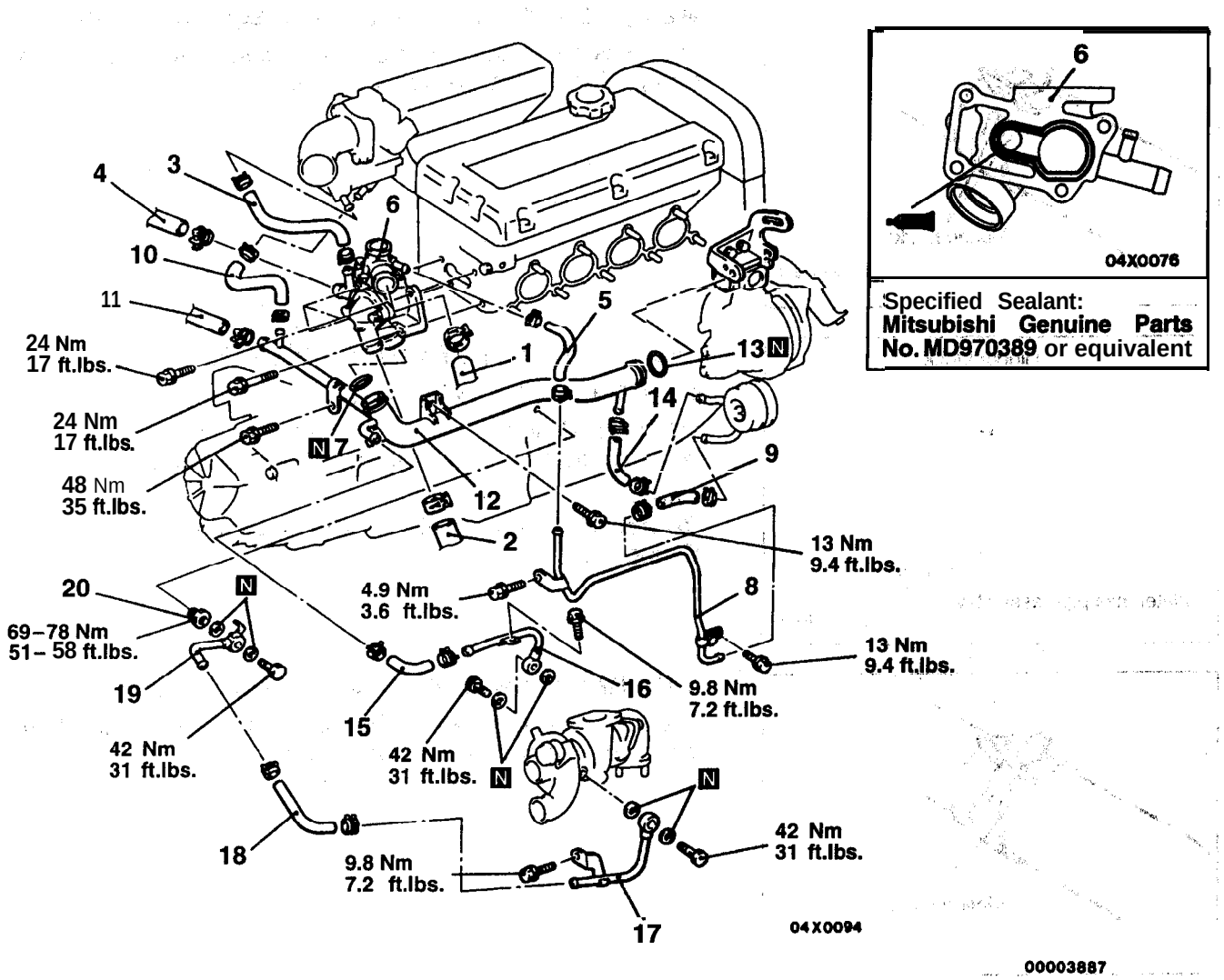

Specified Sealant:
Mitsubishi Genuine Parts No. MD970389 or equivalent

Removal steps

◀A▶ ▶C◀ 1. Radiator upper hose connection
◀A▶ ▶C◀ 2. Radiator lower hose connection
3. Water hose
4. Heater hose connection
5. Water hose
▶B◀ 6. Thermostat case assembly
▶A◀ 7. O-ring
8. Water pipe assembly
9. Water hose
10. Water hose
11. Heater hose connection
12. Water inlet pipe assembly
▶A◀ 13. O-ring
14. Water hose
15. Water hose
16. Water pipe assembly (A)
17. Water pipe assembly (B)
18. Water hose
19. Water pipe assembly (C)
20. Joint

TSB Revision

<2.4L Engine>

Pre-removal and Post-installation Operation"
(1) Engine Coolant Draining and Supplying (Refer to GROUP 00 – Maintenance Service.)
(2) Air Cleaner Removal and Installation
(3) Exhaust Manifold Removal and Installation (Refer to GROUP 15 – Exhaust Manifold.)

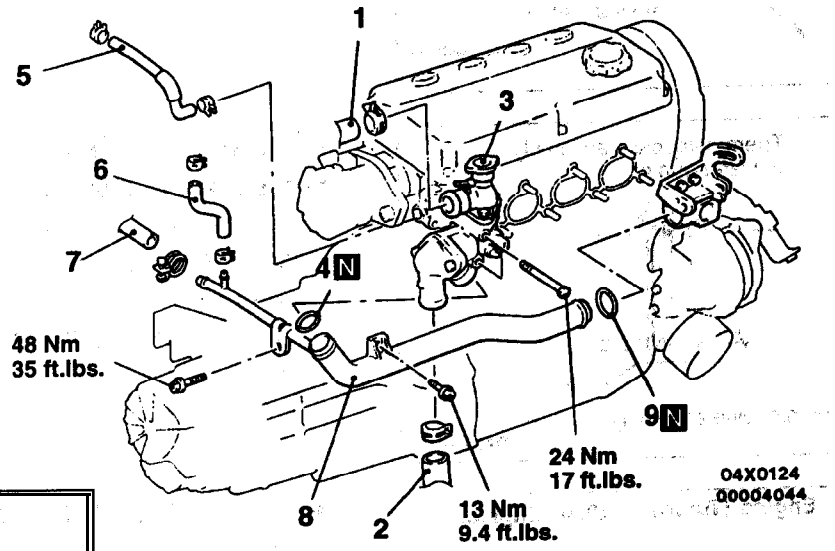

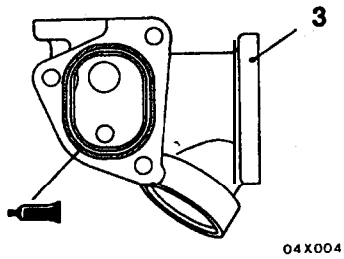

Specified Sealant:
Mitsubishi Genuine Part No. MD970389 or equivalent

Removal steps

◀A▶ ▶C◀ 1. Radiator upper hose connection
◀A▶ ▶C◀ 2. Radiator lower hose connection
▶B◀ 3. Thermostat case assembly
▶A◀ 4. O-ring
5. Water hose
6. Water hose
7. Heater hose connection
8. Water inlet pipe assembly
▶A◀ 9. o-ring

TSB Revision

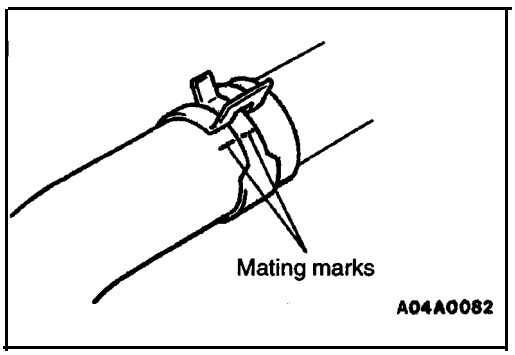

REMOVAL SERVICE POINT

◀A▶ RADIATOR UPPER HOSE/RADIATOR LOWER HOSE DISCONNECTION

After making mating marks on the radiator hose and the hose clamp, disconnect the radiator hose.

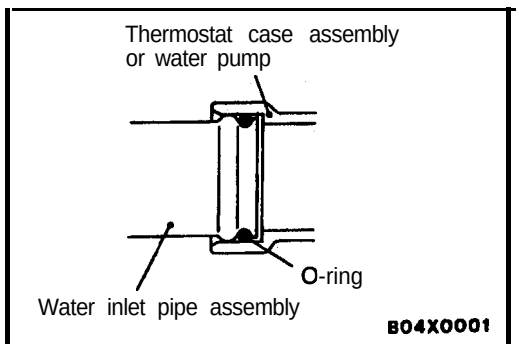

INSTALLATION SERVICE POINTS

▶A◀ O-RING INSTALLATION

Insert the O-ring to the water inlet pipe, and coat the outer circumference of the O-ring with water or engine coolant.

Caution
Do not allow engine oil or other grease to adhere to the O-ring.

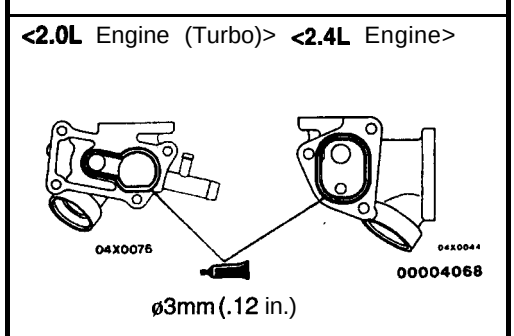

▶B◀ THERMOSTAT CASE ASSEMBLY INSTALLATION

Squeeze out the sealant from the tube evenly and apply it so that there is not too much sealant and no places without sealant.

Specified Sealant:
Mitsubishi Genuine Parts No. MD970389 or equivalent

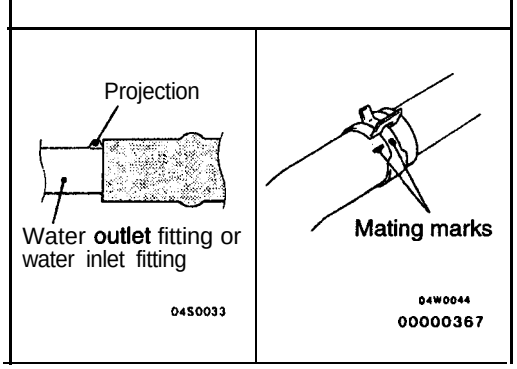

▶C◀ RADIATOR LOWER HOSE/RADIATOR UPPER HOSE CONNECTION

(1) Insert each hose as far as the projection of the water outlet fitting or water inlet fitting.
(2) Align the mating marks on the radiator hose and hose clamp, and then connect the radiator hose.

INSPECTION

14100340088

WATER PIPE AND HOSE CHECK

Check the water pipe and hose for cracks, damage, clogs and replace them if necessary.

INTAKE AND EXHAUST,

CONTENTS

15166666676

GENERAL INFORMATION

15100010054

The intake manifold is made of an aluminium alloy, and the shape provides an increased intake inertia effect and has a good volumetric efficiency.

The exhaust pipe is divided into three parts: the front pipe, the center pipe, and the main muffler.

Items		Specifications
Turbocharger	Type	Exhaust gas turbine type
	Identification No.	M/T: 466491-1
		A/T: 466491-2
	Supercharging pressure control	Turbocharger waste gate actuator and solenoid valve
Charge air cooler	Type	Air cooled type

SERVICE SPECIFICATIONS

15100030067

Items		Standard value	Limit
Intake manifold and air intake plenum	Distortion of the installation surface mm (in.)	0.15 (.006) or less	0.2 (.008)
	Turbocharger waste gate solenoid terminal resistance [at 20°C (68°F)] Ω	36-44	–
Turbocharger	Supercharging pressure kPa (psi)	44–101 (6.4-14.7)	–

SPECIAL TOOLS

15100060059

Tool	Tool number and name	Supersession	Application
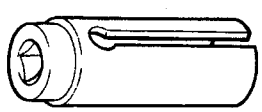	MD998770 Oxygen sensor wrench	YA8875 (Snap-on tool) or equivalent	Heated oxygen sensor removal and installation
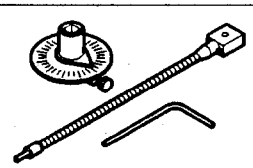	MB991614 Angle gauge	–	Exhaust manifold and turbocharger assembling

TROUBLESHOOTING

15100070045

Symptom	Probable cause	Remedy
Exhaust gas leakage	Loose joints	Retighten
	Broken pipe or muffler	Repair or replace
Abnormal noise	Broken baffle in muffler	Replace
	Broken rubber hangers	Replace
	Interference of pipe or muffler with vehicle body	Correct
	Broken pipe or muffler	Repair or replace

TSB Revision

ON-VEHICLE SERVICE

15100180144

INTAKE MANIFOLD VACUUM CHECK

<2.0L Engine (Turbo)>
Refer to GROUP 11 A – On-vehicle Service.
<2.0L Engine (Non-turbo)>
Refer to GROUP 11 C – On-vehicle Service.
<2.4L Engine>
Refer to GROUP 11 E – On-vehicle Service.

TURBOCHARGER SUPERCHARGING PRESSURE CHECK <Turbo>

15100100027

Caution
Do a test drive with two passengers in the vehicle and where full throttle acceleration can be safely made.
A driver should not read the pressure gauge, but a front passenger should.

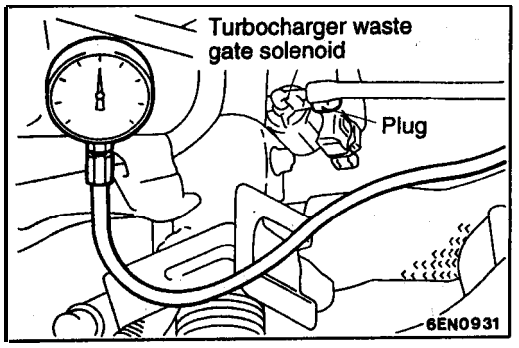

(1) Disconnect the hose (black) from the turbocharger waste gate solenoid, and connect the pressure gauge. to the hose. Plug the nipple of the solenoid valve from which the hose (black) has been disconnected.
(2) Drive the vehicle with full throttle and accelerate the engine to a speed of more than 3,500 r/min at 2nd gear. Measure the supercharging pressure when the pointer is stabilized.

Standard value: 44–101 kPa (6.4–14.7 psi)

(3) If the supercharging pressure deviates from the standard value, check the following items for possible causes.
When pressure is high:
- Malfunction of turbocharger waste gate actuator
- Malfunction of turbocharger waste gate valve
- Disconnected or cracked turbocharger waste gate actuator hose

When pressure is low:
- Malfunction of turbocharger waste gate actuator
- Supercharging pressure leaks
- Faulty turbocharger

TSB Revision

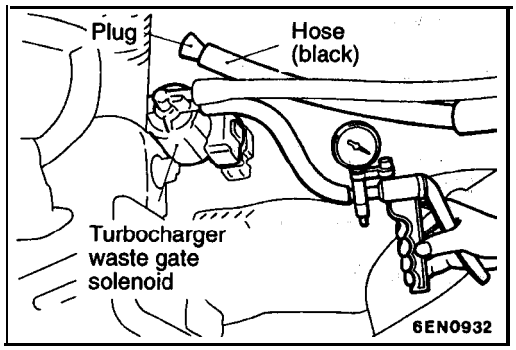

INTAKE CHARGE PRESSURE CONTROL SYSTEM CHECK <Turbo>

15100110013

(1) After the diagnostic trouble code of MFI system is completely read, turn off the ignition switch.
(2) Disconnect the hose (black) from the turbocharger waste gate solenoid and plug this hose.
(3) Connect a hand vacuum pump to the turbocharger waste gate solenoid nipple to which the hose (black) was connected.

(4) Use the vacuum pump to apply negative pressure, and check the negative pressure condition while the engine is stopped and while it is idling.

Engine state	Normal state
Stop (Ignition switch: ON)	Negative pressure is maintained
Idle (after warmup)	Negative pressure leaks

NOTE
If this check indicates an abnormal condition, the turbocharger waste gate solenoid is broken.

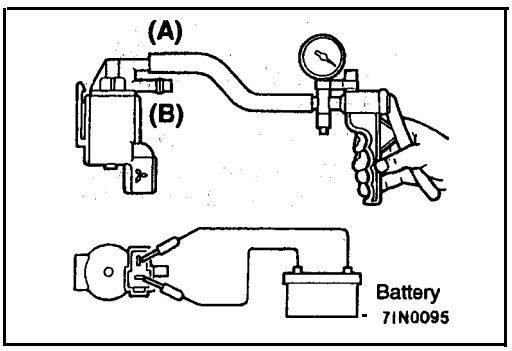

TURBOCHARGER WASTE GATE SOLENOID CHECK <Turbo>

1 5100130019

OPERATION CHECK

(1) Connect a-hand vacuum pump to the solenoid valve nipple (A).
(2) Use a jumper wire to connect between the solenoid valve terminal and battery terminal.
(3) Connect and disconnect the jumper wire at the battery negative terminal to, apply negative pressure and check tightness.

Jumper wire	(B) nipple condition	Normal state
Connected	Open	Negative pressure leaks
	Close	Negative pressure is held.
Disconnected	Open	Negative pressure is held.

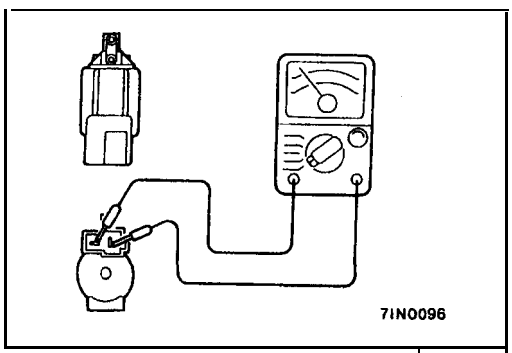

COIL RESISTANCE CHECK

Measure resistance between solenoid valve terminals.

Standard value: 36-44 Ω [at 20°C (68°F)]

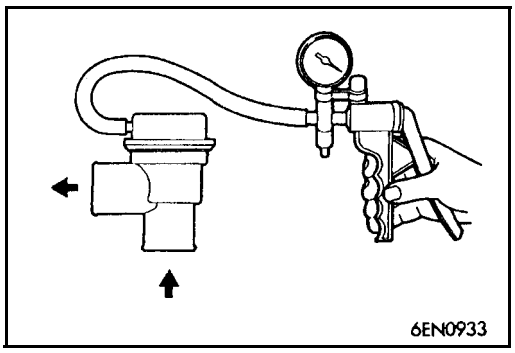

TURBOCHARGER BYPASS VALVE CHECK <Turbo>

1 5100160018

(1) Remove the turbocharger bypass valve.
(2) Connect the hand vacuum pump to,, the nipple of the turbocharger bypass valve.
(3) Apply a negative pressure of approx. 53 kPa (16 in.Hg) and check operation of the valve. Also check that air tightness is maintained.

Negative pressure	Valve operation
Approx. 53 kPa (16 in.Hg)	It starts opening

CHARGE AIR COOLER

15100240040

REMOVAL AND INSTALLATION

Pre-removal and Post-installation Operation
- Front Bumper Removal and Installation (Refer to GROUP 51–Front Bumper.)

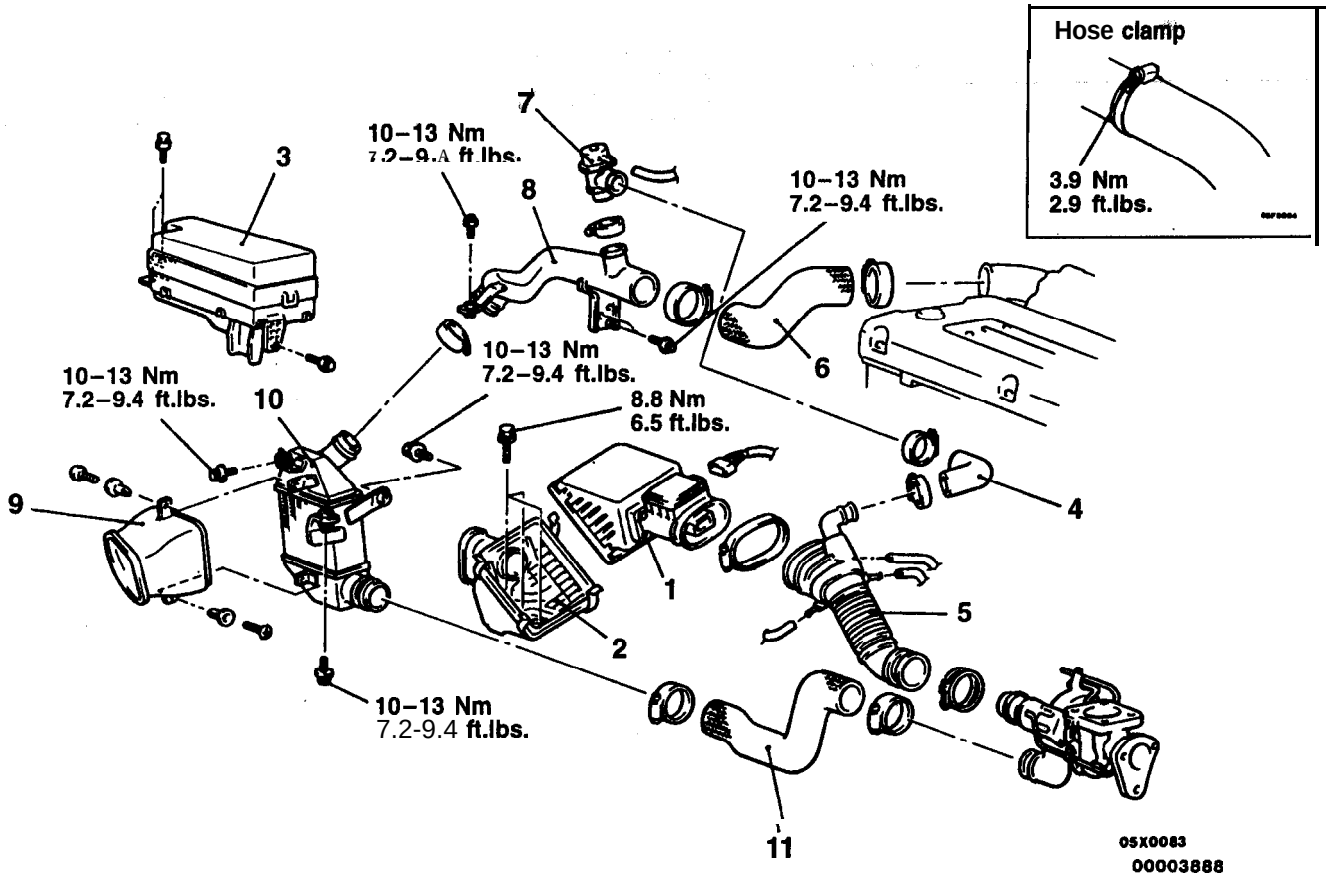

Removal steps

1. Air cleaner assembly
2. Air duct assembly (B)
3. Relay box
4. Air bypass hose
5. Air intake hose
6. Air hose (C)
7. Turbocharger bypass valve
8. Air hose (B)
9. Charge air cooler duct
10. Charge air cooler
11. Air hose (A)

NOTE
Align the mating marks on the hoses and pipes, and remove them.

INSPECTION

15100250012

- Check the charge air cooler fins for bending, damage, or foreign matter.
- Check the charge air cooler hoses for cracking, damage, or wear.

TSB Revision

INTAKE MANIFOLD <2.0L ENGINE (NON-TURBO)>

15100300120

REMOVAL AND INSTALLATION

Pre-removal Operation
- Residual Fuel Pressure Releasing
  (Refer to GROUP 13A–On-vehicle Service.)
- Engine Coolant Draining
  (Refer to GROUP 00–Maintenance Service.)
- Reservoir Assembly Removal
  <Vehicles with Auto-Cruise System>
  (Refer to GROUP 17–Auto-Cruise Control System.)

Post-installation Operation
- Reservoir Assembly Installation
  <Vehicles with Auto-Cruise System>
  (Refer to GROUP 17–Auto-Cruise Control System.)
- Engine Coolant Supplying
  (Refer to GROUP 00–Maintenance Service.)
- Accelerator Cable Adjustment
  (Refer to GROUP 17 – On-vehicle Service.)

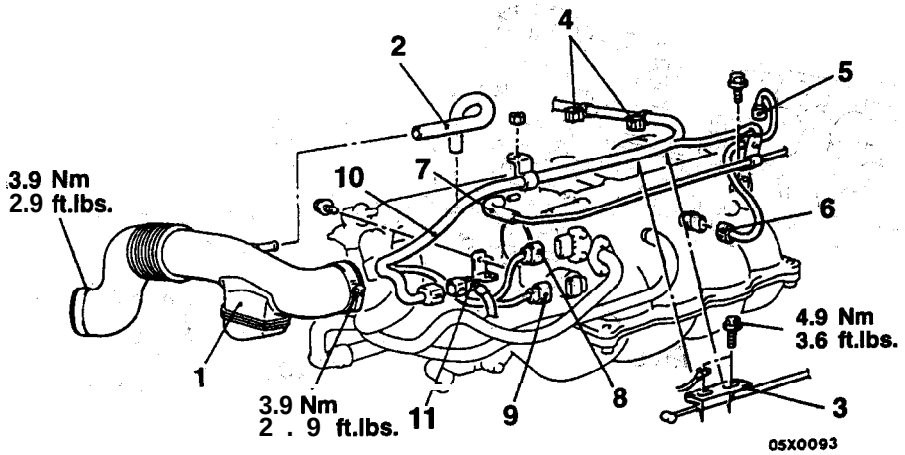

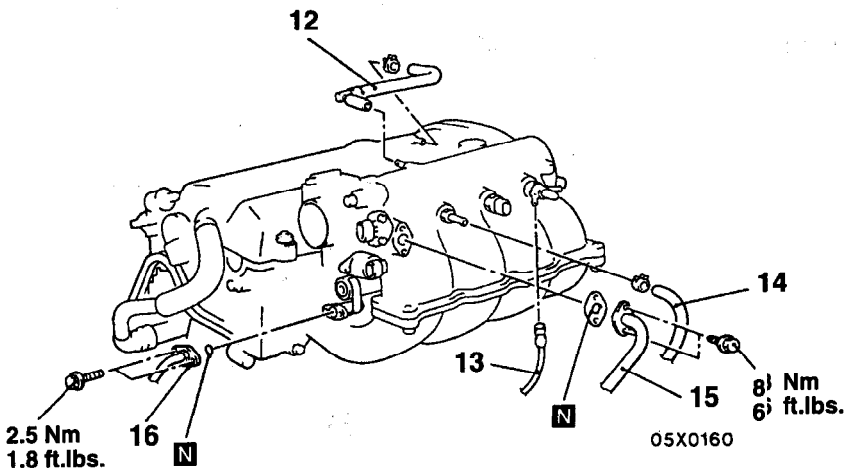

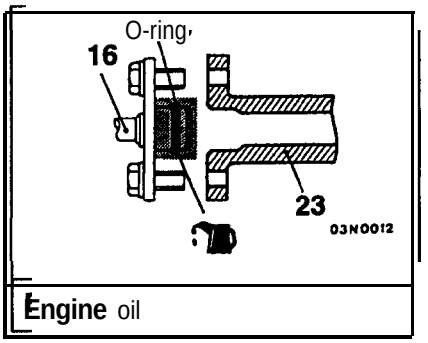

00003889

Removal steps
1. Air intake hose
2. Breather hose
3. Accelerator cable connection
4. Clip
5. MAP sensor connector
6. Charge temperature sensor connector
7. Vacuum hose connection
8. TPS connector
9. AIS motor connector
10. Control wiring harness
11. Generator wiring harness connection
12. PCV hose assembly
13. Vacuum hose connection
14. Brake booster vacuum hose connection
15. EGR pipe connection
◀A▶ ▶B◀ 16. High-pressure fuel hose connection

TSB Revision

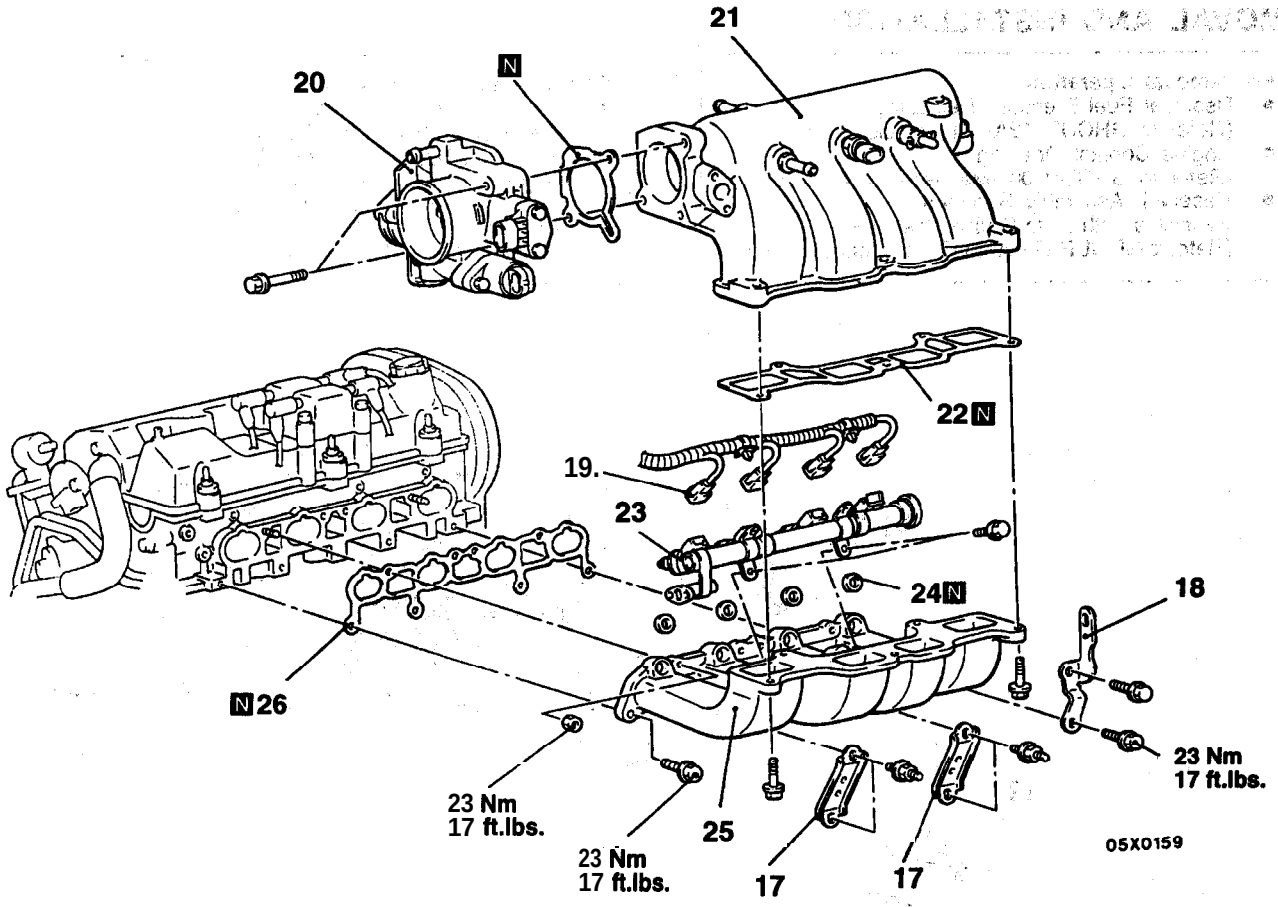

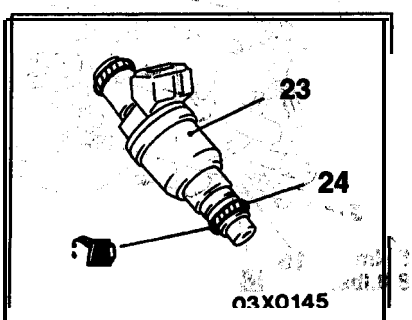

Engine oil

00003890

17. Intake manifold stay
18. Engine hanger
19. Injector connector
20. Throttle body
21. intake manifold plenum
22. Intake manifold plenum gasket
◀B▶ ▶A◀ 23. Fuel rail, fuel injector and pressure regulator assembly
24. O-ring
25. Intake manifold
26. Intake manifold gasket

TSB Revision

REMOVAL SERVICE POINTS

◀A▶ HIGH-PRESSURE FUEL HOSE DISCONNECTION

Relieve pressure in the fuel pipe line to prevent fuel outflow. (Refer to GROUP 13A – On-vehicle Service.)

Caution
Cover fuel pipe line with shop towel after relieving pressure as certain pressure may still remain.

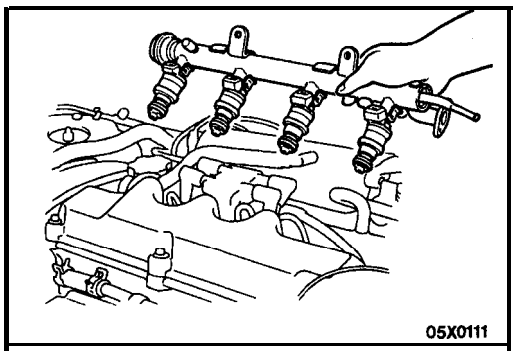

◀B▶ FUEL RAIL, FUEL INJECTOR AND PRESSURE REGULATOR ASSEMBLY REMOVAL

Remove fuel rail with fuel injector and pressure regulator on.

Caution
Do not drop fuel injector when removing fuel rail.

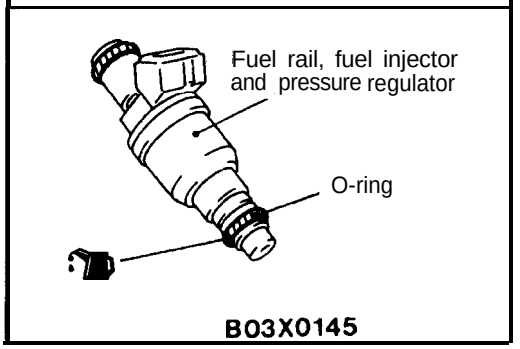

INSTALLATION SERVICE POINTS

▶A◀ FUEL RAIL, FUEL INJECTOR AND PRESSURE REGULATOR ASSEMBLY INSTALLATION

Apply a small amount of new engine oil to the O-ring.

▶B◀ HIGH-PRESSURE FUEL HOSE CONNECTION

When connecting the high-pressure fuel hose to the fuel rail, apply a small amount of new engine oil to the hose union, and then insert, being careful not to damage the O-ring.

Caution
Do not let engine oil get into the fuel rail.

INSPECTION

15100310123

Check the following points; replace the part if a problem is found.

INTAKE MANIFOLD CHECK

1. Check for damage or cracking of any part.
2. Check for obstruction of the negative pressure (vacuum) outlet port, and for obstruction of the water passage or gas passage.
3. Using a straight edge and a feeler gauge, check for distortion of the cylinder head installation surface.

   Standard value: 0.15 mm (.006 in.) or less

   Limit: 0.2 mm (.008 in.)

INTAKE MANIFOLD <2.0L ENGINE (TURBO)>

15100300298

REMOVAL AND INSTALLATION

Pre-removal Operation
- Residual Fuel Pressure Releasing (Refer to GROUP 13A–On-vehicle Service.)
- Engine Coolant Draining (Refer to GROUP 00–Maintenance Service.)
- Battery Removal

Post-installation Operation
- Battery Installation
- Engine Coolant Supplying (Refer to GROUP 00–Maintenance Service.)
- Accelerator Cable Adjustment (Refer to GROUP 17–On-vehicle Service.)

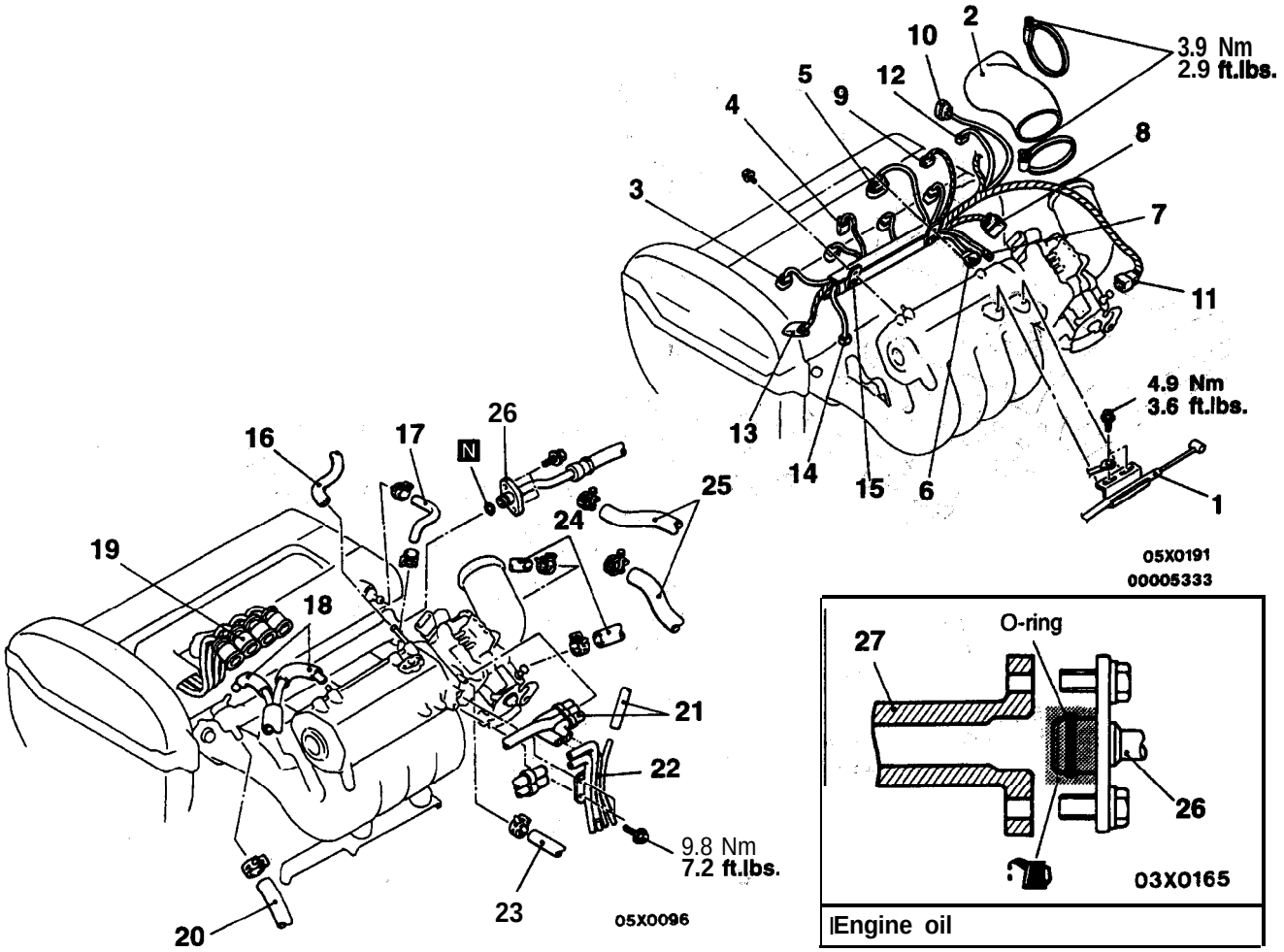

Removal steps

1. Accelerator cable connection
2. Air hose "C"
3. Injector connector
4. Ignition coil connector
5. Ignition power transistor connector
6. Manifold differencial pressure sensor connector
7. Capacitor connector
8. TPS connector
9. Knock sensor connector
10. Engine coolant temperature sensor connector
11. IAC motor connector
12. Camshaft position sensor connector
13. Crankshaft position sensor connector
14. Air conditioning compressor connector
15. Control wiring harness
16. Hose connection
17. PCV hose connection
18. Vacuum hose connection
19. Spark plug cable connection
20. Fuel return hose connection
21. Vacuum hose connection
22. Vacuum pipe
23. Brake booster vacuum hose connection
24. Heater hose connection
25. Heater hose connection
26. ◀A▶ ▶A◀ High-pressure fuet hose connection

TSB Revision

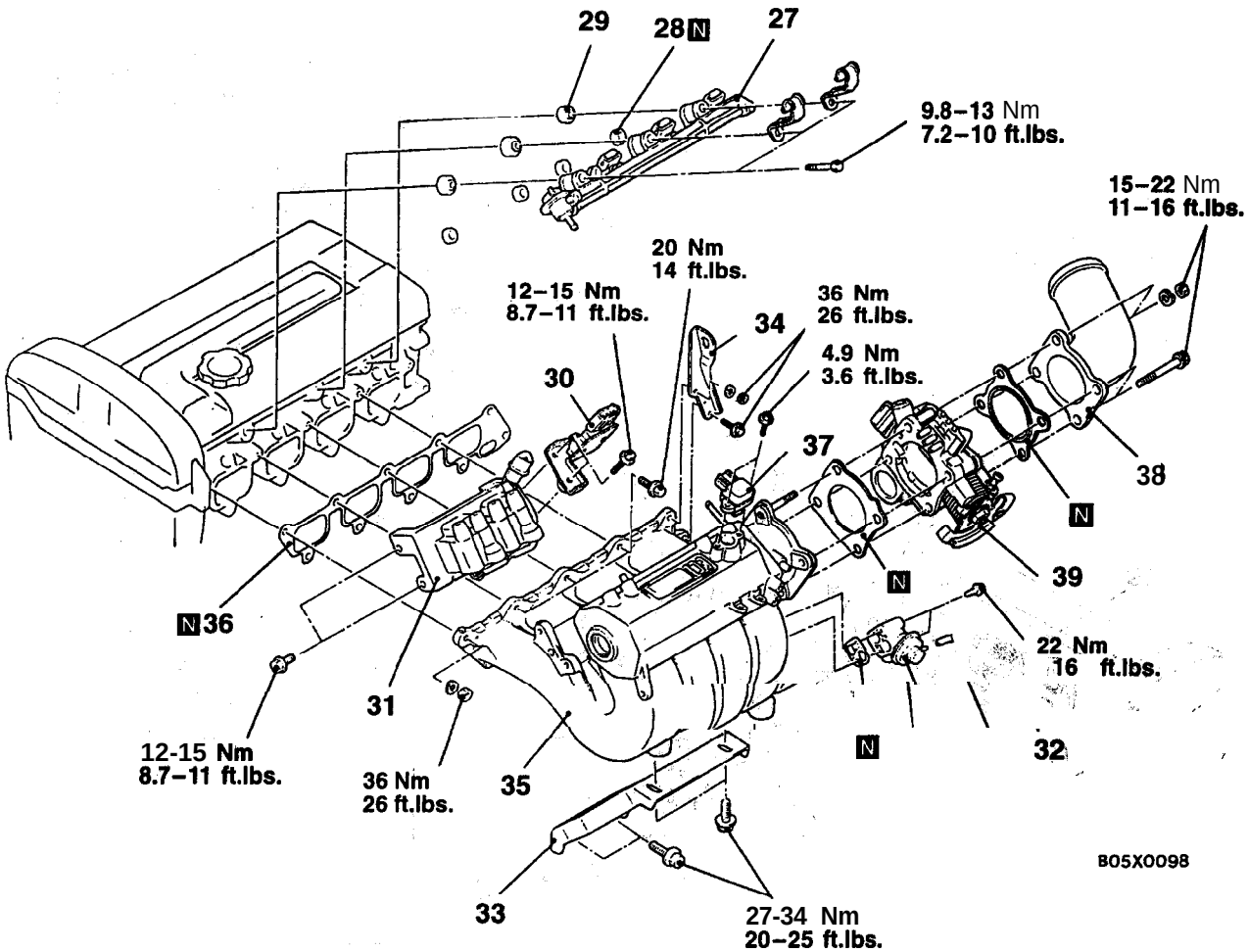

◀B▶

27. Fuel rail, fuel injector and pressure regulator assembly
28. Insulator
29. Insulator
30. Ignition power transistor
31. Ignition coil
32. EGR valve assembly
33. Intake manifold stay
34. Engine hanger
35. Intake manifold
38. Intake manifold gasket
37. Manifold differential pressure sensor
39. Charge air cooler fitting
39. Throttle body

TSB Revision

REMOVAL SERVICE POINTS

◀A▶ HIGH-PRESSURE FUEL HOSE DISCONNECTION

Relieve pressure in the fuel pipe line to prevent fuel outflow. (Refer to GROUP 13A – On-vehicle Service.)

Cautlon
Cover fuel pipe line with shop towel after relieving pressure as certain pressure may still remain.

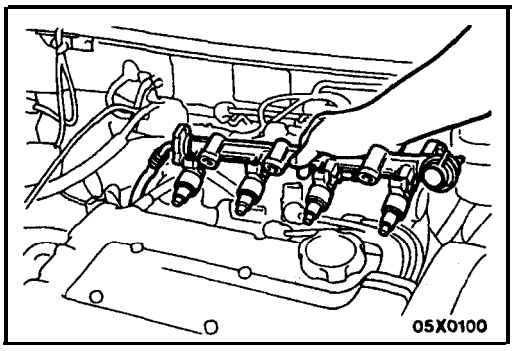

◀B▶ FUEL RAIL, FUEL INJECTOR AND PRESSURE REGULATOR ASSEMBLY REMOVAL

Remove fuel rail with fuel injector and pressure regulator attached.

Caution
Do not drop fuel injector when removing fuel rail.

INSTALLATION SERVICE POINT

▶A◀ HIGH-PRESSURE FUEL HOSE CONNECTION

When connecting the high-pressure fuel hose to the fuel rail, apply a small amount of new engine oil to the hose union, and then insert, beihg careful not to damage the O-ring.

Caution
Do not let engine oil get into the fuel rail.

INSPECTION

15100310123

Check the following points; replace the part if a problem is found.

INTAKE MANIFOLD CHECK

1. Check for damage or cracking of any part.
2. Check for obstruction of the negative pressure (vacuum) outlet port, and for obstruction of the water passage or gas passage.
3. Using a straight edge and a feeler gauge, check for distortion of the cylinder head installation surface.

   Standard value: 0.15 mm (.006 in.) or less

   Limit: 0.2 mm (.008 in.)

INTAKE MANIFOLD <2.4L ENGINE>

15100300304

REMOVAL AND INSTALLATION

Pre-removal Operation
- Residual Fuel Pressure Releasing (Refer to GROUP 13A–On-vehicle Service.)
- Engine Coolant Draining (Refer to GROUP 00–Maintenance Service.)
- Battery Removal

Post-installation Operation
- Battery Installation
- Engine Coolant Supplying (Refer to GROUP 00–Maintenance Service.)
- Accelerator Cable Adjustment (Refer to GROUP 17–On-vehicle Service.)

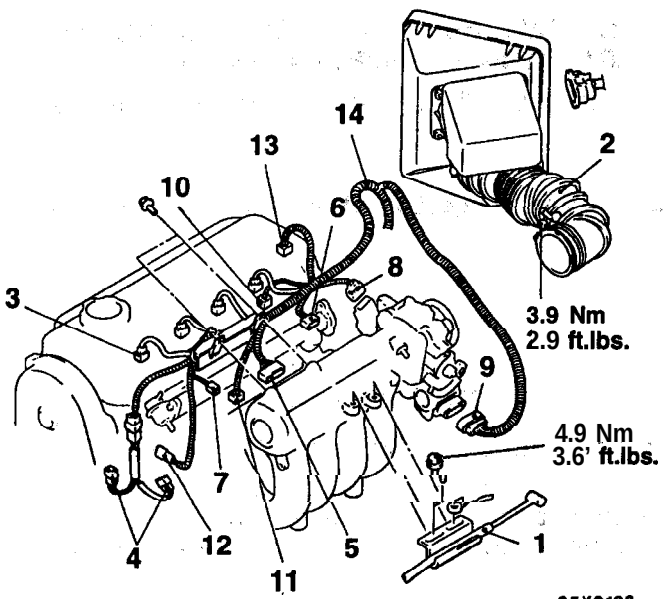

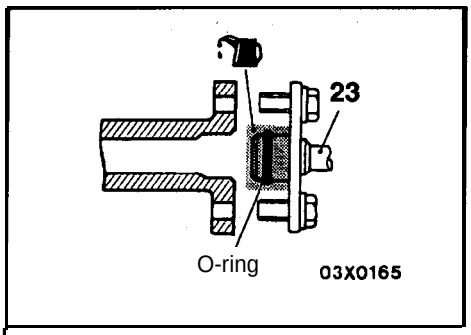

Engine oil

05X0192

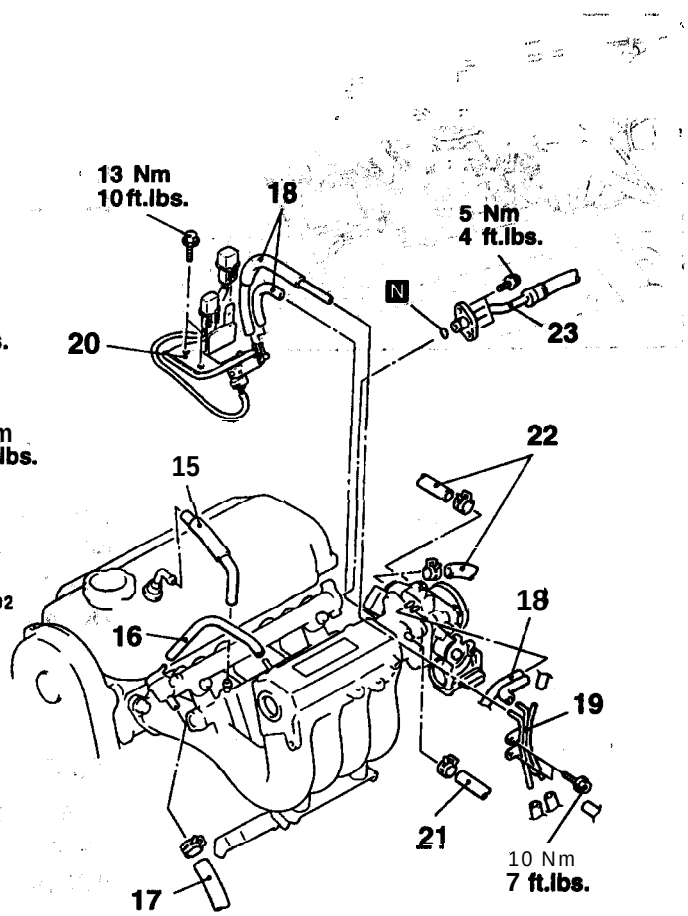

05X0193

00005334

Removal steps

1. Accelerator cable connection
2. Air intake hose
3. Injector connector
4. Ignition coil connector
5. Ignition power transistor connector
6. Manifold differential pressure sensor connector
7. Capacitor connector
8. TPS connector
9. IAC motor connector
10. Heated oxygen sensor connector
11. Crankshaft position sensor connector
12. Air conditioning compressor connector
13. Evaporative emission purge solenoid valve connector
14. Control wiring harness
15. PCV hose connection
16. Vacuum hose
17. Fuel return hose connection
18. Vacuum hose connection
19. Vacuum pipe
20. Evaporative emission purge solenoid valve assembly
21. Brake booster vacuum hose connection
22. Heater hose connection
23. ◀A▶ ▶A◀ High-pressure fuel hose connection

TSB Revision

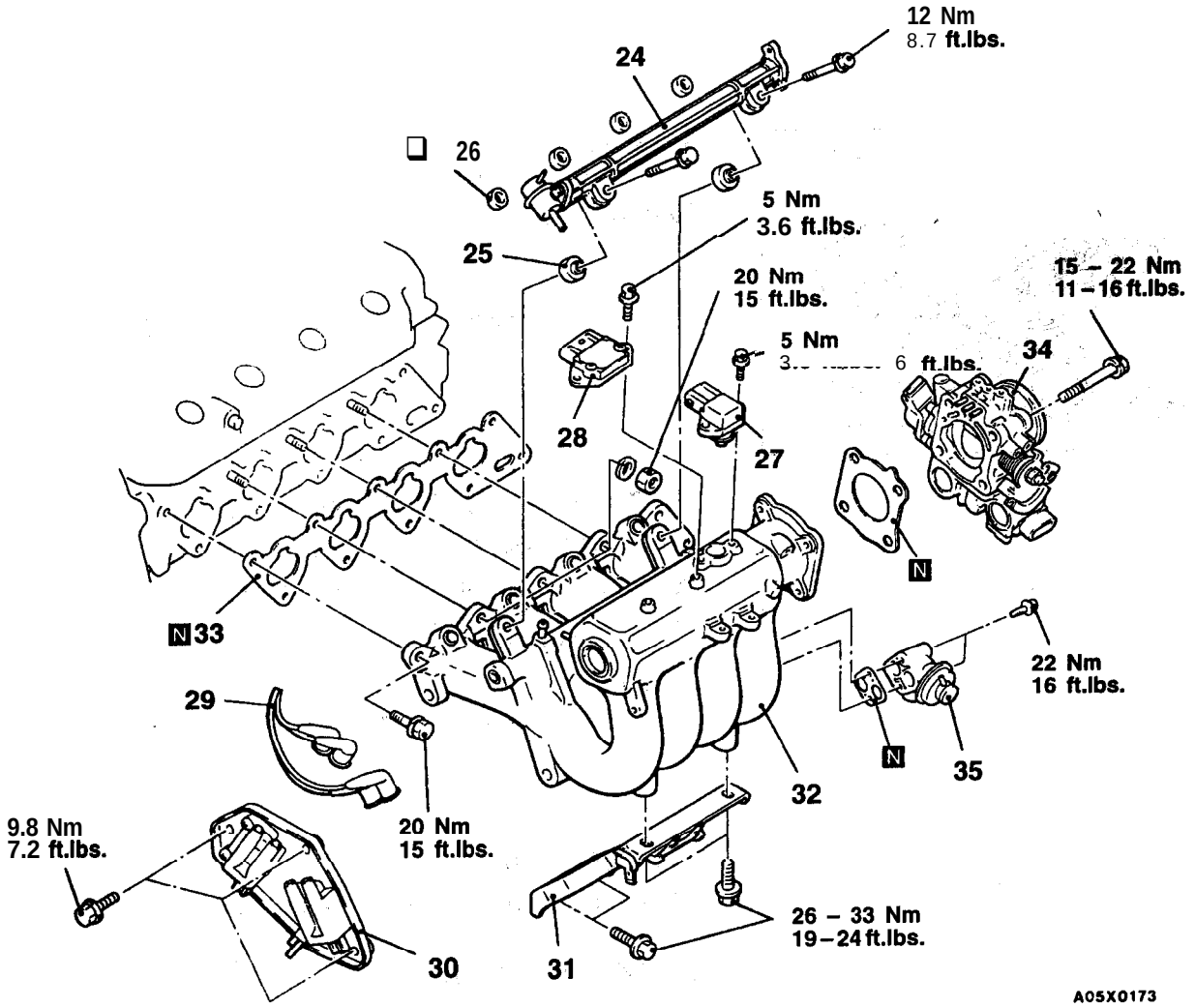

◀B▶

24. Fuel rail, fuel injector and pressure regulator assembly
25. Insulator
26. Insulator
27. Manifold diff erential pressure sensor
26. Ignition power transistor
29. Spark plug cable connection
30. Ignition coil
31. Intake manifold stay
32. Intake manifold
33. Intake manifold gasket
34. Throttle body
35. EGR valve assembly

TSB Revision

REMOVAL SERVICE POINTS

◀A▶ HIGH-PRESSURE FUEL HOSE DISCONNECTION

Relieve pressure in the fuel pipe line to prevent fuel outflow. (Refer to GROUP 13A – On-vehicle Service.)

Caution
Cover fuel pipe line with shop towel after relieving pressure as certain pressure may still remain.

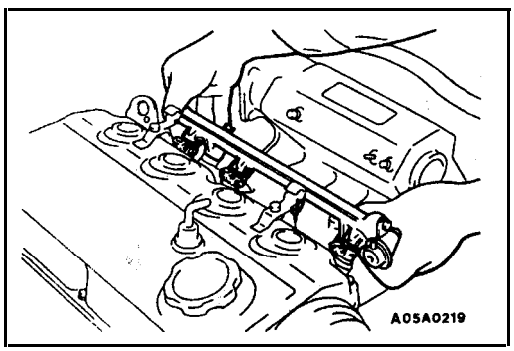

◀B▶ FUEL RAIL, FUEL INJECTOR AND PRESSURE REGULATOR ASSEMBLY REMOVAL

Remove fuel rail with fuel injector and pressure regulator attached.

Caution
Do not drop fuel injector when removing fuel rail.

INSTALLATION SERVICE POINT,

▶A◀ HIGH-PRESSURE FUEL HOSE CONNECTION

When connecting the high-pressure fuel hose to the fuel rail, apply a, small amount of new engine oil to the hose union, and then insert, being careful not to damage the O-ring.

C a u t i o n
Do not let engine oil get into the fuel rail.

I N S P E C T I O N

15100310123

Check the following points; replace the part if a problem is found.

INTAKE MANIFOLD CHECK

1. Check for damage or cracking of any part.
2. Check for obstruction of the negative pressure (vacuum) outlet port, and for obstruction of the water passage or gas passage.
3. Using a straight edge and a feeler gauge, check for distortion of the cylinder head installation surface.

   Standard value: 0.15 mm (.006 in.) or less

   Limit: 0.2 mm (.008 in.)

EXHAUST MANIFOLD <2.0L ENGINE (NON-TURBO)>'

15100330136

REMOVAL AND INSTALLATION

Pre-removal and Post-installation Operation
- Engine Coolant Draining and Refilling
  (Refer to GROUP 00–Maintenance Service.)

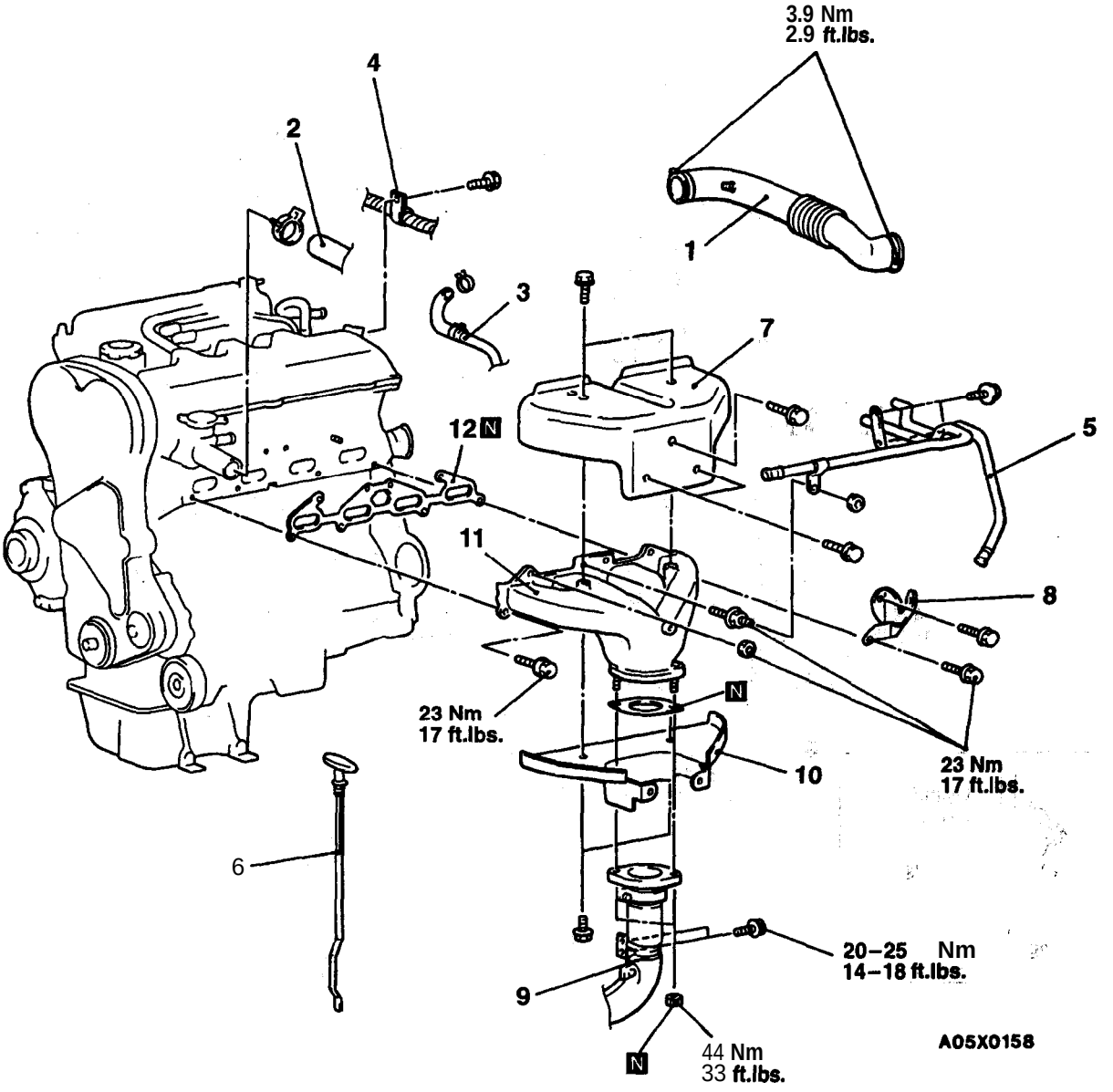

Removal steps

1. Air intake hose
2. Radiator upper hose connection
3. Air hose connection
4. Control wiring harness connection
5. Water pipe assembly
6. Engine oil level gauge
7. Heat protector
6. Engine hanger
9. Front exhaust pipe connection
10. Heat protector
11. Exhaust manifold
12. Exhaust manifold gasket

TSB Revision

EXHAUST MANIFOLD <2.0L ENGINE (TURBO)>

15100330334

REMOVAL AND INSTALLATION

Pre-removal and Post-installation Operation
- Engine Coolant Draining and Refilling (Refer to GROUP 00 – Maintenance Service.)
- Engine Oil Draining and Refilling (Refer to GROUP 00 – Maintenance Service.)

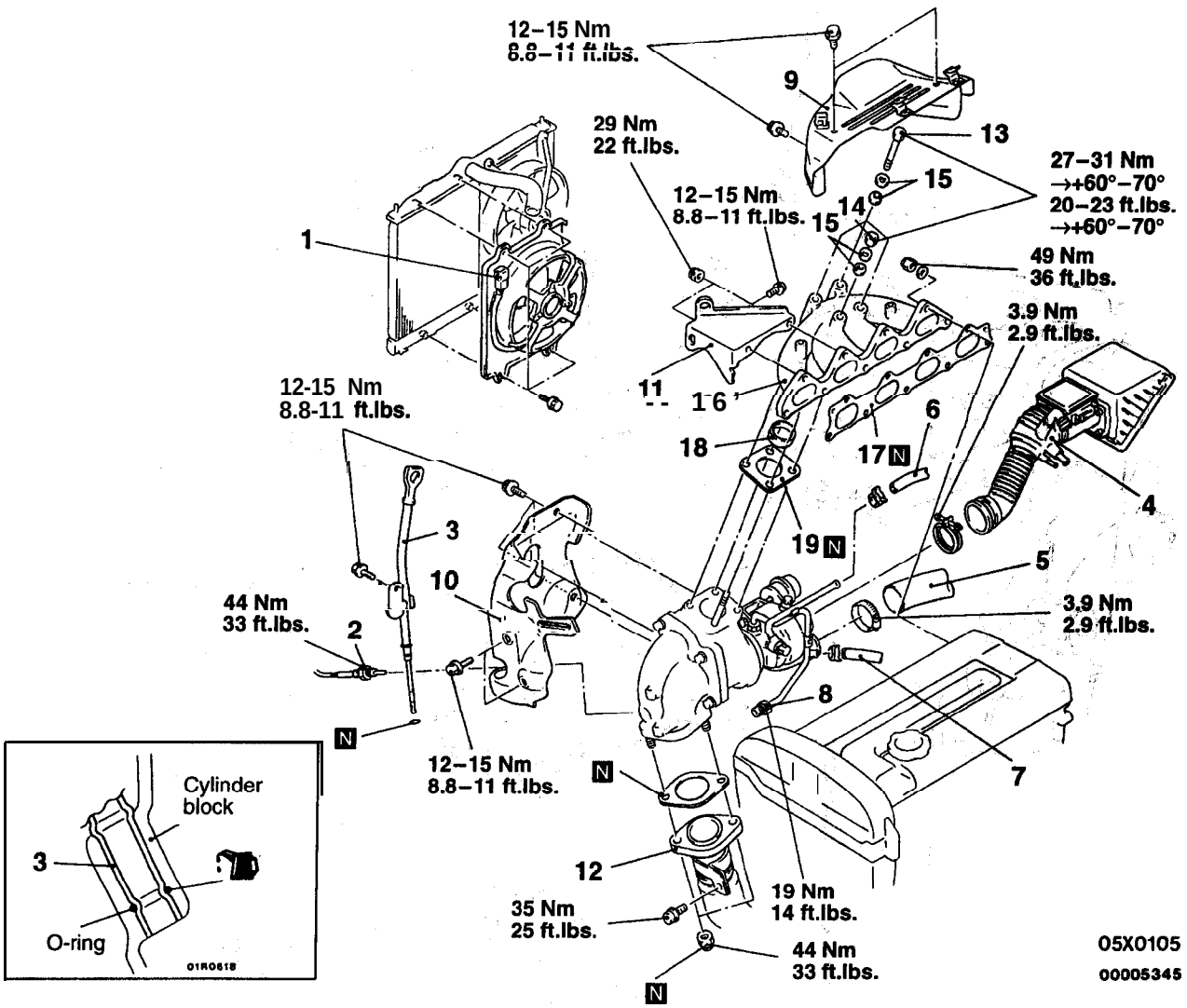

Removal steps

1. Condenser fan motor assembly <Vehicles with air conditioning>
◀A▶ 2. Heated oxygen sensor <front>
3. Engine oil level gauge guide
4. Air cleaner and air intake hose assembly
5. Air hose (A) connection
6. Water hose connection
7. Water hose connection
8. Oil pipe (A) connection
9. Heat protector (A)
10. Heat protector (B)
11. Engine hanger
12. Front exhaust pipe connection
▶B◀ 13. Flange bolts
▶B◀ 14. Flange nut
▶B◀ 15. Coned disc spring
16. Exhaust manifold
17. Exhaust manifold gasket
18. Ring
19. Gasket (A)

TSB Revision

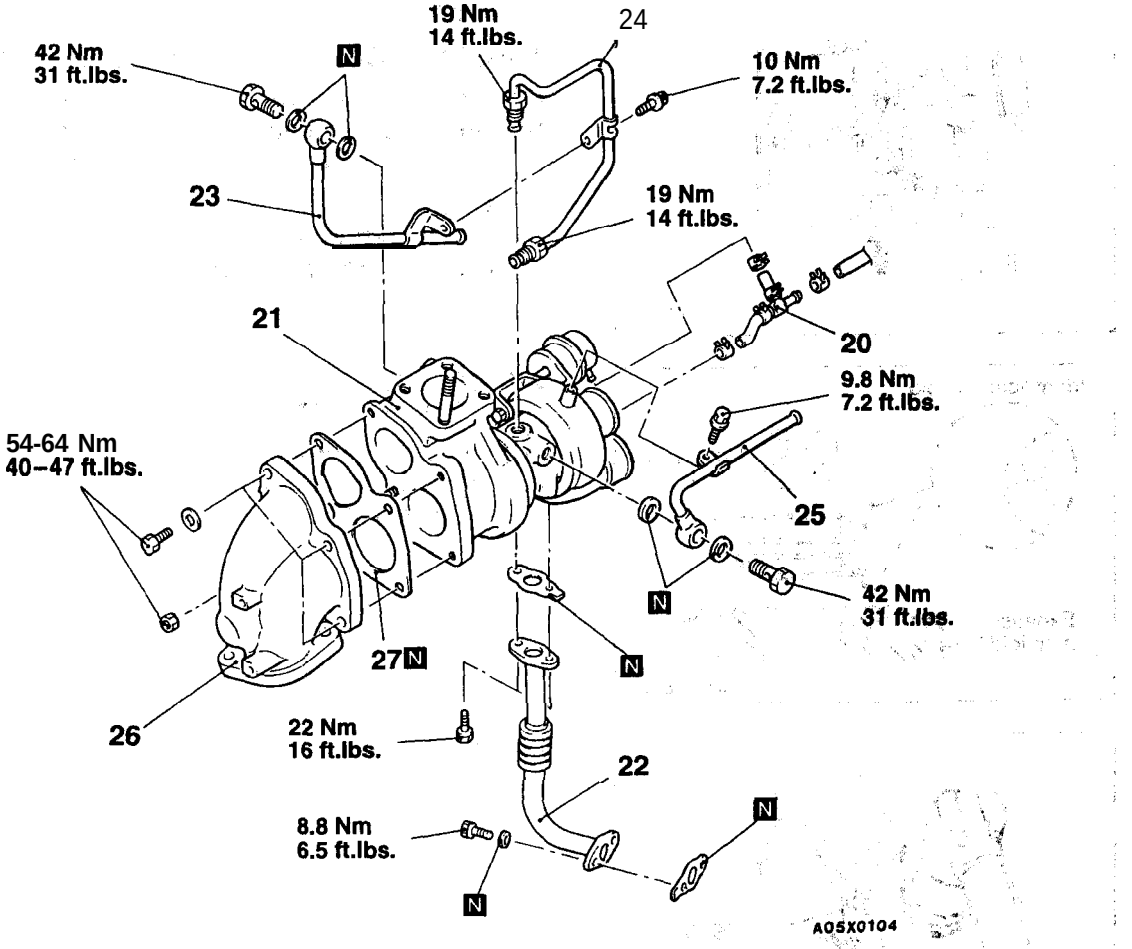

20. Vacuum hose assembly
◀B▶ ▶A◀ 21. Turbocharger assembly
22. Oil return pipe
23. Water pipe assembly (B)

◀C▶ 24. Oil pipe assembly
25. Water pipe assembly (A)
26. Exhaust manifold fitting
27. Ghsket

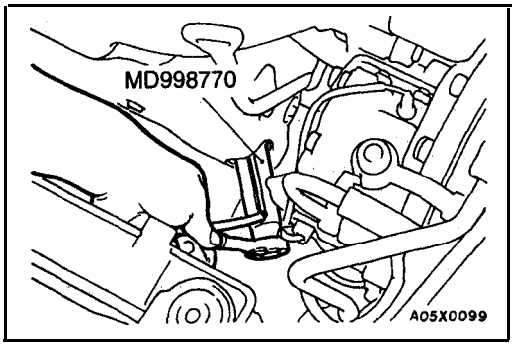

REMOVAL SERVICE POINTS

◀A▶ HEATED OXYGEN SENSOR <FRONT> REMOVAL

◀B▶ TURBOCHARGER ASSEMBLY REMOVAL

Remove the turbocharger assembly with the exhaust fitting, water pipe assembly (A), water pipe assembly (B) and the oil pipe assembly attached to it.

◀C▶ OIL PIPE ASSEMBLY REMOVAL

Caution

After disconnecting the oil pipe, take care that foreign material does **not** enter the oil passage hole of the turbo-**charger assembly.**

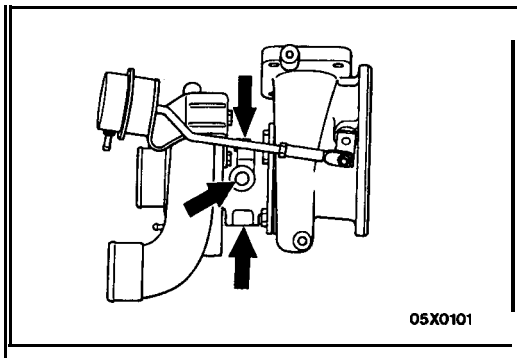

INSTALLATION SERVICE POINTS

▶A◀ TURBOCHARGER ASSEMBLY INSTALLATION

(1) Clean the alignment surfaces shown in the illustration.
(2) Supply clean engine oil through the oil pipe installation hole of the turbocharger assembly.

Caution
When cleaning, take care that no foreign material gets into the engine coolant or oil passages hole.

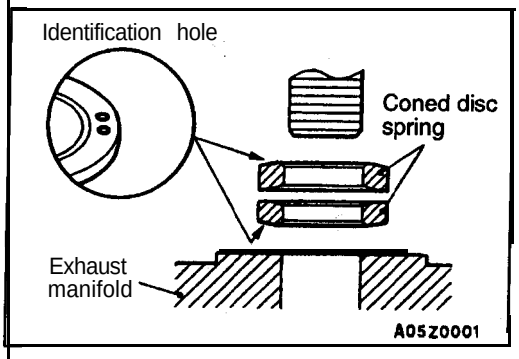

▶B◀ CONED DISC SPRING/FLANGE NUT/FLANGE BOLTS INSTALLATION

(1) Install the coned disc spring in the shown direction.
(2) Tighten the flange nuts and bolts to 27 – 31 Nm (20 – 23 ft.lbs.).

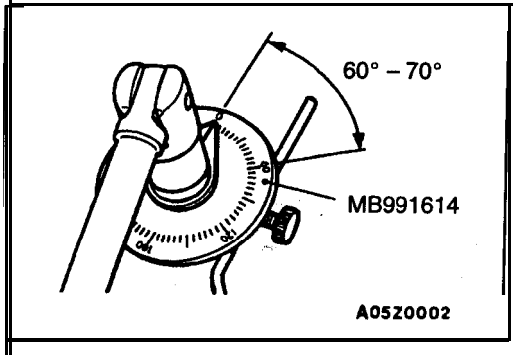

(3) Use the special tool to further tighten by 60° – 70°.

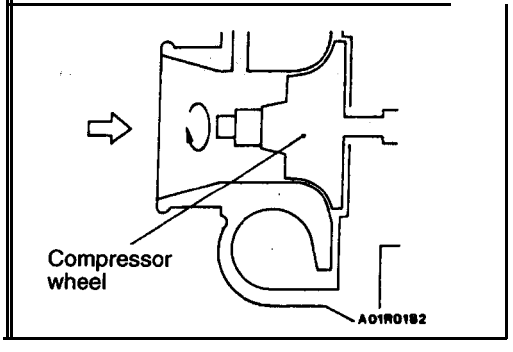

INSPECTION

15100460033

TURBOCHARGER ASSEMBLY CHECK

1. Visually check the turbine wheel and the compressor wheel for cracking or other damage.
2. Check whether the turbine wheel and the compressor wheel can be easily turned by hand.
3. Check for oil leakage from the turbocharger assembly.
4. Check if the turbocharger waste gate valve remains open. If any problem is found, replace the part after disassembly.

OIL PIPE ASSEMBLY AND OIL-RETURN PIPE CHECK 15100460040

Check the oil pipe assembly and oil-return pipe for clogging, bending, or other damage. If there is clogging, clean it.

EXHAUST MANIFOLD <2.4L ENGINE>

15100330150

REMOVAL AND INSTALLATION

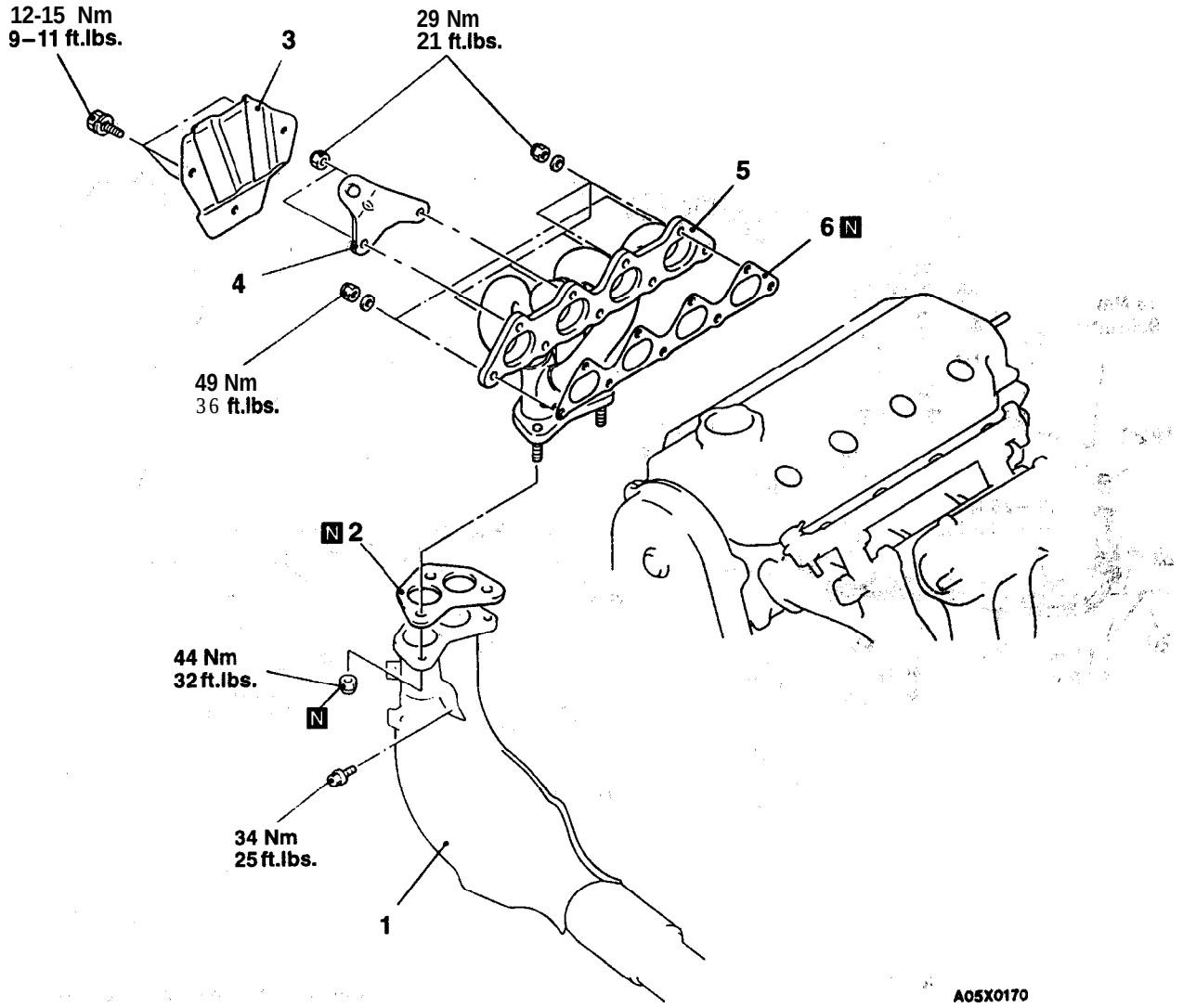

Removal steps

1. Front exhaust pipe connection
2. Gasket
3. Heat protector
4. Engine hanger
5. Exhaust manifold
6. Exhaust manifold gasket

TSB Revision

EXHAUST PIPE AND MAIN MUFFLER

15100540126

REMOVAL AND INSTALLATION

<2.0L Engine (Non-turbo)>

Pre-removal and Post-installation **Operation**
- Under Cover Removal and Installation (Refer to GROUP 42–Under Cover.)

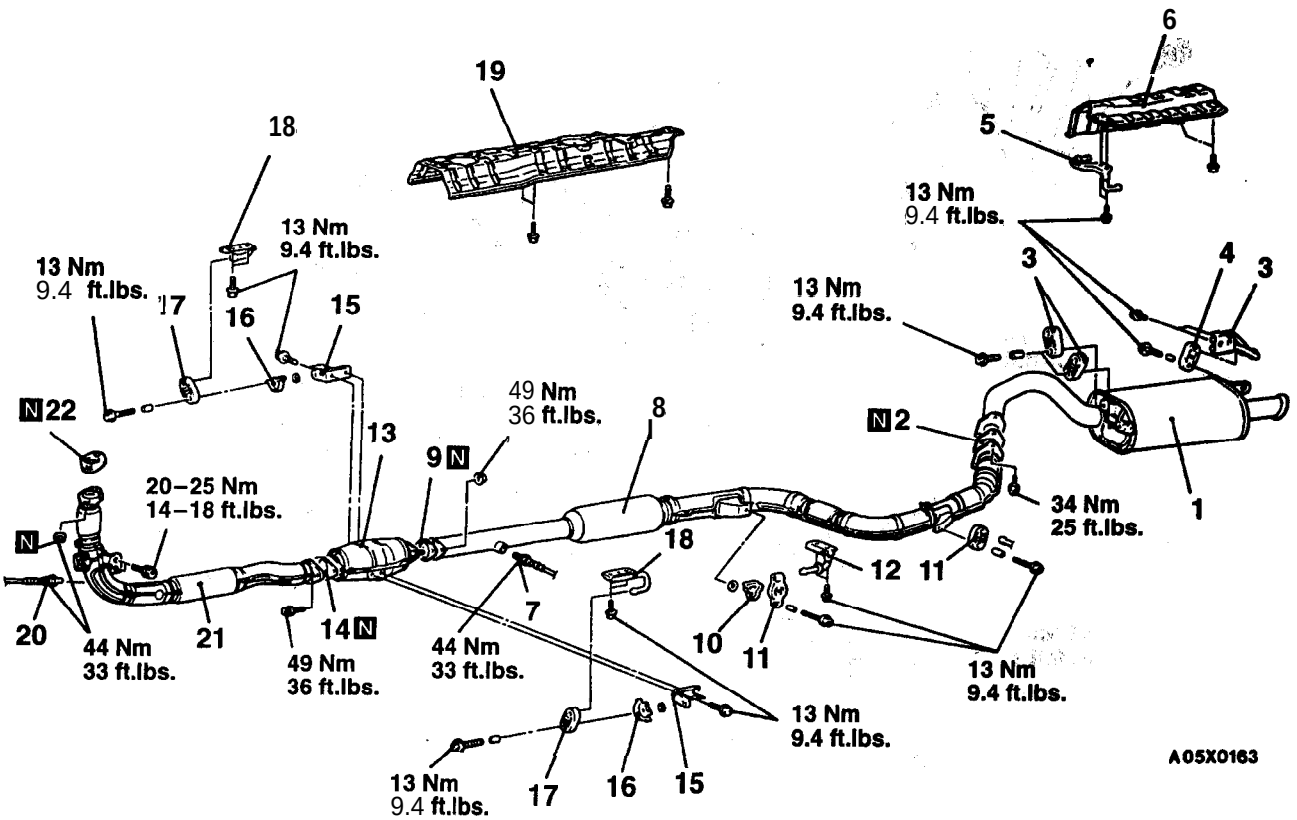

Main muffler removal steps

1. Main muffler assembly
2. Gasket
3. Hanger
4. Tail hanger
5. Rear hanger
6. Rear floor heat protector panel

Center exhaust pipe removal steps

◀A▶ ▶A◀ 7. Heated oxygen sensor connection <rear>
8. Center exhaust pipe
9. Gasket
10. Hanger protector
11. Hanger
12. Hanger bracket

Catalytic converter removal steps

13. Catalytic converter
14. Gasket
15. Catalytic converter bracket
16. Hanger protector
17. Hanger
18. Front hanger
19. Front floor heat protector panel

Front exhaust pipe removal steps

◀A▶ ▶A◀ 20. Heated oxygen sensor connection <front>
21. Front exhaust: pipe
22. Gasket

TSB Revision

<2.0L Engine (Turbo)-FWD>

Pre-removal and Post-installation Operation
- Under Cover Removal and Installation (Refer to GROUP 42–Under Cover.)

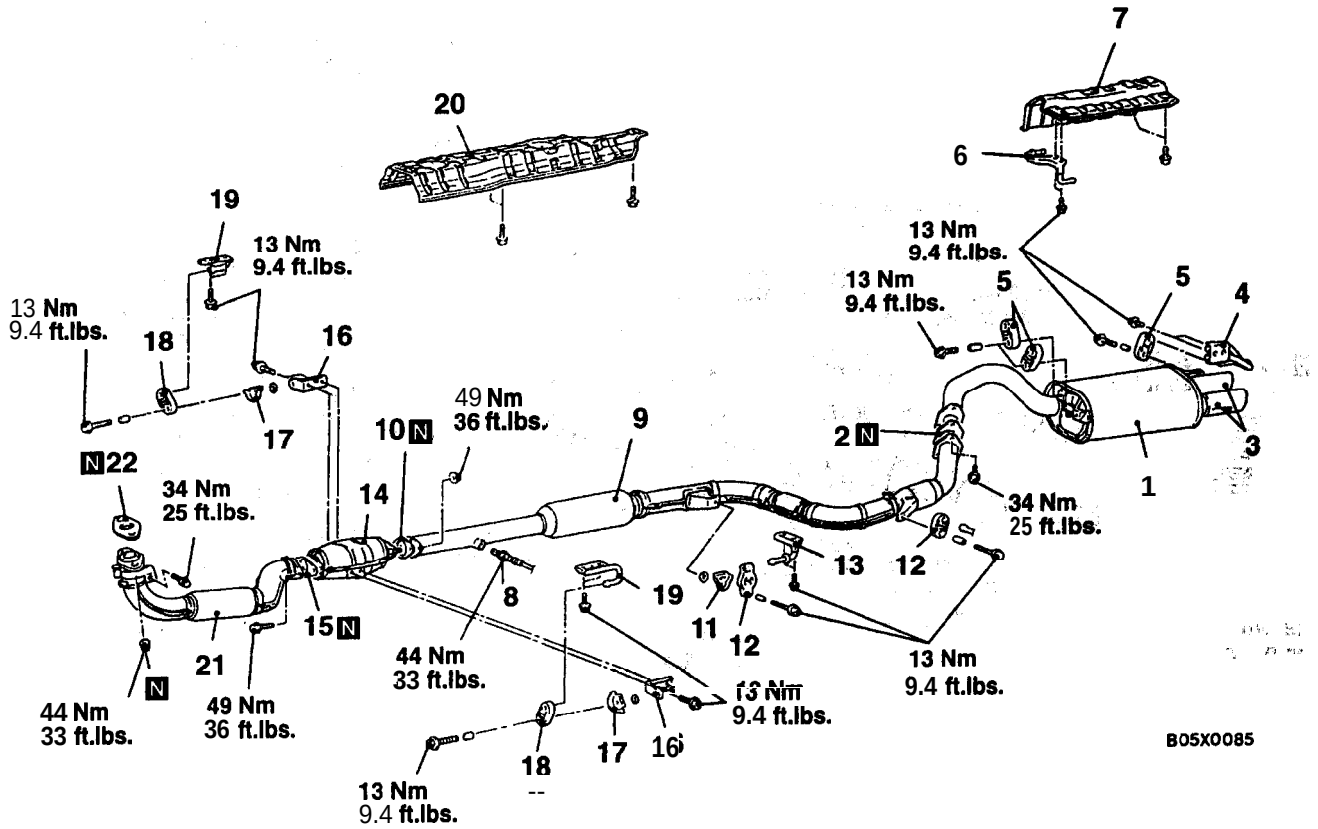

Main muffler removal steps

1. Main muffler assembly
2. Gasket
3. Muffler cutter
4. Hanger
5. Tail hanger
6. Rear hanger
7. Rear floor heat protector panel

Center exhaust pipe removal steps

◀A▶ 8. Heated oxygen sensor connection <rear>
9. Center exhaust pipe
10. Gasket
11. Hanger protector
12. Hanger
13. Hanger bracket

Catalytic converter removal steps

14. Catalytic converter
15. Gasket
16. Catalytic converter bracket
17. Hanger protector
18. Hanger
19. Front hanger
20. Front floor heat protector panel

Front exhaust pipe removal steps

21. Front exhaust pipe
22. Gasket

TSB Revision

<2.0L Engine (Turbo)-AWD>

Pre-removal and Post-installation Operation
- Under Cover Removal and Installation (Refer to GROUP 42–Under Cover.)

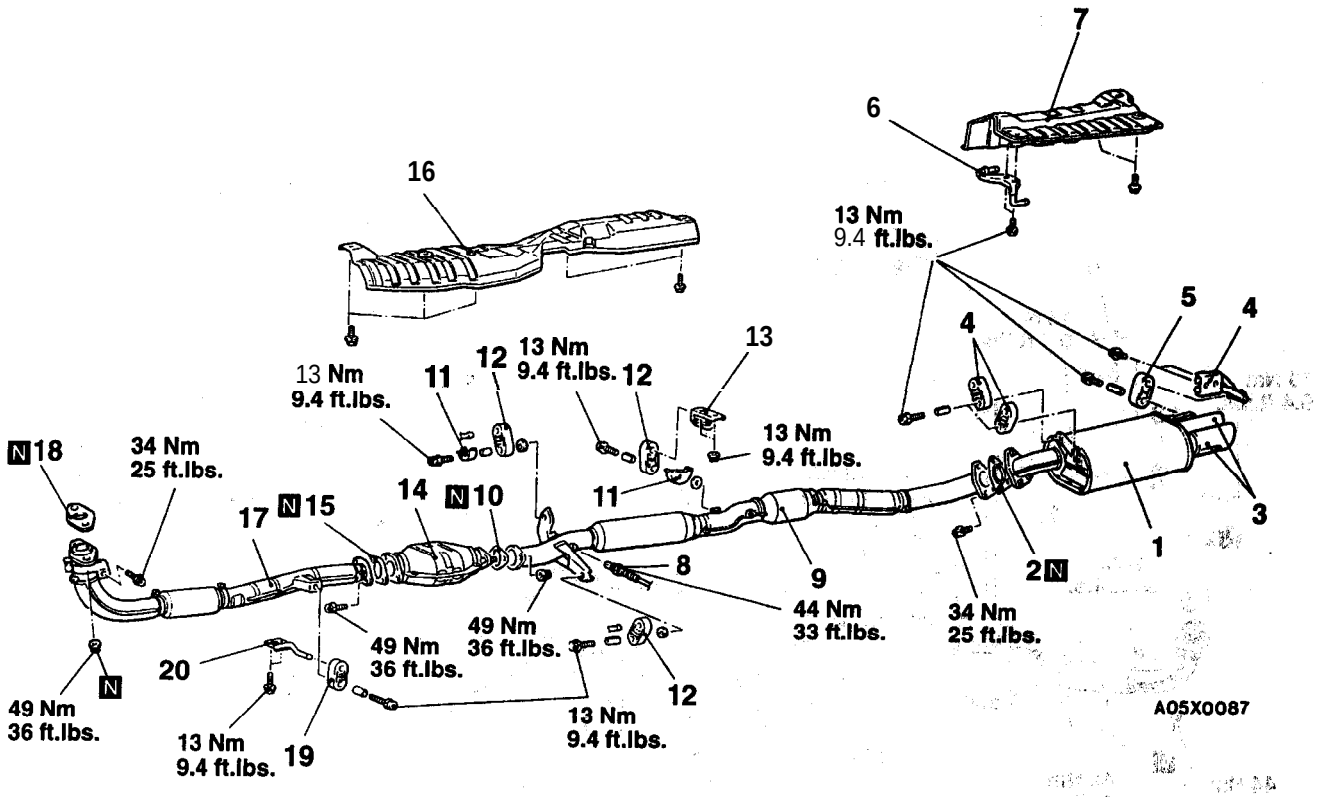

Main muffler removal steps
1. Main muffler assembly
2. Gasket
3. Muffler cutter
4. Hanger
5. Tail hanger
6. Rear hanger
7. Rear floor heat protector panel

Center exhaust pipe removal steps
◀A▶ 6. Heated oxygen sensor connection <rear>
9. Center exhaust pipe
10. Gasket
11. Hanger protector
12. Hanger
13. Center hanger

Catalytic converter removal steps
14. Catalytic converter
15. Gasket
16. Front floor. heat protector panel

Front exhaust pipe removal steps
17. Front exhaust pipe
18. -Gasket
19. Hanger
20. Front hanger

TSB Revision

<2.4L Engine>

Pre-removal and Post-installation Operation
- Under Cover Removal and Installation (Refer to GROUP 42–Under Cover.)

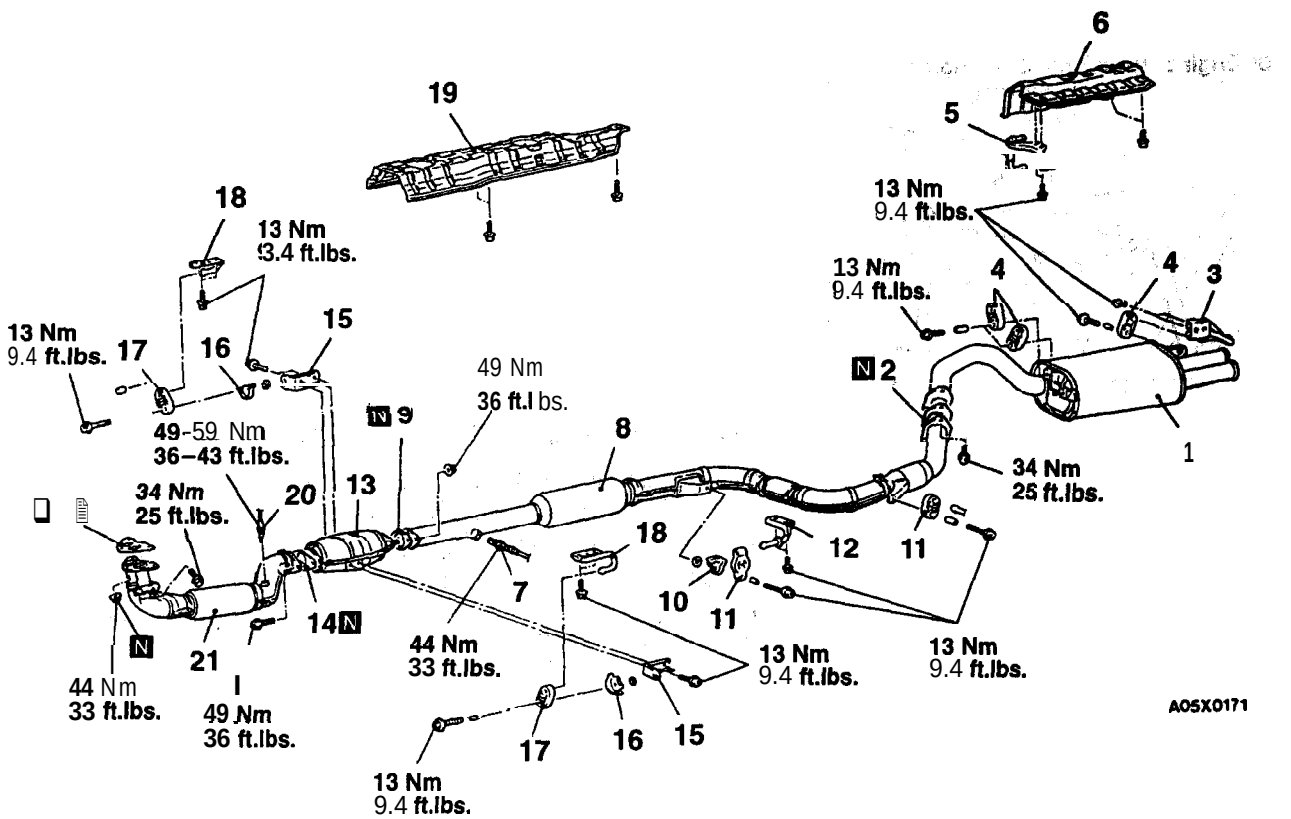

Main muffler **removal steps**
1. Main muffler assembly
2. Gasket
3. Hanger
4. Tail hanger
5. Rear hanger
6. Rear floor heat protector panel

Center exhaust pipe removal steps

◀A▶ 7. Heated oxygen sensor connection <rear>
8. Center exhaust pipe
9. Gasket
10. Hanger protector
11. Hanger
12. Hanger bracket

Catalytic converter removal steps
13. Catalytic converter
14. Gasket
15. Catalytic converter bracket
16. Hanger protector
17. Hanger
18. Front hanger
19. Front floor heat protector panel

Front exhaust pipe removal steps

◀A▶ 20. Heated oxygen sensor <front>
21. Front exhaust pipe
22. Gasket

TSB Revision

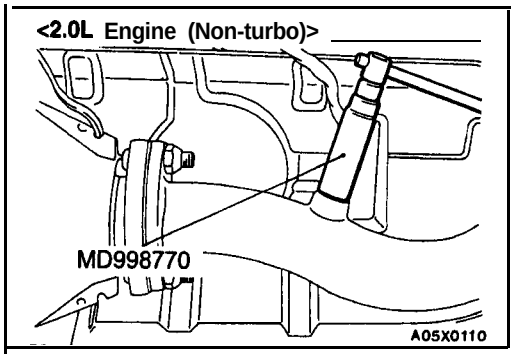

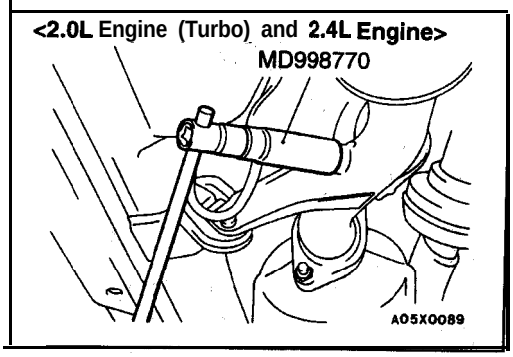

REMOVAL SERVICE POINT

◀A▶ HEATED OXYGEN SENSOR <FRONT>/HEATED OXYGEN SENSER <REAR> DISCONNECTION

For 2.0L Engine (Non-turbo), 'the' exhaust manifold threabs must be cleaned with an 18 mm (.7 in.) × 1.5 + 6Ê tap after the heated oxygen sensor has been disconnected.

INSTALLATION SERVICE POINT

▶A◀ HEATED OXYGEN SENSOR <FRONT>/HEATED OXYGEN SENSER <REAR; CONNECTION

If reusing the original sensor, coat the sensor threads with an antiseize compound such as Loctite 771-64 or equivalent. New sensors have compound on the threads and do not require an additional coating.

TSB Revision

ENGINE AND EMISSION CONTROL

CONTENTS

17109000124

CONTINUED ON NEXT PAGE

WARNINGS REGARDING SERVICING OF SUPPLEMENTAL RESTRAINT SYSTEM (SRS) EQUIPPED VEHICLES

WARNING!

(1) Improper service **or maintenance of any component of the SRS, or any SRS-related component, can lead to personal injuryorcleathtoservicepersonnel (from inadvertentfiring of the air bag) or to the driver and passenger (from rendering the SRS inoperative).**

(2) Service or maintenance of any SRS component or SRS-related component must be performed only at an authorized MITSUBISHI dealer.

(3) MITSUBISHI dealer personnel must thoroughly review this manual, and especially its GROUP 52B – Supplemental Restraint System (SRS) and GROUP 00 – Maintenance Service, before beginning any service or maintenance of any component **of the SRS or any SRS-related component.**

INOTE

'Jhe SRS includes the following components: SRS-ECU, SRS warning light, air bag module, clock spring, and interconnecting wiring. Other SRS-related components (that may have to be removed/installed in connection with SRS service or maintenance) are iindicated in the table of contents by an asterisk (*).

ENGINE CONTROL SYSTEM

17100010041

GENERAL INFORMATION

A cable-type accelerator mechanism and a suspended-type pedal have been adopted.

SERVICE SPECIFICATION

17100030054

Item	Standard value
Accelerator cable play mm (in.)	1–2 (.04–.08)

TROUBLESHOOTING

17100070049

Symptom	Probable cause	Remedy
Throttle valve will not fully open or close	Misadjusted accelerator cable	Adjust
	Misadjusted auto-cruise control cable	Adjust
	Broken return spring	Replace
	Throttle lever malfunction	Replace
Accelerator pedal operation not smooth (over acceleration)	Accelerator pedal wrongly tightened	Repair
	Misinstalled accelerator cable.	Repair
	Accelerator cable requires lubrication	Lubricate or replace

ON-VEHICLE SERVICE 17100090090

ACCELERATOR CABLE CHECK AND ADJUSTMENT

For models equipped with the auto-cruise control system, refer to P.17-33.

1. Turn A/C and lights OFF.
   Inspect and adjust" at no load.
2. Warm engine until stabilized at idle.
3. Confirm idle speed is at prescribed rpm.
4. Stop engine (ignition switch OFF).
5. Confirm there are no sharp bends in accelerator cable.
6. Check inner cable for correct slack:
7. If there is too much slack or no slack, adjust play by the following procedures.
   (1) Turn the ignition switch to the ON position (without starting the engine) and leave in that condition for approximately 15 seconds in order to initialize the IAC motor.'

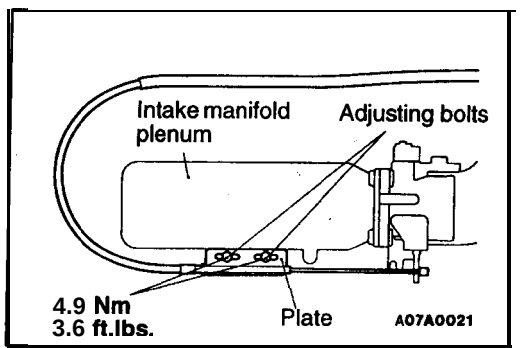

   (2) Loosen the adjusting bolt to release the cable.
   (3) After moving the plate to the position immediately before the throttle lever starts to move, move the plate back towards the throttle body by the standard value amount only to biing the accelerator cable play to the standard value.

   Standard value: 1–2 mm (.04–.08 in.)

   (4) Tighten the adjusting bolts to the specified torque.

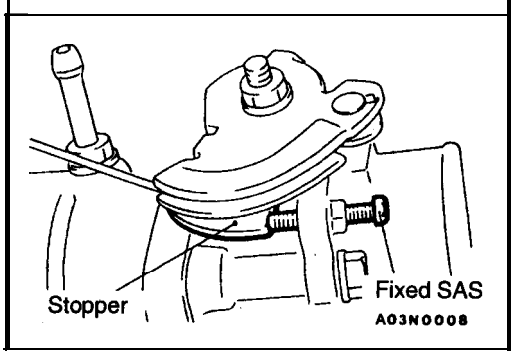

8. Adjust accelerator cable play and confirm throttle lever stopper touches the fixed SAS.

ACCELERATOR CABLE AND PEDAL

17100120096

REMOVAL AND INSTALLATION

Post-installation Operation
Accelerator Cable Adjustment (Refer to P.17-4.)
(For models equipped with auto-cruise control system, refer to P.17-33.)

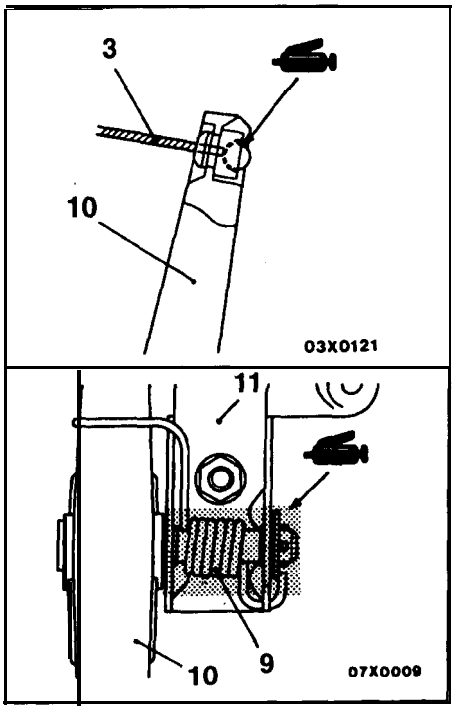

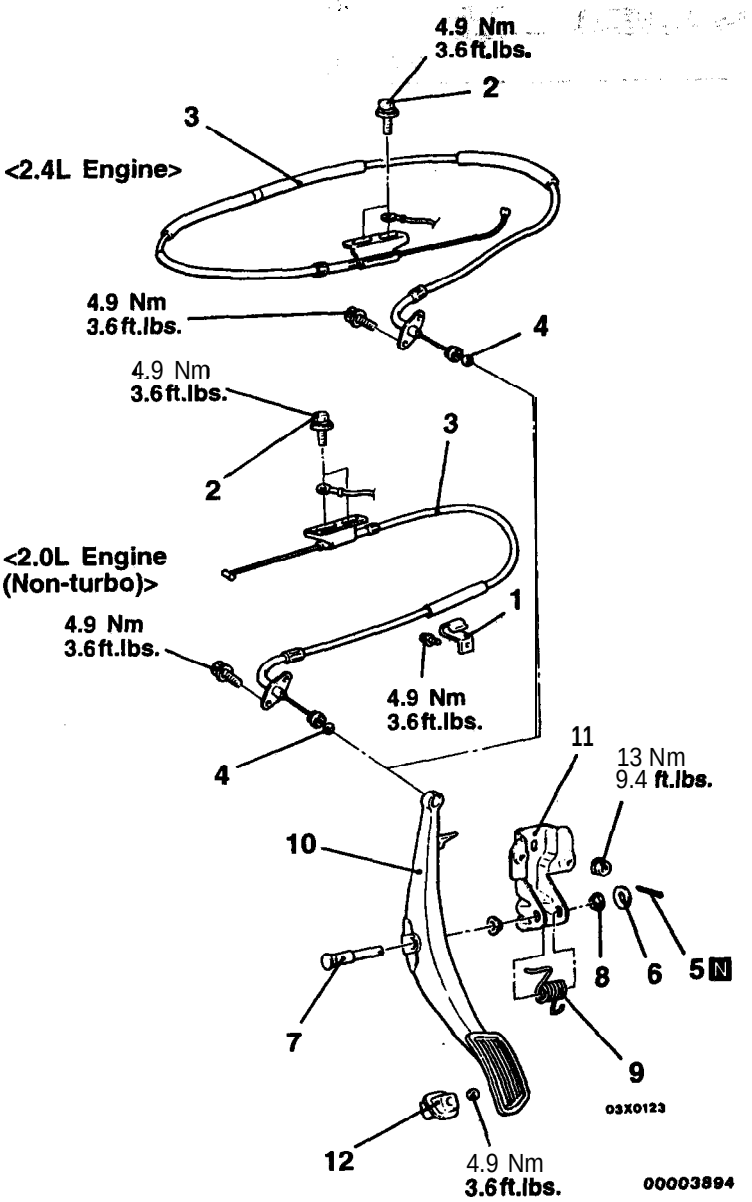

Accelerator cable removal steps
1. Clip
2. Adjusting bolts
▶A◀ 3. Accelerator cable

Accelerator pedal removal steps
4. Accelerator cable connection
5. Cotter pin
6. Washer
7. Accelerator pedal pin
8. Bushing
9. Spring
10. Accelerator pedal arm
11. Accelerator pedal bracket
12. Accelerator pedal stopper

NOTE
For models equipped with auto-cruise control system, the accelerator cable removal/installation procedures are referred to **P.17-40.**

TSB Revision

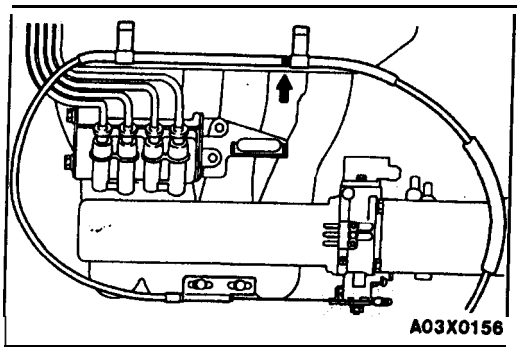

INSTALLATION SERVICE POINT

▶A◀ ACCELERATOR CABLE INSTALLATION <2.4L Engine>

Clamp the accelerator cable so that its marking is as shown.

AUTO-CRUISE CONTROL SYSTEM

17200010075

GENERAL INFORMATION

By using the auto-cruise control, the driver can drive at the speed he/she likes [in a range of approximately 40–135 km/h (25-84 mph) <2.0L Engine (Non-turbo)>, 40–200 km/h (25-124 mph) <2.0L Engine (Turbo) and 2.4L Engine>] without depressing the accelerator pedal.

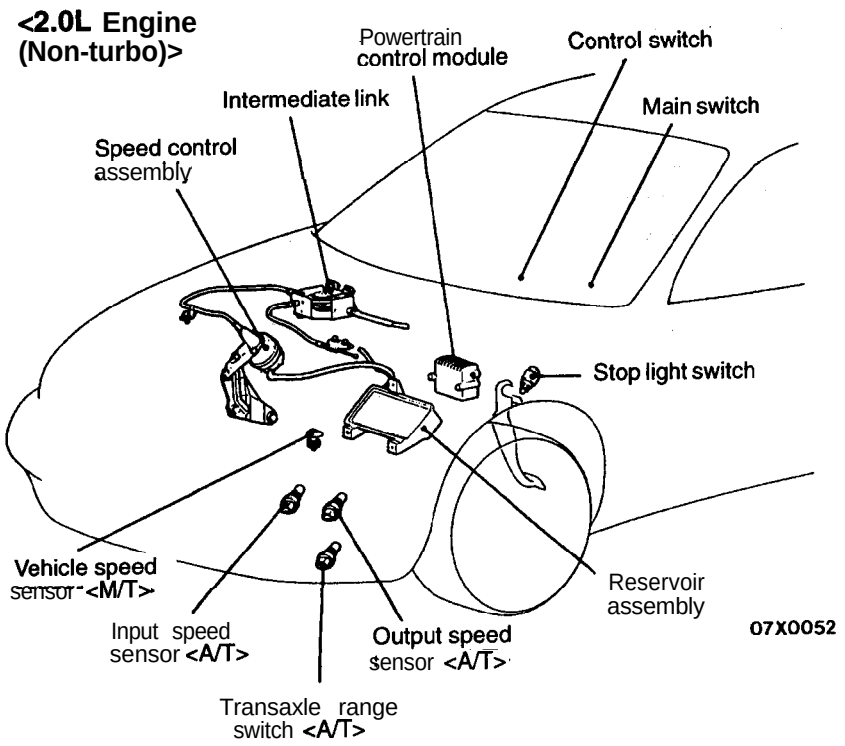

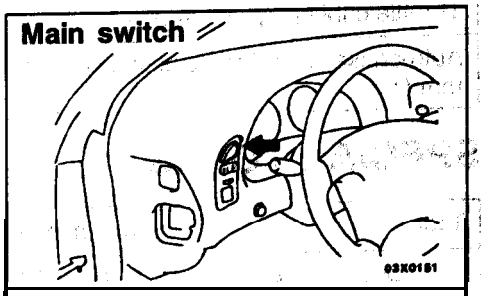

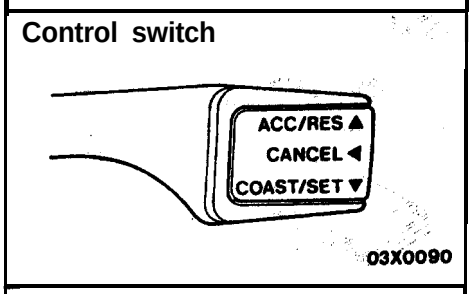

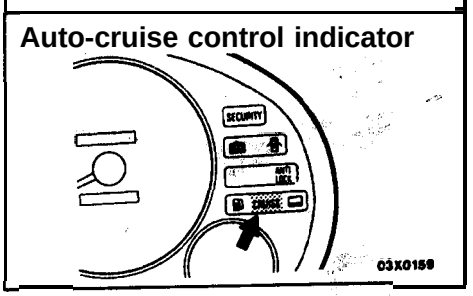

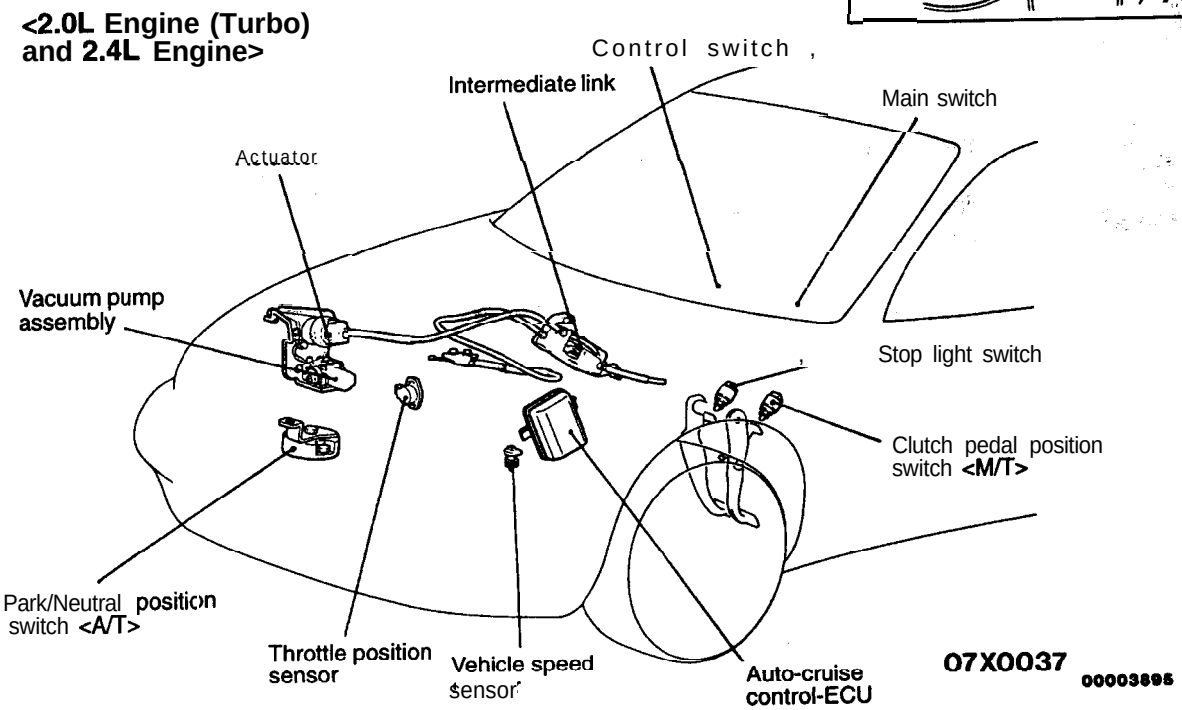

TSB Revision

SERVICE SPECIFICATIONS

17200030071

Items		Standard value
Accelerator cable play mm (in.)	M/T	0–1 (0–.04)
	A/T	2-3 (.08–.12)
Throttle cable play mm (in.)		1–2 (.04–.08)
Auto-cruise control cable play <2.0L Engine (Turbo) and 2.4L Engine> mm (in.)		1–2 (.04–.08)

SPECIAL TOOLS

17200060070

Tool	Tool number and name	Supersession	Application
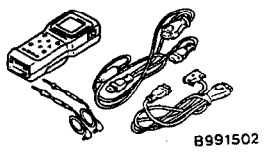 B991502	MB991502 Scan tool (MUT-II)	MB991502	• Reading diagnostic trouble code • Auto-cruise control system inspection
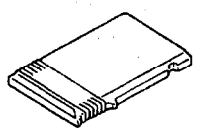 B991325	ROM Pack	–	
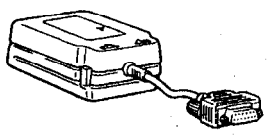	MB991544 MUT-II Interface cartridge	MB991544	• Reading diagnostic trouble code <2.0L Engine (Non-turbo)> • Auto-cruise control system inspection <2.0L Engine (Non-turbo)>
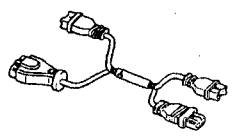	MB991545 Adapter harness	MB991545	
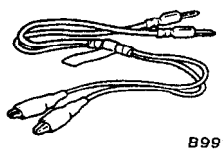 B991529	MB991529 Diagnostic trouble code check harness	MB991529	Checking the diagnostic trouble code.

TROUBLESHOOTING <2.0L ENGINE (NON-TURBO)>

17200200137

DIAGNOSTIC TROUBLESHOOTING FLOW

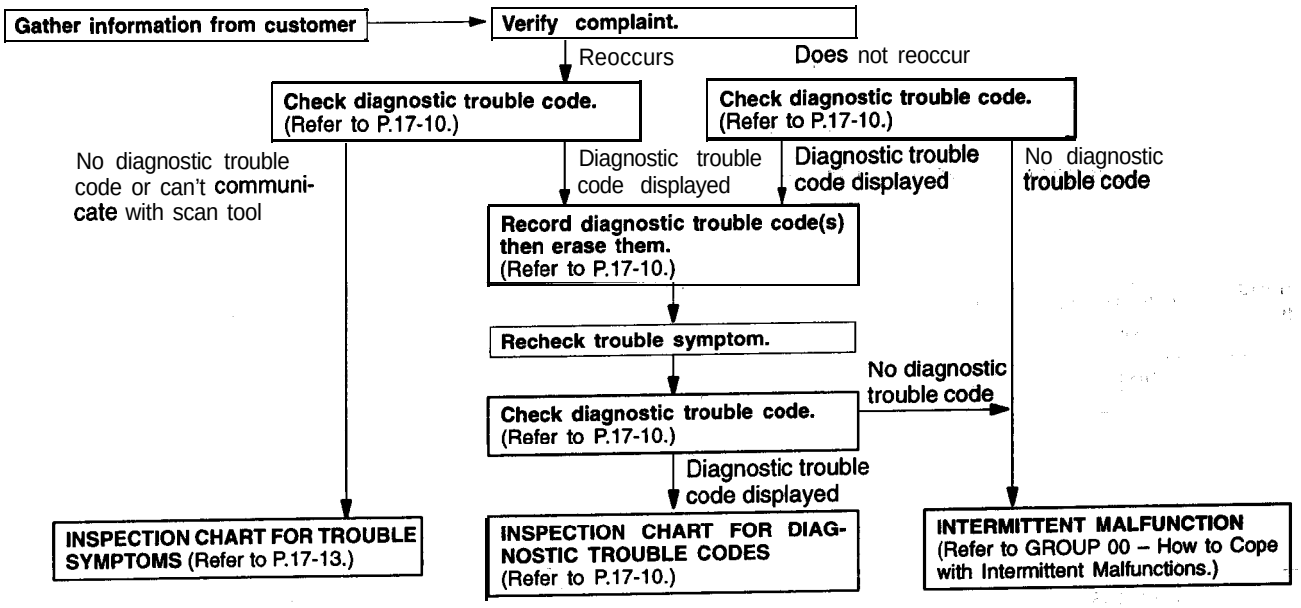

NOTE
Before carrying out trouble diagnosis, check all the following items.
1. Is the vacuum hose correctly installed and undamaged?
2. Are the auto-cruise, accelerator, and throttle cables routed correctly?
3. Do the link assembly and cables move smoothly?
4. Is the play of each cable within its standard value?

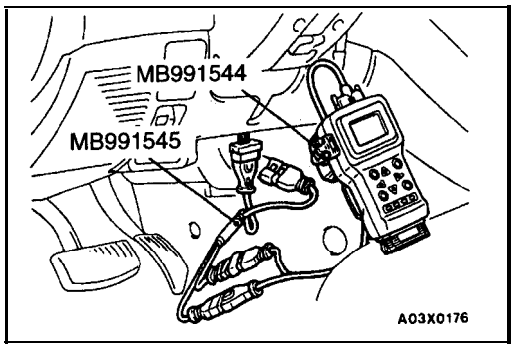

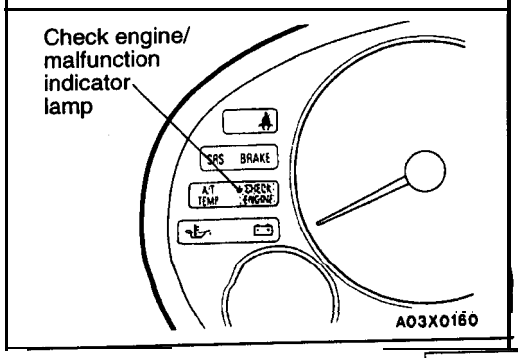

DIAGNOSTIC FUNCTION

17200210048

HOW TO READ THE DIAGNOSTIC TROUBLE CODES

When using the scan tool

Connect the scan tool to the data link connector, and then read the diagnostic trouble codes.

Caution

(1) Turn the ignition switch off before connecting or disconnecting the scan tool.
(2) Use the special tools (MB991544 and MB991545) to connect the scan tool as illustrated.

If scan tool not available

1. Cycle the ignition key On - Off - On - Off - On within 5 seconds.
2. Count the number of times the check engine/malfunction indicator lamp on the instrument panel flashes on and off. The number of flashes represents the trouble code. There is a slight pause between the flashes to separate the first and second digits of the code. Longer pauses between flashes separate individual trouble codes.

ERASING DIAGNOSTIC TROUBLE CODES

With the scan tool

Connect the scan tool to the data link connector, then, erase the diagnostic trouble codes according to scan tool instruction.

Without the scan tool

1. Remove the battery cable from the battery (–) terminal for 10 seconds or more, then, reconnect the cable.
2. After the engine has warmed up, run it at idle for about 15 minutes.

INSPECTION CHART FOR DIAGNOSTIC TROUBLE CODES

17200220140

Code No.			On-board diagnostic items	Reference page
Scan tool mode	General scan tool mode	MIL		
35	P0500	15	Vehicle speed signal system	17-10
86		34	Auto-cruise control switch	17-11
87	–	34	Auto-cruise control switch	17-11
15		34	Speed control servo solenoid valve system	17-11
02	P0605	53	Powertrain control module (PCM)	17-12
82	–	77	Auto-cruise control relay system	17-12

NOTE
*MIL: Check engine/Malfunction indicator lamp

INSPECTION PROCEDURE FOR DIAGNOSTIC TROUBLE CODES

Code No.	Scan tool	35	Vehicle speed signal system	Probable cause
	General scan tool	P0500		
	MIL	15		
[Comment] No distance sensor signal detected during load conditions.				• Malfunction of the vehicle speed sensor <M/T>. • Malfunction of the input speed sensor or output speed sensor <A/T> • Malfunction of the connector. • Malfunction of the harness. • Malfunction of the PCM.

Vehicle speed sensor circuit system check [Vehicle speed sensor <M/T>, input speed sensor or output speed sensor <A/T>]
(Refer to GROUP 54 – Combination Meter.)

Code No.			Auto-cruise control switch	Probable cause
	Scan tool	86		
	General scan tool	–		
	MIL	34		
[Comment] Speed control switch input above maximum acceptable voltage.				• Malfunction of the auto-cruise control switch.

Replace the auto-cruise control switch.

Code No.			Auto-cruise control switch	Probable cause
	Scan tool	87		
	General scan tool	–		
	MIL	34		
[Comment] Speed control switch input below minimum acceptable voltage.				• Malfunction of the auto-cruise control switch.

Replace the auto-cruise control switch.

Code No.			Speed control servo solenoid system	Probable cause
	Scan tool	15		
	General scan tool	–		
	MIL	34		
[Comment] An open or shorted condition is detected in either the speed control vacuum or vent solenoid control circuits.				• Malfunction of the speed control servo. • Malfunction of the connector. • Malfunction of the harness. • Malfunction of 'the PCM.

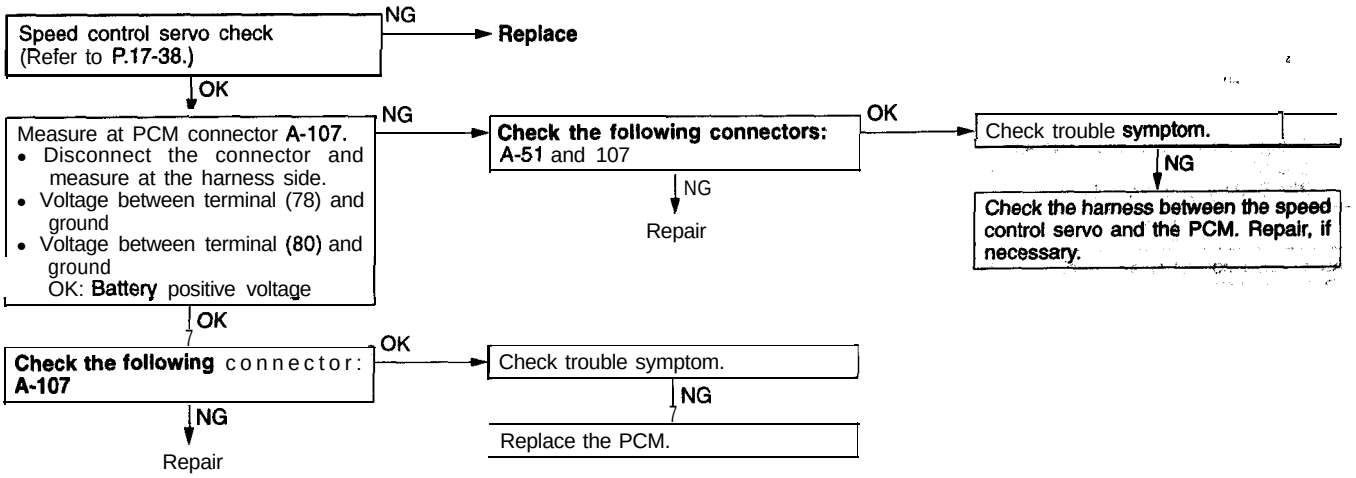

TSB Revision

Code No.			Probable cause
	I Scan tool	0 2	Powertrain control module (PCM)
	General scan tool	P0605	
	MIL	53	
[Comment] Internal powertrain control module fault is detected.			• Malfunction of the PCM.

Replace the powertrain control module.

Code No.			Probable cause
	Scan tool	82	Auto-cruise control relay system
	General scan tool	–	
	MIL	77	
[Comment] An open or shorted condition is detected in the speed control servo power relay control circuit.			• Malfunction of the speed control servo. • Malfunction of the auto-cruise control relay. • Malfunction of the connector. • Malfunction of the harness. • Malfunction of the PCM.

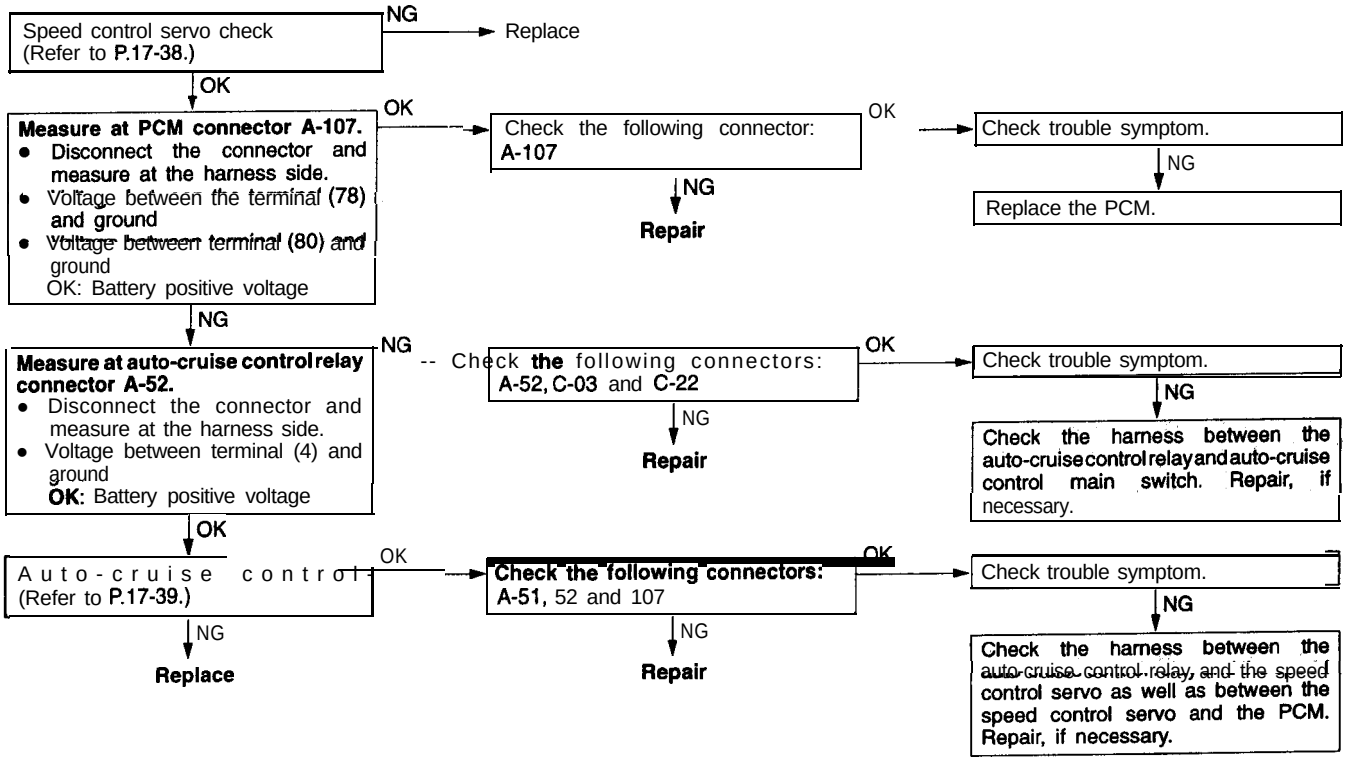

TSB Revision

INSPECTION CHART FOR TROUBLE SYMPTOMS

17200230136

Trouble symptom		Inspection procedure No.	Reference page
Communication with scan tool is not possible.		1	17-13
Auto-cruise control does not cancel.	When engine speed rises suddenly	2	17-13
	When brake pedal is depressed	3	17-14
	When selector lever is set to N range <A/T>	4	17-14
	When CANCEL switch is set to ON	5	17-14
Auto-cruise control cannot be set.		6	17-15
Hunting (repeated acceleration and deceleration) occurs at the set vehicle speed.		7	17-15
When the auto-cruise control main switch is ON, the switch indicator on the instrument panel does not illuminate. (However, auto-cruise control is normal.)		6	17-15
Auto-cruise control main switch illumination light does not illuminate.		9	17-16
Auto-cruise control indicator light inside combination meter does not illuminate. [However, auto-cruise control is normal.)		10	17-16

INSPECTION PROCEDURE FOR TROUBLE SYMPTOMS

INSPECTION PROCEDURE 1

Communication with scan tool is not possible.	Probable cause
[Comment] A defect in the power supply system (including ground) for the diagnostic line may be present.	• Malfunction of the connector. • Malfunction of the harness.

Refer to GROUP 13A – Troubleshooting.

INSPECTION PROCEDURE 2

When engine speed rises suddenly, auto-cruise control does not cancel.	Probable cause
[Comment] A malfunction of powertrain control module may exist.	• Malfunction of the PCM.

Replace the powertrain control module.

INSPECTION PROCEDURE 3

When brake pedal is depressed,, auto-cruise control does not cancel.	Probable cause
[Comment] A malfunction of the stop light switch or stop light circuit may exist.	• Malfunction of the stop light switch. • Malfunction of the connector. • Malfunction of the harness. • Malfunction of the PCM.

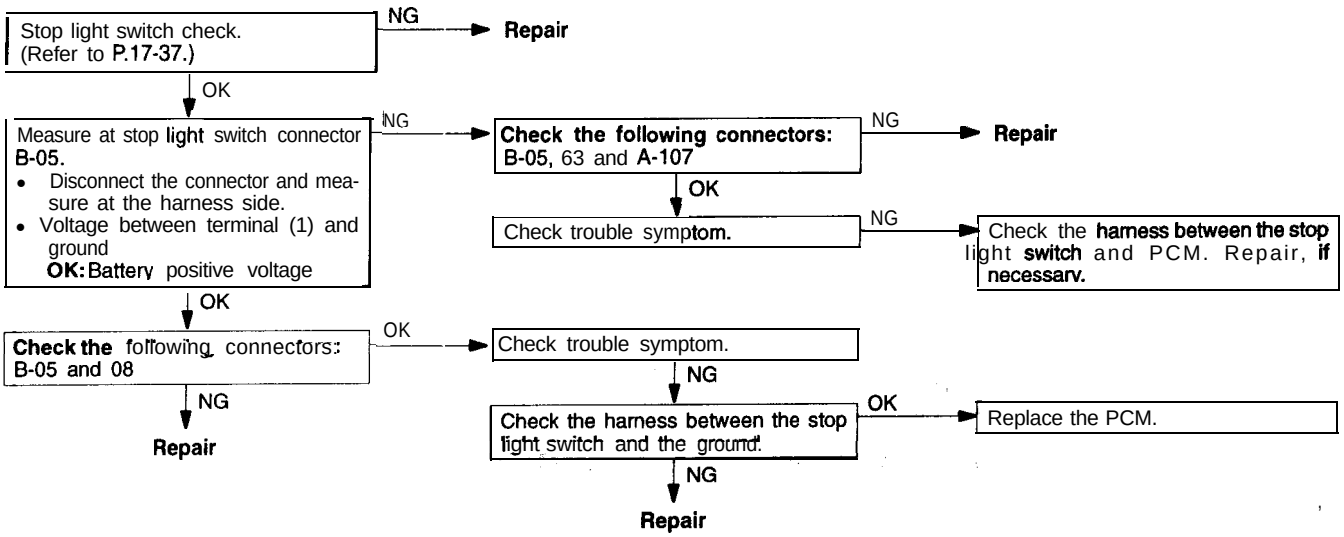

INSPECTION PROCEDURE 4

When selector lever is set to N range, auto-cruise control does not cancel. <A/T>	Probable cause
[Comment] An open-circuit in the output signal circuit in IN range may be present.	• Malfunction of the connector. • Malfunction of the harness. • Malfunction of the PCM.

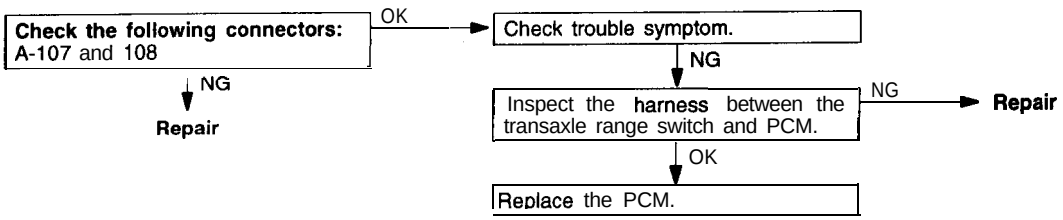

INSPECTION PROCEDURE 5

When auto-cruise control CANCEL switch is set to ON, auto-cruise control does not cancel.	Probable cause
[Comment] An open-circuit inside the CANCEL switch may be present.	• Malfunction of the auto-cruise control switch.

Replace the auto-cruise control switch.

TSB Revision

INSPECTION PROCEDURE 6

Auto-cruise control cannot be set.	Probable cause
[Comment] A malfunction of the auto-cruise control switch circuit may exist.	• Malfunction of the auto-cruise control switch • Malfunction of the clock spring. • Malfunction of the connector. • Malfunction of the harness.

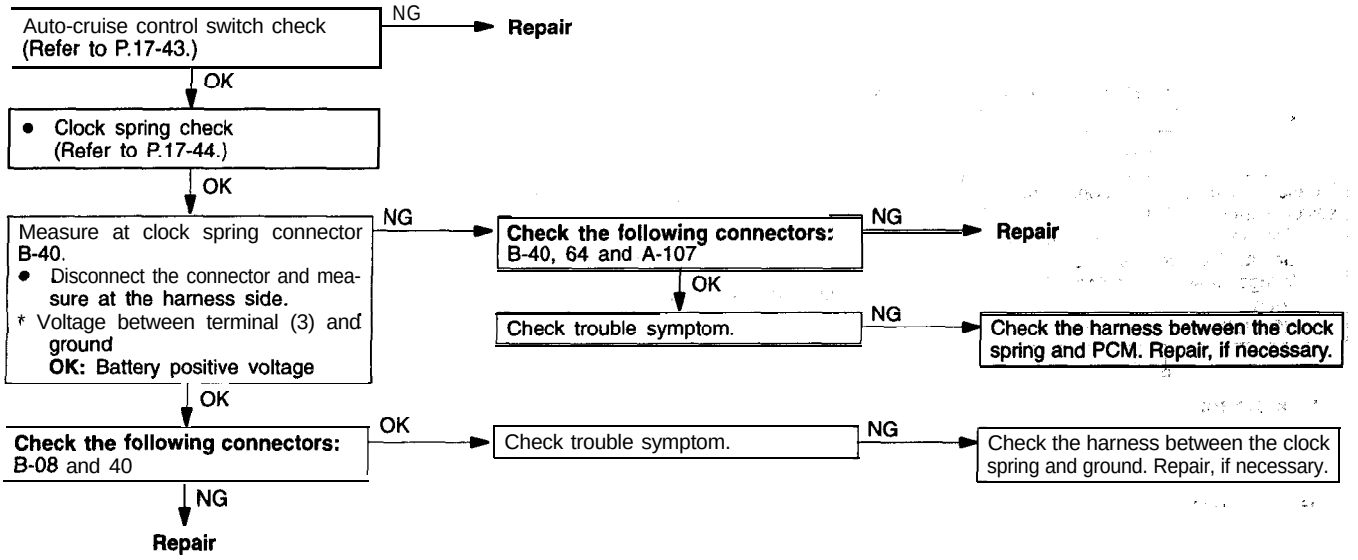

INSPECTION PROCEDURE 7

Hunting (repeated acceleration and deceleration) occurs at the set vehicle speed.	Probable cause
[Comment] A malfunction of a speed sensor, the speed control servo, or the vacuum supply may be present.	• Malfunction of the vehicle speed sensor <M/T>. • Malfunction of the input speed sensor or output speed sensor <A/T>. • Malfunction of the speed control servo. • Malfunction of the vacuum supply. • Malfunction of the PCM.

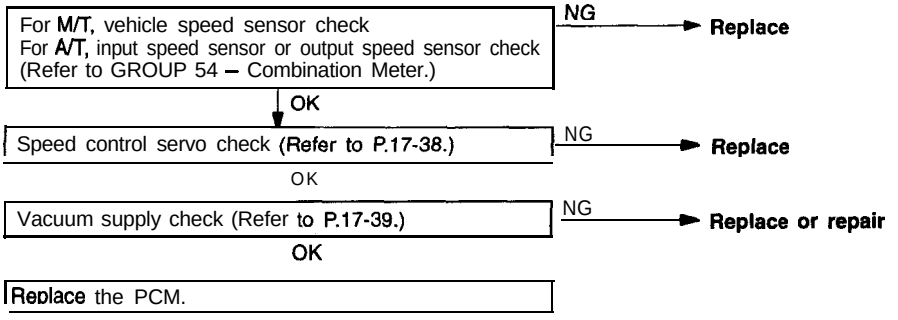

INSPECTION PROCEDURE 8

When the auto-cruise control main switch is ON, the switch indicator on the instrument panel does not illuminate. (However, auto-cruise control is normal.)	Probable cause
[Comment] Blown bulb in auto-cruise control main switch.	• Malfunction of the auto-cruise control main switch.

Replace the auto-cruise control main switch.

TSB Revision

INSPECTION PROCEDURE 9

Auto-cruise control main switch illumination light does not illuminate.	Probable cause
[Comment] A malfunction of the auto-cruise control main switch, harness, or connector may exist.	• Malfunction of the auto-cruise control main switch. • Malfunction of the connector. • Malfunction of the harness.

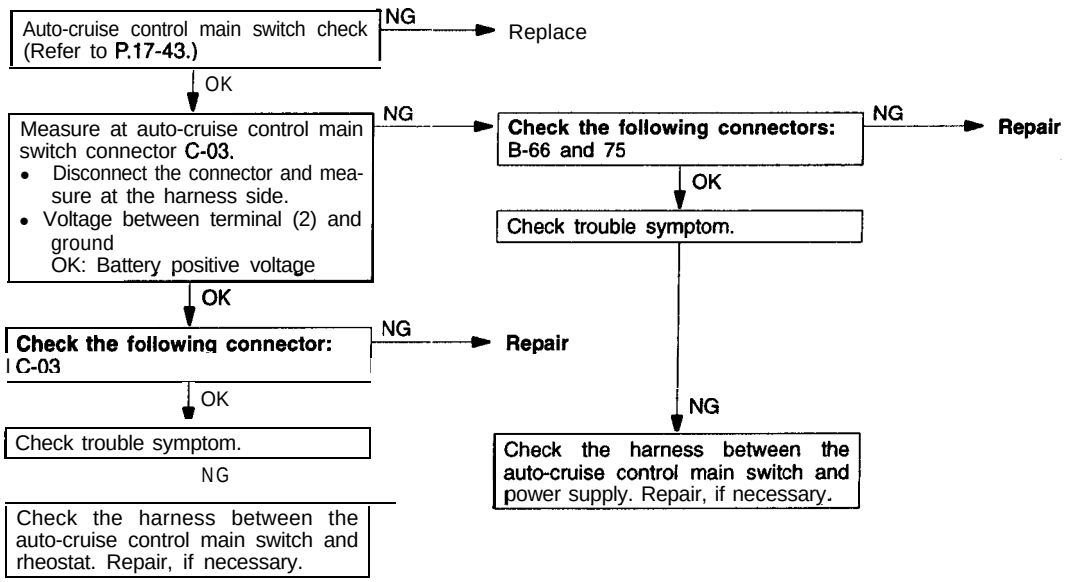

INSPECTION PROCEDURE 10

Auto-cruise control indicator inside combination meter does not illuminate. (However, auto-cruise control is normal.)	Probable cause
[Comment] A malfunction of the bulb, connector, or harness may be present.	• Malfunction of the bulb. • Malfunction of the harness. • Malfunction of the connector. • Malfunction of the PCM.

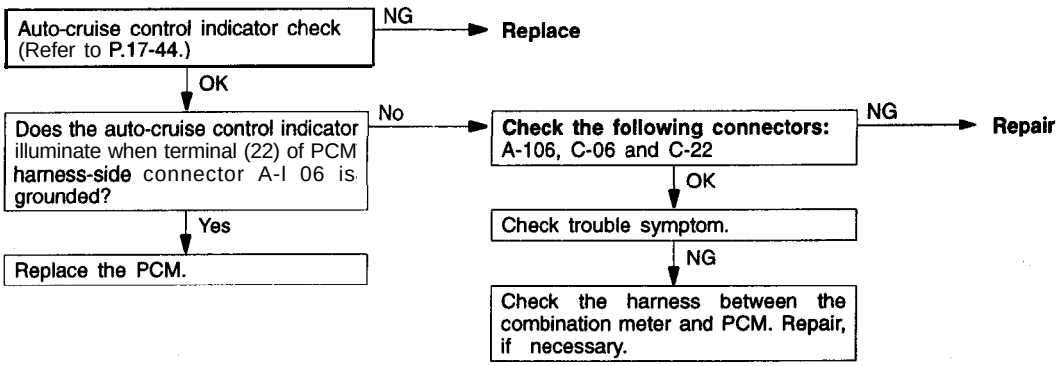

TSB Revision

TROUBLESHOOTING <2.0L ENGINE (TURBO) AND 2.4L ENGINE>

17200200144

DIAGNOSTIC TROUBLESHOOTING FLOW

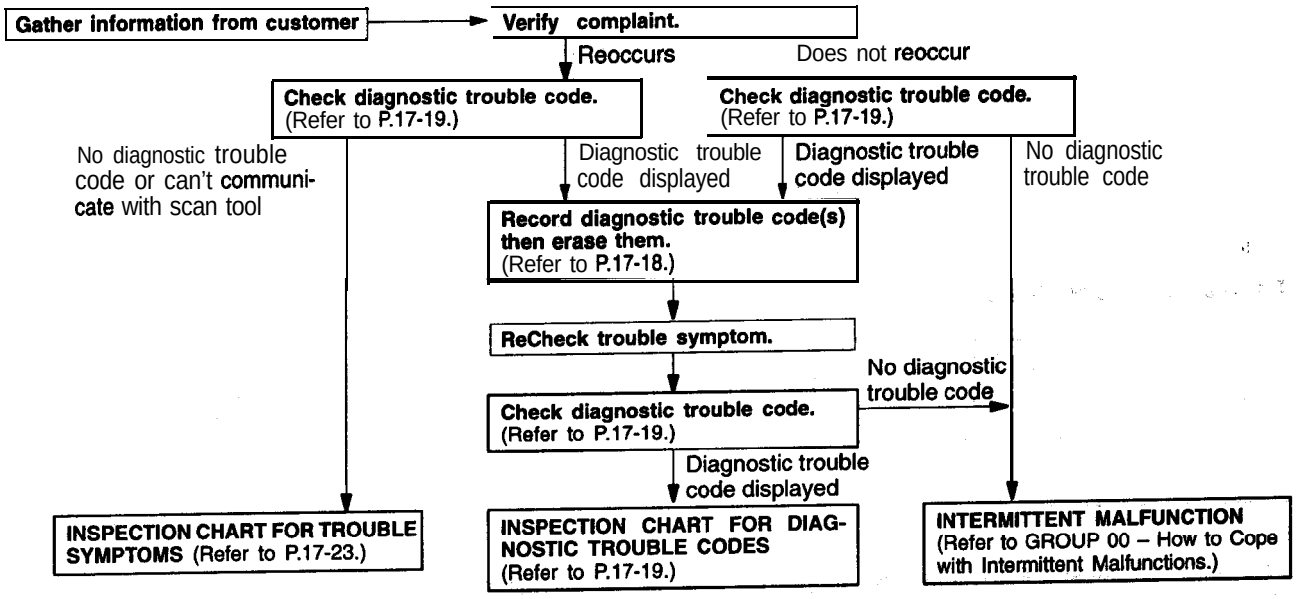

NOTE
Before carrying out trouble diagnosis, check to be sure that all of the following items are normal.
1. Is the vacuum hose correctly installed and undamaged?
2. Are the auto-cruise, accelerator, and throttle cables routed correctly?
3. Do the link assembly and cables move smoothly?
4. Is the play of each cable within its standard value?

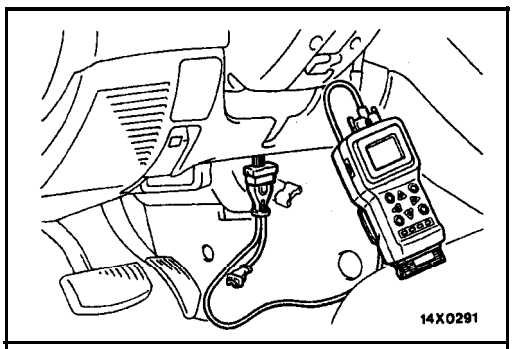

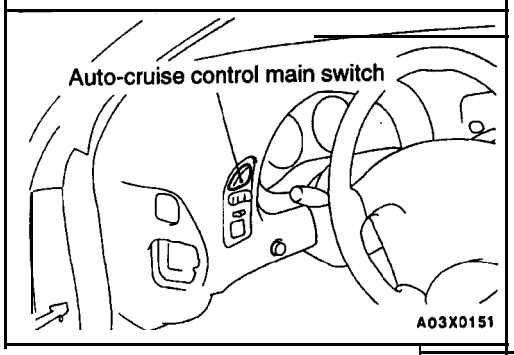

DIAGNOSTIC FUNCTION

17200210055

HOW TO READ DIAGNOSTIC TROUBLE CODES

When using the scan tool

1. Connect the scan tool to the data link connector.

   Caution
   Turn the ignition switch off before disconnecting or connecting the scan tool.

2. With the ignition switch in the ON position, turn the auto-cruise control main switch to ON and take a reading of the diagnostic trouble codes.

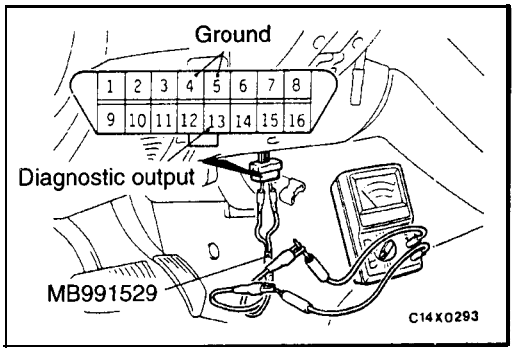

When using a voltmeter

1. Use the special tool to connect a voltmeter between the ground terminal and the diagnostic output terminal of data link connector.
2. In the same way as when using the scan tool, turn the ignition switch to ON and turn on the auto-cruise control main switch. Then take a reading of the diagnostic trouble. codes from the movement of the needle on the voltmeter.

HOW TO READ DIAGNOSTIC TROUBLE CODES FROM A VOLTMETER

Example of diagnostic trouble code voltage waveform	Normal voltage waveform
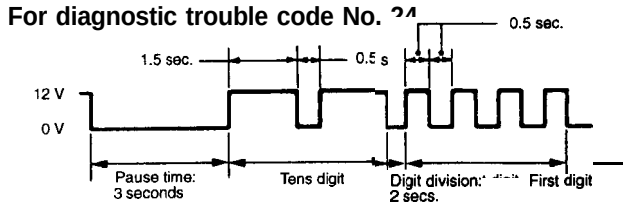	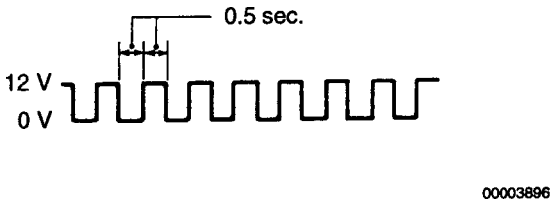

NOTE
Other on-board diagnostic items are also output as voltage waveforms corresponding to diagnostic trouble code numbers.

HOW TO ERASE DIAGNOSTIC TROUBLE CODES

The diagnostic trouble codes can be erased by disconnecting the (–) cable from the battery for 10 seconds or more and then reconnecting it, or by the following procedure.

1. Turn the ignition switch to ON.
2. With the SET switch at the ON position, turn the main switch to ON, and within 1 second after this, turn the RESUME switch to ON.
3. With the SET switch once more at the ON position, turn the stop light switch ON for a continuous period of 5 seconds or more.

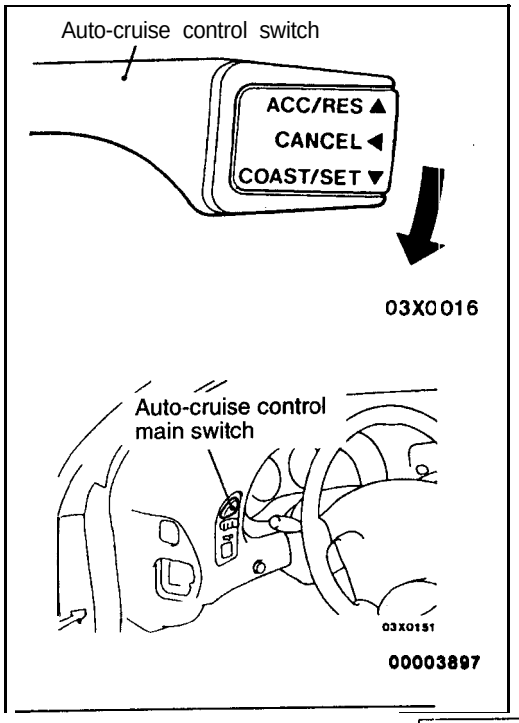

HOW TO READ INPUT SWITCH CODES

1. Connect the scan tool or a voltmeter to the data link connector. (Refer to P.17-17.)
2. With the ignition switch in the ON position, turn the SET switch to the ON position.
3. Within 1 second after turning the auto-cruise control main switch to ON, turn the RESUME switch to ON.
4. Operate each switch listed in the input inspection table and take a reading of the input switch codes with the scan tool or the fluctuation of a voltmeter.

   NOTE
   These codes are output as voltage waveforms in the same way as above.

Input Inspection Table

Code No.	Input operation	Operation judgement
21	SET switch ON	Auto-cruise control-ECU judges that SET switch is ON
22	RESUME switch ON	Auto-cruisecontrol-ECU judges that RESUME switch is ON
23	Stop light switch (ON when brake pedal depressed)	Auto-cruise control-ECU judges that stop light switch is ON
24	Vehicle speed signal	Auto-cruise control-ECU judges that vehicle speed is 40 km/h (25 mph) or higher
25		Auto-cruise control-ECU judges that vehicle speed is lower than 40 km/h (25 mph)
26	• Clutch pedal position switch <M/T> (ON when clutch pedal depressed) • Park/neutral position switch <A/T> (ON when selector lever in N range)	Auto-cruise control-ECU judges that clutch pedal position switch <M/T> or park/neutral position switch <A/T> is ON
27	CANCEL switch ON	Auto-cruise control-ECU judges that CANCEL switch is ON
28	Throttle position sensor signal	Auto-cruise control-ECU judges that throttle position sensor voltage is 1.5 V or more
29	Closed throttle position switch,	Auto-cruise control-ECU judges that closed throttle position switch is OFF

INSPECTION CHART FOR DIAGNOSTIC TROUBLE CODES,

17200220157

Code No.	On-board diagnostic items	Reference page
11	Auto-cruise vacuum pump drive system	17–20
12	Vehicle speed signal system	17–21
14	Auto-cruise vacuum pump power supply system	17-21
15	Auto-cruise control switch	17–22
16	Auto-cruise control-ECU	17–22
17	Throttle position sensor system	17–22

INSPECTION PROCEDURE: FOR DIAGNOSTIC TROUBLE CODES

Code No.11 Auto-cruise vacuum pump drive system	Probable cause
[Comment] This diagnostic trouble code is output if the release valve, control valve and motor drive signals from the auto-cruise vacuum pump are not input to the auto-cruise control-ECU.	• Malfunction of the auto-cruise vacuum pump • Malfunction of the stop light switch • Malfunction of the connector • Malfunction of the harness • Malfunction of the auto-cruise control-ECU

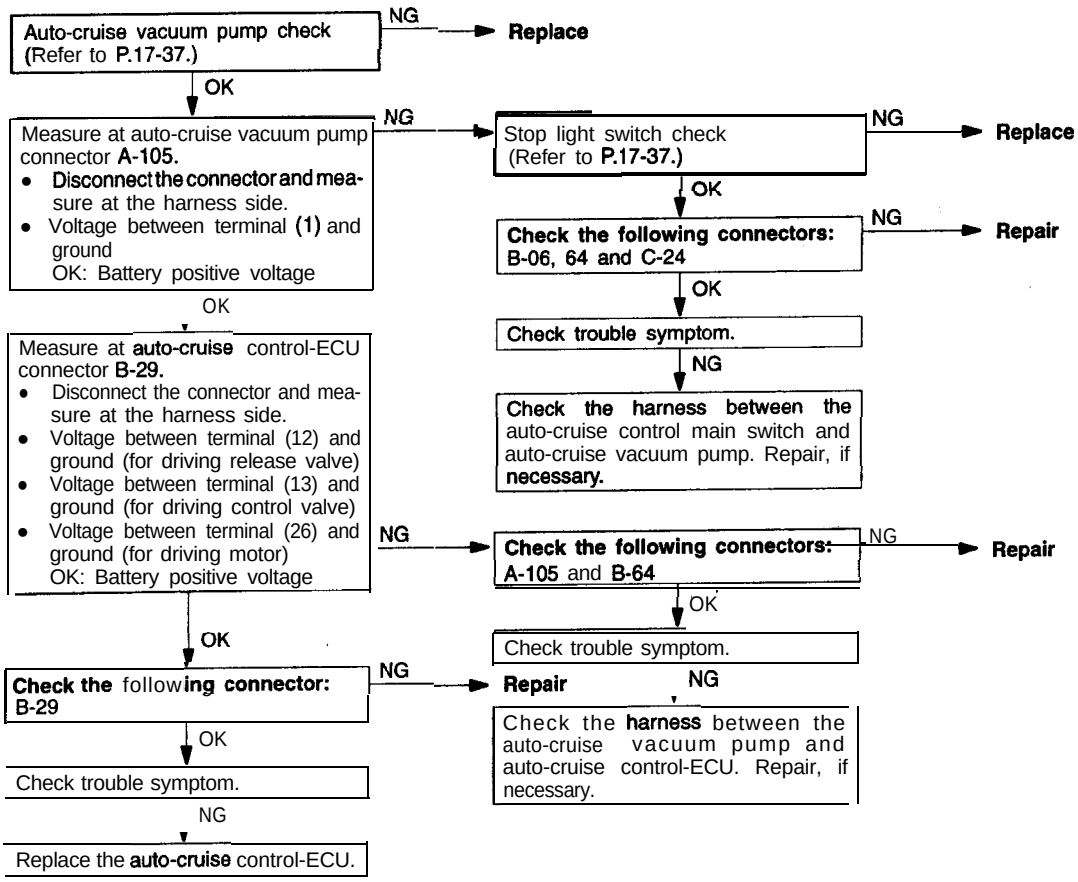

TSB Revision

Code No.1 2 Vehicle speed signal system	Probable cause
[Comment] This diagnostic trouble code is output if the vehicle speed signals from the vehicle speed sensor are not input to the auto-cruise control-ECU when the vehicle speed is 40 km/h (25 mph) or more.	• Malfunction of the vehicle speed sensor • Malfunction of the connector • Malfunction of the harness • Malfunction of the auto-cruise control-ECU

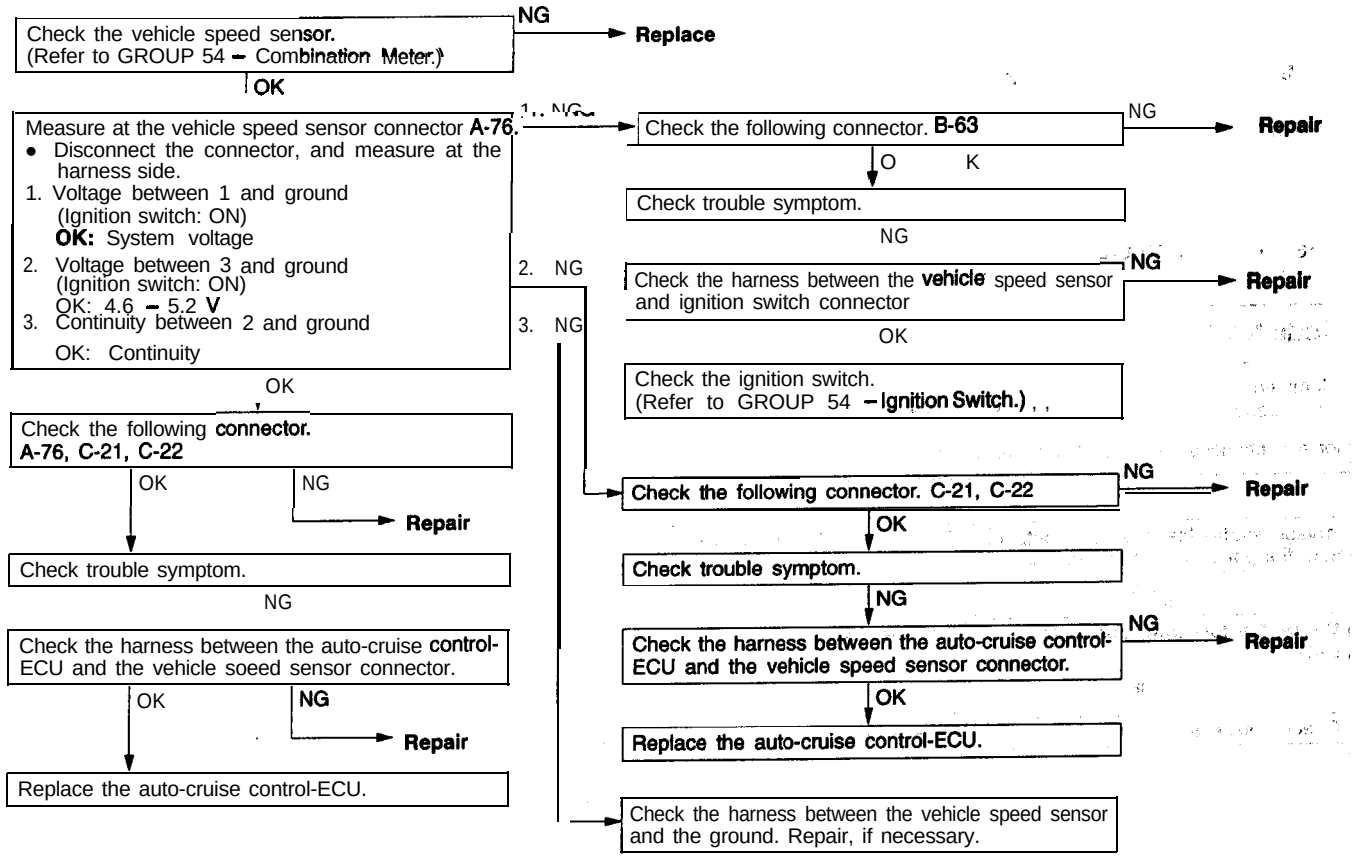

Code No.14 Autocruise vacuum pump power supply system	Probable cause
[Comment] This code will be output when the drive signals for the auto-cruise vacuum pump release valve, control valve and motor are not input to the auto-cruise control-ECU.	• Malfunction of the stop light switch • Malfunction of the connector • Malfunction of the harness • Malfunction of the auto-cruise control-ECU

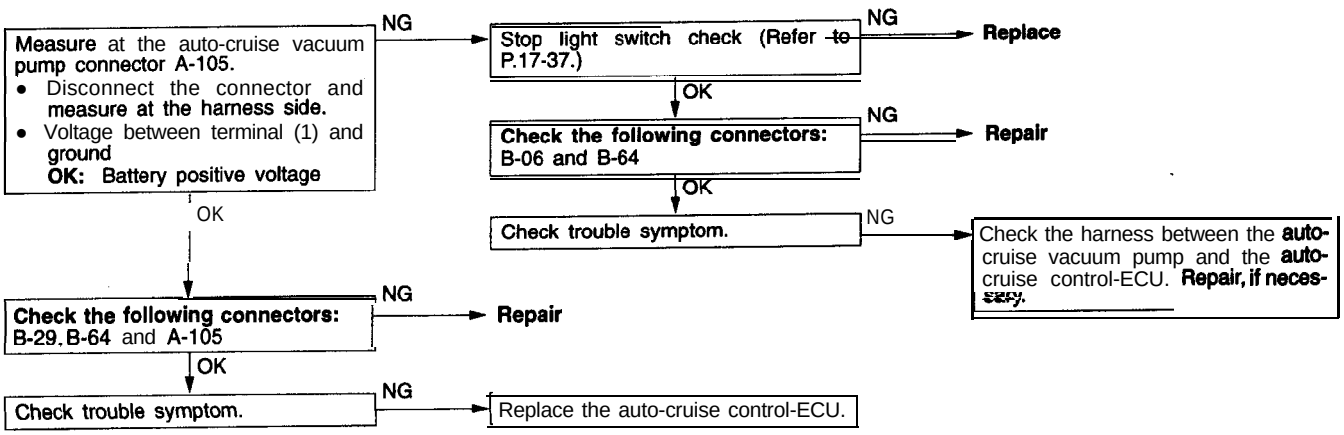

TSB Revision

Code No.15 Auto-cruise control switch	Probable cause
[Comment] This diagnostic trouble code is output if the RESUME switch or SET switch remains ON.	• Malfunction of the auto-cruise control switch

Replace the auto-cruise control switch.

Code No.1 6 Auto-cruise control-ECU	Probable cause
[Comment] This diagnostic trouble code is output if there is an abnormality in the CANCEL hold circuit or the microprocessor monitor circuit in the auto-cruise control-ECU.	• Malfunction of the auto-cruise control-ECU

Replace the auto-cruise control-ECU.

Code No.17 Throttle position sensor system	Probable cause
[Comment] This diagnostic trouble code is output if a voltage of 1.5 V or more when the closed throffle position switch is ON or 0.2 V or less when the closed throttle position switch is OFF is output for a continuous period of 4 seconds or more.	• Malfunction of the throttle position sensor • Malfunction of the connector • Malfunction of the harness • Malfunction of the auto-cruise control-ECU

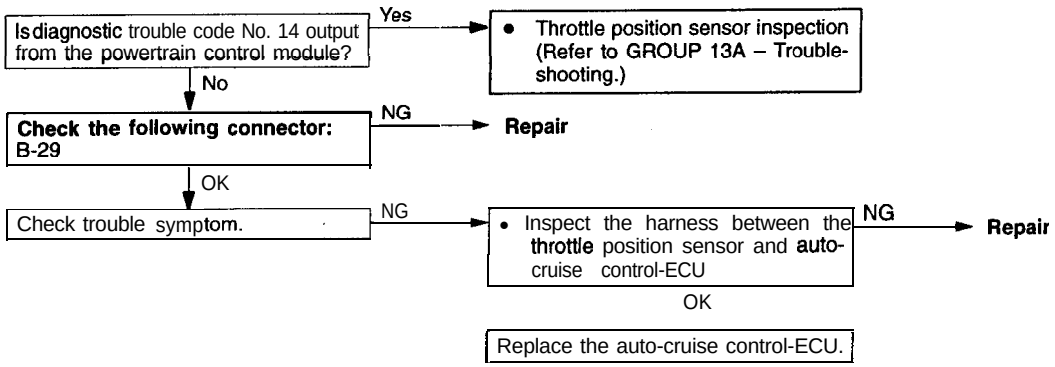

TSB Revision

INSPECTION CHART FOR TROUBLE SYMPTOMS

17200230143

Trouble symptom		Inspection procedure No.	Reference page
Communication with scan tool is not possible.	Communication with all systems is not possible.	1	17-24
	Communication with auto-cruise control-ECU only is not possible.	2	17-24
Input switch inspection using the scan tool is not possible. (However, diagnostic inspection is possible.)		3	17-25
Auto-cruise control does not cancel.	When brake pedal is depressed	4	17-25
	When clutch pedal is depressed <M/T>	5	17-26
	When select lever is set to N range <A/T>	6	17-26
	When CANCEL switch is set to ON	7	17-27
The diagnosis result displayed on the scan tool is normal even though auto-cruise control cannot be set.		8	17-27
Auto-cruise control cannot be set.		9	17-28
Hunting (repeated acceleration and deceleration) occurs at the set vehicle speed.		10	17-28
When the auto-cruise control main switch is ON, the switch indicator on the instrument panel does not illuminate. (However, auto-cruise control is normal.)		11	17-29
Auto-cruise control main switch illumination light does not illuminate.		12	17-29
Auto-cruise control indicator light inside combination meter does not illuminate. (However, auto-cruise control is normal.)		13	17-30

INSPECTION PROCEDURE: FOR TROUBLE SYMPTOMS

INSPECTION PROCEDURE 1

Communication with scan tool is not possible. (Communication with all systems is not possible.)	Probable cause
[Comment] A defect in the power supply system (including ground) for the diagnostic line may be present.	• Malfunction of the connector. • Malfunction of the harness.

Refer to GROUP 13A – Troubleshooting.

INSPECTION PROCEDURE 2

Communication with scan tool is not possible. (Communication with auto-cruise control-ECU only is not possible.)	Probable cause
[Comment] A malfunction of auto-cruise control mainswitch circuit or a malfunction of auto-cruise control-ECU ground circuit may be present.	• Malfunction of the auto-cruise control main switch. • Malfunction of the connector. • Malfunction of the harness. • Malfunction of the auto-cruise control-ECU.

1. Auto-cruise control main switch circuit malfunction

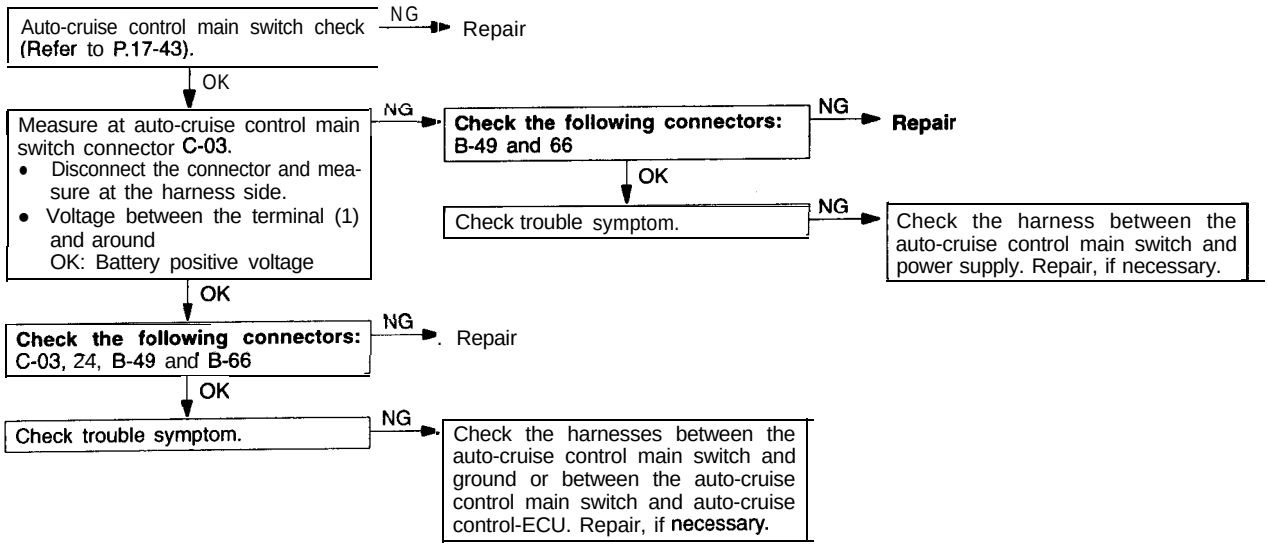

2. Auto-cruise control-ECU ground circuit malfunction

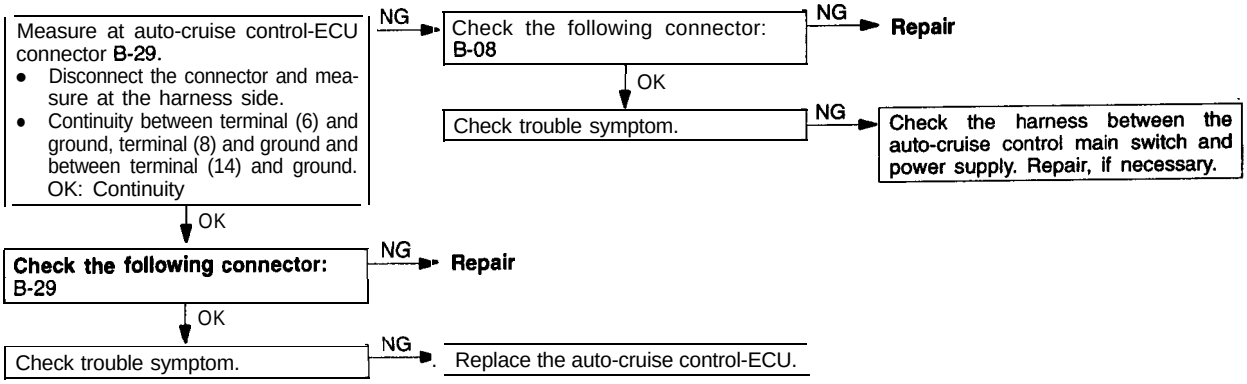

TSB Revision

INSPECTION PROCEDURE 3

Input switch inspection using the scan tool is not pdssible. (However, diagnostic inspection is possible.)	Probable cause
[Comment] A malfunction of auto-cruise control switch circuit system may be present.	• Malfunction of the auto-cruise control switch. • Malfunction of the clock spring . • Malfunction of the connector. • Malfunction of the harness.

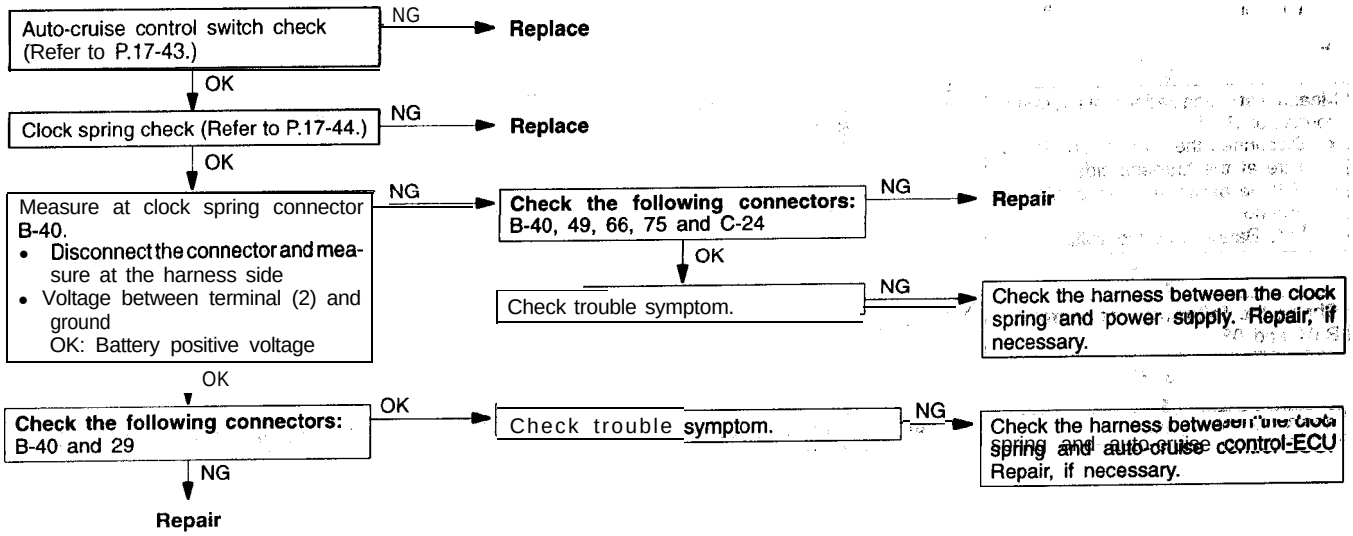

INSPECTION PROCEDURE 4

When brake pedal is depressed, auto-cruise control does not cancel.	Probable cause
[Comment] A malfunction of stop light switch or a malfunction of stop light circuit may be present.	• Malfunction of the stop light switch. • Malfunction of the connector. • Malfunction of. the harness. • Malfunction of the auto-cruise control-ECU.

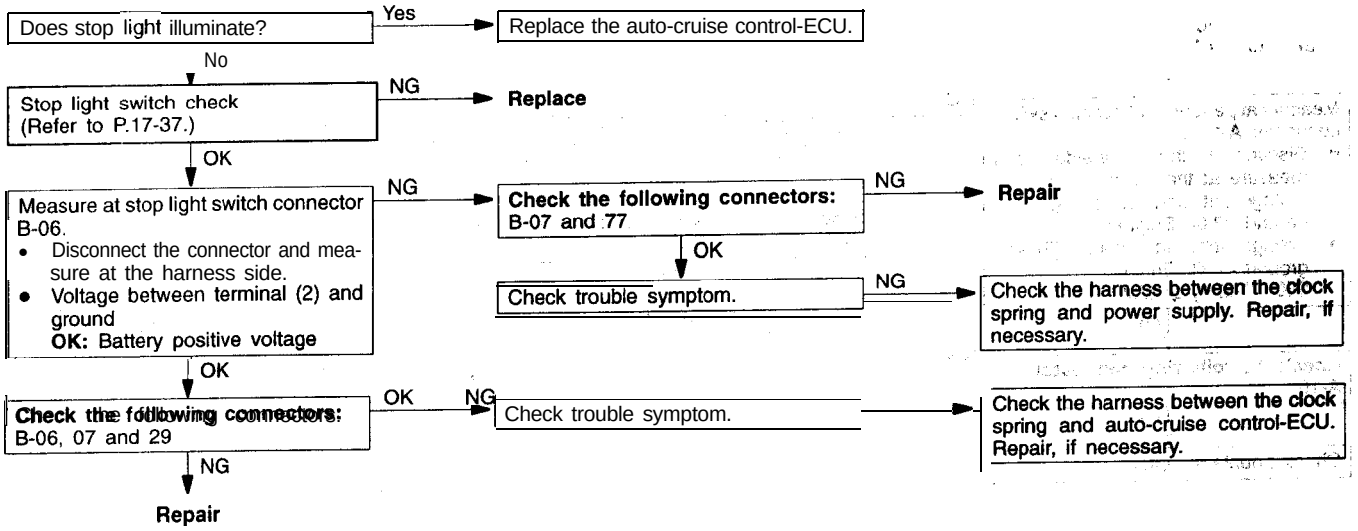

TSB Revision

INSPECTION PROCEDURE 5

When clutch pedal is depressed, auto-cruise control does not cancel. <M/T>	Probable cause
[Comment] A malfunction of clutch pedal position switch or clutch circuit may be present.	• Malfunction of the clutch pedal position switch. • Malfunction of the connector. • Malfunction of the harness. • Malfunction of the auto-cruise control-ECU.

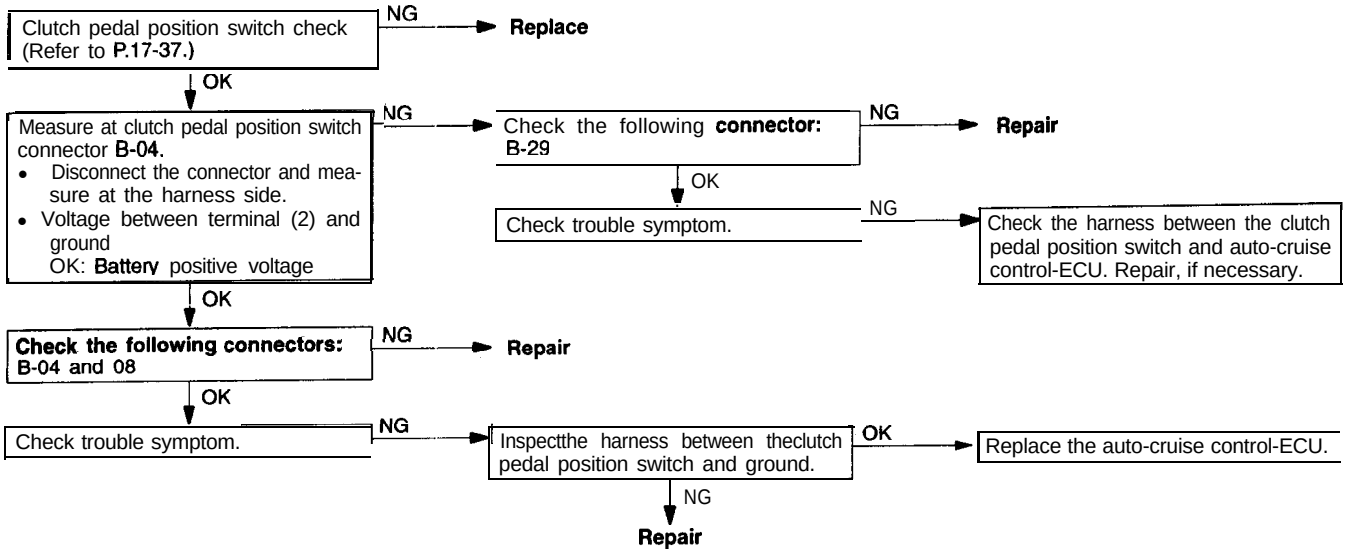

INSPECTION PROCEDURE 6

When select lever is set to N range, auto-cruise control does not cancel. <A/T>	Probable cause
[Comment] The cause is probably an open-circuit in the output signal circuit in N range.	• Malfunction of the park/neutral position switch • Malfunction of the connector. • Malfunction of the harness. • Malfunction of the auto-cruise control-ECU.

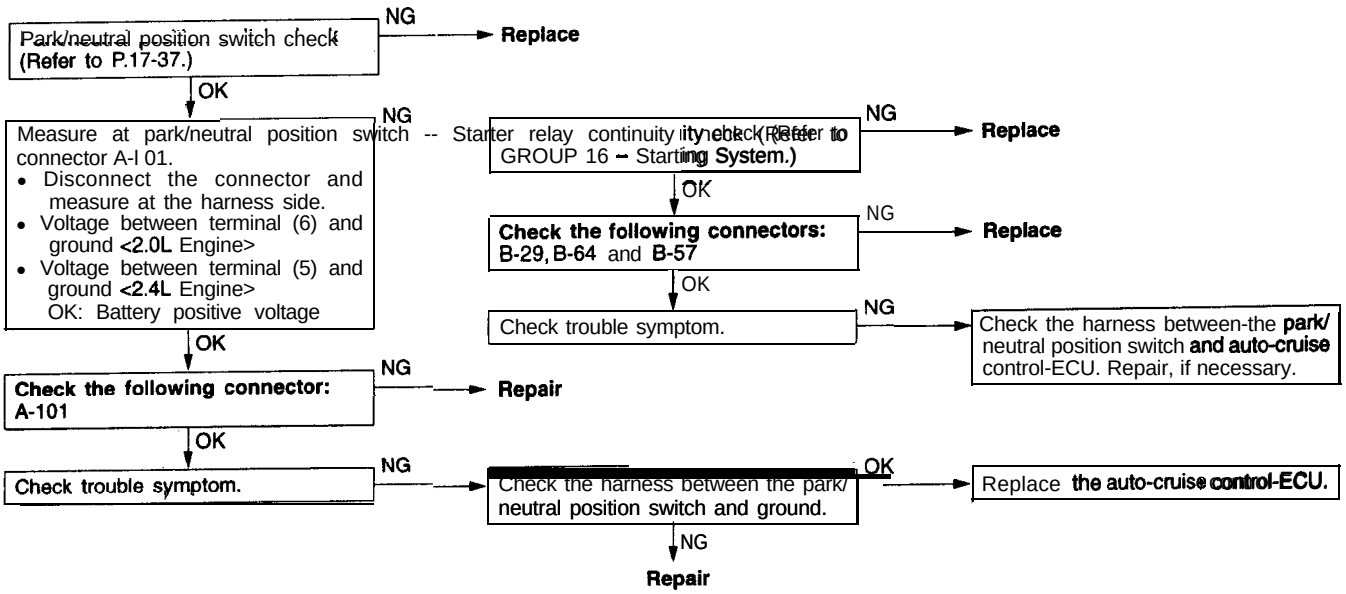

TSB Revision

INSPECTION PROCEDURE 7

When auto-cruise control CANCEL switch is set to ON, auto-cruise control does not cancel.	Probable cause
[Comment] An open-circuit in the circuit inside the CANCEL switch may be present.	• Malfunction of the auto-cruise control switch.

Replace the auto-cruise control switch.

INSPECTION PROCEDURE 8

The diagnostic result displayed on the scan tool is normal even though auto-cruise control cannot be set.	Probable cause
[Comment] Because of an open-circuit in the battery backup circuit system, the fail-safe function prevents diagnostic trouble codes from being memorized and displayed even though auto-cruise control is canceled.	• Malfunction of the connector. • Malfunction of the harness. • Malfunction of the auto-cruise control-ECU.

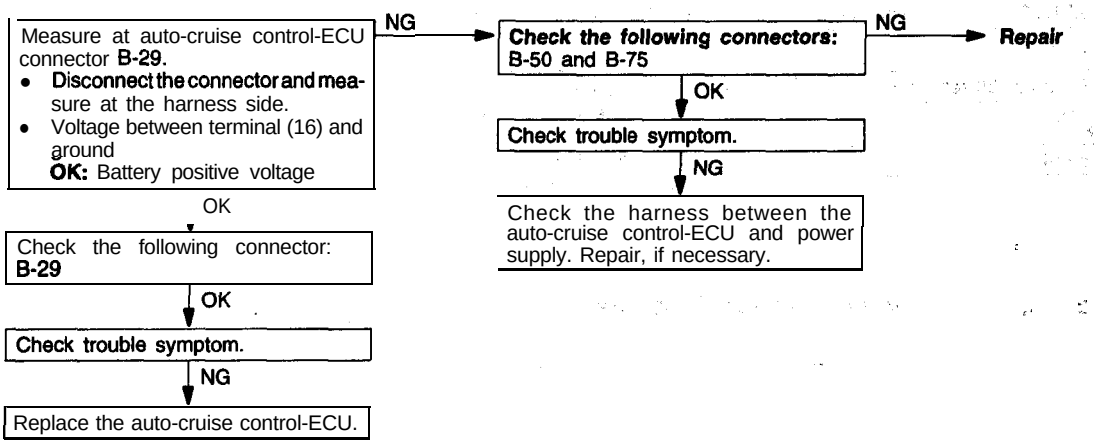

INSPECTION PROCEDURE 9

Auto-cruise control cannot be set.	Probable cause
[Comment] A malfunction of switches or that the fail-safe function cancelling auto-cruise control may be present.	• Malfunction of the auto-cruise control main switch. • Malfunction of the auto-cruise control switch. • Malfunction of the clock spring. • Malfunction of the harnesses or connectors. • Malfunction of the clutch pedal position switch <M/T>. • Malfunction of the park/neutral position switch <A/T> • Malfunction of the auto-cruise control-EC@

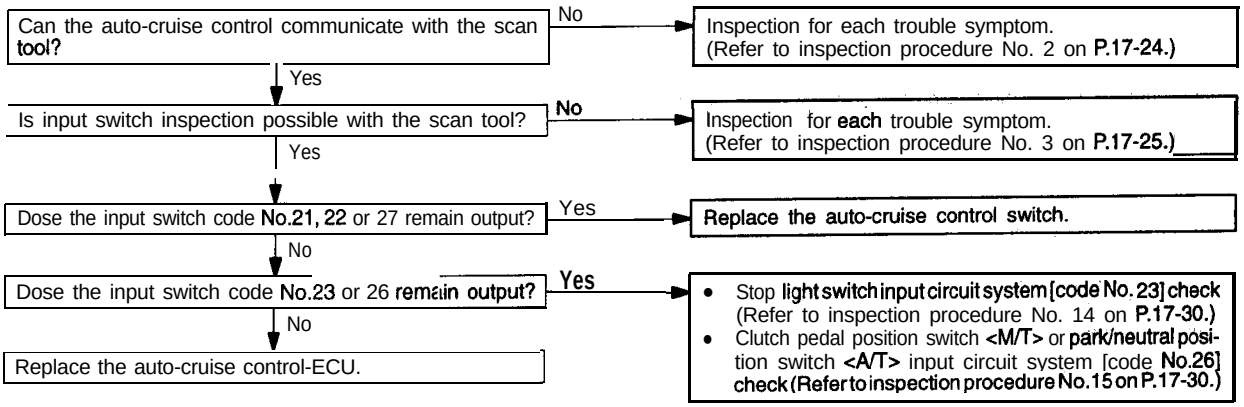

INSPECTION PROCEDURE 10

Hunting (repeated acceleration and deceleration) occurs at the set vehicle speed.	Probable cause
[Comment] A malfunction of vehicle speed sensor or incorrect vacuum in the auto-cruise vacuum pump or actuator may be present.	• Malfunction of the vehicle speed sensor. • Malfunction of the auto-cruise vacuum pump. • Malfunction of the actuator. • Malfunction of the auto-cruise control-ECU.

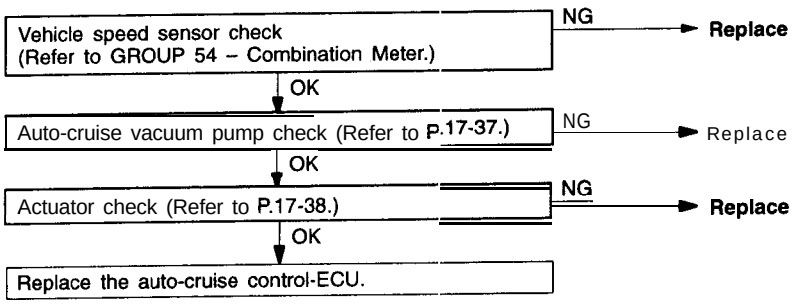

TSB Revision

INSPECTION PROCEDURE 11

When the auto-cruise control main switch is ON, the switch indicator on the instrument panel does not illuminate. (However, auto-cruise control is normal.)	Probable cause
[Comment] Blown bulb in auto-cruise control main switch.	• Malfunction of the auto-cruise control main switch.

Replace the auto-cruise control main switch.

INSPECTION PROCEDURE 12

Auto-cruise control main switch illumination light does not illuminate.	Probable cause
[Comment] A malfunction of auto-cruise control main switch, harness, or connector may exist.	• Malfunction of the auto-cruise control main switch. • Malfunction of the connector. • Malfunction of the harness.

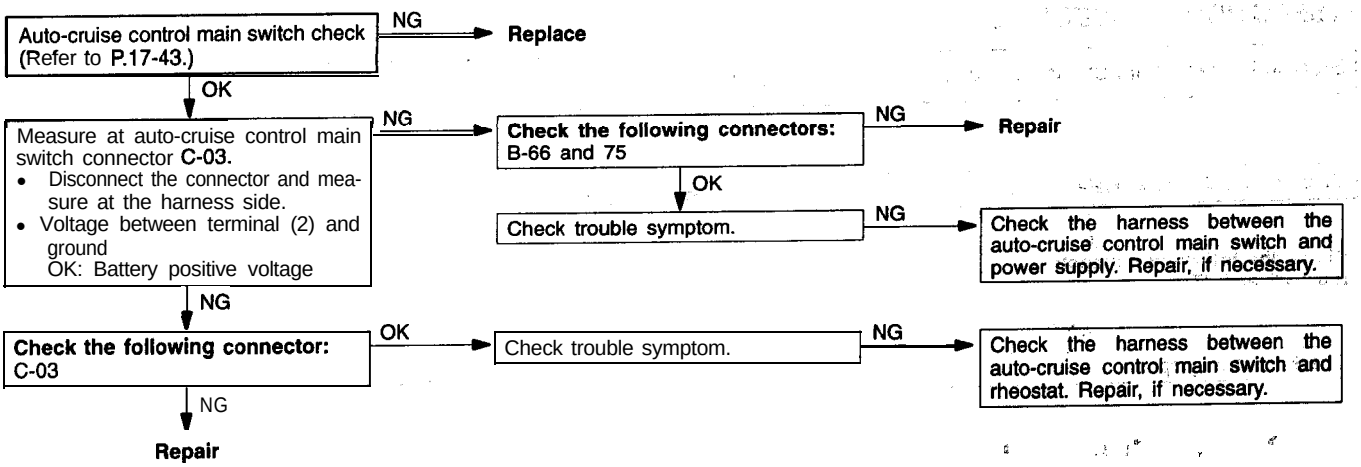

TSB Revision

INSPECTION PROCEDURE 13

Auto-cruise control indicator inside combination meter does not illuminate. (However, auto-cruise control is normal.)	Probable cause
[Comment] A malfunction of the bulb, the connector or harness may be present.	• Malfunction of the bulb. • Malfunction of the harness. • Malfunction of the connector. • Malfunction of the auto-cruise control-ECU.

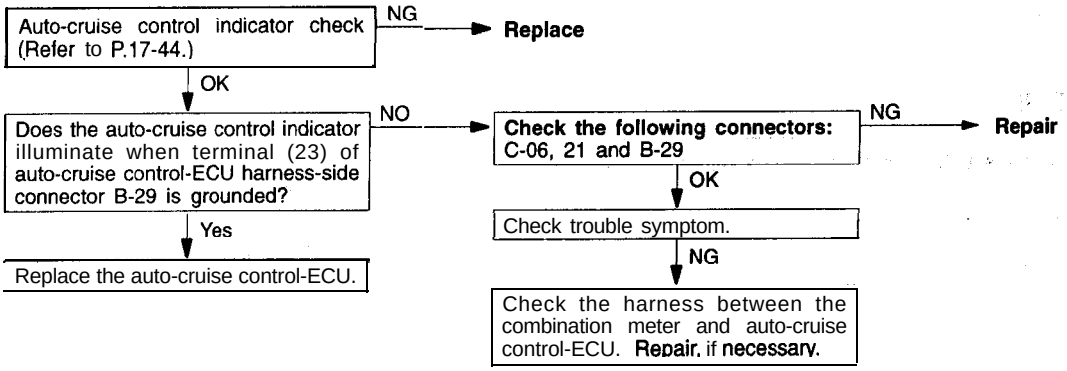

INSPECTION PROCEDURE 14

Stop light switch input circuit system check (Code No. 23)

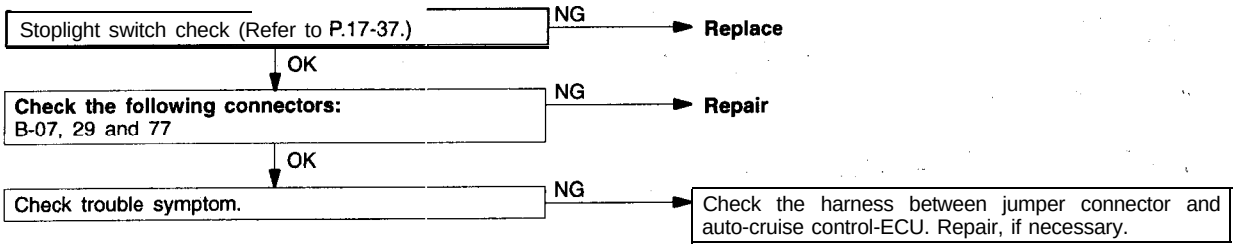

INSPECTION PROCEDURE 15

Clutch pedal position switch <M/T> or park/neutral position switch <A/T> input circuit system check (Code No. 26)

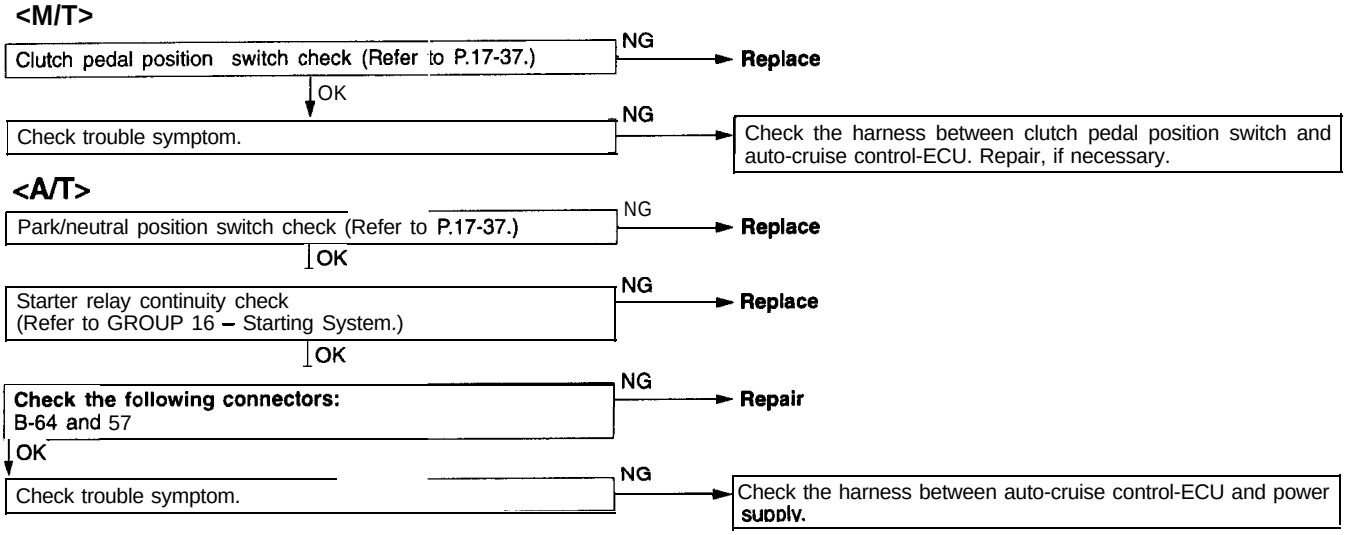

TSB Revision

CHECK AT THE ECU TERMINALS

17200270046

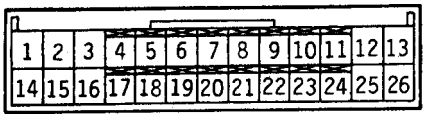

03X0097

Terminal No.	Check item	Check conditions		Normal condition
1	Clutch pedal position switch input <M/T>	When pedal is not depressed	When clutch pedal position switch is OFF	Battery positive voltage
		When pedal is depressed	When clutch pedal position switch is ON	0V
	Park/neutral position switch input <A/T>	When selector lever is in a position other than N range	When park/neutral position switch is OFF	Battery positive voltage
		When selector lever is in N range	When park/neutral position switch is ON	0V
2	ECU power supply	When ignition switch is ON		Battery positive voltage
3	Power supply for OD signal control <A/T>	When ignition switch is ON		Battery positive voltage
4	Closed throttle position switch output	When accelerator pedal is depressed	When closed throttle position switch is OFF	4.5–5.5V
		When accelerator pedal is not depressed	When closed throttle position switch is ON.	0V
5	Throttle position sensor input	When accelerator pedal is fully depressed		4.0–5.5V
		When accelerator pedal is released		0.5–0.7V
6	Ground	At all times		Continuity
8	Ground	At all times		Continuity
10	OD control output <A/T>	When OD switch is ON		Battery positive voltage
		When OD switch is OFF		0V
11	OD switch input <A/T>	When OD switch is ON		Battery positive voltage
		When OD switch is OFF		0V
12	Auto-cruise vacuum pump release valve and control valve input	When driving at constant speed using the SET switch	Release valve closed	0V
13			Control valve closed	0V
12		When accelerating with the RESUME switch while driving at constant speed	Release valve closed	0V
13			Release valve closed	0V
12	Auto-cruise vacuum pump release valve and control valve input	When decelerating with the SET switch while driving at constant speed	Release valve closed	0V
13			Control valve open	Battery positive voltage
12		When canceling constant-speed driving with the CANCEL switch	Release valve open	Battery positive voltage
13			Control valve open	Battery positive voltage

TSB Revision

Terminal No.	Check item	Check conditions		Normal condition
14	Ground	A? all times		Continuity
15	Stop light switch input	When brake pedal is depressed	When stop light switch is ON	Battery positive voltage
		When brake pedal is not depressed	When stop light switch is OFF	0V
16	ECU backup power supply	Al all times		Battery positive voltage
18	Auto-cruise control switch input	When SET switch is pressed	When SET switch is ON	3V
		When SET switch is not pressed	When SET switch is OFF	0V
		When RESUME switch is pressed	When RESUME switch is ON	6V
		When RESUME switch is not pressed	When RESUME switch is OFF	ov
		When CANCEL switch is pressed	When CANCEL switch is ON	Battery positive voltage
		When CANCEL switch is not pressed	When CANCEL switch is OFF	0V
19	Vehicle speed sensor input	When vehicle is moved forwards and backwards, sensor turns ON and OFF repeatedly.	When sensor is ON	0V
			When sensor is OFF	4.5 V or more
20	ACC power supply	When ignition switch is in ACC position		Battery positive voltage
23	Indicator input (inside combination meter)	When driving at constant speed	When indicator is illuminated	0V
		When constant-speed driving is cancelled	When indicator is switched Off	Battery positive voltage
24	Diagnosis control input	When ignition switch is ON		4V or more
25	Surge absorption circuit terminal	When auto-cruise main switch is ON		Battery positive voltage
26	Auto-cruise vacuum pump motor input	When driving at constant speed using the SET switch	Motor stopped	Battery positive voltage
		When accelerating with the RESUME switch while driving at constant speed	Motor running	0V
		When decelerating with the SET switch while driving at constant speed	Motor stopped	Battery positive voltage
		When cancelling constant-speed driving with the CANCEL switch	Motor stopped	Battery positive voltage

ON-VEHICLE SERVICE

17200090093

AUTO-CRUISE CONTROL CABLE CHECK AND ADJUSTMENT

<2.0L Engine
(Non-turbo)>

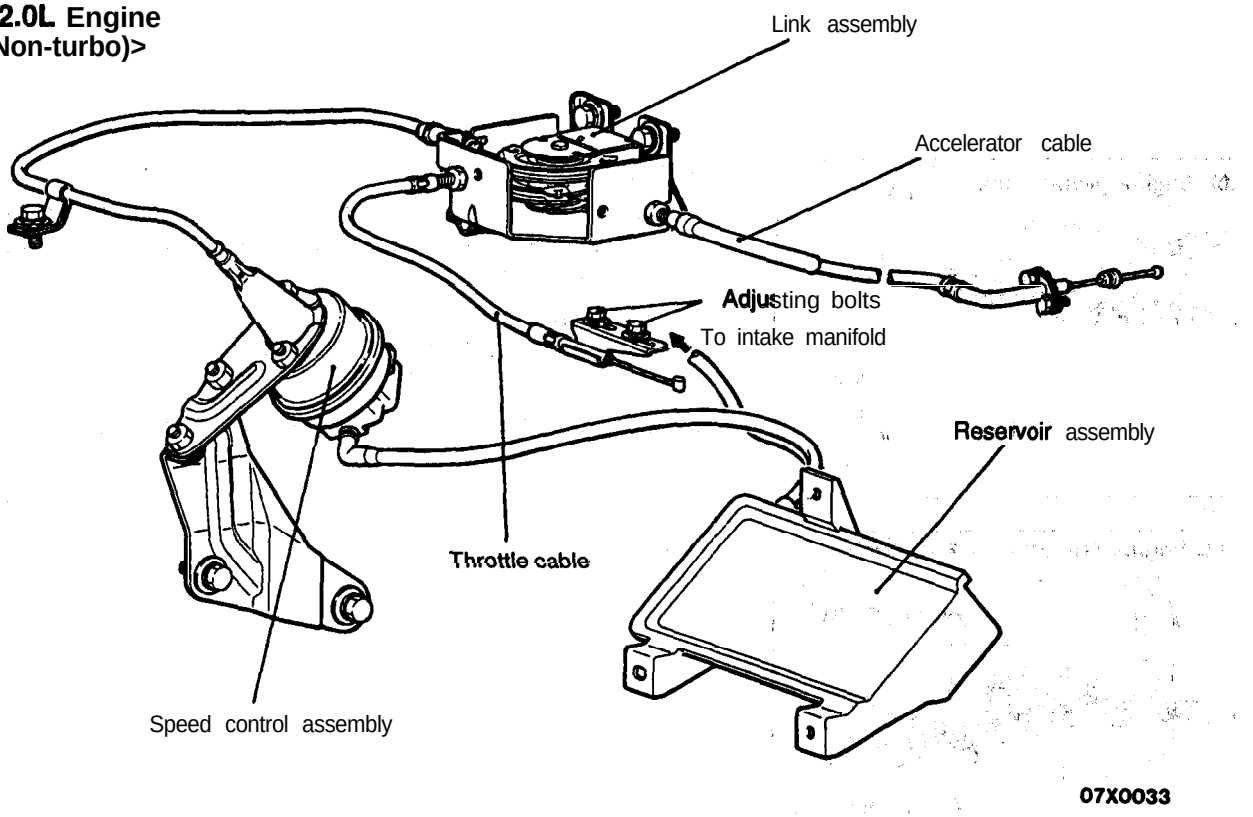

<2.0L Engine (Turbo)
and 2.4L Engine>

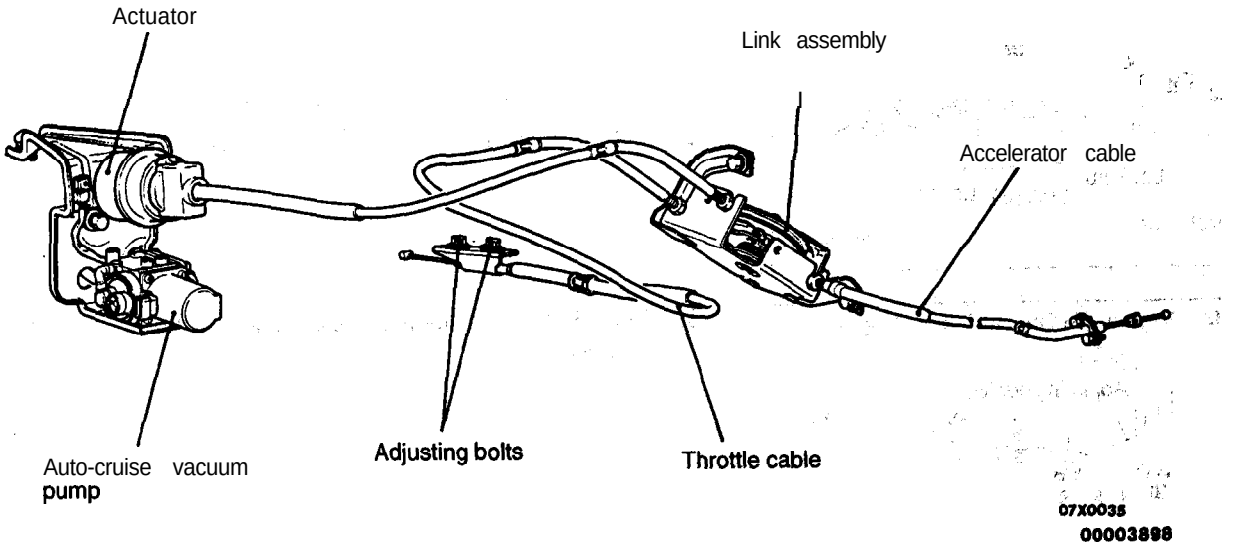

1. Remove the link protector. (Refer to P.17-40.)
2. Check the slack in each of the inner cables in the accelerator cable, auto-cruise control cable and throttle cable.
   If the slack in an inner cable is excessive, or if there is no play, loosen the adjusting bolts and the nuts in the throttle lever and each link, to release the throttle lever and each link. (The bolts and nuts should not be removed.)

<2.0L Engine (Non-turbo)>

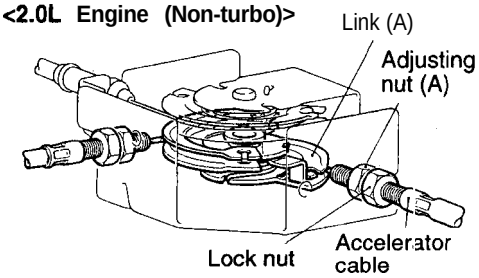

<2.0L Engine (Turbo) and 2.4L Engine>

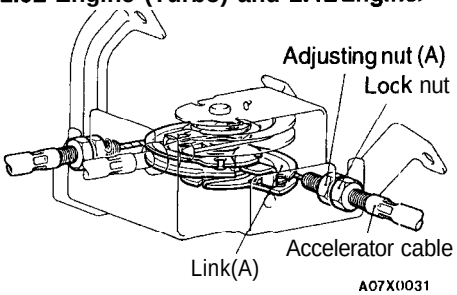

<2.0L Engine (Non-turbo)>

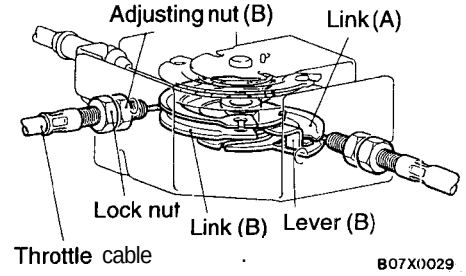

<2.0L Engine (Turbo) and 2.4L Engine>

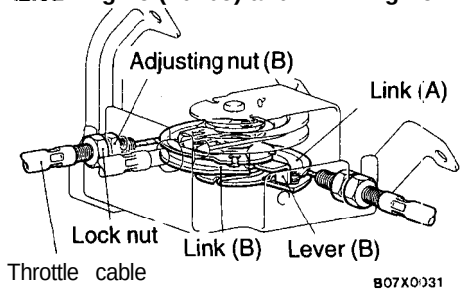

ACCELERATOR CABLE

1. Adjust with the adjusting nut A so when the link A hits the stopper, the accelerator cable play (inner cable play reaches the standard value.

   Standard value:
   <M/T> O-l mm (0–.04 in.)
   <A/T> 2-3 mm (.08–1.2 in.)

2. Fix the accelerator cable with the lock nut.

THROTTLE CABLE

1. Adjust with the adjusting nut B so when the lever B hits the link A, the throttle cable play (inner **cable play) reaches** the standard value.

   Standard value: 1–2 mm (.04–.08 in.)

2. Fix the throttle cable with the lock nut.

3. Tighten the throttle lever-side adjusting bolt to the specified torque.

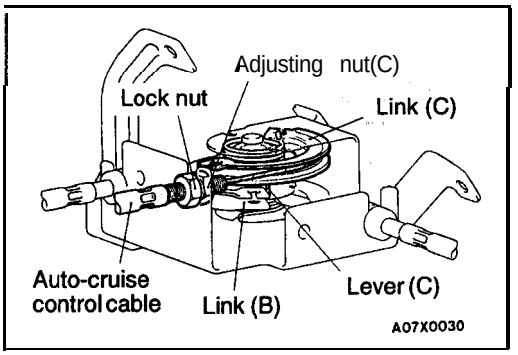

AUTO-CRUISE CONTROL CABLE <2.0L Engine (Turbo) and 2.4L Engine>

1. Adjust with the adjusting nut C so when the lever C stopper hits the link B, the auto-cruise control cable play (inner cable play) reaches the standard value.

   Standard value: 1–2 mm (.04–.08 in.)

2. Fix the auto-cruise control cable with the lock nut.

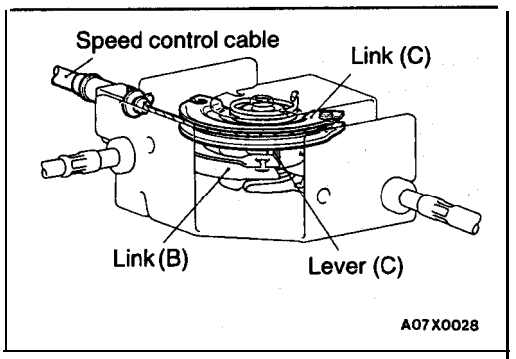

SPEED CONTROL CABLE <2.0L Engine (Non-turbo)>

Hold the link C at the position where the lever C touches the link B. Then fix the speed control cable.

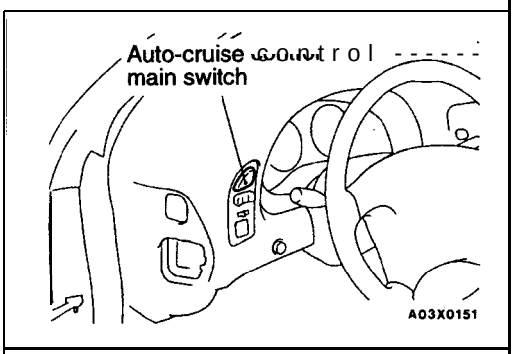

AUTO-CRUISE CONTROL SYSTEM OPERATION CHECK

17200160048

AUTO-CRUISE CONTROL MAIN SWITCH INDICATOR LIGHT

1. Turn the ignition key to ON
2. Check that the indicator within the switch illuminates when the main switch is switched ON.

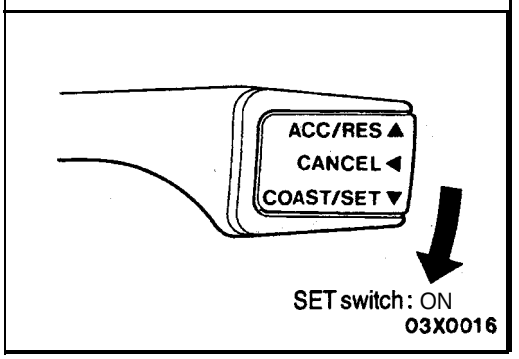

AUTO-CRUISE CONTROL SETTING

1. Switch ON the main switch.
2. Drive at the desired speed within the range of approximately 40–135 km/h (25–84 mph) <2.0L Engine (Non-turbo)>, 40–200 km/h (25-124 mph) <2.0L Engine (Turbo) and 2.4L Engine>.
3. Switch ON the SET switch.
4. Check to be sure that when the switch is released the speed is the desired constant speed,

   NOTE
   'If the vehicles speed decreases to approximately 15 km/h (9 mph) below the set speed because of climbing a hill for example, the auto-cruise-'control will be canceled.

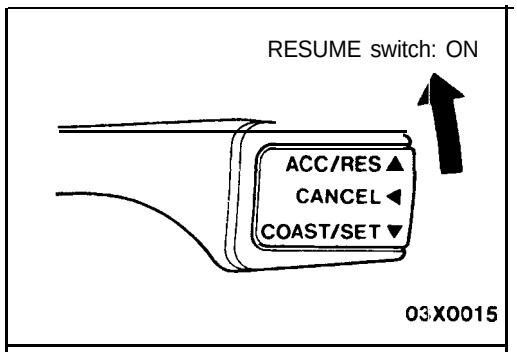

SPEED-INCREASE SETTING

1. Set to the desired speed.
2. Switch ON the RESUME switch.
3. Check to be sure that acceleration continues while the switch is hold, and that when it is released the constant speed at the time when it was released becomes the driving speed.

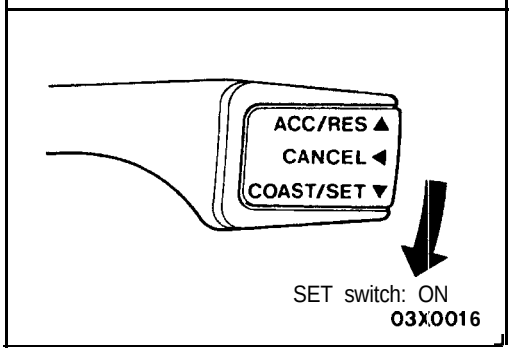

SPEED REDUCTION SETTING

1. Set to the desired speed.
2. Switch ON the SET switch.
3. Check to be sure that deceleration -continues while the switch is pressed, and that when it is released the constant speed at the time when it was released becomes the driving speed.

NOTE
When the vehicle speed reaches the low limit [approximately 40 km/h (25 mph)] during deceleration, the auto-cruise control will be canceled.

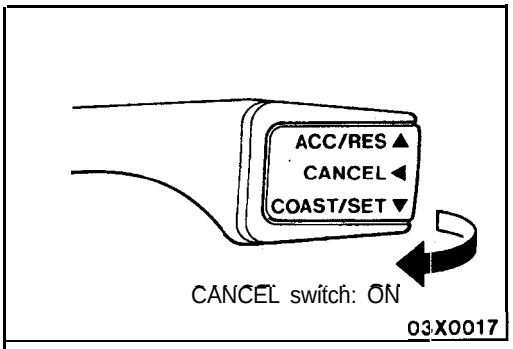

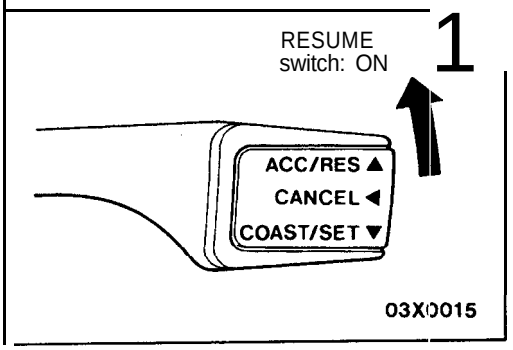

RETURN TO THE SET SPEED BEFORE CANCELLATION AND AUTO-CRUISE CONTROL CANCELLATION

1. Set the auto-cruise speed control.
2. When any of the following operations are performed while at constant speed during auto-cruise control, check if normal driving is resumed and deceleration occurs.
   (1) Switch ON the CANCEL switch.
   (2) The brake pedal is depressed.
   (3) The clutch pedal is depressed. (M/T)
   (4) The selector lever'is moved to the "N" range. (A/T)
3. At a vehicle speed of 40 km/h (25 mph) or higher, check if when the RESUME switch is switched ON, vehicle speed returns to the speed before auto-cruise control driving was canceled, and constant speed driving occurs.
4. When the main switch is turned to OFF while driving at constant speed, check if normal driving is resumed and deceleration occurs.

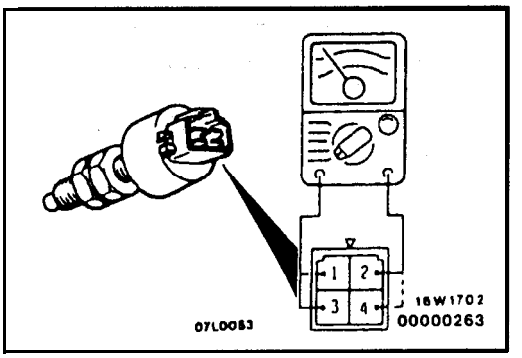

AUTO-CRUISE CONTROL COMPONENT CHECK

17200170155

STOP LIGHT SWITCH

Measurement conditions	For stop light circuit terminal No.		For auto-cruise control circuit terminal No.	
	2	3	1	4
When brake pedal depressed.	0 ——	—— O		
When brake pedal not depressed.			0 ——	—— 0

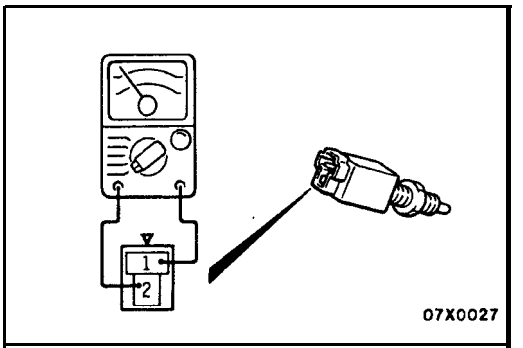

CLUTCH PEDAL POSITION SWITCH <2.0L Engine (Turbo) – M/T and 2.4L Engine – M/T>

Measurement conditions	Terminal No.	
	1	2
When clutch pedal depressed.	0 ——	—— O
When clutch pedal not depressed.		

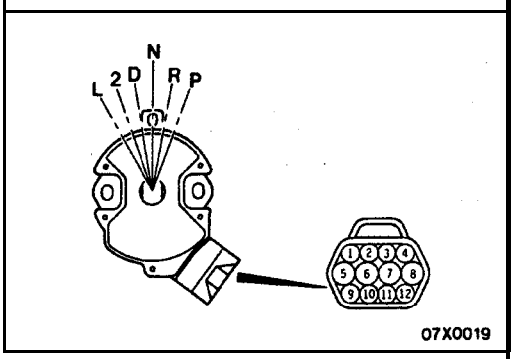

PARK/NEUTRAL POSITION SWITCH ("N" POSITION) <2.0L Engine (Turbo) and 2.4L Engine>

Measurement conditions	Terminal No.		
	2.0L Engine (Turbo)	7	8
	2.4L Engine	5	8
Selector lever is not at "N" position		0 ——	—— O
Selector lever is at "N" position			

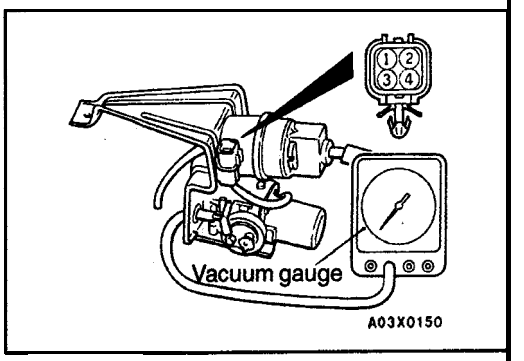

AUTO-CRUISE VACUUM PUMP <2.0L Engine (Turbo) and 2.4L Engine>

1. Disconnect the vacuum hose from the electric vacuum pump and connect a vacuum gauge to the vacuum pump.
2. Disconnect the electric vacuum pump connector.

<Release valve closed, control valve closed>

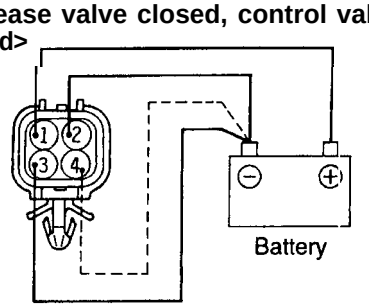

3. Connect terminal (1) to the battery (+) terminal, and connect terminals (2) and (3) to the battery (–) terminal.
4. Check to be sure that the vacuum gauge shows a reading of 53 kPa (15.7 in.Hg) or more when terminal (4) is connected to the battery (–) terminal.

<Release valve open>

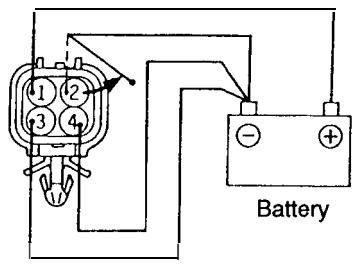

<Control valve open>

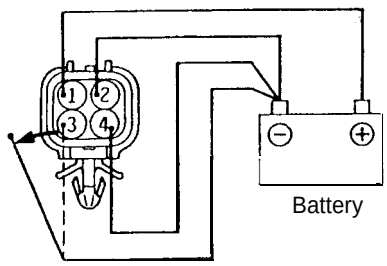

5. In this condition, check to be sure that the vacuum gauge shows a 20 kPa (6 in.Hg) or less when terminals (2) and (3) are disconnected from the battery.

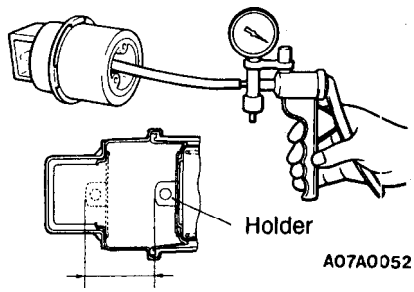

ACTUATOR <2.0L Engine (Turbo) and 2.4L Engine>

1. Remove the actuator.
2. Apply negative pressure to the actuator with the vacuum pump and check that the holder moves more than 35 mm (1.38 in.). In addition, check that there is no change in the position of the holder when negative pressure is maintained in that condition.
3. First install the actuator and then inspect and adjust the auto-cruise control cable (Refer to P.17-33.)

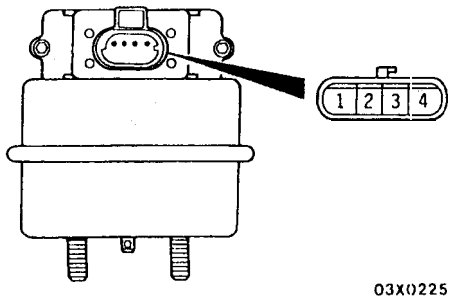

SPEED CONTROL SERVO <2.0L Engine (Non-turbo)>

Electrical Tests

(1) Turn ignition switch to the ON position.. With the speed control switch in the ON position, set up a voltmeter to read battery voltage and connect the riegative lead to a good chassis ground.

(2) Disconnect the four-way connector going to the servo. Test pin 3 of the main harness four-way connector for battery voltage.
If not, check the power supply circuit for the speed control servo.

(3) Connect a jumper wire between pin 2 of the four-way servo connector of the main harness and pin 3 of the speed control servo. The other three pins from the servo should show battery voltage. If not, replace the servo.
(4) Using an ohmmeter, connect one lead to a good body ground. With the other lead touch pin 4 in te four-way servo connector of the main harness, the meter should show continuity. If not, repair the ground circuit as necessary.

Vacuum Test

(1) Remove the speed control cable at the throttle body end.
(2) Disconnect the 4-way electrical connector and the vacuum lines at the servo.
(3) Connect battery voltage to pin No. 3 of the servo.
(4) Ground the remaining three servo pins 1, 2 and 4.
(5) Connect a hand held vacuum pump to the servo vacuum nipple and apply 10 to 15 inches of vacuum.
(6) The cable should pull in and hold for as long as vacuum is applied.

VACUUM SUPPLY <2.0L Engine (Non-turbo)>

(1) Disconnect the vacuum hose at the servo and install a vacuum gauge in the hose.
(2) Start engine and observe the gauge at idle. The vacuum gauge should read at least ten inches of mercury. Shut off engine, the vacuum should continue to hold 10 inches of mercury.
(3) If vacuum does not meet this requirement, check and correct the following vacuum leaks:
- Vacuum lines
- Vacuum reservoir
- Servo vacuum
- Poor engine performance

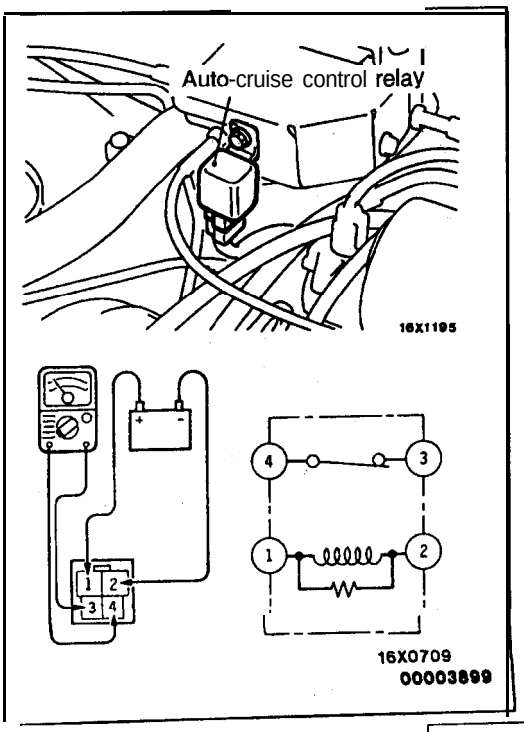

AUTO-CRUISE CONTROL RELAY
<2.0L Engine (Non-turbo)>

Battery voltage	Terminal No.			
	1	2	3	4
Power is not supplied	○		0	○
Power is supplied	⊕	⊖		

AUTO-CRUISE CONTROL

17200140088

REMOVAL AND INSTALLATION

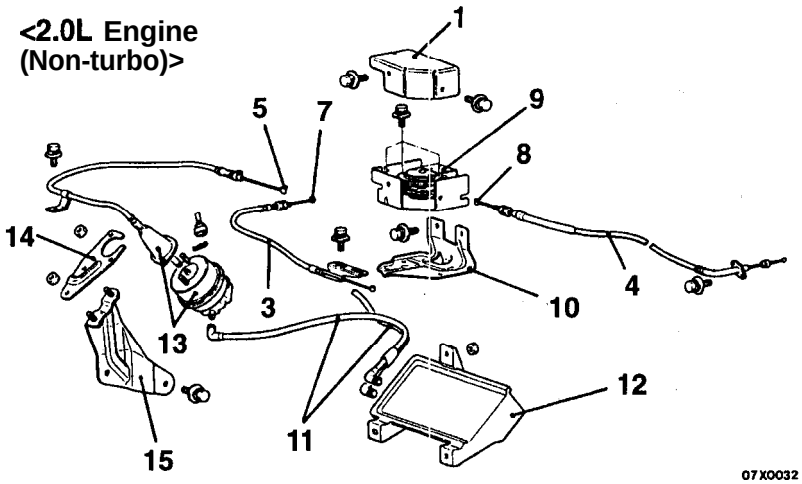

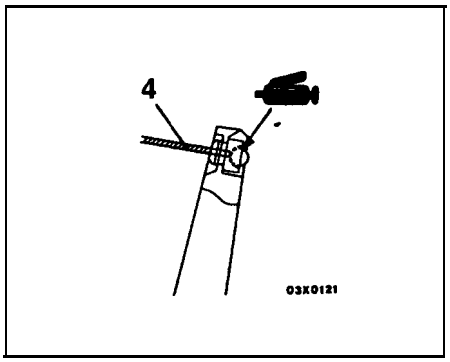

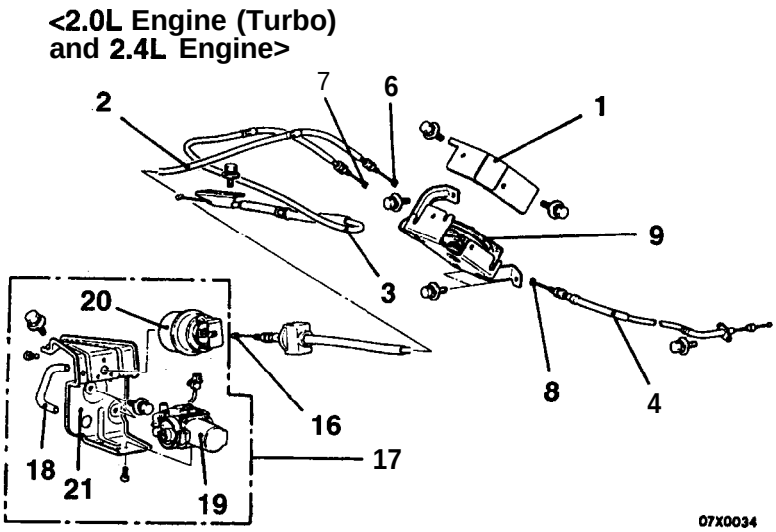

00003900

Auto-cruise control cable, throttle cable and accelerator cable removal steps

1. Link protector
- Auto-cruise control cable adjustment (Refer to P.17-33.)
2. Auto-cruise control cable <2.0L Engine (Turbo) and 2.4L Engine>
3. Throttle cable
4. Accelerator cable

Link assembly removal steps

1. Link protector
- Auto-cruise control cable adjustment (Refer to P.17-34.)
5. Speed control assembly connection <2.0L Engine (Non-turbo)>
6. Auto-cruise control cable connection <2.0L Engine (Turbo) and 2.4L Engine>
7. Throttle cable connection
8. Accelerator cable connection
9. Link assembly
10. Link bracket <2.0L Engine (Non-turbo)>

Reservoir assembly and speed control assembly removal steps <2.0L Engine (Non-turbo)>

11. Vacuum hose connection
12. Reservoir assembly
13. Speed control assembly
14. Actuator upper bracket
15. Actuator lower bracket

Vacuum pump and actuator removal steps <2.0L Engine (Turbo) and 2.4L Engine>

16. Auto-cruise control cable connection
17. Auto-cruise vacuum pump and actuator assembly
18. Vacuum hose
19. Auto-cruise vacuum pump
20. Actuator
21. Actuator bracket

TSB Revision

<2.0L Engine (Non-turbo)>

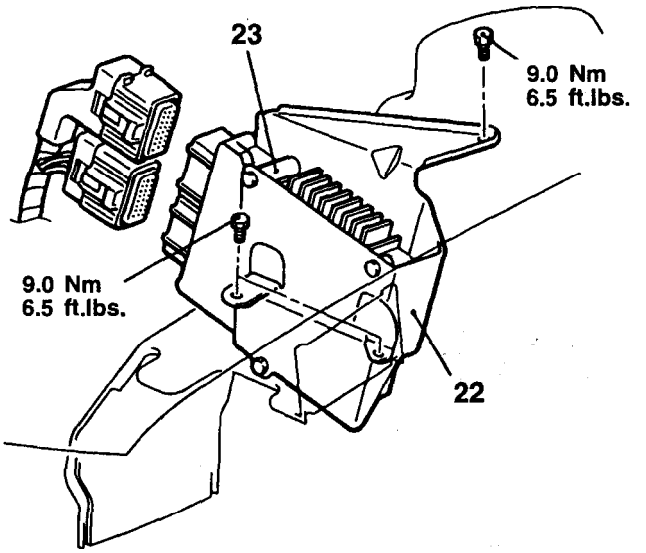

<2.0L Engine (Turbo) and 2.4L Engine>

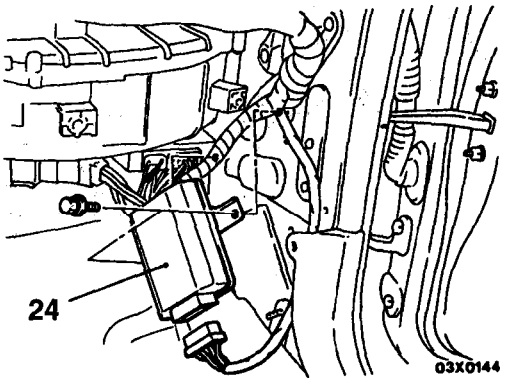

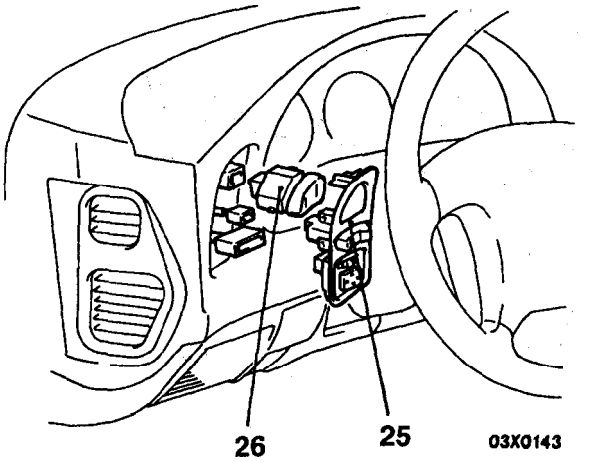

00003901

Powertrain control module removal steps <2.0L Engine (Non-turbo)>

- Air cleaner

22. Powertrain control module bracket
23. Powertrain control module

Auto-cruise control-ECU removal steps <2.0L Engine (Turbo) and 2.4L Engine>

- Cowl side trim
  (Refer to GROUP 52A–Trims.)

24 Auto-cruise control -ECU

Auto-cruise control main switch removat steps

25. Instrument panel switch
26. Auto-cruise control main switch

TSB Revision

CAUTION: **SRS**
Before **removal of air bag module and clock spring, refer to the following sections:**
GROUP **52B –** SRS Service Precautions.
GROUP **52B –** Air Bag Modules **and** Clock Spring.

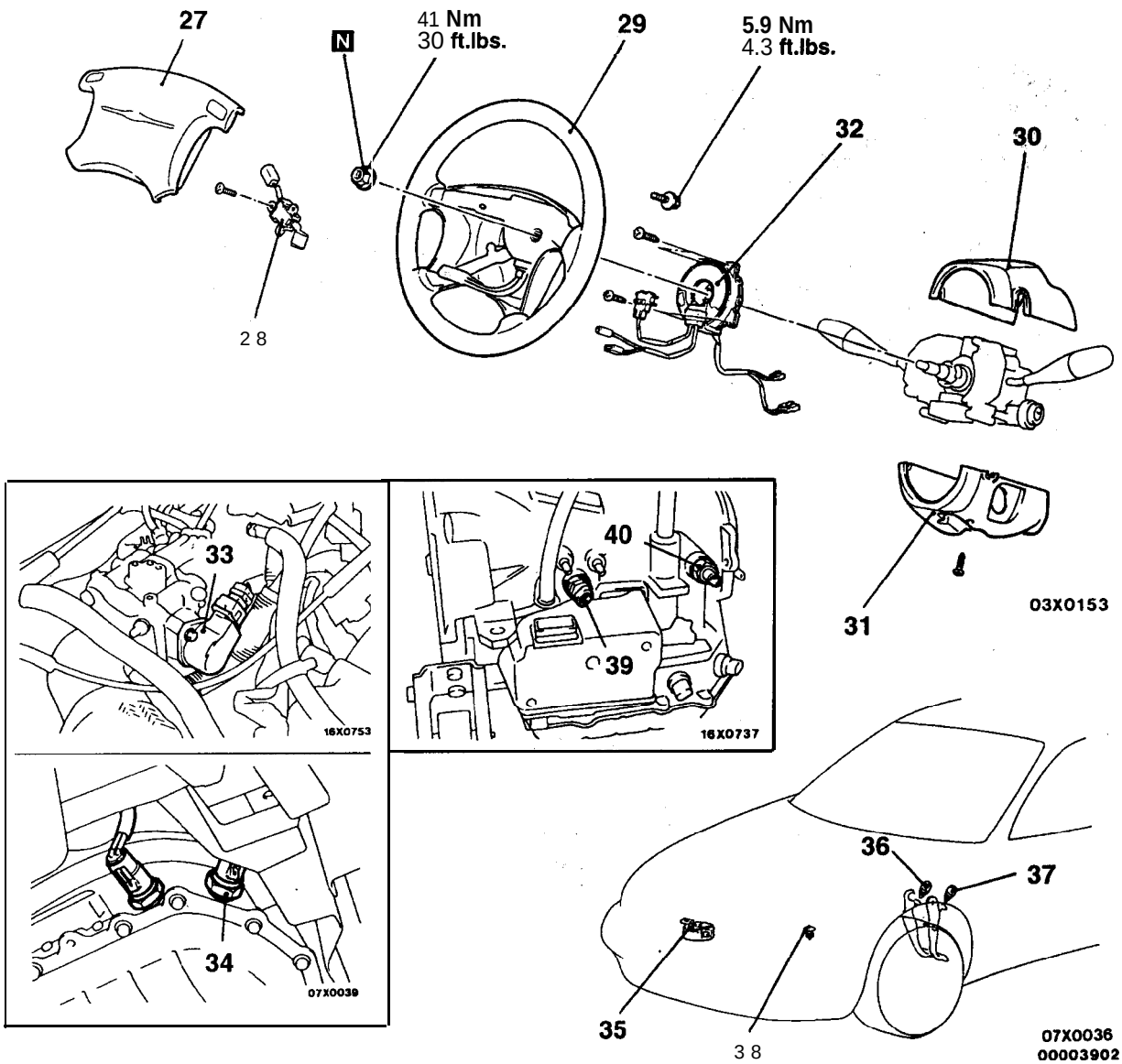

Auto-cruise control switch and clock **spring removal** steps

27. Air bag module
    (Refer to GROUP 52B–Air Bag Modules and Clock Spring.)
28. Auto-cruise control switch
29. Steering wheel
30. Steering column upper cover
31. Steering column lower cover
    - Instrument under cover (Refer to GROUP 52A–Instrument Panel.)
32. Clock spring
    (Refer to GROUP 52B–Air Bag Modules and Clock Spring.)

Sensor removal steps

33. Throttle position sensor <2.0L Engine (Turbo) and 2.4L Engine>
34. Transaxle range switch
    <2.0L Engine (Non-turbo) – A/T>
35. Park/neutral position switch
    <2.0L Engine (Turbo) – AA and 2.4L Engine – A/T>
36. Stop light switch
37. Clutch pedal position switch
    <2.0L Engine (Turbo) – M/T and 2.4L Engine – M/T>
38. Vehicle speed sensor <Except 2.0L Engine (Non-turbo) – A/T>
39. Input speed sensor
    <2.0L Engine (Non-turbo) – A/T>
40. Output speed sensor
    <2.0L Engine (Non-turbo) – A/T>

TSB Revision

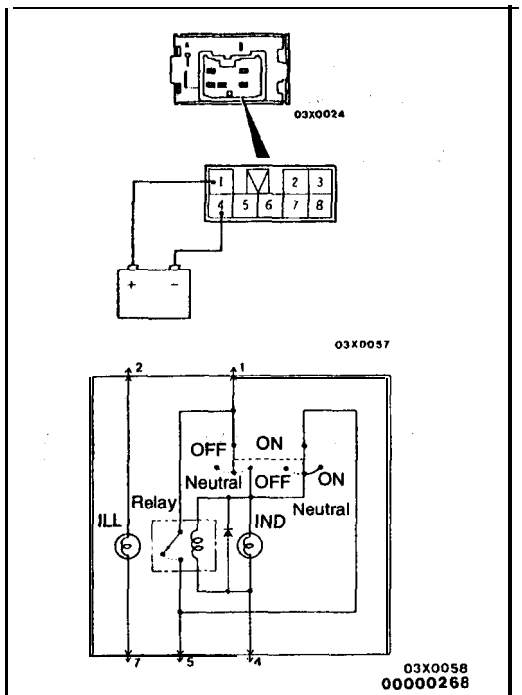

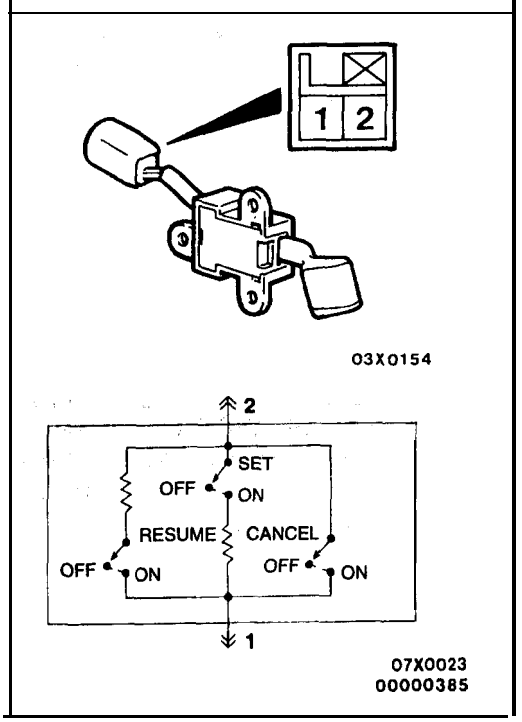

INSPECTION

17200110096

AUTO-CRUISE CONTROL MAIN SWITCH CHECK

Switch position	Terminal No.						
	1	IND	4	5	2	ILL	7
OFF	⊕		⊖		○	⊘	○
Neutral	⊕		⊖		○	⊘	○
			○	○			
ON	⊕		⊖		○	⊘	○
	○	⊘	○				
	0			0			

AUTO-CRUISE CONTROL SWITCH CHECK

17200120082

Measure the resistance between the terminals when each of the SET, RESUME and CANCEL switches is pressed. If the values measured at this time correspond to those in the table below, then there is no problem.

Switch position	Resistance between terminals
Switch OFF	No continuity
CANCEL switch ON	Approx. 0 Ω
RESUME switch ON	Approx. 820 Ω
SET switch ON	Approx. 2,700 Ω

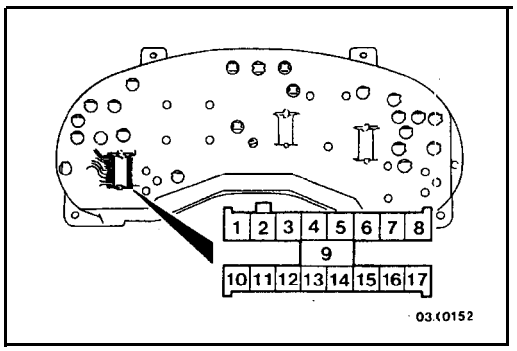

AUTO-CRUISE CONTROL INDICATOR CHECK 17200190052

(1) Remove the combination meter.
(Refer to GROUP 54 – Combination meter.)
(2) Check the continuity between terminals (10) and (16).
If there is no continuity, replace the auto-cruise control indicator.

CLOCK SPRING CHECK 17200280018

Refer to GROUP 52B – Air Bag Module and Clock Spring.

THROTTLE POSITION SENSOR CHECK <2.0L Engine (Turbo) and 2.4L Engine> 17200290011

Refer to GROUP 13A – On-vehicle Service.

VEHICLE SPEED SENSOR CHECK <Except 2.0L Engine (Non-turbo) – A/T>, INPUT SPEED SENSOR OR OUTPUT SPEED SENSOR CHECK <2.0L Engine (Non-turbo) – A/T> 17200300011

Refer to GROUP 54 – Combination Meter.

EMISSION CONTROL SYSTEM <2.0L ENGINE (NON-TURBO)>

17300010108

GENERAL INFORMATION

The emission control system consists of the following sub-systems:
- Positive crankcase ventilation system
- Evaporative emission control system
- Exhaust emission control system

SERVICE SPECIFICATIONS

17300030098

Items	Standard value
Evaporative emission purge solenoid coil resistance [at 20°C (68°F)] Ω	25-35
Electric EGR transducer solenoid coil resistance [at 20°C (68°F)] Ω	25-35

TROUBLESHOOTING

17300070052

Symptom	Probable cause	Remedy,
Engine will not start or is hard to start.	Vacuum hose disconnected or damaged.	Repair or replace
	The EGR valve is not closed.	Repair or replace
	Malfunction of the evaporative emission purge solenoid.	Repair or replace
Rough idle or engine stalls.	The EGR valve is not closed.	Repair or replace
	Vacuum hose disconnected or damaged.	Repair or replace
	Malfunction of the positive crankcase ventilation valve.	Replace
	Malfunction of the purge control system.	Check the system; if there is a problem, check its component parts.
Engine hesitates or poor acceleration.	Malfunction of the exhaust gas recirculation system.	Check the system; if there is a problem, check its component parts.
Excessive oil consumption.	Positive crankcase ventilation line clogged.	Check positive crankcase ventilation system.
Poor fuel mileage.	Malfunction of the exhaust gas recirculation system.	Check the system; if there is a problem, check its component parts.

VACUUM HOSES

17300090232

VACUUM HOSE ROUTING

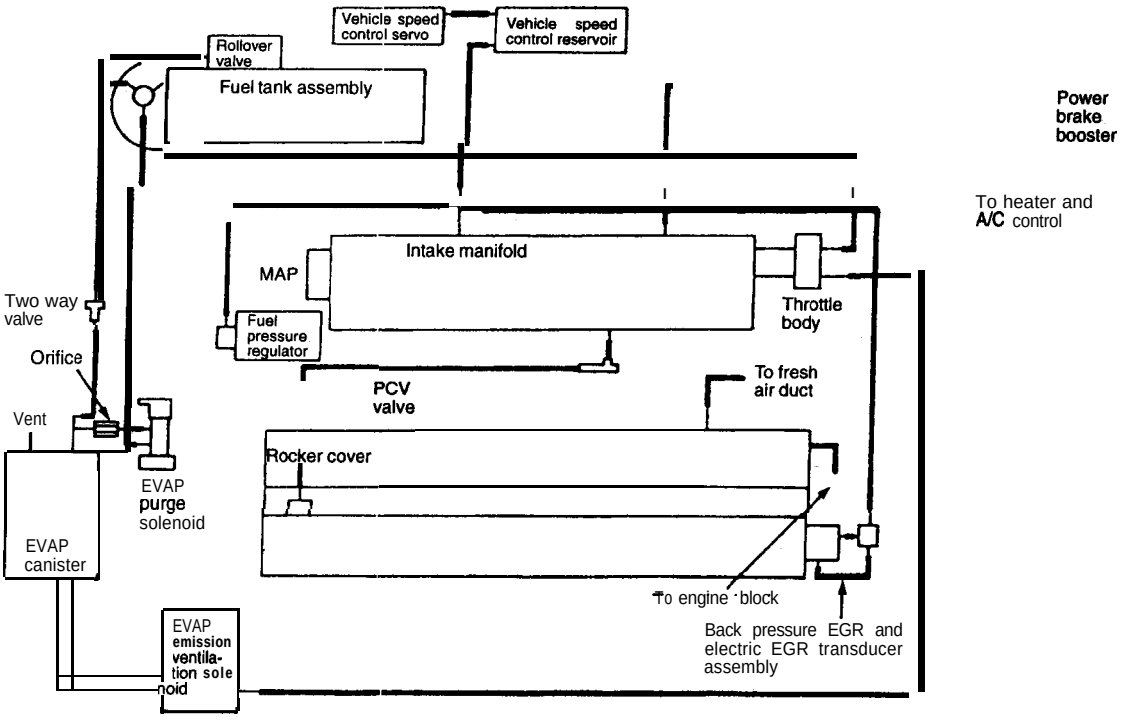

AFU0178

TSB Revision

VACUUM CIRCUIT DIAGRAM

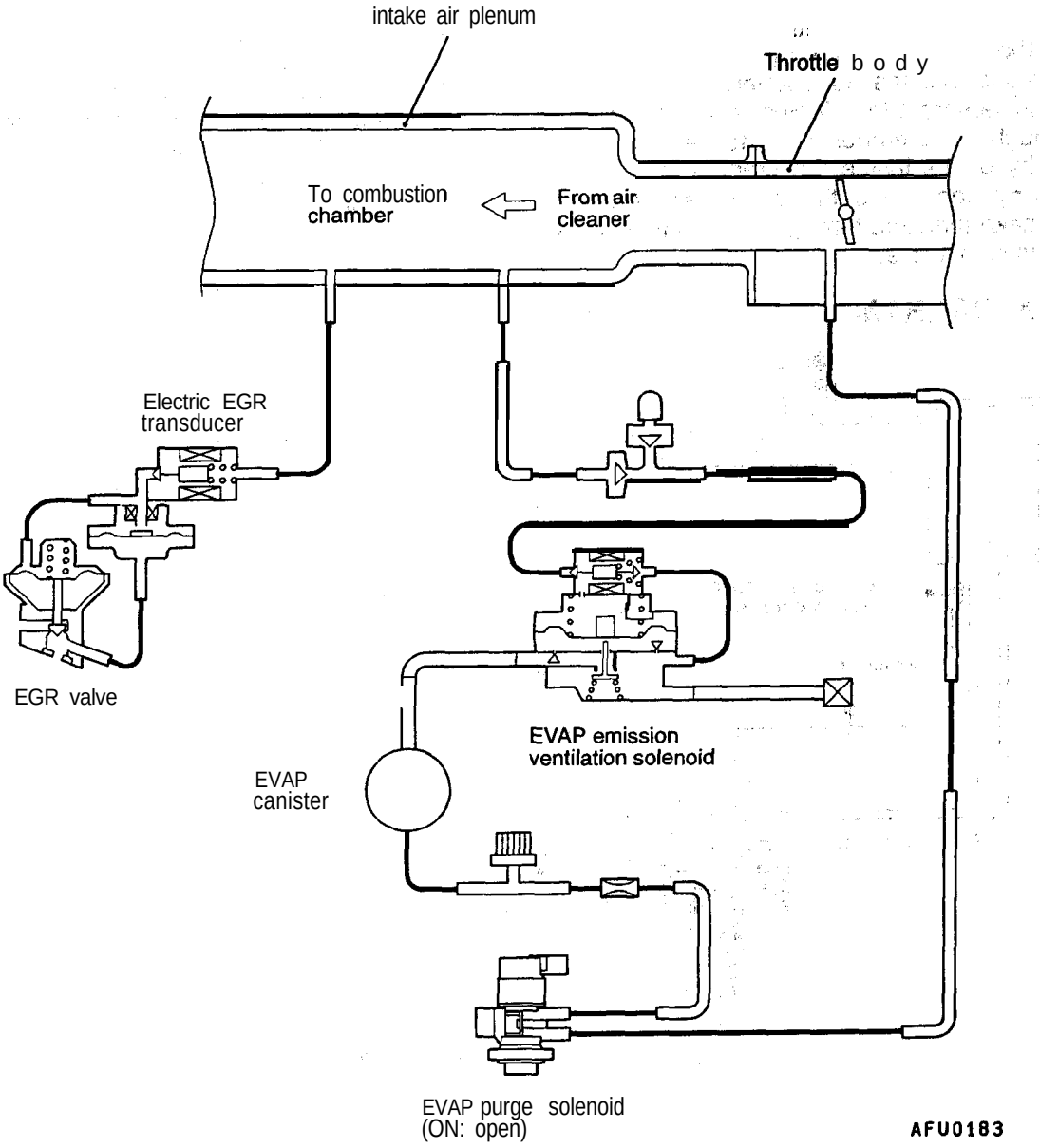

VACUUM HOSE CHECK

1. Using the VACUUM HOSE ROUTING as a guide, check that the vacuum hoses are correctly connected, and that there are no bends or damage to the hoses.

VACUUM HOSE INSTALLATION

1. When connecting the vacuum hoses, they should be securely inserted onto the nipples.
2. To connect the hoses correctly, use the VACUUM HOSE POUTING as a guide.

POSITIVE CRANKCASE VENTILATION SYSTEM

17300500063

GENERAL INFORMATION

The positive crankcase ventilation system (PCV) prevents the escape of blow-by gases from inside the crankcase into the atmosphere.
Fresh air is sent from the air cleaner into the crankcase through the breather hose, to be mixed with the blow-by gases inside the crankcase.
The blow-by gas inside the crankcase is drawn into the intake manifold through the positive crankcase ventilation valve.

The plunger inside the positive crankcase ventilation valve is designed to lift according to intake manifold vacuum, regulating the flow of blow-by.
The blow-by gas flow is decreased during low load engine operation to maintain engine stability, and is increased during high load operation to improve the ventilation performance.

SYSTEM DIAGRAM

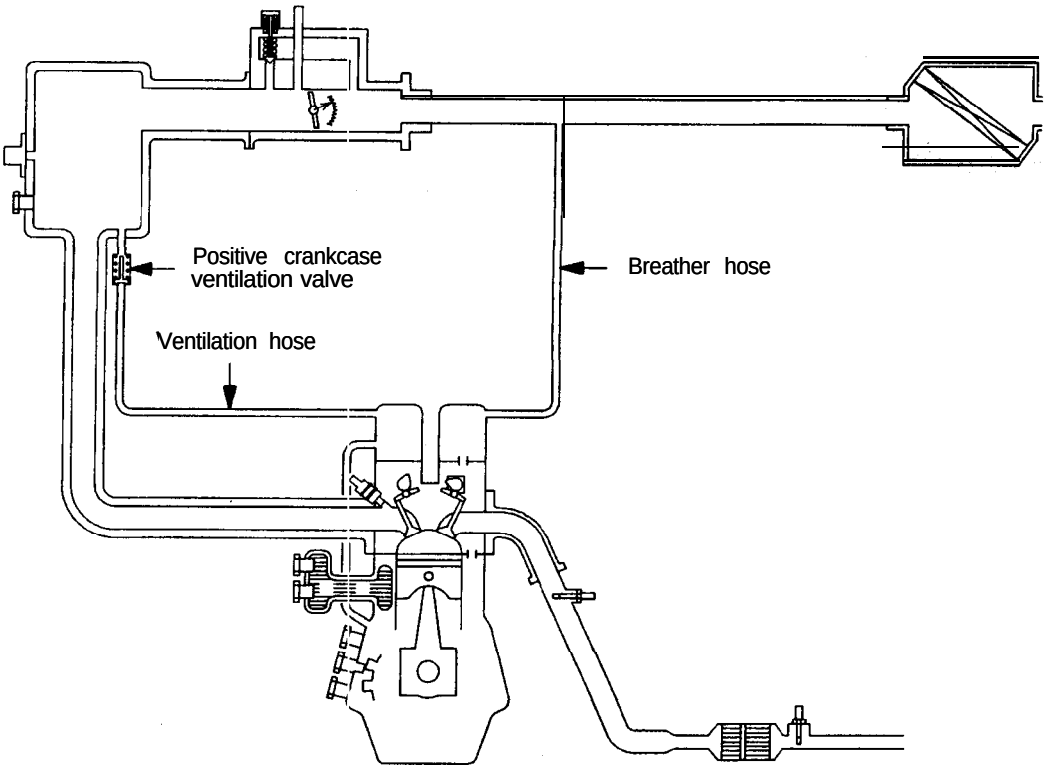

AFU0003

COMPONENT LOCATION

Positive crankcase ventilation valve

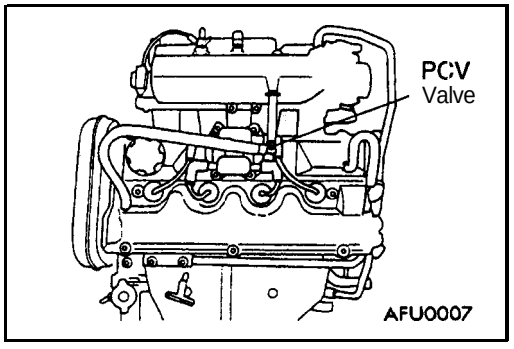

TSB Revision

CRANKCASE, VENTILATION SYSTEM CHECK'

17300110068

1. Remove the rocker cover side' of the PCV valve hose.
2. Start the engine and run at idle.

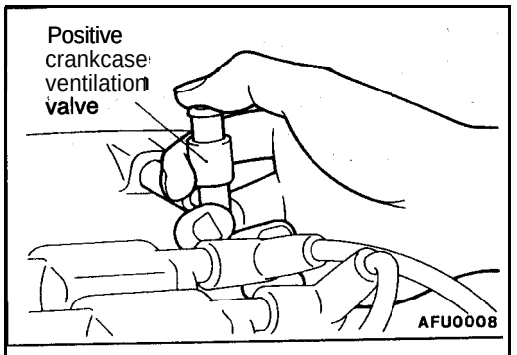

3. Place a finger at the opening of the positive crankcase ventilation valve and confirm that vacuum of the intake manifold is felt.

   NOTE
   At this time, the plunger in the positive crankcase ventilation valve moves forward and: backward.

4. If vacuum is not felt, replace the PCV valve.

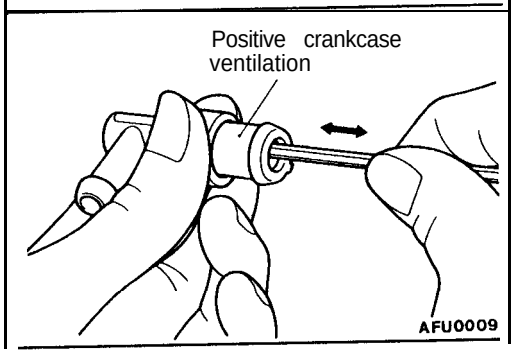

POSITIVE CRANKCASE VENTILATION VALVE CHECK

17300120061

1. Insert a thin rod into the positive crankcase ventilation valve from the side shown in the illustration (rocker cover installation side), and move the rod back and forth to confirm that the plunger moves.
2. If the plunger does not move, the valve is clogged. In this case, clean or replace, the valve.

EVAPORATIVE EMISSION CONTROL SYSTEM

17300510271

GENERAL INFORMATION

The evaporative emission control system prevents the emission of fuel tank vapors into the atmosphere. When fuel evaporates in the fuel tank, the vapors pass through vent hoses or tubes to the charcoal filled EVAP canister. The EVAP canister temporarily holds the vapors. Through the EVAP purge solenoid, the power-train control module (PCM) allows intake manifold vacuum to draw vapors into the combustion chambers during certain engine operating conditions. The plunger solenoid regulates vapor flow from the canister to the engine.

OPERATION

The EVAP purge solenoid regulates the rate of vapor flow from the EVAP canister to the throttle body. The PCM controls solenoid operation.
During the cold start warm-up period and the hot start time delay, the PCM does not energize the solenoid. When de-energized, no vapors are purged. The PCM de-energizes the solenoid during open loop operation.
The engine enters closed loop operation after it reaches a specified temperature and the programmed time delay ends. During closed loop operation, the PCM energizes and de-energizes the solenoid approximately 5 to 10 times per second, depending on operating conditions. The PCM varies the vapor flow rate by changing solenoid pulse width. Pulse width is the amount of time the solenoid de-energizes.

COMPONENT LOCATION

Evaporative emission purge solenoid

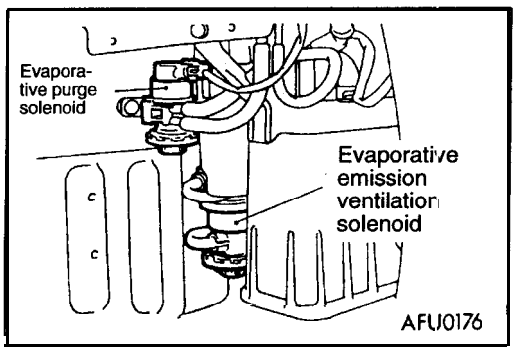

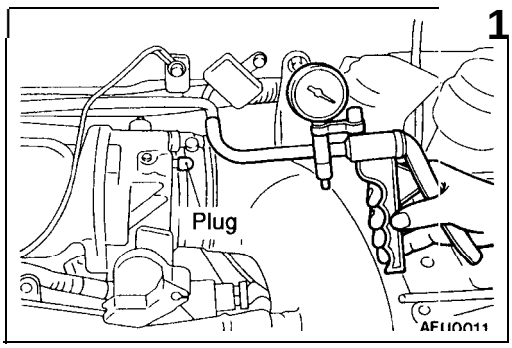

PURGE CONTROL SYSTEM CHECK

17300140289

1. Disconnect the vacuum hose from the throttle body and connect it to a hand vacuum pump.
2. Plug the nipple where the vacuum hose was removed.
3. When the engine is at operating temperature [Engine coolant temperature: 80°C (176°F) or higher], apply vacuum at idle to check the condition of the engine and the vacuum.

Vacuum	Engine status	Normal condition
53 kPa (15.7 in.Hg)	right after starting engine	Vacuum is maintained
	10 or more seconds later	Vacuum leaks

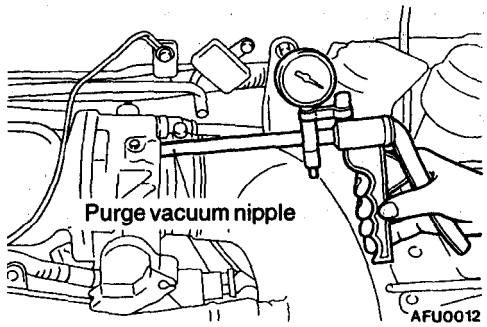

PURGE PORT VACUUM CHECK 17300150060

1. Disconnect the vacuum hose from the throttle body purge vacuum nipple and connect a hand vacuum pump to the nipple.

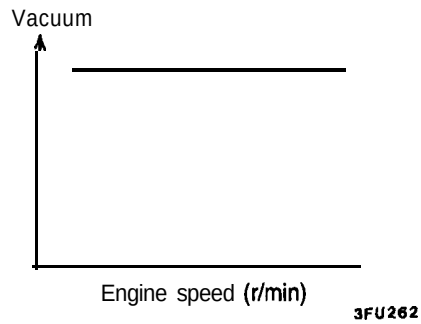

2. Start the engine and raise the speed. Vacuum should be kept constant regardless of the increased engine speed.

   NOTE
   If no vacuum is generated, the throttle body purge port may be clogged.

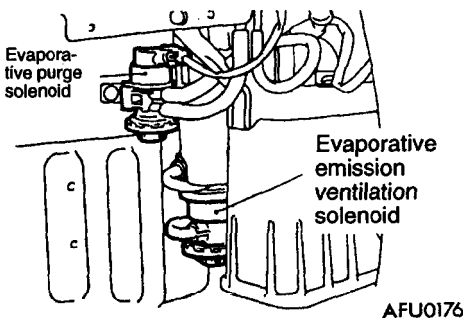

EVAPORATIVE EMISSION PURGE SOLENOID CHECK 17300170196

NOTE
When disconnecting the vacuum hose, place an identification mark on it for proper reconnection.

1. Disconnect 'the vacuum hose from the solenoid valve.
2. Disconnect the harness connector.

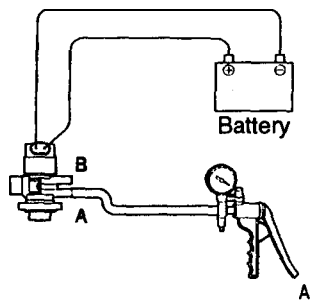

3. Connect a hand vacuum pump to nipple (A) of the solenoid valve (refer to the illustration at left).
4. Check air-tightness by applying a vacuum with voltage applied directly from the battery to the purge control solenoid valve.

Battery voltage	Normal condition
Applied	Vacuum leaks
Not applied	Vacuum maintained

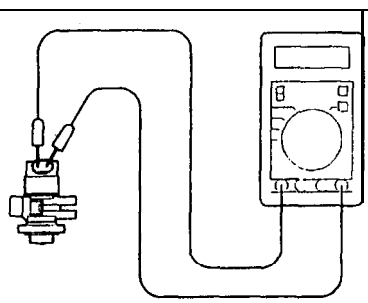

5. Measure the resistance between the terminals of the solenoid valve.

   Standard value: 25-35 Ω [at 20°C (68°F)]

ENGINE COOLANT TEMPERATURE SENSOR AND INTAKE AIR TEMPERATURE SENSOR

17300180113

To check these parts, refer to GROUP 13A – Troubleshooting.

AIR CONDITIONING SWITCH

17300200031

To check the air conditioning switch, refer to GROUP 55 – Air Conditioning Switch.

EVAPORATIVE EMISSION CANISTER/AIR FILTER/EVAPORATIVE EMISSION VENTILATION SOLENOID

17300480053

REMOVAL AND INSTALLATION

Pre-removal and Post-installation Operation
Splash Shield (R.H.) Removal and Installation (Refer to GROUP 42–Fender)

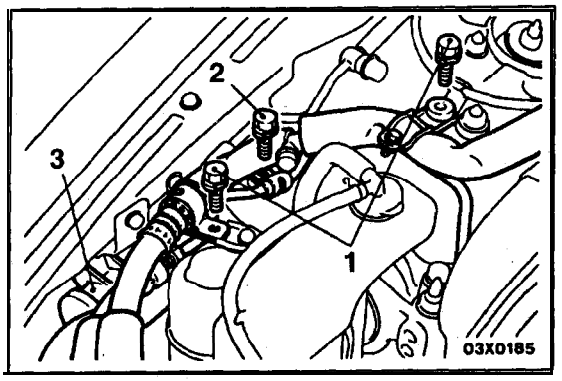

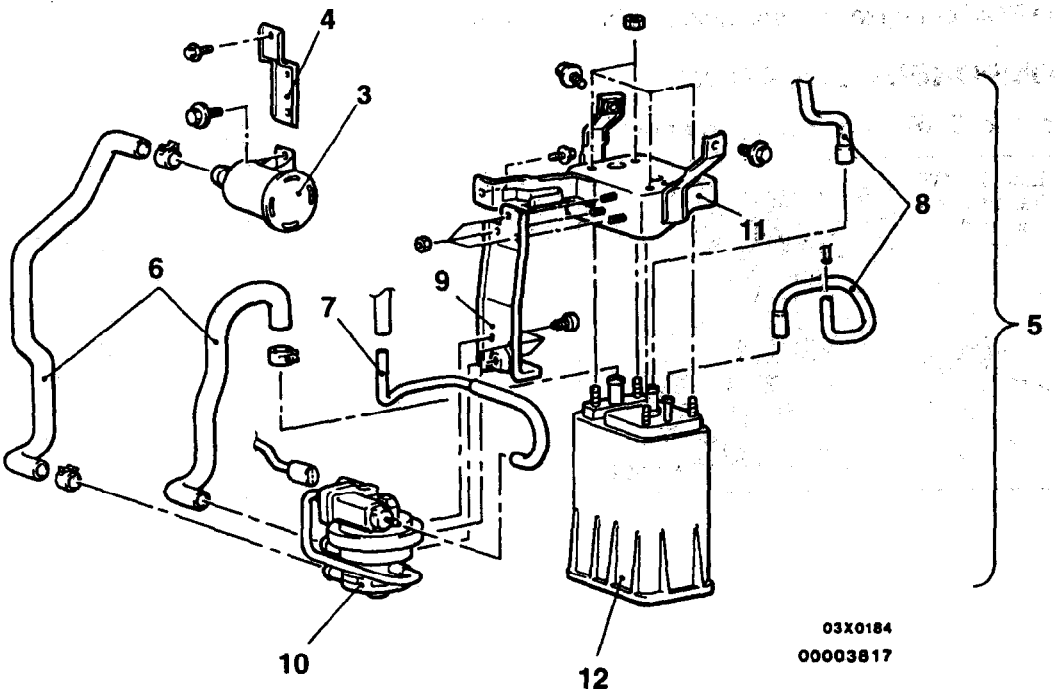

Removal steps

1. Suction hose fixing bolts
2. Pressure tube fixing bolt
3. Air filter
4. Air filter bracket
5. Evaporative emission canister and evaporative emission ventilation solenoid assembly
6. Vent hose
7. Vapor hose
6. Vapor hose
9. Evaporative emission ventilation solenoid bracket
10. Evaporative emission ventilation solenoid
11. Evaporative emission canister holder assembly
12. Evaporative emission canister assembly

TSB Revision

EXHAUST GAS RECIRCULATION (EGR) SYSTEM

17309520059

GENERAL INFORMATION

The EGR system reduces oxides of NOx in engine exhaust and helps prevent detonation (engine knock). The system allows a predetermined amount of hot exhaust gas to recirculate and dilute the incoming air/fuel mixture. The diluted air/fuel mixture reduces peak flame temperature during combustion.

The EGR system contents:

- EGR tube
- EGR valve
- Electronic EGR Transducer
- Connecting hoses

OPERATION

The electronic EGR transducer contains an electrically operated solenoid and a back-pressure transducer. The Powertrain Control Module (PCM) controls operation of the solenoid. Exhaust system back-pressure controls the transducer.

When the PCM de-energizes the solenoid, vacuum does not reach the transducer.

Vacuum only flows to the transducer when the PCM energizes the solenoid.

When exhaust system back-pressure becomes high enough, a bleed valve in the transducer closes. The PCM energizes the solenoid and back-pressure closes the transducer bleed valve. This causes vacuum to flow through the transducer to operate the EGR valve.

Energizing the solenoid, but not fully closing the transducer bleed. hole (because of low back-pressure), varies the strength of vacuum applied to the EGR valve.

Varying the strength of the vacuum changes the amount of EGR supplied to the engine.

This provides the correct amount of exhaust gas recirculation for different operating conditions.-

COMPONENT LOCATION

Electric EGR transducer solenoid

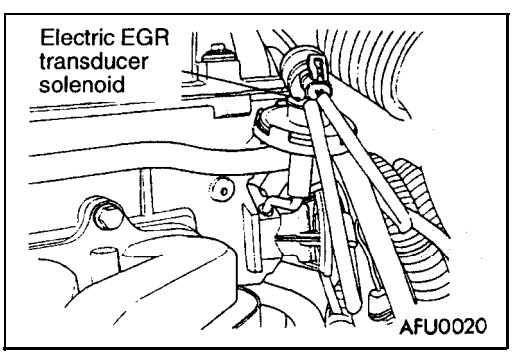

EGR valve

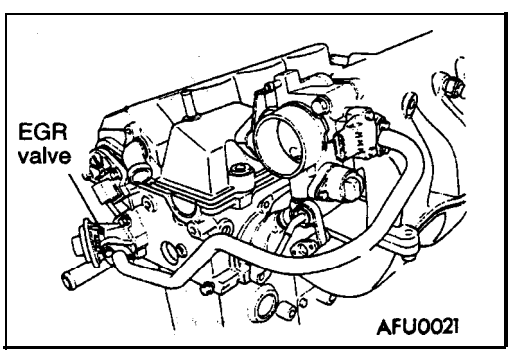

EGR SYSTEM CHECK 17300260077

To ensure proper operation of the EGR system, all passages and moving parts must be free of deposits that could cause plugging or sticking.
Ensure that the system' hoses do not leak.
Replace leaking components.

1. Check the EGR control system and EGR valve with the engine fully warmed up and running [engine coolant temperature over 76°C (170°F)]
2. With the transaxle in neutral and the throttle closed, allow the engine to idle for 70 seconds.
3. Abruptly accelerate the engine to approximately 2000 r/min, but not over 3000 r/min.
4. The EGR valve 'stem should move when accelerating the engine. Repeat the test several- times-to confirm movement.
5. If the EGR valve stem moves, the control system is operating normally.

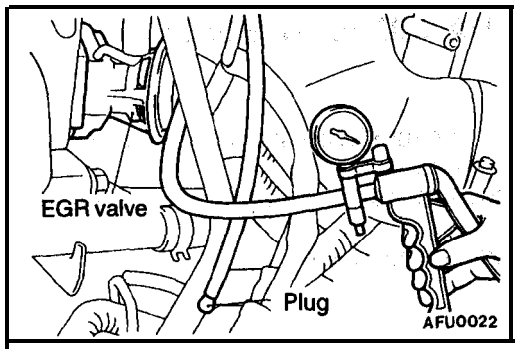

6. Remove the vacuum hose from the EGR valve and plug the hose end.
7. Connect a hand vacuum pump directly to the EGR valve.
8. Check whether the engine stalls or if the idle is unstable when a vacuum of 12 kPa (3.5 in.Hg) or higher is applied while idling.

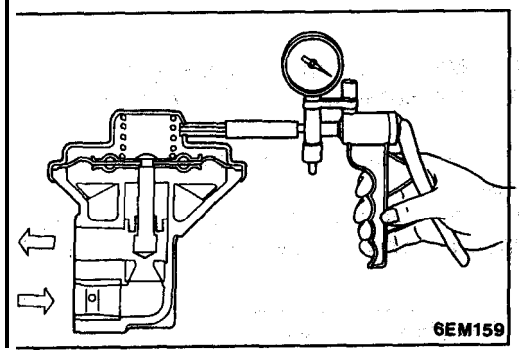

EGR VALVE CHECK 17300280066

1. Remove the EGR valve and inspect for sticking, carbon deposits, etc. If contaminants are found, clean the valve with a suitable solvent so' it will seat correctly.
2. Connect a hand vacuum pump to the EGR valve.
3. Apply 67 kPa (20 in.Hg) of vacuum, and check that the vacuum is maintained.
4. Apply vacuum according to the chart below, and check the passage of air by blowing through either side of the EGR passages.
5. Replace the gasket, and tighten the valve to the specified torque.

Specified torque: 22 Nm (16 ft.lbs.)

Vacuum	Passage of air
5.3 kPa (1.6 in.Hg) or less	Air blows out of opposite passage.
29 kPa (8.7 in.Hg) or more	Air does not blow out of opposite passage.

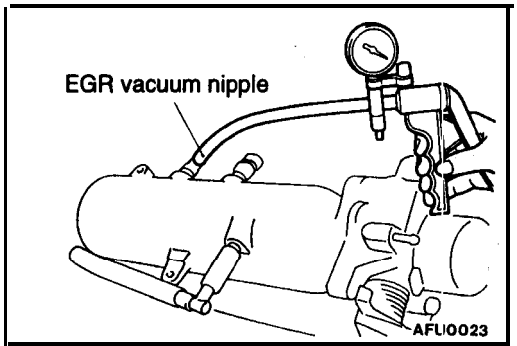

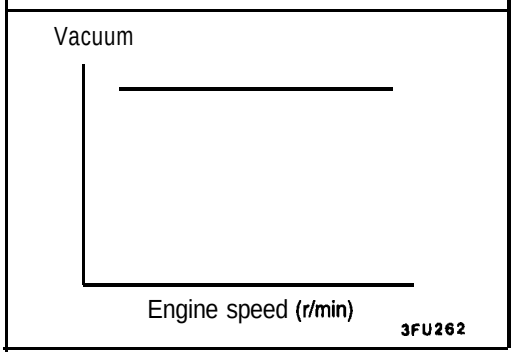

EGR PORT VACUUM CHECK

17300290069

1. Disconnect the vacuum hose from the throttle body EGR vacuum nipple. Connect a hand vacuum pump to the nipple.
2. Start the engine and gradually raise the speed. The vacuum reading on the pump should remain constant.

ELECTRIC EGR TRANSDUCER SOLENOID CHECK

17300610018

NOTE
When disconnecting the vacuum hose, place an, identification mark on it for proper re-connection.

1. Disconnect the vacuum hose from the electric EGR transducer.
2. Disconnect the harness connector.

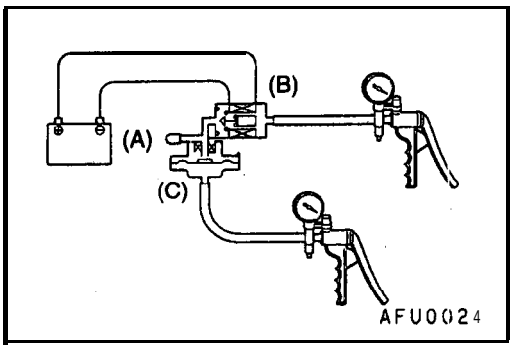

3. Plug nipple (A).
4. Connect the hand vacuum pump to nipple (B).
5. Connect a positive pressure-type hand pump to nipple (C).
6. Use a jumper wire to connect the solenoid terminal to the battery terminal.
7. Turn on and off the negative battery terminal side jumper wire and apply vacuum and positive pressure to check the air tightness.

Jumper wire	Positive pressure status	Vacuum status
Disconnected	Not applied	Leaks
	Applied	Maintained
Connected	Not applied	Maintained

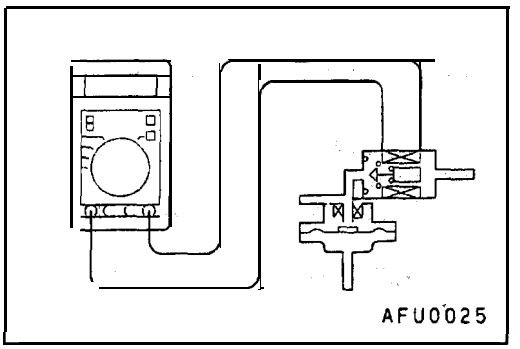

8. Measure the resistance between the solenoid terminals.

Standard value: 25–35Ω [at 20°C(68°F)]

CATALYTIC CONVERTER

17300530086

GENERAL INFORMATION

The three-way catalytic converter, together with the closed loop air-fuel ratio control (based on the oxygen sensor signal) oxidizes carbon monoxides (CO) and hydrocarbons (HC), and reduces nitrogen oxides (NOx).

When the mixture is controlled at stoichiometric air-fuel ratio, the three-way catalytic converter provides the highest purification against CO, HC, and NOx.

REMOVAL AND INSTALLATION

17300390073

Pre-removal and Post-installation Operation
Under Cover Removal and Installation (Refer to GROUP 42–Under Cover.)

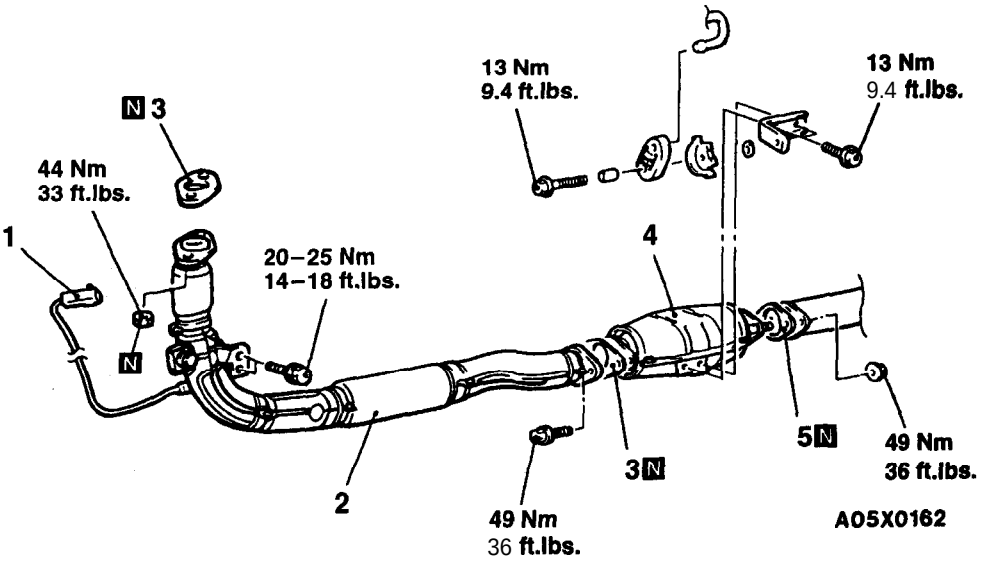

Removal steps

1. Heated oxygen sensor connector <Front>
2. Front exhaust pipe
3. Gasket
4. Catalytic converter
5. Gasket

TSB Revision

INSPECTION

17300400042

Check for damage, cracking or deterioration. Replace if faulty.

Caution

1. **Stop the engine immediately if engine misfiring occurs, otherwise an abnormally hot exhaust system will damage the catalytic converter or other underbody parts.**
2. **Correct and repair the ignition or fuel system if there are malfunctions, otherwise engine misfiring may occur which will damage the catalytic converter.**
3. **Observe manufacturer's specifications when doing service work.**

EMISSION CONTROL SYSTEM <2.0L ENGINE (TURBO) AND 2.4L ENGINE>

17300010078

GENERAL INFORMATION

The emission control system consists of the following sub-systems:
- Positive crankcase ventilation system
- Evaporative emission control system
- Exhaust emission control system

SERVICE SPECIFICATIONS

17300030050

Items	Standard value
Evaporative emission purge solenoid coil resistance [at 20°C (68°F)] Ω	36-44
EGR solenoid coil resistance [at 20°C (68°F)] Ω	36-44

SPECIAL TOOL

17300060028

Tool	Tool number and name	Supersession	Application
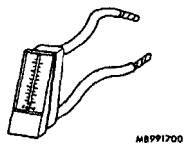 MB991700	MB991 700		Checking the purge control system

TROUBLESHOOTING

17300070021

Symptom	Probable cause	Remedy
Engine will not start or is hard to start.	Vacuum hose disconnected or damaged.	Repair or replace
	The EGR valve is not closed.	Repair or replace
	Malfunction of the evaporative emission purge solenoid.	Repair or replace
Rough idle or engine stalls.	The EGR valve is not closed.	Repair or replace
	Vacuum hose disconnected or damaged.	Repair or replace
	Malfunction of the positive crankcase ventilation valve.	Replace
	Malfunction of the purge control system.	Check the system; if there is a problem, check its component parts.
Engine hesitates or poor acceleration.	Malfunction of the exhaust gas recirculation system.	Check the system; if there is a problem, check its component parts.
Excessive oil consumption.	Positive crankcase ventilation line clogged.	Check positive crankcase ventilation system.
Poor fuel mileage.	Malfunction of the exhaust gas recirculation system.	Check the system: if there is a problem, check its component parts.

TSB Revision

VACUUM HOSES

17300090249

VACUUM HOSE ROUTING

<2.0L Engine (Turbo)>

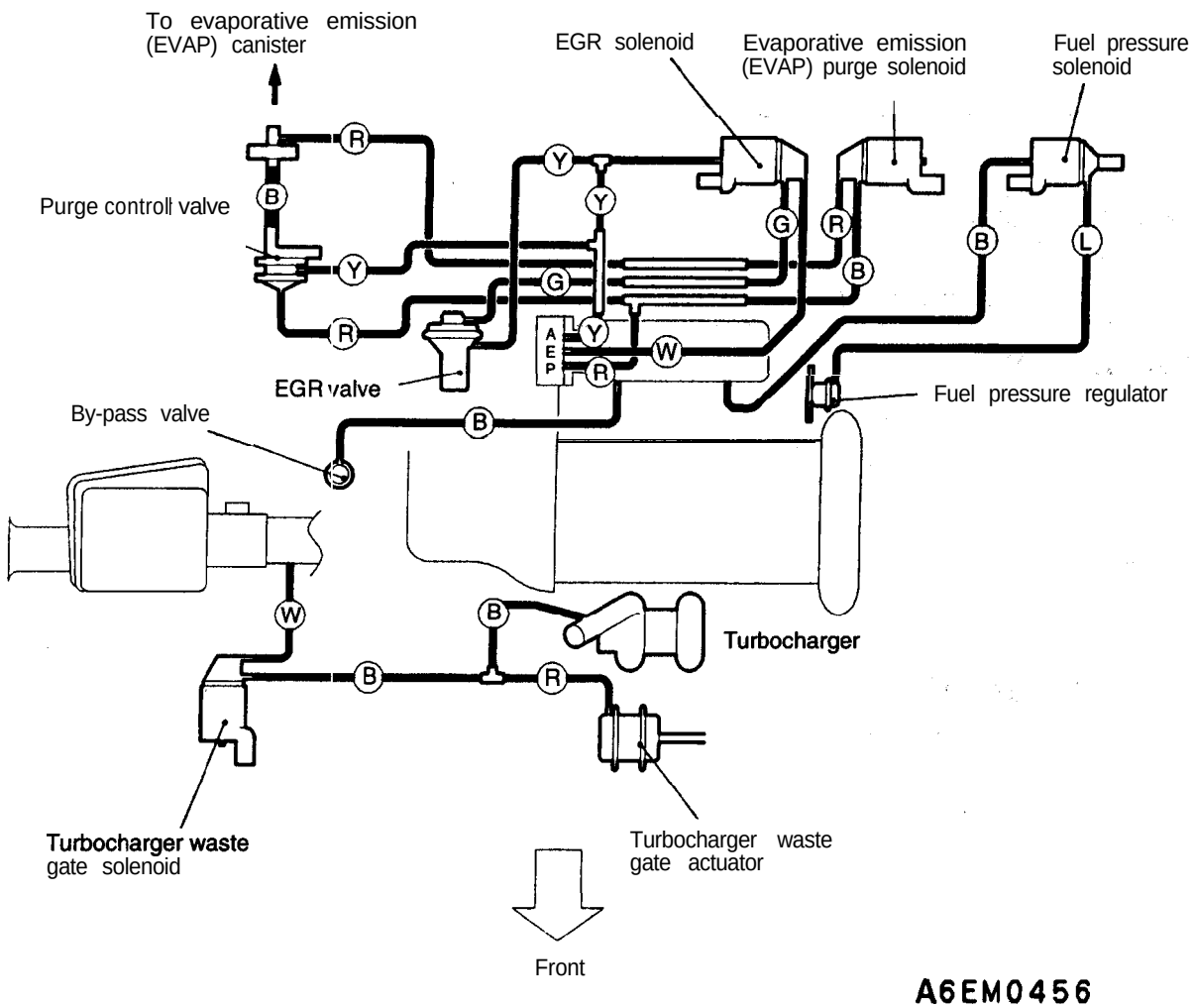

L: Light Blue
R: Red
B: Black
G: Green
Y: Yellow
W: White

TSB Revision

<2.4L Engine>

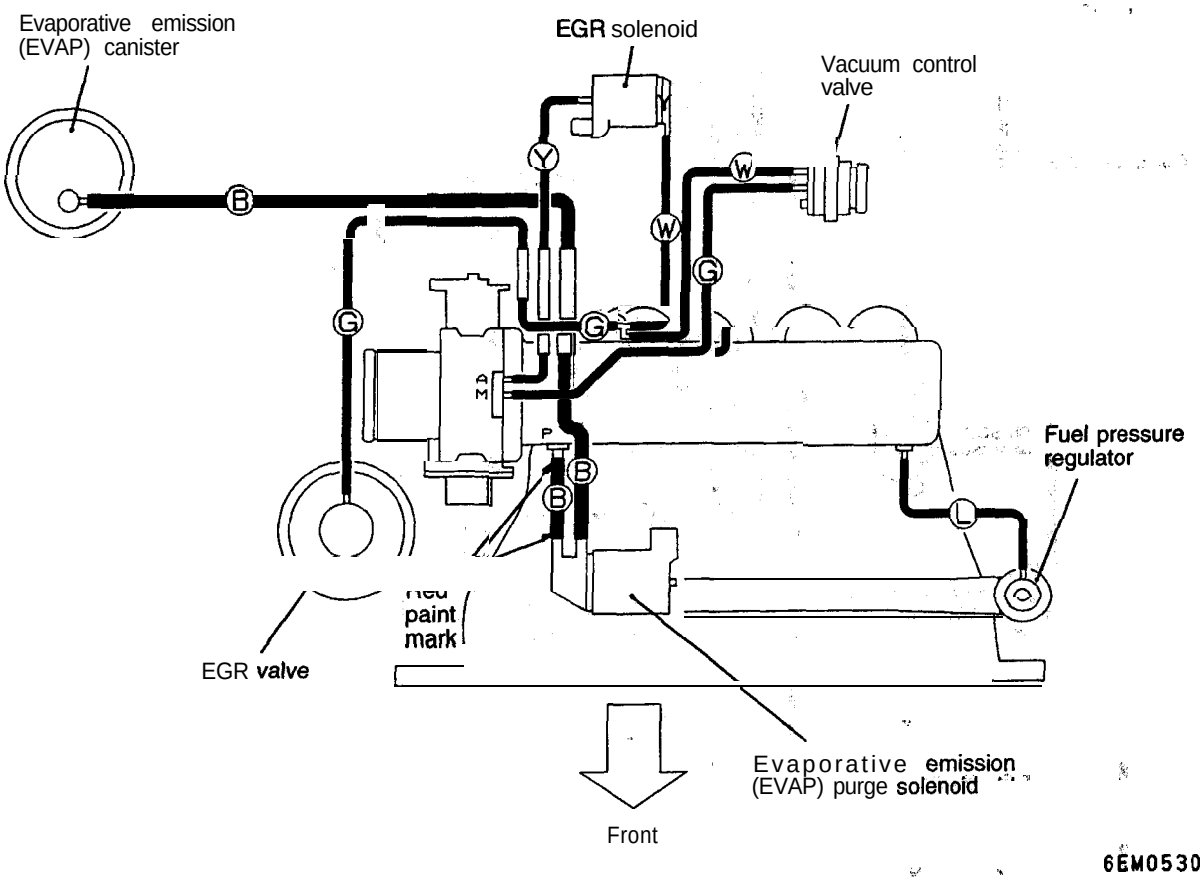

L: Light Blue
R Red
B: Black
G: Green
Y: Yellow
W: White

VACUUM CIRCUIT DIAGRAM

<2.0L Engine (Turbo)>

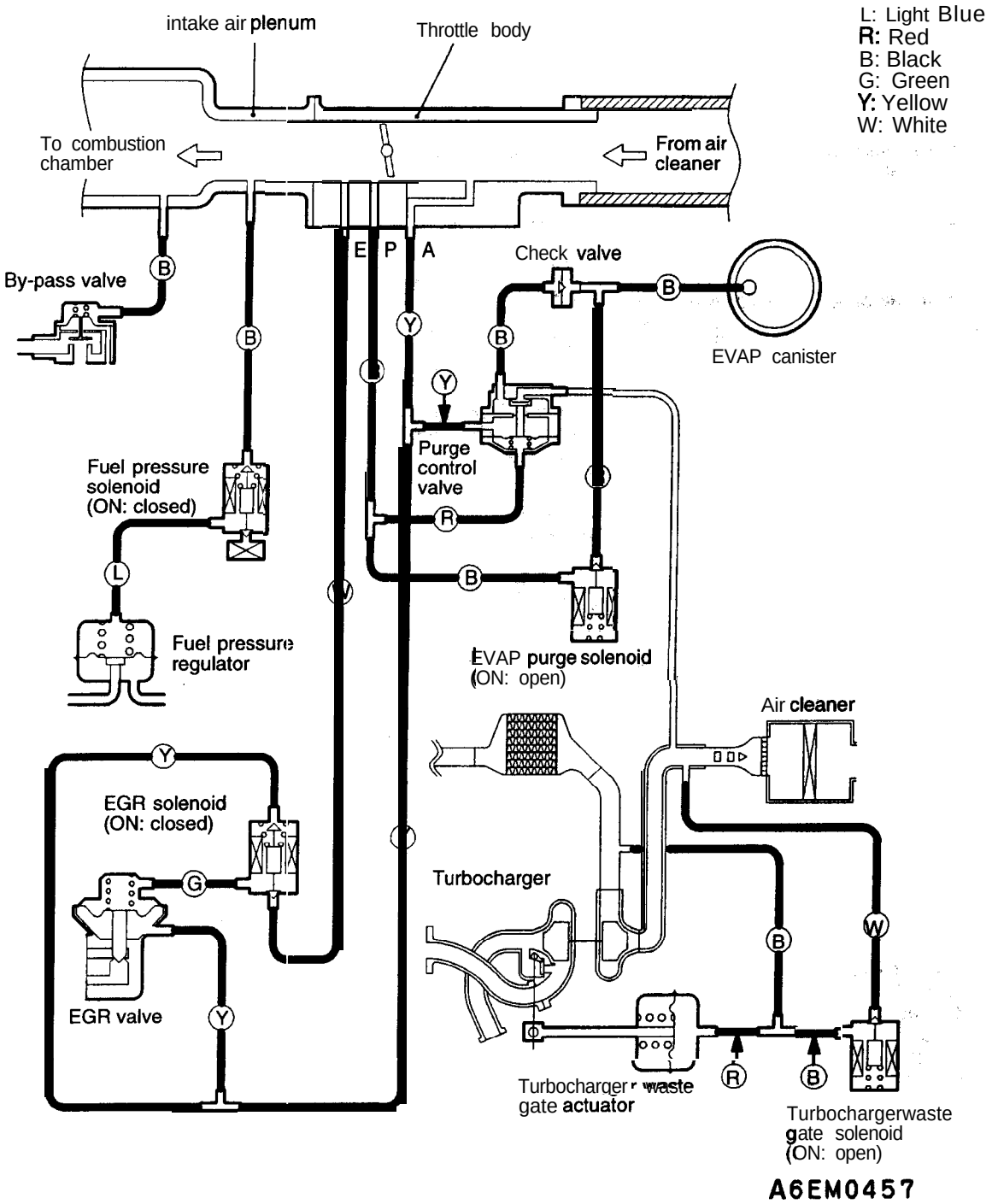

TSB Revision

<2.4L Engine>

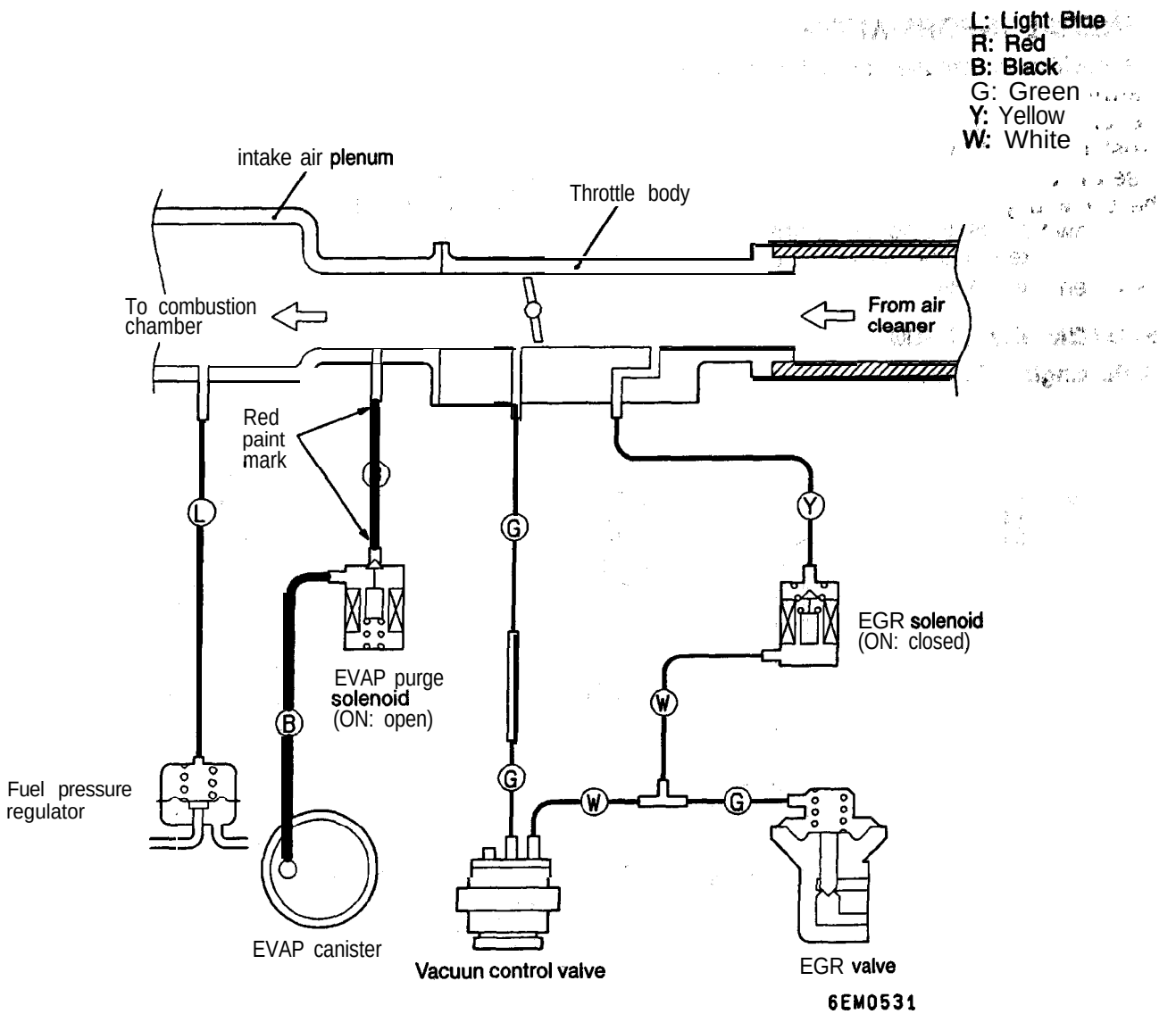

VACUUM HOSE CHECK

Using the VACUUM HOSE ROUTING as a guide, check that the vacuum hoses are correctly connected, and that there are no bends or damage to the hoses.

VACUUM HOSE INSTALLATION

1. When connecting the vacuum hoses, they should be securely inserted onto the nipples.
2. To connect the hoses correctly, use the VACUUM HOSE ROUTING as a guide.

POSITIVE CRANKCASE VENTILATION SYSTEM

17300500070

GENERAL INFORMATION

The positive crankcase ventilation system (PCV) prevents the escape of blow-by gases from inside the crankcase into the atmosphere.
Fresh air is sent from the air cleaner into the crankcase through the breather hose, to be mixed with the blow-by gases inside the crankcase.
The blow-by gas inside the crankcase is drawn into the intake manifold through the positive crankcase ventilation valve.

The plunger inside the positive crankcase ventilation valve is designed to lift according to intake manifold vacuum, regulating the flow of blow-by.
The blow-by gas flow is decreased during low load engine operation to maintain engine stability, and is increased during high load operation to improve the ventilation performance.

SYSTEM DIAGRAM

<2.0L Engine (Turbo)>

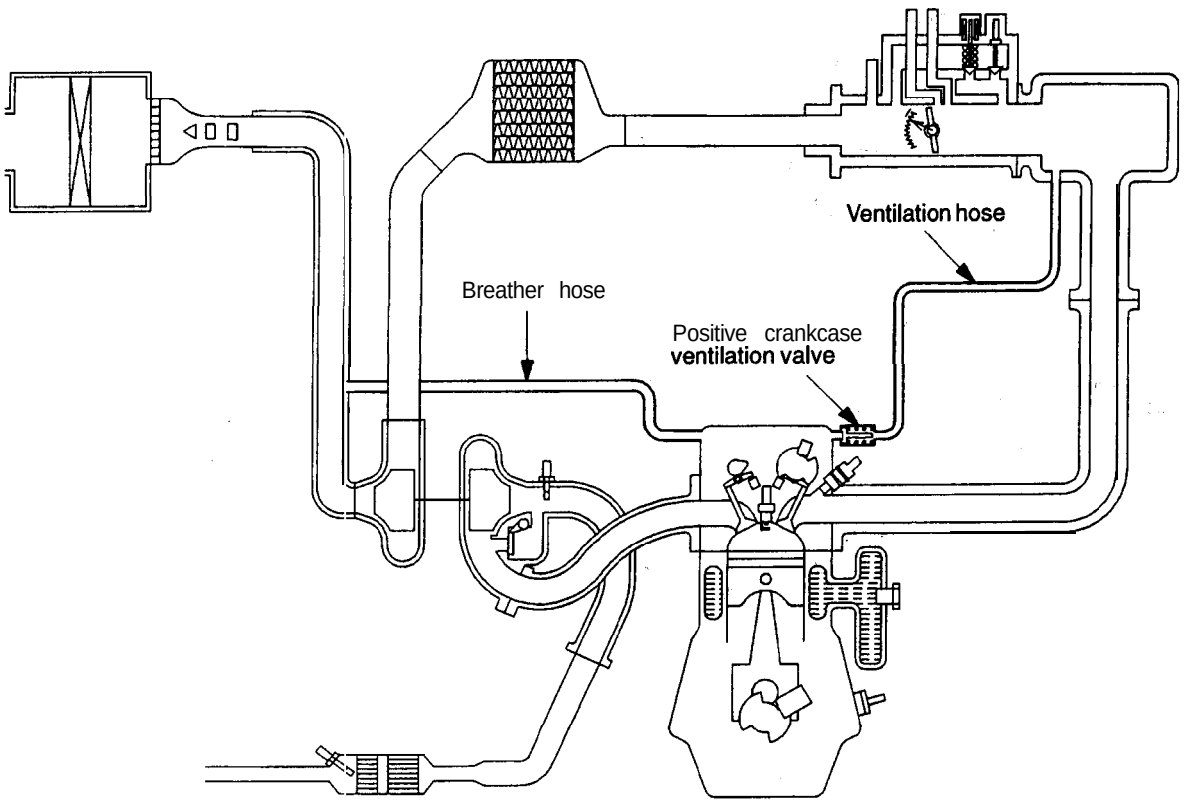

6EM0458

<2.4L Engine>

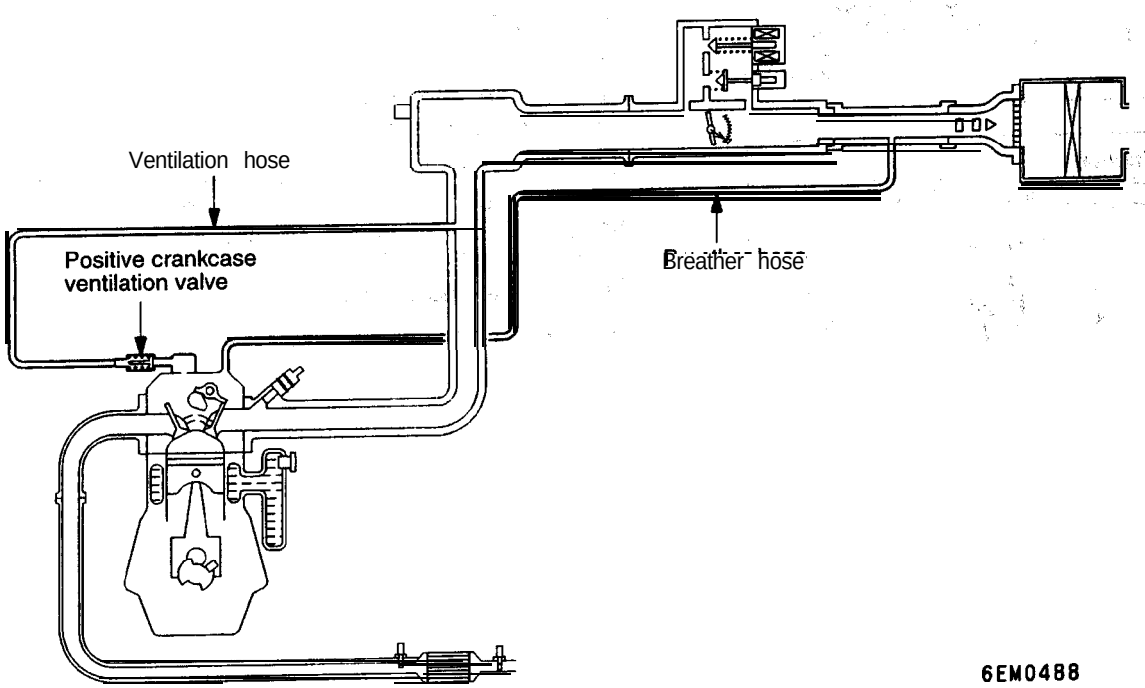

COMPONENT LOCATION

Positive crankcase ventilation valve

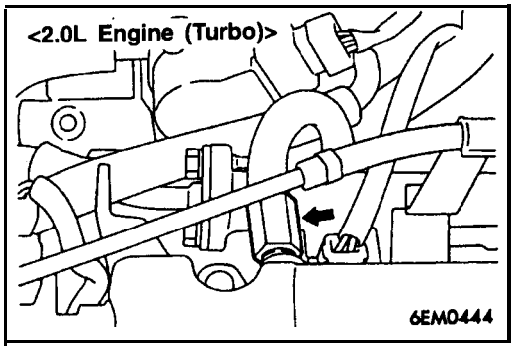

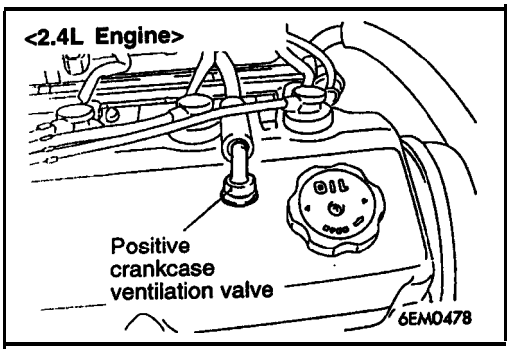

TSB Revision

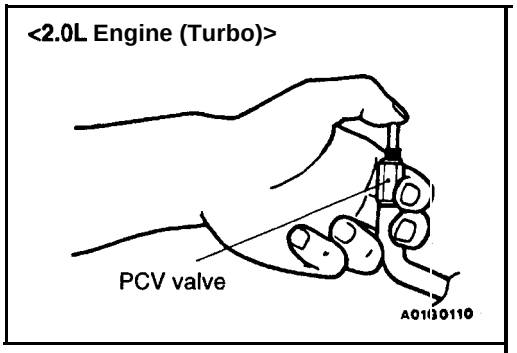

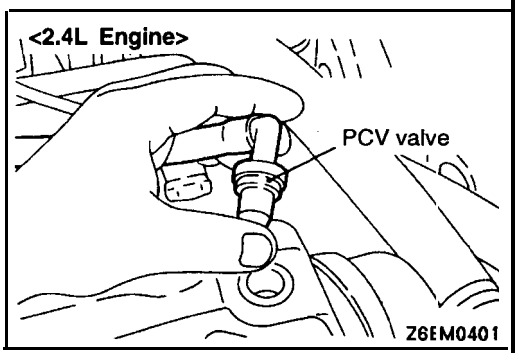

CRANKCASE VENTILATION SYSTEM CHECK

17900110198

1. Remove the positive crankcase ventilation (PCV) valve from the rocker cover, then reconnect the PCV valve to the vacuum supply hose (ventilation hose).
2. With the engine idling, put finger on the open end of the PCV valve, and check for negative pressure (vacuum) with finger.

   NOTE
   At this time, the plunger in the PCV valve should move back and forth as the open end is covered and uncovered.
3. If negative pressure is not felt, clean or replace the PCV valve. Inspect the vacuum supply hose and vacuum supply hose port for restriction or plugged condition.
4. Install the PCV valve.
5. Tighten it to the specified torque. <2.0L 'Engine (Turbo)>

   Specified torque: 10 Nm (7.2 ft.lbs.)

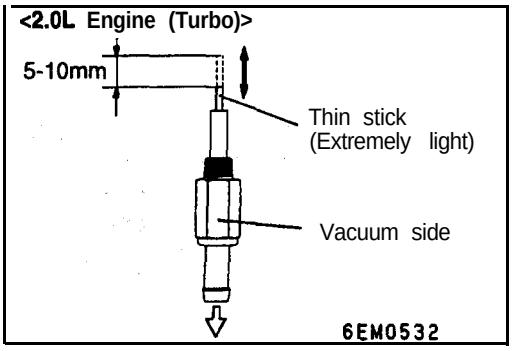

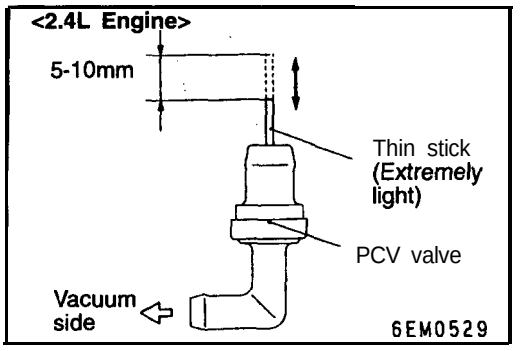

POSITIVE CRANKCASE VENTILATION VALVE" CHECK

17300120177

1. Hold the PCV valve with the vacuum side facing down. Using light pressure depress the PCV valve spring with the thin stick 5-10 mm. Release pressure on the stick to see if the PCV valve spring will lift the stick to its original position.
2. If the stick returns quickly to its original position, the PCV valve is OK. If the stick does not return quickly, Clean or replace the PCV valve.

EVAPORATIVE EMISSION CONTROL, SYSTEM

17300510080

GENERAL INFORMATION <2.0L Engine (Turbo)>

The evaporative emission control system prevents fuel vapors generated in the fuel tank from escaping into the atmosphere.

Fuel vapors from the fuel tank flow through the fuel tank pressure control valve and vapor pipe/hose to be stored temporarily in the EVAP canister.

When driving with a low to medium load on the engine, the fuel vapor absorbed by the EVAP canister is drawn into the P port of the throttle body.

When driving with a high load on the engine, the purge control valve opens and the fuel vapor absorbed by the EVAP canister is drawn into the air intake hose.

SYSTEM DIAGRAM

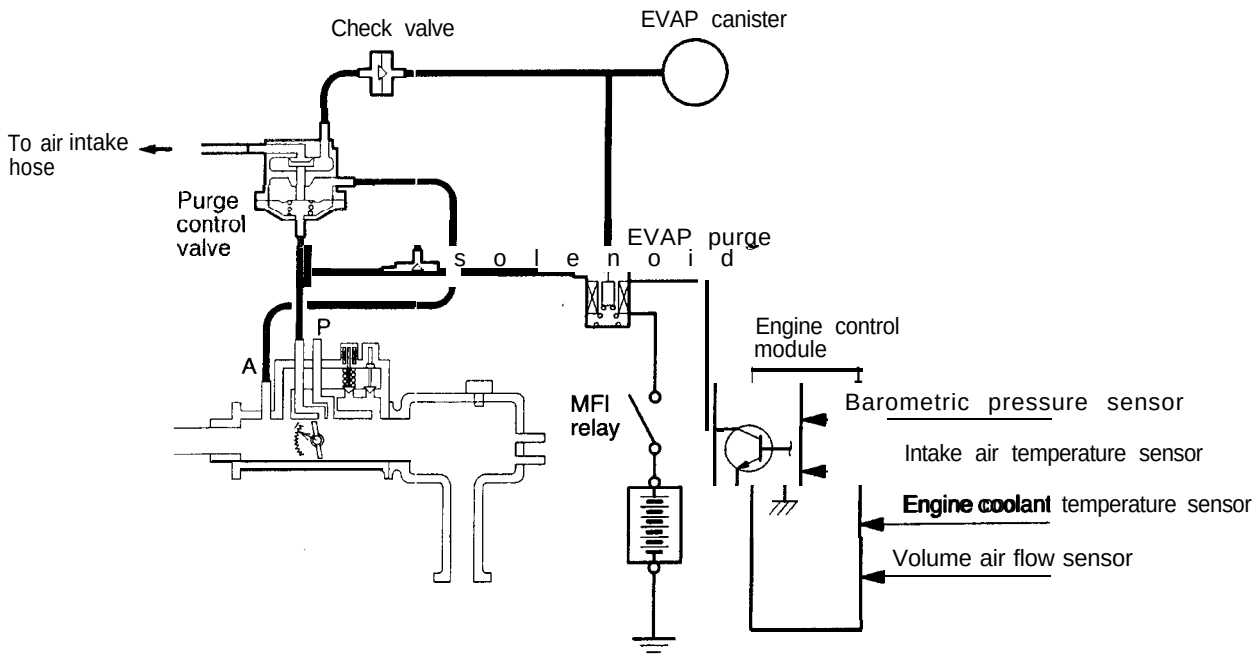

6EM0459

COMPONENT LOCATION

Evaporative emission purge solenoid

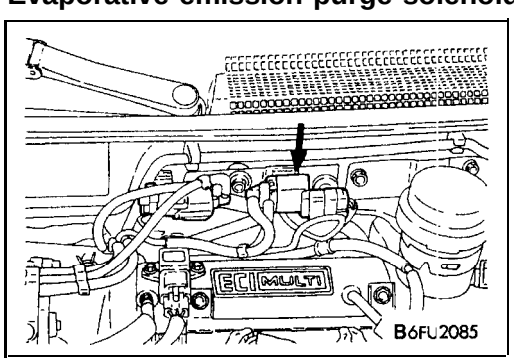

TSB Revision

GENERAL INFORMATION <2.4L Engine>

17300510288

The evaporative emission control system prevents fuel vapors generated in the fuel tank from escaping into the atmosphere.

Fuel vapors from the fuel tank flow through the fuel tank pressure control valve and vapor pipe/hose to be stored temporarily in the EVAP canister.

When the vehicle is in operation, fuel vapors stored in the EVAP canister flow through the EVAP purge solenoid and purge port and go into the intake manifold plenum to be sent to the combustion chamber.

When the engine coolant temperature is low or when the intake air quantity is small (when the engine is at idle, for example), the engine control module brings the EVAP purge solenoid into the OFF state to shut off the fuel vapor flow to the intake manifold plenum. This does not only insure the driveability when the engine is cold or running under low load but also stabilize the emission level.

Furthermore, an EVAP ventilation solenoid is locate between the EVAP canister and the atmosphere in order to carry out OBD-II EVAP leak monitoring. This solenoid is normally off, but turns on during OBD-II EVAP leak monitoring to shut off the flow of air into the EVAP canister from the atmosphere.

Also, fuel vent valve is provided at fuel filler tube to prevent fuel from being over-filling to a fuel tank.

SYSTEM DIAGRAM

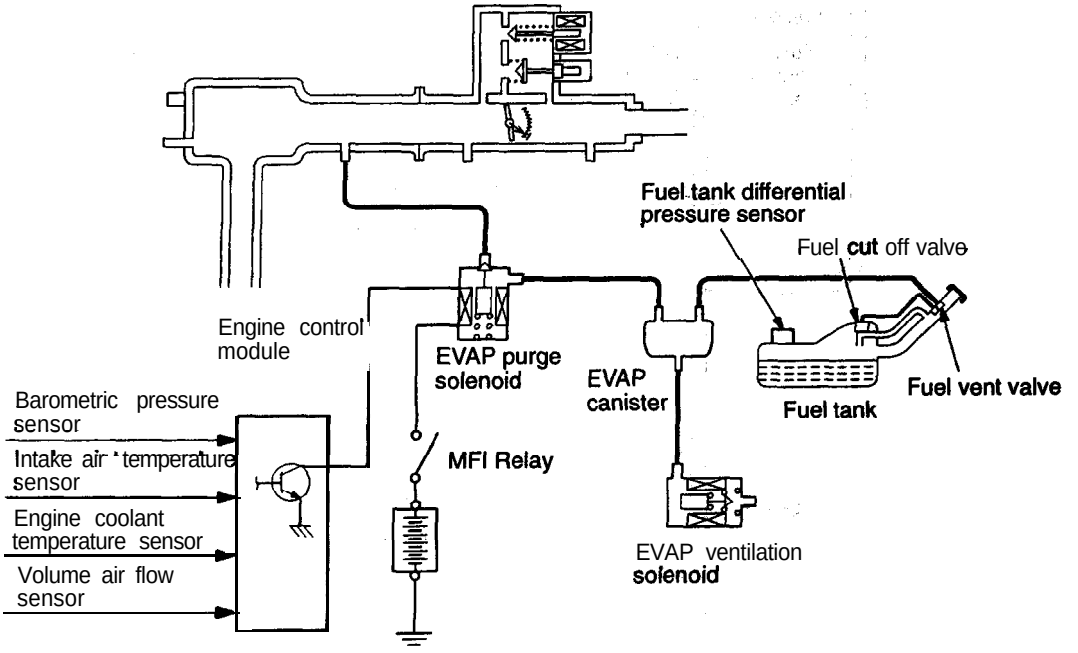

6EM0540

COMPONENT LOCATION

Evaporative emission purge solenoid

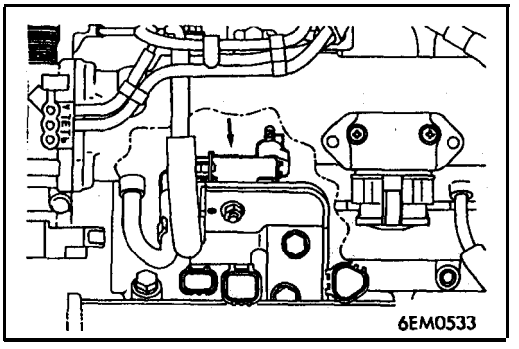

6EM0533

Evaporative emission ventilation solenoid

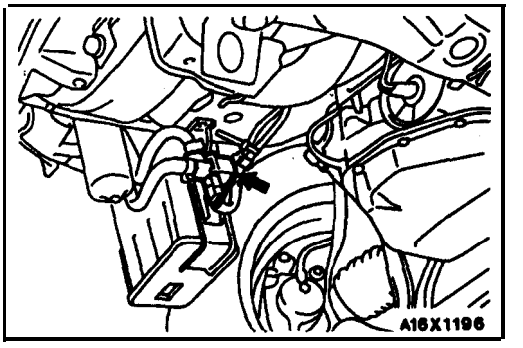

A16X1196

TSB Revision

PURGE CONTROL SYSTEM CHECK (PURGE FLOW CHECK) <2.0L ENGINE (TURBO)>

17300140265

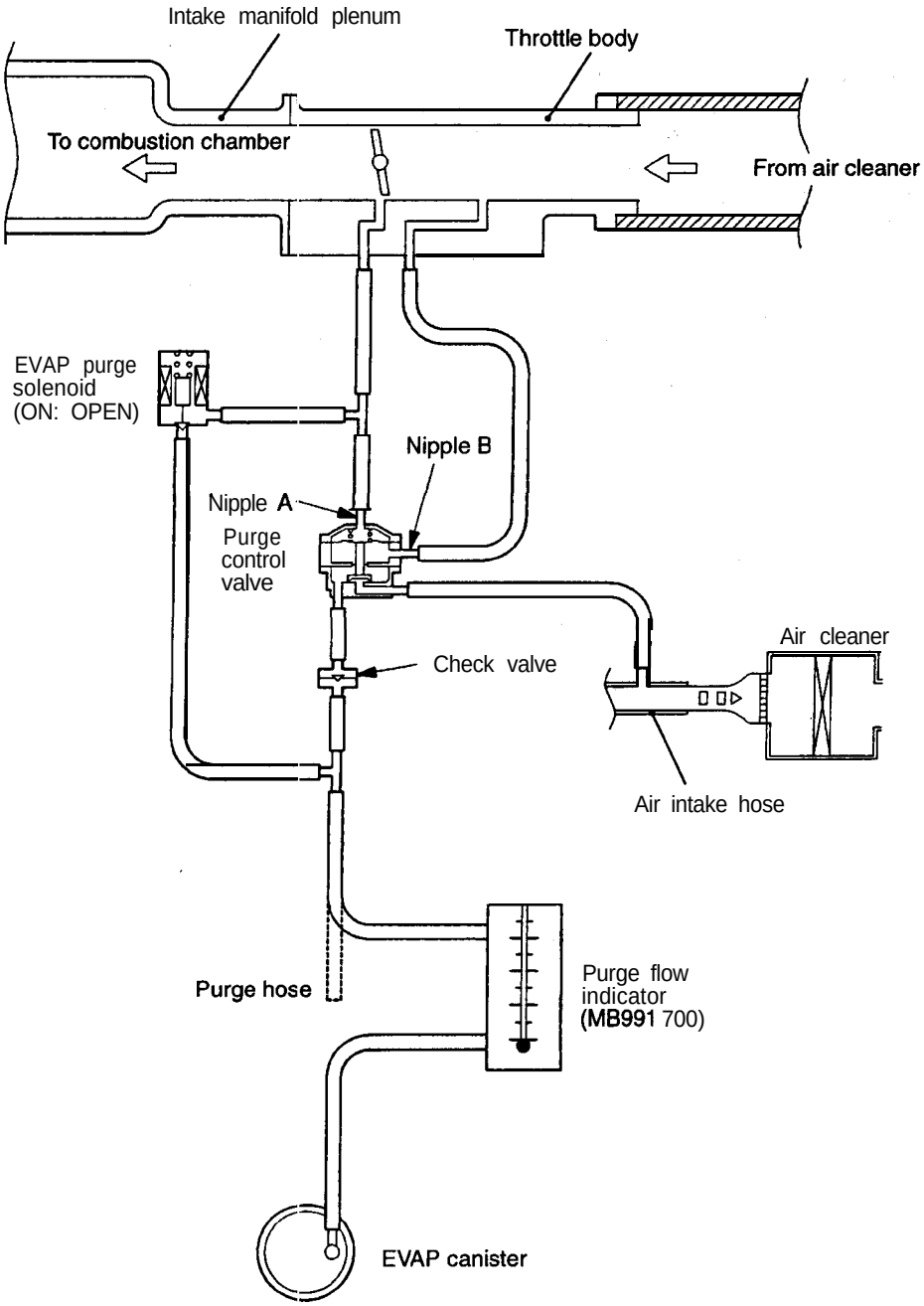

6EM0555

1. Disconnect the purge hose from the evaporative emission (EVAP) canister, and connect the special tool (purge flow indicator) between the EVAP canister and the purge hose.
2. The vehicle should be prepared as follows before the inspection and adjustment.
   - Engine coolant temperature: 80–95°C (176–203° F)
   - Lights, cooling fan and accessories: OFF
   - Transaxle: Neutral (A/T for P range)
3. Run the engine at idle for 3 minutes or more.

TSB Revision

4. Check the purge flow volume when sudden braking is carried out several times.

   Standard value: Momentarily 20 cm^3/sec. (2.5 SCFH) or more

5. If the purge flow volume is less thah the standard value, check it again with the vacuum hose disconnected from the EVAP canister.
   If the purge flow volume is below the standard values, check for blockages in the vacuum port and vacuum hose, and also check the evaporative emission purge solenoid and the purge control valve.
   If the purge flow volume is at the standard value, replace the EVAP canister.

PURGE CONTROL SYSTEM CHECK (PURGE FLOW CHECK) <2.4L ENGINE>

17300140272

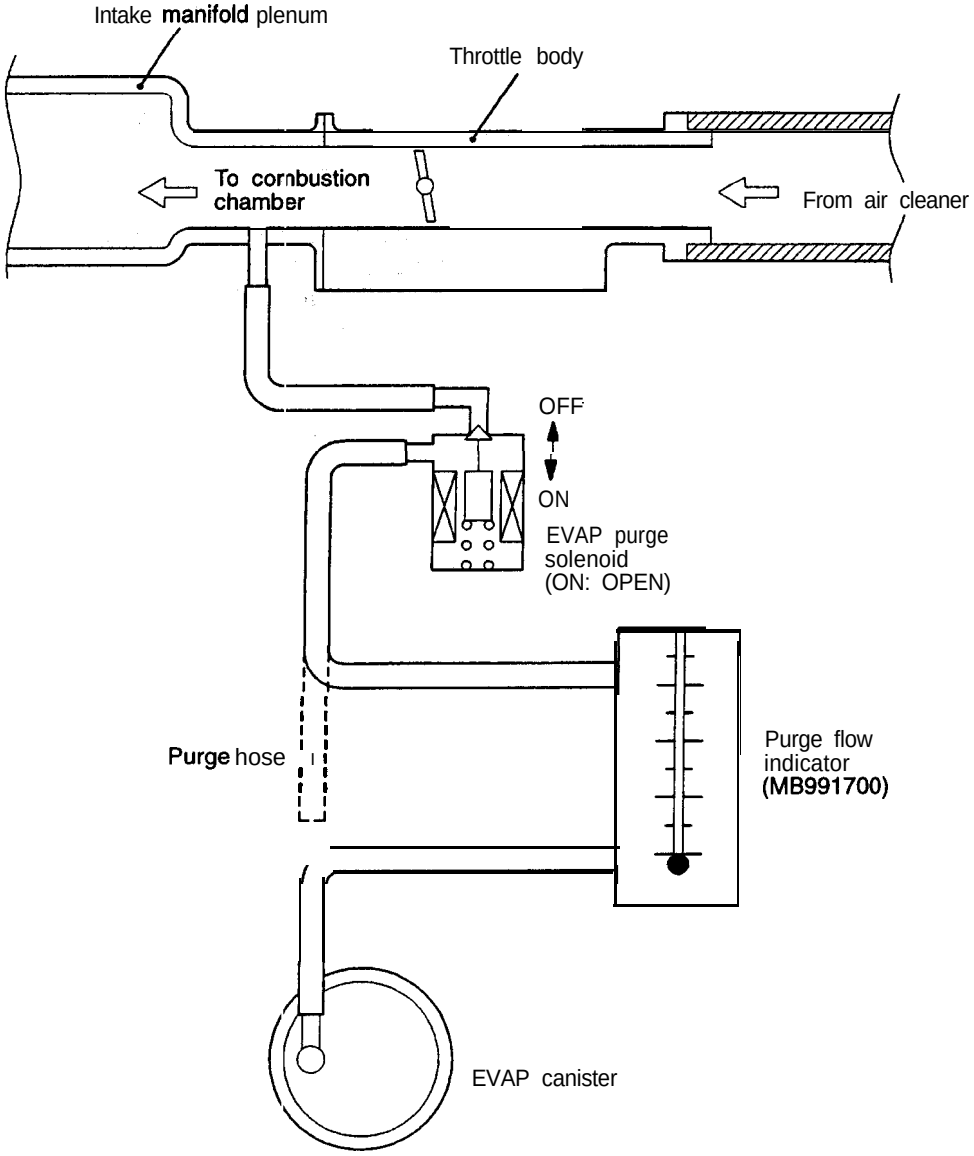

1. Disconnect the purge hose from the evaporative emission (EVAP) canister, and connect the special tool (purge flow indicator) between the EVAP canister and the purge hose.
2. The vehicle should be prepared as follows before the inspection and adjustment.
   - Engine coolant temperature: 80–95°C (176–203°F)
   - Lights, cooling fan and accessories: OFF
   - Transaxle: Neutral (A/T for P range)
3. Run the engine at idle for 4 minutes or more.

TSB Revision

4. Check the purge flow volume when sudden braking is carried out several' times.

   Standard value: Momentarily 20 cm^3/sec. (2.5 SCFH) or more

5. If the purge flow, volume 'is less than the standard value, check it again with the vacuum hose disconnected from the EVAP canister.
   If the purge flow volume is below the standard values, check for blockages in the vacuum port and vacuum hose, and also check the evaporative emission purge solenoid and the purge control valve.
   If the purge flow volume is at the standard value, replace the EVAP canister.

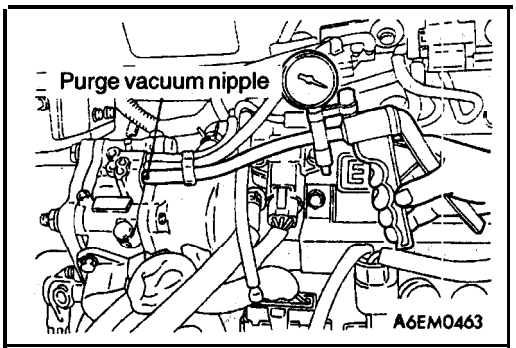

PURGE PORT VACUUM CHECK

17300150213

<2.0L Engine (Turbo)>

1. Disconnect the vacuum hose from the throttle body purge vacuum nipple and connect a hand vacuum pump to the nipple.

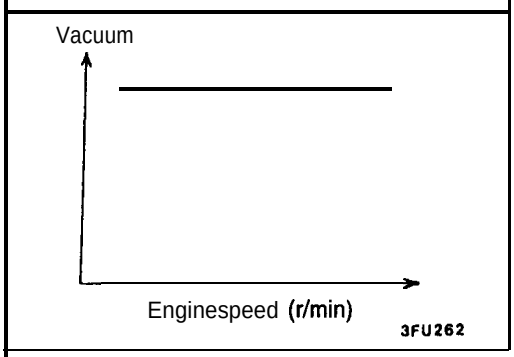

2. Vacuum is kept constant despite the increased engine speed.

   NOTE
   If no vacuum is generated, the throttle body purge port may be clogged.

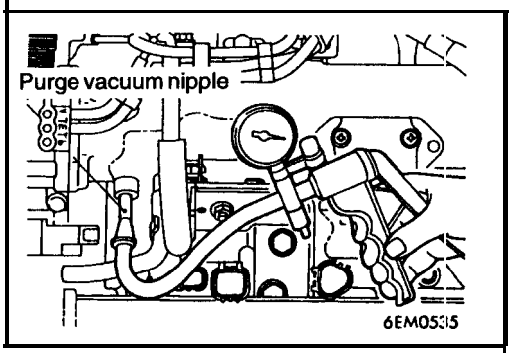

<2.4L Engine (Turbo)>

1. Disconnect the vacuum hose from the intake manifold purge vacuum nipple and connect a hand vacuum pump to the nipple.

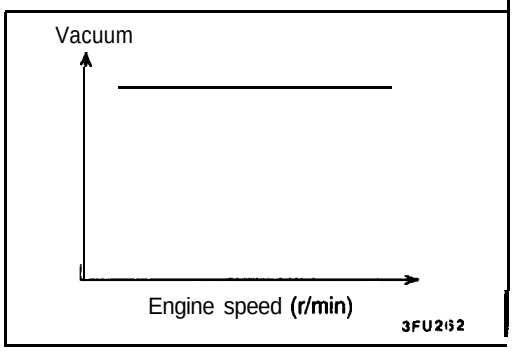

2. Vacuum is kept constant despite the increased engine speed.

   NOTE
   If no vacuum is generated, the intake manifold purge port may be clogged.

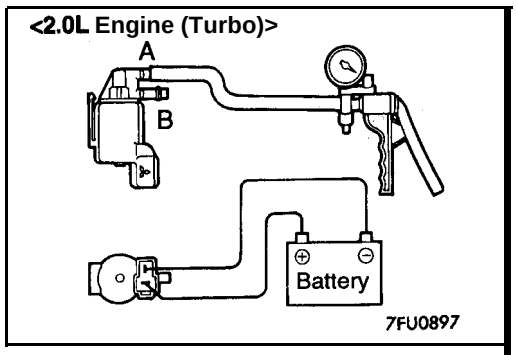

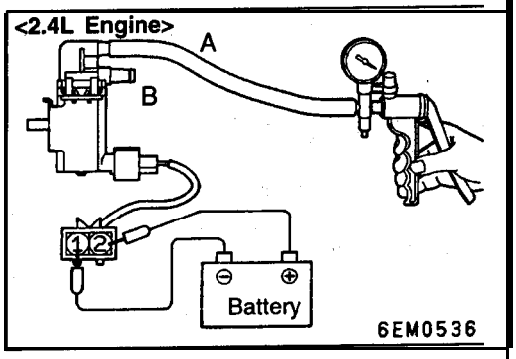

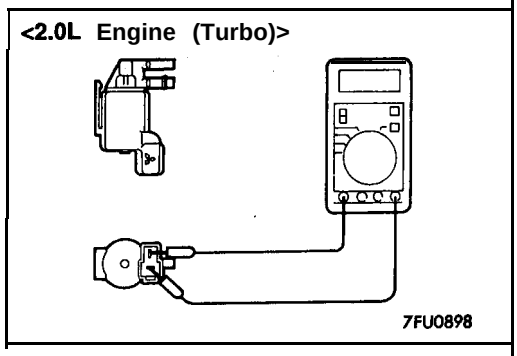

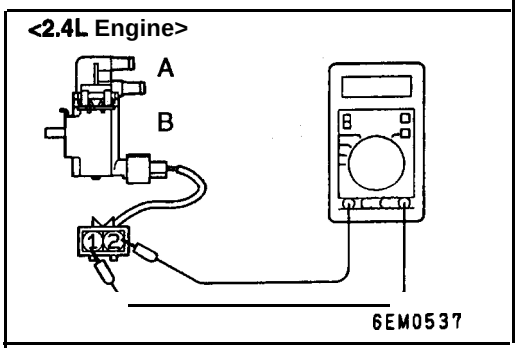

EVAPORATIVE EMISSION PURGE --SOLENOID CHECK

17300170202

NOTE
When disconnecting the vacuum hose, place an identification mark on it for proper reconnection.

1. Disconnect the vacuum hose from the solenoid valve.
2. Disconnect the harness connector.
3. Connect a hand vacuum pump to nipple (A) of the solenoid' valve (refer to the illustration at left).
4. Check air-tightness by applying a vacuum with voltage applied directly from the battery to the purge control solenoid. valve.

Battery voltage	Normal condition
Applied	Vacuum leaks
Not applied	Vacuum maintained

5. Measure the resistance between the terminals of the solenoid valve.

   Standard value: 36-44 Ω [at 20°C (68°F)]

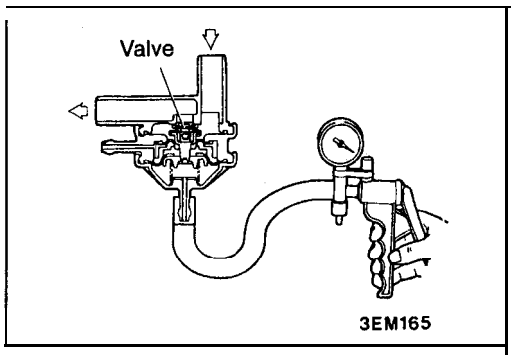

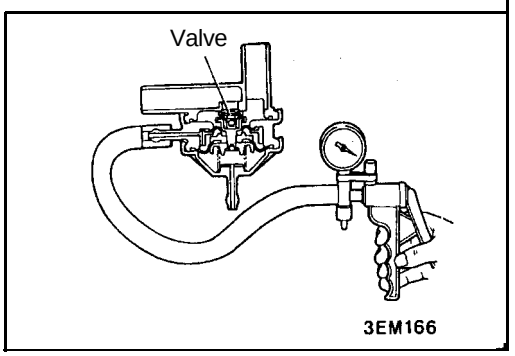

PURGE CONTROL VALVE <2.0L Engine (Turbo)>

17300160025

1. Remove the purge control valve.
2. Connect a hand vacuum pump to the vacuum nipple of the purge control valve.
3. Apply a vacuum of 53 kPa (16 in.Hg.) and check airtightness.
4. Blow in air lightly from the evaporative emission canister side nipple and check conditions as follows.

Hand vacuum pump vacuum	Normal condition
0 kPa (0 in.Hg.) (No vacuum is applied)	Air does not blow through
27 kPa (8.0 in.Hg) or more	Air blow through

5. Connect a hand vacuum pump to the positive pressure nipple of the purge control valve.
6. Apply a vacuum of 53 kPa (16 in.Hg) and check airtightness.

VOLUME AIR FLOW SENSOR, ENGINE COOLANT TEMPERATURE SENSOR AND INTAKE AIR TEMPERATURE SENSOR

17300180120

Refer to GROUP 13A – Troubleshooting.

AIR CONDITIONING SWITCH

17300200048

Refer to GROUP 55 – Air Conditioning Switch.

EVAPORATIVE EMISSION CANISTER/FUEL TANK PRESSURE RELIEF VALVE/PURGE CONTROL VALVE

17300480138

REMOVAL AND INSTALLATION

<2.0L Engine (Turbo)>

Pre-removal and Post-installation Operation
Battery Removal and Installation

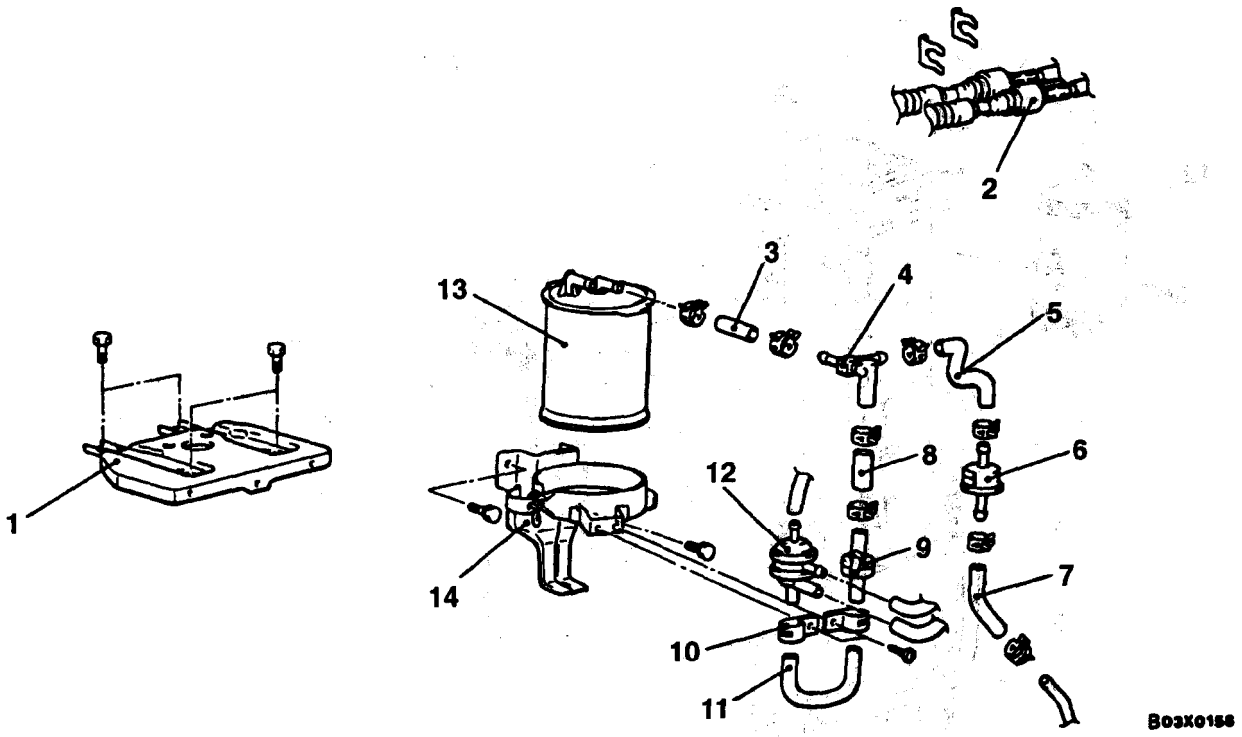

Removal steps

1. Battery bracket
2. Shift cable and select cable connection
3. Vapor hose
4. Connector
5. Vapor hose
▶A◀ 6. Fuel tank pressure relief valve
7. Vapor hose
8. Vapor hose
9. Check valve
10. Clamp'
11. Purge hose
12. Purge control valve
13. Evaporative emission canister
14. Evaporative emission canister holder assembly

TSB Revision

<2.4L Engine>

Pre-removal and Post-installation Operation
Splash Shield (R.H.) Removal and installation (Refer to GROUP 42 – Fender)

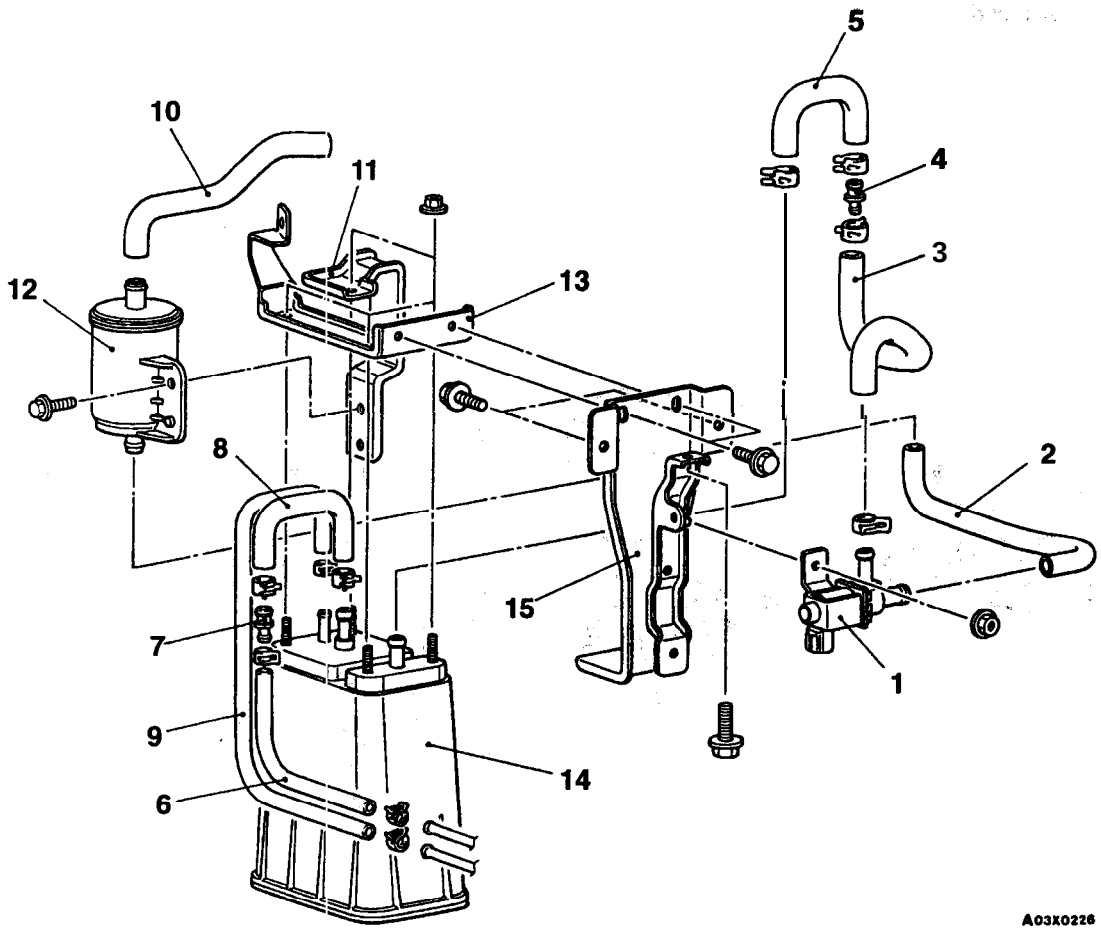

Removal steps

1. Evaporative emission ventilation
2. Vent hose
3. Vent hose
4. Connector
5. Vent hose
6. Vapor hose
7. Connector
8. Evaporative emission purge hose
9. Vapor hose
10. Vent hose
11. Filter bracket
12. Air filter
13. Evaporative emission canister upper bracket
14. Evaporative emission canister
15. Evaporative emission canister bracket

TSB Revision

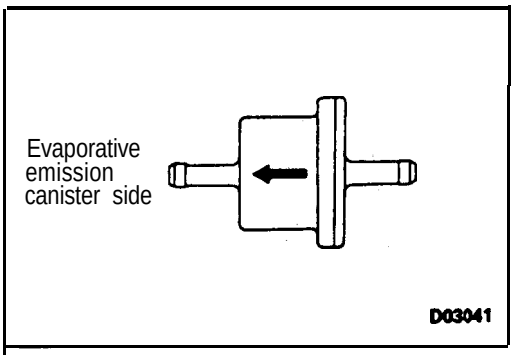

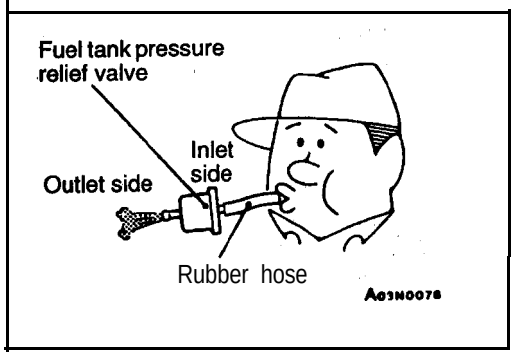

INSTALLATION SERVICE POINT

▶A◀ FUEL TANK PRESSURE RELIEF VALVE INSTALLATION

Install the fuel tank pressure relief valve in the direction shown on the left.

INSPECTION

17300460057

FUEL TANK PRESSURE RELIEF VALVE SIMPLE CHECK

WARNING

To avoid bodily injury, do not breathe fuel vapors.

Attach a clean hose and check the operation of the fuel tank pressure relief valve.

Inspection procedure	Normal condition
Lightly blow from inlet side (fuel tank side).	Air passes through with a slight feeling of resistance.
Lightly blow from outlet side.	Air passes through with no resistance,

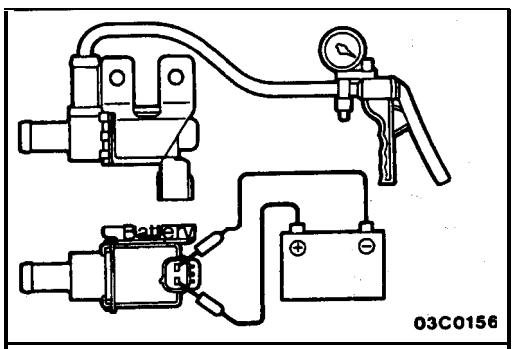

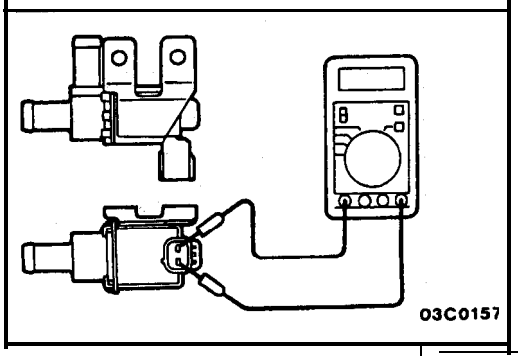

EVAPORATIVE EMISSION VENTILATION SOLENOID CHECK

(1) Connect a hand vacuum pump to nipple (A) of the solenoid.

(2) Check airtightness by applying a vacuum with voltage applied directly from the 'battery to the evaporative emission ventilation solenoid. and 'without applying voltage.

Battery voltage	Normal condition
Applied	Vacuum maintained
Not applied	Vacuum leaks

(3) Measure the resistance between the terminals of the solenoid.

Standard value: 17-21 Ω (at 20°C (68°F)]

EXHAUST GAS RECIRCULATION (EGR) SYSTEM

17300520205

GENERAL INFORMATION

The exhaust gas recirculation (EGR) system lowers the nitrogen oxide (NOx) emission level. When the air/fuel mixture combustion temperature is high, a large quantity of nitrogen oxides (NOx) is generated in the combustion chamber. Therefore, this system recirculates part of emission gas from the exhaust port of the cylinder head to the combustion chamber through the intake manifold to decrease the air/fuel mixture combustion temperature, resulting in reduction of NOx.

The EGR flow rate is controlled by the EGR valve so as not to decrease the driveability.

OPERATION

When the engine coolant temperature is low, when the engine is at idle or when a wide open throttle operation is performed, the EGR valve is kept closed, achieving no EGR.

In normal vehicle operation performed after warming up of the engine, the EGR valve is opened to carry out EGR.

The manifold differential pressure sensor is located in the intake manifold plenum. This sensor detects variations in the manifold negative pressure when the EGR solenoid is momentarily operated. If the manifold negative pressure changes, the EGR system is normal.

The ECM uses this to check the operation of the, EGR system. If a problem is found, the check engine/malfunction indicator light illuminates to warn the driver that a problem has occurred.

SYSTEM DIAGRAM

<2.0L Engine (Turbo)>

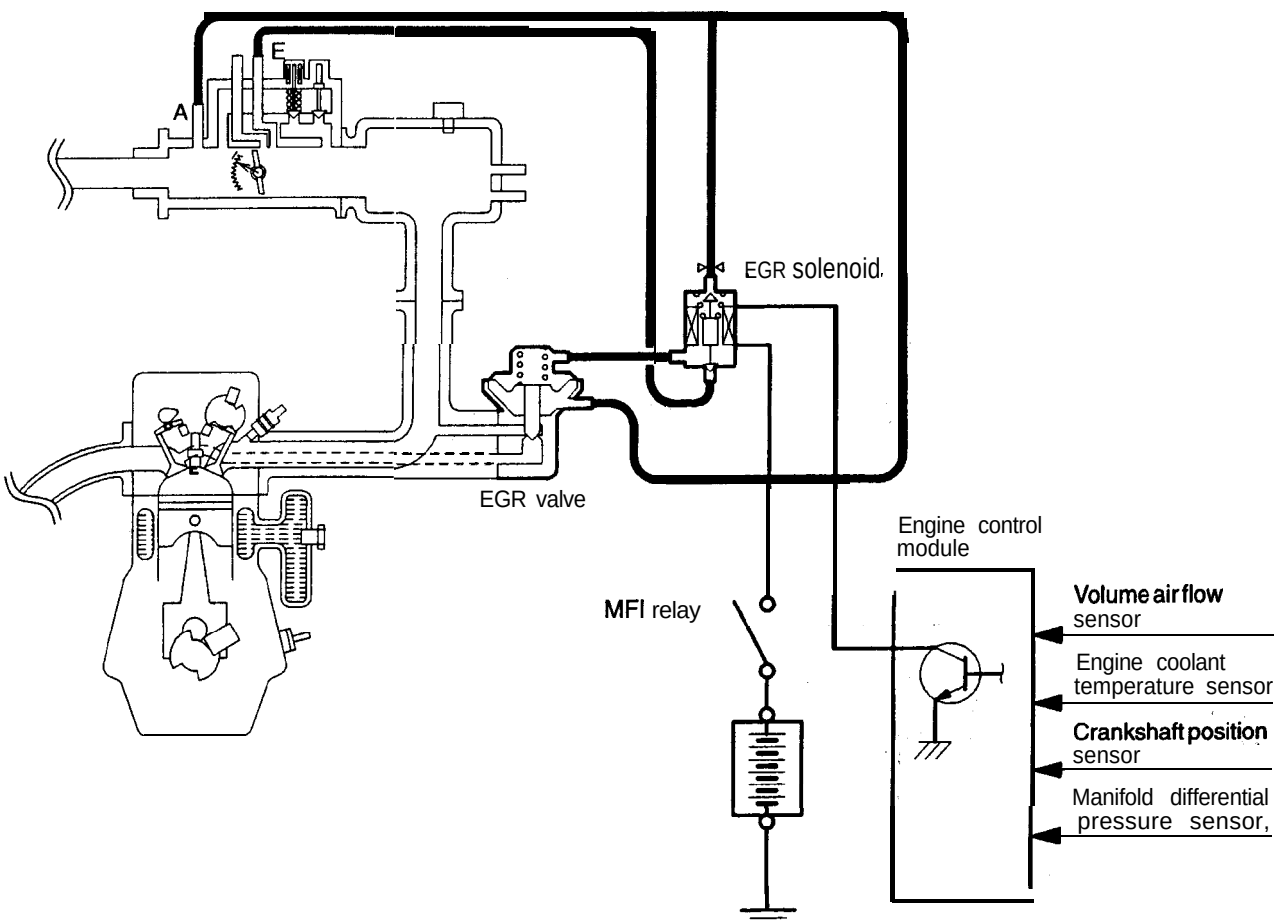

TSB Revision

6EM0464

<2.4L Engine>

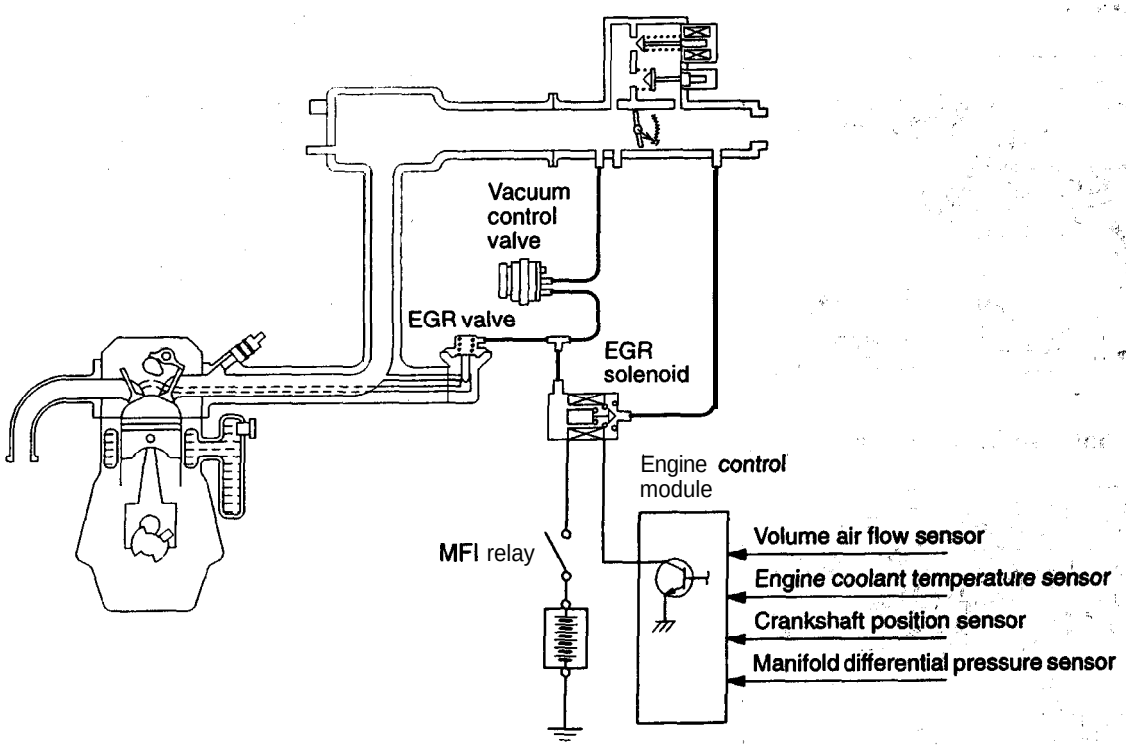

6EM0492

COMPONENT LOCATION
<2.0L Engine (Turbo)>

EGR solenoid

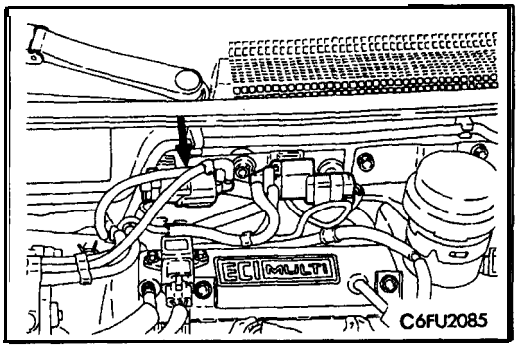

EGR valve

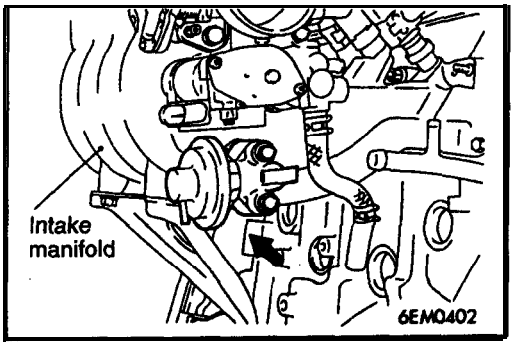

Manifold differential pressure sensor

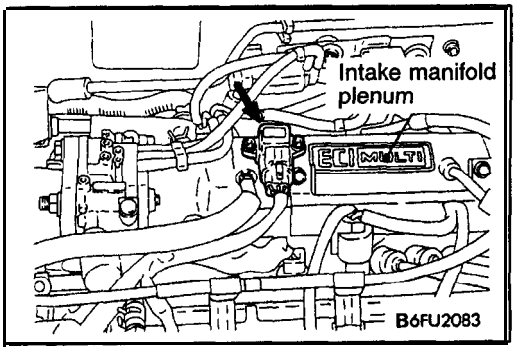

TSB Revision

<2.4L Engine>

EGR solenoid

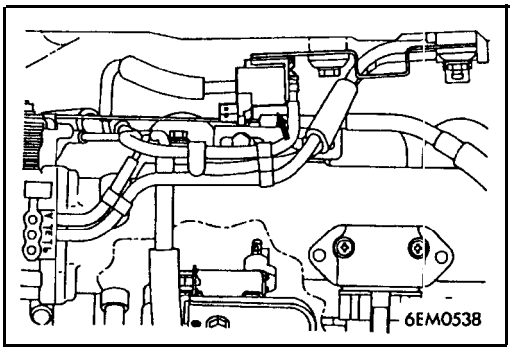

EGR valve

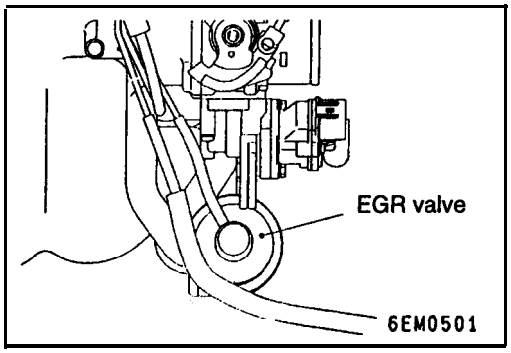

Manifold differential pressure sensor

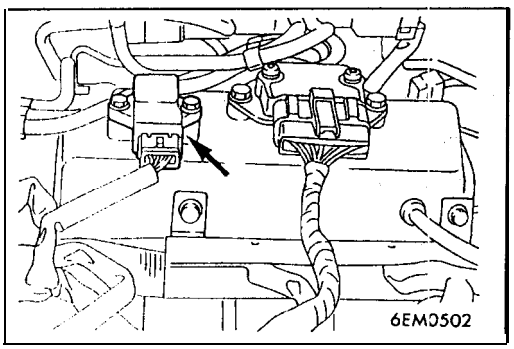

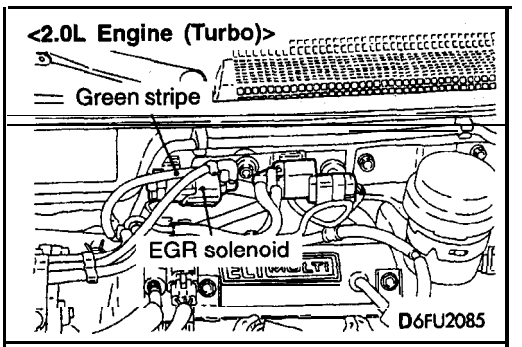

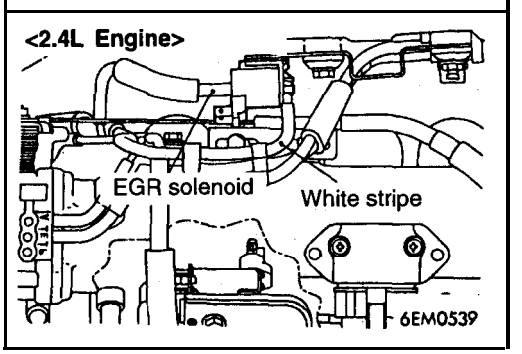

EGR SYSTEM CHECK

17300260220

1. Disconnect the vacuum hose (green stripe <2.0L Engine (Turbo)>, white stripe <2.4L Engine>) from the EGR solenoid, and then connect a hand vacuum pump via the three-way terminal.
2. Regarding the engine in cold and hot conditions, check the condition of vacuum when a rapid racing has been performed by opening the throttle valve quickly.

When engine is cold
[Engine coolant temperature: 20°C (68°F) or less]

Throttle valve	Normal vacuum condition
Open quickly	No vacuum will generate (remained as barometric pressure).

When engine is hot
[Engine coolant temperature: 80°C (176°F) or higher]

Throttle valve	Normal vacuum condition
Open quickly	It will momentarily *rise over* 13 kPa (3.9 in.Hg)

3. Disconnect the three-way terminal.
4. Connect the hand vacuum pump directly to the EGR valve.
5. Check whether the engine stalls or if the idle is unstable when a vacuum of 27 kPa (7.9 in.Hg) or higher is applied while idling.

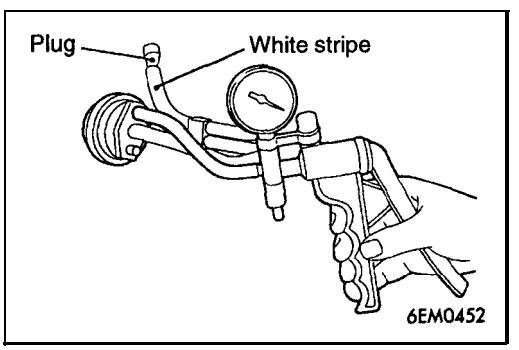

VACUUM CONTROL VALVE CHECK <2.4L Engine>

17300270025

1. Disconnect the vacuum hose (white stripe) from the vacuum control valve and connect the hand vacuum pump to the vacuum control valve.
2. Put the blind plug to the removed vacuum hose.
3. Start the engine and run at idle.
4. Check the vacuum condition.

Engine condition	Normal vacuum condition
Idling	Approx. 23 kPa (6.7 in.Hg)

EGR VALVE CHECK

17300280059

1. Remove the EGR valve and inspect for sticking, carbon deposits, etc. If contaminants are found, clean the valve with a suitable solvent so it will seat correctly.

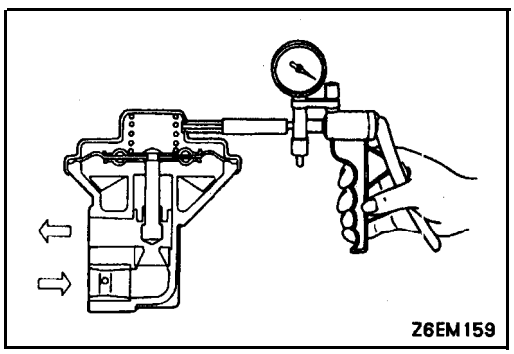

2. Connect a hand vacuum pump to the EGR valve.
3. Apply 67 kPa (20 in.Hg) of vacuum, and check to be sure that the vacuum is maintained.
4. Apply vacuum according to the cahrt below and check the passage of air by blowing through either side of the EG R passages.

Vacuum	Passage of air
5.3 kPa (1.6 in.Hg) or less	Air does not blow out of opposite passage.
27 kPa (7.9 in.Hg) or more	Air blows out of opposite passage.,

5. Replace the gasket, and tighten the valve to the specified torque.

   Specified torque: 22 Nm (16 ft.lbs.)

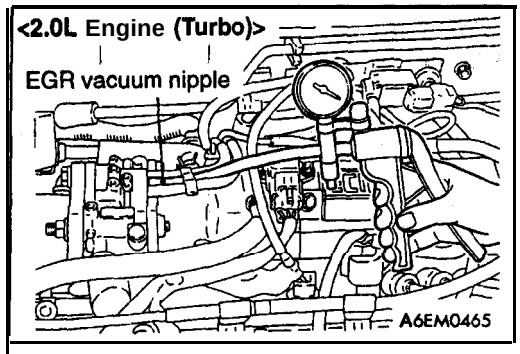

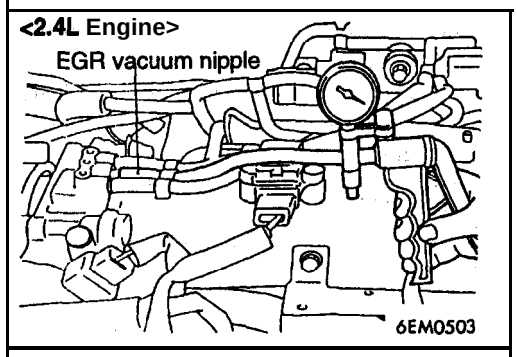

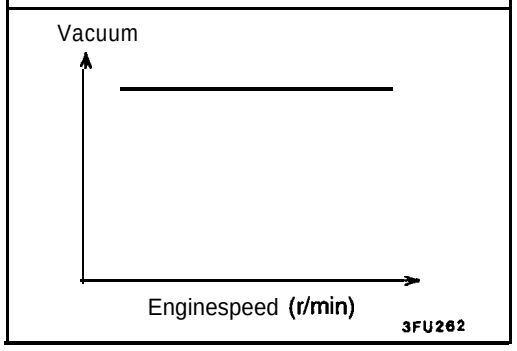

EGR PORT VACUUM CHECK

17300290076

1. Disconnect the vacuum hose (white stripe <2.0L Engine (Turbo)>, green stripe <2.4L Engine>) from the throttle body EGR vacuum nipple. Connect a hand vacuum pump to the nipple.

2. Start the engine and gradually raise the speed.' The vacuum reading on the pump should remain **constant.**

   NOTE
   If no vacuum is generated, the throttle body purge port may be clogged.

EGR SOLENOID CHECK <2.0L Engine (Turbo)>

17300310032

NOTE
When disconnecting the vacuum' hose, place an identification mark on it for proper reconnection.

1. Disconnect the vacuum hose (yellow stripe, white stripe, green stripe) from the solenoid valve.
2. Disconnect the harness connector.

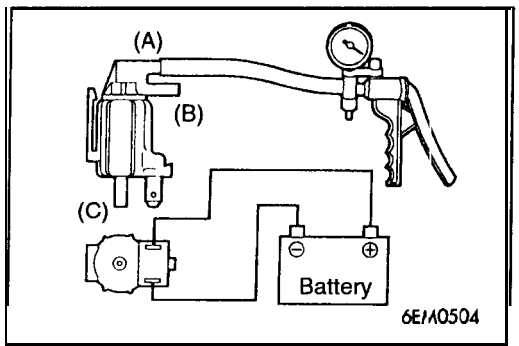

3. Connect a hand vacuum pump to the nipple to which the white-striped vacuum hose was connected.
4. Check air tightness by applying a vacuum with voltage applied directly from the battery to the EGR control solenoid valve and without applying voltage.

Battery voltage	B Nipple condition	Normal condition
Not applied	Open	Vacuum maintained
Applied	Open	Vacuum leaks
	Closed	Vacuum maintained

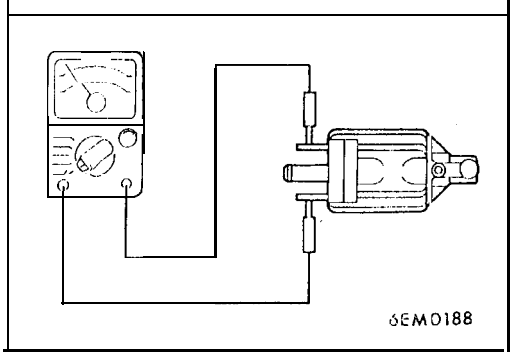

5. Measure the resistance between the solenoid valve terminals.

Standard value: 36–44Ω [at 20°C (68°F)]

EGR SOLENOID CHECK <2.4L Engine> 17300310079

NOTE
When disconnecting the vacuum hose, place an identification mark on it for proper re-connection.

1. Disconnect the vacuum hose (yellow stripe; white stripe) from the solenoid valve;
2. Disconnect the harness connector.

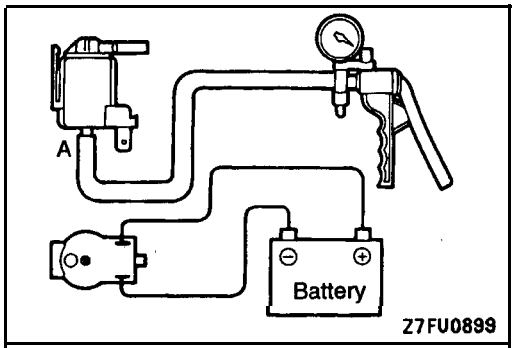

3. Connect a hand vacuum pump to the A nipple.
4. Check air tightness by applying a vacuum with voltage applied directly from the battery to the EGR solenoid and without applying voltage

Battery voltage	Normal condition
Applied	Vacuum maintained
Not applied	Vacuum leaks

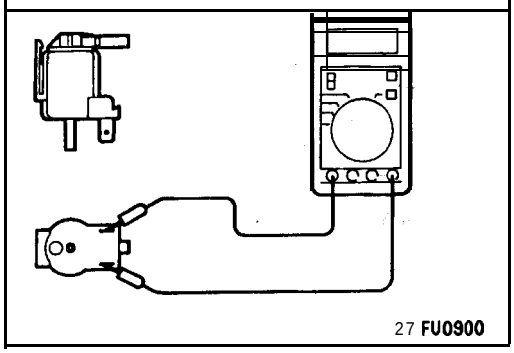

5. Measure the resistance between the terminals of the solenoid valve.

   Standard value: 36–44Ω [at 20°C (68°F)]

CATALYTIC CONVERTER

17399939993

GENERAL INFORMATION

The three-way catalytic converter, together with the closed loop air-fuel ratio control (based on the oxygen sensor signal) oxidizes carbon monoxides (CO) and hydrocarbons (HC), and reduces nitrogen oxides (NOx).

When the mixture is controlled at stoichiometric air-fuel ratio, the three-way catalytic converter provides the highest purification against CO, HC, and NOx.

REMOVAL AND INSTALLATION

17300390080

Pre-removal and Post-installation Operation
Under Cover Removal and Installation (Refer to GROUP 42–Under Cover.)

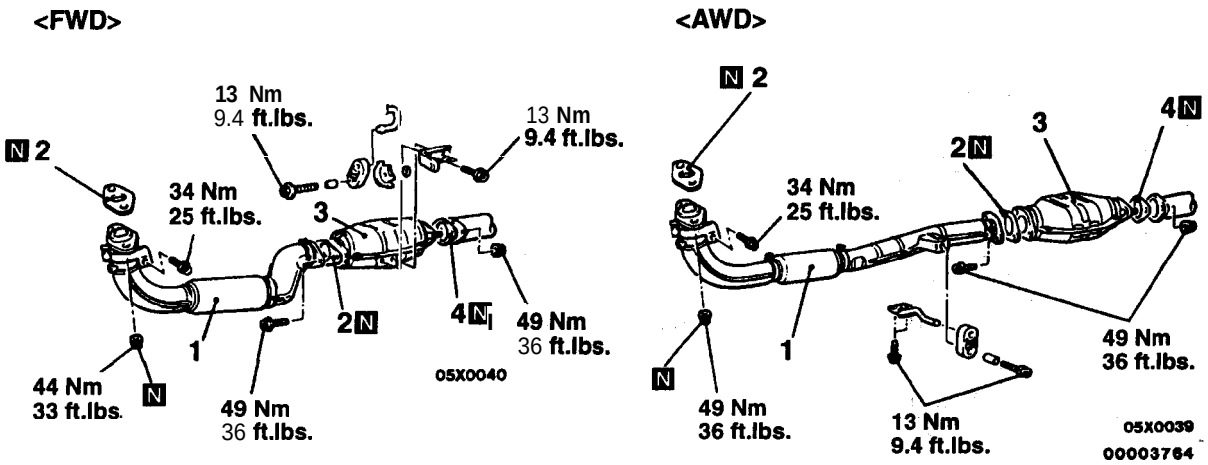

Removal steps

1. Front exhaust pipe
2. Gasket
3. Catalytic converter
4. Gasket

INSPECTION

17300400059

Check for damage, cracking or deterioration. Replace if faulty.

Caution

1. **Stop the engine immediately if engine misfiring occurs, otherwise an abnormally hot exhaust system will damage the catalytic converter or other underbody parts.**
2. **Correct and repair the ignition or fuel system if there are malfunctions, otherwise engine misfiring may occur which will damage the catalytic converter.**
3. **Observe manufacturer's specifications when doing service work.**

CLUTCH

CONTENTS

21109000084

NOTES

CLUTCH

CONTENTS

21109000091

GENERAL INFORMATION

21100010062

The clutch is a dry single-disc, diaphragm type; hydraulic pressure is used for the clutch control.

Items	2.0L Engine (Non-turbo)	2.0L Engine (Turbo)	2.4L Engine
Clutch operating method	Hydraulic type	Hydraulic type	Hydraulic type
Clutch disc type	Single dry disc type	Single dry disc type	Single dry disc type
Clutch disc facing diameter O.D. × I.D. mm (in.)	228 × 150 (9.0 × 5.9)	225 × 150 (8.9 × 5.9)	225 × 150 (8.9 × 5.9)
Clutch cover type	Diaphragm spring strap drive type	Diaphragm spring strap drive type	Diaphragm spring strap drive type
Clutch cover setting load N(lbs.)	4,400 (989)	6,174 (1,388)	4,600 (1,014)
Clutch release cylinder I.D. mm (in.)	22.23 (7/8)	20.64 (13/16)	20.64 (13/16)

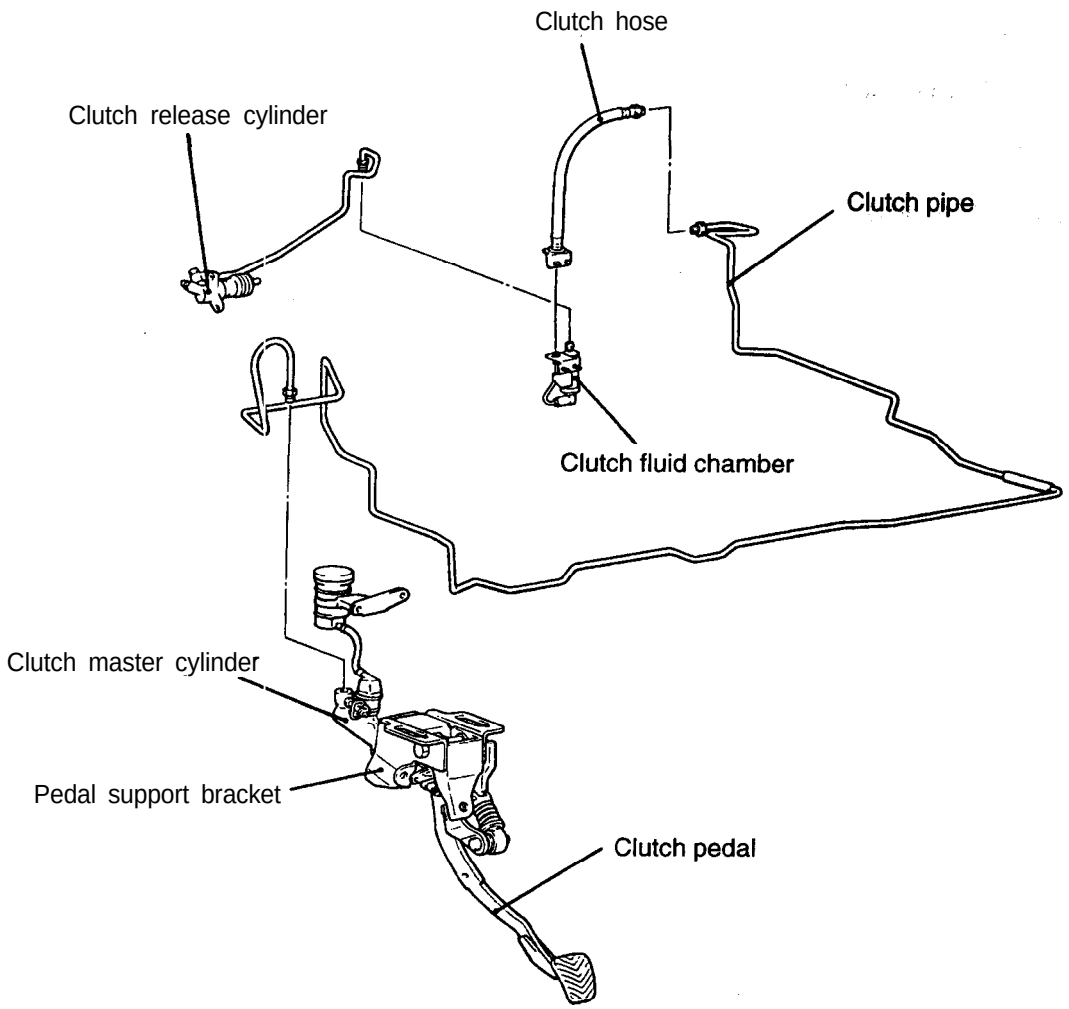

B08X0037

NOTE
This figure shows 2.0L Engine (Turbo).

TSB Revision

SERVICE SPECIFICATIONS

21100030068

Items	Standard value
Clutch pedal height mm (in.)	175–180 (7.0–7.1)
Clutch pedal clevis pin play mm (in.)	1–3 (.04–.12)
Clutch pedal free play mm (in.)	6-13 (.24–.51)
Distance between the clutch pedal and the firewall when the clutch is disengaged mm (in.)	70 (2.76) or more

LUBRICANTS

21100040054

Items	Specified lubricants	Quantity
Clutch fluid	Brake Fluid DOT 3 or DOT 4	As required
Push rod assembly	Rubber grease	As required
Boot		
Release cylinder push rod	MITSUBISHI genuine grease Part No. 0101011 or equivalent	As required
Clutch pedal shaft, bushings and end of the pedal	Brake grease SAE J310, NLGI No. 1	As required
Clutch master cylinder push rod, clevis pin and washer		
Clutch release cylinder clevis pin		

TROUBLESHOOTING

21199979939

Symptom	Probable cause	Remedy
Clutch slips	Insufficient clutch pedal play	Adjust
	Excessive wear of clutch disc facing	Replace
	Hardening of clutch disc facing, or adhesion of oil	Replace
	Clutch release fork catching	Repair or replace parts
	Weak or damaged diaphragm spring	Replace
	Clogging of hydraulic system	Repair or replace parts
Gear shift malfunction	Excessive clutch pedal play	Adjust
	Distorted clutch disc, excessive oscillation	Replace
	Clutch cover assembly worn	Replace
	Clutch disc spline worn or corroded	Replace
	Clutch disc facing peeling	Replace
	Clutch release bearing worn	Replace
	Damaged pressure plate or flywheel	Replace
	Leakage, air mix or clogging of hydraulic system	Repair or replace parts
Clutch noise	Insufficient clutch pedal play	Adjust
	Improper installation of clutch cover assembly	Repair or replace parts
	Excessive wear of clutch disc facing	Replace
	Clutch release fork catching	Repair or replace parts
	Clutch release bearing worn	Replace
	Weak or damaged torsion spring	Replace
	Damaged pilot bushing	Replace
	Insufficient lubrication of bearing sleeve sliding surface	Repair
Clutch pedal feels "heavy"	Insufficient lubrication of clutch pedal	Repair
	Insufficient lubrication of clutch disc spline	Repair
	Clutch release fork catching	Repair or replace parts
	Insufficient lubrication of bearing sleeve sliding surface	Repair
Worn or damaged clutch disc facing	Worn or damaged clutch disc facing	Replace
	Oil adhered to clutch disc facing	Replace
	Uneven height of diaphragm spring	Repair or replace parts
	Weak or damaged torsion spring	Replace
	Damaged pressure plate or flywheel	Replace
	Loose or damaged mounting	Replace or tighten mounting

TSB Revision

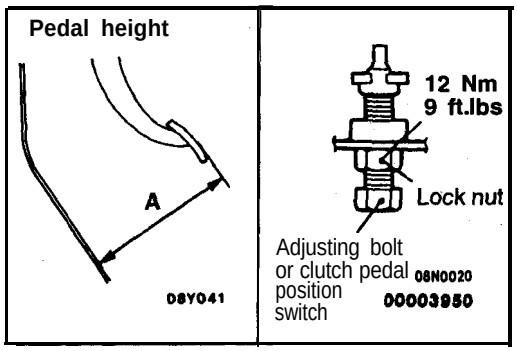

ON-VEHICLE SERVICE

21199999999

CLUTCH PEDAL CHECK AND ADJUSTMENT

1. Turn up the carpet, etc. under the clutch pedal.
2. Measure the clutch pedal height as shown in the figure.

   Clutch pedal height
   Standard value (A): 175–180 mm (7.0–7.1 in.)

3. If the pedal height is not within the standard value, loosen the lock nut and adjust the pedal height to the standard value using the adjusting bolt (vehicles without auto-cruise control), or using the clutch pedal position switch or push rod (vehicles with auto-cruise control).

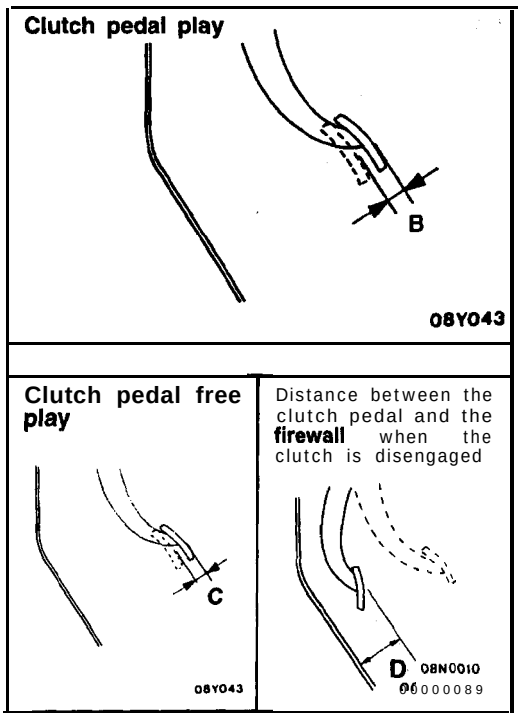

4. Measure the clutch pedal play.

   Clutch pedal play (play at the clevis pin)
   Standard value (B): **1–3 mm (.04–.12 in.)**

5. If the clutch pedal play is outside the **standard value,** adjust with the push rod.

   Caution
   Do not push in the master cylinder push rod at this time.

6. After completing the adjustments, confirm that the clutch pedal free play (measured at the face of the pedal pad) and the distance between. the clutch pedal (the face of the pedal pad) and the firewall when the clutch is disengaged are within the standard value ranges...

   Clutch pedal free play (including the clevis pin play)
   Standard value (C): 6-13 mm (.24–.51 in.)

   Distance between the clutch pedal and the firewall when the clutch is disengaged
   Standard value (D): 70 mm (2.76 in.) or more

7. If the clutch pedal free play and the distance between the clutch pedal and the firewall when the clutch is disengaged do not agree with the standard values, it is probably the result of either air in the hydraulic system or a faulty master cylinder or clutch. Bleed the air, or disassemble and inspect the master cylinder or clutch.
8. Turn back the carpet, etc.

INTERLOCK SWITCH OPERATING CHECK

21100100028

1. Lock the front wheels, apply the parking brake and put the shift lever in the 5th gear.
2. After normally adjusting the clutch pedal, check the interlock switch operation as follows:
   (1) The engine should not start even if the ignition switch is turned to "START" position with the clutch pedal not depressed. If the engine should start, check the interlock switch and the harness.
   (2) The engine should start after the clutch has been disconnected while the clutch pedal is depressed with the ignition switch turned to "START" position.
   If the engine should start before the clutch pedal is disconnected or the engine does not start even if the clutch pedal is depressed, adjust the interlock switch.

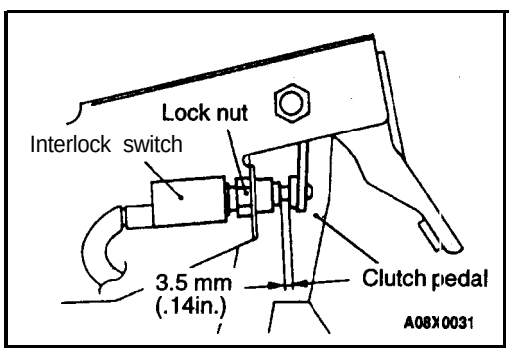

INTERLOCK SWITCH CHECK AND ADJUSTMENT

21100110045

1. Check to be sure that the interlock switch is as shown in the illustration when the clutch pedal is depressed at its full stroke [150 mm (5.9in.)]. If necessary, loosen the lock nut and adjust.

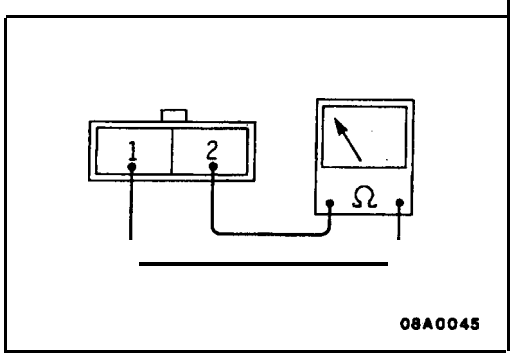

2. Connect an ohmmeter to the interlock switch connector, and then check for continuity when the clutch pedal -is fully depressed and when it is released outward.

Pedal position	Terminal No.	
	1	2
fully depressed		
released	0 ———	———0

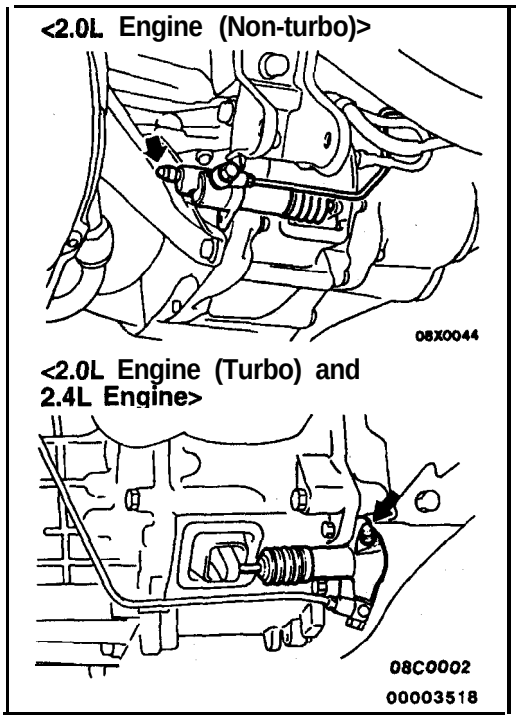

BLEEDING

21100140068

Whenever the clutch tube, the clutch hose, and/or the clutch master cylinder have been removed, or if the clutch pedal is spongy, bleed the system.

Specified brake fluid: DOT 3 or DOT 4

Caution

Use only the specified brake fluid. Do not mix with other fluid.

CLUTCH PEDAL

21100160101

REMOVAL AND INSTALLATION

Pre-removal Operation
- Scuff Plate Removal (Refer to GROUP 52A – Trims.)
- Cowl Side Trim Removal (Refer to GROUP 52A – Trims.)
- Junction Block Installation Boll: Removal

Post-installation Operation
- Clutch Pedal Adjustment (Refer to P.21A-5.)
- Junction Block Installation
- Cowl Side Trim Installation (Refer to GROUP 52A – Trims.)
- Scuff Plate Installation (Refer to GROUP 52A – Trims.)

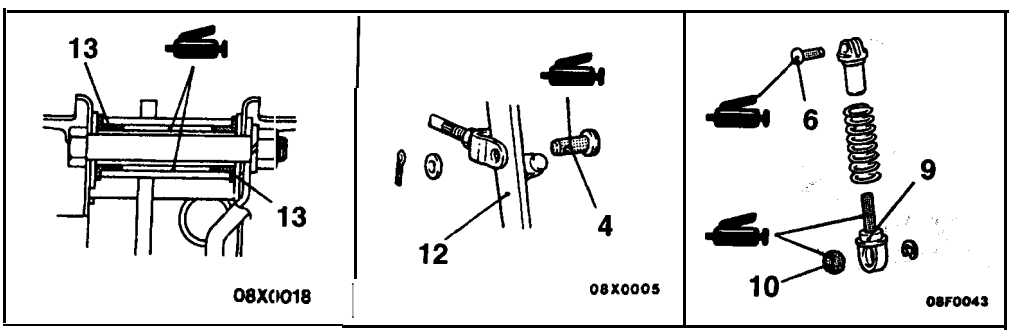

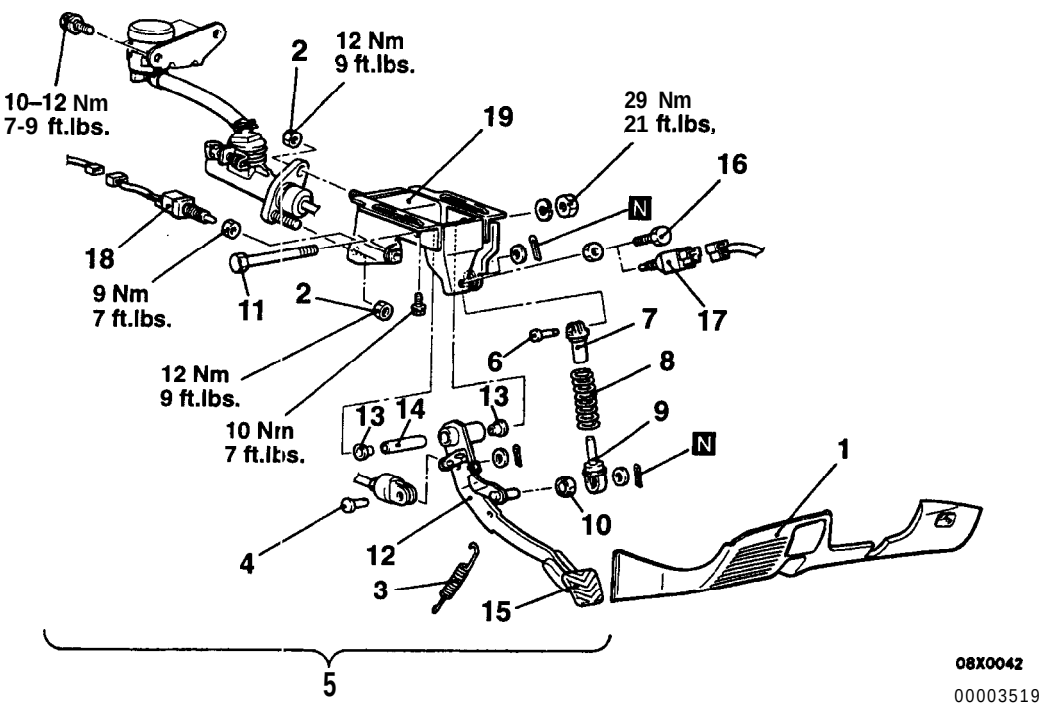

Removal steps

1. Instrument under cover (Refer to GROUP 52A – Instrument Panel.)
2. Master cylinder installation nuts
3. Clutch pedal return spring <2.0L Engine (Non-turbo) and 2.4L Engine>
4. Clevis pin
5. Clutch pedal assembly
6. Clevis pin <2.0L Engine (Turbo)>
7. Rod A <2.0L Engine (Turbo)>
8. Turnover spring <2.0L Engine (Turbo)>
9. Rod B <2.0L Engine (Turbo)>
10. Bushing <2.0L Engine (Turbo)>
11. Bolt
12. Clutch pedal
13. Bushing
14. Spacer
15. Pedal pad
16. Adjusting bolt <Vehicles without clutch pedal position switch>
17. Clutch pedal position switch <Vehicles with clutch pedal position switch>
18. Interlock switch
19. Clutch pedal bracket assembly

TSB Revision

INSPECTION

21100170067

- Check the pedal shaft and bushing for, wear.
- Check the clutch pedal 'for bending or twisting.
- Check the return spring for damage or deterioration.
- Check the turnover spring for damage or deterioration.
- Check the pedal pad for damage or wear.

CLUTCH CONTROL

21100190094

REMOVAL AND INSTALLATION

Pre-removal Operation
- Clutch Fluid Draining

Post-installation Operation
- Clutch Fluid Supplying
- Clutch Line Bleeding (Refer to P.21A-7.)
- Clutch Pedal Adjustment (Refer to P.21A-5.)

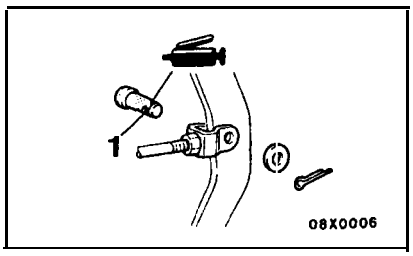

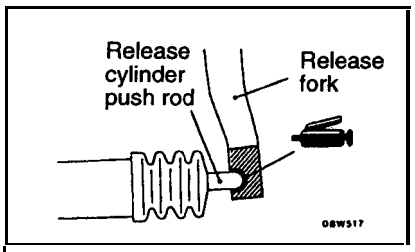

Specified grease:
MITSUBISHI genuine grease
Part No. 0101011 or equivalent

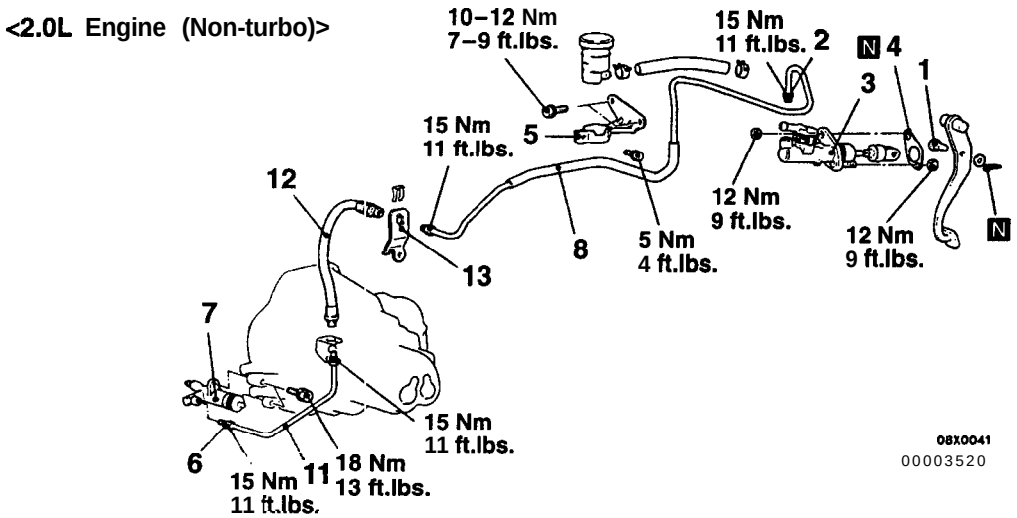

Clutch master cylinder removal steps

1. Clevis pin
2. Clutch pipe connection
3. Clutch master cylinder
4. Sealer
5. Reservoir bracket

Clutch release cylinder removal steps

6. Clutch pipe connection
7. Clutch release cylinder

Clutch line removal steps

8. Clutch pipe
▶A◀ 11. Clutch pipe
◀A▶ ▶A◀ 12. Clutch hose
13. Clutch hose bracket

TSB Revision

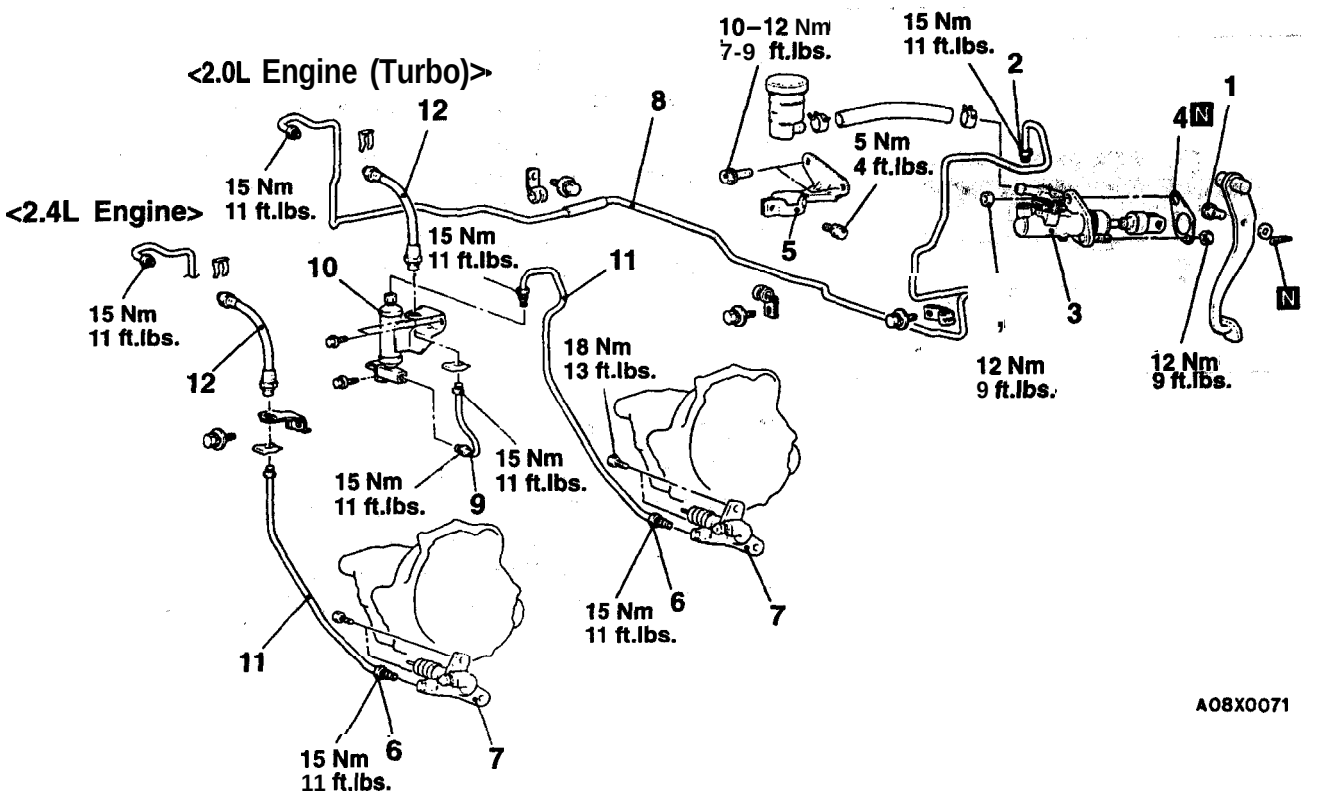

Clutch master cylinder removal steps

1. Clevis pin
2. Clutch pipe connection
3. Clutach master cylinder
4. Sealer
5. Reservoir bracket

Clutch release cylinder removal steps

6. Clutch pipe connection
7. Clutch release cylinder

Clutch line removal steps

8. Clutch pipe
▶A◀ 9. Clutch pipe
10. Clutch fluid chamber
▶A◀ 11. Clutch pipe
◀A▶ ▶A◀ 12. Clutch hose

TSB Revision

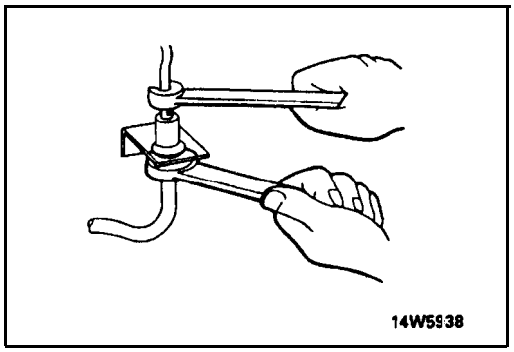

REMOVAL SERVICE POINT

◀A▶ CLUTCH HOSE REMOVAL

Holding the nut at the clutch hose side, loosen the flare nut on the clutch pipe.

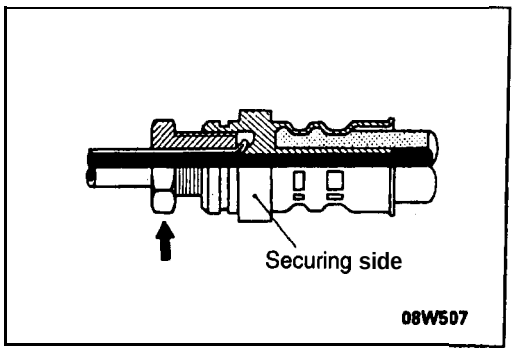

INSTALLATION SERVICE POINT

▶A◀ CLUTCH HOSE/CLUTCH PIPE INSTALLATION

1. Temporarily tighten the clutch pipe flare nut by hand, and then tighten it to the specified **torque,** being careful that the clutch hose does not become twisted.
2. After tightening the clutch pipe flare nut, check to be sure there is no leakage of the clutch fluid.

INSPECTION

21100200063

- Check the pedal shaft bushing for wear.
- Check the pedal arm for bend or torsion.
- Check the turnover spring for deterioration.
- Check the master cylinder or clutch hose for fluid leakage.
- Check the clutch hose or pipe for cracks or clogging.

CLUTCH MASTER CYLINDER

21100210073

DISASSEMBLY AND REASSEMBLY

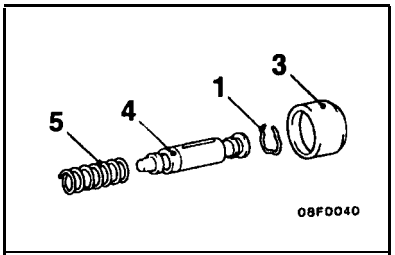

Piston repair kit

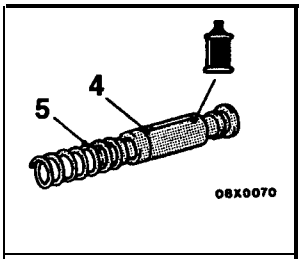

Brake fluid DOT 3 or DOT 4

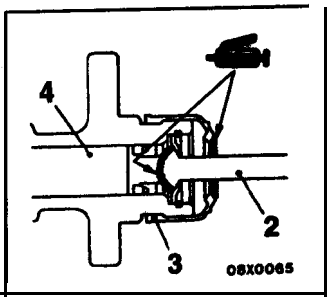

Grease: Rubber grease

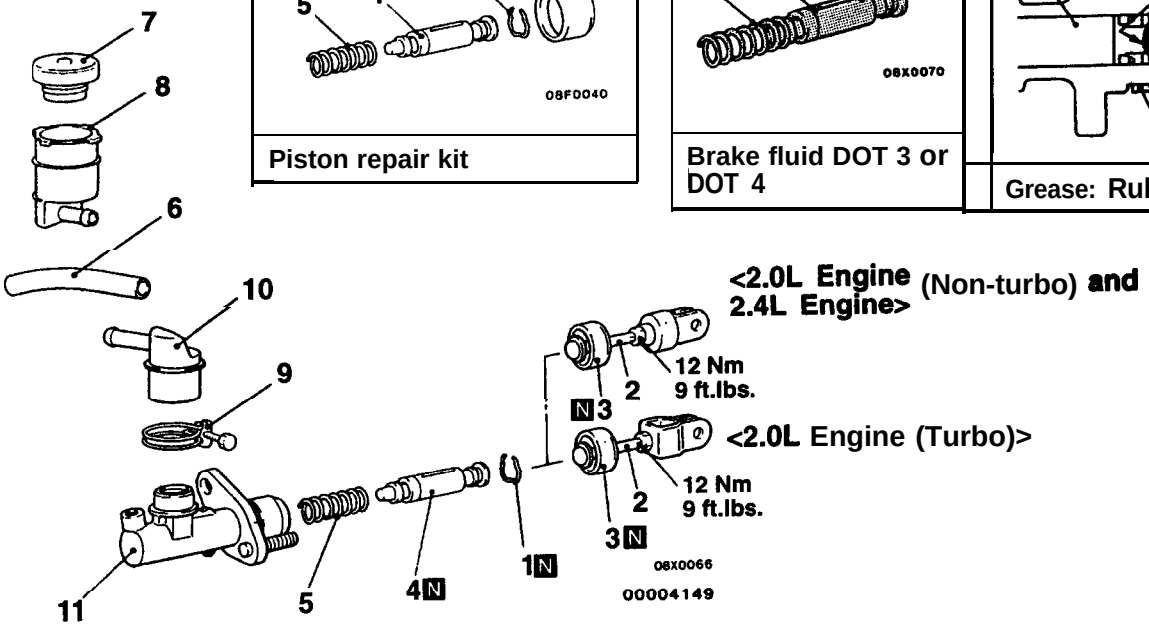

Disassembly steps

1. Piston stopper ring
▶A◀ 2. Push rod assembly
3. Boot
4. Piston assembly
5. Return spring
6. Reservoir hose
7. Reservoir cap
8. Reservoir tank
9. Reservoir band
10. Nipple
11. Clutch master cylinder body

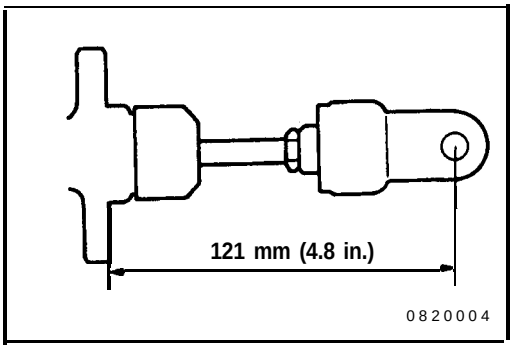

INSTALLATION SERVICE POINT

▶A◀ PUSH ROD ASSEMBLY INSTALLATION

NOTE
Set the length of the push rod assembly to the shown dimension to make the adjustment of the clutch pedal easier.

INSPECTION

21100220045

- Check the inside cylinder body for rust or scars.
- Check the piston cup for wear or deformation.
- Check the piston for rust or scars.
- Check the clutch pipe connection for clogging.

NOTES

CLUTCH OVERHAUL

CONTENTS

21209000087

SPECIFICATIONS

21200030047

SERVICE SPECIFICATION <2.0L Engine (Turbo) and 2.4L Engine>

Items	Limit
Facing rivet sink mm (in.)	0.3 (.012)
Diaphragm spring end height difference mm (in.)	0.5 (.020)

TORQUE SPECIFICATIONS
<2.0L Engine (Turbo) and 2.4L Engine>

Items	Nm	ft. lbs.
Clutch cover bolt	19	14
Release cylinder mounting bolt	19	14
Release cylinder union bolt	23	17
Release cylinder bleeder plug	11	8.0
Release fork fulcrum	36	24
Clutch chamber bracket mounting bolt	19	14
Clutch line tube flare nut	15	11

<2.0L Engine (Non-turbo)>

Item	Nm		ft. lbs.
Drive plate to clutch & flywheel bolt	75		55

LUBRICANTS

21200040040

<2.0L Engine (Turbo) and 2.4L Engine>

Items	Specified lubricants	Quantity
Clutch release cylinder inner surface	Brake Fluid DOT3 or DOT4	As required
Piston and cup of surface		
Release fork fulcrum	Mitsubishi genuine grease Part No. 0101011 or equivalent	As required
Clutch release fork to release cylinder contact surface		
Clutch release bearing inside		
Clutch disc spline		
Clutch release bearing to release fork contact surface		

<2.0L Engine (Non-turbo)>

Items	Specified lubricants	Quantity
Clutch & flywheel assembly spline	Mitsubishi genuine grease Part No. 0101011 or equivalent	As required
Clutch release lever to release cylinder contact surface		
Clutch release lever to release bearing contact surface		

CLUTCH

21200100052

REMOVAL AND INSTALLATION <2.0L Engine (Non-turbo)>

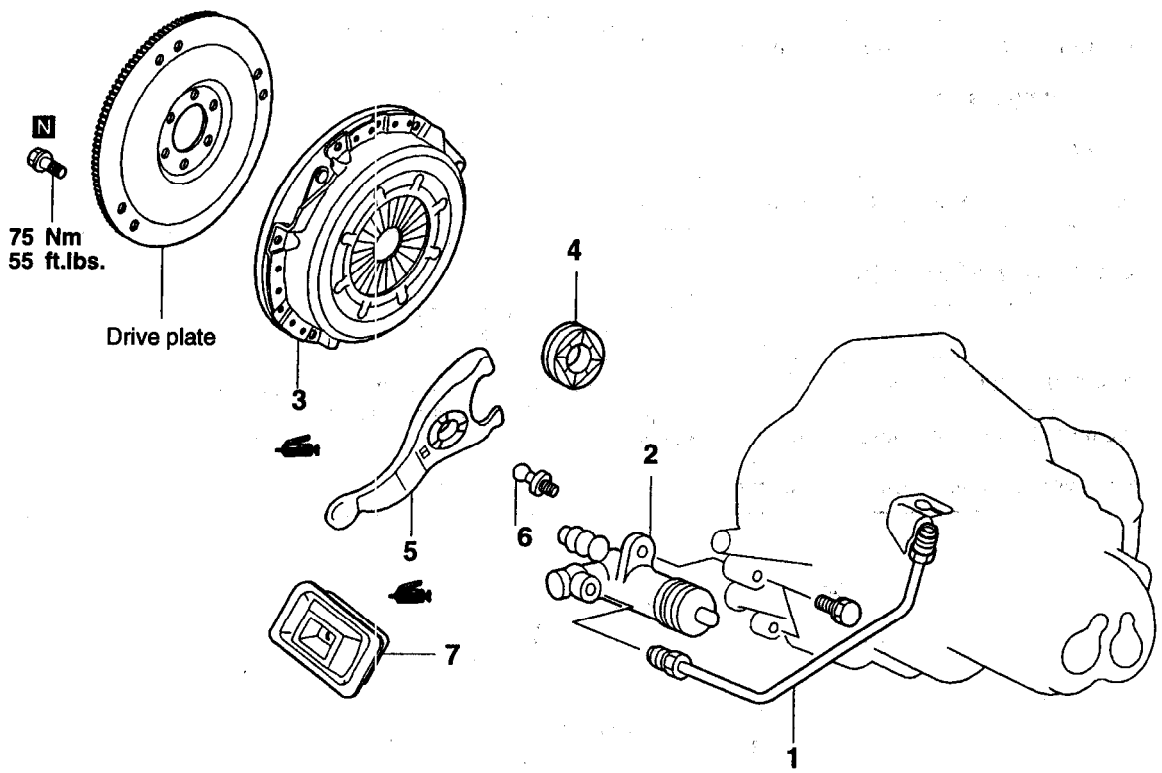

CMT0139

Removal steps

1. Oil tube
2. Clutch release cylinder
3. ▶E◀ Clutch & flywheel assembly
4. Clutch release bearing
5. ▶D◀ Clutch release lever
6. Clutch control equip stud
7. Boot

NOTE
The modular clutch assembly (Clutch & flywheel assembly) used in this vehicle consists of a single, dry-type clutch disc and a diaphragm style clutch cover. The clutch unit is serviced as an assembly. No disassembly is possible.

TSB Revision

REMOVAL AND INSTALLATION <2.0L Engine (Turbo) and 2.4L Engine>

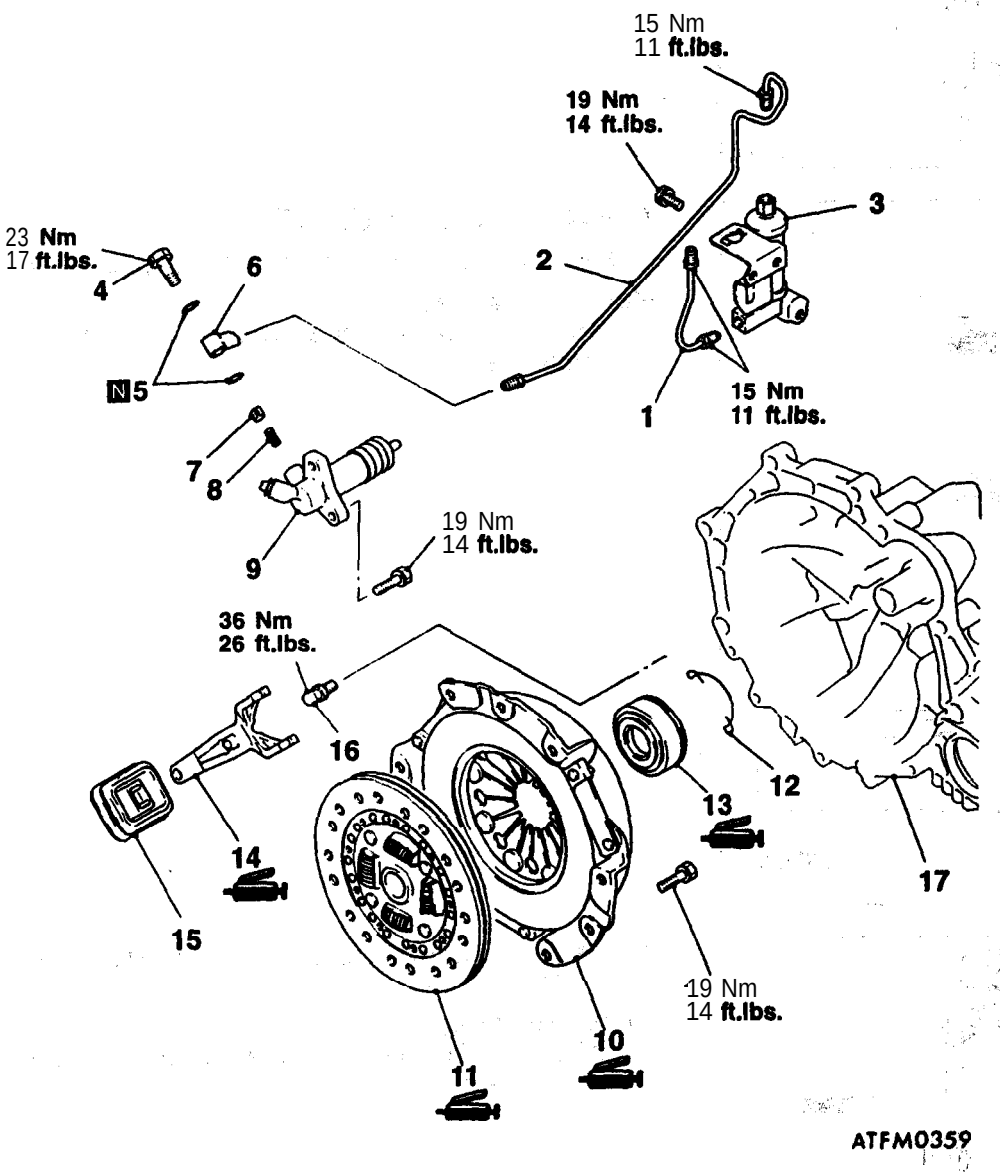

Removal steps

1. Clutch oil tube (A)
2. Clutch oil tube
3. Clutch oil fluid chamber
4. Union bolt
5. Gasket
6. Union
7. Valve plate
8. Valve plate spring
9. Clutch release cylinder
10. Clutch cover ▶C◀
11. Clutch disc ▶C◀
12. Return clip
13. Clutch release bearing ▶B◀
14. Release fork ◀A▶ A◀
15. Release fork boot
16. Fulcrum
17. Transmission

TSB **Revision**

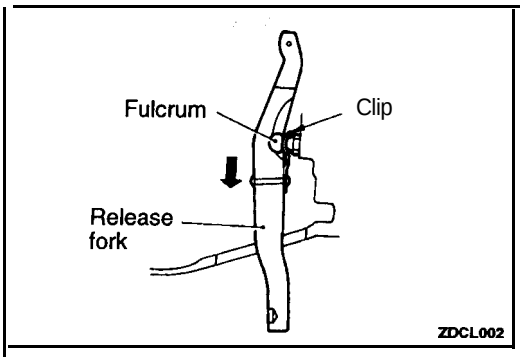

REMOVAL SERVICE POINT

◀A▶ RELEASE FORK REMOVAL

Slide release fork in direction of arrow and disengage fulcrum from clip to remove release fork. Be careful not to cause damage to clip by pushing release fork in the direction other than that of arrow and removing it with force.

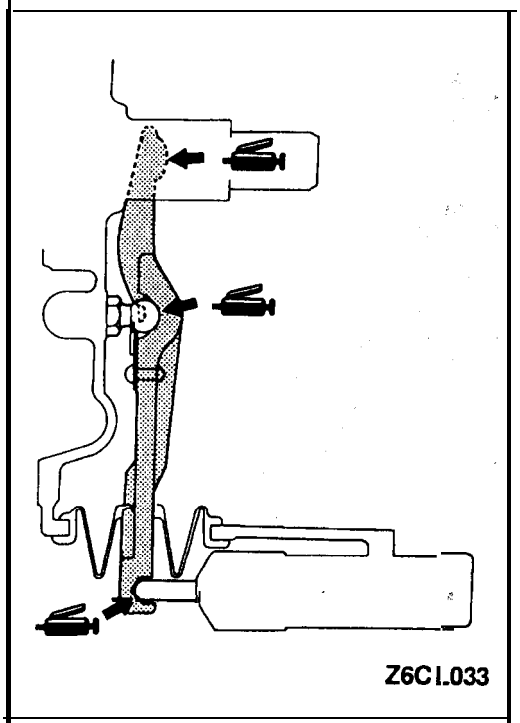

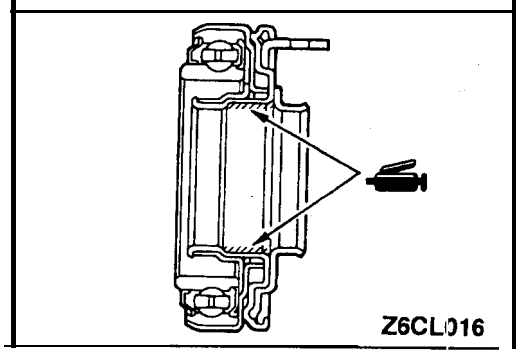

INSTALLATION SERVICE POINTS

▶A◀ GREASE APPLICATION TO RELEASE FORK

Specified grease:

MITSUBISHI genuine grease Part No. 0101011 or equivalent

▶B◀ GREASE APPLICATION TO CLUTCH RELEASE BEARING

Specified grease:

MITSUBISHI genuine grease Part No. 0101011 or equivalent

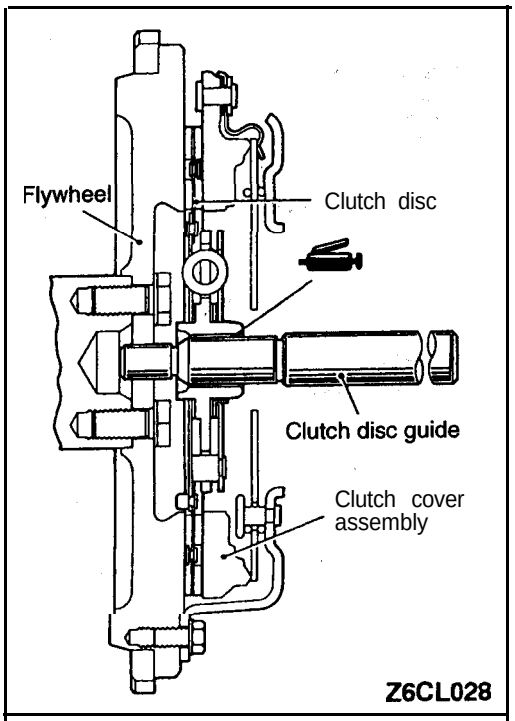

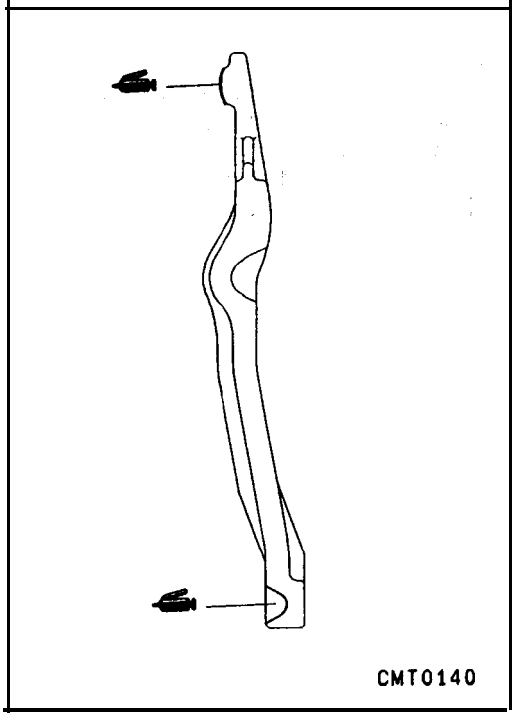

▶C◀ CLUTCH DISC/CLUTCH COVER ASSEMBLY INSTALLATION

(1) Apply specified grease to clutch disc splines and squeeze it in place with a brush.

Specified grease:
MITSUBISHI genuine grease Part No. 0101011 or equivalent

(2) Using clutch disc guide to position clutch disc on flywheel.

▶D◀ GREASE APPLICATION TO CLUTCH RELEASE LEVER

Specified grease:
MITSUBISHI genuine grease Part No. 0101011 or equivalent

▶E◀ CLUTCH & FLYWHEEL ASSEMBLY INSTALLATION

(1) Apply specified grease to clutch disc splines and squeeze it in place with a brush.

Specified grease:
MITSUBISHI genuine grease Part No. 0101011 or equivalent

INSPECTION

21200110043

<2.0L Engine (Turbo) and 2.4L Engine>

CLUTCH COVER ASSEMBLY

- Check the diaphragm spring end for wear and uneven height.
  Replace if wear is evident 'or height difference exceeds the limit.
  Limit: 0.5 mm (.020 in.)
- Check the pressure plate surface for wear, cracks and seizure.
- Check the strap plate rivets for looseness and replace the clutch cover assembly if loose.

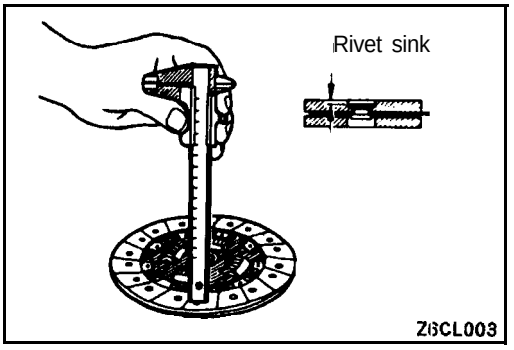

CLUTCH DISC

- Check the facing for loose rivets, uneven contact, deterioration due to seizure, adhesion of oil or grease, and replace the clutch disc if defective.
- Measure the rivet sink and replace the clutch disc if it is out of specification.
  Limit: 0.3 mm (.012 in.)
- Check for torsion spring play and damage and if defective, replace the clutch disc.
- Combine the clutch disc with the input shaft and check sliding condition and play in the rotating direction. If it does not slide smoothly or the play is excessive, check after cleaning and reassembling. If the play is excessive, replace the clutch disc and/or the input shaft.

CLUTCH RELEASE BEARING

Caution

Release bearing is packed with grease. Therefore do not wash it in cleaning solvent or the like.

- Check bearing for seizure, damage, noise, or improper rotation. Check also diaphragm spring contact surface for wear.
- Replace bearing if its release fork contact surface is abnormally worn.

RELEASE FORK

- Replace release fork if its bearing contact surface is abnormally worn.

<2.0L Engine (Non-turbo)>

CLUTCH & FLYWHEEL ASSEMBLY

- Check clutch assembly for contamination (dirt, oil). Replace clutch assembly, if required.
- Check to see if the clutch disc hub splines are damaged. Replace with new clutch assembly, if necessary.
- Check for uneven wear on clutch fingers.
- Check for broken clutch cover diaphragm spring fingers. Replace with new clutch assembly, if necessary.

CLUTCH RELEASE BEARING

- Check to see if the release bearing is sticky or binding. Replace bearing, if needed.

CLUTCH RELEASE LEVER/CLUTCH CONTROL EQUIP STUD

- Check linkage for excessive wear on the pivot stud and fork fingers.
  Replace all worn parts.

CLUTCH RELEASE CYLINDER <2.0L Engine (Turbo) and 2.4L Engine>

21200150057

DISASSEMBLY AND REASSEMBLY

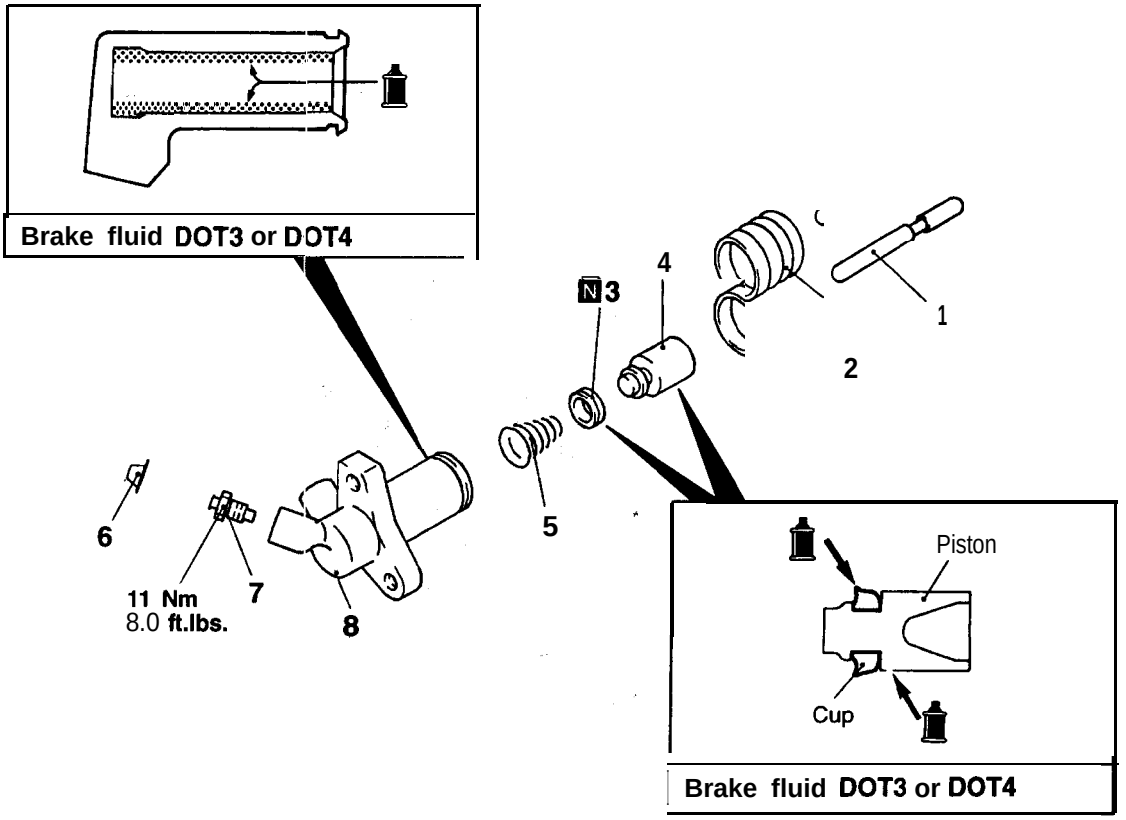

Disassembly steps

1. Push rod
2. Boot
3. Piston cup
4. Piston
5. Conical spring
6. Cap
7. Bleeder plug
8. Release cylinder

◀A▶ ◀A▶

TSB Revision

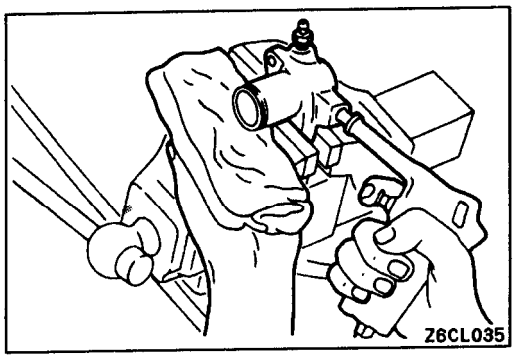

DISASSEMBLY SERVICE POINT

◀A▶ PISTON AND PISTON CAP REMOVAL

Remove the piston from the release cylinder using compressed air.

Caution

1. **Cover with shop towel to prevent the piston from popping out.**
2. **Apply compressed air slowly to prevent brake fluid from splashing.**

INSPECTION

21200160043

- Check the inner surface of the release cylinder for scratches or irregular wear.
- Check the piston cup for scratch or deformation, and the lip for wear.

NOTES

MANUAL TRANSAXLE

CONTENTS

22109000128

NOTES

MANUAL TRANSAXLE

CONTENTS

22109000067

MANUAL TRANSAXLE <2.0L ENGINE (NON-TURBO)>

MANUAL TRANSAXLE <2.0L ENGINE (TURBO) AND 2.4L ENGINE>

WARNINGS REGARDING SERVICING OF SUPPLEMENTAL RESTRAINT SYSTEM (SRS) EQUIPPED VEHICLES

WARNING!

(1) Improper service or maintenance of any component **of the SRS, or any SRS-related component, can lead to personal** injury or death to service personnel (from inadvertent firing of the air **bag) or to the driver and passenger (from rendering the SRS inoperative).**

(2) Service or maintenance of any SRS component or SRS-related component must be performed only at an authorized MITSUBISHI dealer.

(3) MITSUBISHI dealer personnel must thoroughly review this manual, and especially its GROUP 52B – Supplemental Restraint System (SRS) and GROUP 00 – Maintenance Service, before beginning any service or maintenance of any component of the SRS or any SRS-related component.

NOTE

The SRS includes the following components: SRS-ECU, SRS warning light, air bag module, clock spring, and interconnecting wiring. Other SRS-related components (that may have to be removed/installed in connection with SRS service or maintenance) are indicated in the table of contents by an asterisk (*).

MANUAL TRANSAXLE <2.0L ENGINE (TURBO) AND 2.4L ENGINE>

22100010144

GENERAL INFORMATION

The manual transaxles come in three models, namely, F5M31, F5M33 and W5M33. These transaxles are essentially the same as the previous models.

FWD

Items		2.4L Engine	2.0L Engine (Turbo)
Model		F5M31–2–VVXT	F5M33–2–SPZT
Applicable engine		4G64	4G63
Type		5-speed floor shift	5-speed floor shift
Gear ratio	1st	3.166	3.090
	2nd	1.833	1.833
	3rd	1.240	1.217
	4th	0.896	0.888
	5th	0.731	0.741
	Reverse	3.166	3.166
Final gear ratio		3.625	4.153
Speedometer gear ratio (driven/drive)		29/36	29/36

AWD

Items		Specifications
Model		W5M33–2–MUZT
Applicable engine		4G63
Type		5-speed floor shift
Gear ratio	1st	3.083
	2nd	1.684
	3rd	1.115
	4th	0.833
	5th	0.666
	Reverse	3.166
Reduction ratio	Primary	1.275
	Front differential	3.800
	Transfer	1.074
Speedometer gear ratio (driven/drive)		28/36

SECTIONAL VIEW

F5M31

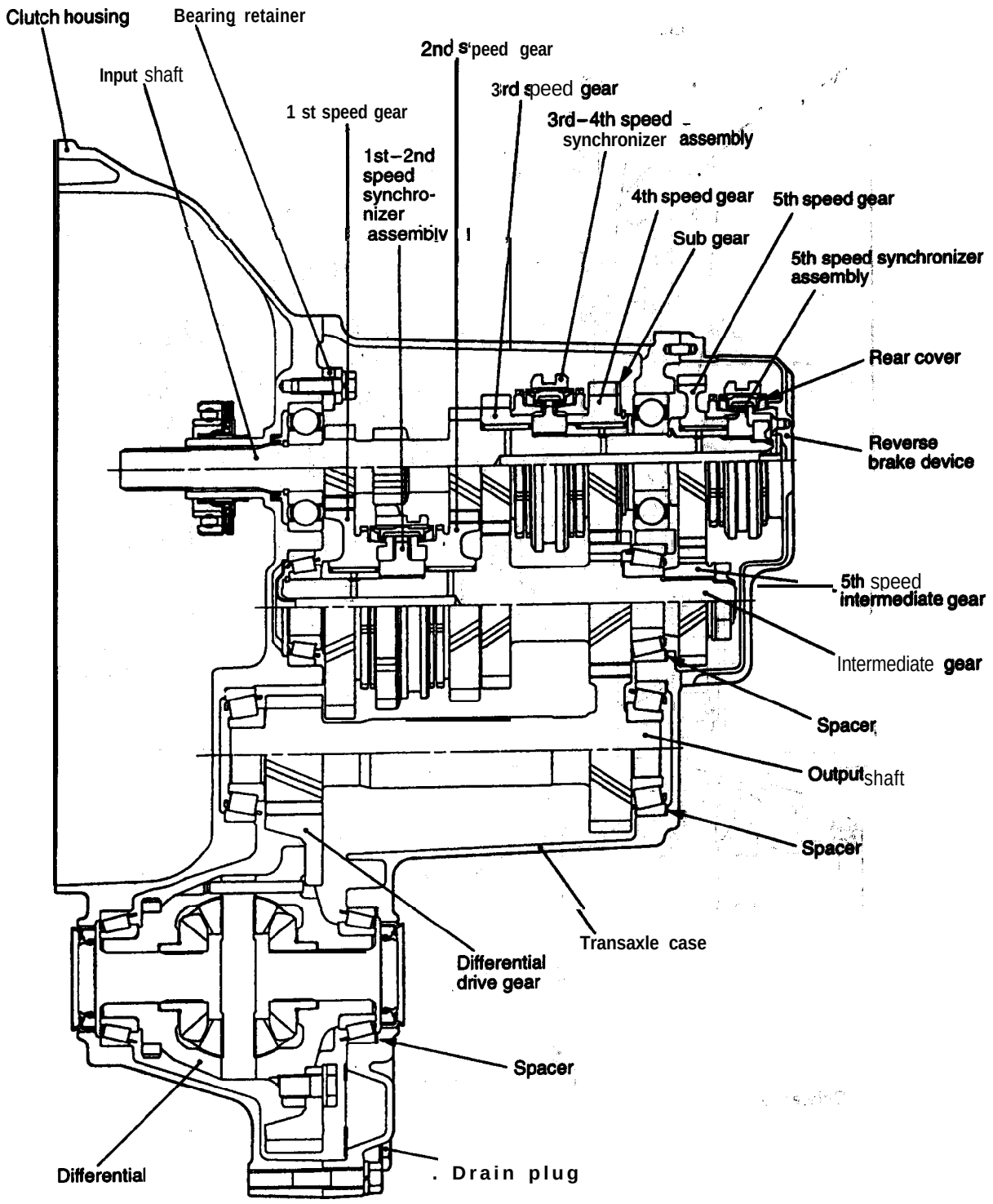

ZTFM0275

F5M33

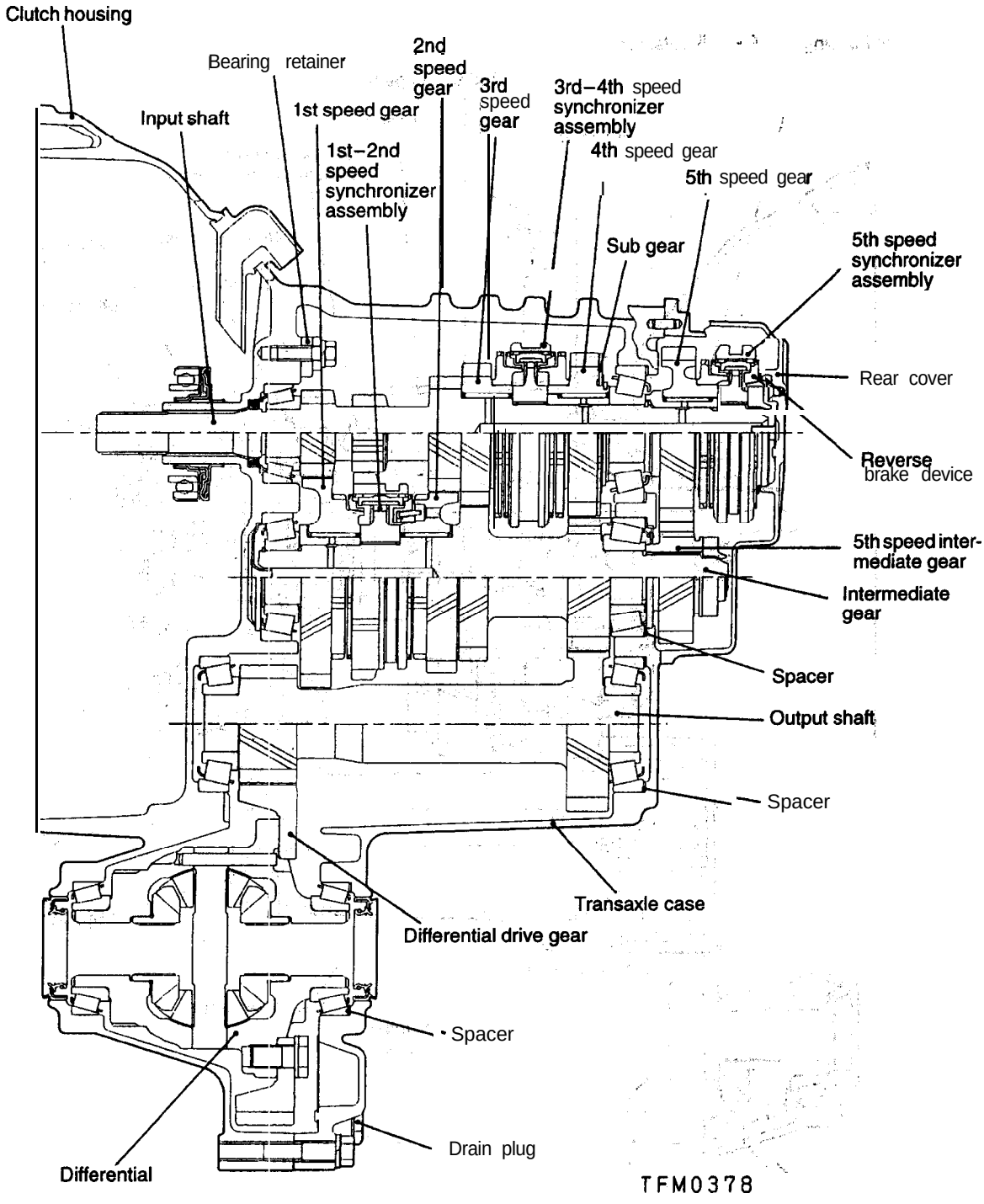

TSB Revision

W5M33

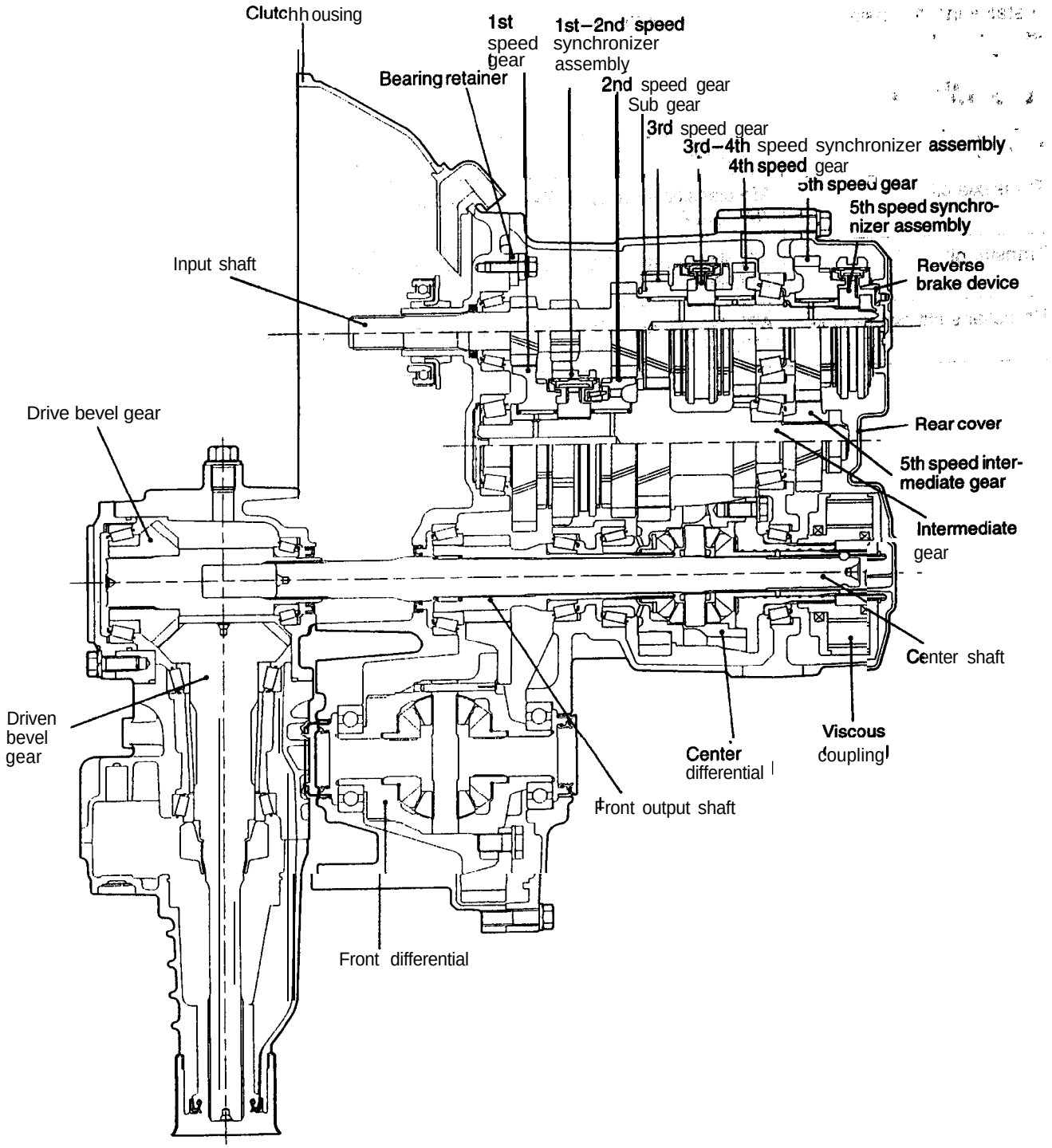

TFM0379

SERVICE SPECIFICATIONS

22100030010

Items	Standard value
Installation dimension of front rod stopper bracket assembly mm (in.)	43 ± 3 (1.69 ±.12)

LUBRICANTS

22100040051

Items	Specified lubricant	Quantity
Transaxle oil	API classification GL-4, SAE 75W-90 or 75W-85W	2.3 dm^3 (2.4 qts.)
Transfer oil	API classification GL-4, SAE 75W-90 or 75W-85W	0.5 dm^3 (.53 qt.)
Propeller shaft sleeve yoke	API classification GL-4, SAE 75W-90 or 75W-85W	As required

SPECIAL TOOLS

22100060064

Tool	Tool number and name	Supersession	Application
	MB991113 Steering linkage puller	MB991113-01	• Tie rod end ball joint an knuckle disconnection • Lateral lower arm ball join and knuckle disconnection • Compression lower arm ba joint and knuckle disconnec tion
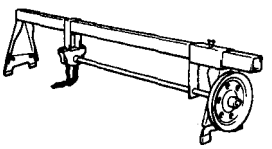	GENERAL SERVICE TOOL MZ203827 Engine lifter	MZ203827-01	Supporting the engine assembly during removal and installation of the transaxle
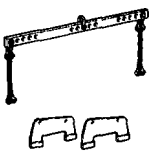	MB991 453 Engine hanger assem-bly	MZ203827-01	Supporting the engine assembly during removal and installation of the transaxle
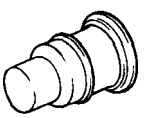	MB991461 <FWD> MB991460 <AWD> Plug	General Service Tool*	Preventing foreign substances from, entering transaxle case *Use shop towel
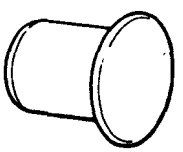	MB991 193 Plug	General Service Tool	Preventing foreign substances rom entering transfer :AWD>
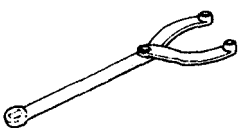	MB990767 End yoke holder	MB990767-01	Fixing of hub :AWD>

TROUBLESHOOTING

22100070036

Symptom	Probable cause	Remedy
Vibration, noise	Loose or damaged transaxle and engine mounts	Tighten or replace mounts
	Inadequate shaft end play	Correct the end play
	Worn or damaged gears	Replace gears
	Use of inadequate grade of oil	Replace with specified oil
	Low oil level	Refill
	Inadequate engine idle speed	Adjust the idle speed
Oil leakage	Broken or damaged, oil seal or O-ring	Replace the oil seal or O-ring
Hard shift	Faulty control cable	Replace the control cable
	Poor contact or wear of synchronizer ring and gear cone	Correct or replace
	Weakenecl synchronizer spring	Replace synchronizer spring
	Use of inadequate grade of oil	Replace with the specified oil
Jumps out of gear	Worn gear shift fork or broken poppet spring	Replace the shift fork or poppet spring
	Synchronizer hub to sleeve spline clearance too large	Replace the synchronizer hub and sleeve

ON-VEHICLE SERVICE

22100090053

TRANSAXLE OIL LEVEL CHECK

Refer to GROUP 00 – Maintenance Service.

TRANSAXLE OIL REPLACEMENT

22100100055

Refer to GROUP 00 – Maintenance Service.

TRANSFER OIL LEVEL CHECK

22100110035

Refer to GROUP 00 – Maintenance Service.

TRANSFER OIL REPLACEMENT

22100120035

Refer to GROUP 00 – Maintenance Service.

TRANSAXLE CONTROL

22100380061

REMOVAL AND INSTALLATION

> Caution: SRS
> Be careful not to subject the SRS-ECU to any shocks during removal and installation of the transaxle control cable and shift lever assembly.

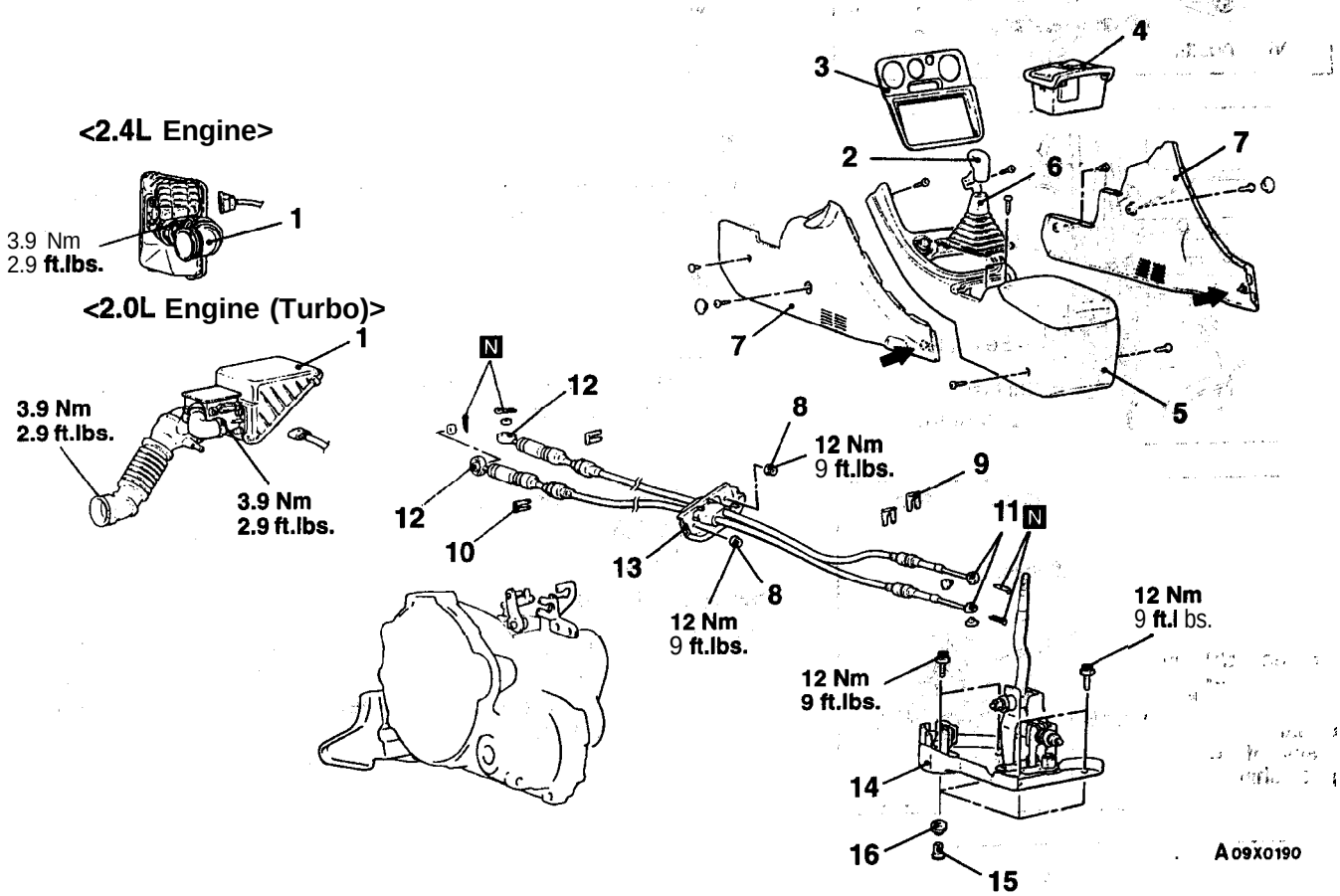

NOTE
⬅: Resin clip position

Transaxle control cable assembly removal steps

1. Air cleaner and air intake hose assembly
2. Shift lever knob
3. Center panel
4. Cupholder assembly
5. Floor console assembly
6. Shift lever cover
7. Console side cover
8. Nut
9. Clip (passenger compartment side)
10. Clip (transaxle side
▶B◀ 11. Shift cable and select cable connection (passenger compartment side))
▶A◀ 12. Shift cable and select cable connection (transaxle side)
13. Shift cable and select cable assembly

Shift lever assembly removal steps

2. Shift lever knob
3. Center. panel
4. Cupholder assembly
5. Floor console assembly
6. Shift lever panel
7. Console side cover
9. Clip (passenger compartment side)
▶B◀ 11. Shift cable and select cable connection (passenger compartment side)
14. Shift lever assembly
15. Distance piece
16. Bushing

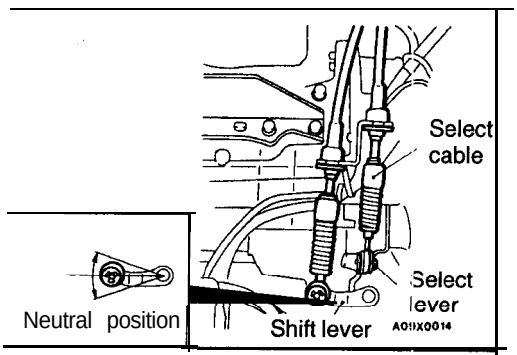

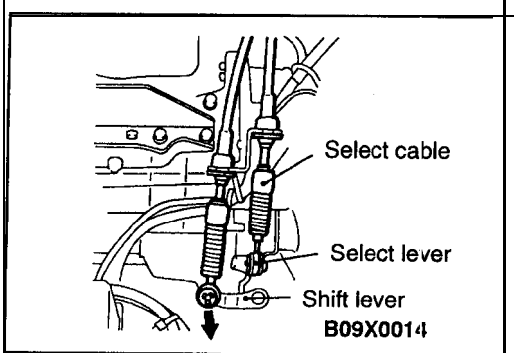

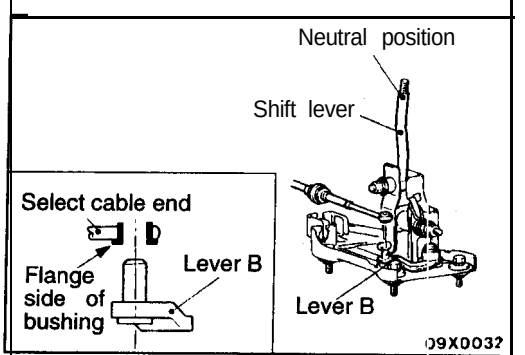

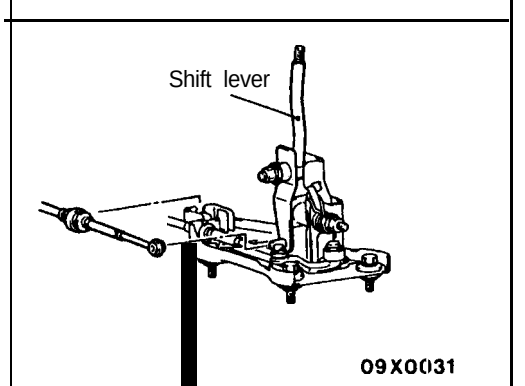

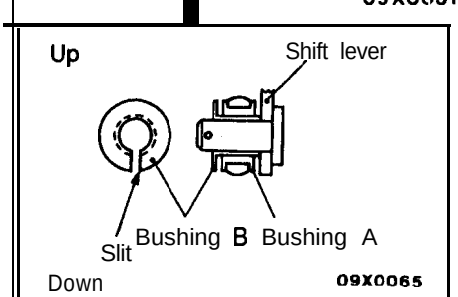

INSTALLATION SERVICE POINTS

▶A◀ SHIFT CABLE AND SELECT CABLE CONNECTION (TRANSAXLE SIDE)

SELECT CABLE

(1) Connect the select cable to the transaxle side select lever.
(2) Set the shift lever of the transaxle side at the neutral position.

NOTE
When the shift lever of the transaxle side is set at the neutral position, the select lever of the transaxle side is also set at the neutral position.

SHIFT CABLE

(1) Connect the shift cable to the transaxle shift lever.
(2) While leaving the select lever at the transaxle side in the neutral position, move the shift lever at the transaxle side in the direction of the arrow in the illustration to set it to 4th gear.

NOTE
If the shift lever does not move easily, depress and hold the clutch pedal.

▶B◀ SHIFT CABLE AND SELECT CABLE CONNECTION (PASSENGER COMPARTMENT SIDE)

SELECT CABLE

(1) While leaving the shift lever inside the passenger compartment in the neutral position, install the select cable to the passenger compartment side of the shift lever.
(2) Install the select cable so that the flange side of resin bushing is positioned at the edge of lever B side.

SHIFT CABLE

(1) Pull the shift lever at the passenger compartment side fully in the direction shown in the illustration (4th gear position), and install the shift cable to the shift lever at the passenger compartment side.
Install so that the slit section of the bushing B is facing either up or down.
(2) Put the shift lever to all the positions and make sure that the operation is smooth.

22100400057

SHIFT LEVER ASSEMBLY
DISASSEMBLY AND REASSEMBLY

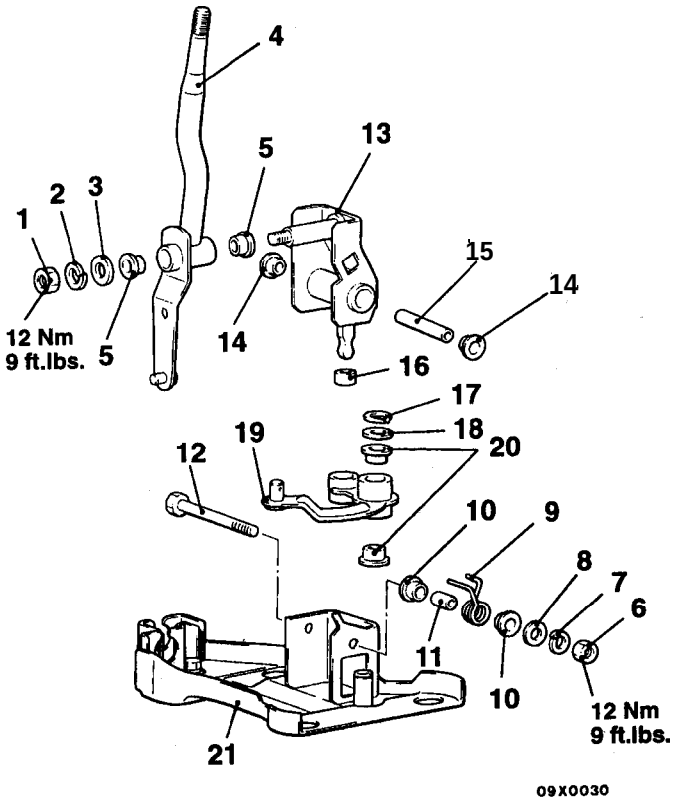

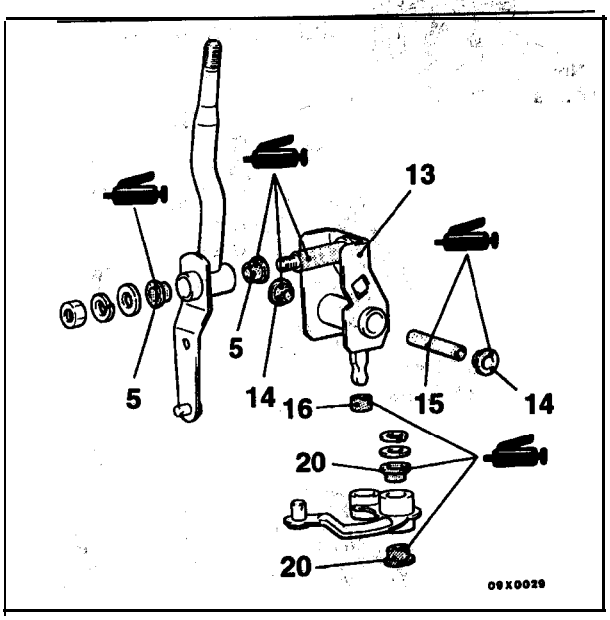

00000099

Disassembly steps

1. Nut
2. Spring washer
3. Plain washer
4. Shift lever
5. Bushing
6. Nut
7. Spring washer
8. Plain washer
9. Return spring
10. Bushing
11. Pipe
12. Bolt
13. Lever A
14. Bushing
15. Collar
16. Bushing
17. Snap ring
18. Washer
19. Lever B
20. Bustiing
21. Bracket assembly

TSB Revision

TRANSAXLE ASSEMBLY <FWD>

22100270238

REMOVAL AND INSTALLATION

Pre-removal Operation
- Transaxle Oil Draining (Refer to GROUP 00 – Maintenance Service.)
- Battery Removal
- Under Cover Removal (Refer to GROUP 42 – Under Cover.)

Post-installation Operation
- Supplying Transaxle Oil (Refer to GROUP 00 – Maintenance Service.)
- Shift Lever Operation Check
- Speedometer Operation Check
- Under Cover Installation (Refer to GROUP 42 – Under Cover.)
- Battery installation

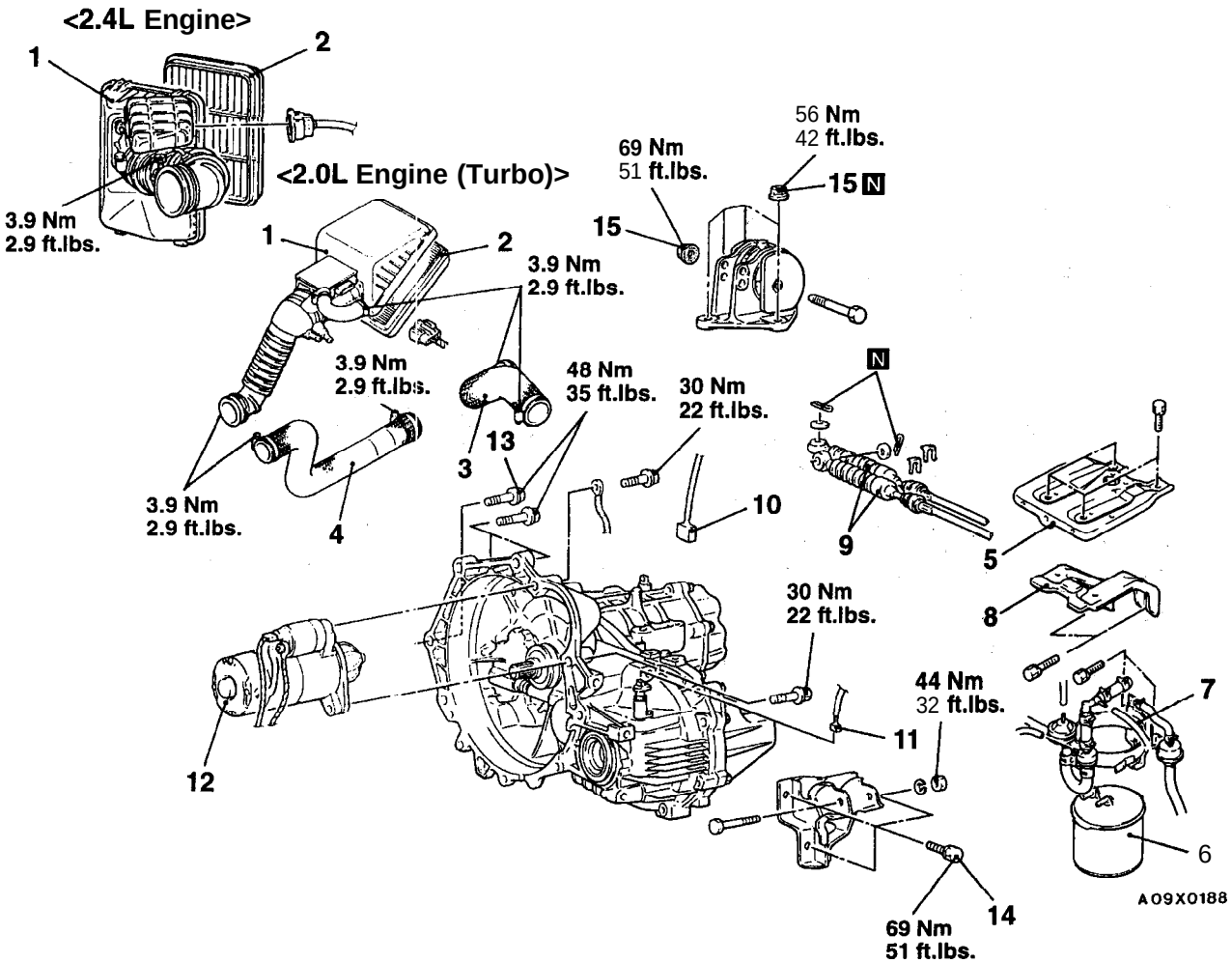

Removal steps

1. Air cleaner cover and air intake hose assembly
2. Air cleaner element
3. Air hose C <2.0L Engine (Turbo)>
4. Air hose A <2.0L Eingine (Turbo)>
5. Battery tray
6. Evaporative emission canister <2.0L Engine (Turbo)>
7. Evaporative emission canister holder <2.0L Engine (Turbo)>
8. Battery tray stay
9. Shift cable and select cable connection
10. Backup light switch connector
11. Vehicle speed sensor connector
12. Starter motor
13. Transaxle assembly mounting bolts
14. Rear roll stopper bracket mounting bolts
15. Transaxle mounting bracket mounting nuts

◀A▶
- Supporting engine assembly

◀B▶

TSB Revision

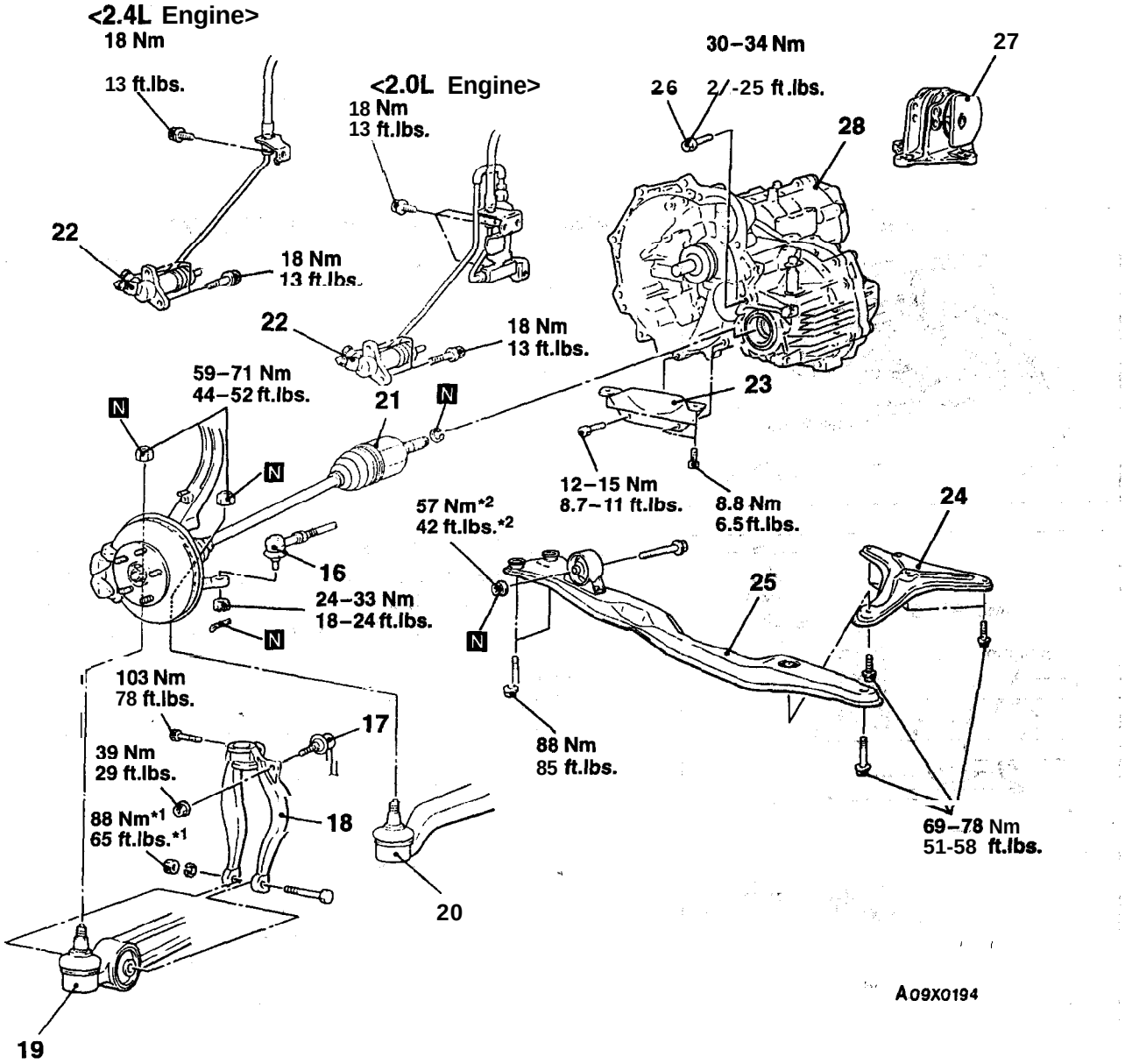

Lifiting up of the vehicle

◀C▶ 16. Tie rod end ball joint and kunckle connection
17. Stabilizer link connection
18. Damper fork
◀C▶ 19. Lateral lower arm ball joint and kunckle connection
◀C▶ 20. Compression lower arm ball joint and kunckle connection
◀D▶ ▶C◀ 21. Drive shaft connection
◀E▶ 22. Clutch release cylinder connection
23. Bell housing cover
24. Stay (R.H.)
▶B◀ 25. Center member assembly
▶A◀ 26. Transaxle assembly mounting bolt
27. Transaxle mounting
28. Transaxle assembly

Caution

***1: Indicates parts which should be temporarily tightened, and then fully tightened with the vehicle on the ground in the unladen condition.**

***2: For tightening locations indicated by the symbol, first tighten temporarily, and then make the final tightening with the entire weight of the engine applied to the vehicle body.**

TSB Revision

REMOVAL SERVICE POINTS

◀A▶ TRANSAXLE MOUNTING BRACKET MOUNTING NUTS REMOVAL

Jack up the transaxle assembly gently with a garage jack, and then remove the transaxle mounting bracket nuts.

Caution
Be sure not to tilt the transaxle assembly.

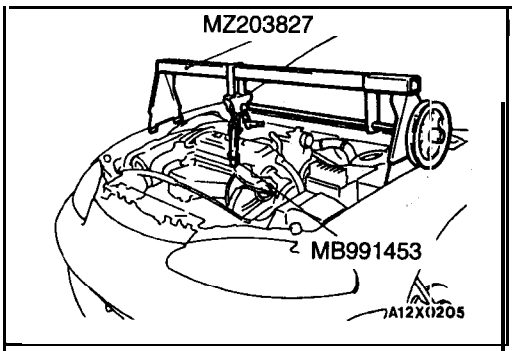

◀B▶ SUPPORTING ENGINE ASSEMBLY

Set the special tool to the vehicle to support the engine assembly.

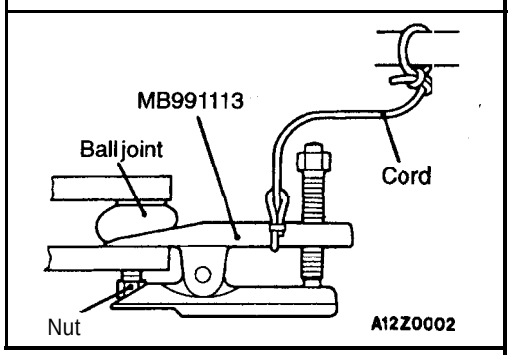

◀C▶ TIE ROD END BALL JOINT AND KNUCKLE/ LATERAL LOWER ARM BALL JOINT AND KNUCKLE/COMPRESSION LOWER ARM BALL JOINT AND KNUCKLE DISCONNECTION

Caution
1. **Using the special tool, loosen the tie rod end mountlng nut. Only loosen the nut; do not remove it from the ball joint.**
2. **Support the special tool with a cold, etc. to prevent it from coming off.**

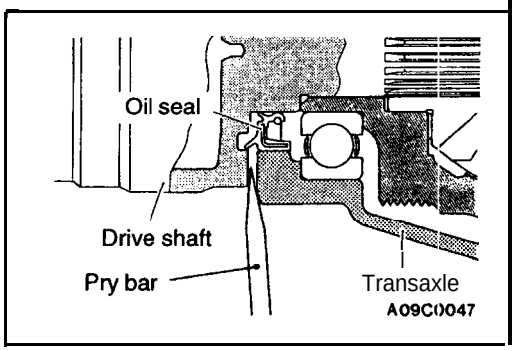

◀D▶ DRIVE SHAFT DISCONNECTION

(1) Insert a pry bar between the transaxle case and the drive shaft to remove the drive shaft.

NOTE
Do not remove the hub and knuckle from the drive shaft.

Caution
1. **Use a pry bar to remove the drive shaft from the B.J. assembly, or the T.J. assembly may be damaged.**
2. **Do not insert the bar too far, or the oil seal may be damaged.**

(2) Suspend the removed drive shaft with wire so that there are no sharp bends in any of the joints.
(3) Use the special tool as a cover not to let foreign objects get into the transaxle case.

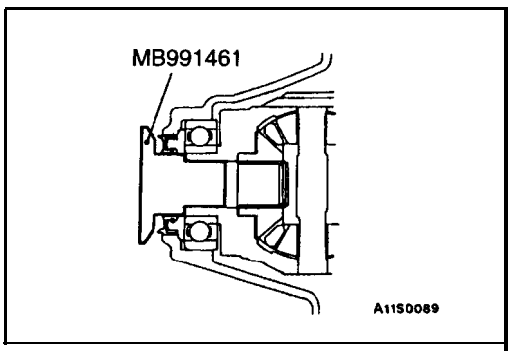

◀E▶ CLUTCH. RELEASE CYLINDER DISCONNECTION

Remove the clutch release cylinder without disconnecting the oil line, and suspend it to a nearby parts with "a wire, etc.

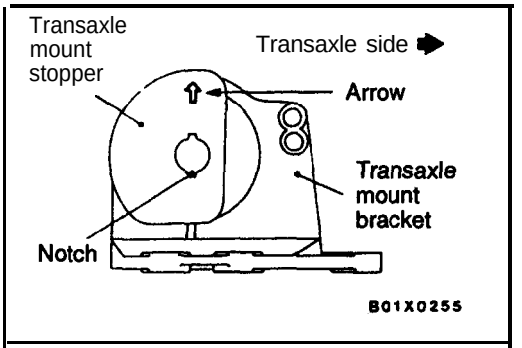

INSTALLATION SERVICE POINT

▶A◀ TRANSAXLE MOUNTING INSTALLATION

Align the notches on the stopper with the transaxle mount bracket with the arrow mark facing toward the shown direction. Then install the stopper.

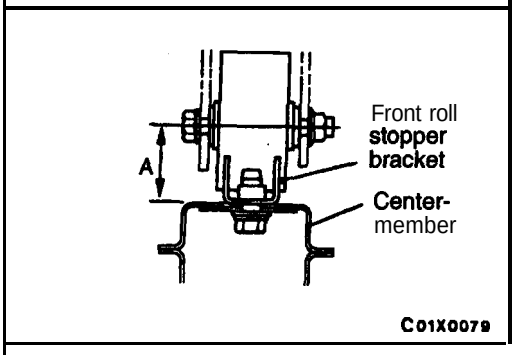

▶B◀ CENTER MEMBER ASSEMBLY INSTALLATION

If the dimension shown in the illustration is outside the standard value when the weight of the engine is on the body;, replace the front roll stopper bracket assembly.

Standard value (A): 43 ± 3 mm (1.69 ± .12 in.)

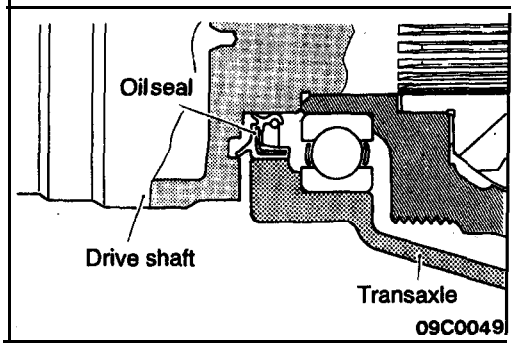

▶C◀ DRIVE SHAFT CONNECTION

Temporarily install the drive shaft so that the T.J. case of the drive shaft is perpendicular to the transaxle.

Caution

Do not damage the oil seal lip by the serrated part of the drive shaft.

TRANSAXLE ASSEMBLY <AWD>

22100270092

REMOVAL AND INSTALLATION

Pre-removal Operation
- Transaxle Oil Draining (Refer to GROUP 00 – Maintenance Service.)
- Battery Removal
- Under Cover Removal (Refer to GROUP 42 – Under Cover.)
- Transfer Assembly Removal (Refer to P.22A-2.)

Post-installation Operation
- Supplying Transaxle Oil (Refer to GROUP 00 – Maintenance Service.)
- Shift Lever Operation Check
- Speedometer Operation Check
- Transfer Assembly Installation (Refer to P.22A-20.)
- Under Cover Installation (Refer to GROUP 42 – Under Cover.)
- Battery Installation

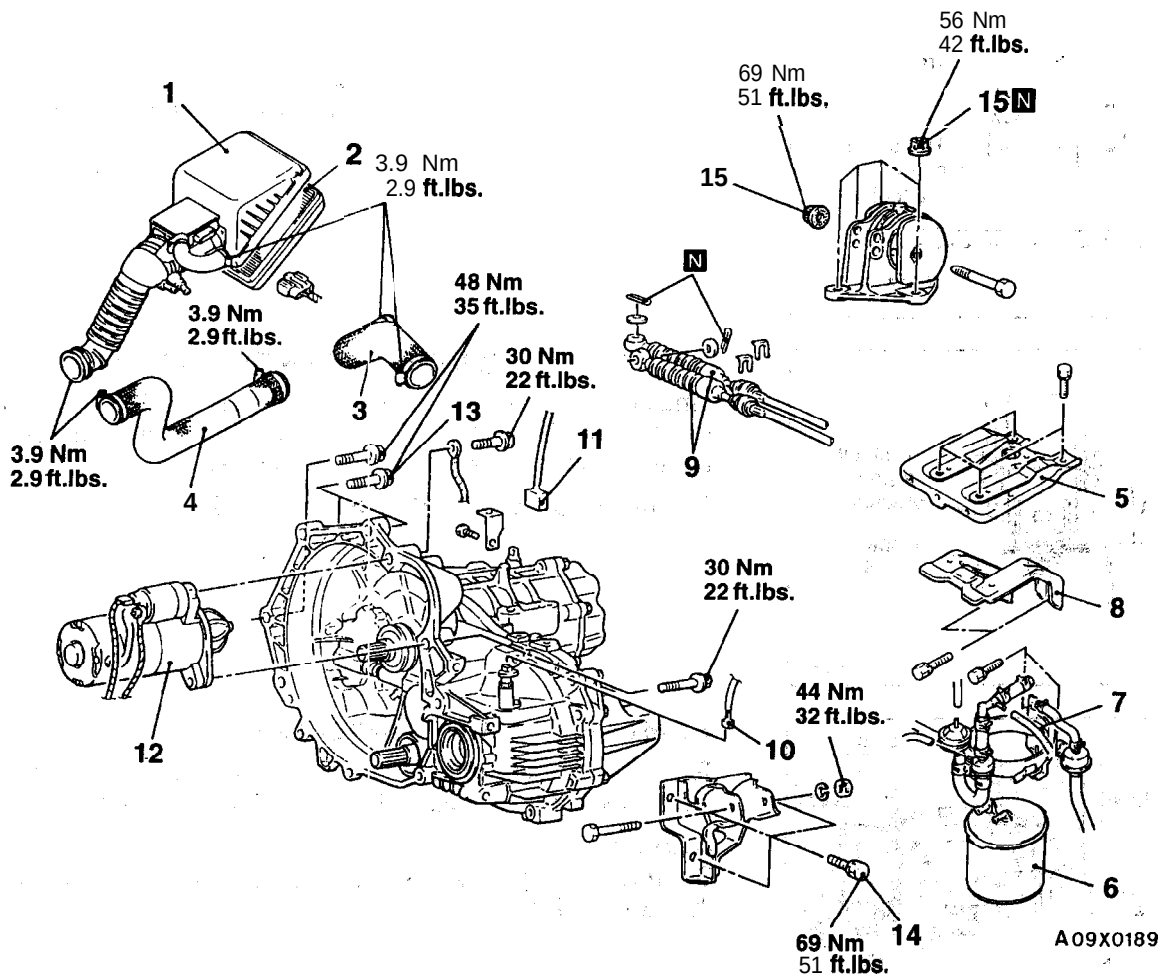

Removal steps

1. Air cleaner cover and air intake hose assembly
2. Air cleaner element
3. Air hose C
4. Air hose A
5. Battery tray
6. Evaporative emission canister
7. Evaporative emission canister holder
8. Battery tray stay
9. Shift cable and select cable connection
10. Backup light switch connector
11. Vehicle speed sensor connector
12. Starter motor
13. Transaxle assembly mounting bolts
14. Rear roll stopper bracket mounting bolts

◀A▶ 15. Transaxle mounting bracket mounting nuts

◀B▶ • Supporting engine assembly

TSB Revision

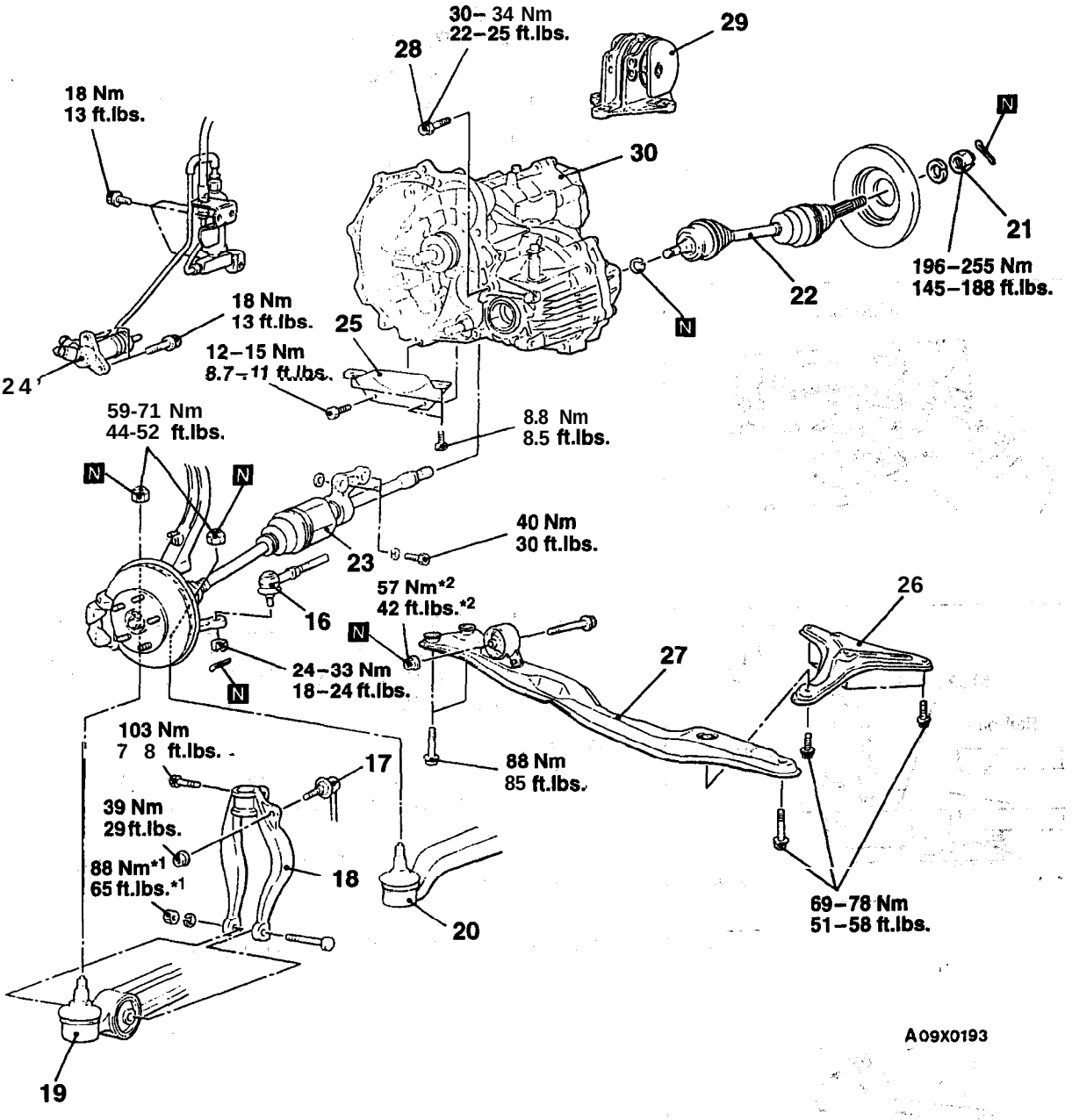

Lifting up of the vehicle

◀C▶ 16. Tie rod end ball joint and knuckle connection
17. Stabilizer link connection
18. Damper fork
◀C▶ 19. Lateral lower arm ball joint and knuckle connection
◀C▶ 20. Compression lower arm ball joint and knuckle connection
◀D▶ ▶D◀ 21. Drive shaft nut
◀E▶ ▶C◀ 22. Drive shaft
◀F▶ ▶C◀ 23. Drive shaft with inner shaft connection
◀G▶ 24. Clutch release cylinder connection
25. Bell housing cover
26. Stay (R.H.)
▶B◀ 27. Center member assembly
28. Transaxle assembly mounting bolt
▶A◀ 29. Transaxle mounting
30. Transaxle assembly

'Caution
*1: indicates parts which should, be temporarily tightened, and, then. fully tightened with the vehicle on the ground in the unladen condition.
*2: For tightening locations indicated by the symbol, first tighten temporarily, and then make the final tightening with the entire weight of the engine applied to the vehicle body.

TSB Revision

REMOVAL SERVICE POINTS

◀A▶ TRANSAXLE MOUNTING BRACKET MOUNTING NUTS REMOVAL

Jack up the transaxle assembly gently with a garage jack, and then remove the transaxle mounting bracket nuts.

Caution
Be sure not to tilt the transaxle assembly.

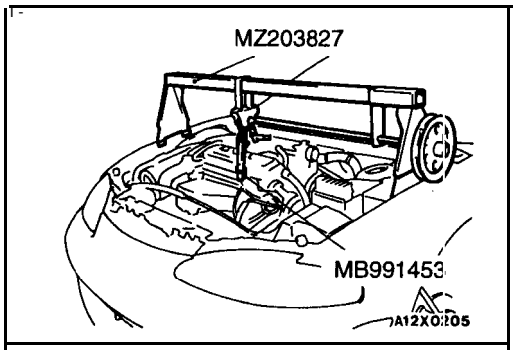

◀B▶ SUPPORTING ENGINE ASSEMBLY

Set the special tool to the vehicle to support the engine assembly.

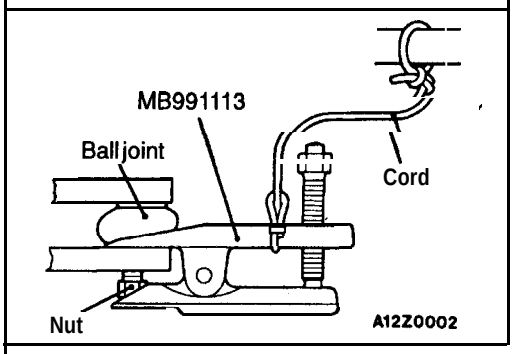

◀C▶ TIE ROD END BALL JOINT AND KNUCKLE/ LATERAL LOWER ARM BALL JOINT AND KNUCKLE/COMPRESSION LOWER ARM BALL JOINT AND KNUCKLE DISCONNECTION

Caution
1. **Using the special tool, loosen the tie rod end mounting nut. Only loosen the nut; do not remove it from the ball joint.**
2. **Support the special tool with a cord, etc. to prevent it from coming off.**

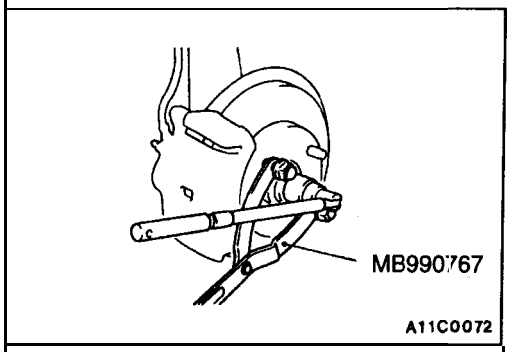

◀D▶ DRIVE SHAFT NUT REMOVAL

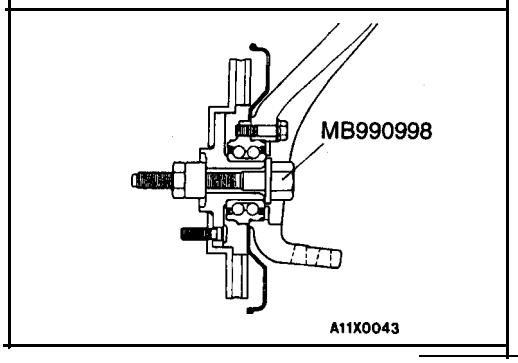

Caution
Do not apply the vehicle weight to the wheel bearing while loosening the drive shaft nut. If, however, the vehicle weight must be applied to the bearing (because of moving the vehicle), temporarily use the special tool MB990998, etc. to secure the wheel bearing.

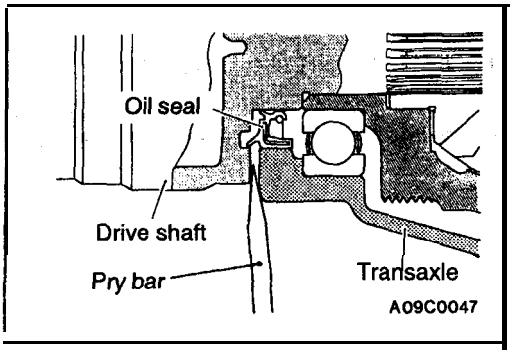

◀E▶ DRIVE SHAFT REMOVAL

(1) Insert a pry bar between the transaxle case and the drive shaft, and then pry the drive shaft from the transaxle.

Caution

1. **Use a pry bar to remove the drive shaft from the B.J. assembly, or the T.J. assembly may be damaged.**
2. **Do not insert the bar too far, or the oil' seal may be damaged.**

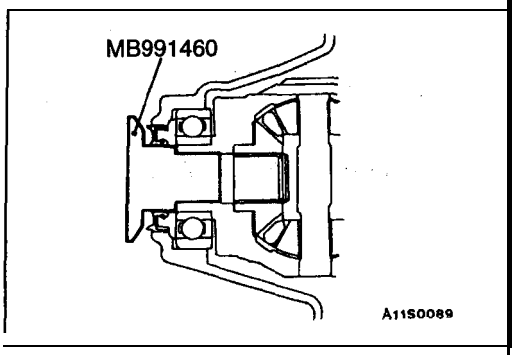

(2) Use the special tool to cover the transaxle case not to' let foreign materials get into the transaxle case.

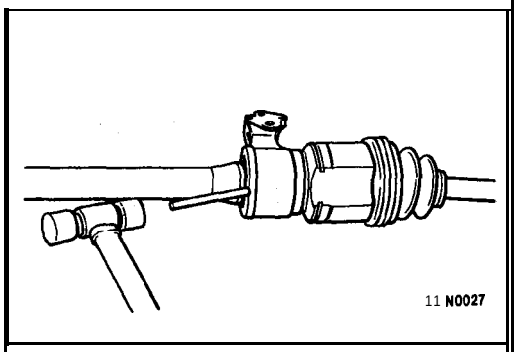

◀F▶ DRIVE SHAFT WITH INNER SHAFT DISCONNECTION

(1) Lightly tap the center -bearing bracket with a plastic hammer or similar tool "to remove the inner shaft from the transaxle.

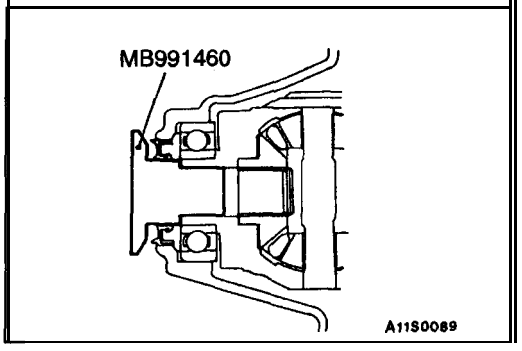

(2) Suspend the removed drive shaft with inner shaft with wire so that there are no sharp bends in any of the joints.
(3) Use the special tool to cover the transaxle case not to let foreign materials get into the transaxle case.

◀G▶ CLUTCH RELEASE CYLINDER DISCONNECTION

Remove the clutch release cylinder without disconnecting the oil line, and suspend it to a nearby parts with a wire, etc.

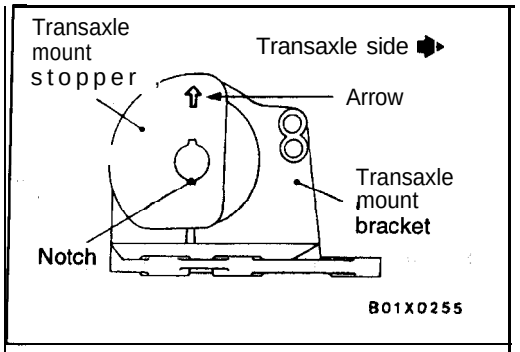

INSTALLATION SERVICE POINT

▶A◀ TRANSAXLE MOUNTING INSTALLATION

Align the notches on the stopper with the transaxle mount bracket with the arrow mark facing toward the shown direction. Then install the stopper.

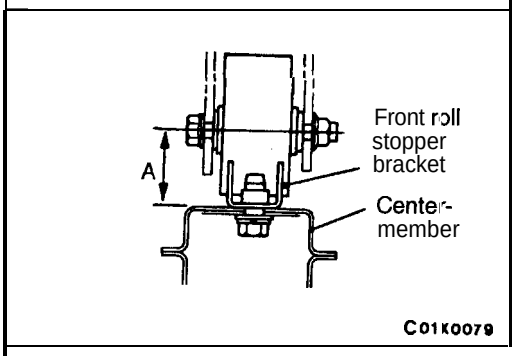

▶B◀ CENTER MEMBER ASSEMBLY INSTALLATION

If the dimension shown in the illustration is outside the standard value when the weight of the engine is on the body, replace the front roll stopper bracket assembly.

Standard value (A): 43 ± 3 mm (1.69 ± .12 in.)

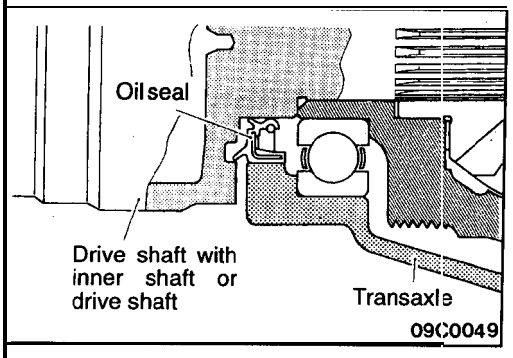

▶C◀ DRIVE SHAFT WITH INNER SHAFT CONNECTION/DRIVE SHAFT INSTALLATION

Temporarily install the drive shaft so that the inner shaft or T.J. case of the drive shaft is perpendicular to the transaxle.

Caution
Do not damage the oil seal lip by the serrated part of the drive shaft.

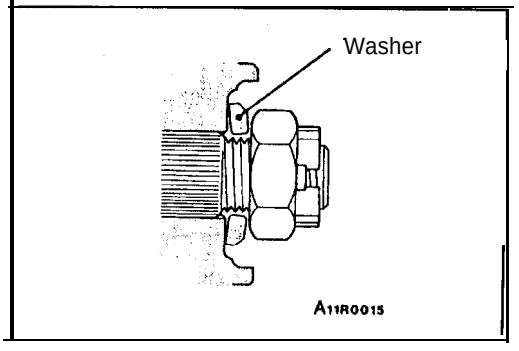

▶D◀ DRIVE SHAFT NUT INSTALLATION

(1) Install the drive shaft washer in the specified direction.

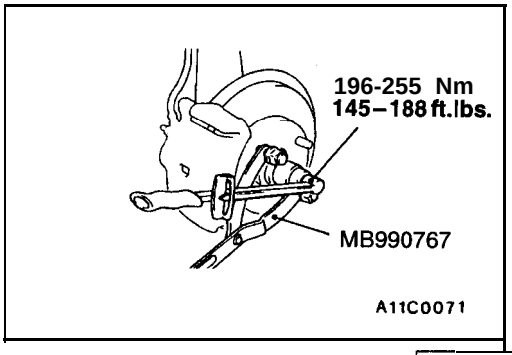

(2) Use the special tool to tighten the drive shaft nut.

Caution
Before securely tightening the drive shaft nuts, make sure there is no load on the wheel bearings.

(3) If the position of the cotter pin holes does not match, tighten the nut up to 255 Nm (188 ft.lbs.) in maximum.
(4) Install the cotter pin in the first matching holes and bend it securely.

TRANSFER ASSEMBLY <AWD>

22100320025

REMOVAL AND INSTALLATION

Pre-removal and Post-installation Operation
- Transfer Oil Draining and Supplying (Refer to GROUP 00 – Maintenance Service.)
- Front Exhaust Pipe Removal and Installation (Refer to GROUP 15 – Exhaust Pipe, Muffler.)

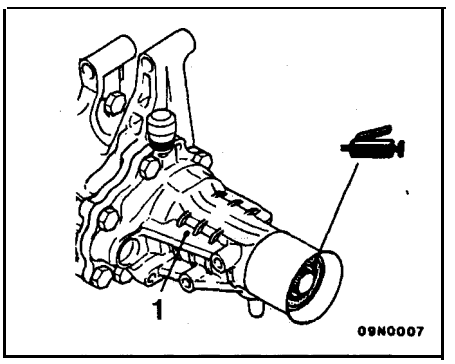

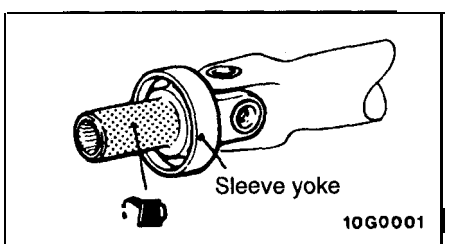

Gear oil:
API classification **GL-4,** SAE **75W-90** or **75W-85W**

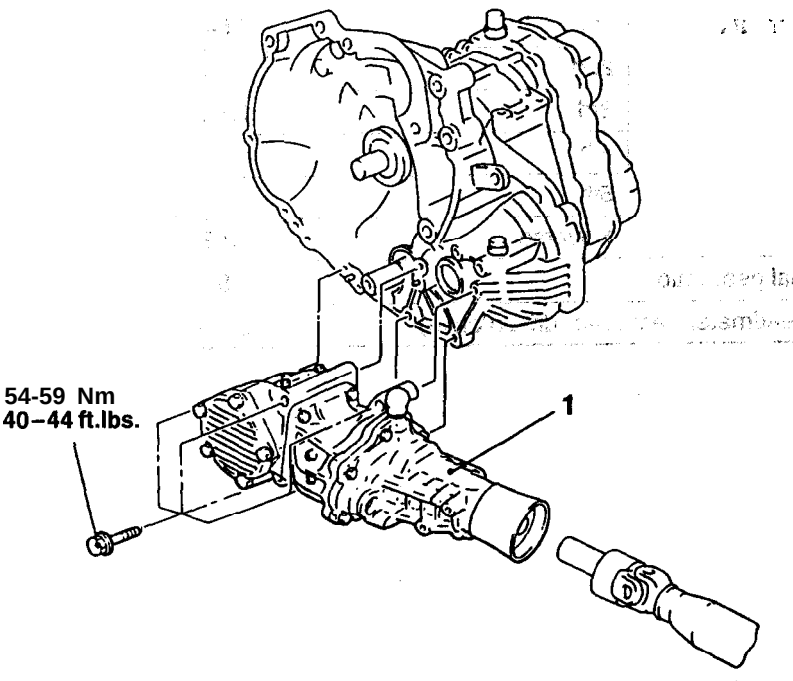

◀A▶ 1. Transfer assembly

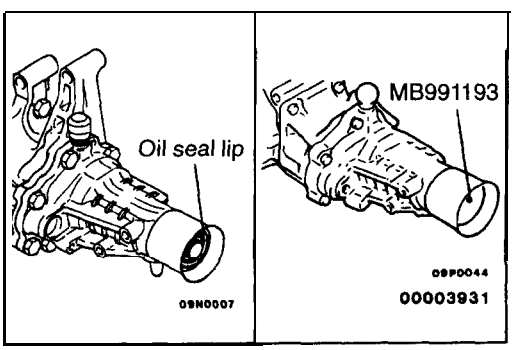

REMOVAL SERVICE POINT

(A, TRANSFER ASSEMBLY REMOVAL

Caution
(1) Do not damage the oil seal lip of the transfer.
(2) Use the special tool to cover the transaxle case to prevent oil from gushing out or foreign materials from getting into the transaxle case.

TSB Revision

MANUAL TRANSAXLE <2.0L ENGINE (NON-TURBO)>

22110010022

GENERAL INFOMATION

The manual transaxle comes in one model, namely F5MC1.

Items		Specifications	
Model		F5MC1-1-QPAF	F5MC1-1-QQAF
Applicable engine		420A	
Type		5-speed floor shift	
Gear ratio	1st	3.54	
	2nd	2.13	
	3rd	1.36	
	4th	1.03	
	5th	0.81	
	Reverse	3.42	
Final gear ratio		3.94	
Speedmeter gear ratio (driven/drive)		28/36	29/36

SECTIONAL VIEW

F5MC1

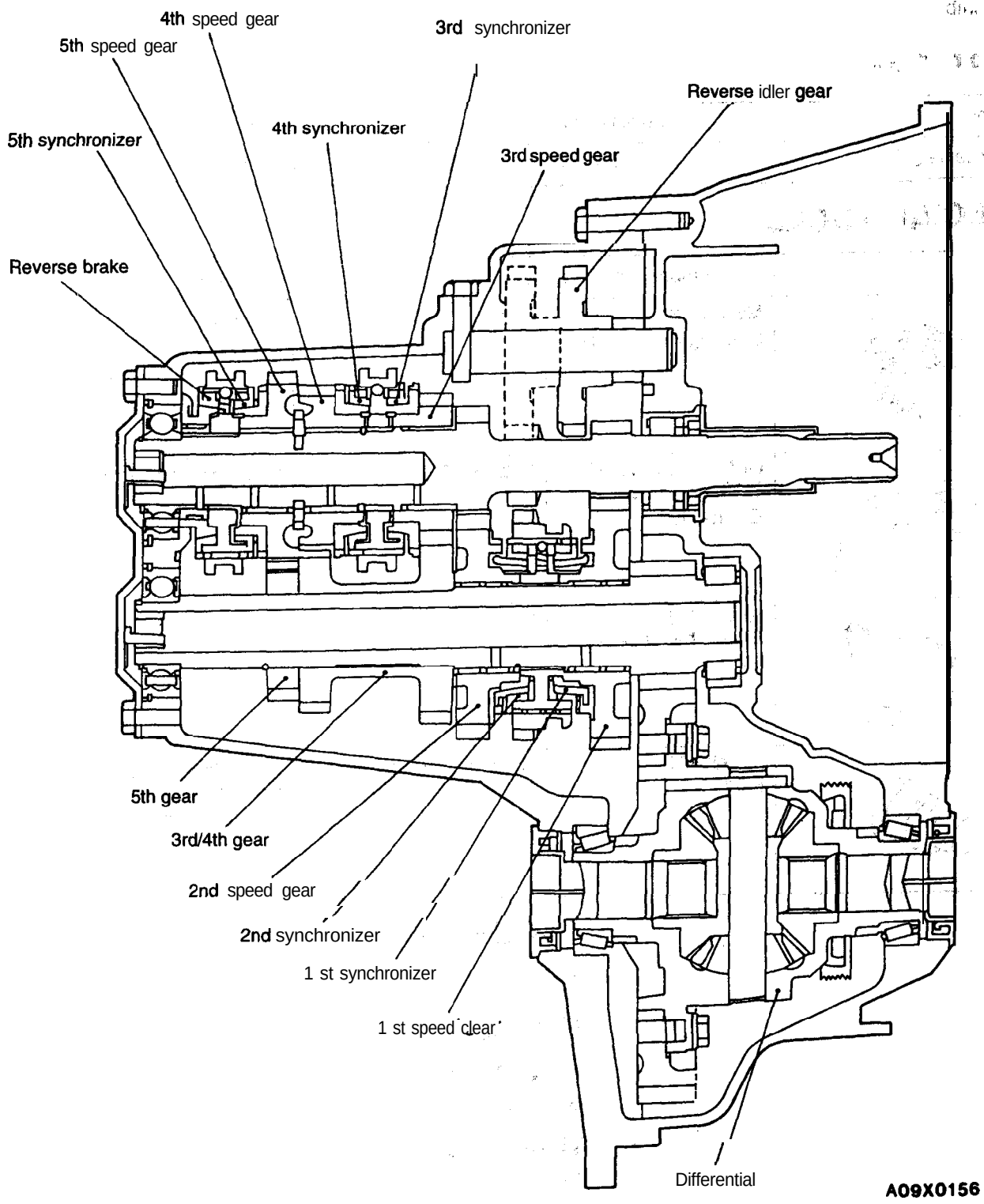

SERVICE SPECIFICATIONS

22100020010

Items	Standard value
Installation dimension of front roll stopper bracket assembly mm (in.)	43 ± 3 (1.69 ± .12)

LUBRICANTS

22110020025

Items	Specified lubricant	Quantity dm^3 (qts.)
Transaxle oil	TEXACO MTX FLUID FM	2.0(2.1)

SPECIAL TOOLS

22110020028

Tool	Tool number and name	Supersession	Application
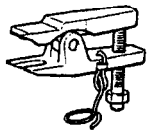	MB991113 Steering linkage puller	MB991113-01	• Tie rod end ball joint an knuckle disconnection • Lateral lower arm ball join and knuckle disconnection • Compression lower arm ba joint and knuckle disconnec tion
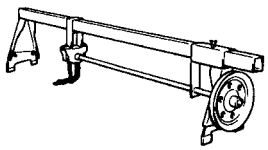	GENERAL SERVICE TOOL MZ203827 Engine lifter	MZ203827-01	Supporting the engine assembly during removal and installation of the transaxle
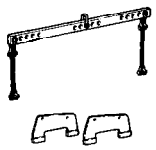	MB991453 Engine hanger assembly	MZ203827-01	
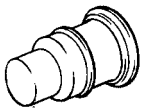	MB991461 Plug	General Service Tool*	Preventing foreign substances from entering transaxle case *Use shop towel

TROUBLESHOOTING

22110040021

Refer to P.22A-8.

ON-VEHICLE SERVICE

22110060027

TRANSAXLE OIL LEVEL CHECK

Refer to GROUP 00 – Maintenance Service.

TRANSAXLE OIL REPLACEMENT

22110070020

Refer to GROUP 00 – Maintenance Service.

TSB Revision

TRANSAXLE CONTROL

22100380078

REMOVAL AND INSTALLATION

Pre-removal and Post-installation Operation
- Battery Removal and Installation

Caution: SRS
Be careful not to subject the SRS-ECU to any shocks during removal and installation of the transaxle control cable and shift lever assembly.

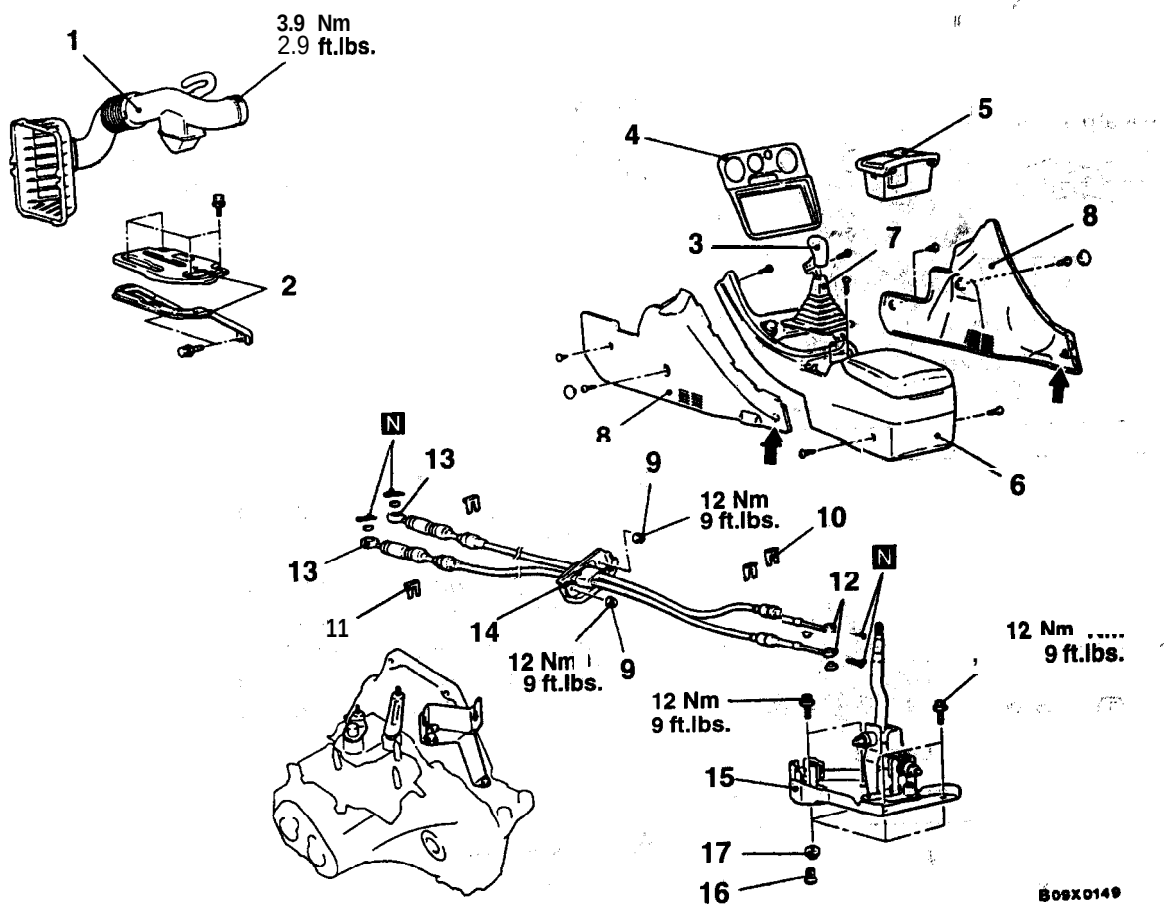

NOTE
⬅: Resin clip position

Transaxle control cable assembly removal steps
1. Air cleaner and air intake hose assembly
2. Battery tray and tray stay
3. Shift lever knob
4. Center panel
5. Cup holder assembly
6. Floor console assembly
7. Shift lever cover
8. Console side cover
9. Nut
10. Clips (passenger compartment side)
11. Clips (transaxle side)
▶B◀ 12. Shift cable and select cable connection (passenger compartment side)
▶A◀ 13. Shift cable and select cable connection (transaxle side)
14. Shift cable. and select cable assembly

Shift lever assembly removal steps
3. Shift lever knob
4. Center panel
5. Cup holder assembly
6. Floor console assembly
7. Shift lever panel
8. Console side cover
10. Clip (passenger compartment side)
▶B◀ 12. Shift cable and select cable connection (passenger compartment side)
15. Shift lever assembly
16. Distance piece
17. Bushing

TSB Revision

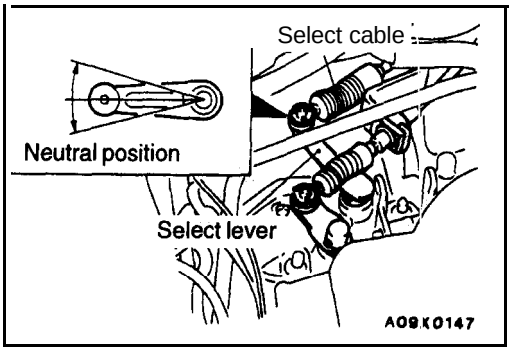

INSTALLATION SERVICE POINTS

▶A◀ SHIFT CABLE AND SELECT CABLE CONNECTION (TRANSAXLE SIDE)

SELECT CABLE

(1) Connect the select cable to the transaxle side select lever.
(2) Set the select lever of the transaxle side at the neutral position.

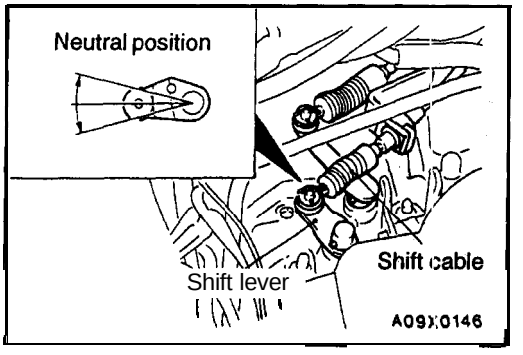

SHIFT CABLE

(1) Connect the shift cable to the transaxle side shift lever.
(2) Set the shift lever of the transaxle side at the neutral position.

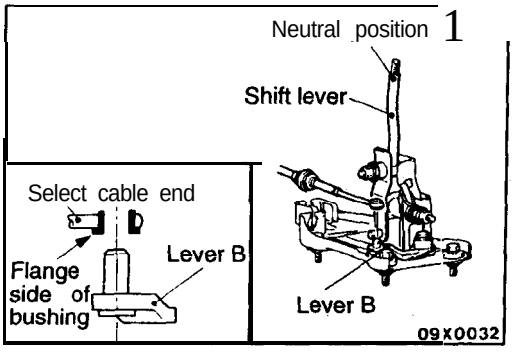

▶B◀ SHIFT CABLE AND SELECT CABLE CONNECTION (PASSENGER COMPARTMENT SIDE)

(1) While leaving the shift lever inside the passenger compartment in the neutral position, install the select cable to the passenger compartment side of the shift lever.
(2) Install the select cable so that the flange side of resin bushing is positioned at the edge of lever B side.

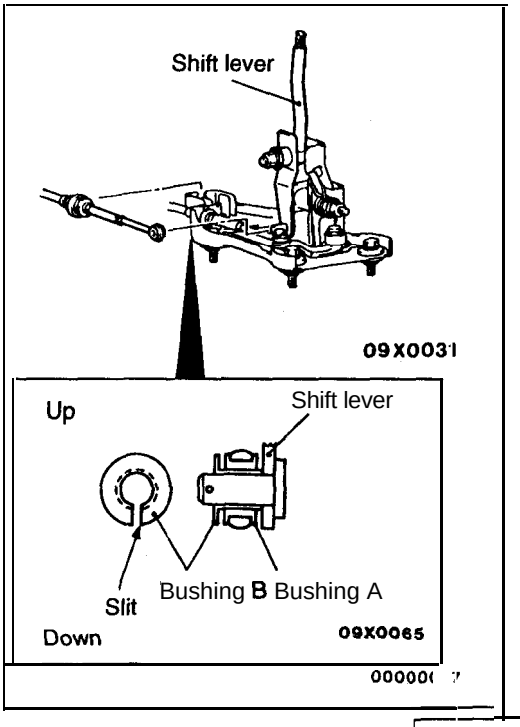

SHIFT CABLE

(1) While leaving the shift lever inside the passenger compartment in the neutral position, install the shift cable to the passenger compartment side of the shift lever. Install so that the slit section of the bushing B is facing either up or down.
(2) Put the shift lever to all the positions and make sure that the operation is smooth.

SHIFT LEVER ASSEMBLY DISASSEMBLY AND REASSEMBLY

22100400057

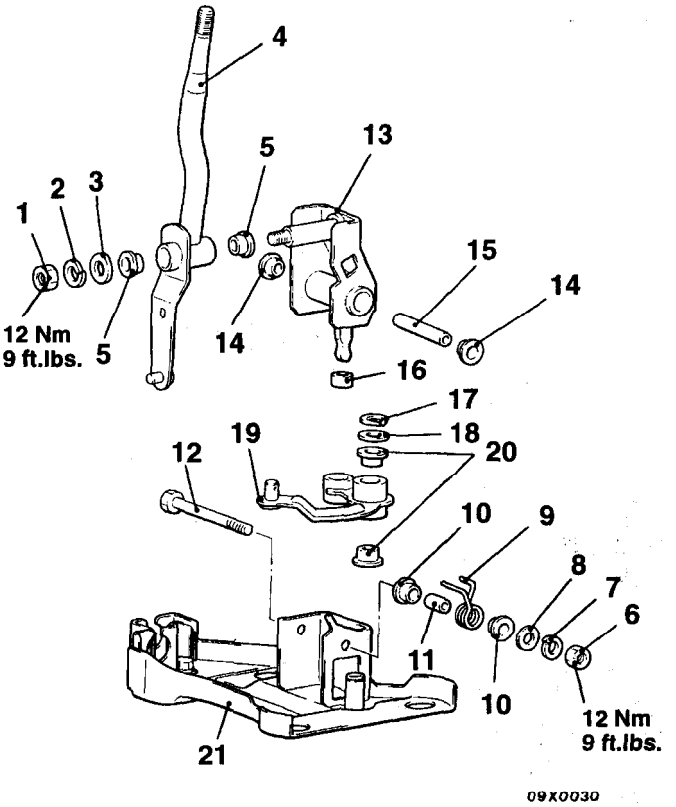

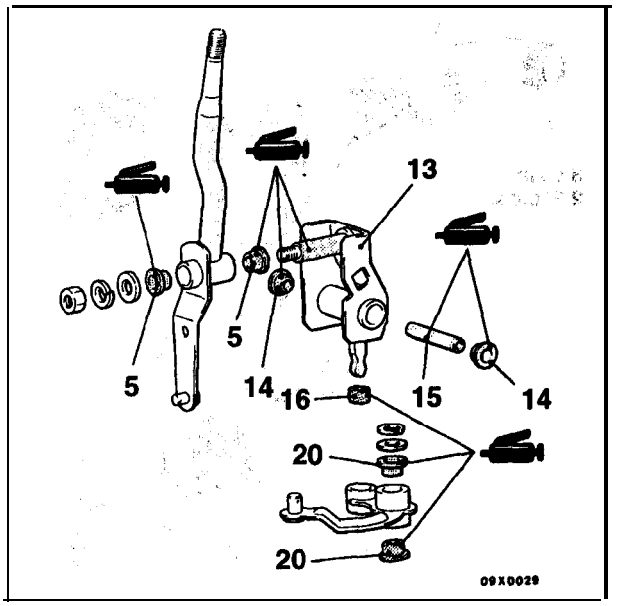

00000098

Disassembly steps

1. Nut
2. Spring washer
3. Plain washer
4. Shift lever
5. Bushing
6. Nut
7. Spring washer
8. Plain washer
9. Return spring
10. Bushing
11. Pipe
12. Bolt
13. Lever A
14. Bushing
15. Collar
16. Bushing
17. Snap ring
18. Washer
19. Lever B
20. Bushing
21. Bracket assembly

TSB Revision

TRANSAXLE ASSEMBLY

22100270108

REMOVAL AND INSTALLATION

Pre-removal Operation
- Transaxle Oil Draining (Refer to GROUP 00 – Maintenance Service.)
- Battery Removal
- Under Cover Removal (Refer to GROUP 42 – Under Cover.)

Post-installation Operation
- Supplying Transaxle Oil (Refer to GROUP 00 – Maintenance Service.)
- Shift Lever Operation Check
- Speedometer 'Operation Check
- Under Cover Installation (Refer to GROUP 42 – Under Cover.)
- Battery Installation

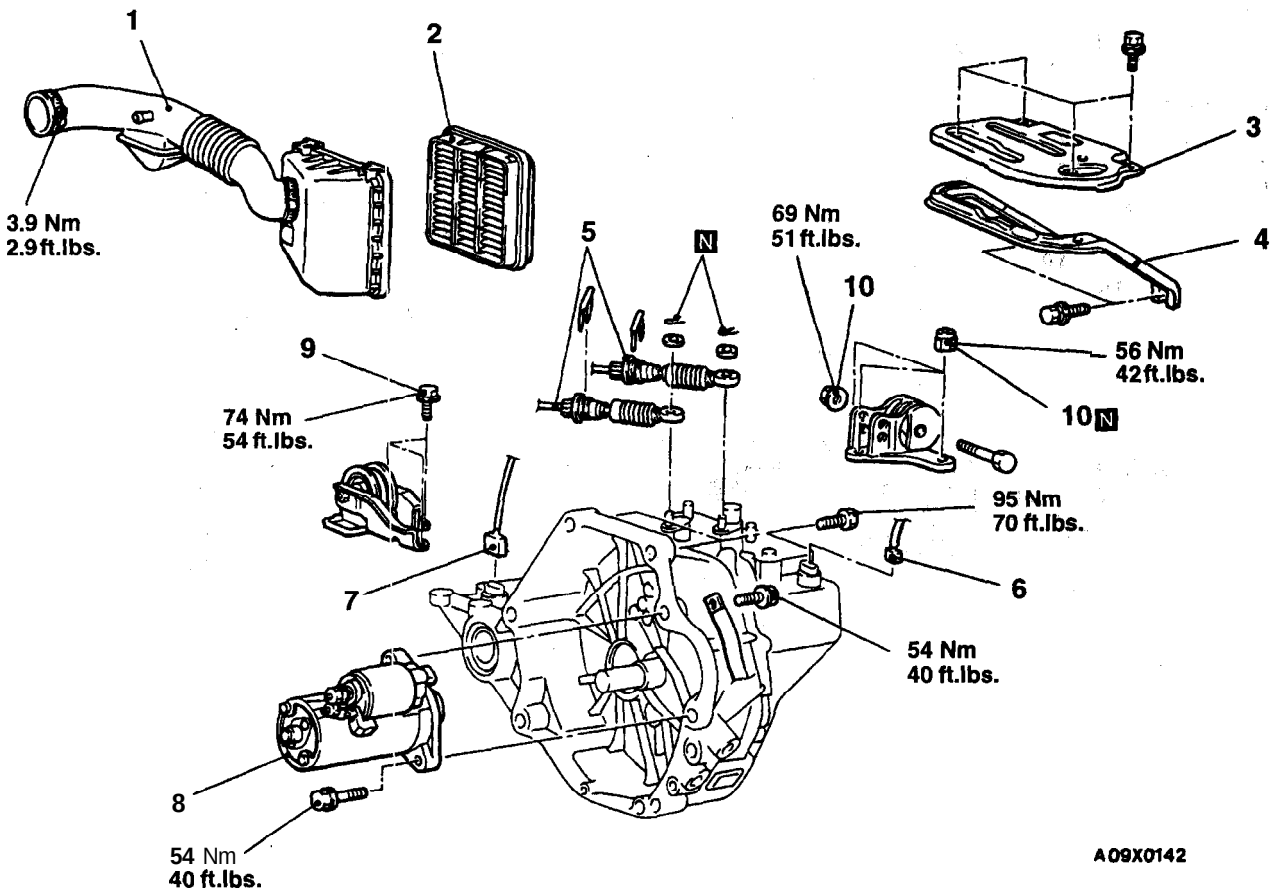

Removal steps

1. Air cleaner cover and air intake hose assembly
2. Air cleaner element
3. Battery tray
4. Battery tray stay
5. Shift cable and select cable connection
6. Backup light switch connector
7. Vehicle speed sensor connector
8. Starter motor
9. Rear roll stopper bracket mounting bolts
10. Transaxle mounting bracket mounting nuts

◀A▶ ● ♌ • Supporting engine assembly

TSB Revision

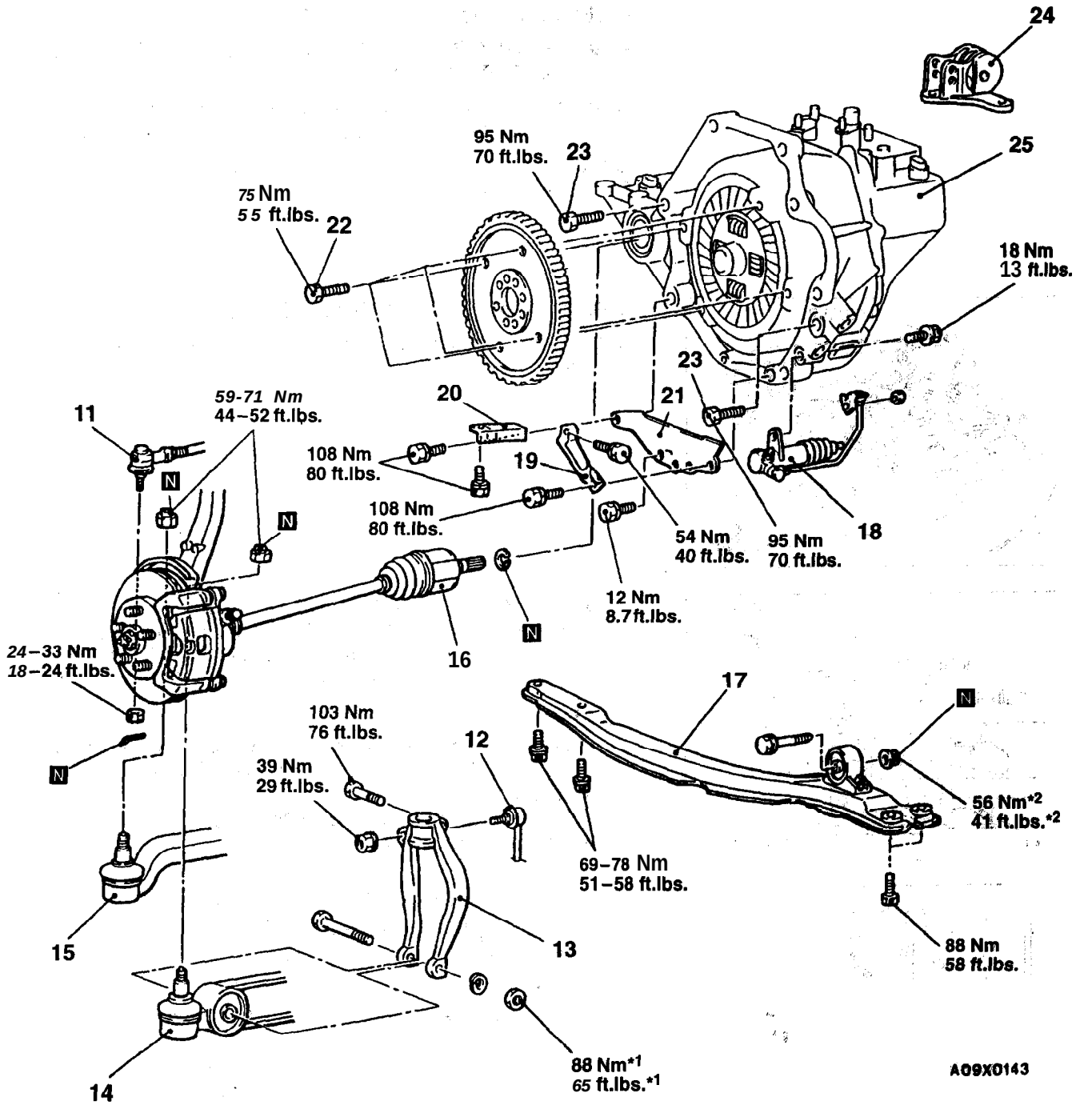

Lifting up of the vehicle

◀C▶ 11. Tie rod end ball joint and knucklle connection
12. Stabilizer link connection
13. Damper fork
◀C▶ 14. Lateral lower arm ball joint and knucklle connection
◀C▶ 15. Compression lower arm ball joint and knucklle connection
◀D▶ ▶C◀ 16. Drive shaft connection
▶B◀ 17. Center member assembly
◀E▶ 18. Clutch release cylinder connection
19. Front plate
20. Rear plate
21. Transaxle case lower cover
◀F▶ 22. Flex plate connecting bolts
◀F▶ 23. Transaxle assembly mounting bolts
▶A◀ 24. Transaxle mounting
◀F▶ 25. Transaxle assembly

Caution

- **I: Indicates parts which should be temporarily tightened, and then fully tightened with the vehicle on the ground in the unladen dondition.**

***2: For tightening locations indicated by the symbol, first tighten temporarily, and then make the final tightening with the entire weight of the engine applied to the vehicle body.**

TSB Revision

REMOVAL SERVICE POINTS

◀A▶ TRANSAXLE MOUNTING BRACKET MOUNTING NUTS REMOVAL

Jack up the transaxle assembly gently with a garage jack, and then remove the transaxle mounting bracket nuts.

Caution
Be sure not to tilt the transaxle assembly.

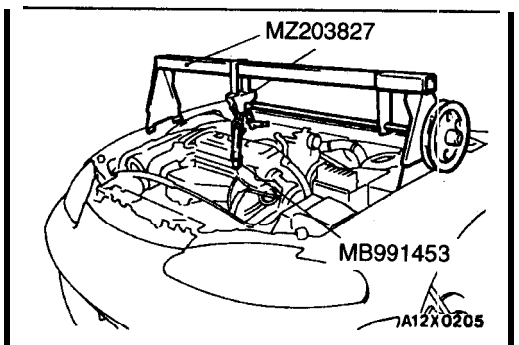

◀B▶ SUPPORTING ENGINE ASSEMBLY

Set the special tool to the vehicle to support the engine assembly.

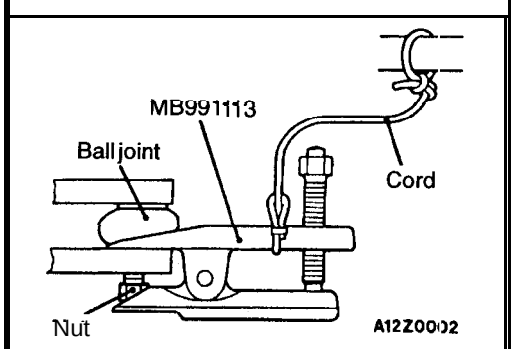

◀C▶ TIE ROD END BALL JOINT AND KNUCKLE/LATERAL LOWER ARM BALL JOINT AND KNUCKLE/COMPRESSION LOWER ARM BALL JOINT AND KNUCKLE DISCONNECTION

Caution
1. **Using the special tool, loosen the tie rod end mounting nut. Only loosen the nut; do not remove it from. the ball joint.**
2. **Support the special tool with a cord, etc. to prevent it from coming off.**

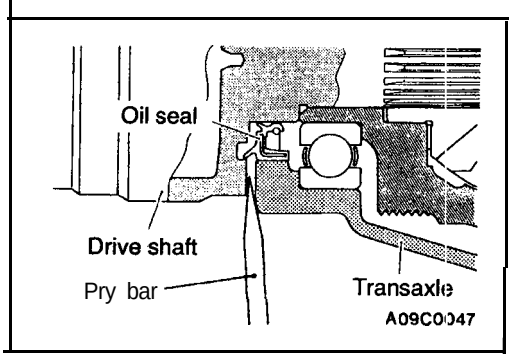

◀D▶ DRIVE SHAFT DISCONNECTION

(1) Insert a pry bar between the transaxle case and the drive shaft to remove the drive shaft.

NOTE
Do not remove the hub and knuckle from the drive shaft.

Caution
1. **Use a pry bar to remove the drive shaft from B.J. assembly, or the T.J. assembly may be damaged.**
2. **Do not insert the bar too far, or the oil seal may be damaged.**

(2) Suspend the removed drive shaft with wire so that there are no sharp bends in any of the joints.

(3) Use the special tool to cover the transaxle case to prevent foreign materials from getting into the transaxle case.

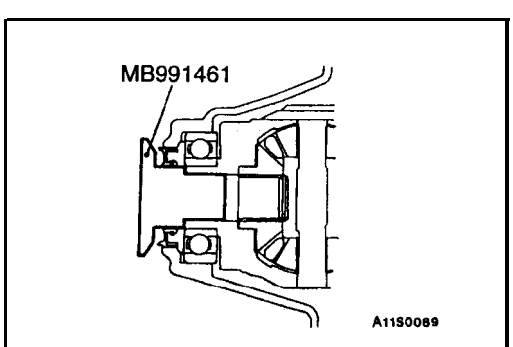

◀E▶ CLUTCH RELEASE CYLINDER DISCONNECTION

Remove the clutch release cylinder without disconnecting the oil line connection, and fix it to the vehicle chassis.

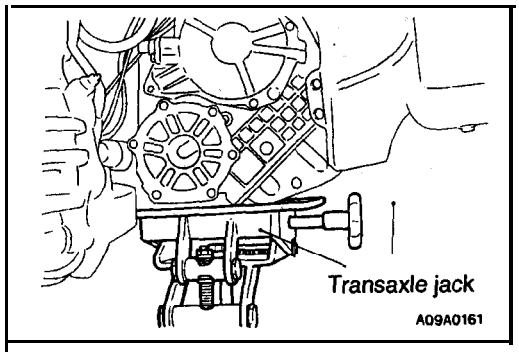

◀F▶ FLEX PLATE CONNECTING BOLTS/TRANSAXLE ASSEMBLY MOUNTING BOLTS/TRANSAXLE ASSEMBLY REMOVAL

(1) Support the transaxle assembly by using a transaxle jack.

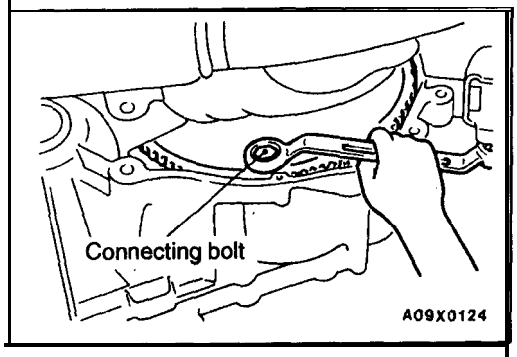

(2) Remove the connection bolts while turning the crankshaft.

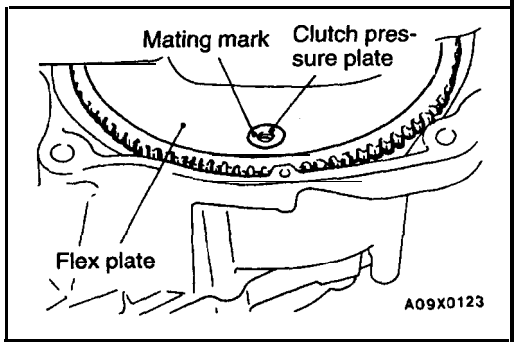

(3) Chalk mating marks on the flex plate and clutch pressure plate for easier installation.
(4) Press the clutch pressure plate into the transaxle for easier removal.
(5) Remove the transaxle assembly mounting bolt and lower the transaxle assembly.

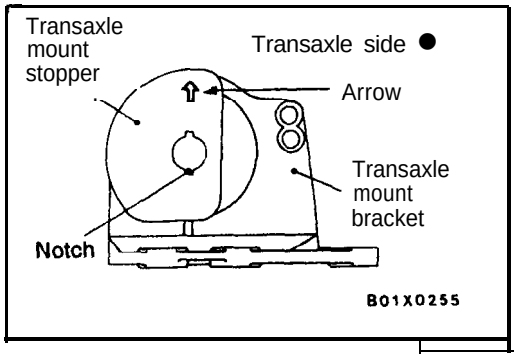

INSTALLATION SERVICE POINT

▶A◀ TRANSAXLE MOUNTING INSTALLATION

Align the notches on the stopper with the transaxle mount bracket with the arrow mark facing toward the shown direction. Then install the stopper.

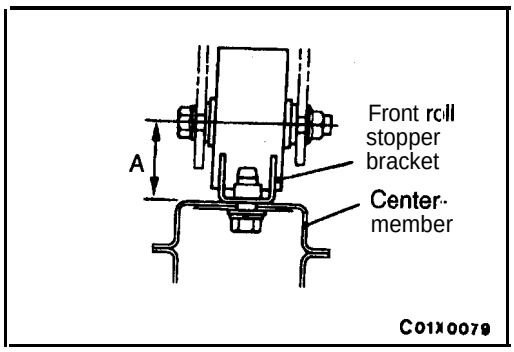

▶B◀ CENTERMEMBER ASSEMBLY INSTALLATION

If the dimension shown in the illustration is outside the standard value when the' weight of the engine is on the body, replace the front roll stopper bracket assembly.

Standard value (A): 43 ± 3 mm (1.69 ± .12 in.)

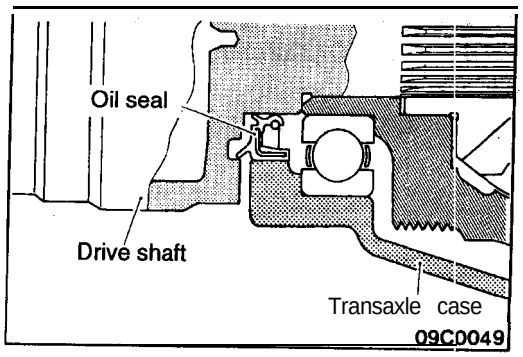

▶C◀ DRIVE SHAFT CONNECTION

Temporarily install the drive shaft so that the T.J. case of the drive shaft is perpendicular to the transaxle.

Caution
Do not damage the oil seal lip by the serrated part of the drive shaft.

MANUAL TRANSAXLE OVERHAUL <F5M31, F5M33, W5M33>

CONTENTS

22209000053

GENERAL INFORMATION

22200010055

SECTIONAL VIEW – F5M31

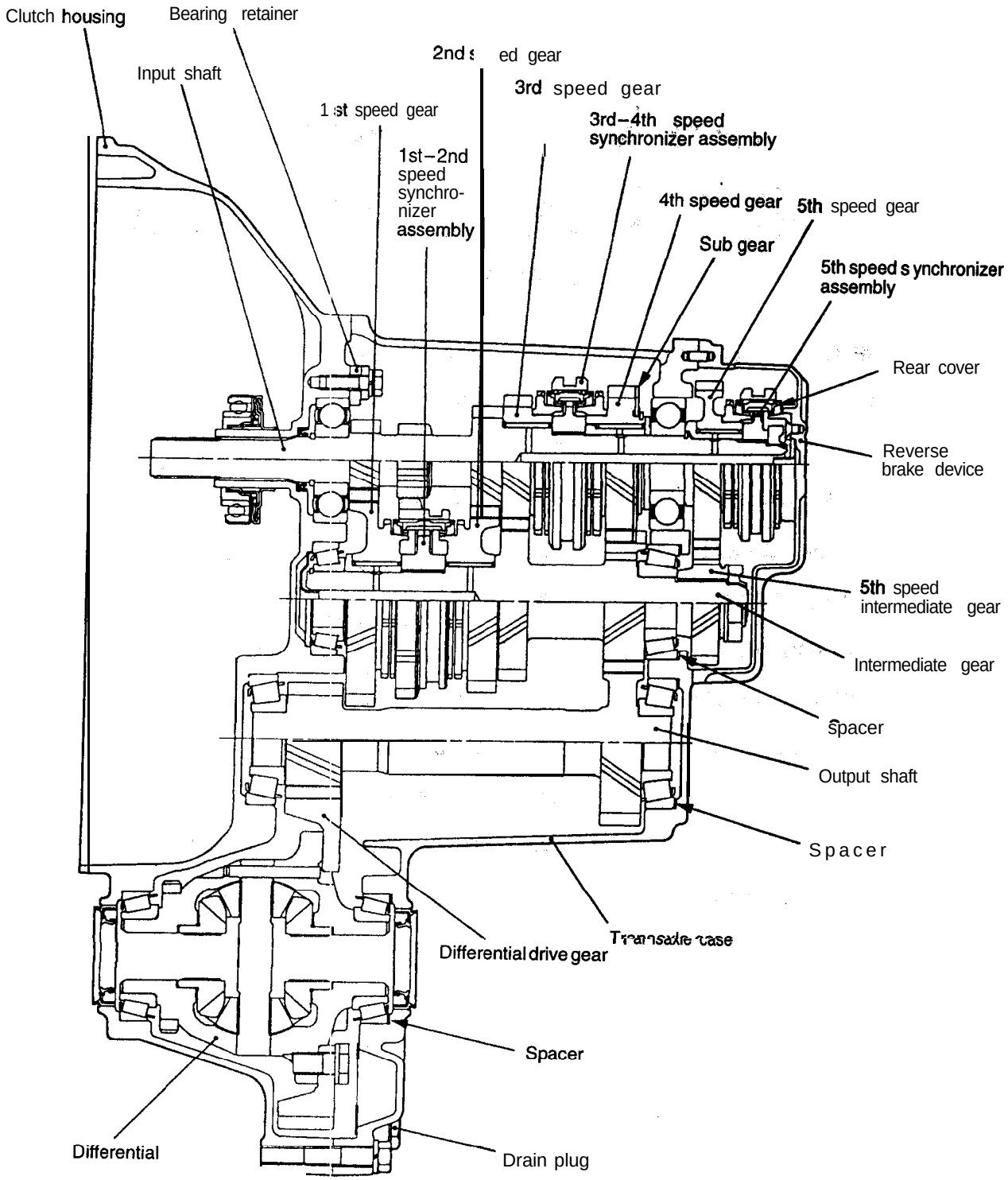

ZTFM0275

SECTIONAL VIEW – F5M33

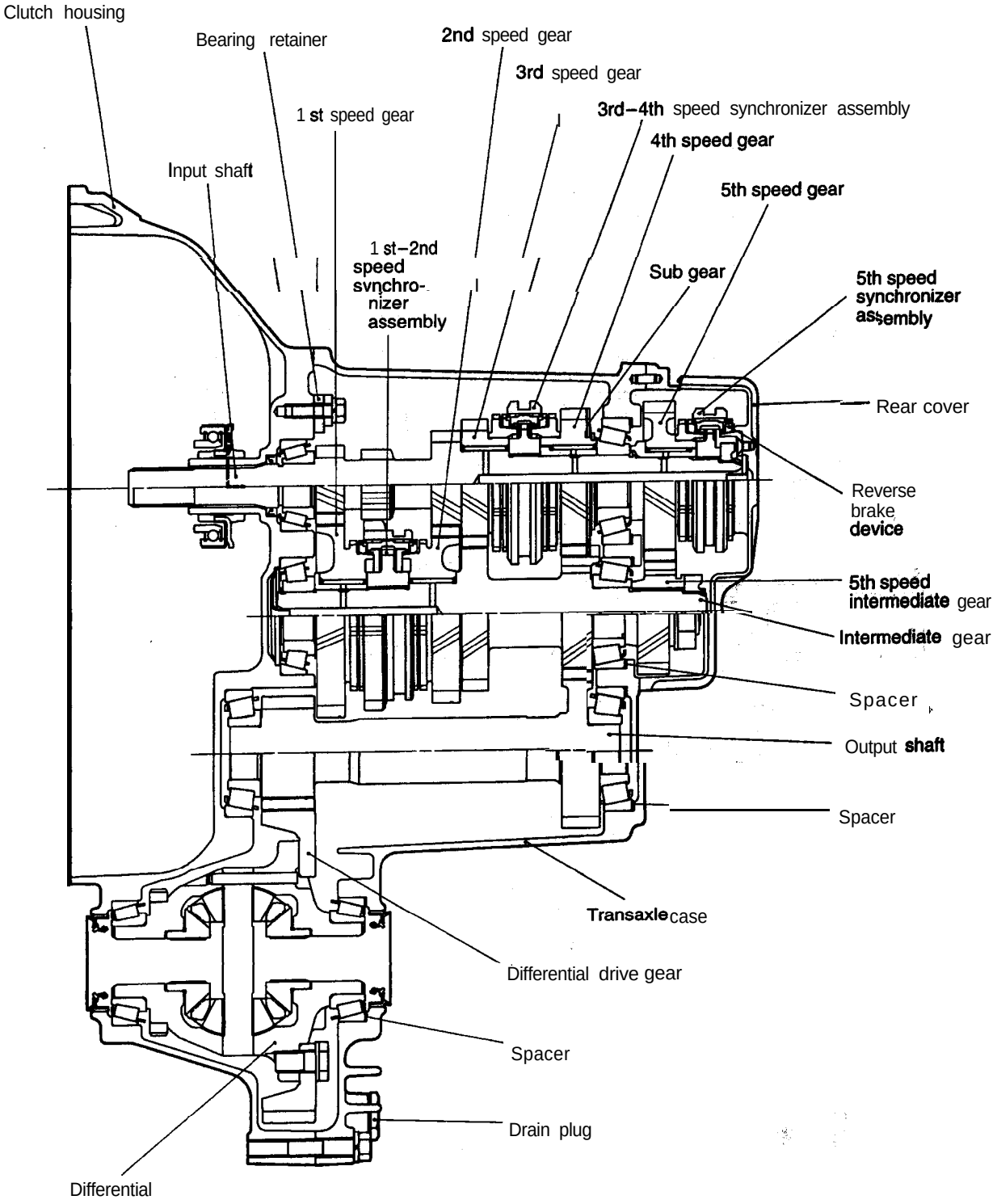

ZTFM0025

SECTIONAL VIEW – W5M33

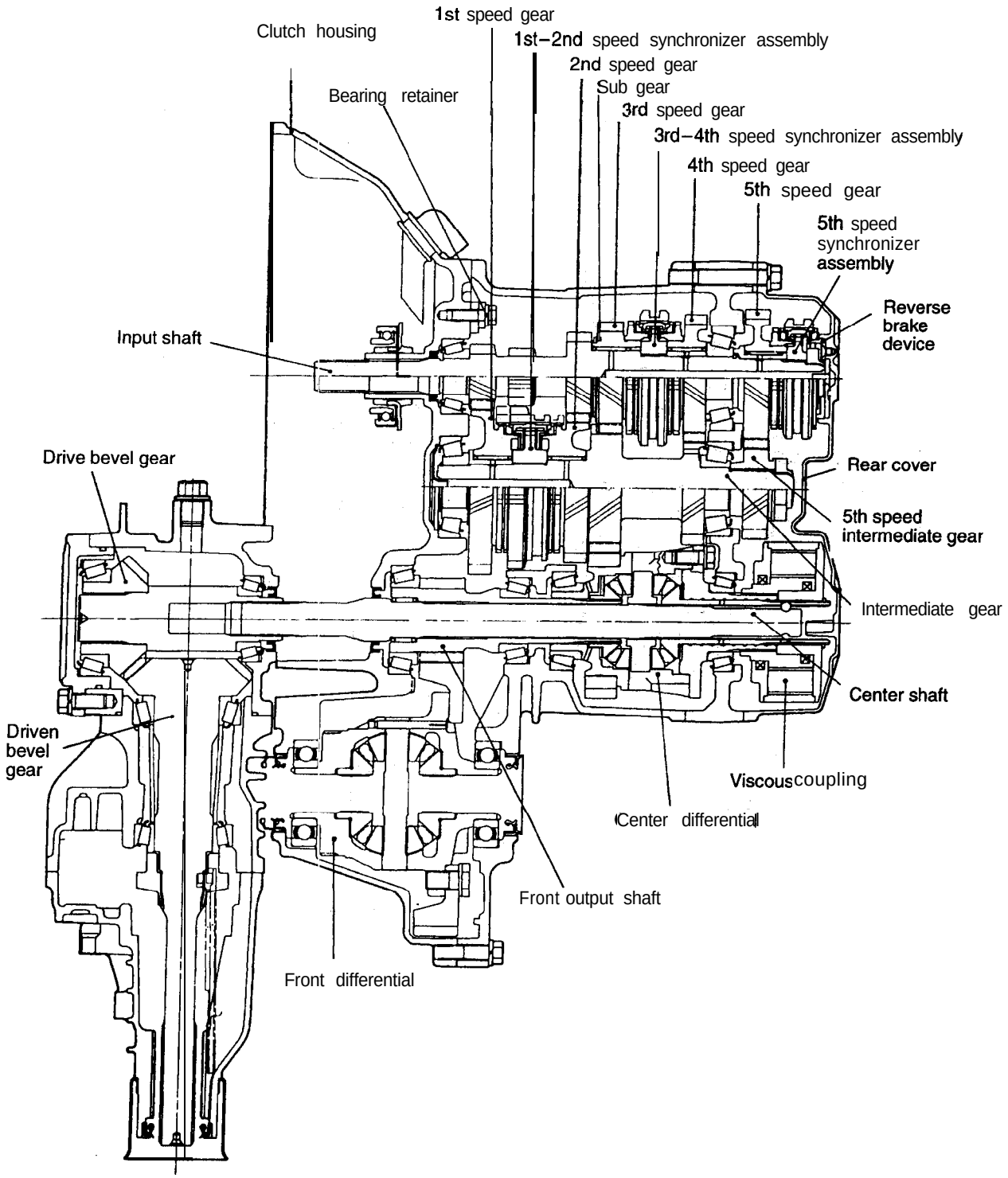

ZTFM0014

SPECIFICATIONS

22200020140

TRANSAXLE MODEL TABLE

Transaxle model	Gear ratio	Speedometer gear ratio	Final gear ratio	Vehicle model	Engine model"
F5M31-2-VVXT	A	29/36	3.625	D34A	4G64
F5M33-2-SPZT	B	29/36	4.153	D32A	4G63-DOHC Turbo
W5M33-2-MUZT	C	29/36	3.908	D33A	4G63-DOHC Turbo

GEAR RATIO TABLE

Items	A	B	C
1st	3.166	3.090	3.083
2nd	1.833	1.833	1.684
3rd	1.240	1.217	1.115
4th	0.896	0.888	0.833
5th	0.731	0.741	0.666
Reverse	3.166	3.166	3.166
Transfer		–	1.090

SERVICE SPECIFICATIONS <F5M31, F5M33>

22200030044

Items	Standard value
Differential case preload mm (in.)	0.05–0.10 (.0020 –.0040)
Differential pinion backlash mm (in.)	0.025–0.150 (.00098–.00591)
Input shaft front bearing end play <F5M31> mm (in.)	0.01–0.12 (.0004–.0047)
Input shaft end play <F5M33> mm (in.)	0–0.05 (0–.0020)
Input shaft rear bearing end play mm (in.)	0–0.09 (0–.0035)
Intermediate gear bearing end play <F5M33> mm (in.)	0.01–0.14 (.0004–.0055)
Intermediate gear bearing end play <F5M31> mm (in.)	0.01–0.11 (.0004–.0044)
Intermediate gear preload mm (in.)	0.05–0.10 (.0020–.0040)
Output shaft preload mm (in.)	0.05–0.10 (.0020–.0040)

SERVICE SPECIFICATIONS <W5M33>

Items	Standard value
Center differential case end play mm (in.)	0.08–0.13 (.0031–.0051)
Center differential side gear end play mm (in.)	0.05–0.25 (.0020 –.0100)
Front differential case end play mm (in.)	0.05–0.17 (.0020–.0067)
Front differential pinion backlash mm (in.)	0.025–0.150 (.00098 –.00591)
Front output shaft preload mm (in.)	0.08–0.13 (.0031–.0051)
Input shaft end play mm (in.)	0–0.05 (0–.0020)
Input shaft front bearing end play mm (in.)	0.01–0.12 (.0004–.0047)
Input shaft rear bearing end play mm (in.)	0–0.09 (0–.0035)
Intermediate gear bearing end play mrn (in.)	0.01–0.14 (.0004–.0055)
Intermediate gear preload mm (in.)	0.08–0.13 (.0031–.0051)
Transfer bevel gear set backlash mm (in.)	0.08–0.13 (.0031–.0051)
Transfer drive bevel gear rotating torque Nm (ft.lbs.)	1.7-2.5 (1.23–1.81)
Transfer driven bevel gear rotating torque Nm (ft.lbs.)	1.0–1.7 (0.72–1.23)
Viscous coupling end play mm (in.)	0.10–0.26 (.0039–.0102)

SNAP RINGS AND SPACERS FOR ADJUSTMENT

Snap ring (For adjustment of input shaft front bearing end play)

Thickness mm (in.)	identification symbol	Part No.	Thickness mm (in.)	Identification symbol	Part No.
2.24 (.0882)	None	MD706537	2.38 (.0937)	Brown	MD706539
2.31 (.0909)	Blue	MD706538			

Snap ring (For adjustment of input shaft rear bearing end play)

Thickness mm (in.)	Identification symbol	Part No.	Thickness mm (in.)	Identification symbol	Part No.
1.40 (.0551)	Blue	MD723276	1.60 (.0630)	Yellow	MD723278
1.45 (.0571)	Purple	MD730889	1.65 (.0650)	Brown	MD730891
1.50 (.0591)	Red	MD723277	1.70 (.0670)	Green	MD723279
1.55 (.0610)	White	MD730890	1.75 (.0689)	Orange	MD730892

Spacer: F5M33, W5M33 (For adjustment of input shaft end play)

Thickness mm (in.)	Identification symbol	Part No.	Thickness mm (in.)	Identification symbol	Part No.
0.80 (.0315)	80	MD727661	1.16 (.0457)	K	MD710455
0.83 (.0327)	83	MD720937	1.19 (.0468)	L	MD710456
0.86 (.0338)	86	MD720938	1.22 (.0480)	G	MD700271
0.89 (.0350)	89	MD720939	1.25 (.0492)	M	MD716457
0.92 (.0362)	92	MD720940	1.28 (.0504)	N	MD710458
0.95 (.0374)	95	MD720941	1.31 (.0561)	E	MD706574
0.98 (.0386)	98	MD720942	1.34 (.0527)	0	MD710459
1.01 (.0398)	01	MD720943	1.37 (.0539)	P	MD710460
1.04 (.0409)	04	MD720944	1.40 (.0551)		MD706573
1.07 (.0421)	07	MD720945	1.43 (.0563)	Q	MD710461
1.10 (.0433)	J	MD710454	1.46 (.0575)	R	MD710462
1.13 (.0445)	D	MD700270			

Snap ring: F5M33 (For adjustment of intermediate rear front bearing end play)

Thickness mm (in.)	Identification symbol	Part No.	Thickness mm (in.)	Identification symbol	Part No.
1.40 (.0551)	None	MD703779	1.60 (.0630)	Blue	MD703781
1.50 (.0591)	Brown	MD703780			

Snap ring: F5M31 (For adjustment of intermediate gear front bearing end play)

Thickness mm (in.)	Identification symbol	Part No.	Thickness mm (in.)	Identification symbol	Part No.
1.40 (.0551)	Blue	MD723276	1.60 (.0630)	Yellow	MD723278
1.50 (.0591)	Red	MD723277	1.70 (.0670)	Green	MD723279

Spacer: F5M31, F5M33 (For adjustment of intermediate gear end play)

Thickness mm (in.)	Identification symbol	Part No.	Thickness mm (in.)	Identification symbol	Part No.
0.62 (.0244)	62	MD736754	1.01 (.0398)	01	MD724149
0.65 (.0256)	65	MD736755	1.04 (.0409)	04	MD724150
0.68 (.0268)	68	MD735659	1.07 (.0421)	07	MD724151
0.71 (.0280)	71	MD735660	1.10 (.0433)	10	MD724152
0.74 (.0291)	74	MD735661	1.13 (.0445)	13	MD724153
0.77 (.0303)	77	MD735662	1.16 (.0457)	16	MD724154
0.80 (.0315)	80	MD724142	1.19 (.0468)	19	MD724155
0.83 (.0327)	83	MD724143	1.22 (.0480)	22	MD724156
0.86 (.0338)	86	MD724144	1.25 (.0492)	25	MD724157
0.89 (.0350)	89	MD724145	1.28 (.0504)	28	MD724158
0.92 (.0362)	92	MD724146	1.31 (.0516)	31	MD724159
0.95 (.0374)	95	MD724147	1.34 (.0527)	34	MD724160
0.98 (.0386)	98	MD724148	1.37 (.0539)	37	MD724161

Spacer: W5M33 (For adjustment of intermediate gear preload)

Thickness mm (in.)	Identification syrnbol	Part No.	Thickness mm (in.)	Identification symbol	Part No.
0.80 (.0315)	80	MD720948	1.13 (.0445)	13	MD720959
0.83 (.0327)	83	MD720949	1.16 (.0457)	16	MD720960
0.86 (.0350)	86	[illegible]	1.19 (.0480)	19	MD720961
0.89 (.0350)	89	MD720951	1.22	22	MD720962
0.92 (.0362)	92	MD720952	1.25 (.0492)	25	MD712346
0.95 (.0374)	95	MD720953	1.28 (.0504)	28	MD712347
0.98 (.0386)	98	MD720954	1.31 (.0515)	31	MD712348
1.01 (.0398)	01	MD720955	1.34 (.0527)	34	MD712349
1.04 (.0409)	04	MD720956	1.37 (.0539)	37	MD712329
1.07 (.0421)	07	MD720957	1.40 (.0551)	40	
1.10 (.0433)	10	MD720958	1.43 (.0563)	43	MD712331

Spacer: F5M31, F5M33 (For adjustment of output shaft end play)

Thickness mm (in.)	Identification symbol	Part No.	Thickness mm (in.)	Identification symbol	Pan No.
0.83 (.0327)	83	MD720937	1.10 (.0433)	J	MD710454
0.86 (.0338)	86	MD720938	1.13 (.0445)	D	MD700270
0.89 (.0350)	89	MD720939	1.16 (.0457)	K	MD710455
0.92 (.0362)	92	MD720940	1.19 (.0468)	L	MD710456
0.95 (.0374)	95	MD720941	1.22 (.0480)	G	MD700271
0.98 (.0386)	98	MD720942	1.25 (.0492)	M	MD710457
1.01 (.0398)	01	MD720943	1.28 (.0504)	N	MD710456
1.04 (.0409)	04	MD720944	1.31 (.0516)	E	MD706574
1.07 (.0421)	07	MD720945	1.34 (.0527)	0	MD710459

Spacer: W5M33 (For adjustment of front differential case end play)

Thickness mm (in.)	Identification symbol	Part No.	Thickness mm (in.)	Identification symbol	Part No.
0.56 (.0220)	56	MD727658	1.01 (.0398)	01	MD720943
0.65 (.0256)	65	MD727659	1.10 (.0433)	J	MD710454
0.74 (.0291)	74	MD727660	1.19 (.0468)	L	MD710456
0.83 (.0327)	83	MD720937	1.28 (.0504)	N	MD710458
0.92 (.0362)	92	MD720940	1.37 (.0539)	P	MD710460

Spacer: F5M31, F5M33 (For adjustment of front differential case end play)

Thickness mm (in.)	Identification symbol	Part No.	Thickness mm (in.)	Identification symbol	Part No.
0.80 (.0315)	80	MD727661	0.92 (.0362)	92	MD720940
0.83 (.0327)	83	MD720937	0.95 (.0374)	95	MD720941
0.86 (.0338)	86	MD720938	0.98 (.0386)	98	MD720942
0.89 (.0350)	89	MD720939	1.01 (.0398)	01	MD710455
1.04 (.0409)	04	MD720944	1.16 (.0457)	K	MD710456
1.07 (.0421)	07	MD720945	1.19 (.0468)	L	MD700271
1.10 (.0433)	J	MD710454	1.22 (.0480)	G	MD710457
1.13 (.0445)	D	MD700270	1.25 (.0492)	M	

Spacer (For adjustment of front differential pinion backlash)

Thickness mm (in.)	Identification symbol	Part No.	Thickness mm (in.)	Identification symbol	Part No.
0.75–0.82 (.0295–.0323)	–	MA180862	1.01–1.08 (.0398–.0425)		MA180675
0.83–0.92 (.0327–.0362)	–	MA180861	1.09–1.16 (.0429–.0457)	–	MA180876
0.93–1.00 (.0366–.0394)		MA180860			

Spacer: W5M33 (For adjustment of front output shaft preload)

Thickness mm (in.)	Identification symbol	Part No.	Thickness mm (in.)	Identification symbol	Part No.
1.28 (.0504)	B28	MD726167	1.61 (.0634)	B61	MD724334
1.31 (.0516)	B31	MD726168	1.64 (.0646)	B64	MD724335
1.34 (.0527)	B34	MD726169	1.67 (.0657)	B67	MD724336
1.37 (.0539)	B37	MD724326	1.70 (.0669)	B70	MD724337
1.40 (.0551)	B40	MD724327	1.73 (.0681)	B73	MD724338
1.43 (.0563)	B43	MD724328	1.76 (.0692)	B76	MD724339
1.46 (.0575)	B46	MD724329	1.79 (.0705)	B79	MD724340
1.49 (.0587)	B49	MD724330	1.82 (.0716)	B82	MD724341
1.52 (.0598)	B52	MD724331	1.85 (.0728)	B85	MD724342
1.55 (.0610)	B55	MD724332	1.88 (.0740)	B88	MD724343
1.58 (.0622)	B58	MD724333	1.91 (.0751)	B91	MD724344

Snap ring: W5M33 [For adjustment of viscous coupling end play (with VCU)]

Thickness mm (in.)	Identification symbol	Part No.	Thickness mm (in.)	Identification symbol	Part No.
1.3 (.051)	Orange	MD727650	1.7 (.067)	White	MD720689
1.4 (.055)	Red	MD720686	1.8 (.071)	Yellow	MD720690
1.5 (.059)	Blue	MD720687	1.9 (.075)	Green	MD727651
1.6 (.063)	None	MD720688			

Spacer: W5M33 (For adjustment of center differential pinion backlash front side)

Thickness mm (in.)	Identification symbol	Part No.	Thickness mm (in.)	Identification symbol	Part No.
2.09–2.16 (.0823–.0850)	0	MD741413	2.51–2.58 (.0988–.1016)	5	MD741408
2.17–2.24 (.0854–.0882)	9	MD741412	2.59-2.66 (.1020–.1047)	4	MD741407
2.25-2.32 (.0886–.0913)	8	MD741411	2.67-2.74 (.1050–.1079)	3	MD741406
2.33-2.42 (.0917–.0953)	7	MD741410	2.75-2.82 (.1083–.1110)	2	MD741405
2.43–2.50 (.0597–.0984)	6	MD741409			

Spacer: W5M33 (For adjustment of center differential case preload)

Thickness mm (in.)	Identification symbol	Part No.	Thickness mm (in.)	Identification symbol	Part No.
1.13 (.0445)	13	MD736928	1.49 (.0587)	49	MD718524
1.16 (.0457)	16	MD736929	1.52 (.0598)	52	MD718525
1.19 (.0468)	19	MD736751	1.55 (.0610)	55	MD718526
1.22 (.0480)	22	MD736931	1.58 (.0622)	58	MD718527
1.25 (.0492)	25	MD726166	1.61 (.0634)	61	MD718528
1.28 (.0504)	28	MD718517	1.64 (.0646)	64	MD718529
1.31 (.0516)	31	MD718518	1.67 (.0657)	87	MD718530
1.34 (.0527)	34	MD718519	1.70 (.0669)	70	MD718531
1.37 (.0539)	37	MD718520	1.73 (.0681)	73	MD721959
1.40 (.0551)	40	MD718521	1.76 (.0692)	76	MD721960
1.43 (.0563)	43	MD718522	1.79 (.0705)	79	MD721961
1.46 (.0575)	46	MD718523			

Spacer: W5M33 (For adjustment of center differential pinion backlash, rear side)

Thickness mm (in.)	Identification symbol	Part No.	Thickness mm (in.)	Identification symbol	Part No.
0.59–0.66 (.0232–.0260)	74	MD724974	0.93–1.00 (.0366–0.394)	78	MD720678
0.67–0.74 (.0264–.0291)	50	MD724950	1.01–1.08 (.0398–.0425)	76	MD720676
0.75–0.82 (.0295–.0323)	80	MD720680	1.09–1.16 (.0429–.0457)	77	MD720677
0.83–0.92 (.0327–.0362)	79	MD720679	1.17–1.24 (.0421–.0488)	49	MD724949

Spacer: W5M33 (For adjustment of drive bevel gear mount)

Thickness mm (in.)	Identification symbol	Part No.	Thickness mm (in.)	Identification symbol	Part No.
1.34 (.0528)	34	MD723600	1.52 (.0598)	52	MD723606
1.37 (.0539)	37	MD723601	1.55 (.0610)	55	MD723607
1.40 (.0551)	40	MD723602	1.58 (.0622)	58	MD723608
1.43 (.0563)	43	MD723603	1.61 (.0634)	61	MD723609
1.46 (.0575)	46	MD723604	1.64 (.0646)	64	MD726170
1.49 (.0587)	49	MD723605	1.67 (.0657)	67	MD726171

Spacer: W5M33 (For adjustment of drive bevel gear preload)

Thickness mm (in.)	Identification symbol	Part No.	Thickness mm (in.)	Identification symbol	Part No.
1.28 (.0504)	B28	MD726167	1.58 (.0622)	B58	MD724333
1.31 (.0516)	B31	MD726168	1.61 (.0634)	B61	MD724334
1.34 (.0528)	B34	MD726169	1.64 (.0646)	B64	MD724335
1.37 (.0539)	B37	MD724326	1.67 (.0657)	B67	MD724336
1.40 (.0551)	B40	MD724327	1.70 (.0669)	B70	MD724337
1.43 (.0563)	B43	MD724328	1.73 (.0681)	B73	MD724338
1.46 (.0575)	B46	MD724329	1.76 (.0693)	B76	MD724339
1.49 (.0587)	B49	MD724330	1.79 (.0705)	B79	MD724340
1.52 (.0598)	B52	MD724331	1.82 (.0717)	B82	MD724341
1.55 (.0610)	B55	MD724332	1.85 (.0728)	B85	MD724342

Spacer: W5M33 (For adjustment of drive bevel gear mount)

Thickness mm (in.)	Identification symbol	Part No.	Thickness mm (in.)	Identification symbol	Part No.
0.13 (.0051)	13	MD720353	0.34 (.0134)	34	MD720360
0.16 (.0063)	16	MD720354	0.37 (.0146)	37	MD720361
0.19 (.0075)	19	MD720355	0.40 (.0157)	40	MD720362
0.22 (.0087)	22	MD720356	0.43 (.0169)	43	MD720363
0.25 (.0098)	25	MD720357	0.46 (.0181)	46	MD720364
0.28 (.01IO)	28	MD720358	0.49 (.0193)	49	MD720365
0.31 (.0122)	31	MD720359	0.52 (.0205)	52	MD720366

Spacer: W5M33 (For adjustment of driven bevel gear preload)

Thickness mm (in.)	Identification symbol	Part No.	Thickness mm (in.)	Identification symbol	Part No.
1.19 (.0469)	19	MD726172	1.58 (.0622)	58	MD722093
1.22 (.0480)	22	MD722081	1.61 (.0634)	61	MD722094
1.25 (.0492)	25	MD722082	1.64 (.0646)	64	MD722095
1.28 (.0504)	28	MD722083	1.67 (.0657)	67	MD722096
1.31 (.0516)	31	MD722084	1.70 (.0669)	70	MD722097
1.34 (.0528)	34	MD722085	1.73 (.0681)	73	MD722098
1.37 (.0539)	37	MD722086	1.76 (.0693)	76	MD722099
1.40 (.0551)	40	MD722087	1.79 (.0705)	79	MD722100
1.43 (.0563)	43	MD722088	1.82 (.0717)	82	MD722101
1.46 (.0575)	46	MD722089	1.85 (.0728)	85	MD722102
1.49 (.0587)	49	MD722090	1.88 (.0740)	88	MD722103
1.52 (.0598)	52	MD722091	1.91 (.0752)	91	MD722104
1.55 (.0610)	55	MD722092	1.94 (.0764)	94	MD722105

TORQUE SPECIFICATIONS

Items	Nm	ft.lbs.
Transaxle		
Backup light switch	33	24
Bearing retainer bolt	19	14
Bell housing cover mounting bolt	9	7
Center differential lock actuator mounting bolt <W5M33>	19	14
Center differential lock indicator lamp switch <W5M33>	33	24
Center differential shift lever mounting bolt <W5M33>	19	14
Differential drive gear bolt	135	98
Input shaft lock nut	150	109
Interlock plate bolt	24	18
Intermediate gear lock nut	150	109
Oil drain plug	33	24
Oil filler plug	33	24
Output gear mounting bolt	75	55
Poppet plug	36	27
Rear cover bolt <W5M33>	39	29
Rear cover bolt <F5M31,F5M33>	19	14
Restrict ball	33	24
Reverse brake cone machine screw	7	5
Reverse idler gear shaft bolt	49	36
Reverse shift lever assembly attaching bolt	19	14
Select lever mounting bolt	19	14
Shift cable bracket mounting bolt	19	14
Speedometer sleeve bolt	4	3
Starter motor mounting bolt	27	20
Stopper bracket bolt	19	14
Transaxle case tightening bolt	39	29
Transaxle mount bracket mounting bolt	70	51
Transaxle mounting bolt [10 mm diameter bolt]	49	36
Transaxle mounting bolt [8 mm diameter bolt]	27	20
Transaxle mounting bolt [6 mm diameter bolt]	11	8
Transaxle switch <F5M31,F5M33>	33	24

Items	Nm	ft.lbs.
Transfer		
Cover mounting bolt	9	7
Driven bevel gear lock nut	150	109
Extension housing	19	14
Oil drain plug	33	24
Oil filler plug	33	24
Transfer case adapter mounting bolt	39	29
Transfer cover mounting bolt	39	29
Transfer mounting bolt	59	42

SEALANTS AND ADHESIVES

22200040054

Items	Specified sealants and adhesives	Quantity
Transaxle case – rear cover mating surfaces	Mitsubishi genuine sealant Part No.MD997740 or equivalent	As required
Transaxle case – clutch housing mating surfaces		
Adapter-transaxle case mating surfaces <W5M33>		
Adapter – rear cover mating surfaces <W5M33>		
Output gear bolt <W5M33>	3M STUD Locking No.41 70 or equivalent	As required
Differential drive gear bolts		
Bearing retainer bolt (Countersink head bolt only)		
Air breather	3M SUPER WEATHERSTRIP No.8001 or equivalent	As required
Transfer extension housing – adapter mating surfaces	Mitsubishi genuine sealant Part No.MD997740 or equivalent	As required
Transfer cover gasket	3M ATD Part No.8660 or equivalent	As required

SPECIAL TOOLS

22200060050

Tool	Tool number and name	Supersession	Application
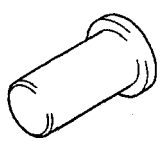	MD998304 Oil seal installer	MD998304-01	Installation of transfer extension housing oil seal,
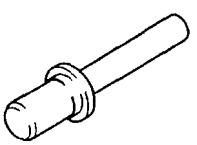	MD998321 Oil seal installer	MD998321-01	Installation of input shaft oil seal

Tool	Tool number and name	Supersession	Application
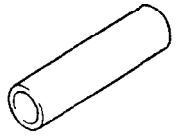	MD998323 Bearing installer	General service tool	Installation of input shaft bearing
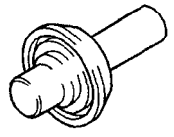	MD998325 Differential oil seal installer	MD998325-01	Installation of differential oil seal
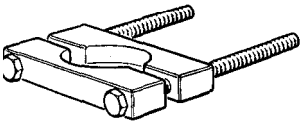	MD998801 Bearing remover	MD998348-01	Removal of gears and bearings of input shaft, intermediate gear and output shaft
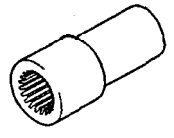	MD998802 Input shaft holder	MD998802-01	Installation and removal of input shaft and intermediate gear lock nut
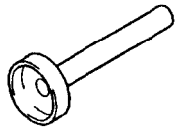	MD998803 Differential oil seal installer	General service tool	Installation of differential oil seal <W5M33>
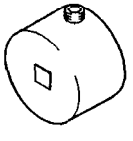	MD998806 Wrench adapter	MD998806-01	Adjustment of tooth contact and inspection of turning drive torque <W5M33>
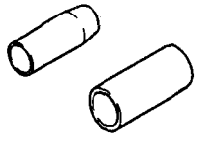	MD998808 Snap ring installer	MD998808-01	Installation of input shaft rear snap ring
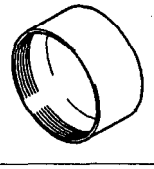	MD998812 Installer cap	General service tool	Use with installer and adapter
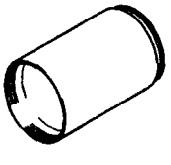	MD998813 Installer – 100	General service tool	Use with installer cap and adapter

Tool	Tool number and name	Supersession	Application
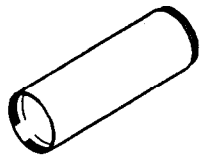	MD998814 Installer – 200	MIT304180	Use with installer cap and adapter
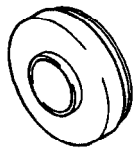	MD998816 Installer adapter (30)	General service tool	Installation of each bearing
	MD998817 Installer adapter (34)	MD998817-01	
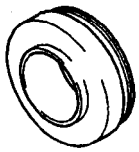	MD998818 Installer adapter (38)	MD998818	
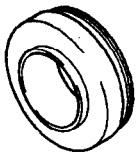	MD998819 Installer adapter (40)	MD998819	
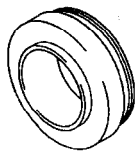	MD998820 Installer adapter (42)	MIT 215013	
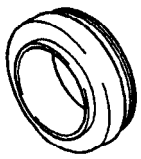	MD998822 Installer adapter (46)	MD998822-01	
	MD998824 Installer adapter (50)	General service tool	
	MD998825 Installer adapter (52)	General service tool	

Tool	Tool number and name	Supersession	Application
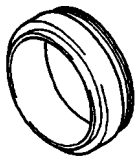	MD998827 Installer adapter (56)	–	Installation of each bearing
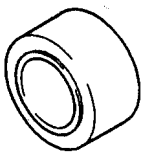	MD998833 Oil seal installer	–	Installation of transfer case oil seal
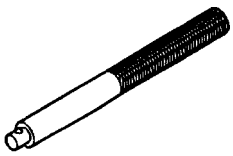	MB990938 Handle	MB990938-01	
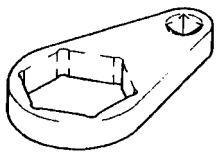	MD998834 Special spanner	–	Installation and removal of driver bevel gear lock nut <W5M33>
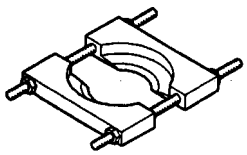	MD998917 Bearing remover	MD998917-01	Removal of intermediate gear bearing
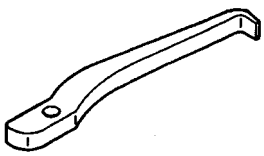	MD999566 Claw	General service tool	Removal of bearing outer race
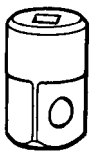	MB990326 Preload socket	General service tool	Measurement of drive bevel gear shaft rotating torque <W5M33>
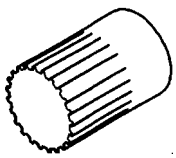	MB991144 Side gear holding tool	MB991144	

TRANSAXLE

22200100059

DISASSEMBLY AND REASSEMBLY – F5M31

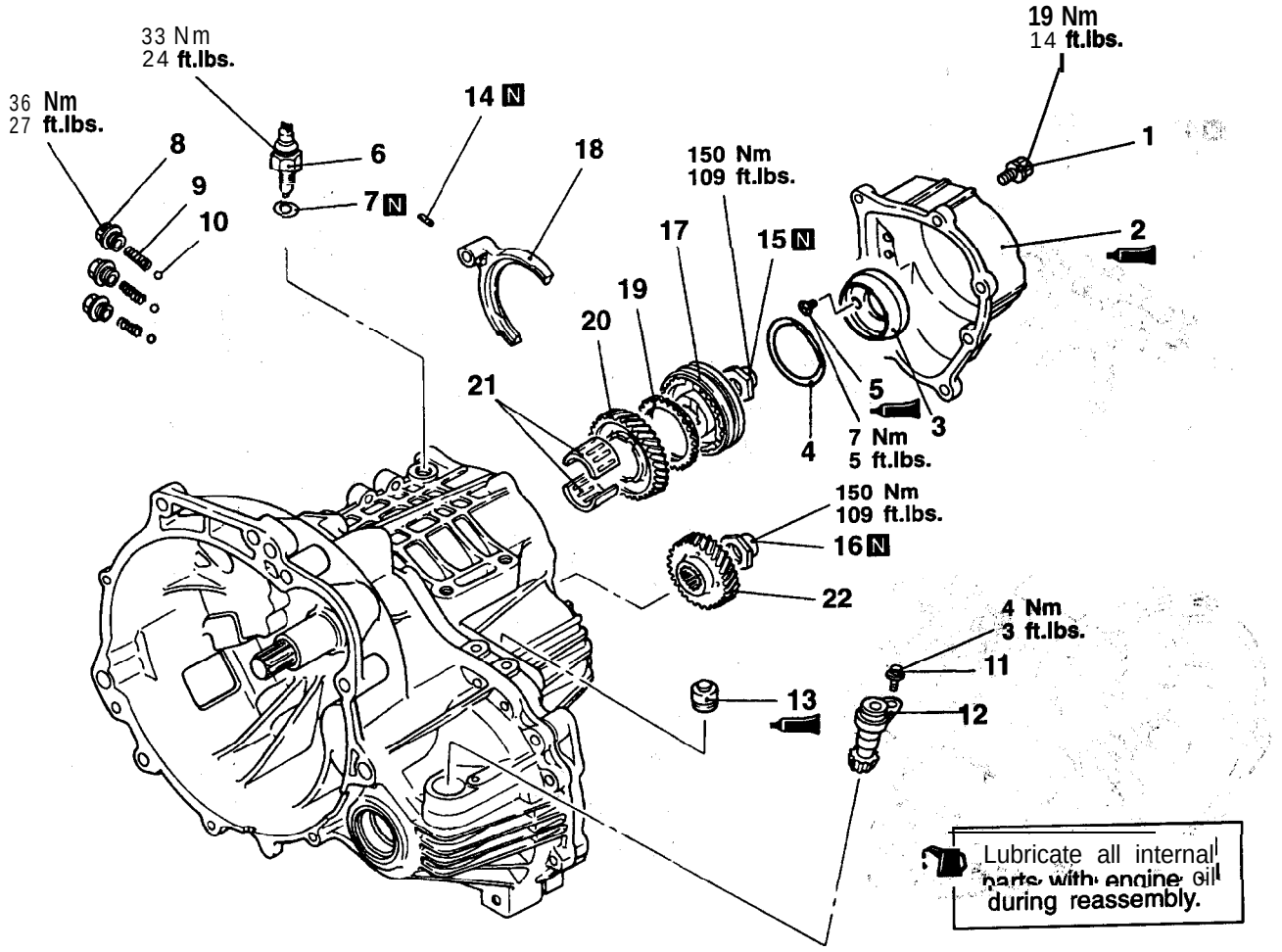

ZTFM0078

Disassembly steps

1. Bolt
▶O◀ 2. Rear cover
3. Reverse brake cone
▶X◀ 41 Wave spring
▶P◀ 5. Machine screw
6. Backup light switch
7. Gasket
8. Poppet plug
9. Poppet spring
10. Poppet ball
11. Bolt
12. Speedometer. driven gear assembly
▶N◀ 13. Air breather
▶M◀ 14. Spring pin
◀A▶ ▶L◀ 15. Lock nut
◀A▶ ▶L◀ 16. Lock nut
17. 5th speed synchronizer assembly
18. 5th speed shift fork
19. Synchronizer ring
20. 5th speed gear
21. Needle bearing
22. 5th speed intermediate gear

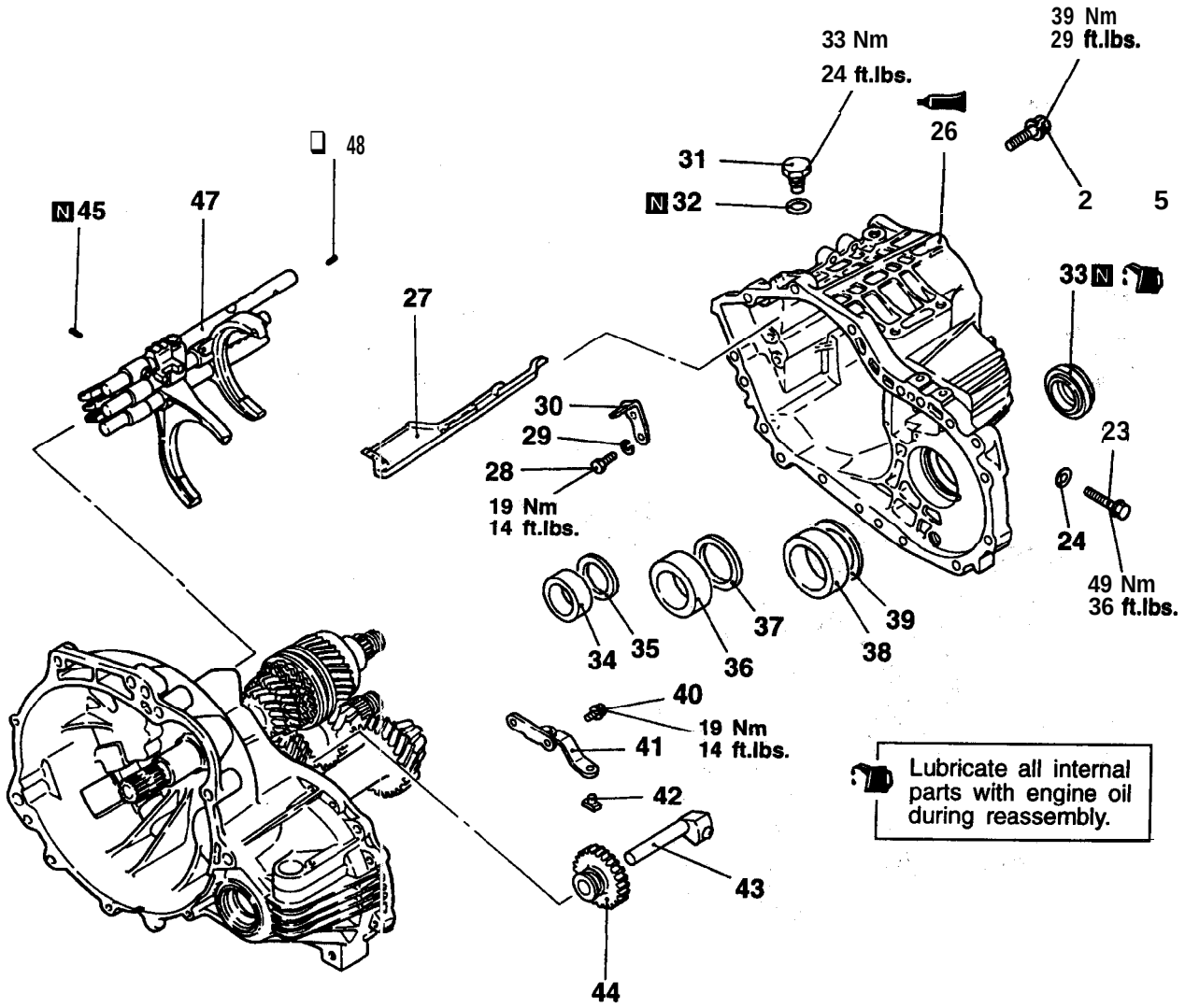

2210010

Disassembly steps

- ▶K◀ 23. Reverse idler gear shaft bolt
- 24. Gasket
- 25. Bolt
- ▶J◀ 26. Transaxle case
- 27. Oil guide
- 28. Bolt
- 29. Spring washer
- 30. Stopper bracket
- 31. Restrict ball assembly
- 32. Gasket
- ▶I◀ 33. Oil seal
- 34. Bearing outer race
- ▶H◀ 35. Spacer
- 36. Bearing outer race
- ▶H◀ 37. Spacer
- 38. Bearing outer race
- ▶H◀ 39. Spacer
- 40. Bolt
- 41. Reverse shift lever assembly
- 42. Reverse shift lever shoe
- ▶G◀ 43. Reverse idler gear shaft
- 44. Reverse idler gear
- ▶F◀ 45. Spring pin
- ▶F◀ 46. Spring pin
- ◀B▶ ▶E◀ 47. Shift rail assembly

TSB Revision

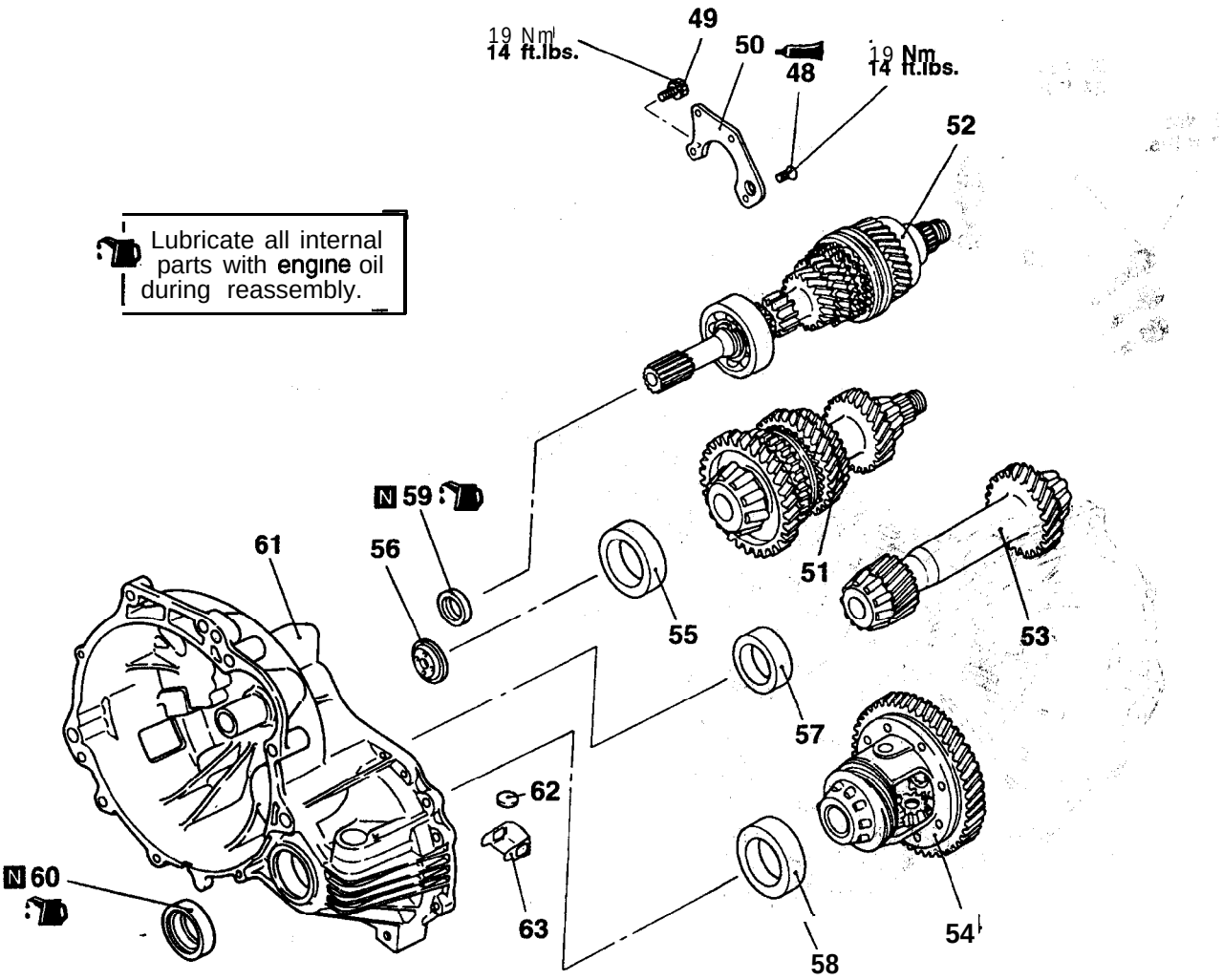

Disassembly steps

- ▶D◀ **48. Bolt**
- **49. Bolt**
- **50.** Bearing retainer
- ◀C▶ ▶C◀ 51. Intermediate gear assembly
- ◀C▶ ▶C◀ **52.** Input shaft assembly
- 53. Output shaft assembly
- 54. Differential gear assembly
- 55. Bearing outer race
- 56. Oil guide
- 57. Bearing outer race
- 58. Bearing outer race'
- ▶B◀ 59. Oil seal
- ▶A◀ **60.** Oil seal
- 61. Clutch housing assembly
- 62. Magnet
- 63. Magnet holder

DISASSEMBLY AND REASSEMBLY – F5M33

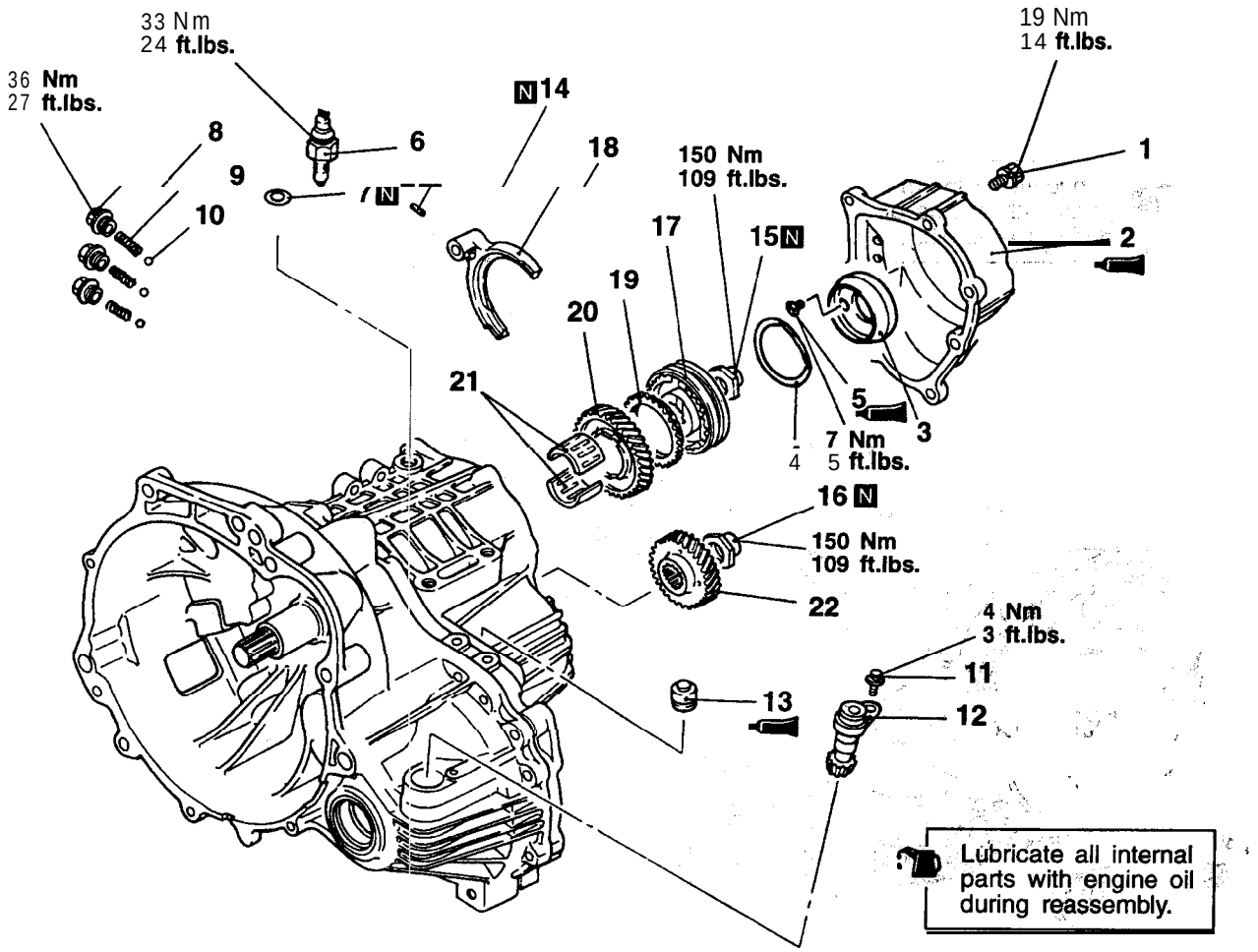

ZTFM0078

Disassembly steps

1. Bolt
▶O◀ 2. Rear cover
3. Reverse brake cone
▶X◀ 4. Wave spring
▶P◀ 5. Machine screw
6. Backup light switch
7. Gasket
8. Poppet plug
9. Poppet spring
10. Poppet ball
11. Bolt
12. Speedometer driven gear assembly
▶N◀ 13. Air breather
▶M◀ 14. Spring pin
◀A▶ ▶L◀ 15. Lock nut
◀A▶ ▶L◀ 16. Lock nut
17. 5th speed synchronizer assembly
1.8. 5th speed shift fork
19. Synchronizer ring
20. 5th speed gear
21. Needle bearing
22. 5th speed intermediate gear

TSB Revision

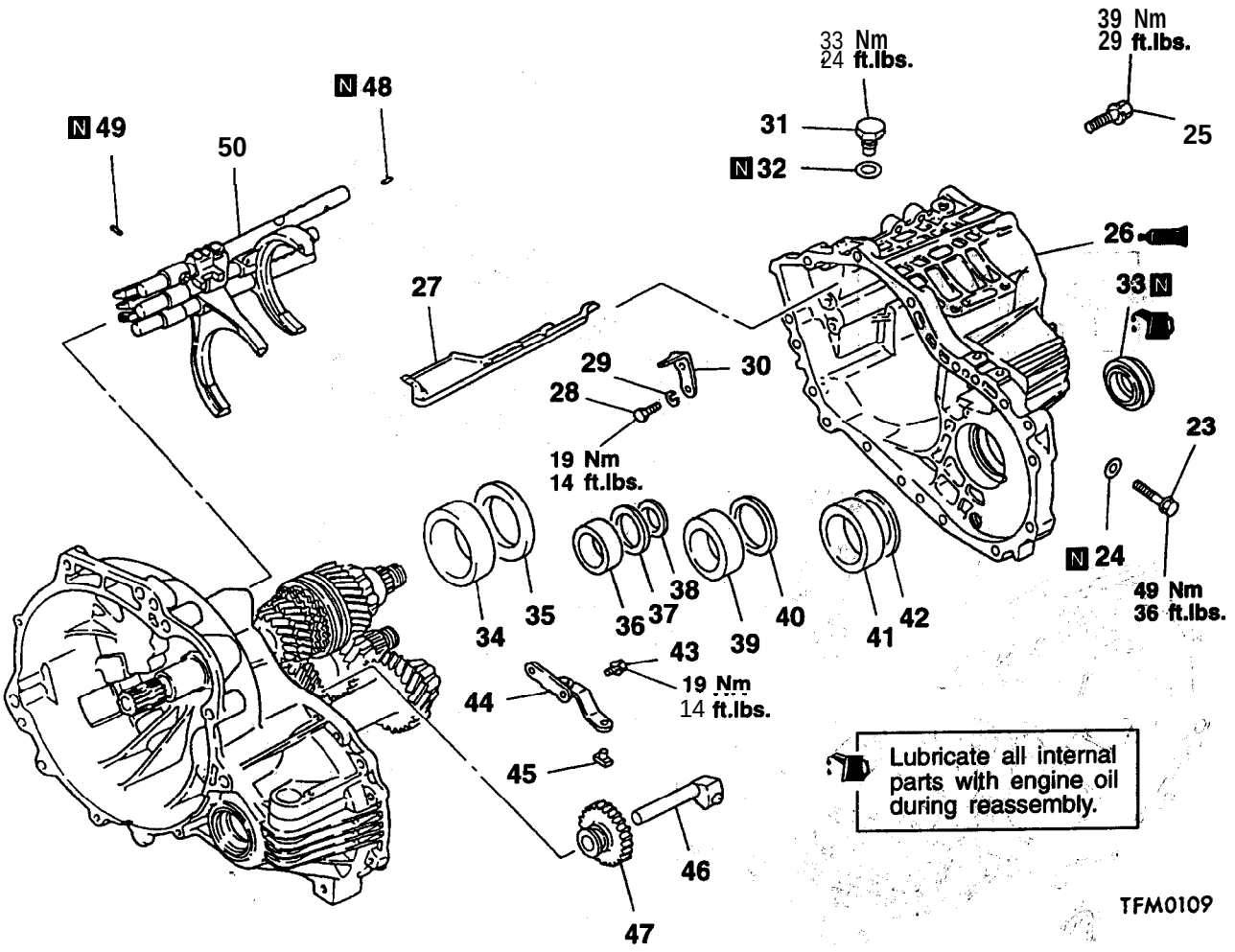

Disassembly steps

- ▶K◀ 23. Reverse idler gear shaft bolt
- 24. Gasket
- 25. Bolt
- ▶J◀ 26. Transaxle case
- 27. Oil guide
- 28. Bolt
- 29. Spring washer
- 30. Stopper bracket
- 31. Restrict ball assembly
- 32. Gasket
- ▶I◀ 33. Oil seal
- 34. Bearing outer race
- ▶H◀ 35. Spacer
- 36. Bearing outer race
- ▶H◀ 37. Spacer
- 38. Filter
- 39. Bearing outer race
- ▶H◀ 40. Spacer
- 41. Bearing outer race
- ▶H◀ 42. Spacer
- 43. Bolt
- 44. Reverse shift lever assembly
- 45. Reverse shift lever shoe
- ▶G◀ 46. Reverse idler gear, shaft
- 47. Reverse idler gear
- ▶F◀ 48. Spring pin
- ▶F◀ 49. Spring pin
- ◀B▶ ▶F◀ 50. Shift rail assembly

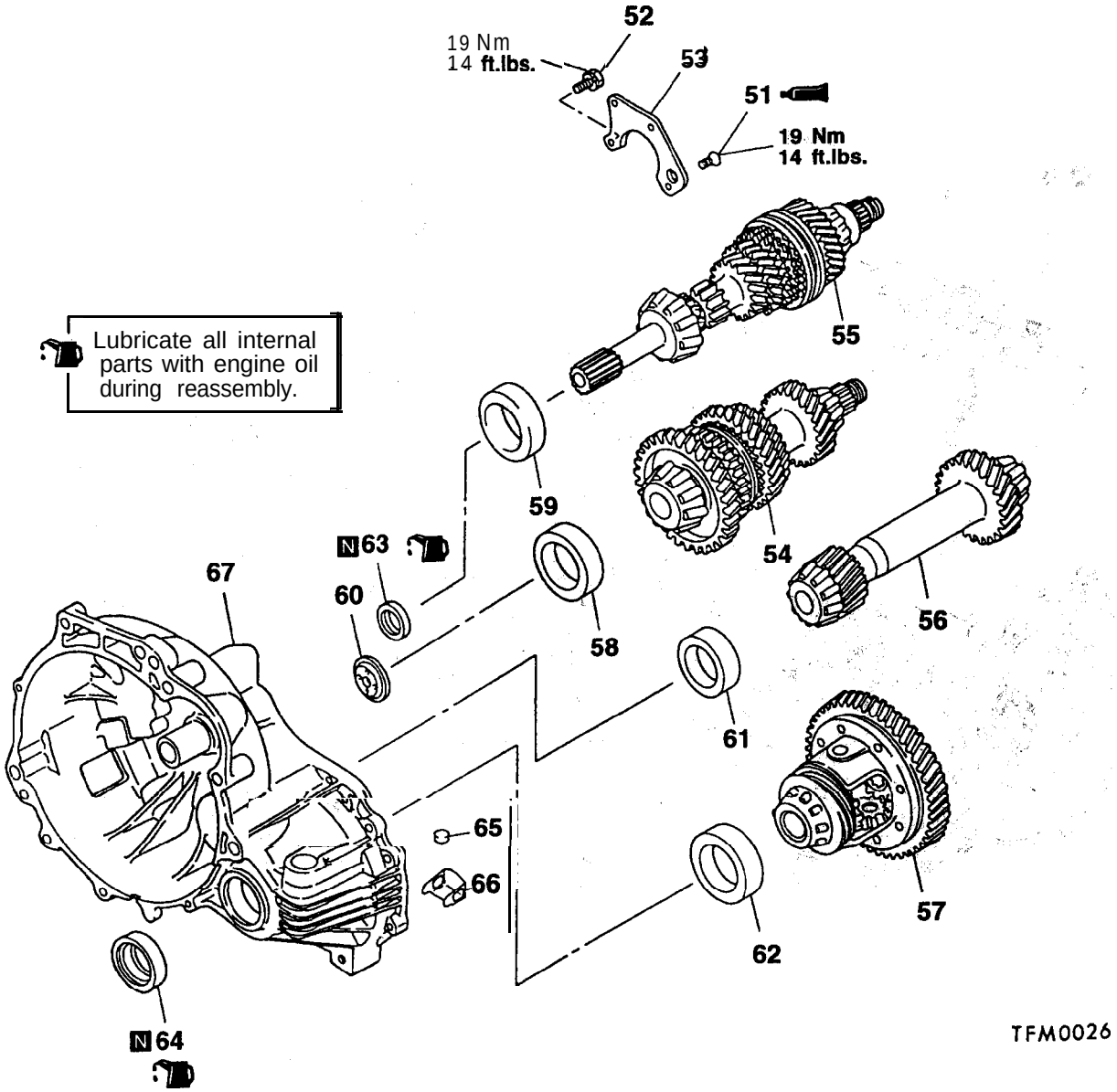

Disassembly steps

- ▶D◀ **51. Bolt**
- **52. Bolt**
- **53.** Bearing retainer
- ◀C▶ ▶C◀ 54. Intermediate gear assembly
- ◀C▶ ▶C◀ 55. Input shaft assembly
- 56. Output shaft assembly
- 57. Differential gear assembly
- 58. Bearing outer race
- 59. Bearing outer race
- 60. Oil guide
- 61. Bearing outer race
- 62. Bearing outer **race**
- ▶B◀ **63.** Oil seal
- ▶A◀ **64.** Oil seal
- 65. Magnet
- 66. Magnet holder
- 67. Clutch housing assembly

DISASSEMBLY AND REASSEMBLY – W5M33

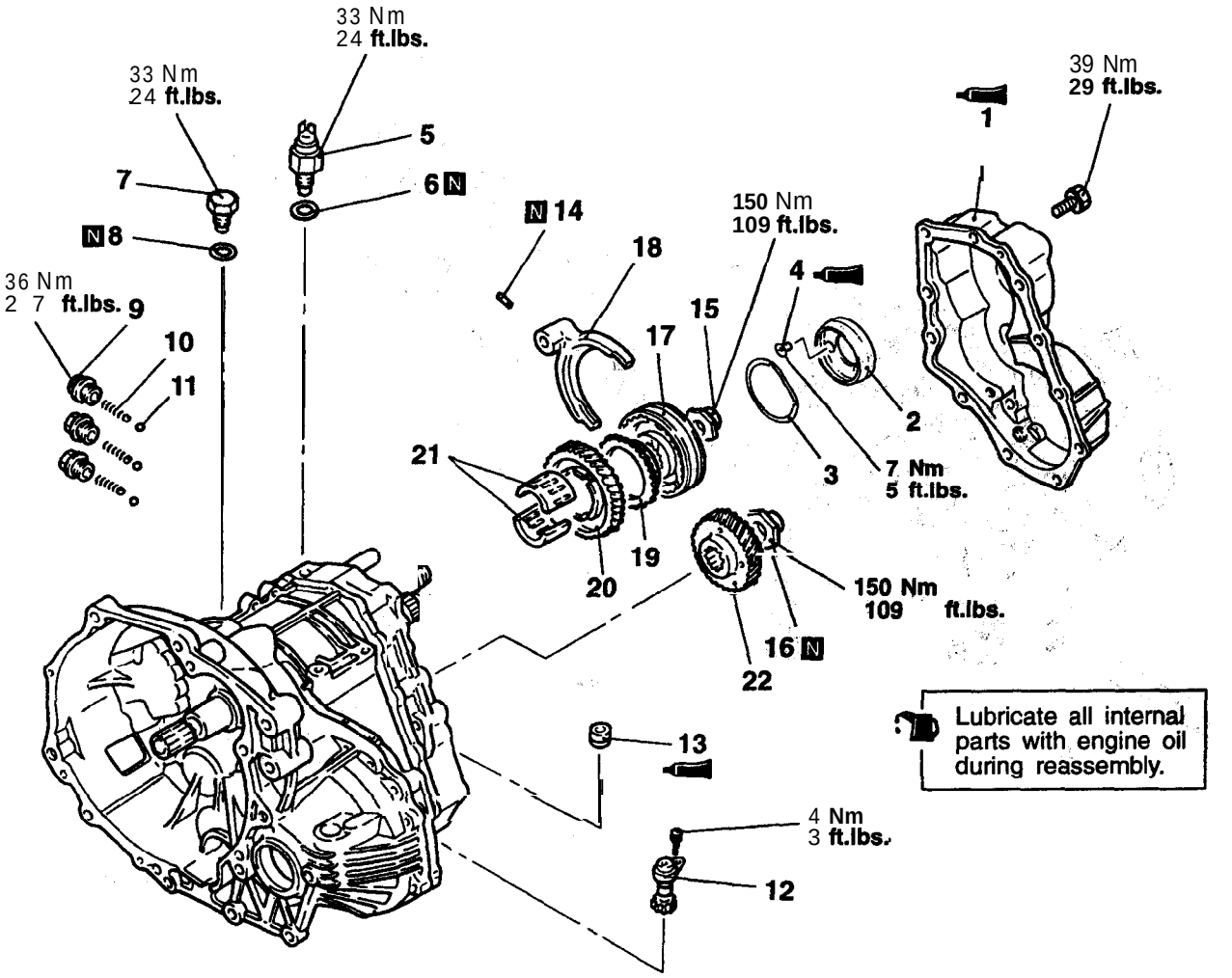

ZTFM0028

Disassembly steps

▶O◀ 1. Rear cover
2. Reverse bracket cone
▶X◀ 3. Wave spring
▶P◀ 4. Machine screw
5. Backup light switch
6. Gasket
7. Restrict ball assembly
8. Gasket
9. Poppet plug
10. Poppet spring
11. Poppet ball
12. Speedometer driven gear assembly
▶N◀ 13. Air breather
▶M◀ 14. Spring pin
◀A▶ ▶L◀ 15. Lock nut
◀A▶ ▶L◀ 16. Lock nut
17. 5th speed synchronizer assembly
18. Shift fork
19. Synchronizer ring
20. 5th speed gear
21. Needle bearing.
22. 5th speed intermediate gear

TSB Revision

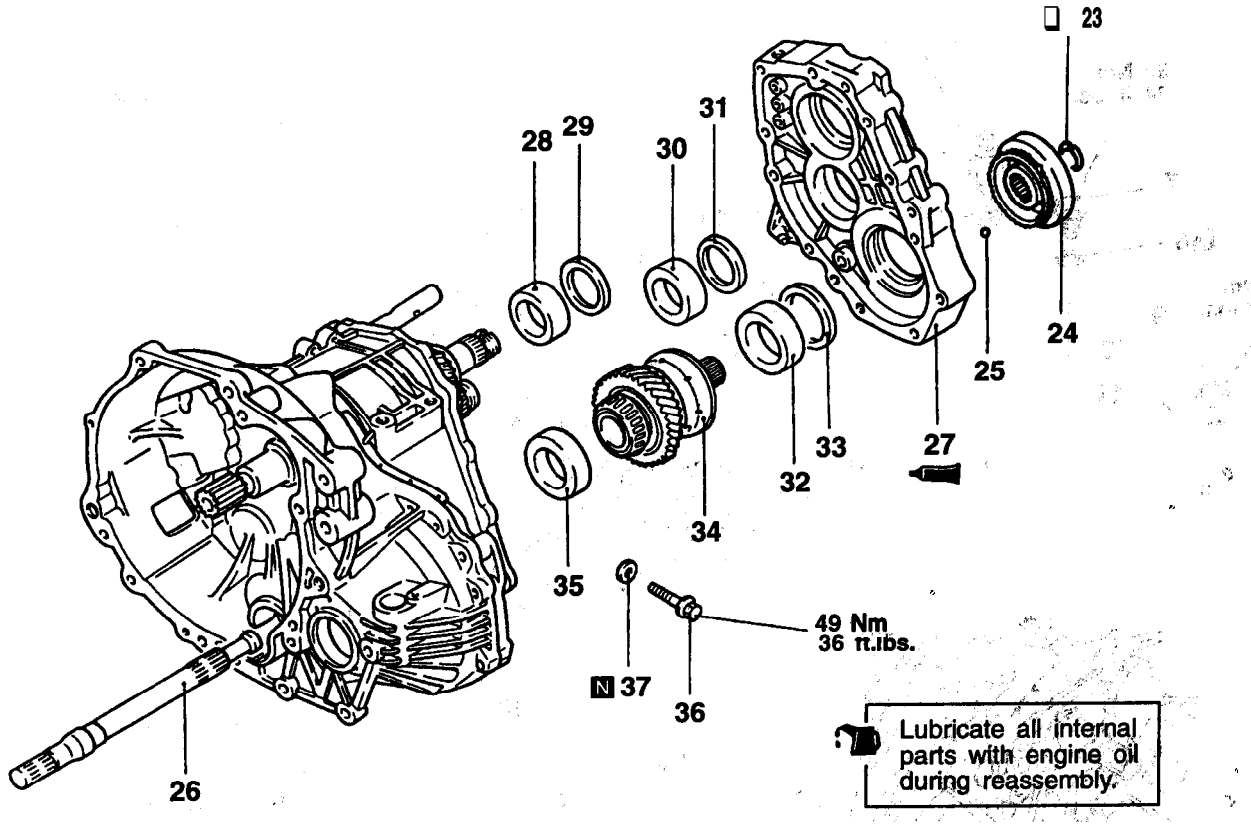

YTFM0029

Disassembly steps

- ▶W◀ 23. Snap ring
- 24. Viscous coupling
- ▶V◀ 25. Steel ball
- 26. Center shaft
- ▶U◀ 27. Transaxle case adapter
- ◀D▶ 28. Outer case
- ▶T◀ 29. Spacer
- 30. Outer race
- ▶T◀ 31. Spacer
- 32. Outer race
- ▶T◀ 33. Spacer
- 34. Center differential
- ◀D▶ 35. Outer race
- ▶K◀ 36. Reverse idler gear shaft bolt
- 37. Gasket

TSB Revision

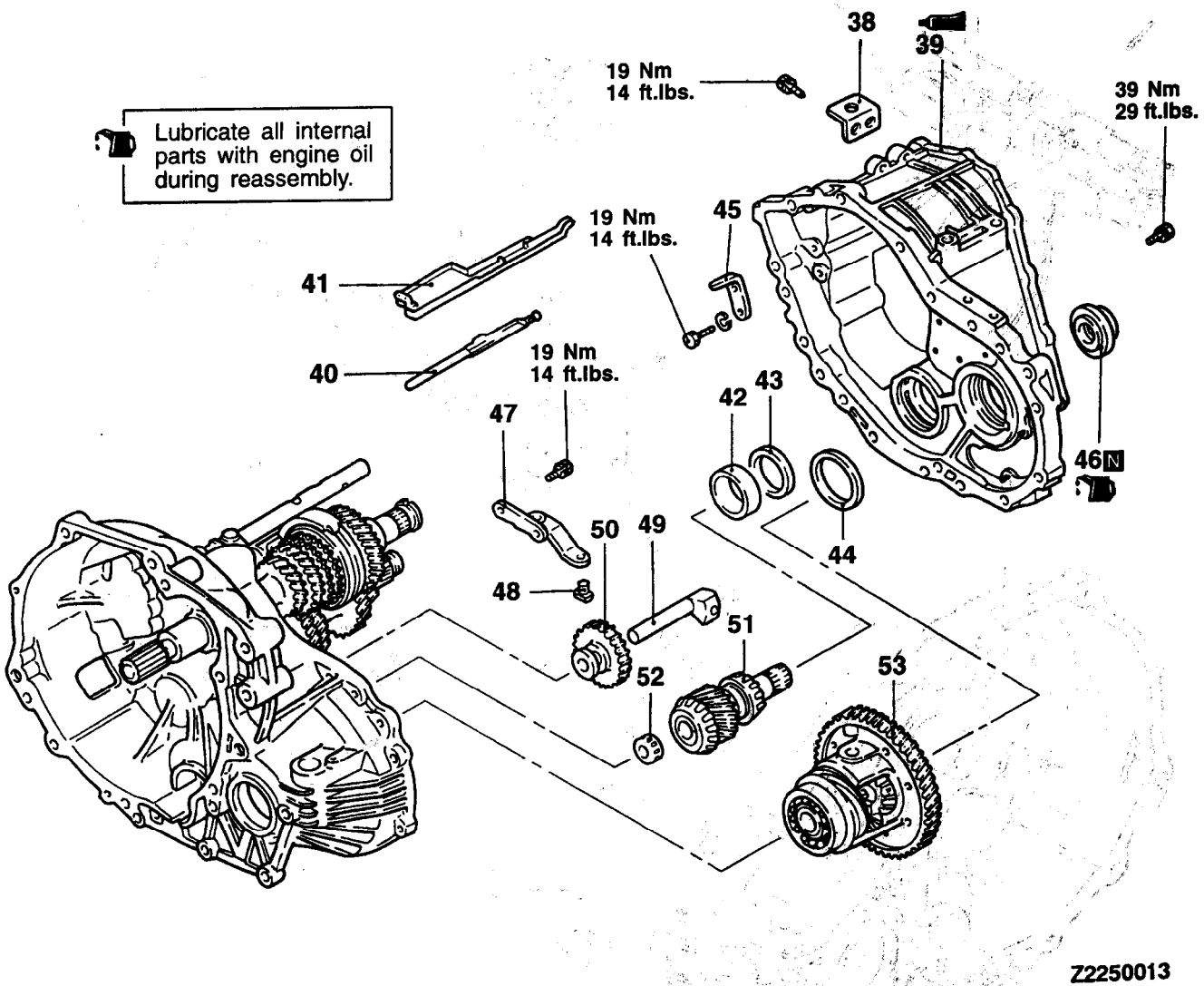

Disassembly steps

38. Clutch oil line bracket
▶J◀ 39. Transaxle case
40. Oil guide
41. Oil guide
42. Outer race
▶S◀ 43. Spacer
▶S◀ 44. Spacer
45. Stopper bracket
▶I◀ **46.** Oil seal
47. Reverse shift lever assembly
48. Reverse shift lever shoe
49. Reverse idler gear shaft
50. Reverse idler gear
51. Front output shaft assembly
52. Needle bearing
53. Front diff erential

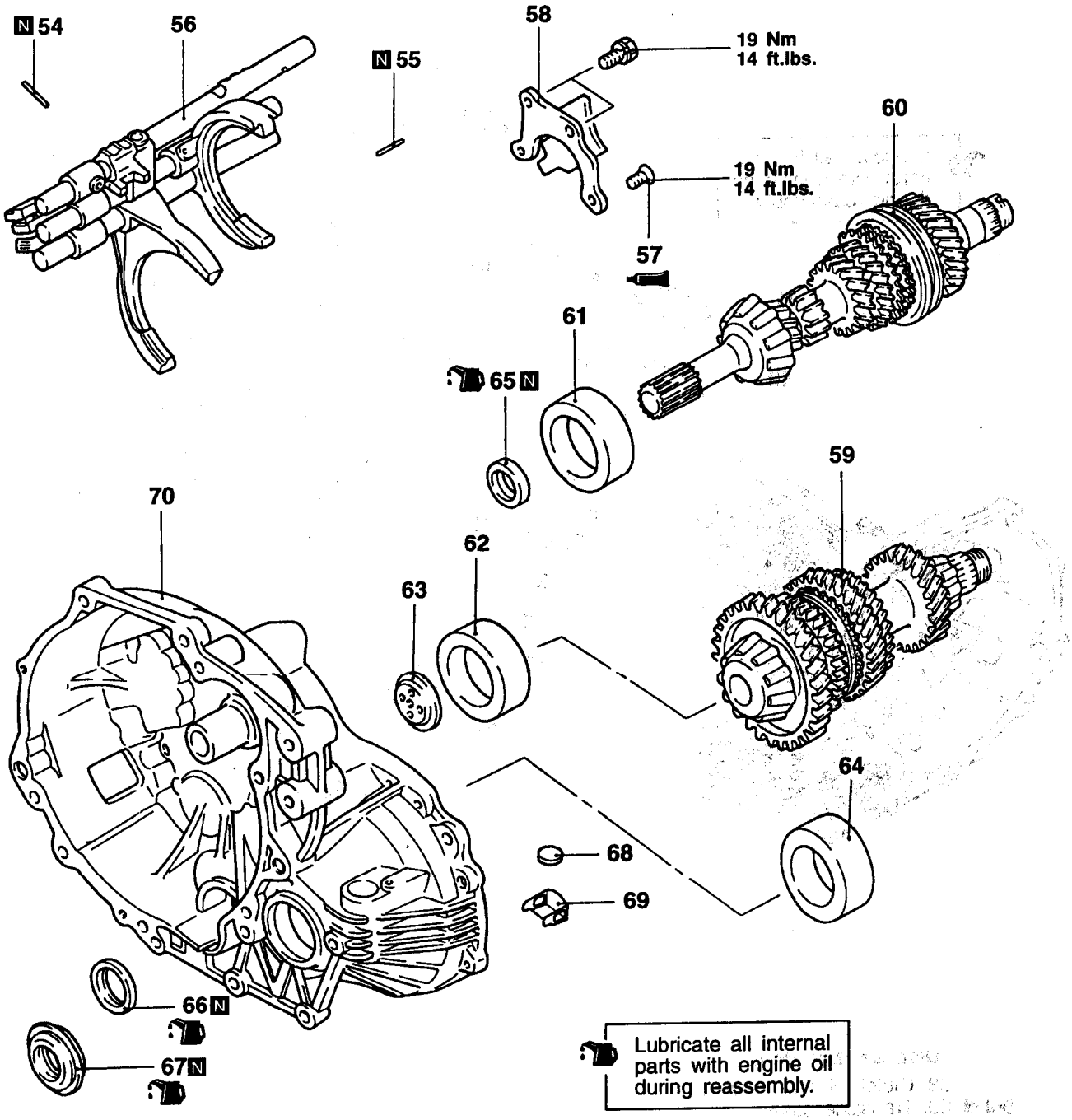

Disassembly steps

- ▶F◀ 54. Spring pin
- ▶F◀ 55. Spring pin
- ◀B▶ ▶E◀ 56. Shift rail assembly
- ▶D◀ 57. Bolt
- 58. Bearing retainer
- ◀C▶ ▶C◀ 59. Intermediate gear assembly
- ◀C▶ ▶C◀ 60. Input shaft assembly
- ◀D▶ 61. Outer race
- ◀D▶ 62. Outer race
- 63. Oil guide
- ◀D▶ 64. Outer race
- ▶B◀ 65. Oil seal
- ▶Q◀ 66. Oil seal
- ▶R◀ 67. Oil seal
- 68. Magnet
- 69. Magnet holder
- 70. Clutch housing assembly

TSB Revision

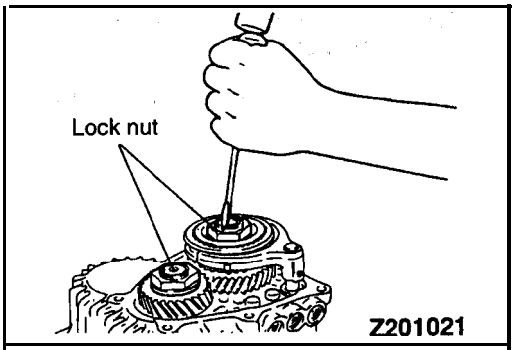

DISASSEMBLY SERVICE POINTS

◀A▶ LOCK NUTS FOR INPUT SHAFT / INTERMEDIATE GEAR REMOVAL

(1) Unstake lock nuts of the input shaft and intermediate gear.

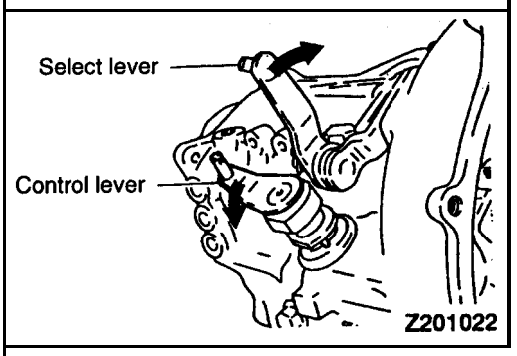

(2) Shift the transaxle in reverse using the control lever and select lever.

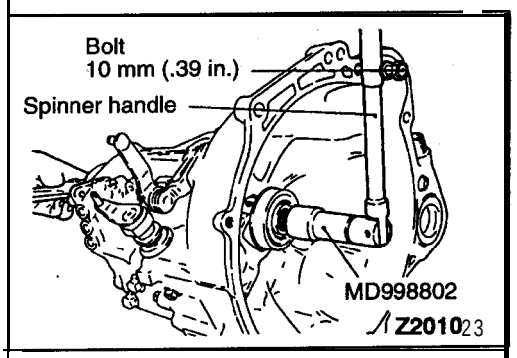

(3) Install the special tool onto the input shaft.
(4) Screw a bolt [10 mm (.39 in.)] into the bolt hole around clutch housing and attach a spinner handle to the special tool.
(5) Remove the lock nut, while using the bolt as a spinner handle stopper.

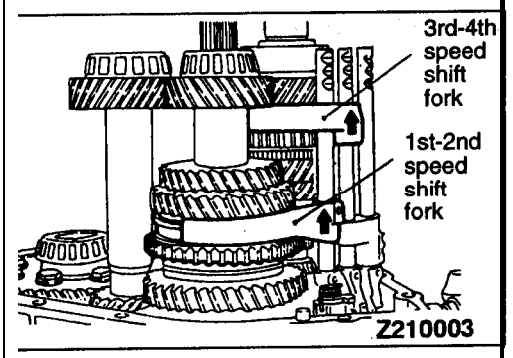

◀B▶ SHIFT RAIL ASSEMBLY REMOVAL

(1) Shift the 1st-2nd speed shift fork to the 2nd speed.
(2) Shift the 3rd-4th speed shift fork to the 4th speed.

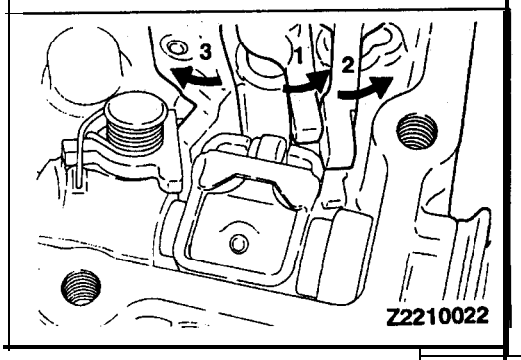

(3) Remove the shift rail assembly as shown in the illustration so as not to hit the interlock plate and control finger.

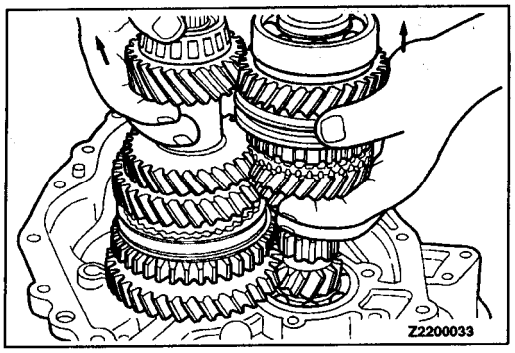

◀C▶ INTERMEDIATE GEAR ASSEMBLY / INPUT SHAFT ASSEMBLY REMOVAL

Lift up the input shaft assembly and remove the intermediate gear assembly.

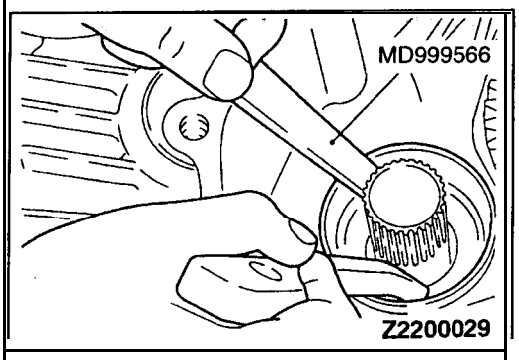

◀D▶ BEARING OUTER RACE REMOVAL

REASSEMBLY SERVICE POINTS

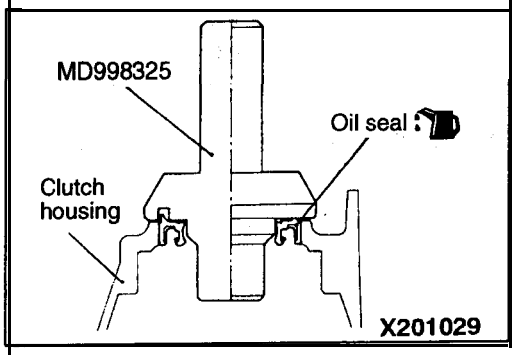

▶A◀ OIL SEAL FOR DRIVE SHAFT INSTALLATION

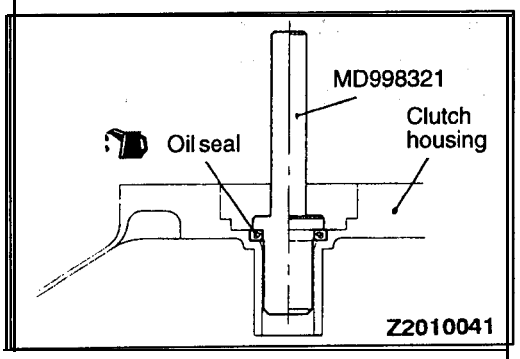

▶B◀ OIL SEAL FOR INPUT SHAFT FRONT INSTALLATION

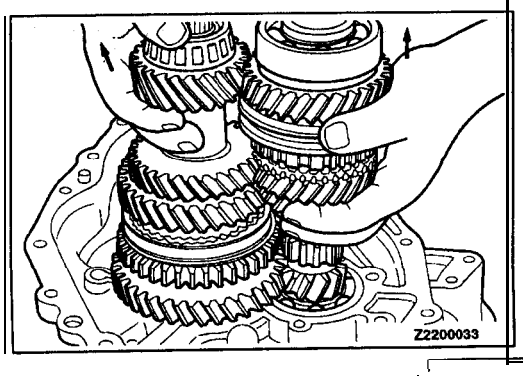

▶C◀ INTERMEDIATE GEAR ASSEMBLY / INPUT SHAFT ASSEMBLY INSTALLATION.

Lifting up the input shaft assembly, install it simultaneously with the intermediate gear assembly.

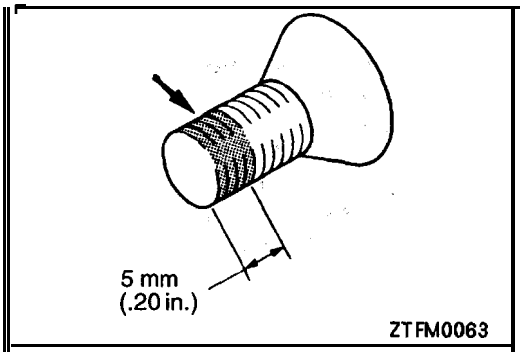

▶D◀ SEALANT APPLICATION TO BEARING RETAINER MOUNTING BOLT

Specified sealant:
3M STUD Locking No.4170 or equivalent

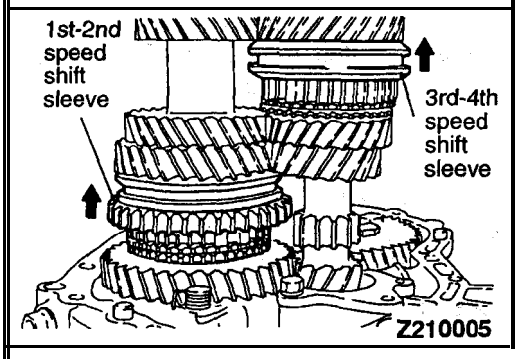

▶E◀ SHIFT RAIL ASSEMBLY INSTALLATION

(1) Set the 1st-2nd speed shift sleeve at 2nd speed.
(2) Set the 3rd-4th speed shift sleeve at 4th speed.
(3) Install the shift fdrks to respective sleeves.

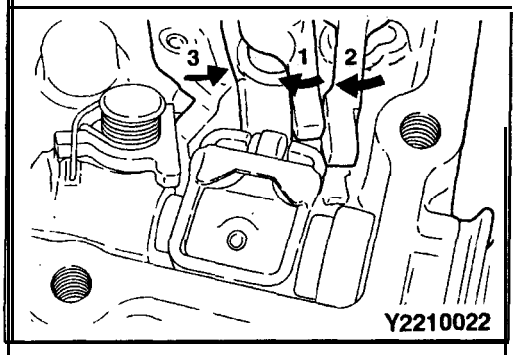

(4) Insert the shift rail into the shift fork hole, while turning so as to prevent the shift lug from interfering with the stopper plate.
(5) Turn the shift rail to engage shift lug.

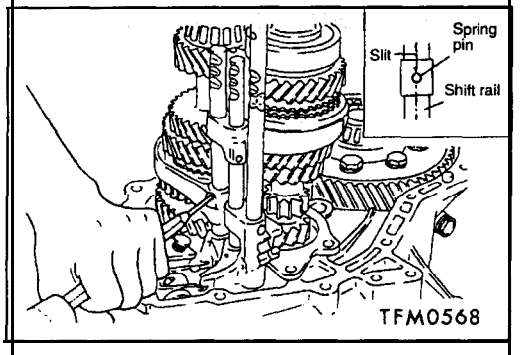

▶F◀ SPRING PINS FOR 1ST-2ND SPEED SHIFT FORK / 3RD-4TH SPEED SHIFT FORK INSTALLATION

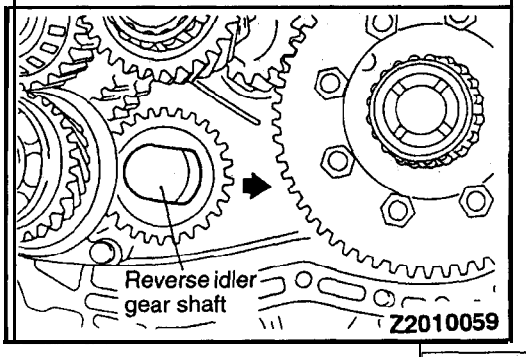

▶G◀ REVERSE IDLER GEAR SHAFT INSTALLATION

Install in the direction as illustrated.

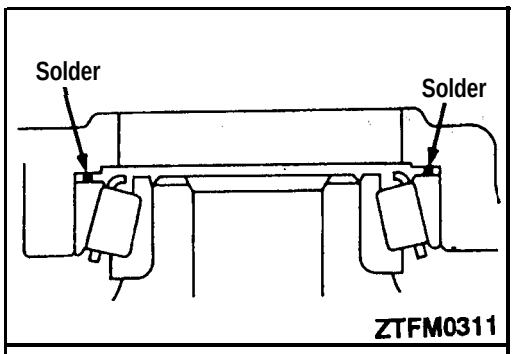

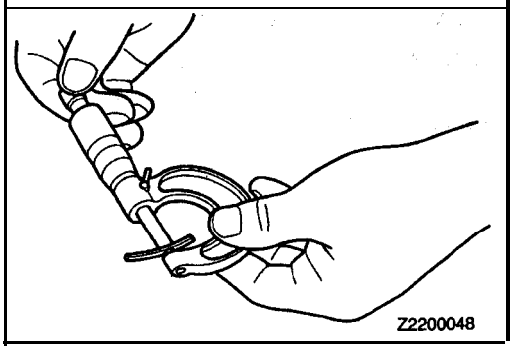

▶H◀ SPACERS SELECTION

(1) Place solder with a length of approximately 10 mm (.39 in.) and a diameter of approximately 1.6 mm (.063 in.) in the spacer mounting pasition.
(2) Tighten the case mounting' bolt to the specified torque.
(3) Remove the case and then take out the solder. If the solder is not broken, use solder with a larger diameter to carry out the operations in (1) and (2).

(4) Measure the thickness of the crushed solder with a micrometer, and select and install a spacer of thickness that gives standard end play and preload.

Standard 'value:

Input shaft end play <F5M33>
0 – 0.05mm (0 – .0020 in.)
Intermediate gear preload
0.05–0.10 mm (.0020–.0040 in.)

Output shaft preload
0.05–0.10 mm (.0020–.0040 in.)

Differential case preload
Preload
0.05–0.10 mm (.0020–.0040 in.)

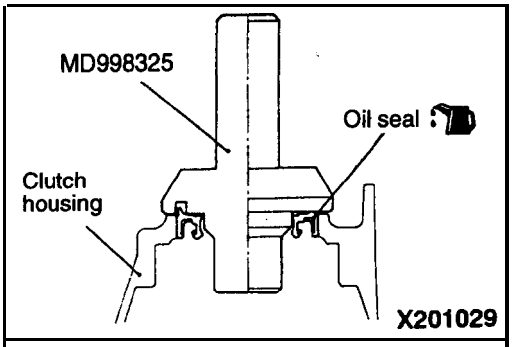

▶I◀ OIL SEAL FOR DRIVE SHAFT INSTALLATION

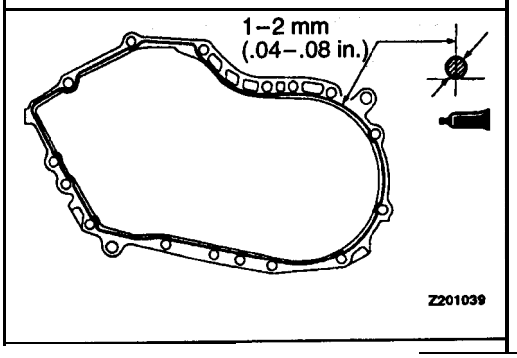

▶J◀ SEALANT APPLICATION TO TRANSAXLE' CASE

Squeeze out sealant from the tube uniformly without excess or discontinuity.

Specified sealant:
Mitsubishi genuine sealant part No.MD997740 or equivalent

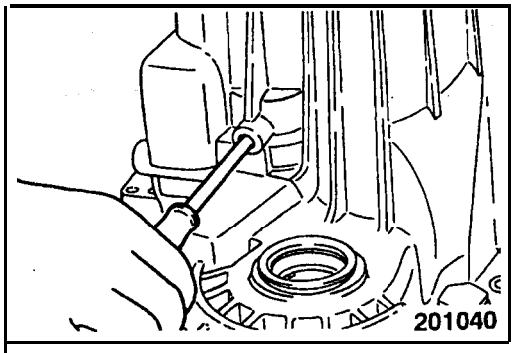

▶K◀ REVERSE IDLER GEAR SHAFT BOLT INSTALLATION

(1) Center the shaft with a Phillips screwdriver [shaft diameter 8 mm (.31 in.)] or the like.
(2) Tighten the reverse idler gear shaft bolt to the specified torque.

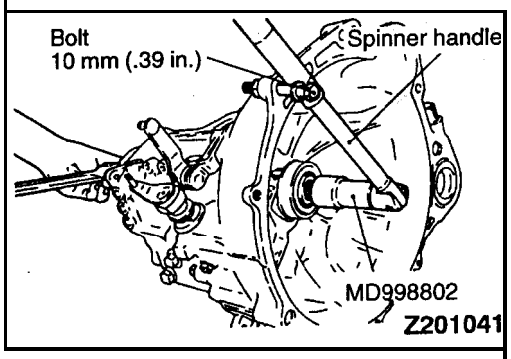

▶L◀ LOCK NUTS FOR INPUT SHAFT / INTERMEDIATE GEAR INSTALLATION

(1) Install the special tool onto the input shaft.
(2) Screw a bolt [IO mm (.39 in.)] into the hole around clutch housing and attach a spinner handle to the special tool.

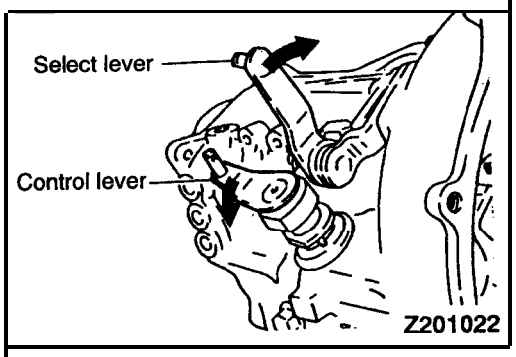

(3) Shift the transaxle in reverse using control lever and select lever.
(4) Tighten the lock nut to the specified torque, while using the bolt attached in the above step as a spinner handle stopper.

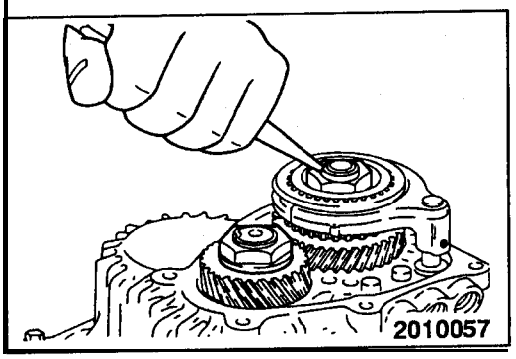

(5) Stake the lock nut.

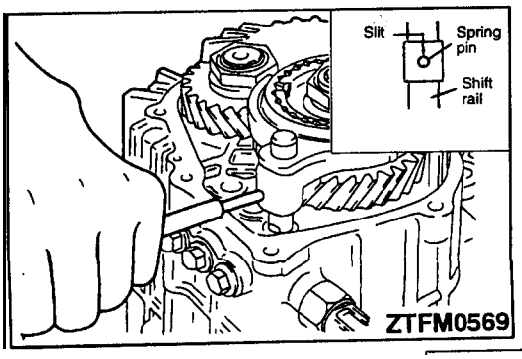

▶M◀ SPRING PIN FOR OD-R SHIFT FORK INSTALLATION

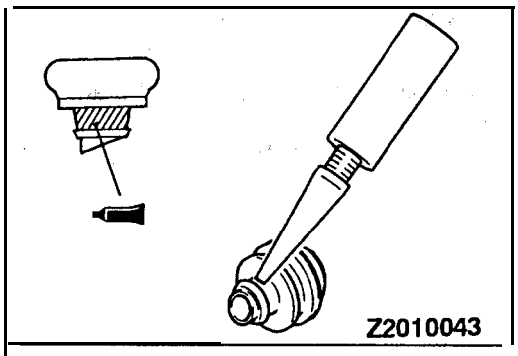

▶N◀ SEALANT APPLICATION TO AIR' BREATHER

Specified sealant:
3M SUPER WEATHERSTRIP No.8001 'or equivalent

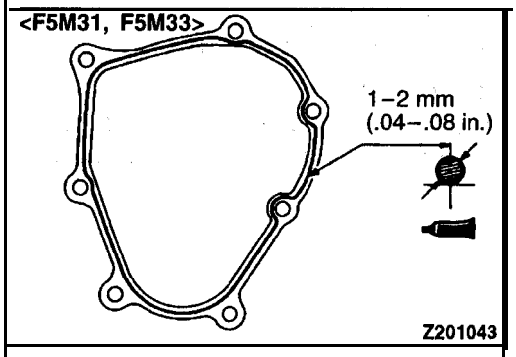

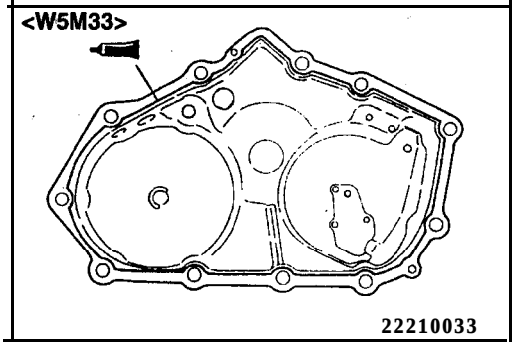

▶O◀ SEALANT APPLICATION TO REAR COVER

Specified sealant:
Mitsubishi genuine sealant Part No.MD997740 or equivalent

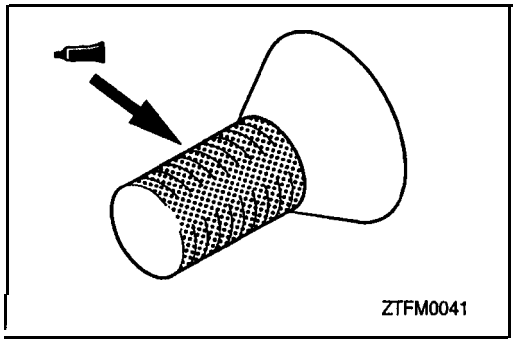

▶P◀ SEALANT APPLICATION TO MACHINE SCREW

Specified sealant:
3M STUD Locking No.4170 or equivalent

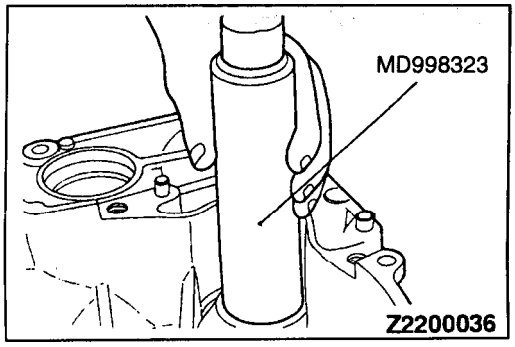

▶Q◀ OIL SEAL INSTALLATION

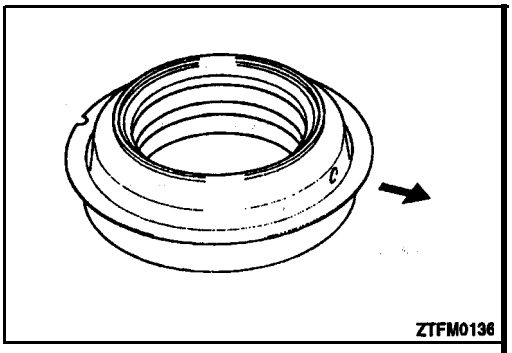

▶R◀ OIL SEAL INSTALLATION

Install the oil seal flange part so that the 3-mm (.12-in.) hole faces the bottom of the transaxle.

Caution
Apply transmission oil to the oil seal lip before installing.

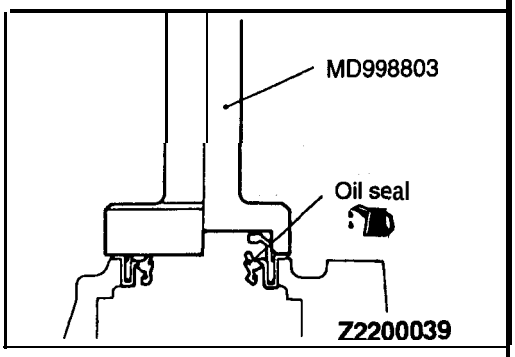

▶S◀ SPACERS INSTALLATION

(1) Place two pieces of solder measuring about 10 mm (.39 in.) in length and 3 mm (.12 in.) in diameter at illustrated locations on the transaxle and install each outer race.

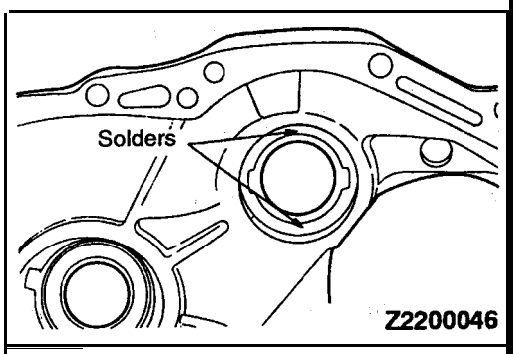

(2) Place two pieces of solder measuring about 10 mm (.39 in.) in length and 3 mm (.12 in.) in diameter on the bearing outer race as shown in illustration.
(3) install the transaxle case and tighten the bolts to the specified torque.
(4) Remove the transaxle case and remove the solder.

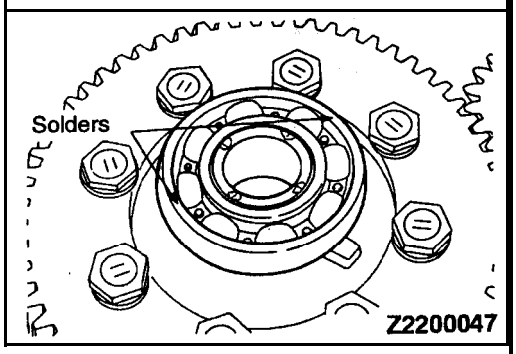

(5) Measure the thickness of the crushed solder with a micrometer and select and install a- spacer of. thickness that gives standard preload and end play.

Standard value:
Front output shaft bearing preload:
0.08–0.13 mm (.0031–.0051 in.)
Front differential case end play:
0.05–0.17 mm (.0020–.0067 in.)

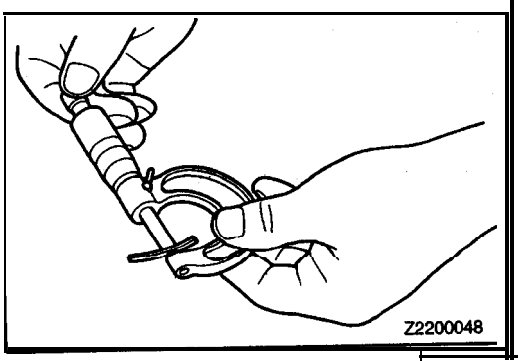

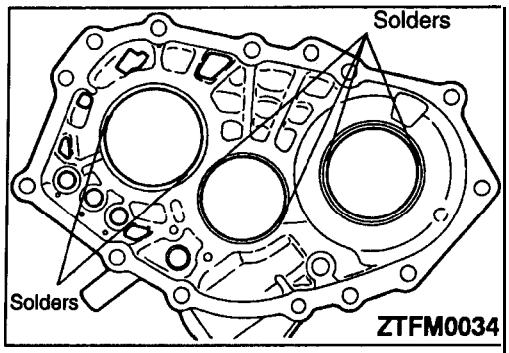

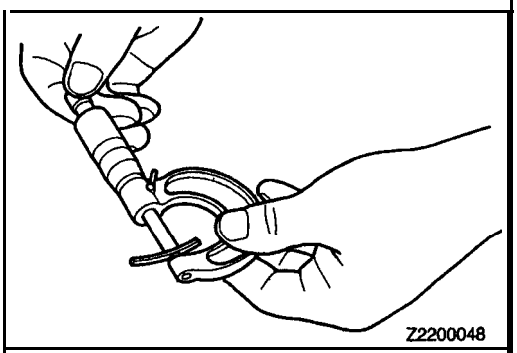

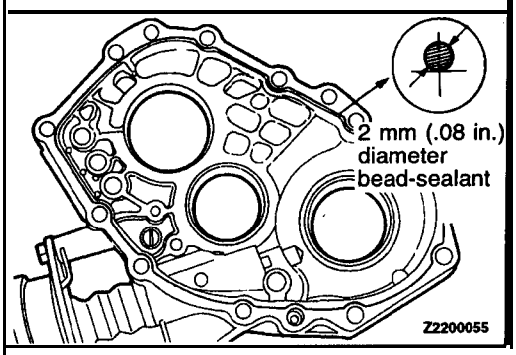

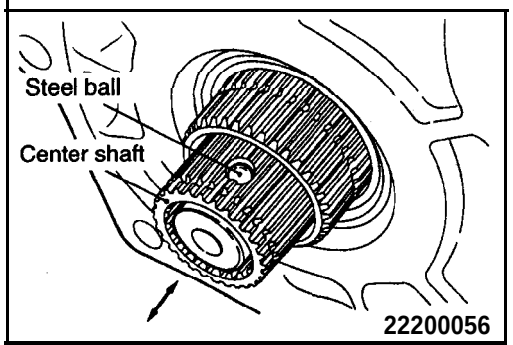

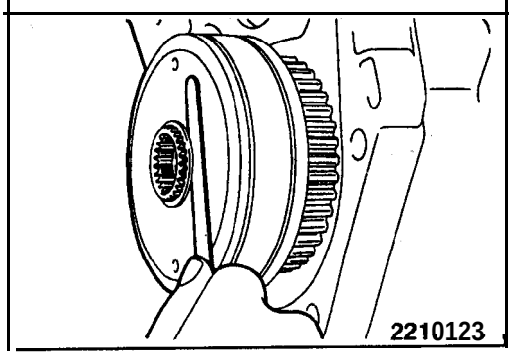

▶T◀ SPACERS INSTALLATION

(1) Place two pieces of solder measuring about 10 mm (.39 in.) in length and 3 mm (.12 in.) in diameter at illustrated locations on the transaxle case adapter assembly and install outer races.
(2) Install the transaxle case adapter assembly and rear cover and tighten the bolts to the specified torque.
(3) Remove the transaxle case adapter assembly and rear cover.
(4) Remove outer races and remove the solder. Measure the thickness of the crushed solder with a micrometer, and select and install a spacer of thickness that gives standard end play and preload.

Standard value:
Intermediate gear preload:
0.08–0.13 mm (.0031–.0051 in.)
Center differential case preload:
0.08–0.13 mm (.0031–.0051 in.)
Input shaft end play:
0–0.05 mm (0–.0020 in.)

▶U◀ TRANSAXLE CASE ADAPTER ASSEMBLY INSTALLATION

Apply the specified sealant (liquid gasket) to the transaxle case side of the transaxle case adapter, assembly.

Specified sealant:
Mitsubishi genuine sealant Part No.MD997740 or equivalent

Caution
Squeeze out sealant from the tube uniformly without excess or discontinuity.

▶V◀ STEEL BALLS INSTALLATION

Move the center shaft so that the steel balls, are securely seated in the grooves.

▶W◀ SNAP RING INSTALLATION

Choose a snap ring that gives the standard end play of the viscous coupling and install it.

Standard value:
Viscous coupling: 0.10–0.26 mm (.0039–.0102 In.)

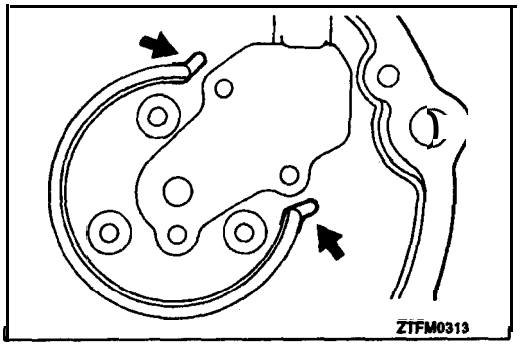

▶X◀ WAVE SPRING INSTALLATION

Install the wave spring so that the clasps come to the indicated position in the illustration.

5TH-SPEED SYNCHRONIZER

22200130041

DISASSEMBLY AND REASSEMBLY

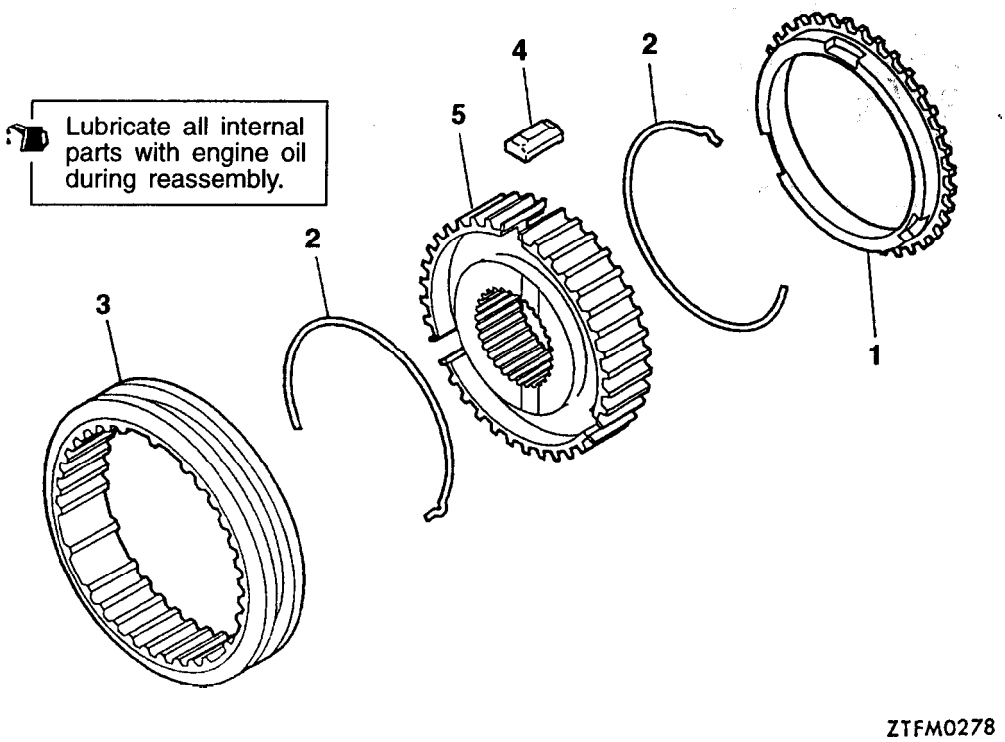

Disassembly steps

1. Reverse brake ring
▶B◀ 2. Synchronizer spring
▶A◀ 3. Synchronizer sleeve
4. Synchronizer key
▶A◀ 5. Synchronizer hub

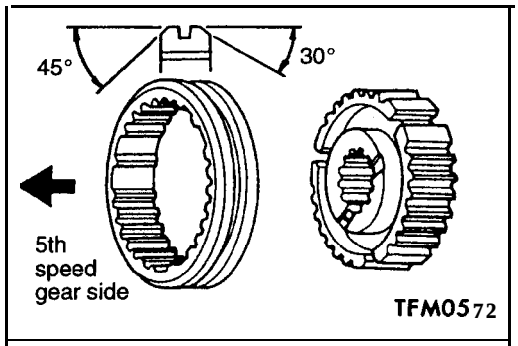

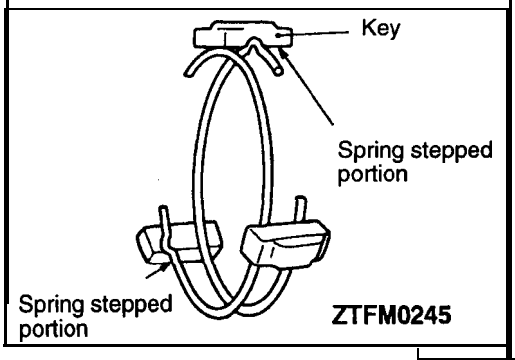

REASSEMBLY SERVICE POINTS

▶A◀ SYNCHRONIZER HUB / SYNCHRONIZER SLEEVE INSTALLATION

▶B◀ SYNCHRONIZER SPRING INSTALLATION

When installing the synchronizer springs, be sure to position each spring with respect to the keys as illustrated.

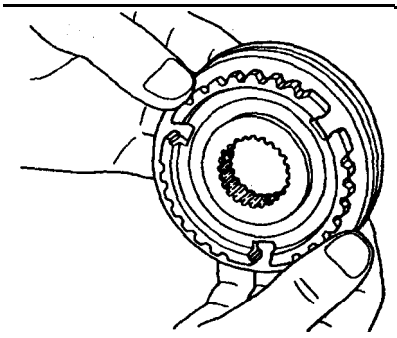

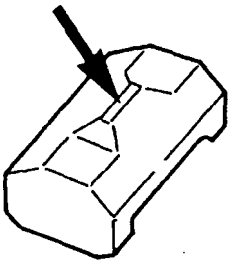

INSPECTION

22200140044

SYNCHRONIZER SLEEVE AND HUB

(1) Combine the synchronizer sleeve and hub, and check that they slide smoothly.
(2) Check that the sleeve is free from damage at its inside front and rear ends.
(3) Check for wear of the hub front end (surface in contact with the 5th speed gear).

Caution
When replacing, replace the synchronizer hub and sleeve as a set.

SYNCHRONIZER KEY AND SPRING

(1) Check for wear of the synchronizer key center protrusion.
(2) Check the spring for weakness, deformation and breakage.

INPUT SHAFT

22200160040

DISASSEMBLY AND REASSEMBLY – F5M3

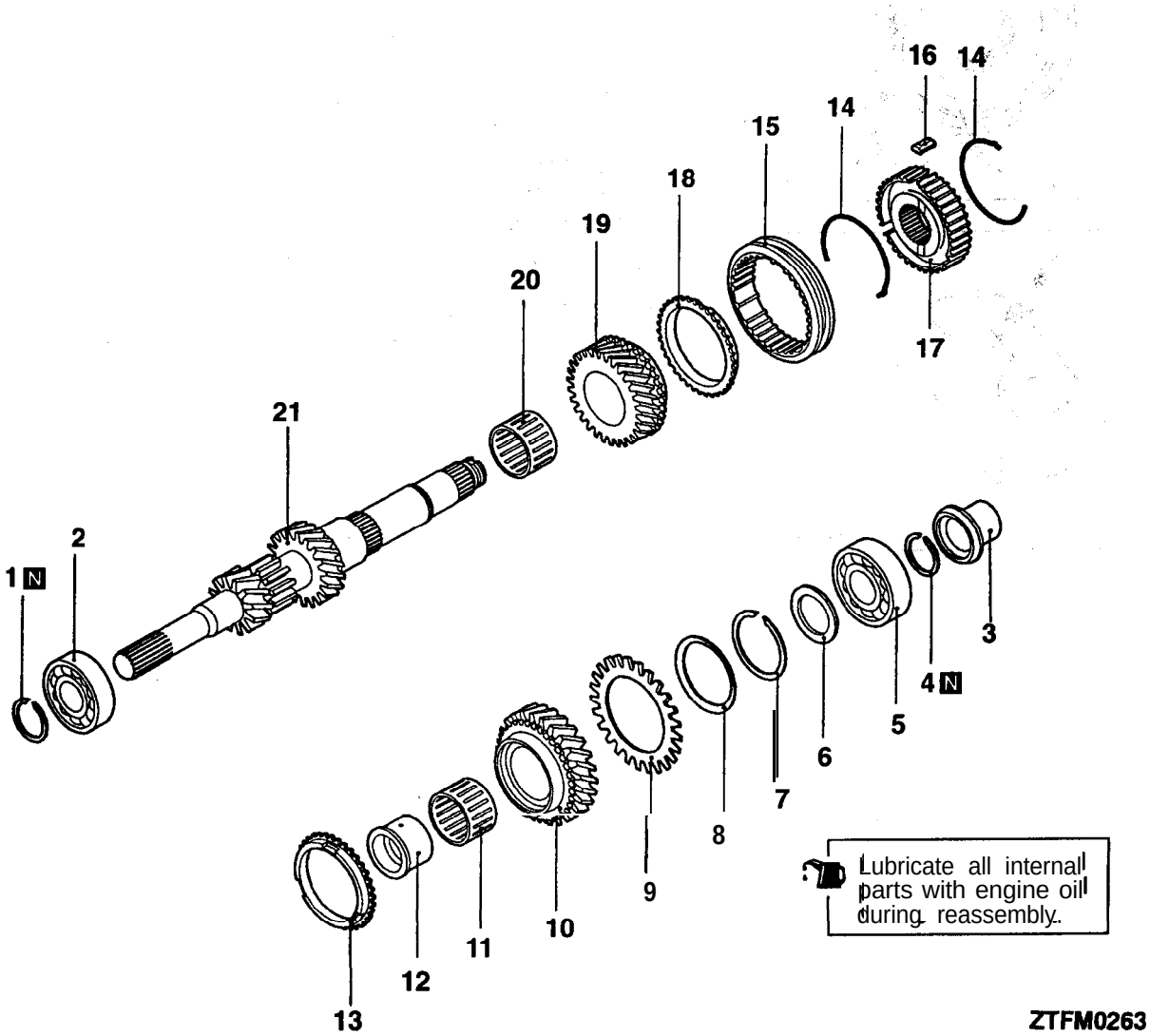

Disassembly steps

- ▶J◀ 1. Snap ring
- ◀A▶ ▶I◀ 2. Ball bearing
- ◀B▶ ▶H◀ 3. Bearing sleeve
- ▶G◀ 4. Snap ring
- ◀C▶ ▶F◀ 5. Ball bearing
- ▶E◀ 6. Spacer
- ↗ Dd 7. Snap ring
- ▶D◀ 8. Cone spring
- ▶D◀ 9. Sub gear
- 10. 4th speed gear
- 11. Needle bearing
- ▶C◀ 12. Bearing sleeve
- 13. Synchronizer ring
- ▶B◀ 14. Synchronizer spring
- ▶A◀ 15. 3rd-4th speed synchronizer sleeve
- ▶B◀ 16. Synchronizer key
- ▶A◀ 17. 3rd-4th speed synchronizer hub
- 18. Synchronizer ring
- ◀C▶ 19. 3rd speed gear
- 20. Needle bearing
- 21. Input shaft

TSB Revision

DISASSEMBLY AND REASSEMBLY – F5M33

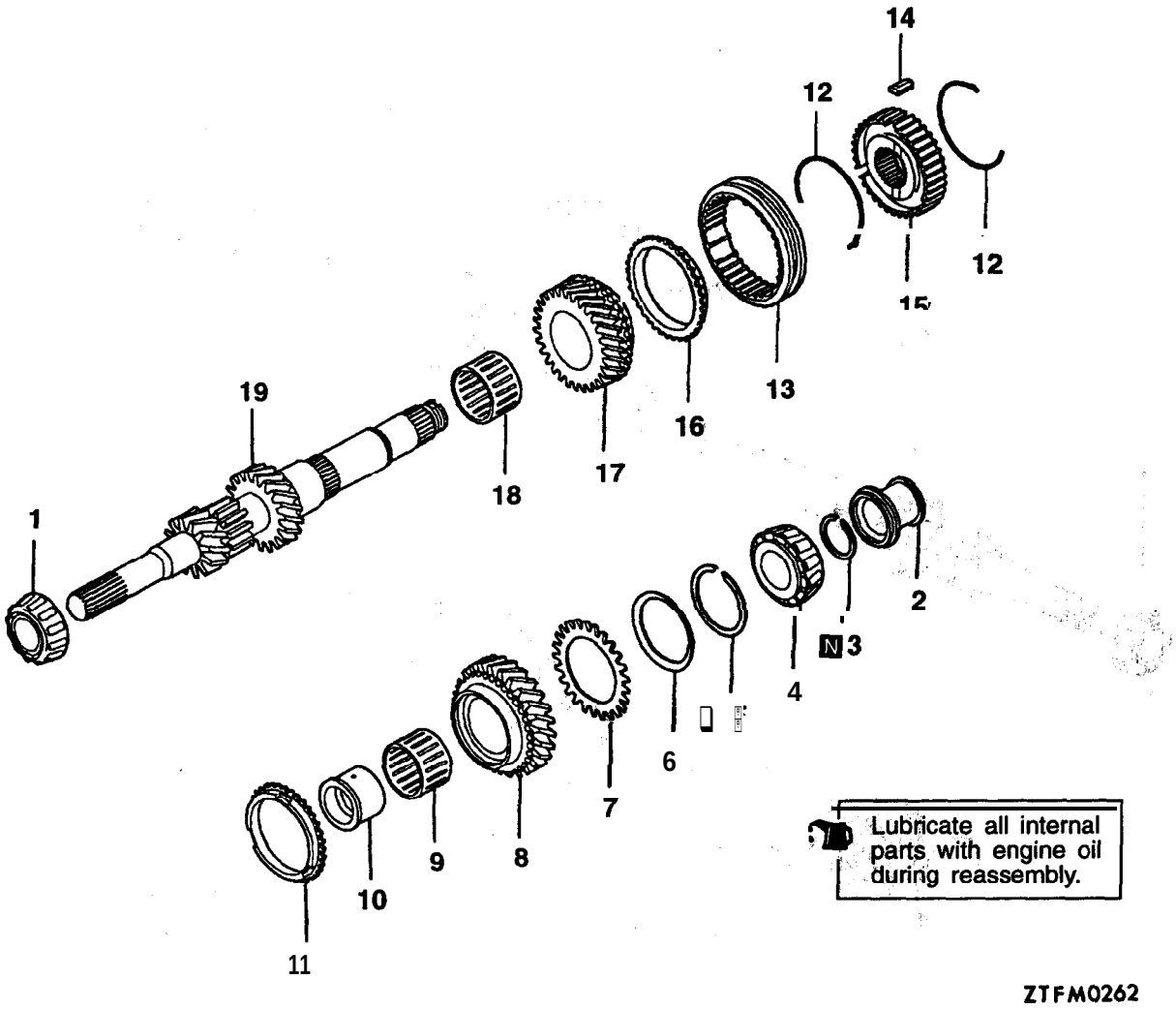

Disassembly steps

◀A▶ ▶I◀ 1. Taper roller bearing
◀B▶ ▶H◀ 2. Bearing sleeve
▶G◀ 3. Snap ring
◀C▶ ▶F◀ 4. Taper roller bearing
▶D◀ 5. Snap ring
▶D◀ 6. Cone spring
▶D◀ 7. Sub gear
8. 4th speed gear
9. Needle bearing
▶C◀ 10. Bearing sleeve
11. Synchronizer ring
▶B◀ 12. Synchronizer spring
▶A◀ 13. 3rd-4th synchronizer sleeve
▶B◀ 14. Synchronizer key
▶A◀ 15. 3rd-4th synchronizer hub
16. Synchronizer ring
◀C▶ 17. 3rd speed gear
18. Needle bearing
19. Input shaft

DISASSEMBLY AND REASSEMBLY – W5M33

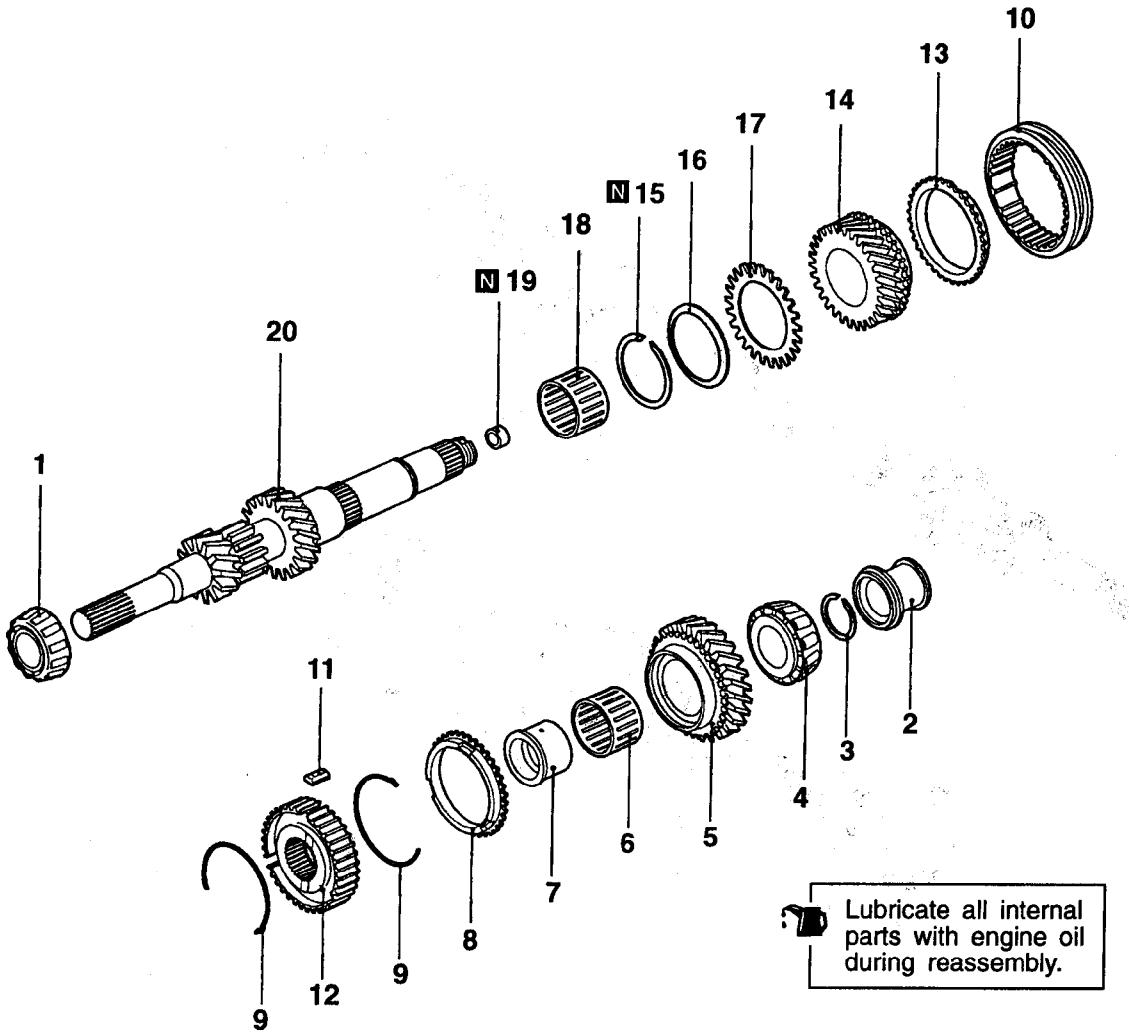

ZTFM0256

Disassembly steps

◀A▶ ▶I◀ 1. Taper roller bearing
◀B▶ ▶H◀ 2. Bearing sleeve
▶G◀ 3. Snap ring
◀C▶ ▶F◀ 4. Taper roller bearing
5. 4th speed gear
6. Needle bearing
▶C◀ 7. Bearing sleeve
8. Synchronizer ring
▶B◀ 9. Synchronizer spring
▶A◀ 10. 3rd-4th speed synchronizer sleeve
▶B◀ 11. Synchronizer key
▶A◀ 12. 3rd-4th speed synchronizer hub
13. Synchronizer ring
◀C▶ 14. 3rd speed gear
▶D◀ 15. Snap ring
▶D◀ 16. Cone spring
▶D◀ 17. Sub gear
18. Needle bearing
19. Oil seal
20. Input shaft

TSB Revision

DISASSEMBLY SERVICE POINTS

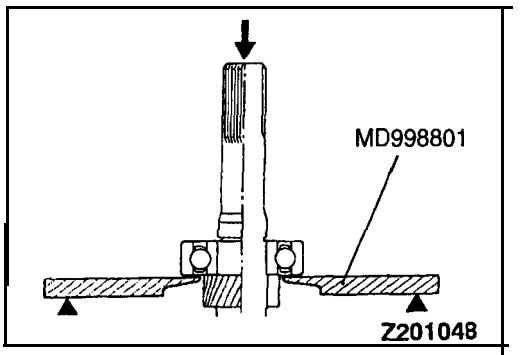

◀A▶ FRONT BALL BEARING / FRONT TAPER ROLLER BEARING, REMOVAL

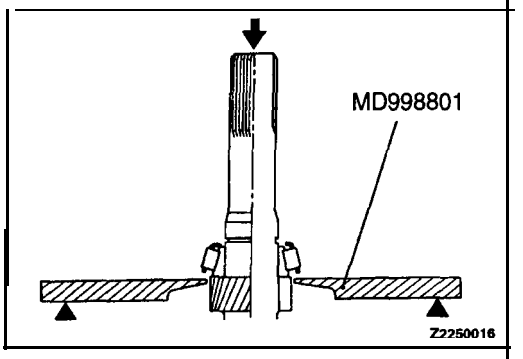

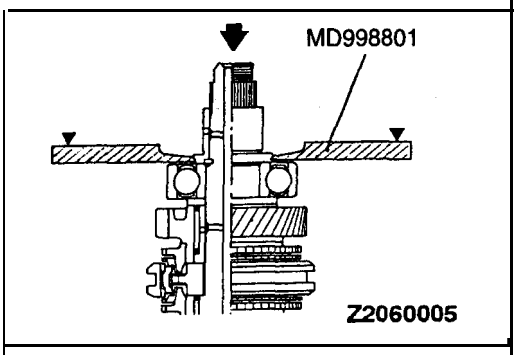

◀B▶ BEARING SLEEVE FOR 5TH SPEED GEAR REMOVAL

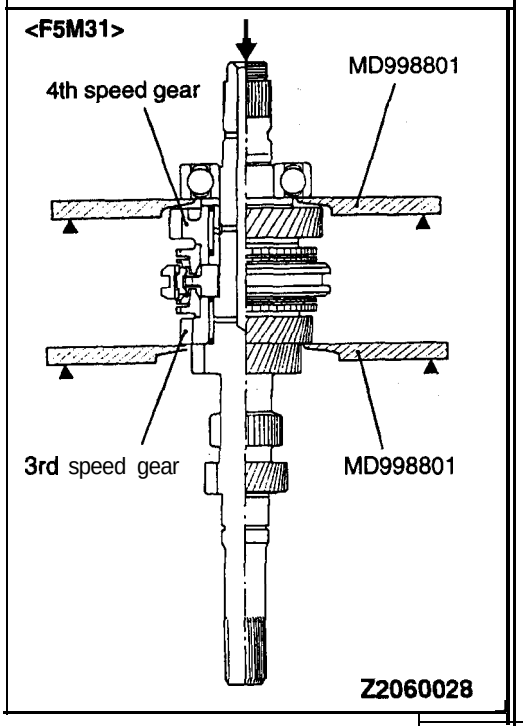

◀C▶ REAR BALL BEARING / TAPER ROLLER BEARING / 3RD SPEED GEAR REMOVAL

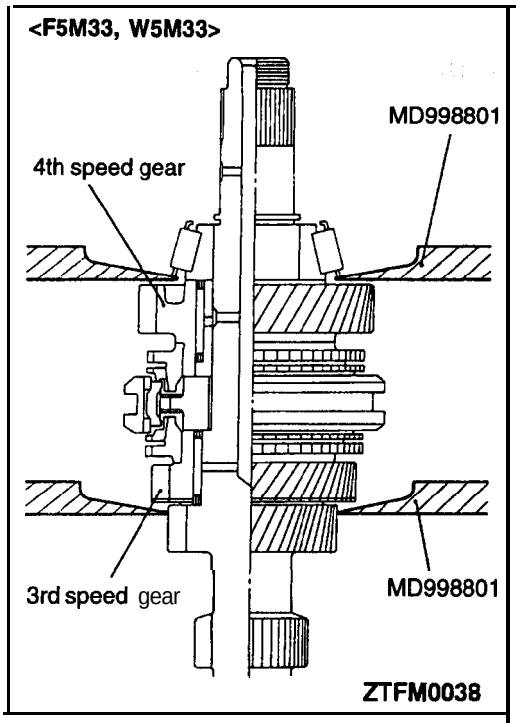

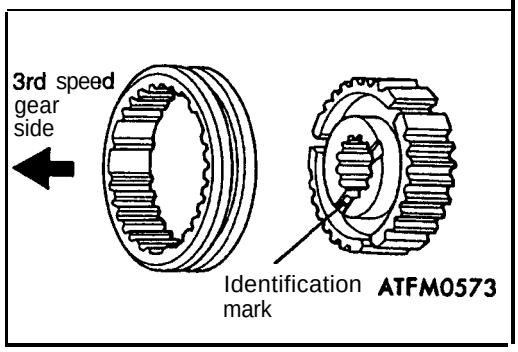

REASSEMBLY SERVICE POINTS

▶A◀ 3RD-4TH SPEED SYNCHRONIZER HUB / 3RD-4TH SPEED SYNCHRONIZER SLEEVE INSTALLATION

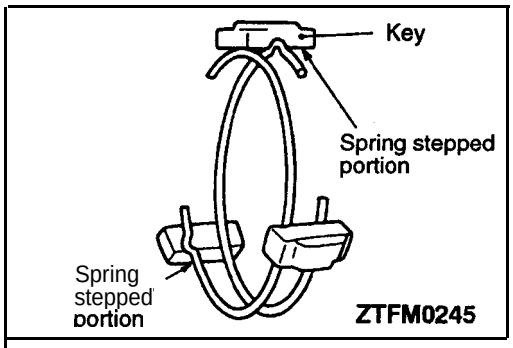

▶B◀ SYNCHRONIZER SPRING / SYNCHRONIZER KEY INSTALLATION

When installing the synchronizer springs, be sure to position each spring with respect to the keys as illustrated.

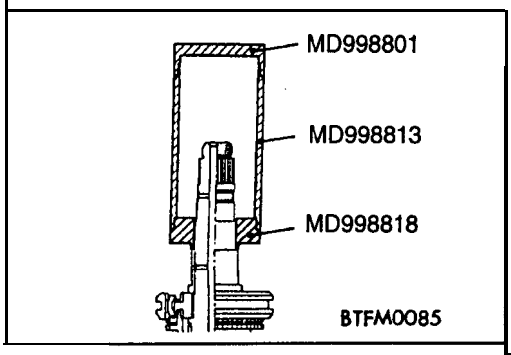

▶C◀ BEARING SLEEVE FOR 4TH SPEED GEAR INSTALLATION

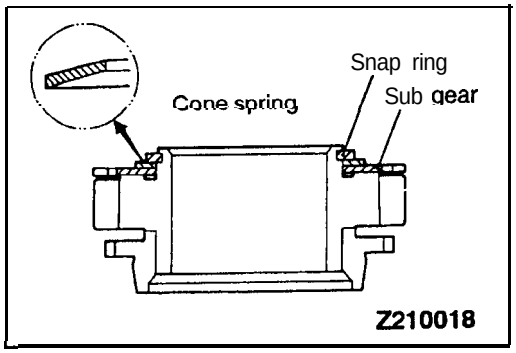

▶D◀ SUB GEAR / CONE SPRING / SNAP RING INSTALLATION

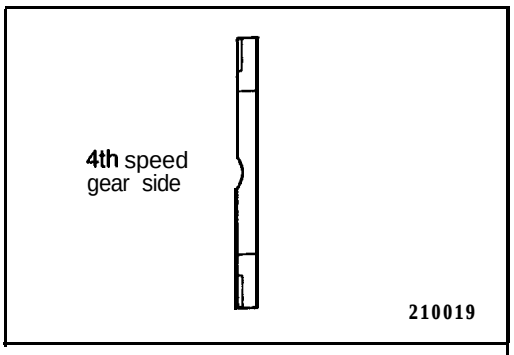

▶E◀ SPACER INSTALLATION

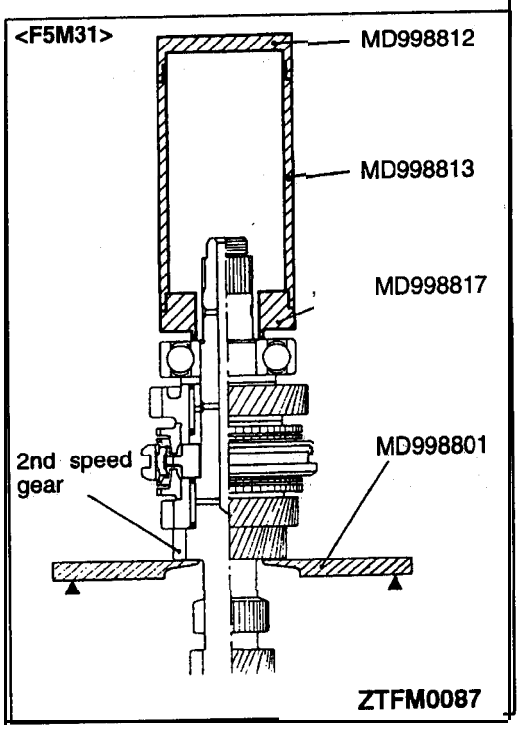

▶F◀ REAR BALL BEARING INSTALLATION

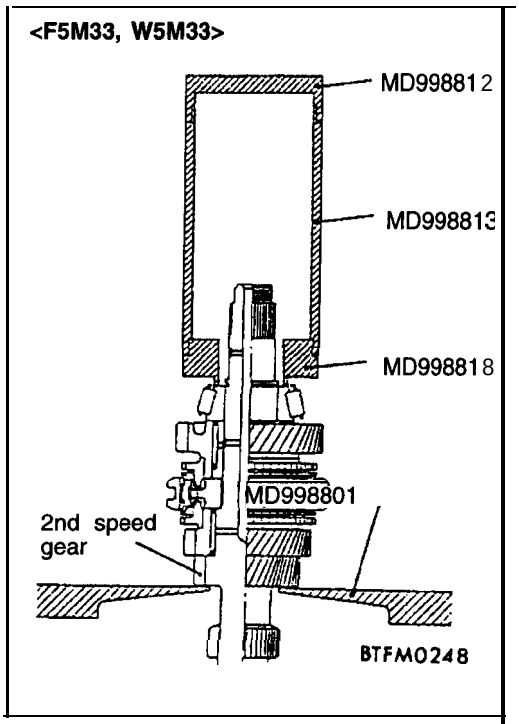

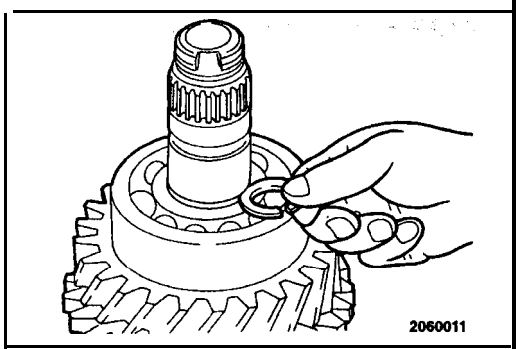

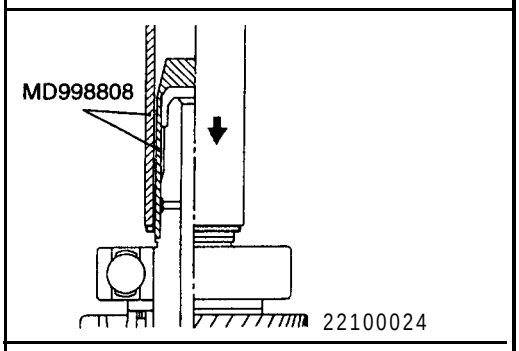

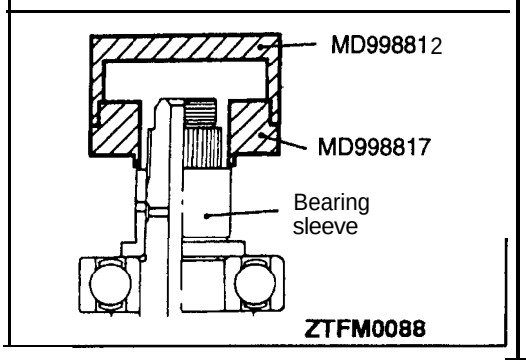

▶G◀ SNAP RING INSTALLATION

Select the thickest snap ring that can be fitted in the snap ring groove.

Standard value:

Input shaft rear bearing end play
0–0.09 mm (0–.0035 in.)

Caution
- **Do not reuse the snap ring.**
- **The snap ring may be opened too wide by pliers, resulting in improper installation of the sleeve.**

▶H◀ BEARING SLEEVE FOR 5TH SPEED GEAR INSTALLATION

Caution
When press-fitting the sleeve to the input shaft, make sure that the sleeve flange is closely fitted to the bearing.

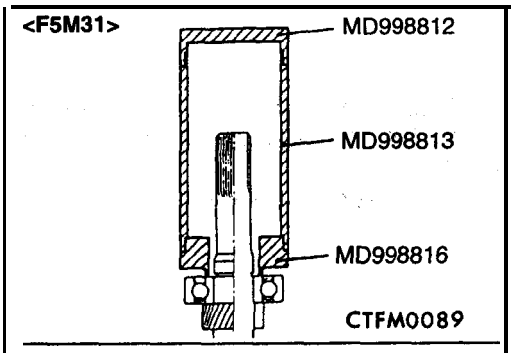

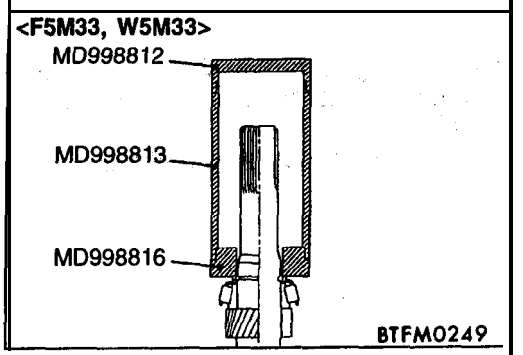

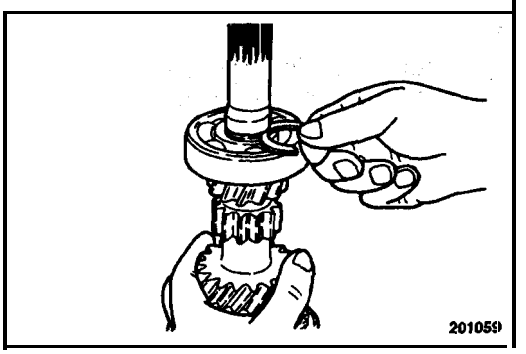

▶I◀ FRONT BALL BEARING / FRONT TAPER ROLLER BEARING INSTALLATION

▶J◀ SNAP RING INSTALLATION'

Snap rings are available in three, different thickness. Select the thickest one that fits in the snap ring groove.

Standard value:

input shaft front bearing end play
0.01–0.12 mm (.0004–.0047 in.)

Caution
Do not damage the input shaft oil seal contacting portion.

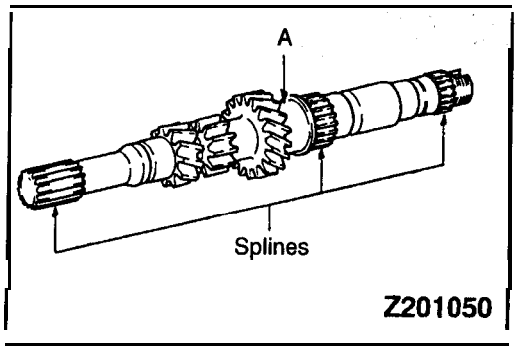

INSPECTION

22200170043

INPUT SHAFT

(1) Check the outer surface of the input shaft where the needle bearing is mounted for damage, abnormal wear and seizure [portion A].
(2) Check the splines for damage and wear.

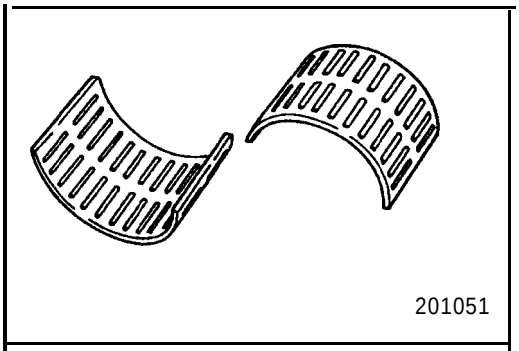

NEEDLE BEARING

(1) Combine the needle bearing with the shaft or bearing sleeve and gear and check that it rotates smoothly without' abnormal noise or play.
(2) Check the needle bearing cage for deformation.

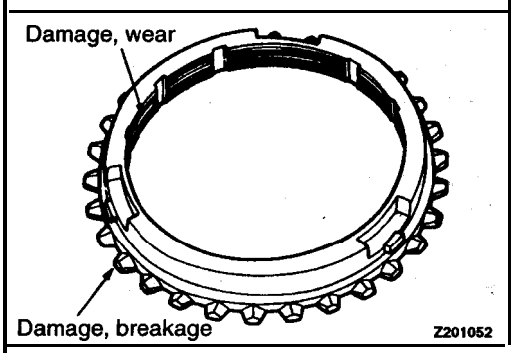

SYNCHRONIZER RING

(1) Check the clutch gear teeth for damage and breakage.
(2) Check the internal surface for damage, wear and broken threads.

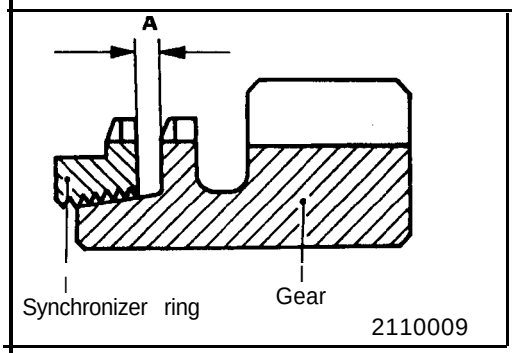

(3) Force the synchronizer ring toward the clutch gear and check clearance "A". Replace if it is out of specification.

Limit: 0.5 mm (.020 in.)

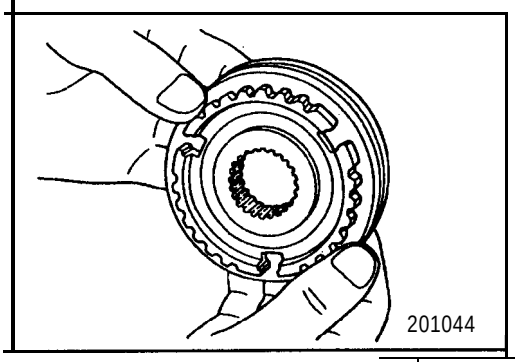

SYNCHRONIZER SLEEVE AND HUB

(1) Combine the synchronizer sleeve and hub and check that they slide smoothly.
(2) Check that the sleeve is free from damage at its inside front and rear ends.
(3) Check for wear of the hub end surfaces (in contact with each speed gear).

Caution
When replacing, replace the synchronizer hub and sleeve as a set.

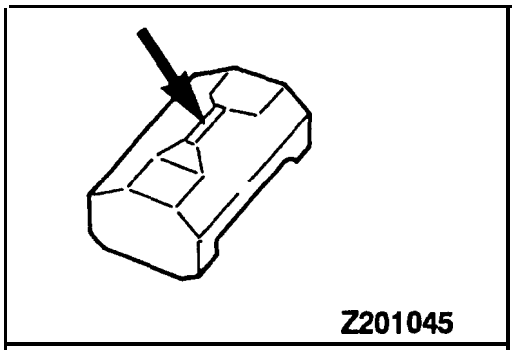

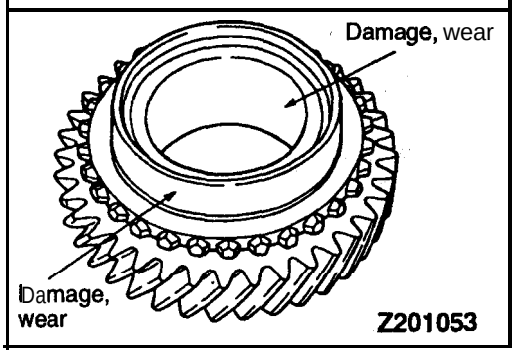

SYNCHRONIZER KEY AND SPRING

(1) Check for wear of the synchronizer key center protrusion.
(2) Check the spring for weakness, deform&i& and breakage.

SPEED GEARS

(1) Check the synchronizer cone for rough surface, damage and wear.
(2) Check the gear bore and front and rear ends for damage and wear.

INTERMEDIATE GEAR

2220018004~

DISASSEMBLY AND REASSEMBLY – F5M31, W5M33

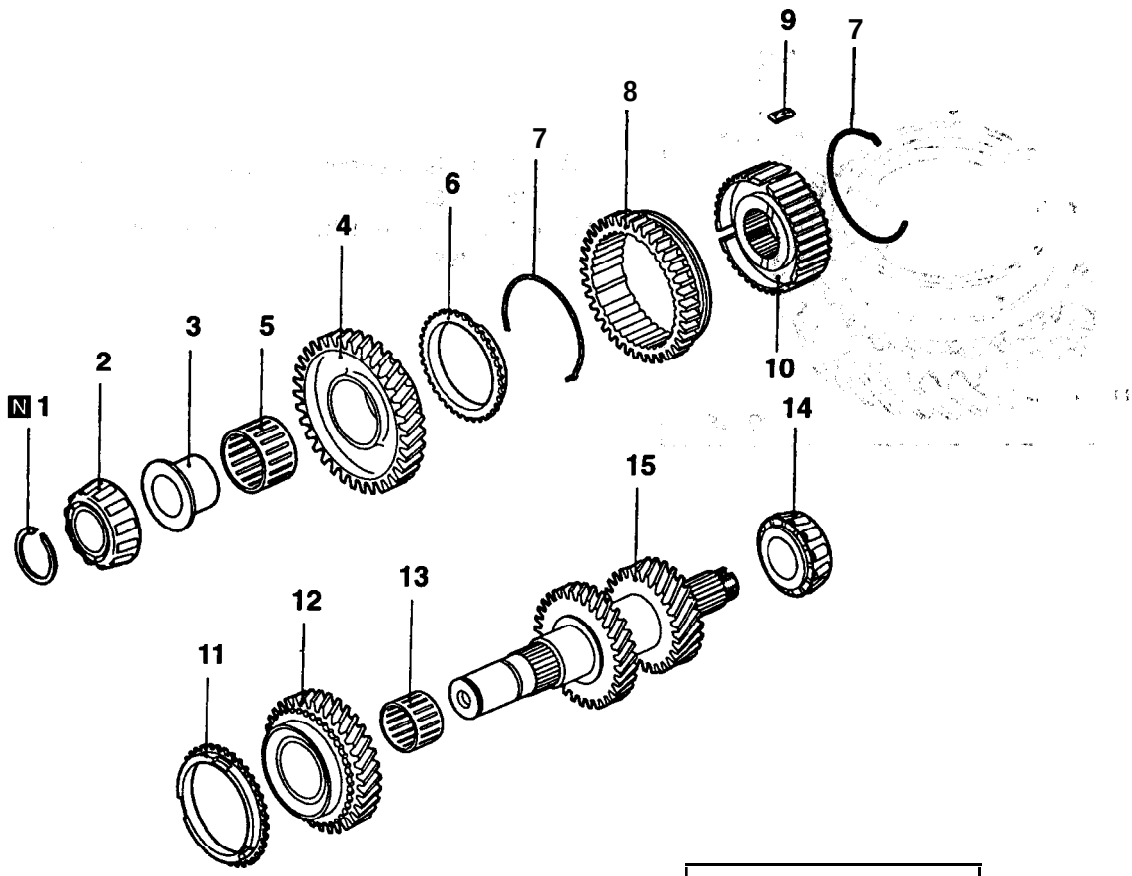

Lubricate all internal parts with engine oil during reassembly.

ZTFM0254

Disassembly steps

- ▶G◀ 1. Snap ring
- ◀A▶ ▶F◀ 2. Taper roller bearing
- ▶E◀ 3. Bearing sleeve
- ◀A▶ 4. 1st speed gear
- 5. Needle bearing
- ▶B◀ 6. Synchronizer ring
- ▶D◀ 7. Synchronizer spring
- ▶C◀ 8. 1st-2nd speed synchronizer sleeve
- ▶C◀ 9. Synchronizer key
- ◀B▶ ▶C◀ 10. 1st-2nd speed synchronizer hub
- ▶B◀ 11. Synchronizer ring
- ◀B▶ 12. 2nd speed gear
- 13. 2nd speed gear bearing
- ◀C▶ ▶A◀ 14. Taper roller bearing
- 15. Intermediate gear

TSB Revision

DISASSEMBLY AND REASSEMBLY – F5M33

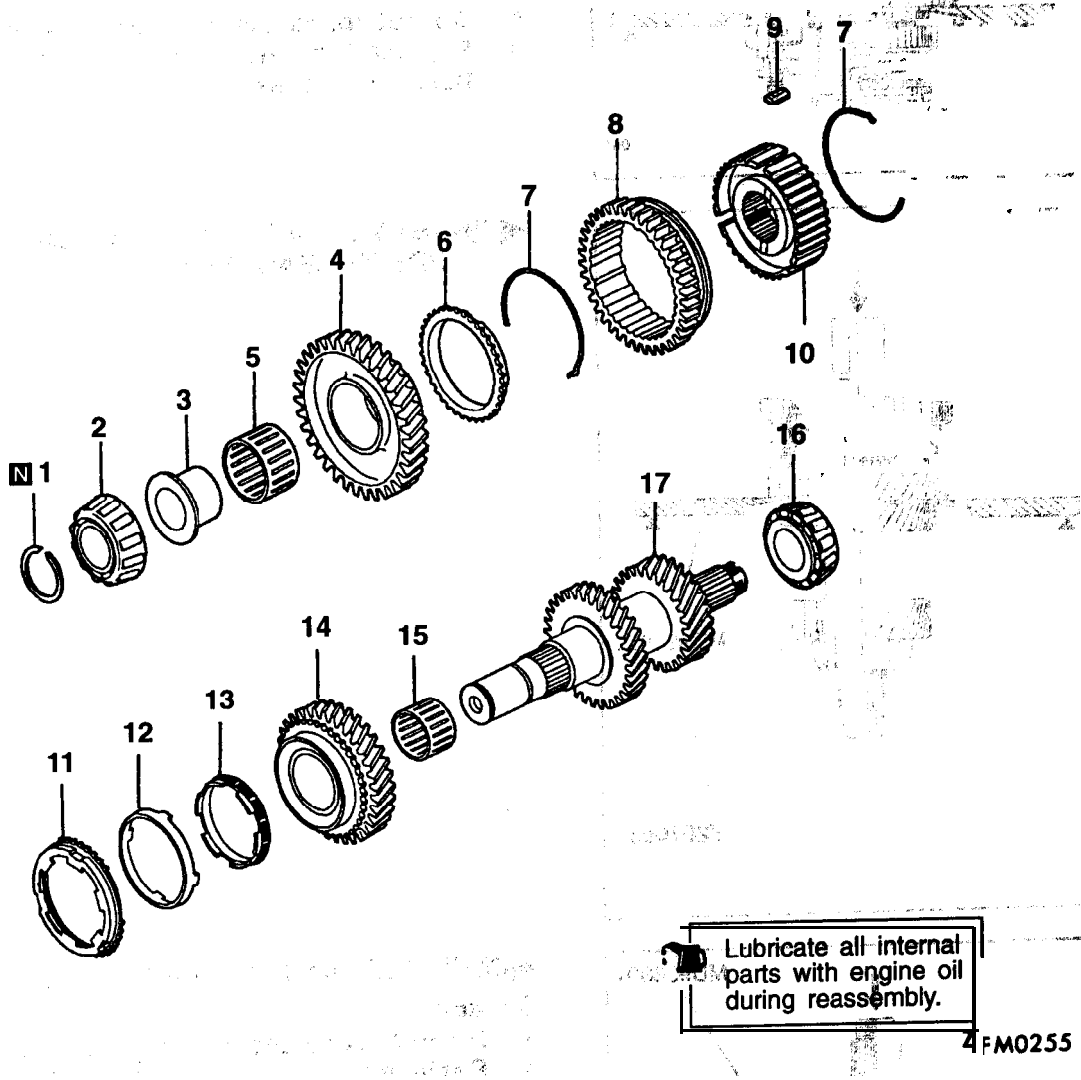

Disassembly steps

- ▶G◀ 1. Snap ring
- ◀A▶ ▶F◀ 2. Taper roller bearing
- ▶E◀ 3. Bearing sleeve
- ◀A▶ 4. 1st speed gear
- 5. Needle bearing
- ▶B◀ 6. Synchronizer ring
- ▶D◀ 7. Synchronizer spring
- ◀B▶ ▶C◀ 8. 1st-2nd speed synchronizer sleeve
- ▶C◀ 9. Synchronizer key
- ▶C◀ 10. 1st-2nd speed synchronizer hub
- 11. Synchronizer outer ring
- 12. Synchronizer cone
- 13. Synchronizer inner ring
- ◀B▶ 14. 2nd speed gear
- 15. Needle bearing
- ◀C▶ ▶A◀ 16. Taper roller bearing
- 17. Intermediate gear

TSB Revision

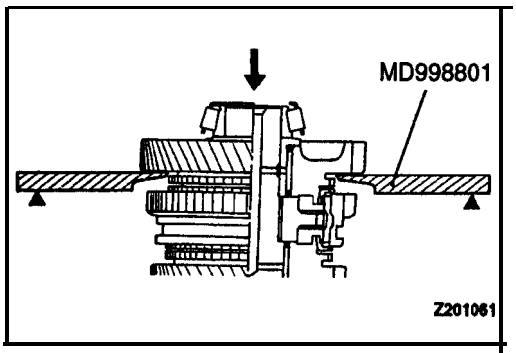

DISASSEMBLY SERVICE POINTS

◀A▶ TAPER ROLLER BEARING / 1ST SPEED GEAR REMOVAL

Caution
- **Do not reuse the bearing removed from the shaft.**
- **Replace the inner and outer races of the taper roller bearing as a set.**

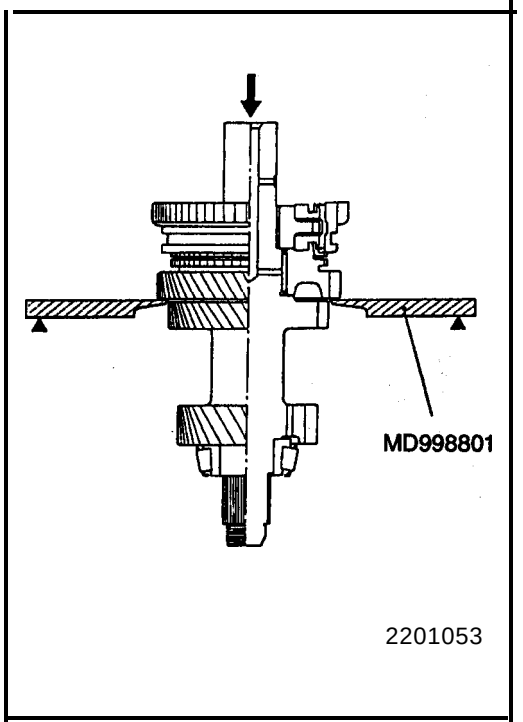

◀B▶ 1ST-2ND SPEED SYNCHRONIZER HUB / 2ND SPEED GEAR REMOVAL

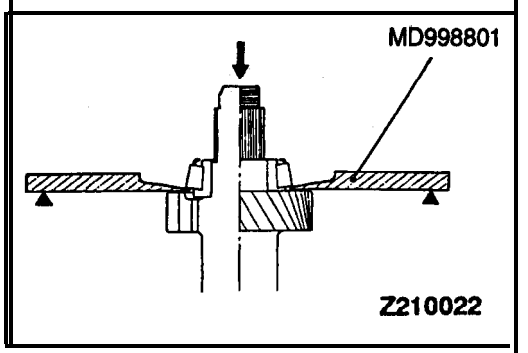

◀C▶ TAPER ROLLER BEARING REMOVAL

Caution
- **Do not reuse the bearing removed from the shaft.**
- **Replace the inner and outer races of the taper roller bearing as a set.**

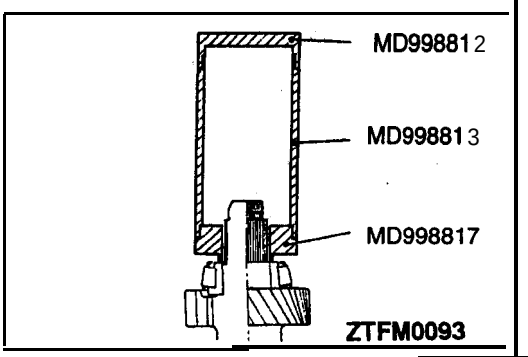

REASSEMBLY SERVICE POINTS

▶A◀ TAPER ROLLER BEARING INSTALLATION

Caution
When installing the bearing, push the inner race only.

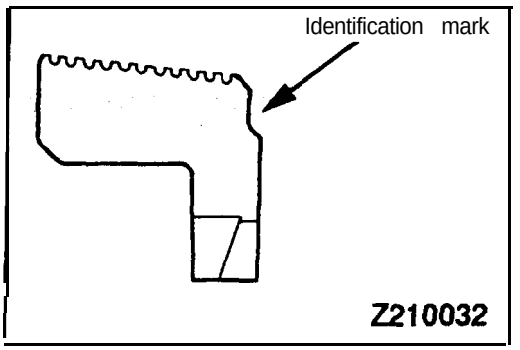

▶B◀ SYNCHRONIZER RINGS FOR 1ST SPEED GEAR, 2ND SPEED GEAR INSTALLATION .

The 1st speed gear and 2nd speed gear of synchronizer rings have an identification mark.

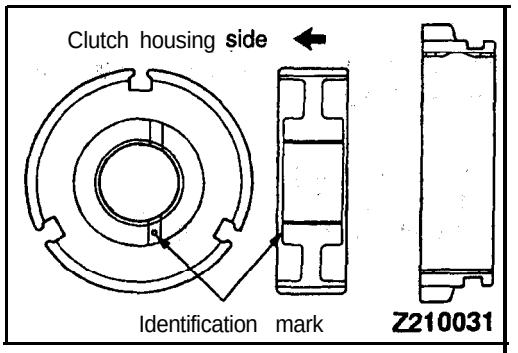

▶C◀ 1 ST-2ND SPEED SYNCHRONIZER HUB / SYNCHRONIZER KEY / 1ST-2ND SYNCHRONIZER SLEEVE INSTALLATION

(1) Combine the 1st–2nd speed synchronizer hub and sleeve as illustrated.

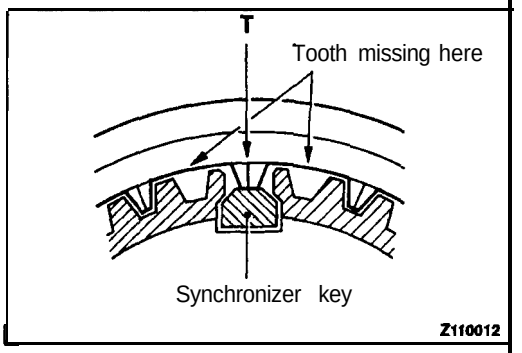

(2) The synchronizer sleeve has tooth missing at six portions. Assemble the hub to the sleeve in such a way that the center tooth "T" between two missing teeth will touch the synchronizer key.

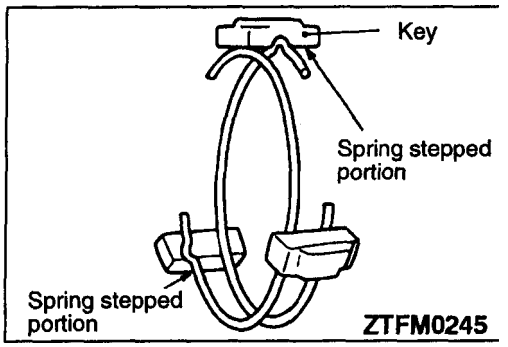

▶D◀ SYNCHRONIZER SPRING INSTALLATION

When installing the synchronizer springs, be sure to position each spring with respect to the keys as illustrated.

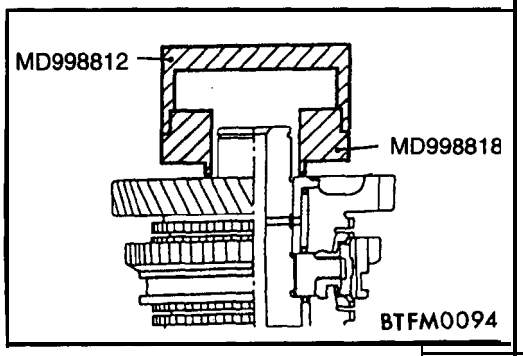

▶E◀ BEARING SLEEVE INSTALLATION

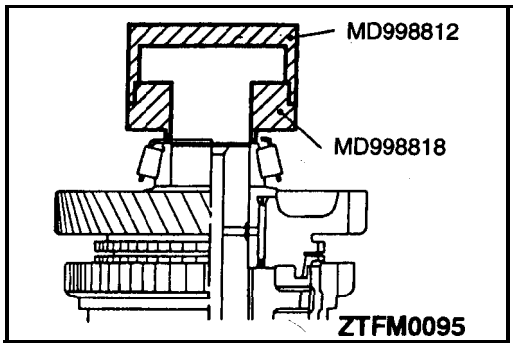

▶F◀ TAPER ROLLER BEARING INSTALLATION

Caution
When installing the bearing, push the. inner race only.

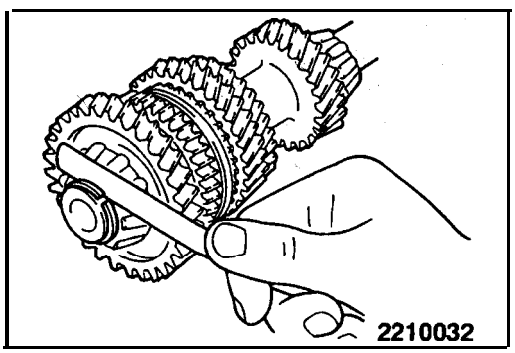

▶G◀SNAP RING INSTALLATION

Select and install the snap ring that gives standard intermediate gear bearing end play.

Standard, value:
Intermediate gear bearing end play:
0.01–0.14 mm (.0004–.0055 in.) <F5M33, W5M33>
0.01–0.11 mm (.0004–.0044 in.) <F5M31>

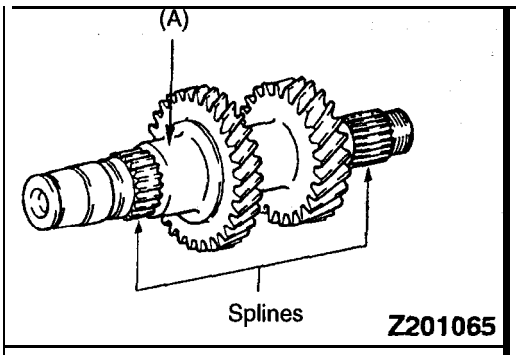

INSPECTION

22200200049

INTERMEDIATE GEAR

(1) Check the outer surface of the intermediate gear where the needle bearing is mounted' for damage, abnormal wear and seizure [portion (A)].
(2) Check the splines for damage and wear.

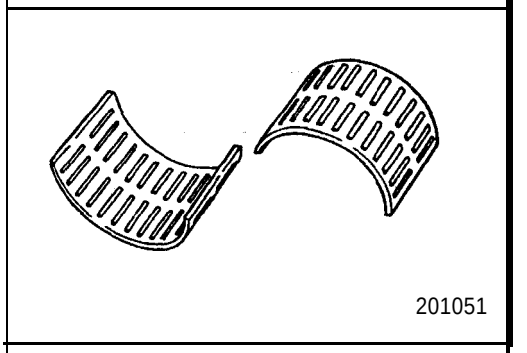

NEEDLE BEARING

(1) Combine the needle bearing with the shaft or bearing' sleeve and gear and check that it rotates Smoothly without abnormal noise or play.
(2) Check the needle bearing cage for' deformation.

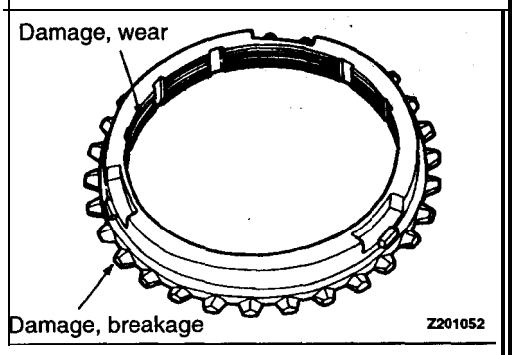

SYNCHRONIZER RING

(1) Check the clutch gear teeth for damage and breakage.
(2) Check the internal surface for damage,, wear and broken threads.

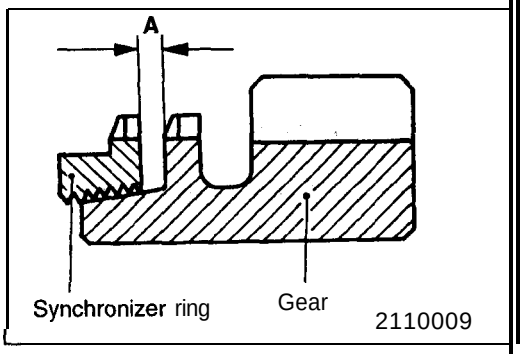

(3) Force the synchronizer ring toward the clutch gear and check clearance "A". Replace if it is out of specification.

Limit: 0.5 mm (.020 in.)

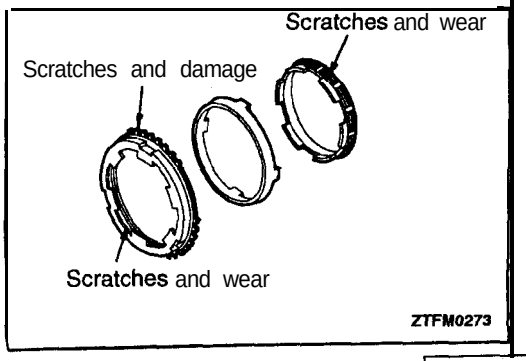

SYNCHRONIZER OUTER RING, INNER RING AND CONE

(1) Check that there are no scratches of damage on the clutch gear teeth and cone surface.
(2) Check that there are no scratches, wear or peeling on the paper lining surface.

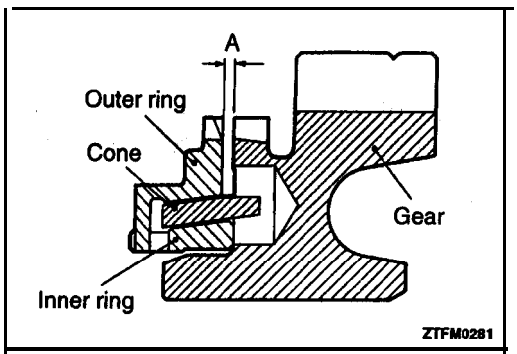

(3) Install the outer ring, inner ring and cone, and press them onto the clutch gear. Check clearance "A", and replace if "A" is below the limit value.

Limit: 0.5 mm (.020 in.)

Caution
Replace the outer ring, inner ring and cone, as a set.

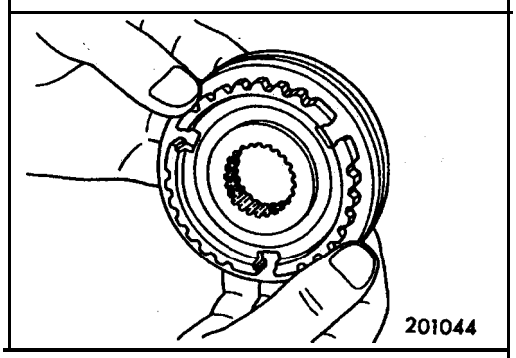

SYNCHRONIZER SLEEVE AND HUB

(1) Combine the synchronizer sleeve and hub and check that they slide smoothly.
(2) Check that the sleeve is free from damage at its inside front and rear ends.
(3) Check for wear of the hub end surface (in contact with each speed gear).

Caution
Replace the synchronizer hub and sleeve as a set.

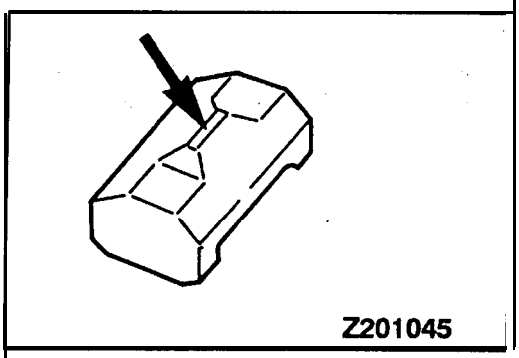

SYNCHRONIZER KEY AND SPRING

(1) Check for wear of the synchronizer key center protrusion.
(2) Check the spring for weakness, deformation and breakage.

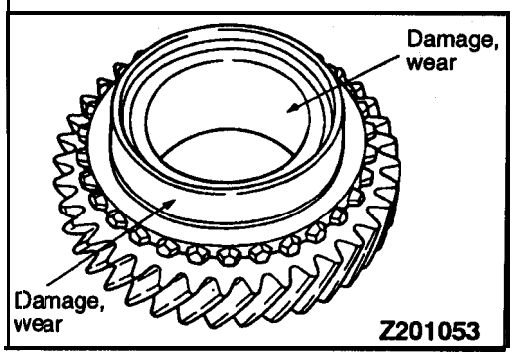

SPEED GEARS

(1) Check the bevel gear and clutch gear teeth for damage and wear.
(2) Check the synchronizer cone for rough surface, damage and wear.
(3) Check the gear bore and front arid rear ends for damage and wear.

OUTPUT SHAFT <F5M31, F5M33>

22200220052

DISASSEMBLY AND REASSEMBLY

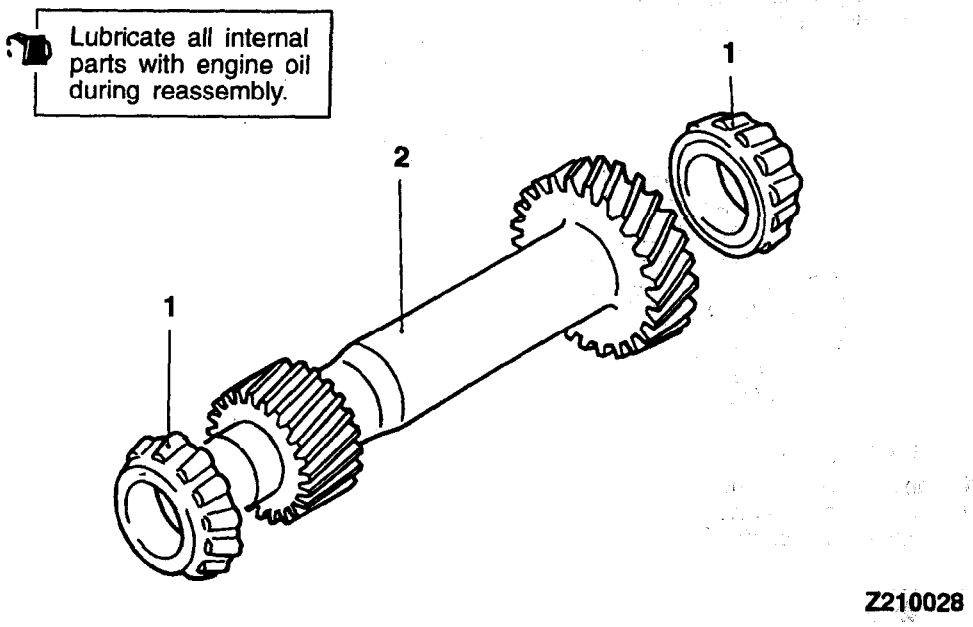

Disassembly steps

◀A▶ ▶A◀ 1. Taper roller bearing
2. Output shaft

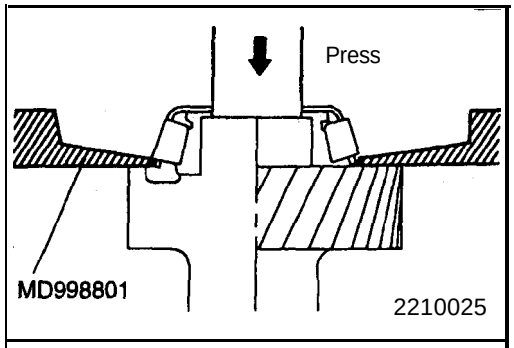

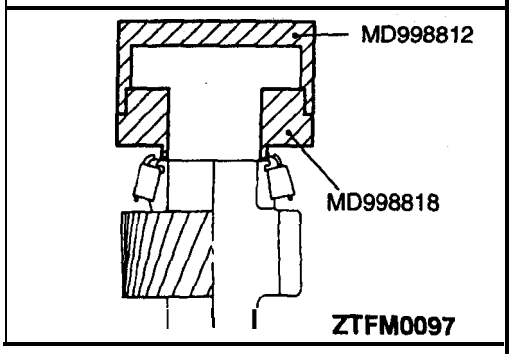

DISASSEMBLY SERVICE POINT

◀A▶ TAPER ROLLER BEARINGS REMOVAL

Caution

- **Do not reuse the bearings removed from the shaft.**
- **Replace the inner and outer races of the taper roller bearing as a set.**

REASSEMBLY SERVICE POINT

▶A◀ TAPER ROLLER BEARINGS INSTALLATION

Caution

When installing the bearing, push the inner race only.

FRONT OUTPUT SHAFT <W5M33>

22201150039

DISASSEMBLY AND REASSEMBLY

Lubricate all internal parts with engine oil during reassembly.

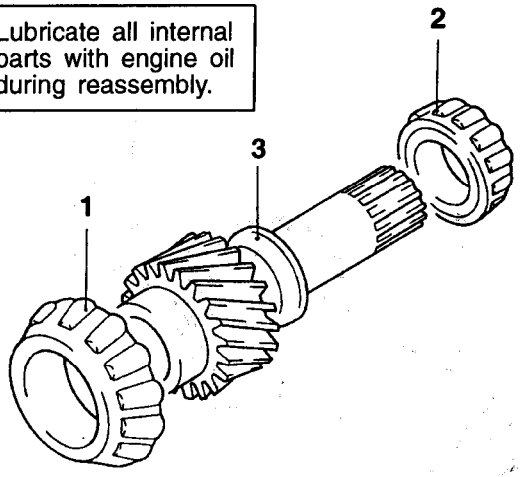

Z2200075

Disassembly steps

◀A▶ ▶B◀ 1. Taper roller bearing
◀A▶ ▶A◀ 2. Taper roller bearing
3. Front output shaft

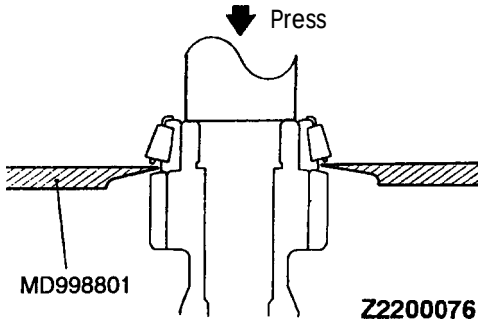

Z2200076

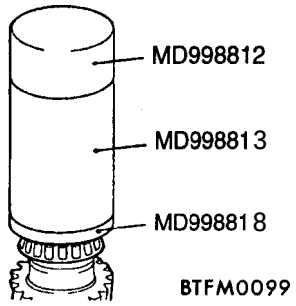

BTFM0099

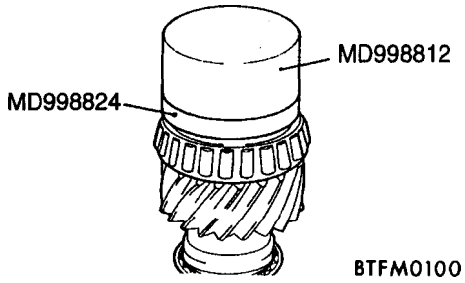

BTFM0100

DISASSEMBLY SERVICE POINT

◀A▶ TAPER ROLLER BEARINGS REMOVAL

Remove the taper roller bearings using the special tool.

NOTE
(1) Do not reuse the bearing removed' from 'the shaft.
(2) Replace the inner and outer races of the taper roller bearing as a set.

REASSEMBLY SERVICE POINTS

▶A◀ TAPER ROLLER BEARINGS INSTALLATION

Install the taper roller bearing using the special tool.

NOTE
Apply the special tool to the inner race only when 'installing' the bearing.

▶B◀ TAPER ROLLER BEARINGS INSTALLATION

Install the taper roller bearing using the special tool.

NOTE
Apply 'the special tool to the inner race only when installing' the bearing.

DIFFERENTIAL

22200250051

DISASSEMBLY AND REASSEMBLY

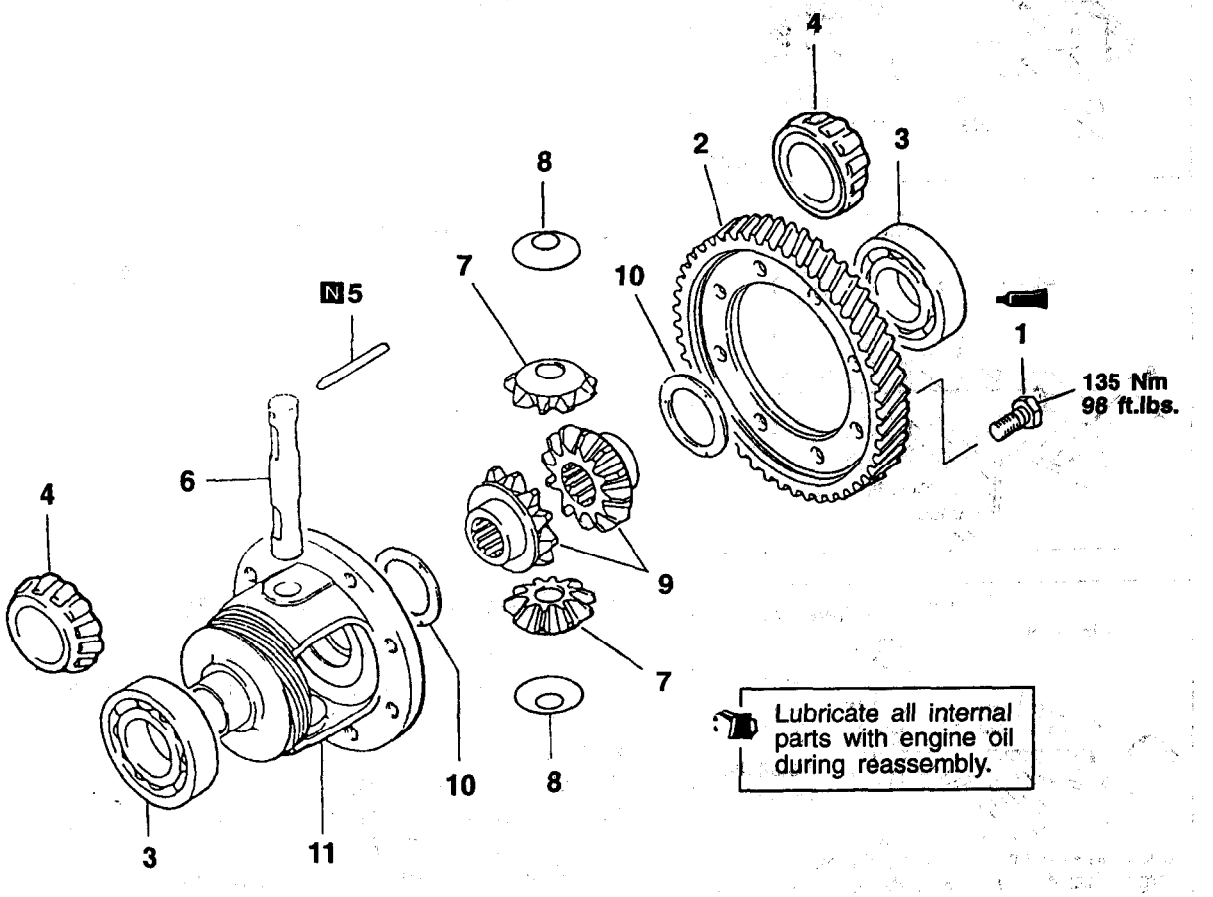

2160119

Disassembly steps

	▶D◀	2. Differential drive gear
◀A▶	▶C◀	3. Ball bearing <W5M33>
◀B▶	▶B◀	4. Taper roller bearing <F5M31, F5M33>
◀C▶	▶A◀	5. Lock pin

6. Pinion shaft
8. Washer
9. Side gear
10. Spacer
11. Differential case

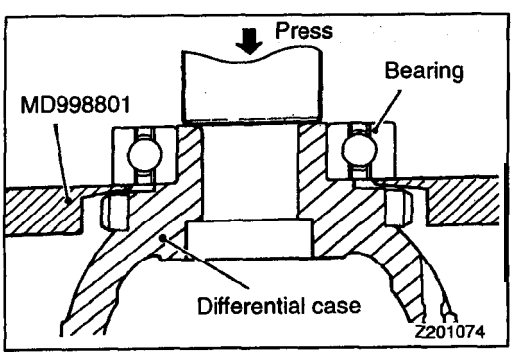

DISASSEMBLY SERVICE POINTS

◀A▶ BALL BEARINGS REMOVAL

Caution

Do not reuse the bearing 'removed 'from the shaft.

TSB **Revision**

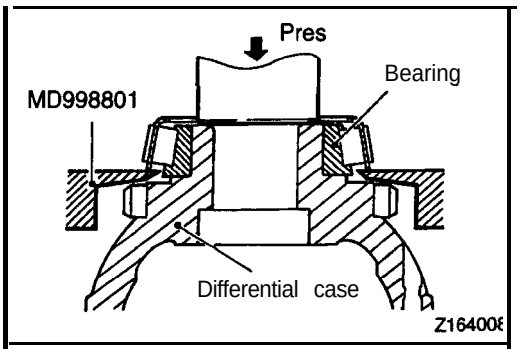

◀B▶ TAPER ROLLER BEARING REMOVAL

Caution

- **Do not reuse the bearing removed from the shaft.**
- **Replace the inner and outer races of the taper roller bearing as a set.**

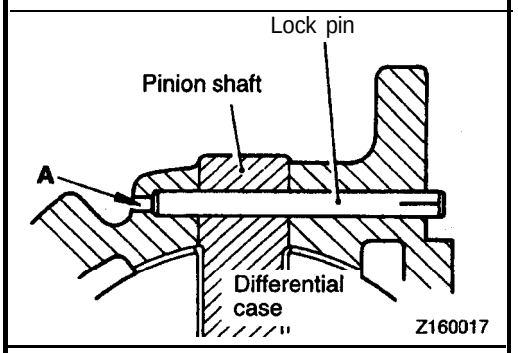

◀C▶ LOCK PIN REMOVAL

Drive out the lock pin from the hole A using a punch.

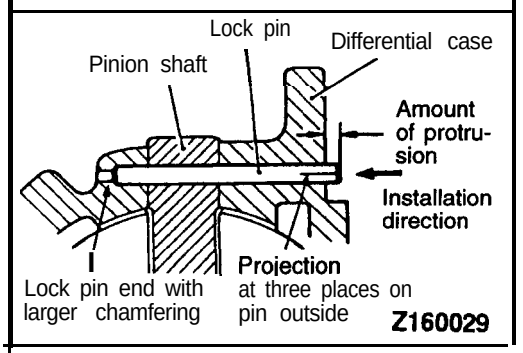

REASSEMBLY SERVICE POINTS

▶A◀ LOCK PIN INSTALLATION

Align the pinion shaft lock pin hole with the case lock pin hole and insert the lock pin.

Caution

1. **Do not reuse the lock pin.**
2. **The lock pin must not protrude more than 3 mm (.12 in.). <F5M31, F5M33>**
3. **The lock pin head must be sunk from the flange surface of the differential case. <W5M33>**

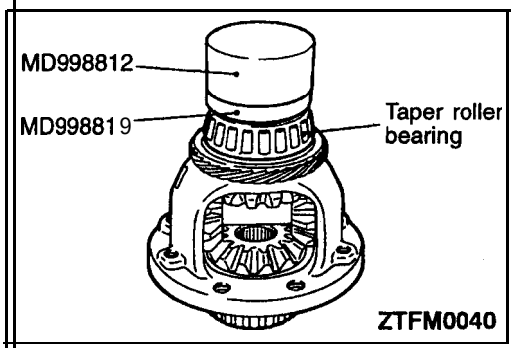

▶B◀ TAPER ROLLER BEARINGS INSTALLATION

Caution

When press-fitting the bearings, push the inner race only.

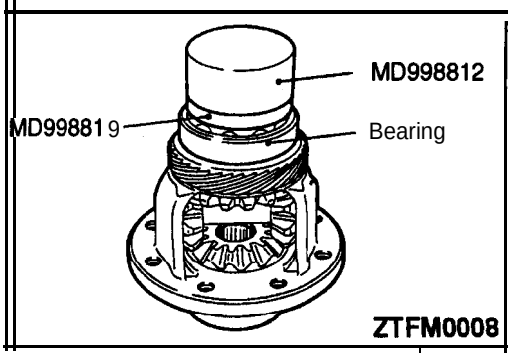

▶C◀ BALL BEARINGS INSTALLATION

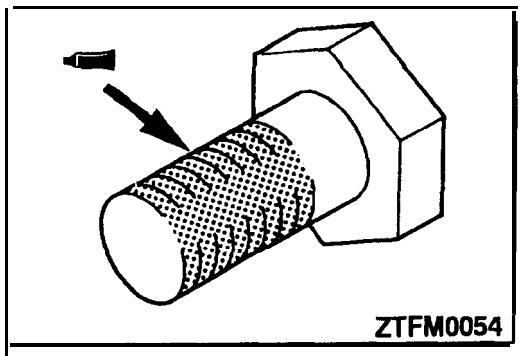

▶D◀ **BOLTS** JNSTALLATION

(1) Apply the specified sealant to the bolt threads.

Specified sealant:
3M Stud Locking No.4170 or equivalent

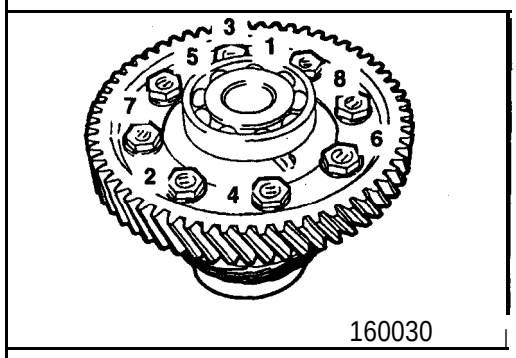

(2) Tighten to the specified torque while following the order given in the illustration.

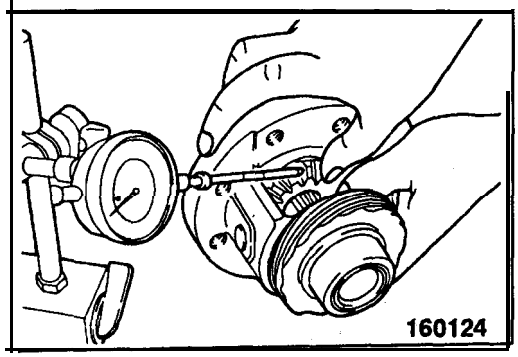

INSPECTION

22200260047

ADJUSTMENT OF PINION BACKLASH

Measure the backlash between the side gears and pinions. Adjust for same backlash of both side gears.

Standard value: 0.025–0.150 mm (.00098–.00591 in.)

If backlash is out of specification, disassemble again and using correct spacer, reassemble and adjust.

CENTER DIFFERENTIAL <W5M33>

22200280036

DISASSEMBLY AND REASSEMBLY

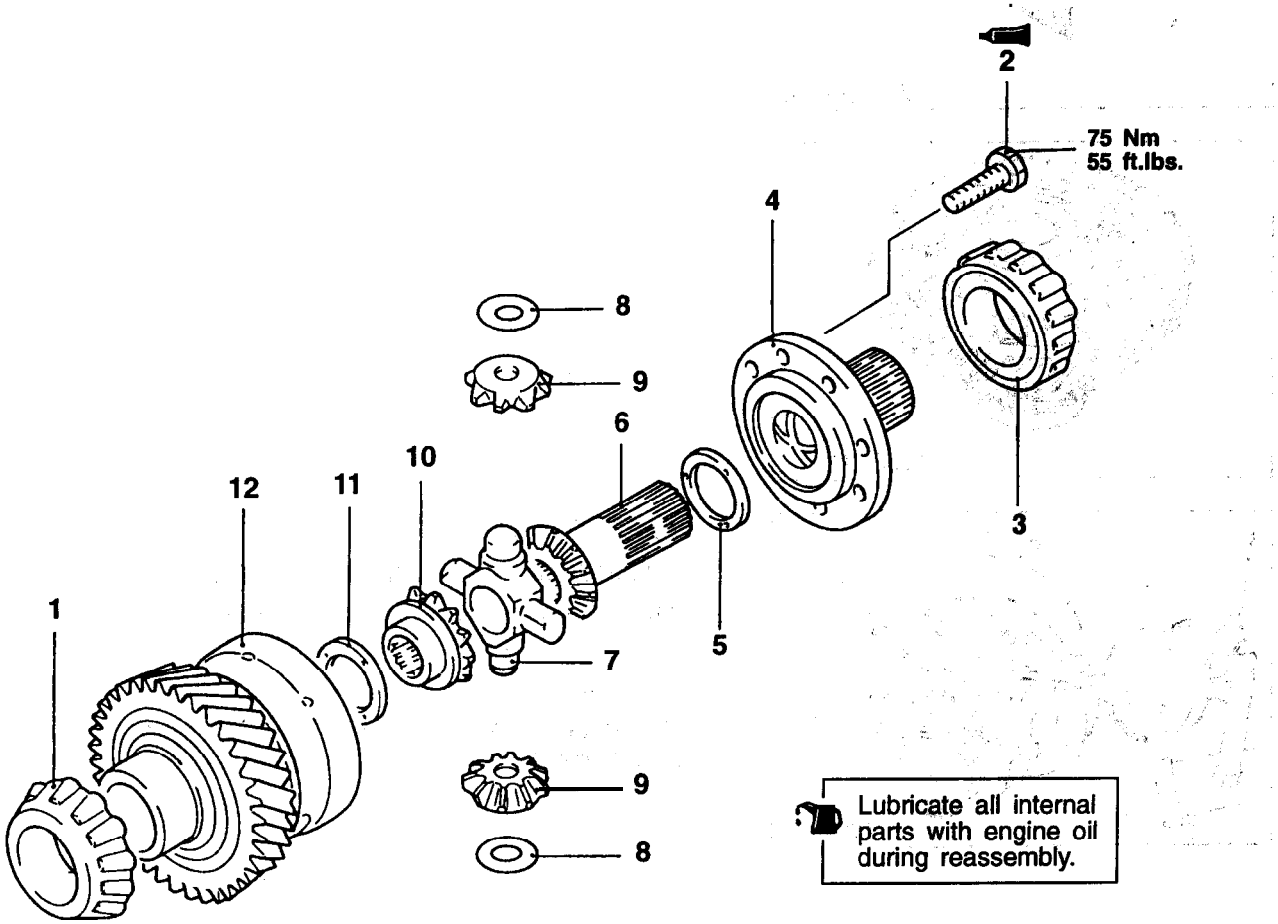

22250015

Disassembly steps

◀A▶ ▶D◀ 1. Taper roller bearing
▶C◀ 2. Bolt
◀A▶ ▶B◀ 3. Taper roller bearing
4. Output gear
▶A◀ 5. Spacer
6. Side gear
7. Pinion shaft
8. Washer
9. Pinion
10. Side gear
▶A◀ 11. Spacer
12. Center differential case

TSB Revision

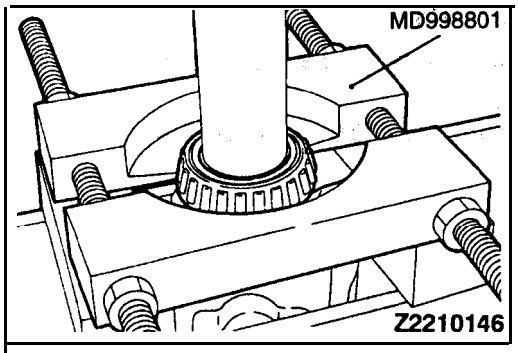

DISASSEMBLY SERVICE POINT

◀A▶ TAPER ROLLER BEARINGS REMOVAL

Remove-the taper roller bearings 'using the special tool.

NOTE
(1) Do not reuse the bearing removed from the shaft.
(2) Replace the inner and outer races of the taper roller bearing as a set.

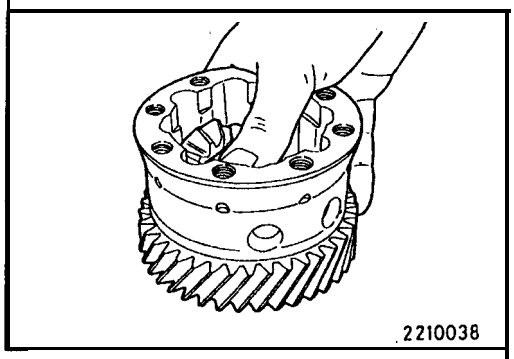

REASSEMBLY SERVICE POINTS

▶A◀ SPACERS INSTALLATION

(1) Install the spacer, side gear, pinion gear, washer and pinion shaft to the center differential case.
(2) Holding down the pinion shaft, select the spacer of maximum thickness that allows the pinion gear to turn lightly and install it to the shaft.
(3) Install the side gear, spacer and output gear and tighten the bolt to the specified torque.
(4) Select the spacer of maximum thickness that allows the side gear to turn lightly and install it.
(5) Check that both side gears turn lightly.

Standard, value:
Center differential side gear end play:
0.05–0.25 mm (.0020–.0010 in.)

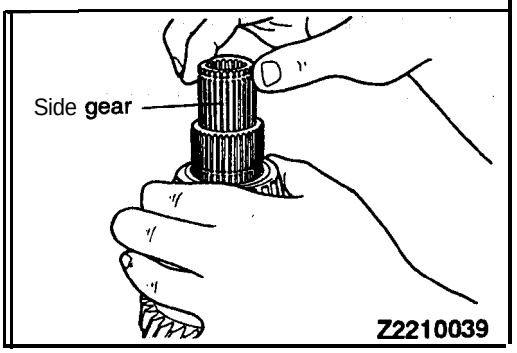

▶B◀ TAPER ROLLER BEARINGS INSTALLATION

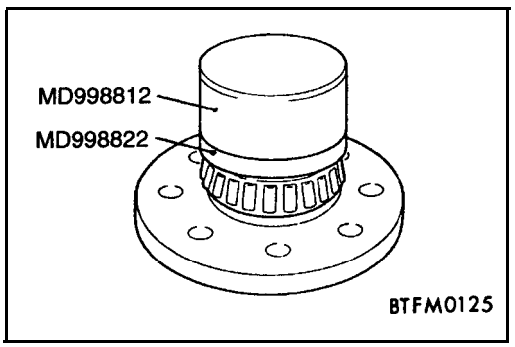

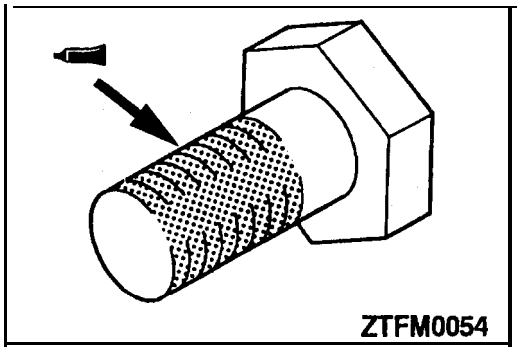

▶C◀ BOLTS INSTALLATION

(1) Apply the specified sealant to the bolt threads.

Specified sealant:
3M Stud Locking No.4170 or equivalent

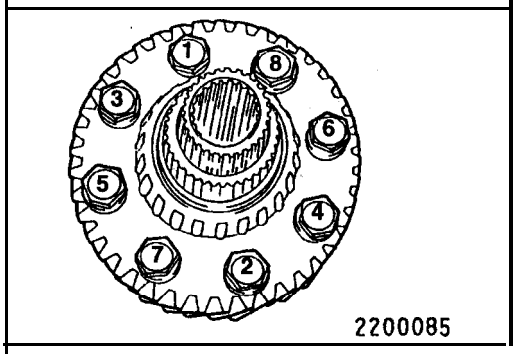

(2) Tighten to the specified torque while following the order given in the illustration.

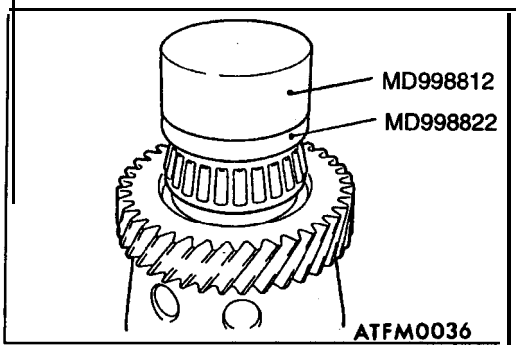

▶D◀ TAPER ROLLER BEARINGS INSTALLATION

NOTE
Apply the special tool to the inner race only when installing the bearing.

SHIFT FORK

22200310049

DISASSEMBLY AND REASSEMBLY

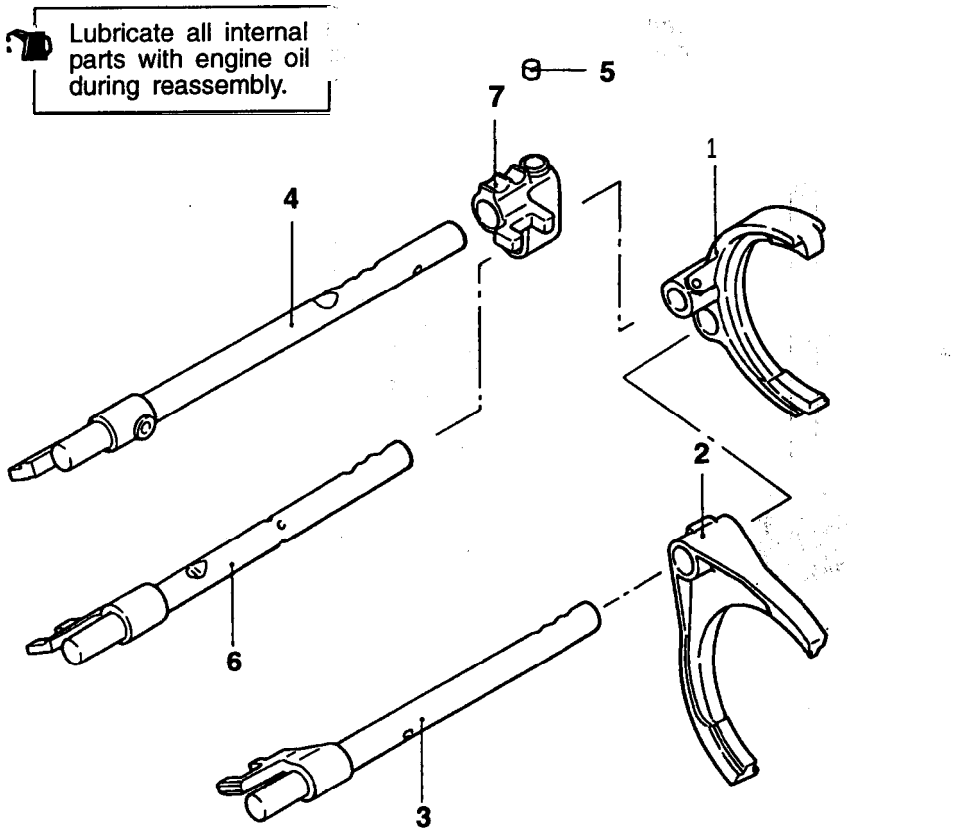

Disassembly steps

1. **3rd-4th** speed shift fork
2. **1st-2nd** speed shift fork
3. **3rd-4th** speed shift rail
4. **5th-reverse** speed shift rail

▶A◀ 5. Interlock plunger
6. **3rd-4th** speed shift rail
7. Reverse shift lug

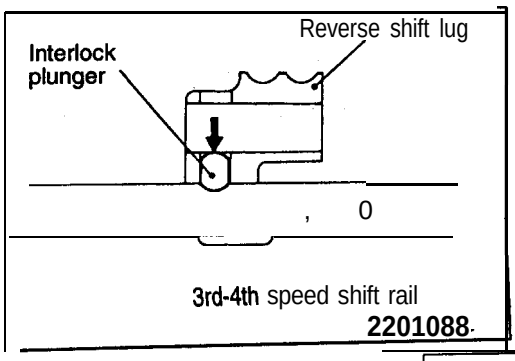

REASSEMBLY SERVICE POINT

▶A◀ INTERLOCK PLUNGER INSTALLATION

TSB Revision

SPEEDOMETER GEAR

22200340048

DISASSEMBLY AND REASSEMBLY

Lubricate all internal parts with engine oil during reassembly.

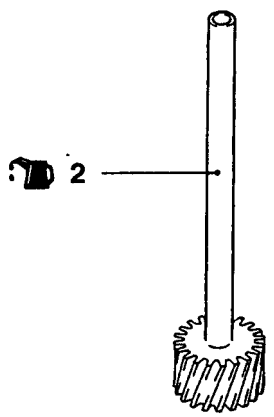

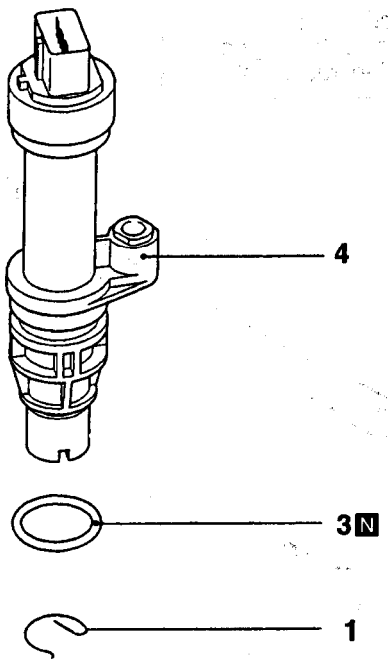

ATFM0580

Disassembly steps

1. e-clip
▶A◀ 2. Speedometer driven gear
3. O-ring
4. Sleeve

REASSEMBLY SERVICE POINT

▶A◀ SPEEDOMETER DRIVEN GEAR INSTALLATION

Apply gear oil sparingly to the speedometer driven gear shaft and insert the shaft.

TSB Revision

CLUTCH HOUSING

22200370054

DISASSEMBLY AND REASSEMBLY

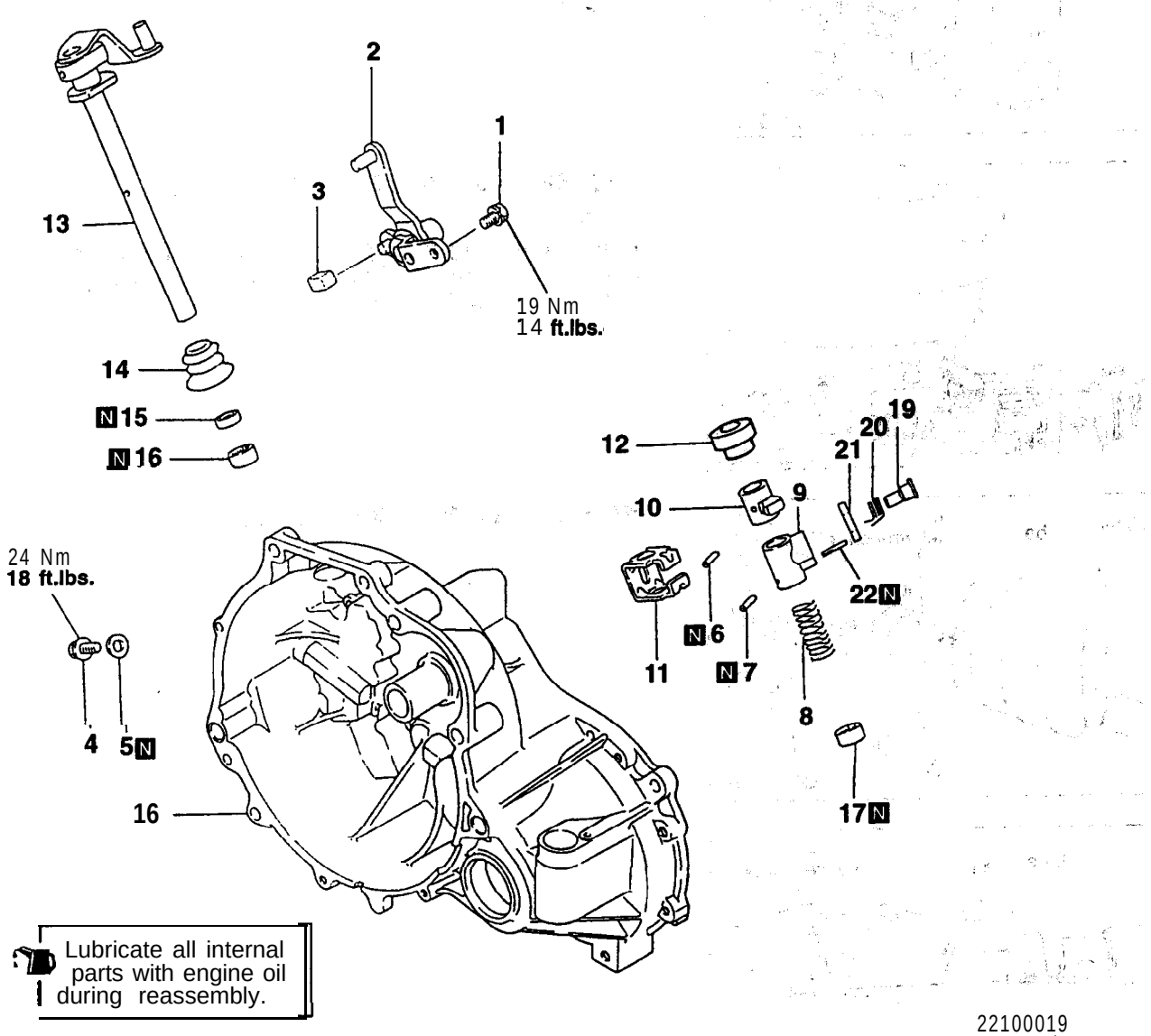

Disassembly steps

1. Bolt
2. Select lever assembly
3. Select lever shoe
4. Interlock plate bolt
5. Gasket
6. ◀A▶ ▶C◀ Lock pin
7. ◀B▶ ▶C◀ Spring pin
8. Neutral return spring
9. Stopper body
10. Control finger
11. Interlock plate
12. Neutral return spring assembly
13. Control shaft
14. Control shaft boot
15. ▶B◀ **Oil seal**
16. ◀C▶ ▶A◀ Needle **bearing**
17. ◀C▶ ▶A◀ Needle, **bearing**
18. **Clutch housing**
19. **Pin**
20. Return spring
21. **Stopper** plate
22. Spring pin

TSB Revision

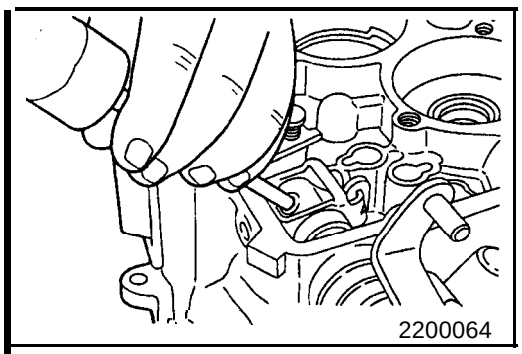

DISASSEMBLY SERVICE POINTS

◀A▶ LOCK PIN REMOVAL

Caution
When removing the lock pin, turn the control lever to such position that the lock pin will not contact the clutch housing.

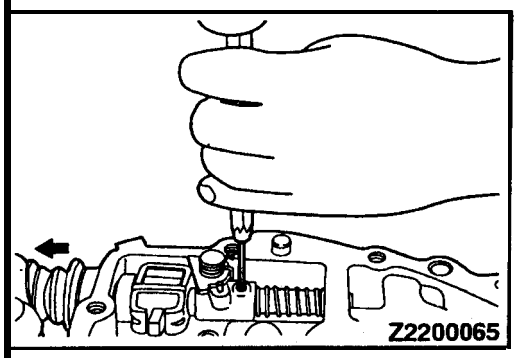

◀B▶ SPRING PIN REMOVAL

Caution
When removing the spring pin, pull the control shaft in the direction illustrated so that the spring pin will not contact the clutch housing.

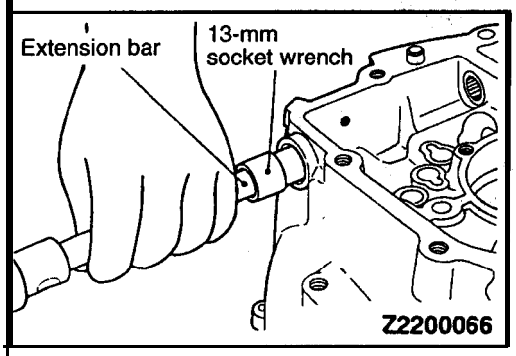

◀C▶ NEEDLE BEARING REMOVAL

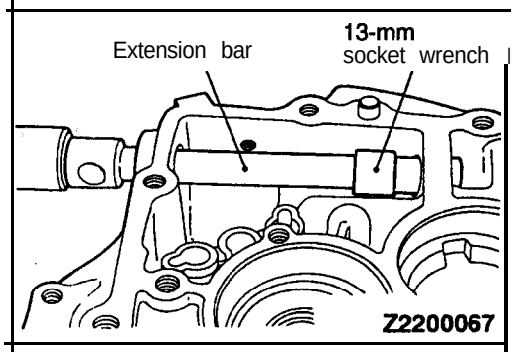

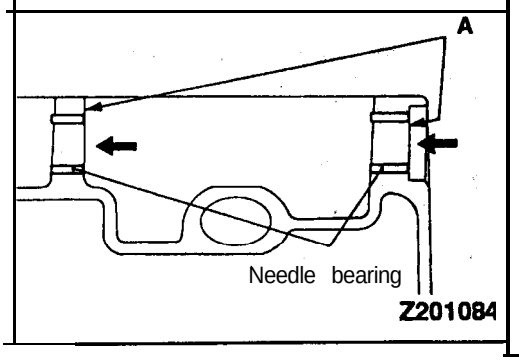

REASSEMBLY SERVICE POINTS

▶A◀ NEEDLE BEARING INSTALLATION

(1) Install the needle bearing flush with the surface A of the clutch housing using a socket wrench.
(2) Install with the part type stamped side facing the surface A.

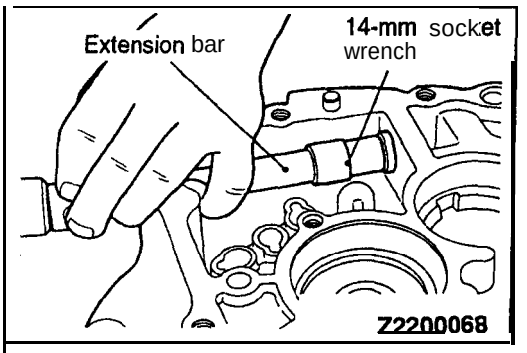

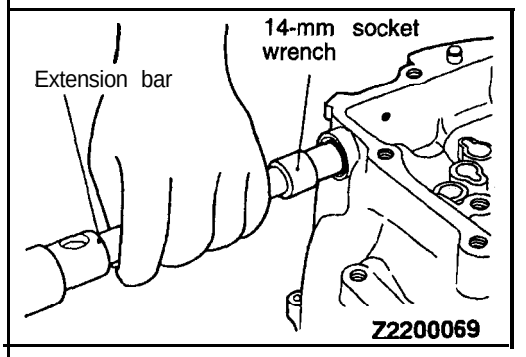

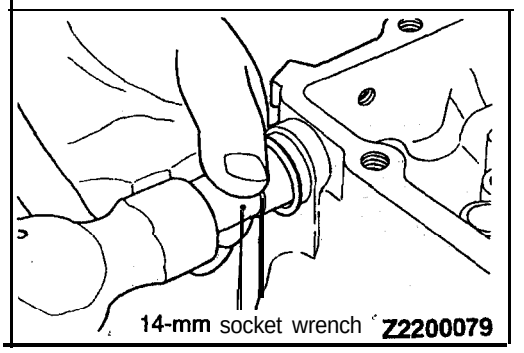

▶B◀ OIL SEAL INSTALLATION

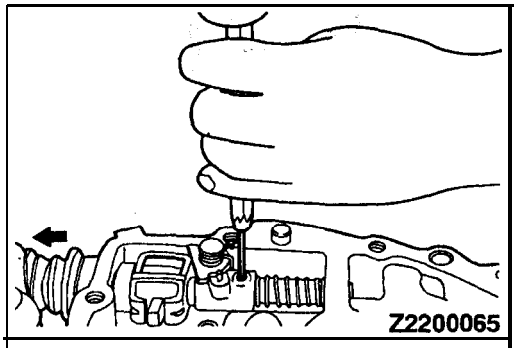

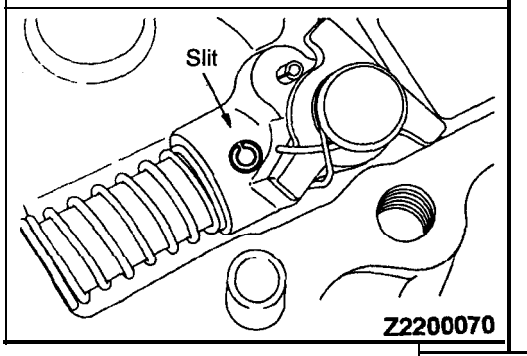

▶C◀ SPRING PIN / LOCK PIN INSTALLATION

Caution

- **Do not reuse the spring pin and lock pin.**
- **Install the spring pin In such a way its slit will be at right angle to the control shaft center.**

TRANSFER <W5M33>

22200400036

DISASSEMBLY AND REASSEMBLY

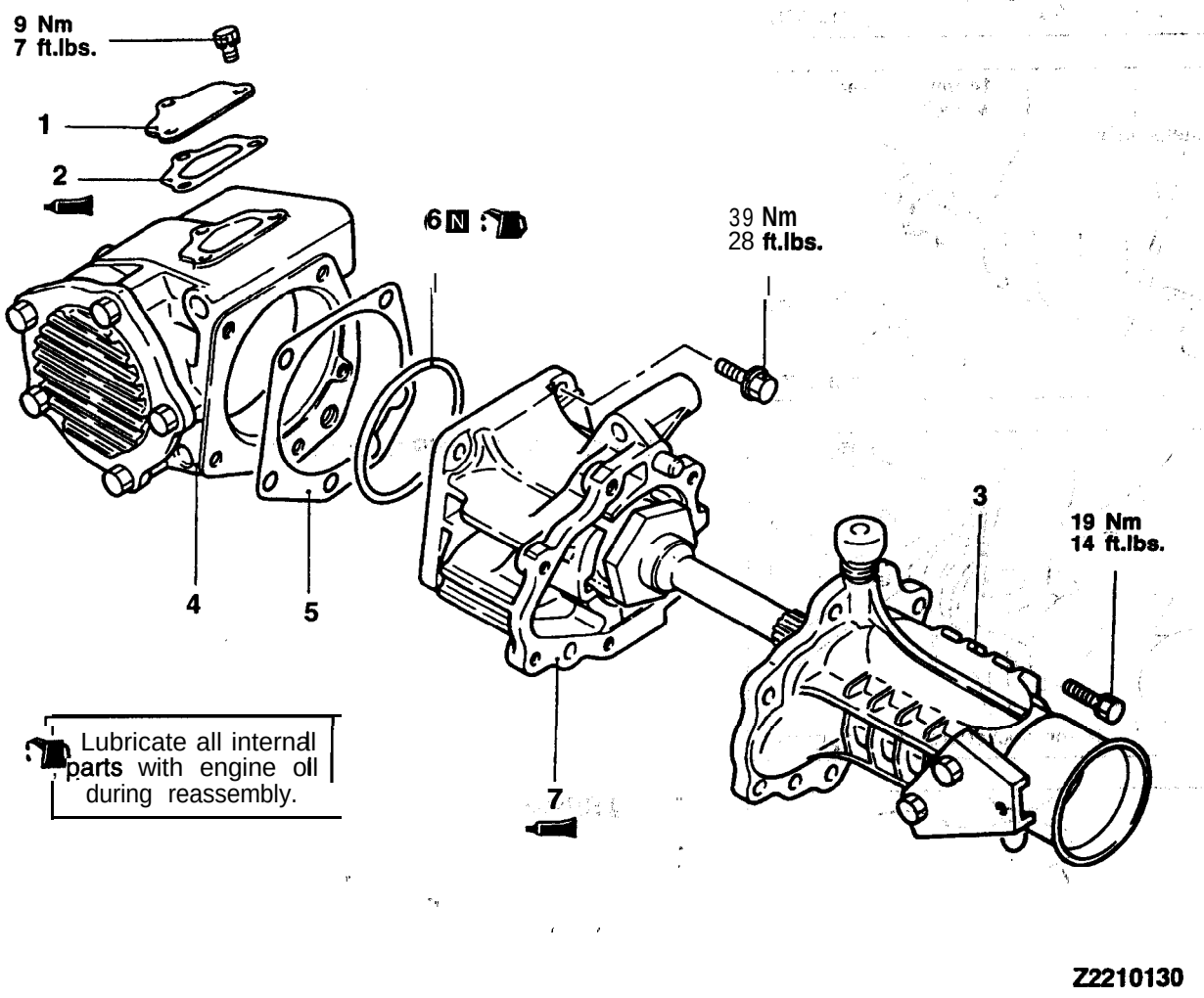

Z2210130

Disassembly steps

1. Cover
▶C◀ 2. Cover gasket
▶B◀ 3. Extension housing assembly
4. Transfer case sub assembly
5. Spacer
▶A◀ 6. O-ring
7. Transfer case adapter sub-assembly

TSB Revision

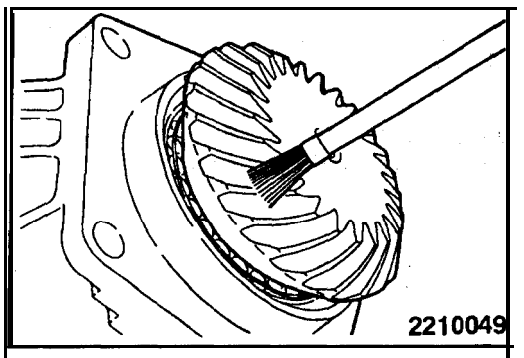

REASSEMBLY SERVICE POINTS

BACKLASH ADJUSTMENT,

(1) Apply a light and uniform coat of machine blue or red lead to the driven bevel gear teeth (both sides) using. a brush.

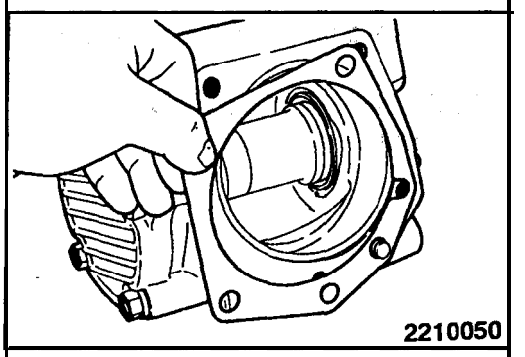

(2) install the spacer that has been used.

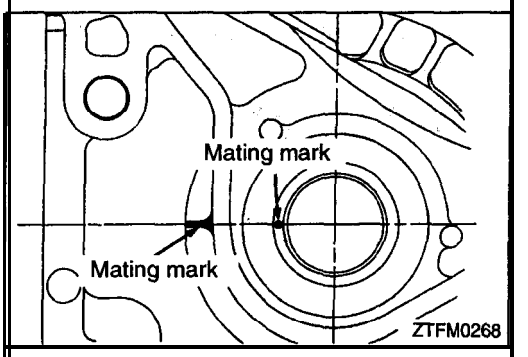

(3) Align the transfer case and drive bevel gear mating marks.

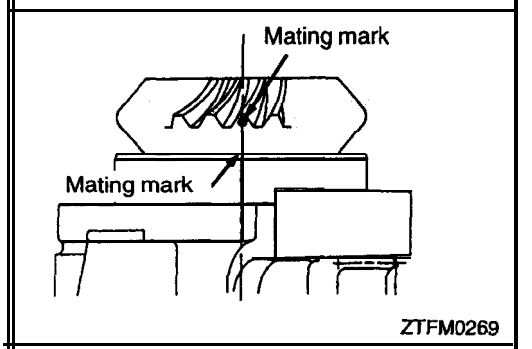

(4) Align the transfer case adapter and drive bevel gear mating marks.

(5) Assemble the transfer case and transfer case adapter and tighten to the specified torque.

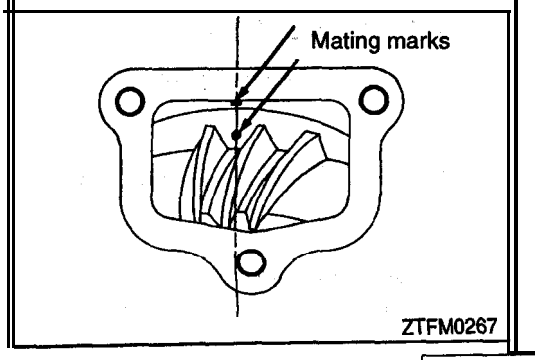

(6) With the mating marks" aligned as in step (3), confirm that the transfer case and drive bevel gear mating marks are matched looking from the cover.'

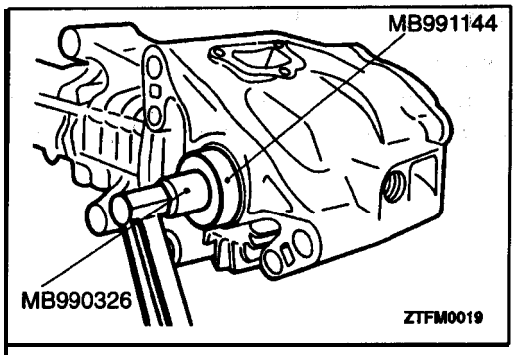

(7) Turn the drive bevel gear shaft (one. forward turn, one reverse turn) using the special tool.

NOTE.
Do not turn the drive bevel gear shaft more than one turn in either direction as this will 'cause an unclear tooth contact pattern.

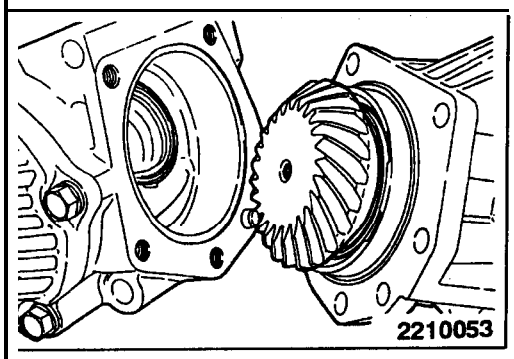

(8) Check to see if the drive bevel gear tooth contact is normal.

NOTE
Refer to the TOOTH CONTACT ADJUSTMENT PROCEDURES on page 22B-70 for the standard tooth contact.

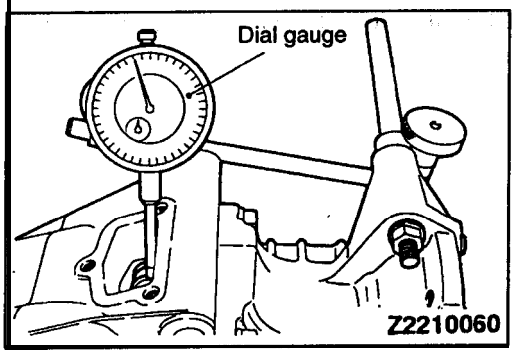

(9) Check to see if the drive bevel gear and driven bevel backlash is as specified.

Standard value: Bevel gear set backlash 0.08–0.13 mm (.0031–.0051 in.)

▶A◀ O-RING INSTALLATION'

Caution
Apply transmission oil to the Q-ring, before installation.

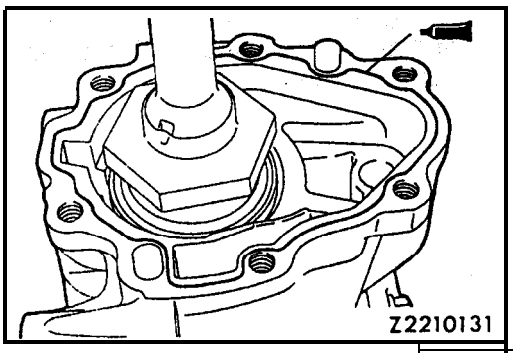

▶B◀ EXTENSION HOUSING INSTALLATION

Apply sealant to the adapter flange surface and install the extension housing.

Specified sealant:
Mitsubishi genuine Sealant Part No.MD997740 or equivalent

NOTE
Squeeze out sealant from the 'tube uniformly and continuously in adequate amount.

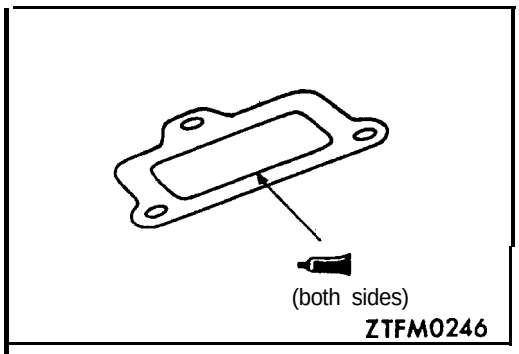

▶C◀ SEALANT APPLICATION TO COVER GASKET

Specified sealant:
3M ATD Part No.8660 or equivalent

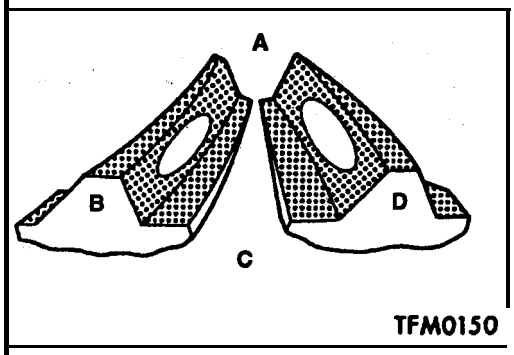

TOOTH CONTACT ADJUSTING PROCEDURES

1. Standard tooth contact pattern

A .... Small end side
B .... Drive side tooth face
(Side on which force acts when running forward)
C .... Big end side
D .... Coast side tooth face
(Side on which force acts when reversing)

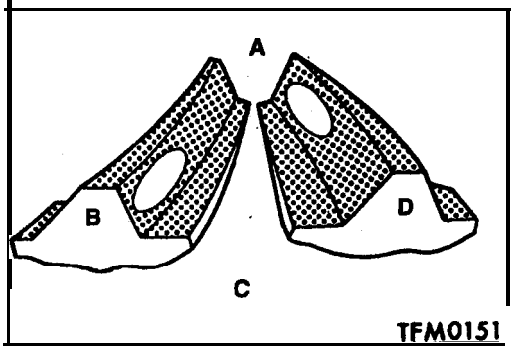

2. Tooth contact pattern, produced when drive bevel gear height is too large

Cause
The driven bevel is too close to the drive bevei gear.

Remedy
Use thicker bevel gear mount adjusting spacer to separate the driven bevel gear more from the drive bevel gear.

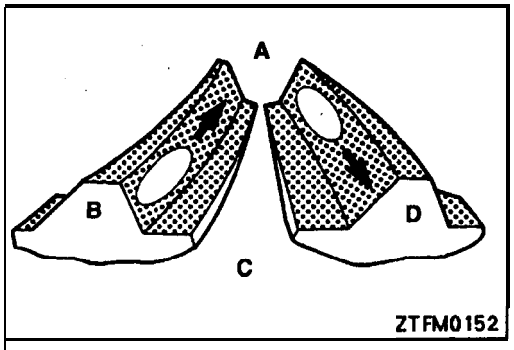

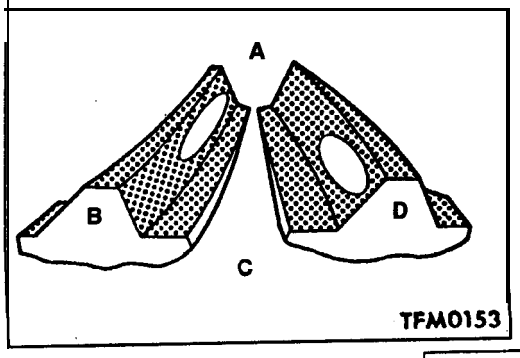

3. Tooth contact pattern produced when driven bevel gear height is too small

Cause
The driven bevel, gear is too separated from the drive bevel gear.

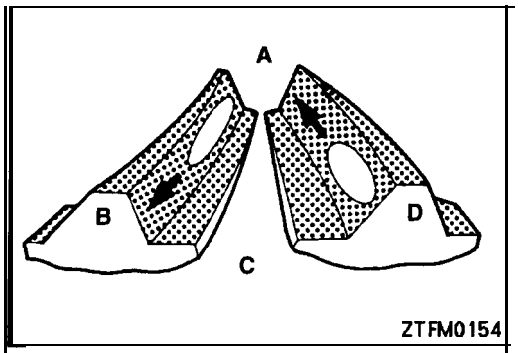

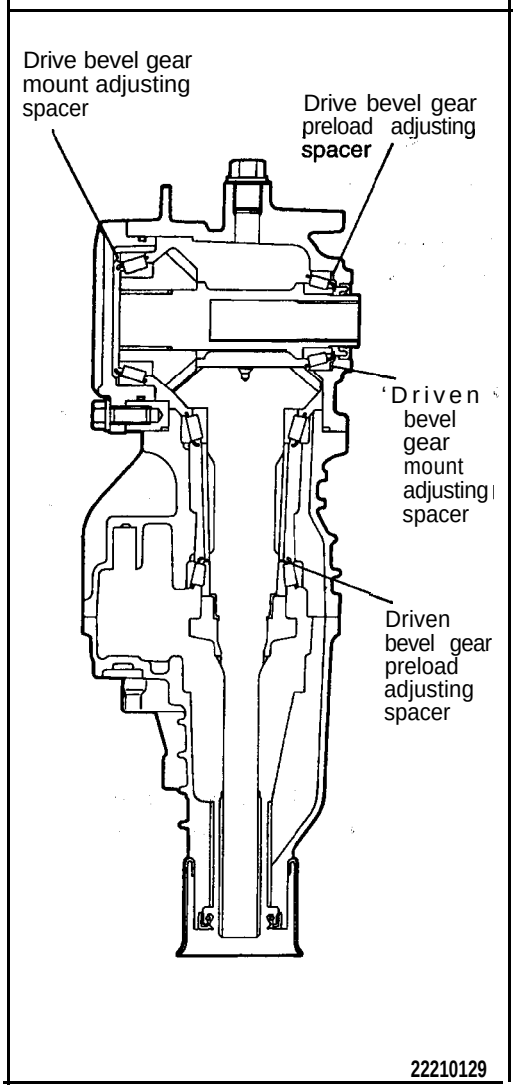

Remedy

Use thinner driven bevel gear mount adjusting spacer, to briiig the driven bevel gear more closer to the drive bevel gear.

NOTE

(1) If' correct tooth contact cannot be obtained even by change of the driven bevel gear mount adjusting spacer, increase or decrease; or decrease the drive bevel gear preload adjusting, spacer and the drive bevel gear mount adjusting spacer as described below and then adjust tooth contact again.

- When the driven 'bevel gear height is too small even if the thinnest driven bevel gear mount adjusting spacer 0.13 mm (.0051 in.) is used:

  Replace the drive bevel gear mount adjusting spacer that is in use with one that is one rank thicker and replace the drive bevel preload adjusting spacer that is in use with one that is one rank 'thinner.

- When the driven bevel gear height is too large even if the thickest driven bevel gear mount adjusting spacer 0.52 mm (.0205 in.) is used:

  Replace the drive. bevel gear mount adjusting spacer that is in use with one that is one rank thinner and replace the drive bevel gear preload adjusting spacer

equal or close to the standard pattern is obtained.

to the standard pattern by above adjustment, replace the drive bevel gear and driven bevel gear as a set tooth contact.

EXTENSION HOUSING <W5M33>

22200430035

DISASSEMBLY AND REASSEMBLY

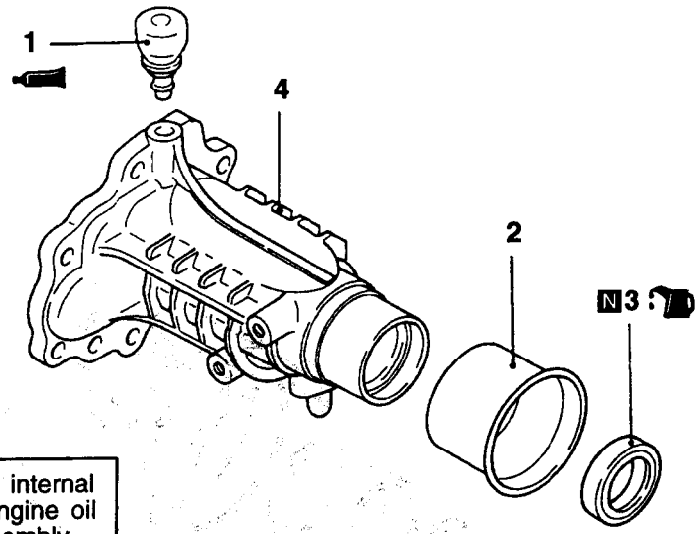

Lubricate all internal parts with engine oil during reassembly.

Disassembly steps

▶B◀ 1. Air bleeder
2. Dust seal guard
▶A◀ 3. Oii seal
4. Extention housing

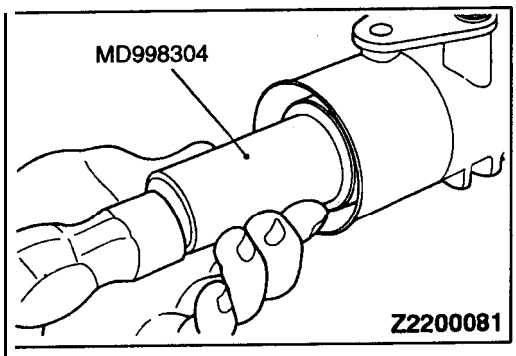

REASSEMBLY SERVICE POINTS

▶A◀ OIL SEAL INSTALLATION

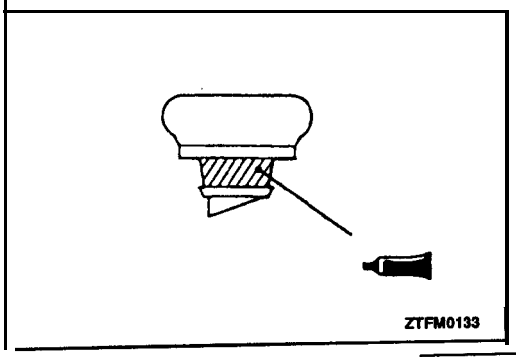

▶B◀ AIR BLEEDER INSTALLATION

Install the air bleeder applying sealant to the inserting portion.

Specified sealant:
3M SUPER WEATHERSTRIP **No.8001 or equivalent**

TRANSFER CASE <W5M33>

22200460034

DISASSEMBLY AND REASSEMBLY

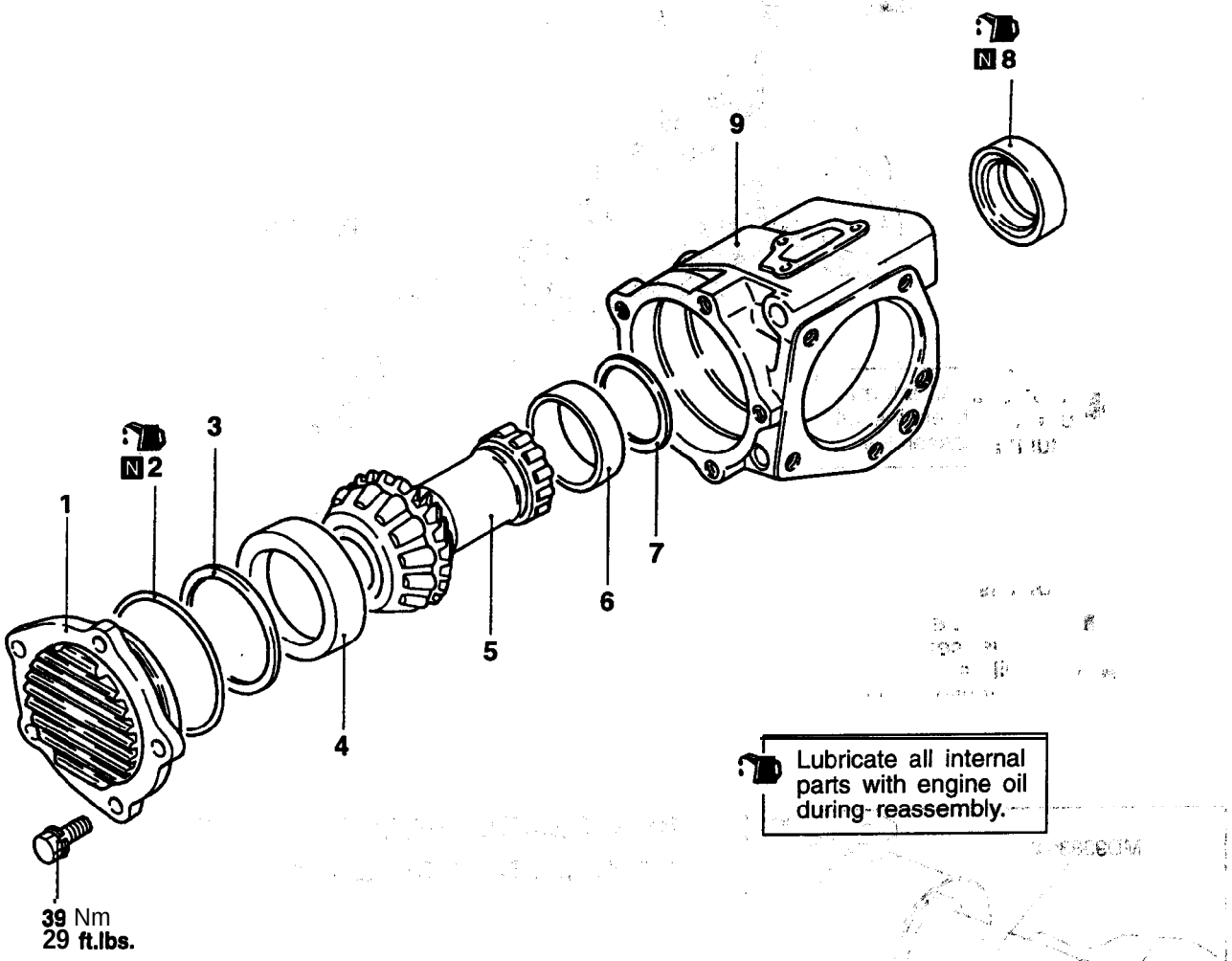

Disassembly steps

1. Transfer cover
2. ▶C◀ O-ring
3. ▶B◀ Spacer
4. Outer race
5. Drive bevel gear assembly
6. Outer race
7. ▶B◀ Spacer
8. ▶A◀ Oil seal
9. Transfer case

TSB Revision

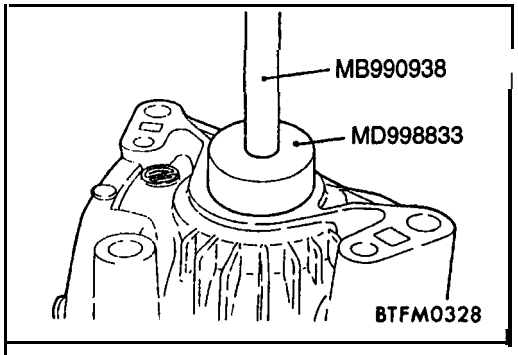

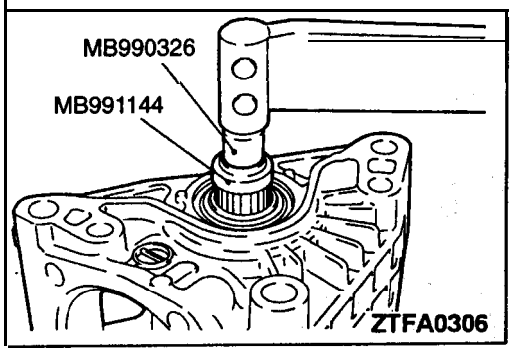

REASSEMBLY SERVICE POINTS

▶A◀ OIL SEAL INSTALLATION

▶B◀ SPACER SELECTION

(1) Use the existing spacer to assemble the transfer case.
(2) Using the special tool, check that the bevel gear rotating drive torque is within the standard value.

Standard value: 1.7–2.5 Nm (1.23–1.81 ft.lbs.)

(3) If the rotating drive torque is outside of the standard value, adjust using adjusting spacers.

NOTE
For adjustment, use two spacers of which thickness is as close as possible to each other.

▶C◀ O-RING INSTALLATION

Caution
Apply transmission oil to the O-ring before installation.

TRANSFER CASE ADAPTER <W5M33>

22200490033

DISASSEMBLY AND REASSEMBLY

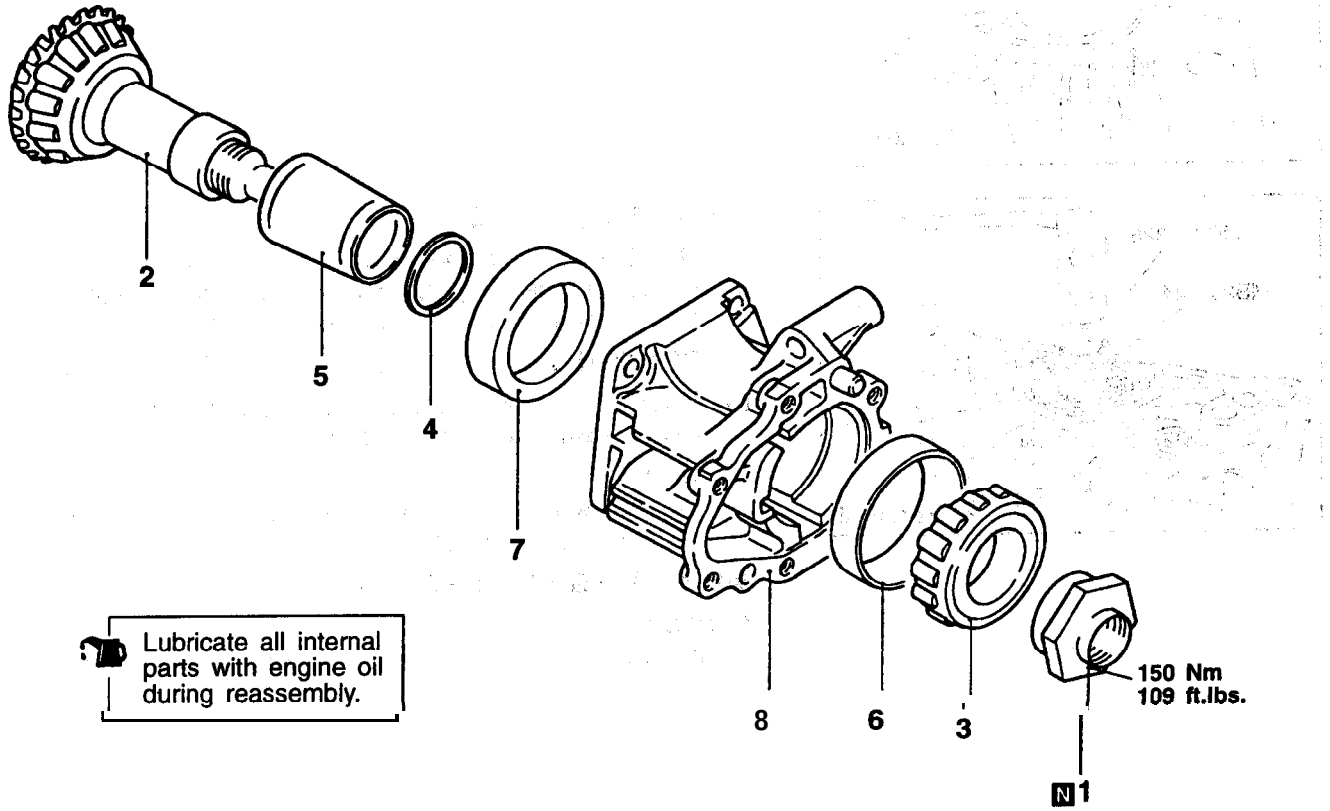

22210133

Disassembly steps

◀A▶ ▶C◀ 1. Lock nut
2. Driven bevel gear assembly
▶B◀ 3. Taper roller bearing
▶A◀ 4. Spacer
5. Collar
6. Outer race
7. Outer race
6. Transfer case assembly

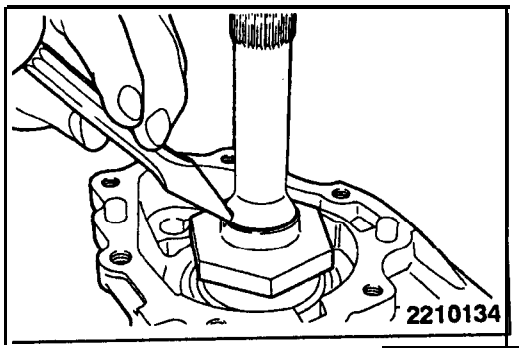

DISASSEMBLY SERVICE POINTS

◀A▶ LOCK NUT REMOVAL

(1) Unlock the lock nut. (Straighten the bent nut.)

TSB Revision

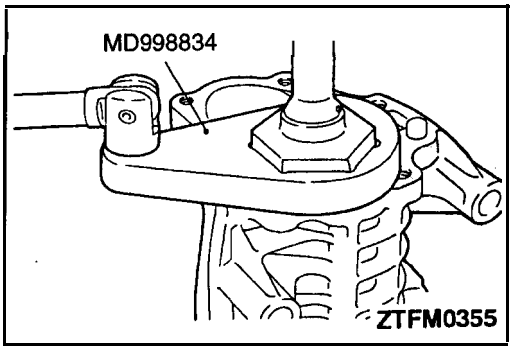

(2) Holding the driven bevel gear, in a vise and using the special tool, remove the lock nut.

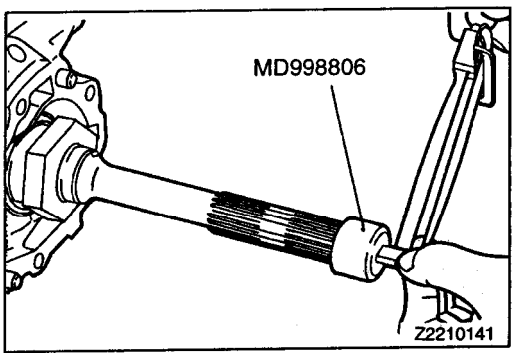

REASSEMBLY SERVICE POINTS

▶A◀ SPACER SELECTION

(1) Use the exisfing spacer to assemble the transfer case adapter.

(2) Using the special tool, check that the bevel gear rotating drive torque is within standard value.

Standard value: 1.0–1.7 Nm (0.72–1.23 ft.lbs.)

(3) If the rotating drive torque is outside of the standard value, adjust using adjusting spacers.

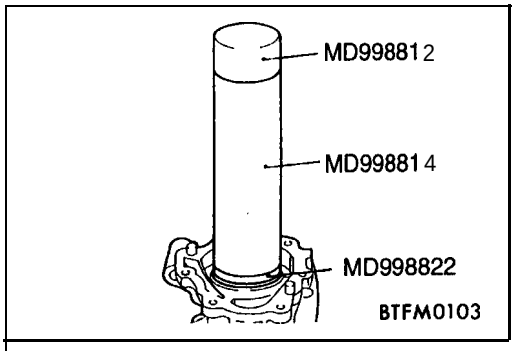

▶B◀ TAPER ROLLER BEARING INSTALLATION

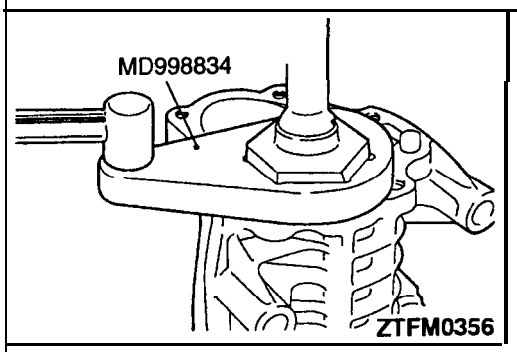

▶C◀ LOCK NUT INSTALLATION

(1) Holding the driven bevel gear in a vise and using the special tool, tighten the lock nut to the specified torque.

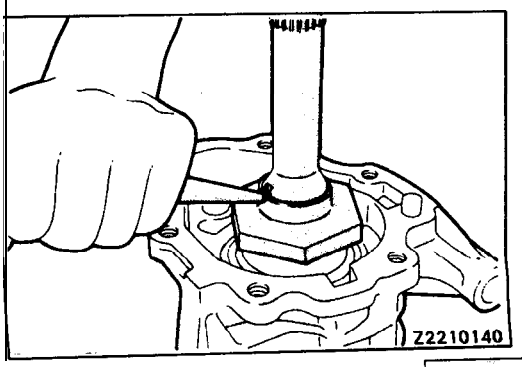

(2) Caulk the lock nut at two positions.

DRIVE BEVEL GEAR <W5M33>

22200520039

DISASSEMBLY AND REASSEMBLY

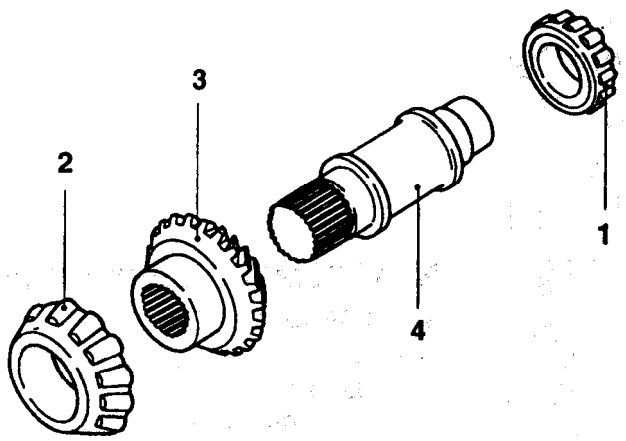

Lubricate all internal parts with engine oil during reassembly.

22210142

Disassembly steps

◀A▶ ▶B◀ 1. Taper roller bearing
◀A▶ ▶B◀ 2. Taper roller bearing
◀B▶ ▶A◀ 3. Drive bevel gear
4. Drive bevel gear shaft

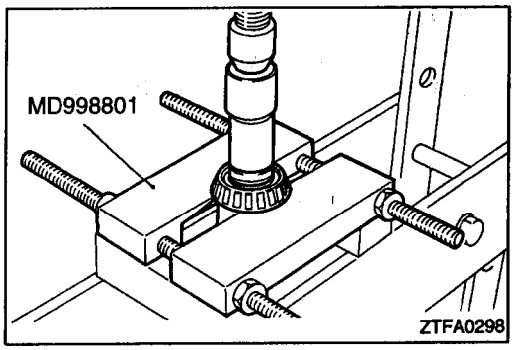

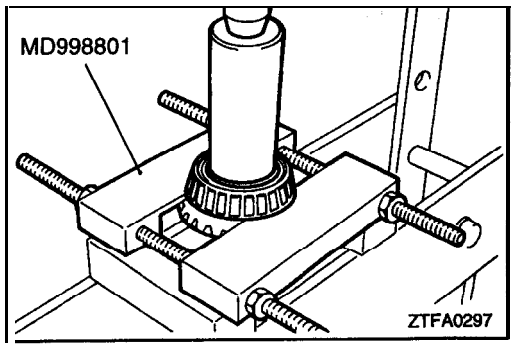

DISASSEMBLY SERVICE POINTS'.

◀A▶ TAPER ROLLER BEARING REMOVAL

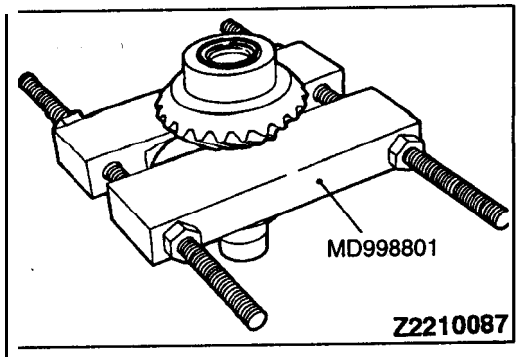

◀B▶ DRIVE BEVEL GEAR REMOVAL

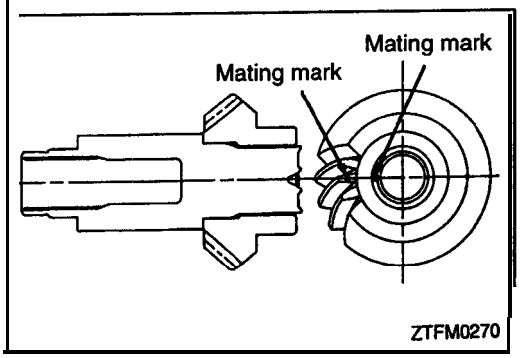

REASSEMBLY SERVICE POINTS

▶A◀ TRANSFER DRIVE BEVEL GEAR INSTALLATION

Install the drive bevel gear and drive bevel gear shaft with the mating marks aligned.

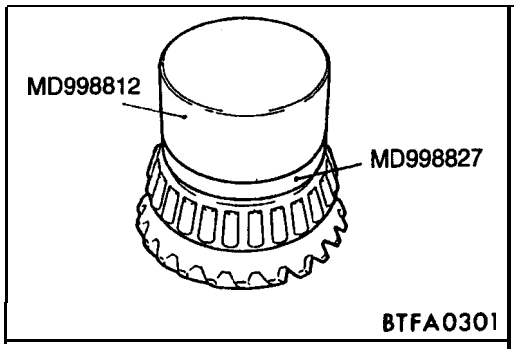

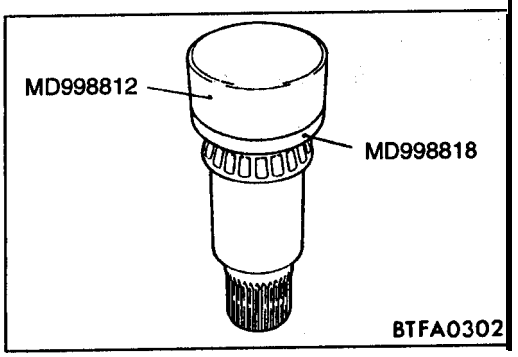

▶B◀ TAPER ROLLER BEARING INSTALLATION

DRIVEN BEVEL GEAR <W5M33>

22200550038

DISASSEMBLY AND REASSEMBLY

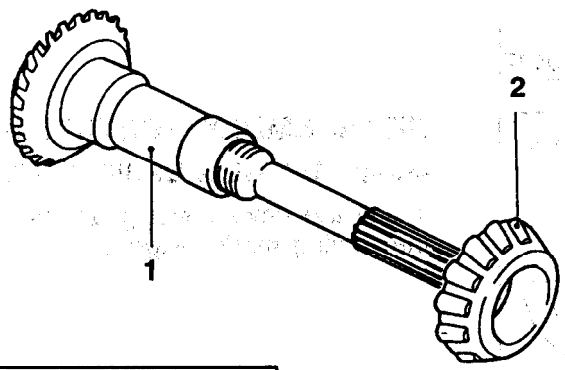

Lubricate all internal parts with engine oil during reassembly.

Z2210143

Disassembly **steps**

1. Driven bevel gear
◀A▶ ▶A◀ 2. Taper roller bearing

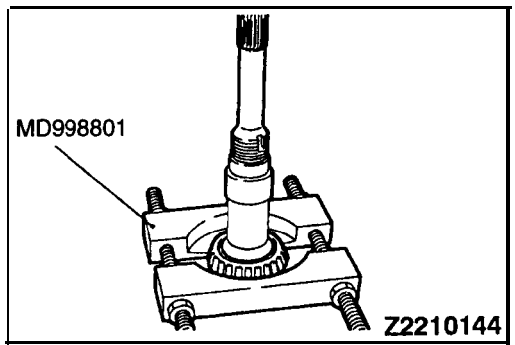

Z2210144

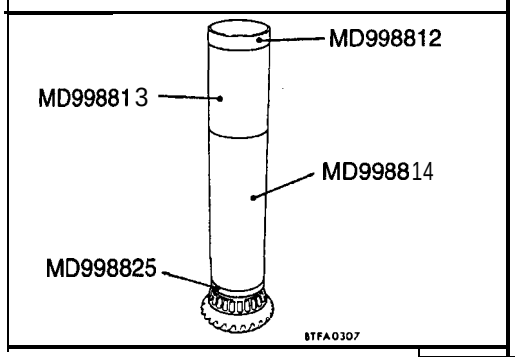

DISASSEMBLY SERVICE POINT

◀A▶ TAPER ROLLER BEARING REMOVAL

REASSEMBLY SERVICE POINT

▶A◀ TAPER ROLLER BEARING INSTALLATION

TSB Revision.

MANUAL TRANSAXLE OVERHAUL <F5MC1>

CONTENTS

22219000016

GENERAL INFORMATION

22210010018

The F5MC1 transaxle internal components can only be serviced by separating the gear case from the bellhousing case. The transaxle output shaft is serviced as a unit, no, disassembly and reassembly is possible. Damage to the transaxle may results.

SECTIONAL VIEW

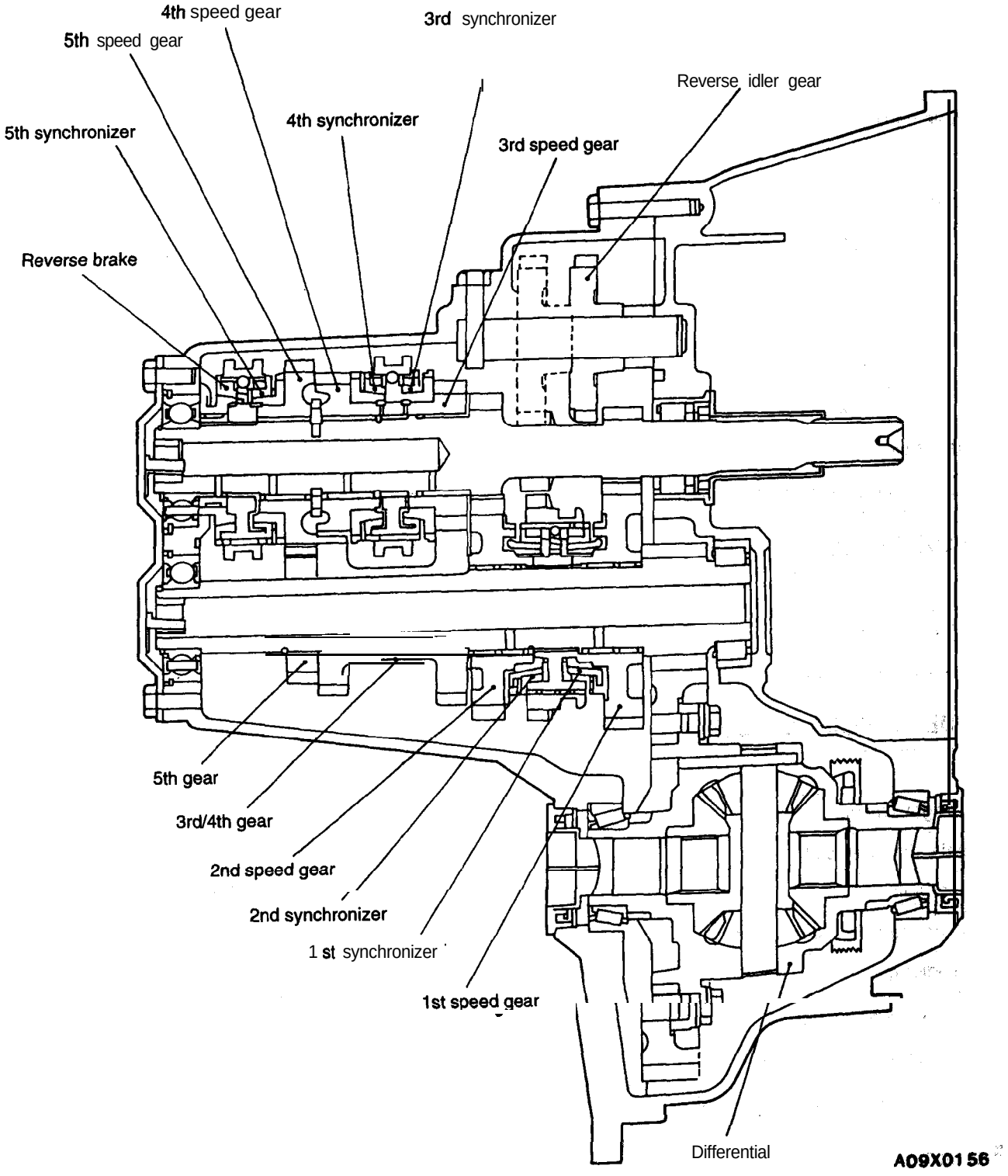

SPECIFICATIONS

22210020028

GENERAL SPECIFICATIONS

Items		Specifications	
Model		F5MC1-1 -QPAF	F5MC1-1 -QQAF
Applicable engine		420A	420A
Type		5-speed floor shift	5-speed floor shift
Gear ratio	1st	3.54	3.54
	2nd	2.13	2.13
	3rd	1.36	1.36
	4th	1.03	1.03
	5th	0.81	0.81
	Reverse	3.94	3.94
Final gear ratio		3.55	3.55
Speedometer gear ratio (driven/drive)		28/36	29/36

SERVICE SPECIFICATIONS

22210030014

Items	Specifications
Differential side gear end play mm (in.)	0.25–0.33 (.0098–.0130)
Differential case preload mm (in.)	0.18 (.0071)

TORQUE SPECIFICATIONS

22210040017

Items	Nm	ft.lbs.
Back-up light switch	24	18
Differential ring gear bolt	81	60
End cover bolt	29	21
Output bearing race retaining strap	11	9.6
Reverse idler gear bolt	26	19
Reverse fork bracket bolt	11	9.6
Shift cable bracket-transaxle	28	20
Transaxle case – clutch housing bolt	29	21

SEALANTS

22210050010

Items	Specified sealant	Quantity
End cover and bolts	Loctite 18718 or equivalent	As required
Clutch housing to transaxle case	Loctite 51817 or equivalent	As required
Clutch housing to transaxle case bolts	Loctite 51817 or equivalent	As required

TSB Revision

SPECIAL TOOLS

22210060013

Tool	Tool number and name	Supersession	Application
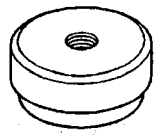	MB990927 Installer adapter	–	Removal of input. shaft bearing and sleeve.
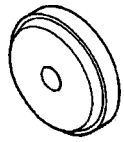	MB990933 Installer adapter		Installation of output bearing race and differential bearing race.
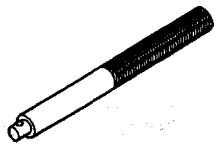	MB990938 Installer bar	MB990938-01	Use with MB990926, MB990933.
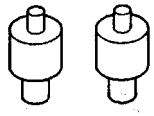	MB995023 Bearing remover & installer	5785-1	Installation and removal of input shaft bearing, output shaft bearing.
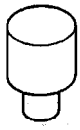	MB995024 Bearing remover & installer	5785-2	
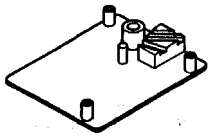	MB995025 Bearing remover & installer	5785-3	
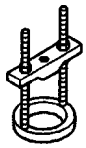	MB995028 Puller press	C-293	Removal of differential bearing.
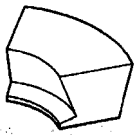	MB995029 Puller blocks adapter	C-293-45	
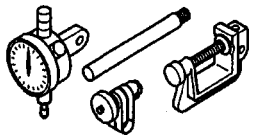	MB995030 Dial indicator set	C-3339	Adjustment of differential side gear.

Tool	Tool number and name	Supersession	Application
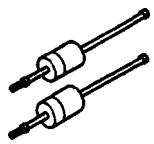	MB995031 Puller set	C-3752	Removal of shifter rail bushing, shifter crossover bushing, shifter selector shaft.
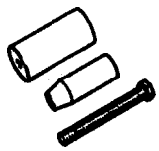	MB995033 Seal installer	C-4680-1	Installation of input shaft bearing and sleeve.
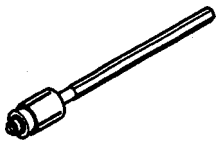	MB995038 Differential bearing torque tool	C-4995	Checking of different/al bearing end play, differential bearing turning torque.
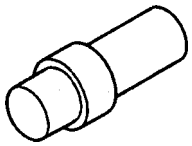	MB995039 Adapter	C-4996	Removal of differential bearing. Adjustment of differential side gear end play.
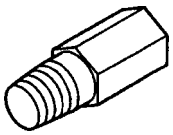	MB995040 Bushing remover	6786	Removal of shifter rail bushing, shifter selector shaft.
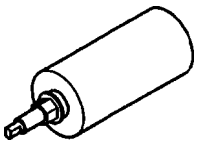	MB995048 Cup remover	L-4518-1	Removal of diffeiential bearing race.
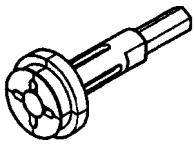	MB995052 Bearing race remover	6787	Removal of output bearing race.
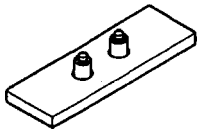	MB995056 Bearing remover & installer	6768	Removal of input shaft bearing and output shaft bearing.
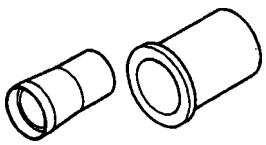	MB995058 Bearing installer	C-4992-1	Installation of input shaft bearing, output bearing.

TSB Revision

Tool	Tool number and name	Supersession	Application
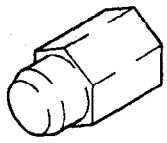	MD998343 Adapter	MD998343-01	Installation of shifter rail bushing, shifter selector shaft.
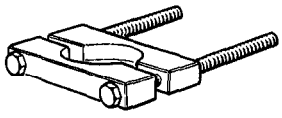	MD998801 Bearing remover	MD998348-01	Installation and removal of each bearing, synchronizer.
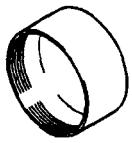	MD998812 Installer cap	General service tool	Use with MD998812, MD998821.
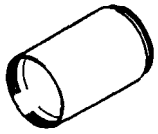	MD998813 Installer – 100	General service tool	Use with MD998812, MD998821.
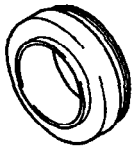	MD998821 Installer adapter (44)	–	Installation of 3–4 speed synchronizer, 5 speed synchronizer and differential bearing cone.
	MD998826 Installer adapter (54)	–	Installation of axle shaft oil seal.

CASE DISASSEMBLY

22210070016

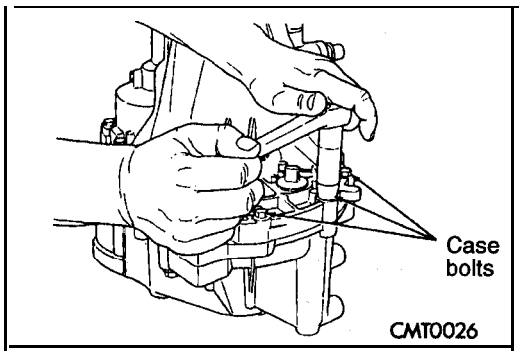

(1) Place transaxle on bench.
(2) Remove shift levers. Remove transaxle case half bolts.'

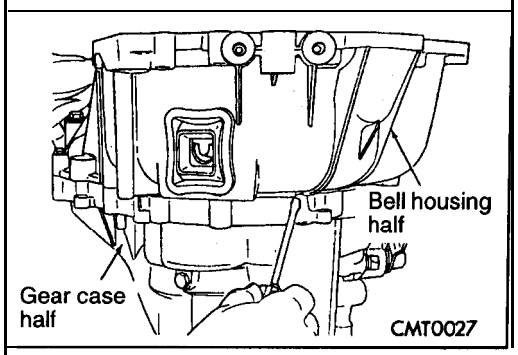

(3) Place two screwdrivers in the slots provided in the case halves near the dowels. Separate the case halves.'

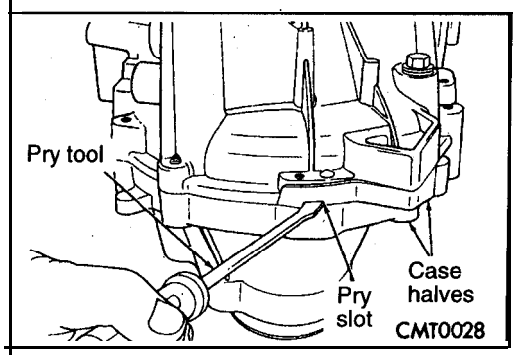

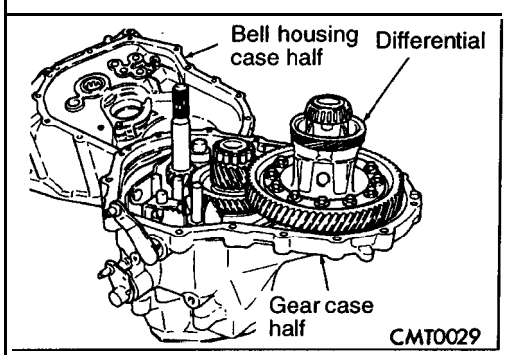

(4) Remove bell housing case half, from gear case half.

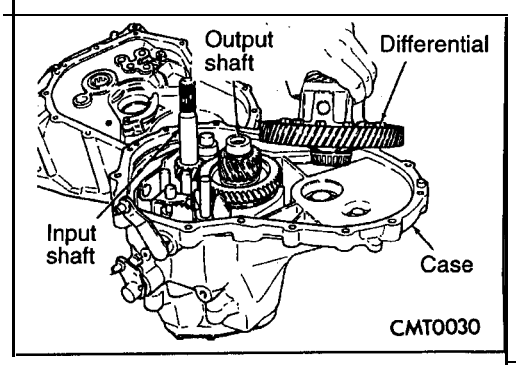

(5) Remove output shaft roller bearing from output shaft.
(6) Remove differential assembly.

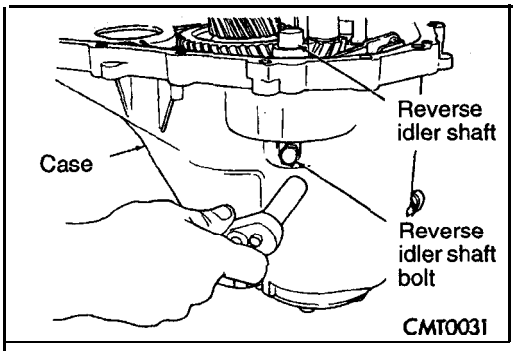

(7) Remove reverse idler shaft bolt.

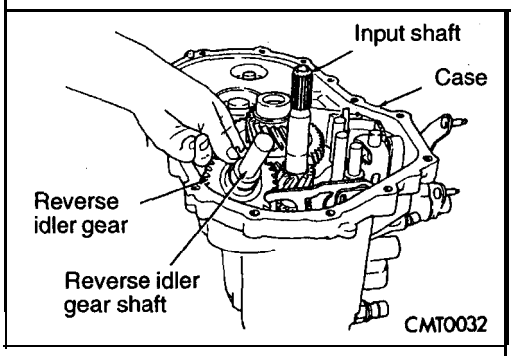

Remove reverse idler gear.

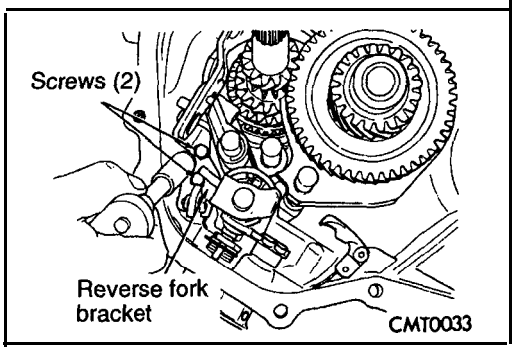

(8) Remove two screws retaining reverse fork bracket.

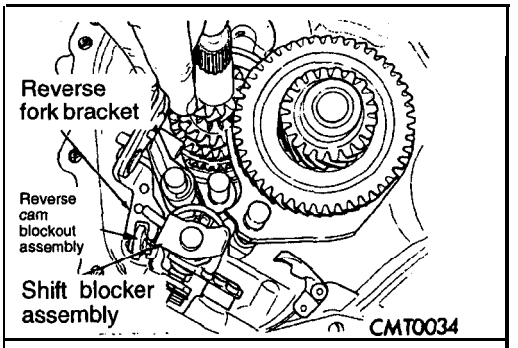

Remove reverse fork bracket and reverse cam blockout assembly.

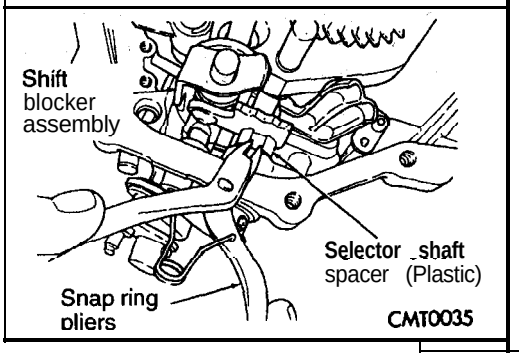

(9) Using snap ring pliers, remove selector shaft spacer.

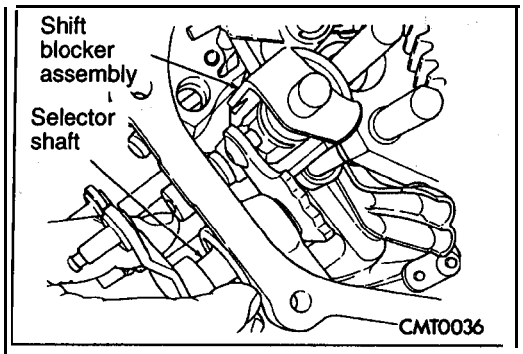

(10) Pull the selector shaft shift pin out of the slot in the blocker, assembly. Turn selector shaft up and out of the way.

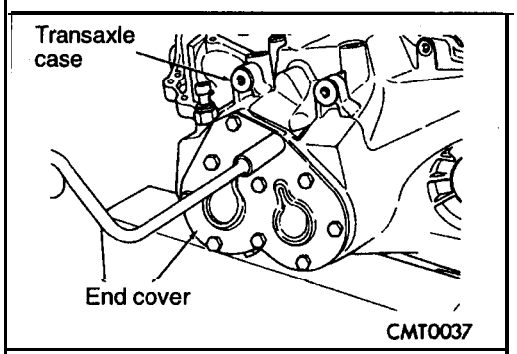

(11) Remove transaxle end cover.

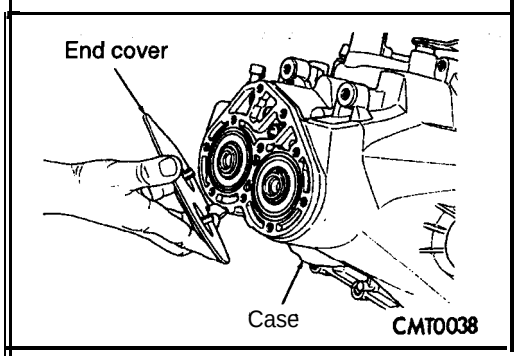

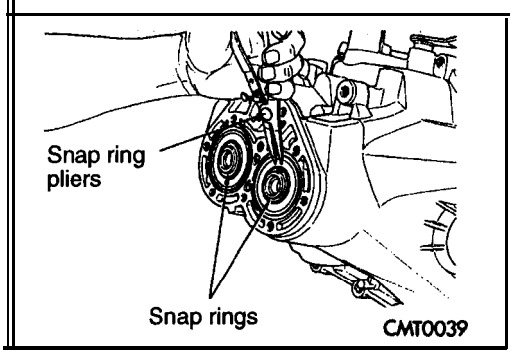

(12) Remove two snap rings retaining the output shaft and' the input shaft to the bearing.

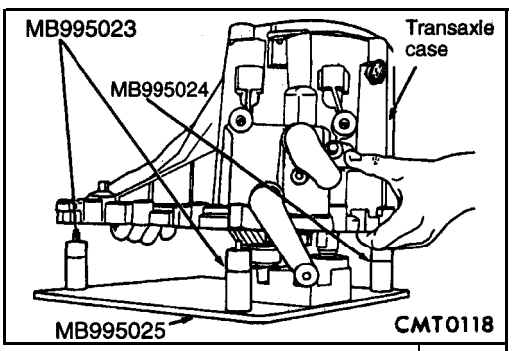

(13) Using bench fixture and shims provided (MB995023, MB995024, MB995025), turn transaxle over., Install transaxle onto bench fixture. Verify shim spacers are in position on bench fixture. Install transaxle into shop press.

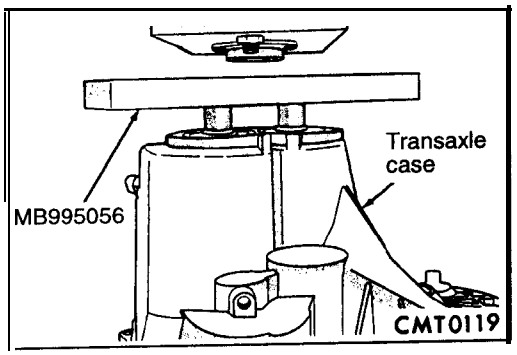

(14) Install bearing fixture (MB995056) onto transaxle end bearings. Verify tool is property aligned to input and output shaft.

Caution
The oil dams in the input and output shaft can be damaged while pressing on the shafts if the bearing fixture is not properly used.

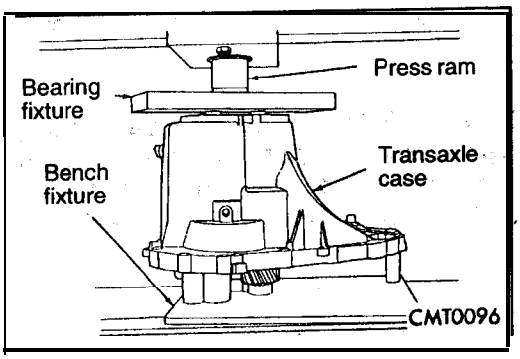

(15) Install transaxle gear case and bench fixture onto shop press. Press output and input shaft assemblies out of case.

(16) Remove transaxle from press.

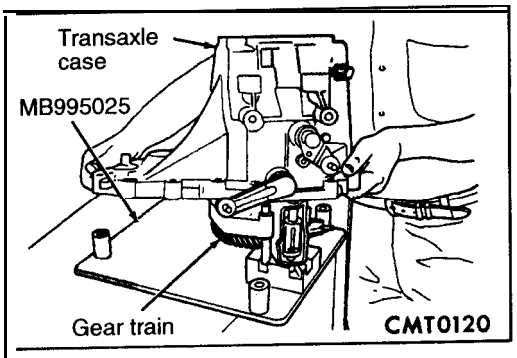

(17) Carefully remove transaxle case from the shaft assemblies and bench fixture.

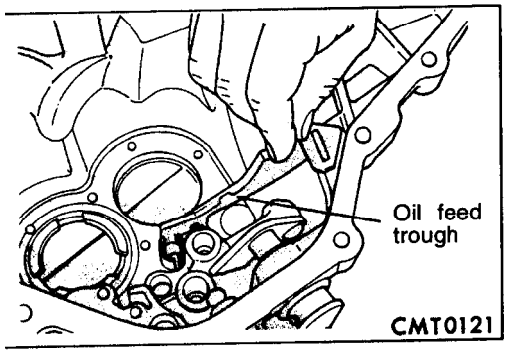

(18) Make sure the oil feed trough to end bearings is not damaged.

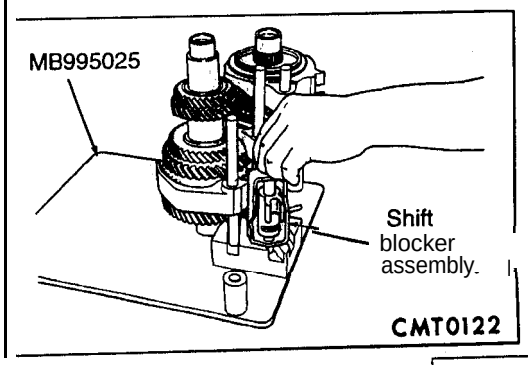

(19) Remove the shift blocker assembly from the bench fixture.

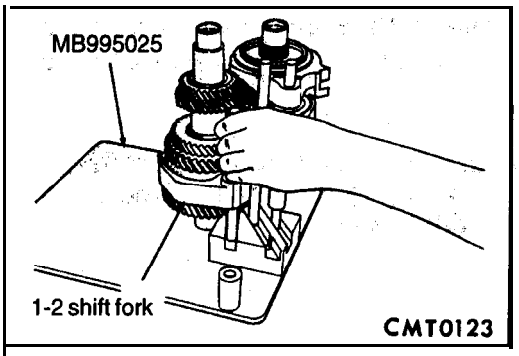

(20) Remove the 1-2 shift fork from the output shaft.

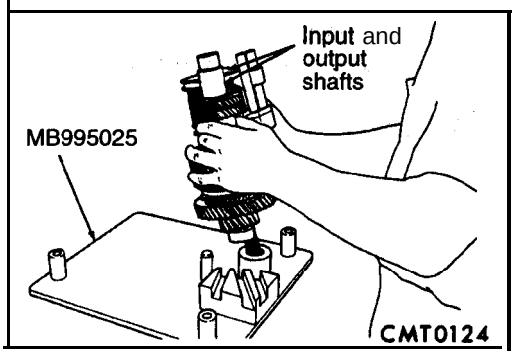

(21) Remove input and output shaft assemblies from bench fixture.

Caution
The output shaft assembly is serviced as an assembly. Do not try to repair any component on 'the output shaft. If the 1/2 synchronizer or gear fails, it is necessary to replace the complete output shaft assembly.

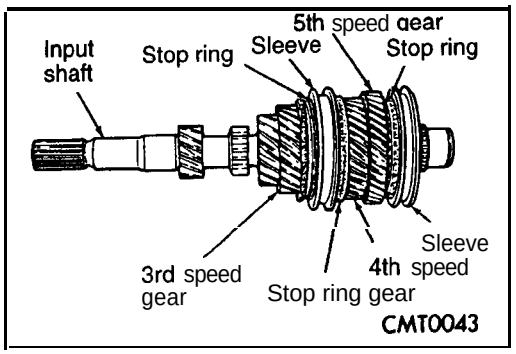

INPUT SHAFT DISASSEMBLY

22210080019

Before disassembly of the input shaft, it is necessary to check the synchronizer stop ring gap. Use a feeler gauge to measure the gaps between the stop rings and the speed gears. The correct gaps are listed below:, ,

1st 1.04–1.72 mm (.0409–.0677 in.)
2nd 0.94–1.72 mm (.0370–.0677 in.)
3rd 1.37-1.93 mm (.0539–.0760 in.)
4th 1.41-1.97 mm (.0555–.0776 in.)
5th 1.37-1.93 mm (.0539–.0760 in.)

If a stop ring gap does not fall within. the specifications it must be insepcted for wear and replaced. If the 1st or 2nd synchronizer stop ring is worn beyond specifications, the complete output shaft assembly must be replaced.
The input shaft incorporates the 3rd, 4th, and 5th speed. gears and synchronizers on the assembly..

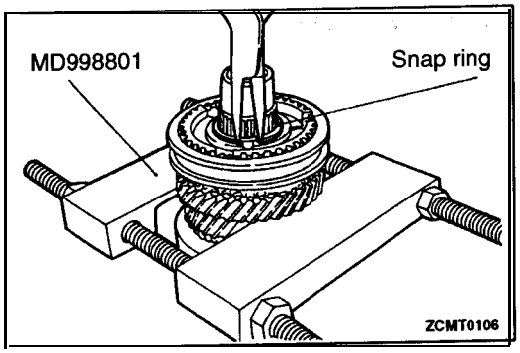

(1) Install MD998801 behind 5th speed gear. Remove snap ring at 5th synchronizer hub on input shaft,

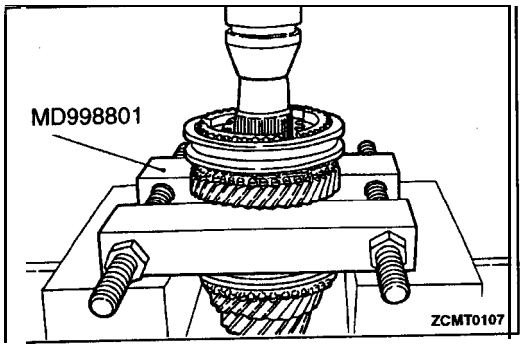

(2) Remove synchronizer and gear using shop press.

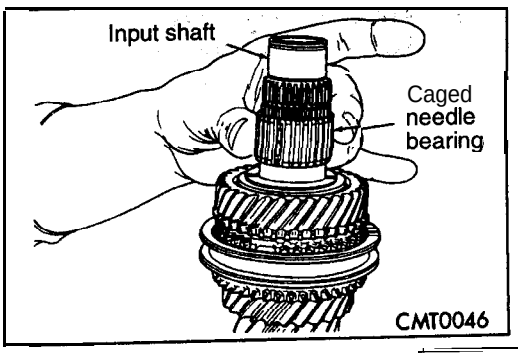

(3) Remove caged needle bearing.

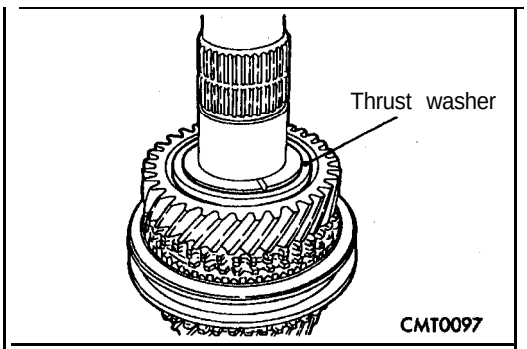

(4) Remove 4-5 gears split thrust washer ring.

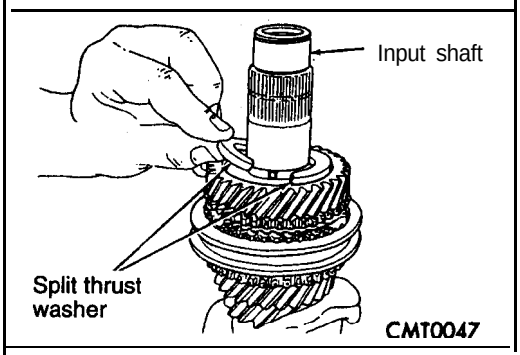

(5) Remove split thrust washer.

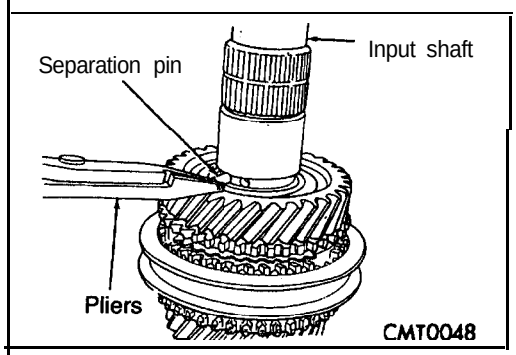

(6) Remove split thrust washer separation pin.

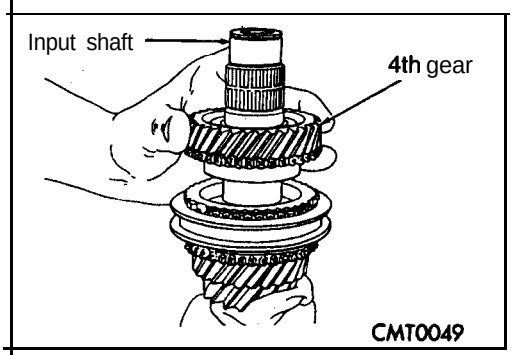

(7) Remove 4th gear.

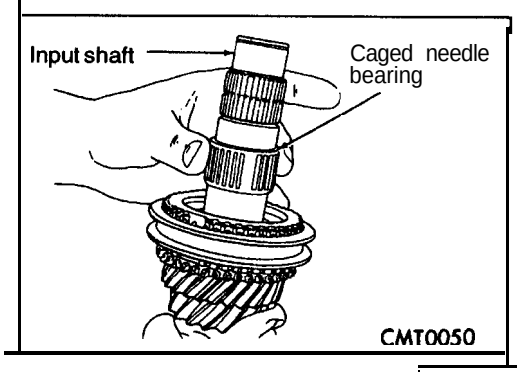

(8) Remove 4th gear caged needle bearing. Check the caged needle bearing for a broken retention spring.

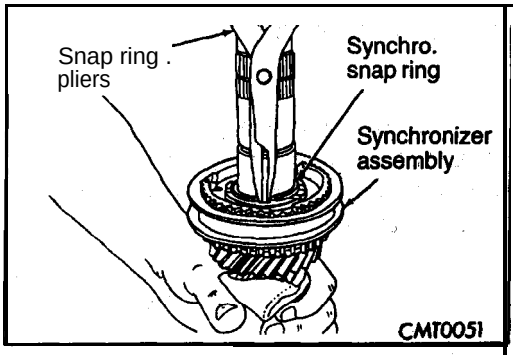

(9) Remove blocking ring. Remove 3/4 synchronizer hub retaining snap ring.

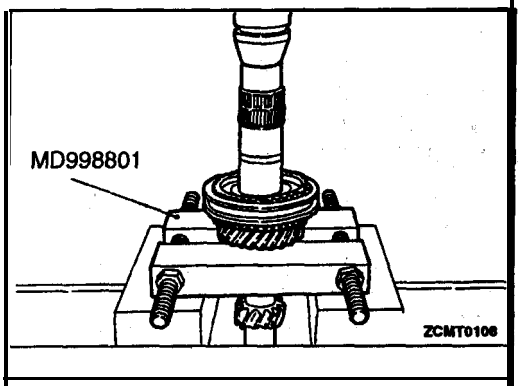

(10) Install input shaft in shop press. Using MD998801 to remove 3/4 synchronizer and 3rd gear.

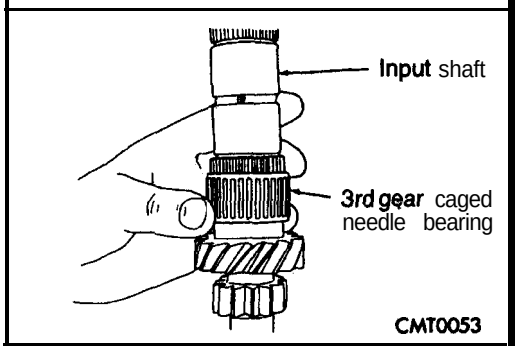

(11) Remove 3rd gear caged needle bearing. Check the caged needle bearing for a broken retention spring.

(12) Inspect the input shaft for worn or damaged bearing races or chipped gear teeth. Replace as necessary.

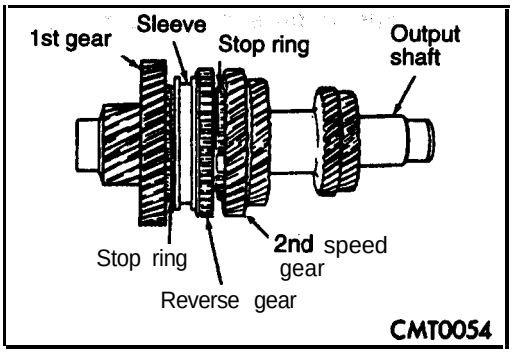

OUTPUT GEAR DISASSEMBLY 22210090012

Caution
The output shaft assembly is serviced as an assembly. Do not try to repair any component on the output shaft. If the 1/2 synchronizer or gear fails, it is necessary to replace the complete output shaft assembly.

It is necessary to check the synchronizer stop ring gap. Use a feeler gauge to measure the gaps between the stop rings and the speed gears.
The correct gaps are listed below:

1st 1.04–1.72 m m (.0409–.0677 in.)
2nd 0.94–1.72 mm (.0370–.0677 in.)
3rd 1.37–1.93 m m (.0539–.0760 in.)
4th 1.41–1.97 m m (.0555–.0776 in.)
5th 1.37-1.93 mm (.0539–.0760 in.)

If a stop ring gap does not fall within the specifications it must be inspected for wear and replaced. If the 1st and 2nd synchronizer stop ring is worn beyond specifications, the complete output shaft assembly must be replaced.
The output shaft incorporates the 1st and 2nd gears and synchronizers on the assembly.

TRANSAXLE CLEANING AND CHECK

22210100012

Clean the gears, bearings, shafts, synchronizers, thrust washers, oil feeder, shifter mechanism, gear case, and bellhousing with solvent. Dry all parts except the bearings with compressed air. Allow the bearings to either air dry or wipe them dry with clean shop towels.
Inspect the gears, bearings, shafts and thrust washers.
Replace the bearings and cups if the rollers are worn, chipped, cracked, flat spotted or brinnelled, or if the bearing cage is damaged or distorted. Replace the thrust washers if cracked, chipped, or worn. Replace the gears if the teeth are chipped, cracked, or wore thin. Inspect the synchronizers. Replace the sleeve if worn or damaged in any way. Replace the stop rings if the friction material is burned, flaking off, or worn. Check the condition of the synchronizer keys and springs. Replace these parts if worn, cracked, or distorted.

DIFFERENTIAL OVERHAUL . . 22210110015

DISASSEMBLY

(1) Remove differential bearing cone.

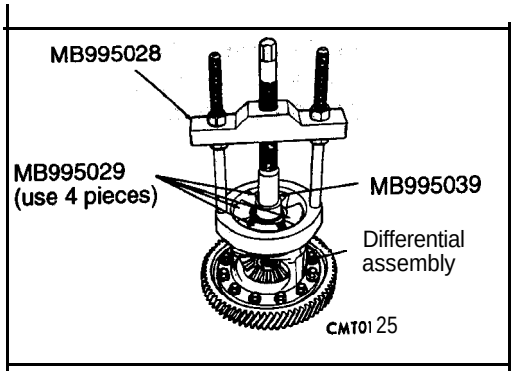

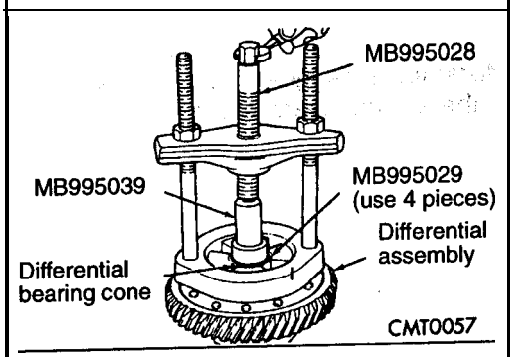

(2) Remove ring gear bolts and ring gear.
(3) Pry the speedometer drive gear off of the differential case using a flat blade pry tool.

NOTE
The speedometer drive gear must be remove from the differential case in order to service the differential gears.

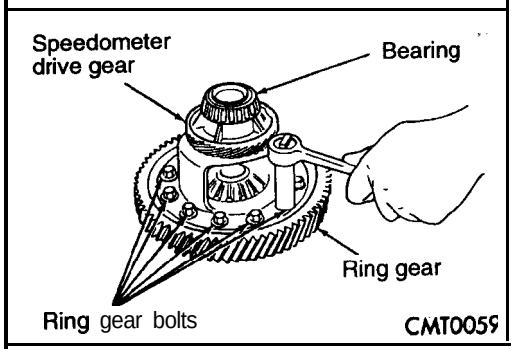

(4) Remove pinion shaft solid pin.

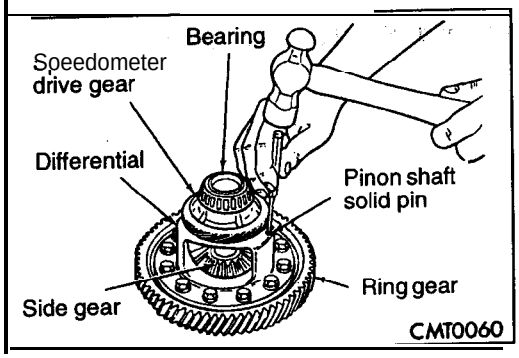

(5) Remove pinion shaft.

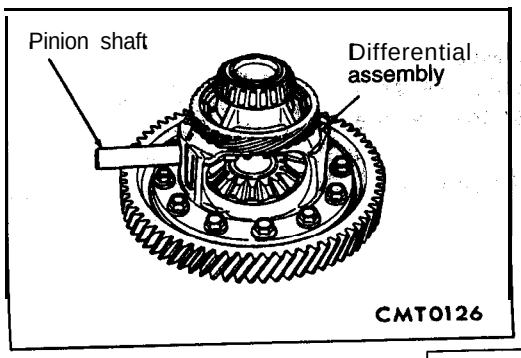

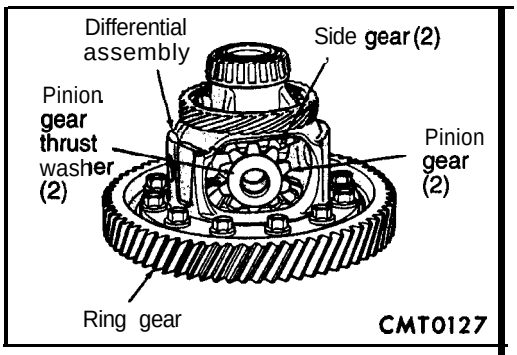

(6) Rotate side gears to opening in differential.
(7) Remove pinion gears, side gears' and thrust washers by rotating side gears to opening in case.

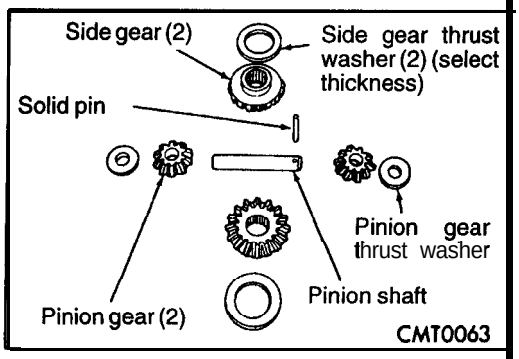

REASSEMBLY

(1) Assemble the differential side gears, pinion gears and pinion gears with the pinion gears washers.

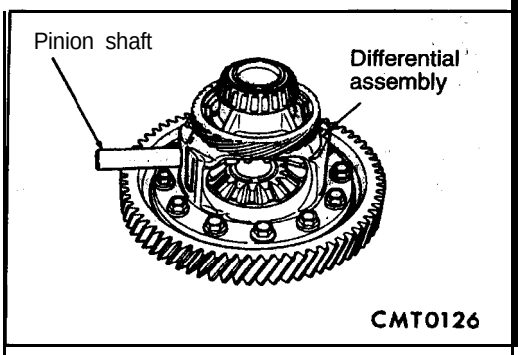

(2) Install pinion shaft.

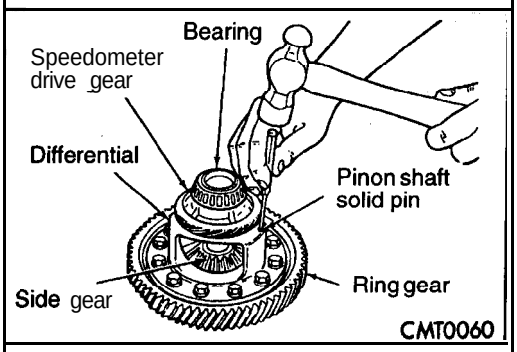

(3) Stake pinion shaft solid pin with a suitable chisel.

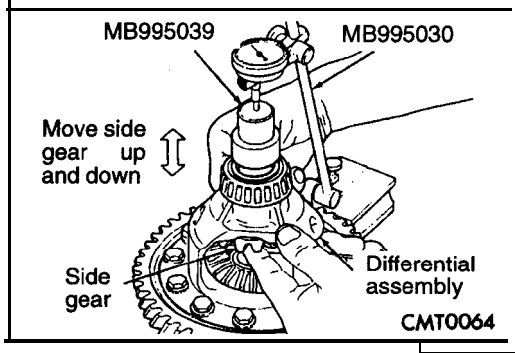

(4) Rotate the assembly two full revolutions both clockwise and counterclockwise.'
(5) Set up dial indicator as shown and record end play.
(6) Rotate side gear 90 degrees and record another end play.
(7) Again, rotate side gear 90 degrees and record a final: end play.

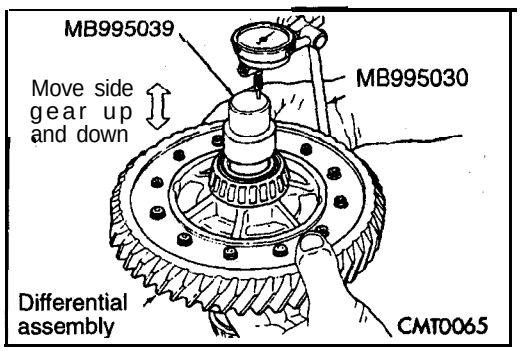

(6) Using the smallest end play record, shim that side gear to within 0.25 mm (.001 in.) to 0.33 mm (.013 in.).
(9) The other side gear should be checked using the same procedure.

NOTE

Side gear end play must be within 0.25 mm (.001 in.) to 0.33 mm (.013 in.). Five select thrust washers are available:
0.69 mm (.027 in.), 0.61 mm (.032 in.), 0.94 mm (.037 in.), 1.07 mm (.042 in.) and 1.19 mm (.047 in.)

(10) After the end play is measured and adjusted, replace speedometer drive gear with a new one.
(11) Install drive gear lip downward.

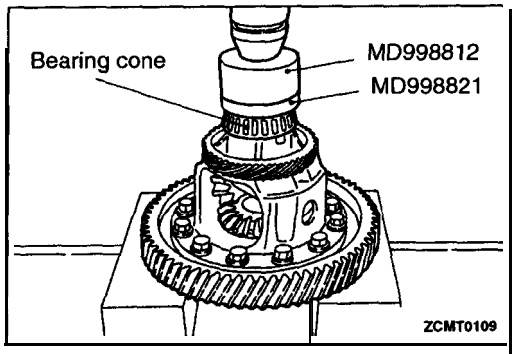

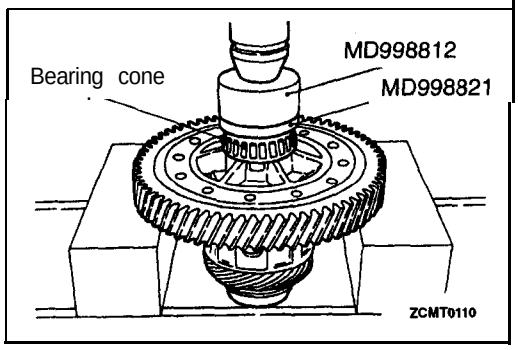

(12) Install differential bearing cone.

SYNCHRONIZER OVERHAUL

22210130011

DISASSEMBLY

Place synchronizer in a clean shop,, towel and Wrap. Press on inner hub. Carefully open up shop. towel and remove springs, balls, keys, hub, and sleeve.

CLEAN

22210140014

Do not attempt to clean the blocking rings in solvent. The friction material will become contaminated. Place synchronizer components in a suitable holder and clean with solvent. Then let them air, dry.

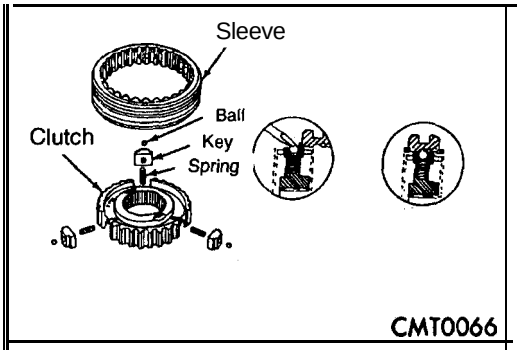

ASSEMBLY

22210160010

(1) Position synchronizer hub onto a suitable holding fixture (input shaft). The synchronizer hubs are directional. The hubs must be installed with the **U** facing upward.
(2) Install springs into hub slot
(3) Insert key into hub and spring.

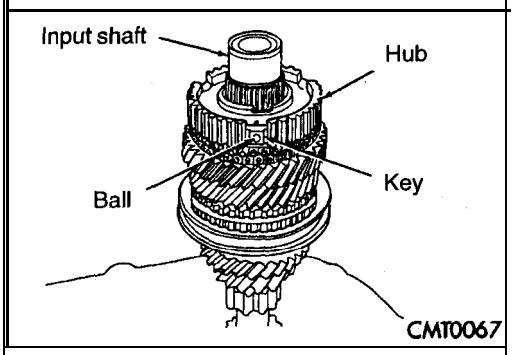

(4) Apply petroleum jelly to the hole in the key. **Insert** balls into each key.

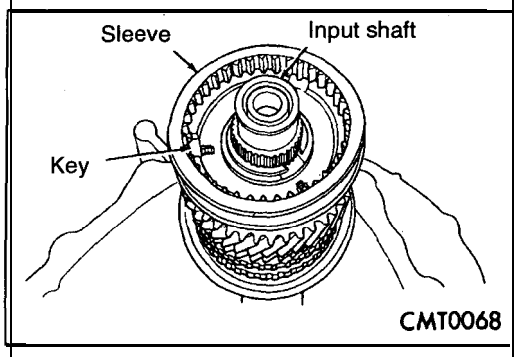

(5) Slide sleeve over the hub and depress balls as you carefully slip the sleeve into position.

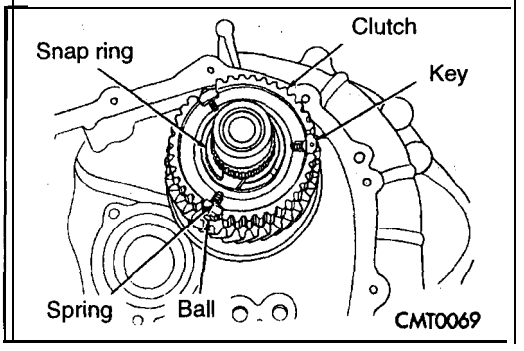

(6) Line up stop ring tang over the keys in the hub. Install stop rings. Center the keys and balls by pushing on both stop rings.

INSPECT

22210150017

Proper inspections of components involved:
Teeth, for wear, scuffed, nicked, burred or broken teeth keys, for wear or distortion.
Balls and springs, for distortion, cracks or wear'
If any of these conditions exists in these **components,** replace as necessary.

SHIFTER RAILS OVERHAUL 22210170013

(1) Disassemble the transaxle case using the procedures' provided in this group.
(2) Remove shifter rails from the geartrain.
(3) To service the 5/R shift rail, remove the C-clip retaining the reverse shift lever arm. Remove the 5th "shift fork roll pin and remove the 5th shift fork.
Remove the shift lug roll pin and remove the shift lug.' Replace parts as necessary.
(4) To service the 3/4 shift rail, remove the roll pin retaining' the 3/4 shift fork. Remove the shift fork.,, Remove the shift lug roll pin and remove shift lug. Replace parts as, necessary.
(5) To service the 1/2 shift rail, remove the roll pin retaining, the 1/2 shift fork. Remove the shift fork and replace parts as necessary.

GEAR CASE OVERHAUL 22210180016

The sealant used to seal the transaxle case halves is Loctite 51817 or equivalent. The sealant used for the bearing end plate cover is Loctite 18718 or equivalent.
The components that are left in the gear cases when the gear train is pulled out are the:
Axle shaft seals
Output bearing race and retainer
Input bearing and sleeve
Differential bearing cones
Shifter rail bushings
Shifter shafts
Shifter shaft seals
Shifter shaft bushings
Rear bearing oil feed trough

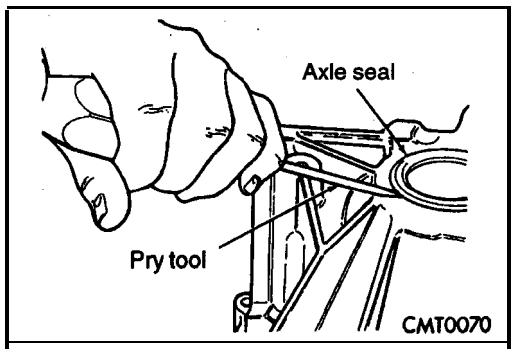

AXLE SHAFT SEALS 22210200019

REMOVAL

(1) Insert a flat blade pry tool at outer edge of axle shaft seal.
(2) Tap on the pry tool with a small hammer and remove axle shaft seal.

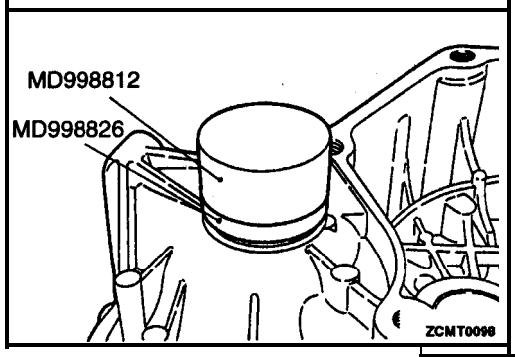

INSTALLATION 22210210012

(1) Clean axle shaft seal bore of any excess sealant.
(2) Align axle shaft seal with axle shaft seal bore.
(3) Install axle seal on tool MD998812, MD998826 and insert into axle shaft seal bore.
(4) Tap seal into position.

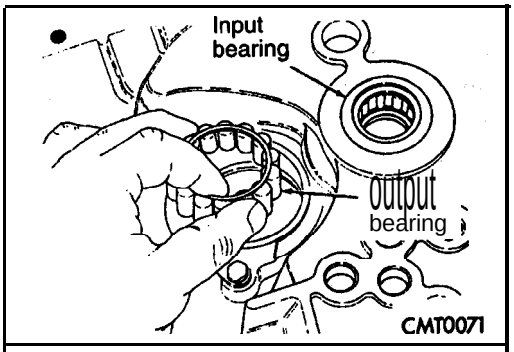

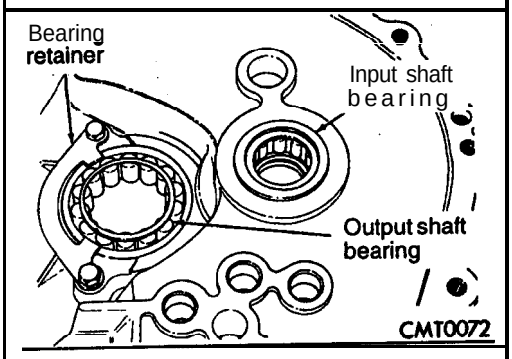

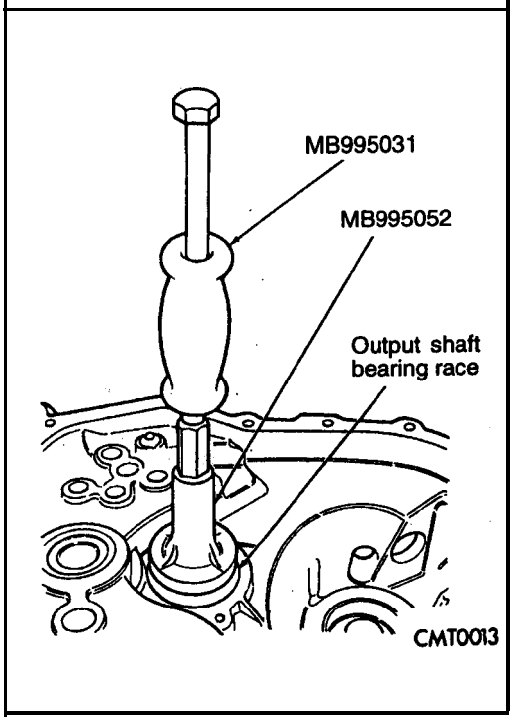

OUTPUT BEARING

22210230018

REMOVAL

(1) Note the position of the output shaft bearing. The bearing is not identical end to end. Remove caged roller bearing from output bearing "race.

(2) Remove screws at output bearing retainer strap.

(3) Install tool MB995031, MB995052. Tighten tool to output bearing race.

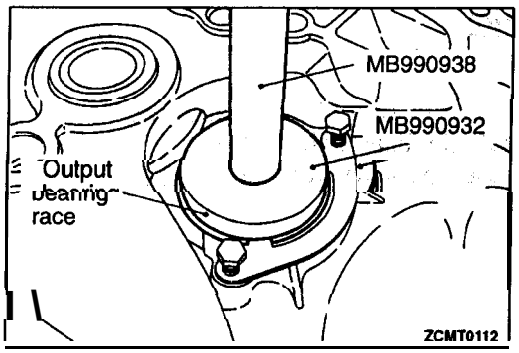

INSTALLATION

22210240011

(1) Line up output bearing race to race bore.
(2) Insert tool MB990933, MB990938 into output bearing race. Tap race into bore. Position bearing retaining stlap. Tighten bolts to' 11 Nm (9.6 ft.lbs.).

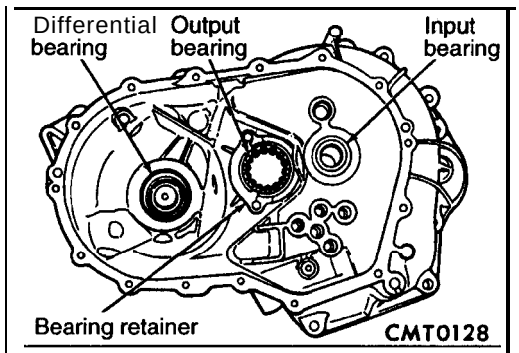

INPUT BEARING AND SLEEVE

22210250014

The input bearing is a one-piece bearing and sleeve unit. The sleeve is the slide point for the clutch release bearing and lever.

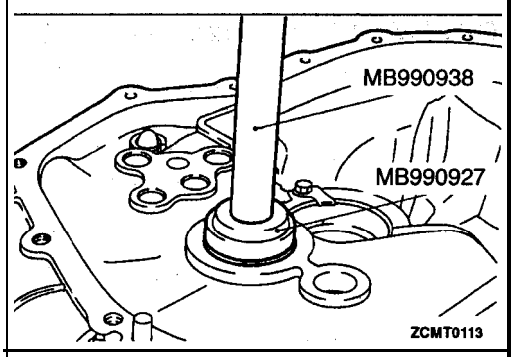

REMOVAL

22210260017

(1) Install tool MB990927, MB990938 over input bearing on. the gear case side of the transaxle clutch housing.
(2) Tap the input bearing out of the housing.'

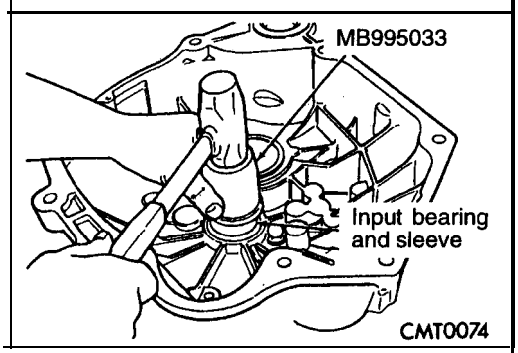

INSTALLATION

22210270010

(1) Apply coating of Loctite sealant on bearing outer diameter. Position sleeve and bearing assembly at input bearing bore.
(2) Install tool MB995033 over input bearing.

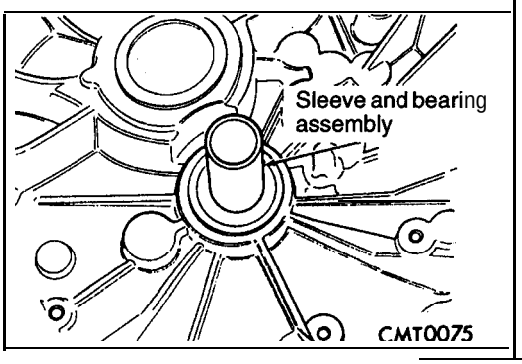

(3) Using the spacer tool and shop press, install input bearing into bore until it is fully seated.

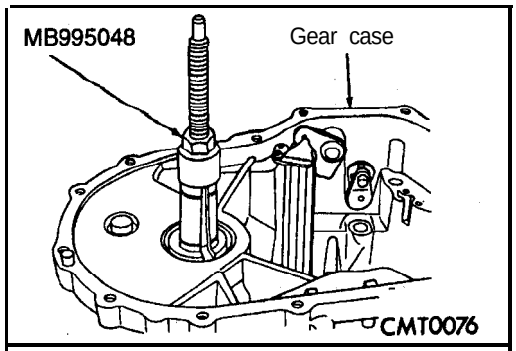

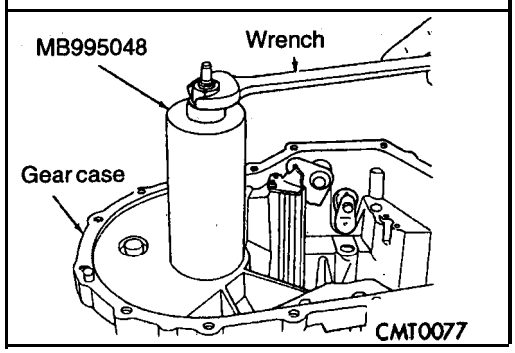

DIFFERENTIAL BEARING CUPS 22210290016

REMOVAL

(1) Install MB995048 into the differential bearing cup.

(2) Install the tool cup over the tool.
(3) Tighten the tool until the race is removed from the case.

INSTALLATION 22210300016

(1) Position the bearing cup into the case.
(2) Install the bearing cup onto MB990933.
(3) Using MB990933, MB990938 driver, install differential bearing cup into the transaxle case.

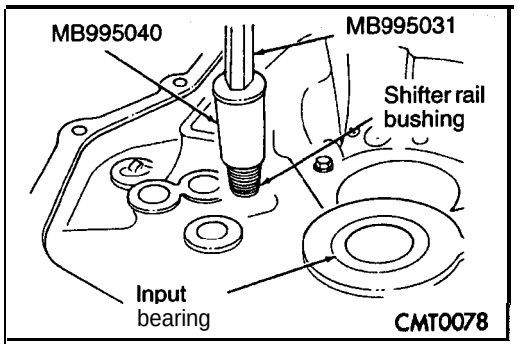

SHIFTER RAIL BUSHINGS 22210320012

REMOVAL

(1) Thread tool MB995040 into shifter rail bushing.
(2) Install MB995031 onto tool.
(3) Remove bushing using slide hammer and tool assembly.

INSTALLATION 22210330015

(1) Line up replacement bushing in bore.
(2) Using tool MD998343, tap bushing into bore until flush with the chamfer in the case.

SHIFTER SHAFT SEALS 22210340018

It is not necessary to remove the shifter shafts from the transaxle to service the shifter shaft seals.

REMOVAL 22210350011

(1) Using a pick tool, pry up on the shifter shaft seal and remove seal from bore.

INSTALLATION 22210360014

(1) Position new shifter shaft seal in bore.
(2) Install shifter shaft seal into bore using an appropriate size deep well socket.

SHIFTER SELECTOR SHAFT 22210380010

REMOVAL

(1) With the transaxle disassembled, remove the selector shaft by pushing on the shaft from the outside and pulling shaft out from the inside.

Reverse removal procedure to install selector shaft.

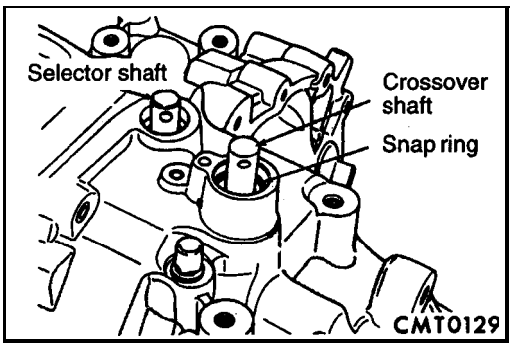

SHIFTER CROSSOVER SHAFT 22210400013

REMOVAL

(1) With the transaxle disassembled, remove the crossover shaft seal.
(2) Using snap ring pliers, remove the snap ring at the crossover shaft bore.
(3) Push the crossover shaft in the case and remove the crossover assembly.

Reverse removal procedure to install crossover shaft.

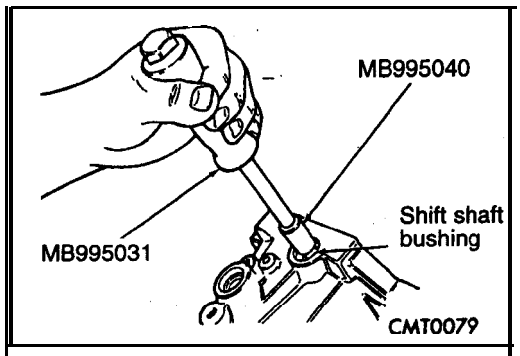

SHIFTER SELECTOR SHAFT BUSHING 22210420019

REMOVAL

(1) Thread MB995040 into bushing.
(2) Install MB995031 onto tool and remove bushing using slide hammer.

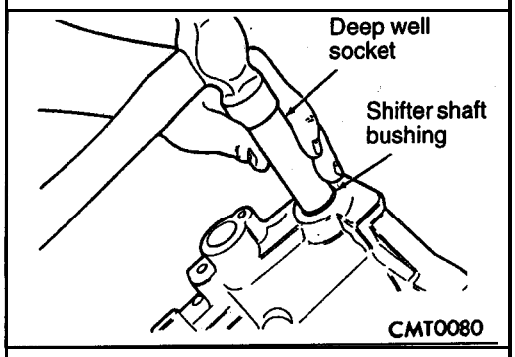

INSTALLATION 22210430012

(1) Position replacement bushing over selector shaft bore.
(2) Using an appropriate size deep well socket, install bushing in selector shaft bore.

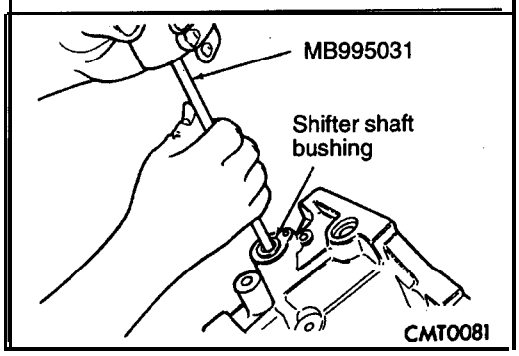

SHIFTER CROSSOVER SHAFT BUSHING 22210520016

REMOVAL

(1) Install MB995031 through the crossover bushing.
(2) Thread nut and washer onto MB995031.
(3) Using the MB995031, remove the crossover shaft bushing.

INSTALLATION 22210530019

(1) Position the replacement crossover shaft bushing over the crossover shaft bushing bore.
(2) Using an appropriate size deep well socket, install the crossover shaft bushing into the bushing bore.

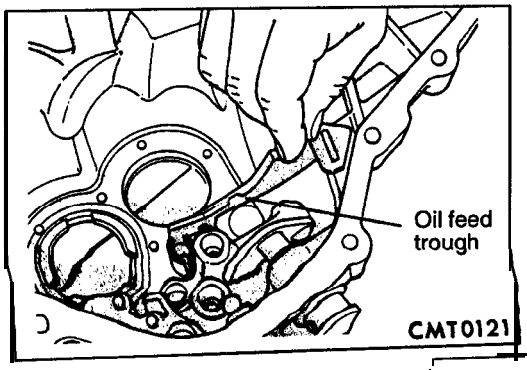

REAR BEARING OIL FEED TROUGH 22210450018

REMOVAL

The bearing oil feed trough is retained in the case by a pin that is molded into the case and clips that are part of the trough.

(1) Using light plier pressure, squeeze the clips together at the rear of the trough.
(2) Slide the trough over the retaining' pin that locates the trough in the case.

Reverse removal procedure to install oil feed trough.

INPUT SHAFT REASSEMBLY

22210460011

The snap rings that are used on the input shaft are available in select fit sizes. Use the thicknest snap ring that will fit in each 'snap ring groove.

(1) Place input shaft into shop press.
(2) Install 3rd gear caged needle bearing on input shaft.

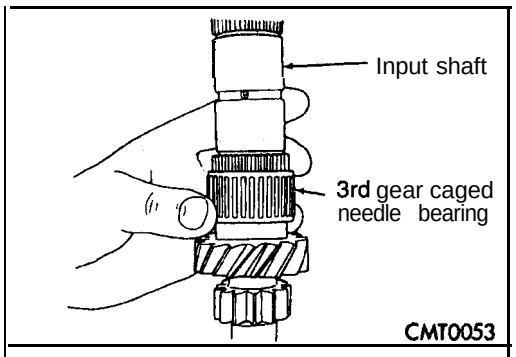

(3) Install 3rd gear and 3/4 synchronizer onto input shaft. Install MD998812, MD99881 3, MD998821 over input shaft and press on synchronizer hub and 3rd gear. The synchronizer hub has the letter "U" stamped on the top face of the hub.
This designates that the hub must be installed with the "U" facing upward.

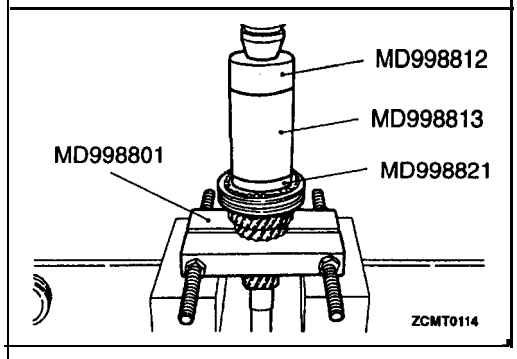

(4) Install 3/4 synchronizer snap ring into slot on input shaft.

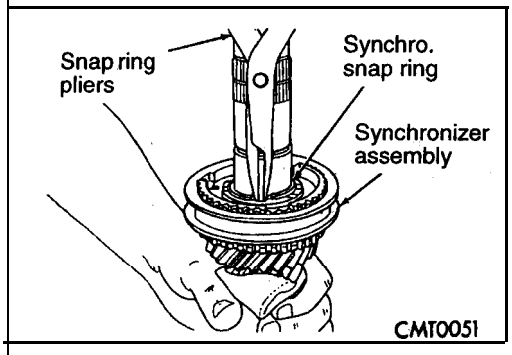

(5) Install blocking ring into 3/4 synchronizer. Install 4th gear caged needle bearing.

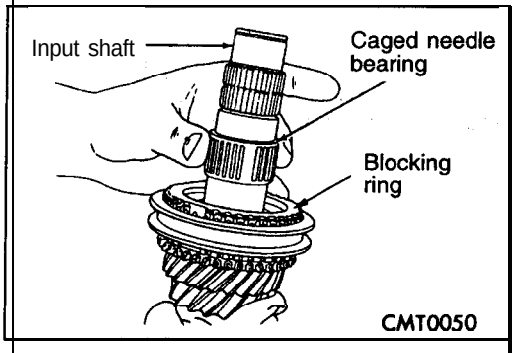

(6) Install 4th gear onto input shaft.

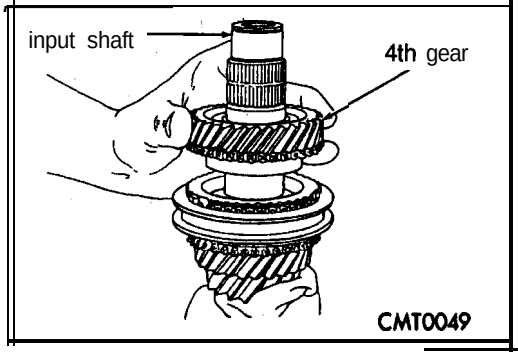

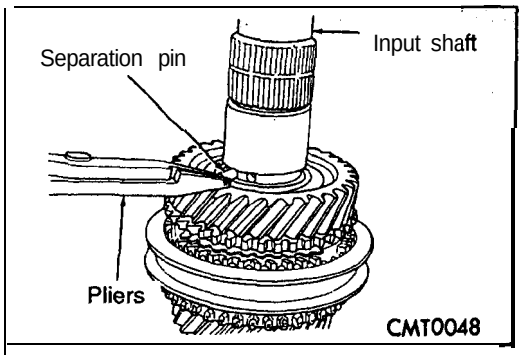

(7) Install 4/5 split thrust washer separation pin.

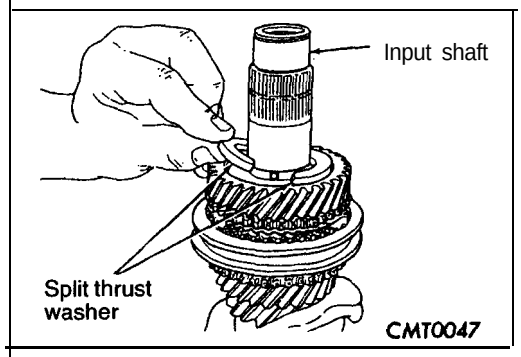

(8) Install split thrust washer onto input shaft.

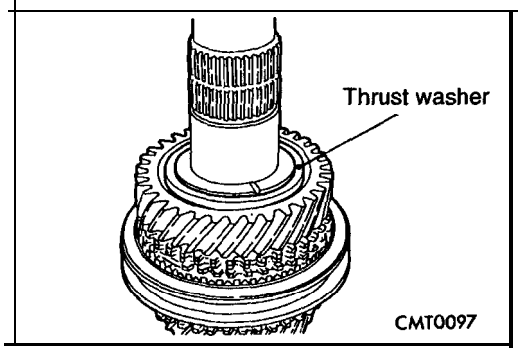

(9) Install split thrust washer retaining ring.

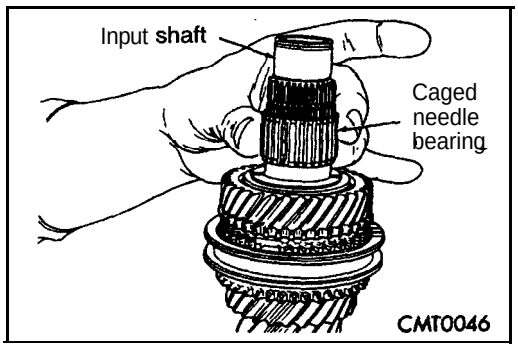

(10) Install 5th gear caged needle bearing.

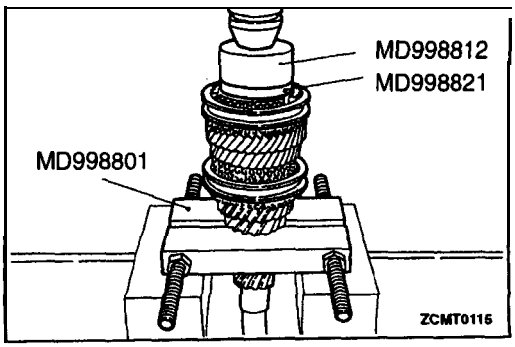

(11) Using MD998812, MD998821, install 5th speed gear and synchronizer. The 5th gear synchronizer hub has the letter "S" stamped on the top face of the hub. This designates that hub must be installed with the "S" facing upward.

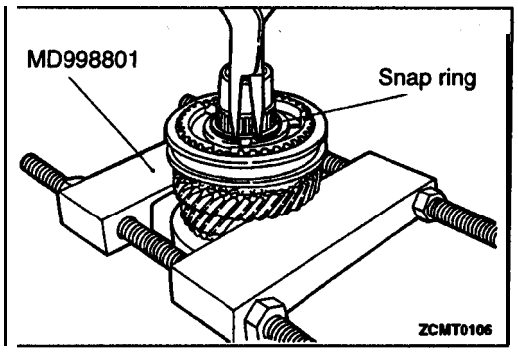

(12) Install 5th gear synchronizer snap ririg.

TSB Revision

CASE REASSEMBLY

22210470014

The sealant used to seal the transaxle case halves is Loctite 51617 or equivalent.
The sealant used for the bearing end plate cover is Loctite 18718 or equivalent.

(1) Verify bench fixture shims are removed from bench fixture. Install output and input gear into pallet fixture (MB995025).

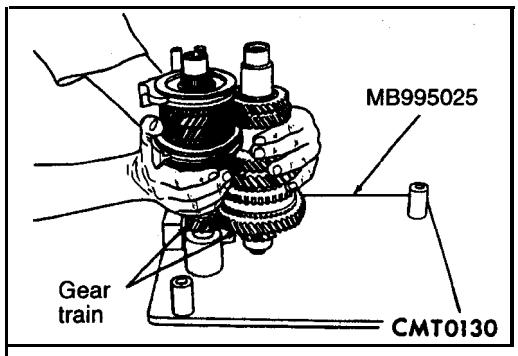

(2) Install shift rails and forks. into bench fixture.

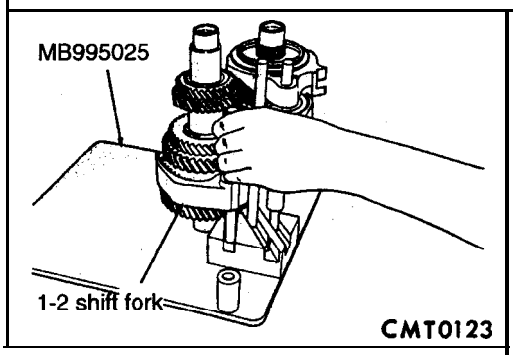

(3) Install shift blocker assembly into bench fixture.

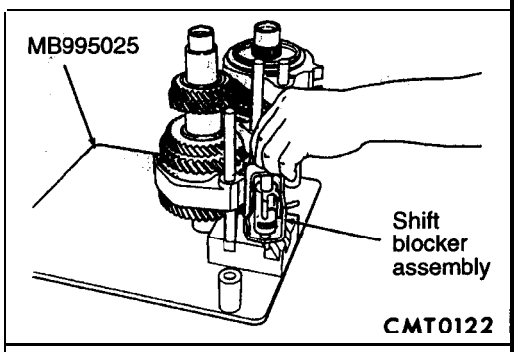

(4) Install gear case half over pallet fixture. Line up shift finger over 3/4 lug.

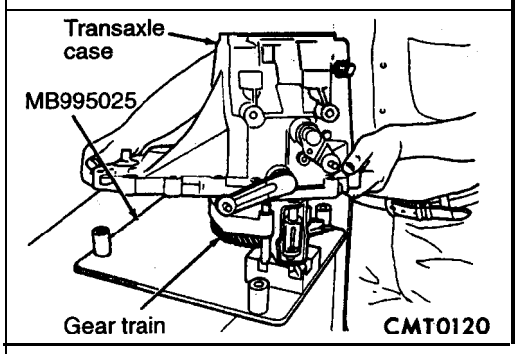

(5) Line up reverse brake friction cone lug to the slots in the gear case. Verify reverse brake shim is in position.

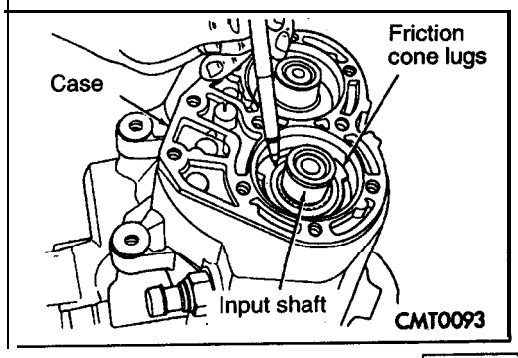

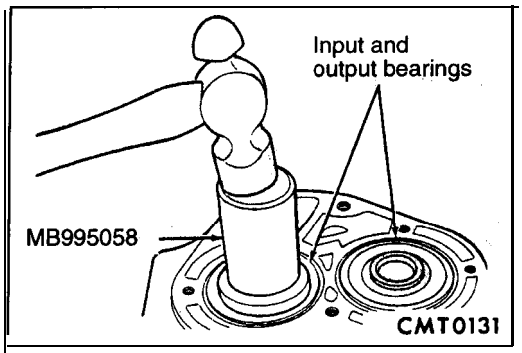

(6) Position input and output bearings on the shafts. Using MB995058, press input and output shaft bearings until they bottom into the case and against the shafts.

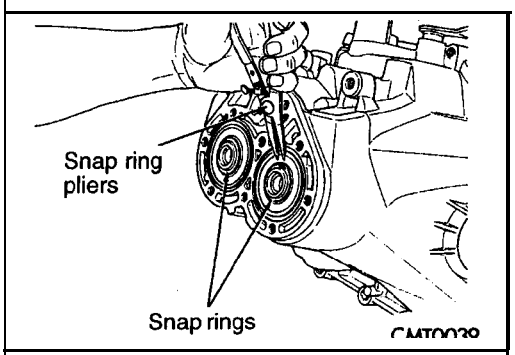

(7) Install shaft snap rings at input and output bearings.

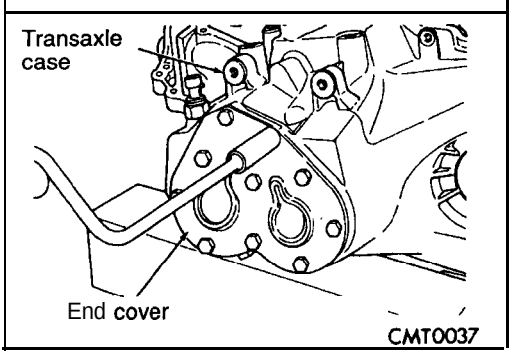

(8) Apply Loctite 18718 or equivalent to end cover outer edge and around bolt holes. Install end cover onto gear case. Tighten end cover bolts to 29 Nm (21 ft.lbs.) torque.
(9) Remove gear case from bench fixture.
(10) Install gear case in a holding fixture with end cover facing down.

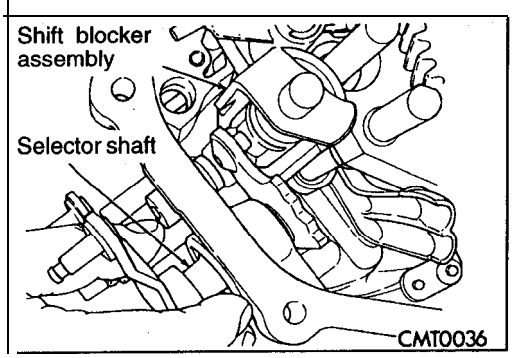

(11) Turn selector shaft into slot on shift, blocker assembly.
(12) Push selector shaft spacer clip onto selector shaft. Install shift levers.

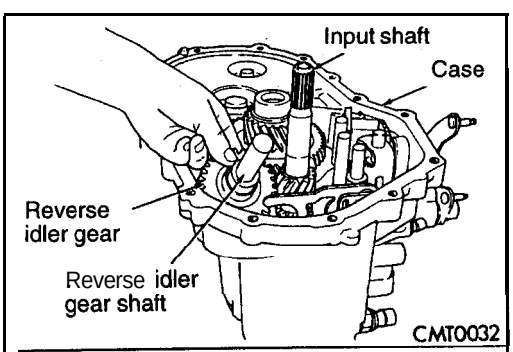

(13) Install reverse idler gear and shaft. Install bolt into shaft. Tighten bolt on shaft to 26 Nm (19 ft.lbs.) torque.

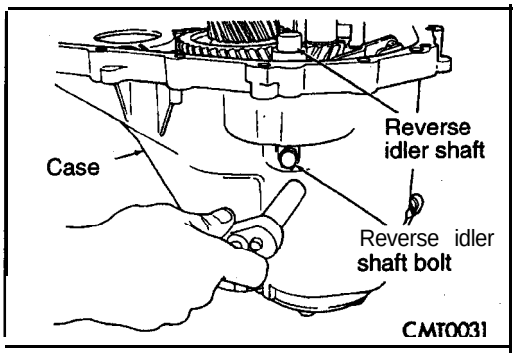

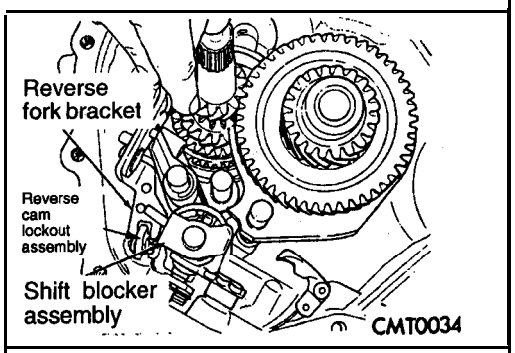

(14) Install reverse fork bracket and reverse cam lockout assembly. Tighten screws to 11 Nm (9.6 ft.lbs.) torque.

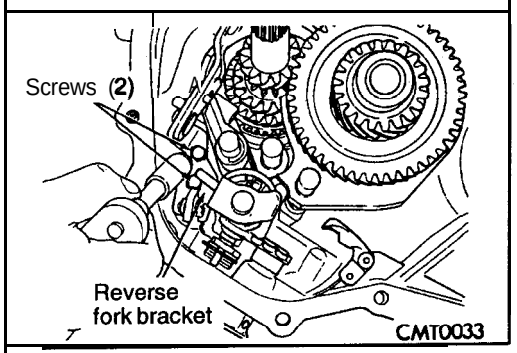

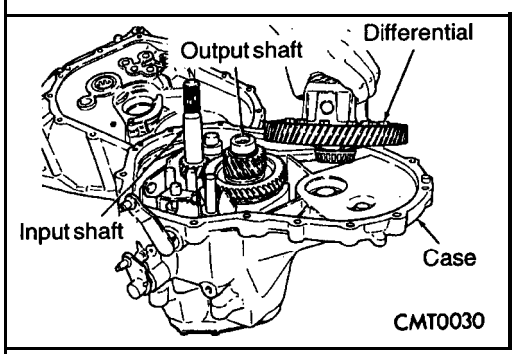

(15) Install differential into gear case.

BEARING ADJUSTMENT PROCEDURE 22210480017

GENERAL RULES ON SERVICING BEARINGS

(1) Take extreme care when removing, and installing bearing cups and cones. Use only an arbor press for installation, as a hammer may not properly* align the bearing cup or cone.
Burrs or nicks on the bearing seat will give a false end play reading while gauging. for proper shims. Improperly seated bearing cups and cones are subject to low mileage' failure.

(2) Bearing cups and 'cones should be replaced if they show signs of pitting or heat distress., If distress is seen on' either the cup or bearing rollers, both cup and cone must be replaced.

(3) Bearing preload and drag torque specifications must be maintained to avoid premature' bearing failures. Used (original) bearing may lose up to 50% of the original drag torque offer break in. All bearing, adjustments must be made with no other component interference or gear intermesh.

(4) Replace bearings as a pair. For example, if one differential bearing is defective, replace both differential. bearings. If one input shaft bearing is defective; 'replace both input shaft bearings.

(5) Bearing cones must not be reused if removed.

(6) Turning torque readings should be obtained while smoothly rotating in either direction,,

DIFFERENTIAL BEARING PRELOAD ADJUSTMENT

22210500010

True bearing turning torque readings can only be obtained with the gear train removed from the case.

(1) Remove bearing cup and existing shim from clutch bell-housing case.
(2) Press in new bearing cup into bell housing case (or use a cup that has been ground down on the outer edge for ease of measurement).
(3) Press in new bearing cup into gear case side.
(4) Lubricate differential bearings with SAE 5W-30 engine oil. Install differential assembly in transaxle gear case. Install and torque case bolts to 29 Nm (21 ft.lbs.).
(5) Position transaxle with bell housing facing down on work-bench with C-clamps. Position dial indicator.

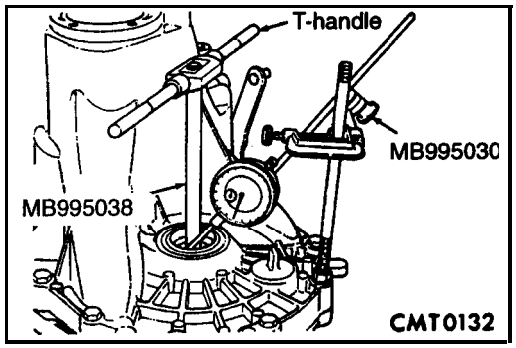

(6) Apply a medium load to differential with MB995038 and a T-Handle, in the downward direction. Roll differential assembly back and forth many times. This will settle the bearings. Zero dial indicator. To obtain end play readings, apply a medium load in the upward direction while rolling differential assembly back and forth. Record end play.
(7) The shim required for proper bearing preload is total of end play and (constant) preload of 0.18 mm (.0071 in.).
(8) Remove case bolts. Remove clutch bell housing differential bearing cup. Install shim(s) selected in step (7). Then press the bearing cup into clutch bell housing.
(9) Install and torque case bolts to 26 Nm (19 ft.lbs.).

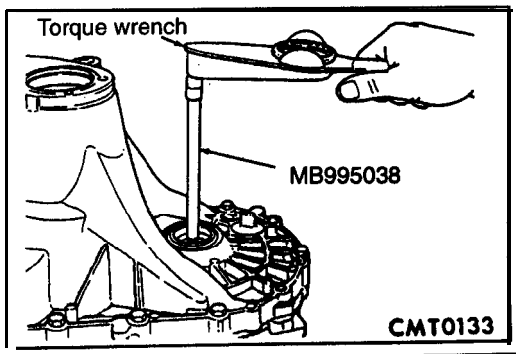

(IO)Using MB995038 and an inch-pound torque wrench, check turning torque of the differential assembly clockwise and counterclockwise. The turning torque should be 68 to 136 Ncm (6 to 12 in.lbs). If the turning torque is too high, install a 0.5 mm (.0020 in.) thinner shim. If the turning torque is too low, install a 0.5 mm (.020 in.) thicker shim.
(11) Recheck turning torque. Repeat Step (10) until the proper turning torque is obtained.

NOTES

AUTOMATIC TRANSAXLE

CONTENTS

23109000132

NOTES

AUTOMATIC TRANSAXLE

CONTENTS

23109000248

CONTINUED ON NEXT PAGE

WARNINGS REGARDING SERVICING OF SUPPLEMENTAL RESTRAINTSYSTEM (SRS) EQUIPPED VEHICLES

WARNING!

(1) Improper service or maintenance of any component of the SRS, or any SRS-related component, can lead to personal injuryordeath to service personnel (from inadvertent firing of the air bag) or to the driver and passenger (from rendering the SRS inoperative).

(2) Service or maintenance of any SRS component or SRS-related component must be performed only at an authorized MITSUBISHI dealer.

(3) MITSUBISHI dealer personnel must thoroughly review this manual, and especially its GROUP 52B – Supplemental Restraint System (SRS) and GROUP 00 -Maintenance Service before beginning any service or maintenance of any component of the SRS or any SRS-related component.

NOTE

The SRS includes the following components: SRS-ECU, SRS warning light, air bag module, clockspring and interconnecting wiring. Other SRS-related components (that may have to be removed/installed in connection with SRS service or maintenance) are indicated in the table of contents by an asterisk (*).

AUTOMATIC TRANSAXLE <2.0L ENGINE (TURBO) AND 2.4L ENGINE>

23100010158

GENERAL INFORMATION

The automatic transaxles come in two models, namely, F4A23, F4A33 and W4A33. These transaxles are essentially the same as the conventional models.

FWD

Items		2.4L ENGINE	2.0L ENGINE (TURBO)
Model		F4A23-2-UPQ5	F4A33-1-UPQ
Applicable engine		4G64	4G63
Type		Electronically controlled 4-speed full-automatic	Electronically controlled 4-speed full-automatic
Torque converter	Type	3-element with torque converter clutch	3-element with torque converter clutch
	Engine stall speed r/min	2,100–2,600	3,300–3,800
Gear ratio	1st	2.551	2.551
	2nd	1.488	1.488
	3rd	1.000	1.000
	4th	0.685	0.685
	Reverse	2.176	2.176
Final gear ratio		4.350	4.376
Speedometer gear ratio (driven/drive)		29/86	29/36

AWD

Items		Specifications
Model		W4A33-1-FNQ
Applicable engine		4G63
Type		Electronically controlled 4-speed full-automatic
Torque converter	Type	3-element with torque converter clutch
	Engine stall speed r/min	3,300–3,800
Gear ratio	1st	2.551
	2nd	1.488
	3rd	1.000
	4th	0.685
	Reverse	2.176
Reduction ratio	Primary	1.228
	Front differential	3.550
	Transfer	1.074
Speedometer gear ratio (driven/drive)		28/36

TSB Revision

FUNCTION ELEMENT TABLE

● : Function element

Selector lever position	Over-drive switch	Gear position	Gear ratio	Engine start	Parking mechanism	Front clutch	Rear clutch	End clutch	One-way. clutch	Kick-down brake	Low-reverse brake
P	–	Neutral	–	OK							
R	–	Re-verse	2.176	–		●					●
N	–	Neutral	–	OK							
D	ON	1st	2.551	–			●		●		
D	ON	2nd	1.488	–			●			●	
D	ON	3rd	1.000	–		●	●	●			
D	ON	4th	0.685	–				●		●	
D	OFF	1st	2.551	–			●		●		
D	OFF	2nd	1.488	–			●			●	
D	OFF	3rd	1.000	–		●	●	●			
2		1st	2.551	–			●				
2		2nd	1.488	–			●			●	
L		1st	2.551	–			●				●

SECTIONAL VIEW

F4A23

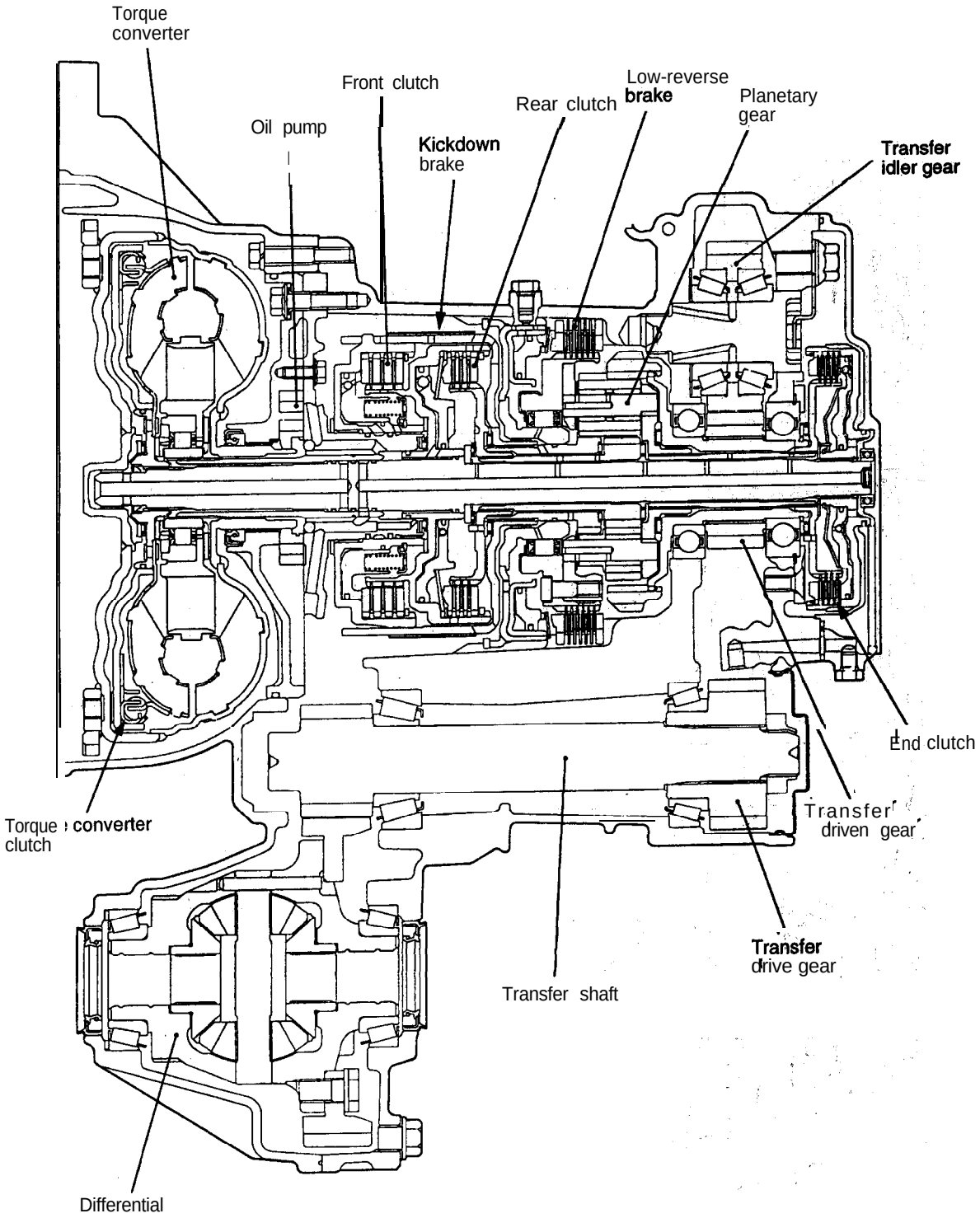

TFA1056

SECTIONAL VIEW

F4A33

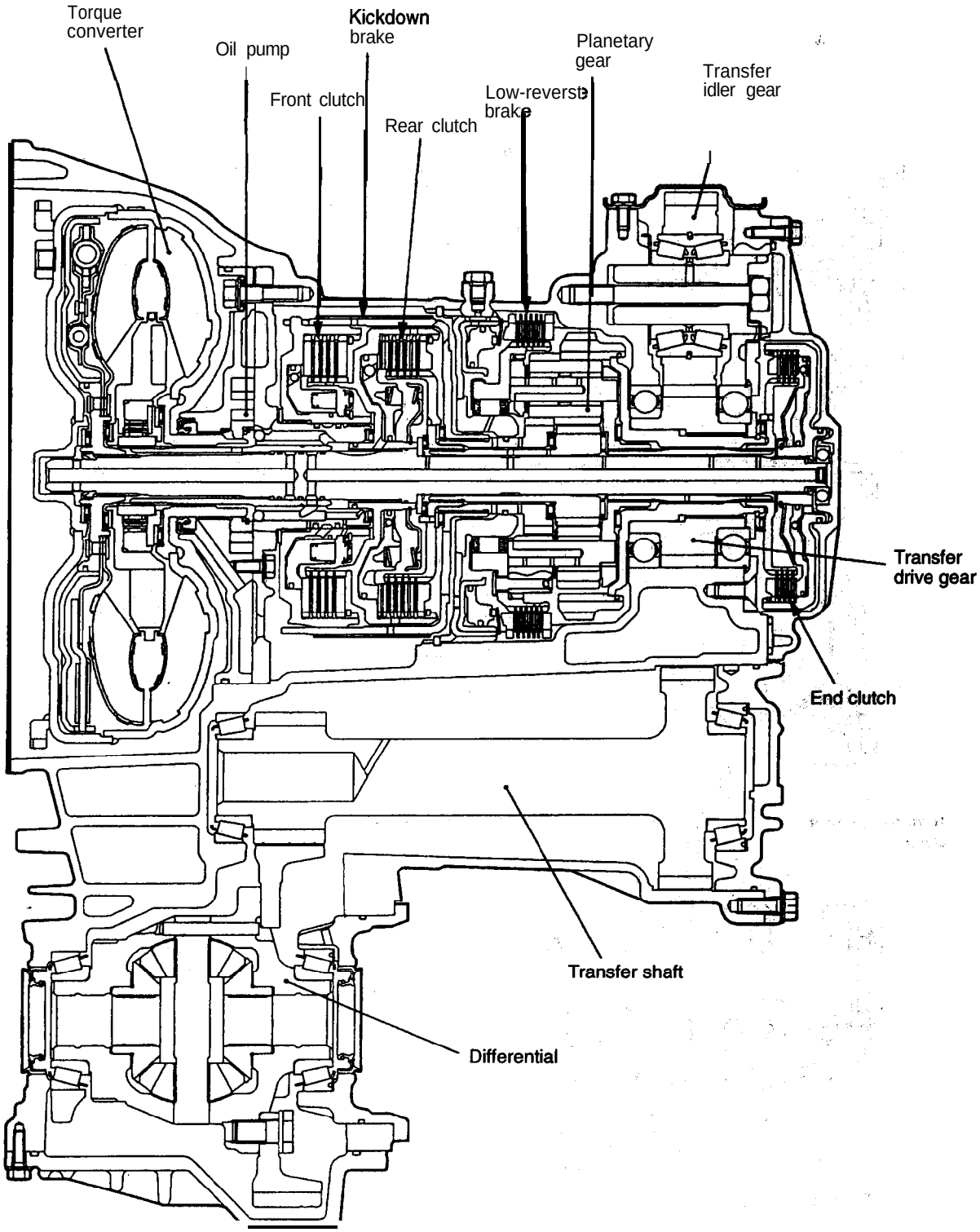

TFA1070

TSB Revision

SECTIONAL VIEW

W4A33

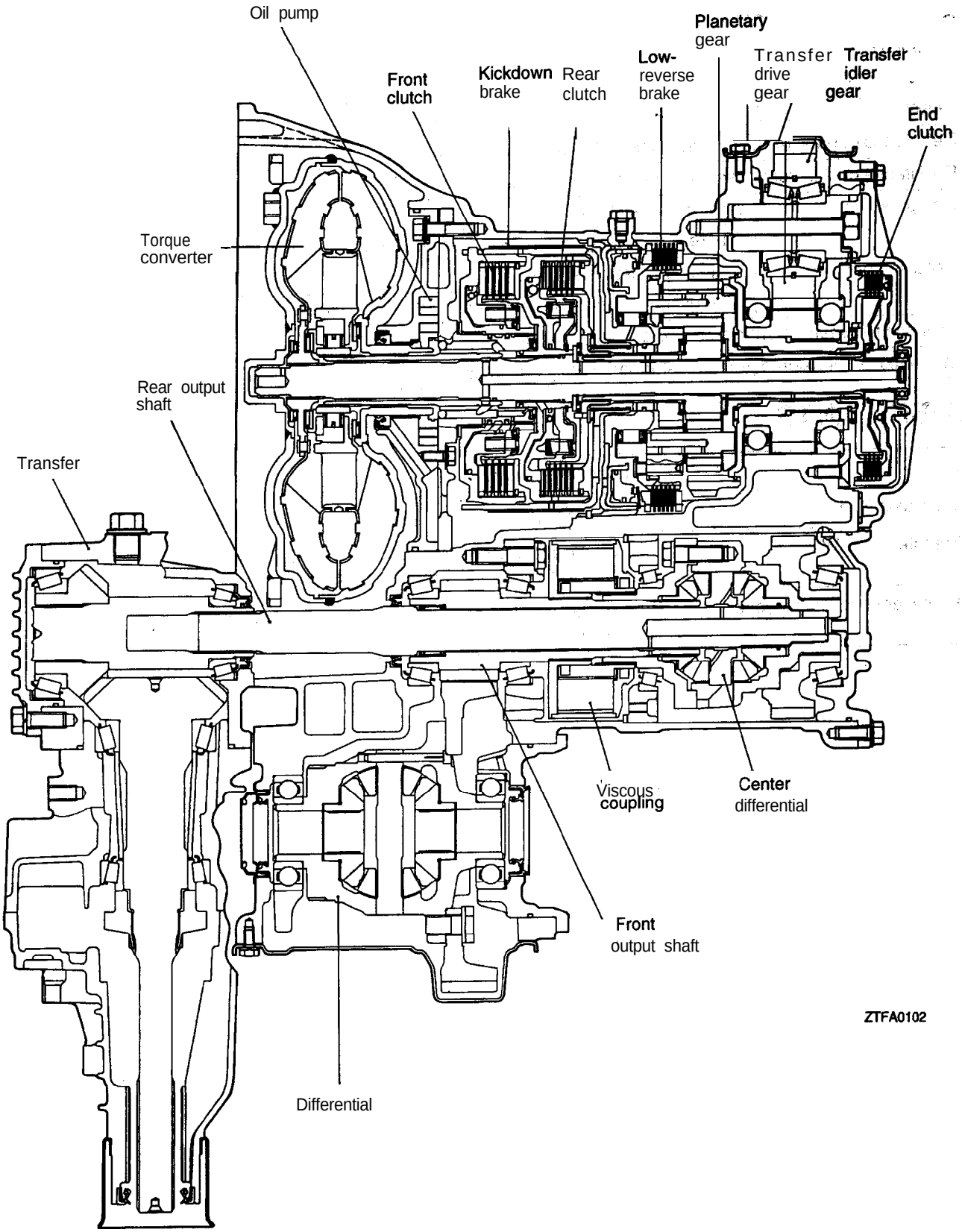

TSB Revision

SERVICE SPECIFICATIONS

23100030147

Items		Standard value
Resistance of pulse generators A and B [at 20°C (68°F)] Ω		330–390
Resistance of oil temperature sensor [at 0°C (32°F)] kΩ		16.7–20.5
Resistance of oil temperature sensor [at 100°C (212°F)] Ω		0.57–0.69
Resistance of torque converter clutch solenoid coil [at 20°C (68°F)] Ω		Approx. 13
Resistance of pressure control solenoid valve coil [at 20°C (68°F)] Ω		Approx. 3
Resistance of shift control solenoid valves A and B coils [at 20°C (68°F)] Ω		Approx. 22
Line pressure	Line pressure kPa (psi)	870–890 (126-129)
	Oil pressure change for each turn of adjusting screw kPa (psi)	38 (5.5)
Reducing pressure	Reducing pressure kPa (psi)	415–435 (60–63)
	Oil pressure change for each turn of adjusting screw kPa (psi)	45 (6.5)
Distance between detent pin and detent plate mm (in.)		1.7–2.4 (.067–.094)
Installation dimension of front roll stopper bracket assembly mm (in.)		43±3 (1.69±.12)

LUBRICANTS

23100040133

Items	Specified lubricant	Quantity
Transaxle fluid	DIAMOND ATF SP II or equivalent	6.7 dm^3 (7.1 qts.)
Transfer oil <AWD>	API classification GL-4, SAE 75W–90 or 75W–85W	0.5 dm^3 (.5 qt.)
Propeller shaft sleeve yoke	API classification GL-4, SAE 75W–90 or 75W–85W	As required

TSB Revision

SPECIAL TOOLS

23100060054

Tool	Tool number and name	Supersession	Application
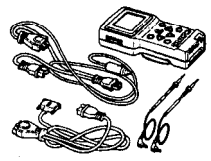	MB991502 Scan tool (MUT-II)	MB991502	Diagnostic trouble code check
	ROM pack (for scan tool)	–	
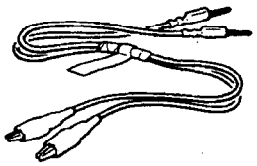	MB991529 Diagnostic trouble code check harness	Tool not necessary if scan tool <MUT-II> available	
	MD998330 Oil pressure gauge 3,000 kPa (400 psi) MD999563 Oil pressure gauge 1,000 kPa (140 psi)	MD998330-01	To measure oil pressure
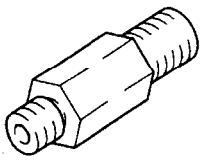	MD998332 Adapter	MD998332-01	Oil pressure gauge connection
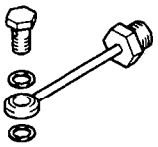	MD998900 Adapter	MD998900-01	
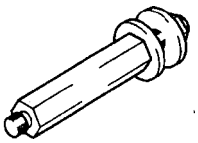	MD998915 Kickdown servo wrench adapter	MD998916-01 MD998916-1-01	Kickdown servo adjustment
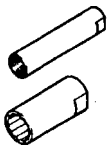	MD998916 Kickdown servo wrench adapter	MD998916-2-01 MD998916-3-01	
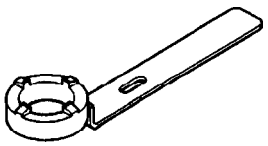	MD998918 Kickdown servo wrench	MD998918-01	

TSB Revision

Tool	Tool number and name	Supersession	Application
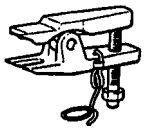	MB991113 Steering linkage puller	MB991113-01	• Tie rod end ball joint and knuckle disconnection • Lateral lower arm ball joir and knuckle disconnection • Compression, lower arm ba joint and knuckle disconnec tion
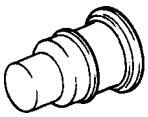	MB991 461 <FWD> MB991 460 <AWD> Plug	General service tool*	To prevent foreign substances from entering transaxle case • : Use shop towel
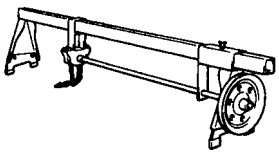	GENERAL SERVICE TOOL MZ203827 Engine lifter	MZ203827-01	To support the engine assembly during removal and installation of the transaxle
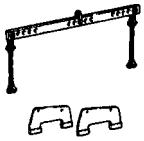	MB991 453 Engine hanger assembly	MZ203827-01	To support the engine assembly during removal and installation of the transaxle
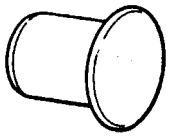	MB991 193 Plug	General service tool	To prevent foreign substances from entering transfer <AWD>
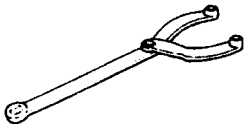	MB990767 End yoke holder	MB990767-01	Hub fixing <AWD>

TROUBLESHOOTING

23100760176

DIAGNOSTIC TROUBLESHOOTING FLOW

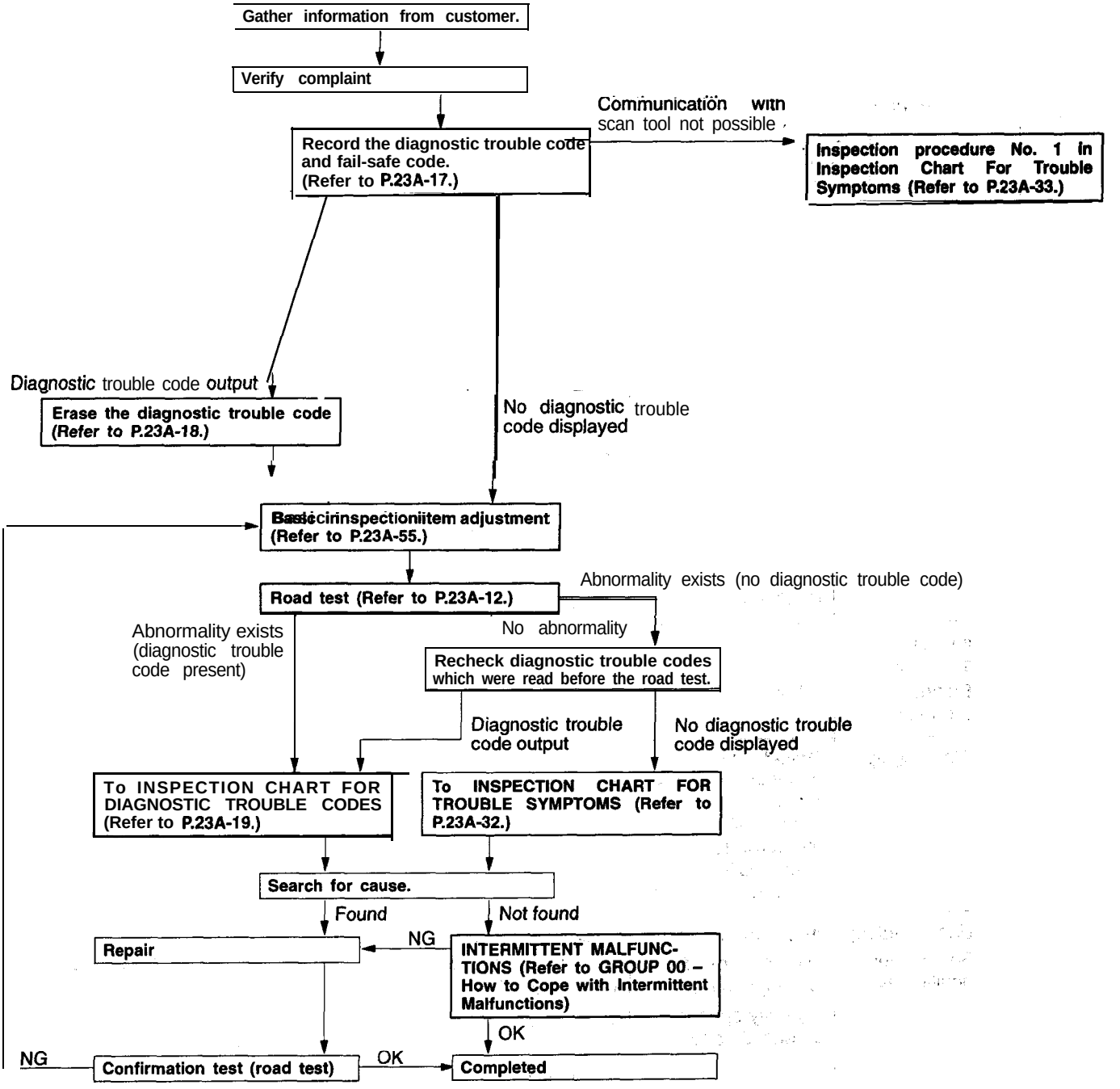

ROAD TEST

23100780172

★: Use scan tool.

Procedure	Conditions	Operation	Judgement value	Inspection item	Inspection procedure page if there is an abnormality
1	Ignition switch: ON Engine: Stopped	Overdrive switch (1) ON (2) OFF	★ Data list No. 35 (1) OD (2) OD – OFF	Overdrive switch	Overdrive switch system (P.23A-44.)
		Selector lever position (1) P (2) R (3) N (4) D (5) 2 (6) L	★ Data list No. 37 (1) P, N (2) R (3) P,N (4) D (5) 2 (6) L	Park/ Neutral position switch	Code Nos. 36, 37 Park/ Neutral position switch system (P.23A-26.)
		Brake pedal (1) Depressed (2) Released	★ Data list No. 28 (1) ON (2) OFF	Stop light switch	Code No. 28 – Stop light switch system (P.23A-23.)
	Ignition switch: ST Engine: Stopped	Starting test with lever in P or N range	Starting should be possible	Starting possible or impossible	Starting impossible (P.23A-33.)
3	Warming up	Drive for 15 minutes or more so that the automatic transmission fluid temperature becomes 70 – 90°C(158–194°F).	★ Data list No. 15 Gradually rises to 70 – 90°C	Oil temperature sensor	Code Nos. 15, 16 – Oil temperature sensor system (P.23A-21.)
	Engine: Idling Selector lever position: N	Accelerator pedal (1) Fully closed (2) Depressed (3) Fully open (for at least 2 seconds)	★ Data list No. 11 (1) 400–1,000 mV (2) Gradually rises from (1) (3) 4,500–5,500 mV	TPS	Code Nos. 11, 12, 13 – TPS system (P.23A-21.)
			★ Data list No. 25 (1) ON (2) OFF (3) OFF	Closed throttle position switch	Closed throttle position switch system (P.23A-44.)
		Selector lever operation (1) N→D shift (2) N→R shift	Should be no abnormal shifting shocks Time lag should be within 2 seconds	Malfunction when starting	Engine stalling during shifting (P.23A-36.)
					Shocks when changing from N to D and long lag time (P.23A-37.)

TSB Revision

Procedure	Conditions	Operation	Judgement value	Inspection item	inspection procedure page if there is an abnormality
4	Engine: Idling Selector lever position: N	Selector lever operation (1) N→D shift (2) N→R shift	Should be no abnormal shifting shocks Time lag should be within 2 seconds	Malfunction when starting	Shocks when changing from N to R and long lag time (P.23A-38.)
					Shocks when changing from N to D, N to R and long lag time (P.23A-39.)
				Driving impossible	Does not move forward (P.23A-34.)
					Does not back-up (P.23A-35.)
					Does not move (forward or reverse) (P.23A-36.)
5	Engine: Idling (vehicle stopped) Selector lever position: D	A/C switch (1) ON (2) OFF	★ Data list No. 26 (1) ON (2) OFF	A/C load signal	A/C load signal system (P.23A-45.)
		Accelerator pedal (1) Fully closed (2) Depressed (Driving at 5 km/h (3.1 mph)	★ Data list No. 45 (1) 55-75 % (2) 90–100 %	Pressure control solenoid valve (PCSV)	Code Nos. 45, 46, 85 – Pressure control solenoid valve system (P.23A-28.)
	Engine: Idling (vehicle stopped) Selector lever position: D	Accelerator pedal (1) Fully closed (2) Depressed	★ Data list No. 27 (1) C (2) 1	Shift control solenoid valve A (SCSV-A)	Code Nos. 41, 42, 83 – Shift control solenoid valve A system (P.23A-27.)
				Shift control solenoid valve B (SCSV-B)	Code Nos. 43, 44, 84 – Shift control solenoid valve B system (P.23A-27.)
			★ Data list No. 23 (1) 600–900 rpm	Ignition signal	Code No. 23 – Ignition signal system (P.23A-22.)

Procedure	Conditions	Operation	Judgement value	Inspection item	Inspection procedure page if there is an abnormality
▲ 6	Selector lever position: D Overdrive: OFF	Engine (1) Idling (vehicle stopped) (2) Driving at 10 km/h (6 mph) (3) Driving at constant speed of 50 km/h (31 mph) (20 seconds or more) (4) Driving at constant speed of 40 km/h (25 mph) with selector lever in 2 range (5) Driving at constant speed of 70 km/h (43 mph) with selector lever in D range	★ Data list No. 27 (1) C (2) 1 (3) 3 (4) 2	Shift control solenoid valve A (SCSV-A)	Code Nos. 41, 42, 83 – Shift control solenoid valve A system (P.23A-27.)
				Shift control solenoid valve B (SCSV-B)	Code Nos. 43, 44, 84 – Shift control solenoid valve B system (P.23A-27.)
			★ Data list No. 21 (1) OF (2) ON (3) ON (4) OFF	Kickdown servo switch	Code Nos. 21, 22 – Kickdown servo switch system (P.23A-22.)
			★ Data list No. 38 (1) 0 km/h (2) 10 km/h (3) 50 km/h (4) 40 km/h	Vehicle speed sensor	Vehicle speed sensor system (P.23A-46.)
▲ 6	Selector lever position: D Overdrive: OFF	Engine (1) Idling (vehicle stopped) (2) Driving at 10 km/h (6 mph) (3) Driving at constant speed of 50 km/h (31 mph) (20 seconds or more) (4) Driving at constant speed of 40 km/h (25 mph) with selector lever in 2 range (5) Driving at constant speed of 70 km/h (43 mph) with selector lever in D range	★ Data list No. 31 (3) 1,800–2,200 rpm	Pulse generator A (PG-A)	Code Nos. 31, 81 – Pulse generator A system (P.23A-24.)
			★ Data list No. 32 (3) 1,800–2,200 rpm	Pulse generator B (PG-B)	Code Nos. 32, 82 – Pulse generator B system (P.23A-25.)
			★ Data list No. 47 (3) 100–300 rpm (5) 0–10 rpm	Torque converter clutch solenoid	Code Nos. 47 48, 49, 58 – Torque converter clutch solenoid (P.23A-28.)
			★ Data list No. 49 (3) 0 % (5) 40–60 %	Torque converter clutch solenoid	Code Nos. 47, 48, 49, 58 – Torque converter clutch solenoid (P.23A-28.)
			For (3) and (5), acceleration should be smooth with no abnormal vibration.	Malfunction while driving	Poor acceleration (P.23A-43.)
					Vibration (P.23A-43.)

NOTE
Tests marked with ▲ should be carried out on a road that is as straight and level as possible.

Procedure	Conditions	Operation	Judgement value	Inspection item	Inspection procedure page if there is an abnormality
▲ 7	Selector lever position: D Overdrive: ON	Engine (1) Driving at constant speed of 50 km/h (31 mph) (20 seconds or more)	★ Data list No. 27 (1) 4	Shift control solenoid valve A (SCSV-A)	Code Nos. 41, 42, 83 – Shift control solenoid valve A system (P.23A-27.)
				Shift control solenoid valve B (SCSV-B)	Code Nos. 43, 44, 84 – Shift control solenoid valve B system (P.23A-27.)
			★ Data list No. 31 (1) 1,200–1,500 rpm	Pulse generator A (PG-A)	Code Nos. 31, 81 – Pulse generator A system (P.23A-24.)
		(1)	★ Data list No. 32 1,800–2,200 rpm	Pulse generator B (PG-B)	Code Nos. 32, 82 – Pulse generator B system (P.23A-25.)
A 8	Selector lever position: D Overdrive: ON	Monitor scan tool data list Nos. 27 and 32. (1) Accelerate to 4th gear at TPS output of 1.5 V (opening angle 30%). (2) Slowly decelerate to a standstill. (3) Accelerate to 4th gear at TPS output of 2.5 V (opening angle 50%). (4) At 50 km/h (31 mph) in 4th gear, turn overdrive OFF. (5) At 50 km/h (31 mph) in 3rd gear, move selector lever to 2 range. (6) At 20 km/h (12 mph) in 2 range, move selector lever to L range.	For (1), (2) and (3) should match the specified output shaft speed (vehicle speed), and there should be no abnormal shocks. For (4), (5) and (6), downshifting should be made immediately after operation.	Malfunction when shifting	Shocks and flare shifts (P.23A-40.)
				Displaced shifting points	All points (P.23A-41.)
					Some points (P.23A-42.)
				Does not shift	No fail-safe codes (P.23A-42.)
					Code Nos. 31, 81 – Pulse generator A system (P.23A-24.)
					Code Nos. 32, 82 – Pulse generator B system (P.23A-25.)
					Code Nos. 41, 42, 83 – Shift control solenoid valve A system (P.23A-27.)
					Code Nos. 43, 44, 84 – Shift control solenoid valve B system (P.23A-27.)

Procedure	Conditions	Operation	Judgement value	Inspection item	Inspection procedure page if there is an abnormality
A 8	Selector lever position: D Overdrive: ON	Monitor scan tool data list Nos. 27 and 32. (1) Accelerate to 4th gear at TPS output of 1.5 V (opening angle 30%). (2) Slowly decelerate to a standstill. (3) Accelerate to 4th gear at TPS output of 2.5 V (opening angle 50%). (4) At 50 km/h (31 mph) in 4th gear, turn overdrive OFF. (5) At 50 km/h (31 mph) in 3rd gear, move selector lever to 2 range. (6) At 20 km/h (12 mph) in 2 range, move selector lever to L range.	For(l), (2) and (3) should match the specified output shaft speed (vehicle speed), and there should be no abnormal shocks. For (4), (5) and (6), downshifting should be made immediately after operation.	Does not shift	Code Nos. 45, 46, 85 – Pressure control solenoid valve system (P.23A-28.) Code Nos. 51, 86 – 1 st gear incorrect ratio (P.23A-29.) Code Nos. 52, 86 – 2nd gear incorrect ratio (P.23A-30.) Code Nos. 53, 86 – 3rd gear incorrect ratio (P.23A-30.) Code Nos. 54, 86 – 4th gear incorrect ratio (P.23A-30.)

NOTE

Tests marked with ▲ should be carried out on a road that is as straight and level as possible.

SHIFT PATTERN

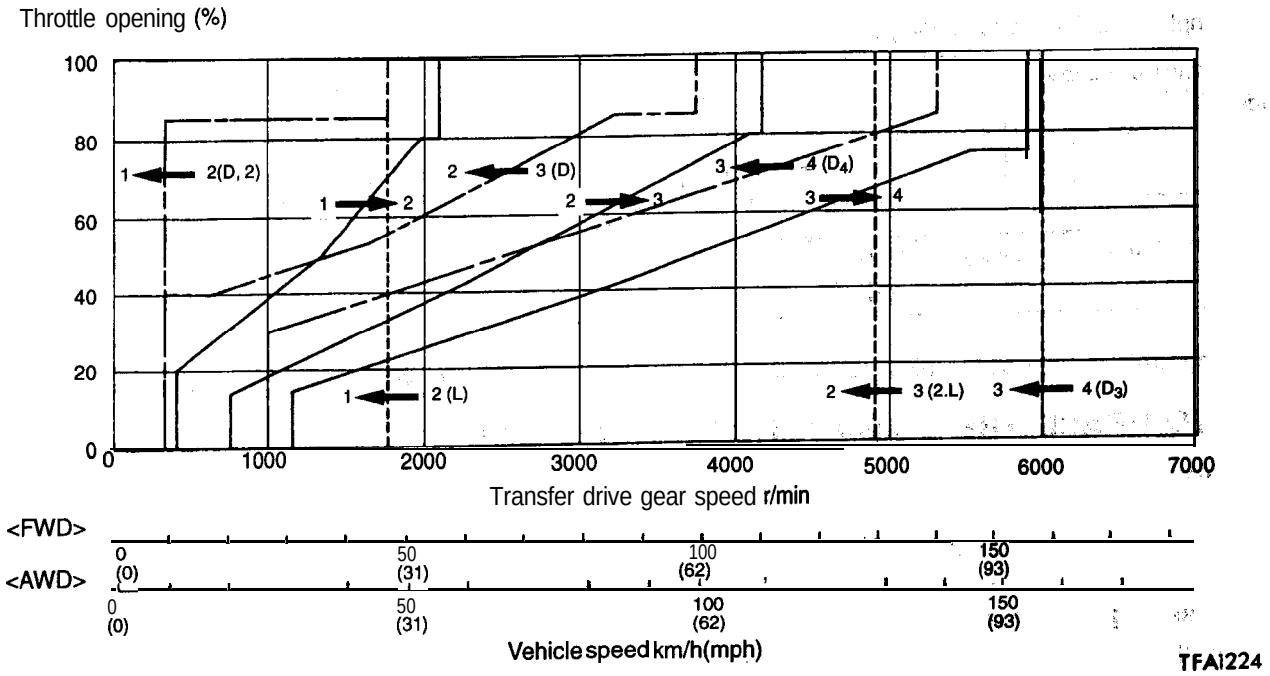

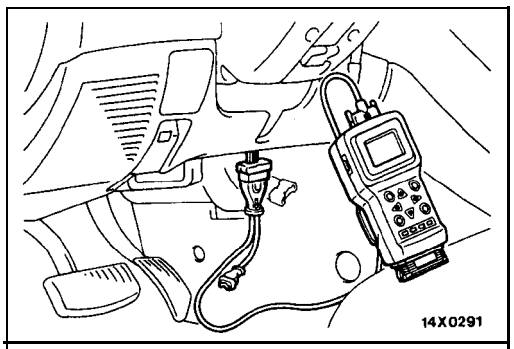

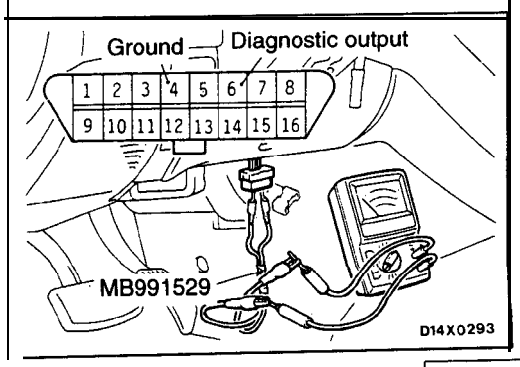

DIAGNOSIS FUNCTION

23100770056

METHOD OF READING THE DIAGNOSTIC TROUBLE CODES

When Using the Scan Tool

Connect the scan tool to the data link connector **(16-pin)** at the lower right of the instrument under cover, and then read the diagnostic trouble codes.

Caution
Always turn the ignition switch off before connecting or disconnecting the scan tool.

When Using a Voltmeter

Connect a voltmeter to (4) terminal and (6) terminal of the data link connector underneath the instrument under cover, and take a reading of the diagnostic trouble codes from the movement of the needle on the voltmeter.

DIAGNOSTIC RESULT DISPLAY METHOD WHEN USING THE CHECK ENGINE/MALFUNCTION INDICATOR LAMP

Example of flashing when a diagnostic trouble code is output	Flashing when normal
For diagnostic trouble code No. 24 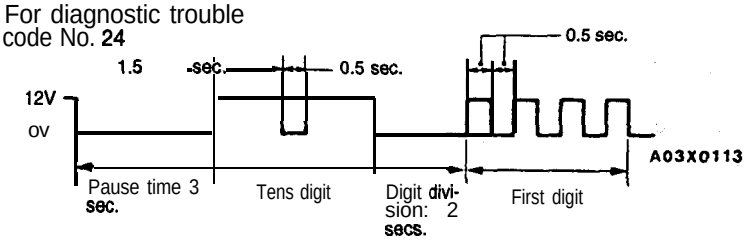	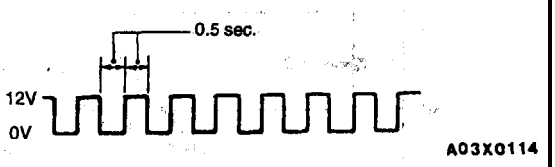

NOTE
Other diagnostic trouble codes also output as the same code numbers as when using the scan tool.

HOW TO ERASE THE DIAGNOSTIC TROUBLE CODES

When using the scan tool

1. Turn the ignition switch to OFF and then back to ON again.
2. Erase the diagnostic trouble codes.
3. Check to be sure that no diagnostic trouble codes exist.

When using a voltmeter

(1) Turn the ignition switch to the OFF position.
(2) After disconnecting the battery cable from the battery (–) terminal for 10 seconds or more, reconnect the cable.
(3) Turn the ignition switch to the ON position, read the diagnostic trouble codes and check that a normal code is output.

INSPECTION CHART FOR DIAGNOSTIC TROUBLE CODES

23100790151

Code	Diagnostic item		Reference page
11	Throttle position sensor system	Excessive output	23A-21
12	Throttle position sensor system	Insufficient output	23A-21
13	Throttle position sensor system	Defective sensor	23A-21
14	Throttle position sensor system	Defective sensor adjustment	23A-21
15	Oil temperature sensor system	Open circuit	23A-21
16	Oil temperature sensor system	Short circuit	23A-21
21	Kickdown servo switch system	Open circuit	23A- 22
22	Kickdown servo switch system	Short circuit	23A- 22
23	Ignition signal system	Open circuit	23A- 22
28	Stop light switch system	Short circuit	23A- 23
31	Pulse generator A (PG-A) system	Open circuit	23A- 24
32	Pulse generator B (PG-B) system	Open circuit	23A- 25
36	Park/Neutral position switch svstem	Short circuit	23A- 26
37	Park/Neutral position switch system	Open circuit	23A- 26
41	Shift control solenoid valve A (SCSV-A) system	Open circuit	23A- 27
42	Shift control solenoid valve A (SCSV-A) system	Short circuit	23A- 27
43	Shift control solenoid valve B (SCSV-B) system	Open circuit	23A- 27
44	Shift control solenoid valve B (SCSV-B) system	Short circuit	23A-27
45	Pressure control solenoid valve (PCSV) system	Open circuit	23A-28
46	Pressure control solenoid valve (PCSV) system	Short circuit	23A-28
47	Torque converter clutch solenoid system	Open circuit	23A-28
48	Torque converter clutch solenoid system	Short circuit	23A-28
49	Torque converter c lutch solenoid system	Defective system	23A-28
51	1st gear incorrect ratio		23A-29
52	2nd gear incorrect ratio		23A-30
53	3rd gear incorrect ratio		23A-30
54	4th gear incorrect ratio		23A-30
58	Torque converter clutch solenoid system	Direct stuck on	23A-28
59	Anomalous vibration occurrence		23A-31
61	Torque reduction request signal lines	Short circuit	23A-31
	Torque reduction execution signal lines	Open circuit	23A-31
62	Torque reduction request signal lines	Open circuit	23A-31

TSB Revision

Code	Diagnostic item		Reference page
63	Torque reduction execution signal lines	Short circuit	23A-31

TSB Revision

INSPECTION PROCEDURES FOR DIAGNOSTIC TROUBLE CODES

Code No. 11, 12, 13, 14 Throttle position sensor system	Probable cause
[Comment] If the TPS output becomes 4.6 V or more at idle, TPS output is excessive, and diagnostic trouble code No. 11 is output. If the TPS output becomes 0.2 V or less at times other than idling, TPS output is insufficient and diagnostic trouble code No. 12 is output. If the TPS output and the target value inside the TCM do not match even after compensation is carried out while the engine is idling, the TPS sensor is defective and diagnostic trouble code No. 13 is output. If the TPS voltage becomes 0.2 V or less or 1.2 V or more while the engine is idling, the TPS adjustment is defective and diagnostic trouble code No. 14 is output.	• Malfunction of the throttle position sensor • Malfunction of connector • Malfunction of TCM

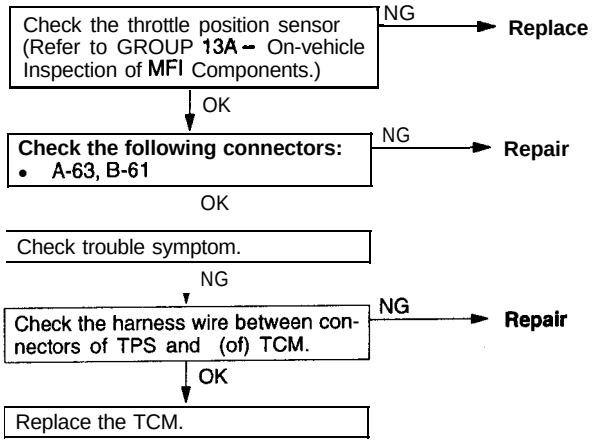

Code No. 15, 16 Oil temperature sensor system	Probable cause
[Comment] If the oil temperature sensor output is 4.4 V or higher (oil temperature does not increase) even after driving for 10 minutes or more, there is an open circuit in the oil temperature sensor and diagnostic trouble code No. 15 is output. When the oil temperature sensor output is 0.2 V or less (for 1 second or more), it is judged that there is a short-circuit in the oil temperature sensor and diagnostic trouble code No. 16 is output.	• Malfunction of oil temperature sensor • Malfunction of connector • Malfunction of TCM

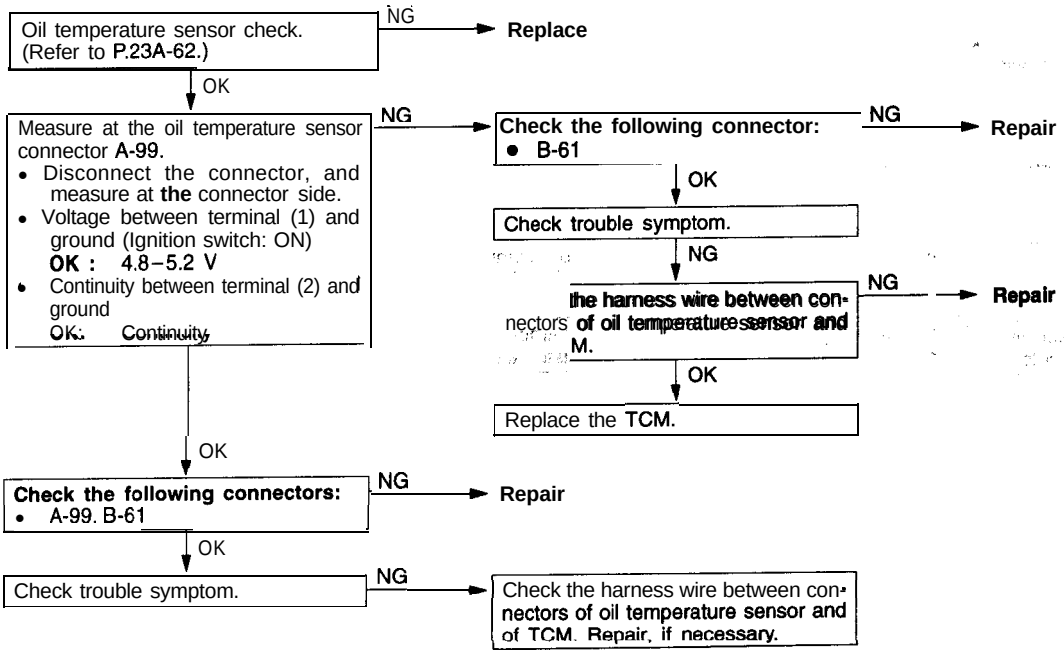

TSB Revision

Code No. 21, 22 Kickdown servo switch system	Probable cause
[Comment] If the kickdown servo switch does not turn ON in 1 and 3 range within 5 seconds, there is an open circuit in the kickdown servo switch and diagnostic trouble code No. 21 is output. If the kickdown servo switch does not turn OFF in 2 and 4 range, there is a short circuit in the kickdown servo switch and diagnostic trouble code No. 22 is output,	• Malfunction of kickdown servo switch • Malfunction of connector • Malfunction of TCM

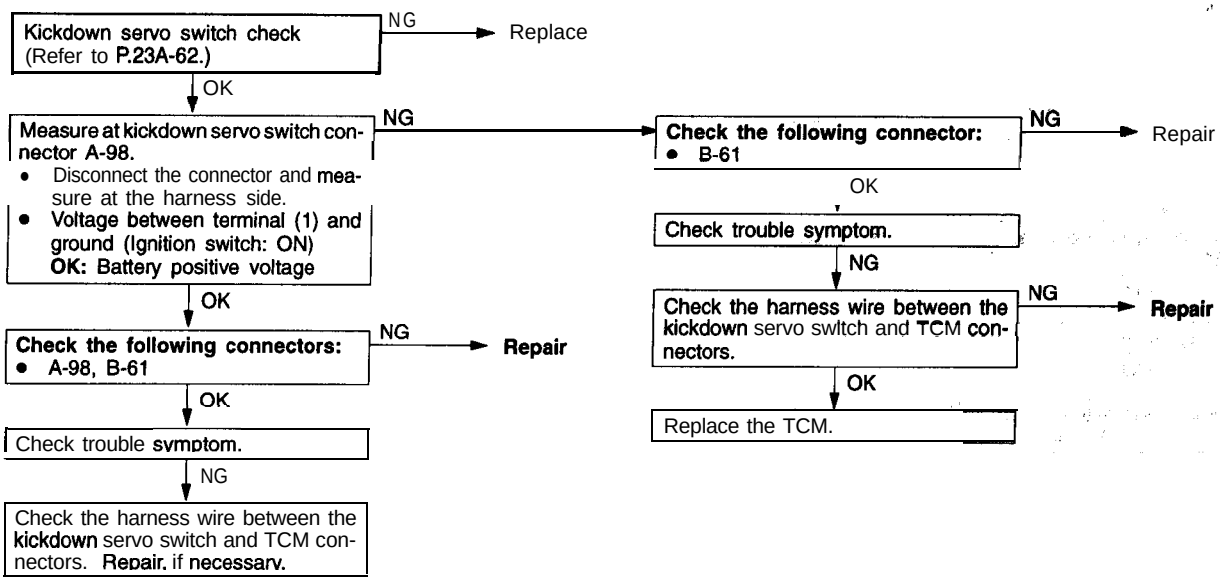

Code No. 23 Ignition signal system	Probable cause
[Comment] If ignition pulses are not input to the TCM while the engine is idling, there is an open circuit in the ignition signal line and diagnostic trouble code No. 23 is output.	• Malfunction of ignition coil • Malfunction of power transistor • Malfunction of connector • Malfunction of TCM

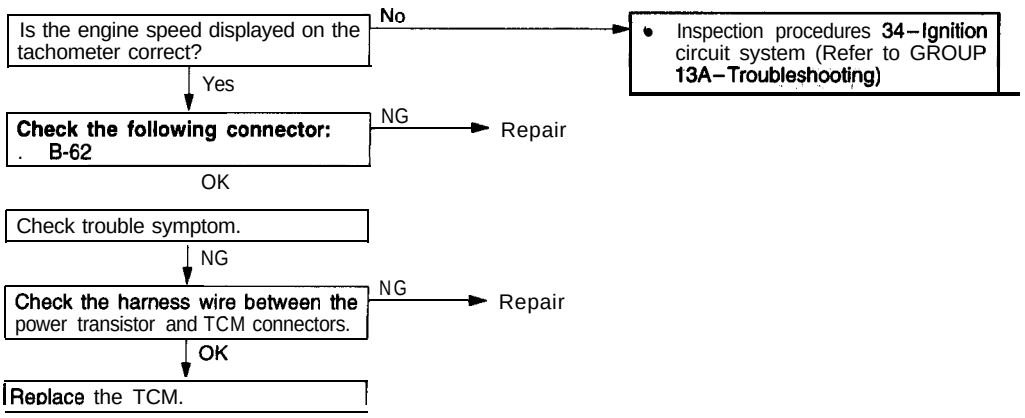

TSB Revision

Code No. 28 Stop light switch system	Probable cause
[Comment] If the stop light switch is ON far 15 minutes or more while driving at 3 km/h (2 mph)or more, there is a short circuit in the stop light switch and diagnostic trouble code No. 28 is output.	• Malfunction of stop light switch • Malfunction of connector • Malfunction of TCM

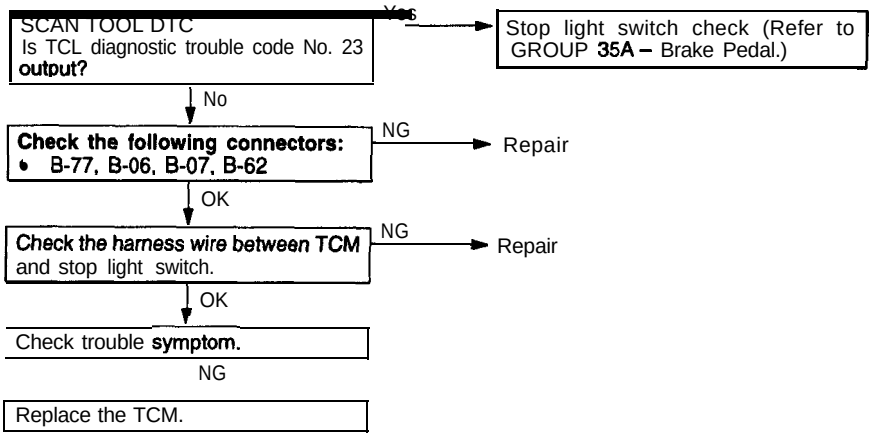

Code No. 31, 81 Pulse generator A system	Probable cause
[Comment] If there is no pulse generator A output at an output shaft speed of 1,500 r/min or above, there is an open circuit in pulse generator A and diagnostic trouble code No. 31 is output. In addition, if diagnosis code No. 31 is output 4. times within 10 seconds, there is an open circuit in pulse generator A, fail-safe code No. 81 is output and the vehicle is locked in 3rd gear (D) or 2nd gear (2, L) as a fail-safe measure.	• Malfunction of pulse generator A • Malfunction of connector • Malfunction of end clutch retainer • Malfunction of TCM • Noise generated

★: Refer to Automatic Transaxle Overhaul

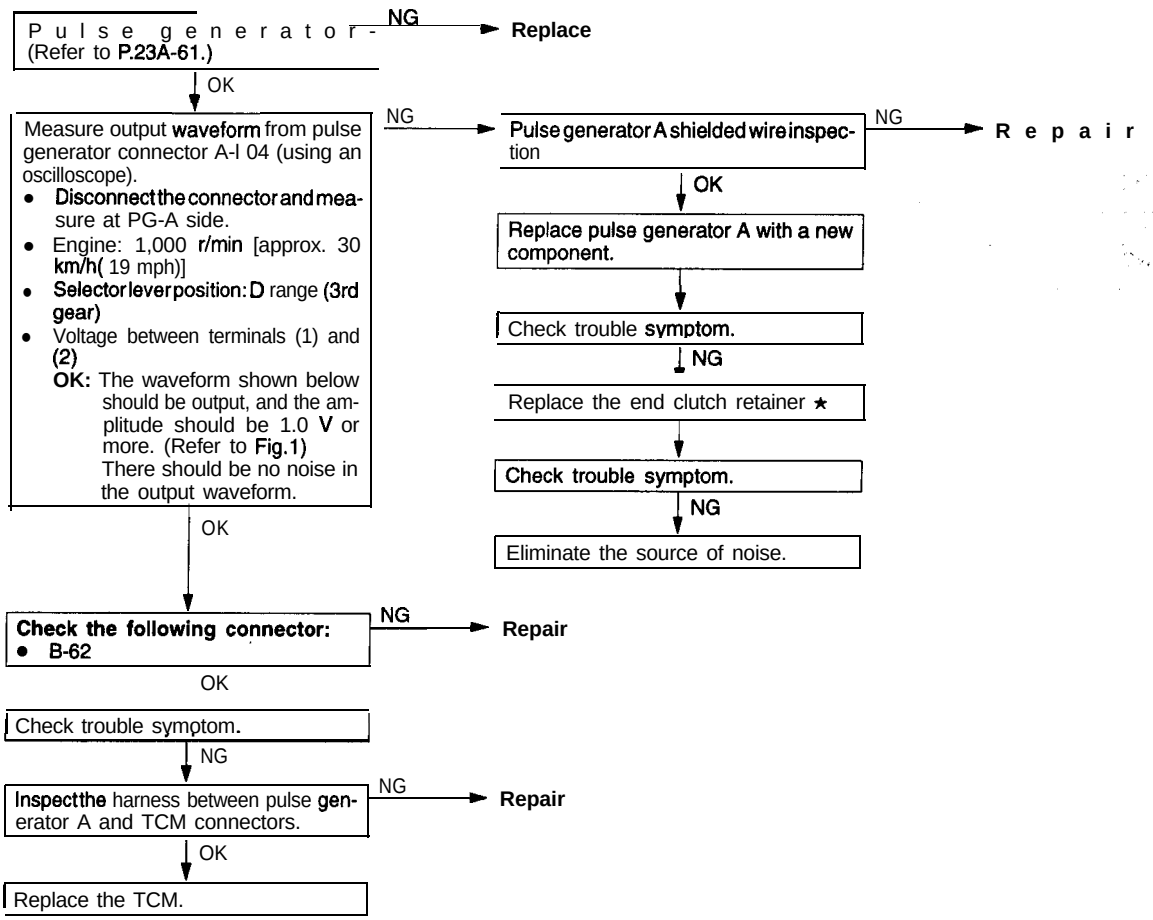

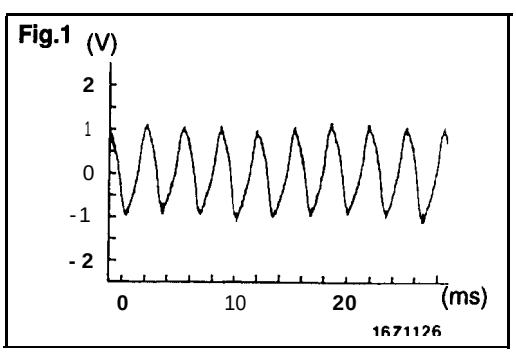

TSB Revision

Code No. 32, 82 Pulse generator B system	Probable cause
[Comment] If pulse generator B output and the input shaft speed is 1,500 r/min or above, there is an open circuit in pulse generator B and diagnostic trouble code No. 32 is output. In addition, if diagnosis code No. 32 is output 4 times, there is an open circuit in pulse generator B, fail-safe code No. 82 is output and the vehicle is locked in 3rd gear (D) or 2nd gear (2, L) as a fail-safe measure.	• Malfunction of pulse generator B • Malfunction of connector • Malfunction of transfer driven gear • Malfunction of, TCM • Noise generated

★: Refer to Automatic Transaxle **Overhaul**

Pulse generator B check (Refer to P.23A-61.)
- NG → **Replace**
- OK ↓

Measure output waveform from pulse generator connector A-104 (using an oscilloscope).
- Disconnect the connector and measure at PG-B side.
- Engine: 1,000 r/min [approx. 30 km/h(19 mph)]
- Selector lever position: Drange (3rd gear)
- Voltage between terminals (3) and (4)

OK: The waveform shown below should be output, and the amplitude should be 0.5 V or more. (Refer to Fig.1)
There should be no noise in the output waveform.

- NG → Pulse generator B shielded wire inspection
  - NG → **Repair**
  - OK ↓
  - Replace pulse generator B with a new component.
  - ↓
  - Check trouble symptom.
  - NG ↓
  - Replace the transfer driven gear ★
  - ↓
  - Check trouble symptom.
  - NG
  - Eliminate the source of noise.
- OK ↓

Check the following connector:
- B-62

- NG → **Repair**
- OK

Check trouble symptom.
- NG

Inspect the harness wire between pulse generator B and TCM connectors.
- NG → **Repair**
- OK

Replace the TCM.

Fig.1

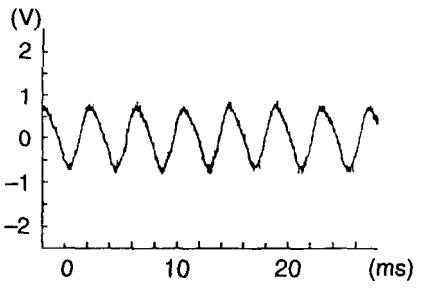

TSB Revision

Code No. 36, 37 Park/neutral position switch system	Probable cause
[Comment] When the park/neutral position switch signal is input to two or more places simultaneously for a continuous period of 30 seconds or more, it is judged that there is a short-circuit in the park/neutral position switch and diagnostic trouble code No. 36 is output. When the park/neutral position switch signal is not input to a single place for a continuous period of 30 seconds or more, it is judged that there is an open circuit in the park/neutral position switch and diagnostic trouble code No. 37 is output.	• Malfunction of park/neutral position switch • Malfunction of connector • Malfunction of ignition switch • Malfunction of TCM

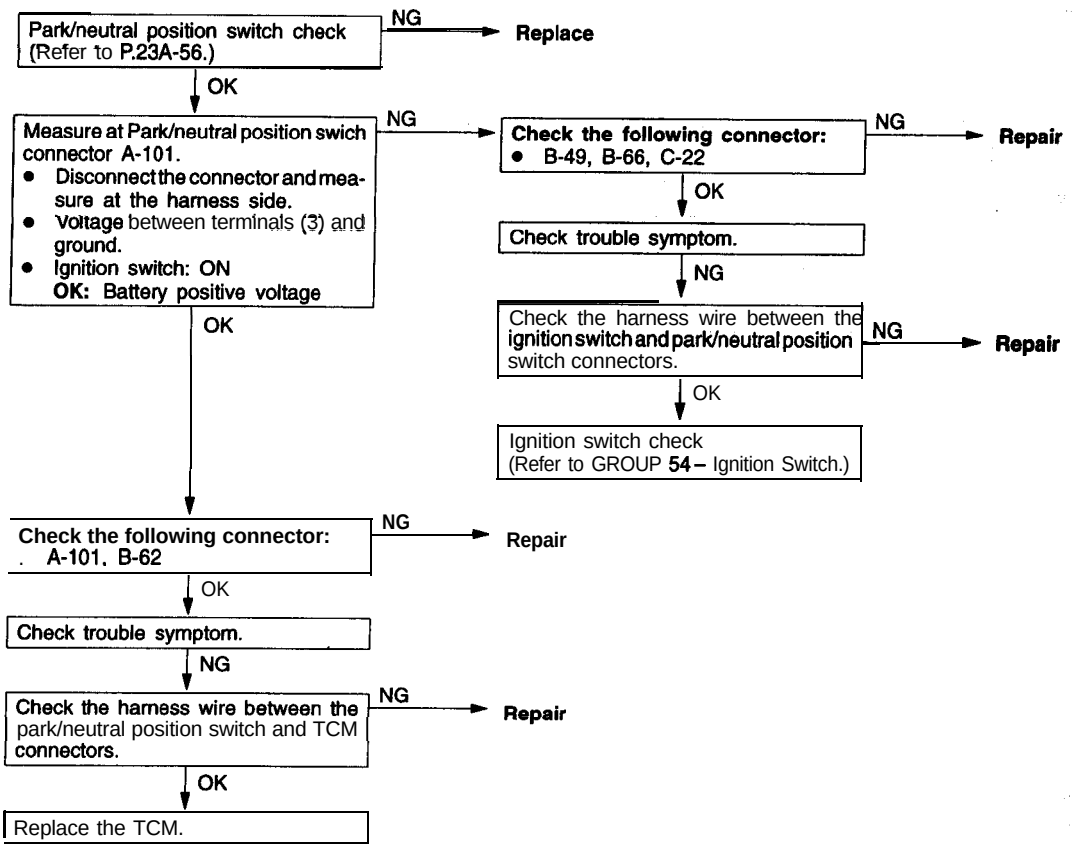

TSB Revision

Code No. 41, 42, 83 Shift control solenoid valve A (SCSV-A) system	Probable cause
[Comment] If the resistance value of shift control solenoid valve A is high, there is an open circuit in shift control solenoid valve A and diagnostic trouble code No. 41 is output. If the resistance value is low, there is a short circuit in shift control solenoid valve A and diagnostic trouble Code No. 42 is output. In addition, if diagnostic trouble code No. 41 or 42 is output 4 times, there is an open or short circuit in shift control solenoid valve A, fail-safe code No. 63 is output and the vehicle is locked in 3rd gear (D) as a fail-safe measure.	• Malfunction of shift control solenoid valve A • Malfunction of connector • Malfunction of TCM

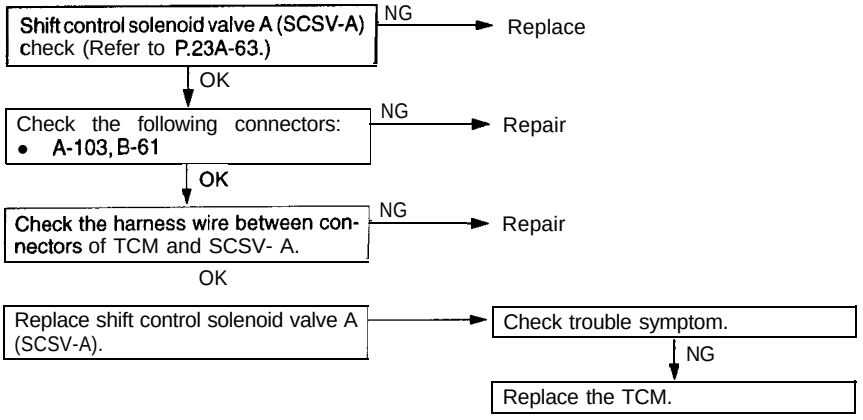

Code No. 43, 44, 84 Shift control solenoid valve B (SCSV-B) system	Probable cause
[Comment] If the resistance value of shift control solenoid valve B is high, there is an open circuit in shift control solenoid valve B and diagnostic trouble code No. 43 is output. If the resistance value is low, there is a short circuit in shift control solenoid valve B and diagnostic trouble code No. 44 is output. In addition, if diagnostic trouble code No. 43 or 44 is output 4 times, there is an open or short circuit in shift control solenoid valve B, fail-safe code No. 64 is output and the vehicle is locked in 3rd gear (D) as a fail-safe measure.	• Malfunction of shift control solenoid valve B • Malfunction of connector • Malfunction of TCM

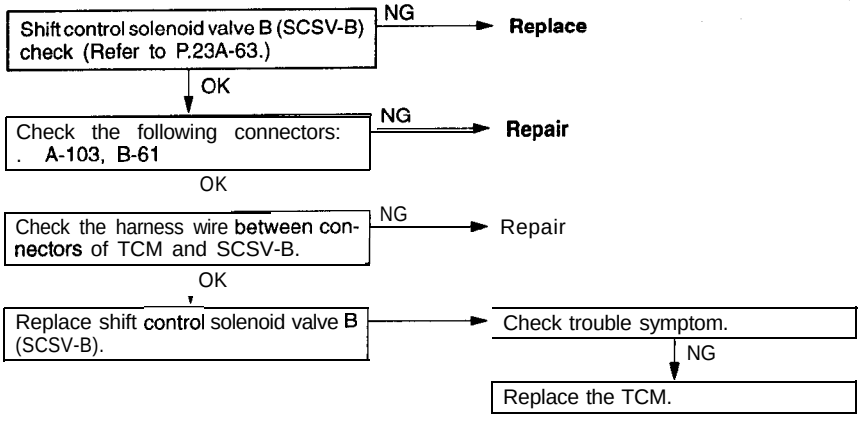

TSB Revision

Code No. 45, 46, 85 Pressure control solenoid valve (PCSV) system	Probable cause
[Comment] If the resistance value of the pressure control solenoid valve is high, there is an open circuit in the pressure control solenoid valve and diagnostic trouble code No. 45 is output. If the resistance value is low, there is a short circuit in the pressure control solenoid valve and diagnostic trouble code No. 46 is output. In addition, if diagnostic trouble code No. 45 or 46 is output 4 times, there is an open or short circuit in the pressure control solenoid valve, fail-safe code No. 85 is output and the vehicle is locked in 3rd gear (D) or 2nd gear (2, L) as a fail-safe measure.	• Malfunction of pressure control solenoid valve • Malfunction of connector • Malfunction of TCM

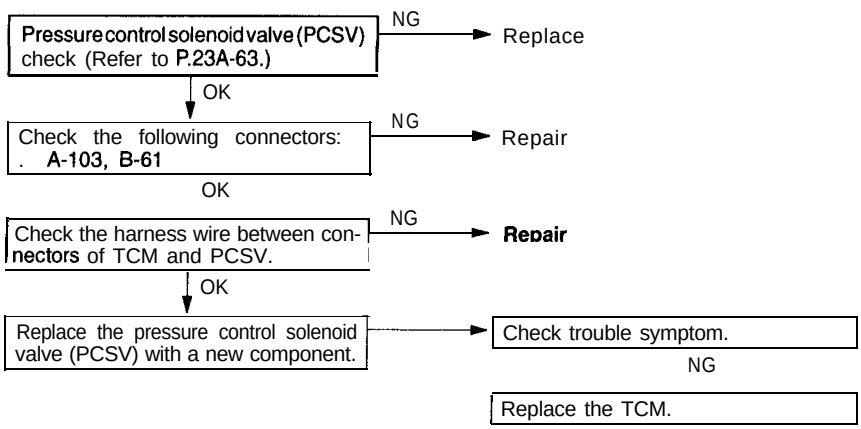

Code No. 47, 48, 49, 58 Torque converter clutch solenoid system	Probable cake
[Comment] If the resistance value of the torque converter clutch solenoid is high, there is an open circuit in the torque converter clutch solenoid and diagnostic trouble code No. 47 is output. If the resistance value is low, there is a short circuit in the torque converter clutch solenoid and diagnostic trouble code No. 48 is output. In addition, if torque converter clutch solenoid drive duty continues at 100% for 4 seconds or more, there is an abnormality in the torque converter clutch control system and diagnostic trouble code No. 49 is output. If the calculated slippage amount (the result when the input shaft speed is subtracted from the engine speed) is 5 r/min for ten seconds when the throttle position is 1.5 V or higher and the output shaft speed is 1,000 r/min in the direct-coupled non-operating range, even though the torque converter clutch solenoid is off, the torque converter clutch is stuck on and diagnostic trouble code No. 58 is output.	• Malfunction of torque converter clutch solenoid • Malfunction of connector • Malfunction of TCM

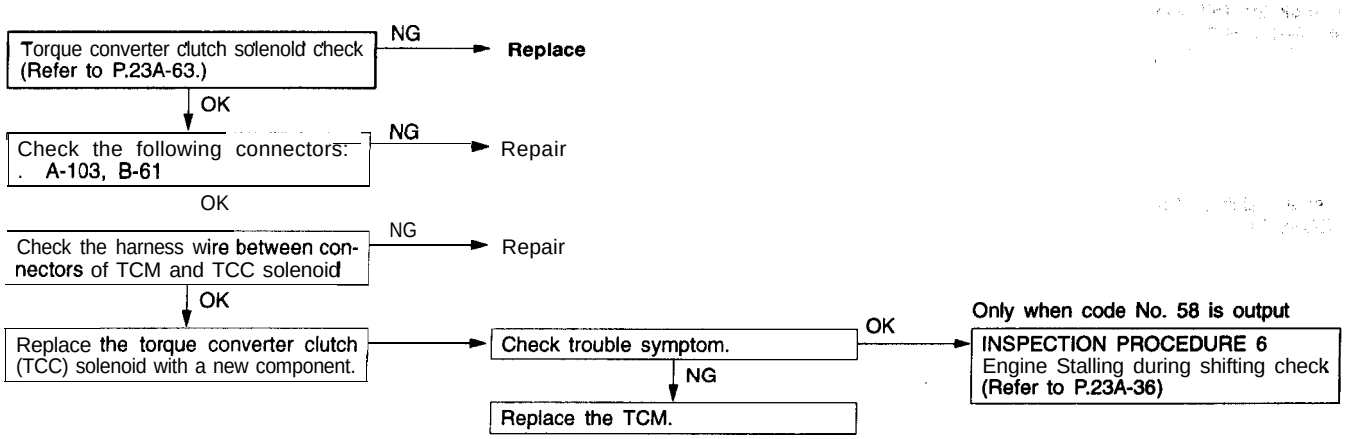

TSB Revision

Code No. 51, 86 1 st gear incorrect ratio	Probable cause
[Comment] If the value resulting from dividing the PG-A output (input shaft rotation speed) by the 1st gear ratio does not match the PG-B output (output shaft rotation speed) after 1st gear is engaged, diagnostic trouble code No. 51 is output. In addition, if related diagnostic trouble codes (Nos. 51, 52, 53 and 54) are output 4 times, there is an incorrect gear ratio, fail-safe code No. 88 is output and the vehicle is locked in 3rd gear (D) or 2nd gear (2, L) as a fail-safe measure.	• Malfunction of pulse generator A or B • Malfunction of transfer driven gear • Malfunction of end clutch retainer • Malfunction of rear clutch • Noise generated

★: Refer to Automatic Transaxle Overhaul

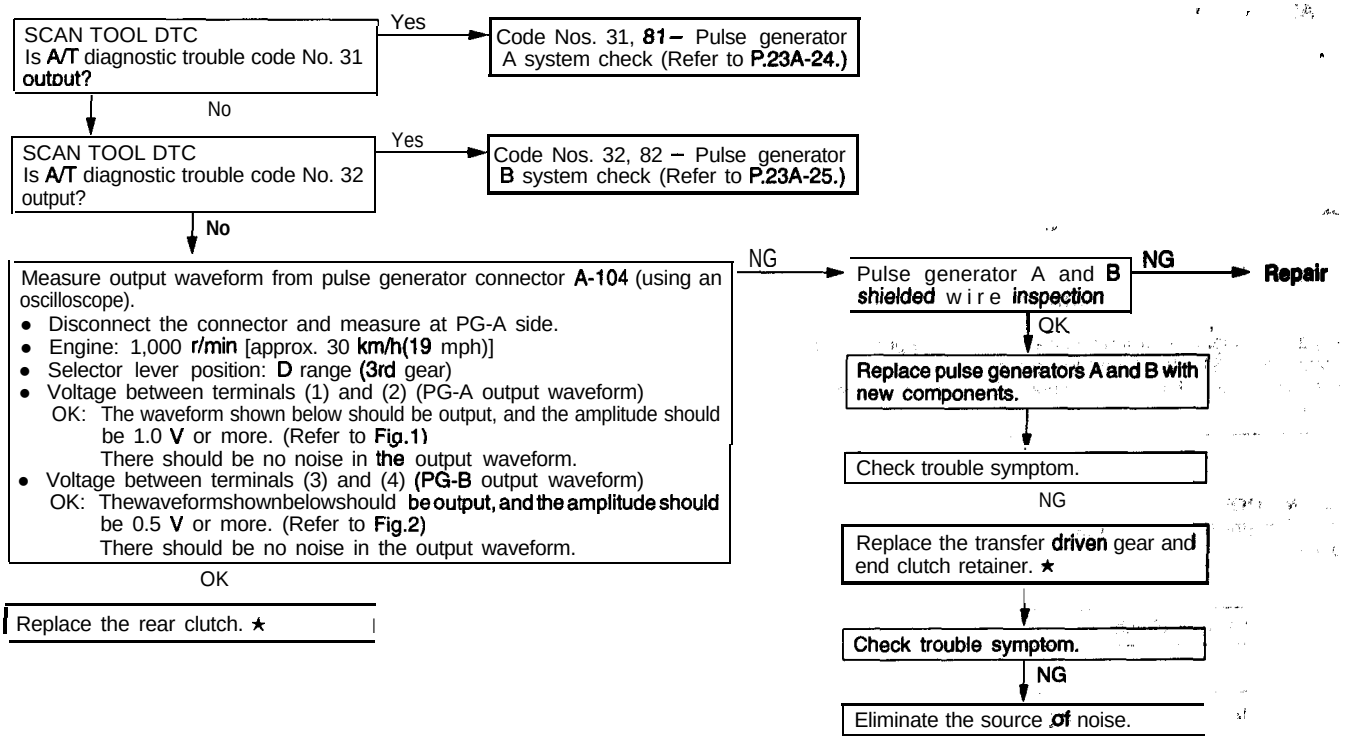

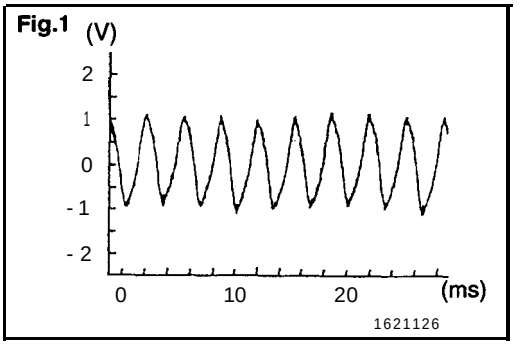

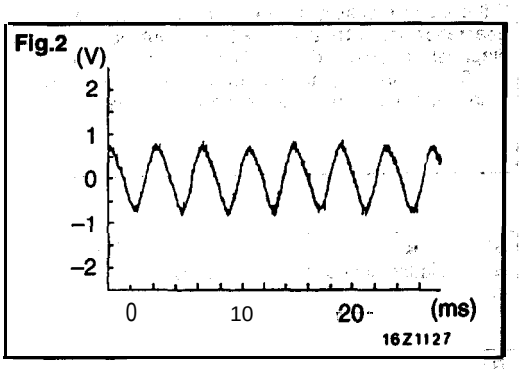

TSB Revision

Code No. 52, 86 2nd gear incorrect ratio	Probable cause
[Comment] If the value resulting from dividing the PG-A output (input shaft rotation speed) by the 2nd gear ratio does not match the PG-B output (output shaft rotation speed) after 2nd gear is engaged, diagnostic trouble code No. 52 is output. In addition, if related diagnostic trouble codes (Nos. 51, 52, 53 and 54) are output 4 times, there is an incorrect gear ratio, fail-safe code No. 86 is output and the vehicle is locked in 3rd gear (D) or 2nd gear (2, L) as a fail-safe measure.	• Malfunction of pulse generator A or B • Malfunction of transfer driven gear • Malfunction of end clutch retainer • Malfunction of rear clutch • Noise generated • Malfunction of kickdown brake'

★: Refer to Automatic Transaxle Overhaul

SCAN TOOL DTC
Is A/T diagnostic trouble code No. 51 output?

→ Yes → Code Nos. 51, 86 – 1 st gear incorrect ratio check (Refer to P.23A-29.)

↓ No

Replace the kickdown brake. ★

Code No. 53, 86 3rd gear incorrect ratio	Probable cause
[Comment] If the value resulting from dividing the PG-A output (input shaft rotation speed) by the 3rd gear ratio does not match the PG-B output (output shaft rotation speed) after 3rd gear is engaged, diagnostic trouble code No. 53 is output. In addition, if related diagnostic trouble codes (Nos. 51, 52, 53 and 54) are output 4 times, there is an incorrect gear ratio, fail-safe code No. 86 is output and the vehicle is locked in 3rd gear (D) or 2nd gear (2, L) as a fail-safe measure.	• Malfunction of pulse generator A or B • Malfunction of transfer driven gear • Malfunction of end clutch retainer • Malfunction of front clutch • Noise generated

★: Refer to Automatic Transaxle Overhaul

SCAN TOOL DTC
Is A/T diagnostic trouble code No. 51 output?

→ Yes → Code Nos. 51, 86 – 1 st gear incorrect ratio check (Refer to P.23A-29.)

↓ No

Replace the front clutch. ★

Code No. 54, 86 4th gear incorrect ratio	Probable cause
[Comment] If the value resulting from dividing the PG-A output (input shaft rotation speed) by the 4th gear ratio does not match the PG-B output (output shaft rotation speed) after 4th gear is engaged, diagnostic trouble code No. 54 is output. In addition, if related diagnostic trouble codes (Nos. 51, 52, 53 and 54) are output 4 times, there is an incorrect ratio, fail-safe code No. 86 is output and the vehicle is locked in 3rd gear (D) or 2nd gear (2, L) as a fail-safe measure.	• Malfunction of pulse generator B • Malfunction of connector • Malfunction of transfer driven gear • Malfunction of end clutch retainer . Malfunction of rear clutch . Noise generated • Malfunction of kickdown brake • Malfunction of end clutch

★: Refer to Automatic Transaxle Overhaul

SCAN TOOL DTC
Is A/T diagnostic trouble code No. 52 output?

→ Yes → Code nos. 52, 86 – 2nd gear incorrect ratio check (Refer to P.23A-30.)

↓ No

Replace the end clutch. ★

TSB Revision

Code No. 59 Anomalous vibration occurrence	Probable cause
[Comment] If pulse generator A output indicates the revolution alteration by more than 50 r/min in a specified cycle, diagnosis code 59 is output.	• Noise generated • Automatic transmission fluid deteriorated • Vibration occurred

Is there noise in the pulse generator A output waveform? → Eliminate the source Of noise.

↓ No

Replace automatic transmission fluid. (Refer to GROUP 00 – Maintenance Service.)

↓

Check trouble symptom.

NG

Inspection procedure 15; vibration. (Refer to P.23A-43.)

Code No.61 Torque reduction request and execution signal lines Code No.62 Torque reduction request signal lines Code No.63 Torque reduction execution signal lines	Probable cause
[Comment] If a "torque reduction executing" signal is detected for 0.2 second or more while a "no torque reduction request" signal is being output, there is a short-circuit in the torque reduction request signal line or an open circuit in the torque reduction execution signal line, and code No. 61 is output. If a "torque reduction executing" signal is not detected four times even though 0.2 second has passed since a "torque reduction request" signal was output, there is an open circuit in the torque reduction request signal line and code No. 62 is output. If a "torque reduction permissible" signal is not detected under the following conditions, there is a short-circuit in the torque reduction execution signal line and code No. 63 is output. The transaxle output shaft speed has been 1,000 r/min or higher after the ignition switch in turned on. Engine speed has been 1,000 r/min or higher for 20 minutes or more after the ignition switch is turned on.	• Malfunction of ECM • Malfunction of TCM • Malfunction of connector

Measure at ECM B-53
- Disconnect the connector and measure at the harness side.
- Voltage between (7) and ground
- Ignition switch ON

OK: 4.8–5.2 V

NG → Check the following connector:
- B-61

NG → Repair

OK → Check trouble symptom.

NG → Check the harness wire between the TCM and ECM.

NG → Repair

OK → Replace the TCM.

OK

Check the following connectors:
- B-53, B-61

NG → Repair

OK

Check trouble symptom.

NG

Check the harness wire between the TCM and ECM.

NG → Repair

OK

Check the ECM. (Refer to GROUP 13A – Troubleshooting.)

TSB Revision

INSPECTION CHART FOR TROUBLE SYMPTOMS

23100800144

Trouble symptom		Inspection procedure	Reference page No.
Communication with scan tool is not possible		1	P.23A- 33
Driving impossible	Starting impossible (will not crank)	2	P.23A-33
	Does not move forward	3	P.23A- 34
	Does not back-up	4	P.23A-35
	Does not move (forward or reverse)	5	P.23A-36
Malfunction when starting	Engine stalling during shifting	6	P.23A-36
	Shocks when shifting from N to D and long lag time	7	P.23A- 37
	Shocks when shifting from N to R and long lag time	6	P.23A-38
	Shocks when shifting from N to D, N to R and long lag time	9	P.23A-39
Malfunction when shifting	Shocks and flare shift	10	P.23A-40
Early, late shift points	All points	11	P.23A-41
	Some points	12	P.23A-42
Does not shift	No fail-safe codes	13	P.23A- 42
Malfunction while driving	Poor acceleration	14	P.23A-43
	Vibration	15	P.23A-43
Overdrive switch system		16	P.23A-44
Closed throttle position switch system		17	P.23A-44
A/C load signal system		18	P.23A- 45
Vehicle speed sensor system		19	P.23A-46

INSPECTION PROCEDURE FOR TROUBLE SYMPTOMS

INSPECTION PROCEDURE 1

• Communication with scan tool is not possible	Probable cause
[Comment] If communication with the scan tool is not possible, the cause is probably a defective diagnosis line or the TCM is not functioning.	• Malfunction of diagnosis line • Malfunction of TCM power supply circuit • Malfunction of TCM ground circuit • Malfunction of TCM

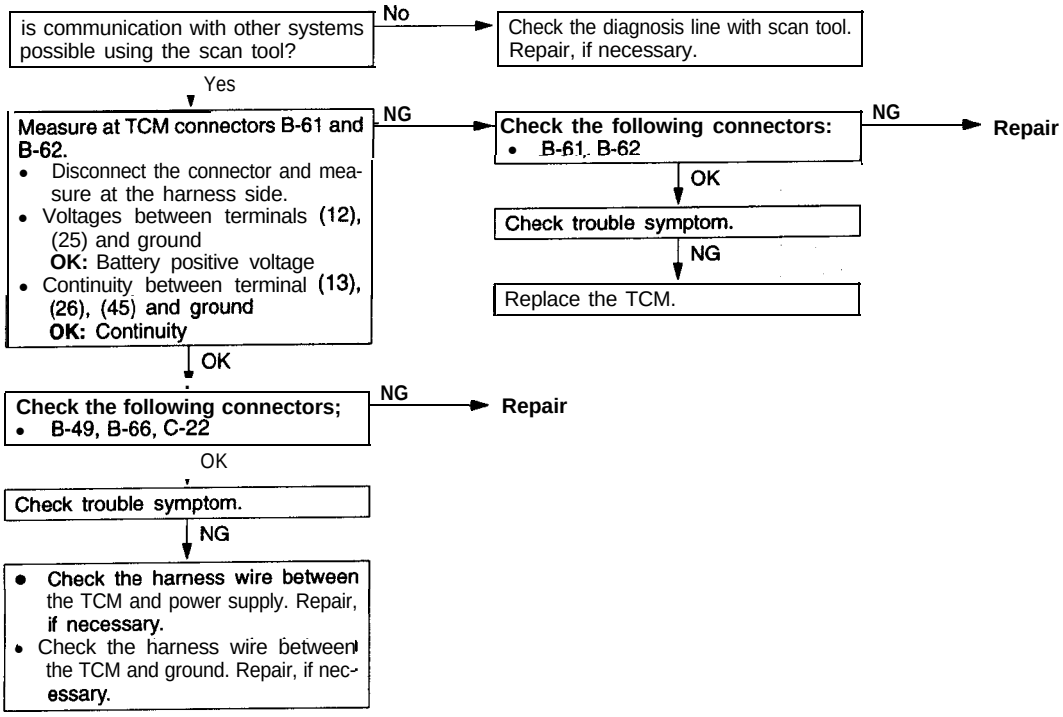

INSPECTION PROCEDURE 2

• Starting impossible (will not crank)	Probable cause
[Comment] Starting is not possible when the selector lever is in P or N range. In such cases, the cause is probably a defective engine system, torque converter or oil pump.	• Malfunction of engine system • Malfunction of torque converter • Malfunction of torque converter clutch • Malfunction of oil pump

★: Refer to Automatic Transaxle Overhaul

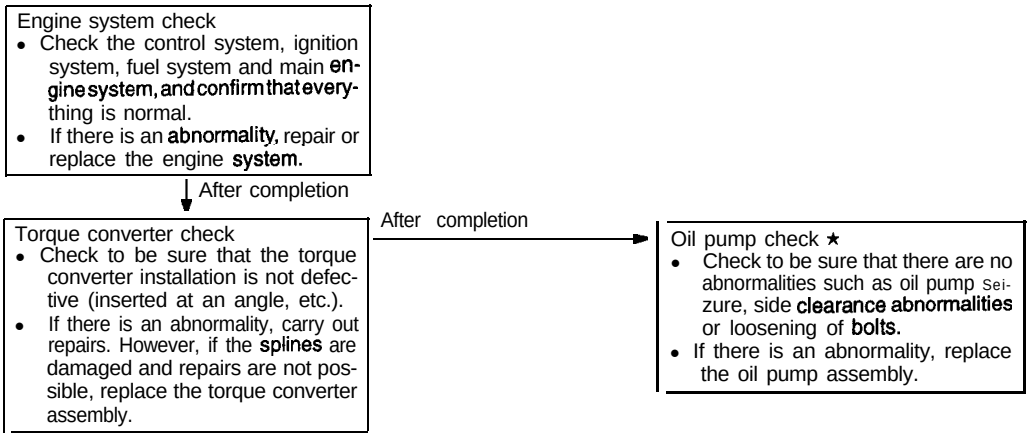

TSB Revision

INSPECTION PROCEDURE 3

• Does not move forward	Probable cause
[Comment] When the engine is idling, the vehicle does not move forward even if the selector lever is shifted from N to D, 2 or L range. In such cases, the cause is probably abnormal line pressure, or a defective rear clutch or one-way clutch.	• Abnormal line pressure • Malfunction of rear clutch • Malfunction of one-way clutch • Malfunction of valve body

★: Refer to Automatic Transaxle Overhaul'

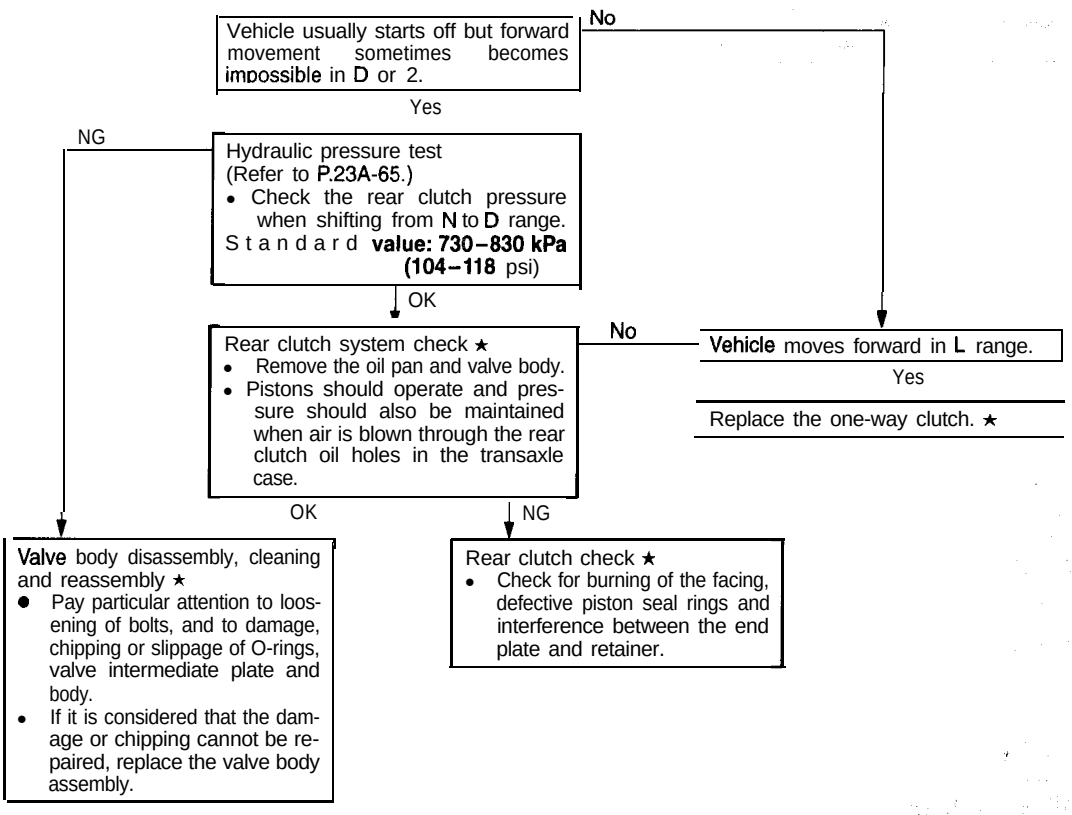

TSB Revision

INSPECTION PROCEDURE 4

• Does not back-up	Probable cause
[Comment] When the engine is idling, the vehicle does not back-up even if the selector lever is shifted from N to R range. In such cases, the cause is probably abnormal pressure in the low reverse brake or front clutch, or a defective low reverse brake or front clutch.	• Abnormal low reverse brake pressure • Abnormal front clutch pressure • Malfunction of front clutch • Malfunction of low reverse brake • Malfunction of valve body

★: Refer to Automatic Transaxle Overhaul

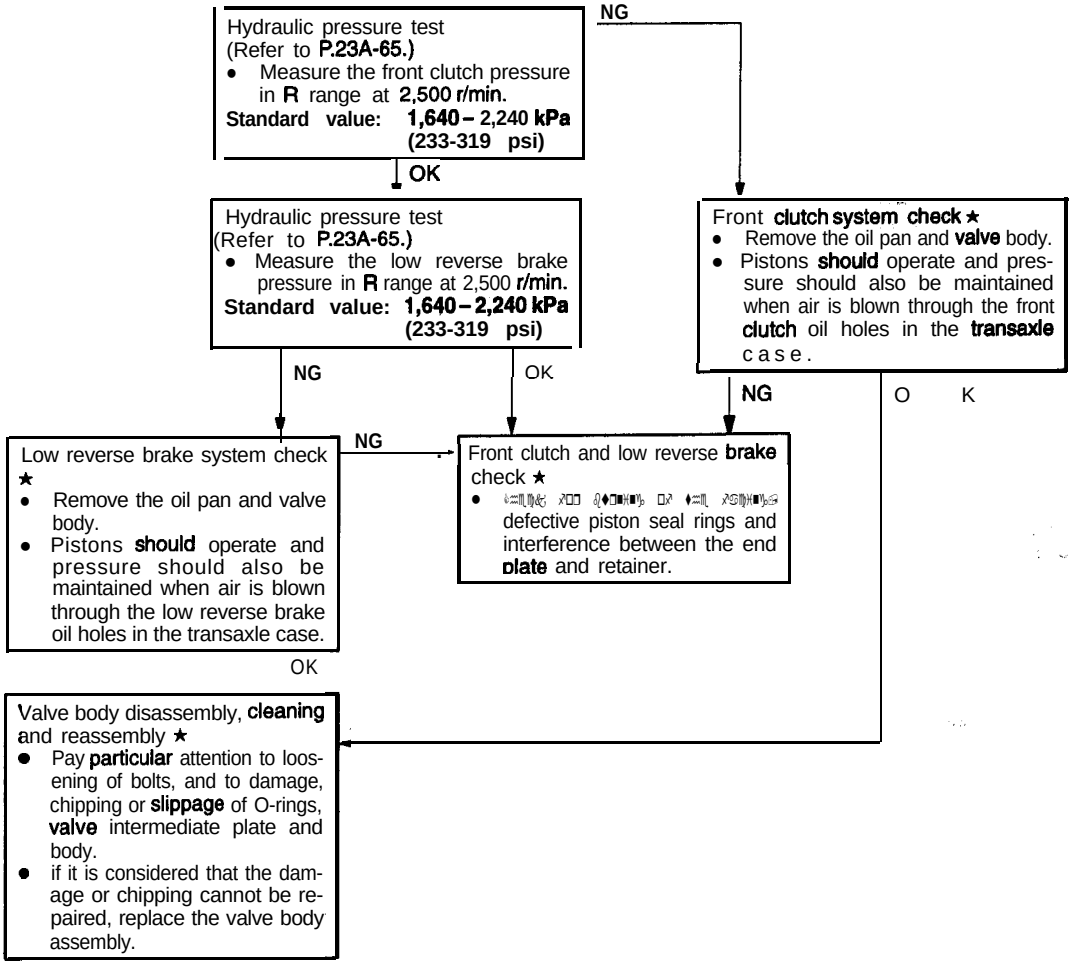

TSB Revision

INSPECTION PROCEDURE 5

• Does not move (forward or reverse)	Probable cause'
[Comment] When the engine is idling, the vehicle does not move forward or in reverse even if the selector lever is shifted from N to D, 2, L or R range. In such cases, the cause is probably abnormal reducing pressure, or a defective oil pump or power train.	• Abnormal reducing pressure • Malfunction of power train • Malfunction of oil pump • Malfunction 'of valve body

★: Refer to Automatic Transaxle Overhaul

Hydraulic pressure test (Refer to P.23A-65.)
- Measure the reducing pressure in N range while the engine is idling.

Standard value: 370–490kPa(53–70 psi)

OK → Power train check ★
- Disassemble the transaxle, check the condition of the planetary carrier, idler gear, output shaft and other parts, and repair or replace if necessary.

NG ↓

Reducing pressure adjustment (Refer to P.23A-90.)

OK → Power train check ★

NG ↓

Valve body disassembly, cleaning and reassembly ★
- Pay particular attention to loosening of bolts, and to damage, chipping or slippage of O-rings, valve intermediate plate and body.
- If it is considered that the damage or chipping cannot be repaired, replace the valve body assembly.

After completion → Oil pump check ★
- Check to be sure that there are no abnormalities such as oil pump seizure, side clearance abnormalities or loosening of bolts.
- If there is an abnormality, replace the oil pump assembly.

INSPECTION PROCEDURE 6

• Engine stalling during shifting	Probable cause
[Comment] When the engine is idling, the engine stalls when the selector lever is shifted from N to D, 2, L or R range. In such cases, the cause is probably a defective engine system or damper clutch control solenoid valve.	• Malfunction of engine system • Malfunction of torque converter clutch solenoid • Malfunction of valve body • Malfunction of torque converter

★: Refer to Automatic Transaxle Overhaul

Engine system check
- Check the control system, ignition system, fuel system and main engine system, and confirm that everything is normal.
- If there is an abnormality, repair or replace the engine system.

After completion

Solenoid valve connector check
- Check to be sure that there is no water in the connector.
- Check to be sure that none of the terminals are shorted to each other.

After completion

Torque converter clutch solenoid check
- Check to be sure that the valve is not sticking due to foreign materials packed inside solenoid.
- If there is an abnormality, replace the solenoid assembly.

After completion

Transaxle cooling system check
- Check for plugged cooler lines.
- Check for plugged oil cooler.

After completion

Valve body disassembly, cleaning and reassembly ★
- Pay particular attention to loosening of bolts, and to damage, chipping or slippage of O-rings, valve intermediate plate and body.
- If it is considered that the damage or chipping cannot be repaired, replace the valve body assembly.

After completion

Torque converter check
- Check to be sure that there is no sticking due to separation from the damper clutch.
- If there is an abnormality, replace the torque converter assembly.

INSPECTION PROCEDURE 7

• Shocks when shifting from N to D and long lag time	Probable cause
[Comment] When the engine is idling, abnormal shocks or a lag time of 2 seconds or more occur when the selector lever is shifted from N to D range. In such cases, the cause is probably a defective rear clutch or valve body	• Malfunction of rear clutch • Malfunction of valve body • Malfunction of closed throttle position switch'

★: Refer to Automatic Transaxle' Overhaul

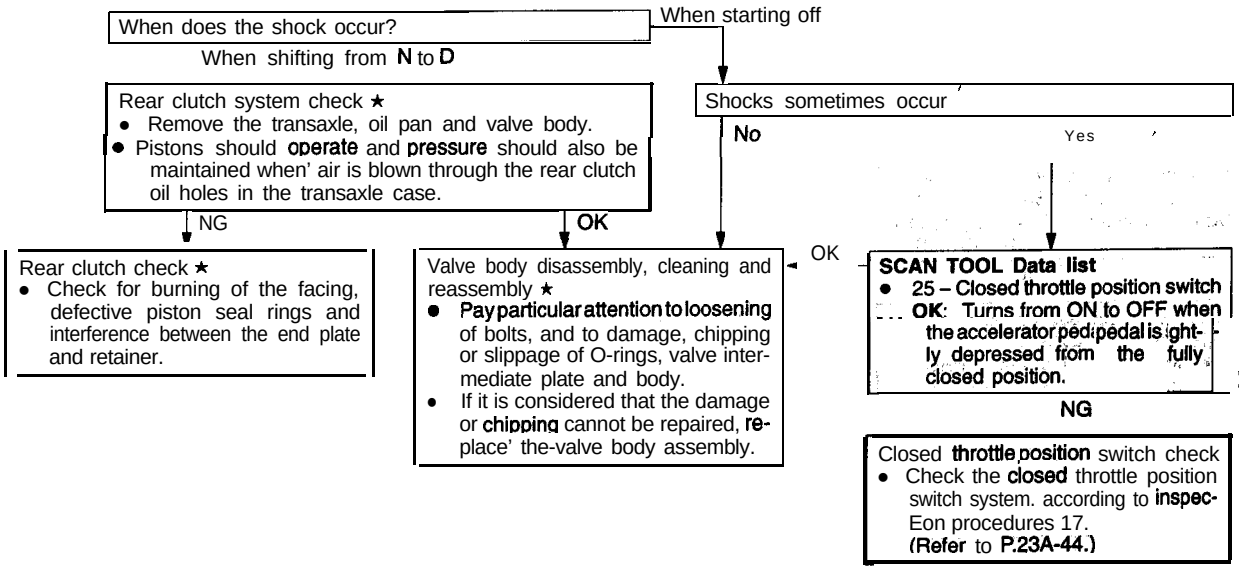

TSB Revision

INSPECTION PROCEDURE 8

• Shocks when shifting from N to R and long lag time	Probable cause
[Comment] When the engine is idling, abnormal shocks or a lag time of 2 seconds or more occurs when the selector lever is shifted from N to R range. In such cases, the cause is probably abnormal low reverse brake or front clutch pressure, or a defective low reverse brake or front clutch.	• Abnormal front clutch pressure • Abnormal low reverse brake pressure • Malfunction of front clutch • Malfunction of low reverse brake • Malfunction of valve body

★: Refer to Automatic Transaxle Overhaul

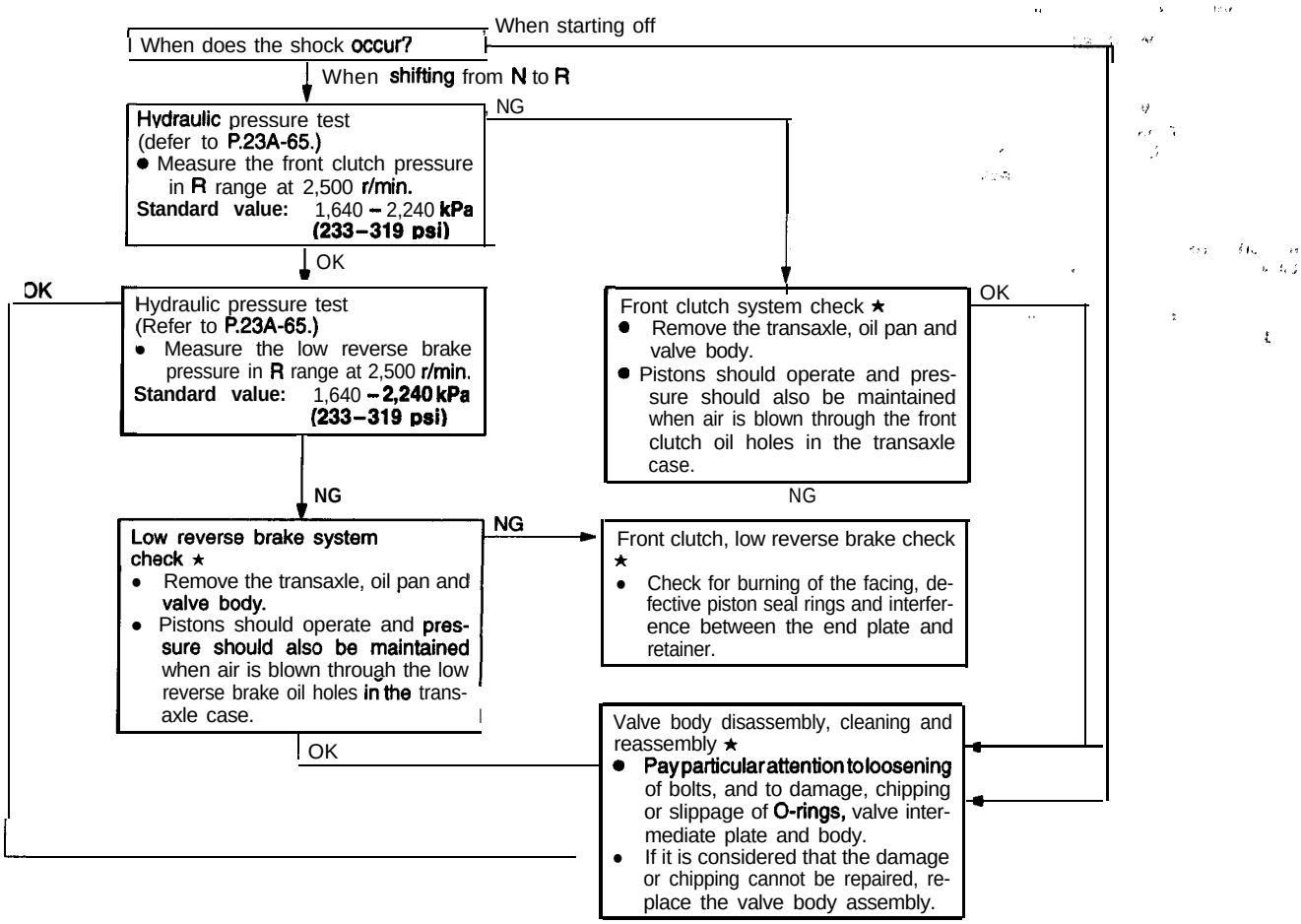

INSPECTION PROCEDURE 9

• Shocks when shifting from N to D, N to R and long lag time	Probable cause
[Comment] When the engine is idling, abnormal shocks or a lag time of 2 seconds or more occur when the selector lever is shifted from N to D range and also from N to R range. In such cases, the cause is probably abnormal reducing pressure or a defective oil pump.	• Abnormal reducing pressure • Malfunction of oil pump • Malfunction of valve body

★: Refer to Automatic Transaxle Overhaul

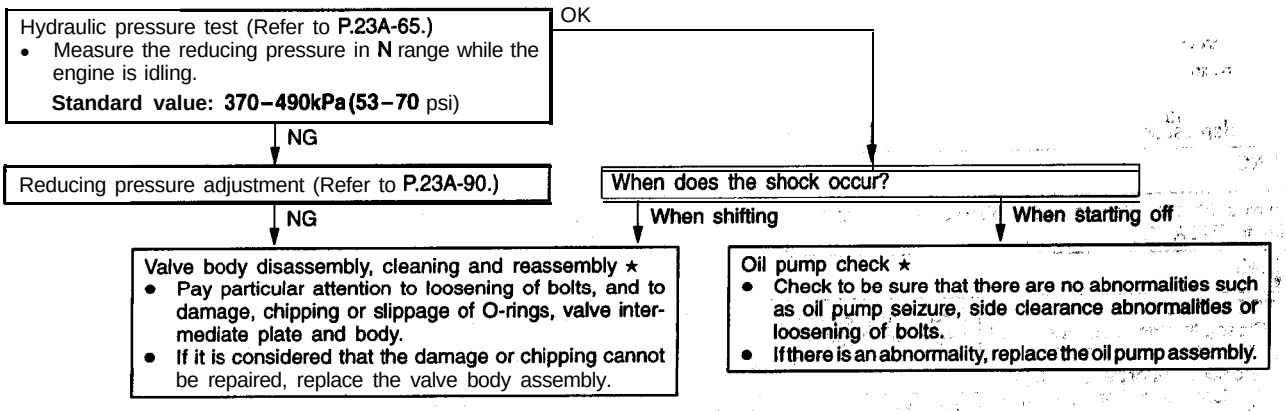

TSB Revision

INSPECTION PROCEDURE 10

• Shocks and flare shifts	Probable cause
[Comment] Shocks occur when driving due to upshifting or downshifting. In addition, the engine speed during shifting increases abnormally in comparison to normal shifting. In such cases, the cause is probably abnormal reducing pressure or a defective kickdown servo switch.	• Malfunction of kickdown servo switch • Abnormal reducing pressure • Malfunction of valve body • Malfunction of closed throttle positron switch • Malfunction of pressure control solenoid valve • Malfunction of clutches and brakes

★: Refer to Automatic Transaxle Overhaul

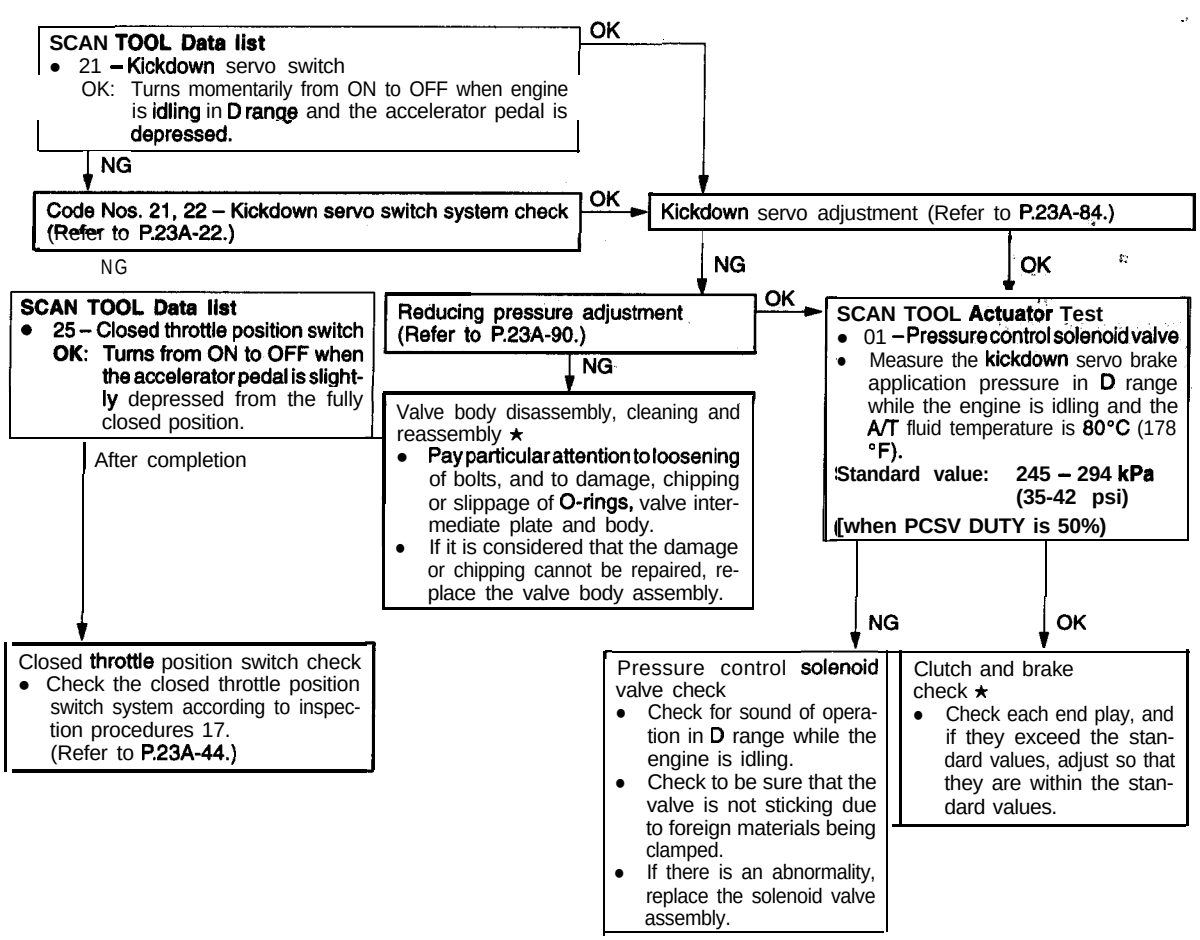

TSB Revision

INSPECTION PROCEDURE 11

• All points (Early, late shifting points)	Probable cause
[Comment] All shift points occurs early, late while driving. In such cases, the cause is probably a defective pulse generator B (PG-B) or shift control solenoid valve A or B (SCSV-A, B).	• Malfunction of pulse generator B (PG-B) • Malfunction of shift control solenoid valve A or B (SCSV-A, B) • Malfunction of TCM • Abnormal reducing pressure or kickdown servo brake application pressure • Malfunction of clutches and brakes • Malfunction, of 'valve body,

★: Refer to Automatic Transaxle Overhaul

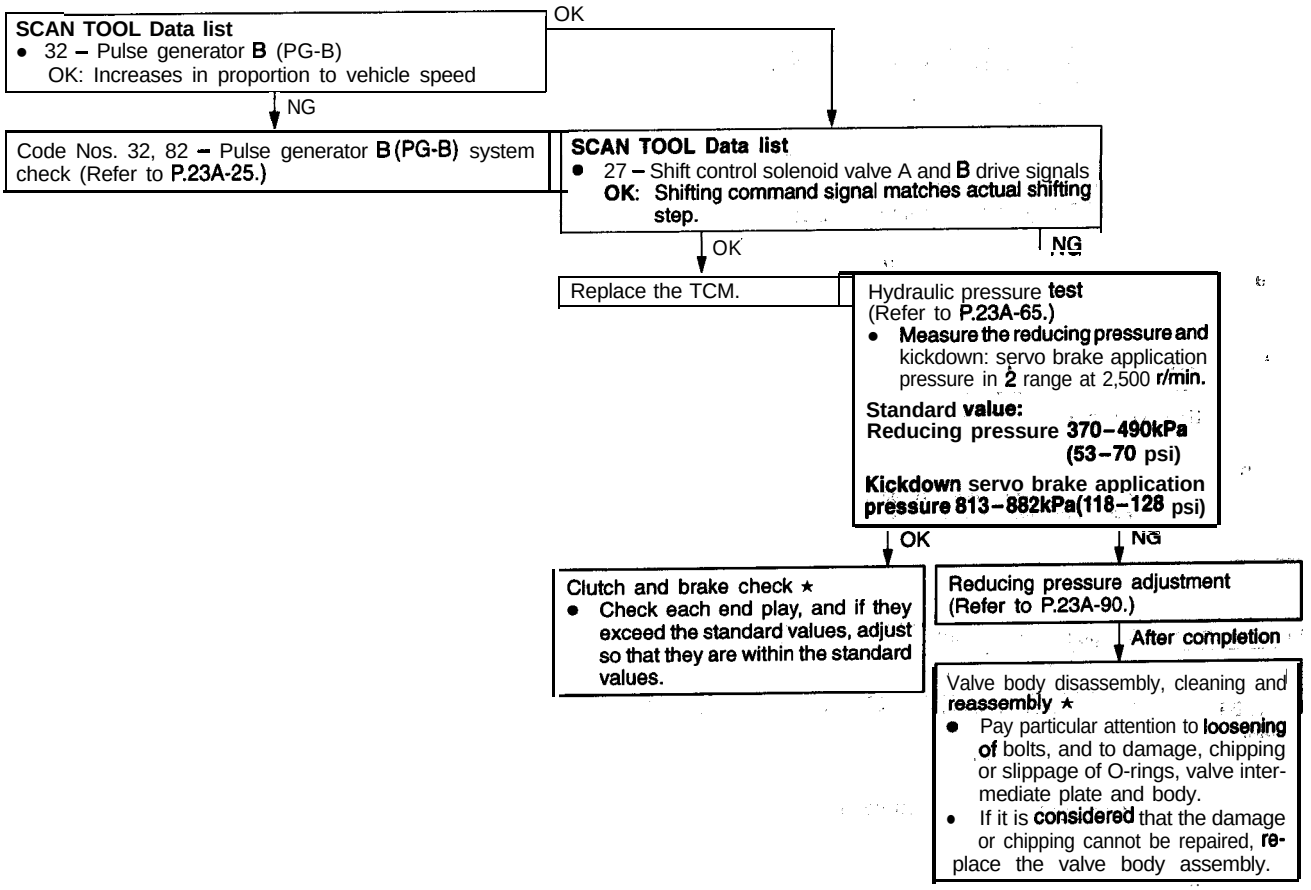

INSPECTION PROCEDURES 12

• Some points (Early, late shifting points)	Probable cause
[Comment] Some shift points occurs early, late while driving. In such cases, the cause is probably a defective valve body, or it is a phenomenon related to control and is not an abnormality.	• Malfunction of valve body

★: Refer to Automatic Transaxle Overhaul

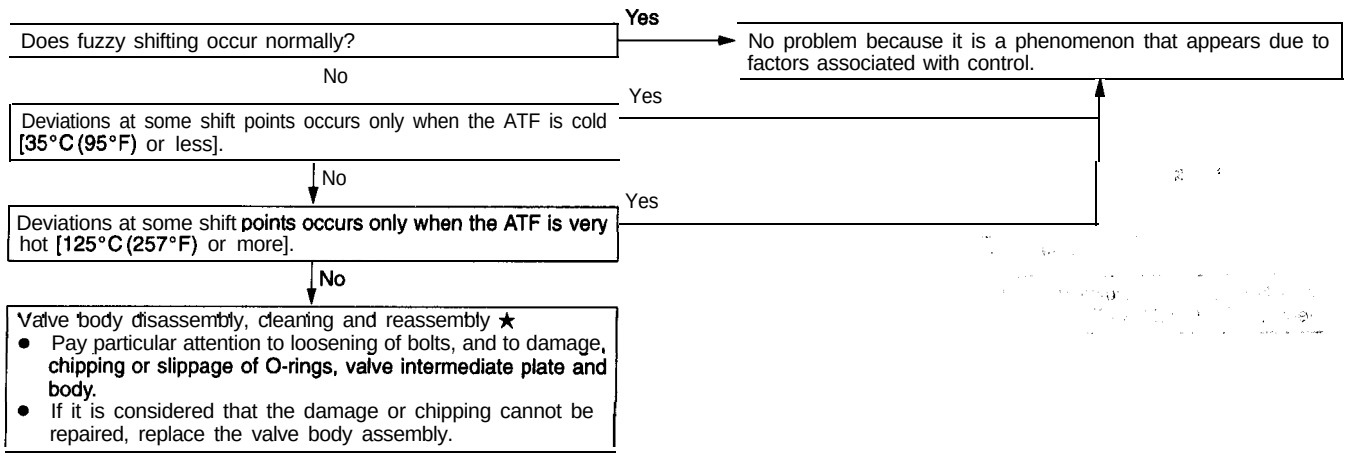

INSPECTION PROCEDURE 13

• No fail-safe codes (Does not shift)	Probable cause
[Comment] Shifting does not occur while driving, and no fail-safe codes are output. In such cases, the cause is probably a defective overdrive switch or Park/Neutral position switch.	• Malfunction of overdrive switch • Malfunction of Park/ Neutral position switch • Malfunction of power supply circuit • Malfunction of TCM

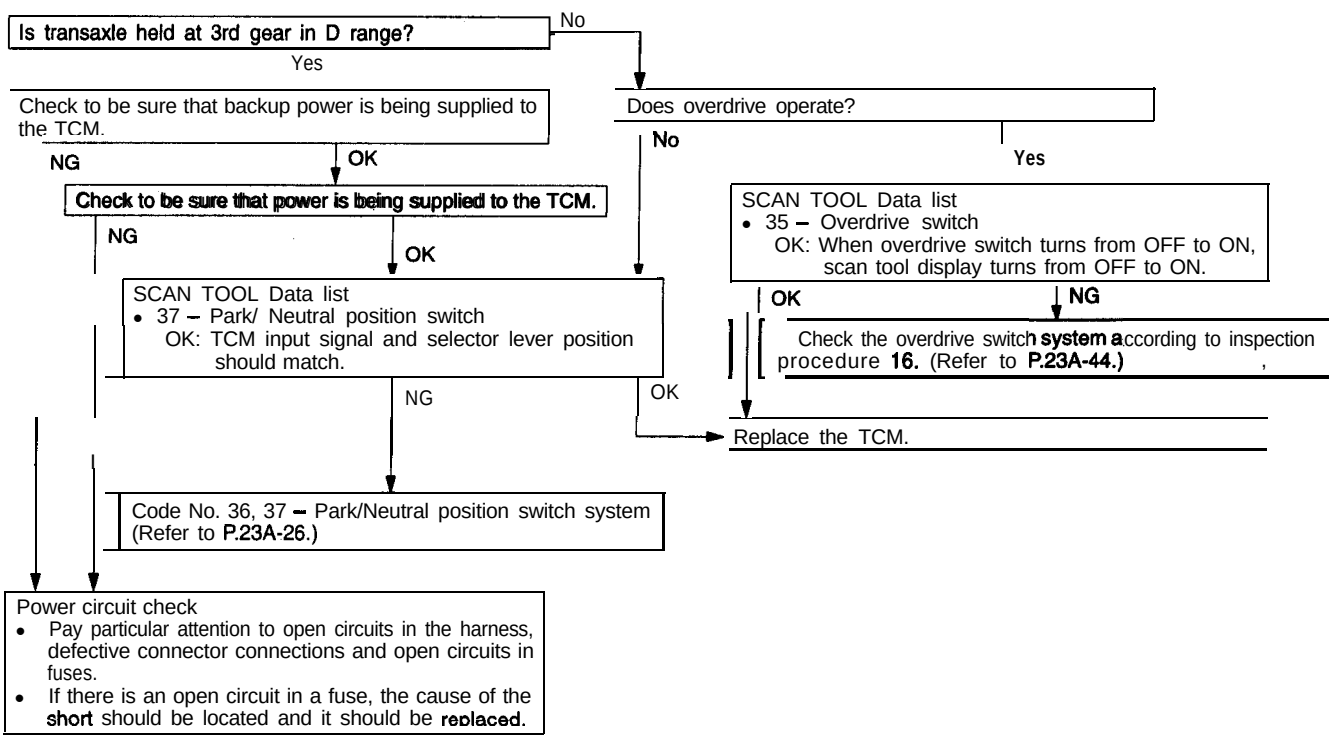

TSB Revision

INSPECTION PROCEDURE 14

● Poor acceleration	Probable cause
[Comment] While driving, acceleration is poor even if downshifting is performed. In such cases, the cause is probably a defective clutch or brake, or a defective engine system.	● Malfunction of clutches and brakes ● Malfunction of engine system

★: Refer to Automatic Transaxle Overhaul

Engine system check
- Check the control system, ignition system, fuel system and main engine system, and confirm that everything is normal.
- If there is an abnormality, repair or replace the engine system.

↓ After completion

Clutch and brake check ★
- Check each end play, and if they exceed the standard values, adjust so that they are within the standard values.
- Check for burning and wear in each facing.

INSPECTION PROCEDURE 15

● Vibration	Probable cause
[Comment] Vibration occurs when driving at constant speed or when accelerating in top range. In such cases, the cause is probably abnormal torque converter clutch pressure or a defective torque converter.	● Abnormal torque converter clutch pressure ● Malfunction of engine system ● Malfunction of torque converter ● Malfunction of valve body

★: Refer to Automatic Transaxle Overhaul

Does the problem occur even when the oil temperature sensor connector is disconnected?

Yes →

Engine system check
- Check the control system, ignition system, fuel system and main engine system, and confirm that everything is normal.
- If there is an abnormality, repair or replace the engine system.

No ↓

Hydraulic pressure test (Refer to P.23A-65.)
- Measure the torque converter clutch pressure in D range at 2,500 r/min (3rd gear).

  Standard value: 450–650 kPa (64-92 psi)

NG ↓

Replace the torque converter assembly.

OK ↓

Valve body disassembly, cleaning and reassembly ★
- Pay particular attention to loosening of bolts, and to damage, chipping or slippage of O-rings, valve intermediate plate and body.
- If it is considered that the damage or chipping cannot be repaired, replace the valve body assembly.

TSB Revision

INSPECTION PROCEDURE 16

• Overdrive switch system	Probable cause
[Comment] In cases such as the above, the cause is probably a defective overdrive switch circuit or defective ignition switch circuit.	• Malfunction of overdrive switch • Malfunction of connector • Malfunction of ignition switch • Malfunction of TCM

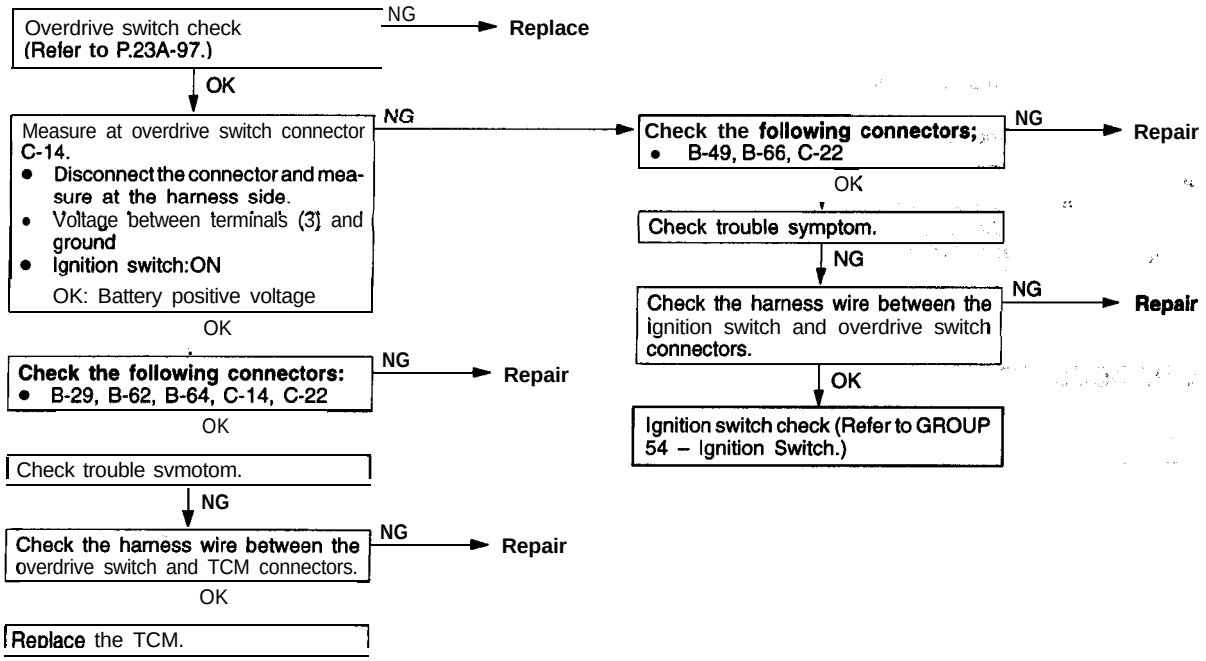

INSPECTION PROCEDURE 17

• Closed throttle position switch system	Probable cause
[Comment] In cases such as the above, the cause is probably a defective closed throttle position switch circuit.	• Malfunction of closed throttle position switch • Malfunction of connector • Malfunction of TCM

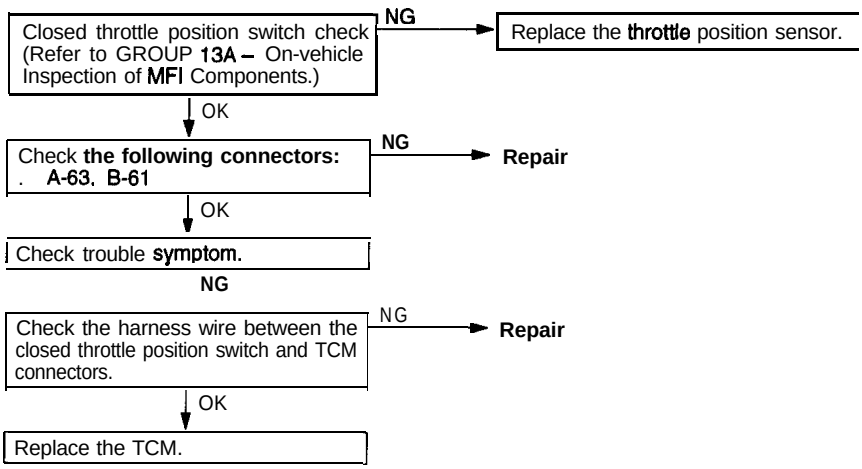

TSB Revision

INSPECTION PROCEDURE 18

• A/C load signal system	Probable cause
[Comment] In cases such as the above, the cause is probably a defective Idle position switch circuit.	• Malfunction of dual pressure switch • Malfunction of connector • Malfunction of A/C system • Malfunction of TCM

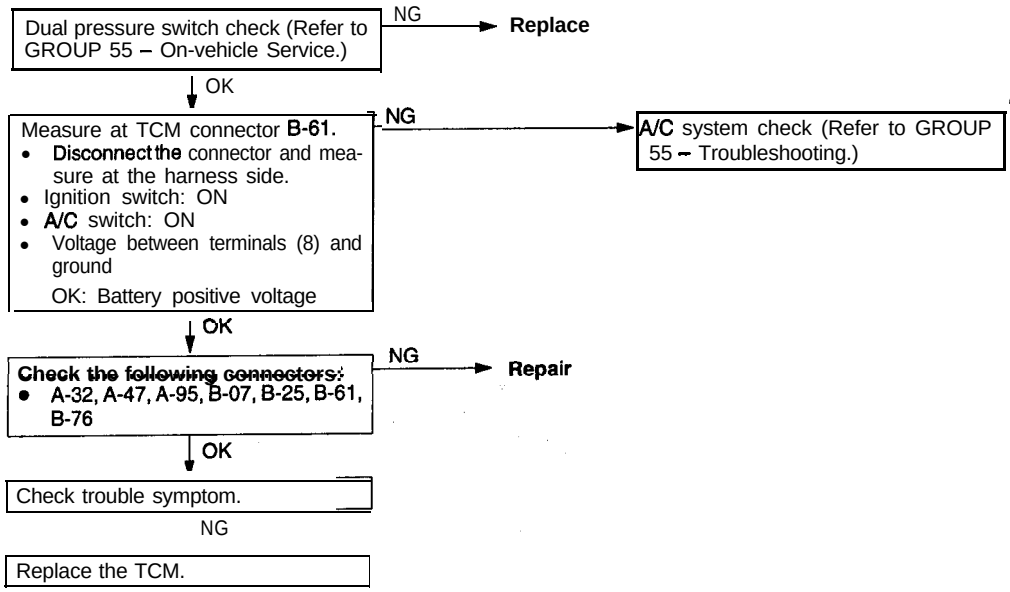

TSB Revision

INSPECTION PROCEDURE 19

• Vehicle speed sensor system	Probable 'cause
[Comment] In cases such as the above, the cause, is probably a defective vehicle speed sensor circuit.	• Malfunction of vehicle speed switch • Malfunction of connector • Malfunction of TCM

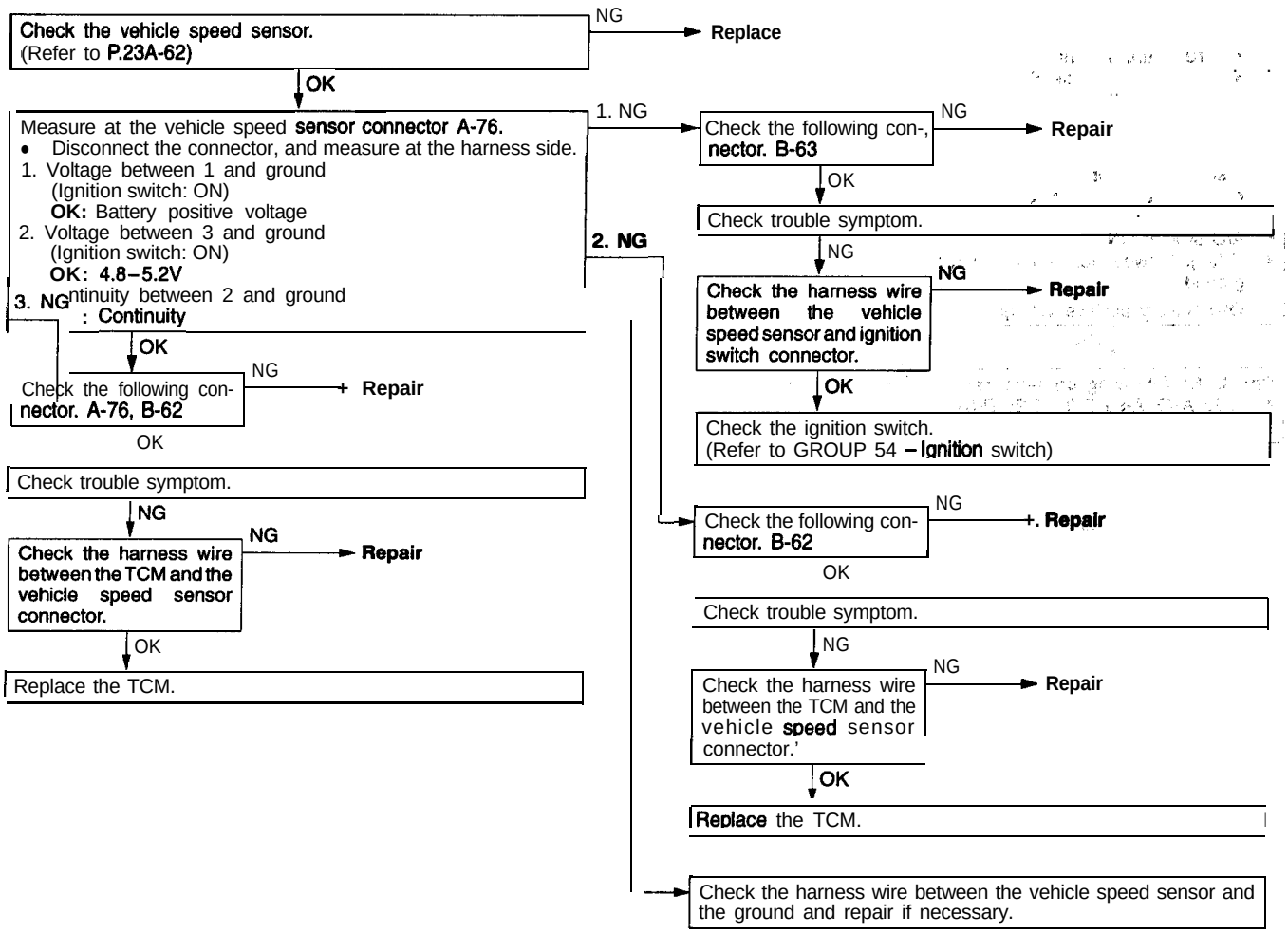

TSB Revision

SERVICE DATA REFERENCE TABLE

23100810055

Item No.	Check item	Check conditions		Normal condition
11	Throttle position sensor	Ignition: ON Engine: Stopped Selector lever position: N range	Fully closed	400–1,000 mV
			Depressed	Gradually rises from the above value
			Fully open (for at least 2 seconds)	4,500–5,500 mV
15	Oil temperature sensor	Warming up	Drive for 15 minutes or more so that the automatic transmission fluid temperature becomes 70 – 90°C (158–194°F).	Gradually rises to 70 – 90°C
21	Kickdown servo switch	Selector lever position: L range	Idling (vehicle stopped)	ON
		Selector lever position: 2 range	Idling (vehicle stopped)	OFF
			Driving at 10 km/h (6 mph)	ON
			Driving at constant speed of 40 km/h (25mph) (20 seconds or more)	OFF
		Selector lever position: D range Overdrive: OFF	Driving at constant speed of 50 km/h (31 mph) (20 seconds or more)	ON
		Selector lever position: D range Overdrive: ON	Driving at constant speed of 50 km/h (31 mph) (20 seconds or more)	OFF
23	Ignition signal	Selector lever position: L range	Idling (vehicle stopped)	600–900 rpm
		Selector lever position: D range Overdrive: OFF	Driving at constant speed of 50 km/h (31 mph) (20 seconds or more)	1,800–2,200 rpm
25	Closed throttle position switch	Ignition: ON Engine: Stopped Selector lever position: N range	Fully closed	ON
			Depressed	OFF
			Fully open (for at least 2 seconds)	OFF
26	A/C load signal	Engine: Idling Selector lever position: D range	A/C switch: ON	ON
			A/C switch: OFF	OFF

Item No.	Check item	Check conditions		Normal condition
27	Shift control solenoid valve A (SCSV-A) drive signal and shift control solenoid valve B (SCSV-B) drive signal	Accelerator pedal position Engine: Idling (vehicle stopped) Selector lever position: D range	Fully closed	C
			Depressed slightly	1
		Selector lever position: L range	Idling (vehicle stopped)	1
		Selector lever position: 2 range	Idling (vehicle stopped)	C
			Driving at 10 km/h(6 mph)	1
			Driving at constant speed of 40 km/h(25 mph) (20 seconds or more)	2
27	Shift control solenoid valve A (SCSV-A) drive signal and shift control solenoid valve B (SCSV-B) drive signal	Selector lever position: D range Overdrive: OFF	Driving at constant speed of 50 km/h(31 mph) (20 seconds or more)	3
		Selector lever position: D range Overdrive: ON	Driving at constant speed of 50 km/h(31 mph) (20 seconds or more)	4
28	Stop light switch	Brake pedal position Ignition switch: ON Engine: Stopped	Depressed	ON
			Released Driving at 5 km/h (3.1 mph)	OFF
31	Pulse generator A (PG-A)	Selector lever position: D range Overdrive: OFF	Driving at constant speed of 50 km/h(31 mph) (20 seconds or more)	1,800–2,200 rpm
		Selector lever position: D range Overdrive: ON	Driving at constant speed of 50 km/h(31 mph) (20 seconds or more)	1,200–1,500 rpm
32	Pulse generator B (PG-B)	Selector lever position: D range Overdrive: OFF	Driving at constant speed of 50 km/h(31 mph) (20 seconds or more)	1,800–2,200 rpm
		Selector lever position: D range Overdrive: ON	Driving at constant speed of 50 km/h(31 mph) (20 seconds or more)	1,800–2,200 rpm
35	Overdrive switch	Ignition switch: ON Engine: Stopped	Overdrive switch: ON	OD
			Overdrive switch: OFF	OD-OFF
37	Park/Neutral position switch	Ignition switch: ON Engine: Stopped	Selector lever: P range Selector lever: R range Selector lever: N range Selector lever: D range Selector lever: 2 range Selector lever: L range	P, N R P, N D 2 L

TSB Revision

Item No.	Check item	Check conditions		Normal condition
38	Vehicle speed sensor	Selector lever position: 2 range	Idling (vehicle stopped)	0 km/h
			Driving at 10 km/h (6 mph)	10 km/h
			Driving at constant speed of 40 km/h (25 mph) (20 seconds or more)	40 km/h
		Selector lever position: D range Overdrive: OFF	Driving at constant speed of 50 km/h (31 mph) (20 seconds or more)	50 km/h
45	Pressure control solenoid valve (PCSV)	Accelerator pedal position Engine: Idling (vehicle stopped) Selector lever position: D range	Fully closed	65–85 %
			Depress slightly [Driving at 5 km/h (3.1. mph)]	90–100 %
47	Torque converter clutch solenoid Amount of torque converter clutch slippage	Selector lever position: D range Overdrive: OFF	Driving at constant speed of 50 km/h (31 mph) (20 seconds or more)	100–300 rpm
			Driving at constant speed of 70 km/h (43 mph)	0–10 rpm
49	Torque converter clutch solenoid duty	Selector lever position: D range Overdrive: OFF	Driving at constant speed of 50 km/h (31 mph) (20 seconds or more)	0 %
			Driving at constant speed of 70 km/h (43 mph)	40–60 %

ACTUATOR TEST REFERENCE TABLE

23100820058

Item No.	Check item	Drive contents	Check conditions	Normal condition
01	Pressure control solenoid valve (PCSV)	Current flows to the solenoid valve for 5 seconds at 50% duty	Engine: Idling (Vehicle stopped) Selector lever: D range Throttle opening angle: Fully closed	The kickdown brake hydraulic pressure is measured and the pressure during actuator driving is lowered.

FAIL-SAFE FUNCTION REFERENCE TABLE

23100830044

The judgement conditions for fail-safe items are the same as the judgement conditions for the related diagnosis codes. If these related diagnosis codes are output 4 times in succession, a fail-safe item is recorded.
Accordingly, if a fail-safe item is output, the diagnostic trouble codes will also be output at the same time.
In addition, fail-safe codes lock the transaxle in 3rd or 2nd gear. Fail-safe will be cancelled if the ignition switch is turned to OFF. The diagnostic trouble codes will remain.

Code No.	Item	Fail-safe	Related diagnosis code No.
81	Open circuit in pulse generator A (PG-A)	Hold in 3rd gear (D) or 2nd gear (2, L)	31
82	Open circuit in pulse generator B (PG-B)	Hold in 3rd gear (D) or 2nd gear (2, L)	32
83	Open or short circuit in shift control solenoid valve (SCSV-A)	Hold in 3rd gear	41, 42
84	Open or short circuit in shift control solenoid valve (SCSV-B)	Hold in 3rd gear	43, 44
85	Open or short circuit in pressure control solenoid valve (PCSV)	Hold in 3rd gear (D) or 2nd gear (2, L)	45, 46
86	Incorrect gear ratio	Hold in 3rd gear (D) or 2nd gear (2, L)	51, 52 ,53, 54

CHECK AT TCM TERMINALS

23100840054

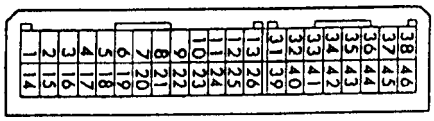

TFA0828

Terminal No.	Check item	Check conditions	Normal condition	Remarks
1	Torque converter clutch solenoid	Engine: Idling Selector lever position: D range	0 V	
		When clutch solenoid is operating	1–3 V	
2	Shift control solenoid valve A (SCSV-A)	Engine: Idling Selector lever position: L range	Battery positive voltage	–
		Engine: Idling Selector lever position: 2 range	0 V	
3	Oil temperature warning light	At all times	0 V	AWD only
		Ignition switch: 5 minutes after turning on	Battery positive voltage	
4	Communication with ECM	Engine: idle Selector lever: D range	0 V	
7	Kickdown servo switch	Engine: Idling Selector lever position: L range	0 V	
		Selector lever position: D range, Transaxle condition: 2nd gear	Battery positive voltage	–
8	A/C compressor clutch relay signal	A/C switch: ON	Battery positive voltage	
		A/C switch: OFF	0 V	
9	Diagnostic output terminal	When normal	0 → 5 V Flashing	–
11	Diagnostic test mode control terminal	–	–	
12	Power supply	Engine: Idling	Battery positive voltage	–
13	Ground	Engine: Idling	0 V	
14	Pressure control solenoid valve (PCSV)	Engine: Idling Selector lever position: D range	1.5–2.0 V	
15	Shift control solenoid valve B (SCSV-B)	Transaxle condition: 1 st and 2nd gear	Battery positive voltage	
		Transaxle condition: 3rd and 4th gear.	0 V	
17	Communication with ECM	Engine: idle after warming up Selector lever: D range	other than 0 V (approx. 2.5 V)	–

TSB Revision

Terminal No.	Check item	Check conditions	Normal condition	Remarks
16	Communication with ECM	Engine: idle Selector lever: D range	5 V	–
20	Closed throttle position switch	Engine: Idling	0 V	
		Engine: Off idle	5 V	
21	Throttle position sensor	Accelerator pedal: Fully closed	0.4–1.0 V	
		Accelerator pedal: Fully open	4.5–5.5 V	
23	Oil temperature sensor	Fluid temperature: 20°C (68°F)	3.9 V	
		Fluid temperature: 100°C (212°F)	1.4 V	
24	Sensor ground	Engine: Idling	0 V	–
25	Power supply	Engine: Idling	Battery positive voltage	–
26	Ground	Engine: Idling	0 V	–
31	Park/ Neutral position switch (P)	Selector lever position: P range	Battery positive voltage	–
		Selector lever position: Out of P range	0 V	–
32	Park/ Neutral position switch (R)	Selector lever position: R range	Battery positive voltage	–
		Selector lever position: Out of R range	0 V	
33	Park/ Neutral position switch (N)	Selector lever position: N range	Battery positive voltage	–
		Selector lever position: Out of N range	0 V	
34	Park/ Neutral position switch (D)	Selector lever position: D range	Battery positive voltage	–
		Selector lever position: Out of D range	0 V	
35	Park/ Neutral position switch (2)	Selector lever position: 2 range	Battery positive voltage	–
		Selector lever position: Out of 2 range	0 V	–
36	Park/ Neutral position switch (L)	Selector lever position: L range	Battery positive voltage	–
		Selector lever position: Out of L range	0 V	
37	Overdrive switch	Overdrive switch: ON	Battery positive voltage	–
		Overdrive switch: OFF	0 V	
38	Stop light switch	Brake pedal is depressed	0 V	–
		Brake pedal is released	Battery positive voltage	

TSB Revision

Terminal No.	Check item	Check conditions	Normal condition	Remarks
39	Backup power supply	Ignition switch: OFF	Battery positive voltage	–
40	Vehicle speed sensor	Vehicle: Slowly moving forward	0 → 5 V Flashing	–
41	Pulse generator B (PG-B)	Measure between terminals (41) and (42) Engine: 3,000 r/min Selector lever position: D range Transaxle condition: 3rd gear	1.5 V AC or more	–
42	Pulse generator B (PG-B)	Measure between terminals (41) and (42) Engine: 3,000 r/min Selector lever position: D range Transaxle condition: 3rd gear	1.5 V AC or more	–
43	Pulse generator A (PG-A)	Measure between terminals (43) and (44) Engine: 3,000 r/min Selector lever position: D range Transaxle condition: 3rd gear	1.5 V AC or more	–
44	Pulse generator A (PG-A)	Measure between terminals (43) and (44) Engine: 3,000 r/min Selector lever position: D range Transaxle condition: 3rd gear	1.5 V AC or more	–
45	Ground	Engine: Idling	0 V	
46	Ignition pulse	Engine: 3000 r/min	0.3–3.0 V	–

OSCILLOSCOPE INSPECTION PROCEDURE

23100850057

Check item	Check conditions		Normal condition (waveform sample)
Pulse generator A (PG-A)	Selector lever position: D range Overdrive: OFF	Driving at constant speed of 50 km/h(31 mph) (20 seconds or more)	Waveform A
Pulse generator B (PG-B)	Selector lever position: D range Overdrive: OFF	Driving at constant speed of 50 km/h(31 mph) (20 seconds or more)	Waveform B
Vehicle speed sensor	Selector lever position: D range Overdrive: OFF	Driving at constant speed of 50 km/h(31 mph) (20 seconds or more)	Waveform C
Pressure control solenoid valve (PCSV)	Accelerator pedal position Engine: Idling (vehicle stopped) Selector lever position: D range	Fully closed	Waveform D

WAVEFORM SAMPLE

Waveform A

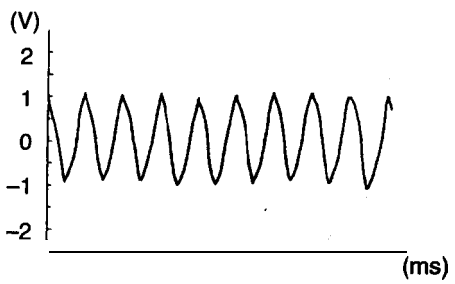

Waveform C

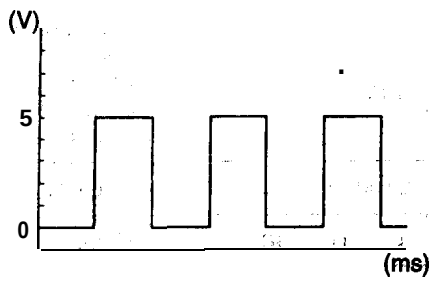

Waveform B

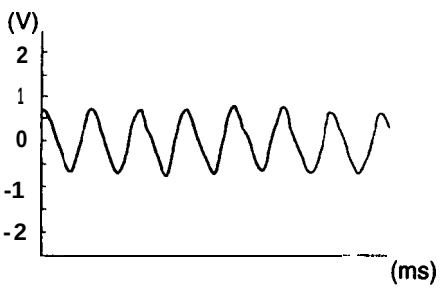

Waveform D

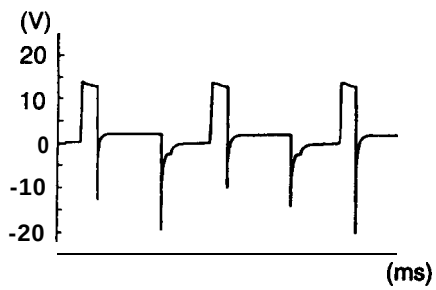

ATFA1268

TSB Revision

ON-VEHICLE SERVICE 23100090152

TRANSAXLE FLUID LEVEL CHECK

Refer to GROUP 00 – Maintenance Service.

TRANSAXLE FLUID REPLACEMENT 23100100176

Refer to GROUP 00 – Maintenance Service.

TRANSFER OIL LEVEL CHECK 23100110025

Refer to GROUP 00 – Maintenance Service.

TRANSFER OIL REPLACEMENT 23100120023

Refer to GROUP 00 – Maintenance Service.

<F4A23>

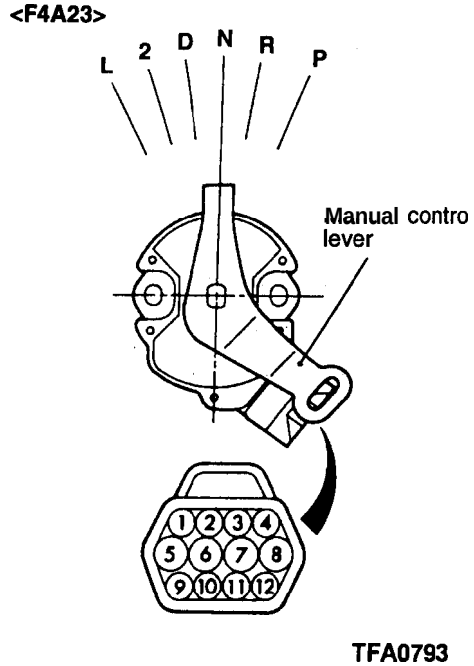

<F4A33, W4A33>

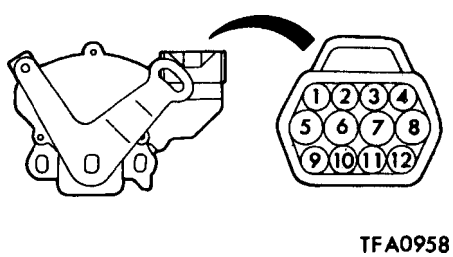

PARK/ NEUTRAL POSITION SWITCH CONTINUITY CHECK

23100140093

<F4A23>

Terminal No.	P	R	N	D	2	L
2	○					
3			○			
4					○	○
5	○	○	○	○	○	
6	○		○			
7		○				
8		○				
9	○		○			
10				○		
11		○				○

<F4A33, W4A33>

Terminal No.	P	R	N	D	2	L
2		○				
3	○	○	○	○	○	○
4	○					
5		○				
6		○				
7	○		○			
8	○		○			
9						○
10				○		
11					○	
12			○			

TSB Revision

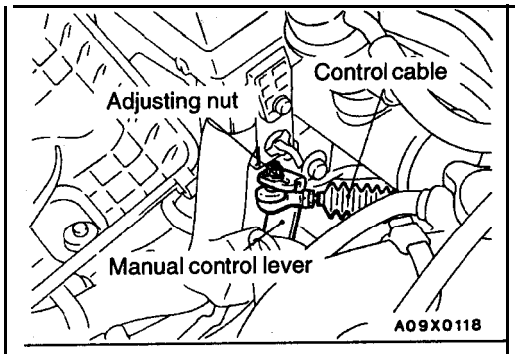

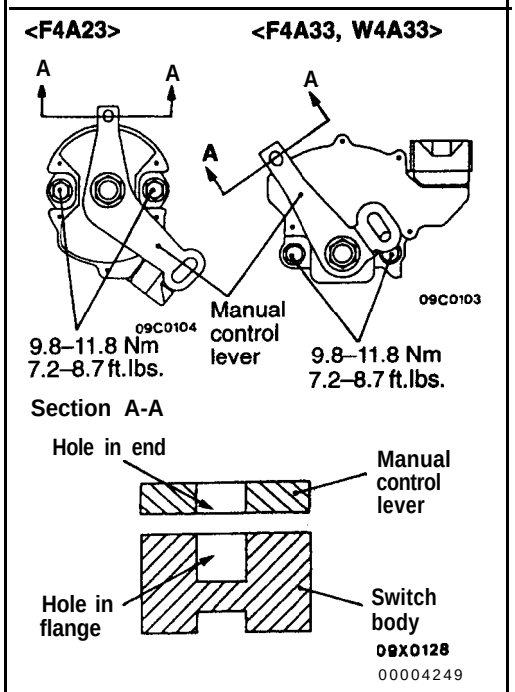

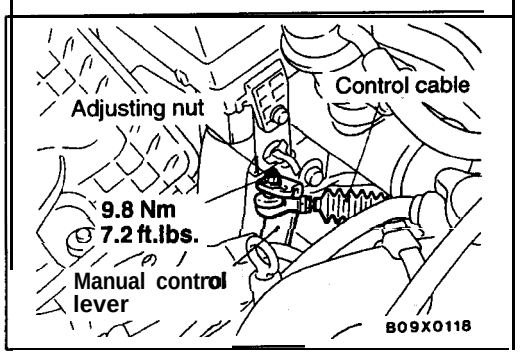

PARK/ NEUTRAL POSITION SWITCH AND CONTROL CABLE ADJUSTMENT

23100150072

1. Set the selector lever to the "N" (Neutral) position.
2. Loosen the'control cable to manual control lever coupling adjusting nut to free the cable and lever.
3. Set the manual control lever to the neutral position.
4. Loosen and adjust the park/neutral position switch body. Then the hole in the end of the manual control lever and the hole in the flange of the park/neutral position switch body must be aligned.
5. Tighten the park/neutral position switch body mounting bolts to the specified torque. Be careful at this time that the position of the switch body is not, changed.
6. Lightly pull the transaxle control cable in the arrow's direction, and tighten the adjusting nut to the specified torque,
7. Check that the selector lever is in "N" position.
8. Check that each range on the transaxle side operates and functions correctly for each position of the selector lever.

THROTTLE POSITION SENSOR (TPS) ADJUSTMENT

23100190050

Refer to GROUP 13A – On-vehicle Service.

ELC 4-SPEED AUTOMATIC TRANSAXLE CONTROL COMPONENT LAYOUT

23100860142

Name	Symbol	Name	Symbol
A/C switch	H	Park/neutral position switch <F4A33, W4A33>	C
Data link connector	K	Pulse generator A and B <F4A23>	B
Kickdown servo switch	A	Pulse generator A and B <F4A33, W4A33>	B
OD-OFF switch	J	Solenoid valve	F
Oil temperature sensor <F4A23>	G	Throttle position sensor (With built-in closed throttle position switch)	E
Oil temperature sensor <F4A33, W4A33>	G	Transaxle control module (TCM)	I
Park/neutral position switch <F4A23>	C	Vehicle speed sensor	D

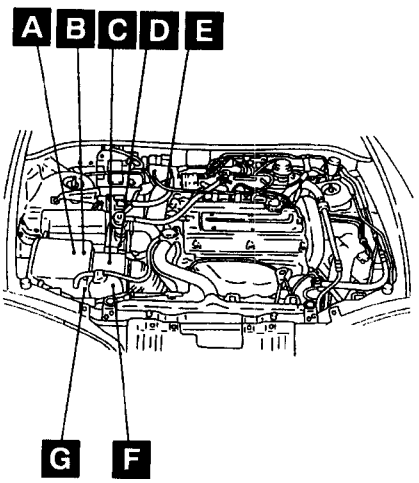

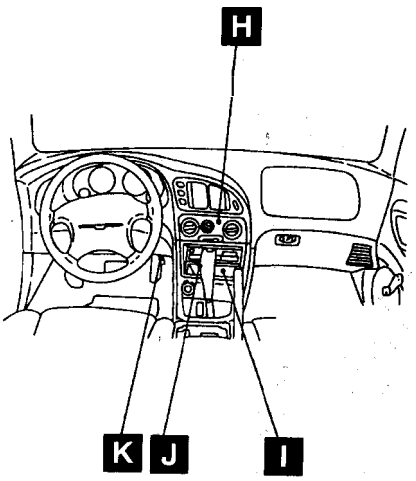

ATFA1570

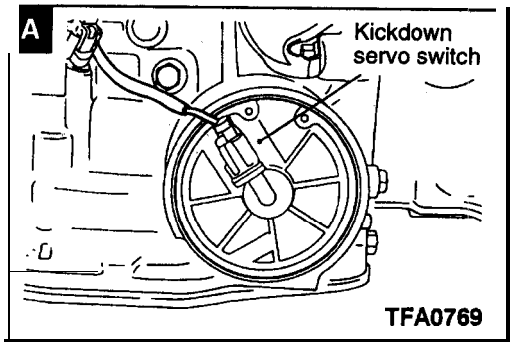

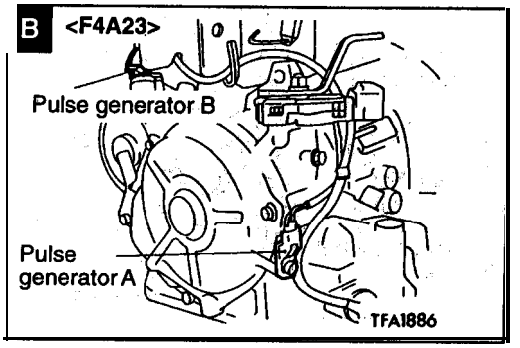

TSB Revision

B <F4A33, W4A33>

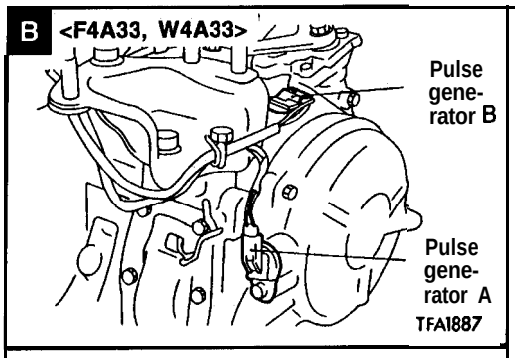

C <F4A33, W4A33>

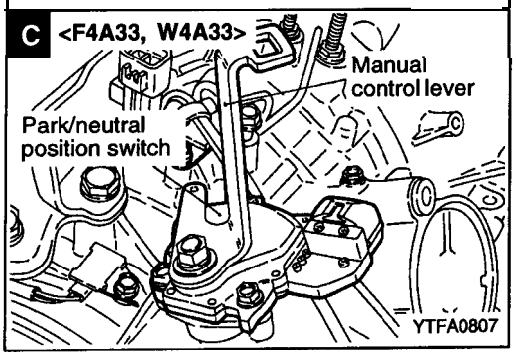

E Throttle position sensor (with builtin closed throttle position switch)

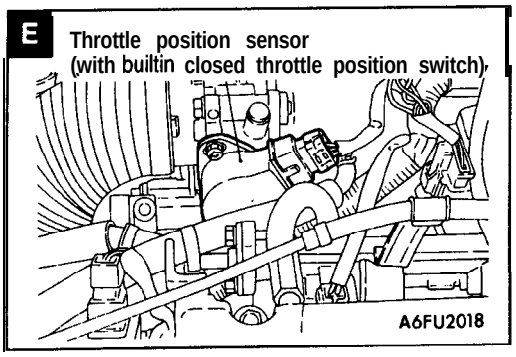

G <F4A23>

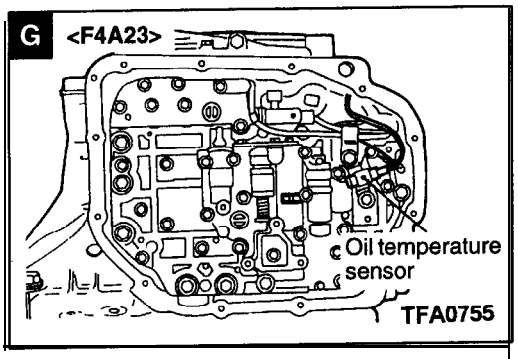

H

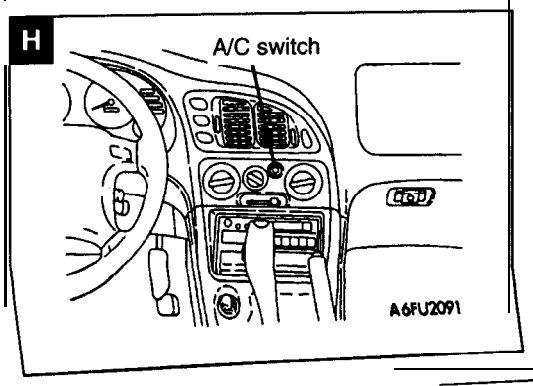

C <F4A23>

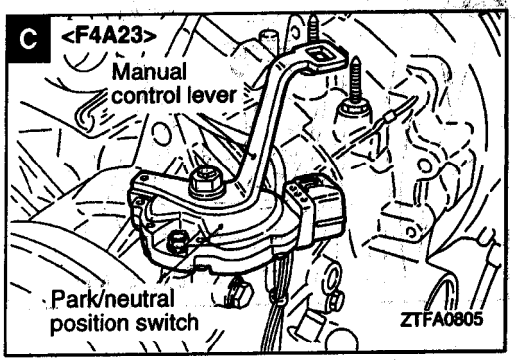

D

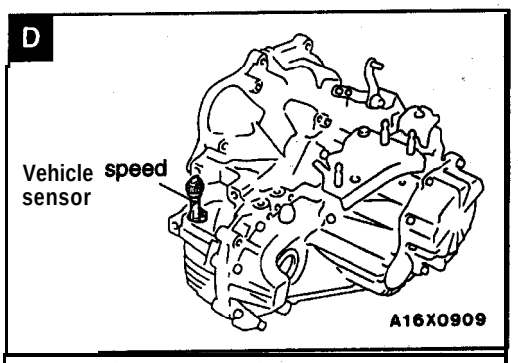

F

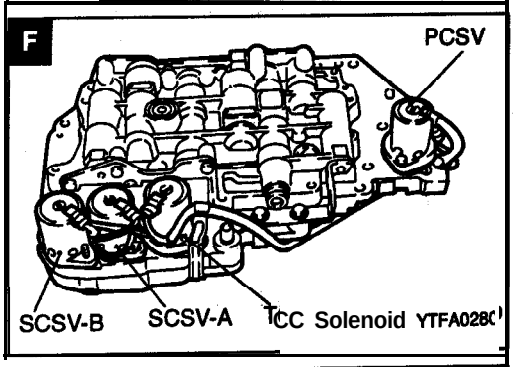

G <F4A33, W4A33>

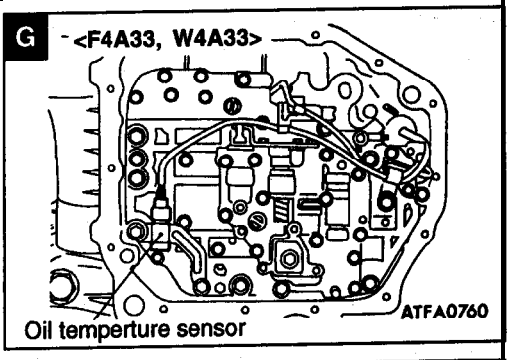

I

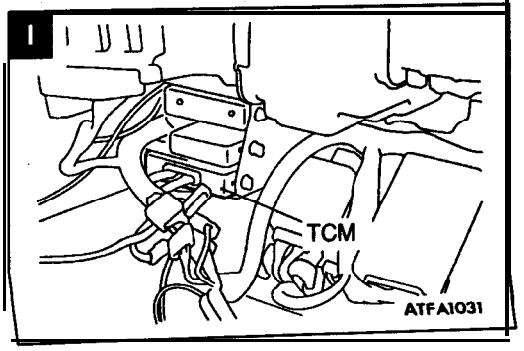

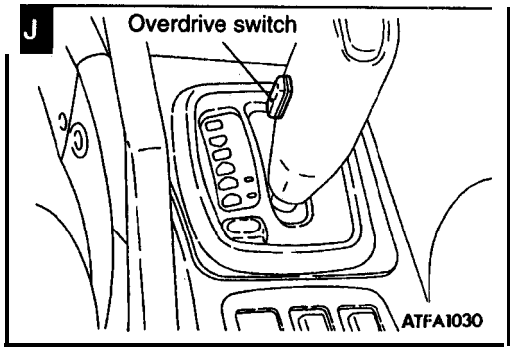

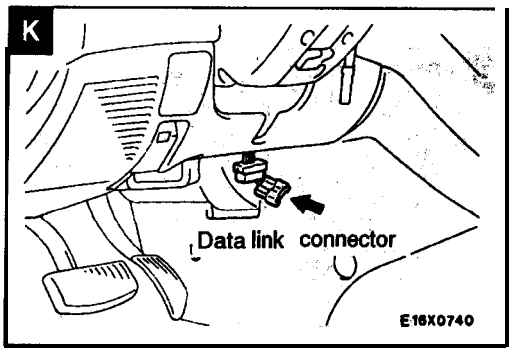

TSB Revision

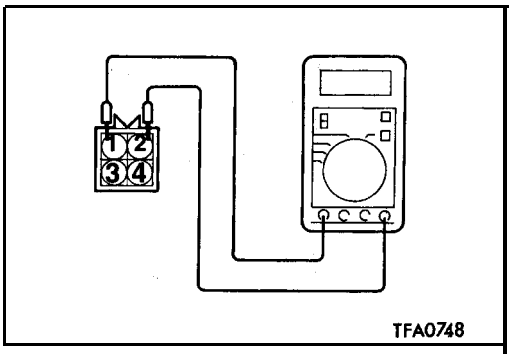

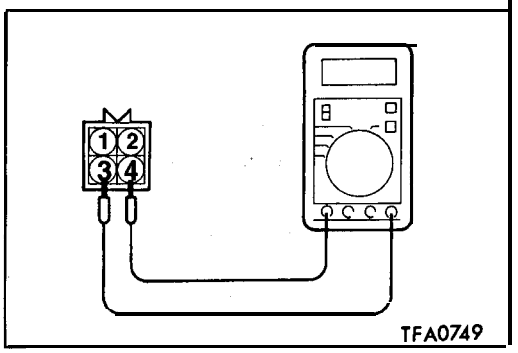

ELC-4A/T CONTROL COMPONENT CHECK

23100360062

PULSE GENERATOR A CHECK

1. Disconnect the pulse generator A connector
2. Measure the resistance between the pulse generator A side connector terminals 1 and 2.

   Standard value: 330–390 Ω [at 20°C (68°F)]

3. If the resistance is outside the standard value, replace the pulse generator assembly.

PULSE GENERATOR B CHECK 23100370065

1. Disconnect the pulse generator B connector.
2. Measure the resistance between the pulse generator B side connector terminals 3 and 4.

   Standard value: 330–390 Ω [at 20°C (68°F)]

3. If the resistance is outside- the standard value, replace the pulse generator assembly.

PARK/ NEUTRAL POSITION SWITCH CONTINUITY CHECK

23100140109

Refer to P.23A-56.

OVERDRIVE SWITCH CONTINUITY CHECK 23100330032

Refer to P.23A-97.

THROTTLE POSITION SENSOR (TPS) CHECK 23100390054

Refer to GROUP 13A – On-vehicle Inspection of MFI Components.

CLOSED THROTTLE POSITION SWITCH CHECK

23100410057

Refer to GROUP 13A – On-vehicle inspection of MFI Components.

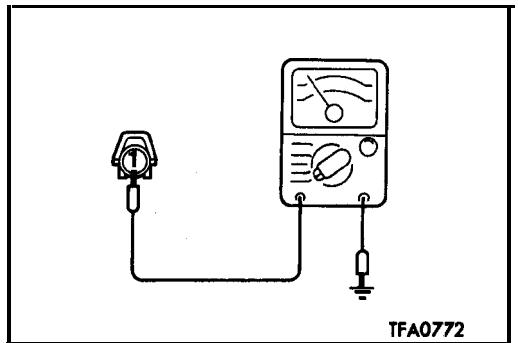

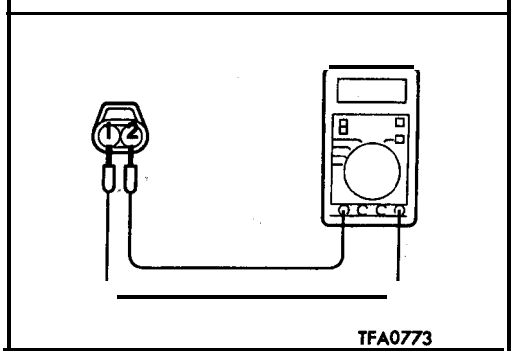

KICKDOWN SERVO SWITCH CHECK 23100430046

1. Disconnect the kickdown servo switch connector.
2. Remove the kickdown servo switch.
3. Check that there is continuity '-'between kickdown servo switch side connector terminal 1 and the metal part inside the kickdown servo switch.
4. If there is no continuity, replace the kickdown servo switch.
5. If continuity exists, push in on servo switch. Check that no continuity exists between terminal 1 and the metal part inside the servo switch.
6. If continuity exists, replace the kickdown servo switch.

OIL TEMPERATURE SENSOR CHECK 23100450042

1. Disconnect the oil temperature sensor connector.
2. Measure the resistance between the oil temperature sensor side connector terminals 1 and 2, and check that the values are as shown in the table below.

Standard values:

Oil temperature °C (°F)	Resistance value kΩ
0 (32)	16.7–20.5
100 (212)	0.57–0.69

3. If the values are outside the standard values, replace the oil temperature sensor.

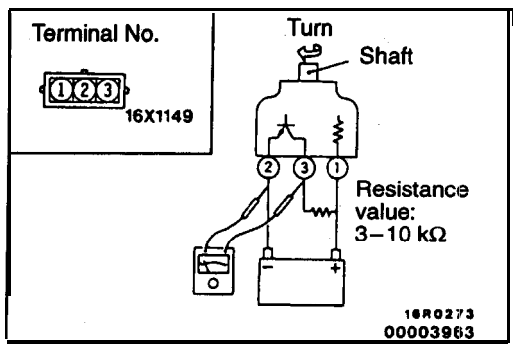

VEHICLE SPEED SENSOR CHECK 23100460045

1. Remove the vehicle speed sensor and connect a 3–10 kΩ resistance as shown in the illustration at left.
2. Turn the shaft of the vehicle speed sensor and check that there is voltage between terminals 2– 3. (1 turn = 4 pulses)

DUAL PRESSURE SWITCH (AIR CONDITIONING LOAD) CHECK 23100470048

Refer to GROUP 55 – On-vehicle Service.

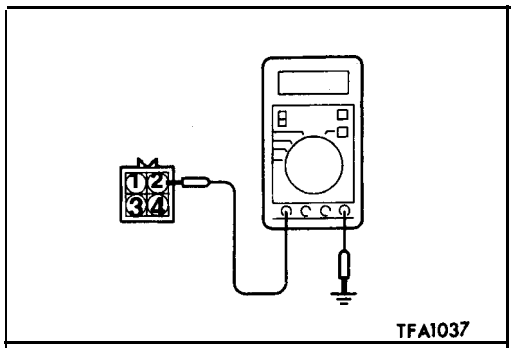

TFA1037

TORQUE CONVERTER CLUTCH SOLENOID CHECK

23100500037

1. Disconnect the TCC solenoid connector.
2. Measure the resistance between the TCC solenoid side connector terminal 2 and the body ground.

   Standard value: Approx. 13 Ω [at 20°C (68°F)]

3. If the resistance is outside the standard value, replace the solenoid valve assembly.

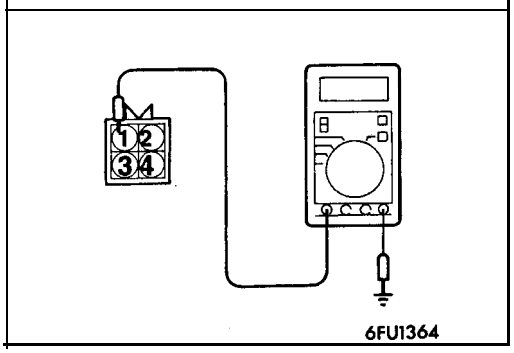

6FU1364

PRESSURE CONTROL SOLENOID VALVE (PCSV) CHECK

23100510030

1. Disconnect the PCSV connector.
2. Measure the resistance between the PCSV side connector terminal 1 and the body ground.

   Standard value: Approx. 3 Ω [at 20°C (68°F)]

3. If the resistance is outside the standard value, replace the solenoid valve assembly.

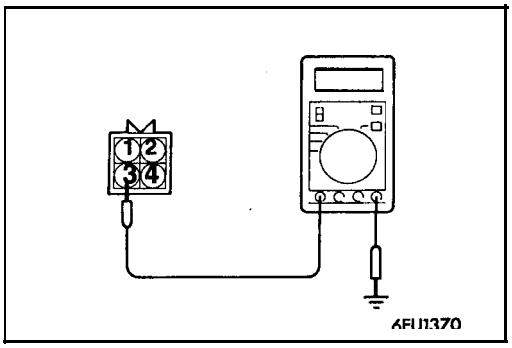

6FU1370

SHIFT CONTROL SOLENOID VALVE A (SCSV-A) CHECK

23100520033

1. Disconnect the SCSV-A connector.
2. Measure the resistance between the SCSV-A side connector terminal 3 and the body ground.

   Standard value: Approx. 22 Ω [at 20°C (68°F)]

3. If the resistance is outside the standard value, replace the solenoid valve assembly.

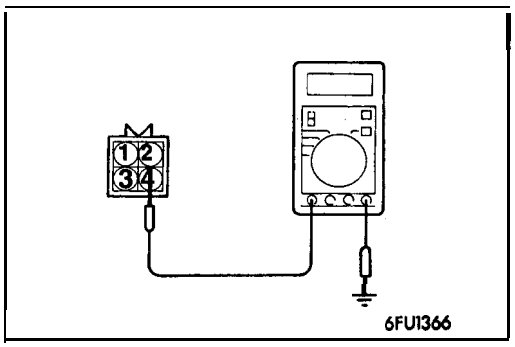

6FU1366

SHIFT CONTROL SOLENOID VALVE B (SCSV-B) CHECK

23100530036

1. Disconnect the SCSV-B connector.
2. Measure the resistance between the SCSV-B side connector terminal 4 and the body ground.

   Standard value: Approx. 22 Ω [at 20°C (68°F)]

3. If the resistance is outside the standard value, replace the solenoid valve assembly.

TORQUE CONVERTER STALL TEST 23100540046

Stall test consists of determining maximum engine speed obtained at full throttle in "D" and "R" positions. This test checks torque converter stator overrunning clutch operation, and holding ability of transmission clutches and low-reverse brake.

Caution
During this test, make sure that no one stands in front of, or behind, vehicle.

1. Check the transmission fluid level, fluid temperature and engine coolant temperature.
   - Fluid level: At "HOT" position on dipstick
   - Fluid temperature: 70–80°C (158–176°F)
   - Engine coolant temperature: 80–90°C (176–194°F)
2. Apply chocks to both rear wheels.
3. Attach engine tachometer.
4. Apply parking and service brakes fully.
5. Start engine.
6. With selector lever in "D" position, depress accelerator pedal fully to read engine maximum rpm. Do not hold throttle wide open any longer than is necessary to obtain maximum engine rpm reading, and never longer than 5 seconds at a time. If more than one stall test is required, operate engine at approximately 1,000 r/min in neutral for 2 minutes to cool transmission fluid between tests.

   Standard value:
   2,100 – 2,600 r/min <F4A23>
   3,300 – 3,600 r/min <F4A33, W4A33>
7. Place selector lever to "R" position and perform stall test by the same procedures above.

Stall Speed Above Specification in "D"

If stall speed is higher than Specification, rear clutch or overrunning clutch of transaxle is slipping. In this case, perform hydraulic test to locate cause of slippage.

Stall Speed Above Specification in "R"

If stall speed is higher than specification, front clutch of transaxle or low-reverse brake is slipping. In this case, perform hydraulic test to locate cause of slippage.

Stall Speed Above Specification in "D" and "R"

If stall speed is lower than specification, insufficient engine output or faulty torque converter is suspected. Check for engine misfiring, ignition timing, valve clearance etc. If these are good, torque converter is faulty.

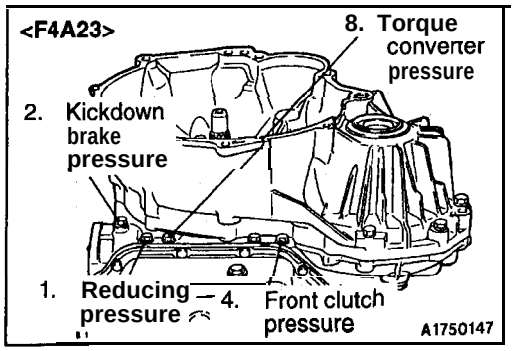

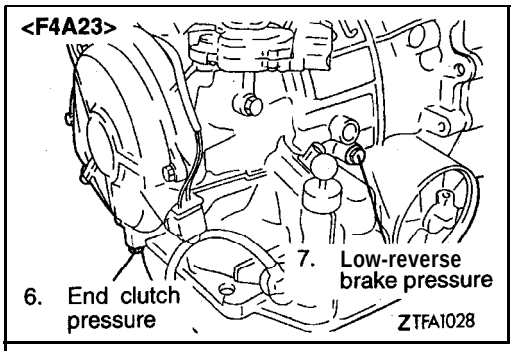

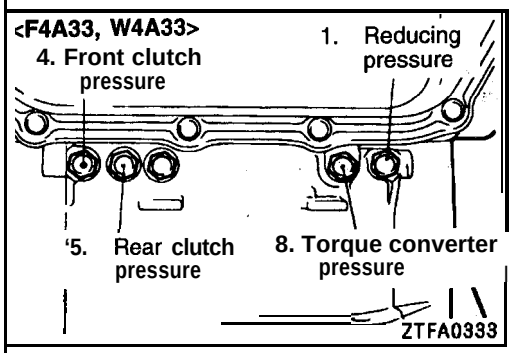

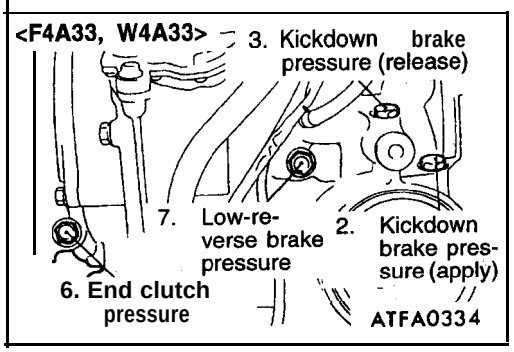

HYDRAULIC PRESSURE TEST

23199999949

1. Completely warm up the transaxle.
2. Raise the vehicle by using a jack so that the drive wheels can be rotated.
3. Connect an engine tachometer and place it in a position where it's easy to see.
4. Attach the special oil-pressure gauge (MD998330, MD999563) and the adapter (MD998332) to each oil-pressure outlet port.
   When the reverse position pressure. is to be tested, the 3,000 kPa (435 psi) type of gauge should be used.
5. Measure each hydraulic pressure under the conditions in the standard hydraulic pressure table, and check that they are at the standard values.
6. Use the scan tool to force-drive the actuator, and measure the kickdown brake pressure (Apply) when the pressure control solenoid valve (PCSV) is at 50 % duty.

   NOTE
   1. Vehicle speed: 0 km/h (0 mph)
   2. Selector lever switch position: "D"
   3. Accelerator condition: Fully closed.
      If all of the above conditions are fulfilled, activate the actuator for 5 seconds to bring the PCSV to 50 % duty.
7. If the pressure is outside the standard value, repair according to the hydraulic pressure test diagnosis chart.

Standard Hydraulic Pressure Table

<F4A23>

Conditions				Standard oil pressure kPa (psi)					
No.	Select lever position	Engine speed rpm	Shift position	1 Reducing pressure	2 Kickdown brake pressure (Apply)	4 Front clutch pressure	6 End clutch pressure	7 Low-reverse brake pressure	8 Torque converter pressure
1	N	Idling	Neutral	370–490 (53–70)	–				
2	D	Idling (using scan tool)	2nd gear	370–490 (53–70)	100–210 (14–30) [250–300 (36–43)]	–			*
3	D (SW-ON)	Approx. 2,500	4th gear	370–490 (53–70)	830–900 (118–128)	–	830–900 (118–128)	–	450–650 (64-92)
4	D (SW-OFF)	Approx. 2,500	3rd gear	370–490 (53–70)	830–900 (118–128)	830–900 (118–128)	830–900 (118–128)	–	450–650 (64-92)
5	2	Approx. 2,500	2nd gear	370–490 (53–70)	830–900 (118–128)				450–650 (64-92)
6	L	Approx. 1,000	1st gear	370–490 (53–70)	–			300–450 (43-64)	*
7	R	Approx. 2,500	Reverse	370–490 (53–70)	–	1,640–2,240 (233-319)		1,640–2,240 (233-319)	450–650 (64-92)
		Approx. 1,000				1,000 (145) or more		1,000 (145) or more	

<F4A33, W4A33>

Conditions				Standard oil pressure kPa (psi)							
No.	Select lever position	Engine speed r/min	Shift position	1 Reducing pressure	2 Kickdown brake pressure (Apply)	3 Kickdown brake pressure (Release)	4 Front clutch pressure	5 Rear clutch pressure	6 End clutch pressure	7 Low-reverse brake pressure	8 Torque converter pressure
1	N	Idling	Neutral	370–490 (53–70)	–	–	–	–	–	–	*
2	D	Idling (using scan tool)	2nd gear	370–490 (53–70)	100–210 (14–30) [250–300 (36–43)]	–	–	730–830 (104–118)	–	–	*
3	D (SW-ON)	Approx. 2,500	4th gear	370–490 (53–70)	830–900 (118–128)	–	–	–	830–900 (118–128)	–	450–650 (64–92)
4	D (SW-OFF)	Approx. 2,500	3rd gear	370–490 (53–70)	830–900 (118–128)	830–900 (118–128)	830–900 (118–128)	830–900 (118–128)	830–900 (118–128)	–	450–650 (64–92)
5	2	Approx. 2,500	2nd gear	370–490 (53–70)	830–900 (118–128)	–	–	830–900 (118–128)	–	–	450–650 (64–92)
6	L	Approx. 1,000	1st gear	370–490 (53–70)	–	–	–	830–900 (118–128)	–	300–450 (43–64)	*
7	R	Approx. 2,500	Reverse	370–490 (53–70)	–	1,640–2,240 (233–319)	1,640–2,240 (233–319)	–	–	1,640–2,240 (233–319)	450–650 (64–92)
		Approx. 1,000				1,000 (145) or more	1,000 (145) or more			1,000 (145) or more	

NOTE
– must be 10 kPa (1.5 psi) or less.
SW-ON: Switch ON the overdrive control switch
SW-OFF: Switch OFF the overdrive control switch
*: Hydraulic pressure is generated, but not the standard value.

TSB Revision

Hydraulic Pressure Test Diagnosis Chart

Case	Description	Reference page
1	Nos. 2 , 3 , 4 , 5 , 6 and 7 hydraulic pressures (line pressure) are all abnormal	23A–71
2	No. 1 hydraulic pressure (reducing pressure) is abnormal.	23A–71
3	No. 2 hydraulic pressure (kickdown brake apply pressure) is abnormal	23A–72
4	No. 3 hydraulic pressure (kickdown brake release pressure) <F4A33, W4A33> and No. 4 hydraulic pressure (front clutch pressure) is abnormal	23A–72
5	No. 5 hydraulic pressure (rear clutch pressure) is abnormal	23A–73
6	No. 6 hydraulic pressure (end clutch pressure) is abnormal	23A–73
7	No. 7 hydraulic pressure (low-reverse brake pressure) is abnormal	23A–73
8	No. 8 hydraulic pressure (torque converter pressure) is abnormal	23A–74
9	Hydraulic pressure appears in places where standard hydraulic pressure is 10 kPa (1.5 psi) or less	23A–74

<F4A23>

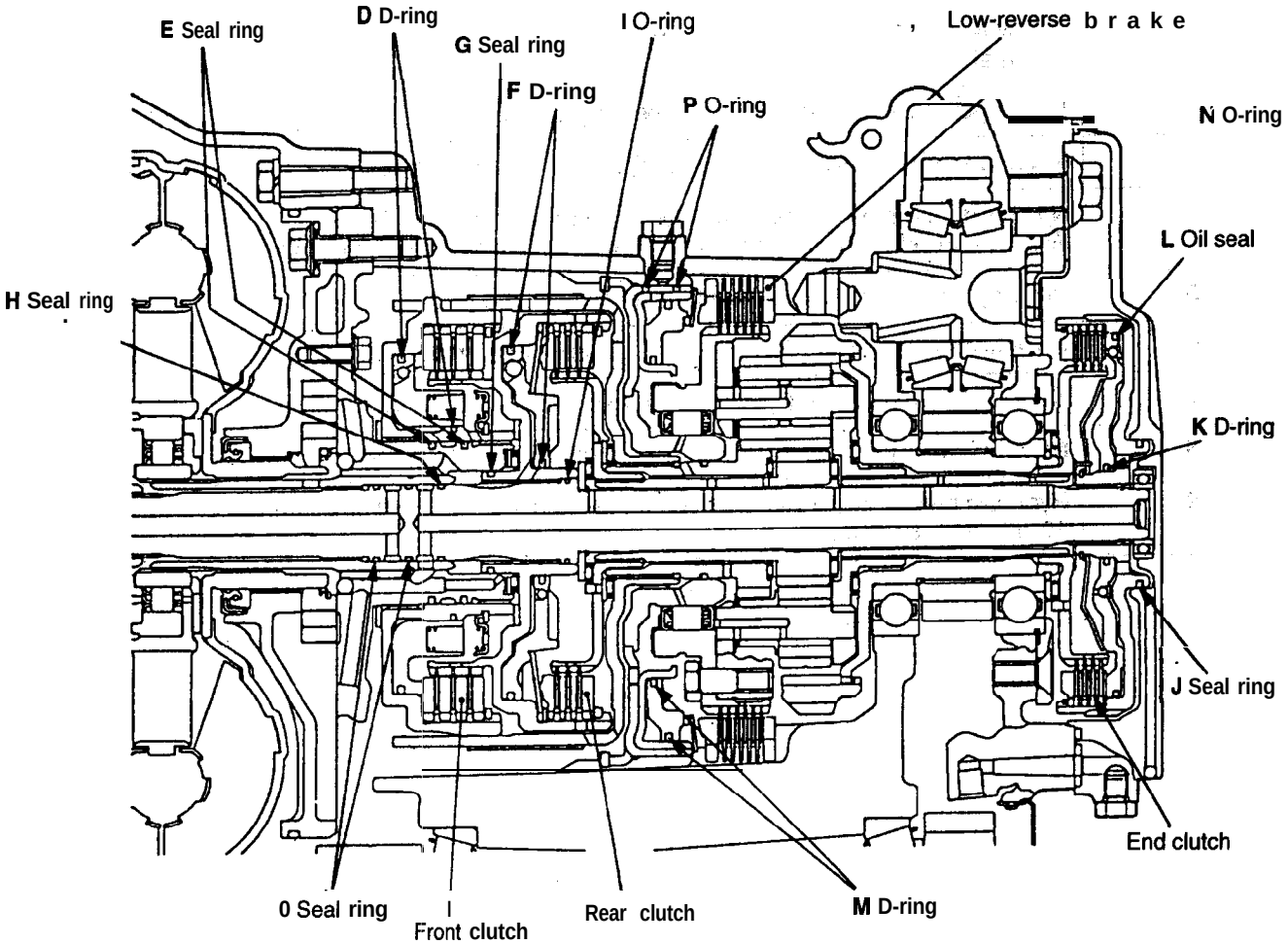

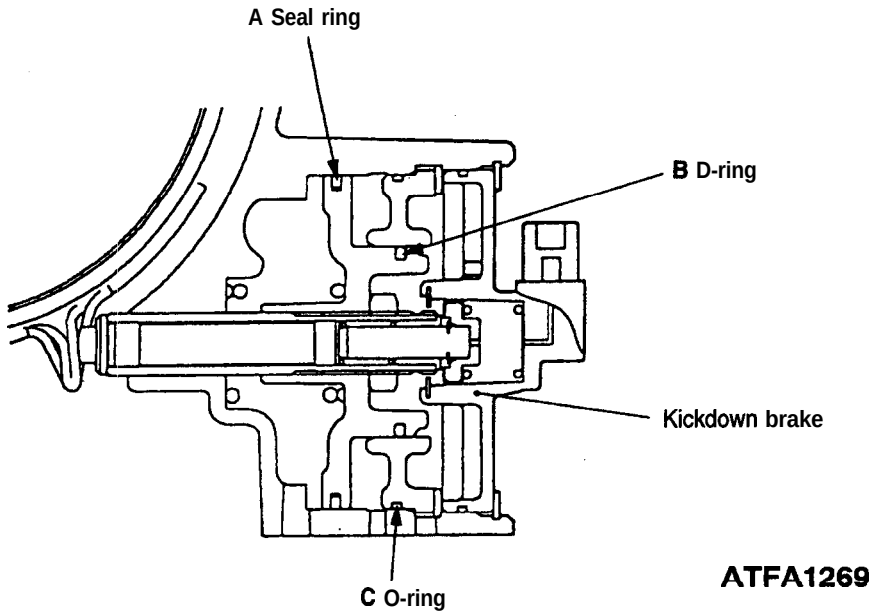

TSB Revision

<F4A33, W4A33>

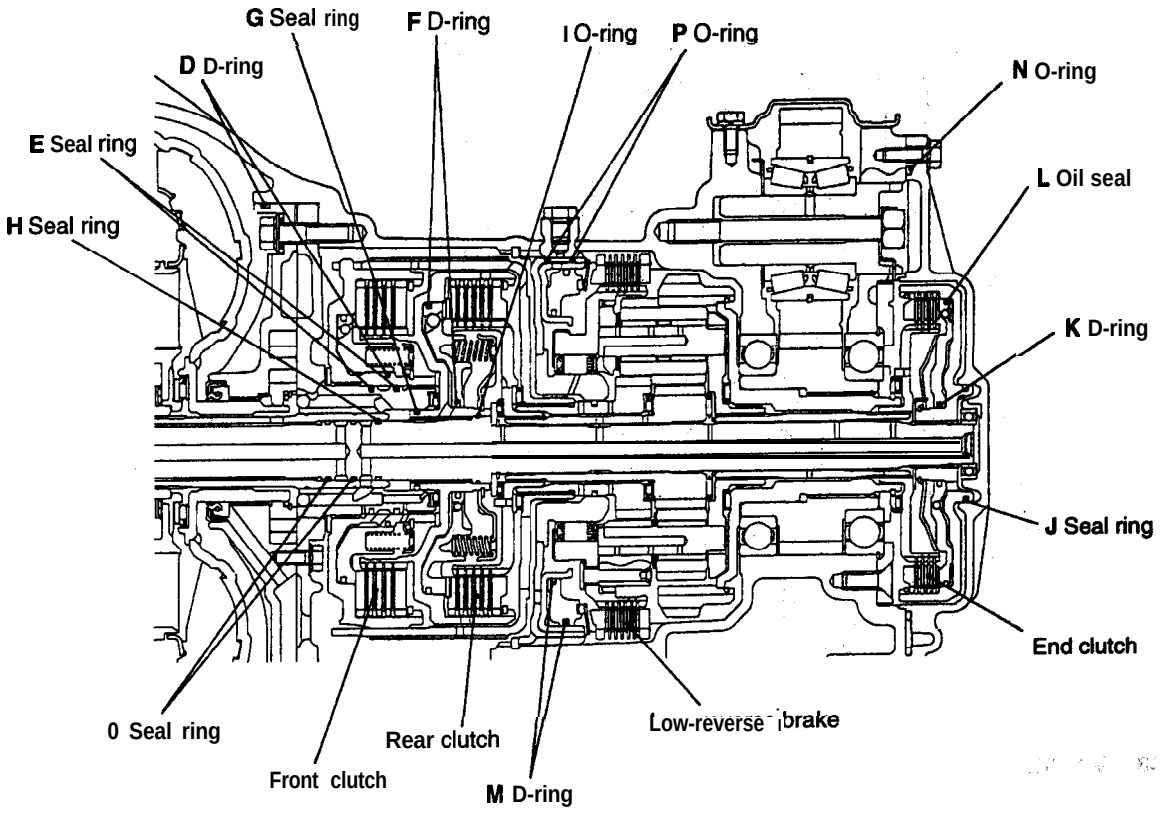

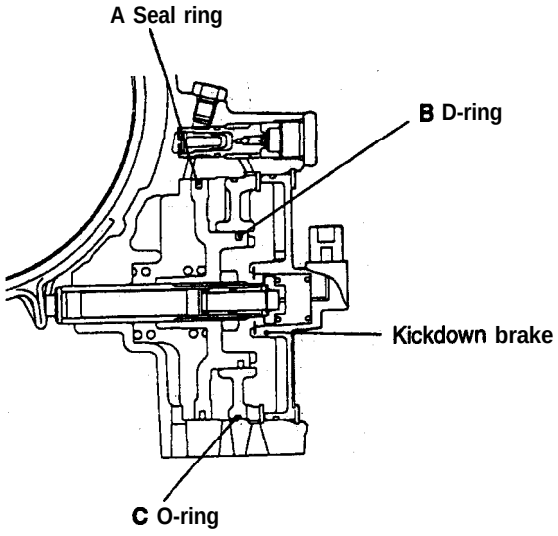

ATFA1267

<F4A23>

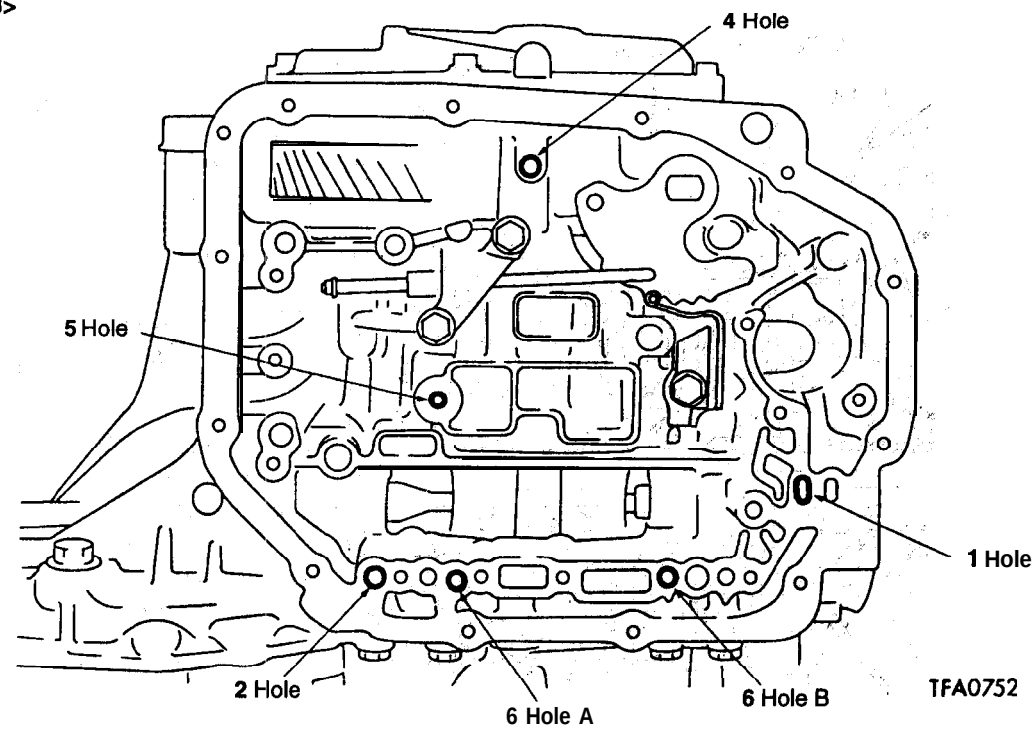

<F4A33, W4A33>

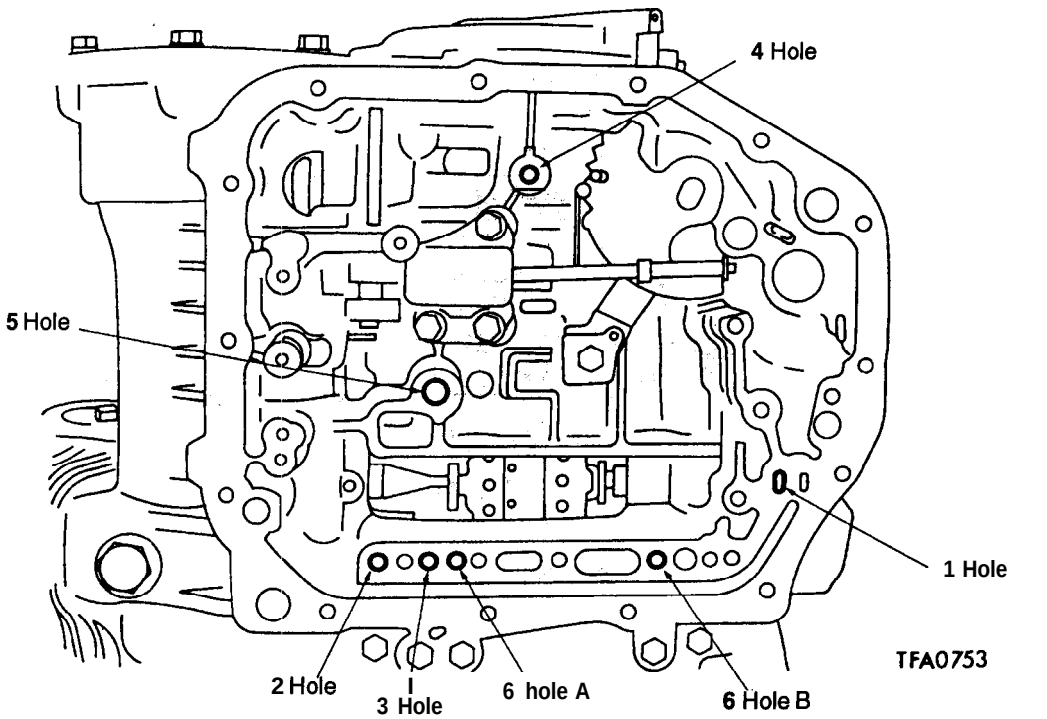

00000394

TSB Revision

CASE 1 No. 2, 3, 4, 5, 6 and 7 hydraulic pressures (line pressure) are all abnormal.

★: Refer to Automatic Transaxle Overhaul

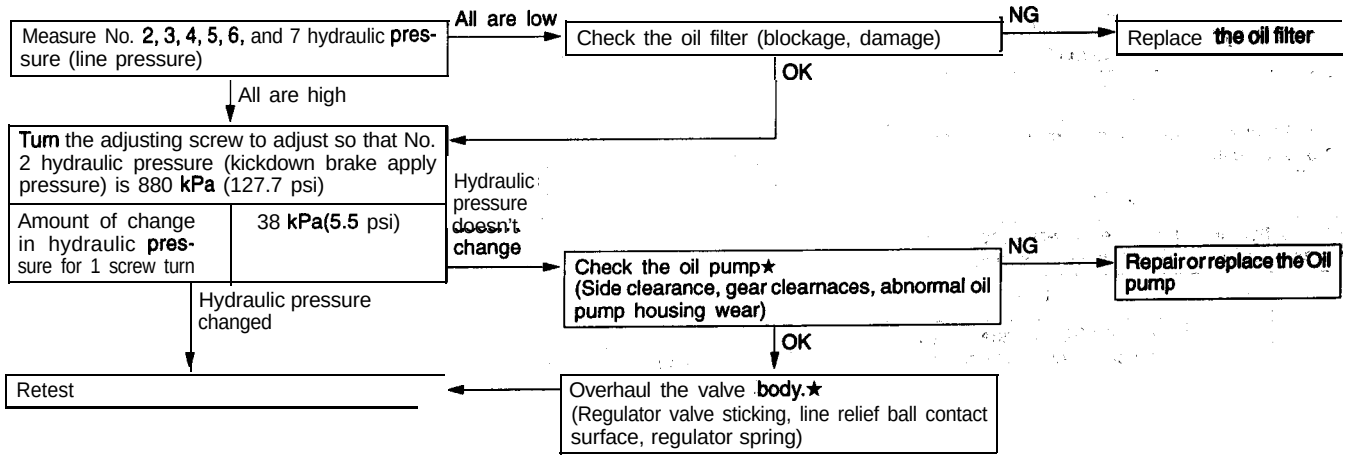

CASE 2 No. 1 hydraulic pressure (reducing pressure) is abnormal.

★: Refer to Automatic Transaxle Overhaul

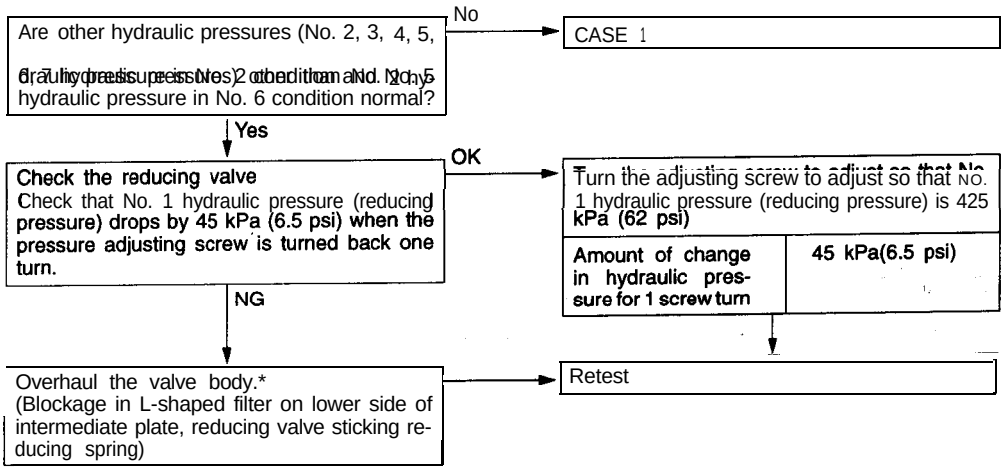

TSB Revision

CASE 3 No. 2 hydraulic pressure (kickdown brake apply pressure) is abnormal.

★: Refer to Automatic Transaxle Overhaul

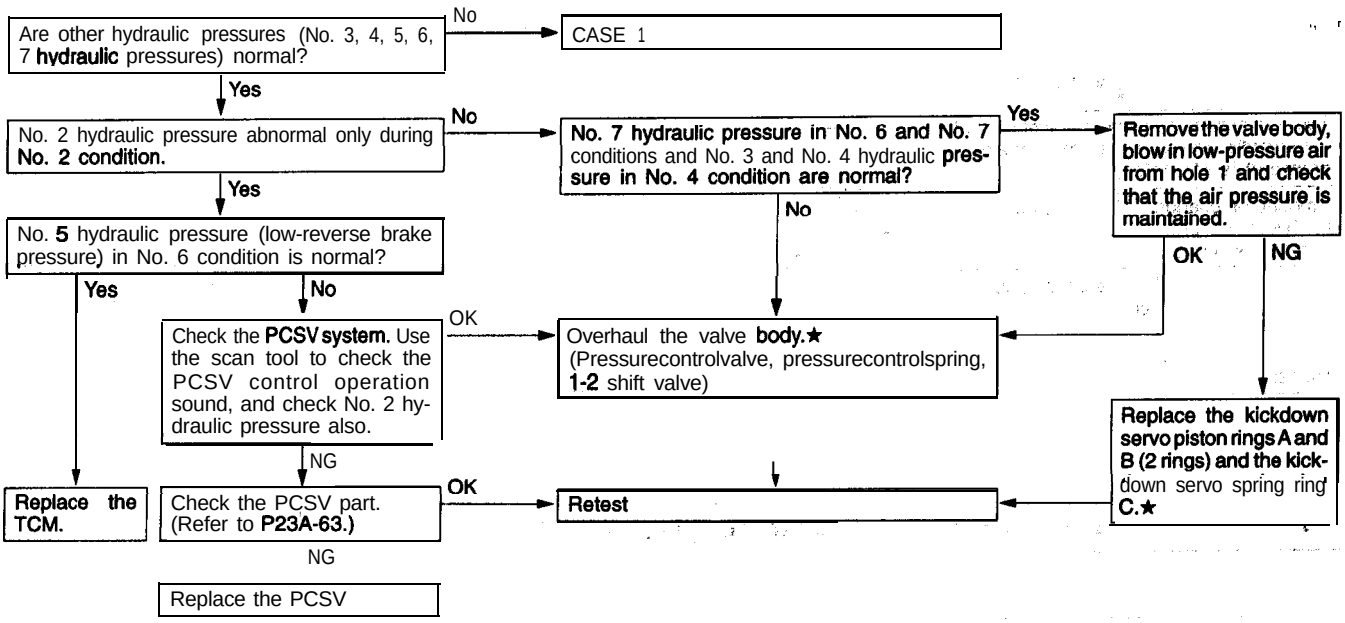

CASE 4 No. 3 hydraulic pressure (kickdown brake release pressure) <F4A33, W4A33> and, No. 4 hydraulic pressure (front clutch pressure) is abnormal.

★: Refer to Automatic Transaxle Overhaul

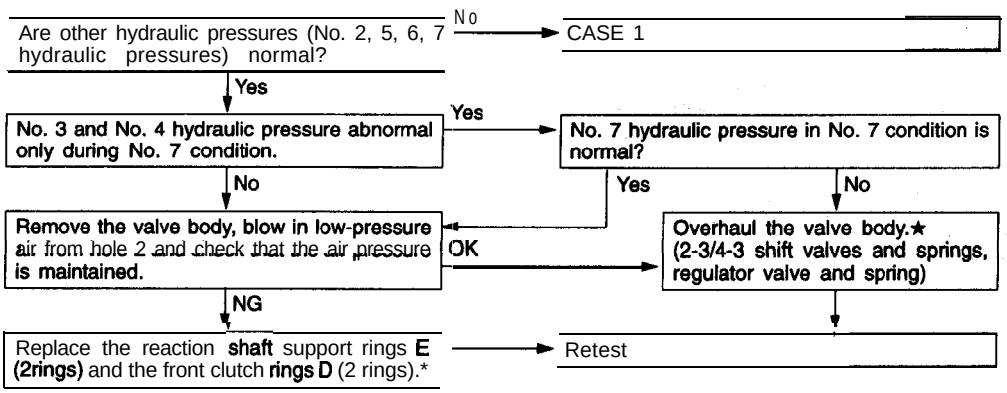

TSB Revision

CASE 5 No. 5 hydraulic pressure (rear clutch pressure) is abnormal.

★: Refer to Automatic Transaxle Overhaul

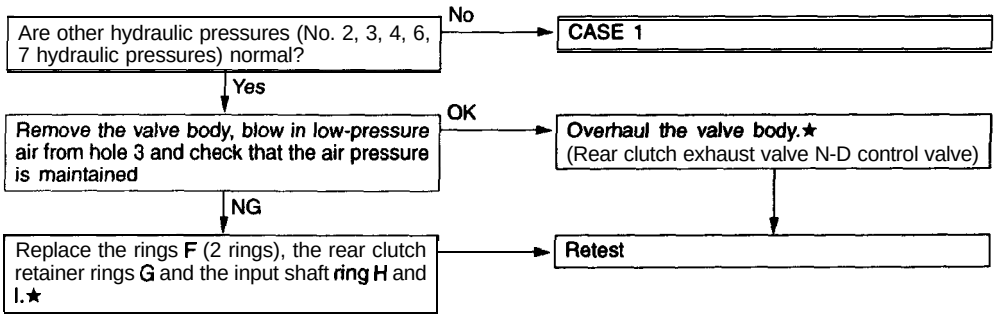

CASE 6 No. 6 hydraulic pressure (end clutch pressure) is abnormal.

★: Refer to Automatic Transaxle Overhaul

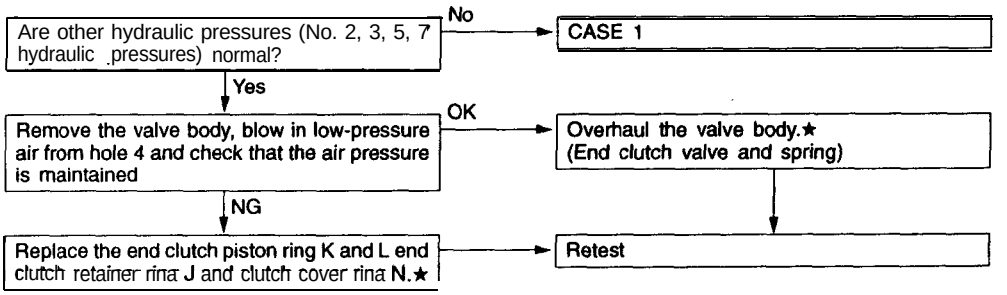

CASE 7 No. 7 hydraulic pressure (low-reverse brake pressure) is abnormal.

★: Refer to Automatic Transaxle Overhaul

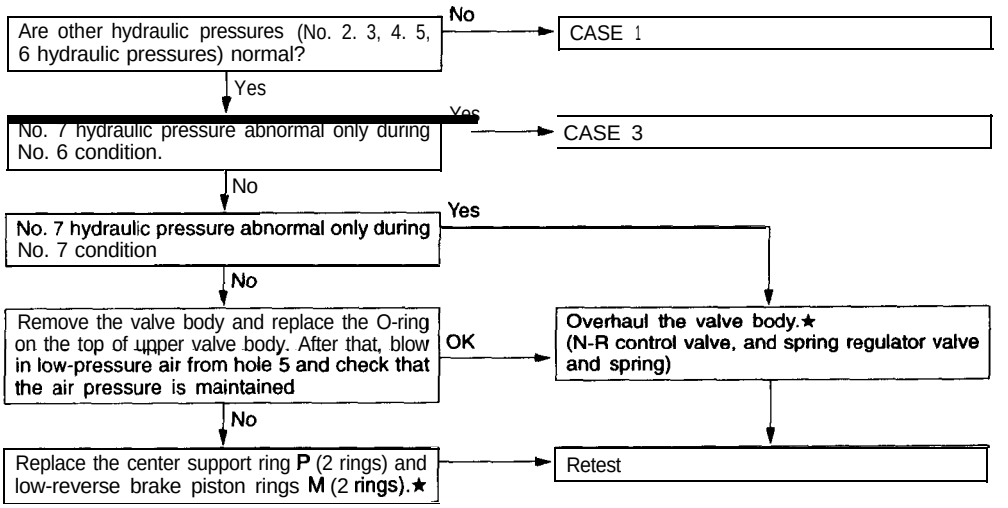

CASE 8 No. 8 hydraulic pressure (torque converter pressure) is abnormal.

★: Refer to Automatic Transaxle Overhaul

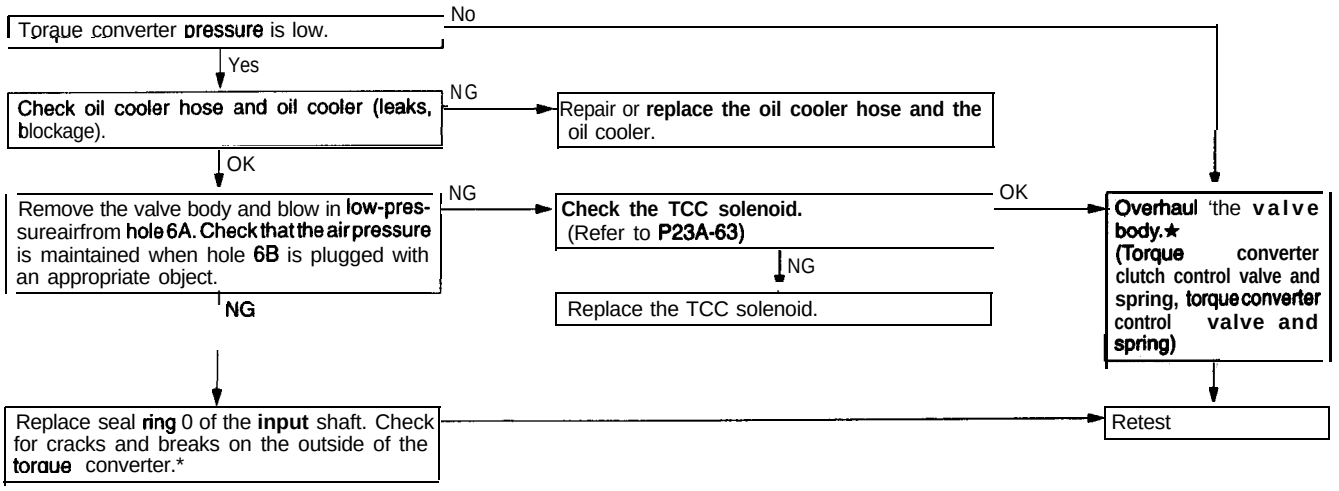

CASE 9 Hydraulic pressure appears in places where standard hydraulic pressure is 9.8 kPa (1.4 psi) or less

★: Refer to Automatic Transaxle Overhaul

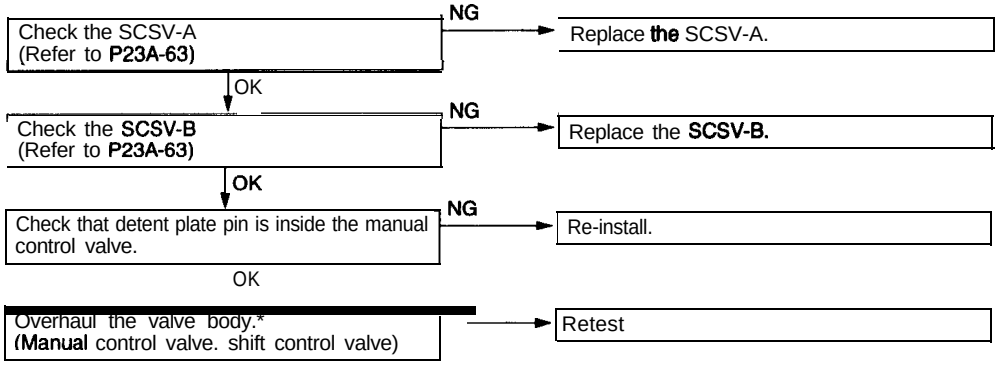

HYDRAULIC CIRCUIT

Neutral

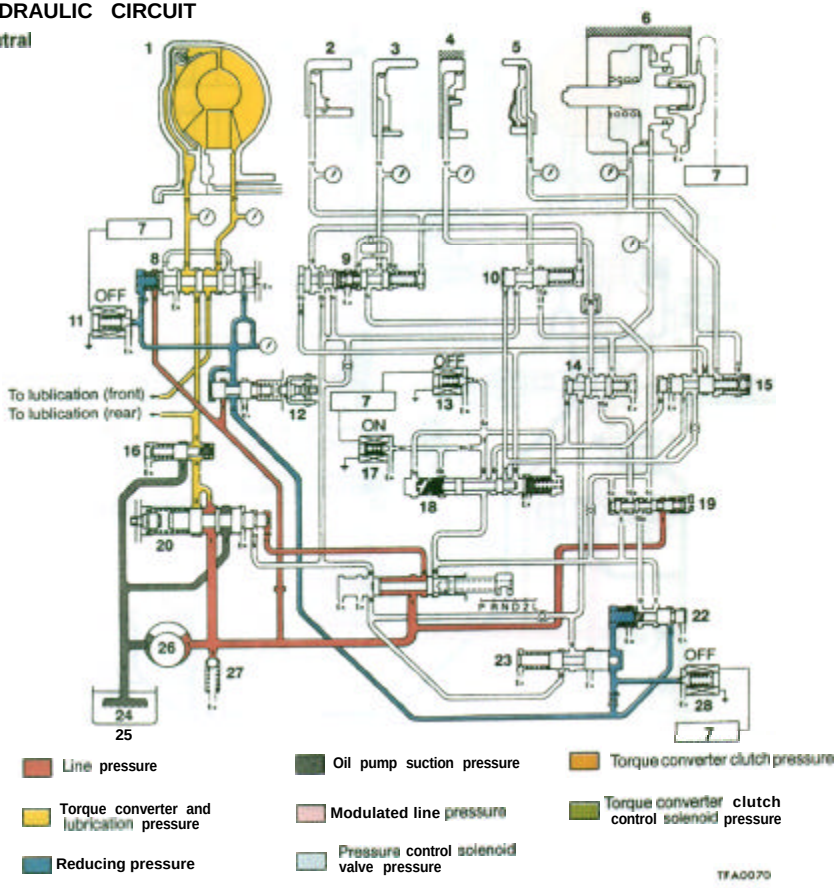

1. Torque converter
2. Front clutch
3. near clutch
4. Low-reverse brake
5. End clutch
6. Kickdown Servo
7. Transaxle control module
8. Torque converter clutch control valve
9. Rear clutch exhaust valve
10. 2-3/4-3 shift valve
11. Torque converter clutch control solenoide valve
12. Reducing valve
13. Shift control solenoide valve "A'
14. 1-2 shift valve
15. End clutch valve
16. Torque converter control valve
17. Shift control solenoid valve 'B'
18. Shift control valve
19. N-D control valve
20. Regurator valve
21. Manual valve
22. Pressure control valve
23. N-R control valve
24. Oil filter
25. Oil oan
26. Oil pump
27. Line relief valve
28. Pressure control solenoid valve

TSB Revision

Parking

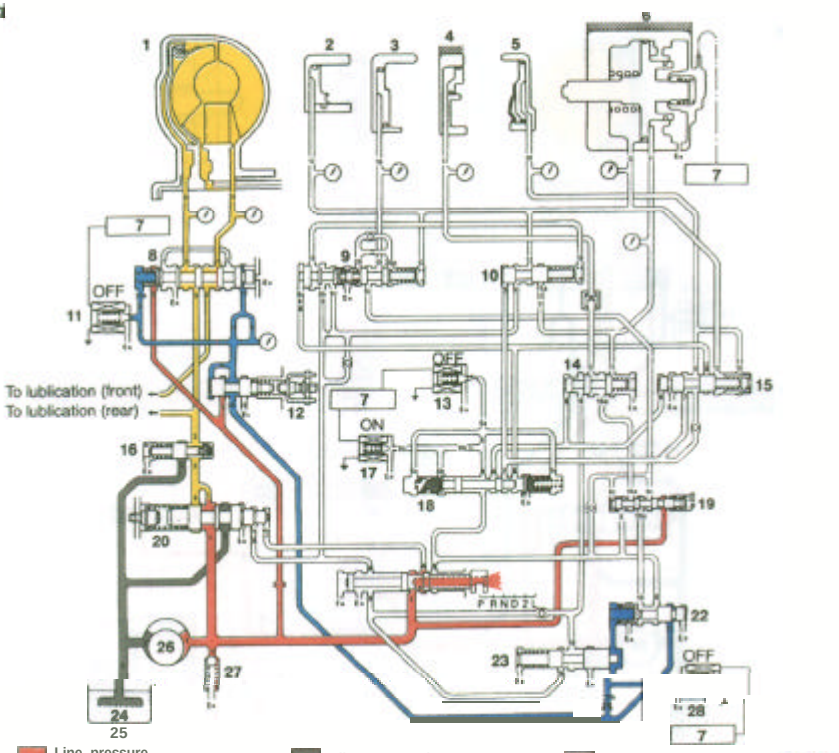

1. Torque converter
2. Front clutch
3. Rear clutch
4. Low-reverse brake
5. End clutch
6. Kickdown Servo
7. Transaxle control module
8. Torque converter clutch control valve
9. Rear clutch exhaust valve
10. 2-3/4-3 shift valve
11. Torque converter clutch control solenoide valve
12. Reducing valve
13. Shift control solenoide valve "A"
14. 1-2 shift valve
15. End clutch valve
16. Torque Converter control valve
17. Shift control solenoid valve "B"
18. Shift control valve
19. N-D control valve
20. Regurator valve
21. Manual valve
22. Pressure control valve
23. N-R control valve
24. Oil filter
25. Oil pan
26. Oil pump
27. Line relief valve
28. Pressure Control solenoid valve

Drive (Stop)

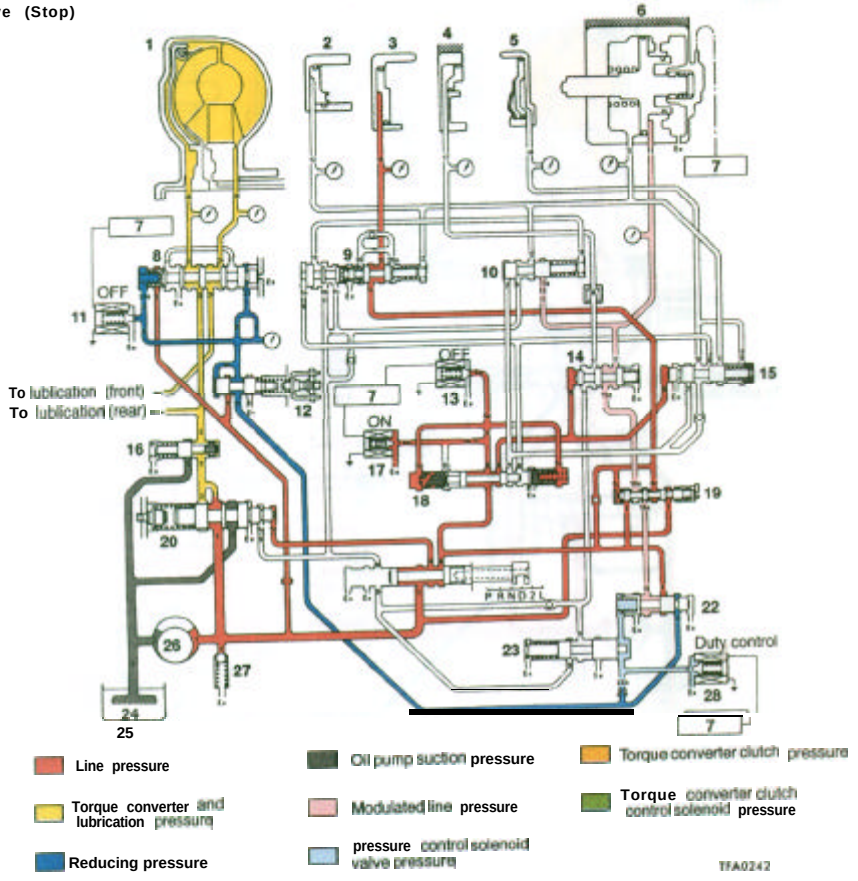

1 Torque converter
2. Front clutch
3. Rear clutch
4. Low-reverse brake
5. End clutch
6. Kickdown Servo
7. Transaxle control module
8. Torque converter clutch control valve
9. Rear clutch exhaust valve
10. 2-3/4-3 shift valve
11. Torque converter clutch control solenoide valve
12. Reducing valve
13. Shift control solenoide valve "A"
14. 1-2 shift valve
15. End clutch valve
16. Torque converter control valve
17. Shift control solenoid valve "B"
18. Shift control valve
19. N-D control valve
20. Regurator valve
21. Manual valve
22. Pressure control valve
23. N-R control valve
24. Oil filter
25. Oil pan
26. Oil pump
27. Line relief valve
28. Pressure control solenoid valve

Drive (First)

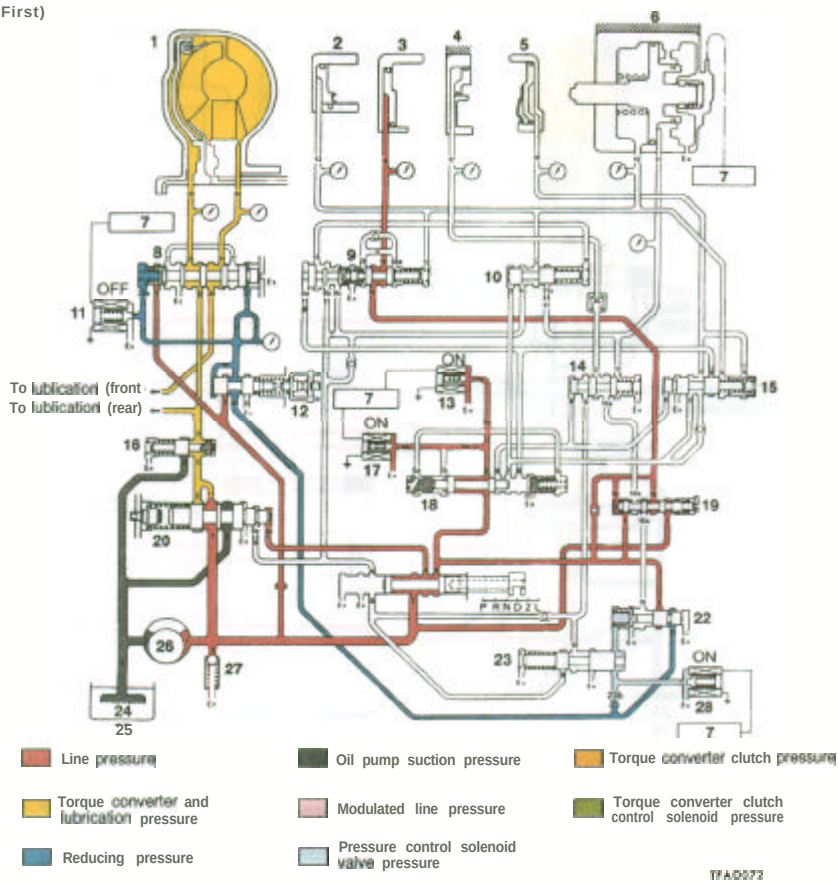

1. Torque converter
2. Front clutch
3. Rear clutch
4. Low-reverse brake
5. End clutch
6. Kickdown Servo
7. Transaxle control module
8. Torque converter clutch control valve
9. Rear clutch exhaust valve
10. 2-3/4-3 shift valve
11. Torque converter clutch control solenoide valve
12. Reducing valve
13. Shift control solenoide valve "A"
14. 1-2 shift valve
15. End clutch valve
16. Torque converter control valve
17. Shift control solenoid valve "B"
18. Shift control valve
19. N-D control valve
20. Reguator valve
21. Manual valve
22. Pressure control valve
23. N-R control valve
24. Oil filter
25. Oil pan
26. Oil pump
27. Line relief valve
28. Pressure control solenoid valve

Drive (Second)

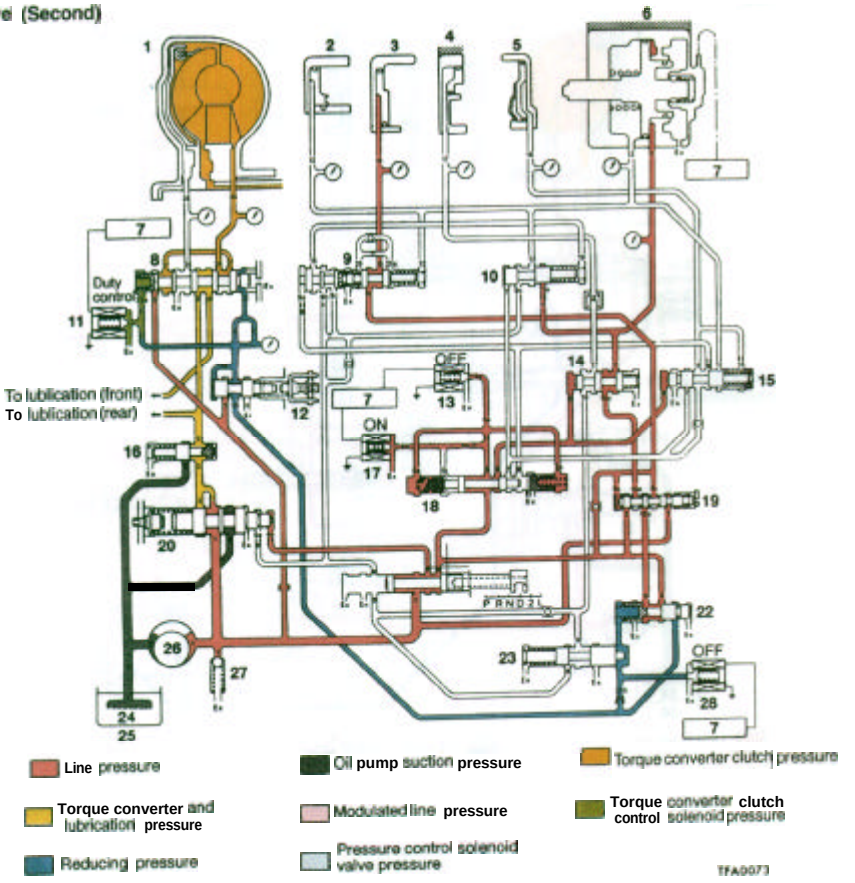

1. Torque converter
2. Front clutch
3. Rear clutch
4. Low-reverse brake
5. End clutch
6. Kickdown Servo
7. Transaxle control module
8. Torque converter clutch control valve
9. Rear clutch exhaust valve
10. 2-3/4-3 shift valve
11. Torque converter clutch control solenoide valve
12. Reducing valve
13. Shift control solenoide valve "A"
14. 1-2 shift valve
15. End clutch valve
16. Torque Converter control valve
17. Shift control solenoid valve "B"
18. Shift control valve
19. N-D control valve
20. Regurator valve
21. Manual valve
22. Pressure control valve
23. N-R control valve
24. Oil filter
25. Oil pan
26. Oil pump
27. Line relief valve
28. Pressure control solenoid valve

Drive (Third)

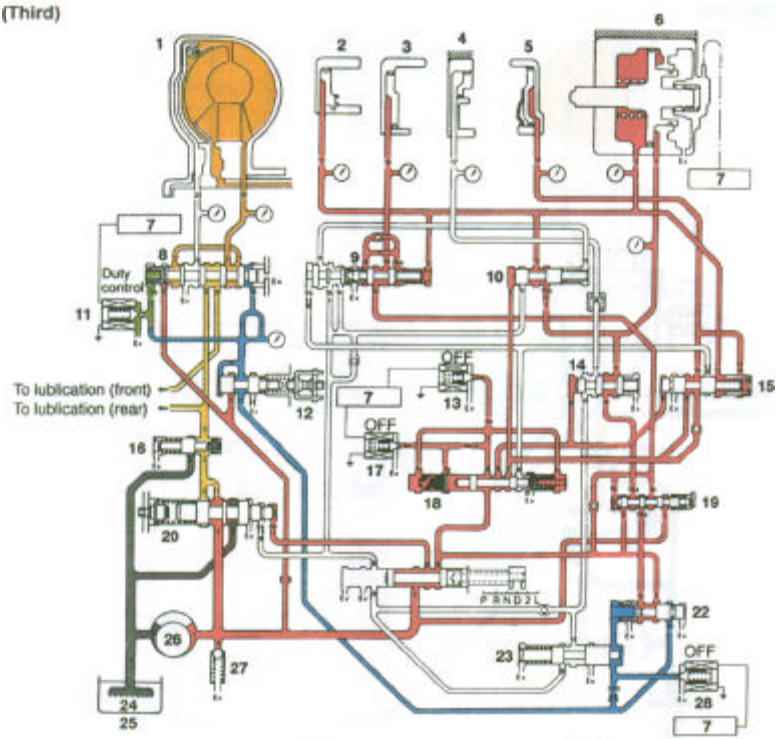

Line pressure
Oil pump suction pressure
Torque converter clutch pressure
Torque converter and lubrication pressure
Modulated line pressure
Torque converter clutch control solenoid pressure
Reducing pressure
Pressure control solenoid valve pressure

TFA0074

1. Torque converter
2. Front clutch
3. Rear clutch
4. Low-reverse brake
5. End clutch
6. Kickdown Servo
7. Transaxle control module
8. Torque converter clutch control valve
9. Rear clutch exhaust valve
10. 2-3/4-3 shift valve
11. Torque converter clutch control solenoide valve
12. Reducing valve
13. Shift control solenoide valve "A"
14. 1-2 shift valve
15. End clutch valve
16. Torque converter control valve
17. Shift control solenoid valve "B
18. Shift control valve
19. N-D control valve
20. Regurator valve
21. Manual valve
22. Pressure control valve
23. N-R control valve
24. Oil filter
25. Oil pan
26. Oil pump
27. Line relief valve
28. Pressure control solenoid valve

Drive (Fourth)

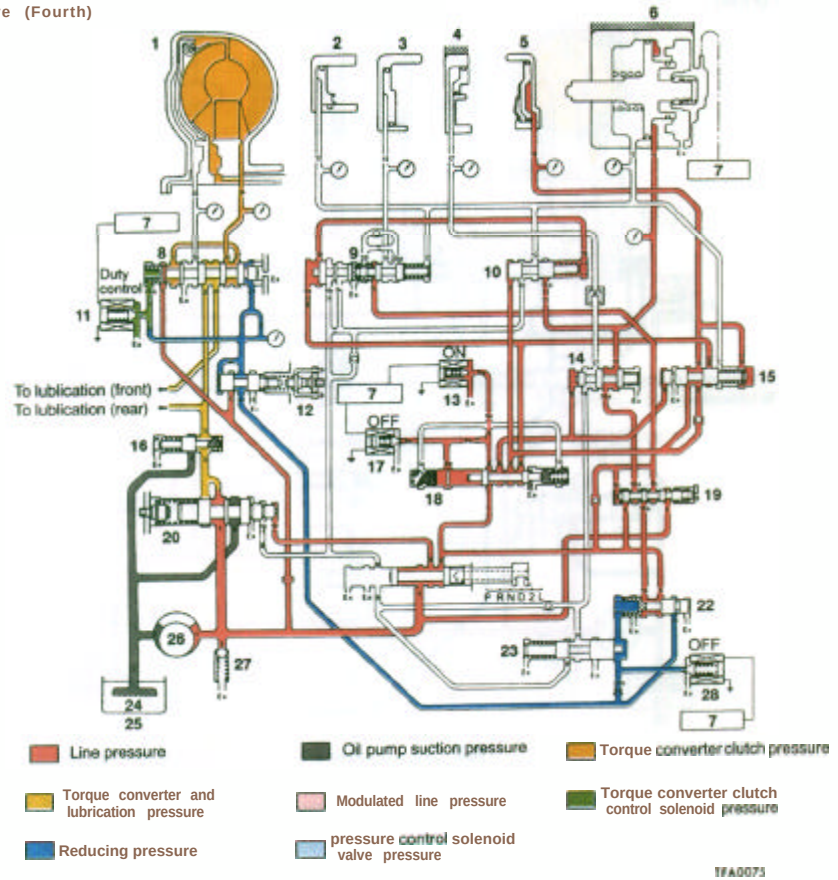

1. Torque convener
2. Front clutch
3. Rear clutch
4. Low-reverse brake
5. End clutch
6. Kickdown Servo
7. Transaxle control module
8. Torque converter clutch control valve
9. Rear clutch exhaust valve
10. 2-3/4-3 shift valve
11. Torque converter clutch control solenoide valve
12. Reducing valve
13. Shift control solenoide valve "A"
14. 1-2 shift valve
15. End clutch valve
16. Torque converter control valve
17. Shift control solenoid valve "B"
18. Shift control valve
19. N-D control valve
20. Regurator valve
21. Manual valve
22. Pressure control valve
23. N-R control valve
24. Oil filter
25. Oil pan
26. Oil pump
27. Line relief valve
28. Pressure control solenoid valve

Lock-up (First)

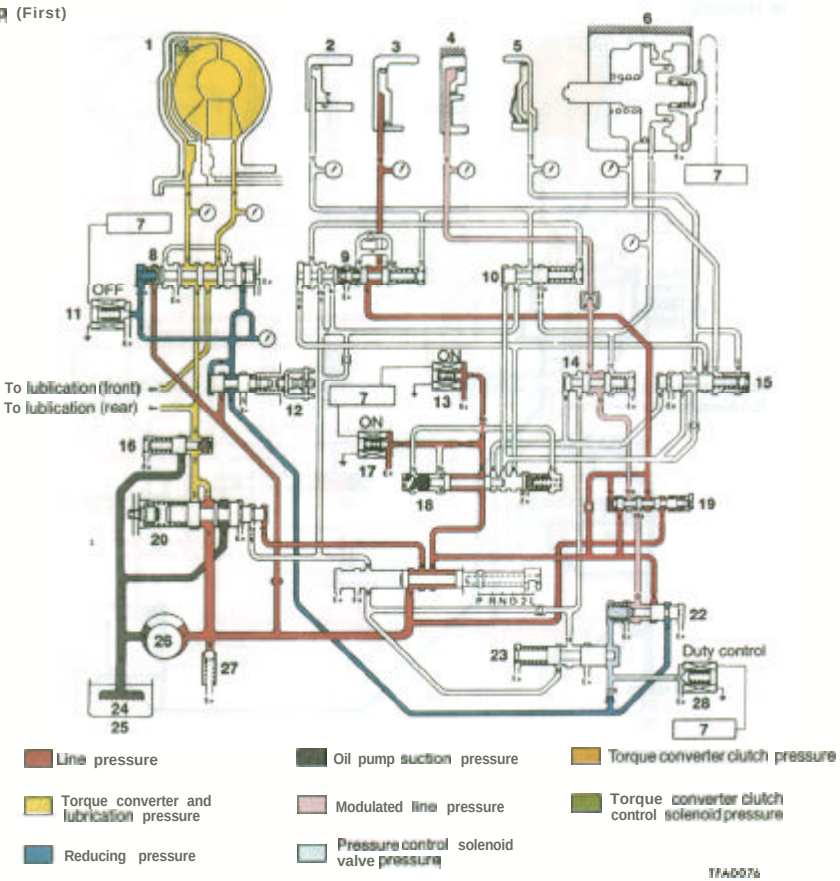

1. Torque converter
2. Front clutch
3. Rear clutch
4. Low-reverse brake
5. End clutch
6. Kickdown Servo
7. Transaxle control module
8. Torque converter clutch control valve
9. Rear clutch exhaust valve
10. 2-3/4-3 shift valve
11. Torque converter clutch control solenoide valve
12. Reducing valve
13. Shift control solenoide valve "A"
14. 1-2 shift valve
15. End clutch valve
16. Torque converter control valve
17. Shift control solenoid valve "B"
18. Shift control valve
19. N-D control valve
20. Regurator valve
21. Manual valve
22. Pressure control valve
23. N-R control valve
24. Oil filter
25. Oil oan
26. Oil pump
27. Line relief valve
28. Pressure control solenoid valve

TSB Revision

Reverse

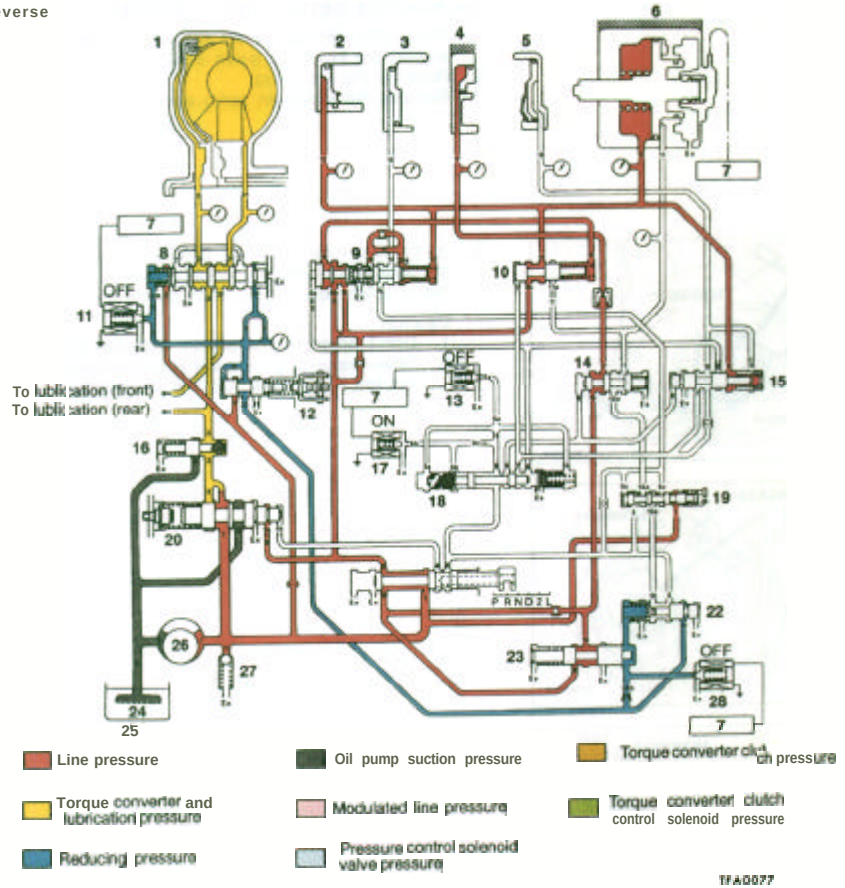

1. Torque converter
2. Front clutch
3. Rear clutch
4. Low-reverse brake
5. End clutch
6. Kickdown Servo
7. Transaxle control module
8. Torque converter clutch control valve
9. Rear clutch exhaust valve
10. 2-3/4-3 shift valve
11. Torque converter clutch control solenoide Valve
12. Reducing valve
13. Shift control solenoide valve "A"
14. 1-2 shift valve
15. End clutch valve
16. Torque converter control valve
17. Shift control solenoid valve "B"
18. Shift control valve
19. N-D control valve
20. Regurator valve
21. Manual valve
22. Pressure control valve
23. N-R control valve
24. Oil filter
25. Oil pan
26. Oil pump
27. Line relief valve
28. Pressure control solenoid valve

KICKDOWN SERVO ADJUSTMENT 23100160037

1. Completely remove all dirt and other materials adhered around the kickdown servo switch.
2. Remove the snap ring.
3. Remove the kickdown servo switch.

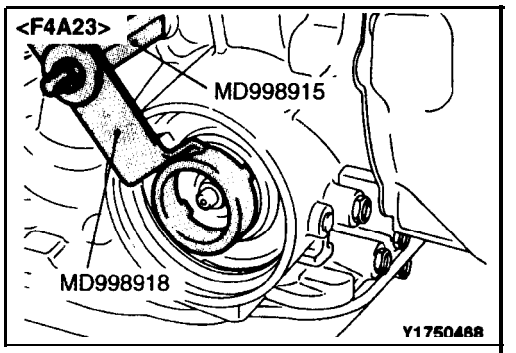

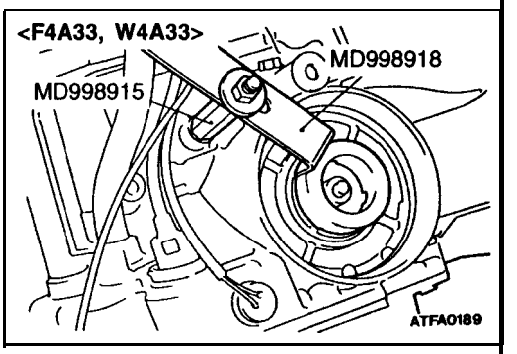

4. To prevent rotation of the piston, engage the pawl of the special tool into the notch of the piston, and using the adapter, secure the piston as shown to the left.

   Caution
   1 **Don't press in the piston with the special tool.**
   2. **When mounting the adapter on the transaxle case, tighten it by hand. Do not overtighten.**

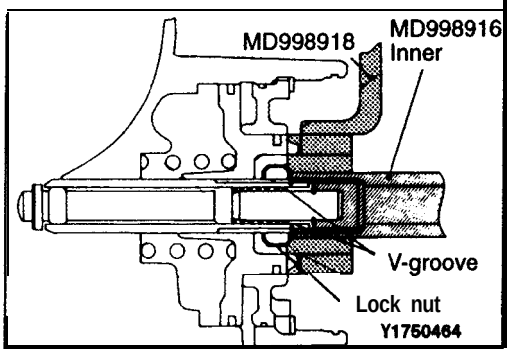

5. Loosen the lock nut to before the V-groove of the adjusting rod, and tighten the special tool (inner) until it contacts the lock nut.

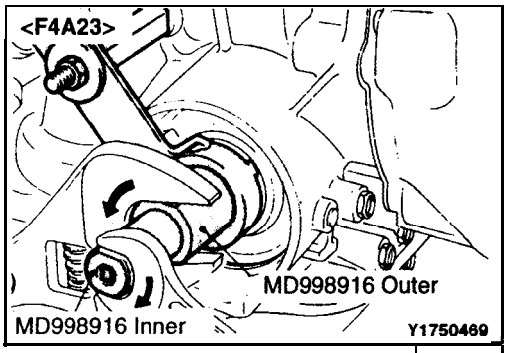

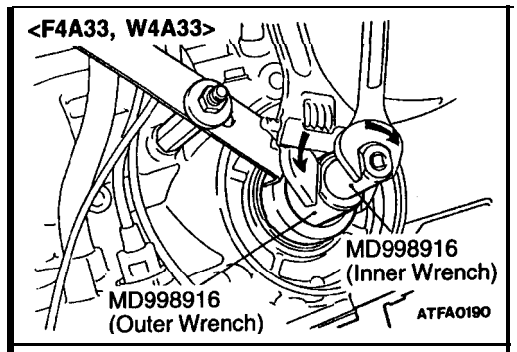

6. Engage the special tool (outer) on the lock nut.
   Rotating the outer cylinder counterclockwise and the inner cylinder clockwise, lock the lock nut and special tool (inner).

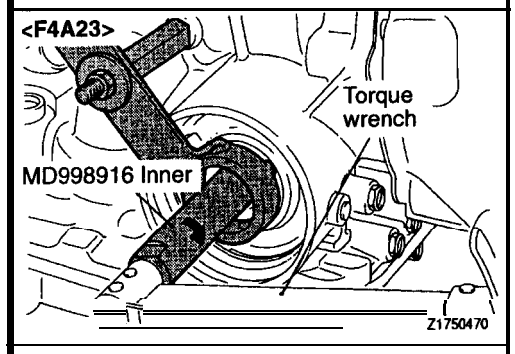

7. Attach a torque wrench to the special tool (inner) and tighten to a torque of 10 Nm (7.2 **ft.lbs.)** and repeating "Tighten" and "Loosen" two times then torque to 5 Nm (3.6 **ft.lbs.).** After that, back off the special tool (inner) 2 to **2-1/4** turns.

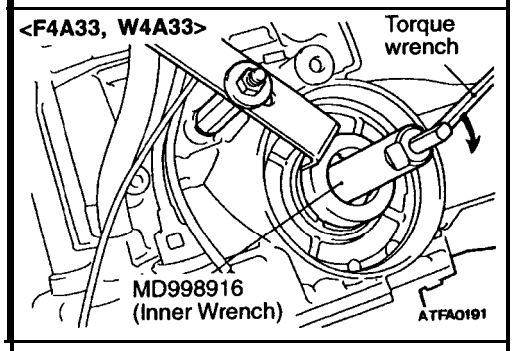

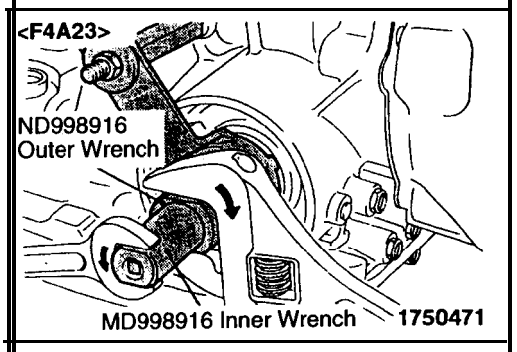

8. Engage the tool (outer) on the lock nut.
   Rotating the outer cylinder clockwise and the inner cylinder counterclockwise, unlock the lock nut and special 'tool (inner).

   Caution
   When unlocking the nut and special tool, apply equal force to both parts.

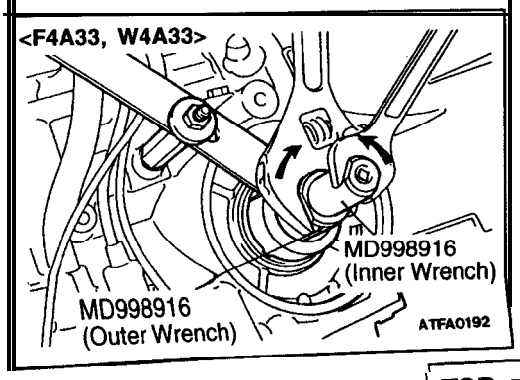

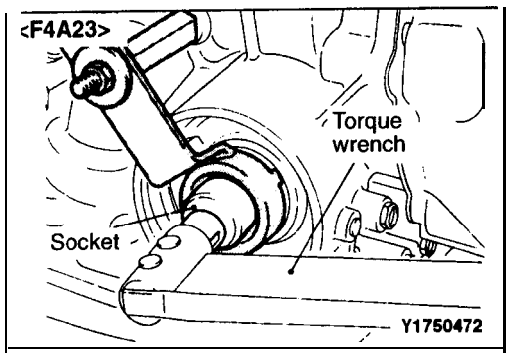

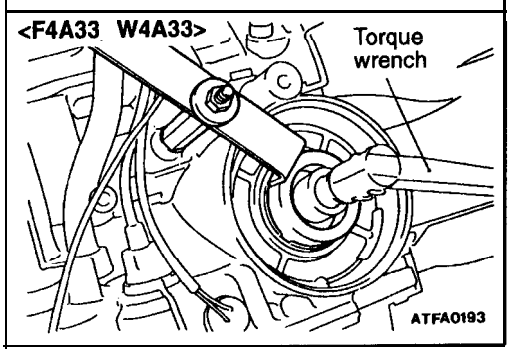

9. Tighten the lock nut by hand until the lock nut contacts the piston. Then using the torque wrench, tighten to the specified torque.

   Lock nut: 29Nm (21 ft.lbs.)

   Caution
   If it is rapidly tightened with the socket wrench or torque wrench, the lock nut and adjusting rod may rotate together.

10. Remove the special tool which fastens the piston. Attach the plug to the outlet of the low-reverse pressure.

LINE PRESSURE ADJUSTMENT

23100170047

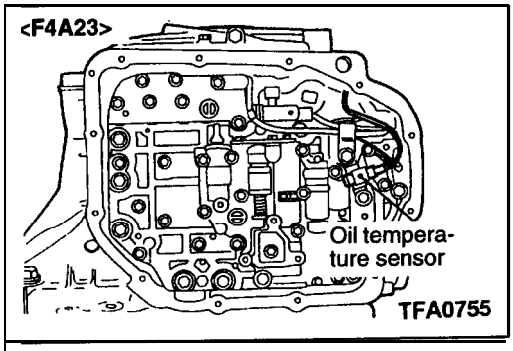

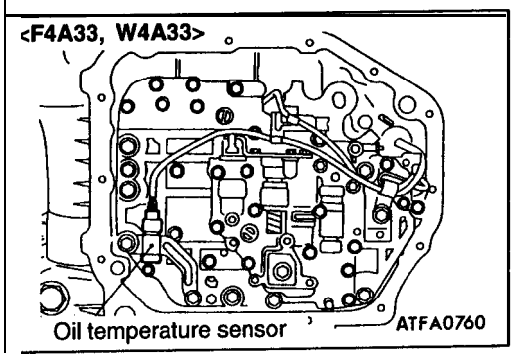

1. Drain out the automatic transmission fluid.
2. Remove the oil pan.
3. Remove the oil filter.
4. Remove the oil temperature sensor.
5. Press the solenoid valve harness grommet and connector into the transaxle case.

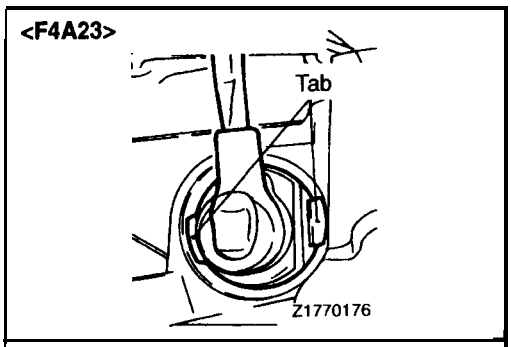

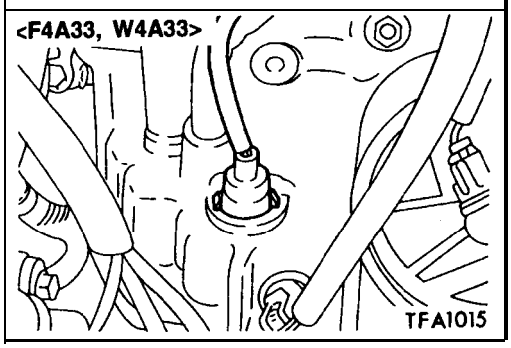

6. Press the catches of the solenoid valve harness grommets and pass the connector through the case hole.

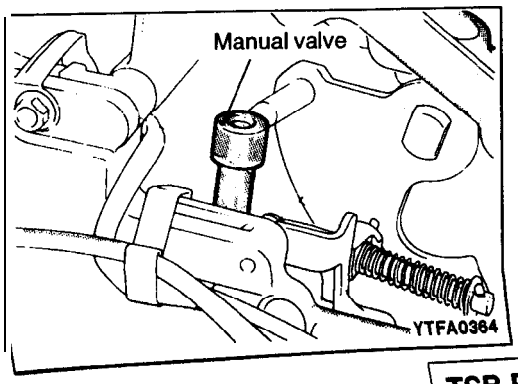

7. Remove the valve body assembly. The manual valve can come out, so be careful not to drop it.

TSB Revision

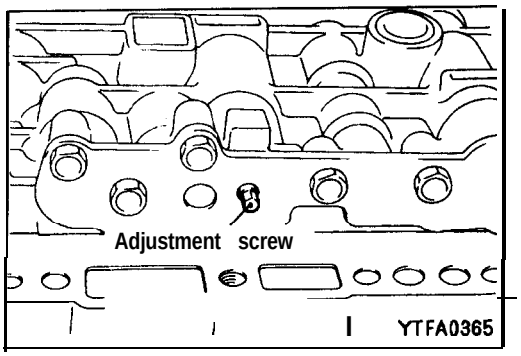

8. Turn the adjustment screw of the regulator valve and adjust so that the line pressure (kickdown brake pressure) becomes the standard value.
   When the adjustment screw is turned clockwise, the line pressure decreases; when it is turned to counterclockwise, it increases.

   Standard value: 870–890 kPa (126–129 psi)
   Oil pressure change for each turn of adjustment screw: 38 kPa (5.5 psi)

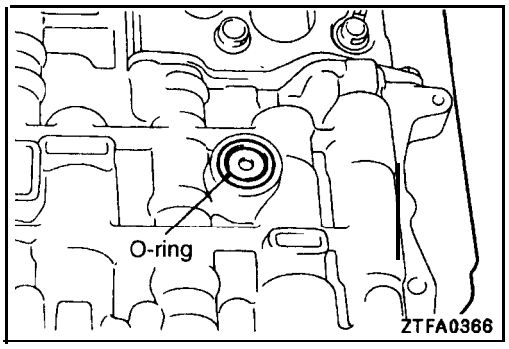

9. Check that the O-ring is installed on the upper surface of the valve body at the place shown in the figure.
10. Replace the O-ring of the solenoid valve harness grommet with a new one.

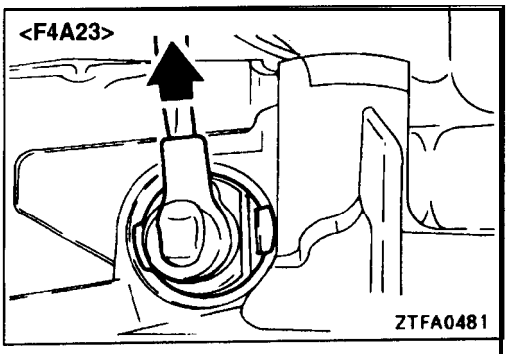

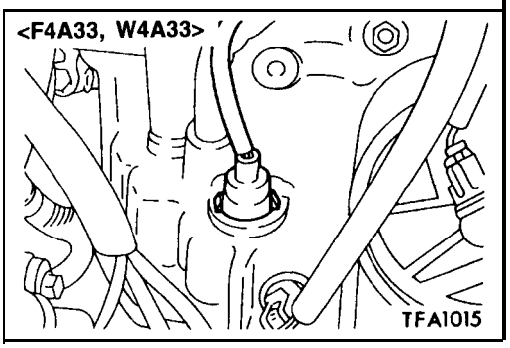

11. Pass the solenoid valve connector through the inside of the hole in the case.

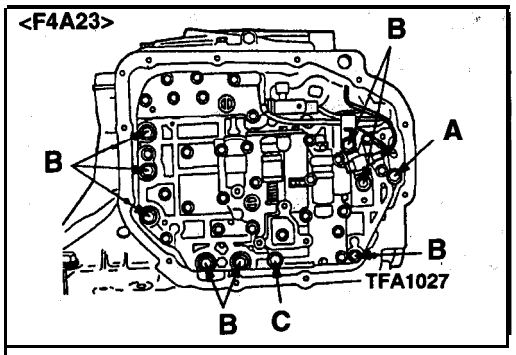

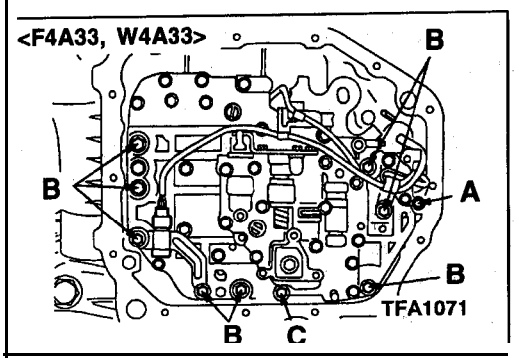

12. Temporarily install the valve body while inserting the detent plate pin in the manual valve, groove. Then install the oil temperature sensor arid holder and tighten the bolts with the specified torque.

    A bolt: 18 mm (.71 in.) long
    B bolt: 25 mm (.98 in.) long
    C bolt: 40 mm (1.57 in.) long
    Valve body assembly mounting bolts: 11 Nm (8.0 ft.lbs.)

13. Install the oil filter.
14. Install a new oil pan gasket and oil pan.
15. Pour in the specified amount of ATF.
16.. Perform the oil pressure test. Readjust if necessary.

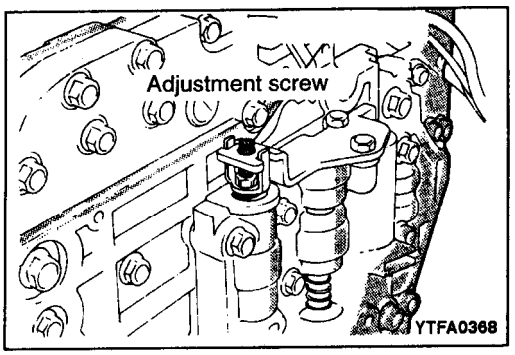

REDUCING PRESSURE ADJUSTMENT 23100180033

WHEN SCAN TOOL IS NOT USED

1. Remove parts up to the oil filter in the same way as for adjustment of the line pressure. The valve body need not be removed.
2. Tune the adjustment screw of the lower valve body and adjust so that the reducing pressure is the standard value. When the adjustment screw is turned clockwise, the reducing pressure decreases; when it is turned counterclockwise, it increases.

   NOTE
   When adjusting the reducing pressure, aim for the center value [425 kPa (60 psi)] of the standard value allowance.

   Standard value: 415-435 kPa (60–63 psi)
   Oil pressure change for each turn of adjustment, screw: 45 kPa (6.5 psi)
3. Install the oil filter and oil pan in the same way as for adjustment of the line pressure.
4. Perform the oil pressure test. Readjust if necessary.

WHEN SCAN TOOL IS USED

1. Use the scan tool to force-actuate the pressure control solenoid valve to 50 % duty, and measure the kickdown brake apply pressure at that time. If the kickdown brake apply pressure is not within the standard value, adjust using the reducing pressure adjustment screw.

   Standard value: 250–300 kPa (36-44 psi)
   Oil pressure change for each turn of adjustment screw: 22 kPa (3.2 psi)
2. Check to be sure, after completing this adjustment, that the reducing pressure is within the range of 370–490 kPa (51-68 psi).

   Caution
   The adjustment should be made at an oil temperature of 70–80°C (158–176°F).
   If the adjustment is made at an oil temperature that is too high, the line pressure will decrease during idling, with the result that a correct adjustment cannot be made.

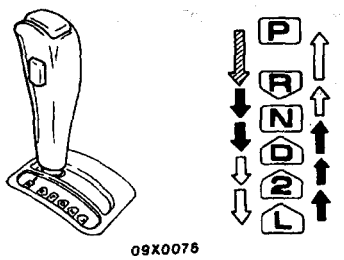

09A0140

Button pressed (while brake pedal is depressed)
Button not pressed
Button pressed

00000207

SELECTOR LEVER OPERATION CHECK

23100130076

1. Shift selector lever to each range and check that lever moves smoothly and clicks into position. Check that position indicator is correct.
2. Check that the selector lever can be shifted to each position (by button dperation as shown in the illustration).
3. Start the engine and check if the vehicle moves forward when the selector lever is shifted from N to D, and moves backward when shifted to R.
4. When the shift lever malfunctions, adjust control cable' and selector lever sleeve. Check for worn shift lever assembly sliding parts.

NOTE .
To move the selector lever from the "P" position to any other position, first turn. the ignition key to any position 'other than "LOCK (OFF)" and depress the brake pedal.

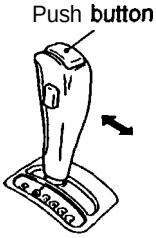

KEY INTERLOCK MECHANISM CHECK 23200090063

Completely stop the vehicle and switch OFF the engine before making the check.

1. Check that, under the following conditions, the selector lever cannot be moved from the "P" position to any other position.
   Also check, at the same time, that the button cannot be pressed.

   Ignition key position: "LOCK (OFF)", or removed
   Brake pedal: Depressed

2. Check that, under the following conditions, the selector lever can be moved from the "P" position to any other position.
   Press the button a few times and check to be sure that the selector lever moves smoothly.

   Ignition key position: "ACC"
   Brake pedal: Depressed
   Button: Pressed

3. Check that, at all positions of the selector lever (other than "P"), the ignition key cannot be turned to the "LOCK (OFF)" position.
   Check to be sure that the ignition key smoothly turns to the "LOCK (OFF)" position when the selector lever is then set to the "P" position and the button is released.
4. If a malfunction is discovered when following the above checking procedures, either adjust or check the key interlock cable mechanism. (Refer to P. 23A-98.)

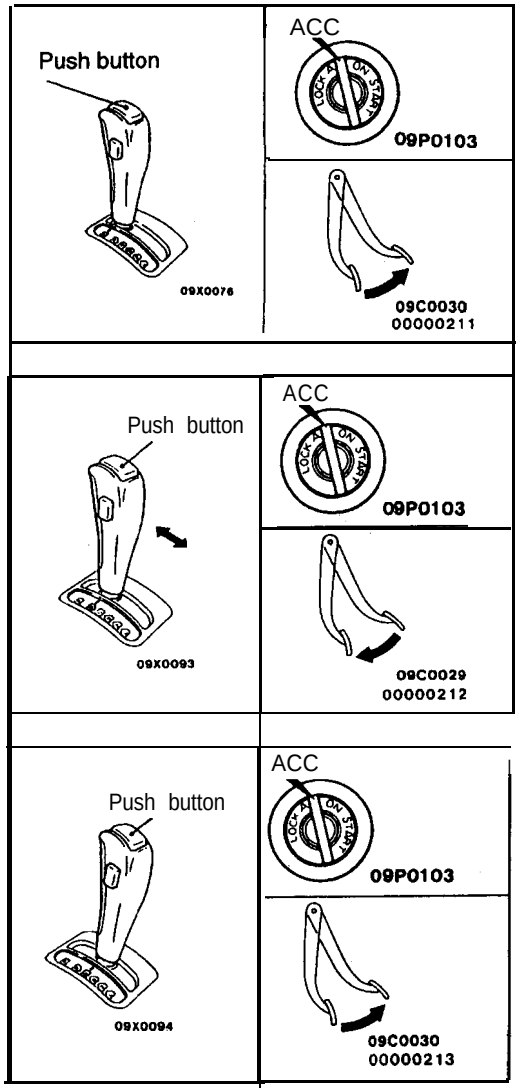

SHIFT LOCK MECHANISM CHECK

23200100063

1. Check that, under the following conditions, the selector lever cannot be moved from the **“P”** position to any other position.

   Ignition key position: “ACC”
   Brake pedal: Not depressed
   Button: Pressed

2. Check that, under the following conditions, the selector lever can be moved smoothly from the **“P”** position to any other position.

   Ignition key position: “ACC”
   Brake pedal: Depressed
   Button: Pressed

3. Check that, under the following conditions, the selector lever can be moved smoothly from the **“R”** position to the “P” position.

   Ignition key position: “ACC”
   Brake pedal: Released
   Button: Pressed

4. If a malfunction is discovered when following the above checking procedures, either adjust or check the shift lock cable mechanism. (Refer to P. 23A-98.)

TRANSAXLE CONTROL

23100660094

REMOVAL AND INSTALLATION

Caution: SRS
Be careful not to subject the SRS-ECU to any shocks during removal and installation of the transaxle control cable and shift lever assembly.

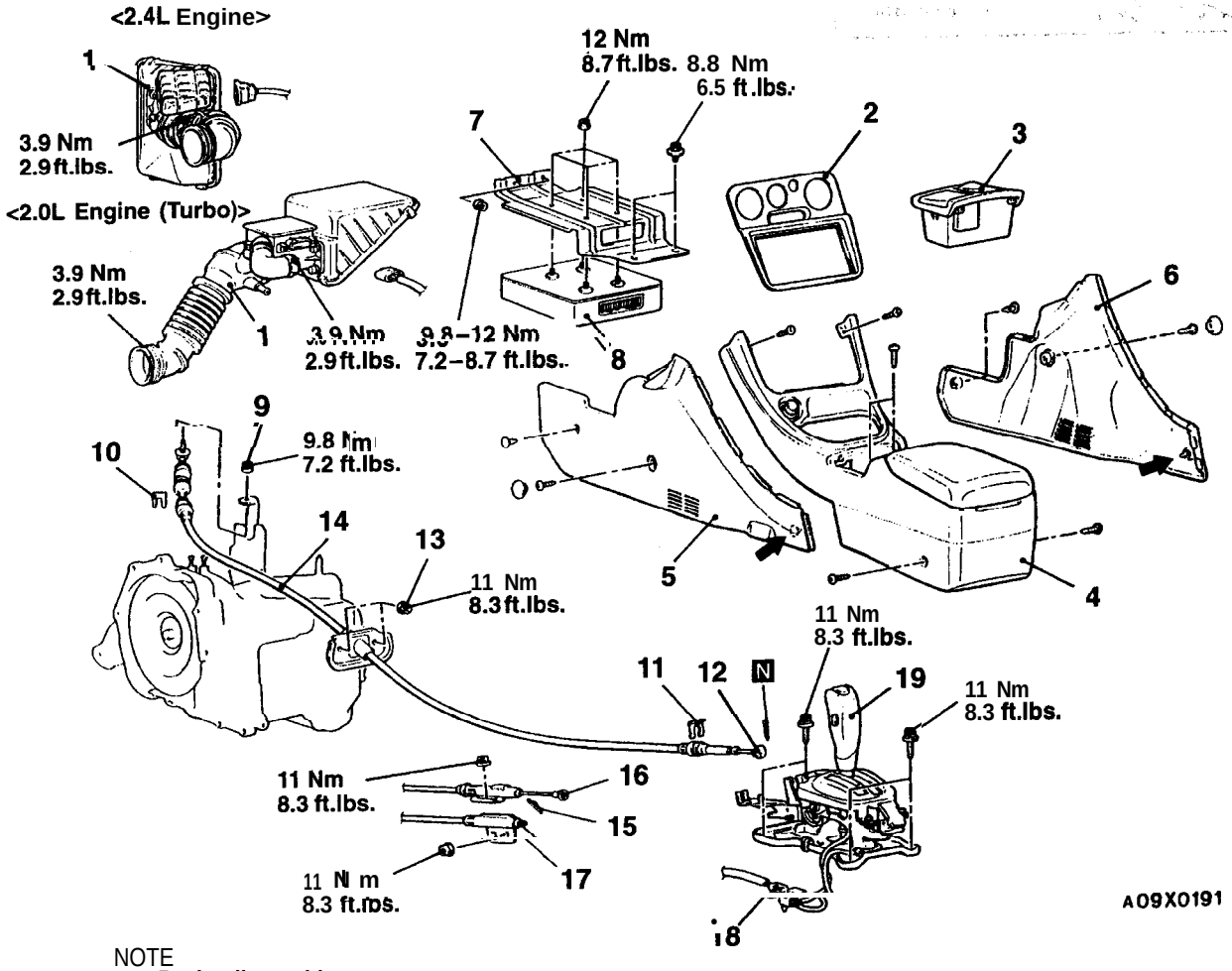

NOTE
◀: Resin clip position

Transaxle control cable assembly removal steps

1. Air cleaner and air intake hose assembly
2. Center panel
3. Cup holder assembly
4. Floor console assembly
5. Console side cover (L.H.)
6. Console side cover RH (R.H.)
7. TCM bracket
8. Transaxle control module (TCM)

▶A◀ 9. Nut
10. Clip
11. Clip
12. Transaxle control cable connection
13. Nut
14. Transaxle control cable assembly

Selector lever assembly removal steps

2. Center panel
3. Cup holder assembly
4. Floor console assembly
5. Console side cover (L.H.)
6. Console side cover (R.H.)
11. Clip
12. Transaxle control cable connection
15. Snap pin
16. Key interlock cable connection
17. Shift lock cable connection
18. Overdrive switch/position indicator light connector
19. **Selector lever assembly**

TSB Revision

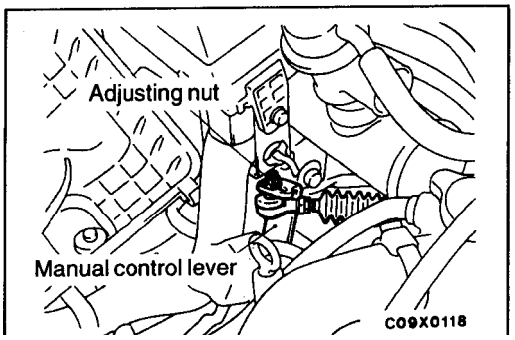

INSTALLATION SERVICE POINT

▶A◀ NUT INSTALLATION

(1) Put the selector lever in the "N" posit/on.
(2) Loosen the adjusting nut, gently pull the transaxle control cable in the direction of the arrow and tighten the nut.

SELECTOR LEVER ASSEMBLY DISASSEMBLY AND REASSEMBLY

23100680076

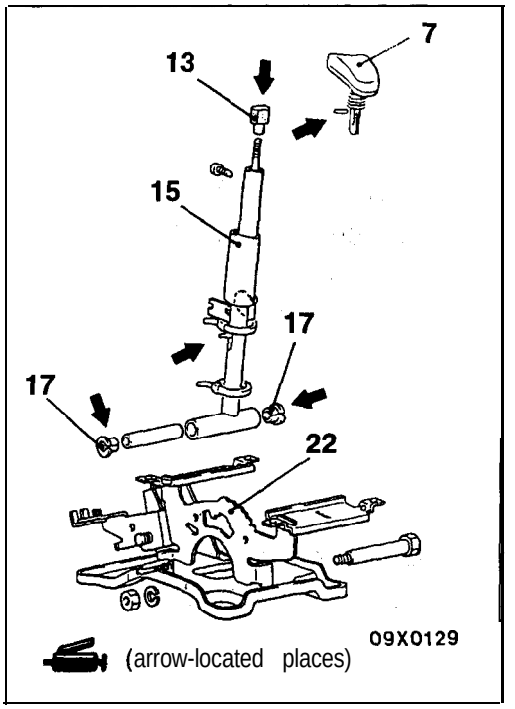

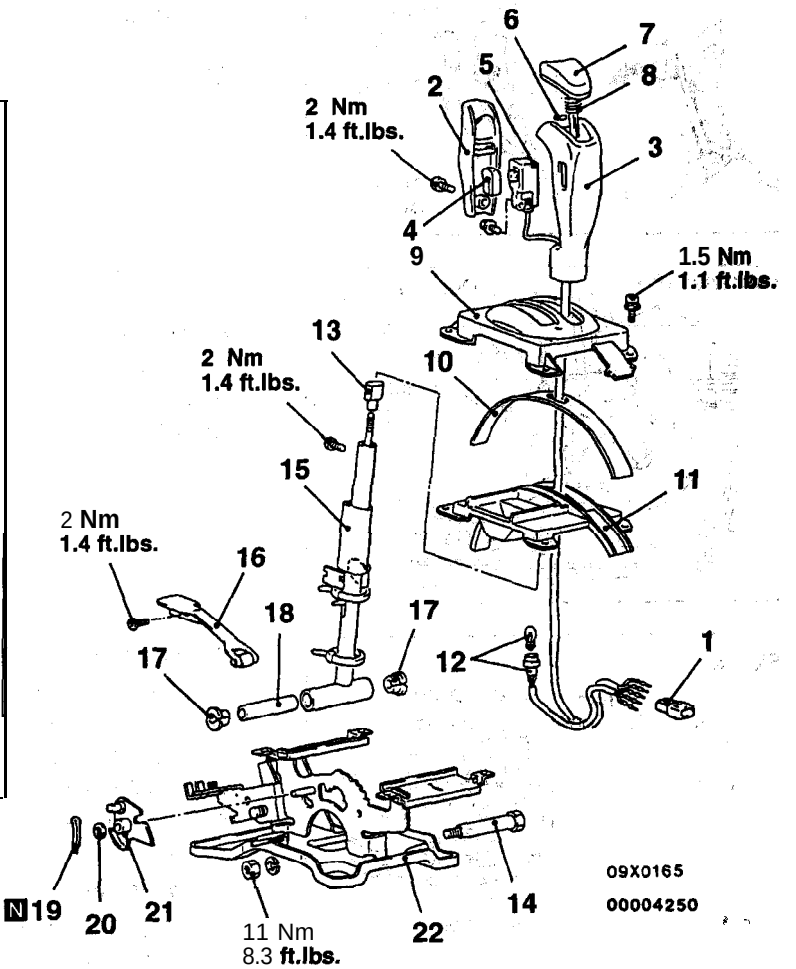

Disassembly steps

◀A▶ 1. Overdrive switch / position indicator light connector case
2. Cover
▶B◀ 3. Selector knob
◀B▶ 4. Overdrive switch button
◀B▶ 5. Overdrive switch
6. Pin
7. Push button
8. Spring
9. Indicator panel upper
10. Slider
11. Indicator panel lower
12. Position indicator light assembly
13. Sleeve
14. Bolt
15. Lever assembly
▶A◀ 16. Detent spring assembly
17. Bushing
18. Pipe
19. Cotter pin
20. Washer
21. Lock cam
22. Bracket assembly

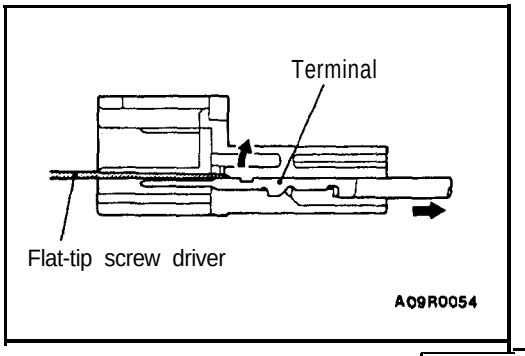

DISASSEMBLY SERVICE POINTS

◀A▶ OVERDRIVE SWITCH / POSITION INDICATOR LIGHT CONNECTOR CASE REMOVAL

Use a flat-tip screwdriver or similar tool to pull out the terminal from the overdrive switch/position indicator light connector case.

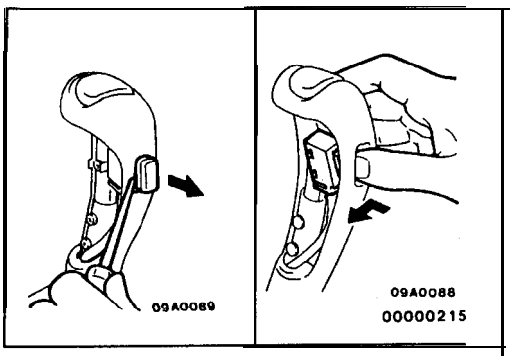

◀B▶ OVERDRIVE SWITCH BUTTON/OVERDRIVE SWITCH REMOVAL

(1) Use a flat-tip screwdriver to remove the overdrive switch button.
(2) Remove the overdrive switch mounting screw.
(3) Pressing the switch, remove the overdrive switch.

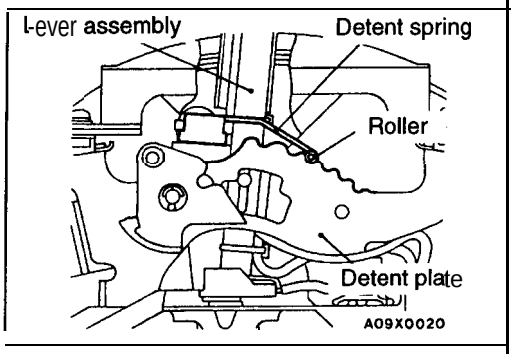

REASSEMBLY SERVICE POINTS

▶A◀ DETENT SPRING ASSEMBLY INSTALLATION

Shift the selector lever to the neutral (N) position, and then install the detent spring assembly so that the roller is in the detent plate groove.

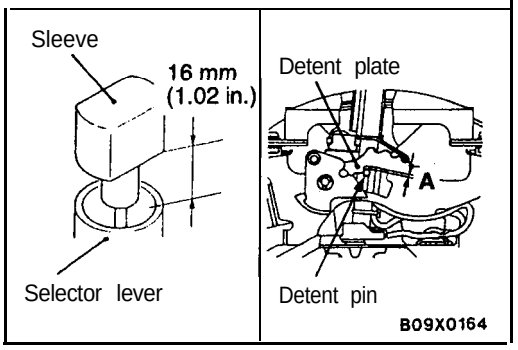

▶B◀ SELECTOR KNOB INSTALLATION

(1) Put the selector lever in the "N" position, turn the sleeve and adjust the dimension between the sleeve and the end of the lever so it reaches 16 mm (1.02 in.)
(2) Install the selector knob.
(3) Check that dimension (A) between the detent plate and detent pin reaches the standard value.

Standard value (A): 1.7-2.4 mm (.067–.094 in.)

(4) If outside the standard value, remove the selector knob and turn the sleeve again to readjust.

INSPECTION

23100690055

- Check the detent plate for wear.
- Check the bushing for wear or damage.
- Check the spring' for damage or deterioration.

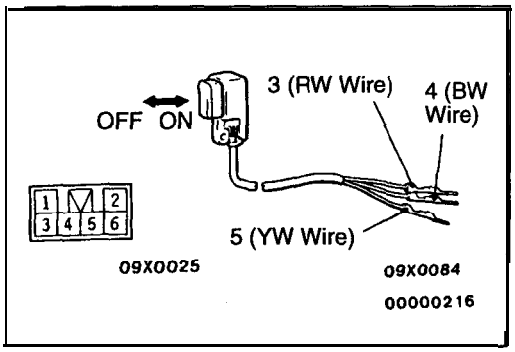

OVERDRIVE SWITCH CONTINUITY CHECK

Switch position	Terminal No.		
	3	4	5
OD is operating (ON)	○	○	
OD is not operating (OFF)	○		○

AUTOMATIC TRANSAXLE KEY INTERLOCK AND SHIFT LOCK MECHANISMS

23200120045

REMOVAL AND INSTALLATION

Caution: SRS
Be careful not to subject the SRS-ECU to any shocks during removal and installation of the key interlock cable and shift lock cable.

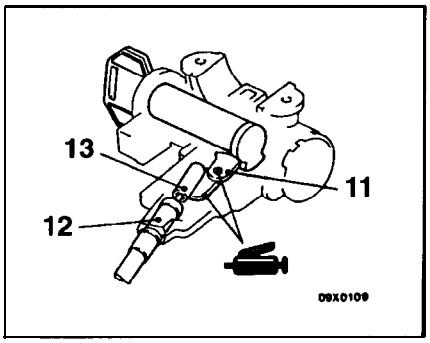

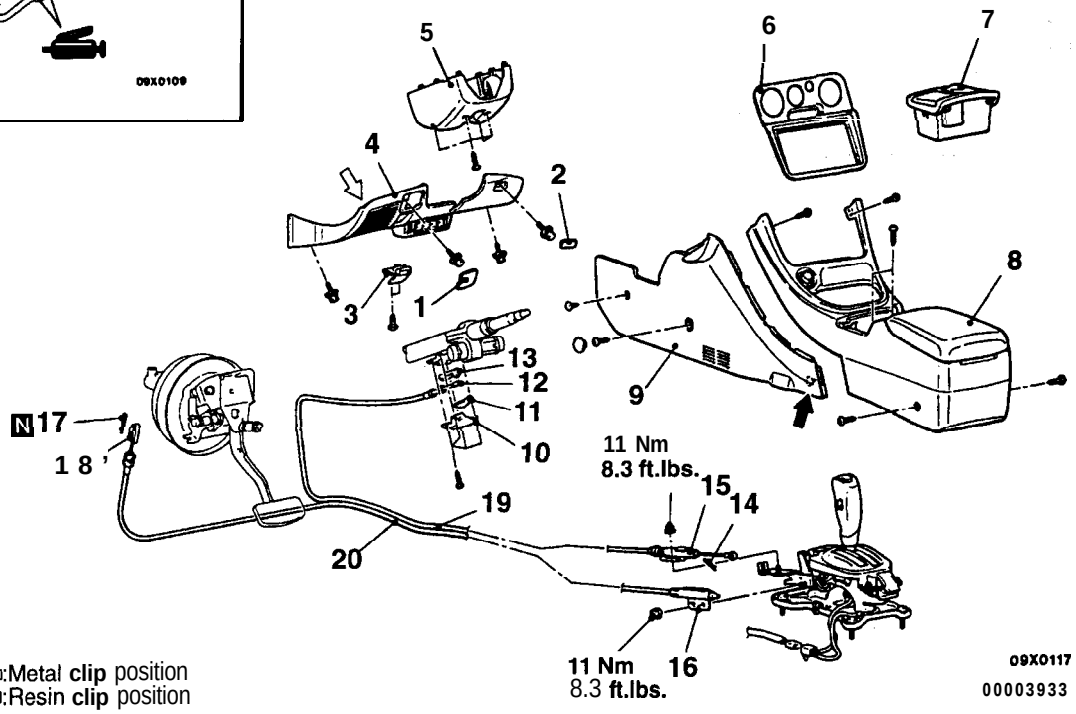

NOTE
(1) ⇦:Metal clip position
(2) ⬅:Resin clip position

Key interlock cable removal steps

1. Plug A
2. Plug B
3. Hood release lever
4. Instrument panel under cover
5. Steering column lower cover
6. Center panel
7. Cup holder assembly
8. Floor console assembly
9. Console side cover (L.H.)
10. Cover
11. Cam and lever
12. Key interlock cable connection
13. Slide lever
14. Snap pin
▶C◀ 15. Key interlock cable connection
▶A◀ 19. Key interlock cable

Shift lock cable removal steps

1. Plug A
2. Plug B
3. Hood release lever
4. Instrument panel under cover
6. Center panel
7. Cup holder assembly
8. Floor console assembly
9. Console side cover (L.H.)
▶B◀ 16. Shift lock cable connection
17. Cotter pin
18. Shift lock cable connection
▶A◀ 20. Shift lock cable

TSB Revision

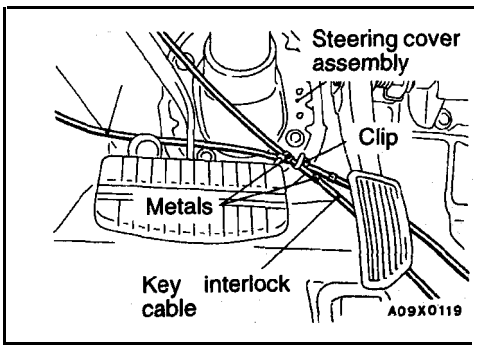

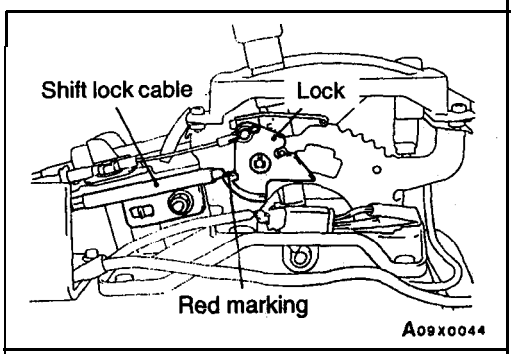

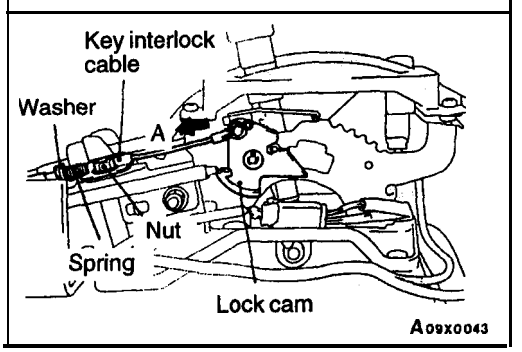

INSTALLATION SERVICE POINTS

▶A◀ SHIFT LOCK CABLE/ KEY INTERLOCK CABLE INSTALLATION

Secure the section between the metals of the shift lock cable and key interlock cable with the clip of the steering cover assembly.

Caution

Do not change the routing of shift lock cable to the selector lever assembly.

▶B◀ SHIFT LOCK CABLE (SELECTOR LEVER SIDE) INSTALLATION

(1) Place the selector fever in position **"P".**
(2) Fasten the shift lock cable' at the position where the end of the shift lock cable is positioned above the red marking.

▶C◀ KEY INTERLOCK CABLE (SELECTOR LEVER SIDE) INSTALLATION

(1) Install the key interlock cable on the lock cam.
(2) Install the spring and washer of the key interlock cable as shown.
(3) While lightly pushing the cable coupling portion of the lock cam in-the direction A, tighten the nut to fasten the key interlock cable.

INSPECTION

23200130031

Check the cable assemblies for function and for damage.

TRANSAXLE ASSEMBLY <FWD>

23100570192

REMOVAL AND INSTALLATION

<2.0L Engine (Turbo)>

Pre-removal Operation
- Transaxle Fluid Draining
  (Refer to GROUP 00 – Maintenance Service.)
- Battery Removal
- Under Cover Removal
  (Refer to GROUP 42 – Under Cover.)

Post-installation Operation
- Battery Installation
- Under Cover Installation
  (Refer to GROUP 42 – Under Cover.)
- Transaxle Fluid Supplying
  (Refer to GROUP 00 – Maintenance Service.)
- Selector Lever Operation Check

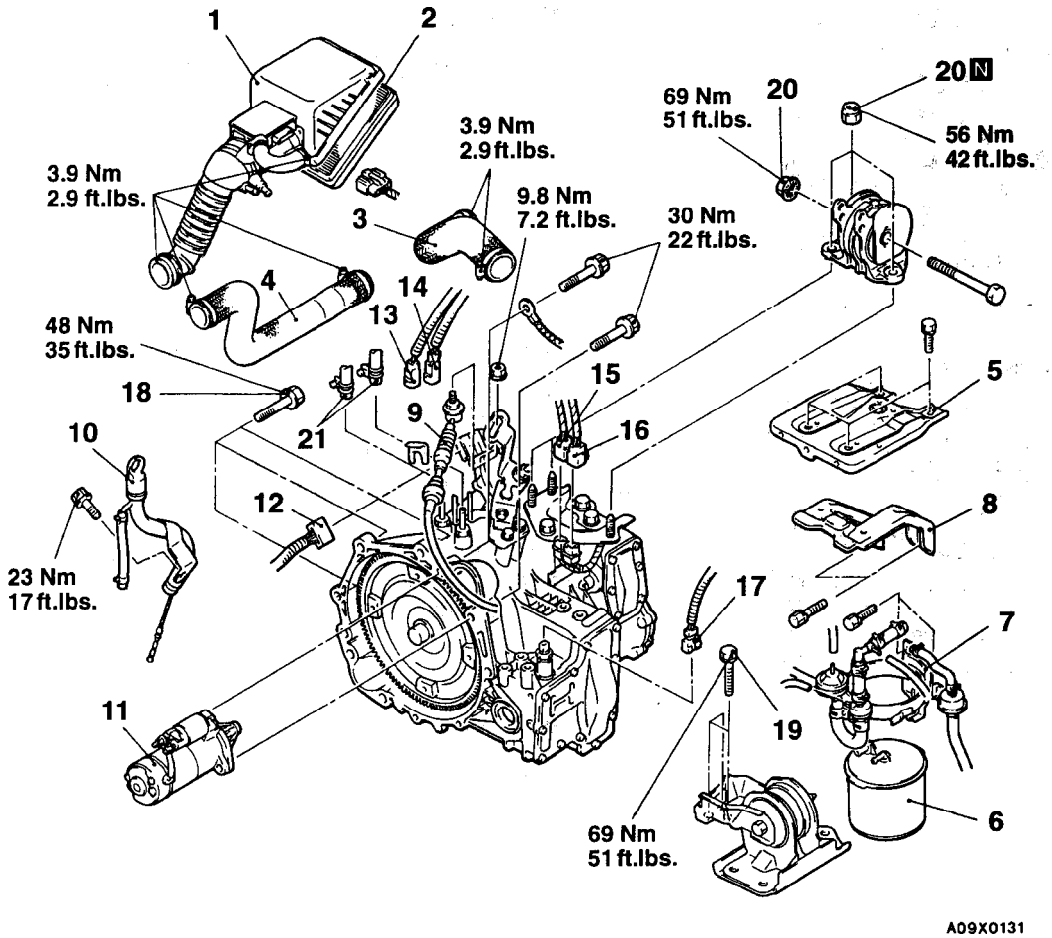

Removal steps

1. Air cleaner cover and air intake hose assembly
2. Air cleaner element
3. Air hose C
4. Air hose A
5. Battery tray
6. Evaporative emission canister
7. Evaporative emission canister holder
8. Battery tray stay
9. Transaxle control cable connection
10. Oil dipstick and guide assembly
11. Starter motor
12. Park/Neutral position switch connector
13. Oil temperature sensor connector
14. Kick down servo switch connector
15. Solenoid valve connector
16. Pulse generator connector
17. Speedometer connector
18. Transaxle assembly mounting bolts
19. Rear roll stopper bracket mounting bolts

◀A▶

20. Transaxle mounting bracket mounting nuts
21. Transaxle oil cooler hoses connection

◀B▶

- Supporting engine assembly

TSB Revision

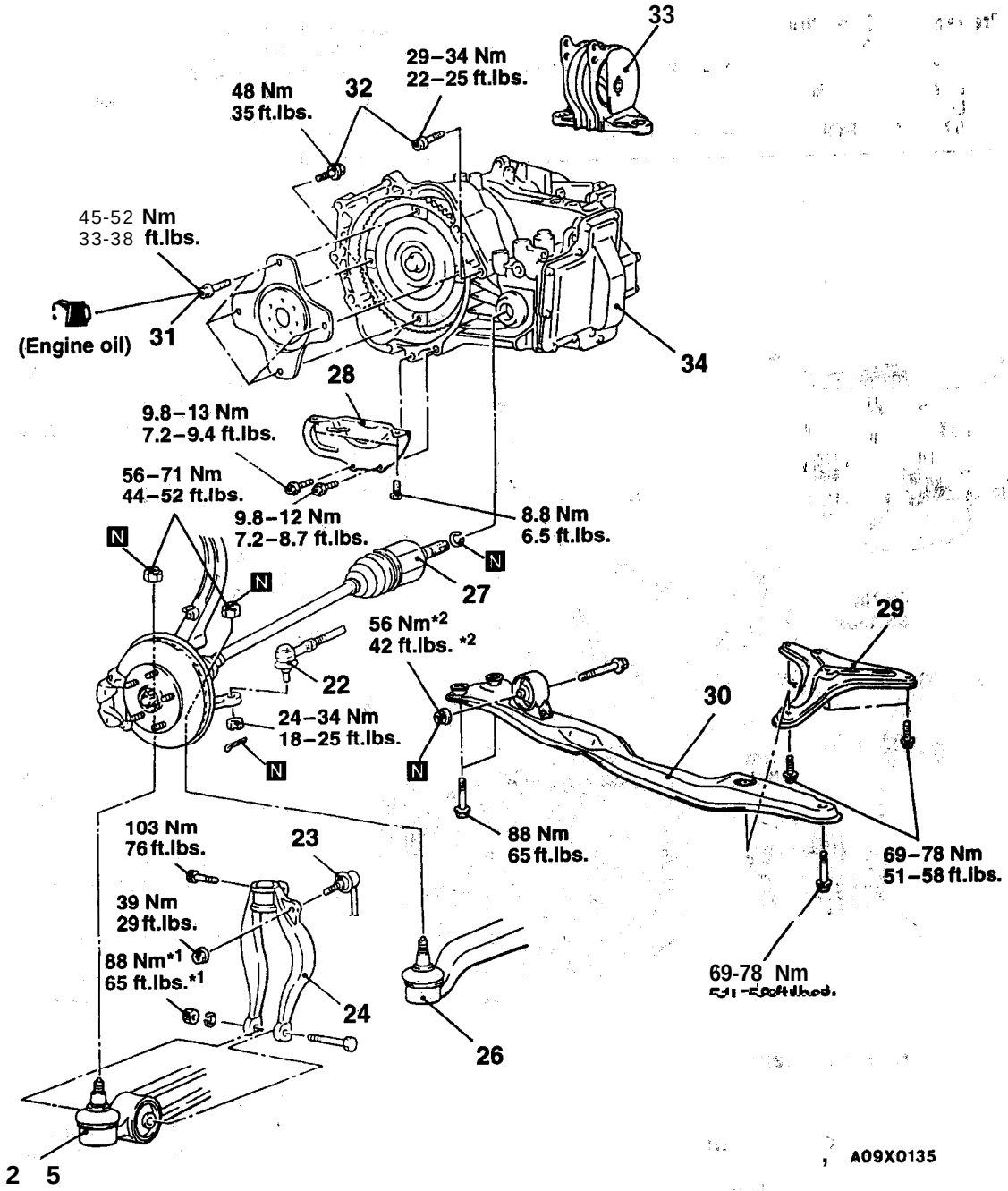

From under vehicles

◀C▶ 22. Tie rod end ball joint and knuckle connection
23. Stabilizer link connection
24. Damper fork
◀C▶ 25. Lateral lower arm ball joint and knuckle connection
◀C▶ 26. Compression lower arm ball joint and knuckle connection
◀D▶ ▶C◀ 27. Drive shaft connection
28. Bell housing cover
29. Stay (R.H.)
▶B◀ 30. Centermember assembly
◀E▶ 31. Drive plate connecting bolts
◀E▶ 32. Transaxle assembly mounting bolts
33. Transaxle mounting bracket
◀E▶ ▶A◀ 34. Transaxle assembly

Caution
*1: indicates parts which should be temporarily tightened, and then fully tightened with the vehicle on the ground in the unladen condition.
*2: For tightening locations indicated by the symbol, first tighten temporarily, and then make the final tightening with the entire weight of the engine applied to the vehicle body.

TSB Revision

<2.4L Engine>

Pre-removal Operation
- Transaxle Fluid Draining
  (Refer to GROUP 00 – Maintenance Service.)
- Battery Removal
- Under Cover Removal
  (Refer to GROUP 42 – Under Cover.)

Post-installation Operation
- Battery Installation
- Under Cover Installation
  (Refer to GROUP 42 – Under Cover.)
- Transaxle Fluid Supplying
  (Refer to GROUP 00 – Maintenance Service.)
- Selector Lever Operation Check

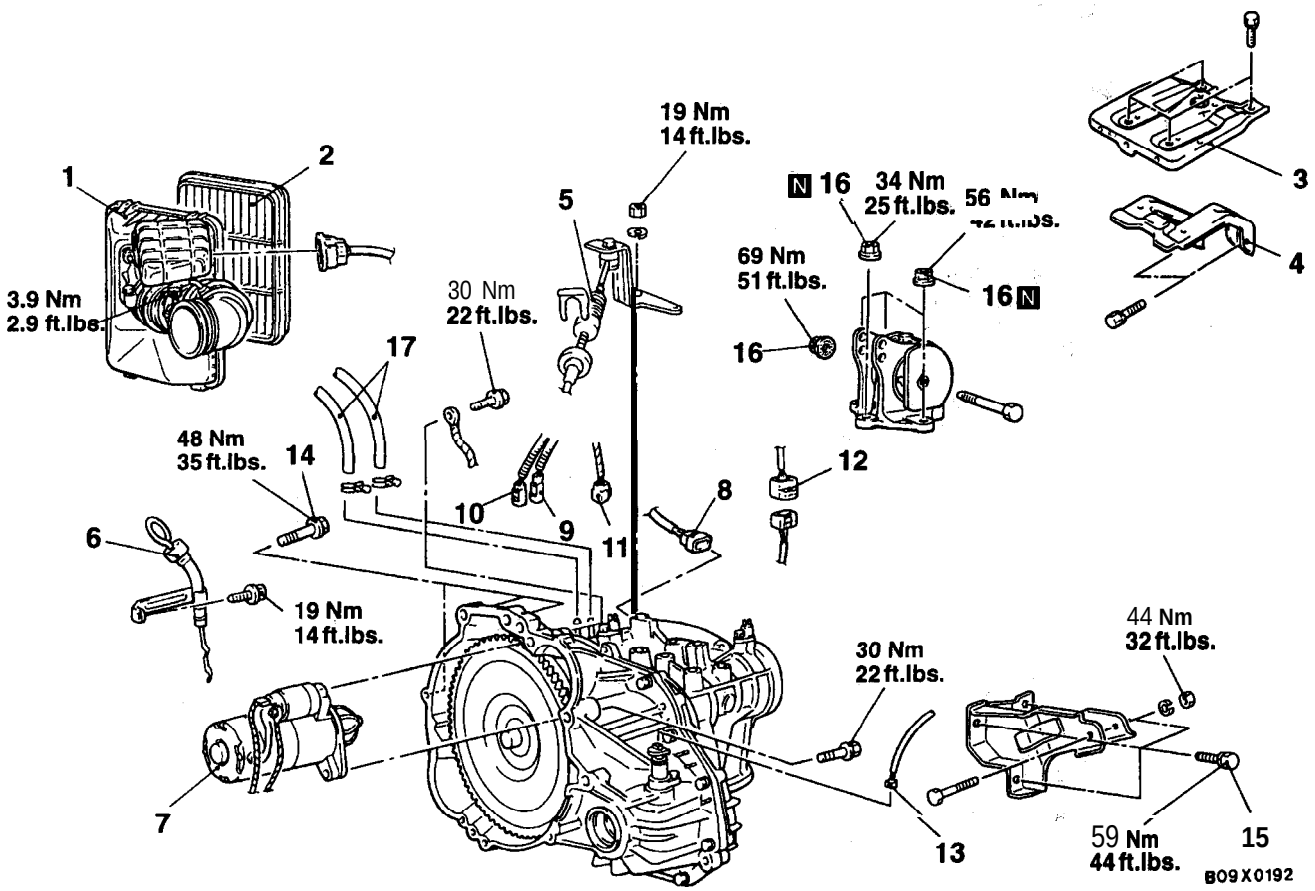

Removal steps

1. Air cleaner cover and air intake hose assembly
2. Air cleaner element
3. Battery tray
4. Battery tray stay
5. Transaxle control cable connection
6. Oil dipstick and guide assembly
7. Starter motor ◀A▶
8. Park/Neutral position switch connector
9. Oil temperature sensor connector ◀B▶
10. Kick down servo switch connector
11. Solenoid valve connector
12. Pulse generator connector
13. Speedometer connector
14. Transaxle assembly mounting bolts
15. Rear roll stopper bracket mounting bolts
16. Transaxle mounting bracket mounting nuts
17. Transaxle oil cooler hoses connection
    - Supporting engine assembly

TSB Revision

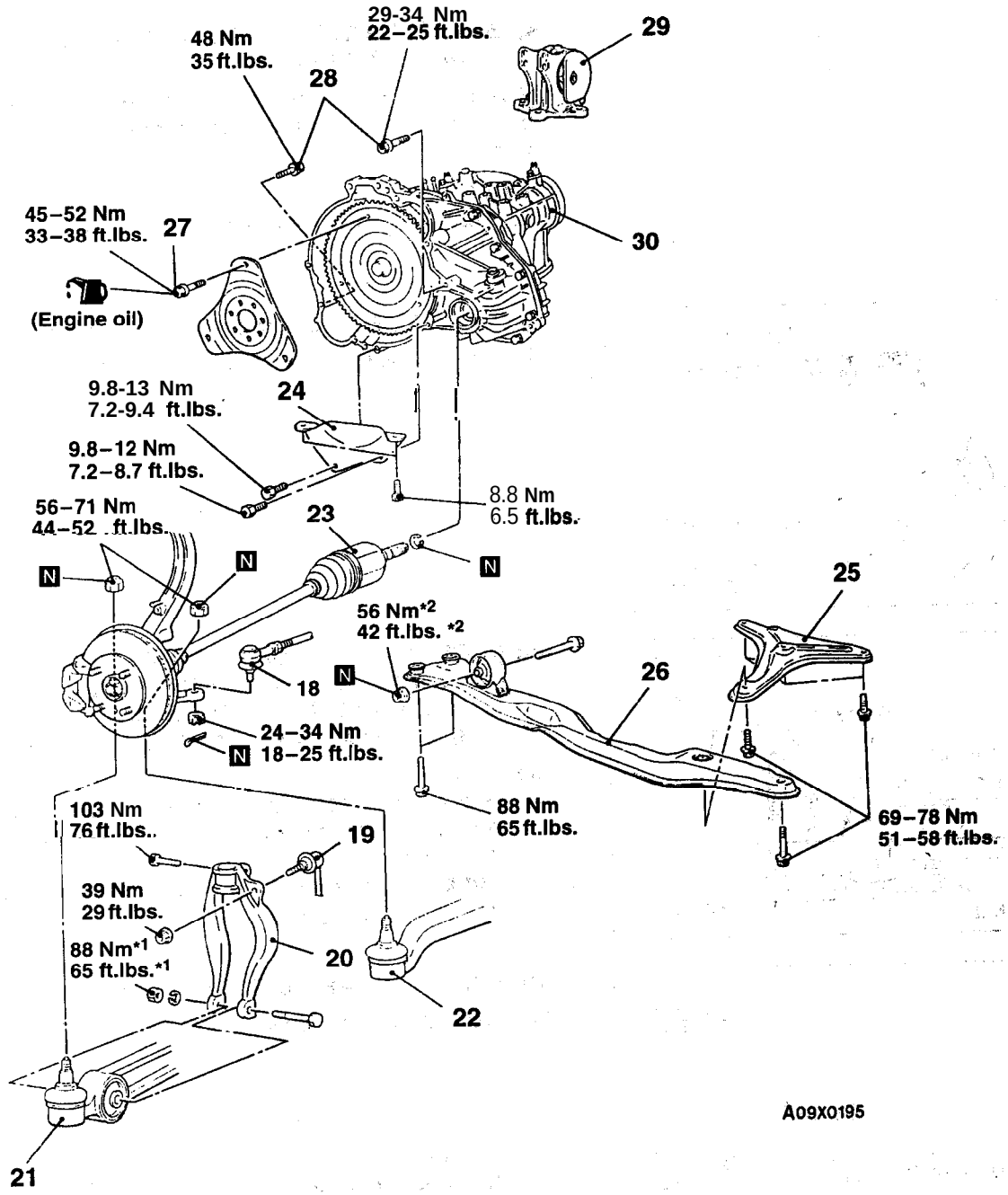

From under vehicles

◀C▶ 18. Tie rod end ball joint and knuckle connection
19. Stabilizer link connection
20. Damper fork
◀C▶ 21. Lateral lower arm ball joint and knuckle connection
◀C▶ 22. Compression lower arm ball joint and knuckle connection
◀D▶ ▶C◀ 23. Drive shaft connection
24. Bell housing cover
25. Stay (R.H.)
▶B◀ 26. Centermember assembly
◀E▶ 27. Drive plate connecting bolts
◀E▶ 28. Transaxle assembly mounting bolts
29. Transaxle mounting bracket
◀E▶ ▶A◀ 30. Transaxle assembly

Caution

- 1: The fasteners marked* should be temporally tightened before they are finally tightened once the total weight of the engine has been placed on the vehicle body.
- 2: For tightening locations indicated by the symbol, first tighten temporarily, and then make the final tightening with the entire weight of the engineapplied tothevehicle body.

TSB Revision

REMOVAL SERVICE POINTS

◀A▶ TRANSAXLE MOUNTING BRACKET MOUNTING NUTS REMOVAL

Jack up the transaxle assembly gently with a garage jack, and then remove the transaxle mounting bracket mounting nuts.

Caution
Be sure not to tilt the transaxle assembly.

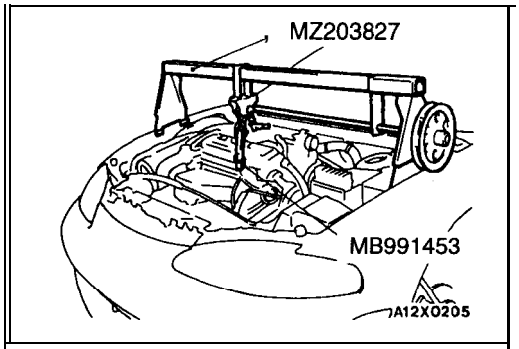

◀B▶ SUPPORTING ENGINE ASSEMBLY

Set the special tool to the vehicle to support the engine assembly.

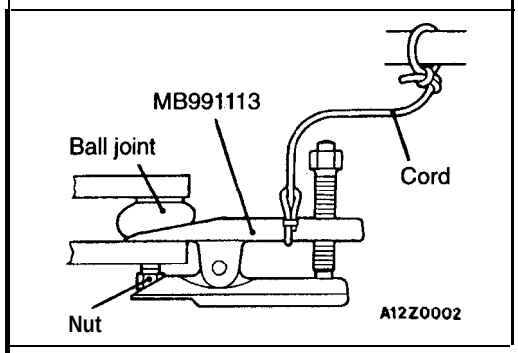

◀C▶ TIE ROD END BALL JOINT AND KNUCKLE/LATERAL LOWER ARM BALL JOINT AND KNUCKLE/COMPRESSION LOWER ARM BALL JOINT AND KNUCKLE DISCONNECTION

Caution
1. **Using the special tool, loosen the tie rod end mounting nut. Only loosen the nut; do not remove it from the ball joint.**
2. **Support the special tool with a cord, etc. to prevent it from coming off.**

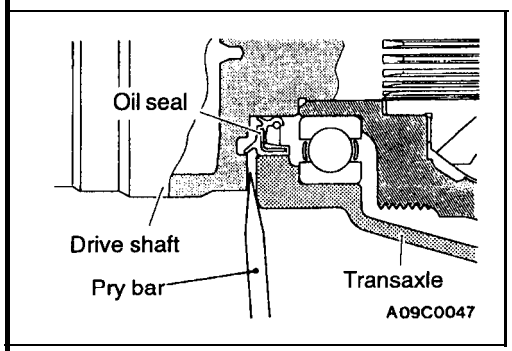

◀D▶ DRIVE SHAFT DISCONNECTION

(1) Insert a pry bar between the transaxle case and the drive shaft to remove the drive shaft.

NOTE
Do not remove the hub and knuckle from the drive shaft.

Caution
1. **Use a pry bar to remove the drive shaft from the B.J. assembly, or the T.J. assembly may be damaged.**
2. **Do not insert the pry bar too far, or the oil seal may be damaged.**

(2) Suspend the removed drive shaft with wire so that there are no sharp bends in any of the joints:
(3) Use the special tool as a cover not to let foreign objects get into the transaxle case.

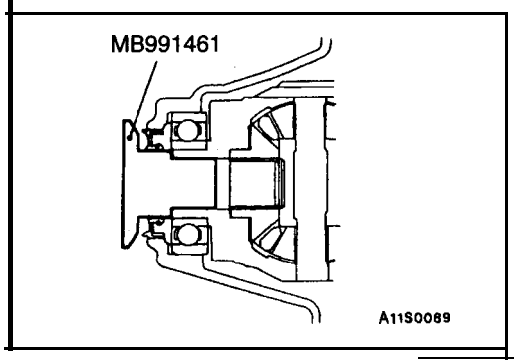

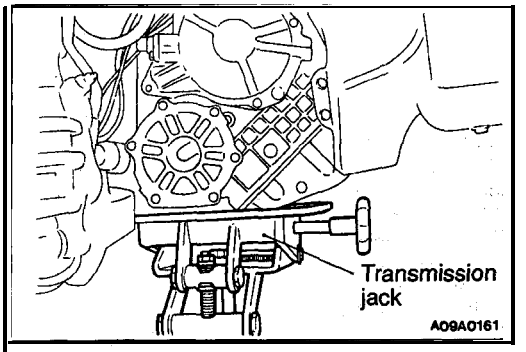

◀E▶ DRIVE PLATE CONNECTING BOLTS/TRANSAXLE ASSEMBLY MOUNTING BOLTS/TRANSAXLE ASSEMBLY REMOVAL

(1) Use a transmisslon jack to support the transaxle assembly.

Caution
Support the transaxle case side, not the oil pan.

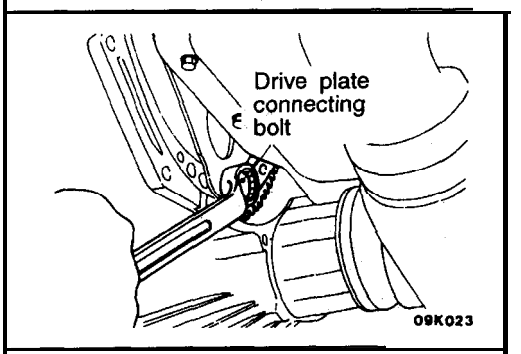

(2) Remove the connection bolts while turning the crankshaft.
(3) Press the torque converter into the transaxle for easier removal.
(4) Remove the transaxle assembly mounting bolt and lower the transaxle assembly.

INSTALLATION SERVICE POINTS

▶A◀ TRANSAXLE ASSEMBLY INSTALLATION

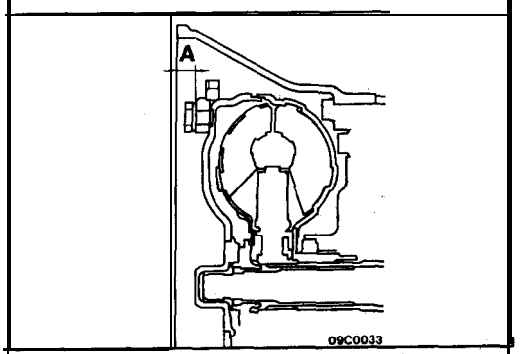

After securely inserting the torque converter into the transaxle so that the value shown in the illustration becomes the reference value, install the transaxle assembly to the engine.

Reference value (A):
<2.0L Engine (Turbo)> Approx. 16.3 mm (.642 in.)
<2.4L Engine> Approx. 12.0 mm (.472 in.)

▶B◀ CENTERMEMBER ASSEMBLY INSTALLATION

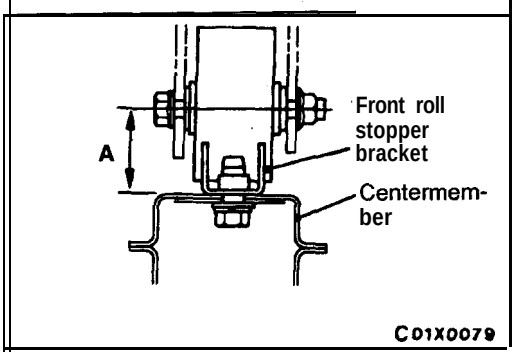

If the dimension shown in the illustration is outside the standard value when the weight of the engine is on the body, replace the front roll stopper bracket assembly.

Standard value (A): 43±3 mm (1.69±.12 in.)

▶C◀ DRIVE SHAFT CONNECTION

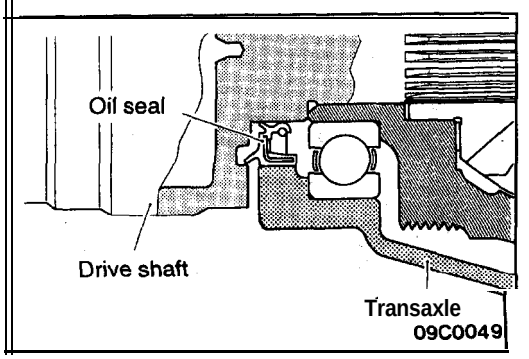

Temporarily install the drive shaft so that the T.J. case of the drive shaft is perpendicular to the transaxle.

Caution
Do not damage the oil seal by the serrated part of the drive shaft.

TRANSAXLE ASSEMBLY <AWD>

23100570205

REMOVAL AND INSTALLATION

Pre-removal Operation
- Transaxle Fluid Draining (Refer to GROUP 00 – Maintenance Service)
- Battery Removal
- Under Cover Removal (Refer to GROUP 42 – Under Cover)
- Front Exhaust Pipe Removal (Refer to GROUP 15 – Exhaust Pipe and Main Muffler)
- Transfer Assembly Removal (Refer to P.23A-112.)

Post-installation Operation
- Transfer Assembly Installation (Refer to P.23A-112)
- Front Exhaust Pipe Installation (Refer to GROUP 15 – Exhaust Pipe and Main Muffler)
- Under Cover Installation (Refer to GROUP 42 – Under Cover)
- Battery Installation
- Transaxle Fluid Supplying (Refer to GROUP 00 – Maintenance Service)

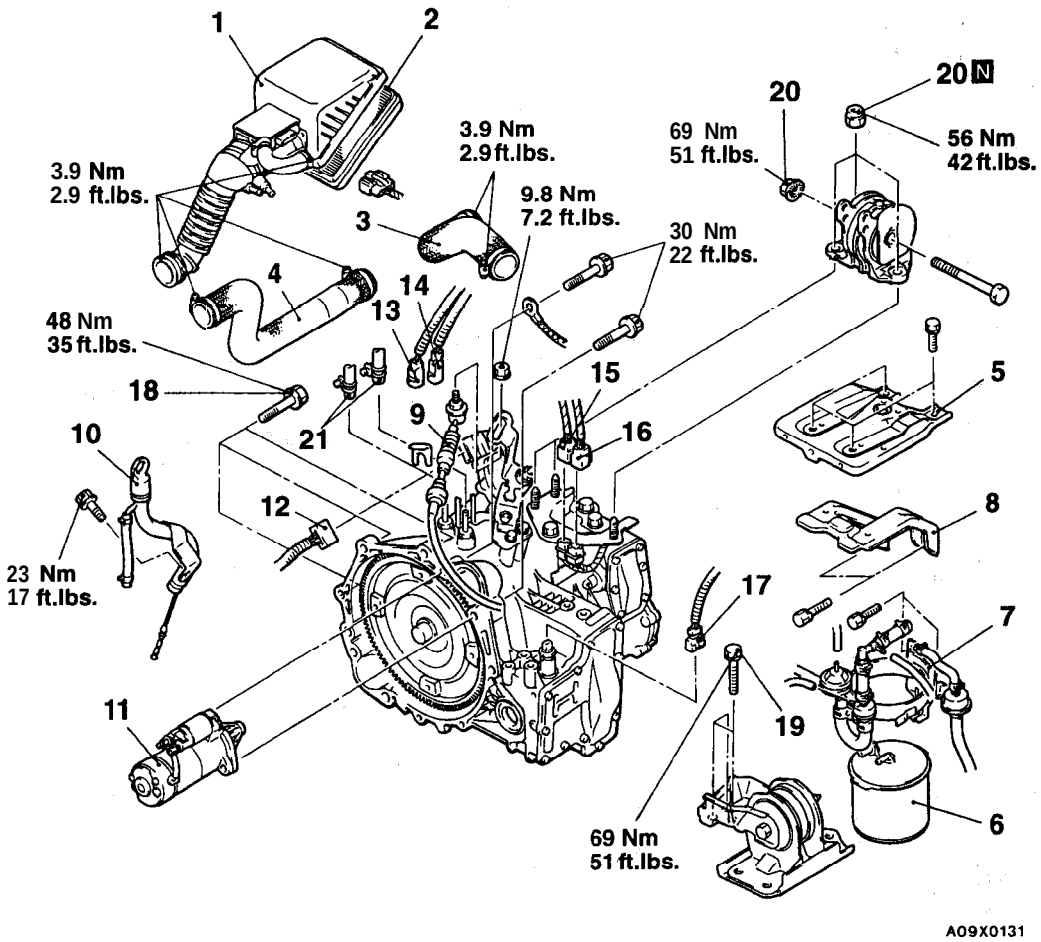

Removal steps

1. Air cleaner cover and air intake hose assembly
2. Air cleaner element
3. Air hose C
4. Air hose A
5. Battery tray
6. Evaporative emission canister
7. Evaporative emission canister holder
8. Battery tray stay
9. Transaxle control cable connection
10. Oil dipstick and guide assembly
11. Starter motor
12. Park/Neutral position switch connector
13. Oil temperature sensor connector
14. Kick down servo switch connector
15. Solenoid valve connector
16. Pulse generator connector
17. Speedometer connector
18. Transaxle assembly mounting bolts
19. Rear roll stopper bracket mounting bolts

◀A▶ 20. Transaxle mounting bracket mounting nuts

21. Transaxle oil cooler hoses connection

◀B▶ • Supporting engine assembly

TSB Revision

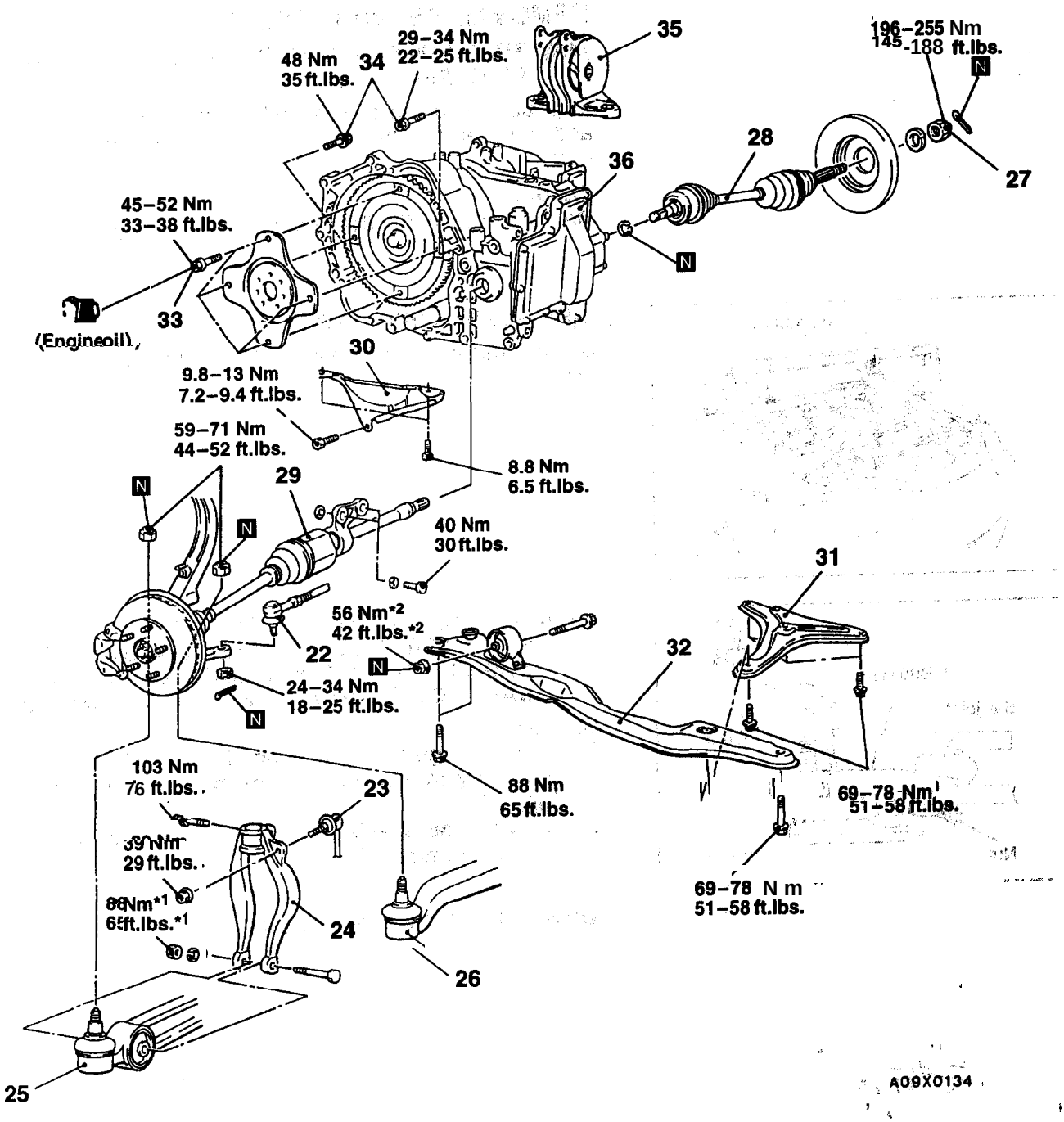

From under vehicles

◀C▶ 22. Tie rod end ball joint and knuckle connection
23. Stabilizer link connection
24. Damper fork
◀C▶ 25. Lateral lower arm ball joint and knuckle connection
◀C▶ 28. Compression lower arm ball, joint and knuckle connection ,
◀D▶ ▶D◀ 27. Drive shaft nut
◀E▶ ▶C◀ 28. Drive shaft
◀F▶ ▶C◀ 29. Drive shaft with inner shaft connection
30. Bell housing cover
31. Stay (R.H.)
▶B◀ 32. Centermember assembly
◀G▶ 33. Drive plate connecting bolts
◀G▶ 34. Transaxle assembly mounting bolts
35. Transaxle mounting bracket
◀G▶ ▶A◀ 38. Transaxle assembly

Caution

1: indicates parts which should be temporarily tightened, and then fully tightened with the vehicle on the ground in the unladen condition.

***2: For tightening locations indicated by the symbol, first tighten temporarily, and then make the final tightening with the entire weight of the engine applied to the vehicle body.**

TSB Revision

REMOVAL SERVICE POINTS

◀A▶ TRANSAXLE MOUNTING BRACKET MOUNTING NUTS REMOVAL

Jack up the transaxle assembly gently with a garage jack, and then remove the transaxle mounting bracket mounting nuts.

Caution
Be sure not to tilt the transaxle assembly.

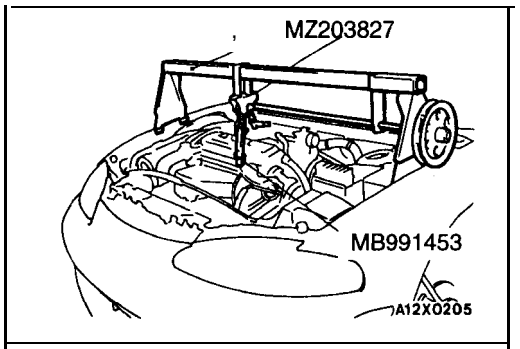

◀B▶ SUPPORTING ENGINE ASSEMBLY

Set the special tool to the vehicle to support the engine assembly.

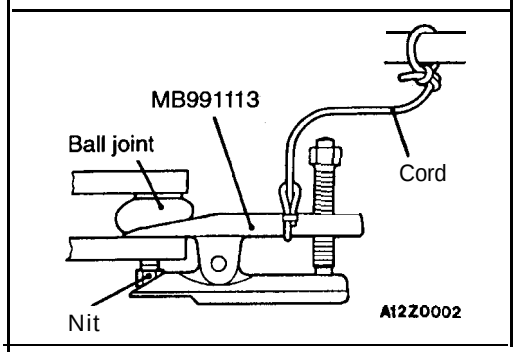

◀C▶ TIE ROD END BALL JOINT AND KNUCKLE/LATERAL LOWER ARM' BALL JOINT AND KNUCKLE/COMPRESSION LOWER ARM BALL JOINT AND KNUCKLE DISCONNECTION

Caution
1. **Using the special tool, loosen the tie rod end mounting nut. Only loosen the nut; do not remove it from the ball joint.**
2. **Support the special tool with a cord, etc. to prevent it from coming off.**

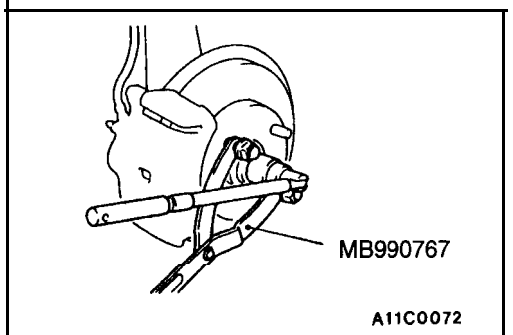

◀D▶ DRIVE SHAFT NUT REMOVAL

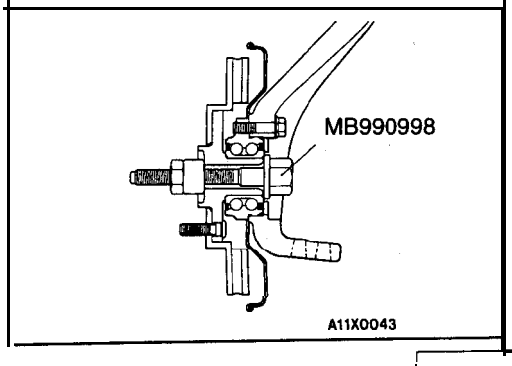

Caution
Do not apply the vehicle weight to the wheel bearing while loosening the drive shaft nut. If, however, the vehicle, weight must be applied to the bearing (because of moving the vehicle), temporarily secure the wheel bearing by using the special tool, MB990998, etc.

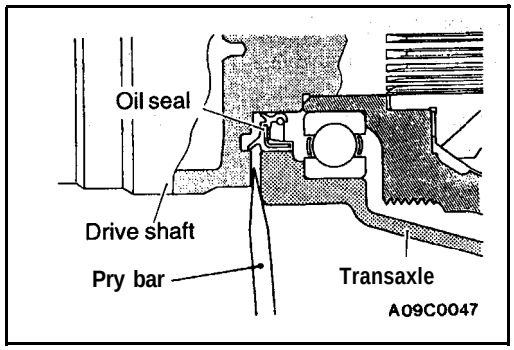

◀E▶ DRIVE SHAFT REMOVAL

(1) Insert a pry bar between the transaxle case and the drive shaft, and then pry the drive shaft from the transaxle.

Caution

1. **Use a pry bar to remove the drive shaft from the B.J. assembly, or the T.J. assembly may be damaged.**
2. **Do not insert the pry bar too far, or the oil seal may be damaged.**

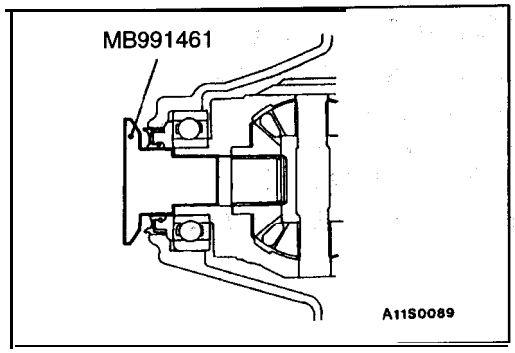

(2) Use the special tool as a cover not fo let foreign objects get into the transaxle case.

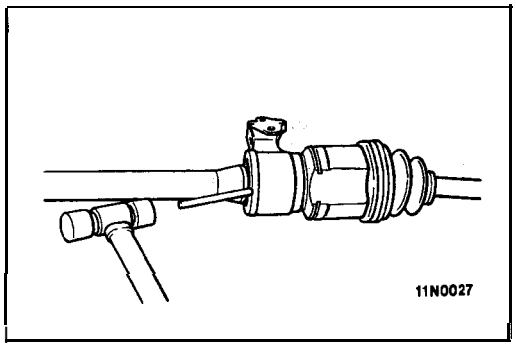

◀F▶ DRIVE SHAFT WITH INNER SHAFT DISCONNECTION

(1) Lightly tap the center bearing bracket with a plastic hammer or similar tool to remove the inner shaft from the transaxle.

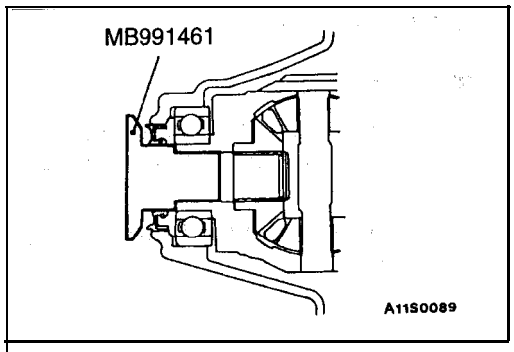

(2) Suspend the removed. drive shaft with inner shaft with wire so that'there are no sharp bends in any of the joints.

(3) Use the special tool as a cover not to let foreign objects get into the transaxle case.

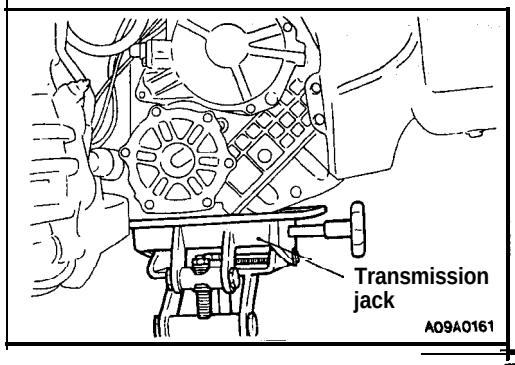

◀G▶ DRIVE PLATE CONNECTING' BOLTS/TRANSAXLE ASSEMBLY MOUNTING BOLTS/TRANSAXLE ASSEMBLY REMOVAL

(1) Use a transmission jack to support the transaxle assembly.

Caution

Support the transaxle case side, not the oil pan.

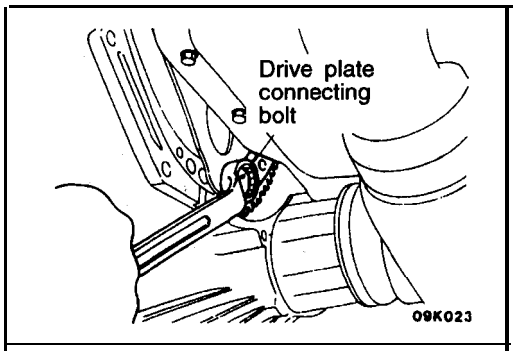

(2) Remove the connection bolts while turning the crankshaft.
(3) Press the torque converter into the transaxle for easier removal.
(4) Remove the transaxle assembly mounting bolt and lower the transaxle assembly.

INSTALLATION SERVICE POINTS

▶A◀ TRANSAXLE ASSEMBLY INSTALLATION

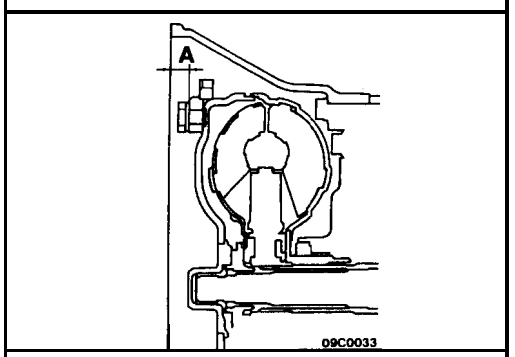

After securely inserting the torque converter into the transaxle so that the value shown in the illustration becomes the reference value, install the transaxle assembly to the engine.

Reference value (A): Approx. 16.3 mm (.642 in.)

▶B◀ CENTERMEMBER ASSEMBLY INSTALLATION

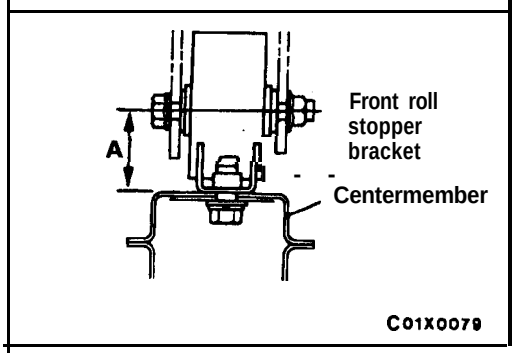

If the dimension shown in the illustration is outside the standard value when the weight of the engine is on the body, replace the front roll stopper bracket assembly.

Standard value (A): 43±3 mm (1.69512 in.)

▶C◀ DRIVE SHAFT WITH INNER SHAFT CONNECTION/ DRIVE SHAFT INSTALLATION

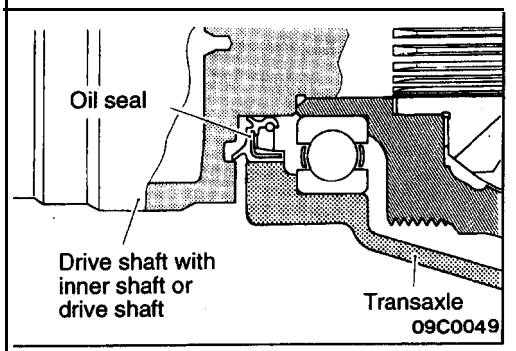

Temporarily install the drive shaft so that the inner shaft or T.J. case of the drive shaft is perpendicular to the transaxle.

Caution
Do not damage the oil seal by the serrated part of the drive shaft.

▶D◀ DRIVE SHAFT NUT INSTALLATION

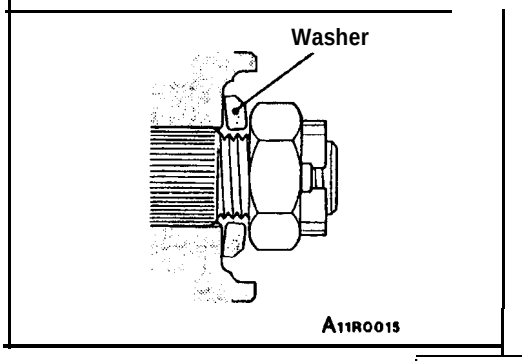

(1) Install the drive shaft washer in the specified direction.

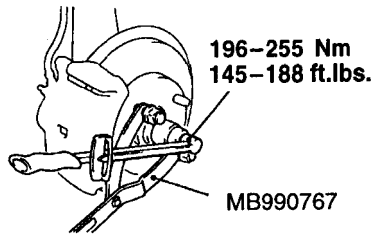

(2) Use the special tool to tighten the drive shaft nut.

Caution
Before securely tightening the drive shaft nuts, make sure there is no load on the wheel bearings.

(3) If the position of the cotter' pin holes does not match, tighten the nut up to 255 Nm (188 ft.lbs.) maximum.

(4) Install the cotter pin in the first matching holes and bend it securely.

TRANSFER ASSEMBLY <AWD>

23100600010

REMOVAL AND INSTALLATION

Pre-removal and Post-installation Operation
- Transfer Oil Draining and Supplying (Refer to GROUP 00 – Maintenance Service)
- Front Exhaust Pipe Removal and installation (Refer to GROUP 42 – Exhaust Pipe and Main Muffler.)

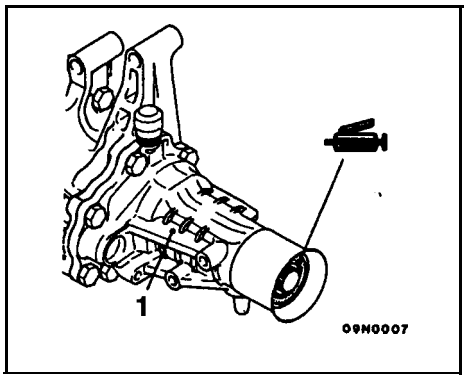

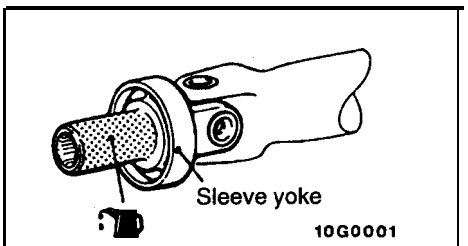

Gear oil:
API classification GL-4 SAE 75W-90 or 75W-85W

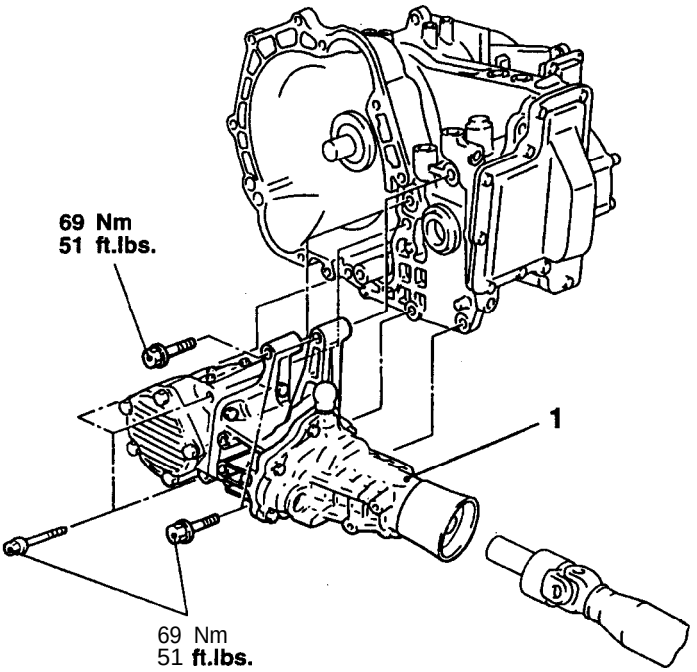

◀A▶ 1. Transfer assembly

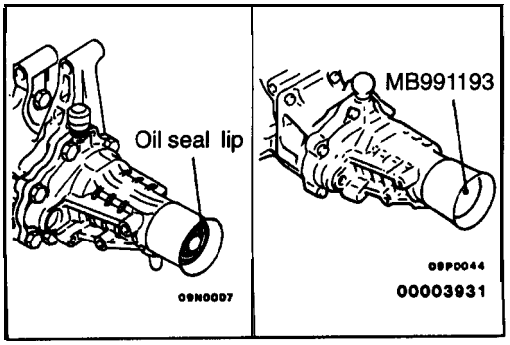

REMOVAL SERVICE POINT

◀A▶ TRANSFER ASSEMBLY REMOVAL

Caution
1. **Do not damage the oil seal lip of the transfer.**
2. **Use the special tool to cover the transfer case to prevent oil from gushing out or foreign materials from getting into the transfer case.**

TRANSAXLE OIL COOLER

29199710119

REMOVAL AND INSTALLATION

Pre-removal and Post-Installation
- Transaxle Fluid Draining and Supplying (Refer to GROUP 00 – Maintenance Service.)
- Front Bumper Removal and Installation (Refer to GROUP 51 – Front Bumper.)

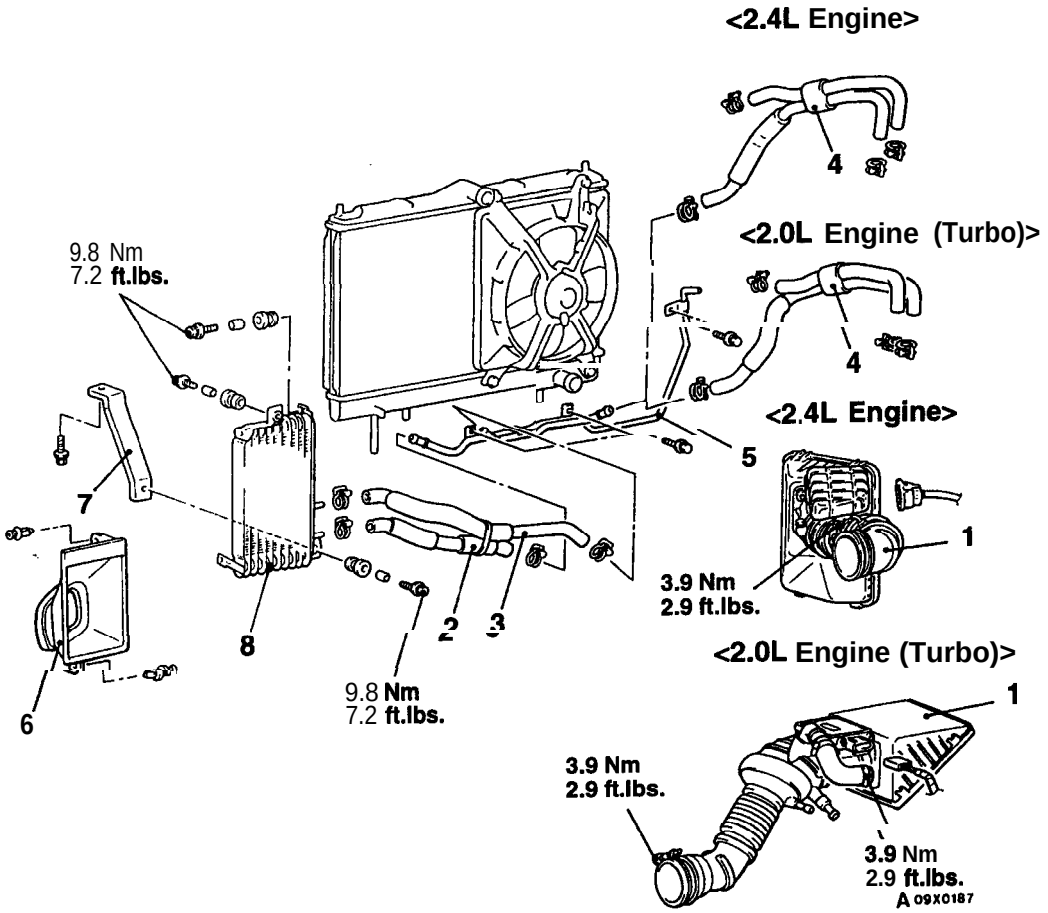

Removal steps

1. Air cleaner cover and air intake hose
2. Feed hose
3. Return hose
4. Hose assembly
5. Pipe assembly
6. Oil cooler duct
7. Bracket
8. Oil cooler assembly

INSPECTION

231 00720044

- Check the hose for cracks, damage and clogs.
- Check for rusted or clogged transaxle oil cooler.
- Check oil cooler fins for bents, damage, and clogged with foreign matter.

AUTOMATIC TRANSAXLE <2.0L ENGINE (NON-TURBO)>

22110010012

GENERAL INFORMATION

The automatic transaxle comes in one model, namely, F4AC1.

Items		Specifications
Model		F4AC1-3-QZAF
Applicable engine		420A
Type		Fully-adaptive, electronically controlled 4-speed full-automatic
Torque converter	Type	3-element with torque converter clutch
	Engine stall speed r/min	2,240–2,440
Gear ratio	1st	2.842
	2nd	1.573
	3rd	1.000
	4th	0.689
	Reverse	2.214
Final gear ratio		3.909

FUNCTION ELEMENT TABLE

Shift Lever Position		Start Safety	Park Sprag	Under-drive clutch	Over-drive clutch	Reverse clutch	2/4 clutch	Low/ Reverse clutch
P – PARK		×	×					×
R – REVERSE						×		×
N – NEUTRAL		×						×
D – OVERDRIVE	First			×				×
D – OVERDRIVE	Second			×			×	
D – OVERDRIVE	Direct			×	×			
D – OVERDRIVE	Overdrive				×		×	
2 – DRIVE GEAR*	First			×				×
2 – DRIVE GEAR*	Second			×			×	
2 – DRIVE GEAR*	Direct			×	×			
L – LOW*	First			×				×
L – LOW*	Second			×			×	
L – LOW*	Direct			×	×			

*: Vehicle upshift and downshift speeds are increased when in these selector positions.

SECTIONAL VIEW

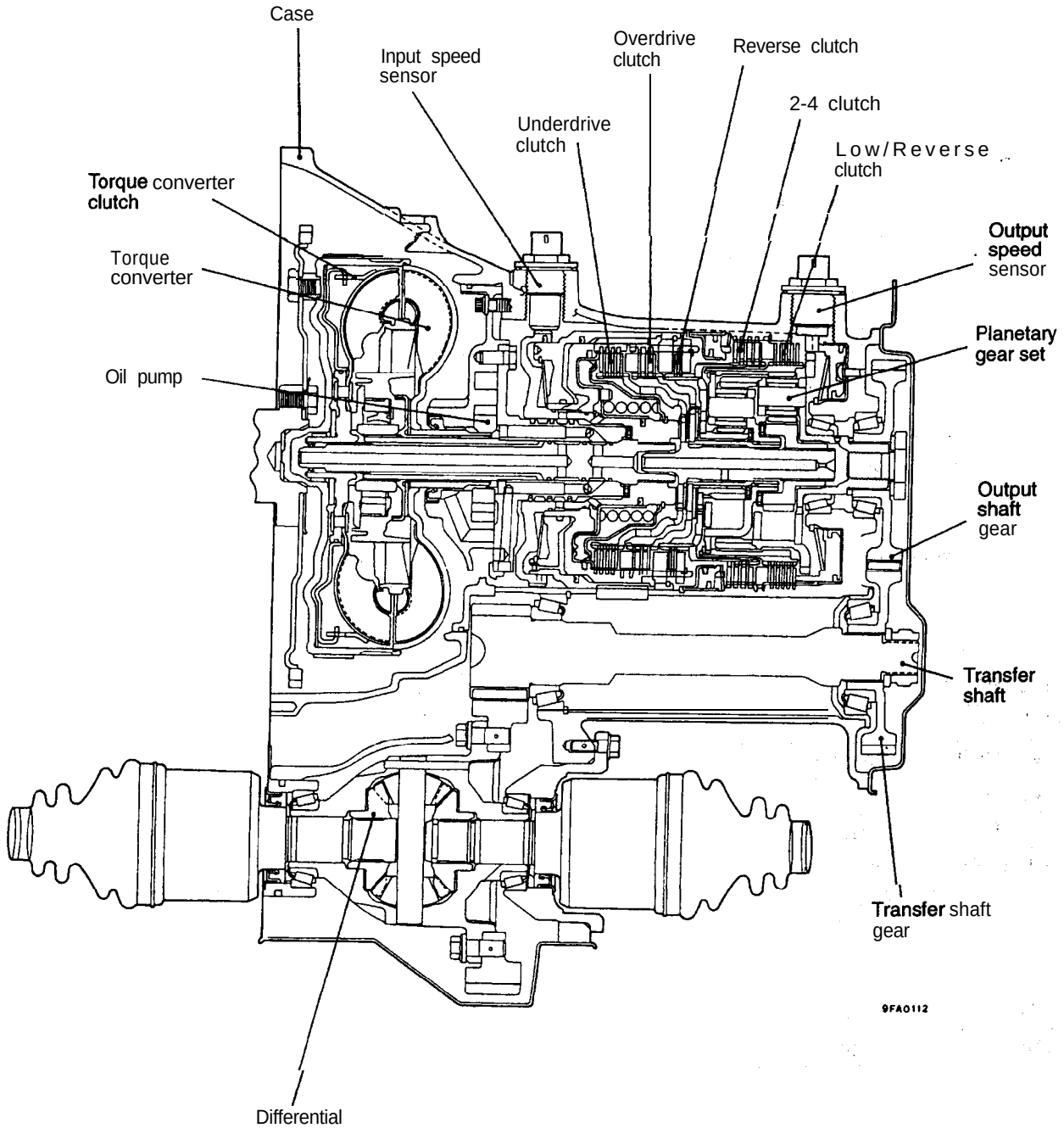

TSB Revision

SERVICE SPECIFICATIONS

23110030018

Item	Standard value
Resistance of input speed sensor kΩ	0.3–1.2
Resistance of output speed sensor kΩ	0.3–1.2
Resistance of LR solenoid coil [at 20°C (68°F)] Ω	Approx. 1
Resistance of 2/4 solenoid coil [at 20°C (68°F)] Ω	Approx. 1
Resistance of OD solenoid coil [at 20°C (68°F)] Ω	Approx. 1
Resistance of UD solenoid coil [at 20°C (68°F)] Ω	Approx. 1
Distance between detent pin and detent plate mm (in.)	1.7–2.4 (.067–.094)
Installation dimension of front roll stopper bracket assembly mm (in.)	43±3 (1.69±.12)

LUBRICANTS

23110040035

Item	Specified lubricant	Quantity dm^3 (qts.)
Transaxle fluid	DIAMOND ATF SP II or equivalent	8.6 (9.1)

SPECIAL TOOLS

23110060017

Tool	Tool number and name	Supersession	Application
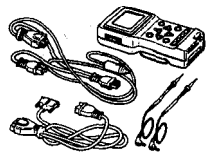	MB991502 Scan tool (MUT-II)	MB991502	Diagnostic trouble code check
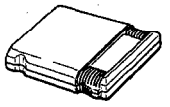	ROM pack (for scan tool)	–	Diagnostic trouble code check
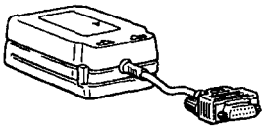	MB991544 MUT-II Interface cartridge	MB991544	
	MD998330 Oil pressure gauge 3,000 kPa (400 psi) MD999563 Oil pressure gauge 1,000 kPa (140 psi)	MD998330-01	To measure oil pressure
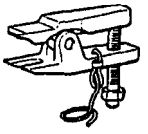	MB991113 Steering linkage puller	MB991113-01	• Tie rod end ball joint and knuckle removal • Lateral lower arm ball joint and knuckle removal • Compression lower arm ball joint and knuckle removal

TSB Revision

Tool	Tool number and name	Supersession	Application
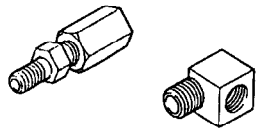	MB991605 Oil pressure gauge adapter set	–	Connection of oil pressure gauge
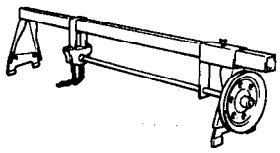	GENERAL SERVICE TOOL MZ203827 Engine lifter	MZ203827-01	To support the engine assembly during removal and installation of the transaxle
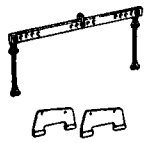	MB991453 Engine hanger assembly	MZ203827-01	To support the engine assembly during removal and installation of the transaxle
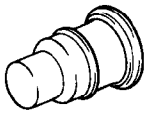	MB991461 Plug	General service tool*	To prevent foreign substances from entering transaxle case *: Use shop towel
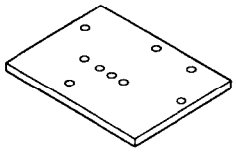	MB995053 Air pressure checking plate	MB995053-01	To check air pressure of valve operation in the transaxle valve body.
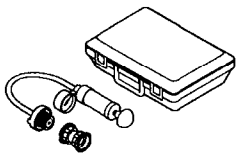	MB995054 Air pressure checking tool	General service tool	Air pressure test of transaxle

TROUBLESHOOTING

23110400031

DIAGNOSTIC TROUBLESHOOTING FLOW

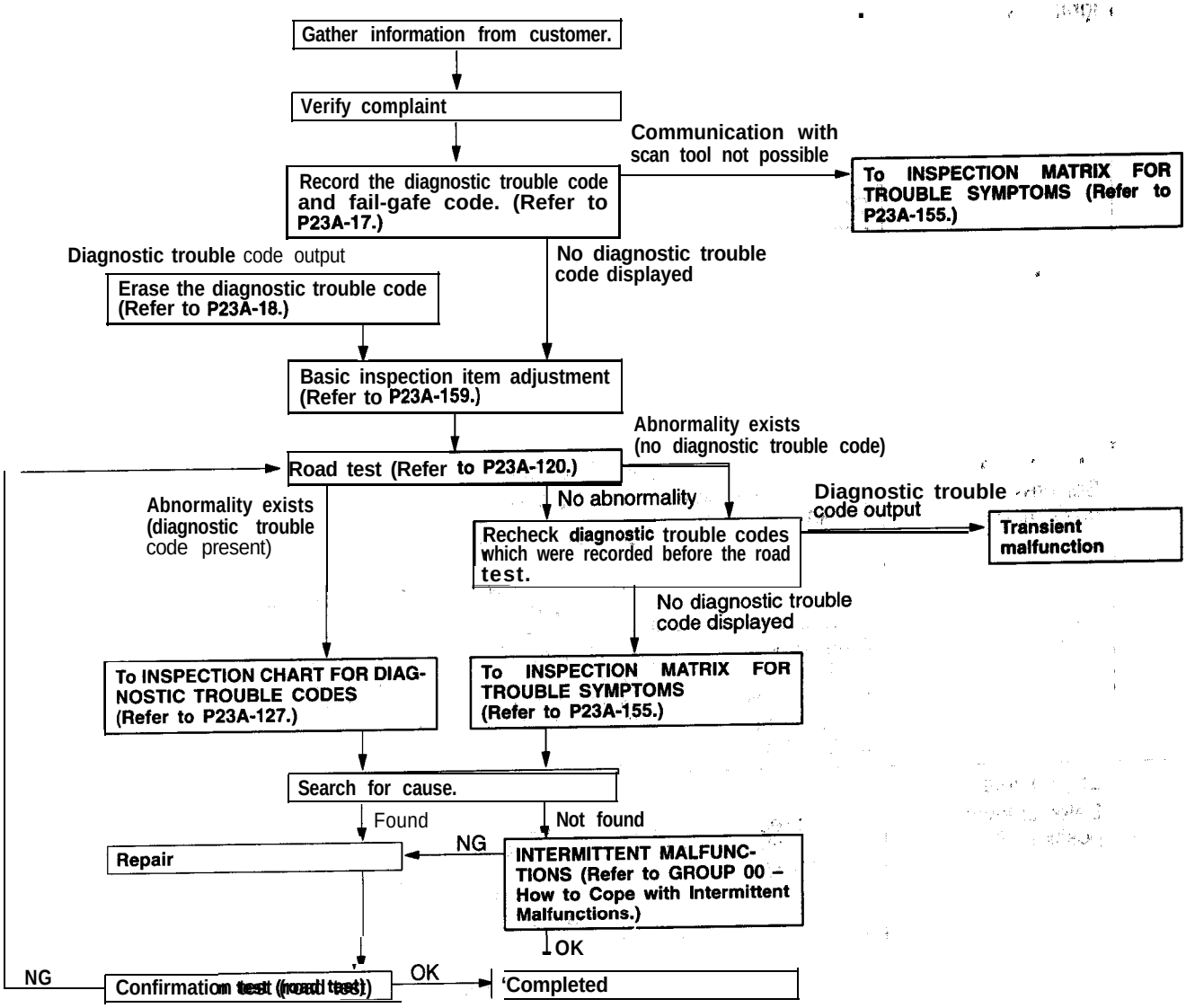

ROAD TEST

23110080013

*: Use scan tool

Procedure	Conditions	Operation	Judgment value	Inspection item	Diagnostic trouble code
1	Ignition switch: ON Engine: Stopped	Check the limp-in mode	★ Data list No.46 • No limp-in mode	Transaxle control module	11,13,16,17
				Transaxle control relay	14
					15
					20
		Check the battery positive voltage	★ Data list No.04 • 12V	Battery	12
2	Warming up	Drive for 15 minutes or more so that the automatic transmission fluid temperature becomes 70–90°C (158–194°F)	★ Data list No. 56 Gradually rises to 158–194°F	Oil temperature sensor	74
3	Engine: Idle Selector lever position: P	Engine (1) Idle (for at least 30 seconds)	★ Data list No.63 (1) 2.0 LMFI	Transaxle control module	45
			★ Check diagnostic trouble code (1) No diagnostic trouble code	CCD Bus	19
				Solenoid Circuit	41,42,43,44
		Selector lever position (1) P (2) R (3) N (4) D (5) 2 (6) L	★ Data list No.46 (1) P (2) R (3) N (4) D (5) 2 (6) L	Transaxle range and neutral position switches	28
3	Engine: Idle Selector lever position: P	Accelerator pedal (1) Depressed (for at least 3 seconds)	★ Data list No.43 (1) Engine speeds displayed on the scan tool and tachometer are identical	Crankshaft position sensor	18
		Accelerator pedal (1) Fully closed (2) Fully open (for at least 2 seconds)	★ Data list No.00 (1) 400 mV or more (2) 3,800 mV or less	Throttle position sensor	29

Procedure	Conditions	Operation	Judgment value	Inspection item	Diagnostic trouble code
4	Selector lever position: D	Engine (1) Driving in 1st gear with selector lever in L range (2) Driving in 2nd gear with selector lever in 2 range (3) Driving in 3rd gear with selector lever in D range (Overdrive switch OFF) (4) Driving in 4th gear with selector lever in D range (Overdrive switch ON) (for at least 1 minute) (5) Driving in Reverse gear with selector lever in R range (for at least 30 seconds)	★ Data list Nos.20, 21 and 22 (1) LR: ON 2-4: OFF OD: OFF (2) LR: OFF 2–4: ON OD: OFF (3) LR: OFF 2–4: OFF OD: ON (4) LR: OFF 2–4: ON OD: ON (5) LR: OFF 2-4: OFF OD: OFF	Pressure switch circuit	21,22,23, 24,25,26, 27
				Hydraulic pressure switch	31,32,33

TSB Revision

Procedure	Conditions	Operation	Judgment value	Inspection item	Diagnostic trouble code
4	Selector lever position: D	Engine (1) Driving in 1st gear with selector lever in L range (2) Driving in 2nd gear with selector lever in 2 range (3) Driving in 3rd gear with selector lever in D range (Overdrive switch OFF) (4) Driving in 4th gear with selector lever in D range (Overdrive switch ON) (for at least 1 minute) (5) Driving in Reverse gear with selector lever in R range (for at least 30 seconds)	★ Data list No.51, No.52, No.53 and No.54 (1) Check the UD and LR clutch (2) Check the 2-4 clutch (3) Check the OD clutch LR clutch: 35 to 85 2-4 clutch: 20 to 77 OD clutch: 75 to 150 UD clutch: 24 to 70	ATF level	35
				UD hydraulic circuit	46
				LR, 2-4 and OD clutch	60,61,62
			★ Data list No.43, No.44 and No.45 (1)(2)(3)(4)(5) Input r/min = Engine r/min Output r/min = Input r/min × gear ratio	Gear ratio in each gear	36
					50,51
					52,53,54
				Input and output speed sensor	36
					56
					57
					58
	Selector lever position: D	Engine 1) Driving in 2nd gear, then apply the brake until a 2-1 downshift occurs. (Do this at least 3 times)	★ Data list No.57 (1) 2nd → 1st	Solenoid switch valve (latched in the LU position)	37
		Engine 1) Driving at constant speed of 80 km/h (50 mph) with selector lever in D range (Overdrive switch ON)	★ Data list No.49 (1) Locked 4th gear	Lockup control	38
				Solenoid switch valve (latched in the LR position)	47

SHIFT PATTERN

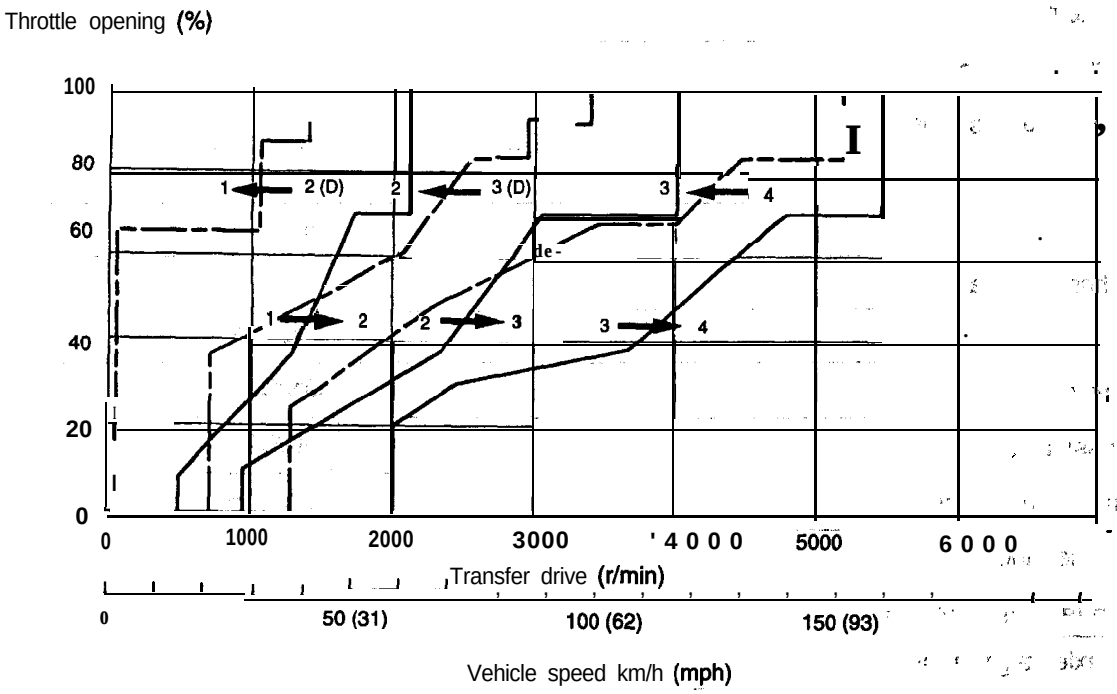

TFA1823

LOCK-UP PATTERN

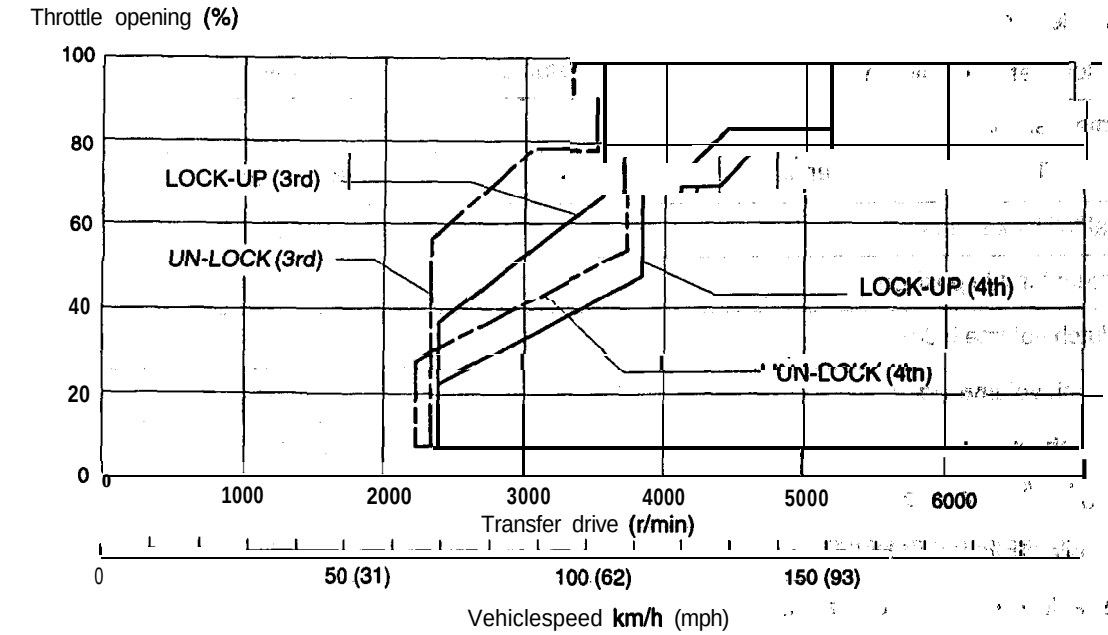

TFA1825

TSB Revision

SERVICE DATA REFERENCE TABLE

23110090016

Data No.	Check item	Display
00	Throttle position sensor	mV
01	Transaxle range sensor 41	mV
02	Start or run position volt	mV
03	Transaxle range sensor 43	mV
04	Switched battery volt	V
20	LR pressure switch	ON/OFF
21	2-4 pressure switch	ON/OFF
22	OD pressure switch	ON/OFF
23	Overdrive lockout switch	ON/OFF
24	Transaxle range sensor 1	ON/OFF
25	Transaxle range sensor 2	ON/OFF
26	Transaxle range sensor 43	ON/OFF
27	Transaxle range sensor 41	ON/OFF
43	Engine speed	rpm
44	Transaxle input speed	rpm
45	Transaxle output speed	rpm
46	Shift lever position information and controller limp-in status	Status
47	Throttle position	X°
48	Transaxle shift schedule	Status
49	Partial/full lock status	Status
50	Minimum throttle position	X°
51	LR clutch volume index	Index
52	2-4 clutch volume index	Index
53	OD clutch volume index	Index
54	UD clutch volume index	Index
55	Transaxle temperature status	Status
56	Transaxle predicted oil temperature	°F
57	In gear code	Status
58	Shift code	Status
59	Pressure switch error counter	Counts
60	Speed/ratio error counter	Counts
61	Speed/ratio error 1 second counter	Counts

TSB Revision

Data No.	Check item	'Display '
62	Speed/ratio error 15 second counter	Counts
63	Engine model identification	Engine Model
64	General flag	Status
65	Actuator test status	Status
66	Element mask register	Status
67	EEPROM flag register	Status
68	Output teeth count	Teeth
69	Wheel speed coefficient in EEPROM	Coefficient
70	Current production MY/application MY	Model Year

ACTUATOR TEST REFERENCE TABLE

23110100016

Item No.	Check item	Drive contents	Check conditions	Remarks
01	LR solenoid	Current flows to the solenoid for 6 seconds at 50% duty.	Engine: Idle (Vehicle stopped) Selector lever position: D range Throttle opening angle: Fully closed	Check the actuator test status (Display)
02	2-4 solenoid			
03	UD solenoid			
04	OD solenoid			

FAIL-SAFE FUNCTION

23110110019

If a problem which interferes with the continuous safe operation of the transaxle is identified, the TCM records a diagnostic trouble code in memory, all solenoids are turned off, and the module is switched to limp-in mode.
When limp-in mode is started, the transaxle is locked in 2nd gear if a drive gear had previously been selected. Meanwhile, if P, R or N range was selected, operation is as usual.
If the ignition key is turned to OFF and then back to ON again, limp-in mode is canceled (a record is retained).

HOW TO READ AND ERASE DIAGNOSTIC TROUBLE CODES

Caution

1. **If battery voltage is low, diagnostic trouble codes may not be output. Be sure to check the battery and charging system before, continuing.**
2. **If the battery is disconnected or if the TCM connector' is disconnected, the diagnostic trouble code memory' will be erased. Do not 'disconnect the battery or TCM until after the diagnostic trouble codes are recorded.,**

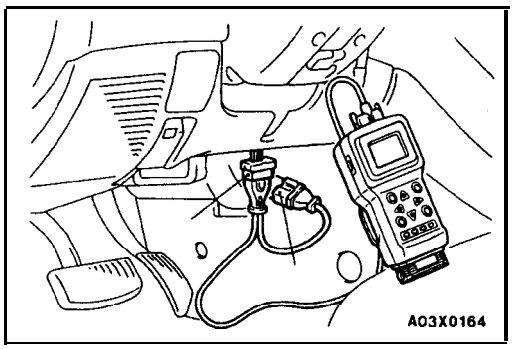

3. **Turn the ignition switch off before connecting or disconnecting the scan tool.**

1. Install the interface cartridge (I/F cartridge) to the scan tool <MUT-II>.
2. Use the I/F cartridge adapter harness to connect the scan tool <MUT-II> to the data link connector.
3. Read the diagnostic trouble codes.
4. Repair the malfunction while referring to the INSPECTION CHART FOR DIAGNOSTIC TROUBLE CODES.
5. Turn the ignition switch to OFF and then back to ON again.
6. Erase the PCM diagnostic trouble code (137:P0700) immediately after erasing the TCM diagnostic trouble code.
7. Check that the diagnostic trouble code is normal.

NOTE

- If the transaxle DTC has been set, (excluding cases where only part of the DTC has been set), the TCM will let the PCM know that a DTC has been sent to the PCM and a problem has occurred. As a result of this, the PCM records the DTC for a transaxle problem (137:P0700). After the transaxle has been repaired, the DTC (137:P0700) which has been stored in the PCM will remain there without being erased, even after the DTC which is store in the TCM has been erased. Therefore the DTC (137:P0700) in the PCM needs to be erased also.

INSPECTION CHART FOR DIAGNOSTIC TROUBLE CODES

23110120012

Code	Diagnostic item	Limp-in	Reference page
11	Internal control module (watchdog circuit test failure)	Yes	23A-128
12	Battery power was disconnected since last power down	No	23A-128
13	Internal control module (watchdog circuit shutdown)	Yes	23A-128
14	Relay always on (relay contacts are welded closed)	Yes	23A-129
15	Relay always off (relay contacts are stuck open)	Yes	23A-130
16	Internal control module (ROM checksum failure)	Yes	23A-128
17	Internal control module (RAM checksum failure)	Yes	23A-128
18	Engine speed sensor circuit	Yes	23A-131
19	CCD bus communication with PCM	No	23A-132
20	Switched battery	Yes	23A-133
21	Pressure switch circuit: OD	Yes	23A-134
22	Pressure switch circuit: 2-4	Yes	23A-135
23	Pressure switch circuit: 2-4/OD	Yes	23A-135
24	Pressure switch circuit: LR	Yes	23A-136
25	Pressure switch circuit: LR/OD	Yes	23A-136
26	Pressure switch circuit: LR/2-4	Yes	23A-137
27	Pressure switch circuit: ALL	Yes	23A-137
28	Check shifter signal	No	23A-138
29	Throttle position signal	No	23A-139
31	Hydraulic pressure switch: OD	Yes	23A-140
32	Hydraulic pressure switch: 2-4	Yes	23A-140
33	Hydraulic pressure switch: OD/2-4	Yes	23A-141
35	Check ATF level	No	23A-141
36	Fault immediately after a shift	Yes	23A-141
37	Solenoid switch valve latched in the LU position	No	23A-141
38	Lockup control out of range	No	23A-141
41	Solenoid circuit error: LR	Yes	23A-142
42	Solenoid circuit error: 2-4	Yes	23A-143
43	Solenoid circuit error: OD	Yes	23A-144
44	Solenoid circuit error: UD	Yes	23A-145
45	Internal control module (engine model EEPROM cell failure)	No	23A-128
46	UD hydraulic circuit failure	No	23A-146
47	Solenoid switch valve latched in the LR position	Yes	23A-146
48	TRD link communication error	No	23A-146
50	Speeds error: Gear ratio in reverse	Yes	23A-147
51	Speeds error: Gear ratio in 1st	Yes	23A-147
52	Speeds error: Gear ratio in 2nd	Yes	23A-147
53	Speeds error: Gear ratio in 3rd	Yes	23A-147
54	Speeds error: Gear ratio in 4th	Yes	23A-147
56	Speeds error: Input speed sensor	Yes	23A-149
57	Speeds error: Output speed sensor	Yes	23A-150
58	Speeds error: Speed sensor ground	Yes	23A-151
60	Inadequate element volume: LR	No	23A-151

TSB Revision

Code	Diagnostic item	Limp-in	Reference page
61	Inadequate element volume: 2-4	No	23A-151
62	Inadequate element volume: OD	No	23A-151
73	Worn out/burnt transmission fluid	No	23A-151
74	Calculated oil temperature in use	No	23A-152

Code No.	Scan tool 11, 13, 16, 17, 45 General scan tool P0700, P0700 P0065, P0604 P1795	Internal control module	Probable cause
TCM malfunction may be present.			• Malfunction of TCM • Replace TCM

Code No.	Scan tool 12 General scan tool P1792	Battery power was disconnected since last power down	Probable cause
Battery disconnected or first installation. A battery-backed RAM is used to maintain some learned values. When the battery is disconnected, this memory is lost. When the battery is connected, this memory loss is detected by the controller. The code is set and the learned values are initialized to known constants. This results in the re-initialization of some parameters.			• Battery disconnected • (After securely connecting the battery, use the scan tool to erase the DTC.)

TSB Revision

Code No.	Scan tool 14 / General scan tool P1767	Relay always on (Relay contacts are welded closed)	Probable cause
Relay output (switched battery) has more than 3 volts at TCM pins 56 and 57 (Connector B-85) when TCM pin 55 (Connector B-85) is turned off. Relay should be de-energized whenever ignition switch is OFF.			• Malfunction of relay (welded contacts) • Short to power on control side of relay between relay and TCM • Short to power on load side of relay between relay and TCM • TCM relay driver circuit stuck ON

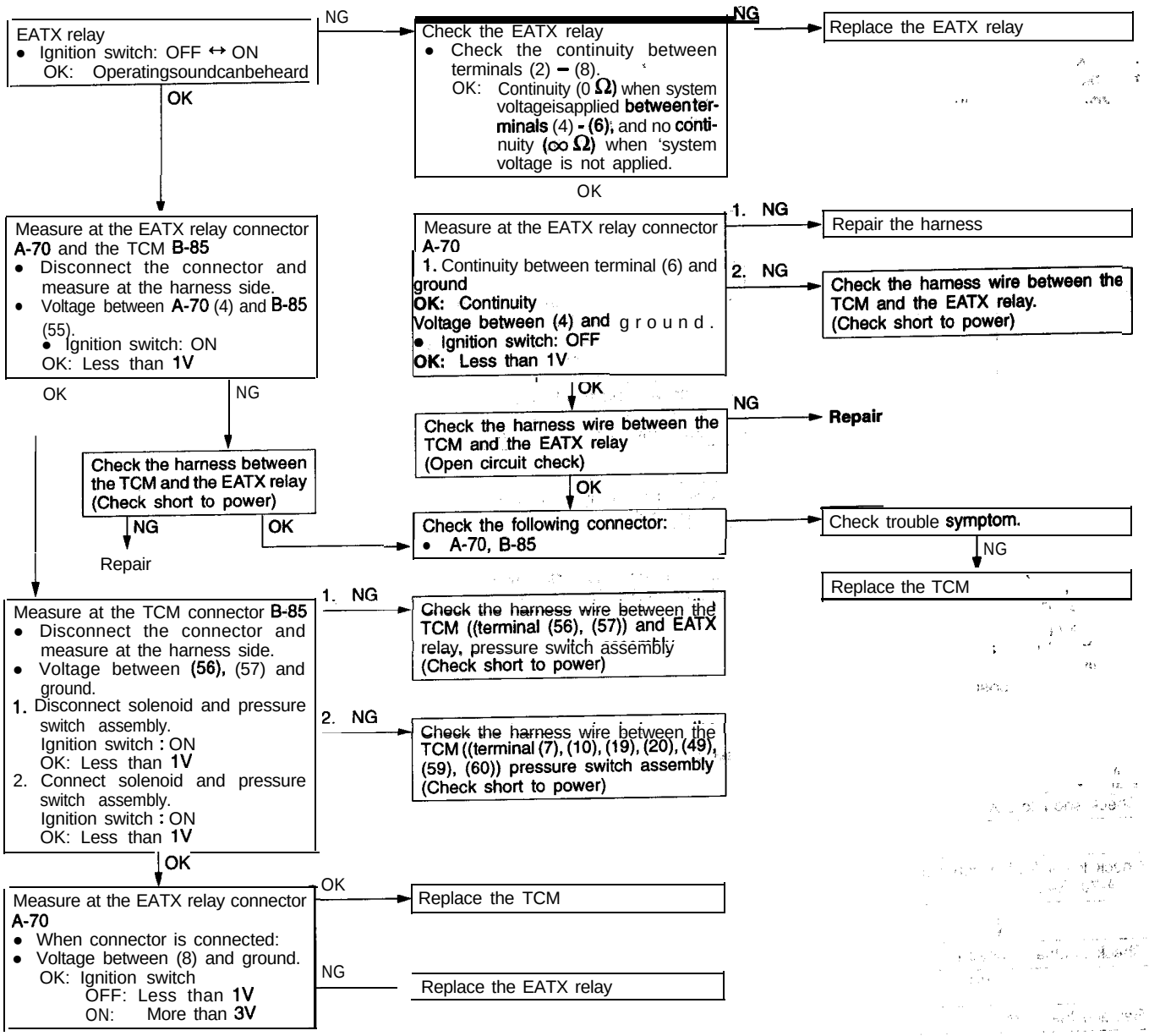

TSB Revision

Code No.	Scan tool 15 / General scan tool P1768	Relay always off (Relay contacts are stuck open)	Probable cause
	Relay output (switched battery) has less than 3 volts at TCM pins 56 and 57 (Connector B-85) when TCM pin 55 (Connector B-85) turns on to energize relay. Relay should be energized whenever key is ON.		• Malfunction of relay (open contacts) • Harness or connector between relay coil and TCM open or short-circuited . Harness or connector between relay output and TCM open-circuited . Relay supply lines open-circuited . Relay ground open-circuited ● Malfunction of TCM

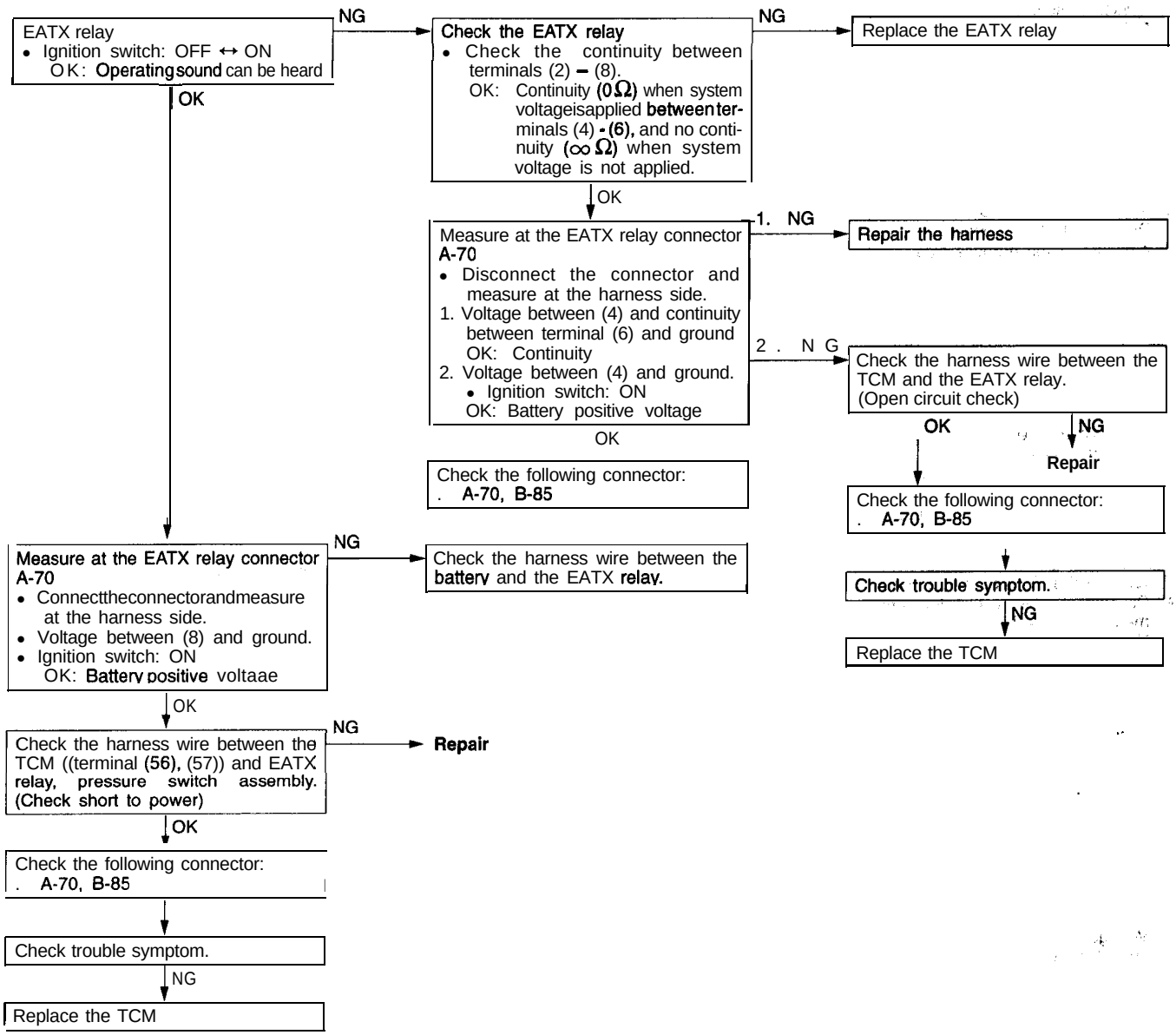

TSB Revision

Code No.	Scan tool 18 / General scan tool P0725	Engine speed sensor circuit	Probable cause
Engine speed received at the PCM from the CKP over the CCD bus is less than 384 r/min.			• Malfunction of crankshaft position sensor • Harness or connector between crankshaft position sensor and TCM open or short-circuited • Malfunction of TCM

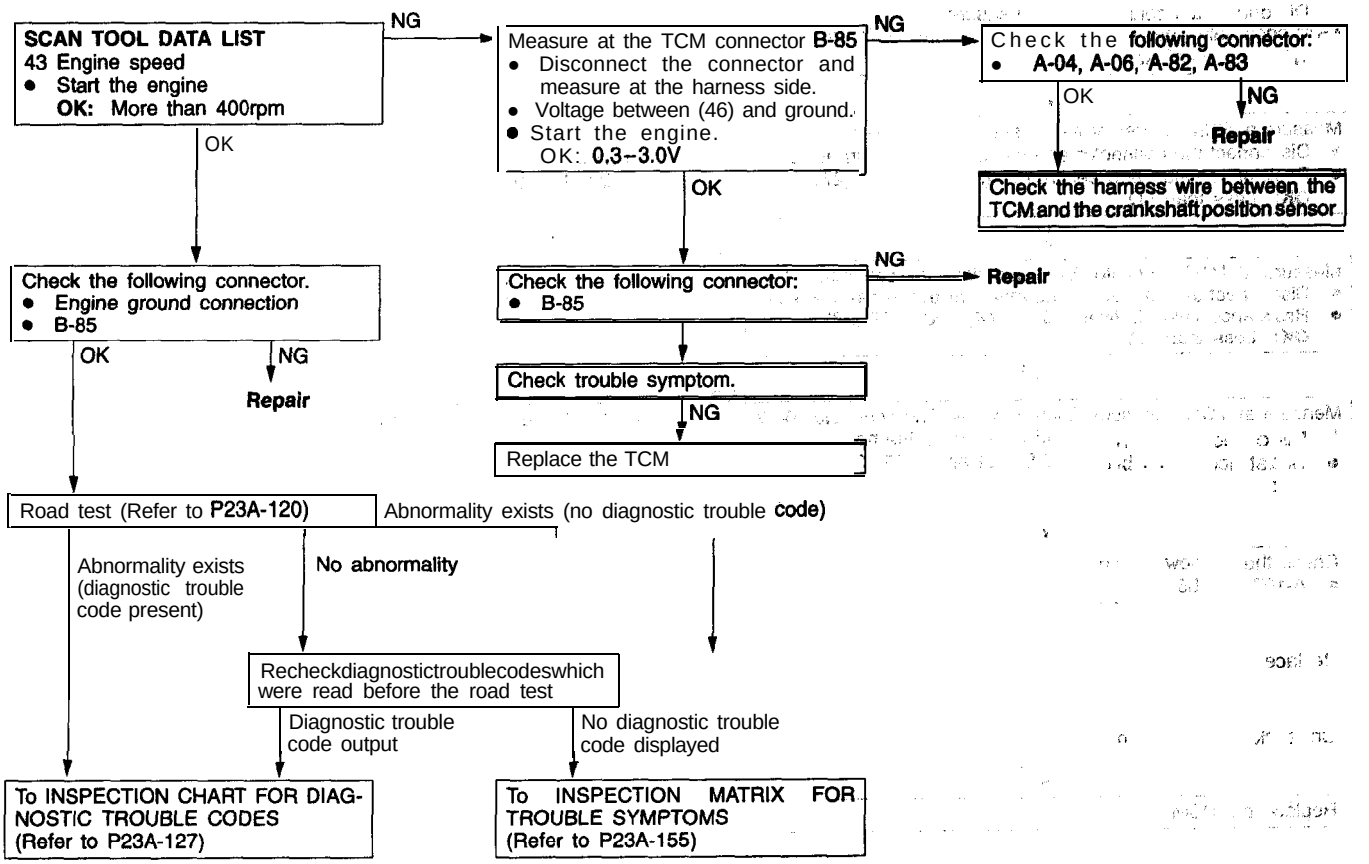

TSB Revision

Code No.	Scan tool 19 General scan tool P0600	CCD bus communication with PCM	Probable cause
No CCD messages received for 10 seconds			• CCD bus between PCM and TCM open or short-circuited • Malfunction of PCM

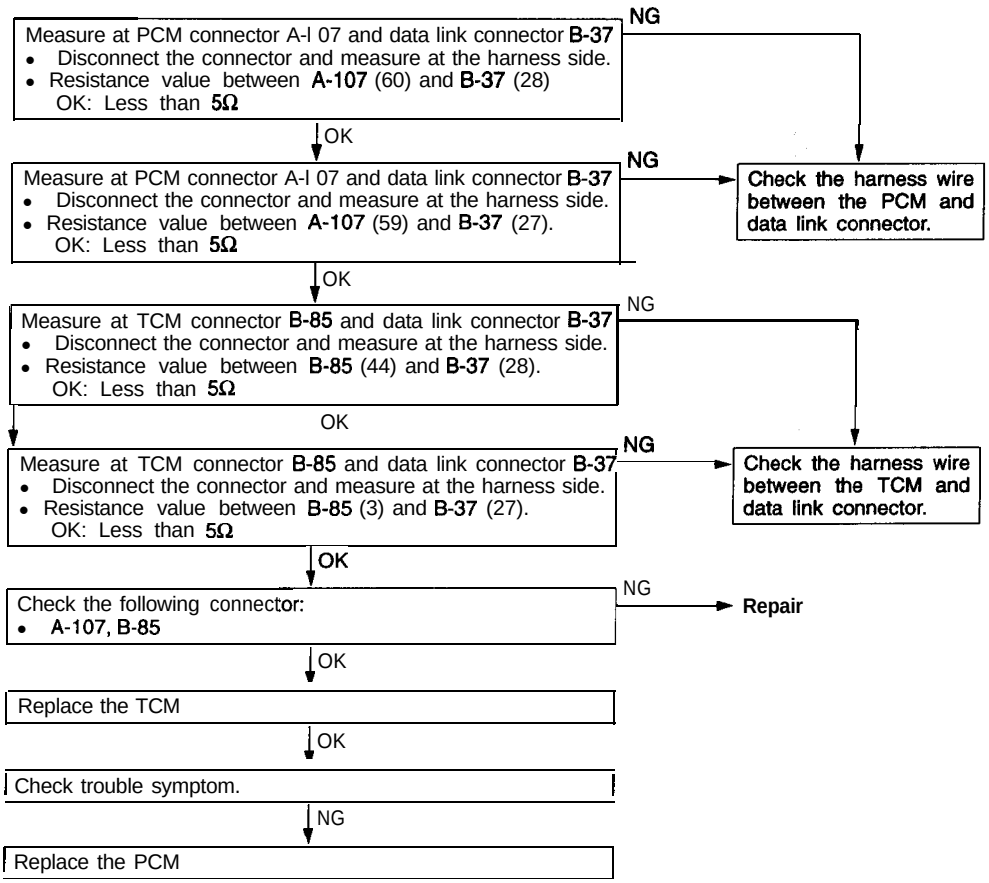

TSB Revision

Code No.	Scan tool 20 / General scan tool P1765	Switched battery	Probable cause
A voltage is detected on any of the presssure switches before the relay is energized.			• Malfunction of EATX relay • Malfunction of EATX relay, harness or connector between relay output TCM open or short-circuited • Harness or connector between EATX relay output and TCM temporarily short-circuited • Malfunction of TCM

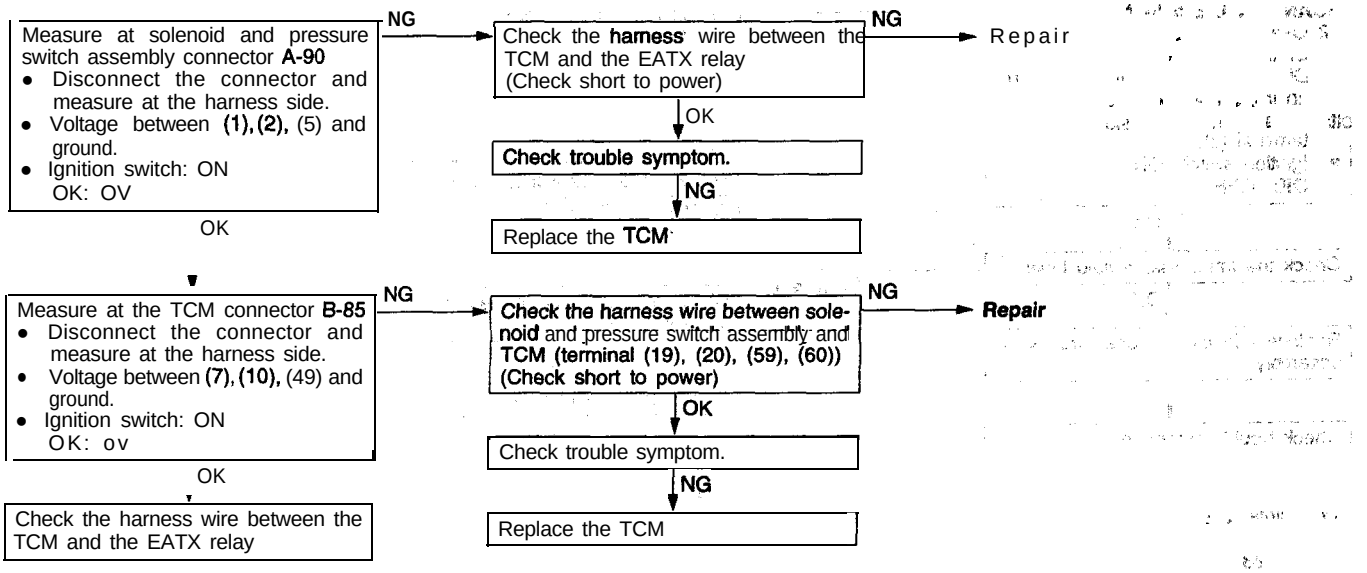

Code No.	Scan tool 21 / General scan tool P1781	Pressure switch circuit: OD	Probable cause
A mismatch has occurred between the shift condition and the pressure switch condition (ON/OFF) while the vehicle is moving.			• Low/high fluid level in transaxle • Malfunction of pressure switch assembly • Harness or connector between OD pressure switch and TCM open or short-circuited • Malfunction of TCM • Internal transaxle problem

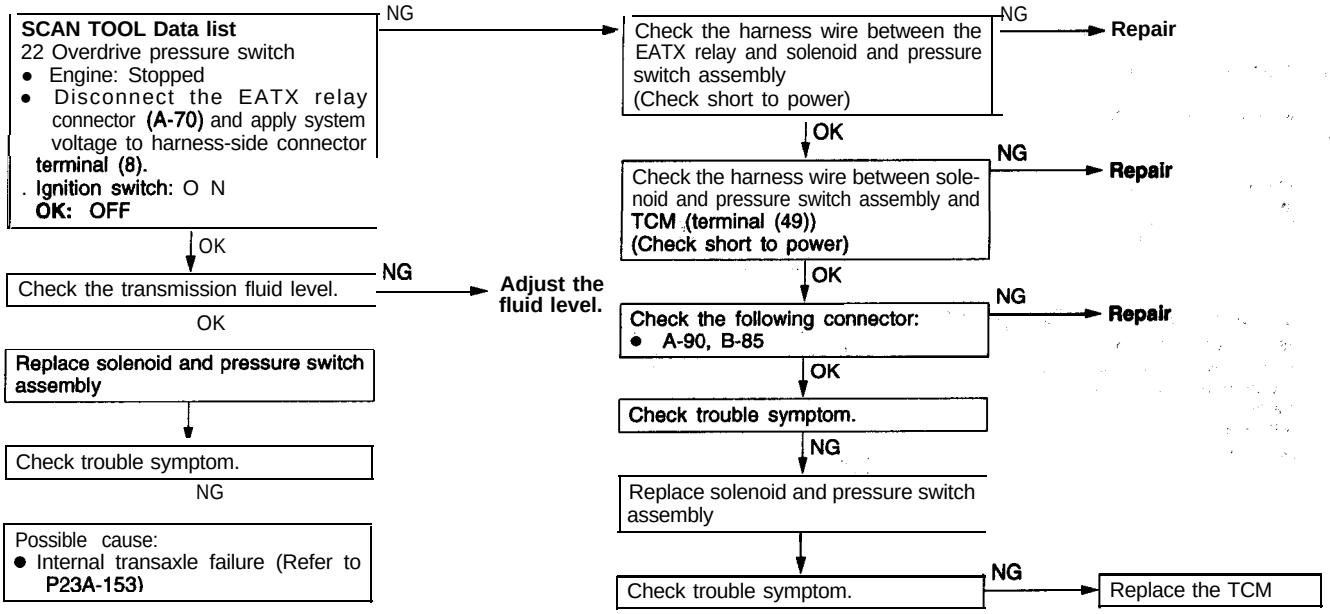

TSB Revision

Code No.	Scan tool 22 / General scan tool P1782	Pressure switch circuit: 2-4	Probable cause
A mismatch has occurred between the shift condition and the pressure switch condition (ON/OFF) while the vehicle is moving.			• Low/high fluid level in transaxle • Malfunction of pressure switch assembly • Harness or connector between 2-4 pressure switch and TCM open or short-circuited • Malfunction of TCM • Internal transaxle problem

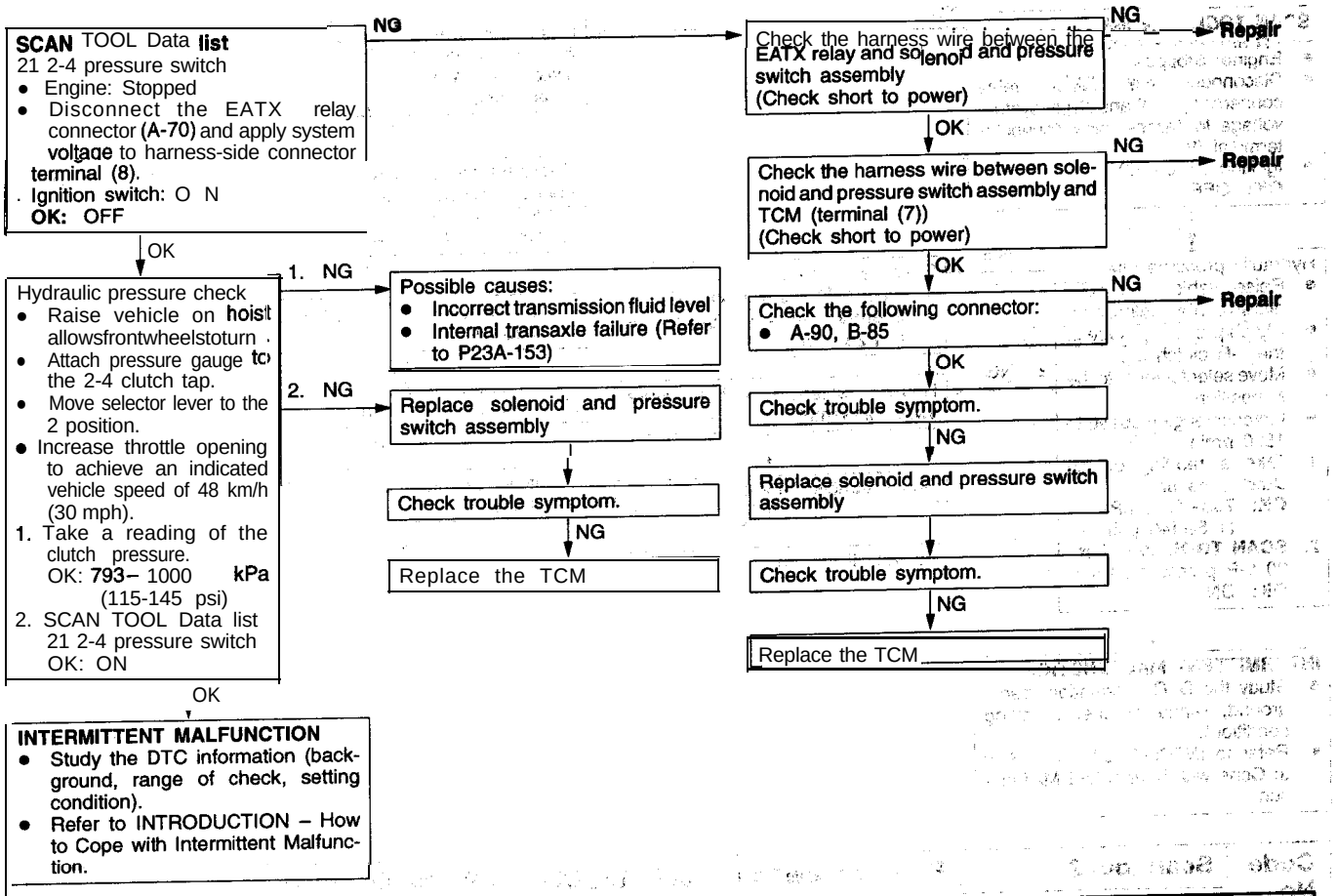

Code No.	Scan tool 23 / General scan tool P1783	Pressure switch circuit: 2-4/OD	Probable cause
A mismatch has occurred between the shift condition and the pressure switch condition (ON/OFF) while the vehicle is moving.			• Low/high fluid level in transaxle • Malfunction of pressure switch assembly • Harness or connector between OD pressure switch and TCM open or short-circuited • Harness or connector between 2-4 pressure switch and TCM open or short-circuited • Malfunction of TCM • Internal transaxle problem

- Carry out the inspection procedure for code No. 21. (Refer to P23A- 134)
- Carry out the inspection procedure for code No. 22. (Refer to P23A-135)

Code No.	Scan tool 24 / General scan tool P1784	Pressure switch cricuit: LR	Probable cause
A mismatch has occurred between the shift condition and the pressure switch condition (ON/OFF) while the vehicle is moving.			• Low/high fluid level in transaxle • Malfunction of pressure switch assembly • Harness or connector between LR pressure switch and TCM open or short-circuited • Malfunction of TCM • Internal transaxle problem

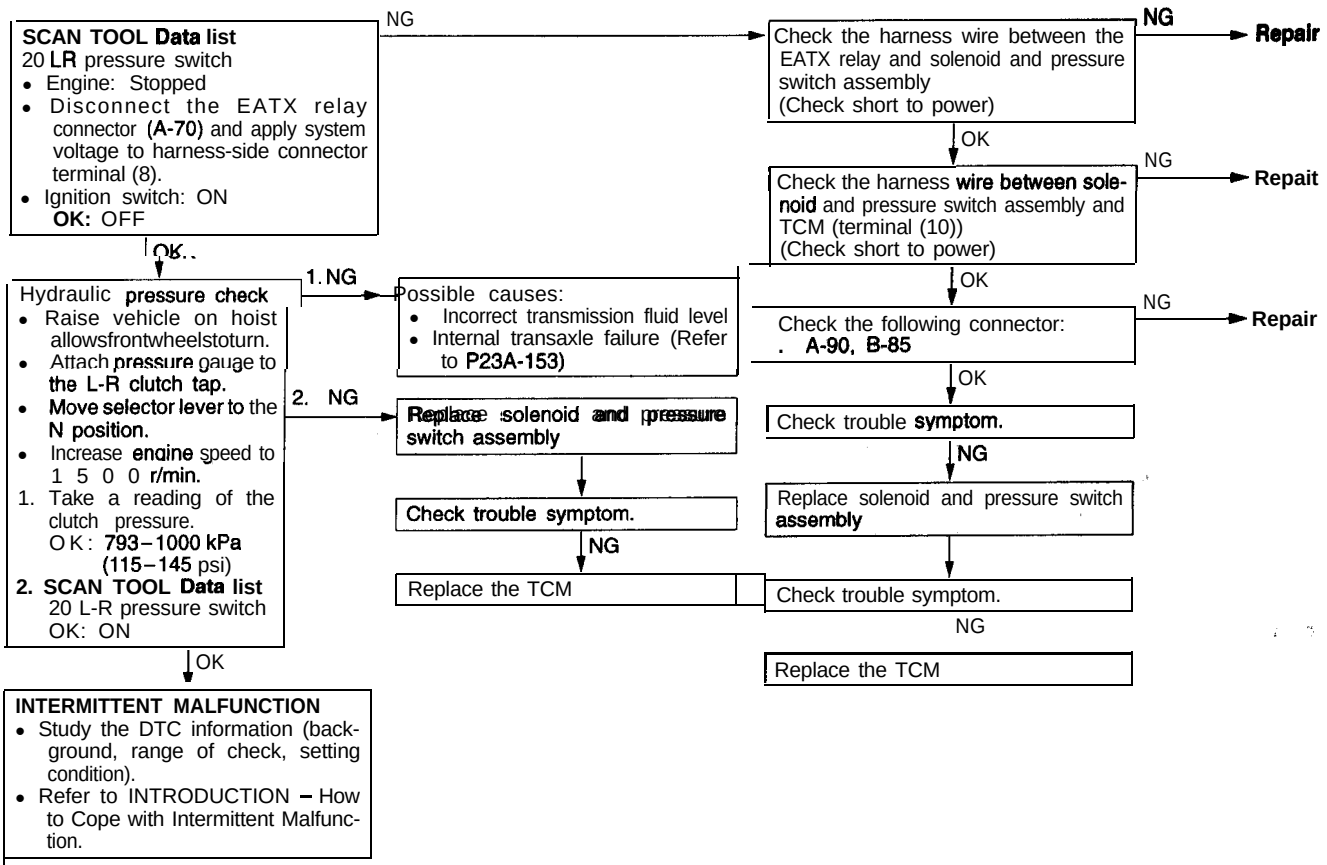

Code No.	Scan tool 25 / General scan tool P1785	Pressure switch circuit: LR/OD	Probable cause
A mismatch has occurred between the shift condition and the pressure switch condition (ON/OFF) while the vehicle is moving.			• Low/high fluid level in transaxle • Malfunction of pressure switch assembly • Harness or connector between OD pressure switch and TCM open or short-circuited • Harness or connector between LR pressure switch and TCM open or short-circuited • Malfunction of TCM • Internal transaxle problem

- Carry out the inspection procedure for code No. 21. (Refer to P23A-134)
- Carry out the inspection procedure for code No. 24. (Refer to P23A-136)

TSB Revision

Code No.	Scan tool 26 / General scan tool P1786	Pressure switch circuit: LR/2-4	Probable cause
A mismatch has occurred between the shift condition and the pressure switch condition (ON/OFF) while the vehicle is moving.			• Low/high fluid level in transaxle • Malfunction of pressure switch assembly • Harness or connector between 2-4 pressure switch and TCM open or short-circuited • Harness or connector between LR pressure switch and TCM open or short-circuited • Malfunction of TCM • Internal transaxle problem

- Carry out the inspection procedure for code No. 22. (Refer to P23A-135)
- Carry out the inspection procedure for code No. 24. (Refer to P23A-136)

Code No.	Scan tool 27 / General scan tool P1780	Pressure switch circuit: ALL	Probable cause
A mismatch has occurred between the shift condition and the pressure switch condition (ON/OFF) while the vehicle is moving.			• Low/high fluid level in transaxle • Malfunction of pressure switch assembly • Harness or connector between OD pressure switch and TCM open or short-circuited • Harness or connector between 2-4 pressure switch and TCM open or short-circuited • Harness or connector between LR pressure switch and TCM open or short-circuited • Malfunction of TCM • Internal transaxle problem

- Carry out the inspection procedure for code No. 21. (Refer to P23A-134)
- Carry out the inspection procedure for code No. 22. (Refer to P23A- 135)
- Carry out the inspection procedure for code No. 24. (Refer to P23A-136)

Code No.	Scan tool 28 / General scan tool P0705	Check shifter signal	Probable cause
Case 1 Invalid code timer has expired (100 msec). Case 2 Third occurrence of setting PRND2L data error flag since start-up			• Malfunction of transaxle range sensor • Harness or connector between transaxle range sensor and TCM open or short-circuited • Transaxle range sensor ground open-circuited • Malfunction of TCM

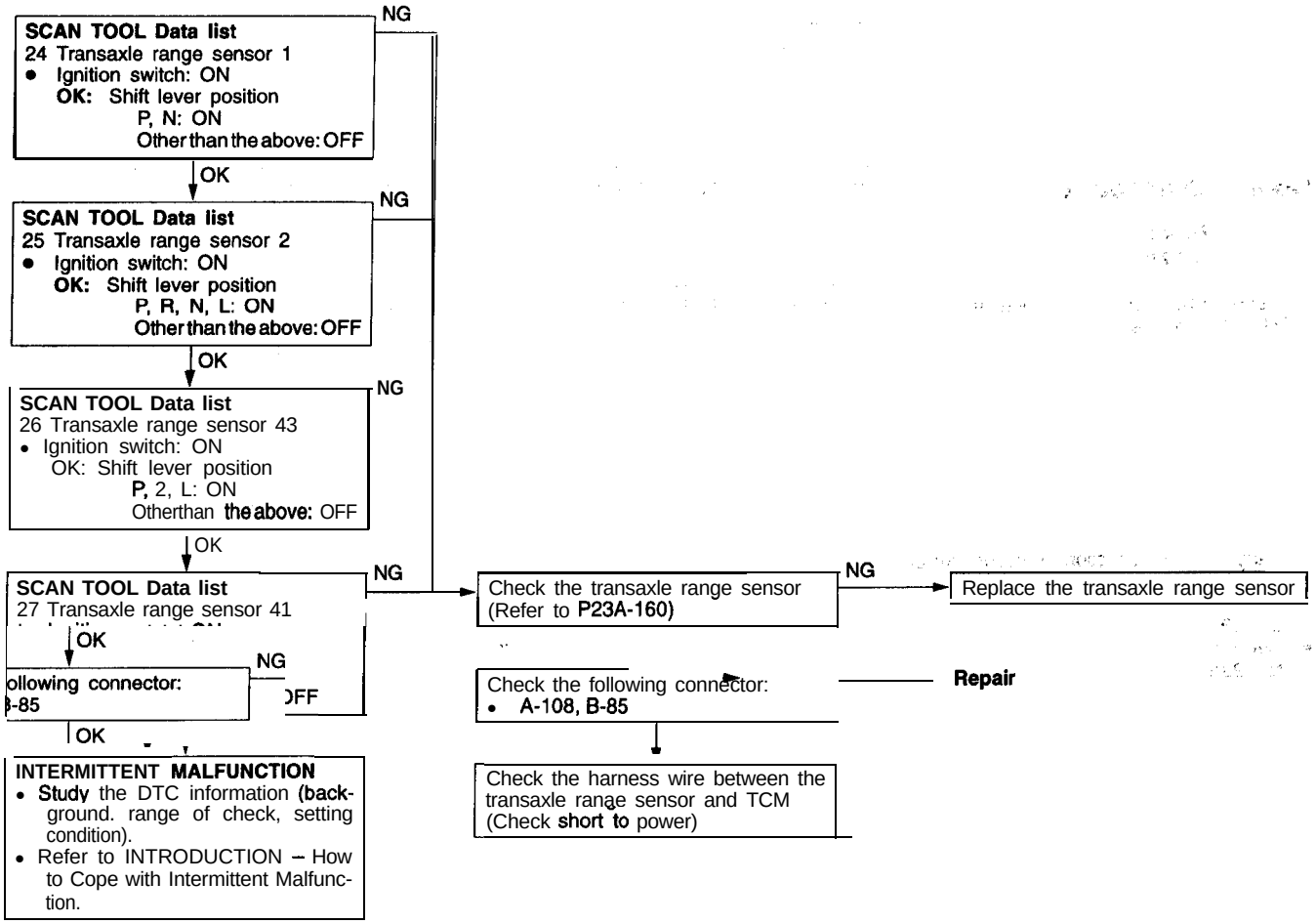

TSB Revision

Code No.	Scan tool 29 General scan tool P0120	Throttle position signal	Probable cause
• Throttle angle less than 6 degrees, or Throttle greater than 120.6 degrees. • The engine must be running.			• Malfunction of throttle position sensor • Harness or connector between throttle position sensor and TCM open or short-circuited • Harness or connector between throttle position sensor output and TCM open or short-circuited • Malfunction of TCM • Malfunction of PCM

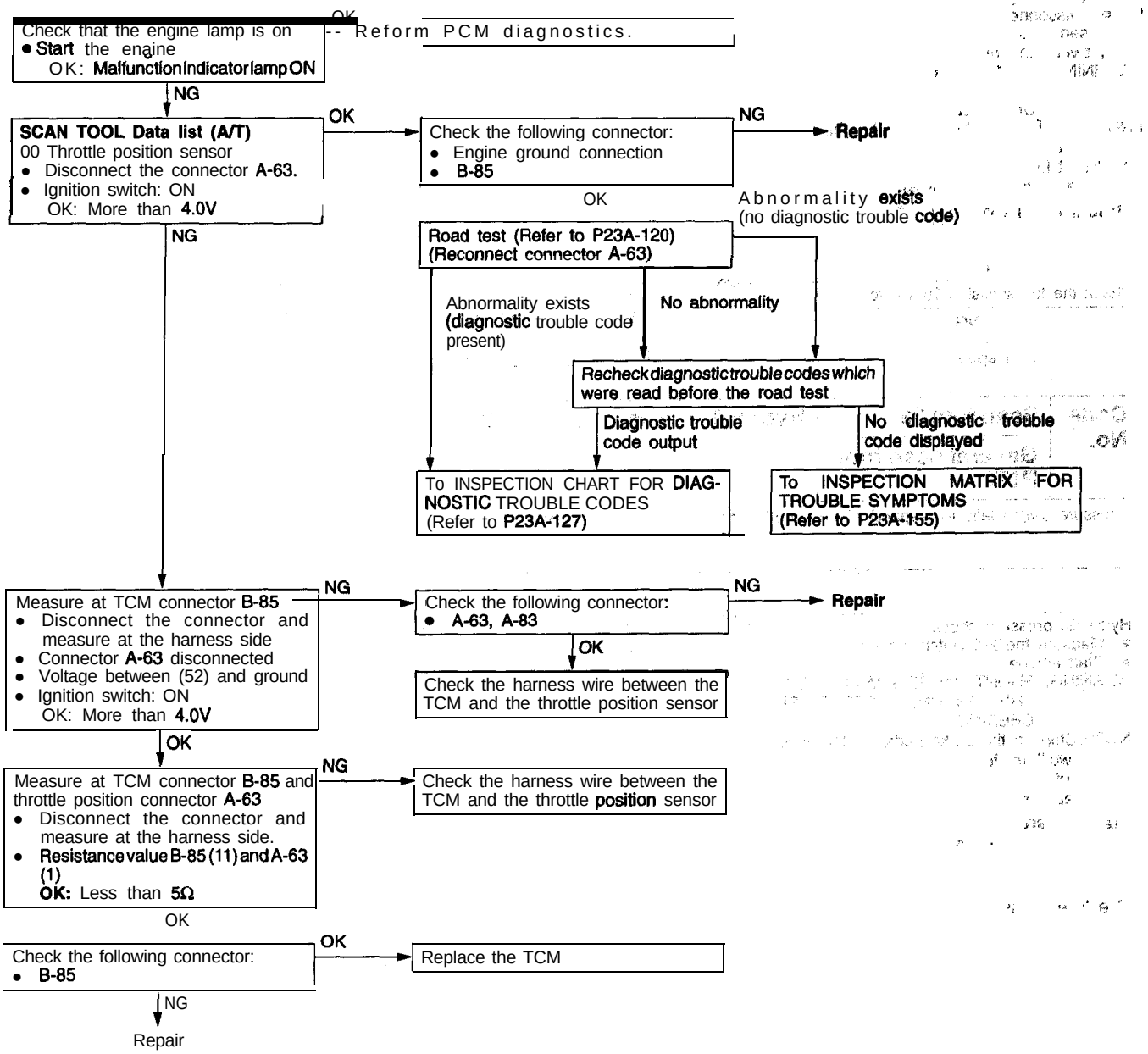

TSB Revision

Code No.	Scan tool 31 General scan tool P1787	Hydraulic pressure switch: OD	Probable cause
Pressure switch falls to respond within specified time for given temperature range.			• Low/high fluid level in transaxle • Malfunction of pressure switch assembly • Internal transaxle problem

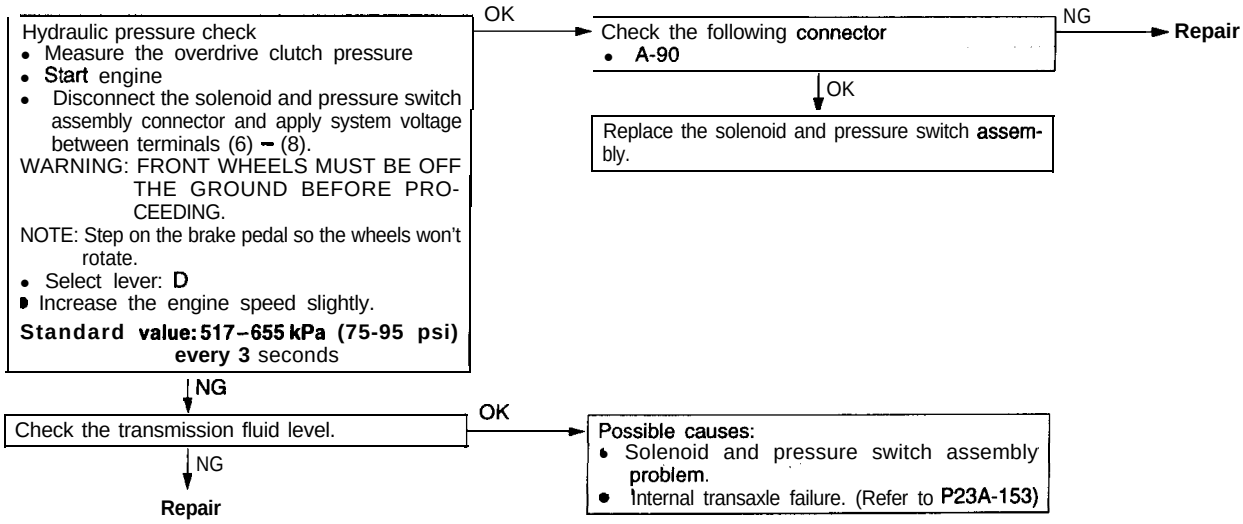

Code No.	Scan tool 32 General scan tool P1788	Hydraulic pressure switch: 2-4	Probable cause
Pressure switch falls to respond within specified time for given temperature range.			• Low/high fluid level in transaxle • Malfunction of pressure switch assembly • Internal transaxle problem

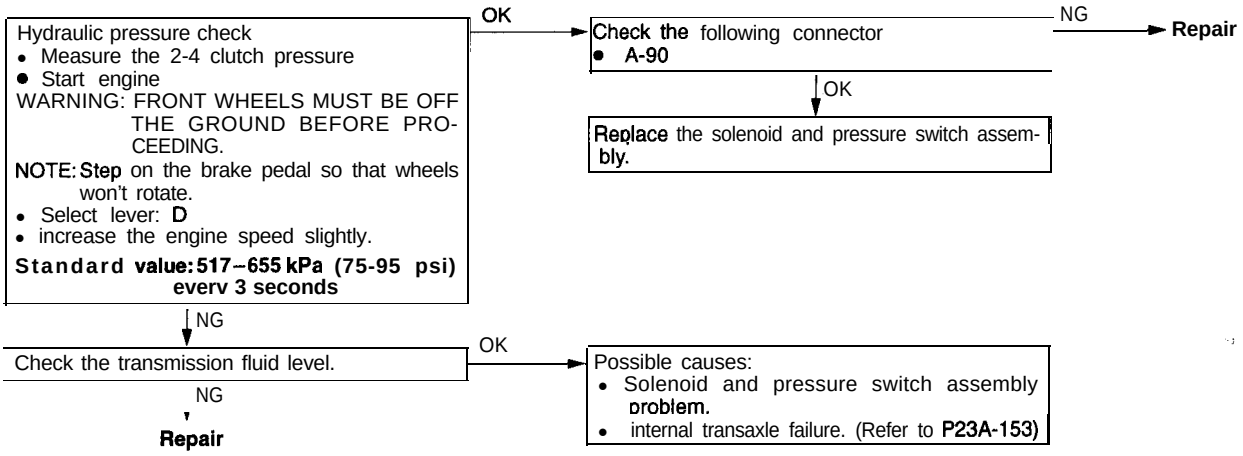

Code No.	Scan tool 33 General scan tool P1789	Hydraulic pressure switch: OD/2-4	Probable cause
Pressure switch falls to respond within specified time for given temperature range.			• Low/high fluid level in transaxle • Malfunction of pressure switch assembly • Internal transaxle problem

- Carry out the inspection procedure for code No. 31. (Refer to P23A-140)
- Carry out the inspection procedure for code No. 32. (Refer to P23A-140)

Code No.	Scan tool 35 General scan tool P1791	Check ATF level	Probable cause
No pressure is present for any element.			• Low/high fluid level in transaxle • Malfunction of oil filter • Missing O-ring • Malfunction of transmission fluid cooler

Code No.	Scan tool 38 General scan tool P1790	Fault immediately after a shift	Probable cause
Fault happened within 1.3 second of a shift (This code is not stored alone. It is stored if a speed error (codes 50 through 58) is detected immediately after a shift).			• Internal transaxle problem (Refer to Speed errors)

Code No.	Scan tool 37 General scan tool P1775	Solenoid switch valve latched in the LU position	Probable cause
Three unsuccessful attempts shift 1st gear.			• Internal transaxle problem • Refer to Inspection matrix for diagnostic trouble code. (Internal transaxle problem (P23A-153))

Code No.	Scan tool 38 General scan tool P0740	Lock-up control out of range	Probable cause
Electronically Modulated Converter Clutch (EMCC) operation is inhibited			• Low/high fluid level in transaxle • Internal transaxle problem

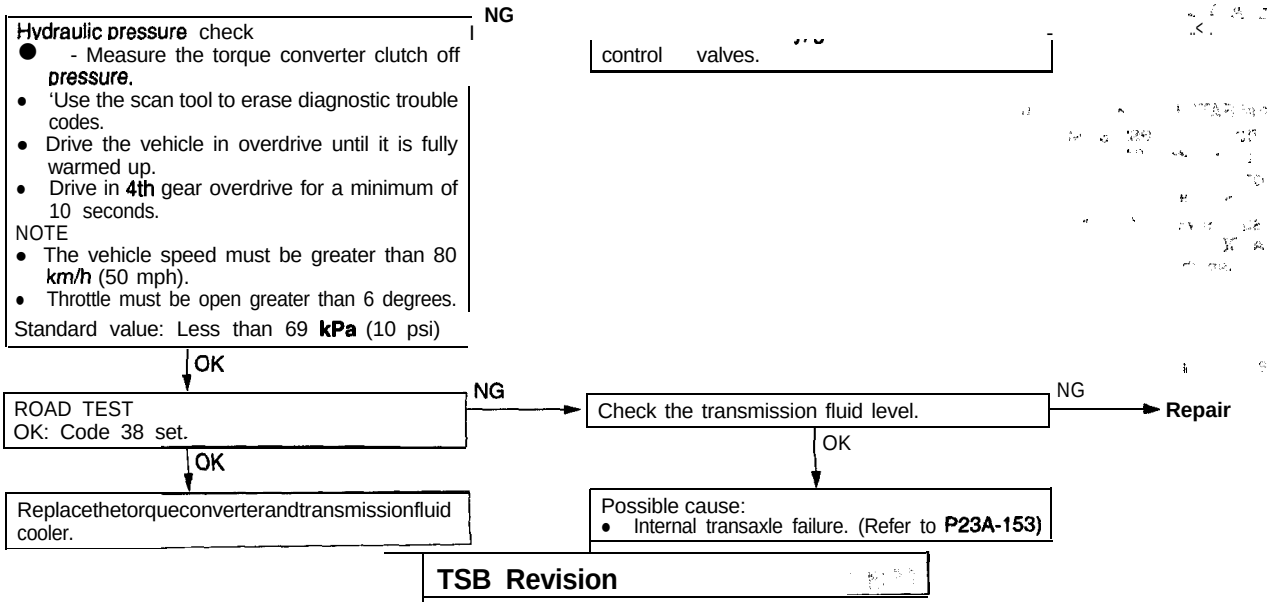

Code No.	Scan tool 41 / General scan tool P0750	Solenoid circuit error: LR	Probable cause
A shift must not be in progress; an selector lever position, pressure switch, or watchdog test must not be in progress; no spike must be detected from the solenoid during the first test, or a pressure switch problem, or a speed problem. The code sets if the solenoid continuity test failed for the second time, or if there is either a pressure switch or speed data problem and the solenoid continuity test failed for the first time.			• Malfunction of pressure switch assembly • Harness or connector between LR solenoid and TCM open or short-circuited • TCM ground open-circuited • Malfunction of TCM

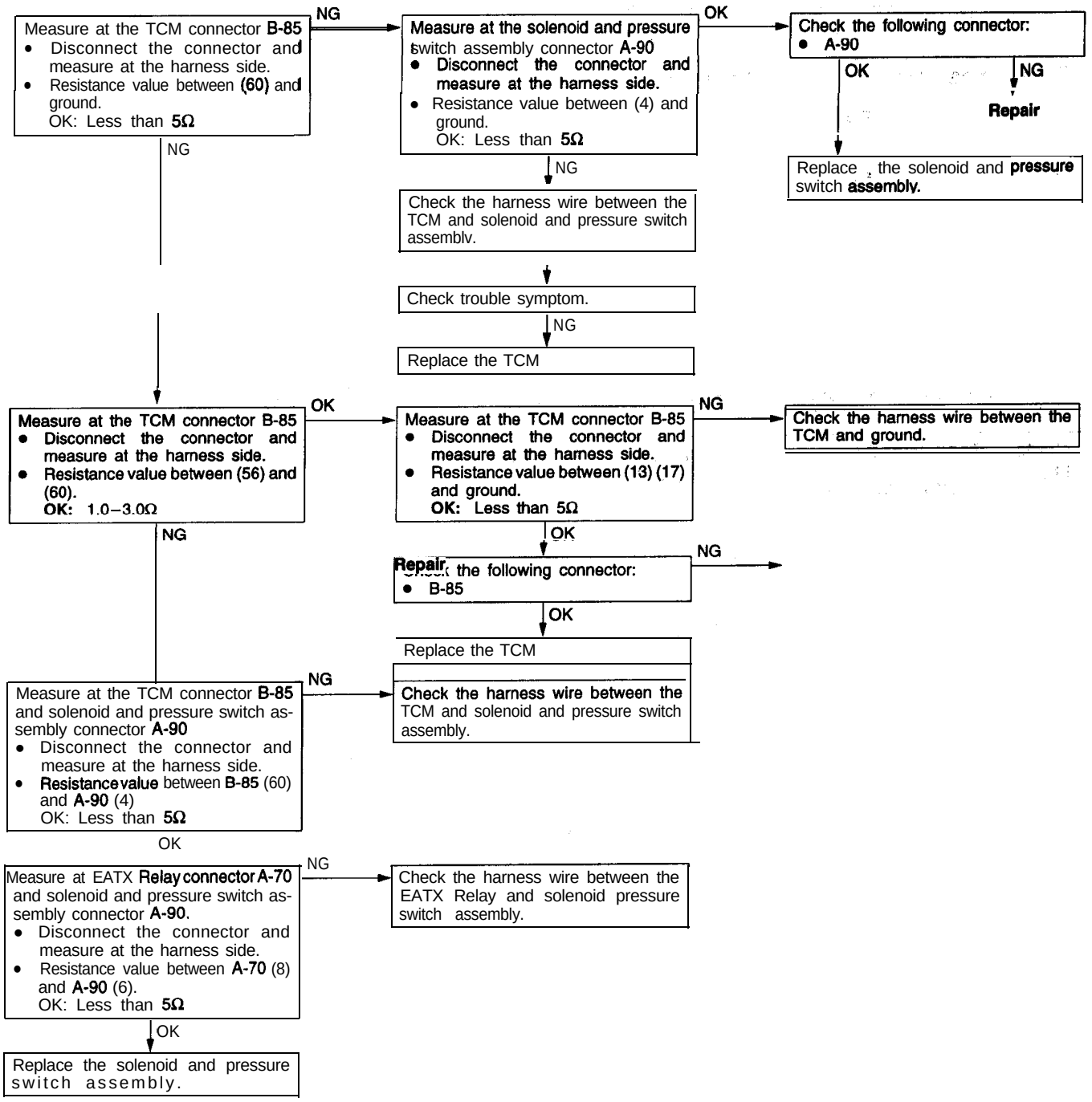

TSB Revision

Code No.	Scan tool 42	Solenoid circuit error: 2-4	Probable cause
	General scan tool P0755		
A shift must not be in progress; an selector lever position, pressure switch, or watchdog test must not be in progress; no spike must be detected from the solenoid during the first test, or a pressure switch problem, or a speed problem. The code sets if the solenoid continuity test failed for the second time, or if there is either a pressure switch or speed data problem and the solenoid continuity test failed for the first time.			• Malfunction of pressure switch assembly • Harness or connector between 2-4 solenoid and TCM open or short-circuited • TCM ground open-circuited • Malfunction of TCM

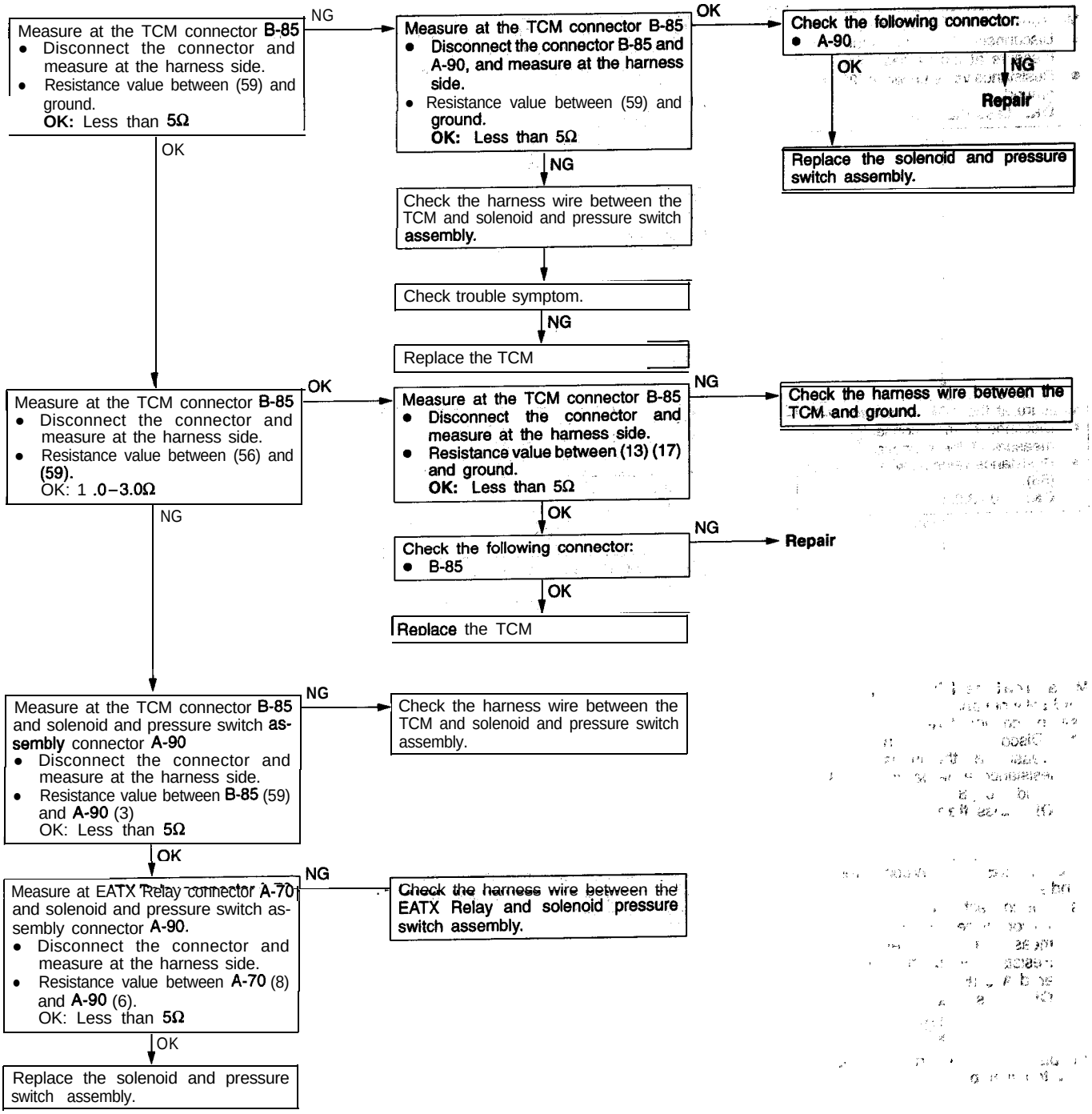

Code No.	Scan tool 43 / General scan tool P0760	Solenoid circuit error: OD	Probable cause
A shift must not be in progress; an selector lever position, pressure switch, or watchdog test must not be in progress: no spike must be detected from the solenoid during the first test, or a pressure switch problem, or a speed problem. The code sets if the solenoid continuity test failed for the second time, or if there is either a pressure switch or speed data problem and the solenoid continuity test failed for the first time.			• Malfunction of pressure switch 'assembly • Harness or connector between OD solenoid and TCM open or short-circuited • TCM ground open-circuited • Malfunction of TCM

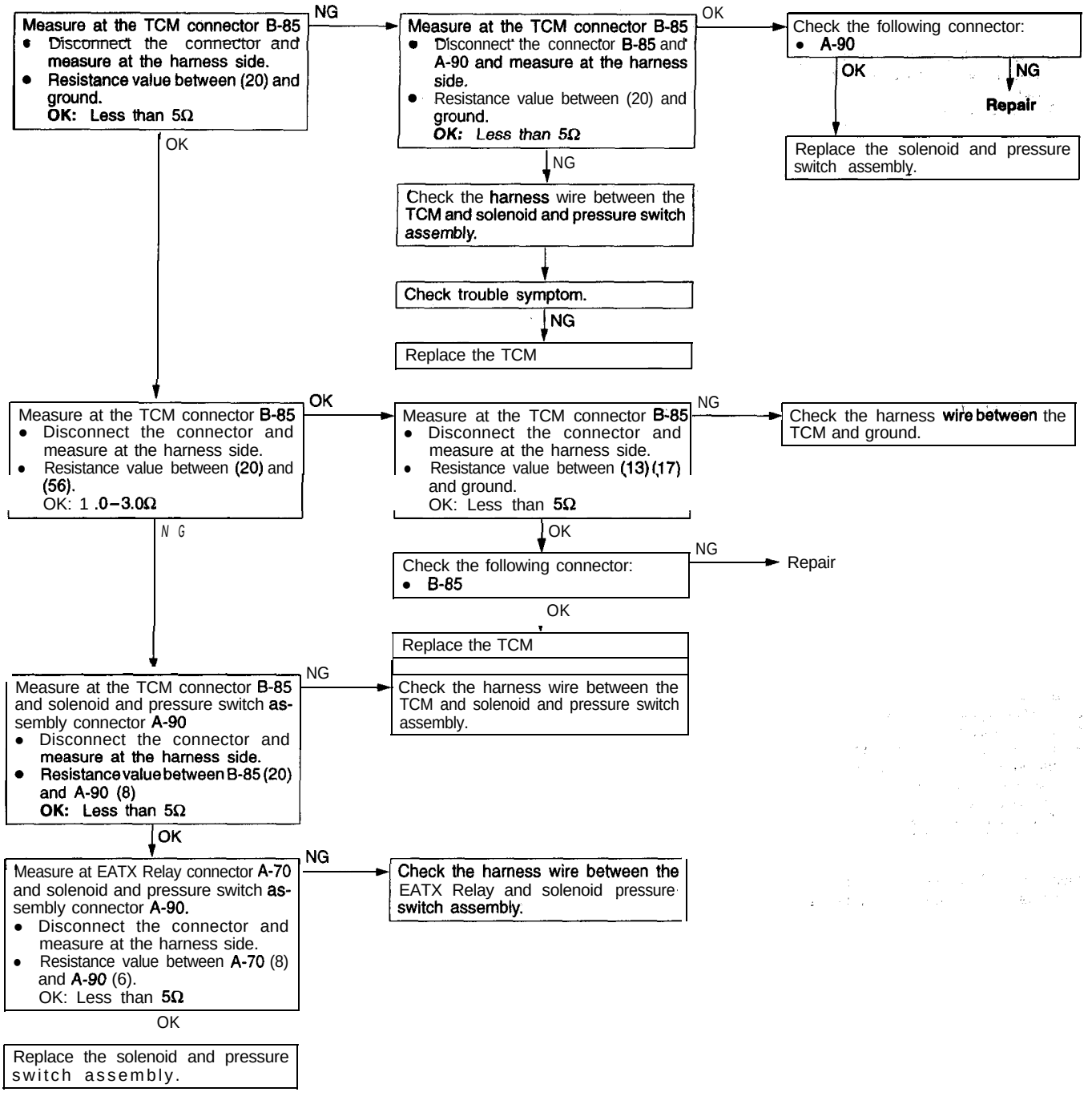

TSB Revision

Code No.	Scan tool 44 General scan tool P0765	Solenoid circuit error: UD	Probable cause
	A shift must not be in progress; an selector lever position, pressure switch, or watchdog test must not be in progress; no spike must be detected from the solenoid during the first test, or a pressure switch problem, or a speed problem. The code sets if the solenoid continuity test failed for the second time, or if there is either a pressure switch or speed data problem and the solenoid continuity test failed for the first time.		• Malfunction of pressure switch assembly • Harness or connector between UD solenoid and TCM open or short-circuited • TCM ground open-circuited • Malfunction of TCM

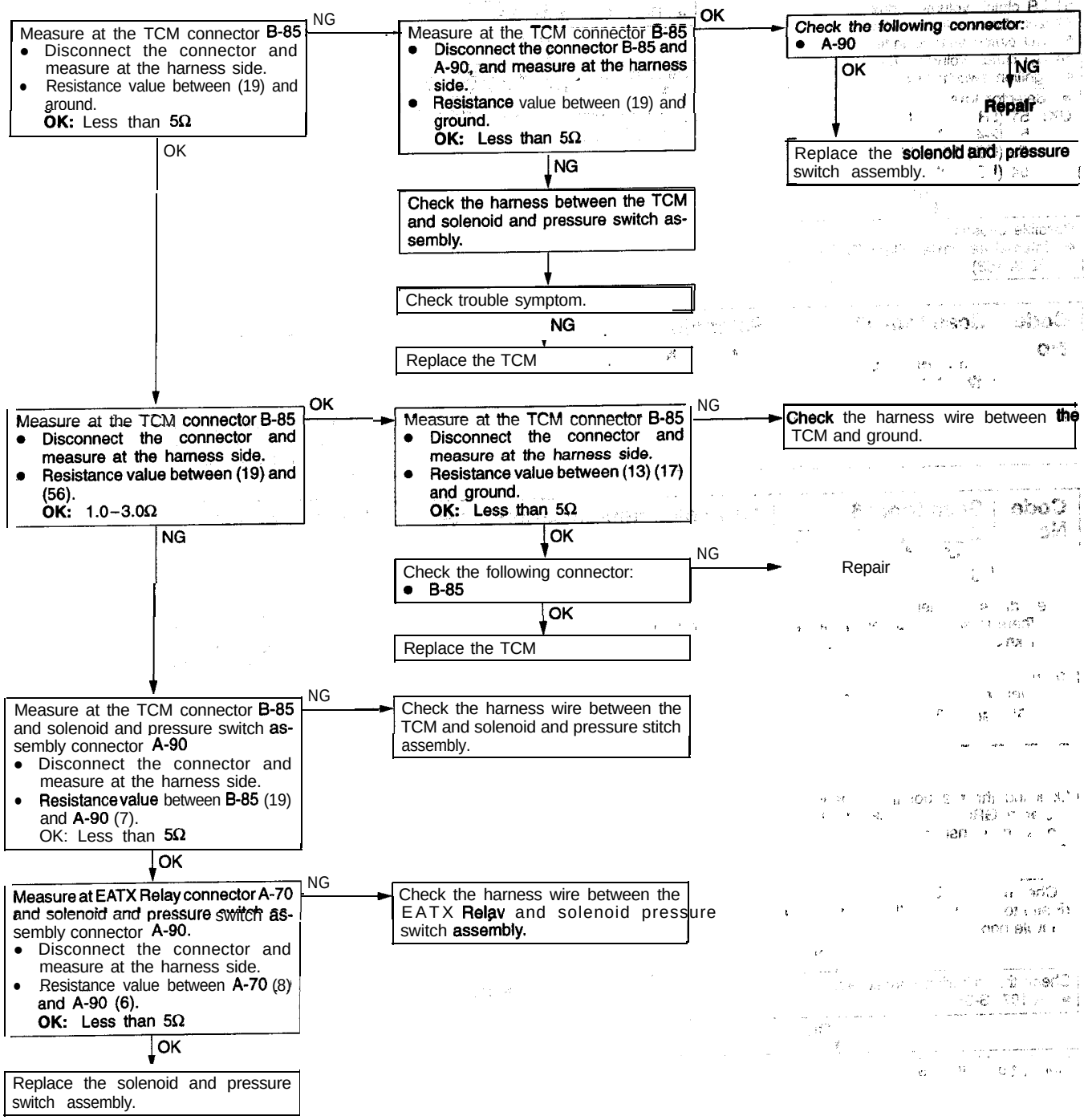

TSB Revision

Code No.	Scan tool 46 / General scan tool P0783	UD Hydraulic circuit failure	Probable cause
A 3-4 shift must be in progress, and the UD flag must be set (temperature must not be cold). The code sets concurrently with the third consecutive 3-4 shift abort if the underdrive fault counter is greater than three.			• Internal transaxle problem

SCAN TOOL Data list
51 **LR** clutch volume index
52 2-4 clutch volume index
53 OD clutch volume index
54 UD clutch volume index
- Ignition switch: ON
- Selector lever: P

OK: 51 (LR) 35 – 85
52 (2-4) 20 – 77
53 (OD) 75 – 150
54 (UD) 24 – 70

OK → Check the following connectors:
- B-85, A-83, A-86, A-89

NG → Repair

OK → Refer to INSPECTION MATRIX FOR DIAGNOSTIC TROUBLE CODE. (Internal transaxle problem) (Refer to P23A-153)

NG → Possible causes:
- Internal transaxle failure (Refer to P23A-153)

Code No.	Scan tool 47 / General scan tool P1776	Solenoid switch valve latched in the LR position	Probable cause
LR pressure is high for second time.			• Internal transaxle problem • Refer to Inspection matrix for diagnostic trouble code. (Internal transaxle problem) (P23A-153)

Code No.	Scan tool 48 / General scan tool P1793	TRD link communication error	Probable cause
The code sets when: There is an incorrect response from the power train control module via the CCD bus acknowledging request for torque management test during idle. or when: Event dependent on two sequential request for torque managed shift without correct response from powertrain control module on CCD bus acknowledging that torque management is in process.			• CCD bus communication problem • Sticky throttle position sensor . Open circuit or short-circuit in TRD link line between TCM and PCM

Check the throttle position sensor.
(Refer to GROUP 13A MFI <2.0L ENGINE (NON-TURBO)> – On-vehicle inspection of MFI components)

NG → Replace

OK ↓

Check the CCD bus communication.
(Refer to GROUP 13A MFI <2.0L ENGINE (NON-TURBO)> – Troubleshooting)

NG → Repair

OK ↓

Check the following connectors:
- A-107, B-85

NG → Repair

OK ↓

Check trouble symptom.

OK

Check the harness wire between the PCM connector A-107 (63) and TCM connector B-85 (50).

TSB Revision

Code No.	Scan tool 50, 51, 52, 53, 54 General scan tool P0736, P0731 P0732 P0733 P0734	Speeds error (Gear, 'ratio reverse, lst, 2nd, 3rd, 4th)	Probable cause
Code 50-54 sets if the ratio of the input r/min to the output r/min does not compare to a particular gear ratio. A hard fault is considered to exist when the fault counter has matured to a value of 255. An intermittent fault is considered present when the fault counter is greater than or equal to 6 and less than 255. No fault is considered to exist when the fault counter is less than 6.			• Malfunction of input speed' sensor • Malfunction of output speed sensor • Harness or connector between input speed sensor and TCM open or short-circuited • Harness or connector between output speed sensor and TCM open or short-circuited • Malfunction of TCM • Internal transaxle problem

Check the installation condition of the input speed sensor
- NG → Repair
- OK ↓

Check the installation condition of the output speed sensor
- NG → Repair
- OK ↓

Check the following connectors:
- A-83, A-86, A-89
- NG → Repair
- OK ↓

SCAN TOOL Data list
44 Transaxle input speed
45 Transaxle output speed
- Start the engine.
- Selector lever: D

OK: More than 0
- NG → • Carry out the inspection procedure for code No. 56. (P23A-149)
- OK ↓

Check the transmission fluid level.
- NG → Repair
- OK ↓

SCAN TOOL Data list
44 Transaxle input speed
- Raise the vehicle's drive wheels off the ground
- Start the engine and step on the brake so the wheels won't rotate.

1. Selector lever: 2
- Open the throttle to 30%
- Use the scan tool 'to monitor the input RPM. Allow the engne to return to idle.

OK: 0 rpm

2. Select lever: R
- Open the throttle to 30%
- Use the scan tool to monitor the input RPM. Allow the engine to return to idle.

OK: 0 rpm

1. NG → The 2-4 clutch or UD clutch may be slipping.

Caution
* Do not test any gear range for longer than 5 seconds

2. NG → • The reverse clutch or low/reverse clutch may be slipping.

- OK ↓

Transaxle overhaul
- If code No. 50 is set: Reverse clutch or LR clutch may be slipping
- If code No. 51 is set: UD clutch may be slipping
- If code No. 52 is set: 2-4 clutch or UD clutch may be slipping
- If code No. 53 is set: OD clutch may be slipping
- If code No. 54 is set: OD clutch may be slipping

OK

Check trouble symptom.

NG

Check the following connectors:
- B-85
- OK → Replace the TCM.
- NG → Repair

Code No.	Scan tool 56 General scan tool P0715	Speeds error: Input Speed Sensor	Probable cause
There is an excessive change in input shaft speed in any gear. A hard fault is considered to exist when the fault counter has matured to a value of 255. An intermittent fault is considered present when the fault counter is greater than or equal to 6 and less than 255. No fault is considered to exist when the fault counter is less than 6.			• Malfunction of input speed sensor • Harness or connector between output speed sensor and TCM open or short-circuited • Malfunction of TCM

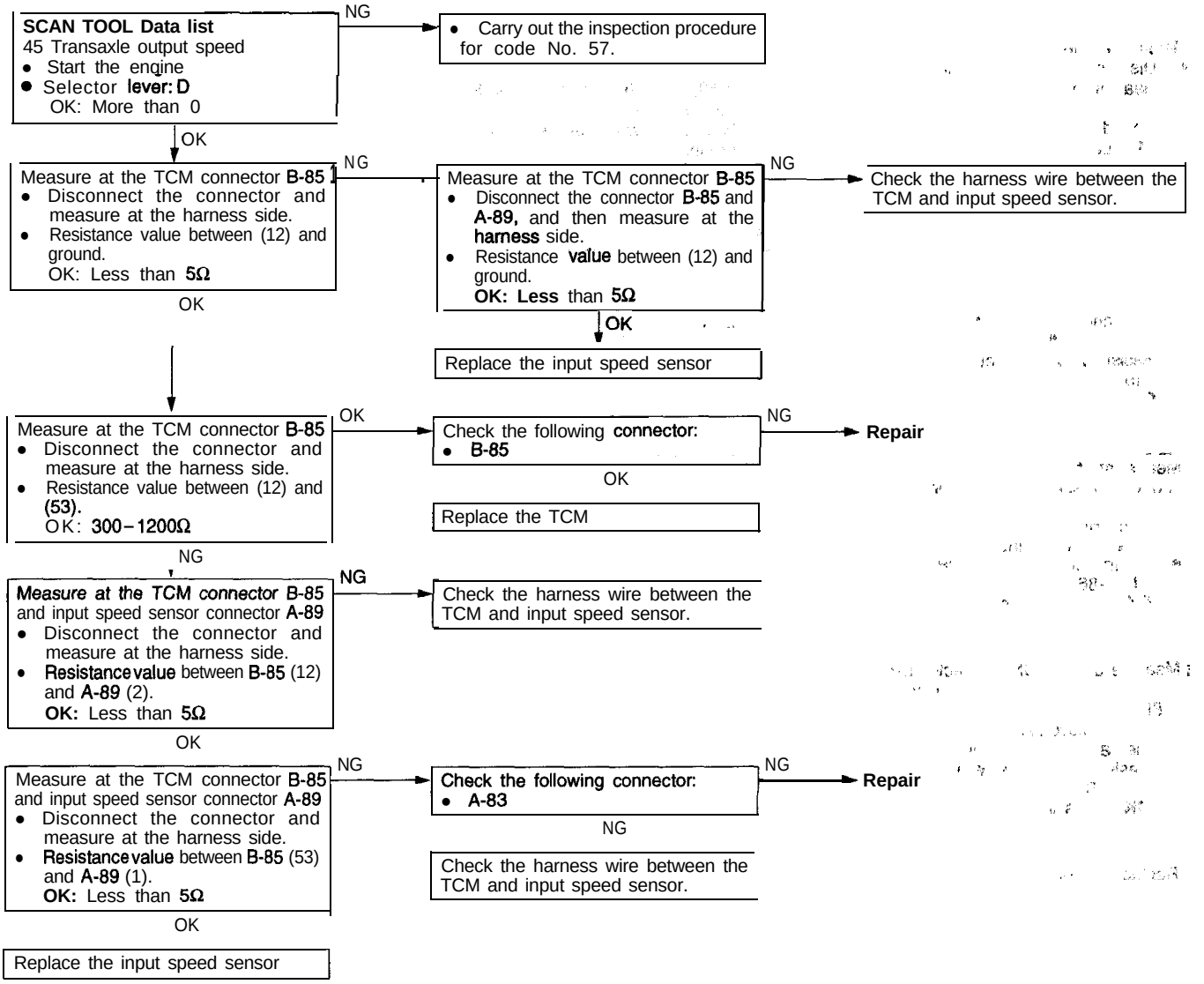

TSB Revision

Code No.	Scan tool 57 General scan tool P0720	Speeds error: Output Speed Sensor	Probable cause
There is an excessive change in output shaft speed in any gear. A hard fault is considered to exist when the fault counter has matured to a value of 255. An intermittent fault is considered present when the fault counter is greater than or equal to 6 and less than 255. No fault is considered to exist when the fault counter is less than 6.			• Malfunction of output speed sensor • Harness or connector between output Speed sensor and TCM open or short-circuited • Malfunction of TCM

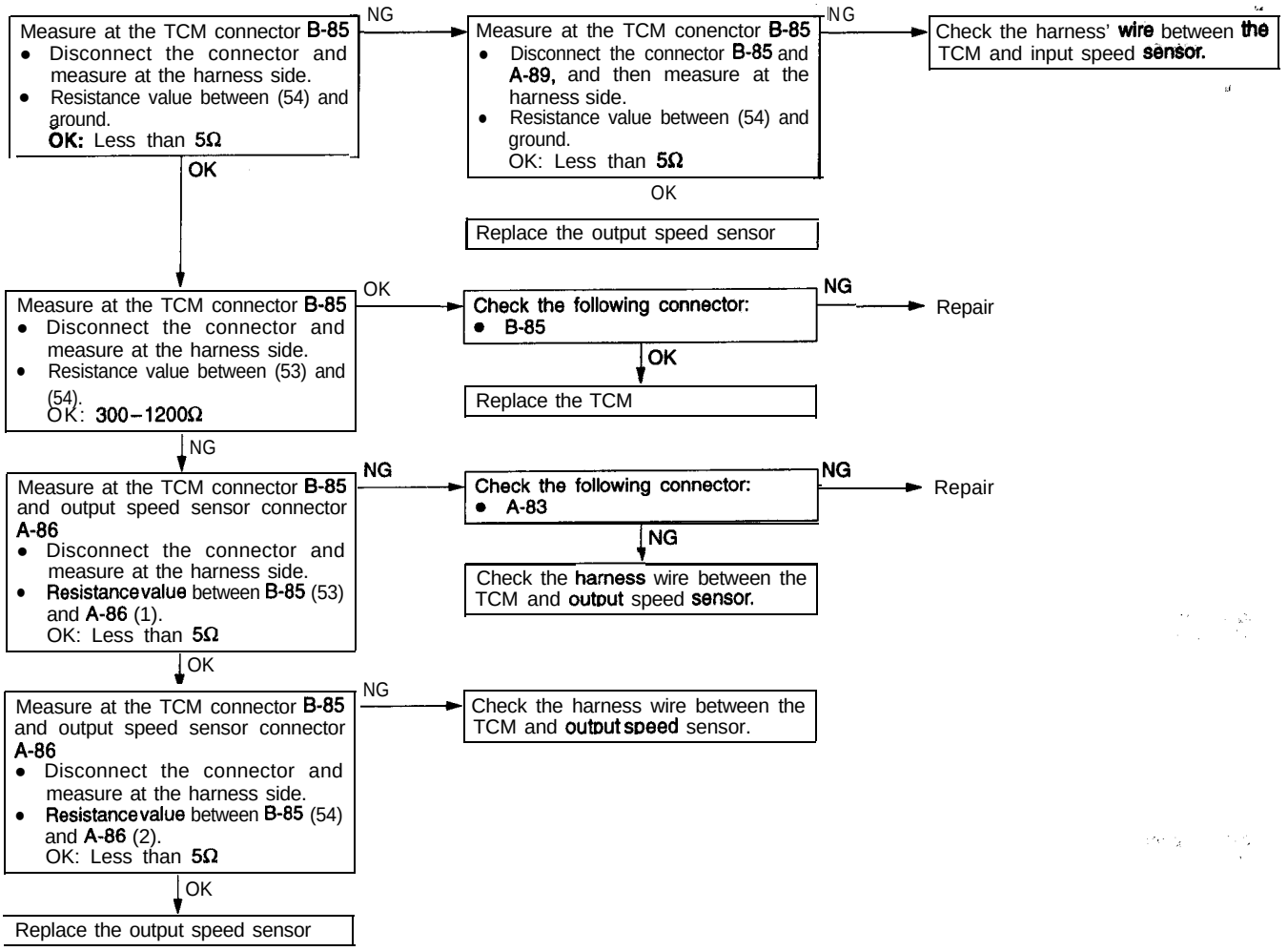

TSB Revision

Code No.	Scan tool 58 General scan tool P1794	Speeds error: Speed sensor ground	Probable cause
After a reset in Neutral and input shaft speed/output shaft speed equals a ratio of input gear teeth to output gear teeth of 2.50. A hard fault is considered to exist when the fault counter has matured to a value of 255. An intermittent fault is considered present when the fault counter is greater than or equal to 6 and less than 255. No fault is considered to exist when the fault counter is less than 6.			• Sensor ground open-circuited • Malfunction of TCM

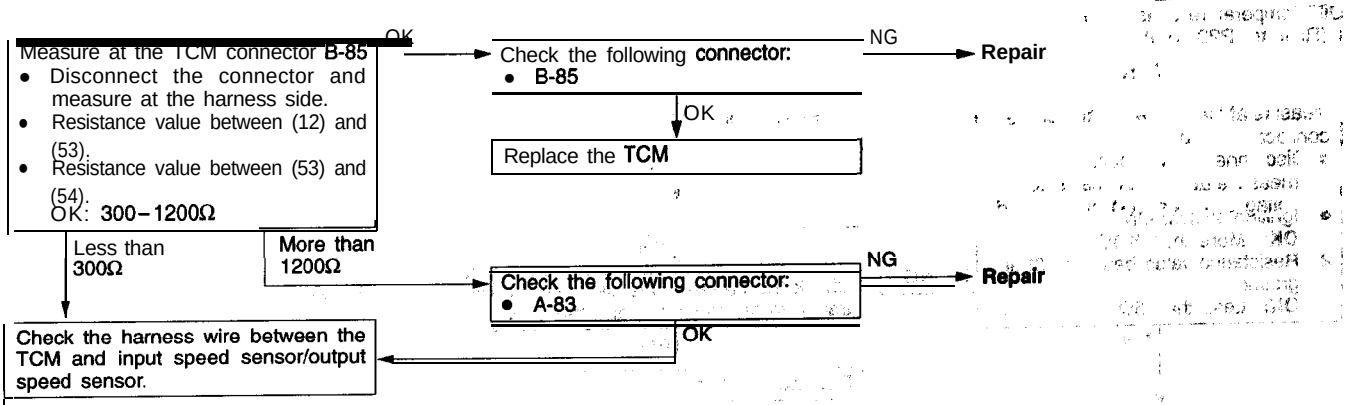

Code No.	Scan tool 60, 61, 62 General scan tool P1770, P1771 P1772	LR inadequate element volume: LR, 2-4, OD	Probable cause
The updated learned volume is below a threshold value. The volumes of the transmission fluid needed to apply the friction elements are continuously monitored and learned for adaptive controls. As the friction material wears, the volume Of fluid needed to apply the element increases. The following are the typical clutch volumes beyond which the clutches might be damaged: LR: 35-83 OD: 75–150 2-4: 20–77 UD: 24–70			Internal transaxle problem • Refer to Inspection matrix for diagnostic trouble code. (Internal transaxle problem (P23A-153))

Code No.	Scan tool 73 General scan tool P1798	Worn out/burnt transmission fluid	Probable cause
With the A/C clutch engaged, converter clutch fully on, partial lock failure counter greater than equal to 20, and the turbine acceleration out of range. Theory of operation: While in 3rd, 4th gear Fully electronically modulated converter clutch (FEMCC) and just before the A/C clutch engages, the PCM requests the TCM to momentarily establish Partial electronically modulated converter clutch (PEMCC) operation. If the turbine acceleration is out of range during the FEMCC to PEMCC transition, a counter is incremented. When the count is 20 or more, the trouble code is set. This code does not cause the code is set, FEMCC to PEMCC operation before the A/C clutch engagement will be disabled.			• Degraded fluid • Wheels severely out of alignment • Internal transaxle problem

Check the transmission fluid.
(Refer to GROUP 00 – Maintenance Service)

↓ OK

Possible cause:
• Internal transaxle failure (Refer to P23A-153)

TSB Revision

Code No.	Scan tool 74 General scan tool P1799	Calculated oil temperature in use	Probable cause
This code will set when the Transaxle Thermistor Voltage is below .0784 volts or above 4.9412 volts for 15 seconds, for 3 consecutive engine starts.			• Malfunction of oil temperature sensor • Harness or connector between transaxle range sensor and TCM open or short-circuited • Malfunction of TCM

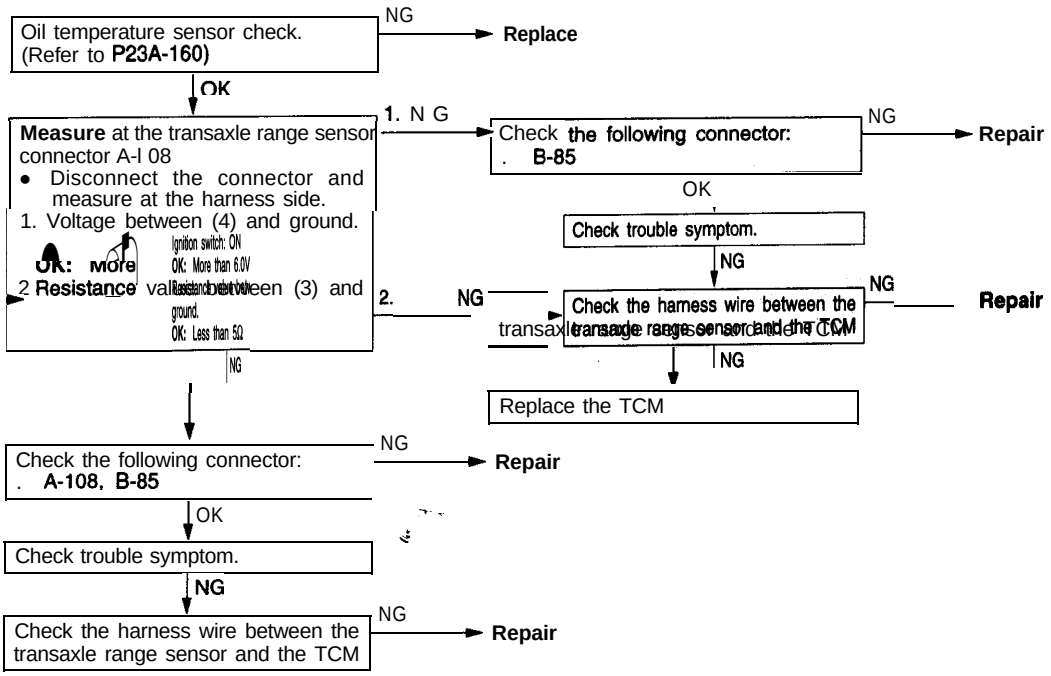

TSB Revision

INSPECTION MATRIX FOR DIAGNOSTIC TROUBLE CODE (Internal transaxle problem)

23110410010

Code	Condition	1	2	3	4	5	6	7	8	9	10	11	12	13	14	15	16	17	18	19	20	21	22	23	24	25
21	OD clutch -pressure too low	X	X	X		X		X				X	X	X	X					X	X	X	X	X		X
22	2-4 clutch – pressure too low	X	X			X				X		X	X	X	X				X	X	X	X	X	X		
23	OD & 2-4 clutch – pressure too low	X	X			X						X	X	X	X				X	X	X	X	X	X		
24	LR clutch – pressure too low	X	X			X					x	x	x	x					X	X	X	X	X	X		
25	OD & LR clutch – pressure too low	X	X			X						X	X	X	X				X	X	X	X	X	X		
26	2-4 & LR clutch- pressure too low	X	X			X						x	x	x	x				X	X	X	x		x		x
27	OD, 2-4 & LR clutch – pressure too low	X	X			X						X	X	X	X				x	x	x	x	x	x		
31	OD clutch pressure switch response failure					X	X	X	X											X		x	x			
32	2-4 clutch pressure switch response failure	X	X			X				X										X		X				
33	OD & 2-4 clutch pressure switch response failure	X	X			X								X						X		X				
37	Solenoid switch valve stuck in the LU position														X	X				X		X				
38	Partial lockup control out of range				x	x									X		X	X	x		x		x		x	
46	UD clutch – not lowering pressure		X				X					X	X			X			x	x	x	x				
47	Solenoid switch valve stuck in the LR position														x	x				X		X				
50	Speed ratio default in reverse	X		x	x	x			X		X	x	x	X	X				x	x	x	x		X	X	X
51	Speed ratio default in 1st	X		x	x	x	x				x	x	x	x	x				X	X	X	X		X	X	X
52	Speed ratio default in 2nd	X		x	x	x	x			X		xx			X				X	X	X	X		X		X
53	Speed ratio default in 3rd	X		x	x	x	x	x				xx			X				xxx	x					X	X
54	Speed ratio default in 4th	X		xxx					X	X		xx			X				x	x		x	x	X		X
60	Inadequate LR element volume										x	x	x						X							X
61	Inadequate 2-4 element volume									X		x	x						X							X
62	inadequate OD element volume							X				x	x						X							X

NOTE
Code 36 is not stored alone. It is stored if a speed error (code 50 through 58) is detected immediately after a shift. Look at the possible causes associated with the speed error code.

PROBABLE CAUSE

No.	Probable cause
1	Low fluid level
2	Aerated fluid (High fluid level)
3	Worn or damaged reaction shaft support sealing
4	worn or damaged input shaft sealing
5	Worn pump
6	Damaged or failed underdrive clutch
7	Damaged or failed ovedrive clutch
8	Damaged or failed reverse clutch
9	Damaged or failed 2-4 clutch
10	Damaged or failed low/reverse clutch
11	Damaged clutch seal
12	Worn or damaged accumulator sealing
13	Plugged filter
14	Stuck/sticky valves
15	Solenoid switch valve
16	Lock-up switch valve
17	Torque converter control valve
18	Regulator valve
19	Valve body leakage
20	Pressures too high
21	Internal solenoid leak
22	Torque converter clutch failure
23	Faulty cooling system
24	Damaged speed sensor gear teeth
25	Planetary gear sets broken or seized

INSPECTION MATRIX FOR TROUBLE SYMPTOMS

23110130015

Trouble symptom	1	2	3	4	5	6	7	8	9	10	11	12	13	14	15	16	17
Harsh engagement from Neutral (N) to Drive (D)																	
Harsh engagement from Neutral (N) to Reverse (R)														X			
Delayed engagement from Neutral (N) to Drive (D)	X	X			X	X			X	X							
Delayed engagement from Neutral (N) to Reverse (R)												X					
Poor shift quality			X									X					
Shifts erratically	X		X		X												
Drives in neutral (N)								X			X		X				
Drags or locks																	
Grating, scraping, growling noise																	
Knocking noise																	
Buzzing noise during shifts only															X	X	X
Hard to fill oil blows out filler tube		X	X	X	X	X									X	X	X
Transaxle overheats		X	X	X			X	X					X				
Harsh upshift	X	X	X		X	X							X				
No upshift into overdrive																	
No torque converter control				X					X	X			X				
Harsh downshifts		X							X	X			X				
High shift efforts	X			X		X				X							
Harsh torque converter control shift	X	X				X				X							

PROBABLE CAUSE

No.	Probable cause
1	Engine performance
2	Worn or faulty underdrive clutch
3	Worn of faulty overdrive clutch
4	Worn of faulty reverse clutch
5	Worn or faulty 2-4 clutch
6	Worn or faulty low/reverse clutch
7	Clutch(es) dragging
8	Insufficient clutch plate clearance
9	Damaged clutch seal
10	Worn or damaged accumulator sealing(s)
11	Faulty cooling system
12	Engine coolant temperature too low
13	Incorrect gear shift control linkage adjustment
14	Shift linkage damaged
15	Chipped or damaged gear teeth
16	Planetary gear sets broken or seized
17	Bearings worn or damaged

Trouble symptom

Trouble symptom	18	19	20	21	22	23	24	25	26	27	28	29	30	31	32	33	34
Harsh engagement from Neutral(N) to Drive(D)																X	
Harsh engagement from Neutral(N) to Reverse(R)				X													
Delayed engagement from Neutral(N) to Drive(D)		X		X		X			X		X		X				
Delayed engagement from Neutral(N) to Reverse(R)			X	X	X		X		X		X						X
Poor shift quality																	
Shifts erratically					X	X											
Drives in Neutral (N)					X		X		X	X	X		X				X
Drags or locks								X		X	X						
Grating, scraping, growling noise														X	X		
Knocking noise									X		X						
Buzzing noise during shifts only	X																
Hard to fill oil blows out filler tube																	
Transaxle overheats				X													
Harsh upshift		X		X	X		X	X	X		X						
No upshift into overdrive		X		X	X			X	X		X						
No torque converter control		X	X	X	X		X	X	X		X	X					
Harsh downshifts		X	X	X	X		X	X	X		X	X					
High shift efforts				X		X							X				
Harsh torque converter control shift				X		X							X				

PROBABLE CAUSE

No.	Probable cause
18	Drive shaft(s) bushing(s) worn or damaged
19	Worn or broken reaction shaft support sealing
20	Worn or damaged input shaft sealing
21	Valve body malfunction or leakage
22	Hydraulic pressure too low
23	Hydraulic pressure too high
24	Faulty oil pump
25	Oil filter clogged
26	Low fluid level
27	High fluid level
28	Aerated fluid
29	Engine idle too low
30	Engine idle too high
31	Normal solenoid operation
32	Solenoid sound cover loose
33	Sticking lockup piston
34	Torque converter failure

CHECK AT TCM TERMINALS

23110140018

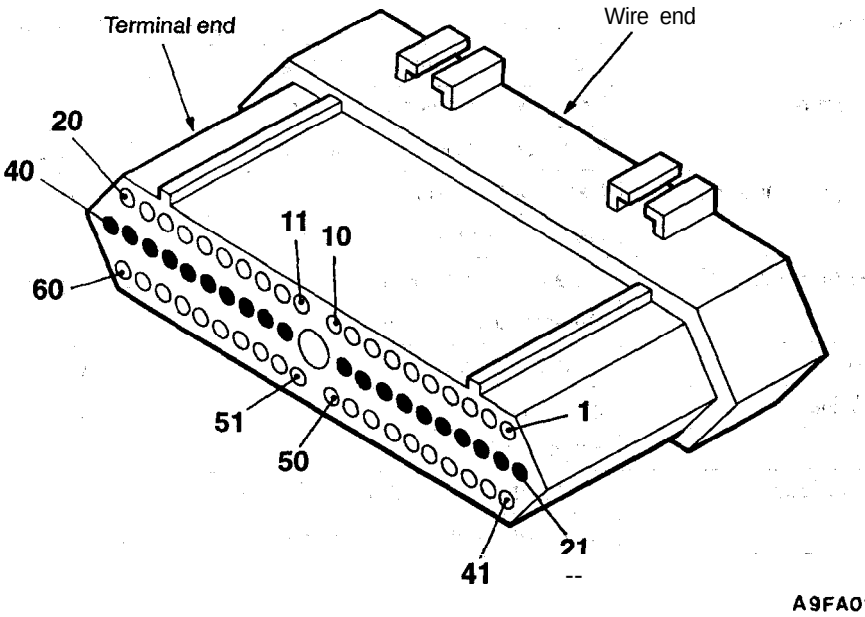

Terminal No.	Check item	Check conditions	Normal condition
1	Transaxle range sensor 1	Selector lever position: R, D, 2, L	Battery positive voltage
		Selector lever position: P, N	ov
2	Transaxle range sensor 2	Selector lever position,: D, 2	Battery positive. voltage
		Selector lever position:, P, R, N, L	o v
3	CCD Bus (+)	Ignition switch: OFF	2.5 V
6	SCI REC	Ignition switch: OFF	5 V
7	2-4 pressure switch	Transaxle condition: 2nd, 4th gear	ov
		Transaxle condition: other gears	Battery positive voltage
9	Overdrive switch	Overdrive switch: ON	Battery positive voltage
		Overdrive switch: OFF	o v
10	L/R pressure switch	Transaxle condition: N and 1st gear	0 V
		Transaxle condition: other gears	Battery positive voltage
11	Sensor ground	Ignition switch: ON	0 V
12	Input speed sensor	Measure between terminals (53) and (12) Engine: 3,000 r/min Selector lever position: D range Transaxle condition: 3rd gear	2.6 V
13	Signal ground	Ignition switch: ON	o v
16	Direct battery	Ignition switch: OFF	Battery positive voltage
17	Power ground	Ignition switch: ON	o v
18	Vehicle speed output	Vehicle: Slowly moving forward	0–4 V

Terminal No.	Check item	Check conditions	Normal condition
19	UD solenoid driver	Transaxle condition: 1st, 2nd, 3rd gear	Battery positive voltage
		Transaxle condition: other gears	10 V
20	OD solenoid driver	Transaxle condition: 3rd, 4th gear	10 V
		Transaxle condition: other gears	Battery positive voltage
41	Transaxle range sensor 41	Selector lever position: P, R, 2	Battery positive voltage
		Selector lever position: N, D, L	o v
43	Transaxle range sensor 43	Selector lever position: R, N, D	Battery positive voltage
		Selector lever position: P, 2, L	o v
44	CCD Bus (–)	Ignition switch: OFF	2.5 V
45	CCD Bus (+) Bias	Ignition switch: OFF	2.5 V
46	Crank signal	Engine: idle	1.5 V
48	Ignition ground feed	Selector lever position: R, D, 2, L	Battery positive voltage
		Selector lever position: P, N	o v
49	OD pressure switch	Transaxle condition: 3rd, 4th gear	Battetv positive voltaae
		Transaxle condition: other gears	OV
51	Ignition 12V Feed	Ignition switch: ON	Battery positive voltage
		Ignition switch: OFF	o v
52	Throttle position sensor	Accelerator pedal: full closed	0 V
		Accelerator pedal: full open	3.8 V
53	Sensor ground	Ignition switch: ON	o v
54	Output speed sensor	Measure between terminals (53) and (54) Engine: 3,000 r/min Selector lever position: D range Transaxle condition: 3rd gear	2.6 V
55	Relay power	Ignition switch: ON	Battery positive voltage
		Ignition switch: OFF	o v
56	Switched battery	Ignition switch: ON	Battery positive voltage
		Ignition switch: OFF	0 V
57	Switched battery	Ignition switch: ON	Battery positive voltage
		Ignition switch: OFF	o v
59	2-4 solenoid driver	Transaxle condition: 2nd, 4th gear	Battery positive voltage
		Transaxle condition: other gears	10 V
60	L/R solenoid driver	Transaxle condition: N and 1st gear	10 V
		Transaxle condition: other gears	Battery positive voltage

ON-VEHICLE SERVICE 23110160045

TRANSAXLE FLUID LEVEL CHECK

Refer to GROU'P 00 – Maintenance Service.

TRANSAXLE FLUID REPLACEMENT 23110170048

Refer *to* GROUP 00 – Maintenance Service.

TCM RESETTING PROCEDURE 23110420013

(1) Disconnect the negative battery cable from the battery before replacing the transaxle or carrying out an overhaul.
(2) After work has been completed, check the diagnostic trouble codes (DTC). If DTC No. 12 ("Battery power was disconnected since last power down") has been generated, this DTC must be cleared.
Furthermore, select "Special function" on the scan tool and then set the scan tool to Quick Learn mode (carry out this operation from the scan tool screen). Then input the clutch volume index into the TCM.

PINION FACTOR WRITING PROCEDURE AFTER TCM REPLACEMENT OR TIRE SIZE CHANGE 23110430016

NOTE
With F4AC1 transmissions, the TCM uses the rotation speed of the transaxle output shaft to calculate the vehicle speed and cumulative distance travelled. Because of this, it is necessary to input (or update) the tire size coefficient into the TCM memory after the TCM has been replaced or the tire size has been changed.

(1) Select "Special function" on the scan tool and then set the scan tool to Pinion Factor mode (carry out this operation from the scan tool screen). Then input (or update) the tire size coefficient into the TCM memory. Note that new TCMs do not have a tire size coefficient already input.

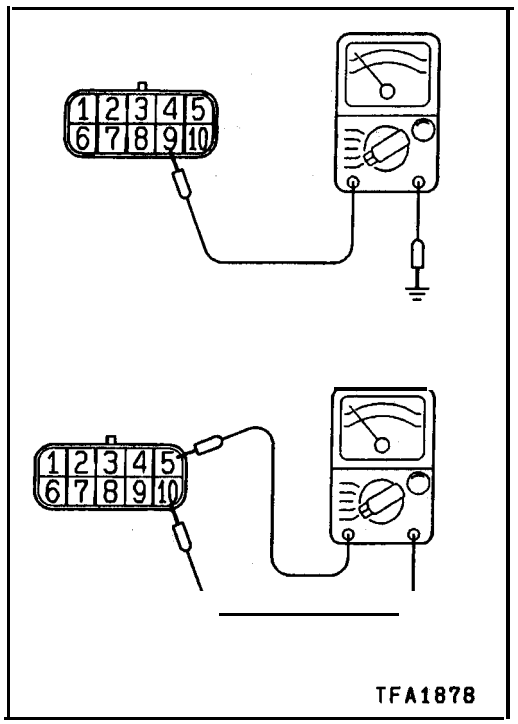

TRANSAXLE RANGE SENSOR CONTINUITY CHECK

23110440019

(1) Disconnect the transaxle range sensor connector.
(2) Check the continuity between sensor terminals and body ground (and terminals 5-10) while shifting the gearshift lever at each position. The continuity between sensor terminals and body ground (and terminals 5-10) should be as shown in the table below.

Lever position	Terminal No.							Body ground
	'	5	6	7	8	9	10	
P	○		○	○	○			○
R		○		○			○	○
N	○		○	○		○		○
D						○		○
2					○			○
L				○	○	○		○

(3) If there is a defect, replace the transaxle range sensor.

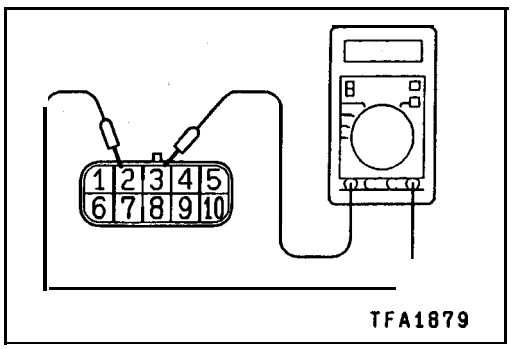

OIL TEMPERATURE SENSOR CONTINUITY CHECK

23110450012

(1) Disconnect the transaxle range sensor connector.
(2) Measure the resistance between terminals 2-3 and check that the values are as shown in the table below.

Oil temperature °C(°F)	Resistance value kΩ
0 (32)	29.33 – 35.99
100 (212)	640 – 720

(3) If the values are outside the standard values, replace the transaxle range sensor.

AUTOMATIC TRANSAXLE CONTROL COMPONENT LAYOUT

23110200020

Name	Symbol	Name	Symbol
Crankshaft position sensor (Engine speed signal)	J	Overdrive switch	L
Data link connector	N	Pressure switches	H
EATX relay	C	Solenoid assembly	G
Engine coolant temperature sensor	I	Stop light switch	M
Input speed sensor	F	Throttle position sensor	B
Manifold absolute pressure sensor	A	Transaxle control module	K
Output speed sensor	D	Transaxle range sensor (With built-in oil temperature sensor)	E

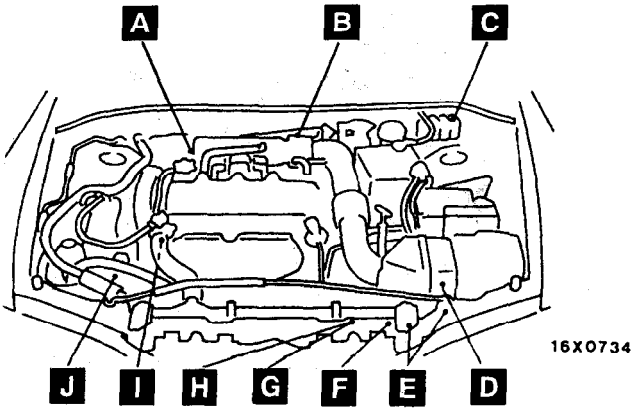

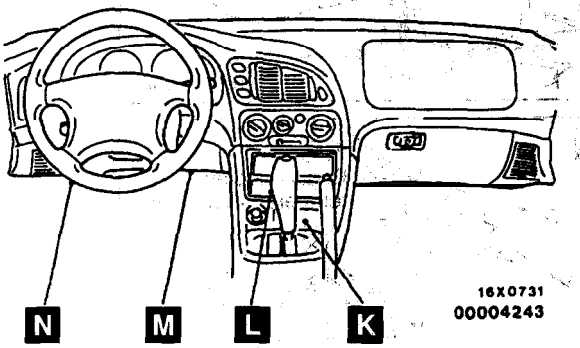

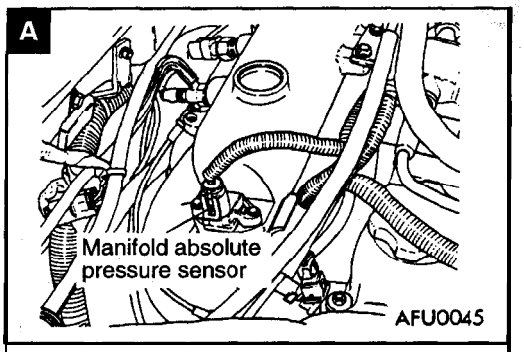

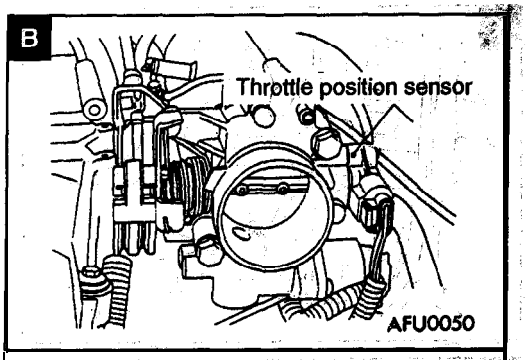

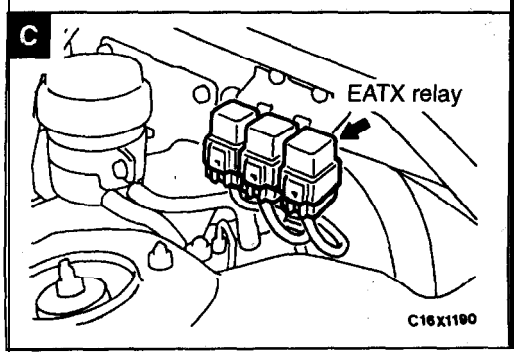

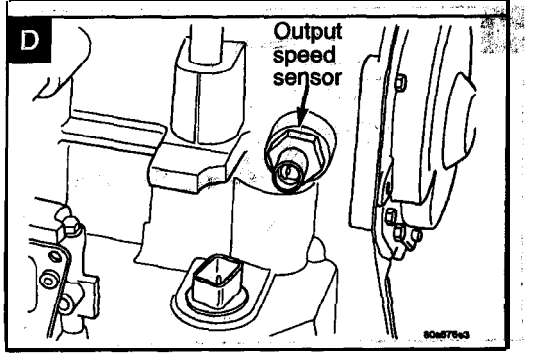

E

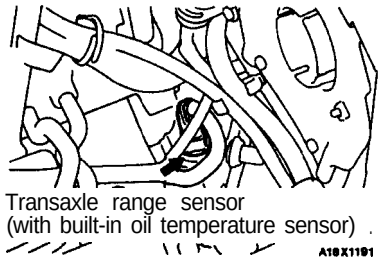
Transaxle range sensor
(with built-in oil temperature sensor)
A16X1191

F

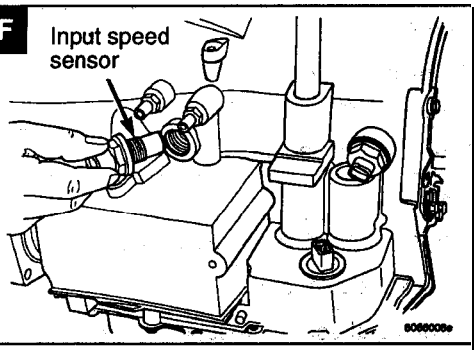
Input speed
sensor

G

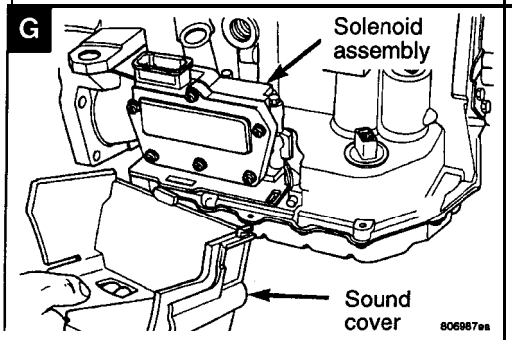
Solenoid
assembly
Sound
cover

H

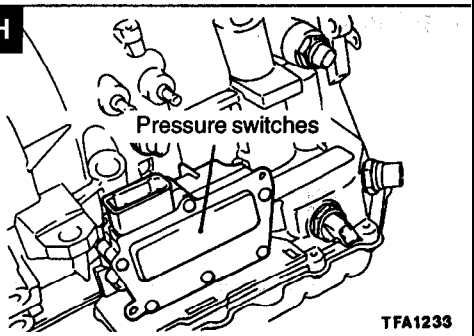
Pressure switches
TFA1233

I

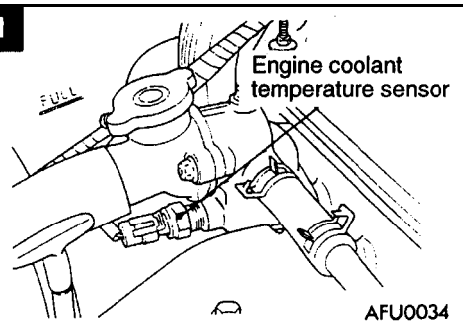
Engine coolant
temperature sensor
FULL
AFU0034

J

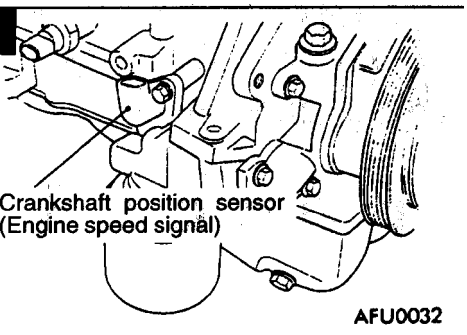
Crankshaft position sensor
(Engine speed signal)
AFU0032

K

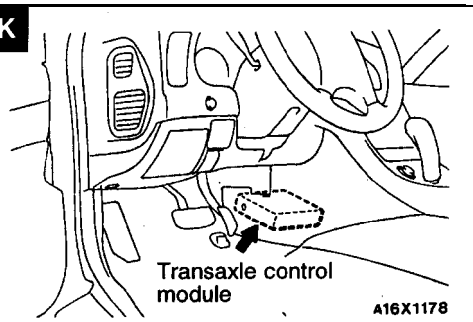
Transaxle control
module
A16X1178

L

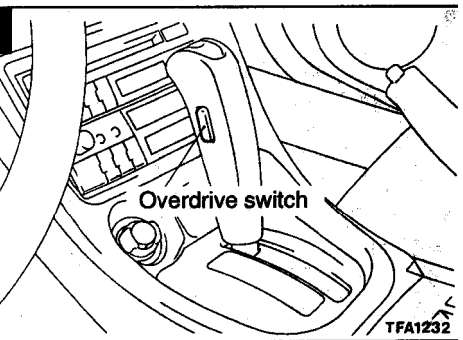
Overdrive switch
TFA1232

M

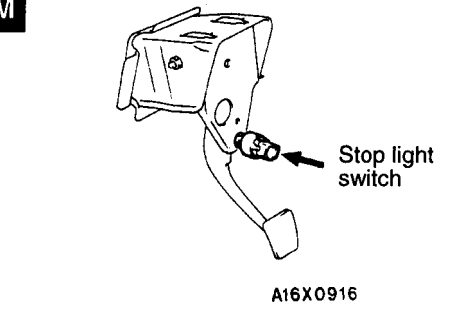
Stop light
switch
A16X0916

N

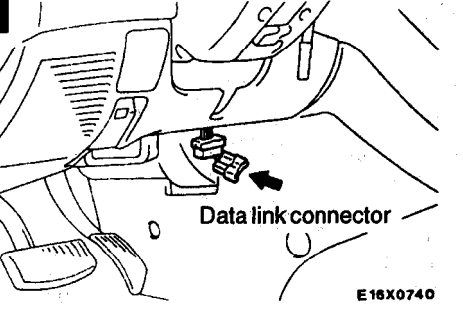
Data link connector
E16X0740

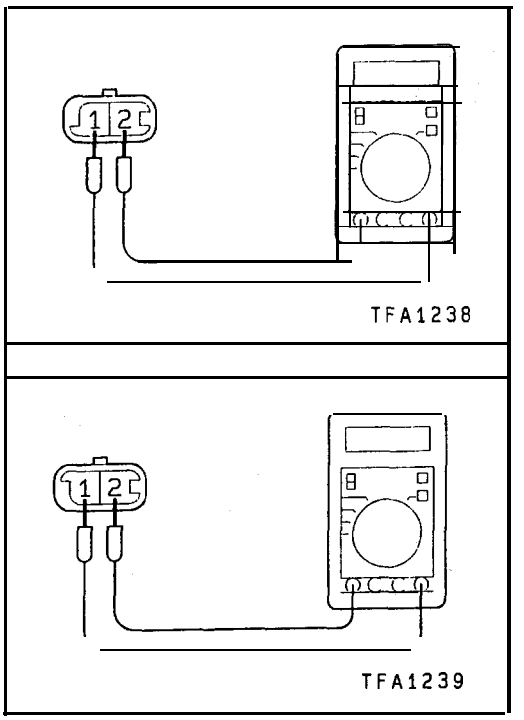

AUTOMATIC TRANSAXLE CONTROL COMPONENT CHECK 23110220026

INPUT SPEED SENSOR CHECK

(1) Disconnect the input speed sensor connector.
(2) Measure the resistance between the input speed sensor side connector terminals 1 and 2.

Standard value:, 0.3–1.2 kΩ

(3) If the resistance is outside the standard value, replace the input speed sensor.

OUTPUT SPEED SENSOR CHECK 23110230029

(1) Disconnect the output speed sensor connector.
(2) Measure the resistance between the input speed sensor side connector terminals 1 and 2.

Standard value: 0.3–1.2 kΩ

(3) If the resistance is outside the standard value, replace the output speed sensor.

TRANSAXLE RANGE SENSOR CONTINUITY CHECK 23110440026

Refer to P.23A-160.

OVERDRIVE SWITCH CONTINUITY CHECK 23110240022

Refer to P.23A-193.

THROTTLE POSITION SENSOR (TPS) CHECK 23110250018

Refer to GROUP 13A – On-vehicle Inspection of MFI Components.

ENGINE COOLANT TEMPERATURE SENSOR CHECK 23110260028

Refer to GROUP 13A – On-vehicle Inspection of MFI Components.

CRANKSHAFT POSITION SENSOR CHECK 23110270021

Refer to GROUP 13A – Troubleshooting.

MANIFOLD ABSOLUTE PRESSURE SENSOR CHECK 23110280024

Refer to GROUP13A – On-vehicle Inspection of MFI Components.

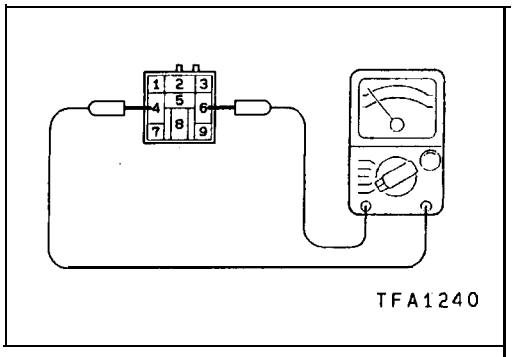

EATX RELAY CHECK

23110290027

(1) Remove the EATX relay.
(2) Check the continuity between the EATX relay terminals 4 and 6.

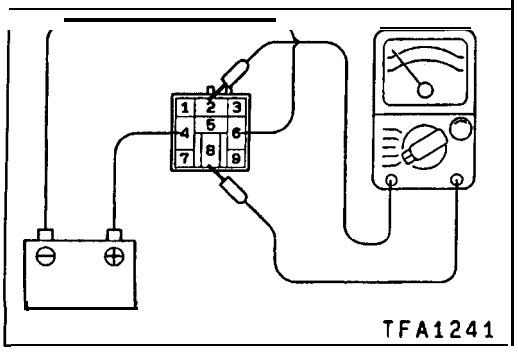

(3) Use jumper leads to connect EATX relay terminal 4 **to** the battery **(+)** terminal and terminal 6 to the battery **(–)** terminal.
(4) Check the continuity between EATX relay terminals 2 and 8 while connecting and disconnecting the' jumper lead at the battery **(–)** terminal.

Jumper lead	Terminal 2	Terminal 8
Connected	○———	———○
Disconnected		

STOP LIGHT SWITCH CHECK

23110300027

Refer to GROUP **35A** – On-vehicle Service.

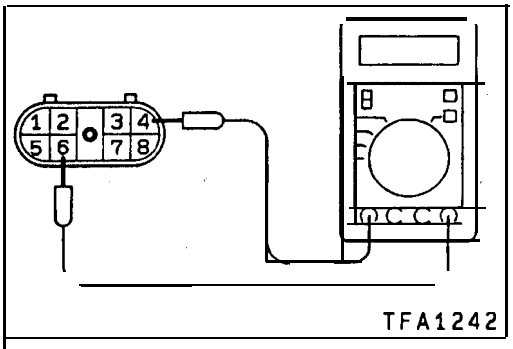

LR SOLENOID CHECK

23110310020

(1) Disconnect the solenoid and pressure switch assembly connector.
(2) Measure the resistance between the solenoid and pressure switch assembly side connector terminals 4 and 6.

Standard value: Approx. 1 Ω [at 20°C(68°F)]

(3) If the resistance is outside the standard value, replace the solenoid and pressure switch assembly.

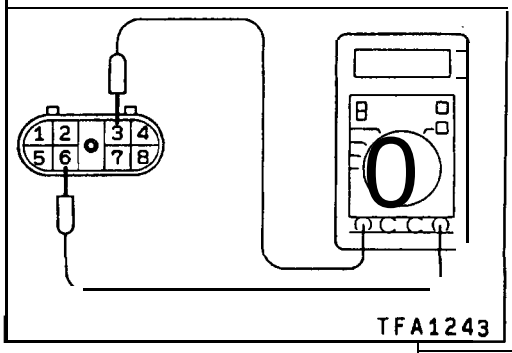

2/4 SOLENOID CHECK

23110320023

(1) Disconnect the solenoid and pressure switch assembly connector.
(2) Measure the resistance between the solenoid and pressure switch assembly side connector terminals 3 and 6.

Standard value: Approx. 1Ω [at 20°C(68°F)]

(3) If the resistance is outside the standard value, replace the solenoid and pressure switch assembly.

TSB Revision

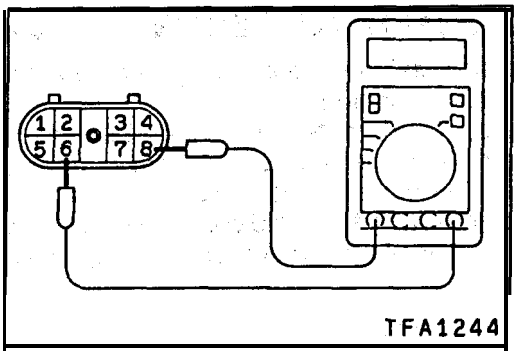

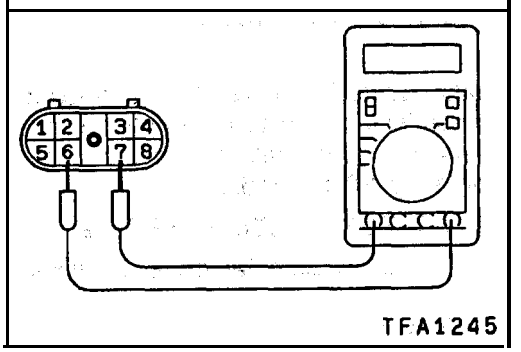

OD SOLENOID CHECK

23110330026

(1) Disconnect the solenoid and pressure switch assembly connector.

(2) Measure the resistance between' the solenoid and pressure switch assembly side 'connector terminals 6 and 8.

Standard, value: Approx. 1 Ω [at 20°C(68°F)]

(3) If' the resistance is outside the standard value, replace the solenoid and pressure switch, assembly.

UD SOLENOID CHECK

23110340029

(1) Disconnect the solenoid and pressure switch assembly connector.

(2) Measure the resistance between the solenoid and pressure switch assembly side connector terminals 6 and 7.

Standard value: Approx. 1 Ω [at 20 °C (68 °F)]

(3) If the resistance' is outside' the standard value, replace the solenoid and pressure switch assembly.'

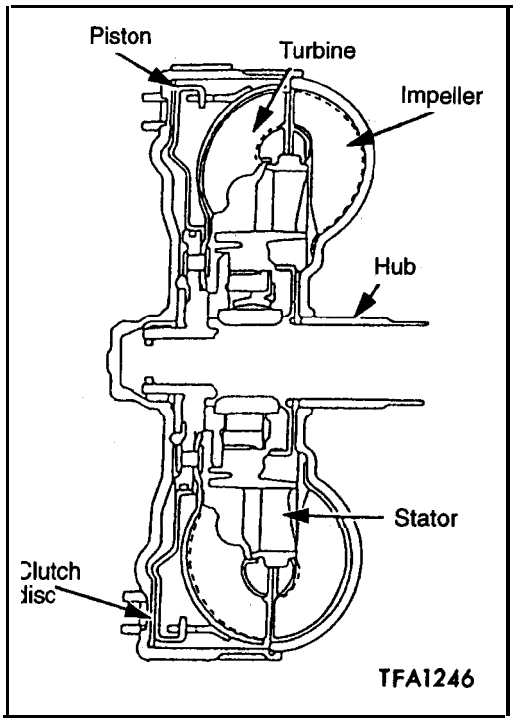

TORQUE CONVERTER STALL TESTING 23110350022

The torque converter stall test is used primarily to determine stator overrunning clutch operation.
Use the scan tool and a tachometer to do the stall test.
Determine engine rpm with the transaxle in drive, engine at wide open throttle, and vehicle stationary.
To keep the vehicle stationary and to avoid creeping or lurching forward, apply both the service brakes and the parking brake.

WARNING
When performing a stall test, always apply both the service brakes and parking brake. Also, do not let anyone stand in front of the vehicle during testing.

NOTE
Avoid keeping the throttle open for more than 5 seconds at a time. Allow the transmission fluid to cool between stall tests by placing the transaxle in neutral, raising the engine rpm slightly for approximately 20 seconds.

TORQUE CONVERTER STATOR CLUTCH FAILURE

One type of stator over-running clutch failure is a slipping clutch. With this type of failure, the vehicle will exhibit normal transaxle operation at highway speeds but will have poor acceleration.
Another type of stator over-running clutch failure is a seized clutch.
With this type of failure, the vehicle acceleration may be acceptable but a high throttle is required to maintain vehicle speed.
The vehicle may seem like it has a loss of power.
With either type of failure, poor fuel economy and transaxle fluid over-hearting may be the result.

STALL SPEED ABOVE SPECIFICATION

If the stall speed exceeds 2,440 r/min by more than 200 r/min, a clutch is slipping.
Diagnose the clutch circuits by performing hydraulic and air pressure tests.
The clutches of the F4AC1 transaxles may also be checked using information given through the input and output speed sensors to the TCM.

STALL SPEED BELOW SPECIFICATION

If stall speed is 250–350 r/min below specification, the stator over-running clutch is slipping. During the road test, if poor acceleration occurs through the gears with normal transaxle operation at highway speeds, the vehicle has a slipping stator clutch.

NORMAL STALL SPEED AND ACCELERATION

If stall speed and acceleration appear normal, but it takes excessively high throttle opening to maintain vehicle speed, the starter's over-running clutch is seized.
This will impede the flow of fluid within the torque converter, causing excessive use of power from the engine for cruising.

CONVERTER NOISE

While performing the stall test, listen for abnormal noise coming from the converter area.
A whining noise due to fluid flow within the converter is considered normal.

Loud metallic noises coming from the converter indicate loose parts or internal damage. Remove the inspection cover from the bellhousing area and check for a cracked torque converter flex plate or its bolts.

If the flex plate and bolts are ok, and there is still noise coming from the torque converter, the torque converter may be defective and must be replaced.

Be sure to check a sample of the, fluid for contamination.

TRANSAXLE COOLER AND LINE FLUSHING

If there has been a mechanical failure within the torque converter or in the transaxle itself, the fluid-becomes contaminated and circulates throughout the hydraulic system.

This includes the cooler for the transaxle inside the radiator. The cooler and the lines connecting the cooler to the transaxle, must be flushed before being connected to the newly repaired or replaced torque converter or transaxle.

If the system is not flushed, the new components will become contaminated with the old fluid. The proper method for flushing is reverse flushing the system.

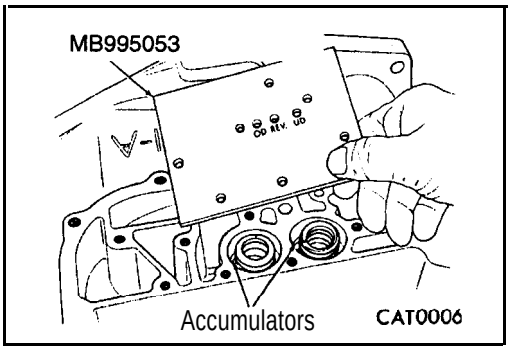

CLUTCH AIR PRESSURE TESTS

23110360025

Inoperative clutches can be located using a series of tests by substituting air pressure for fluid pressure.
The clutches may be tested by applying air pressure to their respective passages.
Remove the valve body and then install the special tool MB995053. To make air pressure tests, go on as follows:
The compressed air supply must be free of all dirt and moisture.
Use a pressure of 207 kPa (30 psi).
Remove oil pan and valve body. See Valve body removal.

OVERDRIVE CLUTCH

Apply air pressure to the overdrive clutch apply passage and watch for the push/pull piston to move forward. The piston should return to its starting position when the air pressure is removed.

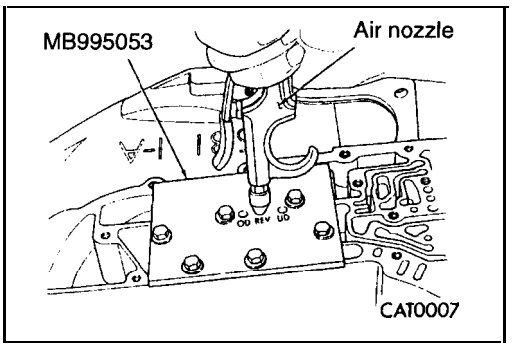

REVERSE CLUTCH

Apply air pressure to the reverse clutch apply passage and watch for the push/pull piston to move rearward. The piston should return to its starting position when the air pressure is removed.

2/4 CLUTCH

Apply air pressure to the feed hole located on the 2/4 clutch retainer. Look in the area where the 2/4 piston contacts the first separator plate and watch carefully for the 2/4 piston to move rearward. The piston should return to its original position after the air pressure is removed.

LOW/REVERSE CLUTCH

Apply air pressure to the low/reverse clutch feed hole (rear of case, between 2 bolt holes). Then, look in the area where the low/reverse piston contacts the first separator plate and watch carefully for the piston to move forward. The piston should return to its original position after the air pressure is removed.

UNDERDRIVE CLUTCH

Because this clutch piston cannot be seen, its operation is checked by function. Air pressure is applied to low/reverse and the 2/4 clutches. This locks the output shaft. Use a piece of rubber hose wrapped around the input shaft and a pair of clamp-on pliers to turn the input shaft. Next apply air pressure to the underdrive clutch. The input shaft should not rotate with hand torque. Release the air pressure and confirm that the input shaft will rotate.

FLUID LEAKAGE-TORQUE CONVERTER HOUSING AREA CHECK 23110370028

(1) Check for source of leakage.
Since fluid leakage at or around the torque converter area may originate from an engine oil leak, the area should be examined closely, Factory fill fluid is dyed red and, therefore, can be distinguished from engine oil.

(2) Before removing the transaxle, perform the following checks:
When leakage is determined to originate from the transaxle, check fluid level before removal of the transaxle and torque converter.
High oil level can result in oil leakage out the vent in the manual shaft. If the fluid level is high, adjust to proper level.
After fluid is at the proper level, check for leakage. If a leak persists, perform the following operation on the vehicle to determine if it is the torque converter or transaxle that is, leaking.

TORQUE CONVERTER LEAKAGE

(1) Possible sources of torque converter leakage are:
(2) Torque converter weld leaks at the out side (peripheral) weld. Torque converter hub weld.
(3) Hub weld is inside and not visible. Do not attempt to repair.

Replace torque converter.
If the torque converter must be replaced, refer to Torque Converter Clutch Break-in Procedure in this section. This procedure' will reset the transaxle control module break-in status. Failure to perform this procedure may cause transaxle shutter.

HYDRAULIC PRESSURE TESTS 23110380021

Pressure testing is a very important step in the diagnostic procedure. These tests usually reveal the cause of most transaxle problems.
Before performing pressure tests, be certain that fluid level and condition, and shift cable adjustments have been checked and approved. Fluid must be at operating temperature 65–93°C (150 to 200°F).

1. Install an engine tachometer.
2. Raise vehicle on hoist which allows front wheels to turn, and position tachometer so it can be read.
3. Attach 1,000 kPa (140 psi) gauge and special tool MB991605 to ports required for test being conducted. A 3,000 kPa (400 psi) gauge and special tool MB991605 are required for reverse pressure test. Test port locations are shown in illustration.

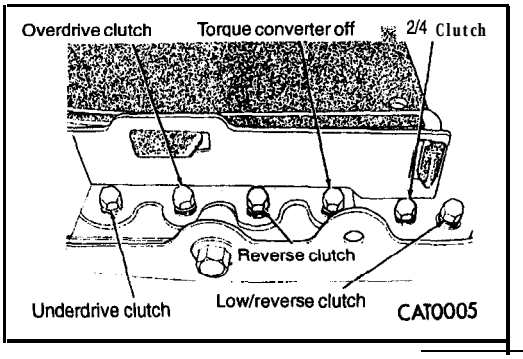

TEST ONE-SELECTOR IN LOW 1st GEAR

(1) Attach pressure gauge to the low/reverse clutch tap.
(2) Move selector lever to the L position.
(3) Allow vehicle wheels to turn and increase throttle opening to achieve an indicted vehicle speed of 32 km/h (20 mph).
(4) Low/reverse clutch pressure should read 793 to 1,000 kPa (115 to 145 psi).
(5) This test checks pump output, pressure regulation and condition of the low/reverse clutch hydraulic circuit and shift schedule.

TEST TWO-SELECTOR IN DRIVE 2nd GEAR

(1) Attach pressure gauge to the underdrive clutch tap.
(2) Move selector lever to the 2 position.
(3) Allow vehicle wheels to turn and increase throttle opening to achieve an indicated vehicle speed of 48 km/h (30 mph).
(4) Underdrive clutch pressure should read 758 to 1,000 kPa (110 to 145 psi).
(5) This test checks the underdrive clutch hydraulic circuit as, well as the shift schedule.

TEST THREE-OVERDRIVE CLUTCH CHECK

(1) Attach pressure gauge to the overdrive clutch tap.
(2) Move selector lever to the D position.
(3) Allow vehicle wheels to turn and increase throttle opening to achieve an indicated vehicle speed of 32 km/h (20 mph).
(4) Overdrive clutch pressure should read 517 to 655 kPa (75 to 95 psi).
(5) Move selector lever to the 2 position and increase indicated vehicle speed of 48 km/h (30 mph).
(6) The vehicle should be in second gear and overdrive clutch pressure should be less than 35 kPa (5 psi).
(7) This test checks the overdrive clutch hydraulic circuit as well as the shift schedule.

TEST FOUR-SELECTOR IN DRIVE, OVERDRIVE GEAR

(1) Attach pressure gauge to the 2/4 clutch tap.
(2) Move selector lever to the D position,
(3) Allow vehicle wheels to turn and increase, throttle opening to achieve an indicated vehicle speed of 48 km/h (30 mph).
(4) The 2/4 clutch pressure should read 517 to 655 kPa (75 to 95 psi).
(5) This test checks the 2/4 clutch hydraulic circuit.

TEST FIVE-SELECTOR IN DRIVE, OVERDRIVE

(1) Attach pressure gauge to the torque converter clutch off pressure tap.
(2) Move selector lever to the D position.
(3) Allow vehicle wheels to turn and increase throttle opening to achieve an indicated vehicle speed of 80 km/h (50 mph).

CAUTION
Both wheels must turn at the same speed.

(4) Torque converter clutch off pressure should be less than 35 kPa (5 psi).
(5) This test checks the torque converter clutch hydraulic circuit.

TEST SIX-SELECTOR IN REVERSE

(1) Attach pressure gauge to the reverse clutch tap.
(2) Move selector lever to the reverse position.
(3) Read reverse clutch pressure with output stationary (foot on brake) and throttle opened to achieve 1,500 r/min.
(4) Reverse clutch pressure should read 1,138 to 1,620 kPa (165 to 235 psi).
(5) This test checks the reverse clutch hydraulic circuit.

TEST RESULT INDICATIONS

(1) If proper line pressure is found in any one test, the pump and pressure regulator are working properly.
(2) Low pressure in all positions indicates a defective pump, a clogged filter, or a stuck pressure regulator valve.
(3) Clutch circuit leaks are indicated if pressures do not fall within the specified pressure range.
(4) If the overdrive clutch pressure is greater than 35 kPa (5 psi) in step (6) of Test Three, a worn reaction shaft seal ring is indicated.

PRESSURE CHECK SPECIFICATIONS

PRESSURE TAP ORDER ON CASE FROM BELLHOUSING TO END COVER
ALL PRESSURE SPECIFICATIONS ARE kPa (psi) [on hoist, with front wheels free to turn]

Gear Selector Position	Actual Gear	Under-Drive Clutch	Over-Drive Clutch	Reverse Clutch	Torque Converter Clutch Off	2/4 Clutch	Low/ Reverse Clutch
PARK* 0 km/h (0 mph)	PARK	0–14 (0–2)	0–35 (0–5)	0–35 (0–2)	414-758 (60–110)	0–35 (0–2)	793– 1,000 (115-145)
REVERSE* 0 km/h (0 mph)	RE-VERSE	0–14 (0–2)	0–49 (0–7)	1,138– 1,620 (165-235)	345–690 (50–1 0 0)	0–35 (0–2)	1,138–1,620 (165-235)
NEUTRAL* 0 km/h (0 mph)	NEUTRAL	0–14 (0–2)	0–35 (0–5)	0–35 (0–2)	414-758 (60–110)	0–35 (0–2)	793– 1,000 (115-145)
L# 32 km/h (20 mph)	FIRST	758– 1,000 (110–145)	0–35 (0–5)	0–35 (0–2)	414-758 (60–110)	0–35 (0–2)	793– 1,000 (115-145)
2# 48 km/h (30mph)	SECOND	758– 1,000 (110–145)	0–35 (0–5)	0–35 (0–2)	414–758 (60–110)	793–1000 (115–145)	0–35 (0–2)
2# 72 km/h (45 mph)	DIRECT	517-655 (75-95)	517-655 (75-95)	0–35 (0–2)	414-621 (60–90)	0–35 (0–2)	0–35 (0–2)
D# 48 km/h (30 mph)	OVER-DRIVE	0–14 (0–2)	517–655 (75–95)	0–35 (0–2)	414–621 (60–90)	517–655 (75–95)	0–35 (0–2)
D# 80 km/h (50 mph)	OVER-DRIVE WITH TCC	0-14 (0–2)	517–655 (75–95)	0–35 (0–2)	0–35 (0–5)	517–655 (75–95)	0–35 (0–2)

● : Engine speed at 1,500 r/min
#: CAUTION; Both front wheels must be turning at same speed.

HYDRAULIC CIRCUIT

<Park/Neutral>

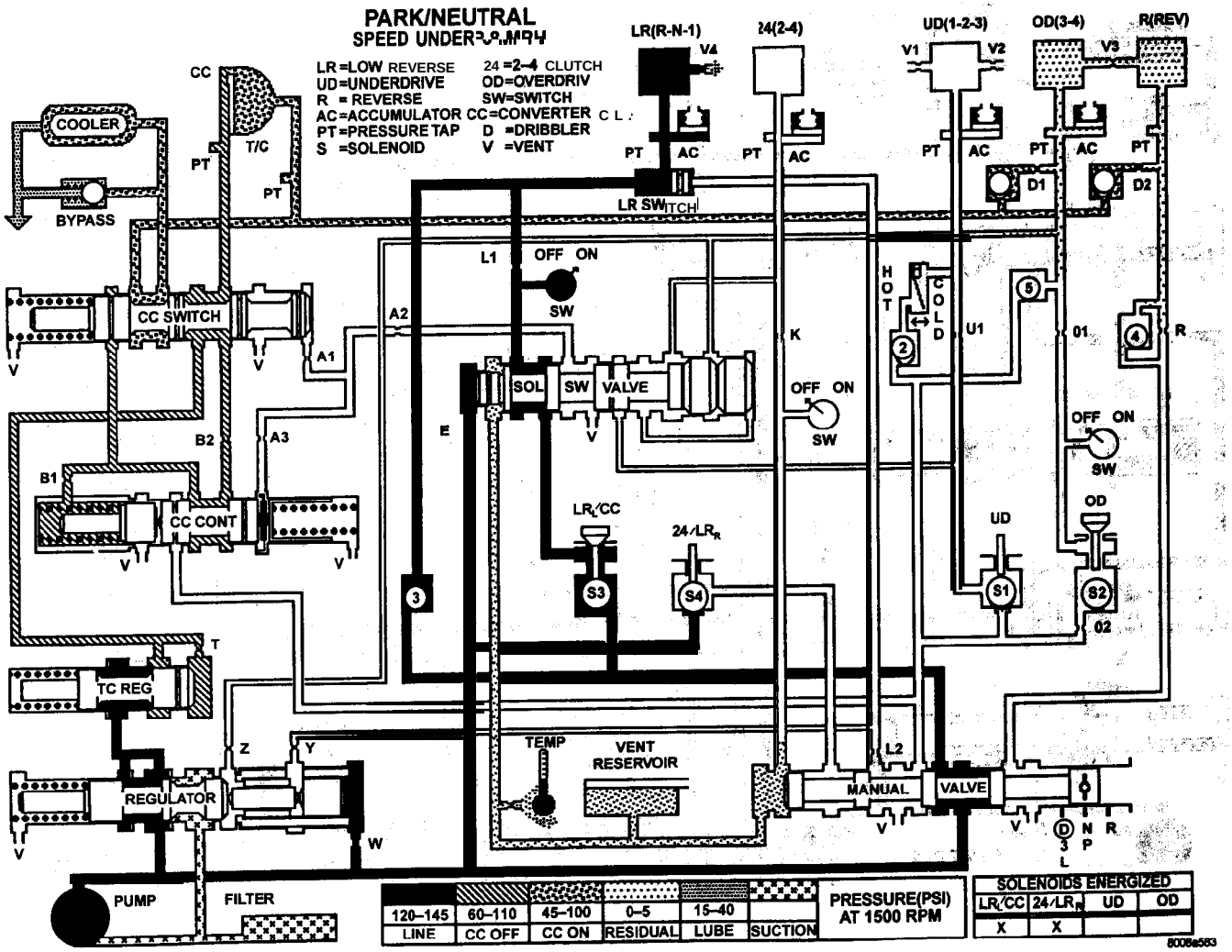

<Neutral>

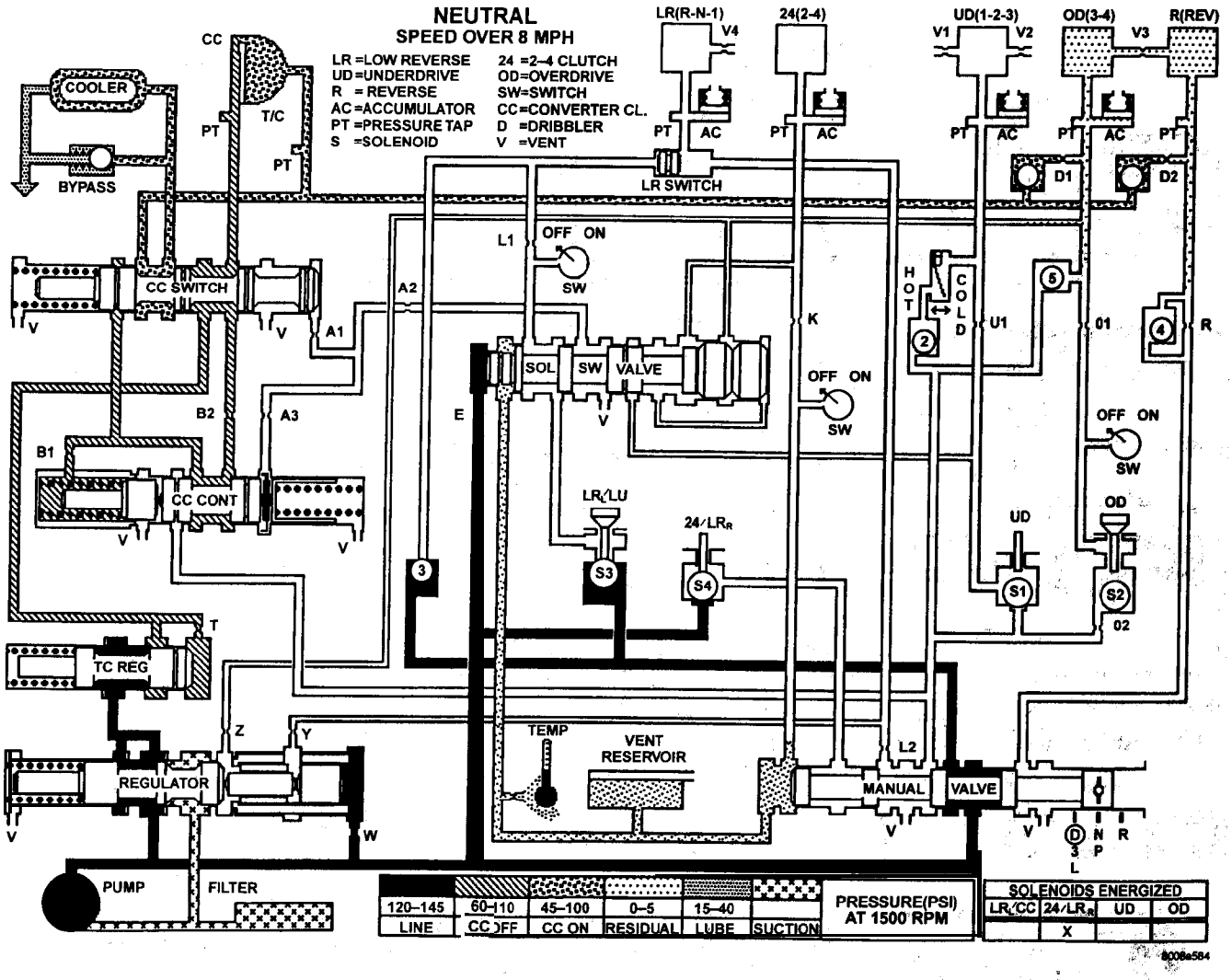
NEUTRAL
SPEED OVER 8 MPH
LR =LOW REVERSE
UD=UNDERDRIVE
R = REVERSE
AC=ACCUMULATOR
PT =PRESSURE TAP
S =SOLENOID
24 =2–4 CLUTCH
OD=OVERDRIVE
SW=SWITCH
CC=CONVERTER CL.
D =DRIBBLER
V =VENT
COOLER
BYPASS
CC
T/C
PT
CC SWITCH
CC CONT
TC REG
REGULATOR
PUMP
FILTER
LR(R-N-1)
24(2-4)
UD(1-2-3)
OD(3-4)
R(REV)
V1
V2
V3
V4
AC
D1
D2
LR SWITCH
L1
OFF ON
SW
A1
A2
A3
B1
B2
E
K
SOL
SW
VALVE
HOT
COLD
U1
01
R
LR/LU
24/LR
S3
S4
UD
OD
S1
S2
02
T
Z
Y
W
TEMP
VENT
RESERVOIR
L2
MANUAL
VALVE
D
3
L
N
P
R
120–145
LINE
60–110
CC OFF
45–100
CC ON
0–5
RESIDUAL
15–40
LUBE
SUCTION
PRESSURE(PSI)
AT 1500 RPM
SOLENOIDS ENERGIZED
LR/CC
24/LR
UD
OD
X
8008a584

<Reverse>

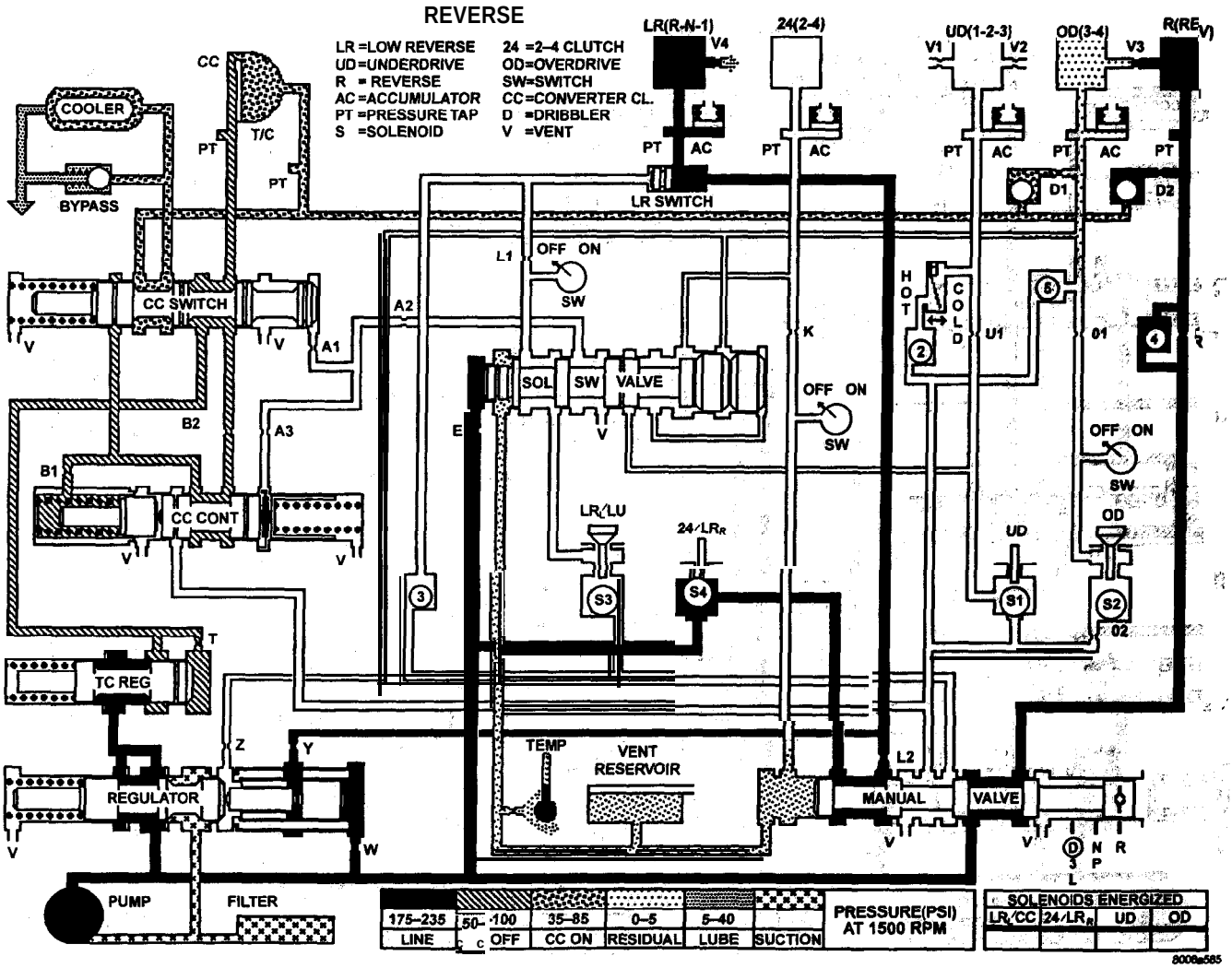
REVERSE
LR =LOW REVERSE
UD=UNDERDRIVE
R = REVERSE
AC =ACCUMULATOR
PT =PRESSURE TAP
S =SOLENOID
24 =2–4 CLUTCH
OD=OVERDRIVE
SW=SWITCH
CC=CONVERTER CL.
D =DRIBBLER
V =VENT
COOLER
BYPASS
CC
T/C
PT
LR(R-N-1)
24(2-4)
UD(1-2-3)
OD(3-4)
R(REV)
V1
V2
V3
V4
AC
LR SWITCH
D1
D2
L1
OFF ON
SW
CC SWITCH
A1
A2
A3
B1
B2
SOL
SW
VALVE
E
K
HOT
COLD
U1
01
OFF ON
SW
CC CONT
LR/LU
24/LR
UD
OD
S1
S2
S3
S4
02
TC REG
T
Z
Y
W
TEMP
VENT
RESERVOIR
L2
MANUAL
VALVE
D
N
R
3
P
L
REGULATOR
PUMP
FILTER
175–235
LINE
50–100
CC OFF
35–85
CC ON
0–5
RESIDUAL
5–40
LUBE
SUCTION
PRESSURE(PSI)
AT 1500 RPM
SOLENOIDS ENERGIZED
LR/CC
24/LR
UD
OD
8008a585

<Reverse Block>

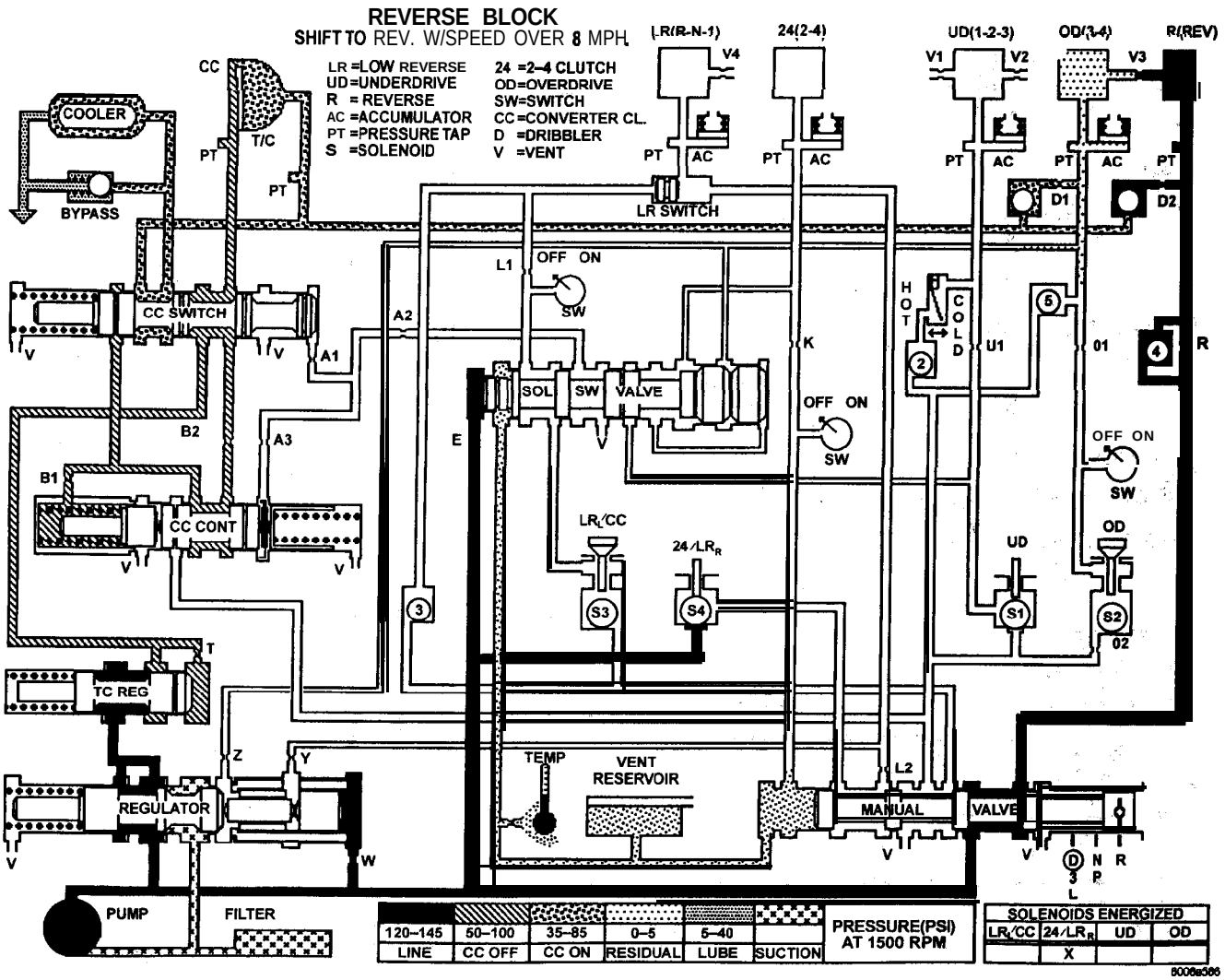

TSB Revision

<First Gear>

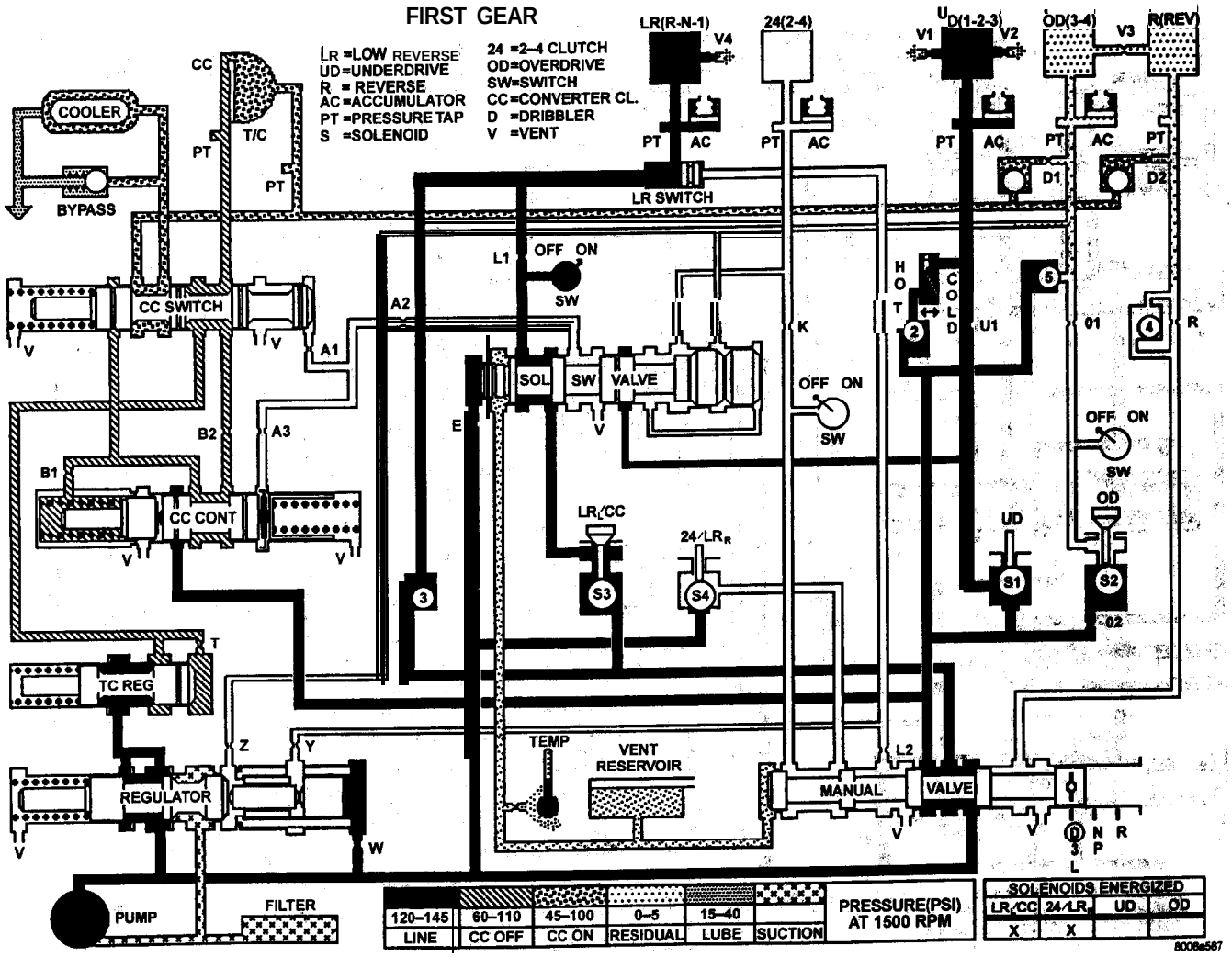
FIRST GEAR
LR =LOW REVERSE
UD=UNDERDRIVE
R = REVERSE
AC=ACCUMULATOR
PT =PRESSURE TAP
S =SOLENOID
24 =2–4 CLUTCH
OD=OVERDRIVE
SW=SWITCH
CC=CONVERTER CL.
D =DRIBBLER
V =VENT
LR(R-N-1)
24(2-4)
UD(1-2-3)
OD(3-4)
R(REV)
COOLER
BYPASS
T/C
CC
PT
AC
LR SWITCH
CC SWITCH
OFF ON
SW
SOL
VALVE
HOT
COLD
CC CONT
TC REG
REGULATOR
PUMP
FILTER
TEMP
VENT RESERVOIR
MANUAL
VALVE
LR/CC
24/LR
UD
OD
PRESSURE(PSI) AT 1500 RPM
120–145 LINE
60–110 CC OFF
45–100 CC ON
0–5 RESIDUAL
15–40 LUBE
SUCTION
SOLENOIDS ENERGIZED
LR/CC 24/LR UD OD
X X
8006a587

<Second Gear>

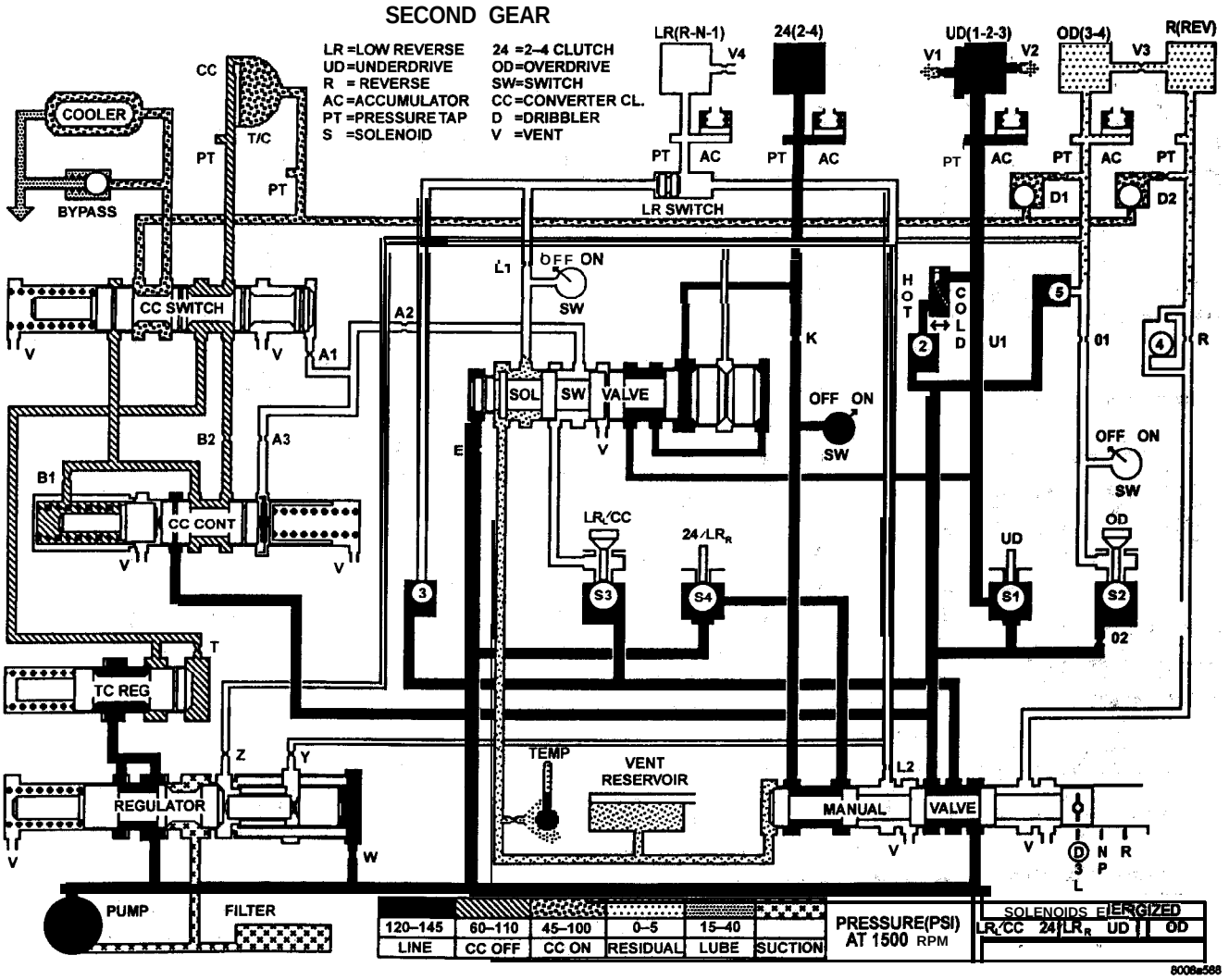

TSB Revision

<Direct Gear>
Electronically Modulated Converter Clutch

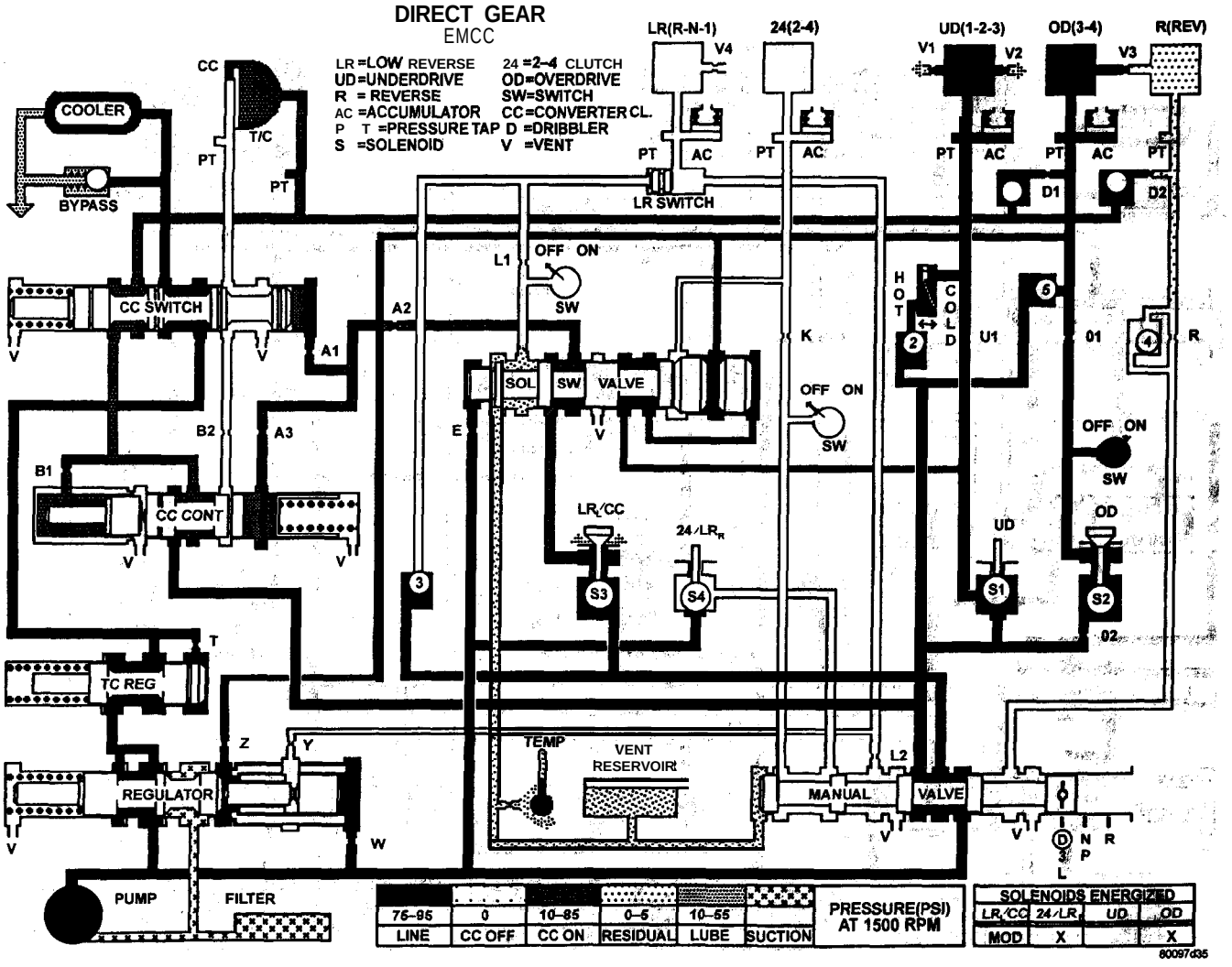

<Direct Gear>
Converter Clutch ON

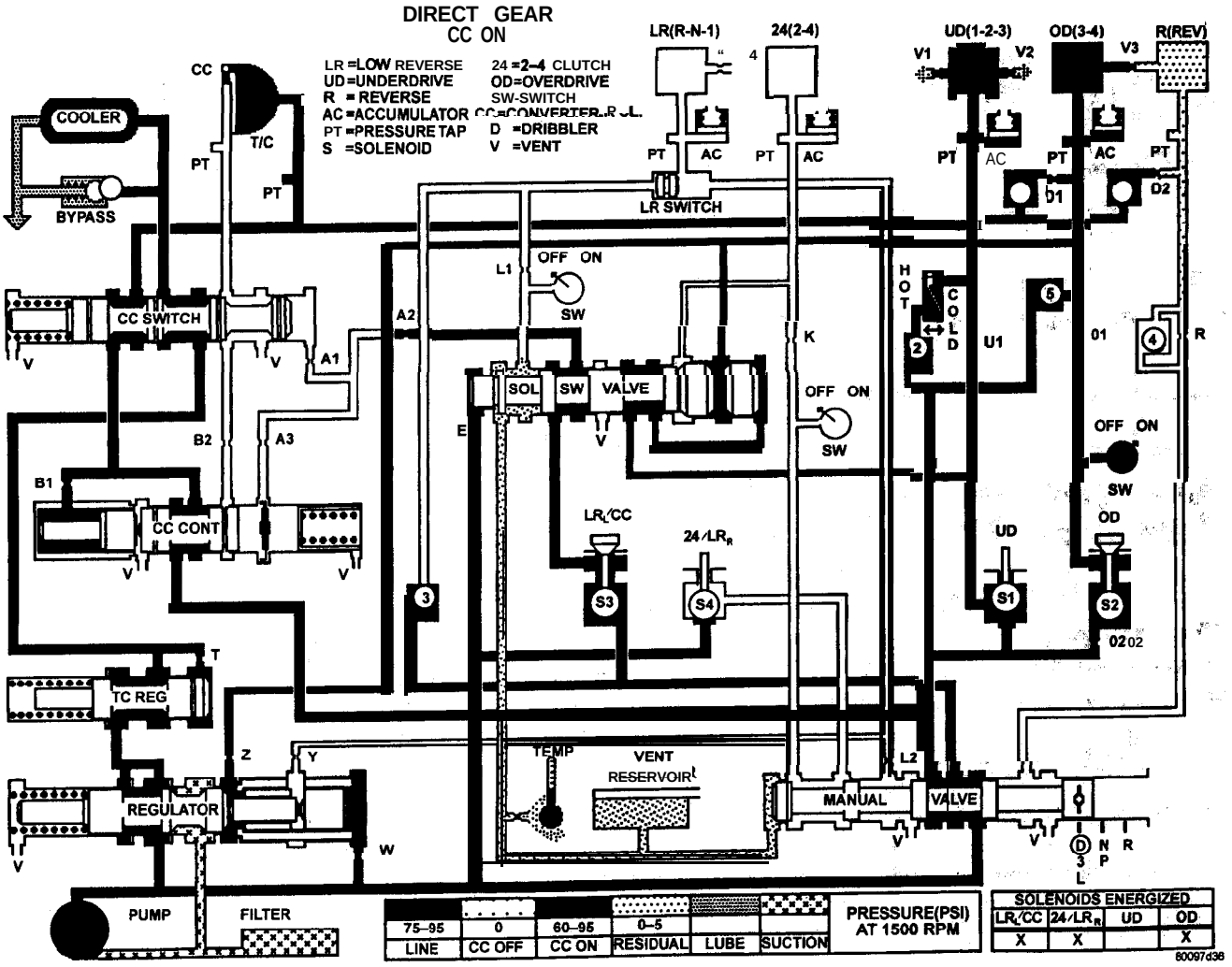

TSB Revision

<Overdrive>

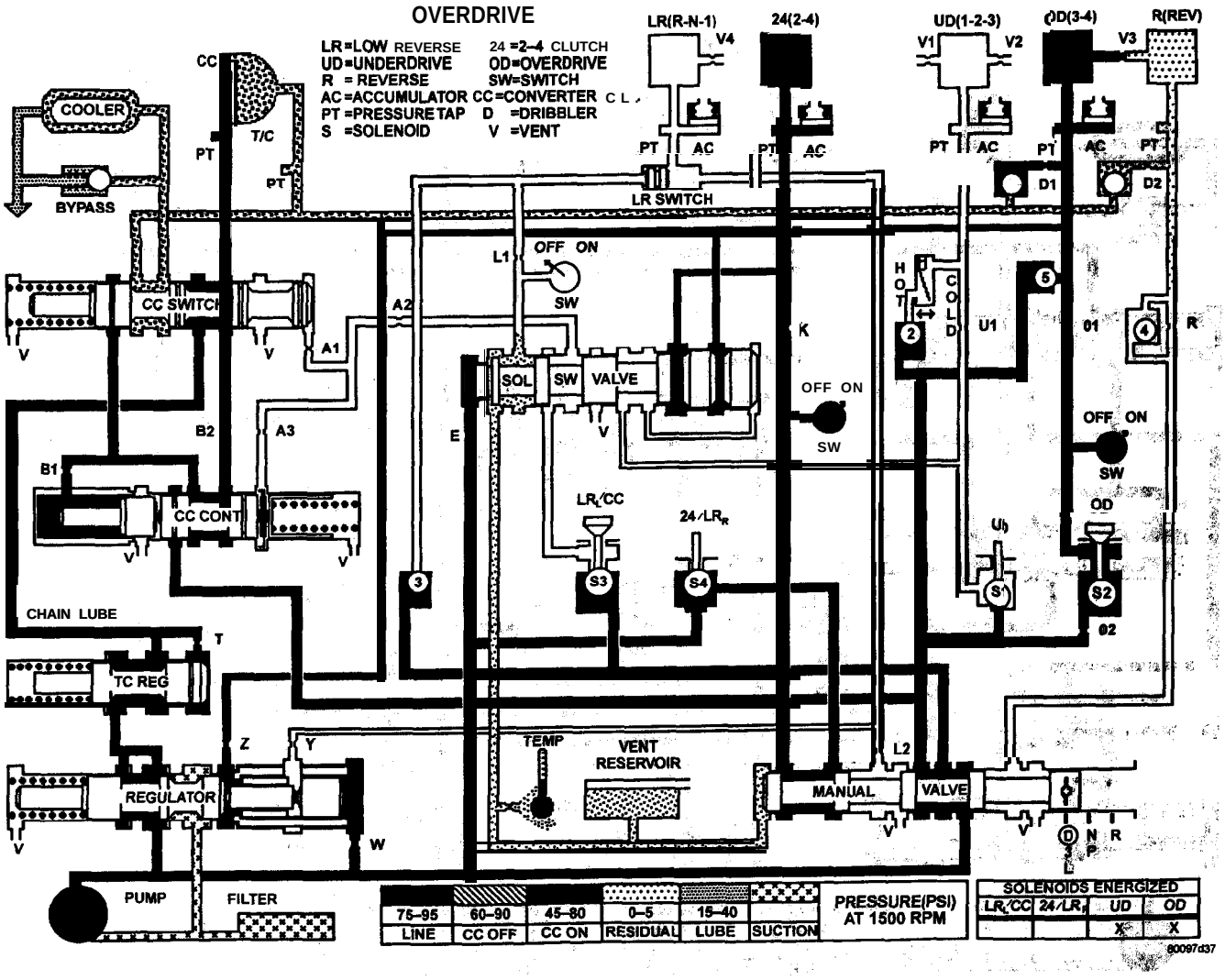
OVERDRIVE
LR=LOW REVERSE
UD=UNDERDRIVE
R = REVERSE
AC=ACCUMULATOR
PT =PRESSURE TAP
S =SOLENOID
24 =2–4 CLUTCH
OD=OVERDRIVE
SW=SWITCH
CC=CONVERTER CL.
D =DRIBBLER
V =VENT
LR(R-N-1)
24(2-4)
UD(1-2-3)
OD(3-4)
R(REV)
COOLER
BYPASS
T/C
CC SWITCH
CC CONT
TC REG
REGULATOR
CHAIN LUBE
LR SWITCH
SOL
SW
VALVE
OFF ON
HOT
COLD
LR/CC
24/LR
TEMP
VENT RESERVOIR
MANUAL
PUMP
FILTER
D N R
75–95 LINE
60–90 CC OFF
45–80 CC ON
0–5 RESIDUAL
15–40 LUBE
SUCTION
PRESSURE(PSI) AT 1500 RPM
SOLENOIDS ENERGIZED
LR/CC 24/LR UD OD
X X
80097d37

<Overdrive>
Electronically Modulated Converter Clutch

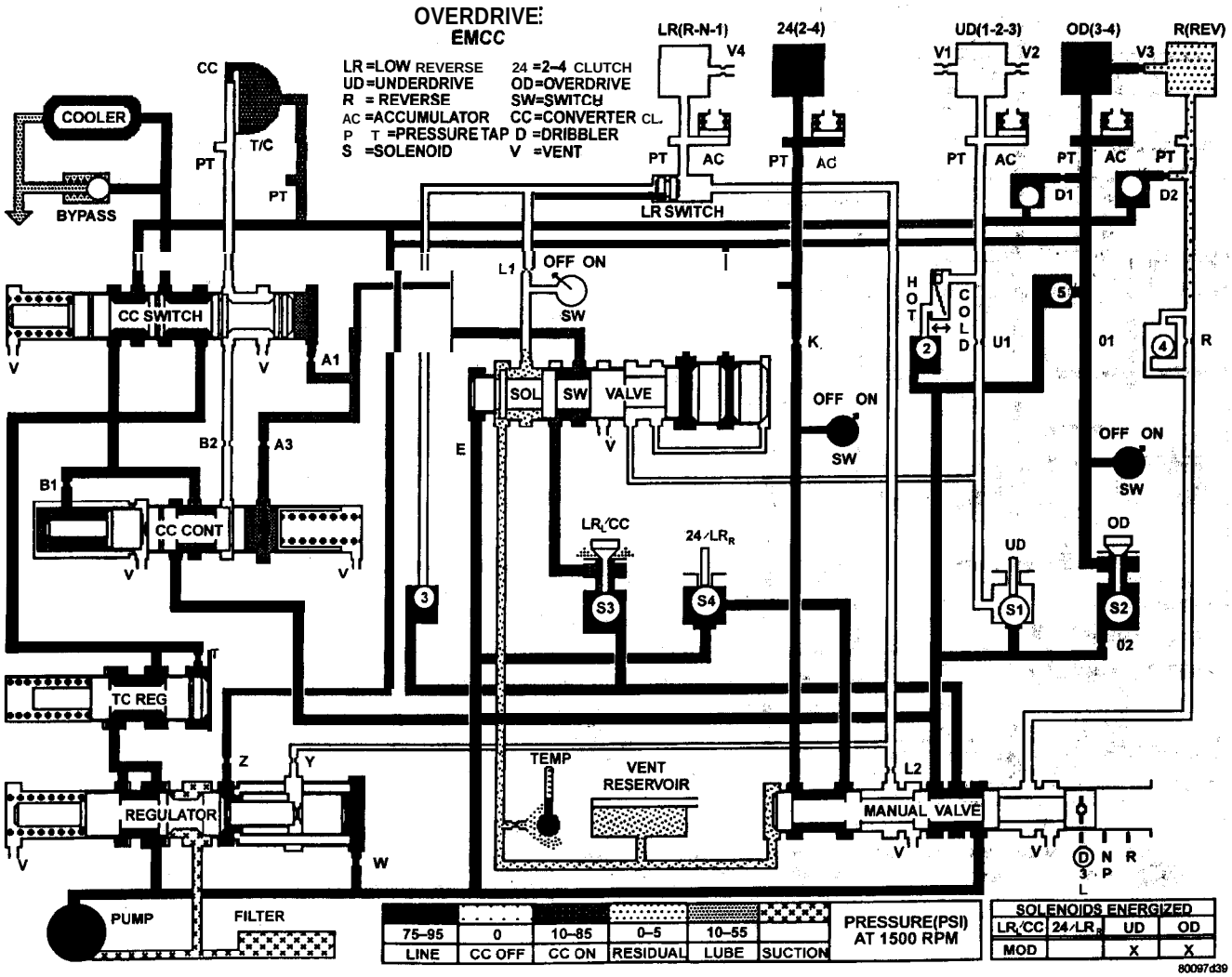

TSB Revision

<Overdrive>
Converter Clutch ON

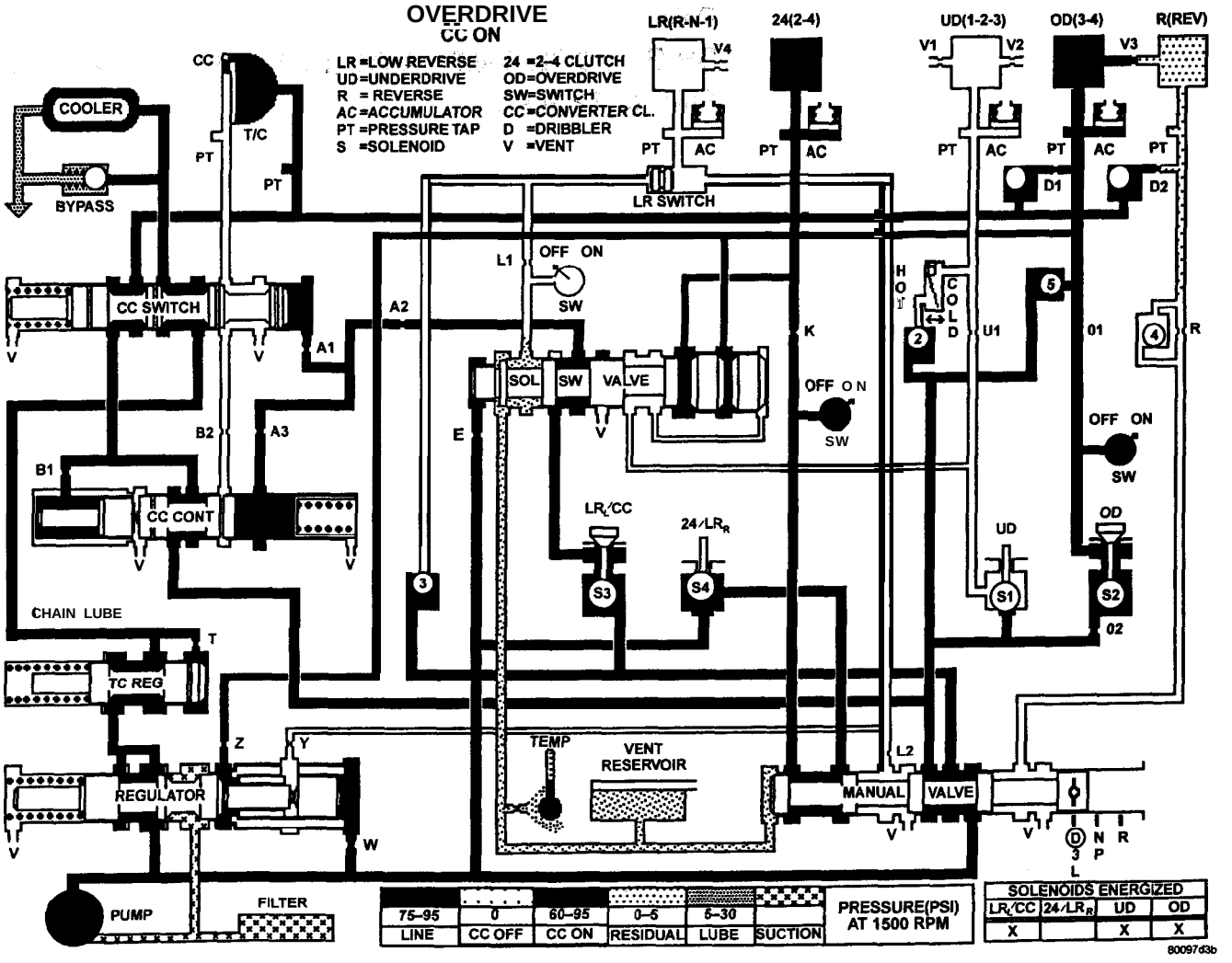

SELECTOR LEVER OPERATION CHECK 23100130083

Refer to P.23A-91.

KEY INTERLOCK MECHANISM CHECK 23200090070

Refer to P.23A-91.

SHIFT LOCK MECHANISM CHECK 23200100070

Refer to P.23A-92.

TRANSAXLE CONTROL

23100660100

REMOVAL AND INSTALLATION

Caution: SRS
Be careful not to subject the SRS-ECU to any shocks during removal and installation of the transaxle control cable and shift lever assembly.

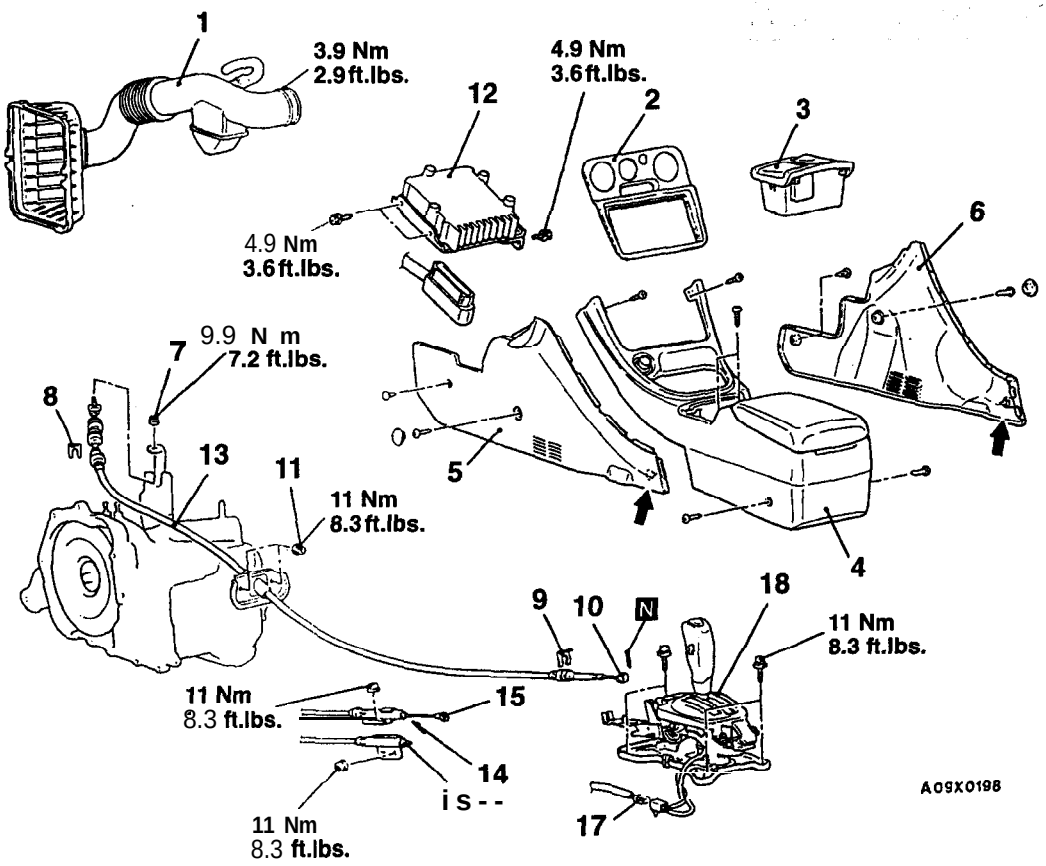

NOTE
◀: Resin clip position

Transaxle control cable assembly removal steps

1. Air cleaner and air intake hose assembly
2. Center panel
3. Cup holder assembly
4. Floor console assembly
5. Console side cover (L.H.)
6. Console side cover (R.H.)
7. ▶A◀ Nut
8. Clip
9. Clip
10. Transaxle control cable connection
11. Nut
12. EATX-ECM
13. Transaxle control cable assembly

Selector lever assembly removal steps

2. Center panel
3. Cup holder assembly
4. Floor console assembly
5. Console side cover (L.H.)
6. Console side cover (R.H.)
9. Clip
10. Transaxle control cable connection
14. Snap pin
15. Key interlock cable connection
16. Shift lock cable connection
17. Overdrive switch/position indicator light connector
18. Selector lever assembly

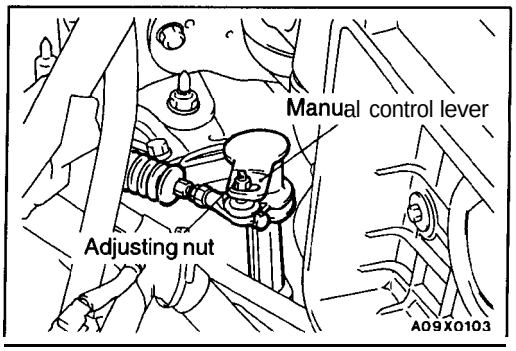

INSTALLATION SERVICE POINT

▶A◀ NUT INSTALLATION

(1) Put the selector lever in the "N" position.
(2) Loosen the adjusting nut, gently pull the transaxle control cable in the direction of the arrow and tighten the nut.

SELECTOR LEVER ASSEMBLY. DISASSEMBLY AND REASSEMBLY

23100680076

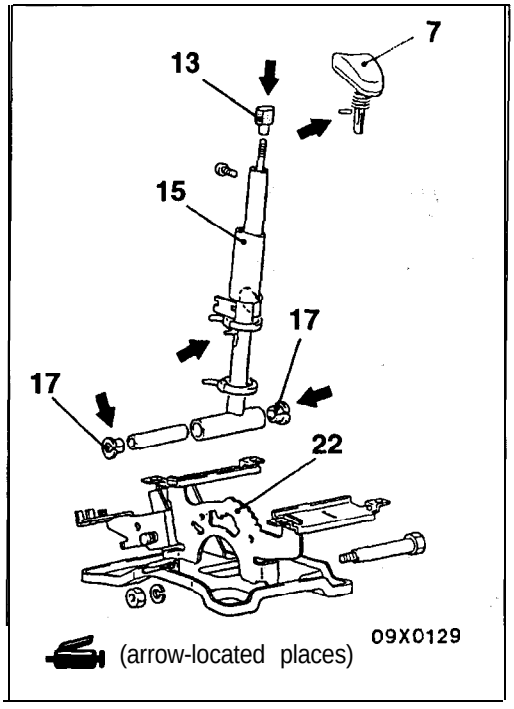

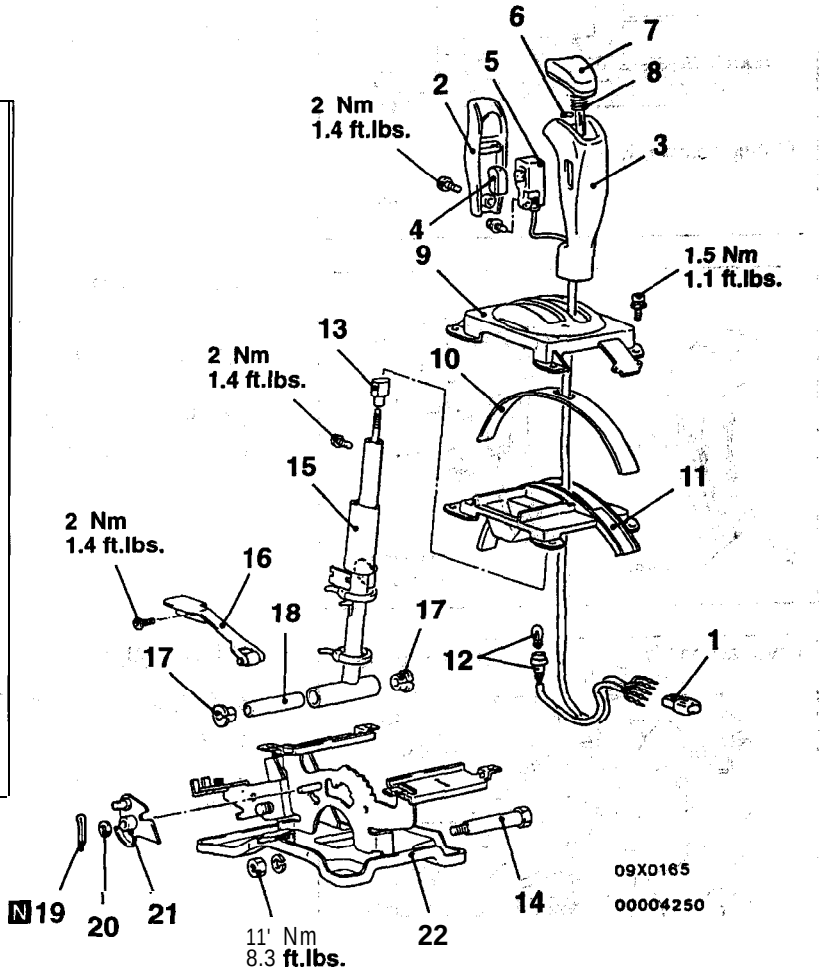

Disassembly steps

◀A▶ 1. Overdrive switch / position indicator light connector case
2. Cover
▶B◀ 3. Selector knob
◀B▶ 4. Overdrive switch button
◀B▶ 5. Overdrive switch
6. Pin
7. Push button
8. Spring
9. Indicator panel upper
10. Slider
11. Indicator panel lower
12. Position indicator light assembly
13. Sleeve
14. Bolt
15. Lever assembly
▶A◀ 16. Detent, spring' assembly
17. Bushing
18. Pipe
19. Cotter pin
20. Washer.
21. Lock cam
22. Bracket assembly

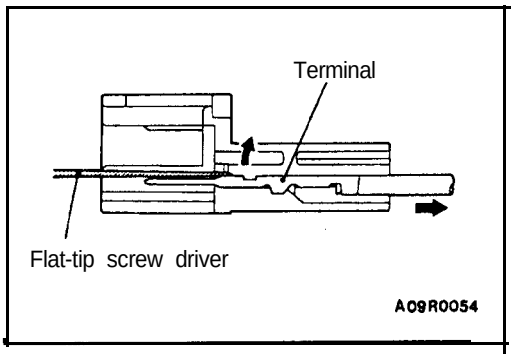

DISASSEMBLY SERVICE POINTS

◀A▶ OVERDRIVE SWITCH / POSITION INDICATOR LIGHT CONNECTOR CASE REMOVAL

Use a flat-tip screwdriver or similar tool to pull out the terminal from the overdrive switch/position indicator light connector case.

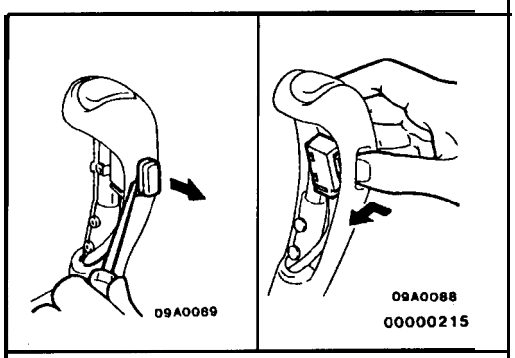

◀B▶ OVERDRIVE SWITCH BUTTON/OVERDRIVE SWITCH REMOVAL

(1) Use a flat-tip screwdriver to remove the overdrive switch button.
(2) Remove the overdrive switch mounting screw.
(3) Pressing the switch, remove the overdrive switch.

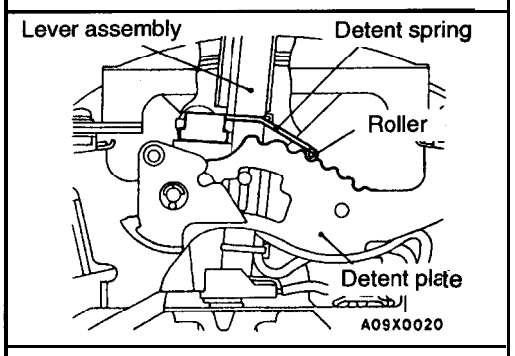

REASSEMBLY SERVICE POINTS

▶A◀ DETENT SPRING ASSEMBLY INSTALLATION

Shift the selector lever to the neutral (N) position, and then install the detent spring assembly so that the roller is in the detent plate groove.

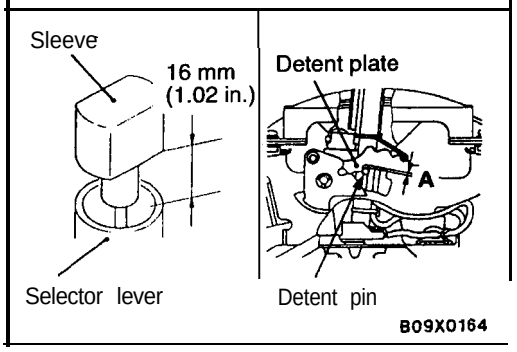

▶B◀ SELECTOR KNOB INSTALLATION

(1) Put the selector lever in the "N" position, turn the sleeve and adjust the dimension between the sleeve and the end of the lever so it reaches 16 mm (1.02 in.)
(2) Install the selector knob.
(3) Check that dimension (A) between the detent plate and detent pin reaches the standard value.

Standard value (A): 1.7-2.4 mm (.067–.094 in.)

(4) If outside the standard value, remove the selector knob and turn the sleeve again to readjust.

INSPECTION

23100690055

- Check the detent plate for wear.
- Check the bushing for wear or damage.
- Check the spring for damage or deterioration.

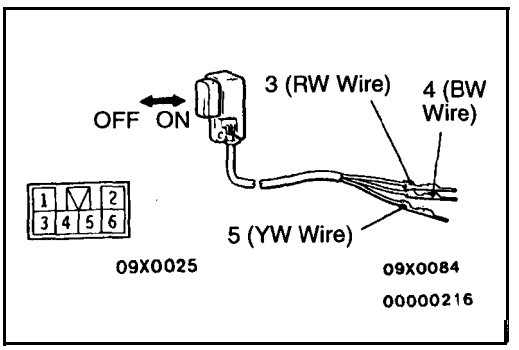

OVERDRIVE SWITCH CONTINUITY CHECK

Switch position	Terminal No.		
	3	4	5
OD is operating (ON)	0		
OD is not operating (OFF)	○		○

AUTOMATIC TRANSAXLE KEY INTERLOCK AND SHIFT LOCK MECHANISMS

23200120045

REMOVAL AND INSTALLATION

Caution: SRS
Be careful not to subject the SRS-ECU to any shocks during removal and installation of the key interlock cable and shift lock cable.

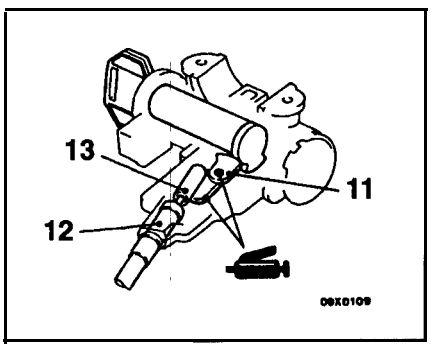

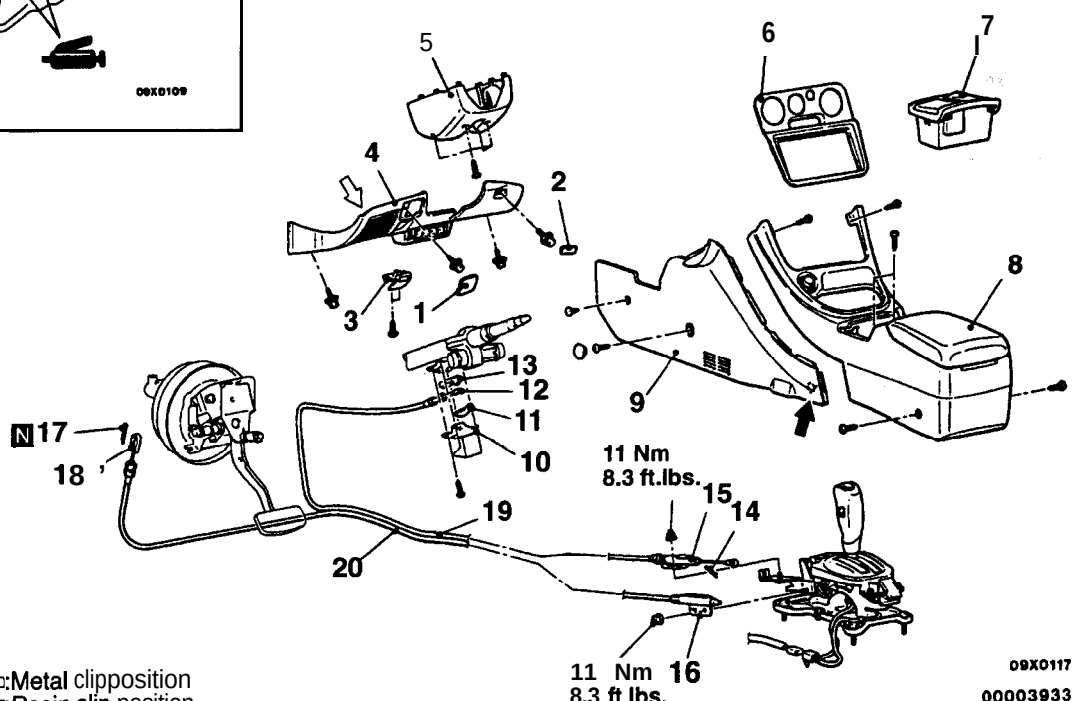

NOTE
(1) ⇦:Metal clipposition
(2) ⬅:Resin clip position

Key interlock cable removal steps

1. Plug A
2. Plug B
3. Hood release lever
4. Instrument panel under cover
5. Steering column lower cover
6. Center panel
7. Cup holder assembly
8. Floor console assembly
9. Console side cover (L.H.)
10. Cover
11. Cam and lever
12. Key interlock cable connection
13. Slide lever
14. Snap pin
15. ▶C◀ Key interlock cable connection
19. ▶A◀ Key interlock cable

Shift lock cable removal steps

1. Plug A
2. Plug B
3. Hood release lever
4. Instrument panel under cover
6. Center panel
7. Cup holder assembly
8. Floor console assembly
9. Console side cover (L.H.)
16. ▶B◀ Shift lock cable connection
17. Cotter pin
18. Shift lock cable connection
20. ▶A◀ Shift lock cable

TSB Revision

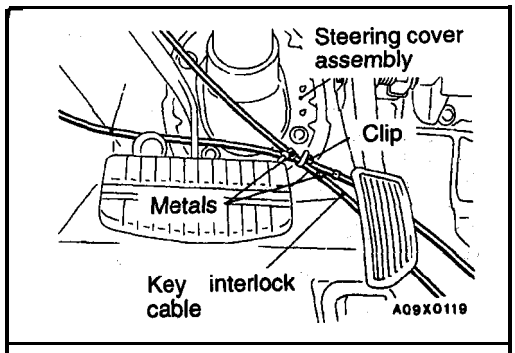

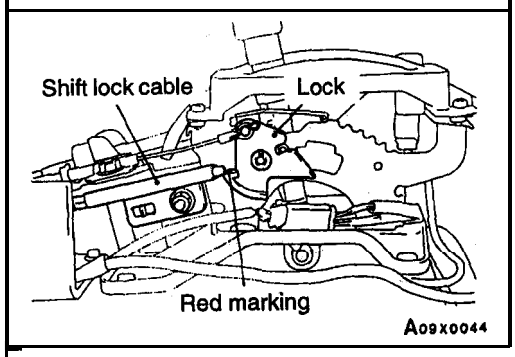

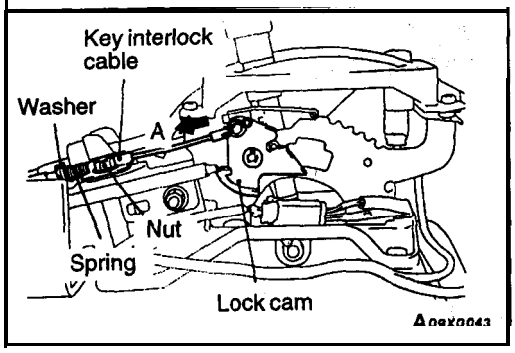

INSTALLATION SERVICE POINTS

▶A◀ SHIFT LOCK CABLE/ KEY INTERLOCK CABLE INSTALLATION

Secure the section between the metals of the shift lock cable and key interlock cable with the clip of the steering cover assembly.

Caution

Do not change the routing of shift lock cable to the selector lever assembly.'

▶B◀ SHIFT LOCK CABLE (SELECTOR LEVER SIDE) INSTALLATION

(1) Place the selector lever in position "P".
(2) Fasten the shift lock cable at the position where the end of the shift lock cable is-positioned above the red marking.

▶C◀ KEY INTERLOCK CABLE (SELECTOR LEVER SIDE) INSTALLATION

(1) Install the key interlock cable on the lock cam.
(2) Install the spring and washer of the key interlock cable as shown.
(3) While lightly pushing the cable coupling portion of the lock cam in the direction A, tighten the nut to fasten the key interlock cable.

INSPECTION

23200130031

Check the cable assemblies for function and for damage.

TRANSAXLE ASSEMBLY

23100570212

REMOVAL AND INSTALLATION

Pre-removal Operation
- Transaxle Fluid Draining
  (Refer to GROUP 00 – Maintenance service)
- Battery Removal
- Under Cover Removal
  (Refer to GROUP 42 – Under Cover)

Post-installation Operation
- Under Cover Installation
  (Refer to GROUP 42 – Under Cover)
- Battery Installation
- Transaxle Fluid Supplying
  (Refer to GROUP 00 – Maintenance Service)
- Selector Lever Operation Check

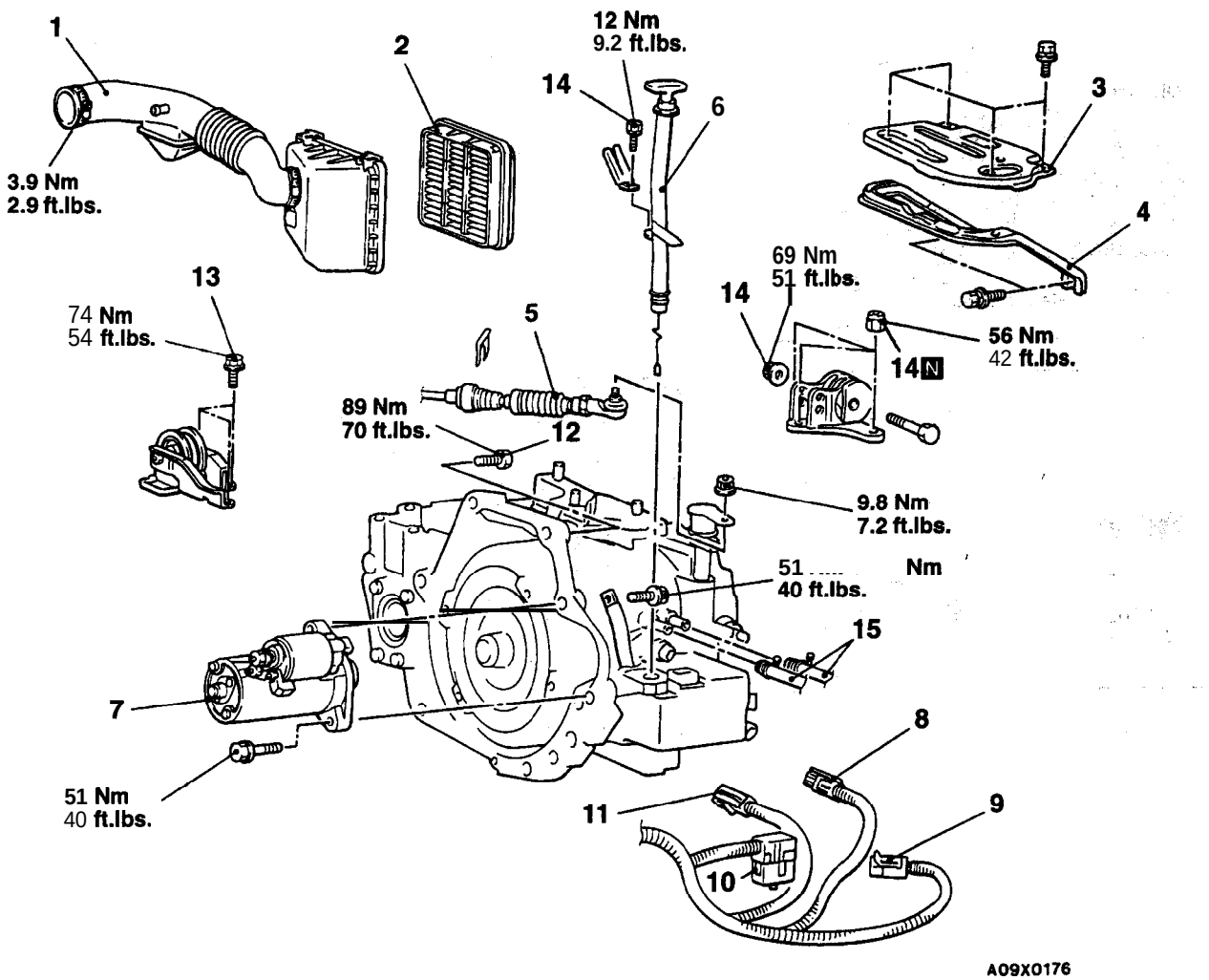

Removal steps

1. Air cleaner cover and air intake hose assembly
2. Air cleaner element
3. Battery tray
4. Battery tray stay
5. Transaxle control cable connection
6. Oil dipstick and guide assembly
7. Starter motor
8. Output speed sensor connector
9. Transaxle range switch connector

◀A▶

10. Solenoid and pressure switch connector
11. Input speed sensor connector
12. Transaxle assembly mounting bolts
13. Rear roll stopper bracket mounting bolts
14. Transaxle mounting bracket mounting nuts
15. Transaxle oil cooler hoses connection

◀B▶

- Supporting engine assembly

TSB Revision

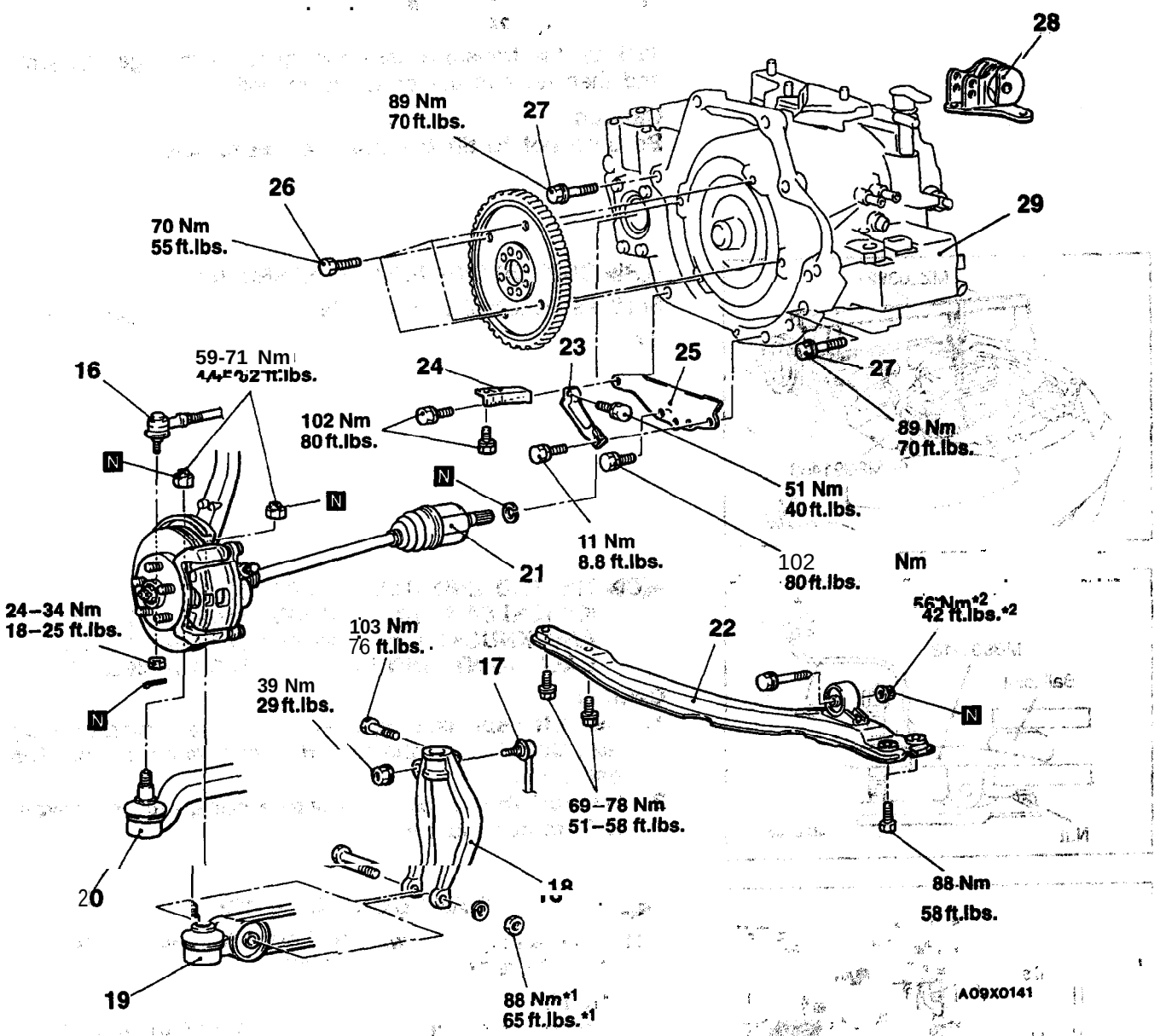

From under vehicles

◀C▶ 16. Tie-rod" end ball joint and knuckle connection
17. Stabilizer link connection
16. Damper fork
◀C▶ 19. Lateral lower arm ball joint and. knuckle connection
◀C▶ 20. Compression' lower arm ball' joint and knuckle connection
◀D▶ ▶B◀ 21. Drive shaft connection
▶A◀ 22. Centermember assembly
23. Front plate
24. Rear plate
25. Transaxle case lower cover
◀E▶ 26. 'Torque converter connecting bolts
◀E▶ 27. Transaxle assembly mounting bolts
26. Transaxle mounting bracket
◀E▶ 29. Transaxle assembly

Caution

1: Indicates parts which should be temporarily tightened, and then fully tightened with the vehicle on the ground in the unladen condition.

*2: For tightening locations indicated by the symbol. first tighten temporarily, and then make the final tightening with the entire weight of the engine applied to the vehicle body.

REMOVAL SERVICE POINTS

◀A▶ TRANSAXLE MOUNTING BRACKET MOUNTING NUTS REMOVAL

Jack up the transaxle assembly gently with a garage jack, and then remove the transaxle mounting.

Caution
Be sure not to tilt the transaxle assembly.

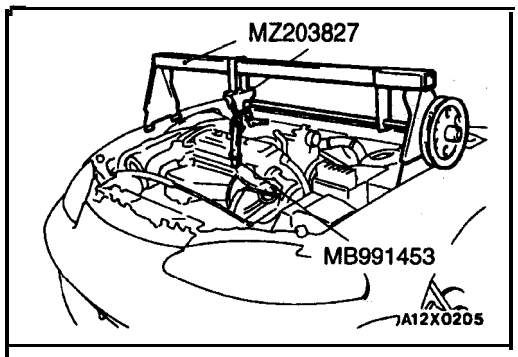

◀B▶ SUPPORTING ENGINE' ASSEMBLY

Set the special tool to the vehicle to support the engine assembly.

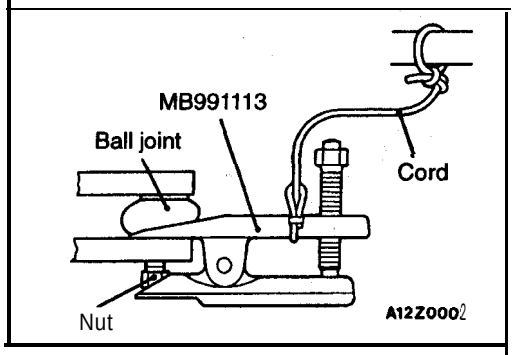

◀C▶ TIE ROD END BALL JOINT AND KNUCKLE/LATARAL LOWER ARM BALL JOINT AND KNUCKLE/COMPRESSION'-LOWER ARM BALL JOINT AND KNUCKLE DISCONNECTION

Caution
1. **Using the special tool, loosen the tie rod end mounting nut. Only loosen the nut; do not remove it from the ball joint.**
2. **Support the special tool with a cord, etc. to prevent it from coming off.**

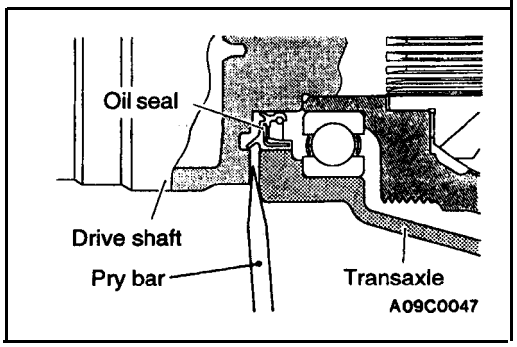

◀D▶ DRIVE SHAFT DISCONNECTION

(1) insert a pry bar between the transaxle case and the drive shaft to remove the drive shaft.

NOTE
Do not remove the hub and knuckle from the drive shaft.

Caution
1. **Use a pry bar to remove the drive shaft from the B.J. assembly, or the T.J. assembly may be damaged.**
2. **Do not insert the pry bar too far, or the oil seal may be damaged.**

(2) Suspend the removed drive shaft with wire so that there are no sharp bends in any of the joints.
(3) Use the general service tool as a cover not to let foreign' objects get into the transaxle case.

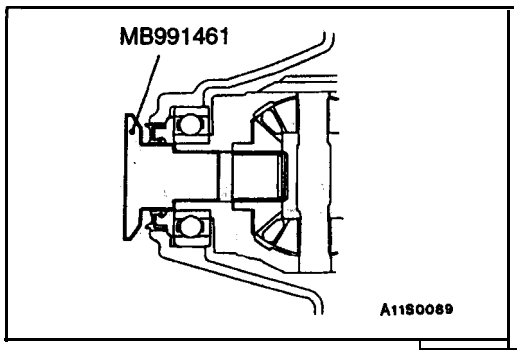

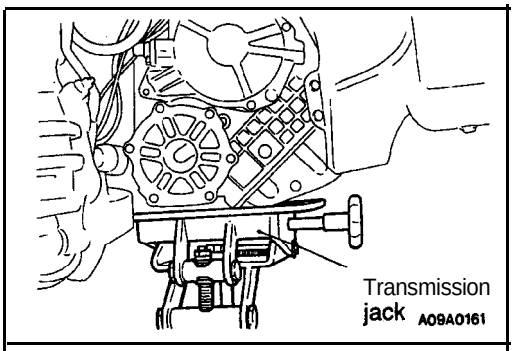

◀E▶ TORQUE CONVERTER CONNECTING BOLTS/TRANSAXLE ASSEMBLY MOUNTING BOLTS/TRANSAXLE ASSEMBLY REMOVAL

(1) Use a transmission jack to support the transaxle assembly.

Caution
Support the transaxle case side, not the oil pan.

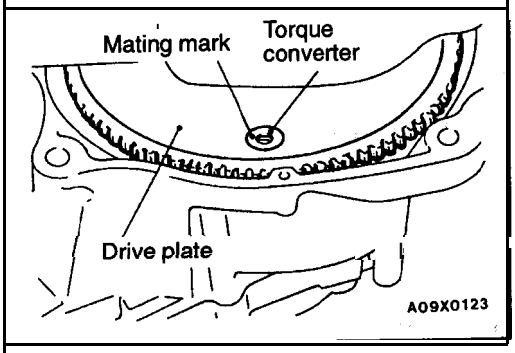

(2) To make installation easier, use chalk to make mating marks on the torque converter and drive plate.
(3) Remove the connection bolts while turning the crankshaft.
(4) Press the torque converter into the transaxle for easier removal.
(5) Remove the transaxle, assembly mounting bolt and lower the transaxle assembly.

INSTALLATION SERVICE POINTS

▶A◀ CENTERMEMBER ASSEMBLY INSTALLATION

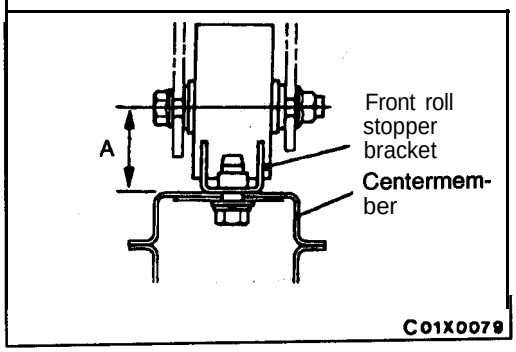

If the dimension shown in the illustration is outside the standard value when the weight of the engine is on the body, replace the front roll stopper bracket assembly.

Standard value (A) : 43±3 mm (1.69±.12 in.)

▶B◀ DRIVE SHAFT CONNECTION'

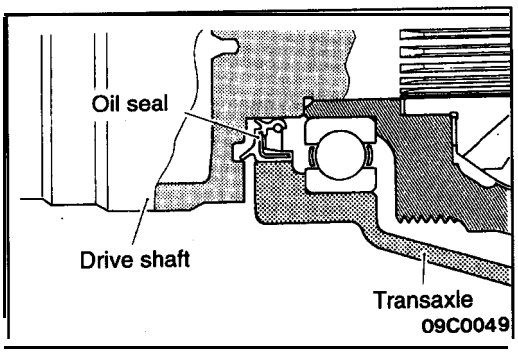

Temporarily install the drive shaft so that the TJ case of the drive shaft is perpendicular to the transaxle.

Caution
Do not damage the oil seal lip by the serrated part of the drive shaft.

TRANSAXLE OIL COOLER

23100740040

REMOVAL AND INSTALLATION

Pre-removal and Post-installation
Transaxle Fluid Draining and Supplying
(Refer to GROUP 00 – Maintenance Service.)

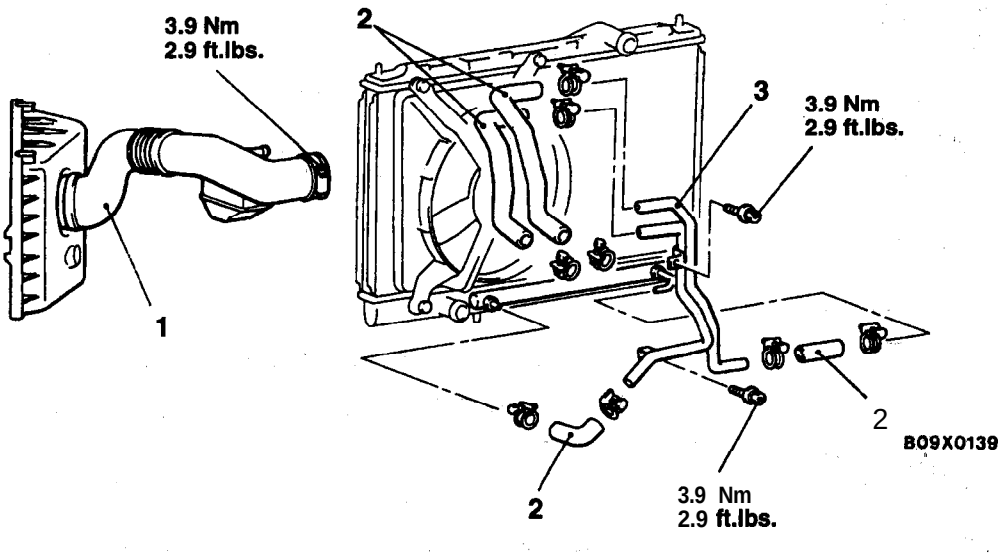

Removal steps

1. Air cleaner cover and air intake hose
2. Hose
3. Pipe assembly

INSPECTION

23100720044

- Check the hose for cracks, damage and clogs.
- Check for rusted or clogged transaxle oil cooler.
- Check oil cooler fins for bents, damage, and clogged with foreign matter.

TSB Revision

AUTOMATIC TRANSAXLE OVERHAUL <F4A23>

CONTENTS

23309000053

GENERAL INFORMATION

23300010055

Precautions to be taken when disassembling and reassembling the transaxle

- Because the automatic transaxle is composed of component parts of an especially high degree of precision, these parts should be very carefully handled during disassembly and assembly so as not to scar or scratch them.
- A rubber mat should be placed on the workbench, and it should always be kept clean.
- During disassembly, cloth gloves or shop towels should not be used. If such items must be used, either use articles made of nylon, or use paper towels.
- All disassembled parts must be thoroughly cleaned.
  Metal parts may be cleaned with ordinary detergents, but must be thoroughly air dried.
- Clean the clutch disc, resin thrust plate and rubber parts by using ATF (automatic transmission fluid), being very careful that dust, dirt, etc. do not adhere to them.
- Do not reuse gaskets, oil seals, or rubber parts.
  Replace such parts with new ones at every reassembly. The' O-ring of the oil level gauge need not be replaced.
- Do not use grease other than petrolatum jelly.
- Apply ATF to friction components, rotating parts, and sliding parts before installation.
- A new clutch disc should be immersed in ATF for at least two hours before installation.
- Do not apply sealer or adhesive to gaskets.
- When a bushing must be replaced, replace the assembly in which it is incorporated.
- If the transaxle main unit is damaged, also disassemble and clean the cooler system.

SECTIONAL VIEW – F4A23

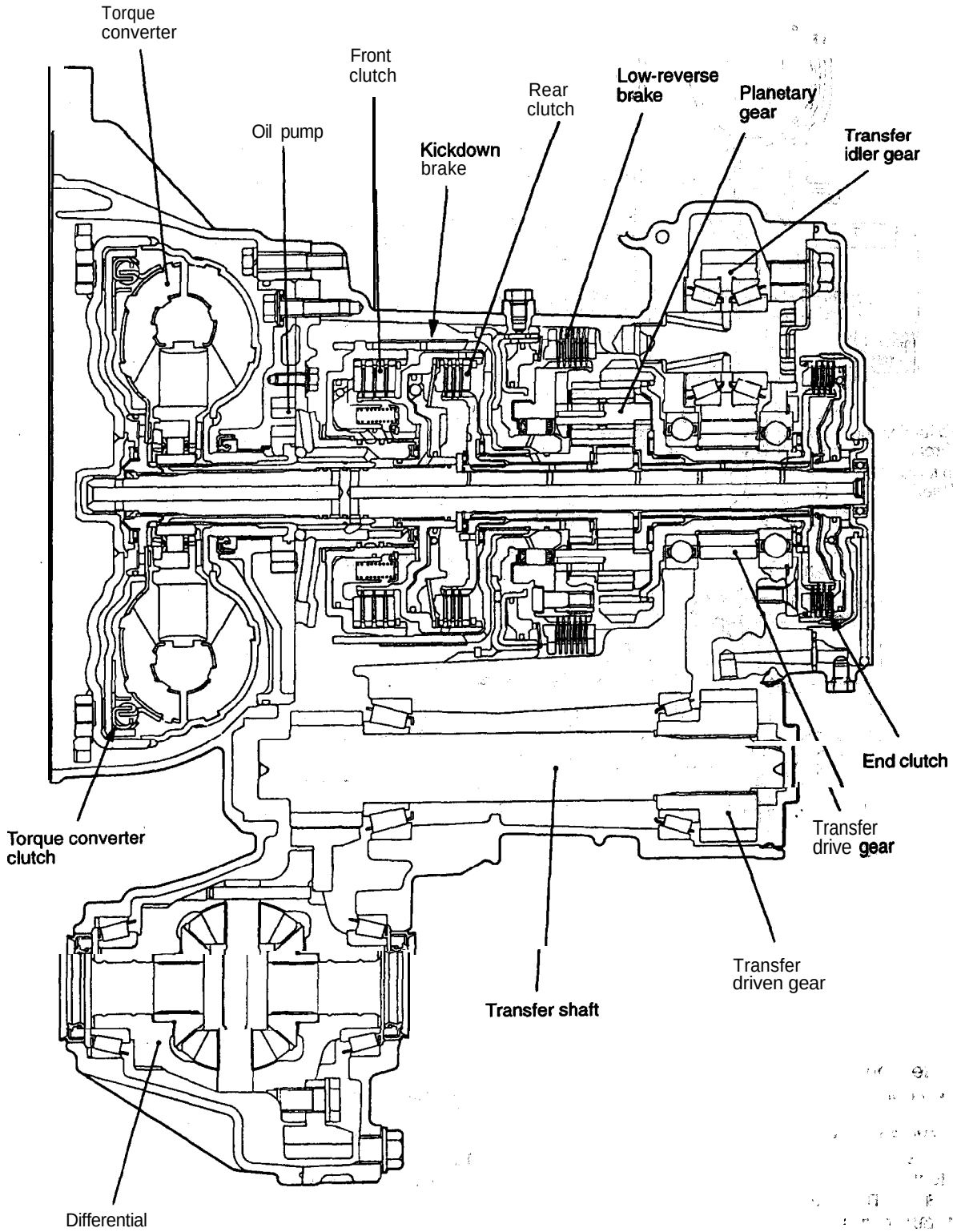

HYDRAULIC CONTROL SYSTEM

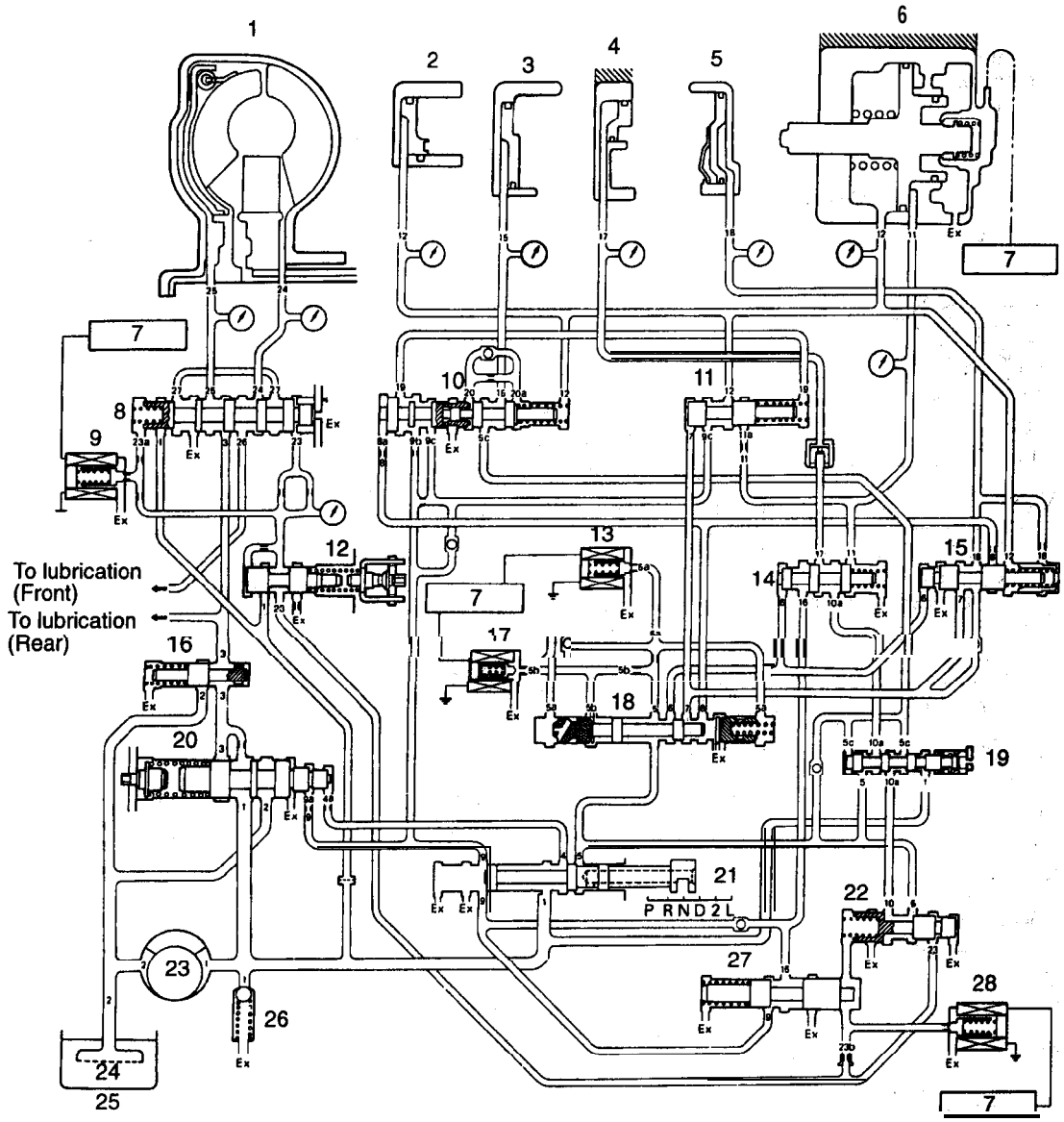

1. Torque converter
2. Front clutch
3. Rear clutch
4. Low-reverse brake
5. End clutch
6. Kickdown servo
7. Transaxle control module
8. Torque converter clutch control valve
9. Torque converter clutch solenoid
10. Rear clutch exhaust valve
11. 2-3/4-3 shift valve
12. Reducing valve
13. Shift control solenoid valve "A"
14. 1-2 shift valve
15. End clutch valve
16. Torque converter control valve
17. Shift control solenoid valve "B
18. Shift control valve
19. N-D control valve
20. Regulator valve
21. Manual valve
22. Pressure control valve
23. Oil pump
24. Oil filter
25. Oil pan
26. Line relief valve
27. N-R control valve
28. Pressure control solenoid valve

SPECIFICATIONS

23300020140

TRANSAXLE MODEL TABLE

Transaxle model	Speedometer gear ratio	Final gear ratio	Vehicle model	Engine model
F4A23-2-UPQ5	29/36	4.350	D34A	4G64

GEAR RATIO TABLE

1st	2nd	3rd	4th	Reverse
2.551	1.488	1.000	0.685	2.176

SERVICE SPECIFICATIONS

23300030051

Items	Standard value
Transfer idler gear bearing preload Nm (ft.lbs.)	1.5 (1.1)
Input shaft end play mm (in.)	0.3–1.0 (.012–.039)
Transfer shaft end play mm (in.)	0–0.025 (0–.00098)
Low-reverse brake end play mm (in.)	1.0–1.2 (.039–.047)
Differential case preload mm (in.)	0.08–0.13 (.0031–.0051)
End clutch snap ring clearance mm (in.)	0.6–0.85 (.024–.0335)
Oil pump gear side clearance mm (in.)	0.03–0.05 (.0012–.0020)
Front clutch snap ring clearance mm (in.)	0.7–0.9 (.028–.035)
Rear clutch snap ring clearance mm (in.)	0.4–0.6 (.016–.023)
Output flange bearing end play mm (in.)	0–0.06 (0–.0024)
Differential pinion backlash mm (in.)	0.025–0.150 (.00098–.00591)
Pulse generator resistance	245 ohm at 20°C (68°F)
Pressure control solenoid valve resistance	Approx. 3 ohm at 20°C (68°F)
Shift control solenoid valve resistance	Approx. 22 ohm at 20°C (68°F)
Torque converter clutch solenoid resistance	Approx. 13 ohm at 20°C (68°F)

VALVE BODY SPRING IDENTIFICATION

mm (in.)

Spring	Free height	Outside diameter	Number of loops	Wire diameter
Regulator valve spring	52 (2.05)	15 (.59)	11	1.4 (.055)
Torque converter control valve spring	22.6 (.890)	9.0 (.354)	9.5	1.3 (.051)
Pressure control valve spring	21.3 (.839)	7.6 (.299)	8	0.45 (.0177)
Rear clutch exhaust valve spring	27.4 (1.079)	6.8 (.268)	12	0.7 (.028)
2-3 shift valve spring	27.5 (1.083)	7.0 (.276)	15	0.8 (.031)
End clutch valve spring	24.4 (.961)	6.6 (.260)	15.5	0.6 (.024)
1-2 shift valve spring	26.6 (1.047)	7.6 (.299)	13	0.6 (.024)
Reducing valve spring	33.4 (1.315)	11 (.43)	9	1.0 ($39)
N-R control valve spring	32.1 (1.264)	9.2 (.362)	8	0.7 (.028)
Shift control valve spring	26.8 (1.055)	5.7 (.224)	22	0.5 (.020)
Relief spring	17.3 (.681)	7.0 (.276)	10	1.0 (.039)
Torque converter clutch control valve spring	14.2 (.559)	6.2 (.244)	9.5	0.7 (.028)

PRESSURE PLATES, SNAP RINGS AND SPACERS FOR ADJUSTMENT

hrust washer set (For adjustment of input-shaft end play)

Thrust washer thickness mm (in.)	Thrust race thickness mm (in.)	Part No.	Thrust washer thickness mm (in.)	Thrust race thickness mm (in.)	Part No.
1.4 (.055)	1.0 (.040)	MD997914	2.2 (.087)	1.8 (.071)	MD997918
1.4 (.055)	1.2 (.047)	MD997915	2.2 (.087)	2.0 (.079)	MD997919
1.8 (.071)	1.0 (.040)	MD997906	2.6 (.102)	1.8 (.071)	MD997910
1.8 (.071)	1.2 (.047)	MD997907	2.6 (.102)	2.0 (.079)	MD997911
1.8 (.071)	1.4 (.055)	MD997916	2.6(.102)	2.2 (.087)	MD997920
1.8 (.071)	1.6 (.063)	MD997917	2.6(.102)	2.4 (.094)	MD997921
2.2(.087)	1.4 (.055)	MD997908	3.0 (.118)	2.2 (.087)	MD997912
2.2(.087)	1.6 (.063)	MD997909	3.0 (.118)	2.4 (.094)	MD997913

Pressure plate (For adjustment of low-reverse brake end play)

Thickness mm (in.)	Identification symbol	Part No.	Thickness mm (in.)	Identification symbol	Part No.
5.6 (.220)	Y	MD731720	6.4 (.252)	4	MD727804
5.7 (.224)	Z	MD731721	6.5 (.256)	5	MD731003
5.8 (.228)	8	MD727801	6.6 (.260)	6	MD727805
5.9 (.232)	9	MD731000	6.7 (.264)	7	MD731004
6.0 (.236)	0	MD727802	6.8 (.268)	X	MD731005
6.1 (.240)	1	MD731001	6.9 (.272)	A	MD734766
6.2 (.244)	2	MD727803	7.0 (.276)	B	MD734767
6.3 (.248)	3	MD731002			

TSB Revision

Snap ring (For adjustment of front clutch and rear clutch clearance)

Thickness mm (in.)	Identification symbol	Part No.	Thickness mm (in.)	Identification symbol	Part No.
1.6 (.063)	None	MD955630	2.4 (.094)	Blue	MD955634
1.7 (.067)	Brown	MD730930	2.5 (.098)	None	MD730934
1.8 (.071)	Blue	MD955631	2.6 (.102)	Brown	MD955635
1.9 (.075)	None	MD730931	2.7 (.106)	Blue	MD730935
2.0 (.079)	Brown	MD955632	2.8 (.110)	None	MD955636
2.1 (.083)	Blue	MD730932	2.9 (.114)	Brown	MD730936
2.2 (.087)	None	MD955633	3.0 (.118)	Blue	MD955637
2.3 (.091)	Brown	MD730933			

Snap ring (For, adjustment of end clutch clearance)

Thickness mm (in.)	Identification symbol	Part No.	Thickness mm (in.)	Identification symbol	Part No.
1.20 (.0472)	Purple	MD757421	1.65 (.0650)	Gray	MD757424
1.30(.0512)	Yellow	MD756034	1.80 (.0708)	Green	MD756036
1.40 (.0551)	Brown	MD758167	1.95 (.0768)	Red	MD757544
1.55 (.0610)	None	MD756035			

Snap ring (For adjustment of output flange bearing end play)

Thickness mm (in.)	Identification symbol	Part No.	Thickness mm (in.)	Identification symbol	Part No.
1.82 (.0717)	None	MD722538	2.00 (.0787)	None	MD721016
1.88 (.0740)	Blue	MD721014	2.06 (.0811)	Blue	MD721017
1.94 (.0764)	Brown	MD721015	2.12 (.0835)	Brown	MD722539

Spacer (For adjustment of transfer shaft preload)

Thickness mm (in.)	Identification symbol	Part No.	Thickness mm (in.)	Identification symbol	Part No.
1.20 (.0472)	20	MD723160	1.53 (.0602)	53	MD723171
1.23 (.0484)	23	MD723161	1.56 (.0614)	56	MD723172
1.26 (.0496)	26	MD723162	1.59 (.0626)	59	MD723173
1.29 (.0508)	29	MD723163	1.62 (.0638)	62	MD723174
1.32 (.0520)	32	MD723164	1.65 (.0650)	65	MD723175
1.35 (.0531)	35	MD723165	1.68 (.0661)	68	MD723176
1.38 (.0543)	38	MD723166	1.71 (.0673)	71	MD723177
1.41 (.0555)	41	MD723167	1.74 (.0685)	74	MD723178
1.44 (.0567)	44	MD723168	1.77 (.0697)	77	MD723179
1.47 (.0579)	47	MD727169	1.80 (.0709)	80	MD723180
1.50 (.0591)	50	MD723170			

Spacer (For adjustment of differential case preload)

Thickness mm (in.)	Identification symbol	Part No.	Thickness mm (in.)	Identification symbol	Part No.
1.10 (.0433)	J	MD710454	1.82 (.0717)	Z	MD710470
1.13 (.0445)	D	MD700270	1.85 (.0728)	H	MD700272
1.16 (.0457)	K	MD710455	1.88 (.0740)	AA	MD710471
1.19 (.0469)	L	MD710456	1.91 (.0752)	BB	MD715955
1.22 (.0480)	G	MD700271	1.94 (.0764)	cc	MD715956
1.25 (.0492)	M	MD710457	1.97 (.0776)	DD	MD715957
1.28 (.0504)	N	MD710458	2.00 (.0787)	EE	MD715958
1.31 (.0516)	E	MD706574	2.03 (.0799)	FF	MD715959
1.34 (.0528)	0	MD710459	2.06 (.0811)	GG	MD715960
1.37 (.0539)	P	MD710460	2.09 (.0823)	HH	MD715961
1.40 (.0551)	None	MD706573	2.12 (.0835)	II	MD715962
1.43 (.0563)	Q	MD710461	2.15 (.0846)	JJ	MD715963
1.46 (.0575)	R	MD710462	2.18 (.0858)	KK	MD715964
1.49 (.0587)	C	MD706572	2.21 (.0870)	LL	MD715965
1.52 (.0598)	S	MD710463	2.24 (.0882)	MM	MD715966
1.55 (.0610)	T	MD710464	2.27 (.0894)	NN	MD715967
1.58 (.0622)	B	MD706571	2.30 (.0906)	00	MD715968
1.61 (.0634)	U	MD710465	2.33 (.0917)	PP	MD715969
1.64 (.0646)	V	MD710466	2.36 (.0929)	QQ	MD715970
1.67 (.0657)	A	MD706570	2.39 (.0941)	R R	MD715971
1.70 (.0669)	W	MD710467	2.42 (.0953)	ss	MD722734
.73 (.0681)	X	MD710468	2.45 (.0965)	l-r	MD722735
.76 (.0693)	F	MD706575	2.48 (.0976)	uu	MD722736
.79 (.0705)	Y	MD710469			

Spacer (For adjustment of differential pinion backlash)

Thickness mm (in.)	Identification symbol	Part No.	Thickness mm (in.)	Identification symbol	Part No.
0.75–0.82 (.0295 – .0323)	–	MD722986	1.01– 1.08 (.0398 – .0425)	–	MD722982
0.83–0.92 (.0327 – .0362)	–	MD722985	1.09–1.16 (.0429 – .0457)	–	MD722983
0.93– 1.00 (.0366 – .0394)	–	MD722984			

TORQUE SPECIFICATIONS

Items	Nm	ft.lbs.
Bearing retainer bolts	20	15
Converter housing bolts	21	16
Detent plate mounting bolt	1 1	8
Differential drive gear bolts	135	98
Drain plug	33	24.
End clutch cover bolts	7	6
End cover bolts	5	4
Idler shaft lock plate bolt	54	40
Kickdown servo lock nut	29	21
Manual control lever nut	19	14
Manual control shaft set screw	9	7
Oil filter bolts	6	5
Oil pan bolts	1 1	8
Oil pump assembly mounting bolts	21	16
One-way clutch outer race lock plate bolts	40	29
Park/neutral position switch bolts	11	8
Pressure check plug	9	7
Pulse generator bolts	11	8
Pump housing to reaction shaft support bolts	11	8
Solenoid valve mounting bolts	5	4
Speedometer sleeve locking plate bolt	4	3
Sprag rod support bolts	2 4	18
Transfer shaft lock nut	215	156
Valve body assembly mounting bolts	11	8
Valve body bolts	5	4

SPECIAL TOOLS

23300060050

Tool	Tool number and name	Supersession	Application
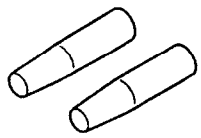	MD998266 Guide pins	MD998266-01	Alignment of intermediate plate and valve body
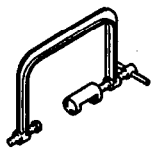	MD998303 Valve spring compressor	MD998341-01	Installation and removal of kickdown servo
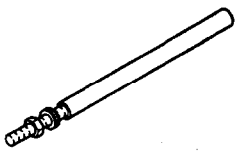	MD998316 Dial gauge support	MIT209038	Measurement of low-reverse brake end play
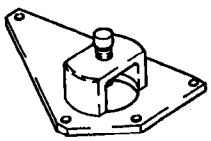	MD998319 Transfer shaft retainer	MD998319-01	Installation of transfer shaft rear bearing and gear
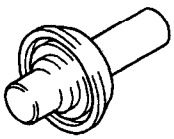	MD998325 Differential oil seal installer	MD998325-01	Installation of differential oil seal
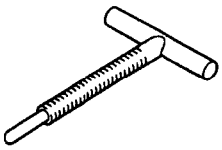	MD998333 Oil pump remover	MD998333-01	Removal of oil pump
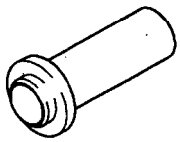	MD998334 Oil seal installer	MD998334-01	Installation of oil pump oil seal
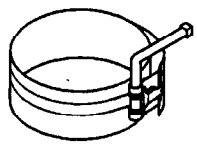	MD998335 Oil pump band	MD998335-01	Installation of oil pump

Tool	Tool number and name	Super-session	Application
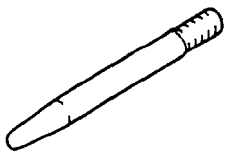	MD998336 Guide pin	MD998336-01	Alignment of oil pump housing and reaction shaft support
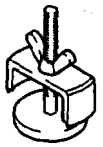	MD998337 Spring compressor	MD998337-01	Use with MD998338, MD998907
	MD998338 Spring compressor	MD998338	Disassembly of rear clutch
	MD998341 Kickdown servo adapter set	MD998341-01	Removal and installation of kickdown servo
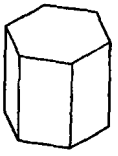	MD998344 Wrench adapter "B"	MD998344-01	Removal and installation of transfer idler shaft
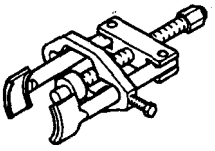	MD998348 Bearing puller	MD998348-01	Removal of bearing
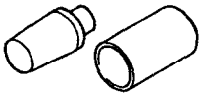	MD998367 Snap ring installer	MD998367-01	Assembly of the end clutch
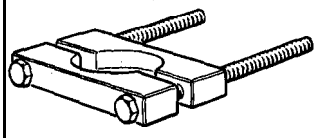	MD998801 Bearing remover	MD998348-01	Removal of bearing
	MD998812 Installer cap	General service tool	Use with installer and installer adapter

Tool	Tool number and name	Supersession	Application
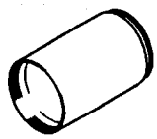	MD998813 Installer-100	General service tool	Use with installer cap and installer adapter
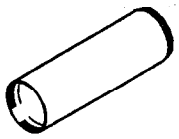	MD998814 Installer-200	MIT304180	Use with installer cap and installer adapter
	MD998818 Installer adapter (38)	–	Installation of each bearing
	MD998819 Installer adapter (40)	–	Installation of each bearing
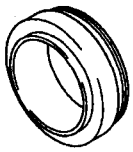	MD998824 Installer adapter (50)		
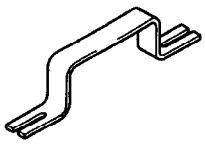	MD998905 Handle	MD998905-01	Removal and installation of center support
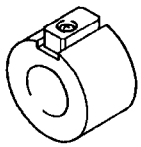	MD998906 Wrench adapter	MD998906-01	Preload measurement of transfer idler shaft
	MD998907 Spring compressor	MD998907-01	Disassembly and reassembly of front clutch
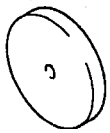	MD998908 Bearing installer	MD998908-01	Press-in of transfer shaft rear bearing

Tool	Tool number and name	Supersession	Application
	MD998910 Bearing installer	MD998910-01	Press-in of transfer shaft rear bearing
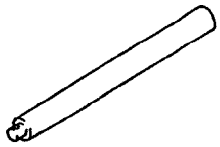	MD998912 Handle	General service tool	Press-in of transfer shaft rear bearing
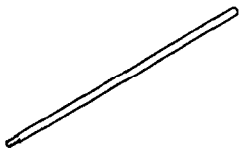	MD998913 Dial gauge extension	MD998913-01	Measurement of low-reverse brake end play
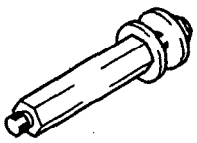	MD998915 Kickdown servo wrench adapter	MD998915-01	Adjustment of kickdown servo
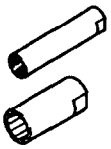	MD998916 Kickdown servo adjust wrench set	MD998916-01	Adjustment of kickdown servo
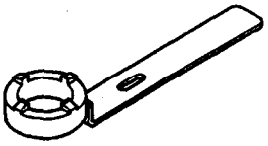	MD998918 Kickdown servo wrench	MD998918	

TRANSAXLE

DISASSEMBLY AND REASSEMBLY

23300100134

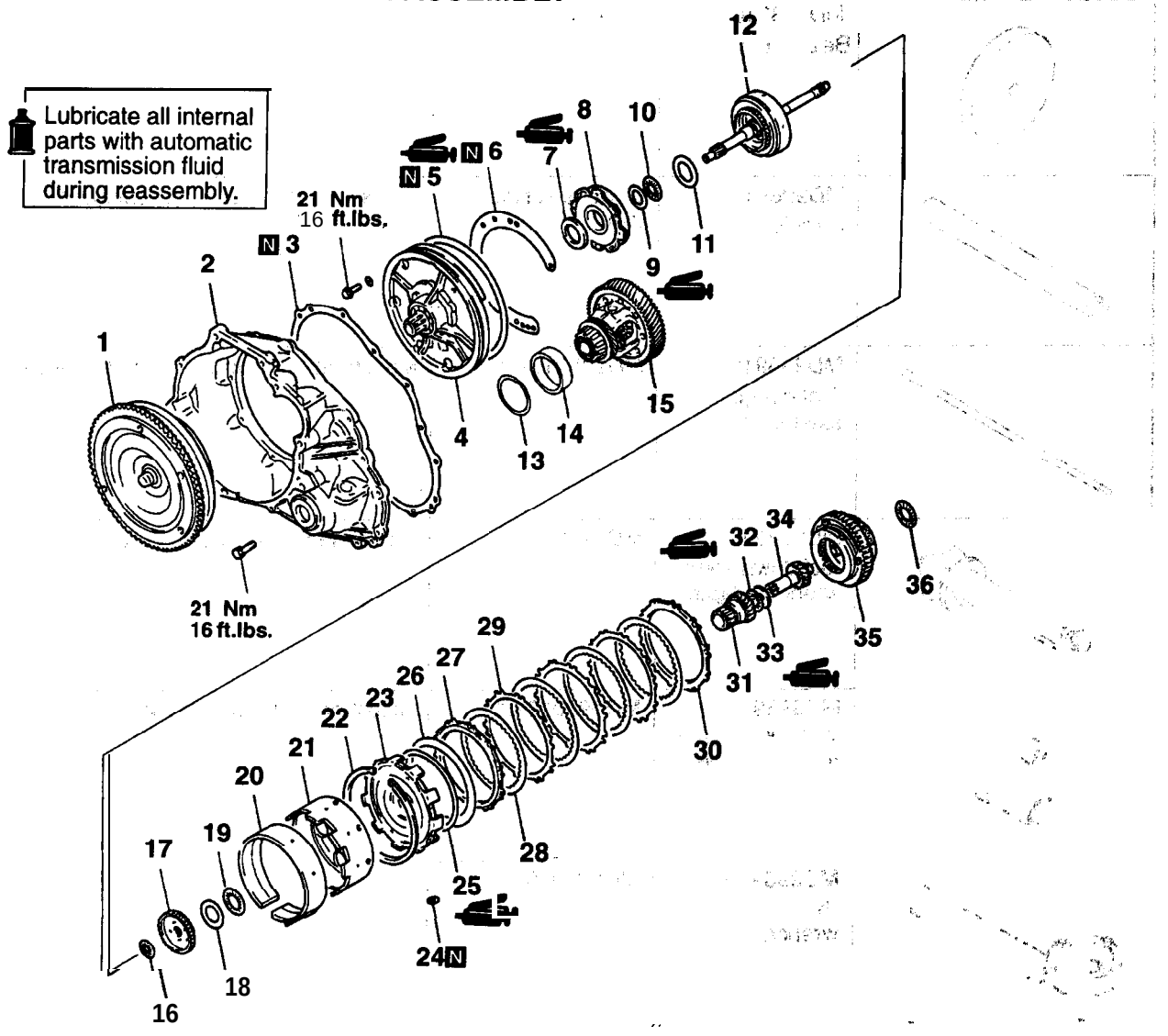

1. Torque converter
2. Converter housing
3. Gasket
4. Oil pump
5. O-ring
6. Gasket
7. Thrust washer #1
6. Front clutch assembly
9. Thrust race #3
10. Thrust bearing #4
11. Thrust washer #2
12. Rear clutch assembly
13. Spacer
14. Outer race
15. Differential
16. Thrust bearing #6
17. Clutch hub
18. Thrust race #7
19. Thrust bearing #8
20. Kickdown band
21. Kickdown drum
22. Snap ring
23. Center support
24. O-ring
25. Wave spring
26. Return spring
27. Pressure plate
28. Brake disc
29. Brake plate
30. Reaction plate
31. Reverse sun gear
32. Thrust bearing #9
33. Thrust race #10
34. Forward sun gear
35. Planetary carrier
36. Thrust bearing #12

TSB Revision

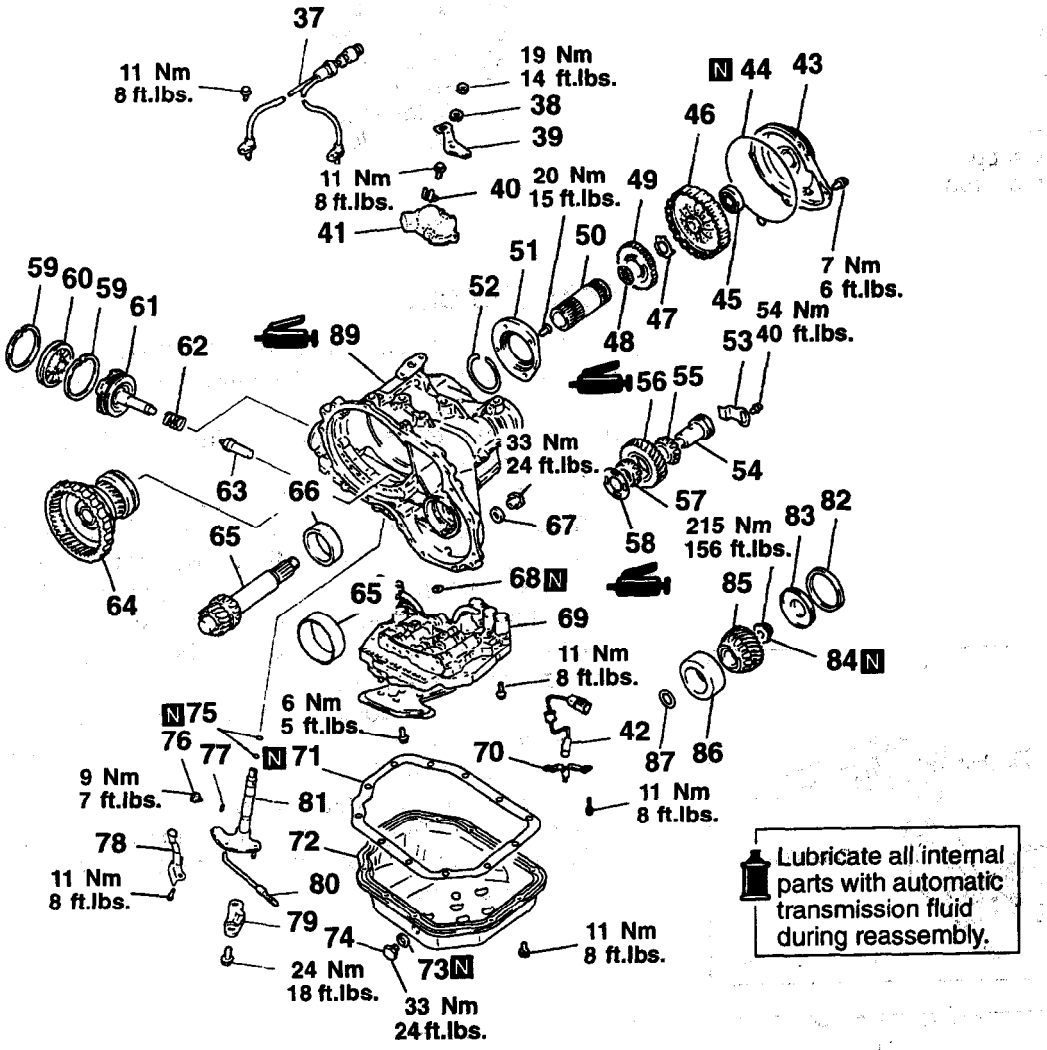

37. Pulse generator
38. Spring washer
39. Control lever
40. Clamp
41. Park/neutral position switch
42 Oil temperature sensor
43 End clutch cover
44: O-ring
45. Bearing
46. End clutch
47. Thrust washer
48. End clutch hub
49. Thrust bearing #13
50. End clutch shaft
51. Bearing retainer
52. Snap ring
53. Lock plate
54. Idler gear shaft
55. Bearing inner race'
56. Idler gear
57. Bearing inner race
58. Spacer
59. Snap ring
60. Kickdown servo switch
61. Kickdown servo piston
62. Spring
63. Anchor rod
64. Output flange
65. Transfer shaft
66. Outer race
67. Gasket
68. O-ring
69. Valve body

70. Clamp
71. Gasket
72. Oil pan
73. Gasket
74. Drain plug
75. O-ring
76. Set screw
77. O-ring
78. Detent plate
79. Sprag rod support
80. Parking sprag rod
81. Control shaft
82. D-ring
83. Transfer shaft cover
84. Lock nut
85. Driven gear
86. Outer race
87. Spacer
88. Outer race
89. Transaxle case

DISASSEMBLY

(1) Prior to disassembling the transaxle, plug all openings and thoroughly clean the exterior of the, assembly, preferably by steam.
(2) Place the transmission on the 'workbench with the oil pan down.
(3) Remove the torque converter.
(4) Measuring input shaft end play before disassembly will usually indicate when a thrust washer change is required (except when major parts are replaced). Thrust washers are located between the reaction shaft support and rear clutch retainer, and between the reaction shaft support and front clutch 'retainer.
Mount a dial indicator to the converter housing using the special tool, with its plunger seated against the end of the input shaft.
Move the input shaft in and out with pliers to obtain the end play reading. Be careful not to scratch the input shaft. Record the indicator reading for reference when reassembling the transaxle.

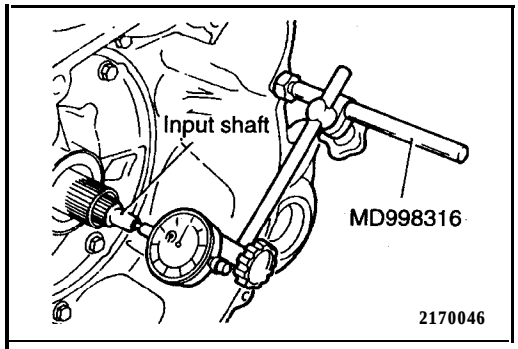

(5) Remove pulse generators "A" and "B".

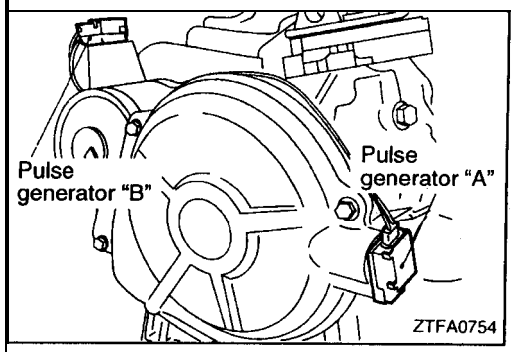

(6) Remove the manual control lever, and then remove the park/neutral position switch.

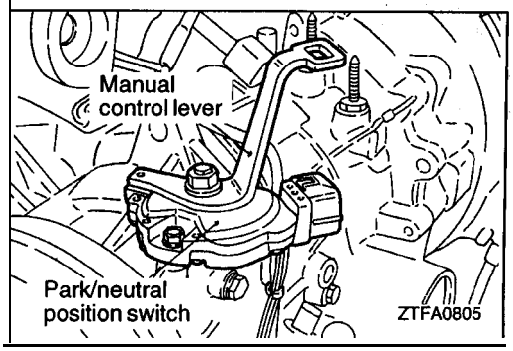

TSB Revision

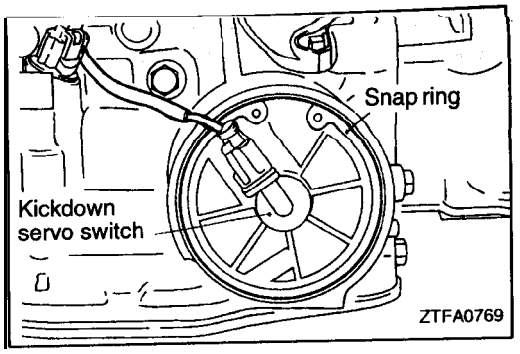

(7) Snap off the snap ring and remove the kickdown servo switch.

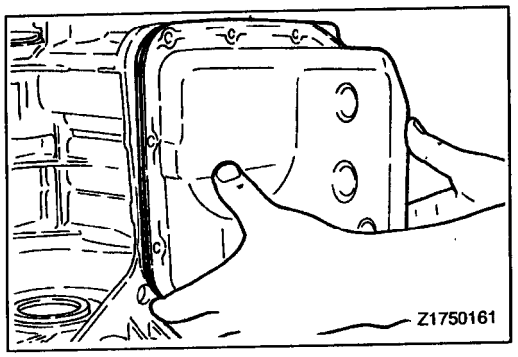

(8) Remove the oil pan and oil pan gasket.

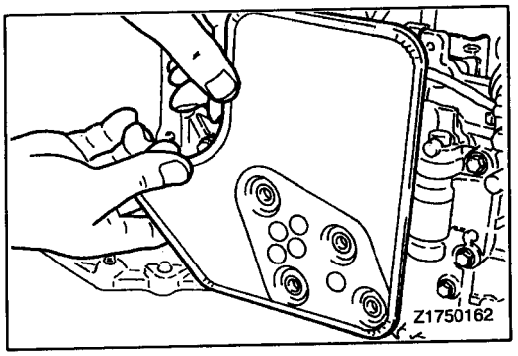

(9) Remove the oil filter.

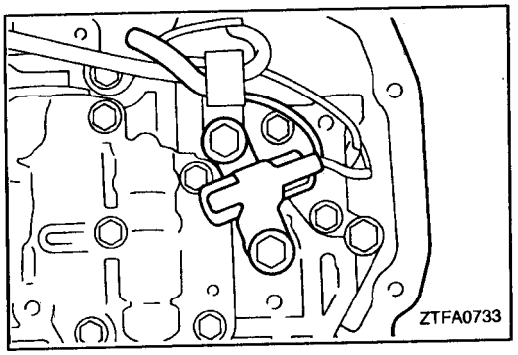

(10) Remove the oil temperature sensor bracket. mounting bolts'and remove the oil temperature sensor from its bracket. Using a screwdriver, push out the rubber plug, working from inside the case, and remove the oil temperature sensor from the case.

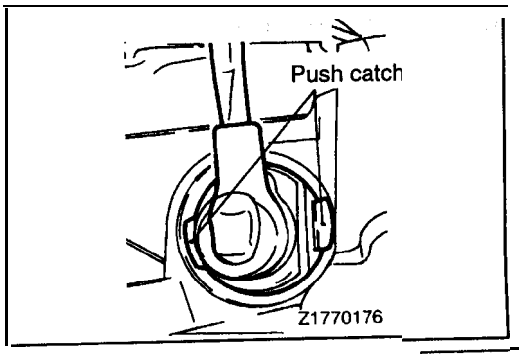

(11) With their catches pressed down, force the harness grommet and connector into the transaxle case:,

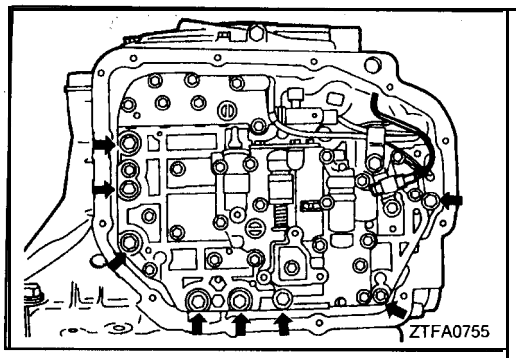

(12) Remove the valve body mounting bolts indicated by arrows aiid remove the valve. body from the transaxle case.

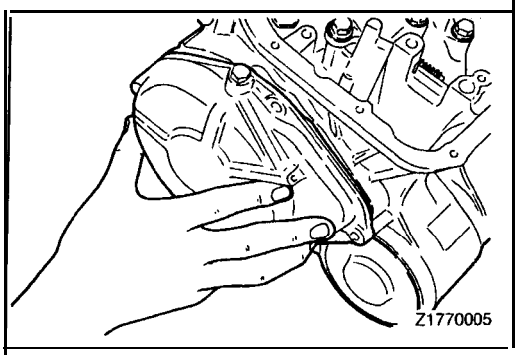

(13) Remove the end clutch cover.

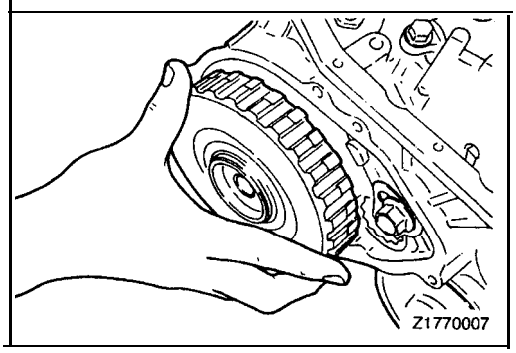

(14) Remove the end clutch assembly.

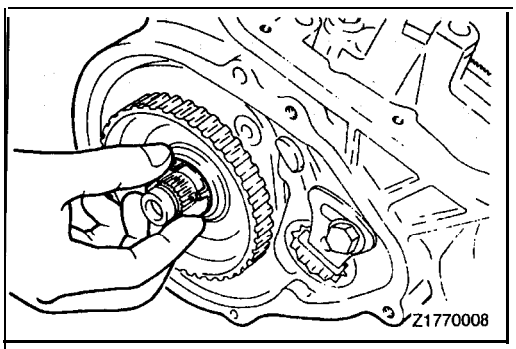

(15) Remove the thrust washer from the input shaft end.

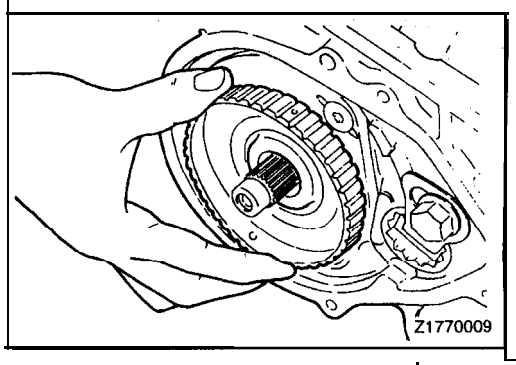

(16) Remove the end clutch hub and the thrust bearing.

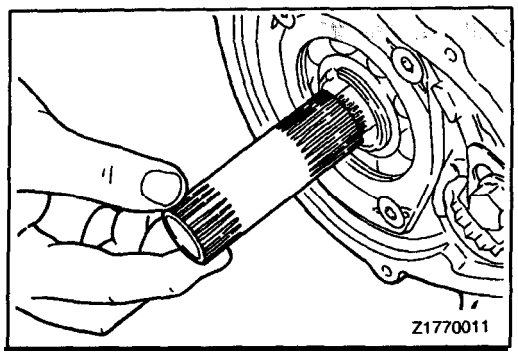

(17) Pull out the end clutch shaft.

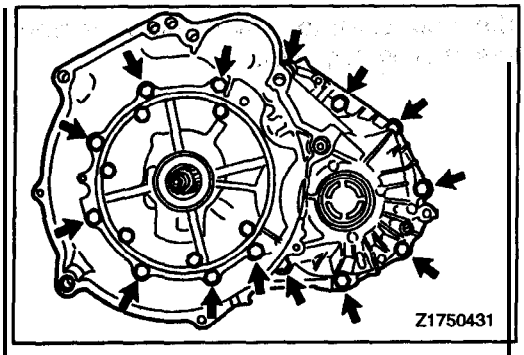

(18) Remove the 14 bolts indicated by arrows and remove the converter housing and gasket.

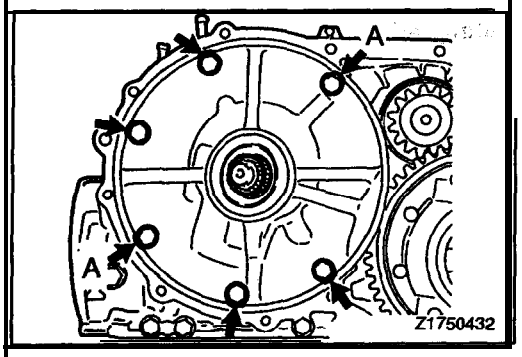

(19) Remove the six oil pump mounting bolts indicated by arrows.

(20) Screw the special tools (MD998333) into the bolt holes marked A.

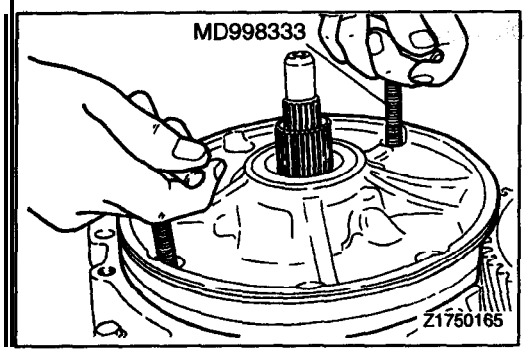

(21) Grasping the special tools, remove the oil pump. Then, remove the gasket.

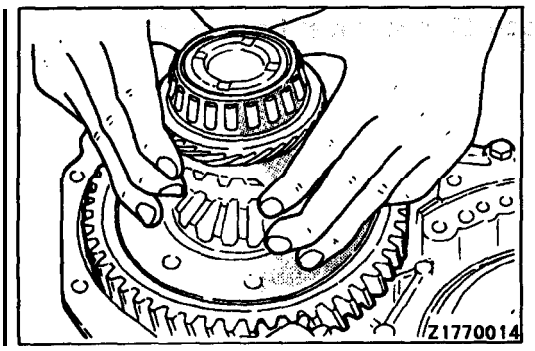

(22) Remove the spacer and differential from the transaxle case.

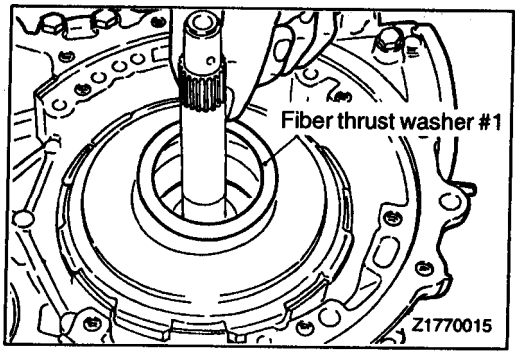

(23) **Remove** fiber thrust washer **#1.**

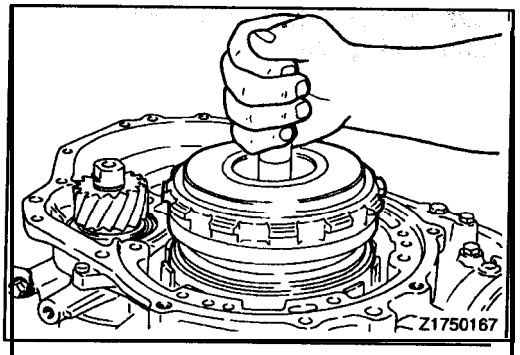

(24) **Grasp and raise the** input shaft to, remove **both** the **front** and **rear** clutch assemblies **together.**

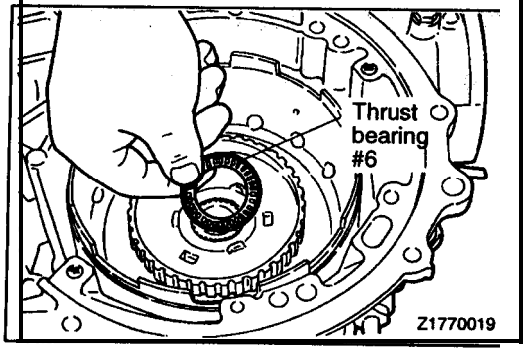

(25) Remove thrust **bearing #6.**

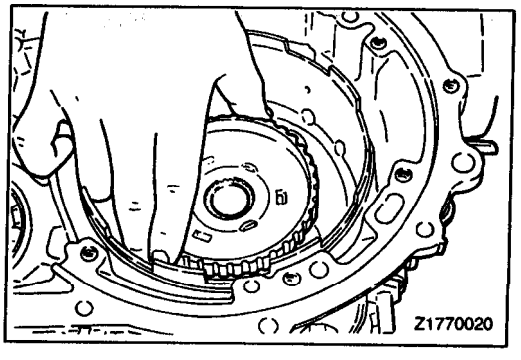

(26) **Remove** the clutch hub.

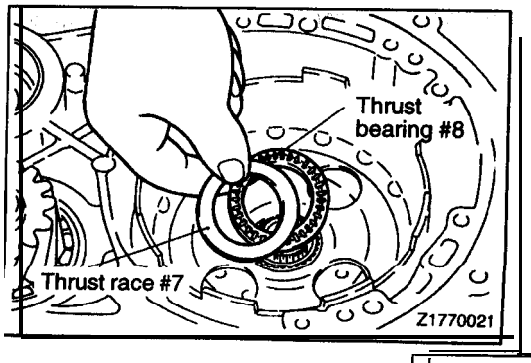

(27) **Remove thrust** race **#7** and thrust **bearing #8.**

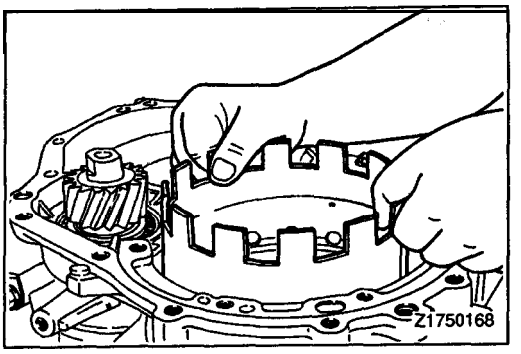

(28) Remove the kickdown drum.

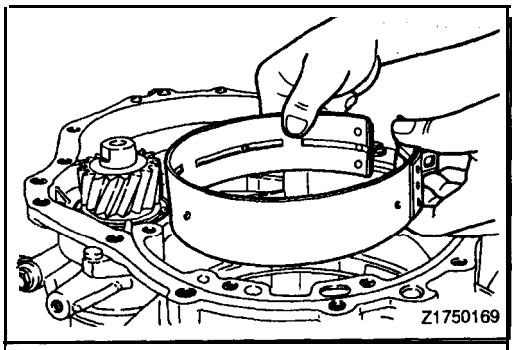

(29) Remove the kickdown band.

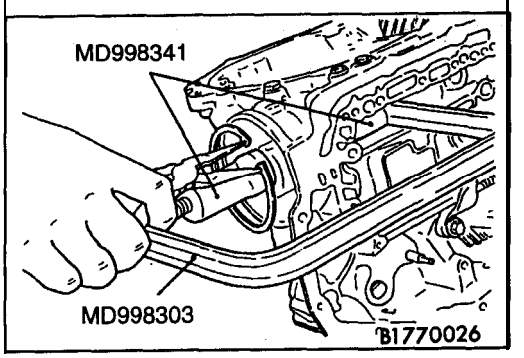

(30) Using the special tools;' push in the kickdown servo and remove the snap ring.

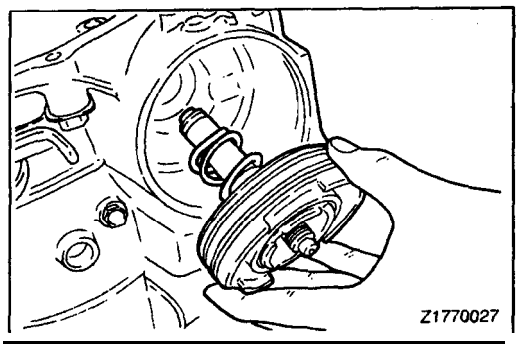

(31) Remove the special tools and then remove the kickdown servo piston, sleeve and spring.

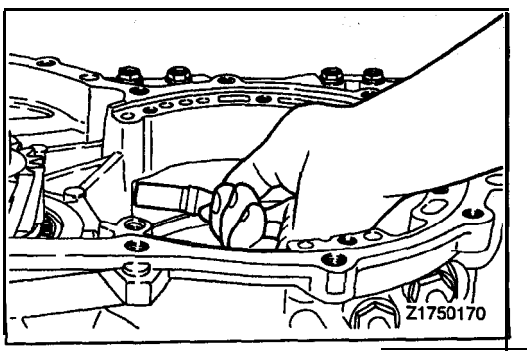

(32) Remove the anchor rod.

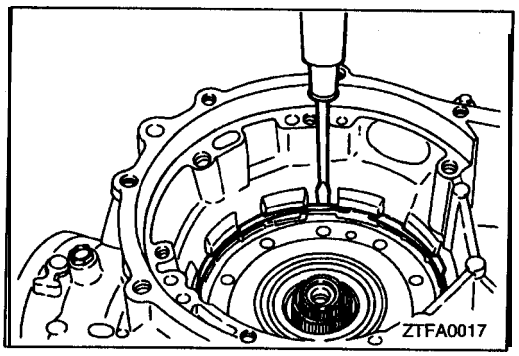

(33) **Remove** the snap ring.

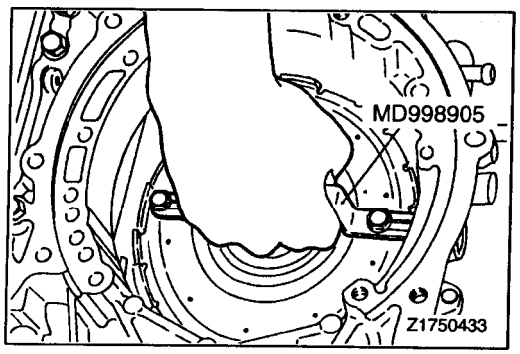

(34) **Set** the special tool on the center support and remove the center support from the case.

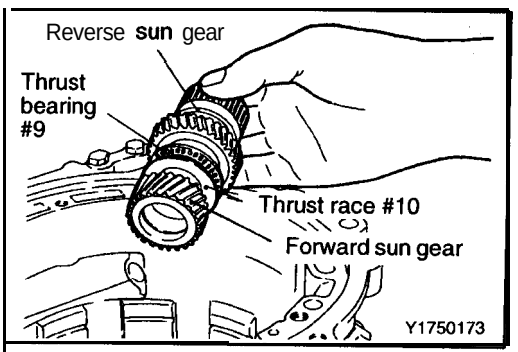

(35) **Remove** reverse sun gear, thrust bearing **#9,** thrust race **#10** and forward sun gear together."

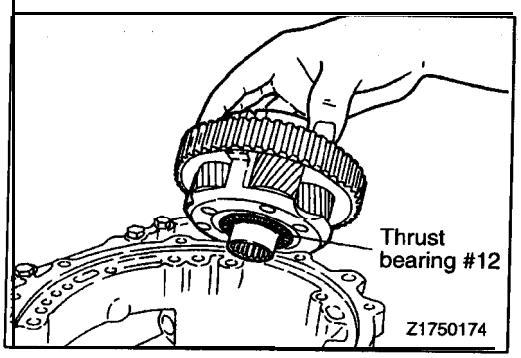

(36) **Remove** the **planetary** gear set and thrust bearing **#12.**

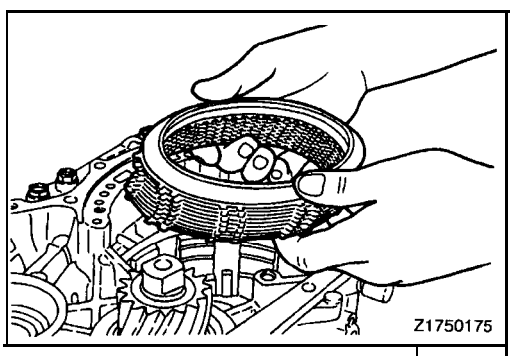

(37) **Remove** the wave spring, return spring, reaction plate, brake discs, and brake plates.

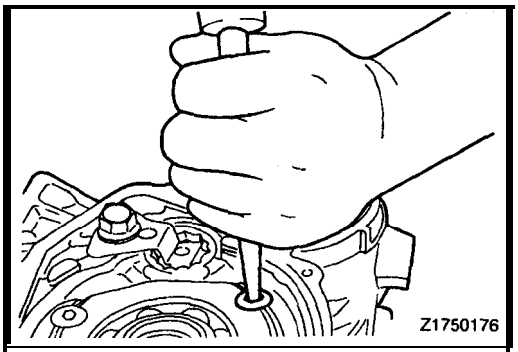

(38) Sealant has been applied to the threads of the screws on the bearing retainer. Tap the screw heads so the screws can be easily loosened.

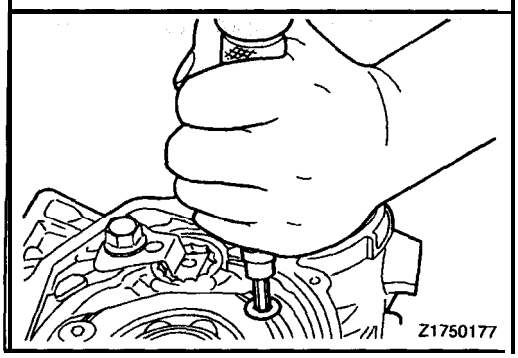

(39) Using an impact driver, loosen the screws and remove the bearing retained

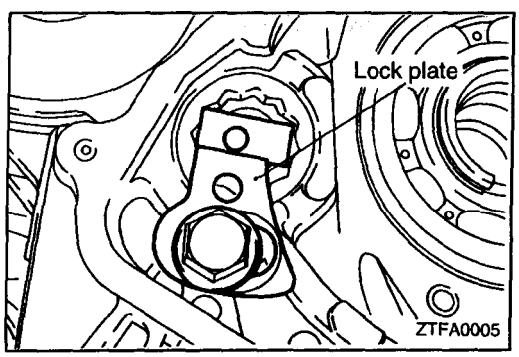

(40) Remove the idler shaft lock plate.

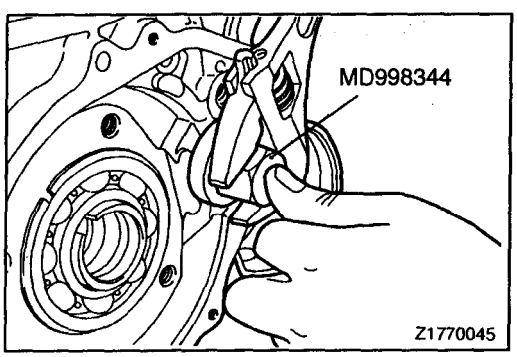

(41) Loosen the transfer idler shaft with the special tool.

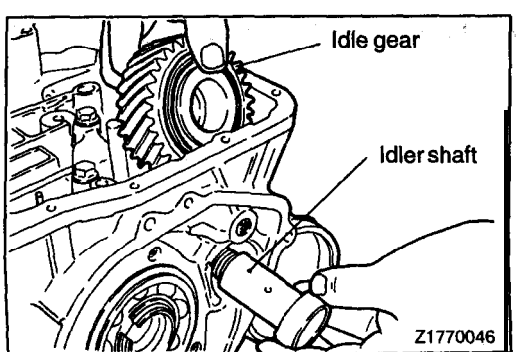

(42) Pull out the transfer idler shaft. Remove the transfer idle gear and the two bearing inner races from inside the; case.

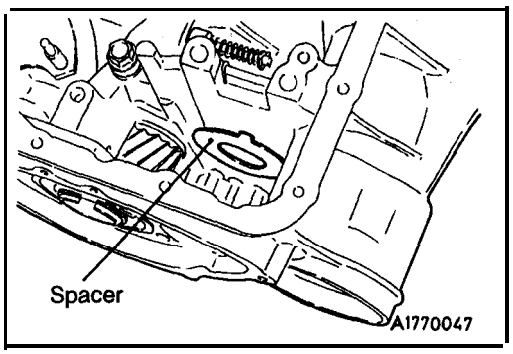

(43) Remove the spacer.

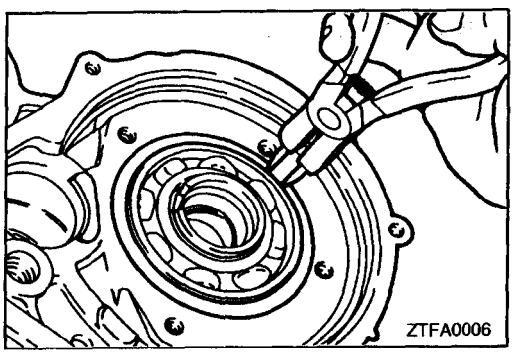

(44) Remove the snap ring from the output flange bearing.

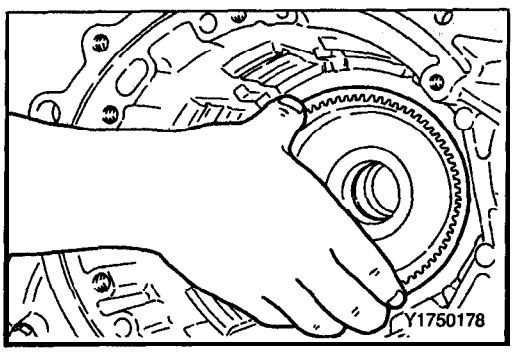

(45) Remove the output flange from the case.

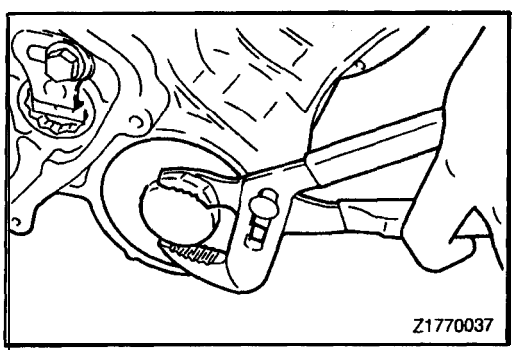

(46) Remove the transfer shaft cover.

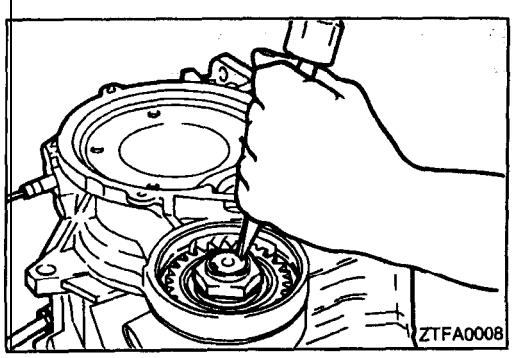

(47) Straighten the locking tab of the transfer shaft lock nut, where it is bent.

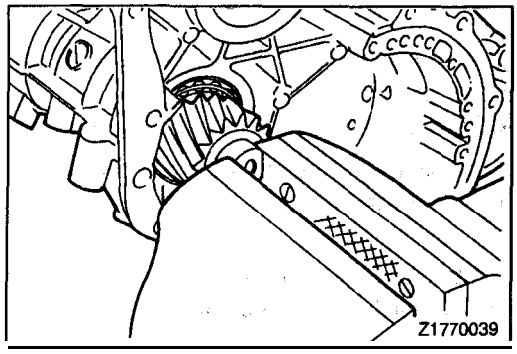

(48) **Secure** the transfer shaft 'on the end of the converter housing.

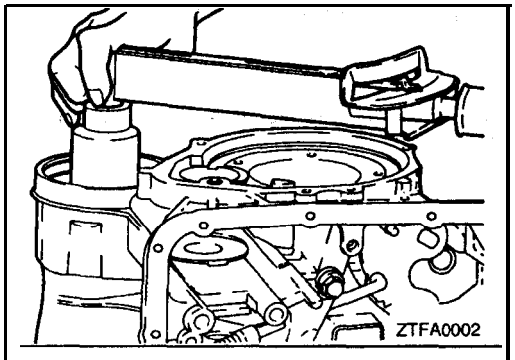

(49) **Remove** the lock nut.

Caution
The lock nut is a left-handed screw.

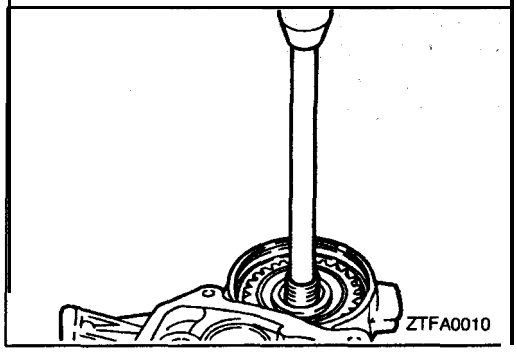

(50) **Drive** out the transfer shaft toward the converter housing end and remove the transfer shaft and transfer driven gear.

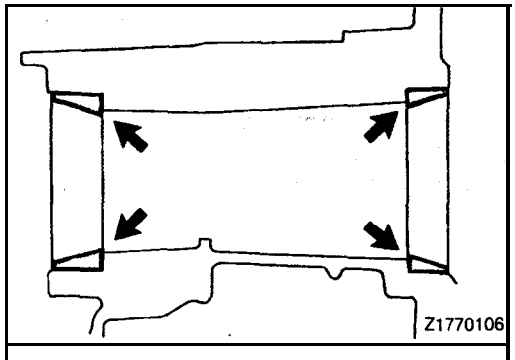

(51) **Remove** the outer races from the transfer shaft bearing.

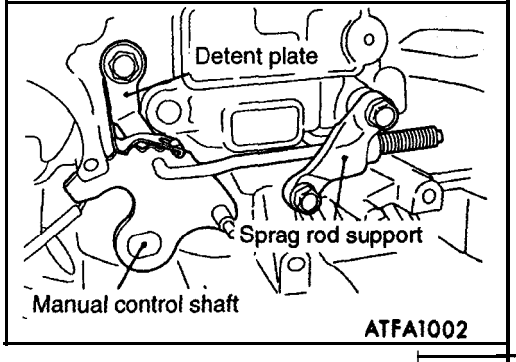

(52) **Remove** the set screw, sprag rod and remove the manual control shaft assembly, detent plate.

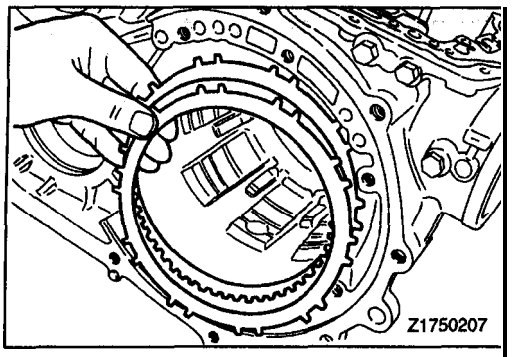

REASSEMBLY

(1) Before reassembling the transaxle, measure the end play in the low-reverse brake and select a pressure plate to obtain the specified end play. Use the following procedure.

(a) Install the brake reaction plate, brake plate, and brake disc in the transaxle. case.

Caution
Blow off automatic transmission fluid from the plates and discs with low-pressure compressed air.

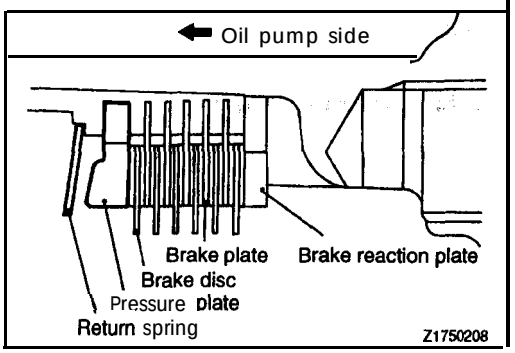

(b) Install the appropriate pressure plate and mount the return spring.

Caution
Make sure that the return spring is mounted in the correct direction.

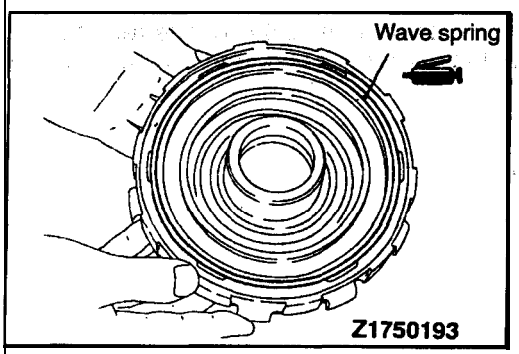

(c) Apply petrolatum jelly to the.. wave spring and attach the wave spring on the center support.

(d) Install the two O-rings removed during disassembly and coat them with automatic transmission fluid.

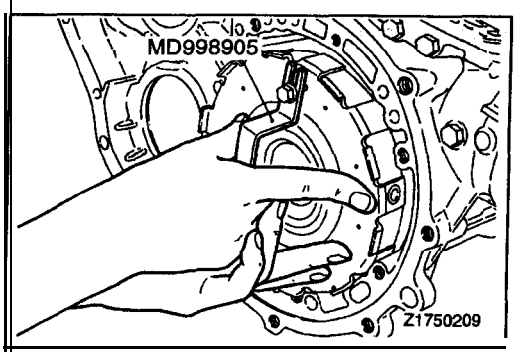

(e) Attach the special tool to the center support and install the support in the transaxle case.

Caution
1. **Install the center support,' taking care that the waved spring is not out of position.**
2. **Install the two O-rings in alignment with the oil holes provided in the transaxle case.**

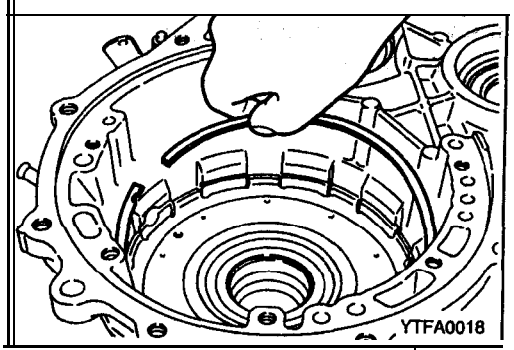

(9 Remove the special tool.

(g) Install the snap ring.

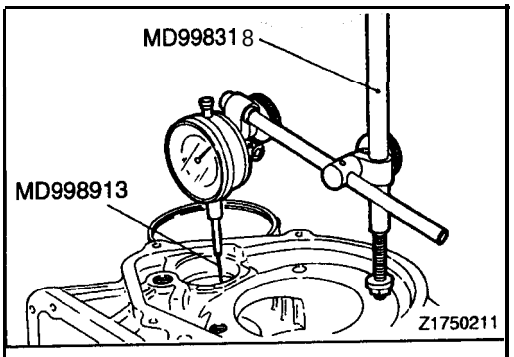

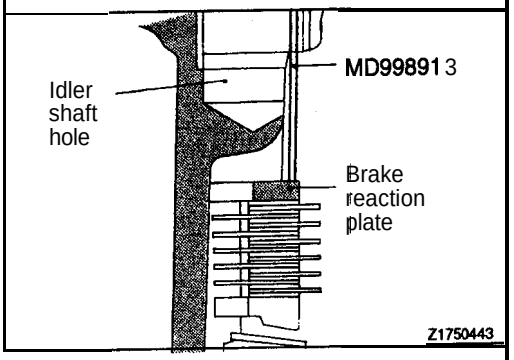

(h) Mount the special tool and 'dial indicator on the rear side of the transaxle case.
Make sure that the dial indicator rod (MD998913-01) is inserted into the transfer idler shaft hole, contacting the brake reaction plate at a right angle.

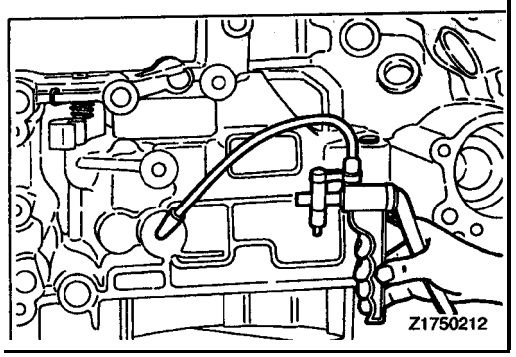

(i) Using 'a hand pump, feed air through the location shown and, at the same time, read the dial indicator and select a pressure plate to obtain the specified end play.

Standard value: 1.0–1.2 mm (.039–.047 in.)

(j) After a pressure plate of the appropriate thickness has been selected; remove all the mounted parts.

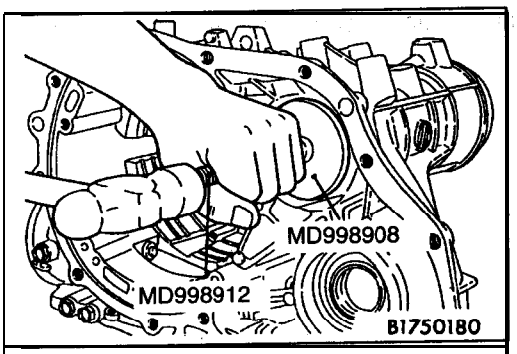

(2) Using a special tools, drive the transfer shaft bearing' outer races into position.

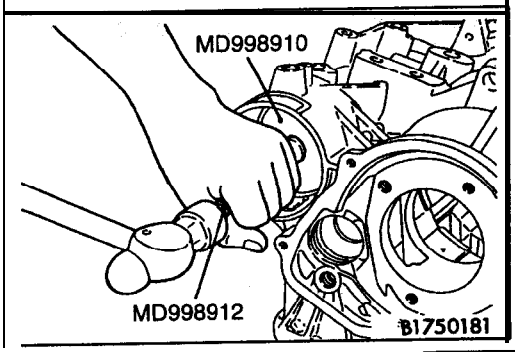

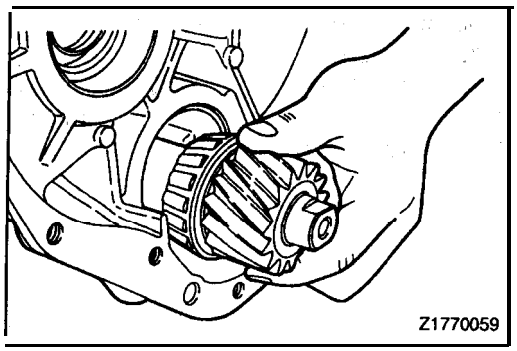

(3) Insert the transfer shaft in the case.

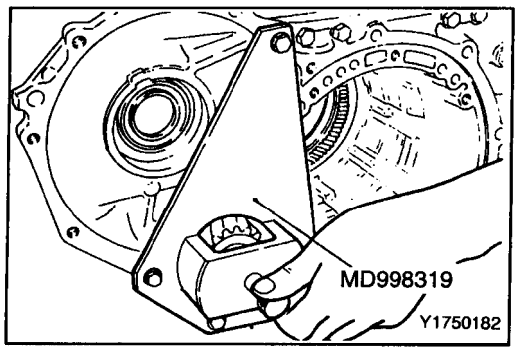

(4) Mount the special tool on the transaxle case to support the transfer shaft.

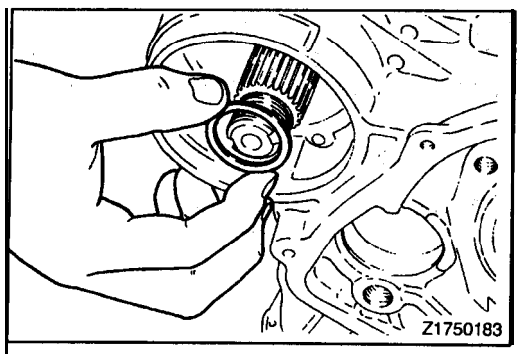

(5) Install the thickest spacer [1.80 mm (.0709 in.)].

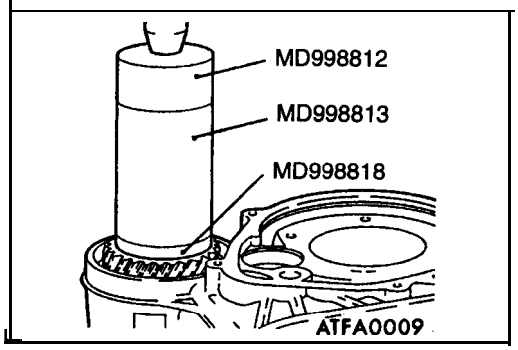

(8) Install the transfer driven gear on the transfer shaft.

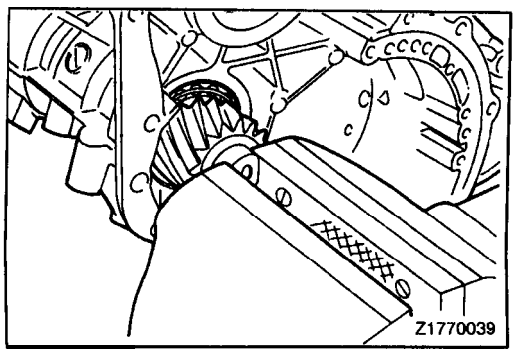

(7) Remove the special tool and secure the transfer shaft in position.

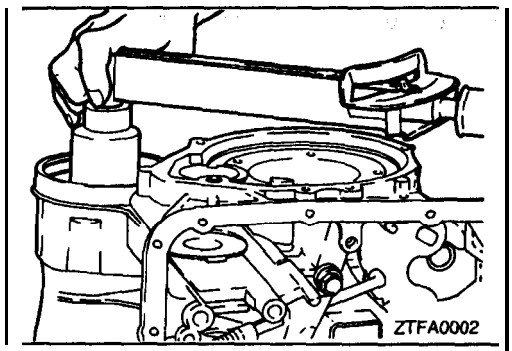

(8) Put on the lock nut and tighten it to the specified torque.

Caution
The lock nut is a left-handed screw.

Tightening torque: 215 Nm (156 ft.lbs.)

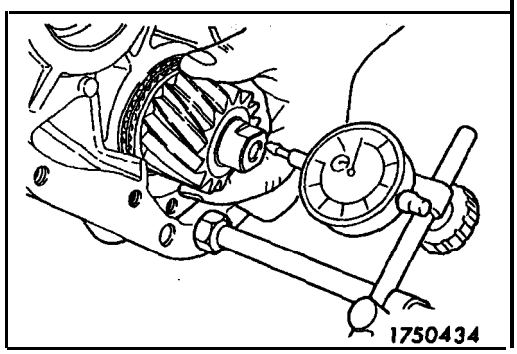

(9) Measure the end play while sliding the transfer shaft 'in- and out, and select a spacer. to obtain the specified end play.

Standard value: 0–0.025 mm (0–.00098 in.)

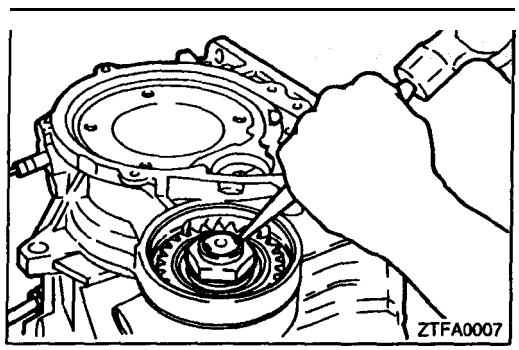

(IO)Bend the locking tab of the lock nut.

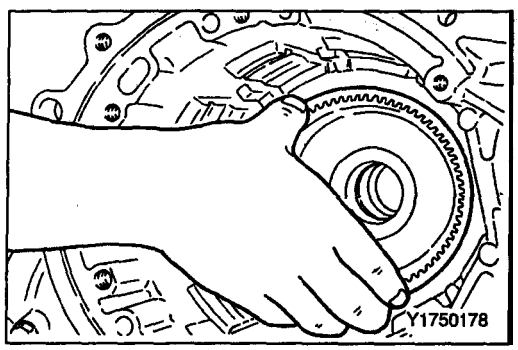

(11) Place the transaxle case on the workbench with the oil pan mounting surface up.

(12)Insert the output flange in position (with two ball bearings and transfer drive gear attached) from the inside of the transaxle case.

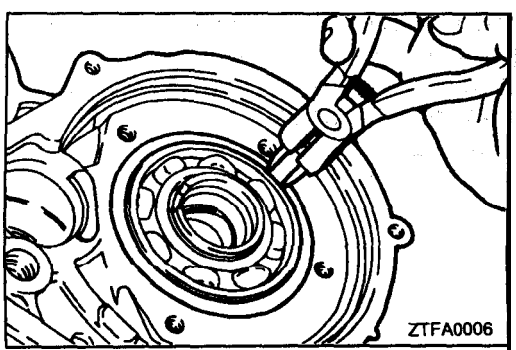

(13)Install the snap ring in the groove of the output flange bearing.

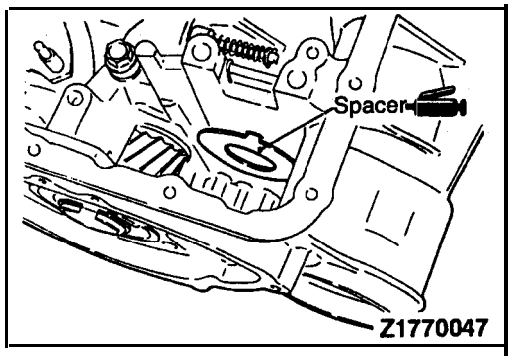

(14) Apply petrolatum jelly to the spacer and attach the spacer to the case.

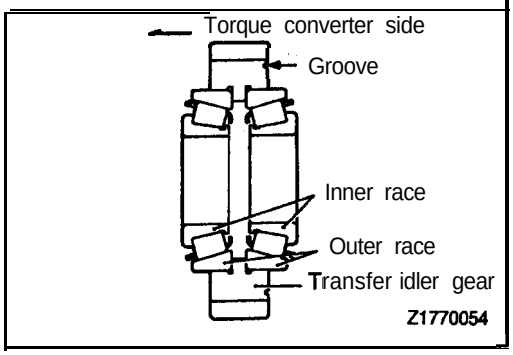

(15) Install the bearing outer race and inner races in the transfer idler gear.

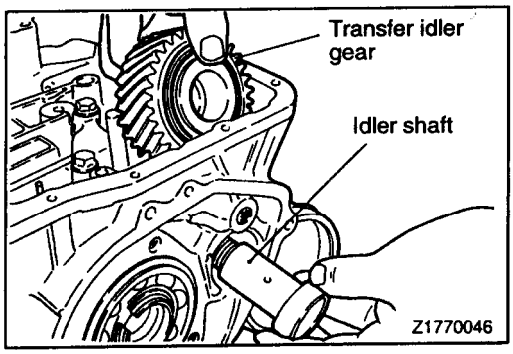

(16) Place the transfer idler gear in the case, and insert and screw the idler shaft into position.

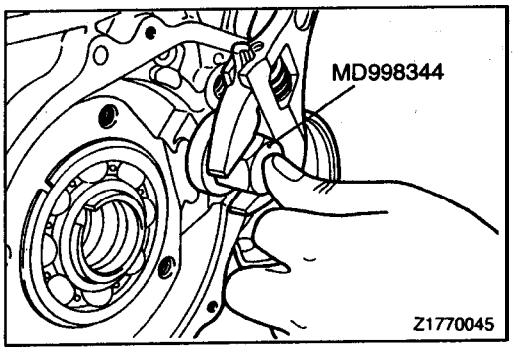

(17) Screw in and tighten the idler shaft by using the special tool.

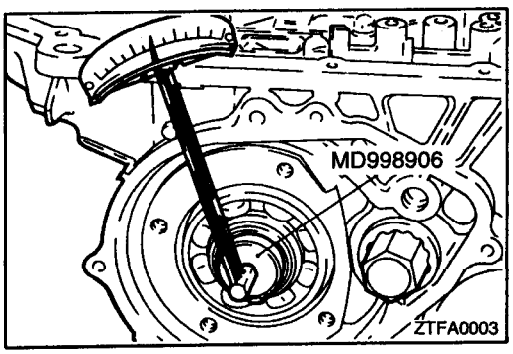

(18) Insert the special tool into the output flange and measure the preload using. a low reading torque wrench. Adjust the preload to the standard,,. value by tightening or loosening the transfer idler shaft.

Standard value: 1.5 Nm (1.1 ft.lbs.)

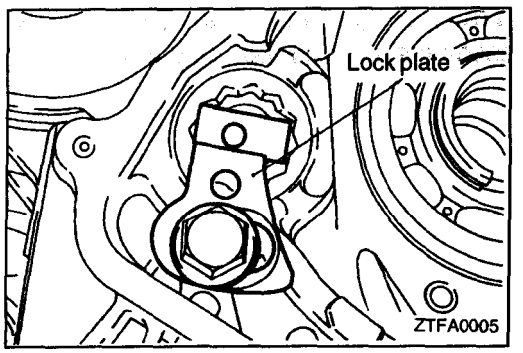

(19) After completing the preload adjustment, install the idler shaft lock plate. The clearance between the idler shaft and the lock plate should be closed in the direction that will prevent idler shaft looseness, and then tighten the lock plate bolt to the specified torque.

Tightening torque: 54 Nm (40 ft.lbs.)

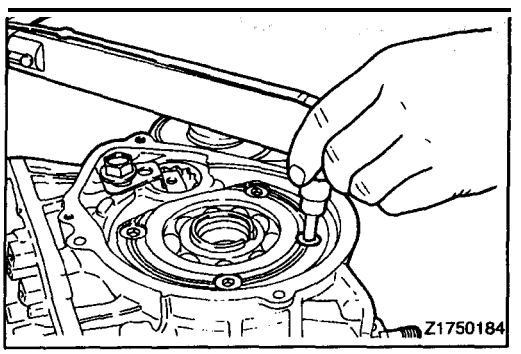

(20) Install the bearing retainer.

(21) Tighten the screw to the specified torque.

Caution
The screw should not be reused.

Tightening torque; 20 Nm (15 ft.lbs.)

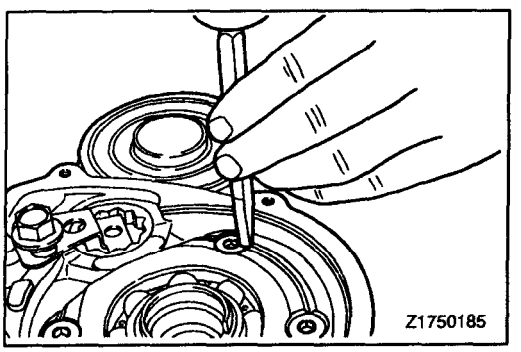

(22) Lock the screw head in place using a chisel.

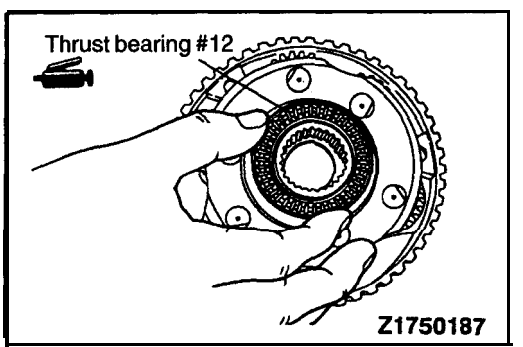

(23) Apply petrolatum jelly to thrust bearing #12 and secure the bearing on the planetary carrier.

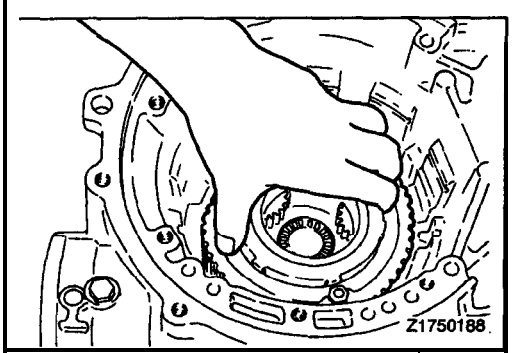

(24) Mount the planetary carrier on the case.

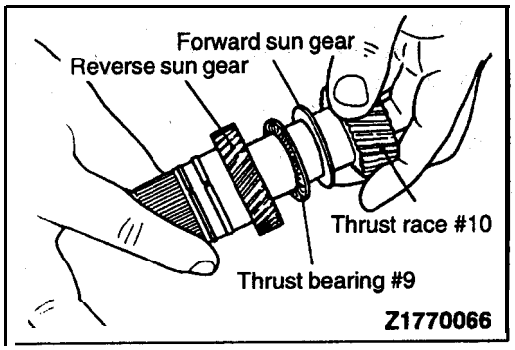

(25) Attach thrust race #10 and thrust bearing #9 to the forward sun gear. Then, assemble, the reverse sun gear.

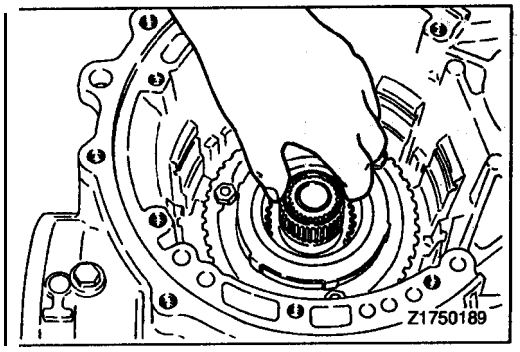

(26) Install the sun gear assembly assembled in step (25) in the planetary carrier.

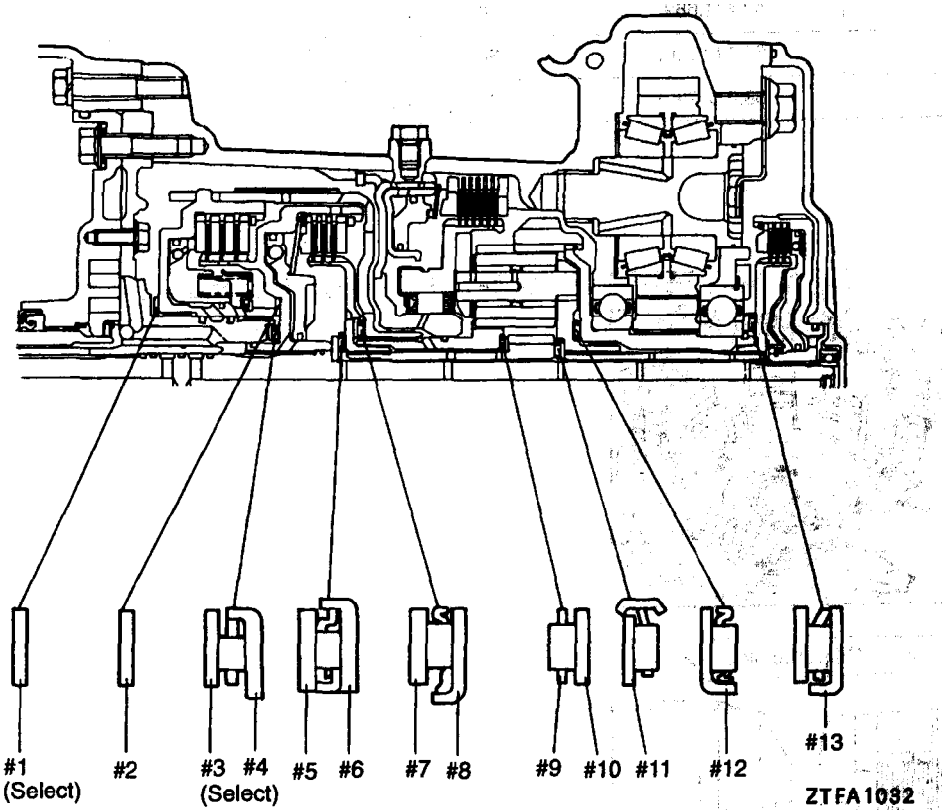

IDENTIFICATION OF THRUST BEARINGS, THRUST RACES, AND THRUST WASHERS

mm (in.)

identification marking	O.D.	I.D.	Thickness	Part No.
#1	70.0 (2.756)	55.7 (2.193)	1.4 (.055) 1.8 (.071) 2.2 (0.87) 2.6 (.102)	*1 *2 *3 *4
#2	70.0 (2.756)	55.7 (2.193)	1.8 (.071)	MD729336
#3	48.9 (1.925)	37.0 (1.457)	1.0 (.039) 1.2 (.047) 1.4 (.055) 1.6 (.063) 1.8 (.071) 2.0 (.079) 2.2 (.087) 2.4 (.094)	MD997854 (incl.*1) MD997847 (incl.*1) MD997848 (incl.*2) MD997849 (incl.*2) MD997850 (incl.*3) MD997851 (incl.*3) MD997852 (incl.*4) MD997853 (incl.*4)
#4	46.1 (1.906)	34.4 (1.354)	—	MD707271
#5	40.0 (1.575)	21.0 (.827)	1.8 (.071)	MD7207751
#6	42.6 (1.677)	28.0 (1.102)	—	MD720753
#7	54.0 (2.126)	38.7 (1.524)	1.6 (.063)	MD704936
#8	52.0 (2.047)	38.4 (1 .433)	—	MD720010

TSB Revision

Identification marking	O.D.	I.D.	Thickness	Part No.
#9	41.0 (1.614)	28.0 (1.102)	—	MD728763
#10	39.0 (1.535)	28.0 (1.102)	1.2 (.047)	MD728764
#11	42.4 (1.669)	22.2 (.874)	—	MD722797
#12	54.0 (2.126)	36.4 (1.433)	—	MD719846
#13	58.0 (2.283)	44.0 (1.732)	—	MD724206

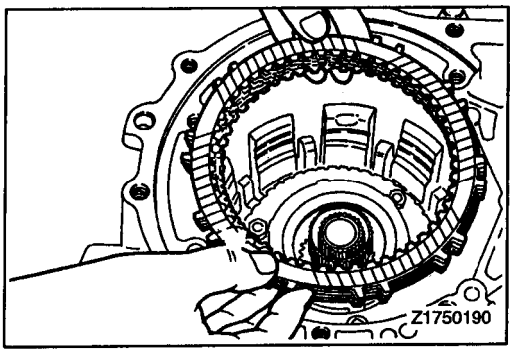

(27) Put the brake disc and brake plate in position.

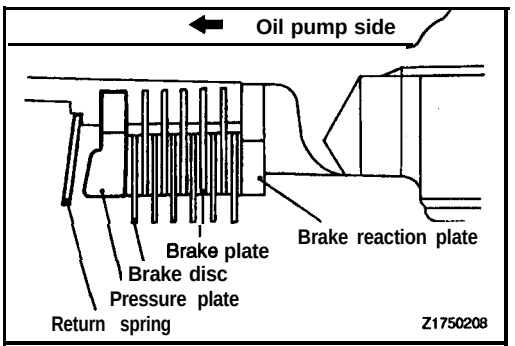

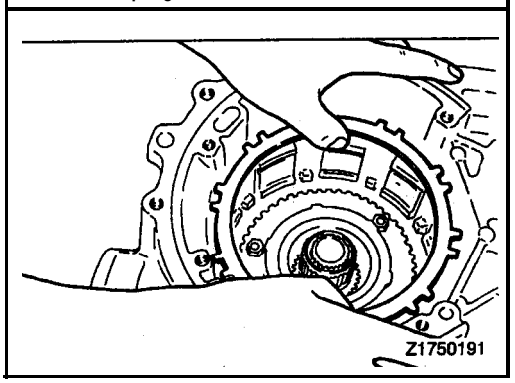

(28) Install the pressure plate which was selected in Step (1).

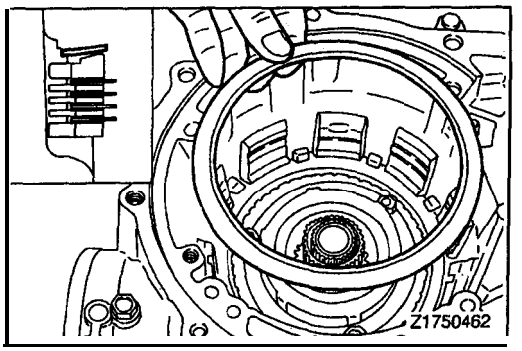

(29) Install the return spring.

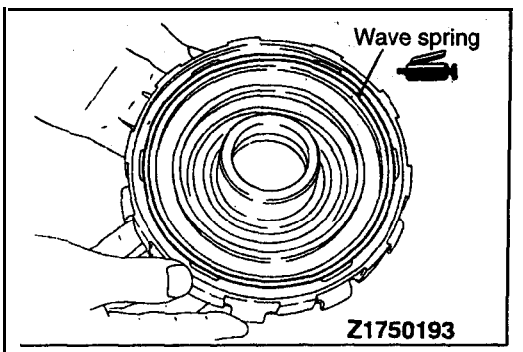

(30) Apply petrolatum jelly to the wave spring and attach the wave spring to the center support.

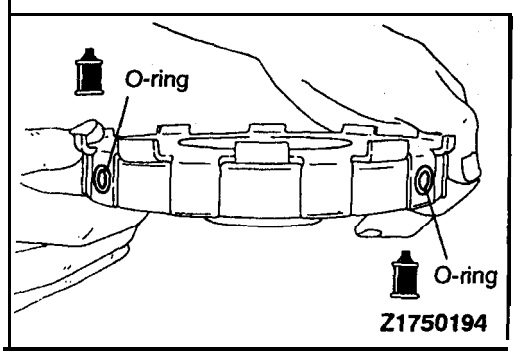

(31) Install the two new O-rings on the hydraulic pressure holes of the center suppdrt.
Apply automatic transmission fluid to the O-rings;

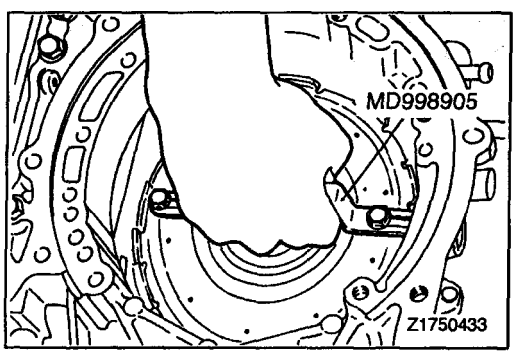

(32) Attach the special tool to the center support. 'Install the center support slowly in the transaxle case, grasping the special tool.

Caution

1. **During installation, take' care not to let the wave spring drop which was applied in Step (30).**
2. **Install the two O-rings in alignment with the oil holes provided En. the transaxle case.**

(33) Remove the special tool from the center support.

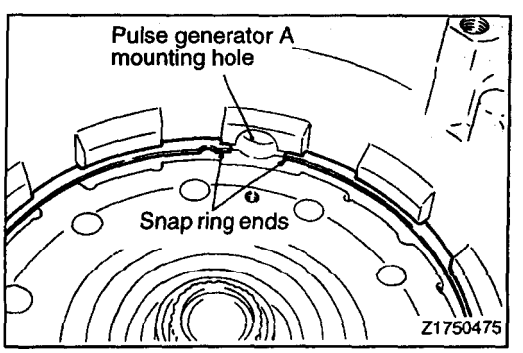

(34) Install the snap ring to secure the center support. The snap ring ends should not interfere with the pulse generator mounting hole.

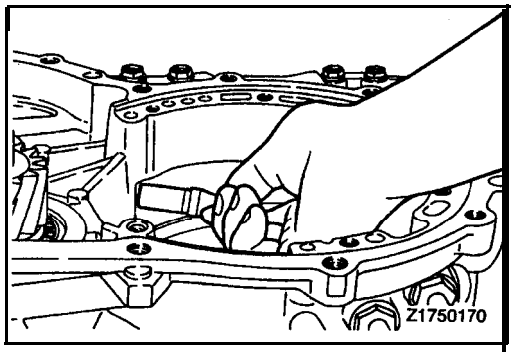

(35) Install the anchor rod in the transaxle case.

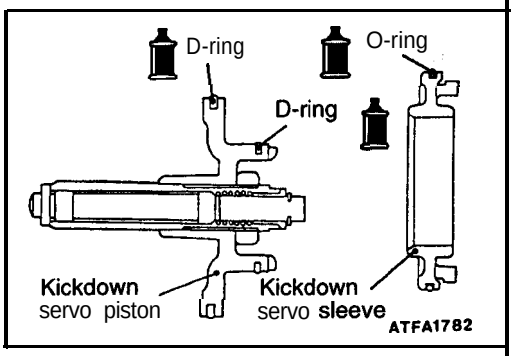

(36) Install a new teflon seal ring and a new D-ring in the grooves of the kickdown servo piston, and apply automatic transmission fluid to the rings.

(37) Install a new O-ring to the groove of kickdown servo sleeve, and apply automatic transmission fluid to the ring.

(38) Assemble the kickdown servo piston with the sleeve.

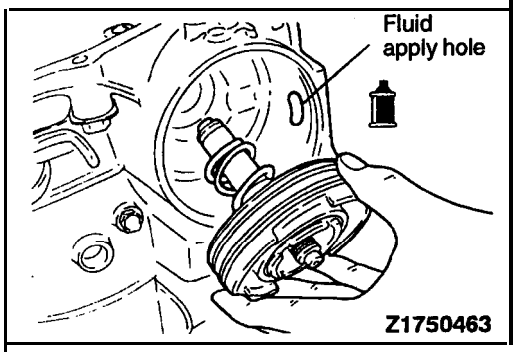

(39) Put the spring on the kickdown servo piston and sleeve assembly, and insert them together in the transaxle case, making sure that the end gap of the teflon seal ring of the kickdown servo piston does not interfere with, the fluid apply hole provided in the servo bore of the transaxle case.

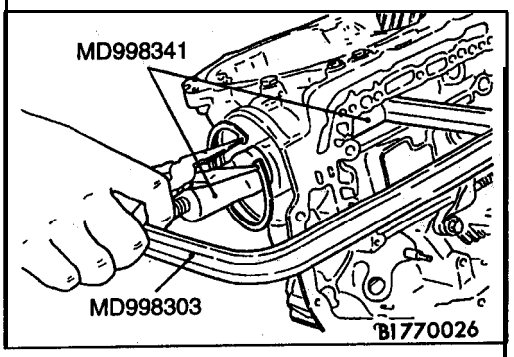

(40) Using the special tools, push in the kickdown servo piston and sleeve assembly, and then install the snap ring.

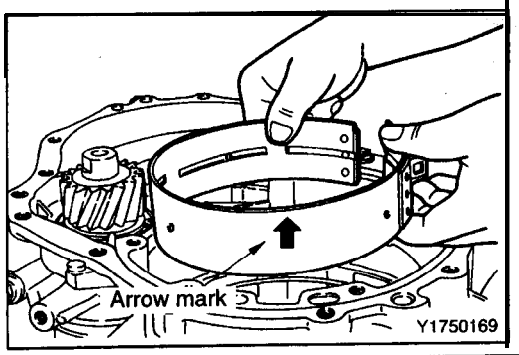

(41) Install the kickdown band; attach the. ends of the band to the ends of the anchor rod and servo piston rod.

NOTE
Install the band with the arrow mark 'facing toward oil pump.

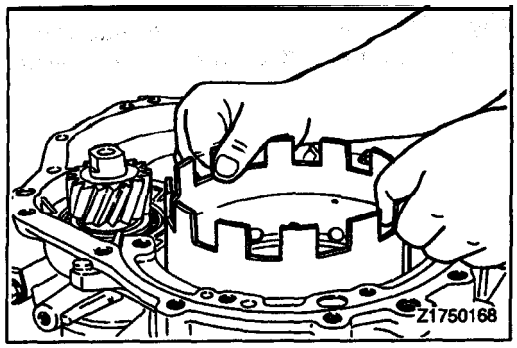

(42) When putting the kickdown drum in "the kickdown band, engage the splines of the kickdown drum with those of the reverse sun gear. Place the kickdown band on the kickdown drum and tighten the kickdown servo adjusting screw to keep the band in position.

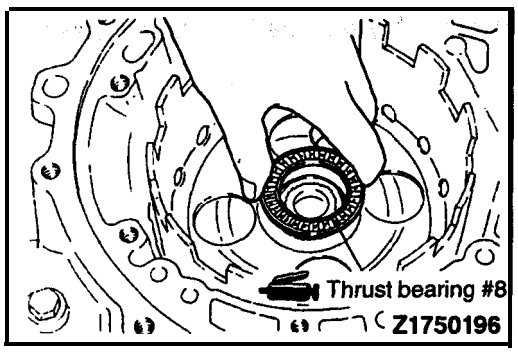

(43) Apply petrolatum jetty to thrust bearing #8 and attach the thrust bearing to the kickdown drum.

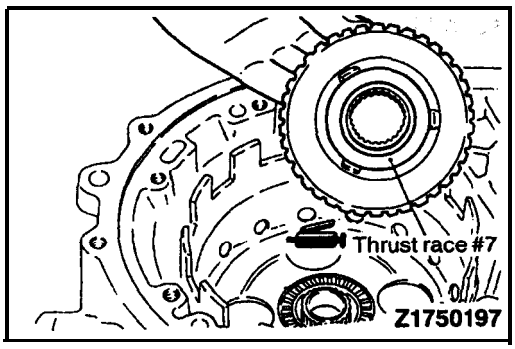

(44) Apply petrolatum jelly to 'thrust race #7 and attach the thrust race to the rear clutch hub.

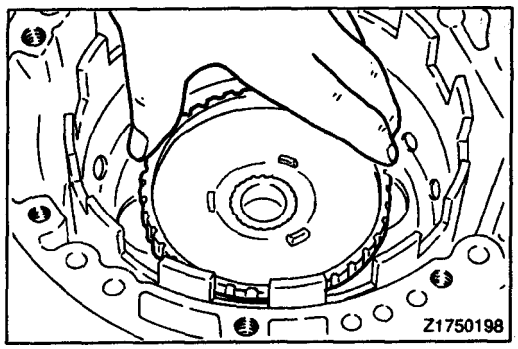

(45) Install clutch hub, engaging it with the forward sun gear splines.

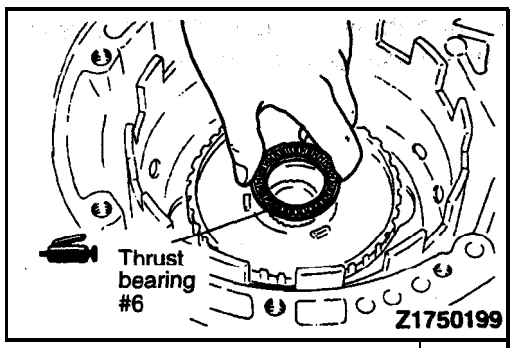

(46) Apply petrotatum jelly to thrust bearing #6 and attach it to the clutch hub.

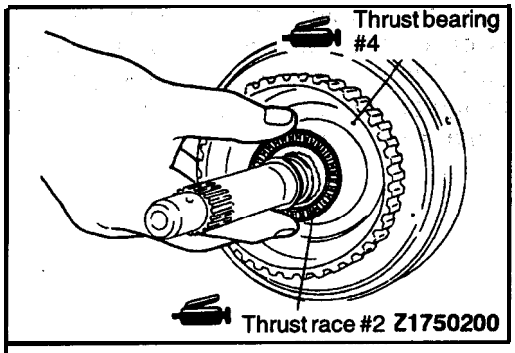

(47) Apply petrolatum jelly to thrust washer #2 and thrust bearing #4 and attach the washer and bearing to the rear clutch assembly.

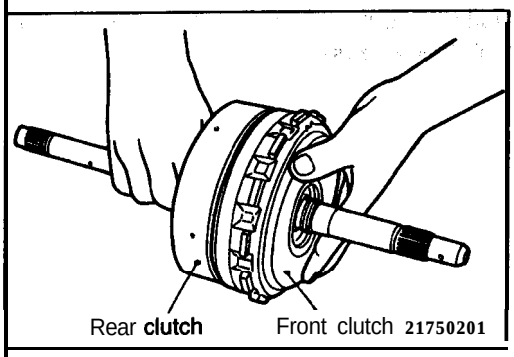

(48) Mate the rear clutch assembly with the front clutch assembly.

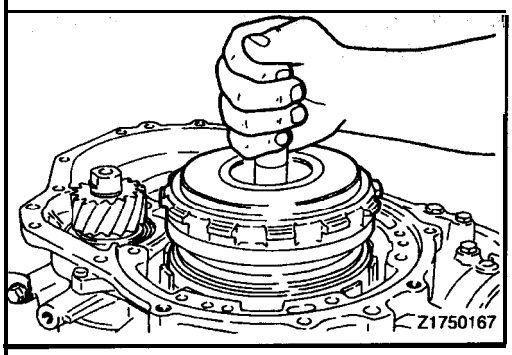

(49) Install the clutch assembly.

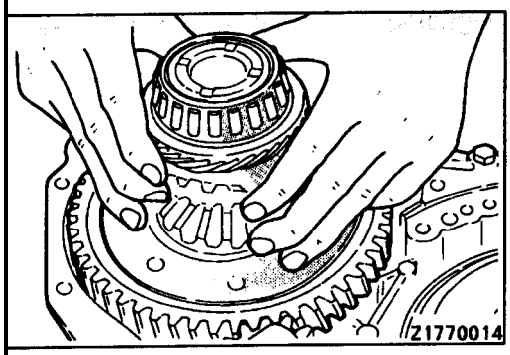

(50) Install the differential.

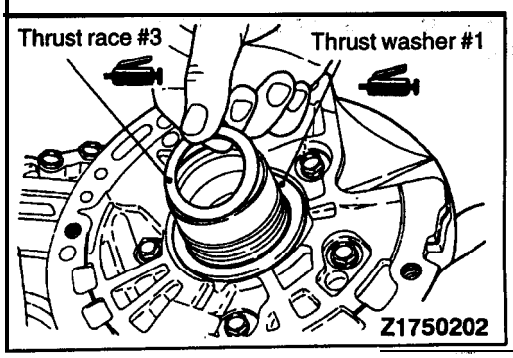

(51) Attach thrust race #3 and thrust washer #1 on the rear end face of the oil pump with petrolatum jelly.

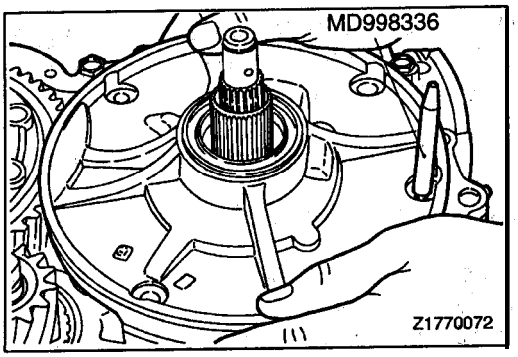

(52) Install the special tool 'on the transaxle case. Using the, special. tool as a guide, install a new oil pump gasket and the oil pump in the case.
(53) Remove the special tool.
(54) Tighten the oil pump bolts to the specified torque.

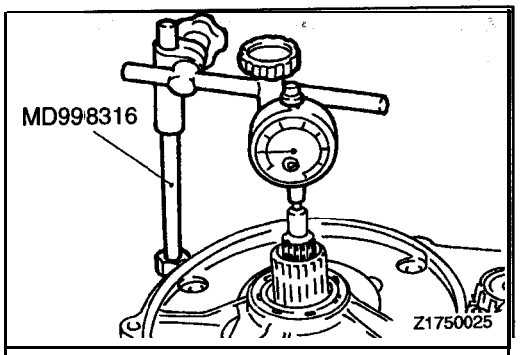

(55) Measure the end play of the input shaft. If the measurement is out of the standard value, replace thrust race #3 and thrust washer #1 to meet the standard value.

Standard value: 0.3–1.0 mm (.012–.039 in.)

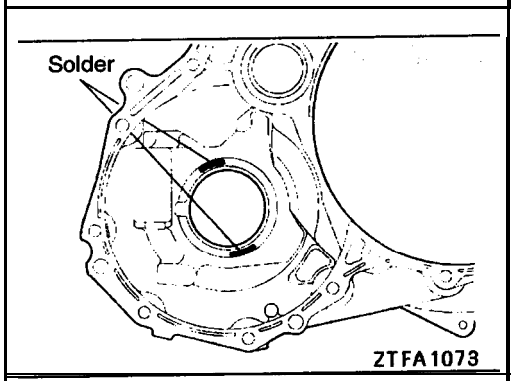

(56) Place two pieces of approx. 10-mm (.39 in.) long and 2.5-mm (.063 in.) dia. solder at the locations shown on the converter housing and assemble the outer race.

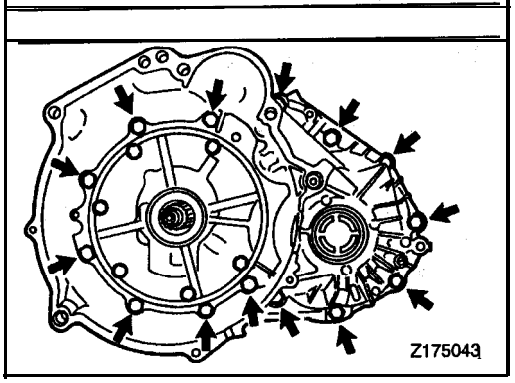

(57) Install the converter housing directly to the-transaxle case, without installing the rubber coatedmetal gasket.
(58) Tighten the bolts to the specification.
(59) Loosen the bolts and remove the converter housing and remove the pieces of flattened solder.

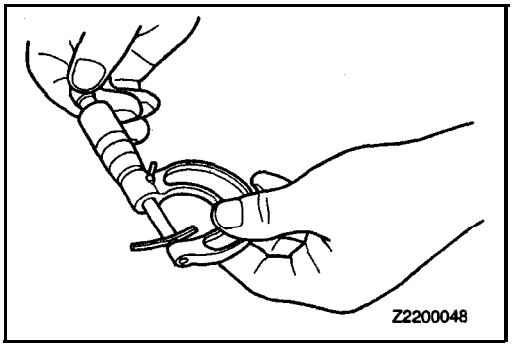

(60) Measure the thickness of the flattened" solder using a micrometer. Add the measured 'solder thickness (T) to' the value 0.38 mm (.0150 in.), which corresponds to the gasket thickness.
Then subtract from that sum a value corresponding to the specified end play.
The result obtained is the thickness of the spacer to be selected.
Select a spacer whose thickness falls within the range determined by the formulas below:
[T + 0.38 mm (.0150 in.) – 0.13 mm (.0051 in.)] to
[T + 0.38 mm (.0150 in.) – 0.08 mm (.0031 in.)]

(61) Place the spacer which was selected in Step (60) and the outer race on the coverter housing.

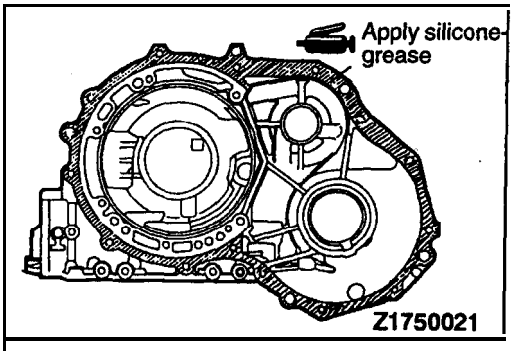

(62) Apply silicone grease to all gasket surfaces of the transaxle case.

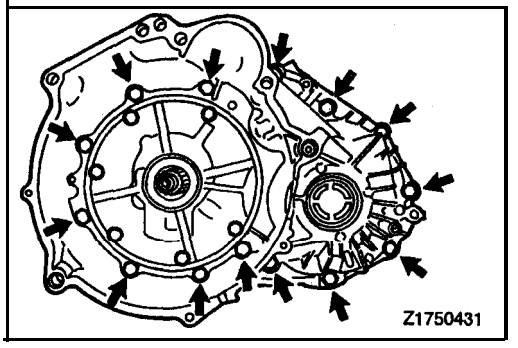

(63) Install a new gasket on the transaxle case.

Caution
Do not reuse the gasket which was previously removed.

(64) Install converter housing and tighten the 14 bolts indicated by arrows to the specified torque.

Tightening torque: 21 Nm (16 ft.lbs.)

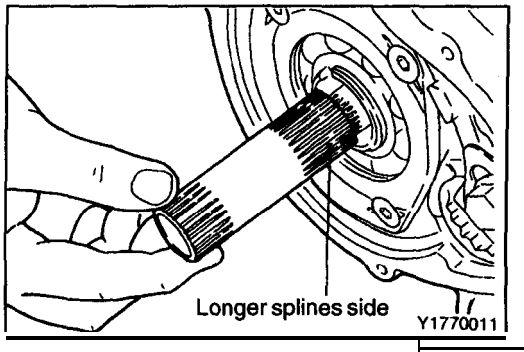

(65) Install the end clutch shaft, inserting the end that has the longer splines first.

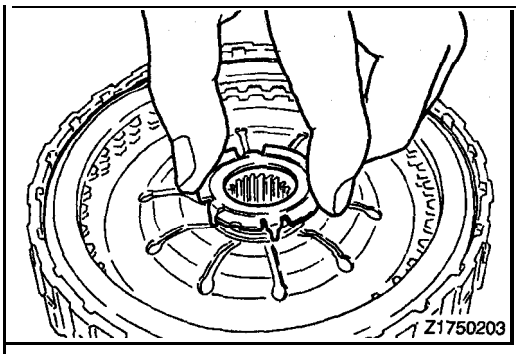

(66) Install the thrust washer on the return spring at the end clutch side.

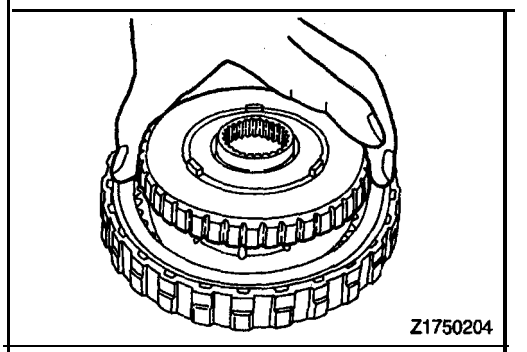

(67) Install the end clutch hub on the end clutch assembly..

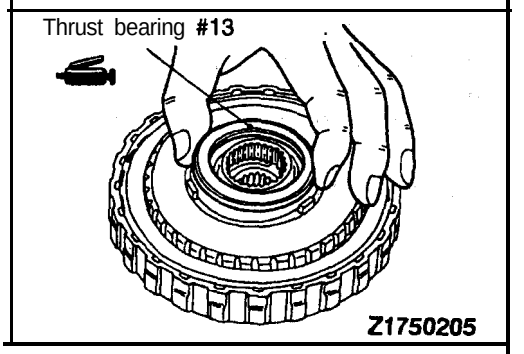

(68) Attach thrust bearing #13 to the end clutch hub with petrolatum jelly.

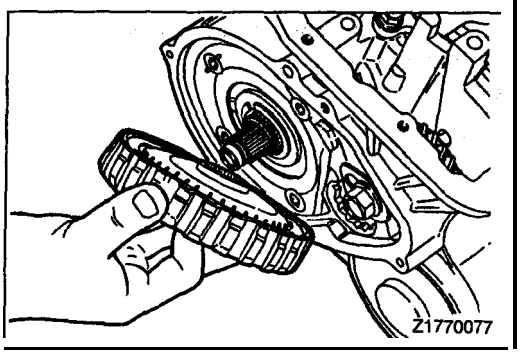

(69) Install the end clutch assembly.

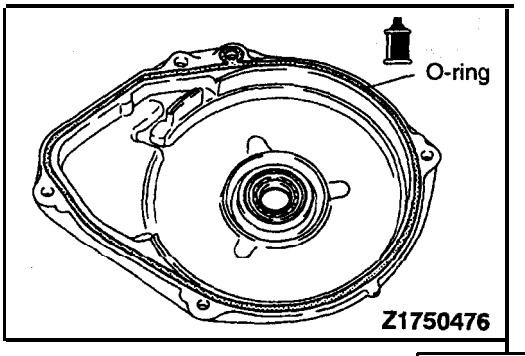

(70) Install a new O-ring in the groove of the end clutch cover.
Check the bearing for smooth' rotation and replace it if defects are evident.
Apply an ample amount of automatic transmission fluid to the bearing.

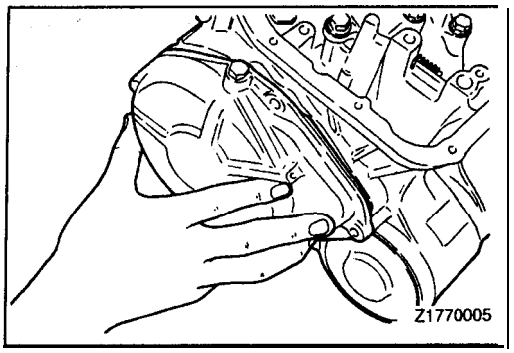

(71) Secure the end clutch cover by tightening its mounting, bolts to the specified torque.

Tightening torque: 7 Nm (5 ft.lbs.)

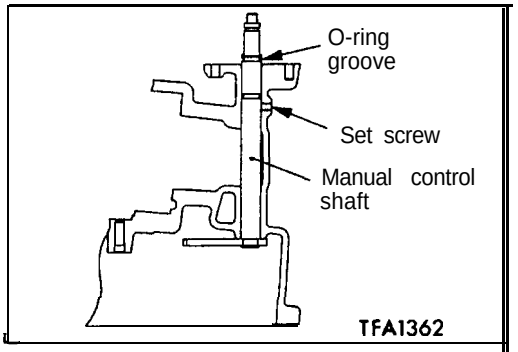

(72) Install the parking sprag rod to the manual control shaft. Then, insert the shaft in the transaxle as shown in the illustration. In doing this work, do not install O-ring in the O-ring groove.

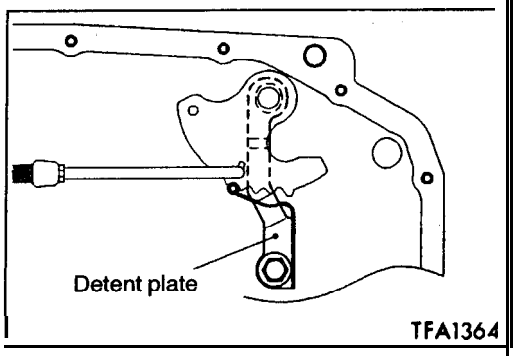

(73) After installing a new O-ring on the manual control shaft assembly, draw the shaft back into the case, then install the set screw and gasket.
Tighten the detent plate mounting bolt to the specified torque.

Tightening torque: 11 Nm (8ft.lbs.)

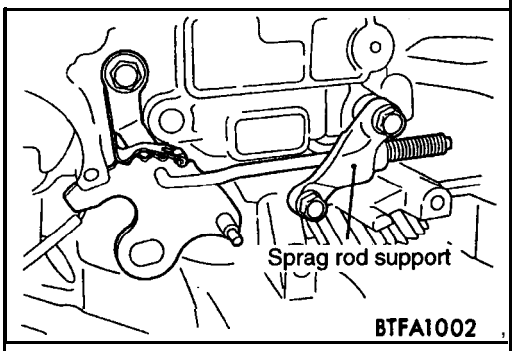

(74) Place the case with the oil pan mounting surface up.
(75) Install the sprag rod support and tighten the two bolts to the specified torque.

Tightening torque: 24 Nm (18 ft.lbs.)

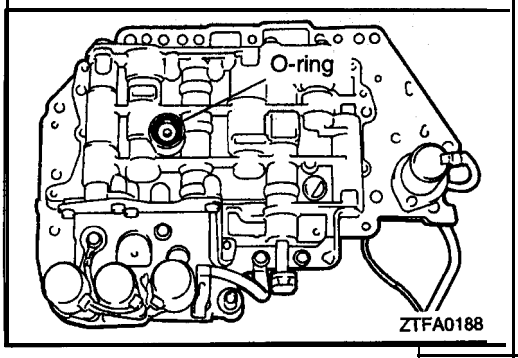

(76) Install the O-ring at the top of the valve body.
(77) Replace the O-ring of the solenoid valve connector with a new one.

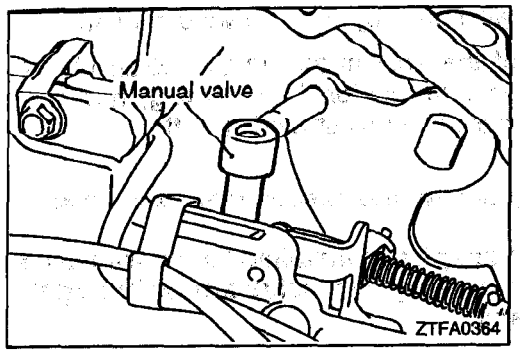

(78) Install the valve body in the transaxle case while fitting the detent plate pin in the gap between the lands of the manual valve,

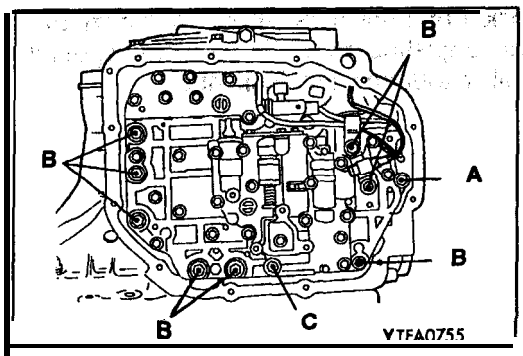

(79) Tighten the valve body mounting dolts (10 'pieces) to the specified torque.

A bolt ..... 18 mm (.71 in.) long
B bolt ..... 25 mm (.98 in.) long
C bolt ..... 40 mm (1.57 in.) long

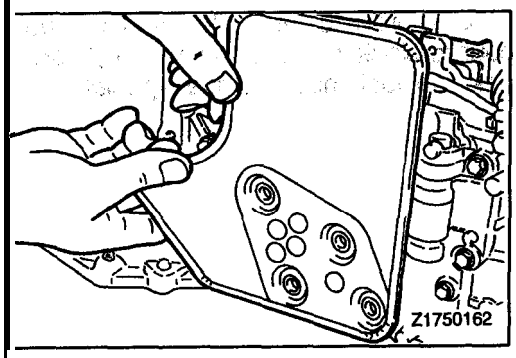

(80) Install the oil filter and tighten the four oil filter mounting bolts to the specified torque.

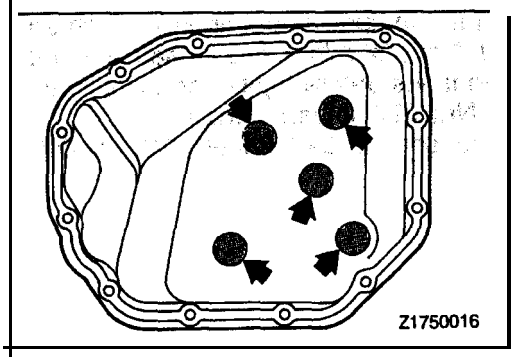

(81) Install five magnets in the five. depressions provided inside the oil pan.

Be sure to remove metal particles from the magnets and clean the inside of the oil pan beforehand.

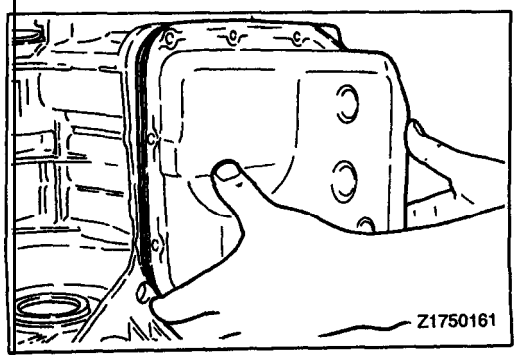

(82) Clean the gasket surfaces of the transaxle case and oil pan. Install a new oil pan gasket and then the oil pan by tightening the 12 bolts to the specified torque.

Tightening torque: 11 Nm (8 ft.lbs.)

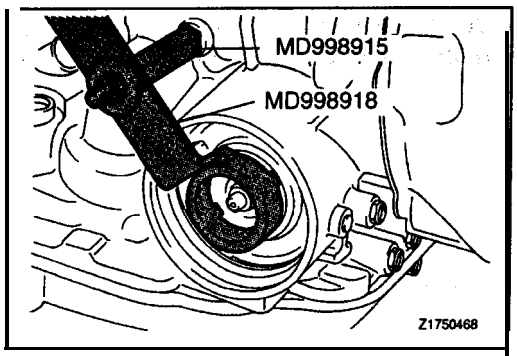

(83) Adjust the kickdown servo by, the following procedure:

(a) Fit the claw of the special tool in the notch of the piston to prevent, the piston from turning, and use adapter to secure it as illustrated at left.

Caution

1. **Do not push in the piston with the special tool.**
2. **When the adapter is installed to the transaxle case, do not apply excessive torque but tighten by hand.**

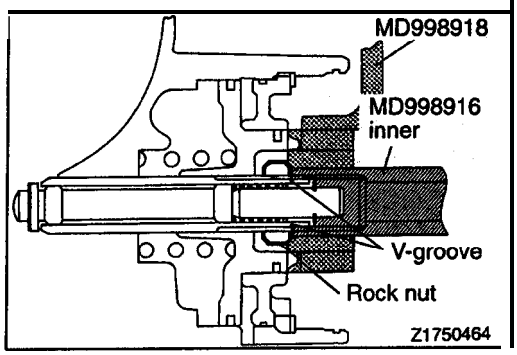

(b) Loosen the lock nut until it is about to reach the V-groove in the adjusting rod. Tighten the special tool (inner) until it touches the lock nut.

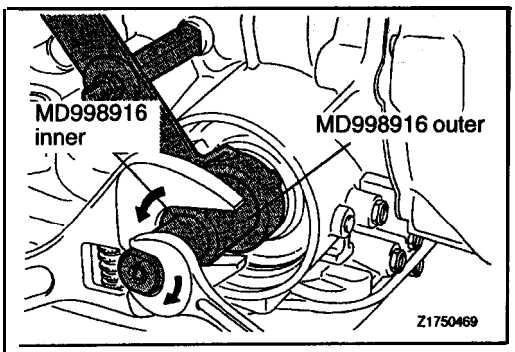

(c) Fit the special tool (outer) to the lock nut. Turn the outer cylinder counterclockwise and the inner cylinder clockwise to lock the lock nut and the special tool (inner).

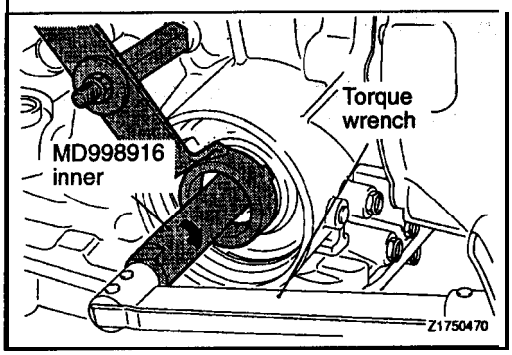

(d) Flit torque wrench to the special tool (inner) to tighten it to a torque of 10 Nm (7.2 ft.lbs.) and loosen. Repeat this sequence two times before tightening the special tool (inner) to 5 Nm (3.6 ft.lbs.) torque.
Then back off the special tool (inner) $2^1/_2$ to $2^3/_4$ turns.

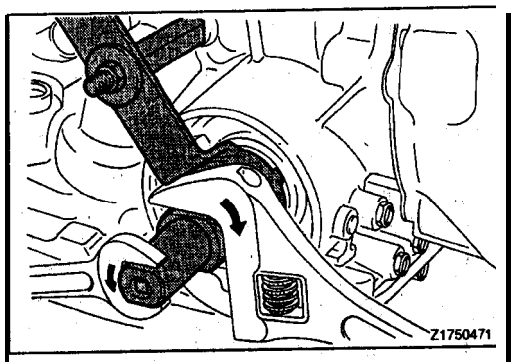

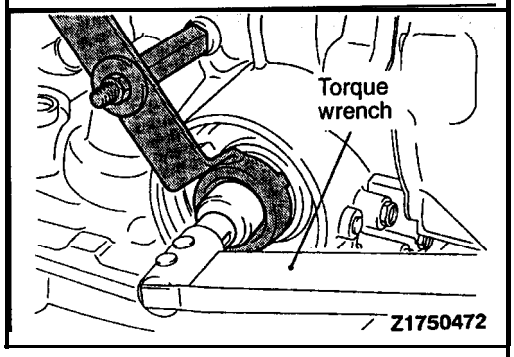

(e) Fit the special tool (outer) to ffie lock nut. Turn the outer cylinder clockwise and the inner cylinder counterclockwise to unlock the lock nut and the special' tool (inner).

Caution
When unlocking is carried out, apply equal force to both special tools to loosen,

(9 Tighten the lock nut by hand until it touches the piston. Then, use torque wrench to tighten the lock nut to' the specified torque.

Tightening torque: 29 Nm (21 ft.lbs.)

Caution
The lock nut may turn with the adjusting rod if tightened quickly with socket wrench or torque wrench.

(g) Remove the special tool for securing the piston. Install the plug to the Low/Reverse pressure outlet and tighten to the specified torque.

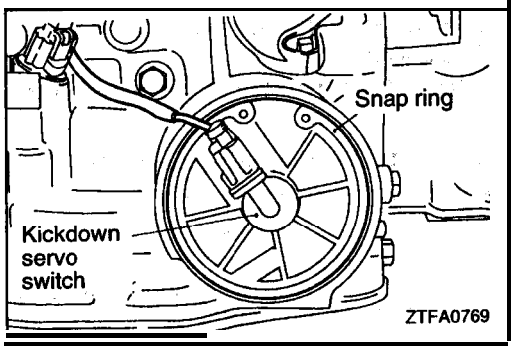

(84) Set a new D-ring in the kickdown servo switch, push the switch into the case and secure it with the snap ring.

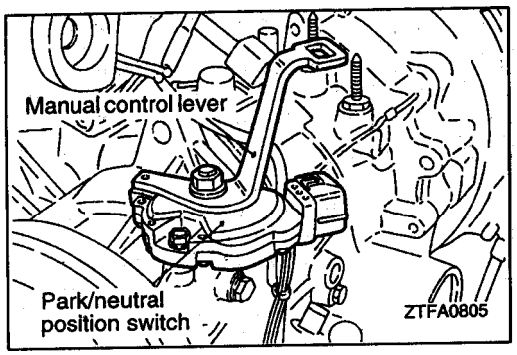

(85) Install the park/neutral position switch and manual control lever and tighten the manual. control' lever nut to the specified torque.

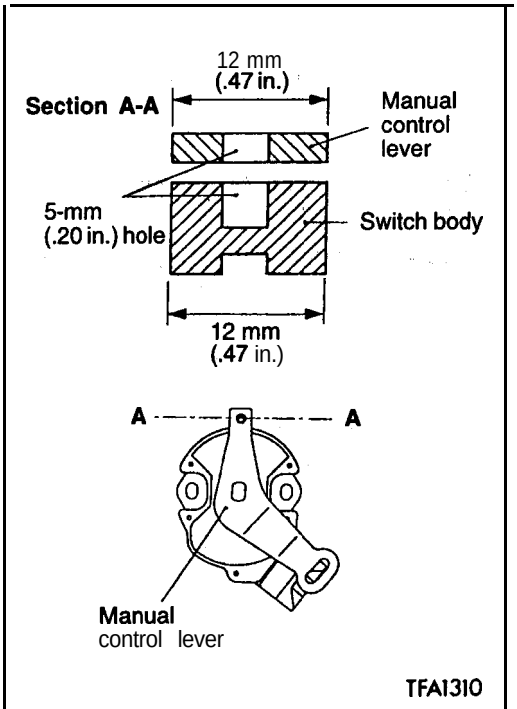

(86) Adjust the park/neutral position switch as follows:

(a) Place the manual control lever in the "N" (neutral) position.

(b) Turn the park/neutral position switch body until the 12-mm (.47 in.) wide end of the manual control lever aligns with the switch body flange [12 mm (.47 in.) wide portion]. Alternatively, turn the switch body until the 5-mm (.20 in.) hole in the manual control' lever, aligns with the 5-mm (.20 in.) hole in the switch body.

(c) Tighten the attaching bolts to the specified torque taking care that switch body is not displaced.

Tightening torque: 11 Nm (8 ft.lbs.)

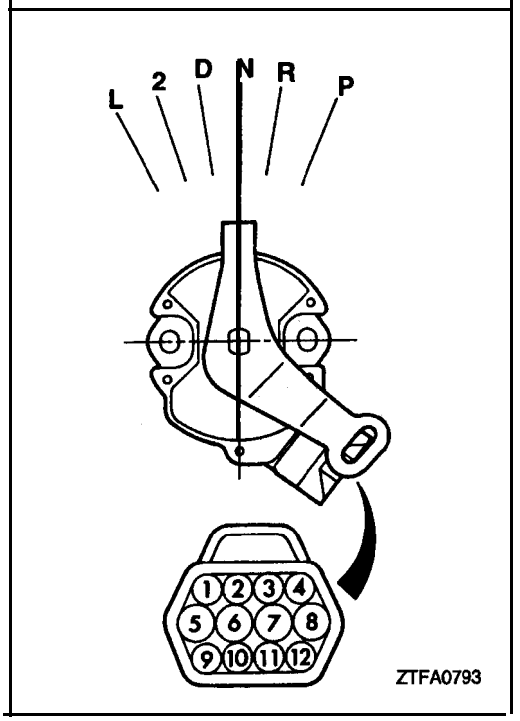

(87) Check the continuity between terminals with the manual control lever at each position.
The continuity between terminals should be as shown in the table below.

Internal Connection in the Park/Neutral Switch

Terminal No.	P	R	N	D	2	L	Connected circuits
1	○						Transaxle control module
2			○				Transaxle control module
3					○		Transaxle control module
4	○	○	○	○	○	○	Ignition switch "ON" terminal
5	○		○				Ignition switch "ST" terminal
6		○					Backup lamp
7		○					Ignition switch "ON" terminal
8	○		○				Starter motor "S" terminal
9				○			Transaxle control module
10		○					Transaxle control module
11						○	Transaxle control module

Lack of continuity indicates a poorly adjusted switch or faulty switch. Readjust the switch. If still without continuity, replace the switch.

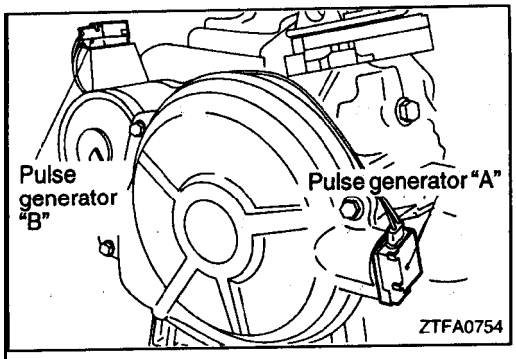

(88) Install pulse generators "A" and "B" and tighten the bolt to the. specified torque.

Tightening torque: 11 Nm (8 ft.lbs.)

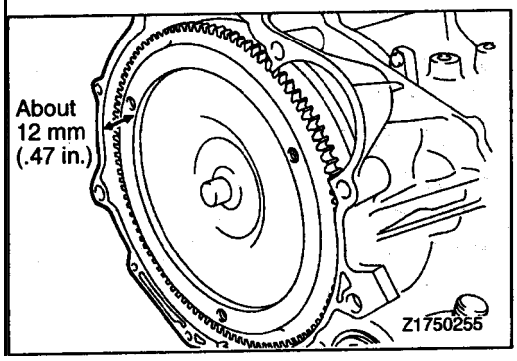

(89) After applying automatic transmission fluid to the outside surface of the oil pump-side cylindrical portion of the torque converter, install the torque converter carefully-so as not to give damage to the oil seal lip. Make certain that the torque converter is in mesh with the oil pump drive gear.

(90) Measure the distance between the ring gear end and the converter housing end.
The torque converter has been properly installed when the measurement is about 12 mm (.47 in.)

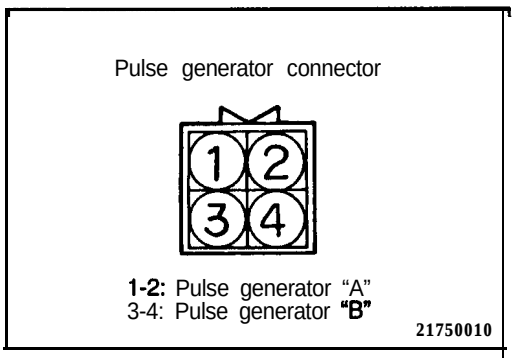

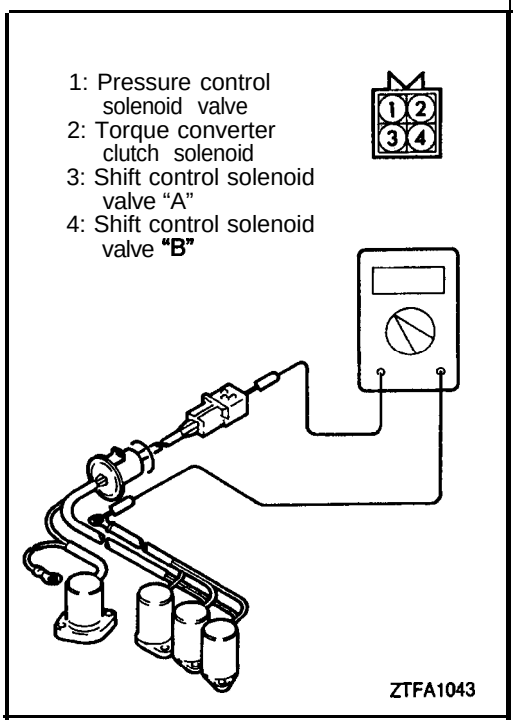

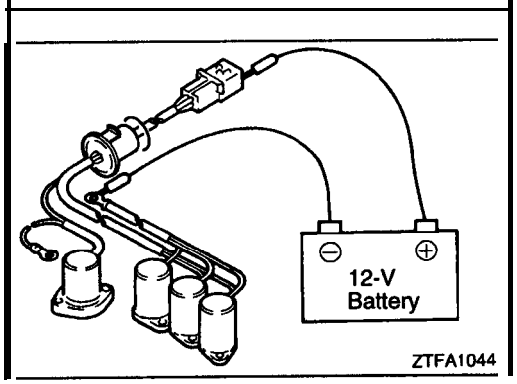

INSPECTION

23300110038

PULSE GENERATORS

(1) Measure the resistance between terminals 1 and 2 or 3 and 4.

Standard value: 245 Ω at 20°C (68°F)

(2) A too small resistance indicates a short circuit and a too large resistance indicates an open circuit.
In either case, replace the 'pulse generator assembly.

SOLENOID VALVES

(1) Measure the resistance between the terminals and valve body of each solenoid valve.

Stgndard value: at 20°C (68°F)

Pressure control solenoid valve: Approx. 3 Ω
Shift control solenoid- valve: Approx. 22 Ω
Torque converter clutch solenoid: Approx. 13 Ω

(2) A too small or large resistance indicates, a' short or open circuit.
In either case, replace the solenoid valve assembly.

(3) Connect a 12-V battery between the terminal and body of each solenoid valve and check the operating sound. The valve is okay if an operating sound is heard. No operating sound indicates that the valve is sticking or has accumulated foreign matter. In this case, replace the solenoid valve assembly.

OIL PUMP

23300130058

DISASSEMBLY AND REASSEMBLY

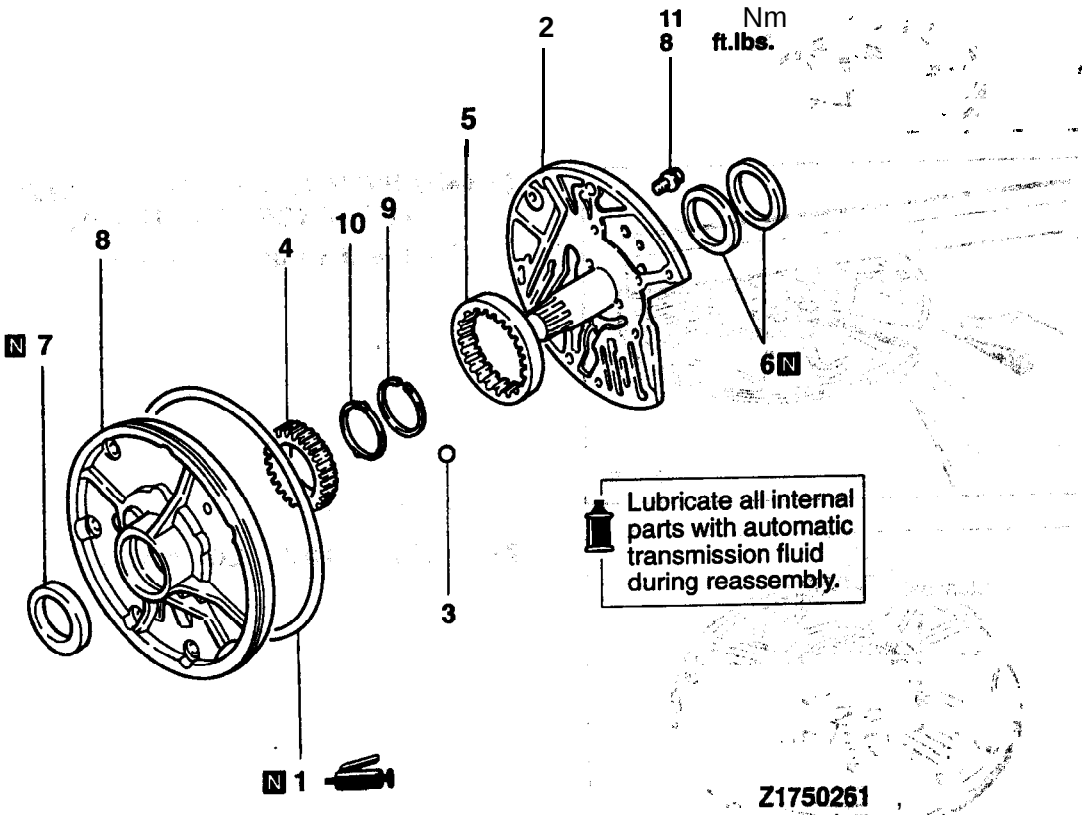

Disassembly steps

- ▶E◀ 1. O-ring
- ▶D◀ 2. Reaction shaft support
- ▶C◀ 3. Steel ball
- ◀A▶ ▶B◀ 4. Drive gear
- ◀A▶ ▶B◀ 5. Driven gear
- 6. Seal ring
- ▶A◀ 7. Oil seal
- 6. Oil pump housing
- 9. Snap ring
- 10. Oil seal

DISASSEMBLY SERVICE POINT

◀A▶ DRIVE GEAR / DRIVEN GEAR REMOVAL

Make reassembly alignment marks on the drive **and driven** gears.

REASSEMBLY SERVICE POINTS

▶A◀ OIL SEAL INSTALLATION

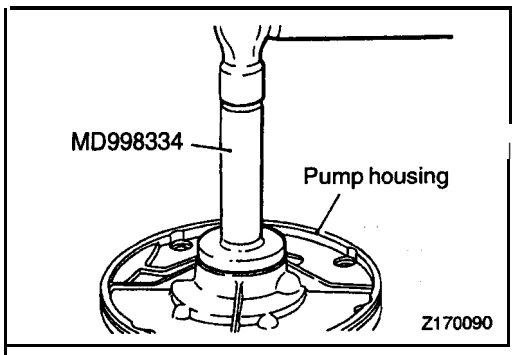

▶B◀ DRIVEN GEAR / DRIVE GEAR SIDE CLEARANCE MEASUREMENT

Standard value: 0.03–0.05 mm (.0012–.0020 in.)

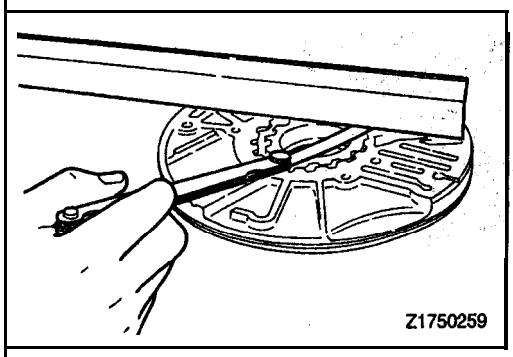

▶C◀ STEEL BALL, LOCATION

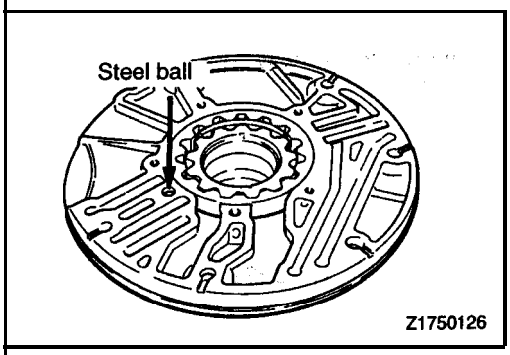

▶D◀ REACTION SHAFT SUPPORT INSTALLATION

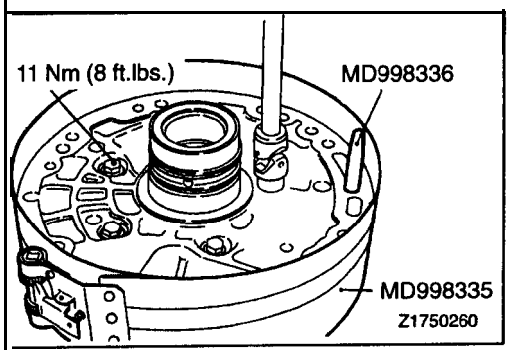

(1) Assemble the reaction shaft support and the pump housing, and tighten the five bolts by fingers.
(2) Insert the special tool (Guide Pin MD998336) in the oil pump bolt hole and tighten the peripheries of the support and housing with the special tool (Band MD998335) to locate the support and housing.
(3) Tighten the five bolts to the specified torque.
(4) Make sure that the oil pump g&at' turns freely.

▶E◀ O-RING INSTALLATION

Install a new O-ring in the groove of the pump housing and apply petrolatum jelly to the O-ring.

FRONT CLUTCH

23300160040

DISASSEMBLY AND REASSEMBLY

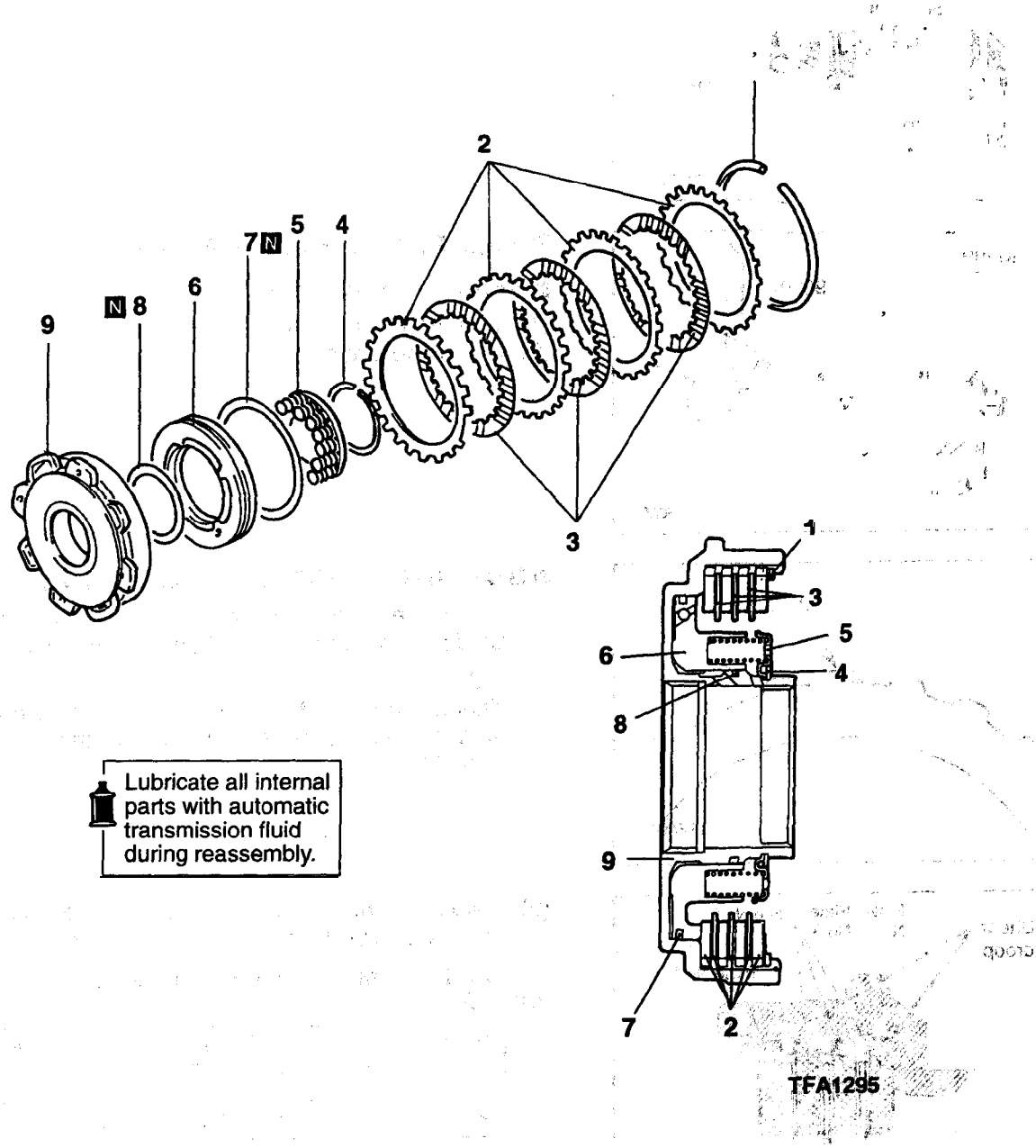

Disassembly steps

▶C◀ 1. Snap ring
▶B◀ 2. Clutch reaction plate
3. Clutch disc
◀A▶ ▶A◀ 4. Snap ring
5. Return spring
6. Front clutch piston
7. D-ring
6. D-ring
9. Front clutch retainer

TSB Revision

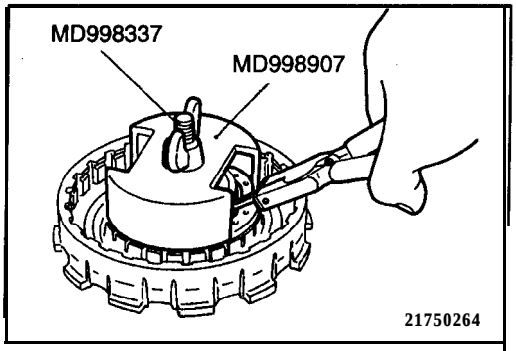

DISASSEMBLY SERVICE POINT

◀A▶ SNAP RING REMOVAL

(1) Compress the return spring with the special tool.
(2) Remove the snap ring.

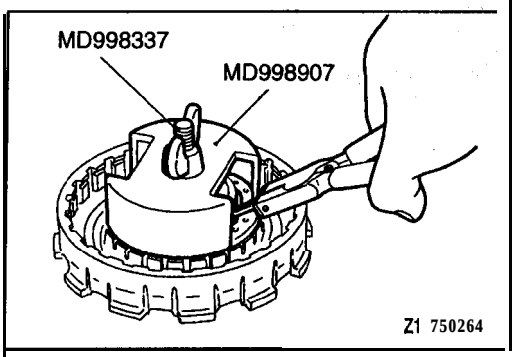

REASSEMBLY SERVICE POINTS

▶A◀ SNAP RING INSTALLATION

(1) Compress the return spring with the special tool.
(2) Install the snap ring.

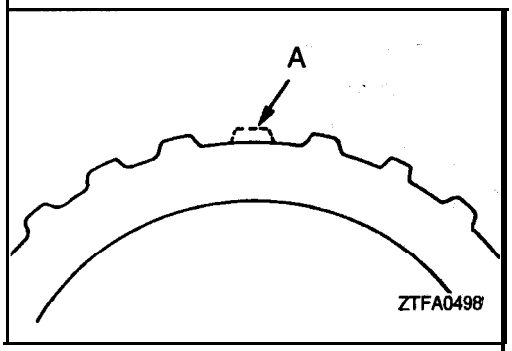

▶B◀ CLUTCH REACTION PLATE': INSTALLATION

(1) Install the clutch reaction plate with' their missing tooth portions (A in the illustration) in alignment.

NOTE
This design is to facilitate escape of automatic transmission fluid and improve the cooling efficiency of the plate and disc.

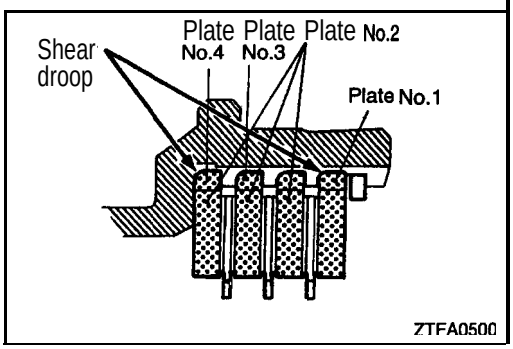

(2) Install the innermost the reaction plate with their shear droops directed as shown in the illustration.

Identification of reaction plate

mm (in.)

Plate No.	Thickness	Identification mark
1	5.0 (.197)	A
2	3.1 (.122)	B
3	3.1 (.122)	B
4	3.7 (.146)	None

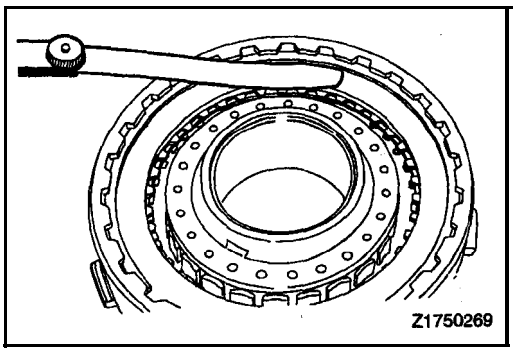

▶C◀ SNAP RING SELECTION

Check clearance between the snap ring and clutch reaction plate. To check the clearance, hold entire circumference of the clutch reaction plate down with 50 N (11 lbs.). force. If clearance is out of standard value, select a snap ring to obtain the standard value.

Standard value: 0.7–0.9 mm (.028–.035 in.)

NOTE
To install the return spring snap rings, set the rings with their end gaps 180° apart.

REAR CLUTCH

23300190049

DISASSEMBLY AND REASSEMBLY

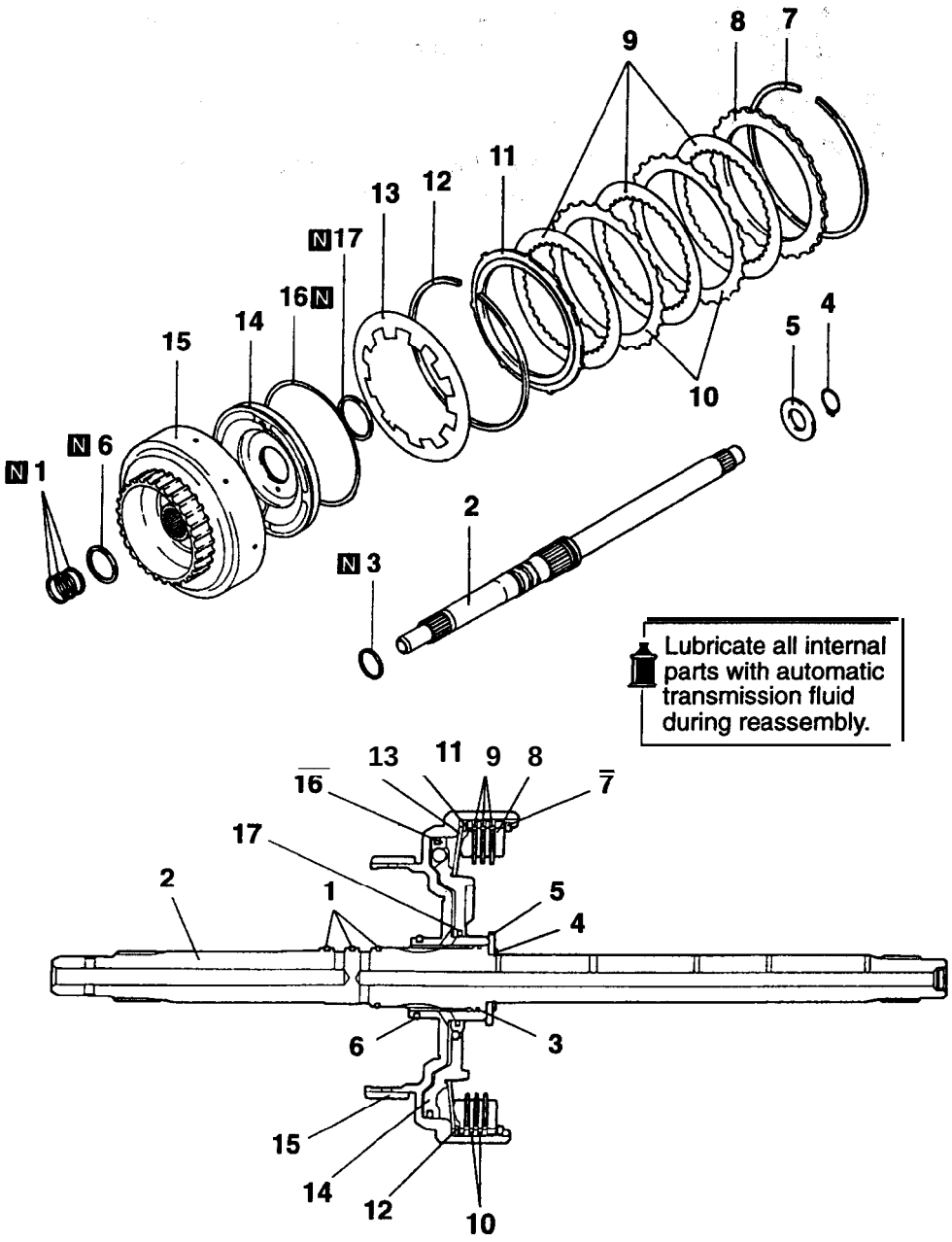

TFA1296

Disassembly steps

1. Seal ring
▶D◀ 2. Input shaft
3. O-ring
4. Snap ring
5. Thrust race
6. Seal ring
▶C◀ 7. Snap ring
▶B◀ 8. Clutch reaction plate
9. Clutch disc
▶B◀ 10. Clutch plate
▶B◀ 11. Clutch pressure plate
◀A▶ ▶A◀ 12. Wave spring
13. Return spring
14. Rear clutch piston
15. Rear clutch retainer
16. D-ring
17. D-ring

TSB Revision

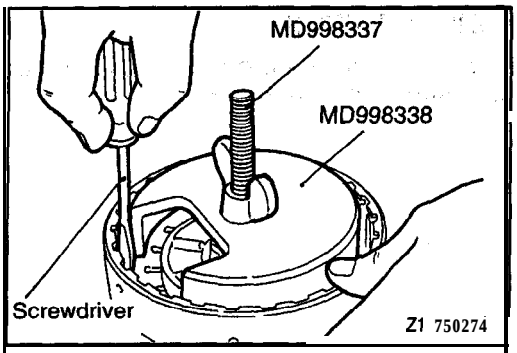

DISASSEMBLY SERVICE POINT

◀A▶ WAVE SPRING REMOVAL

(1) Compress the return. spring with the special tool.
(2) Using a screwdriver, remove the wave spring.

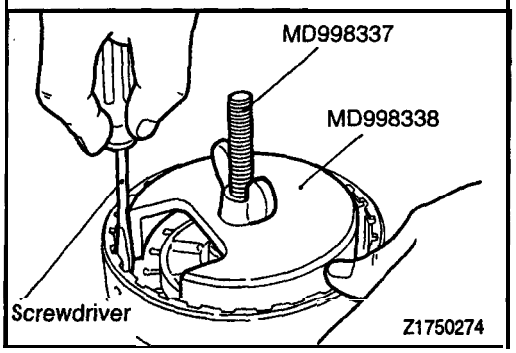

REASSEMBLY SERVICE POINTS

▶A◀ WAVE SPRING INSTALLATION

(1) Compress clutch reaction plate with the special tool.
(2) Install the wave spring.

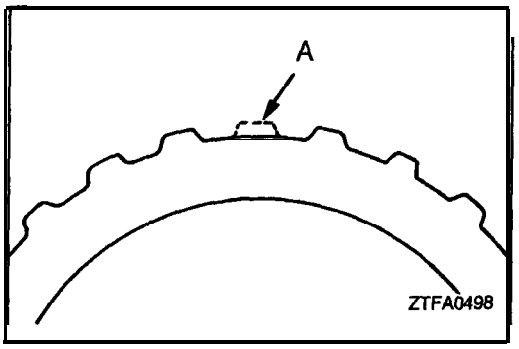

▶B◀ CLUTCH PRESSURE PLATE / CLUTCH PLATE / CLUTCH REACTION PLATE INSTALLATION

(1) Install the clutch pressure plate, clutch plates and clutch reaction plate with their missing tooth portions (A in the illustration) in alignment.

NOTE
This design is to facilitate escape of automatic transmission fluid and improve the cooling efficiency of the plates and disc.

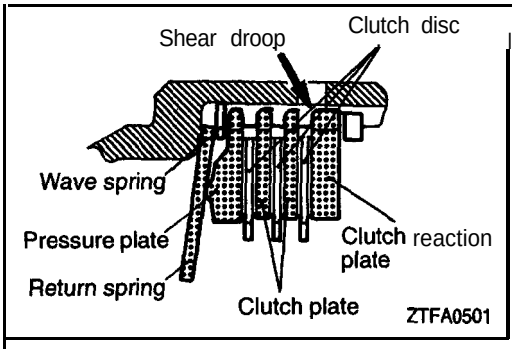

(2) Install the clutch reaction plate with its shear droop directed as shown in the illustration.

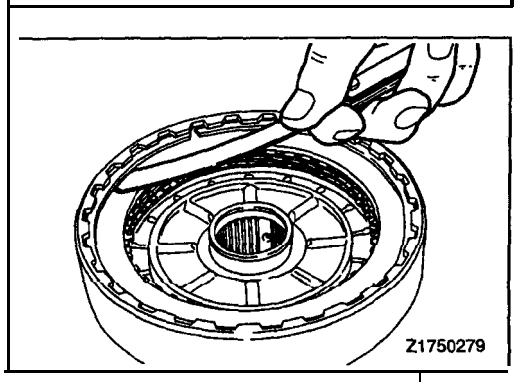

▶C◀ SNAP RING SELECTION

(1) Check clearance between the snap ring and clutch reaction plate. To check the clearance, hold entire circumference of the clutch reaction plate down with **50 N** (11 lbs.) force. If clearance is out of standard value, select a snap ring to obtain the standard value.

Standard value: 0.4–0.6 mm (.016–.024 in.)

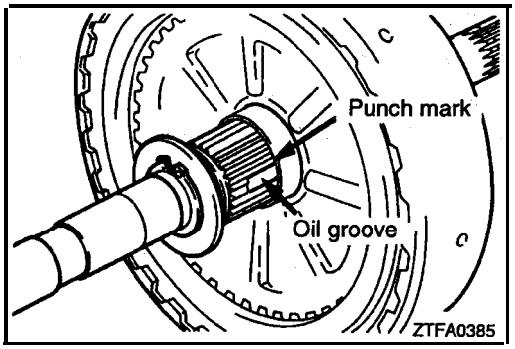

▶D◀ INPUT SHAFT INSTALLATION

Install the input shaft with one of its oil groove aligned with the punch mark on the rear clutch retainer.

END CLUTCH

23300220045

DISASSEMBLY AND REASSEMBLY

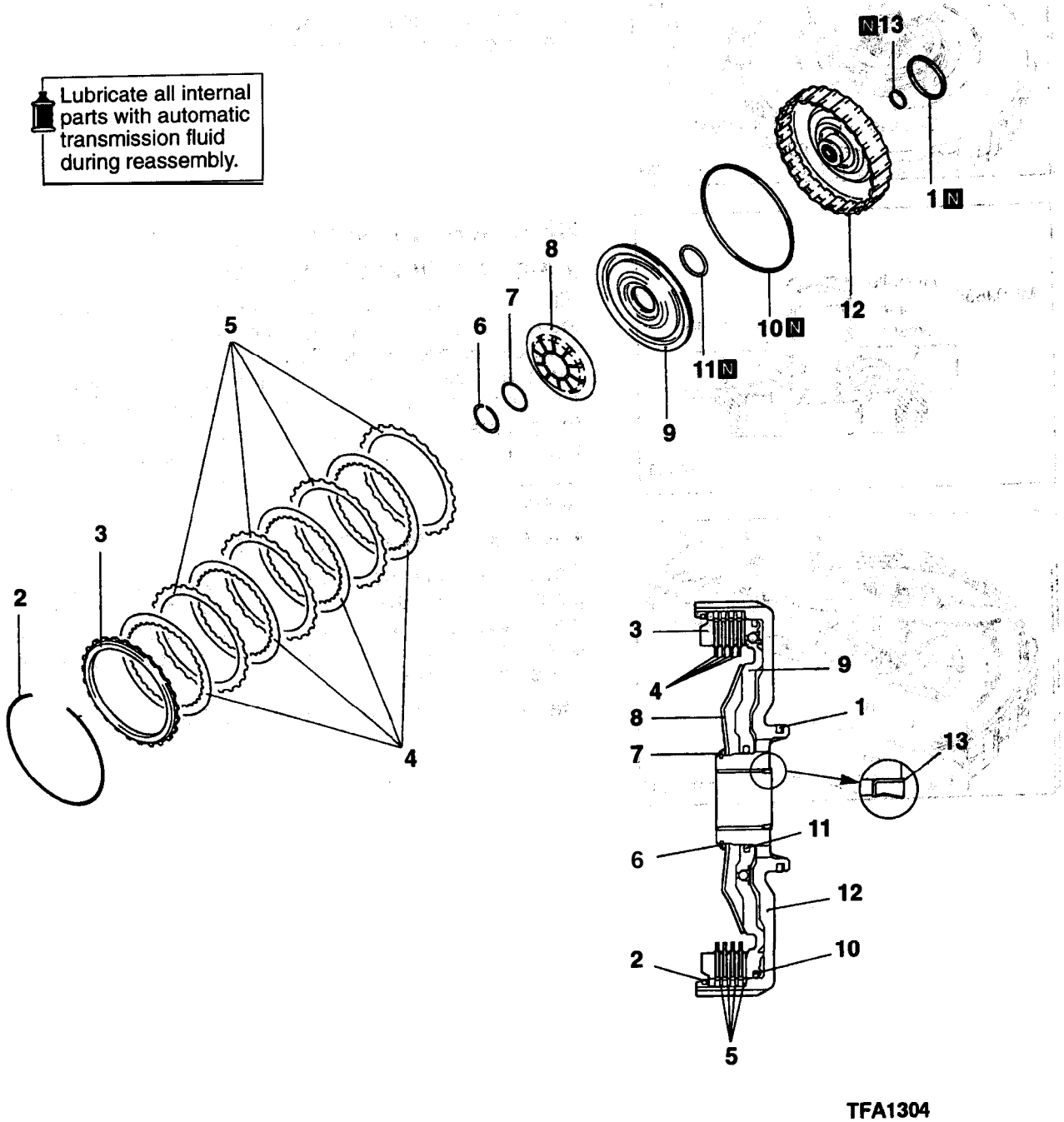

TFA1304

Disassembly steps

1. Seal ring
▶B◀ 2. Snap ring
3. Clutch reaction plate
4. Clutch disc
5. Clutch plate
▶A◀ 6. Snap ring
7. Washer
8. Return Spring
◀A▶ 9. End clutch piston
10. Oil seal
11. D-ring
12. End clutch retainer
13. Oil seal

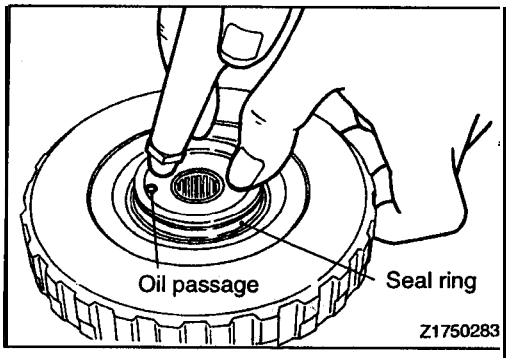

DISASSEMBLY SERVICE POINT

◀A▶ END CLUTCH PISTON REMOVAL

Remove the piston. If it is hard to remove, place the retainer on the workbench with piston side down and blow air through the oil passage in the back of retainer.

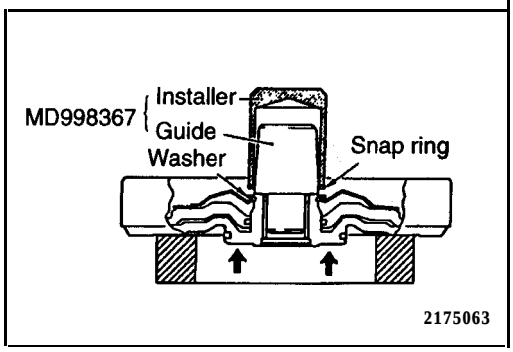

REASSEMBLY SERVICE POINTS

▶A◀ SNAP RING INSTALLATION

Fit a new snap ring to the Guide of the special tool, and install it to the retainer. Be sure to fit snap ring to the lowest possible portion of the Guide.

Put the Installer over the Guide and use a press to install the snap ring in the groove. If the snap ring is installed in the groove, stop using the press. Do not use the press more than necessary. Further, be sure not to support the portion (center protruded portion) marked with arrows in the illustration.

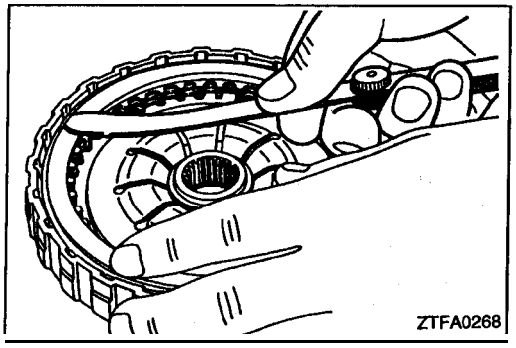

▶B◀ SNAP RING SELECTION

Check clearance between the snap ring and clutch reaction plate. To check the clearance, hold entire circumference of the clutch reaction plate down with 50 N (11 tbs.) force. If clearance is out of standard value, select a snap ring to obtain the standard value.

Standard value: 0.6–0.85 mm (.024–.0335 in.)

PLANETARY GEAR

23300250044

DISASSEMBLY AND REASSEMBLY

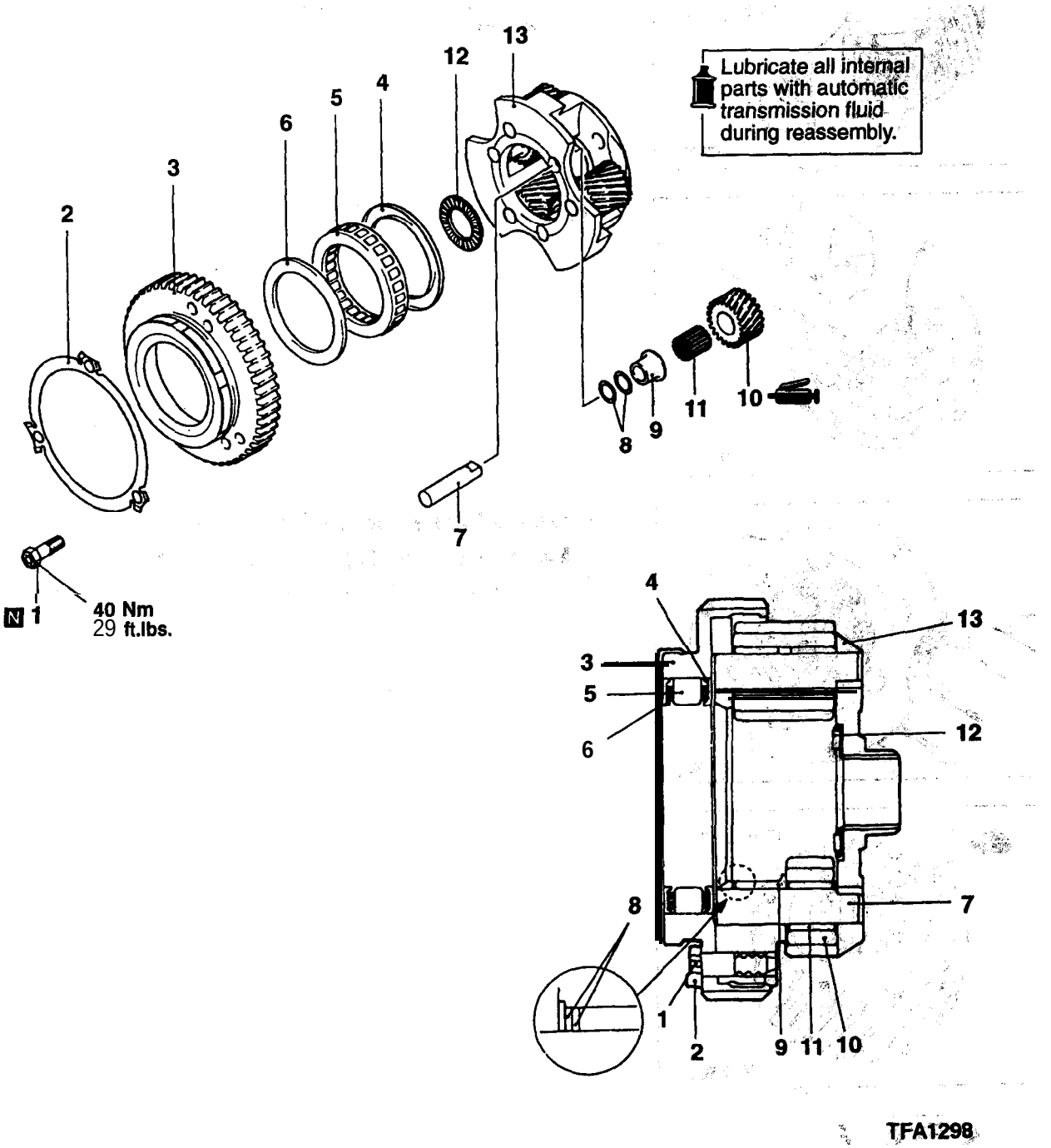

Disassembly steps

▶C◀ 1. Bolt
2. Lock plate
3. One-way clutch outer race
4. End plate
▶B◀ 5. One-way clutch
6. End plate
7. Pinion shaft
8. Front thrust washer
9. Spacer bushing
10. Short pinion
11. Roller
◀A▶ ▶A◀ 12. Thrust bearing
13. Planet carrier

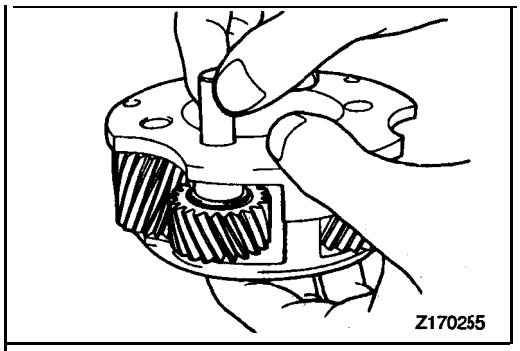

DISASSEMBLY SERVICE POINT

◀A▶ THRUST BEARING REMOVAL

(1) Remove the only one short pinion. Use dare not to drop and lose the 17 rollers in the short pinion. Do not remove the other short pinions.

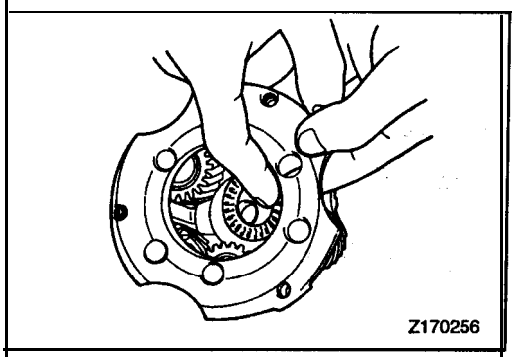

(2) Remove' 'the thrust bearing..

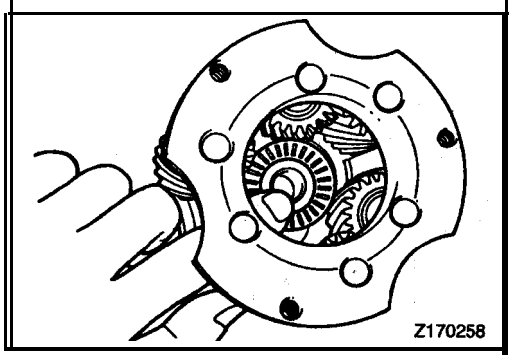

REASSEMBLY SERVICE POINTS

▶A◀ THRUST BEARING INSTALLATION

(1) Install a new thrust bearing on the carrier. Make sure that it fits correctly in the spot faced portion of the carrier.

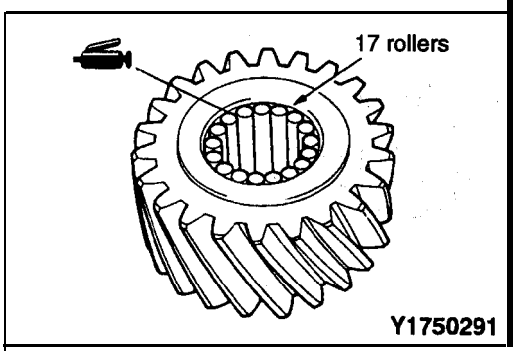

(2) Apply vaseline unsparingly to the inside surface of the short pinion and attach the 17 rollers on the surface.

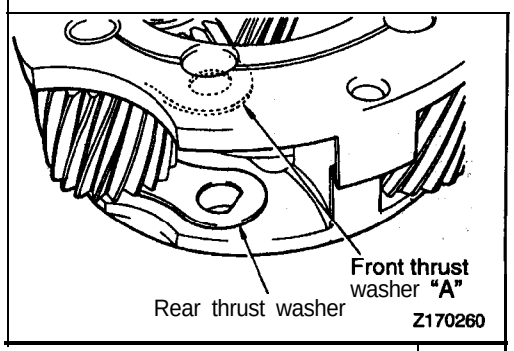

(3) Line up the holes of the rear thrust washer and front thrust washer "A" with the shaft hole of the carrier.
(4) Install the short pinion, spacer bushing and front thrust washer and align the holes. Use care not to allow the rollers to get out of position.

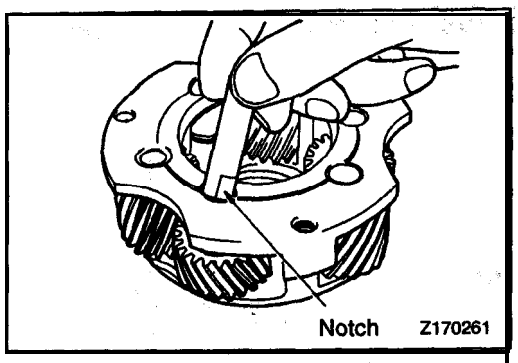

(5) Insert the pinion shaft. Make sure that the flattened end of pinion shaft is correctly fitted in, the hole of the rear thrust plate when the pinion shafts is inserted.

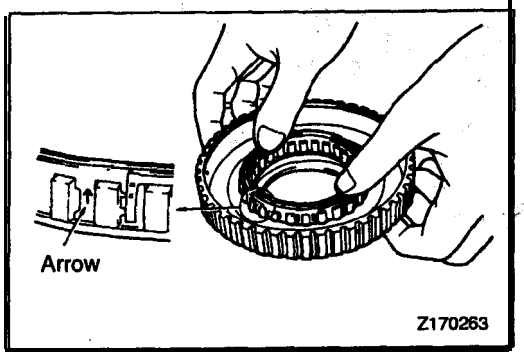

▶B◀ ONE-WAY CLUTCH INSTALLATION

Push the one-way clutch into the outer race. Make sure that arrow on the outside circumference of cage is directed upward as shown in the illustration when the one-way clutch is pushed in.

▶C◀ BOLT INSTALLATION

NOTE
Do not reuse the pre-coated bolt.

ANNULUS GEAR AND TRANSFER DRIVE GEAR 'SET

23300280043

DISASSEMBLY AND REASSEMBLY

Lubricate all internal parts with automatic transmission fluid during reassembly.

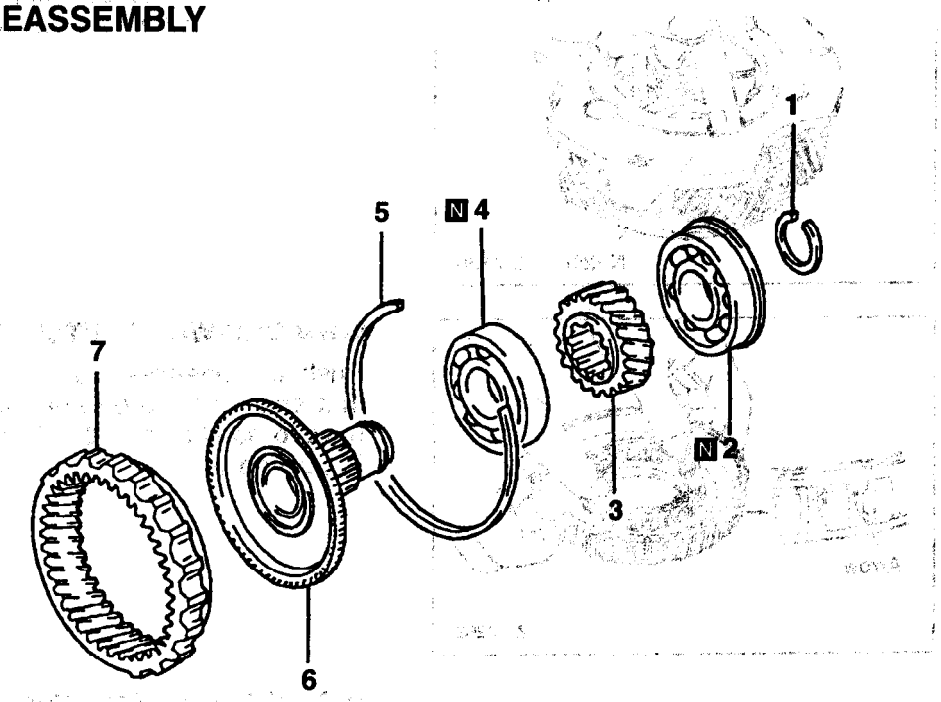

Disassembly steps

- ▶D◀ 1. Snap ring
- ◀A▶ ▶C◀ 2. Bearing
- ◀B▶ ▶B◀ 3. Transfer drive gear
- ◀C▶ ▶A◀ 4. Bearing
- 5. Snap ring
- 6. Output flange
- 7. Annulus gear

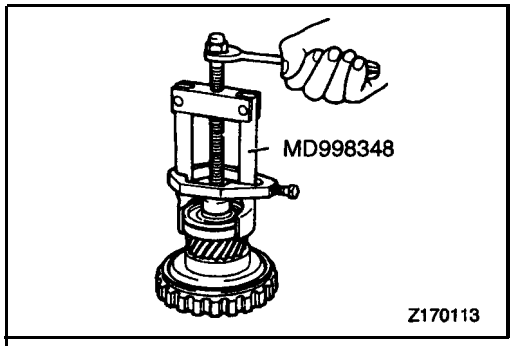

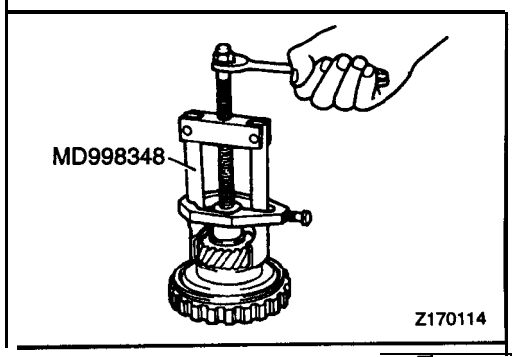

DISASSEMBLY SERVICE POINTS

◀A▶ BEARING REMOVAL

◀B▶ TRANSFER DRIVE GEAR REMOVAL

TSB Revision

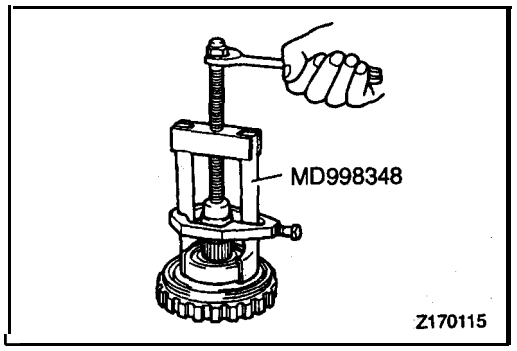

◀C▶ BEARING REMOVAL

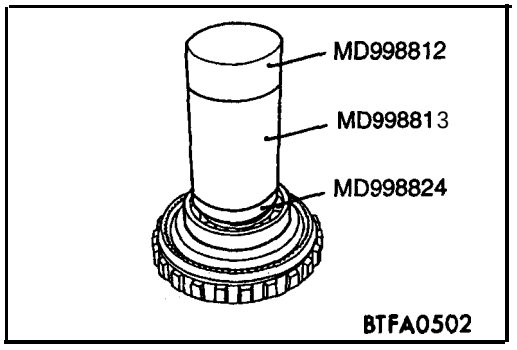

REASSEMBLY SERVICE POINTS

▶A◀ BEARING INSTALLATION

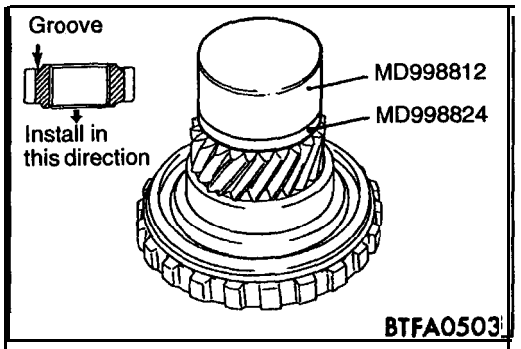

▶B◀ TRANSFER DRIVE GEAR INSTALLATION

Install the transfer drive gear in, proper direction. The direction can be identified by the groove provided in one of the pinion side surfaces.

Caution

Replace the output flange and transfer drive gear as a set.

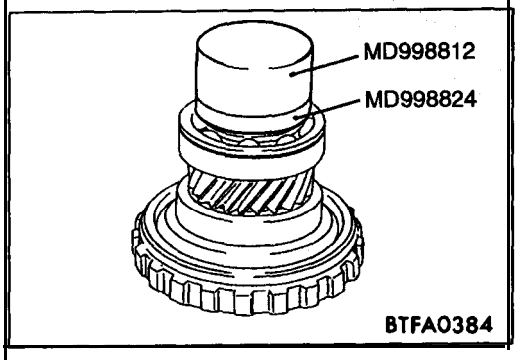

▶C◀ BEARING INSTALLATION

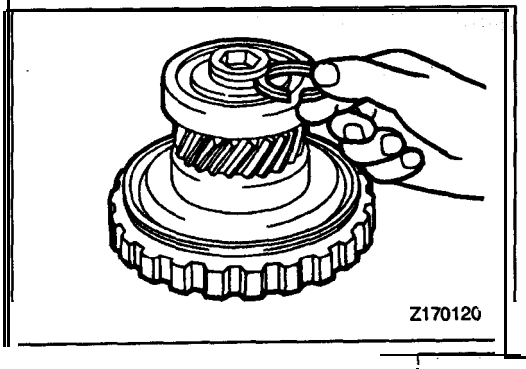

▶D◀ SNAP RING SELECTION

Select a snap ring, which should be the thickest one that can be installed in groove.

Standard value: 0–0.06 mm (0–.0024 in.)

DIFFERENTIAL

23300310056

DISASSEMBLY AND REASSEMBLY

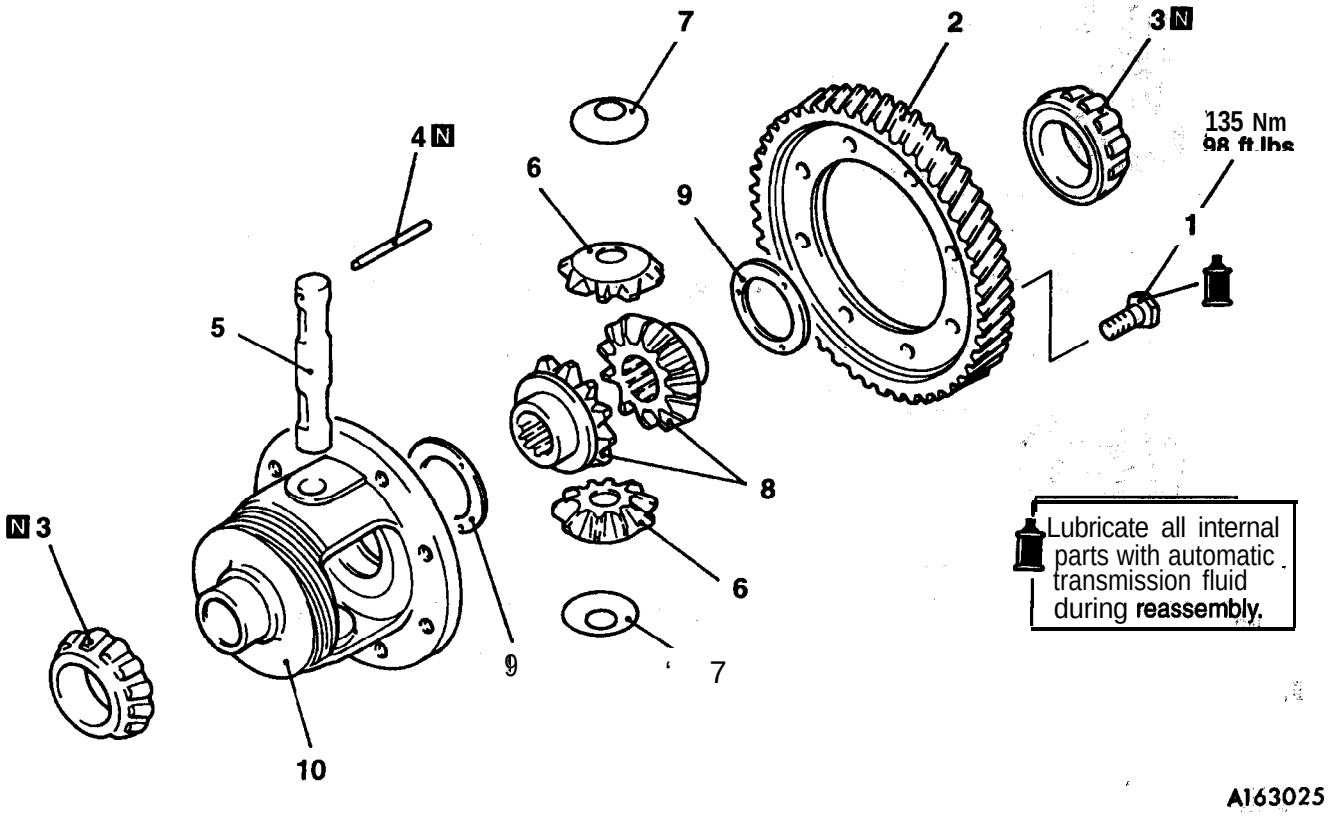

Disassembly steps

▶D◀ 1. Bolt
2. Differential drive gear
◀A▶ ▶C◀ 3. Taper roller bearing
◀B▶ ▶B◀ 4. Lock pin
▶A◀ 5. Pinion shaft
▶A◀ 6. Pinion
▶A◀ 7. Washer
▶A◀ 6. Side gear
▶A◀ 9. Spacer
10. Differential case

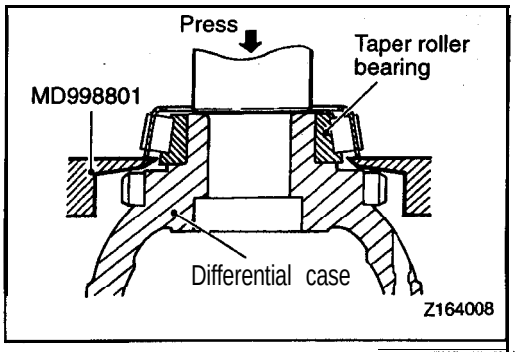

DISASSEMBLY SERVICE POINTS

◀A▶ TAPER ROLLER, BEARING REMOVAL

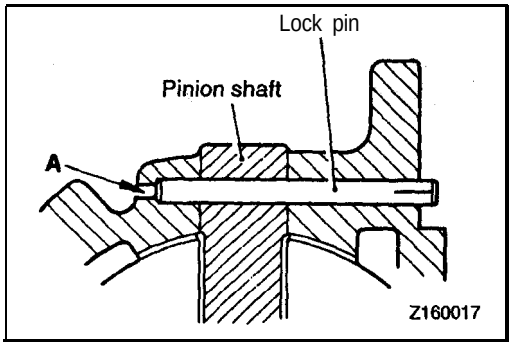

◀B▶ LOCK PIN REMOVAL

(1) Drive out the lock pin with a punch inserted in hole "A".
(2) Remove the pinion shaft from the case, and remove the pinion gears and washers,
(3) Remove the side gears and spacers from' the' case. Keep the removed gears and spacers for R.H. side use separated from those for L.H. side use.

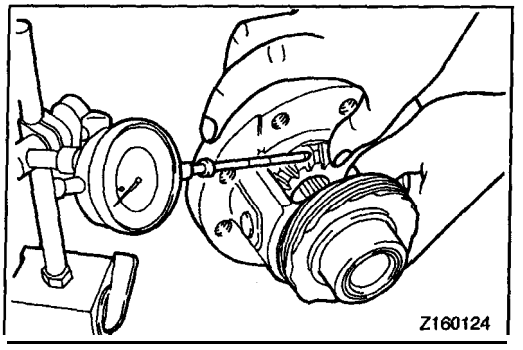

REASSEMBLY SERVICE POINTS

▶A◀ SPACER / SIDE GEAR / WASHER / PINION / PINION SHAFT INSTALLATION

(1) With the spacers installed on the back of the differential side gears, install the gears in the differential case. When reusing the removed parts, install them in the original positions noted during disassembly. When using new differential side gears, install spacers of medium thickness 0.93 to 1.00 mm (.037 to .039 in.).
(2) Install the washers to the back of the pinion gears, install the gears in the differential case, and then insert the pinion shaft.
(3) Measure the backlash between the side gear and pinion gear. The backlash should be 0.025 to 0.150 mm (.00098 to .00591 in.) and the right and left gear pairs should have equal backlash. If the backlash is not within the standard value, disassemble, and reassemble them using spacers selected for correct backlash.

Standard value: 0.025–0.150 mm (.00098–.00591 in.)

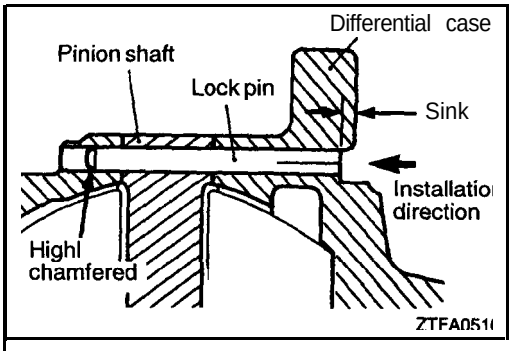

▶B◀ LOCK PIN INSTALLATION

Align the lock pin hole in pinion shaft with that in the case and install the lock pin.

Caution
The lock pin should be lower than the differential case flange surface.

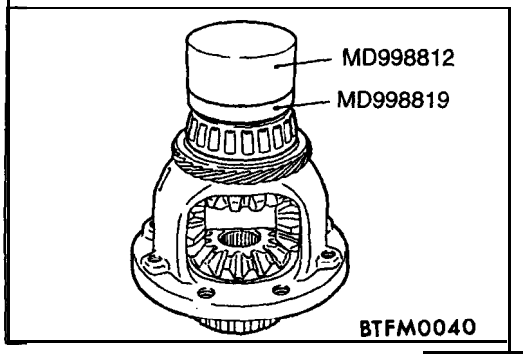

▶C◀ TAPER ROLLER BEARING INSTALLATION

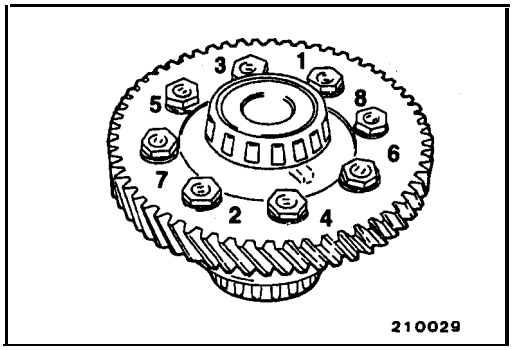

▶D◀ BOLT TIGHTENING

Apply automatic transmission fluid to the bolts and tighten the bolts to the specified torque in the sequence shown in the illustration.

LOW-REVERSE BRAKE

23300370016

DISASSEMBLY AND REASSEMBLY

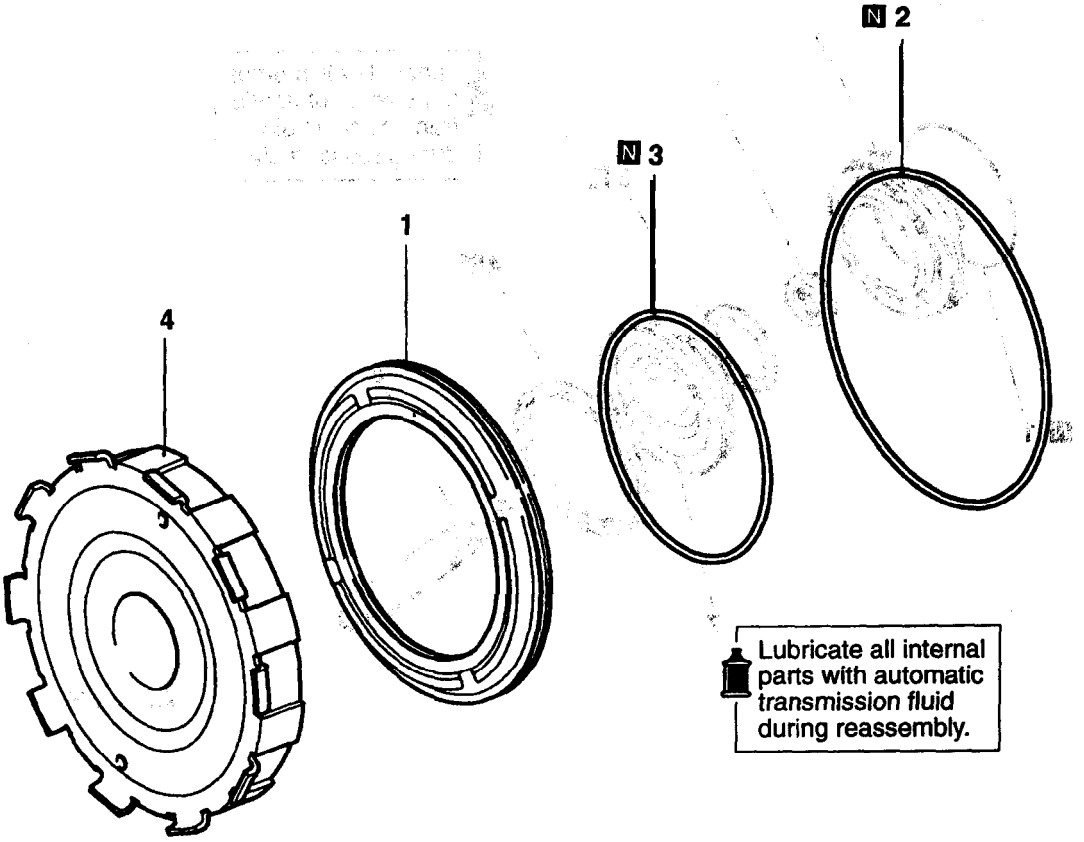

Disassembly steps

1. Low-reverse brake piston
2. D-ring
3. D-ring
4. Center support

KICKDOWN SERVO

23300340017

DISASSEMBLY AND REASSEMBLY

3

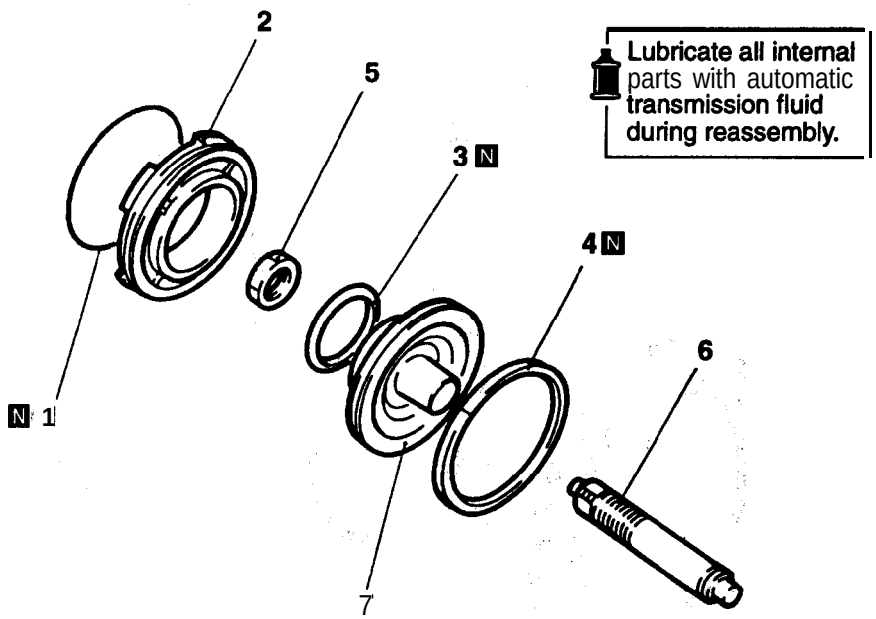

Z1750299

Disassembly steps

1. O-ring
2. Kickdown servo sleeve
3. D-ring
4. Seal ring
5. Lock nut
6. Kickdown servo rod
7. Kickdown servo piston

SPEEDOMETER GEAR

23300400050

DISASSEMBLY AND REASSEMBLY

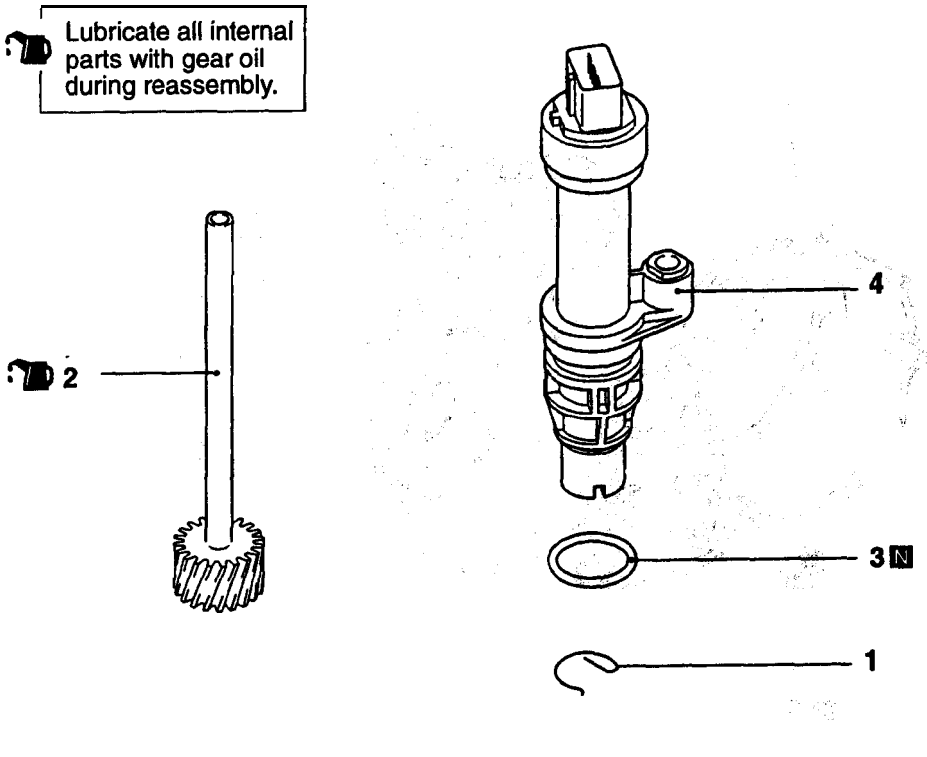

Disassembly steps

1. e-ring
▶A◀ 2. Speedometer driven gear
3. O-ring
4. Sleeve

REASSEMBLY SERVICE POINT

(A) SPEEDMETER DRIVEN GEAR INSTALLATION

Apply gear oil sparingly to the speedometer driven gear shaft and insert the shaft.

DRIVE SHAFT OIL SEAL

23300430042

DISASSEMBLY AND REASSEMBLY

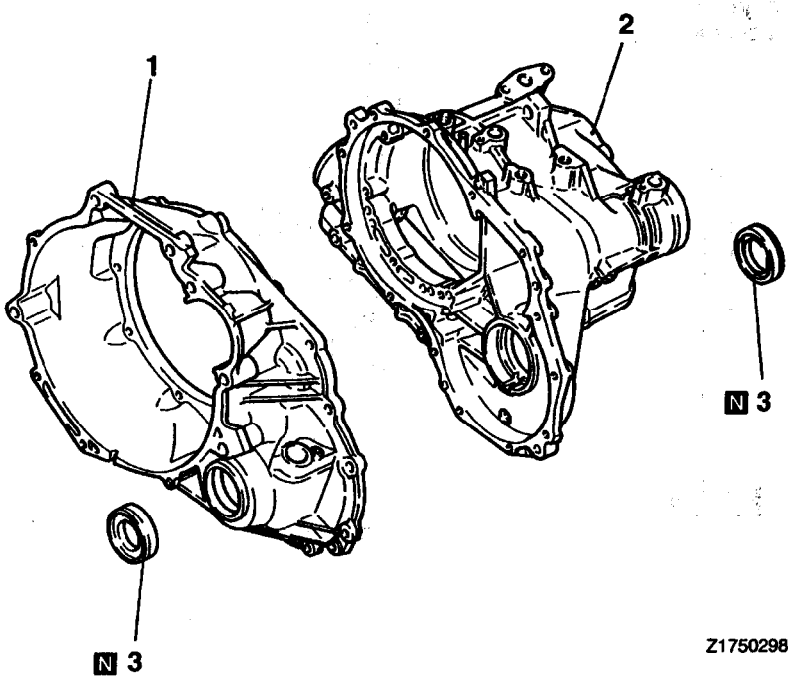

Disassembly steps

1. Converter housing
2. Transaxle case

▶A◀ 3. Oil seal

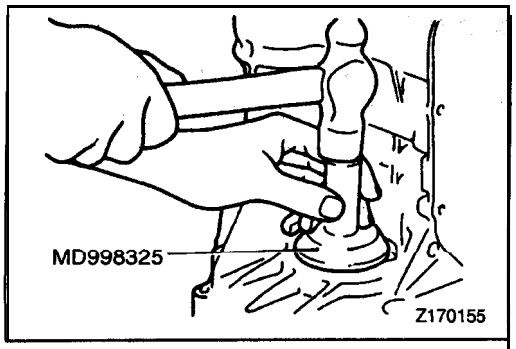

REASSEMBLY SERVICE POINT

▶A◀ OIL SEAL INSTALLATION

TSB Revision

TRANSFER SHAFT

23300490040

DISASSEMBLY AND REASSEMBLY

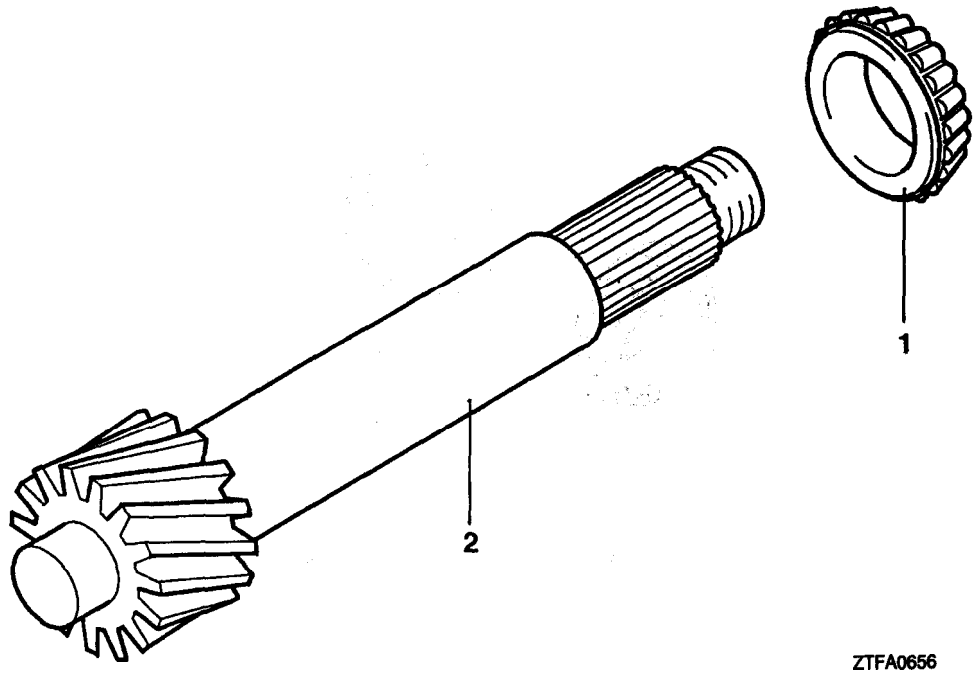

Disassembly steps

◀A▶ ▶A◀ 1. Bearing
2. Transfer shaft

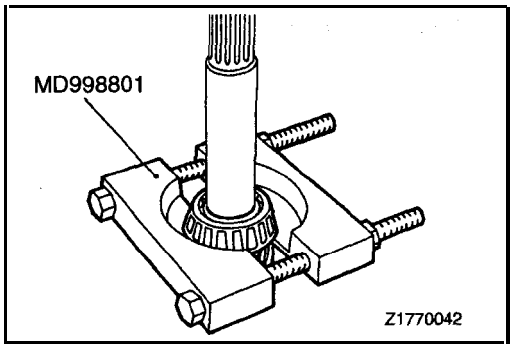

DISASSEMBLY SERVICE POINT

◀A▶ **BEARING REMOVAL**

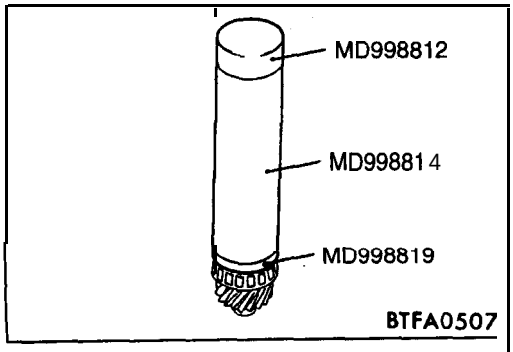

REASSEMBLY SERVICE POINT

▶A◀ **BEARING INSTALLATION**

TSB Revision

TRANSFER DRIVEN GEAR

23300520039

DISASSEMBLY AND REASSEMBLY

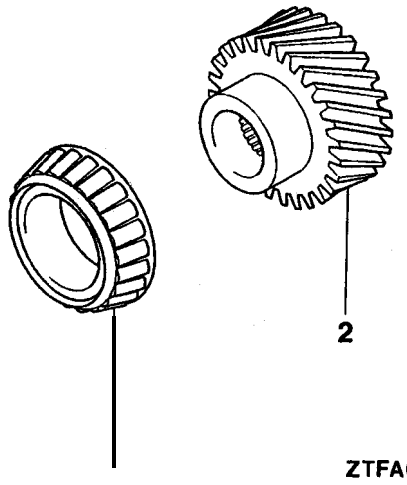

Disassembly steps

◀A▶ ▶A◀ 1. Bearing
2. Transfer driven gear

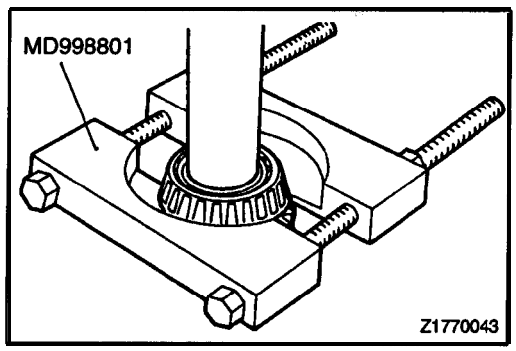

DISASSEMBLY SERVICE POINT

◀A▶ BEARING REMOVAL

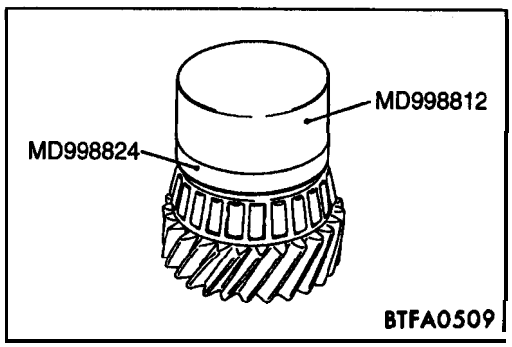

REASSEMBLY SERVICE POINT

▶A◀ BEARING INSTALLATION

TSB Revision

VALVE BODY

23300550052

DISASSEMBLY AND REASSEMBLY

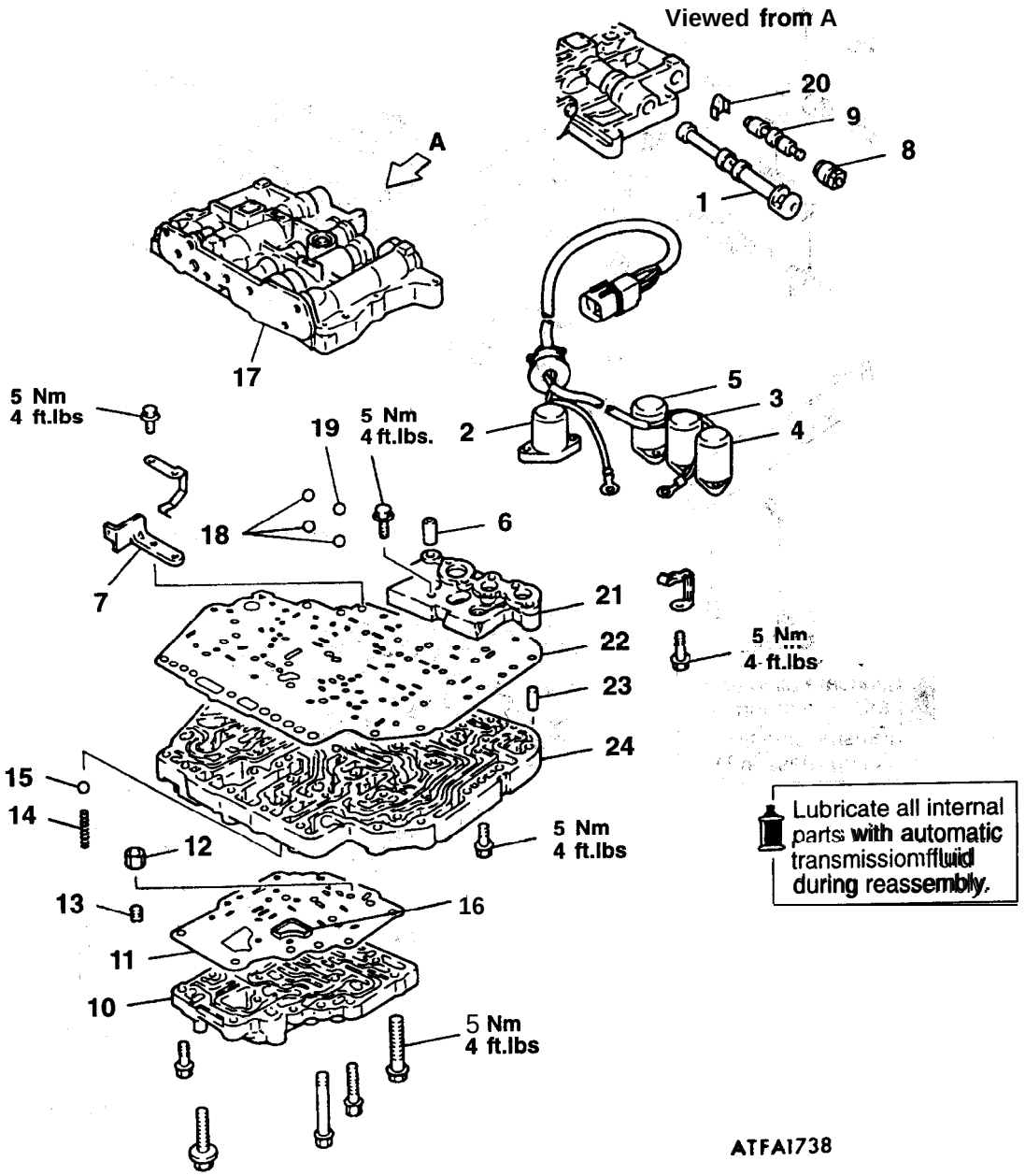

Disassembly steps

1. Manual valve
▶E◀ 2. Pressure control solenoid valve
▶E◀ 3. Shift control solenoid valve "A"
▶E◀ 4. Shift control solenoid valve "B"
▶E◀ 5. Torque converter clutch solenoid
6. Pipe
7. Valve stopper
8. N-D control sleeve
9. N-D control valve
▶D◀ 10. Lower valve body sub assembly
11. Lower separating plate
12. Nut
13. Jet
▶C◀ 14. Relief spring
▶C◀ 15. Steel ball
▶C◀ 16. Oil filter.
▶B◀ 17. Upper valve body sub assembly
▶A◀ 18. Steel ball
▶A◀ 19. Teflon ball
▶A◀ 20. N/D plate
21. Block
22. Upper separating plate
23. Dowel bushing
24. Intermediate plate

TSB Revision

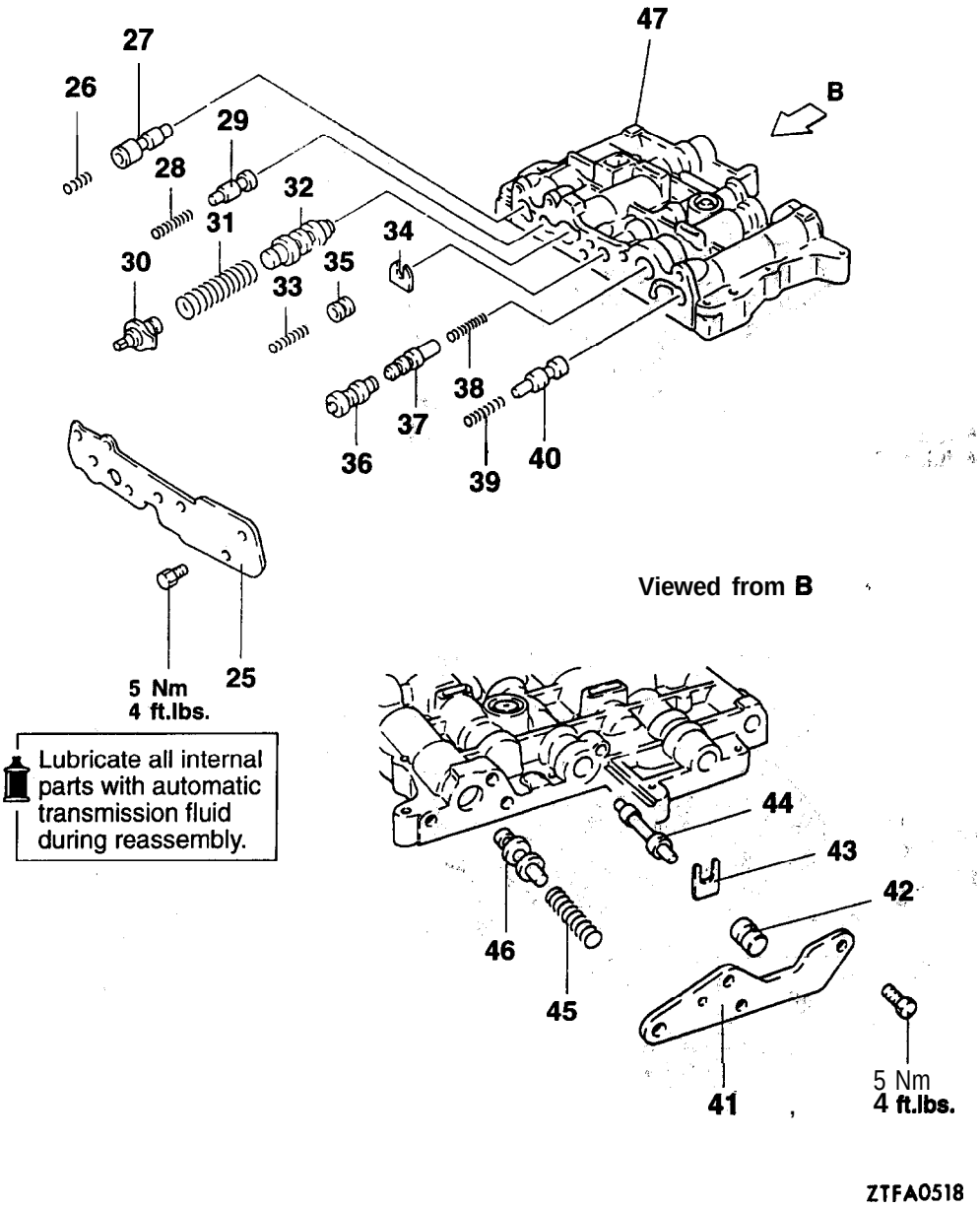

25. Front end cover
26. Pressure control spring
27. Pressure control valve
28. Torque converter control spring
29. Torque converter control valve
30. Adjusting screw
31. Regulator spring
32. Regulator valve
33. Shift control spriig A
▶A◀ 34. Stopper plate
35. Shift control plug
36. Rear clutch exhaust valve A
37. Rear clutch exhaust valve B
38. Rear clutch exhaust spring
39. 2-3/4-3 shift spring
40. 2-3/4-3 shift valve
41. Rear end "cover
42. Shift control plug B
▶A◀ 43. Stopper plate
44. Shift control valve
45. 1-2 shift spring
46. 1-2 shift valve
47. Upper valve body

TSB Revision

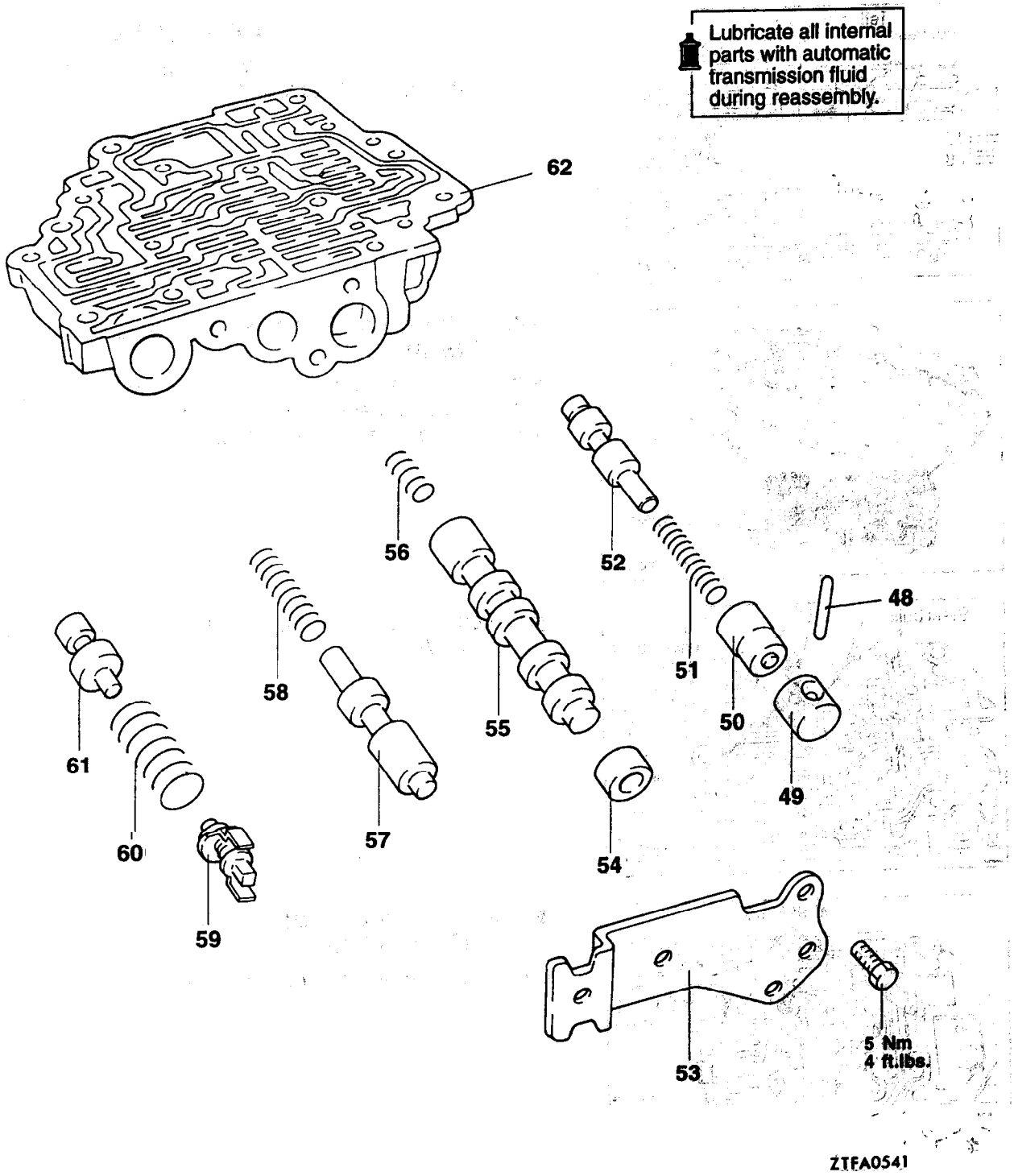

48. Pin
49. Stopper
50. End clutch plug
51. End clutch spring
52. End clutch valve
53. End cover
54. Torque converter clutch control sleeve
55. Torque converter clutch control valve
56. Torque converter clutch control spring
57. N-R control valve
58. N-R control spring
59. Adjusting screw
60. Reducing spning
61. Reducing valve
62. Lower valve body

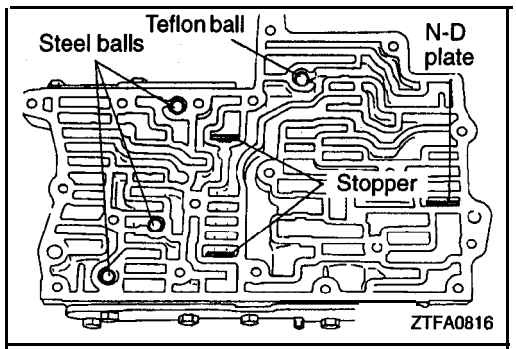

REASSEMBLY SERVICE POINTS

▶A◀ STOPPER PLATE / N-D PLATE / TEFLON BALL / STEEL BALL LOCATION

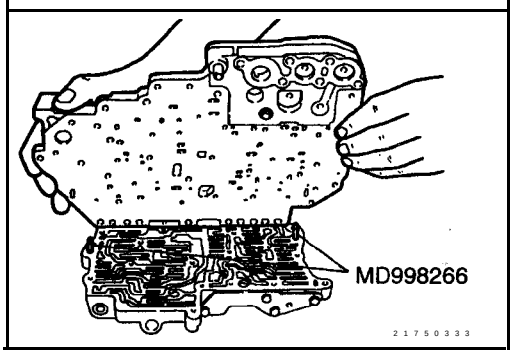

▶B◀ UPPER VALVE BODY SUB ASSEMBLY INSTALLATION

Mount the special tools, and secure the upper separating plate and intermediate plate with the eight mounting bolts. Then, demount the special tools.

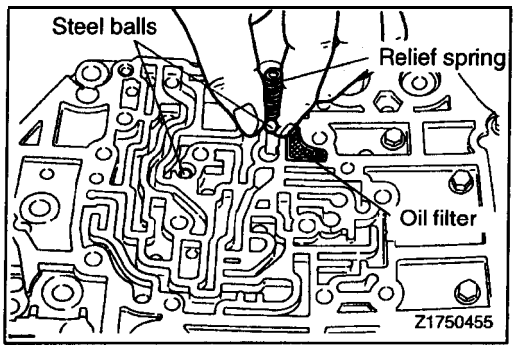

▶C◀ OIL FILTER / STEEL BALL / RELIEF SPRING LOCATION

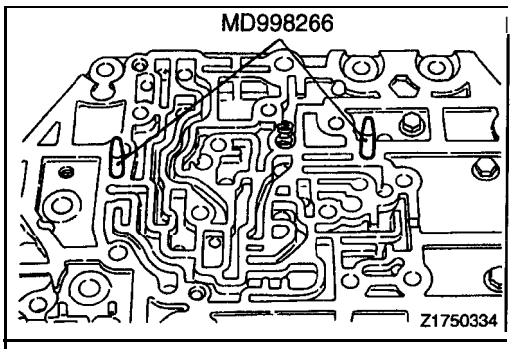

▶D◀ LOWER VALVE BODY SUB ASSEMBLY INSTALLATION

(1) Mount the special tools on the intermediate plate.

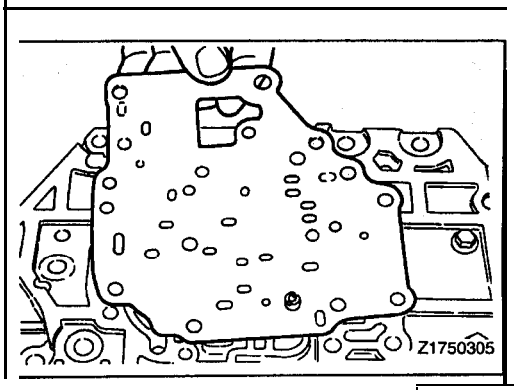

(2) Install the separating plate.

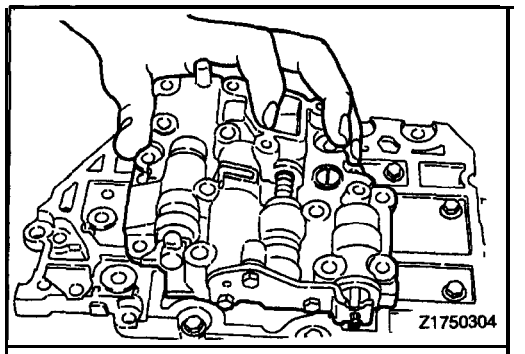

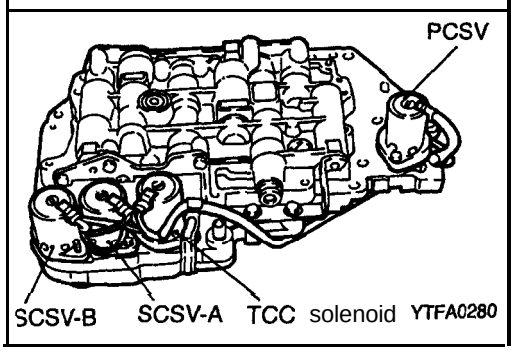

(3) Secure the lower valve body with the bolts. Then, remove the special tools.

▶E◀ SOLENOID VALVE ASSEMBLY INSTALLATION

Install each solenoid valve in the position shown in the figure.

Solenoid valve	Wiring color
Shift control solenoid valve "A" (SCSV-A)	Orange
Shift control solenoid valve "B" (SCSV-B)	Yellow
Torque converter clutch solenoid (TCC solenoid)	Red/Black
Pressure control solenoid valve (PCSV)	Blue

NOTES

AUTOMATIC TRANSAXL F OVERHAUL <F4A33, W4A33> .

CONTENTS

23309000060

GENERAL INFORMATION

23300010062

Precautions to be taken when disassembling and reassembling the transaxle

- Because the automatic transaxle is composed of component parts of an especially high degree of precision, these parts should be very carefully handled during disassembly and assembly so as not to scar or scratch them.
- A rubber mat should be placed on the workbench, and it should always be kept clean.
- During disassembly, cloth gloves or shop towels, should not be used. If such items must be used, either use articles made of nylon, or use paper towels.
- All disassembled parts must be thoroughly cleaned.
  Metal parts may be cleaned with ordinary detergents, but must be thoroughly air dried.
- Clean the clutch disc, resin thrust plate and rubber parts by using ATF (automatic transmission fluid), being very careful that dust, dirt, etc. do not adhere to them.
- Do not reuse gaskets, oil seals, or, rubber parts.
  Replace such parts with new ones at every reassembly. The O-ring of the oil' level gauge need not be replaced.
- Do not use grease other than petrolatum jelly.
- Apply ATF to friction components, rotating parts, and sliding parts before installation.
- A new clutch disc should be immersed in ATF for at least two hours before installation.
- Do not apply sealer or adhesive to gaskets.
- When a bushing must be replaced, replace the assembly in which it is incorporated:
- If the transaxle main unit is damaged, also disassemble and clean the 'cooler system.

SECTIONAL VIEW – F4A33

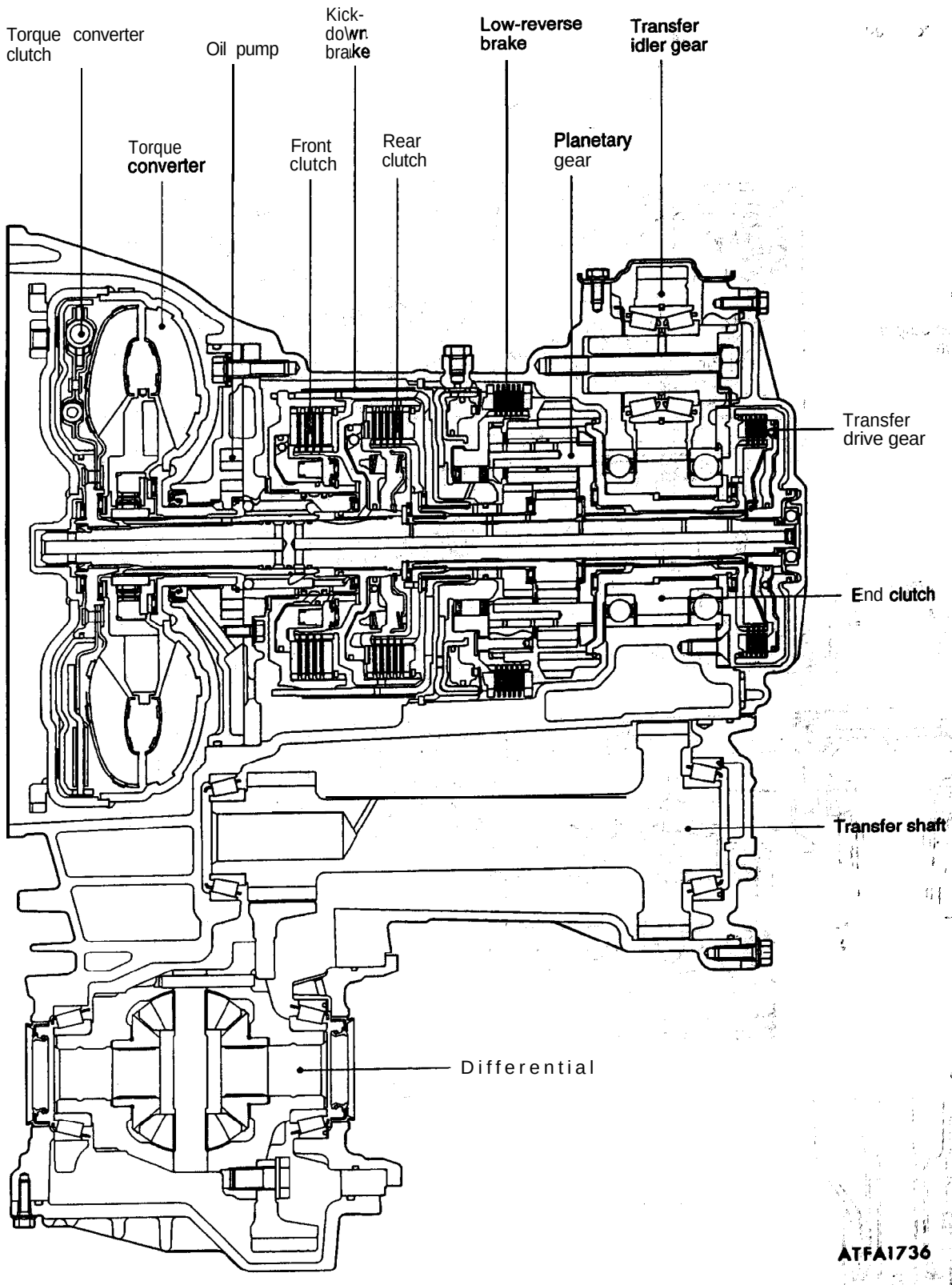

TSB Revision

SECTIONAL VIEW – W4A33

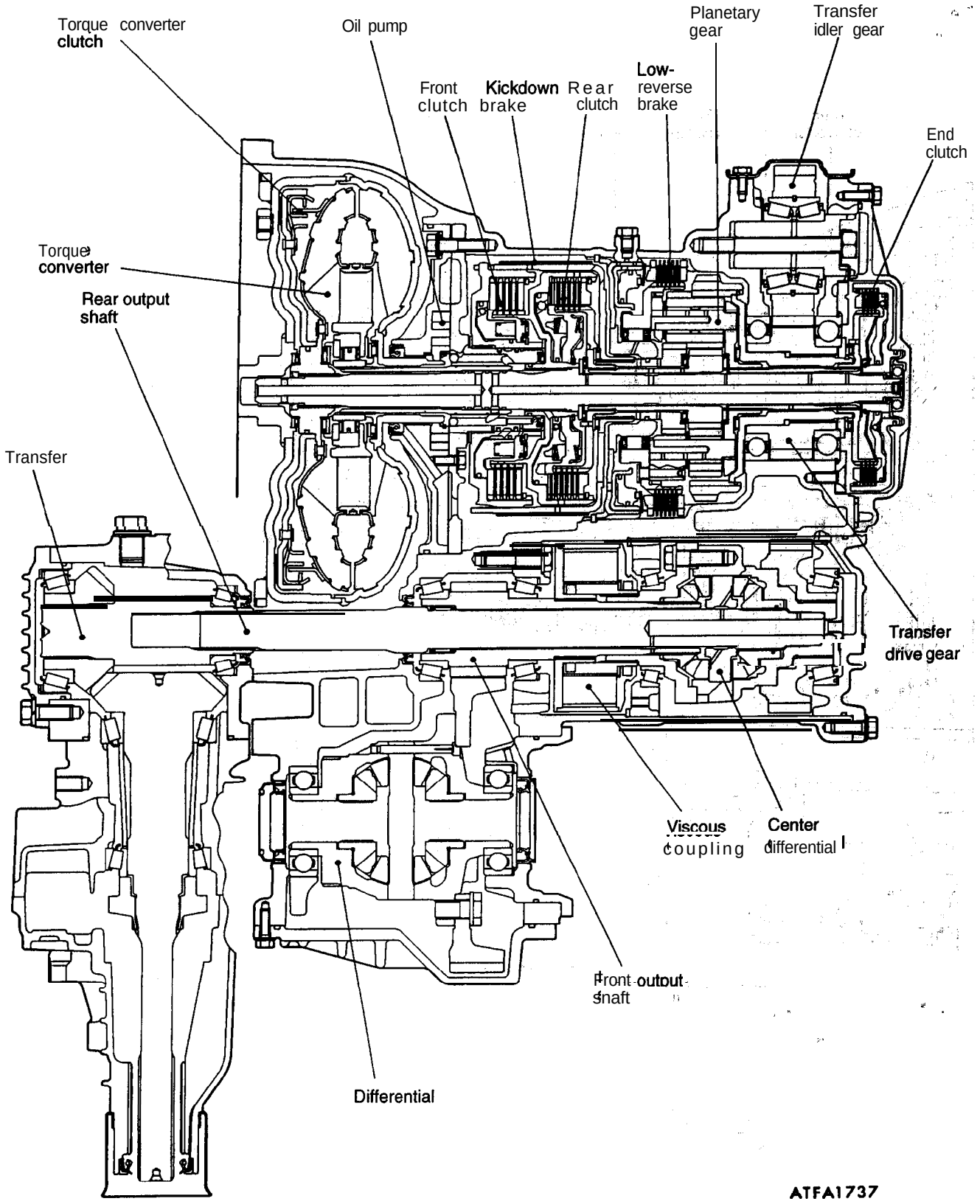

TSB Revision

HYDRAULIC CONTROL SYSTEM

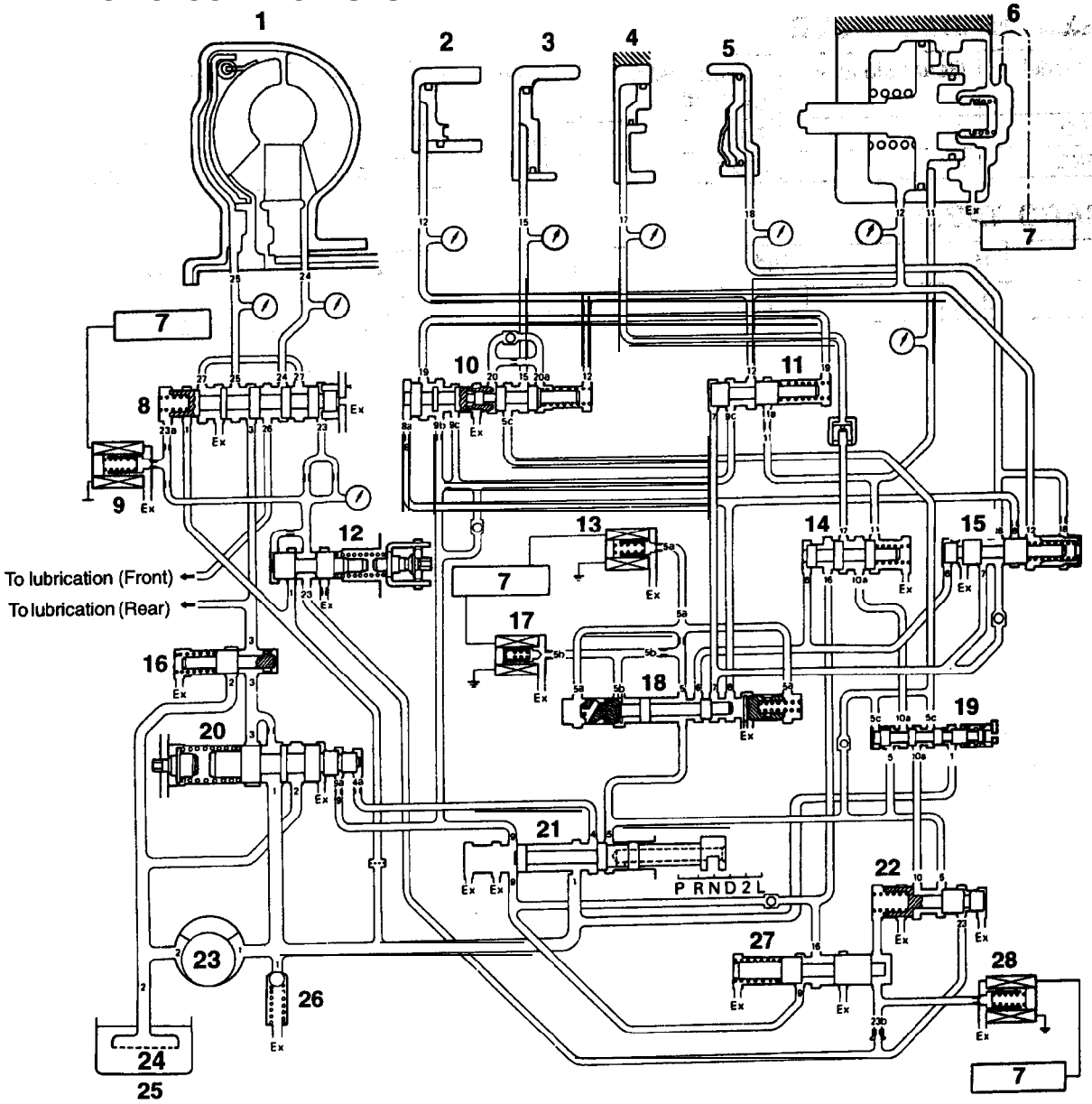

1. Torque converter
2. Front clutch
3. Rear clutch
4. Low-reverse brake
5. End clutch
6. Kickdown servo
7. Transaxle control module
8. Torque converter clutch control valve
9. Torque converter clutch solenoid
10. Rear clutch exhaust valve
11. 2-3/4-3 shift valve
12. Reducing valve
13. Shift control solenoid valve "A"
14. 1-2 shift valve
15. End clutch valve
16. Torque converter control valve
17. Shift control solenoid valve "B"
18. Shift control valve
19. N-D control valve
20. Regulator valve
21. Manual valve
22. Pressure control valve
23. Oil pump
24. Oil filter
25. Oil pan
26. Line relief valve
27. N-R control valve
28. Pressure control solenoid valve

TSB Revision

SPECIFICATIONS

23300020157

TRANSAXLE MODEL TABLE

Transaxle model	Gear ratio type	Speedometer gear ratio	Final gear ratio	Vehicle model	Engine model
F4A33-1-UPQ	A	29/36	4.376	D32A	4G63-DOHC T/C
W4A33-1-FNQ	A	28/36	4.361	D33A	4G63-DOHC T/C

GEAR RATIO TABLE

	1st	2nd	3rd	4th	Reverse
A	2.551	1.488	1.000	0.685	2.176

TSB Revision

SERVICE SPECIFICATIONS

23300030068

Item	Standard value
Transfer driven gear preload (Center differential case preload) mm (in.)	0.075 – 0.135 (.00298–.00536)
Low-reverse brake end play mm (in.)	1.0–1.2 (.039–.047)
Input shaft end play mm (in.)	0.3–1.0 (.012–.039)
Differential case preload – F4A33 mm (in.)	0.075–0.135 (.00298–.00536)
Front differential case end play – W4A33 mm (in.)	0.045–0.165 (.00179–.00655)
Differential gear and pinion backlash mm (in.)	0.025–0.150 (.00099–.00596)
Oil pump side clearance mm (in.)	0.03–0.05 (.0012–.0020)
Output flange bearing end play mm (in.)	0–0.09 (0–.0035)
Front clutch end play mm (in.)	0.8–1.0 (.032–.039)
Rear clutch end play mm (in.)	1.0–1.2 (.039–.047)
End clutch end play mm (in.)	0.60–0.85 (.0236–.0335)
Transfer drive gear end play mm (in.)	0–0.09 (07.0035)
Front output shaft preload – W4A33 mm (in.)	0.055–0.115 (.00218–.00457)
'Center differential side gear end play – W4A33 mm (in.)	0.01–0.03 (.0004–.0012)
Bevel gear set backlash – W4A33 mm (in.)	0.08–0.13 (.0031–.0051)
Driven bevel gear turning drive torque – W4A33 Nm (ft.lbs.)	1.0–1.7 (.72–1.23)
Drive bevel gear shaft turning drive torque – W4A33 Nm (ft.lbs.)	1.7–2.5 (1.23–1.81)

VALVE BODY SPRING IDENTIFICATION CHART

mm (in.)

Part name	Wire diameter	Outside diameter	Length	No. of turns
Regular valve spring	1.4 (.055)	15 (.59)	52 (2.05)	11.5
1-2 shift valve spring	0.6 (.024)	7.6 (.299)	26.6 (1.047)	13.5
Pressure control valve spring	0.45 (.0177)	7.6 (.299)	21.3 (.839)	8.5
Rear clutch exhaust valve spring	0.7 (.028)	6.8 (.268)	27.4 (1.079)	12.5
End clutch valve spring	0.6 (.024)	6.6 (.260)	24.4 (.961)	15.5
2-3 shift valve spring	0.8 (.031)	7.0 (.276)	27.5 (1.083)	15.5
N-R control valve spring	0.7 (.028)	9.2 (.362)	32.1 (1.264)	8.5
Reducing valve spring	1.2 (.047)	8.9 (.350)	29.5 (1.161)	12.5
Line relief spring	1.0 (.039)	7.0 (.276)	17.3 (.681)	10
Torque converter valve spring	1.3 (.051)	9.0 (.354)	22.6 (.890)	9.5
Shift control valve spring	0.5 (.020)	5.7 (.224)	26.8 (1.055)	22
Torque converter clutch control valve spring	0.7 (.028)	6.2 (.244)	14.2 (.559)	9.5

PRESSURE PLATES, SNAP RINGS AND SPACERS FOR ADJUSTMENT

Pressure plate (For adjustment of low-reverse brake end play)

Thickness mm (in.)	Identification symbol	Part No.	Thickness mm (in.)	Identification symbol	Part No.
5.9 (.232)	A	MD731738	8.5 (.256)	5	MD731741
6.0 (.236)	0	MD731737	8.8 (.260)	8	MD731742
8.1 (.240)	1	MD731738	8.7 (.264)	7	MD731743
8.2 (.244)	2	MD731739	8.8 (.268)	8	MD731744
8.3 (.248)	3	MD731740	6.9 (.272)	9	MD731745
8.4 (.252)	4	MD731588			

Snap ring (For adjustment of front clutch and rear clutch end play) • ...rear clutch only

Thickness mm (in.)	Identification symbol	Part No.	Thickness mm (in.)	Identification symbol	Part No.
1.3* (.051)	None	MD731747	1.9 (.075)	None	MD731753
1.4* (.055)	Blue	MD731748	2.0 (.079)	Blue	MD731754
1.5 (.059)	Brown	MD731749	2.1 (.083)	Brown	MD731755
1.6 (.063)	None	MD731750	2.2 (.087)	None	MD731756
1.7 (.067)	Blue	MD731751	2.3 (.091)	Blue	MD731757
1.8 (.071)	Brown	MD731752	2.4 (.094)	Brown	MD731758

Snap ring (For adjustment of end clutch end play)

Thickness mm (in.)	Identification symbol	Part No.	Thickness mm (in.)	Identification symbol	Part No.
1.05 (.0413)	White	MD715800	1.80 (.0709)	Green	MD715803
1.30 (.0512)	Yellow	MD715801	2.05 (.0807)	Pink	MD720849
1.55 (.0610)	None	MD715802			

Spacer (For adjustment of transfer driven gear preload)

Thickness mm (in.)	Identification symbol	Part No.	Thickness mm (in.)	Identification symbol	Part No.
0.62 (.0244)	82	MD737444	0.96 (.0386)	98	MD728810
0.65 (.0256)	65	MD737445	1.01 (.0398)	01	MD728811
0.68 (.0268)	88	MD737446	1.04 (.0409)	04	MD728812
0.71 (.0280)	71	MD737447	1.07 (.0421)	07	MD728813
0.74 (.0291)	74	MD728802	1.10 (.0433)	10	MD728814
0.77 (.0303)	77	MD728803	1.13 (.0445)	13	MD728815
0.80 (.0315)	80	MD728804	1.16 (.0457)	16	MD728816
0.83 (.0327)	83	MD728805	1.19 (.0469)	19	MD728817
0.86 (.0339)	88	MD728806	1.22 (.0480)	22	MD728818
0.89 (.0350)	89	MD728807	1.25 (.0492)	25	MD728819
0.92 (.0362)	92	MD728808	1.28 (.0504)	28	MD728820
0.95 (.0374)	95	MD728809	1.31 (.0516)	31	MD728821

Snap ring (For adjustment of output flange bearing end play)

Thickness mm (in.)	Identification symbol	Part No.	Thickness mm (in.)	Identification symbol	Part No.
1.76 (.0693)	Brown	MD733314	2.00 (.0787)	None	MD721016
1.82 (.0717)	None	MD722538	2.06 (.0811)	Blue	MD721017
1.88 (.0740)	Blue	MD721014	2.12 (.0835)	Brown	MD722539
1.94 (.0764)	Brown	MD721015	2.18 (.0858)	None	MD733315

TSB Revision

Spacer – F4A33 (For adjustment of differential case preload)

Thickness mm (in.)	Identification symbol	ran No.	Thickness mm (in.)	Identification symbol	PartNo.No.
0.71 (.0280)	71	MD754475	1.07 (.0421)	07	MD720945
0.74 (.0291)	74	MD727660	1.10 (.0433)	J	MD710454
0.77 (.0303)	77	MD754476	1.13 (.0445)	D	MD700270
0.80 (.0315)	80	MD727661	1.16 (.0457)	K	MD710455
0.83 (.0327)	83	MD720937	1.19 (.0469)	L	MD710456
0.86 (.0339)	88	MD720938	1.22 (.0480)	G	MD700271
0.89 (.0350)	89	MD720939	1.25 (.0492)	M	MD71 0457
0.92 (.0362)	92	MD720940	1.28 (.0504)	N	MD710458
0.95 (.0374)	95	MD720941	1.31 (.0516)	E	MD706574
0.98 (.0386)	98	MD720942	1.34 (.0528)	0	MD710459
1.01 (.0398)	01	MD720943	1.37 (.0539)	P	MD710460
1.04 (.0409)	04	MD720944			

Spacer – W4A33 (For adjustment of differential case end play)

Thickness mm (in.)	Identification symbol	Part No.	Thickness mm (in.)	Identification symbol	Part No.
1.01 (.0398)	01	MD720943	1.19 (.0469)	L	MD710456
1.10 (.0433)	J	MD71 0454	1.28 (.0504)	N	MD710458

Spacer (For adjustment of differential gear and pinion backlash)

Thickness mm (in.)	Identification symbol	Part No.	Thickness mm (in;)	Identification symbol	Part No.
0.75–0.82 (.0295–.0323)	–	MD722986	1.01–1.08 (.0398–.0425)	–	MD722982
0.83–0.92 (.0327–.0362)	–	MD722985	1.09–1 .16 (.0429–.0457)	–	MD722983
0.93–1 .00 (.0366–.0394)	–	MD722984			

Spacer – W4A33 (For adjustment of center differential front side gear end play)

Thickness mm (in.)	Identification symbol	Part No.	Thickness mm (in.)	Identification symbol	Part No.
0.53–0.60 (.0209–.0236)	41	MD727941	1.01–1.08 (.0398–.0425)	30	M D727930
0.69–0.76 (.0272–.0299)	3 4	MD727934	1.17-1.24 (.0461–.0498)	28	MD727928
0.85–0.92 (.0335–.0362)	32	MD727932			

Spacer – W4A33 (For adjustment of center differential rear side gear end play)

Thickness mm (in.)	Identification symbol	Part No.	Thickness mm (in.)	Identification symbol	Part No.
0.59–0.66 (.0232–.0260)	73	MD724973	1.09–1.16 (.0429–.0457)	43	MD724943
0.75–0.82 (.0295–.0323)	4 8	MD724946	1.25– 1.32 (.0492–.0520)	72	MD724972
0.93–1.00 (.0366–.0394)	8 1	MD720681			

Spacer – W4A33 (For adjustment of drive bevel gear mount)

Thickness mm (in.)	Identification symbol	Part No.	Thickness mm (in.)	Identification symbol	Part No.
1.34 (.0528)	34	MD723600	1.52 (.0598)	52	MD723606
1.37 (.0539)	37	MD723601	1.55 (.0610)	55	MD723607
1.40 (.0551)	40	MD723602	1.58 (.0622)	58	MD723608
1.43 (.0563)	43	MD723603	1.61 (.0634)	61	MD723609
1.46 (.0575)	46	MD723604	1.64 (.0646)	64	MD726170
1.49 (.0587)	49	MD723605	1.67 (.0657)	67	MD726171

Spacer – W4A33 (For adjustment of drive bevel gear train preload)

Thickness mm (in.)	Identification symbol	Part No.	Thickness mm (in.)	Identification symbol	Part No.
1.28 (.0504)	B28	MD726167	1.58 (.0622)	B58	MD724333
1.31 (.0516)	B31	MD726168	1.61 (.0634)	B61	MD724334
1.34 (.0528)	B34	MD726169	1.64 (.0646)	B64	MD724335
1.37 (.0539)	B37	MD724326	1.67 (.0657)	B67	MD724336
1.40 (.0551)	B40	MD724327	1.70 (.0669)	B70	MD724337
1.43 (.0563)	B43	MD724328	1.73 (.0681)	B73	MD724338
1.46 (.0575)	B46	MD724329	1.76 (.0693)	B76	MD724339
1.49 (.0587)	B49	MD724330	1.79 (.0705)	B79	MD724340
1.52 (.0598)	B52	MD724331	1.82 (.0717)	B82	MD724341
1.55 (.0610)	B55	MD724332	1.85 (.0728)	B85	MD724342

Spacer – W4A33 (For adjustment of driven bevel gear train preload)

Thickness mm (in.)	Identification symbol	Part No.	Thickness mm (in.)	Identification symbol	Part No.
1.19 (.0469)	19	MD726172	1.58 (.0622)	58	MD722093
1.22 (.0480)	22	MD722081	1.61 (.0634)	61	MD722094
1.25 (.0492)	25	MD722082	1.64 (.0646)	64	MD722095
1.28 (.0504)	28	MD722083	1.67 (.0657)	67	MD722096
1.31 (.0516)	31	MD722084	1.70 (.0669)	70	MD722097
1.34 (.0528)	34	MD722085	1.73 (.0681)	73	MD722098
1.37 (.0539)	37	MD722086	1.76 (.0693)	76	MD722099
1.40 (.0551)	40	MD722087	1.79 (.0705)	79	MD722100
1.43 (.0563)	43	MD722088	1.82 (.0717)	82	MD722101
1.46 (.0575)	46	MD722089	1.85 (.0728)	85	MD722102
1.49 (.0587)	49	MD722090	1.88 (.0740)	88	MD722103
1.52 (.0610)	52	MD722092	1.94 (.0764)	94	MD722105

Spacer – W4A33 (For adjustment of driven bevel gear mount)

Thickness mm (in.)	Identification symbol	Part No.	Thickness mm (in.)	Identification symbol	Part No.
0.13 (.0051)	13	MD720353	0.34 (.0134)	34	MD720360
0.16 (.0063)	16	MD720354	0.37 (.0146)	37	MD720361
0.19 (.0075)	19	MD720355	0.40 (.0517)	40	MD720362
0.22 (.0087)	22	MD720356	0.43 (.0169)	43	MD720363
0.25 (.0098)	25	MD720357	0.46 (.0181)	46	MD720364
0.28 (.0110)	28	MD720358	0.49 (.0193)	49	MD720365
0.31 (.0122)	31	MD720359	0.52 (.0205)	52	MD720366

Spacer – W4A33 (For adjustment of front output bearing preload)

Thickness mm (in.)	Identification symbol	Part No.	Thickness mm (in.)	Identification symbol	Part No.
1.16 (.0457)	16	MD736929	1.49 (.0587)	49	MD718524
1.19 (.0469)	19	MD736751	1.52 (.0598)	52	MD718525
1.22 (.0480)	22	MD736931	1.55 (.0610)	55	MD715826
1.25 (.0492)	25	MD726166	1.58 (.0622)	58	MD718527
1.28 (.0504)	28	MD718517	1.61 (.0634)	61	MD718528
1.31 (.0516)	31	MD715818	1.64 (.0646)	64	MD718529
1.34 (.0528)	34	MD718519	1.67 (.0657)	67	MD718530
1.37 (.0539)	37	MD718520	1.70 (.0669)	70	MD718531
1.40 (.0551)	40	MD718521	1.73 (.0681)	73	MD721959
1.43 (.0563)	43	MD718522	1.76 (.0693)	76	MD721960
1.46 (.0575)	46	MD718523			

TORQUE SPECIFICATIONS

TRANSAXLE

Items	Nm	ft.lbs.
Air exhaust plug	33	24
Detent plate mounting bolt	11	8
Differential cover bolt	11	8
Differential drive gear bolt	135	98
Differential front bearing cap bolt	70	51
Differential rear bearing retainer bolt	35	26
End clutch cover bolt	11	8
Idler gear cover bolt	11	8
Idler shaft lock bolt	38	28
Park/neutral position switch (PNP switch) bolt	11	8
Kickdown servo lock nut	29	21
Manual control lever nut	19	14
Manual control shaft set screw	9	7
Oil drain bolt	33	24
Oil filter bolt	6	5
Oil dipstick guide bolt	24	18
Oil pan bolt	11	8
Oil pressure check plug	5	4
Oil pump assembly mounting bolt	21	16
Oil pump bolt	11	8
Output bearing retainer bolt	24	18
Output flange bearing retainer bolt	20	15
Parking rod support bolt	24	18
Pulse generator bolt	11	8
Roll stopper bracket bolt	49	35
Shift control cable bracket bolt	24	18
Speedometer gear locking plate bolt	5	4
Transaxle mount bracket bolt	70	51
Valve body assembly mounting bolt	11	8

Items	Nm	ft.lbs.
Valve body bolt	5	4
Center bearing retainer stopper bolt – W4A33	5	4
Center differential drive gear bolt – W4A33	75	54
Front bearing retainer bolt – W4A33	49	35

TRANSFER – W4A33

Items	Nm	ft.lbs.
Cover mounting bolt	5	4::
Driven bevel gear lock nut	1 5 0	108
Extension housing mounting bolt	19	1 ' 4
Oil drain plug	33	24
Oil filler plug	33	24
Transfer case adapter mounting bolt	39	28 4
Transfer cover mounting bolt	39	28

SEALANTS AND ADHESIVES

23300050019

<W4A33>

Items	Specified sealants and adhesives
Transfer extension housing – Transfer adapter	MITSUBISHI Genuine Part No. MD997740 or equivalent
Front bearing retainer bolts	3M Stud Locking Part No. 4170 or equivalent
Center differential flange bolts	3M Stud Locking Part No. 4170 or equivalent
Air breather	3M ATD Part No. 8001 or equivalent-

SPECIAL TOOLS

23300060067

Tool	Tool number and name	Supersession	Application
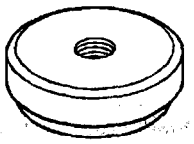	MB990934 Installer adapter	MB990934-01	Installation of bearing out race
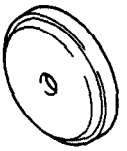	MB990936 Installer adapter	MB990936-01	
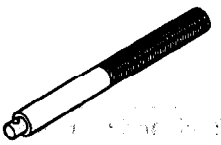	MB990938 Installer bar	MB990938-01	
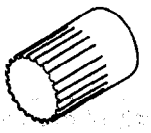	MB991144 Side gear holding tool	MB991144	Measurement of transfer drive and driven bevel gears drive torque <W4A33>
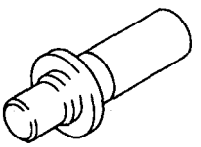	MD998200 Oil seal installer	MD998200-01	Installation of rear output shaft and transfer case oil seal <W4A33>
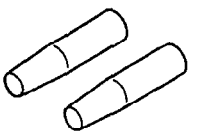	MD998266 Guide pin	MD998266-01	Alignment of intermediate plate and valve bodies
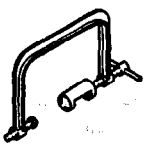	MD998303 Valve spring compressor	MD998341-01	Installation and removal of kickdown servo
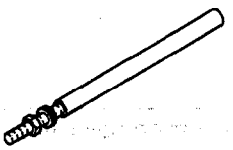	MD998316 Dial gauge support	MIT209038	Measurement of input shaft end play
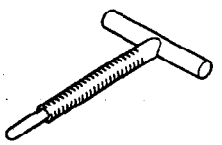	MD998333 Removers	MD998333-01	Removal and installation of oil pump assembly, center differential

Tool	Tool number and name	Supersession	Application
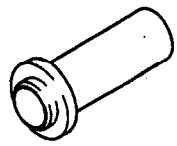	MD998334 Oil pump oil seal installer	MD998334-01	Installation of oil pump oil seal
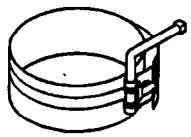	MD998335 Oil pump band	MD998335-01	Alignment of oil pump housing and reaction shaft support
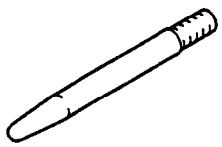	MD998336 Guide pin	MD998336-01	
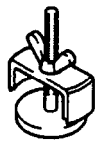	MD998337 Spring compressor	MD998337-01	Disassembly of front clutch and rear clutch
	MD998338 Spring compressor	MD998338-01	Disassembly and reassembly of rear clutch
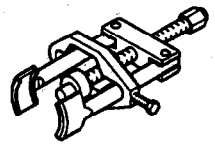	MD998348 Bearing puller	MD998348-01	Removal of bearing
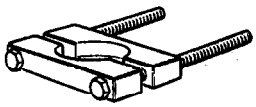	MD998801 Bearing remover	MD998348-01	
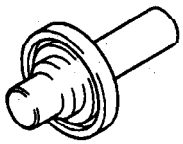	MD998800 Oil seal installer	–	Installation of drive shaft oil seal
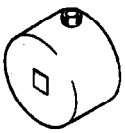	MD998806 Wrench adapter	MD998806-01	Measurement of transfer driven bevel gear drive torque <W4A33>

TSB Revision

Tool	Tool number and name	Supersession	Application
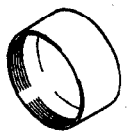	MD998812 Installer cap	General service tool	Use with installer and adapter
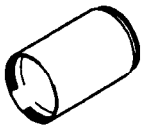	MD998813 Installer-100	General service tool	Use with installer cap and adapter
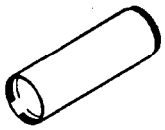	MD998814 Installer-200	MIT304180	
	MD998819 Installer adapter (40)	MD998819	Installation of each bearing
	MD998822 Installer adapter (46)	MD998822-01	
	MD998825 Installer adapter (52)	General service tool	
	MD998827 Installer adapter (56)	General service tool	
	MD998829 Installer adapter (60)	MD998829-01	
	MD998830 Installer adapter (66)	MD998830-01	

Tool	Tool number and name	Supersession	Application
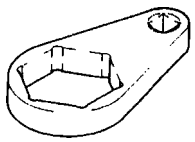	MD998834 Special spanner	–	Removal and installation of transfer driven bevel gear lock nut (50) <W4A33>
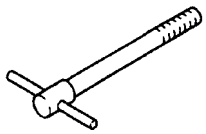	MD998904 Bolt	MD998904-01	Pull-out idler shaft
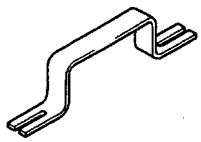	MD998905 Handle	MD998905-01	Removal and 'installation of center support
	MD998907 Spring compressor	MD998907-01	Disassembly and reassembly of front clutch and rear clutch
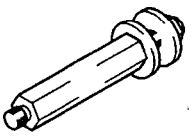	MD998915 Wrench adapter	MD998916-01 MD998916-1-01	Adjustment of kickdown servo
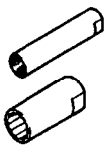	MD998916 Socket wrench	MD998916-2-01 MD998916-3-01	
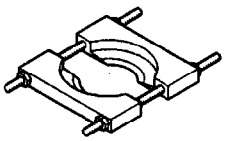	MD998917 Bearing remover	MD998917-01	Disassembly and reassembly of transfer driven gear, bearing
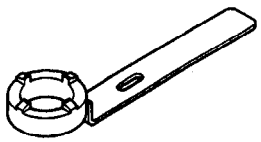	MD998918 Kickdown servo wrench	MD998918	Adjustment of kickdown servo
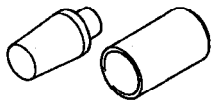	MD998919 Snap ring installer	MD998919	Reassembly of end clutch

TSB Revision

TRANSAXLE <F4A33>

23300100110

DISASSEMBLY AND REASSEMBLY

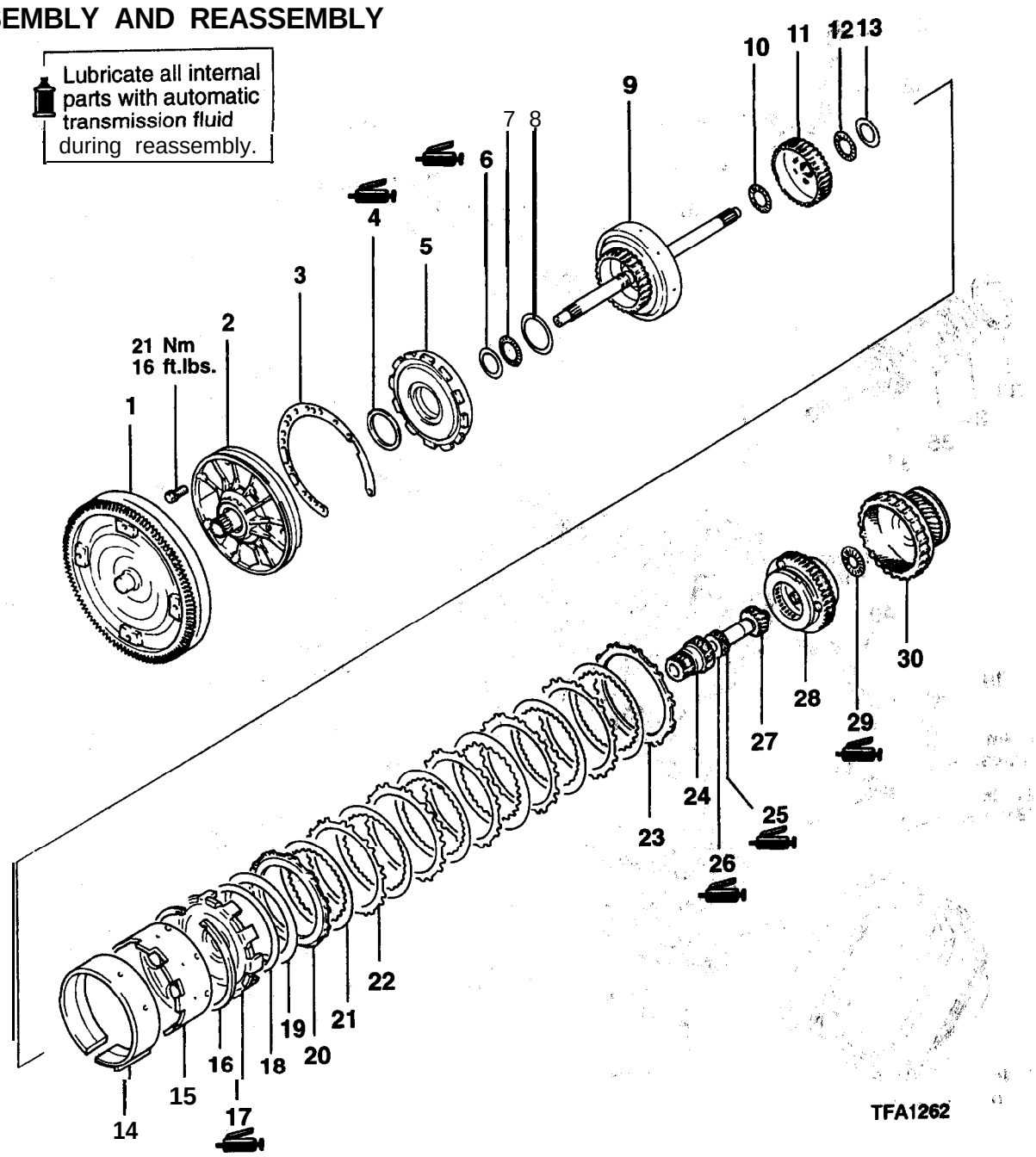

1. Torque converter
2. Oil pump assembly
3. Gasket
4. Thrust washer #1
5. Front clutch assembly
6. Thrust race #3
7. Thrust bearing #4
8. Thrust washer #2
9. Rear clutch assembly
10. Thrust bearing #5
11. Rear clutch hub
12. Thrust bearing #7
13. Thrust race #6
14. Kickdown band
15. Kickdown drum
16. Snap ring
17. Center support
18. Wave spring
19. Return spring
20. Pressure plate
21. Brake disc
22. Brake plate
23. Reaction 'plate
24. Reverse sun gear
25. Thrust bearing #8
26, Thrust race #9
27. Forward sun gear
28. Planetary carrier assembly
29. Thrust bearing #10
30. Output flange

TSB Revision

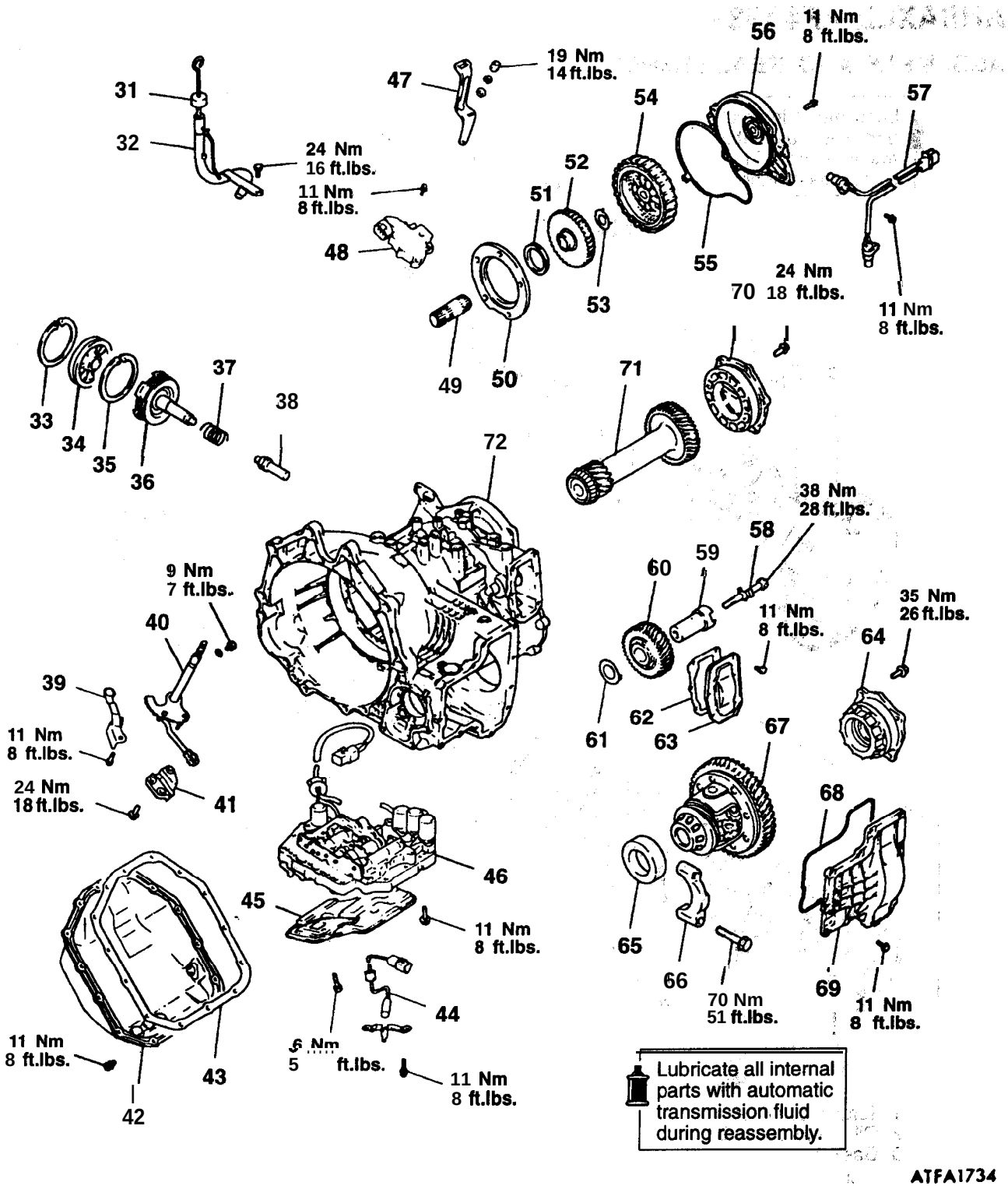

31. Oil dipstick
32. Oil filler tube
33. Snap ring
34. Kickdown servo switch
35. Snap ring
36. Kickdown servo piston
37. Spring
38. Anchor rod
39. Detent plate
40. Manual control shaft
41. Parking roller support
42. Oil pan
43. Gasket
44. Oil temperature sensor
45. Oil screen
46. Valve body assembly
47. Manual control lever
46. Park/neutral position switch (PNP switch)
49. End clutch shaft

TSB Revision

50. Bearing. retainer
51. Thrust bearing #11
52. End clutch hub
53. Thrust washer
54. End clutch assembly
55. O-ring
56. End clutch cover
57. Pulse generator
58. Lock bolt
59. Idler shaft
60. Idler gear
61. Spacer
62. Gasket
63. Idler gear cover
64. Differential bearing- retainer
65. Outer race
66. Diff erential, front bearing cap
67. Differential assembly
68. Gasket
69. Differential cover
70. Outer bearigg retainer
71. Transfer shaft
72. Transaxle case

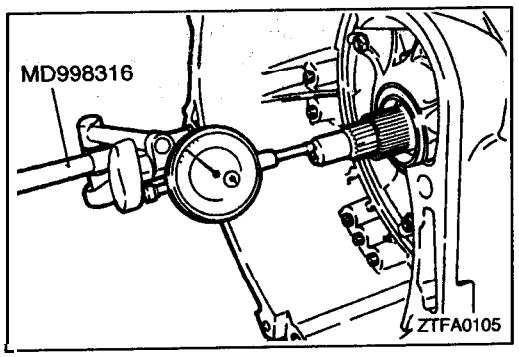

DISASSEMBLY

(1) Clean away any sand, mud, etc. adhered around the' transaxle.
(2) Place the transaxle assembly on the workbench with the oil pan down.
(3) Remove the torque converter;
(4) Use the special tool to mount the dial gauge on the trans-axle case and measure 'the. end play of the input shaft.

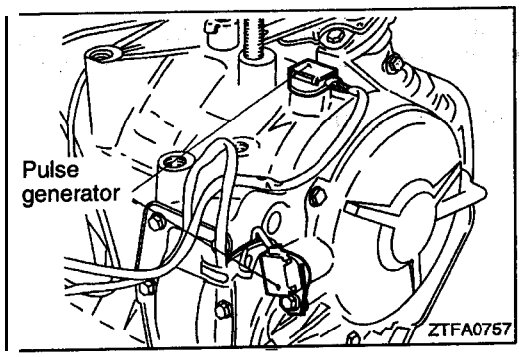

(5) Remove the pulse generator "A" and "B".

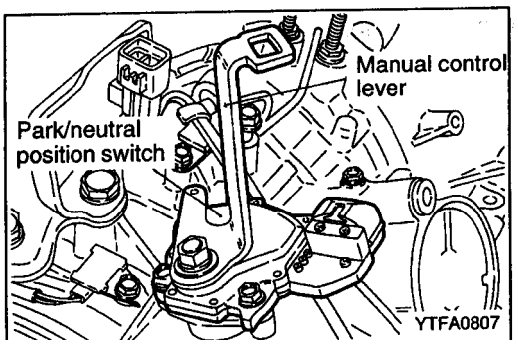

(6) Remove the manual control lever, 'then remove the park/ neutral position switch (PNP switch).

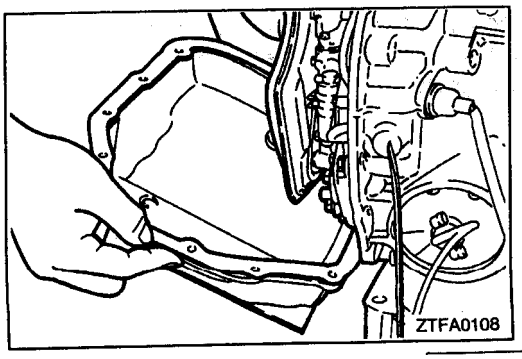

(7) Remove the oil pan, magnets and gasket.

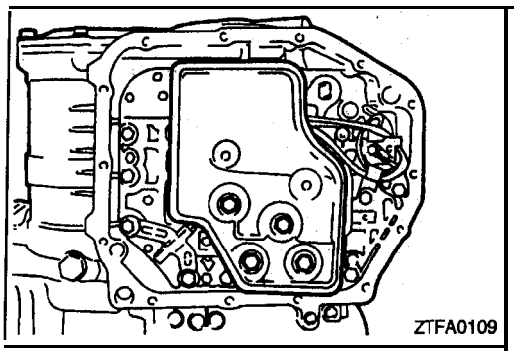

(8) Remove the oil filter from the valve body.

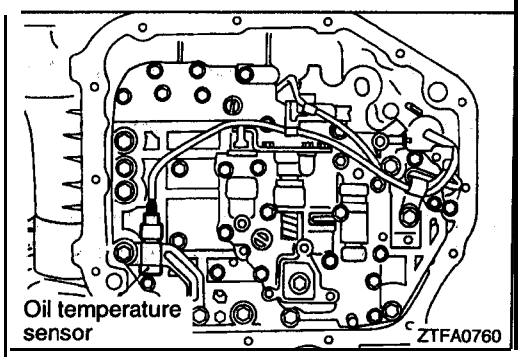

(9) Remove the 10 **valve** body mounting **bolts.**
(10) **Remove** the oil temperature sensor holder and **remove the** oil temperature sensor **harness from the** clamp,

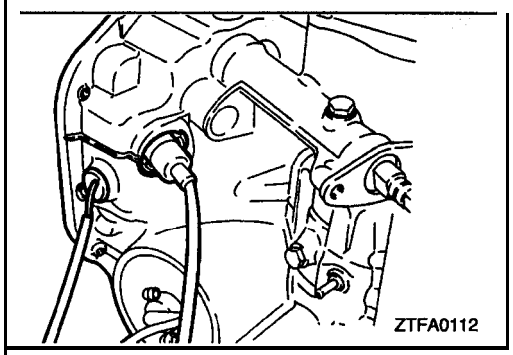

(11) **Press** the finger of the solenoid valve harness grommet,, push the grommet into **the case** and remove the valve body assembly.
(12) **Pull** out the oil temperature sensor.

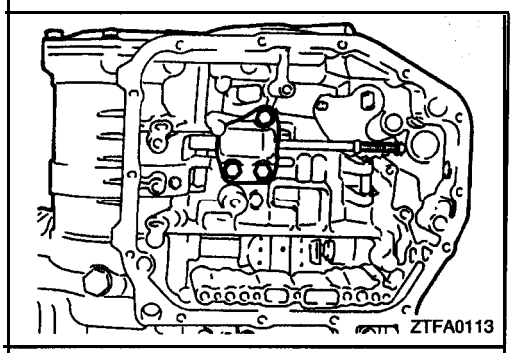

(13) **Remove** the parking roller **support.**

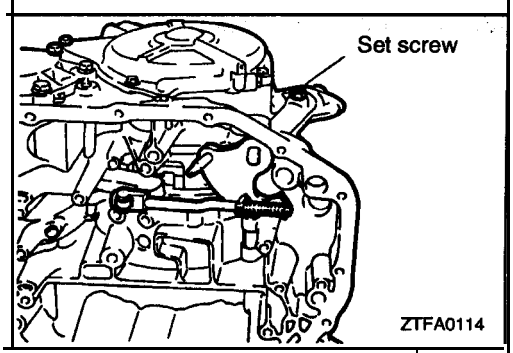

(14) **Remove** the set screw of the manual **control** shaft and' remove the manual control shaft **assembly.**
(15) **Remove** the detent plate.

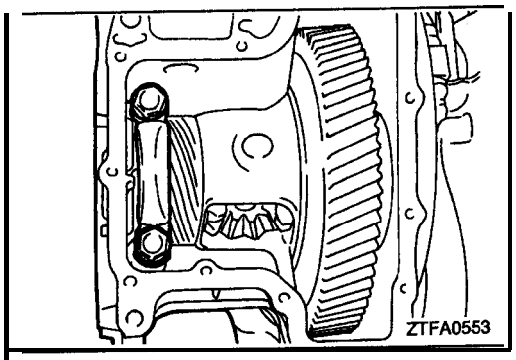

(16) Remove the differential cover and gasket.
(17) Remove the differential front bearing cap.

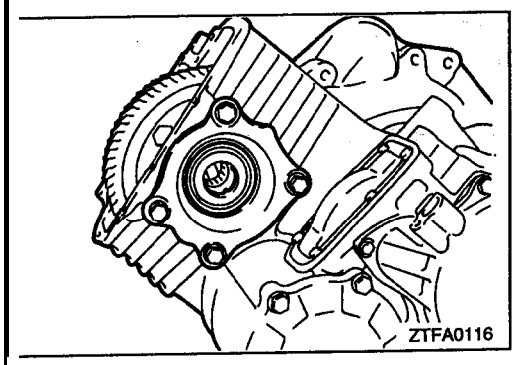

(18) Remove the differential bearing retainer, spacer and outer' race.

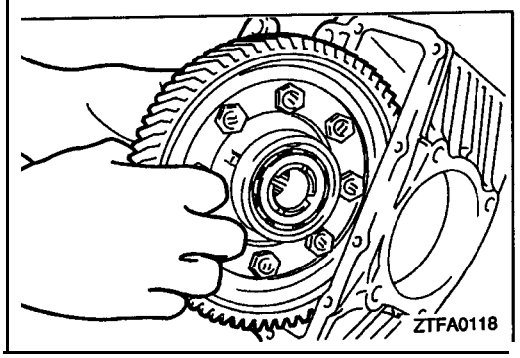

(19) Remove the differential assembly.

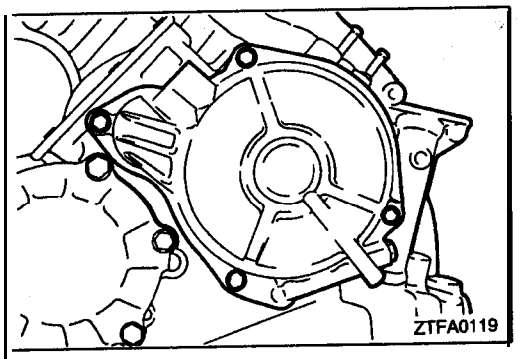

(20) Take out the end clutch' cover installation bolts, then remove the cover holder and end clutch cover.

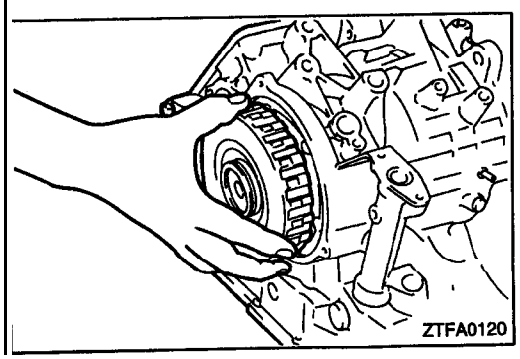

(21) Remove the end clutch assembly.

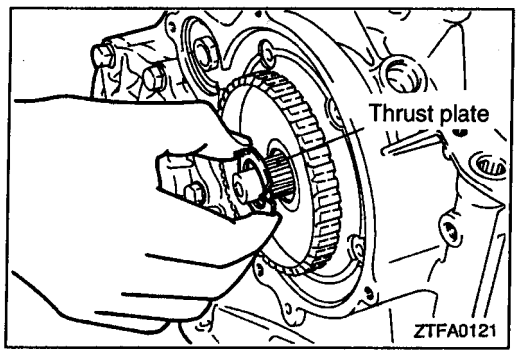

(22) **Remove** the thrust plate.

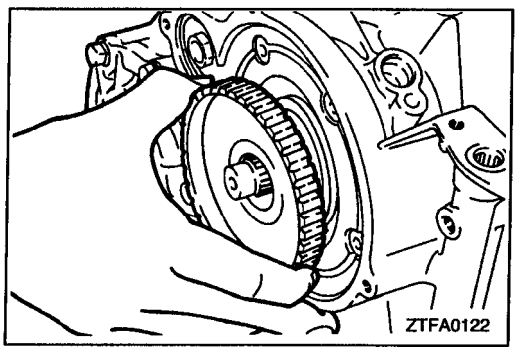

(23) **Remove** the end clutch hub.
(24) **Remove** thrust bearing **#11.**

NOTE
It may be stuck to the and clutch **hub.**

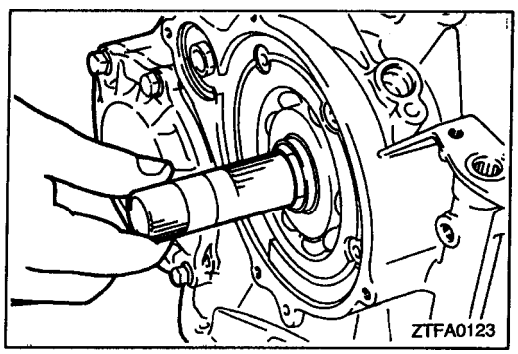

(25) **Pull** out the end clutch shaft.

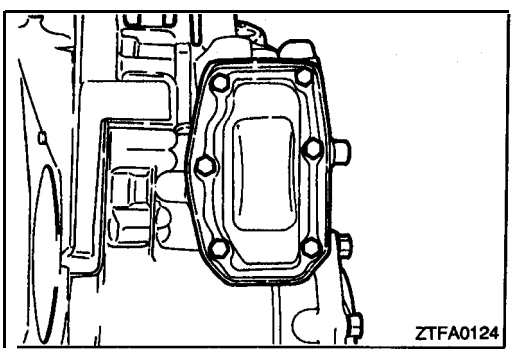

(26) **Remove** the idler gear cover mounting **bolts,** then' **remove** the idler gear cover and gasket.

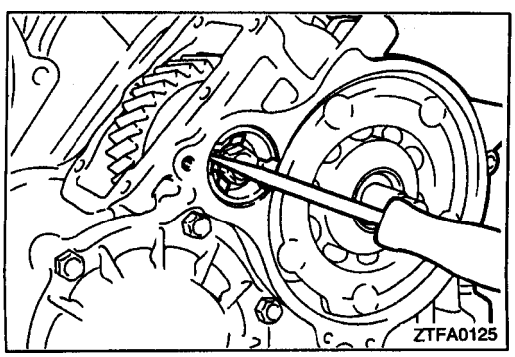

(27) **Disengage** the bolt stopper and remove the bolt.

TSB Revision

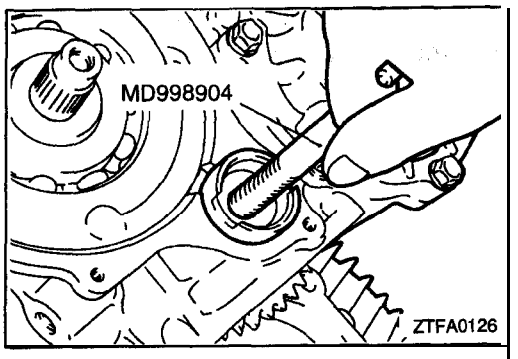

(28) Using the special tool, pull out the. idler shaft and then remove the idler gear and bearing inner race.

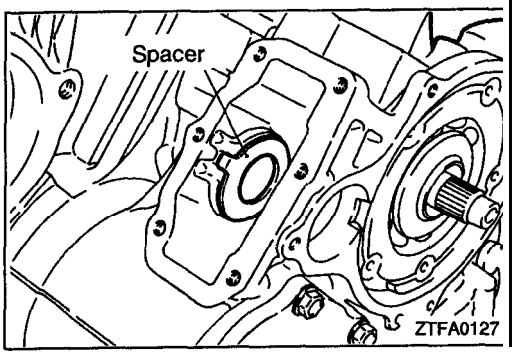

(29) Remove the spacer.

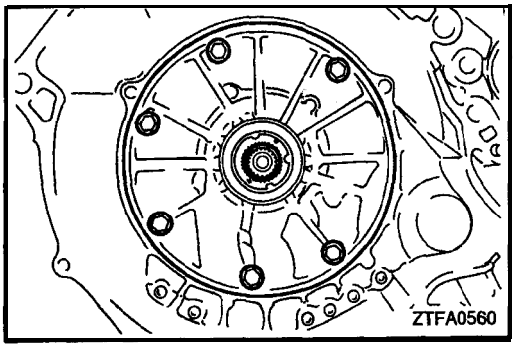

(30) Remove the oil pump installation bolts.

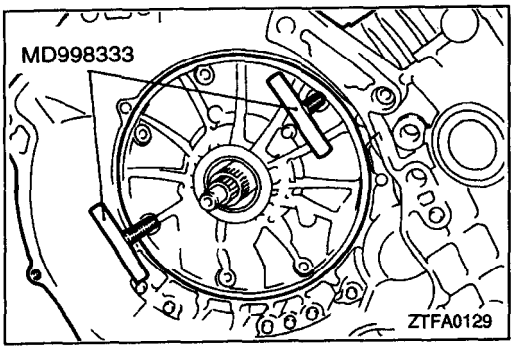

(31) Use the special tool to remove the oil pump.'

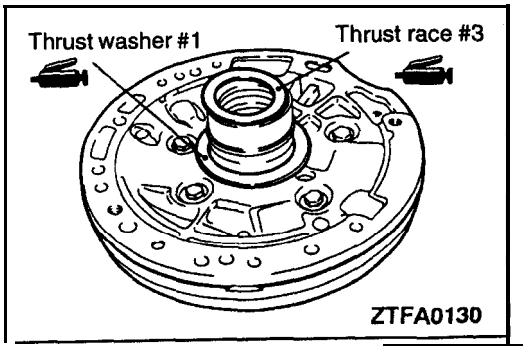

(32) Remove thrust washer #1 and thrust race #3.

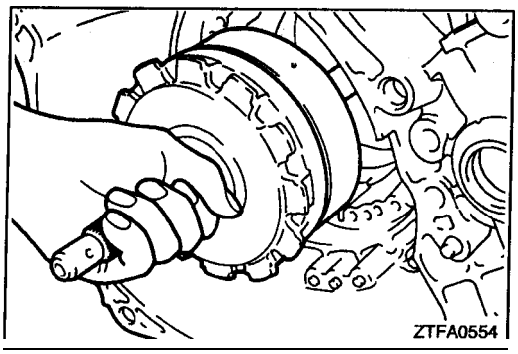

(33) Hold the input shaft and remove the front clutch assembly and rear clutch assembly together.

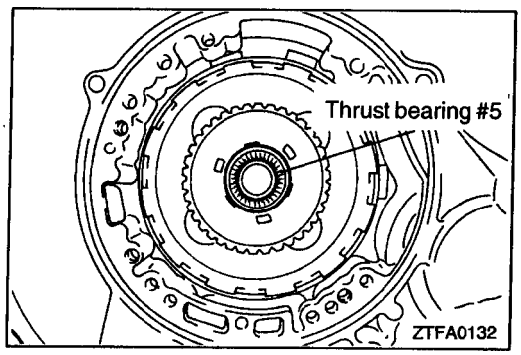

(34) Remove thrust bearing #5.

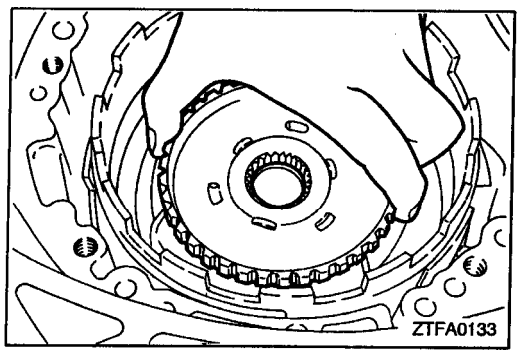

(35) Remove the clutch hub.

NOTE
The thrust race may be stuck to the clutch 'hub.

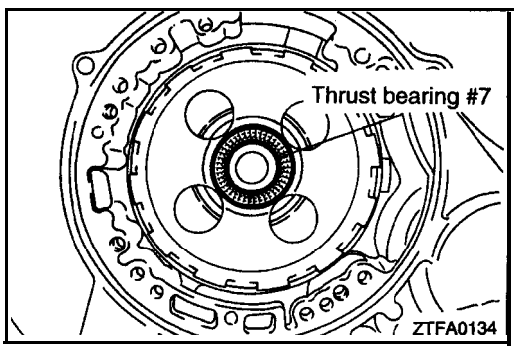

(36) Remove thrust bearing #7.

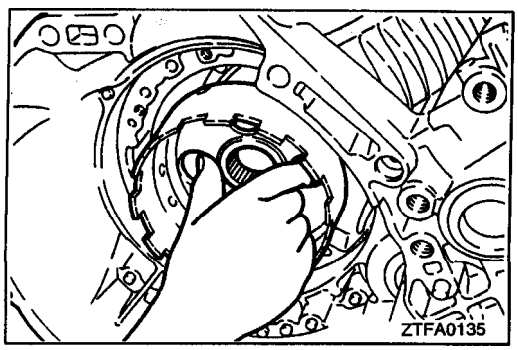

(37) Remove the kickdown drum.

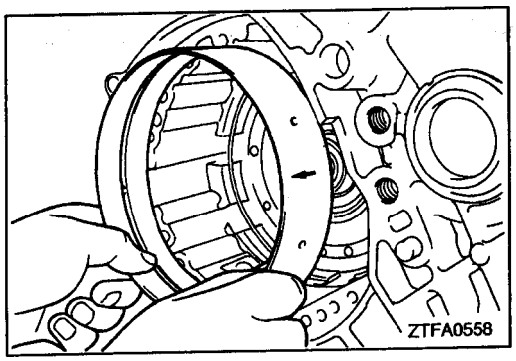

(38) Remove the kickdown band.

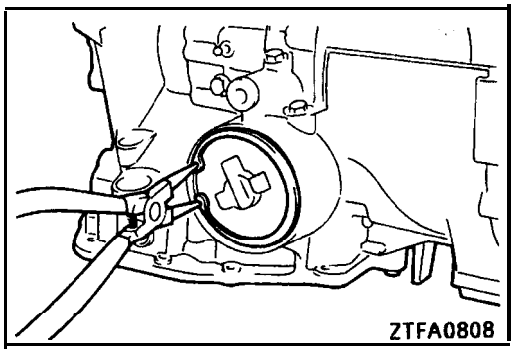

(39) Remove the kickdown servo cover snap ring. Then remove the kickdown servo switch.

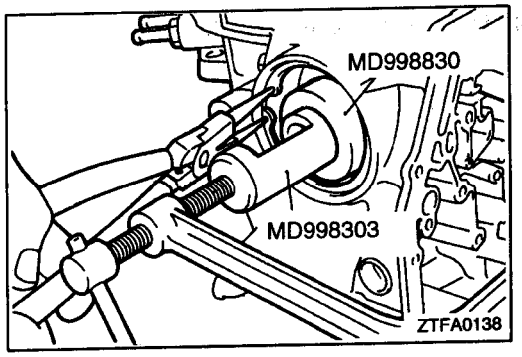

(40) Using the special tool, push in the kickdown servo and remove the snap ring.

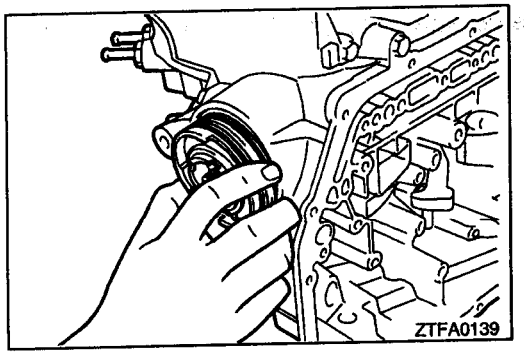

(41) Remove the kickdown servo piston.

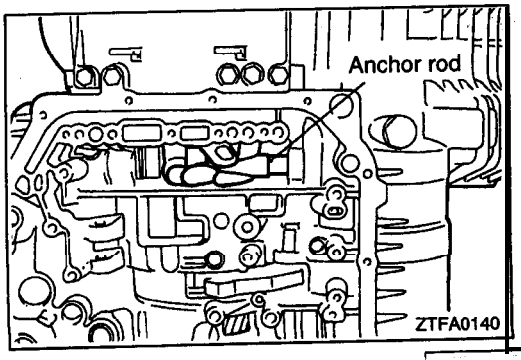

(42) Remove the anchor rod.

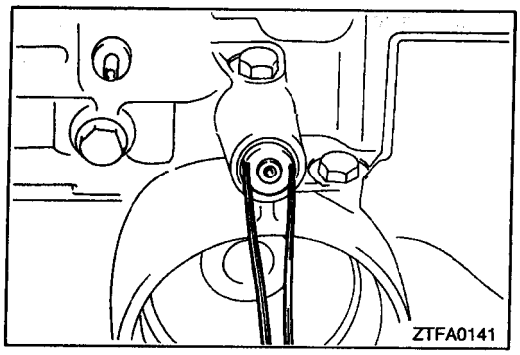

(43) Remove the plug, then remove the air exhaust plug.

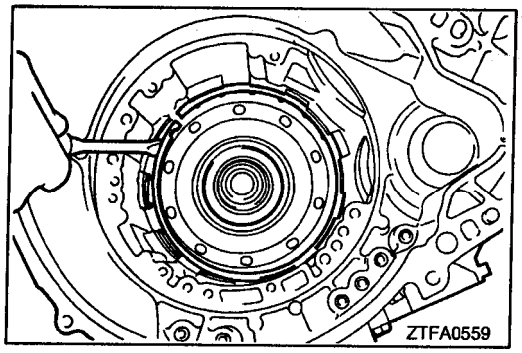

(44) Remove the snap ring.

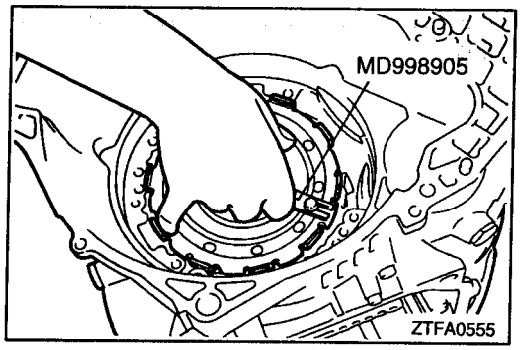

(45) Using the special tool, remove the. center 'support.

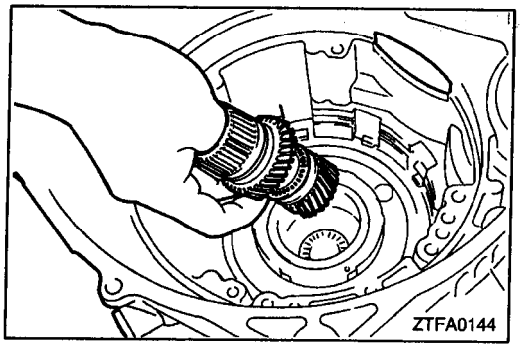

(46) Remove the reverse sun gear and forward sun gear together.

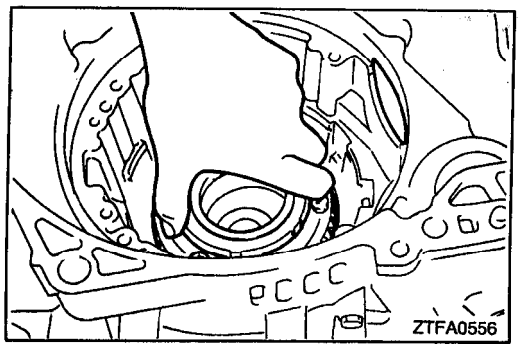

(47) Remove the planetary carrier assembly.

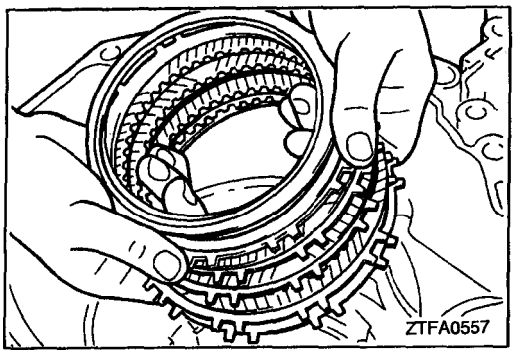

(48) **Remove** the wave spring, return spring, reaction **plate,** brake discs, and brake plates.

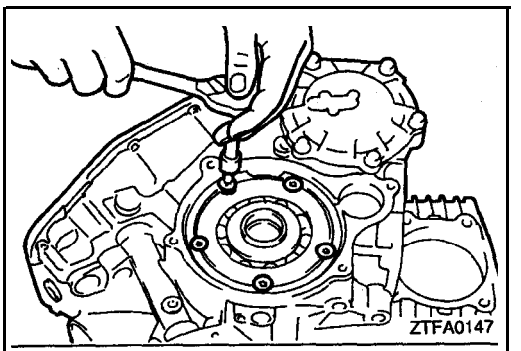

(49) **Remove** 'the screws and **the** rear bearing retainer.

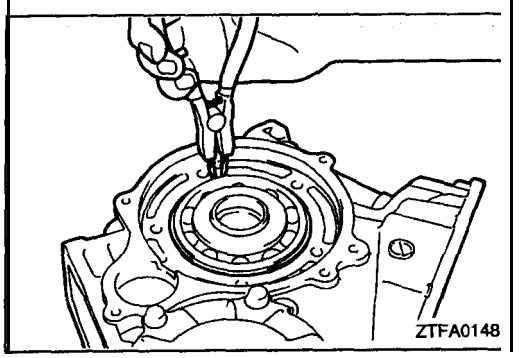

(50) **Remove** the snap ring and **then remove** the output **flange** assembly.

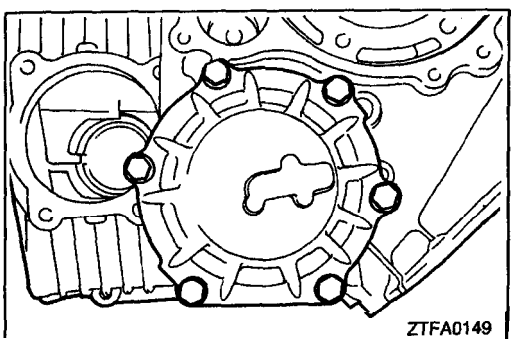

(51) **Remove** the output bearing retainer mounting **bolts and** then remove the output bearing retainer and outer **'race.,**

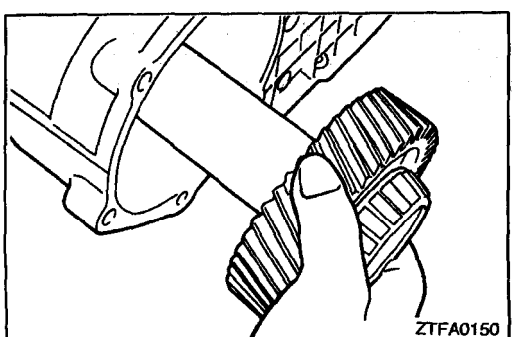

(52) **Remove** the transfer shaft.

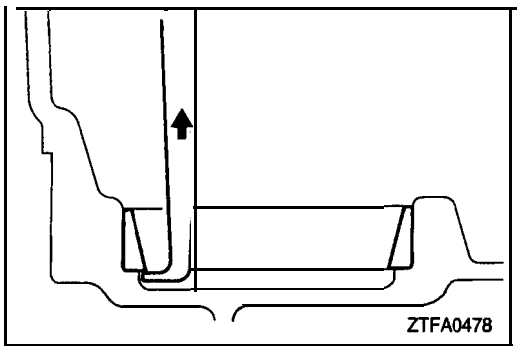

(53) Use a sliding hammer, etc., to remove the outer race.
(54) Remove all oil seals.

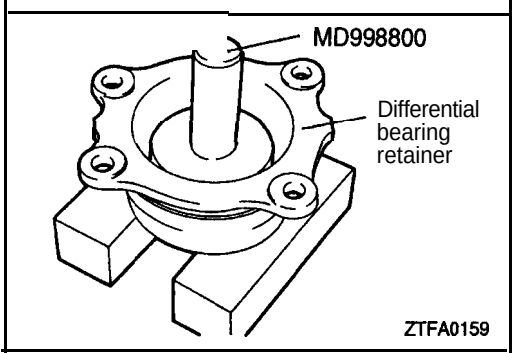

REASSEMBLY

(1) Using the special tool, install the oil seals to the differential bearing retainer and transaxle case.

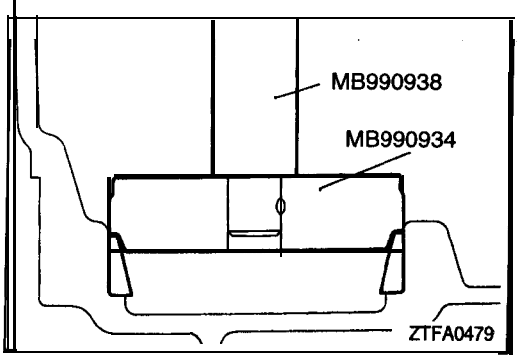

(2) Use the special tool to press fit the outer race into the' transaxle case.

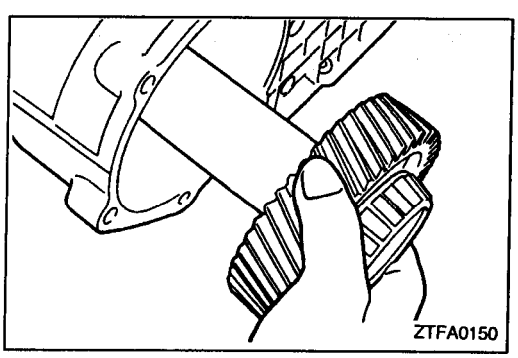

(3) Install the transfer shaft.

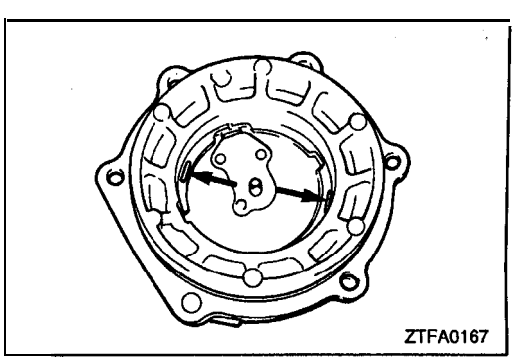

(4) Place solder with a length of approximately 10 mm (.39 in.) and diameter of 1.6 mm (.063 in.) on the output bearing retainer at the position shown in the diagram and install the outer race.

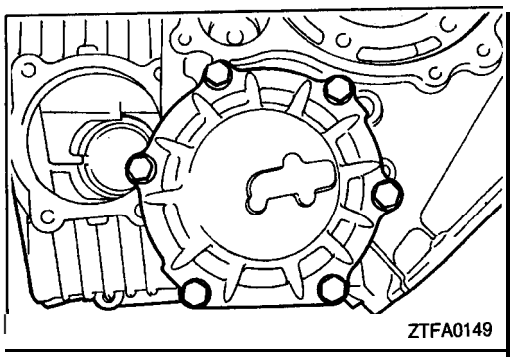

(5) Install the output bearing retainer 'and tighten the bolts to the specified torque.

Output bearing, retainer mounting bolts:
24 **Nm (18 ft.lbs.)**

(6) Loosen the bolts and remove the output bearing **retainer.**

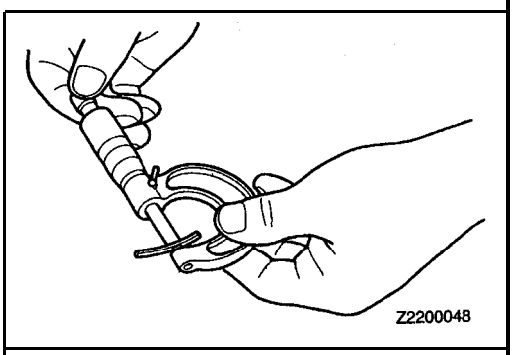

(7) Remove the outer race from the **output** bearing retainer and remove the solder, If the solder is hot crushed, repeat steps (4) **– (6),** using the solder with diameter **of** 3 mm (.12 in.). Measure the thickness of the **crushed** solder with a micrometer and select a **spacer with a** thickness that will provide **the** standard **value** for **the preload.**

Standard value:
0.075–0.135 m m (.00295–.00531 in.)

(8) Install the spacer selected in the **previous item** and the outer race on the output bearing retainer.

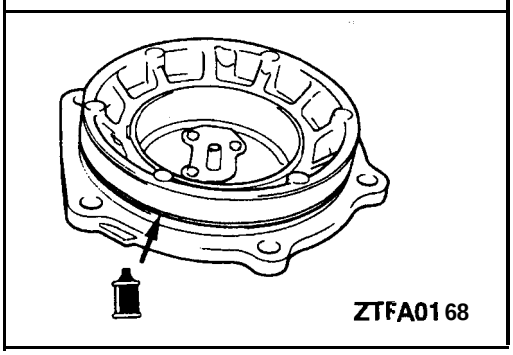

(9) Install a new **O-ring** around **the** outer inside diameter, of the outer bearing retainer.

(10) **Coat** the O-ring with automatic transmission 'fluid and, tighten the output **bearing retainer** mounting bolts to the specified torque.

Output bearing retainer mounting bolts:
24 **Nm (18 ft.lbs.)**

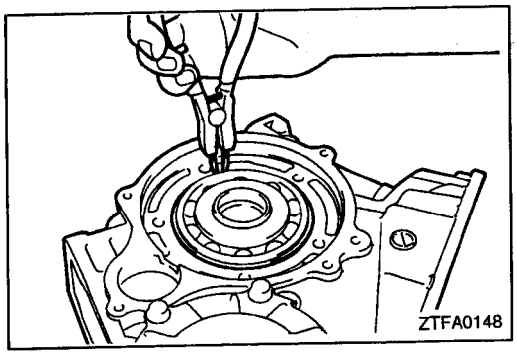

(11) **Insert** the output flange into the case and install a **snap** ring around the bearing.

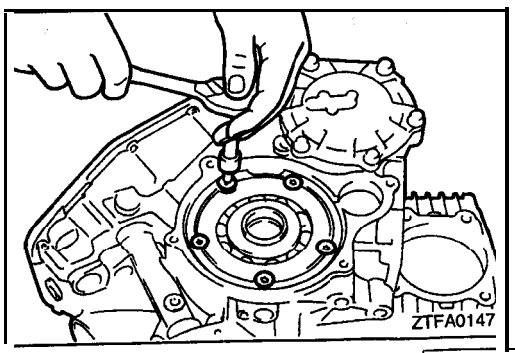

(12) **Install** the bearing retainer using new bolts.

Bearing retainer mounting bolts: 20 Nm (15 ft.lbs.)

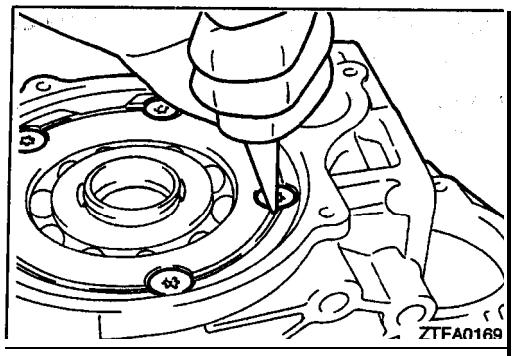

(13)**Caulk** the heads of the bolts.

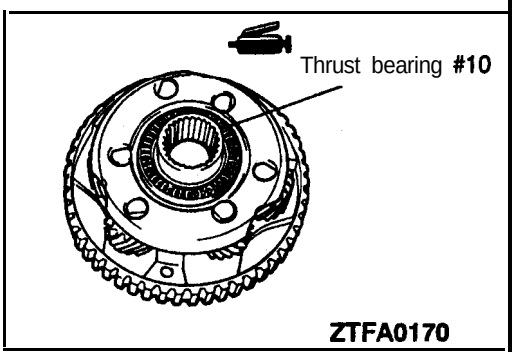

(14)**Apply** a coating of **petrolatum** to **thrust** bearing **#10 and** attach to the planetary carrier.

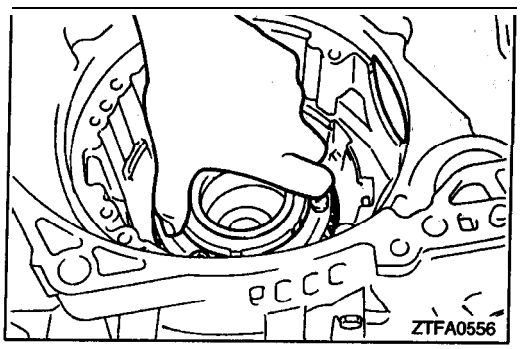

(15)**Assemble** the planetary carrier.

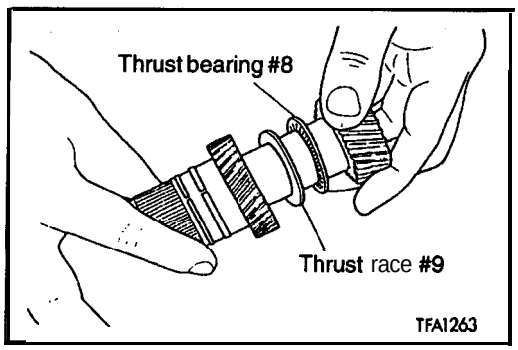

(16)**Assemble** the forward sun gear, thrust race **#9,** thrust bearing **#8** and reverse. sun gear.

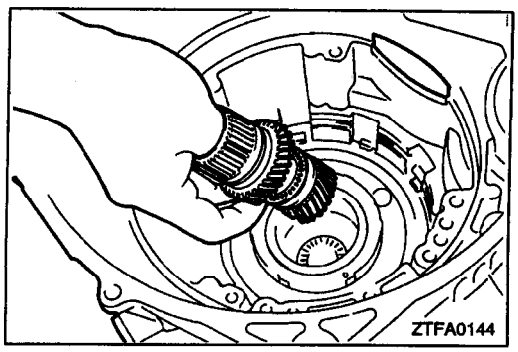

(17)**Install** both sun gears assembled in the previous item into the planetary carrier.

TSB Revision

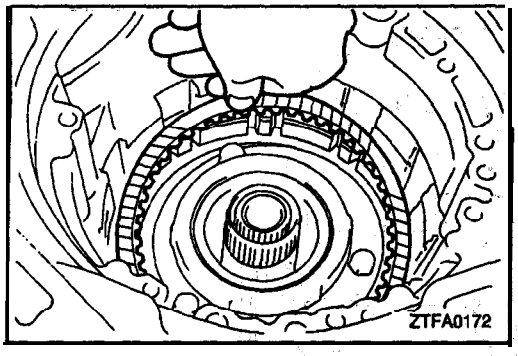

(18)Assemble the reaction plate, brake disc and brake plate.

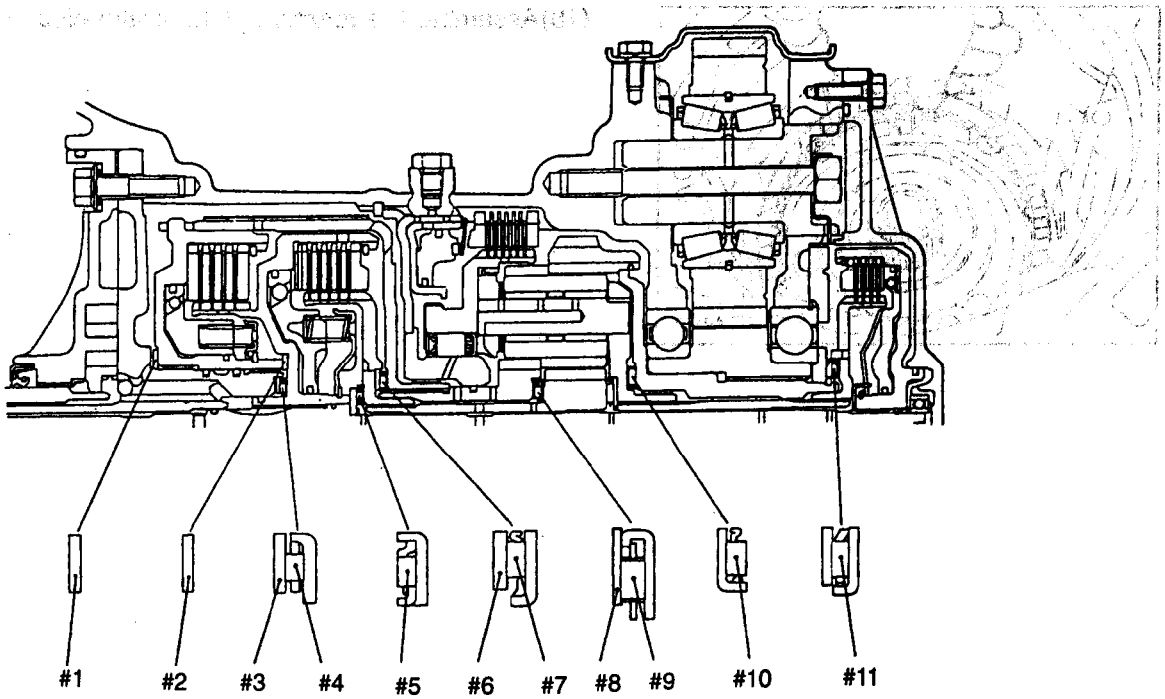

TFA1264

Identification of thrust bearings, thrust races and thrust washers

mm (in.,

Identification marking	O.D.	I.D.	Thickness	Part No.
#1	70.0 (2.756)	55.7 (2.193)	1.4 (.055) 1.8 (.071) 2.2 (0.87) 2.6 (.102)	*1 *2 *3 *4
#2	86.0 (2.598)	54.7 (2.126)	1.8 (.071)	MD731212
#3	48.9 (1.925)	37.0 (1.457)	1.0 (.039) 1.2 (.047) 1.4 (.055) 1.6 (.063) 1.8 (.071) 2.0 (.079) 2.2 (.087) 2.4 (.094)	MD997854 (incl.*1) MD997847 (incl.*1) MD997848 (incl.*2) MD997849 (incl.*2) MD997850 (incl.*3) MD997851 (incl.*3) MD997852 (incl.*4) MD997853 (incl.*4)
#4	48.1 (1.906)	34.4 (1.354)	—	MD707271
#5	42.6 (1.677)	28.0 (1.102)	—	MD720753
#6	54.0 (2.126)	38.7 (1.524)	1.6 (.063)	MD704936
#7	52.0 (2.047)	36.4 (1.433)	—	MD720010
#8	45.0 (1.772)	28.0 (1.102)	—	MD728762
#9	46.0 (1.811)	31.0 (1.220)	0.8 (.031)	MD735063
#10	52.0 (2.047)	36.4 (1.433)	—	MD720010
#11	58.0 (2.283)	44.0 (1.732)	—	MD724206

TSB **Revision**

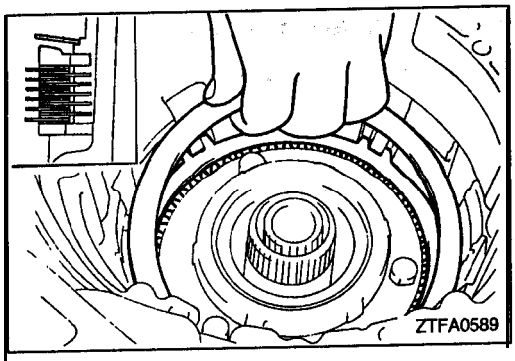

(19) Assemble the pressure plate used "in disassembly and install the return spring.

Caution
Position the return spring correctly when installing.

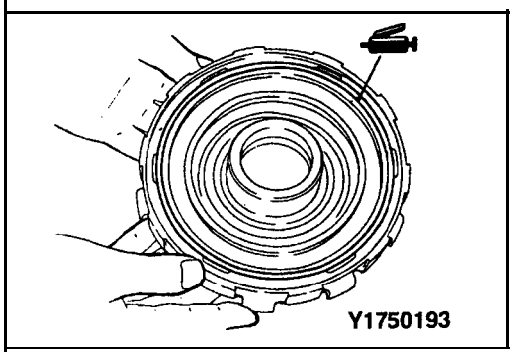

(20) Apply a coating of petrolatum jeliy to the wave spring and attach it to the center support.

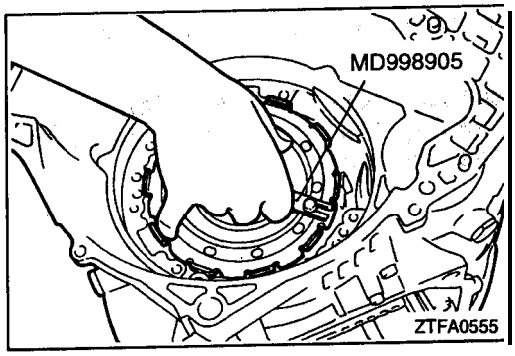

(21) Mount the special tool on the center support,' install 2 new O-rings and push into the transaxle case.

Caution
1. **Coat the O-rings with automatic transmission fluid and align the oil holes.**
2. **Do not move the wave spring out of position When installing.**

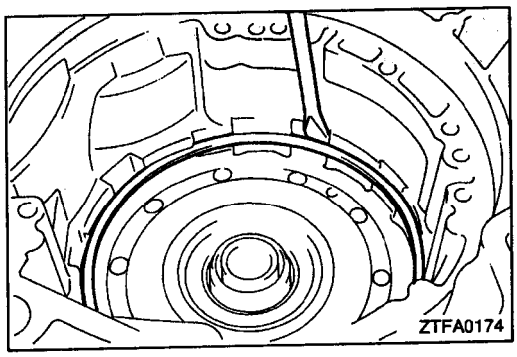

(22) Install the snap ring.

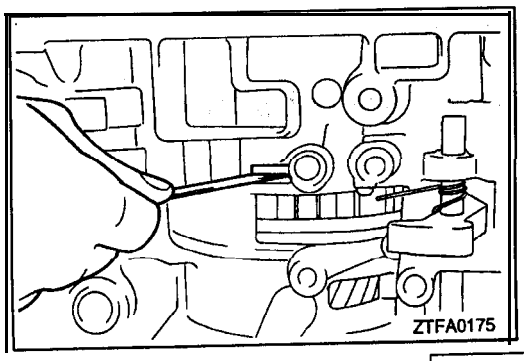

(23) Use a feeler gauge and measure the end' play of the low-reverse brake. Adjust to the standard value by selecting the 'proper pressure plate.

Standard value: 1.0–1.2 mm (.039–.047 in.)

TSB Revision

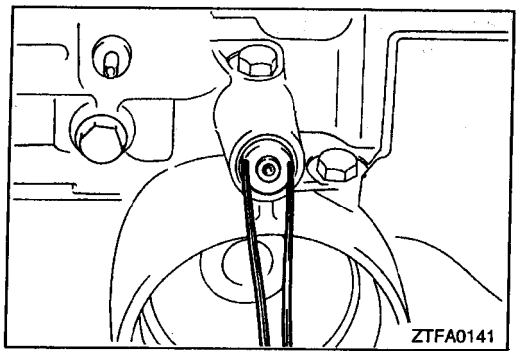

(24) Install the air exhaust plug, and then install the plug.
Air exhaust plug: 33 Nm (24 ft.lbs.)

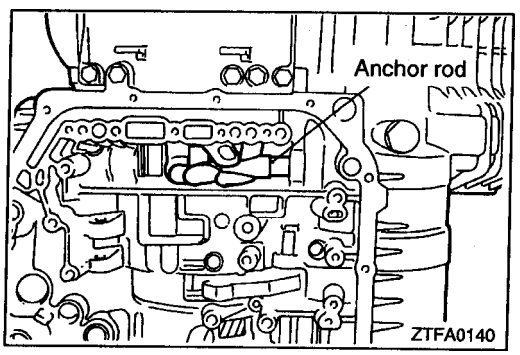

(25) Install the anchor rod.

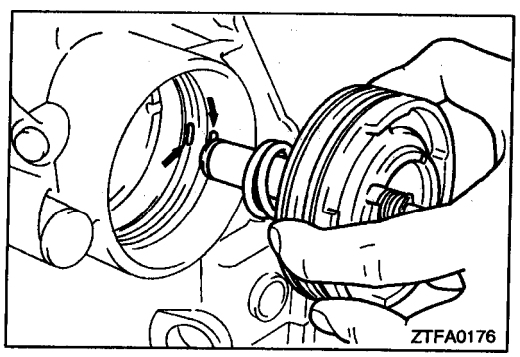

(26) Install the kickdown servo spring, piston and sleeve.

Caution
The seal ring alignment hole of the kickdown servo piston must not overlap the oil filler port (indicated by the arrow in the diagram).

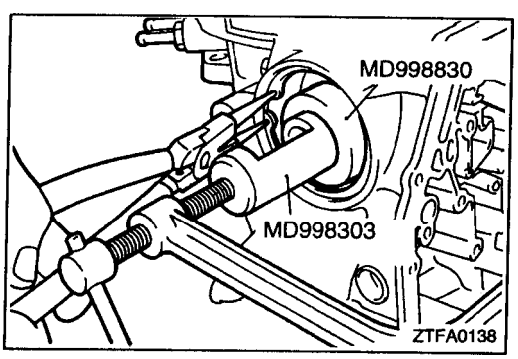

(27) Use the special tool to push in the kickdown servo piston and sleeve, and then install a snap ring.

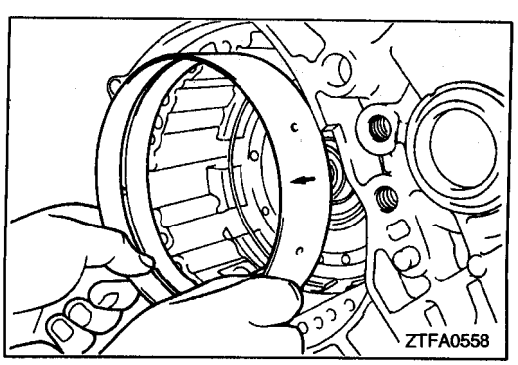

(28) Install the kickdown band.

Caution
Install so the arrow mark is facing forward.

TSB Revision

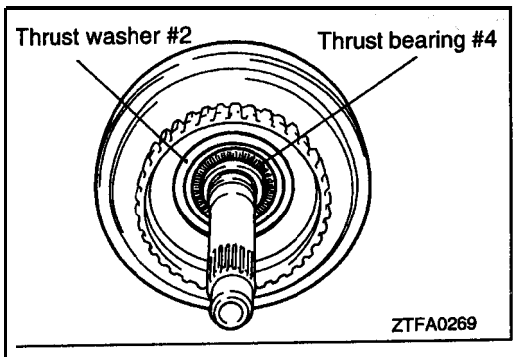

(29) **Install** thrust bearing **#4** and **thrust** washer **#2 on** the rear clutch.

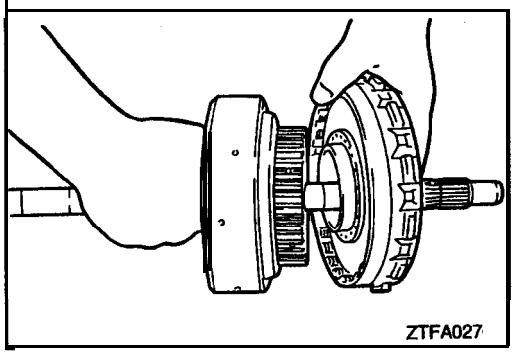

(30) **Combine** the rear clutch assembly **and the** front **clutch** assembly.

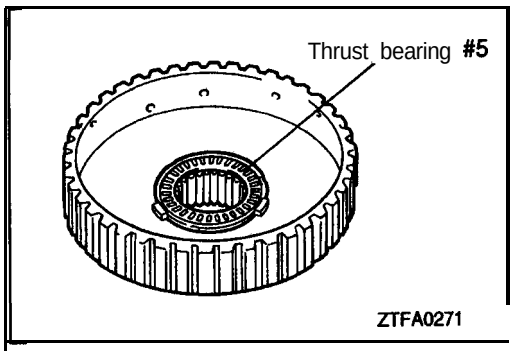

(31) **Install** thrust bearing **#5 on** the rear clutch- hub.

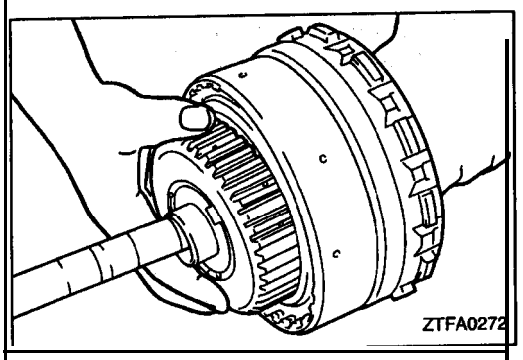

(32) **Install** the rear clutch hub, **on** the **rear clutch.**

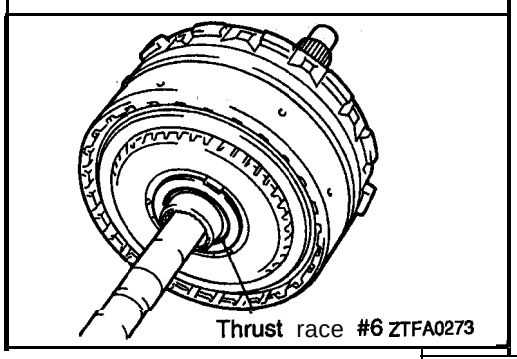

(33) **Install** thrust race **#6** on the end of 'the **rear clutch** hub.

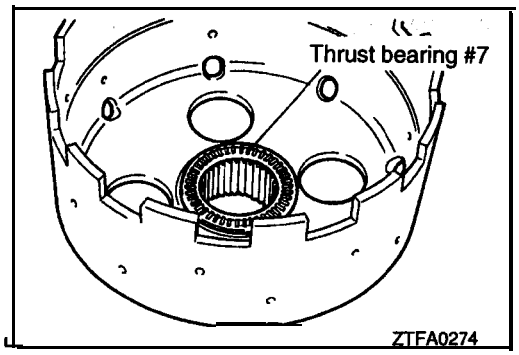

(34) **Install** thrust bearing **#7** in the, **kickdown** drum.

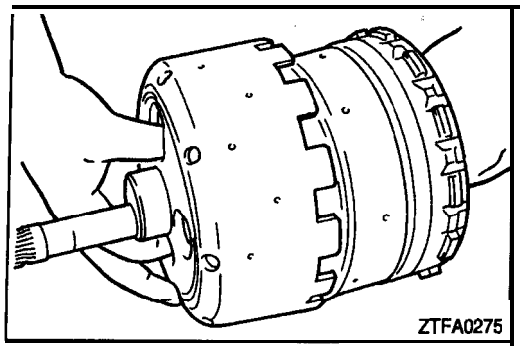

(35) **Install** the clutch assembly in the **kickdown** drum.

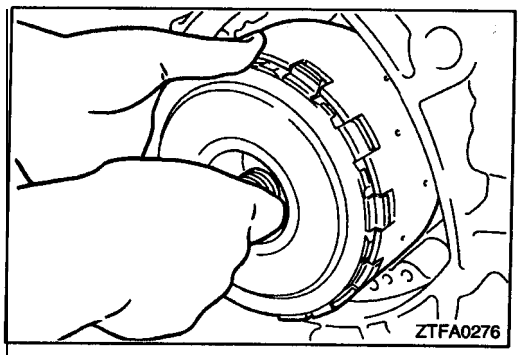

(36) **Install** the clutch assembly and **kickdown** drum into the transaxle case at the same time.

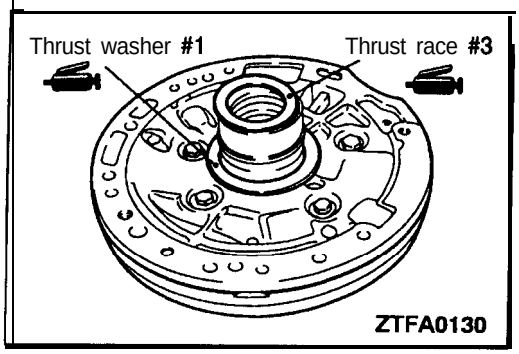

(37) **Adhere** thrust race **#3** and **thrust** washer **#1** to **the** back of the oil pump with **petrolatum**.

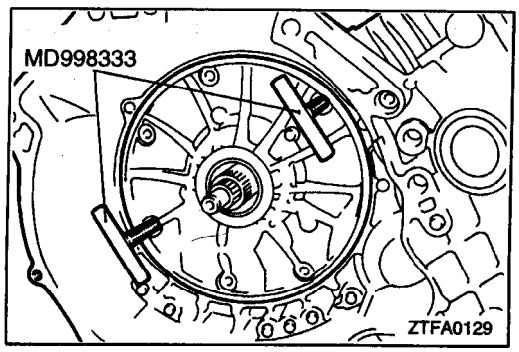

(38) **Use** the special tool to install, a **new** oil pump gasket and oil pump assembly.

Oil pump assembly mounting bolts: 21 Nm (16 ft.lbs.)

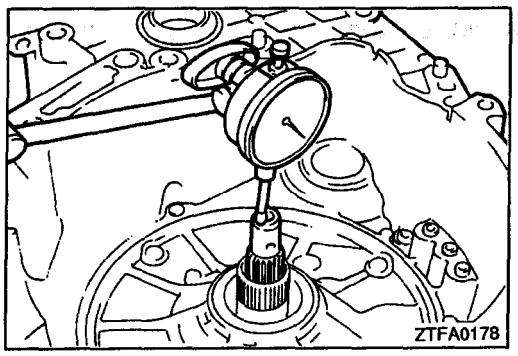

(39) Measure the end play of the input shaft. If not the standard value, replace thrust race #3 and thrust washer #1 and adjust to the standard value.

Standard value: 0.3–1.0 mm (.012–.039 in.)

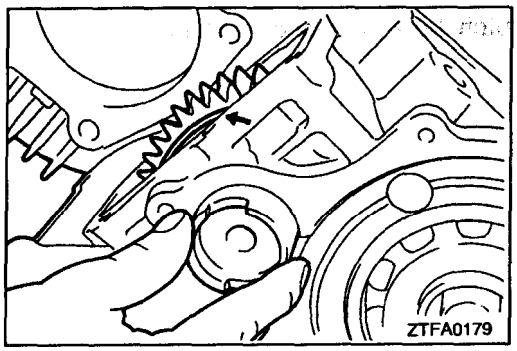

(40) Install the spacer, idler gear arid bearing and then insert the idler shaft.

Caution
Assemble so that the identification groove on the idler gear faces. backward.

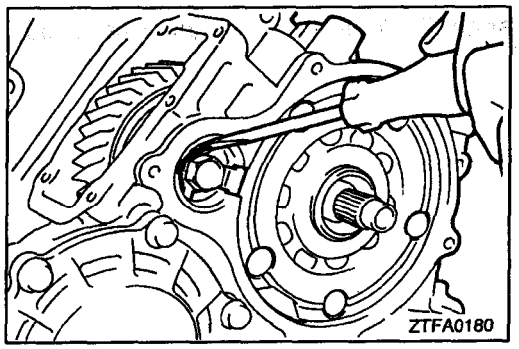

(41) Tighten the idler shaft lock bolt together with the new lock plat to the specified torque. Bend the three fingers of the lock plate to prevent turning.

Idler shaft lock bolt: 38 Nm (28 ft.lbs.)

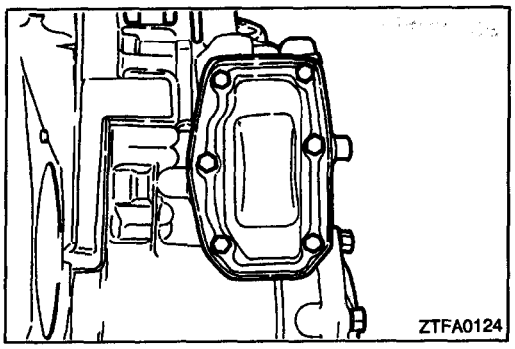

(42) Install the idler gear cover and a new gasket.

Idler gear cover' mounting bolt: 11 Nm (8 ft.lbs.)

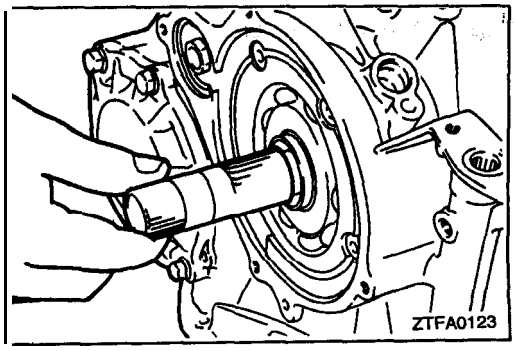

(43) Insert the end clutch shaft 'from the end with the long spline.

TSB Revision

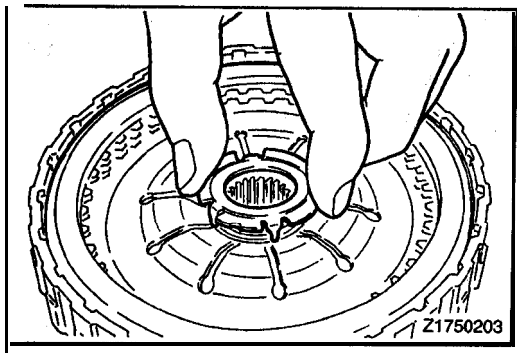

(44) Fit the thrust washer on the return spring of the end clutch.

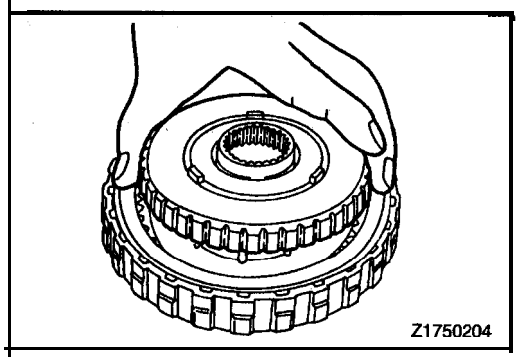

(45) Install the end clutch hub on the end clutch assembly.

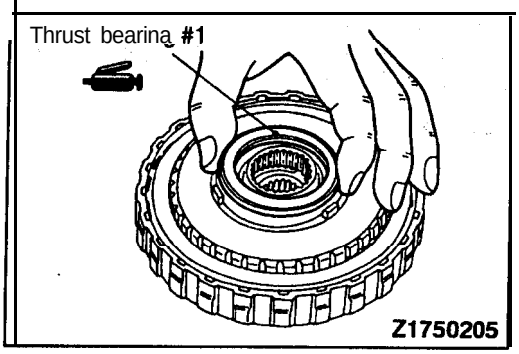

(46) Adhere thrust bearing #1 to the end of the clutch hub with petrolatum.

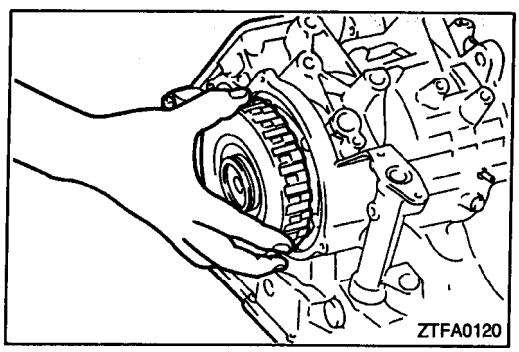

(47) Install end clutch' assembly.

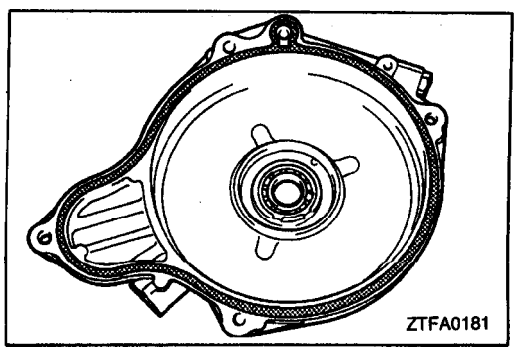

(48) Attach a new O-ring to the end clutch cover.

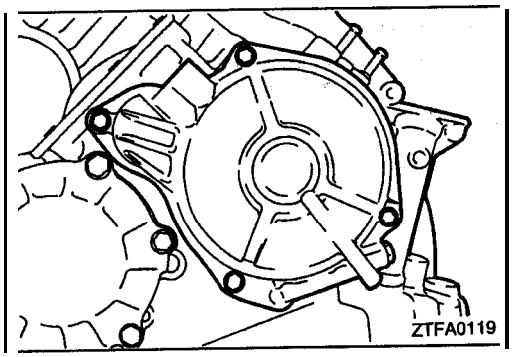

(49) Install the end clutch cover and tighten the bolts to the specified torque.'

End clutch cover mounting bolts: 11 Nm (8 ft.lbs.)

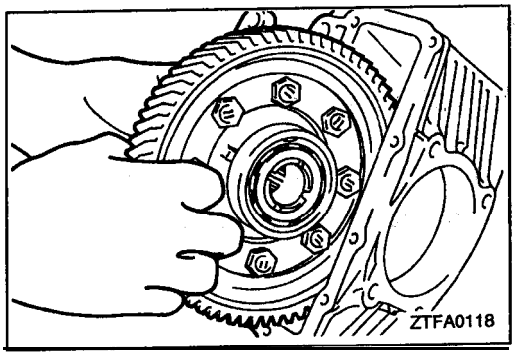

(50) Install the differential assembly.

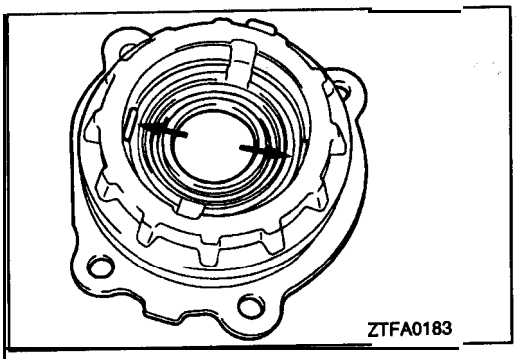

(51) Place solder with a length of approximately 10 mm (.39 in.) and diameter of 1.6 mm (.063 in.) on the differential rear bearing retainer at the position shown in the diagram and install the outer race.

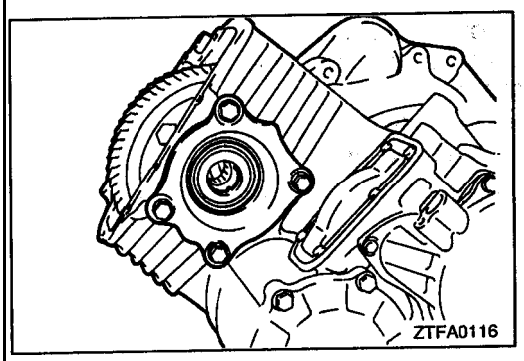

(52) Install the differential rear bearing retainer and tighten the bolts to the specified torque:

(53) Loosen the bolts, remove the differential rear bearing retainer and remove the solder. if the solder is not crushed, repeat steps (51) – (53), using the solder with the diameter of 3 mm.

Differential rear bearing retainer mounting bolts:
35 **Nm (26 ft.lbs.)**

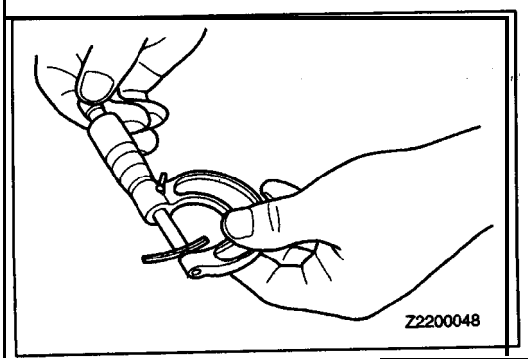

(54) Measure the thickness of the crushed solder with a micrometer and adjust by selecting a spacer with a thickness that will provide the standard value for the end play and preload.

Standard value:
0.075–0.135 mm (.00295–.00531 in.)

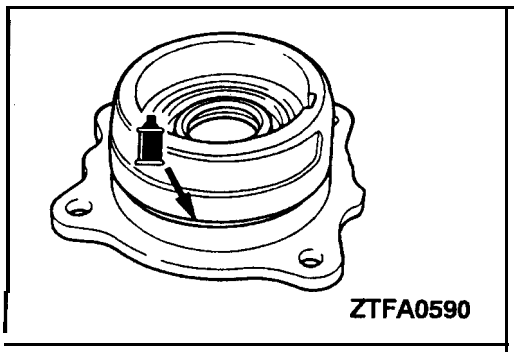

(55) Install a new O-ring on the differential rear bearing retainer, coat the O-ring with automatic transmission fluid,; then install in the transaxle case and tighten the mounting bolts to the specified torque.

Differential rear bearing retainer mounting bolts: 35 Nm (26 ft.lbs.)

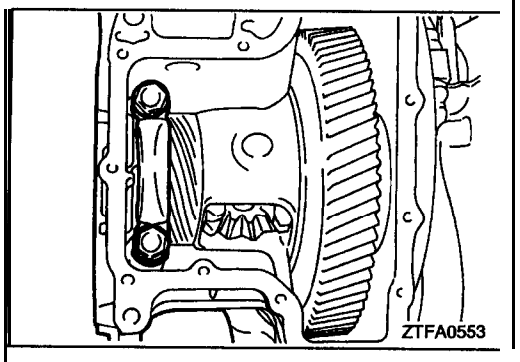

(56) Install the front bearing cap and tighten the bolts to the specified torque.

Differential front bearing cap mounting bolts: 70 Nm (51 ft.lbs.)

(57) Install the differential cover and a new gasket.

Differential cover mounting bolts: 11 Nm (8 ft.lbs.)

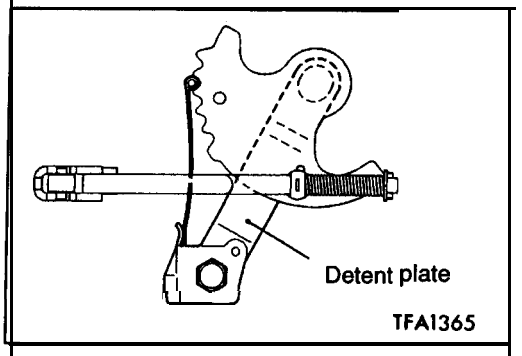

(58) Install the detent plate.

Detent plate mounting bolt: 11 Nm (8 ft.lbs.)

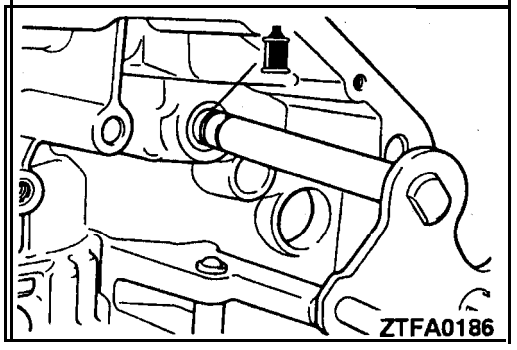

(59) Install a new O-ring on the manual control shaft assembly, coat the O-ring with automatic transmission fluid and then insert into the transaxle case.

(60) Align the groove in the manual control shaft and the set screw hole; then install the set screw.

Manual control shaft set screw: 9 Nm (7 ft.lbs.)

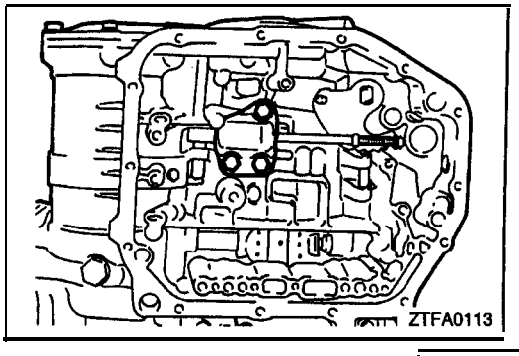

(61) Install the parking roller support.

Parking roller support bolts: 24 Nm (18 ft.lbs.)

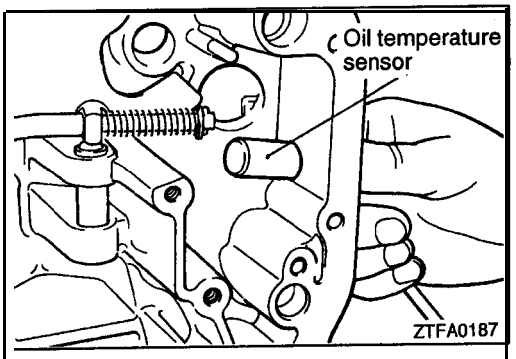

(62) **Insert** the oil temperature sensor into the **case.**

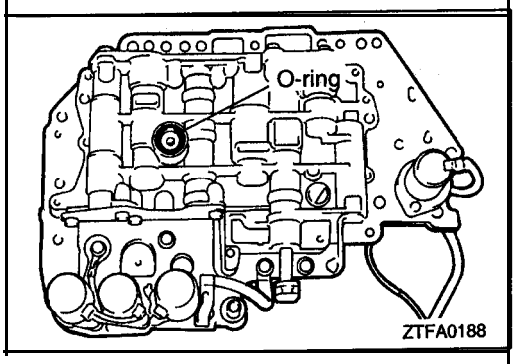

(63) **Install** an O-ring in the O-ring groove at the top of 'the valve body assembly.

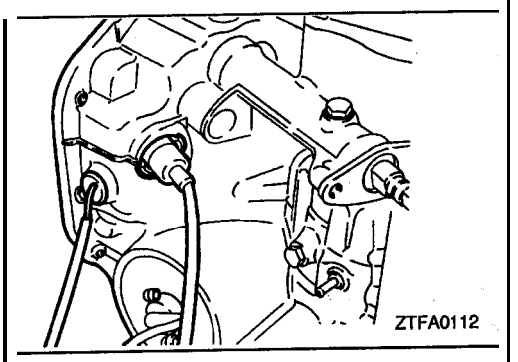

(64) **Replace** the solenoid valve harness grommet **O-ring** with **a new one.**
(65) **Pass the solenoid** valve connector **through the** transaxle case hole from the inside,
(66) **Push** the solenoid valve harness **grommet into** the case hole.

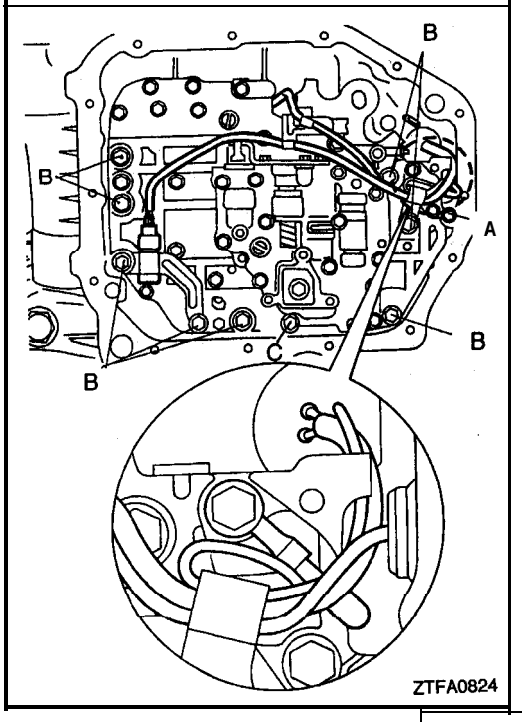

(67) **Insert** the knock pin of the valve body **into the case,** keeping the detent plate pin in the manual **valve** groove. Temporarily install the valve body, **install** the oil temperature sensor and holder; then tighten the **mounting bolts** to the specified torque.

A **bolt:** 18 **mm (.71 in.)**
B **bolt: 25 mm (.98 in.)**
C bolt: 40 mm (1.58 in.)

Valve body assembly mounting bolts: 11 Nm (8 ft.lbs.)

Caution
Firmly fasten the solenoid valve and oil temperature sensor harness at the shown positions.
Especially, be sure to route the pressure control solenoid valve (PCSV) harness, which is separated from other harness, as shown in the diagram and clamp the harness. Failure to fasten it may result in contact with the detent plate or parking rod.

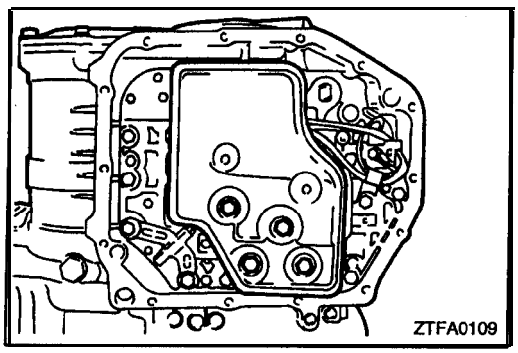

(68) Install the oil screen.

Oil filter mounting bolts: 6 Nm (5 ft.lbs.)

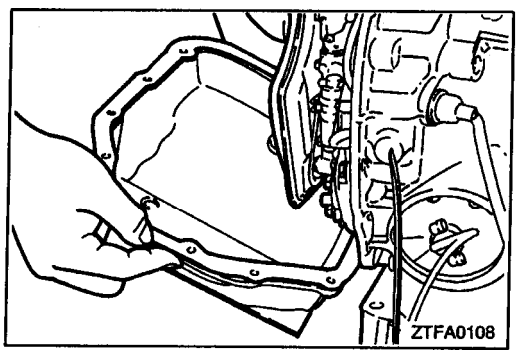

(69) Install the magnets in the oil pan and install the oil pan.

Oil pan mounting bolts: 11 Nm (8 ft.lbs.)

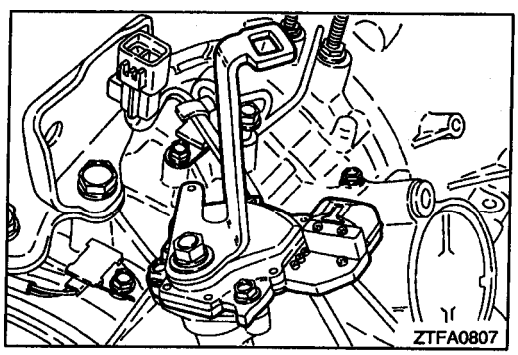

(70) Install the park/neutral position switch (PNP switch) and manual control lever.

Park/neutral position switch mounting bolts: 11 Nm (8 ft.lbs.)

Manual control lever mounting bolt: 19 Nm (14 ft.lbs.)

(71) Install the speedometer gear assembly.

Speedometer gear locking plate mounting bolt: 5 Nm (4 ft.lbs.)

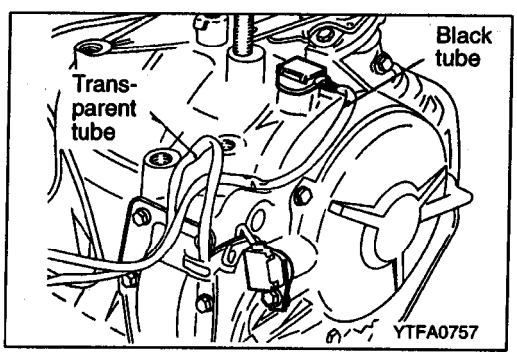

(72) Install the pulse generator A and B.

Pulse generator mounting bolts: 11 Nm (8 ft.lbs.)

Caution
Install the black tube on the output gear side and the transparent tube on the end clutch side.

(73) Install the oil filler tube and insert the dipstick.

Oil filter tube mounting bolt: 24 Nm (18 ft.lbs.)

(74) Install the brackets.

Transaxle mounting bracket bolts: 70 Nm (51 ft.lbs.)

(75) Adjust the kickdown servo.

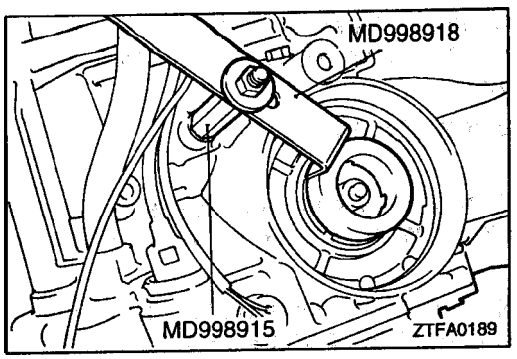

(76) Adjust the kickdown servo by the following procedure:

(a) Fit the claw of the special tool in the notch of the piston to prevent the piston from turning and use adapter to secure it as illustrated at left.

Caution

1. **Do not push in the piston with the special tool.**
2. **When the adapter is installed to the transaxle case, do not apply excessive torque but tighten by hand.**

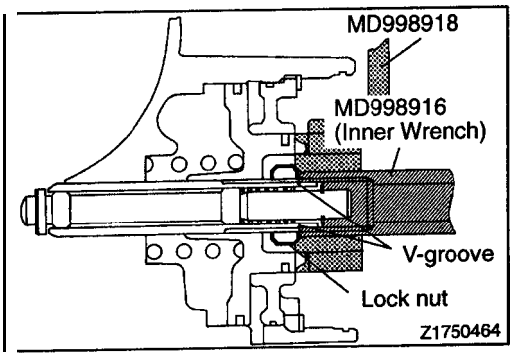

(b) Loosen the lock nut until it is about to reach the V-groove in the adjusting rod. Tighten the special tool (inner) until it touches the lock nut.

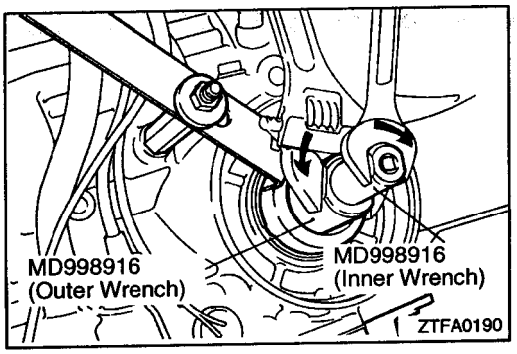

(c) Fit the special tool (outer) to the lock nut. Turn the outer cylinder counterclockwise and the inner cylinder clockwise to lock the lock nut and the special tool (inner).

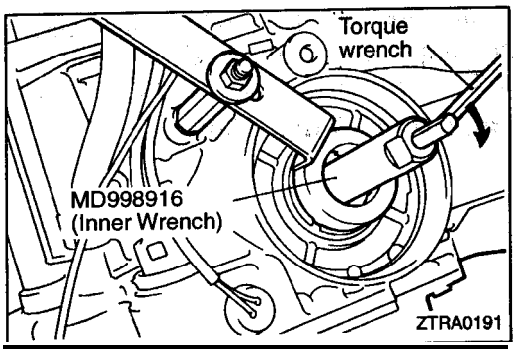

(d) Fit torque wrench to the special tool (inner) to tighten it to a torque of 10 Nm (7.2 ft.lbs.) and loosen. Repeat this sequence two times before tightening the special tool (inner) to 5 Nm (3.6 ft.lbs.) torque. Then back off the special tool (outer) 2 to $2^1/_4$ turns.

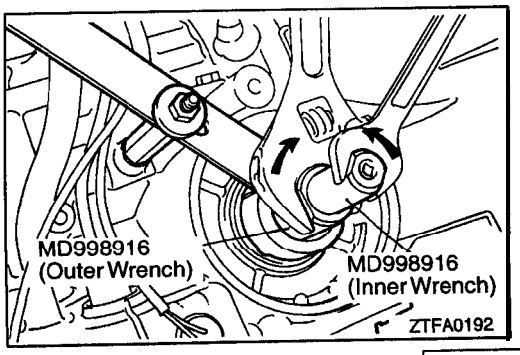

(e) Fit the special tool (outer) to the lock nut.
Turn the outer cylinder clockwise and the inner cylinder counterclockwise to unlock the lock nut and the special tool (inner).

Caution

When unlocking is carried out, apply equal force to both special tools to loosen.

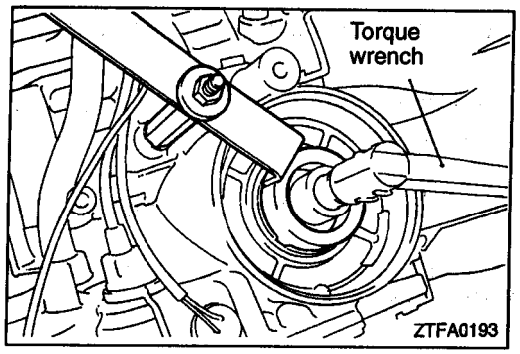

(f) Tighten the lock nut by hand until it touches the piston. Then, use torque wrench to tighten the lock nut to specified torque.

Lock nut: 29 Nm (21 ft.lbs.)

Caution
The lock nut may turn- with the adjusting rod if tightened quickly, with socket wrench or torque wrench.

(g) Remove the special tool for securing the piston. Install the plug to the Low/Reverse pressure outlet and tighten to the specified torque.

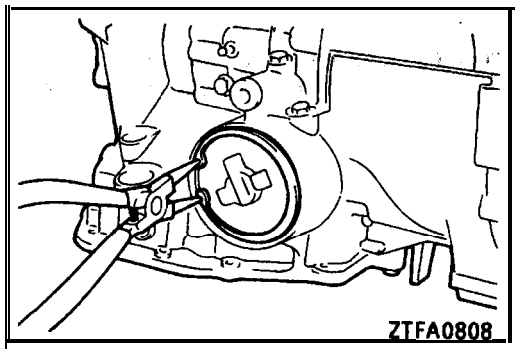

(77) Install the kickdown servo switch and fasten with a snap ring.

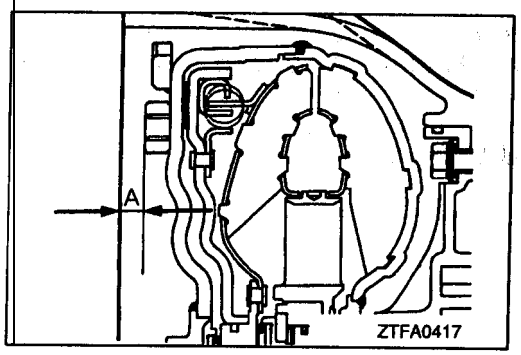

(78) Coat the oil pump drive hub with automatic transmission, fluid and install the torque. converter. Push in firmly so that dimension A in the diagram is at the standard value.

Standard value: approx. 16.3 mm (.642 in.)

TRANSAXLE <W4A33>

22200100127

COMPONENTS

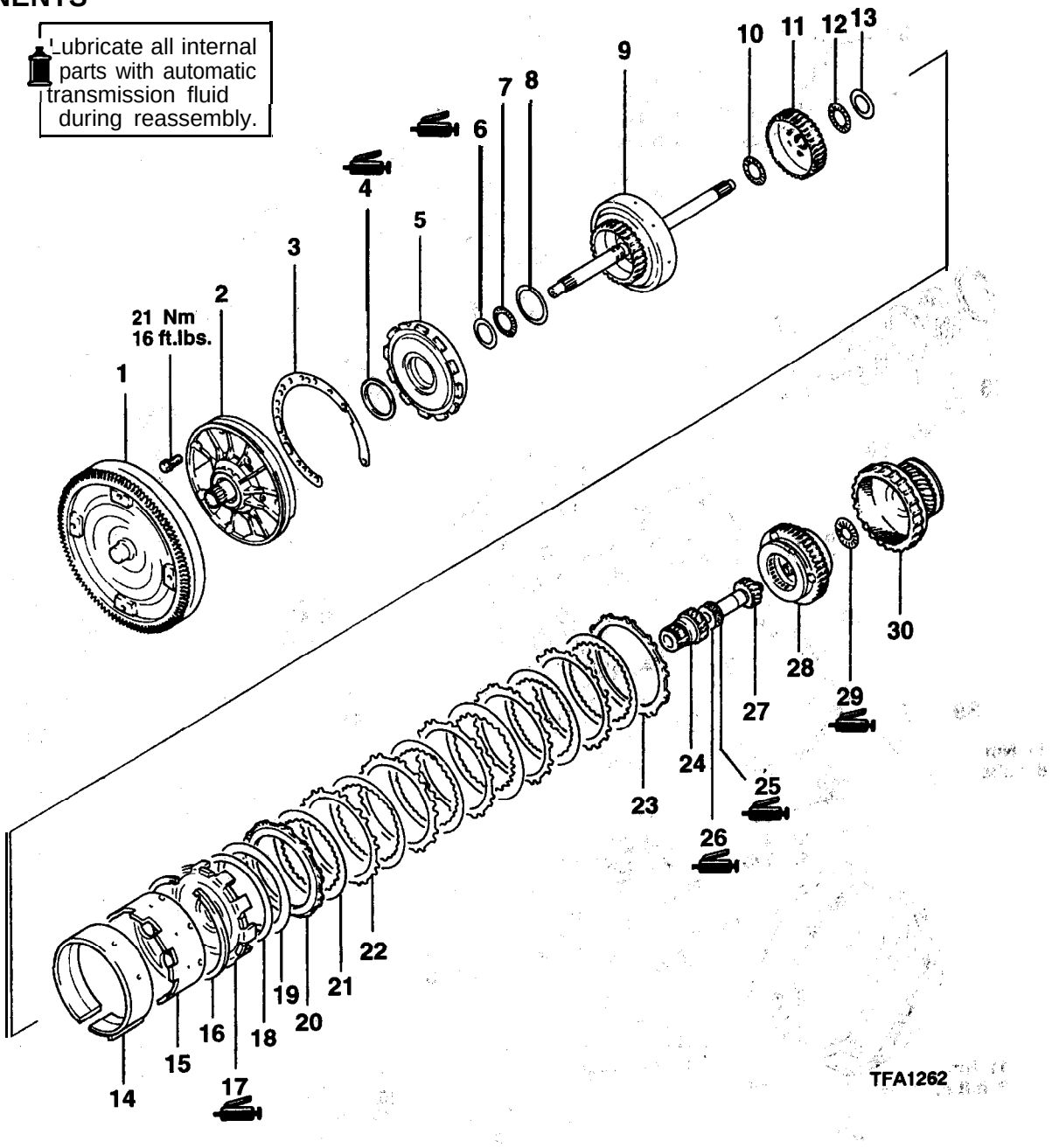

1. Torque converter
2. Oil pump assembly
3. Gasket
4. Thrust washer #1
5. Front clutch assembly
6. Thrust race #3
7. Thrust bearing #2
8. Thrust bearing
9. Rear clutch assembly
10. Thrust bearing #5
11. Rear clutch hub
12. Thrust bearing #7
13. Thrust race #6
14. Kickdown band
15. Kickdown drum
16. Snap ring
17. Center support
18. Wave spring,
19. Return spring
20. Pressure plate
21. Brake disc
22. Brake plate
23. Brake plate:,
24. Reverse sun gear
25. Thrust bearing #8
26. Thrust race #9
27. Forward sun gear
28. Planetary carrier. assembly
29. Thrust bearing #10
30. Output flange..

TSB Revision

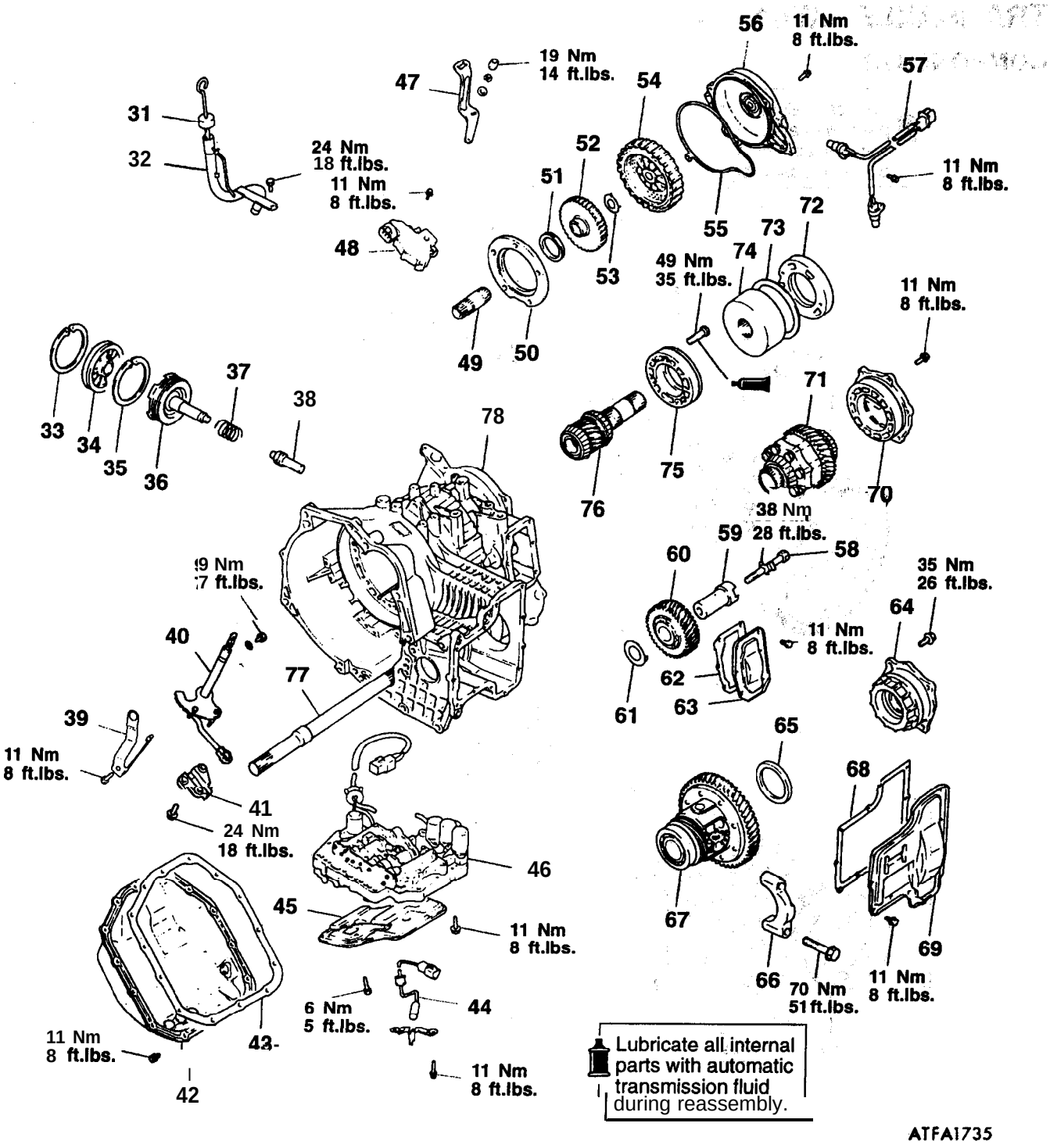

31. Oil dipstick
32. Oil filler tube
33. Snap ring
34. Kickdown servo switch
35. Snap ring
36. Kickdown servo piston
37. Spring
38. Anchor rod
39. Detent plate
40. Manual control shaft
41. Parking roller support
42. Oil pan
43. Gasket
44. Oil temperature sensor
45. Oil filter"
46: Valve body assembly
47. Manual control lever
48. Park/neutral position switch (PNP switch)
49. End clutch' shaft
50. Bearing retainer
51. Thrust bearing #11
52. End clutch hub
53. Thrust washer
54. End clutch assembly:
55. O-ring

TSB Revision

56. End clutch cover
57. Pulse generator
58. Lock bolt
59. Idler shaft
60. Idler gear
61. Spacer
62. Gasket
63. Idler gear cover
64. Differential bearing retainer
65. Spacer
66. Differential front bearing cap
67. Differential assembly
68. Gasket
69. Differential cover
70. Output bearing retainer
71. Center differential assembly
72. Center bearing retainer'
73. Stopper ring
74. Viscous coupling unit
75. Center bearing retainer
76. Front output shaft
77. Rear output shaft
78. Transaxle case

DISASSEMBLY

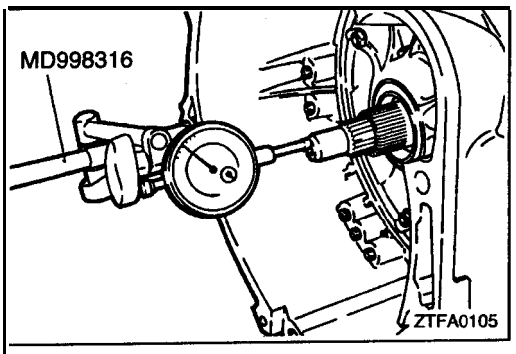

(1) Clean away any sand, mud,. etc. adhered around the transaxle.
(2) Place the transaxle assembly on the workbench with the oil pan down.
(3) Remove the torque converter.
(4) Use the special tool to mount the dial gauge on the transaxle case and measure the" end play of the input shaft.

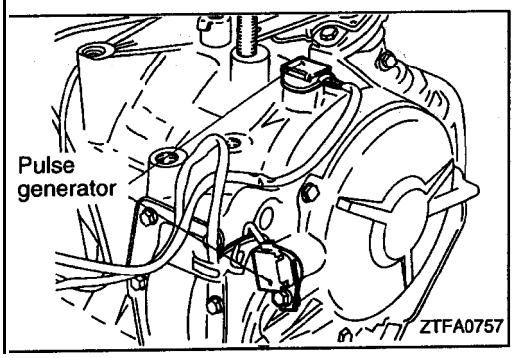

(5) Remove the pulse generator "A" and "B".

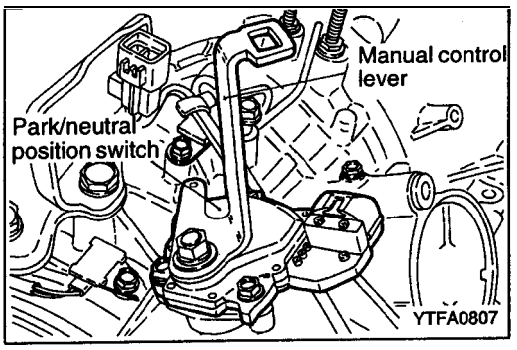

(6) Remove the manual control lever, then remove the park/neutral position switch (PNP switch).

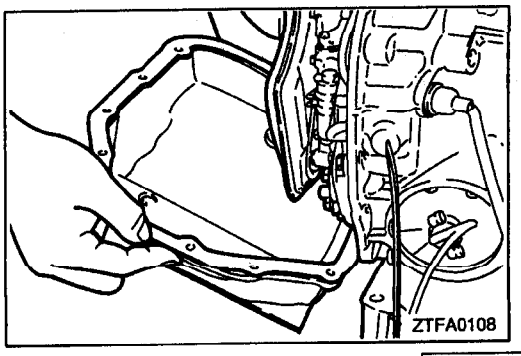

(7) Remove the oil pan, magnets and gasket.

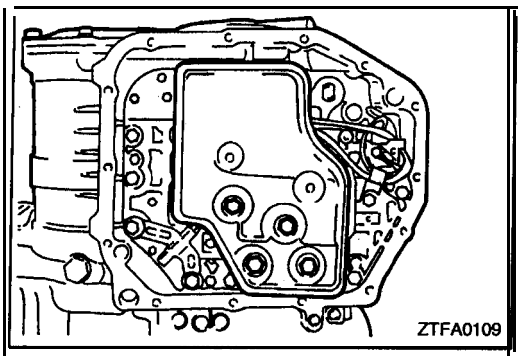

(8) Remove the oil filter from the **valve body.**

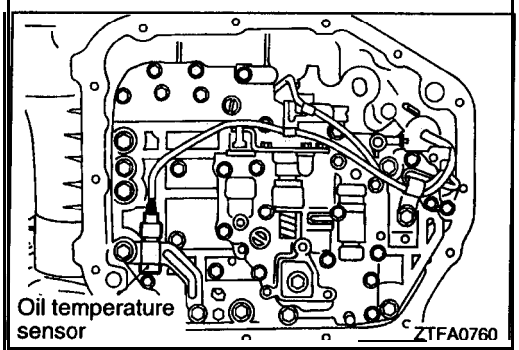

(9) Remove the 10 valve body mounting bolts.
(10) Remove the oil temperature sensor holder and remove the oil temperature sensor harness from the clamp.

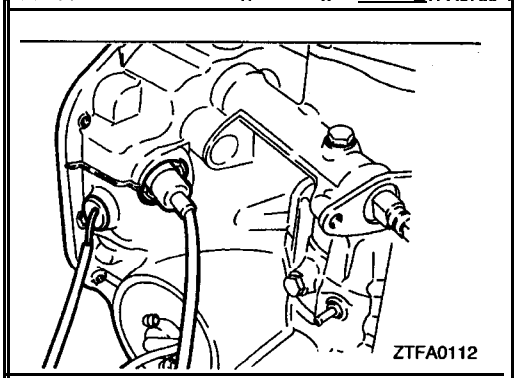

(11) Press the finger of the solenoid valve **harness** grommet, push the grommet into the case and 'remove the valve body assembly.
(12) Pull out the oil temperature sensor.

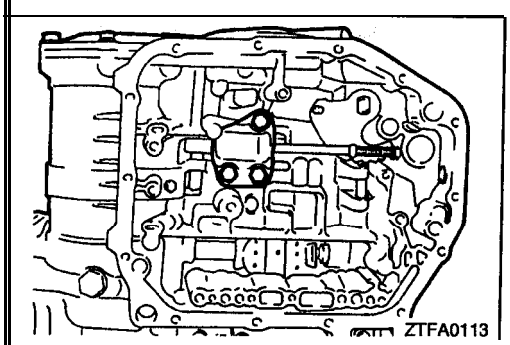

(13) Remove the parking roller support.

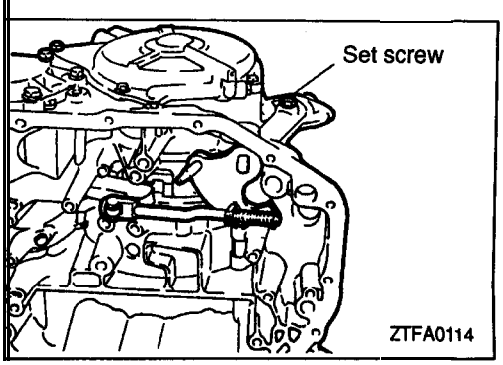

(14) Remove the set screw of the **manual** control shaft and remove the manual control shaft assembly.
(15) Remove the detent plate.

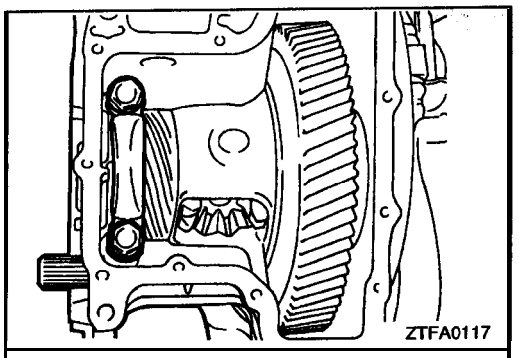

(16) Remove the differential cover and gasket.
(17) Remove the differential front bearing cap.

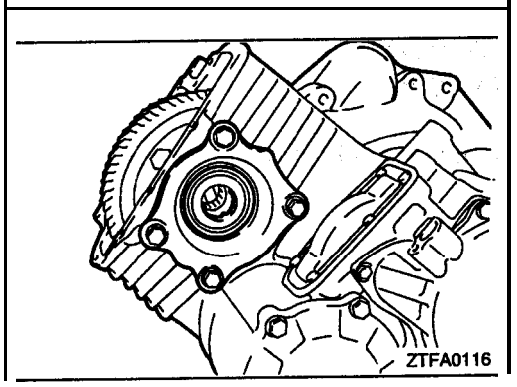

(18) Remove the differential bearing retainer, spacer and outer race.

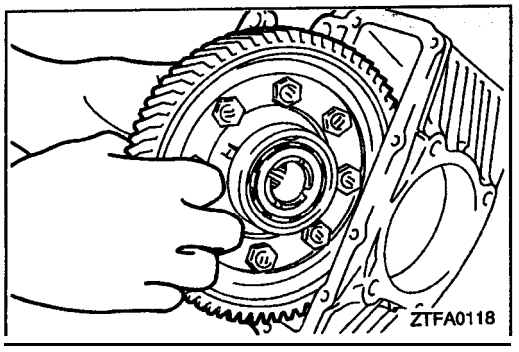

(19) Remove the differential assembly.

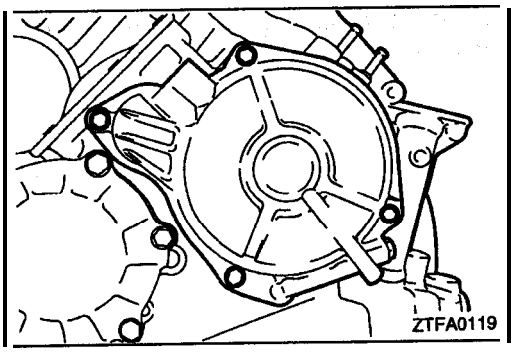

(20) Take out the end clutch cover installation bolts, then remove the cover holder and end clutch cover.

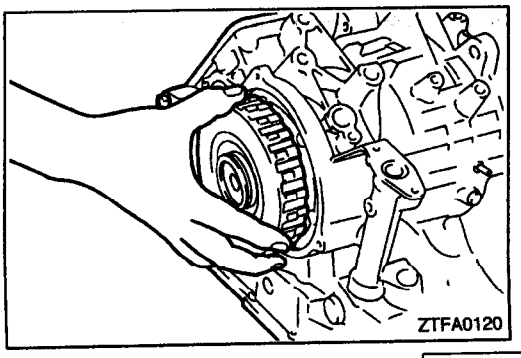

(21) Remove the end clutch assembly.

a

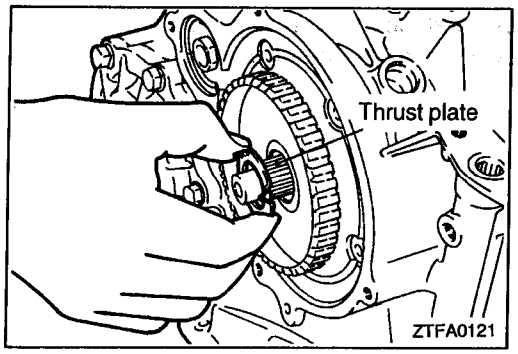

(22) **Remove** the thrust **plate.**

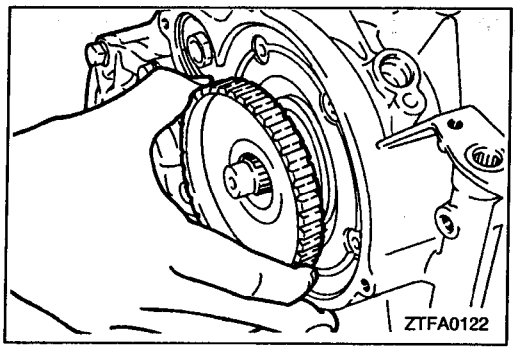

(23) **Remove** the end ditch hub.
(24) **Remove** thrust bearing **#11**.

NOTE
It may be stuck to **the end clutch hub.**

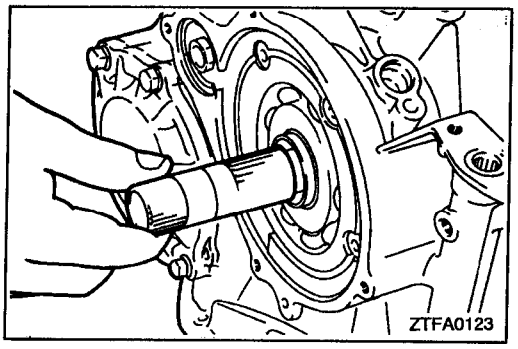

(25) **Pull** out the end **clutch shaft.**

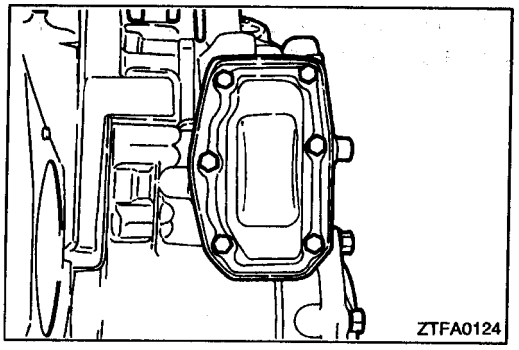

(26) **Remove** the idler gear **cover** mounting bolts, then **remove** the idler gear cover and gasket.

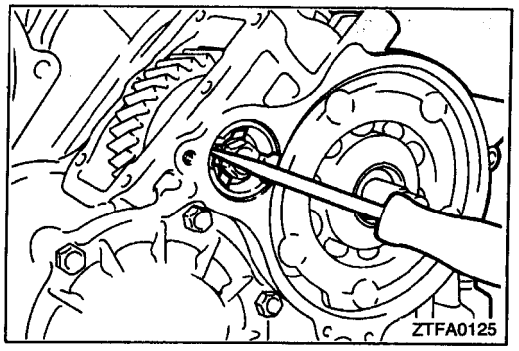

(27) **Disengage** the bolt stopper and **remove** the bolt.

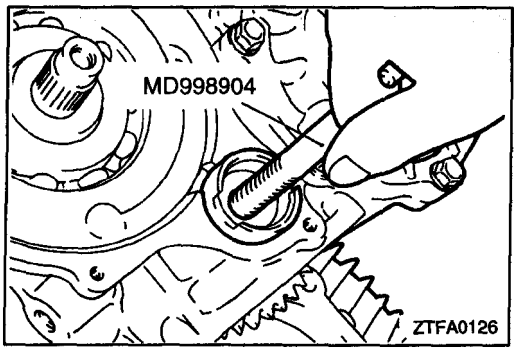

(28) Using the special tool, pull out the idler shaft and then remove the idler gear and bearing inner race.

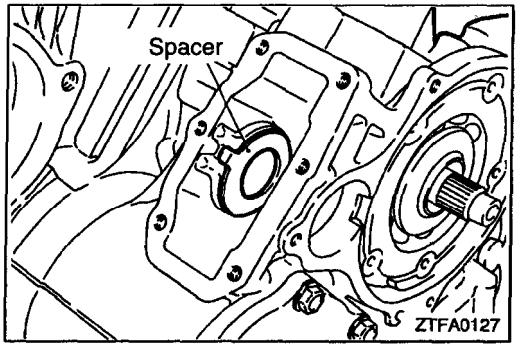

(29) Remove the spacer.

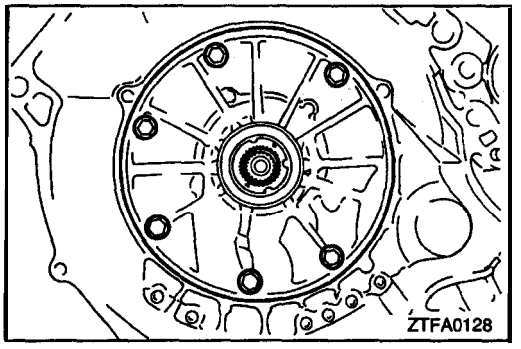

(30) Remove the oil pump installation bolts.

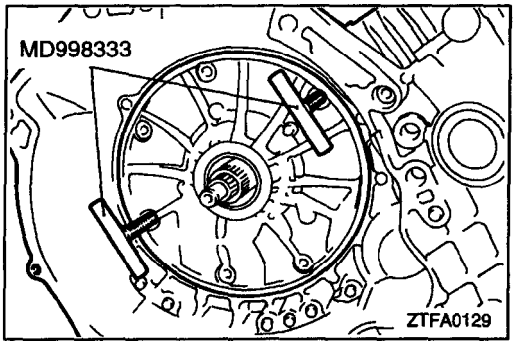

(31) Use the special tool to remove the oil pump.

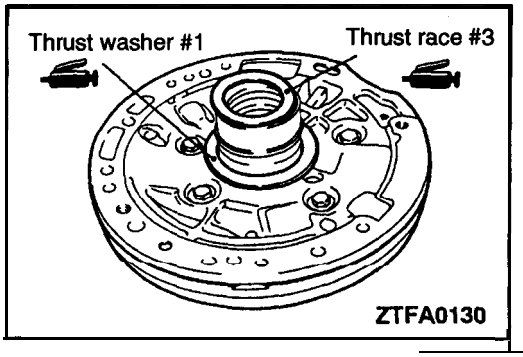

(32) Remove thrust washer #1 and thrust race #3.

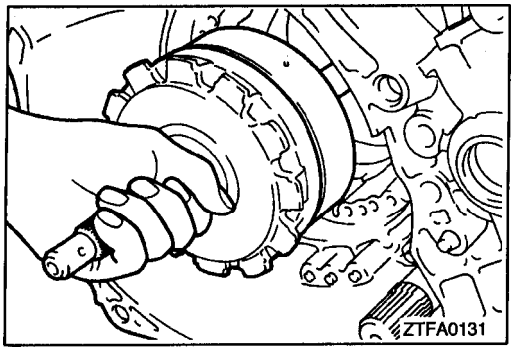

(33) Hold the input shaft and remove the front clutch assembly and rear clutch assembly together.

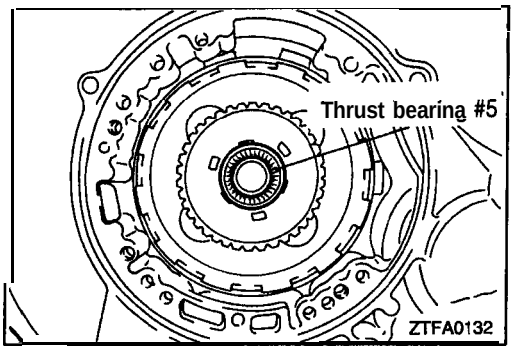

(34) Remove thrust bearing #5.

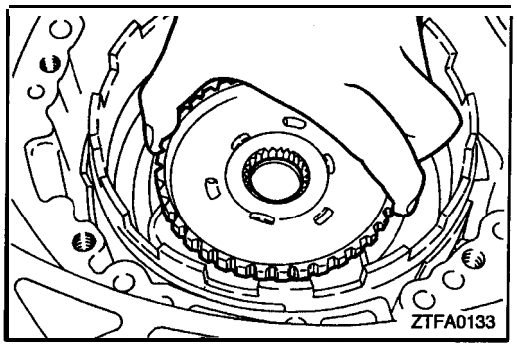

(35) Remove the clutch hub.

NOTE
The thrust race may be stuck to the clutch hub.

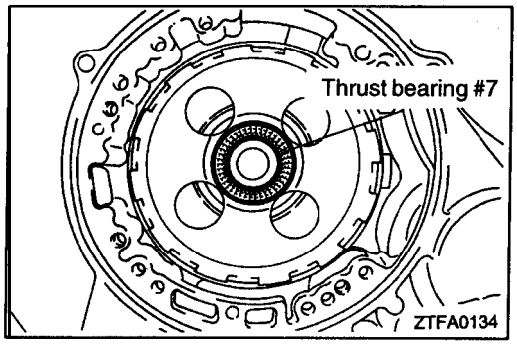

(36) Remove thrust bearing #7.

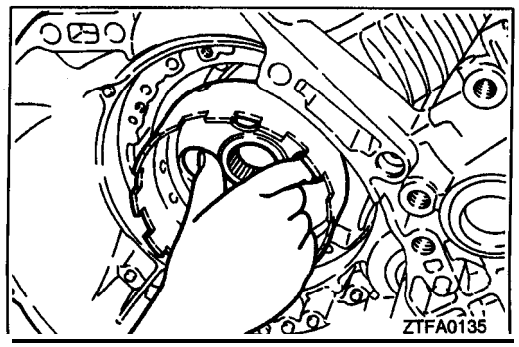

(37) Remove the kickdown drum.

TSB Revision

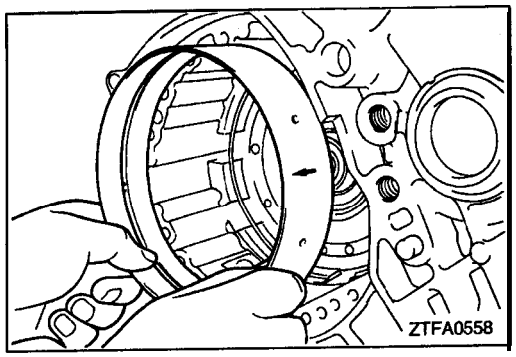

(38) Remove the kickdown band.

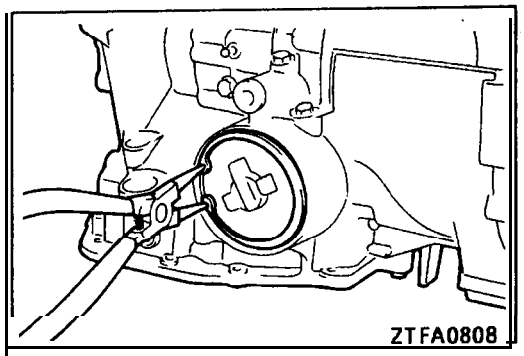

(39) Remove the kickdown servo coyer snap ring. Then remove the kickdown servo switch.

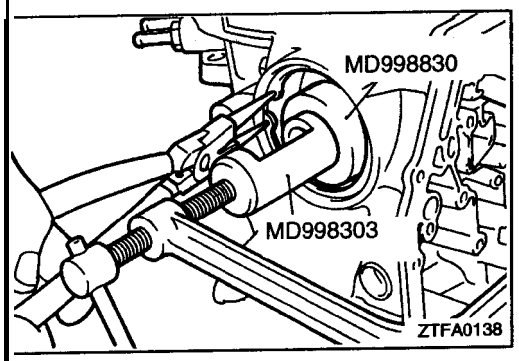

(40) Using the special tool, push in the kickdown servo and remove the snap ring.

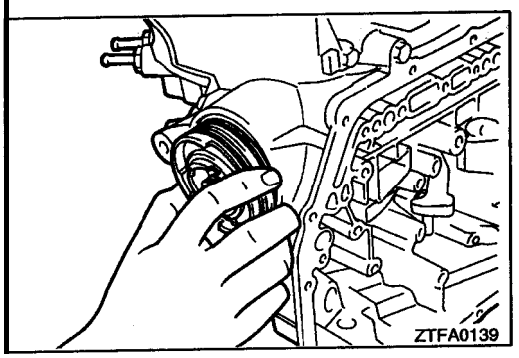

(41) Remove the kickdown servo piston.

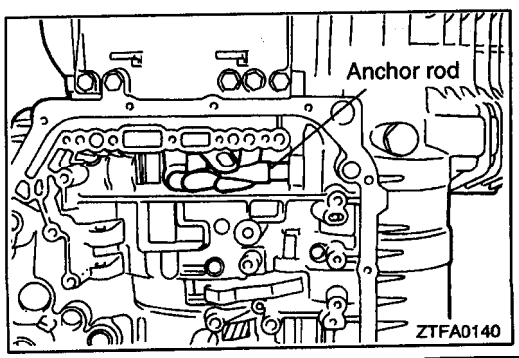

(42) Remove the anchor rod.

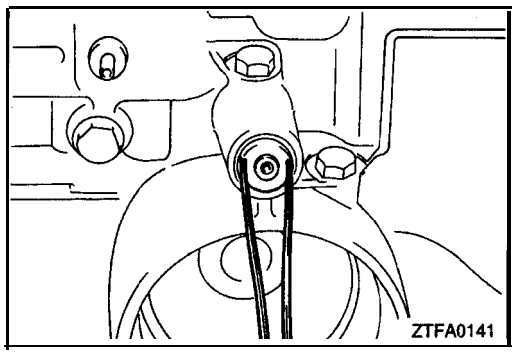

(43) **Remove** the plug, then remove the **air** exhaust plug.

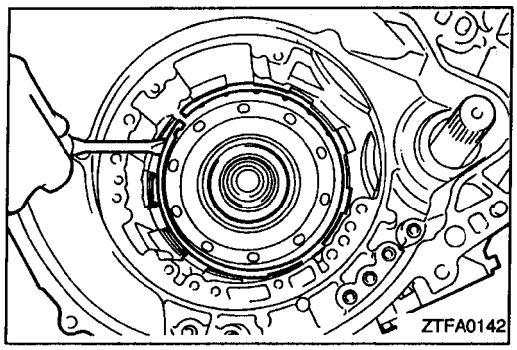

(44) **Remove** the snap ring.

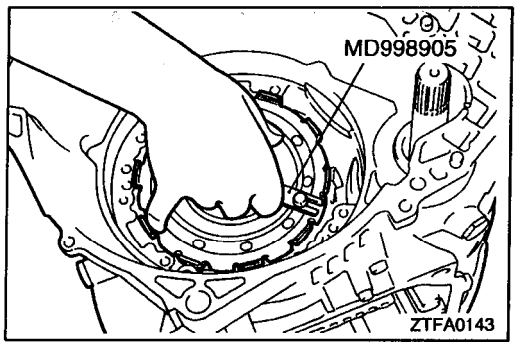

(45) **Using** the special tool, remove the center **support.**

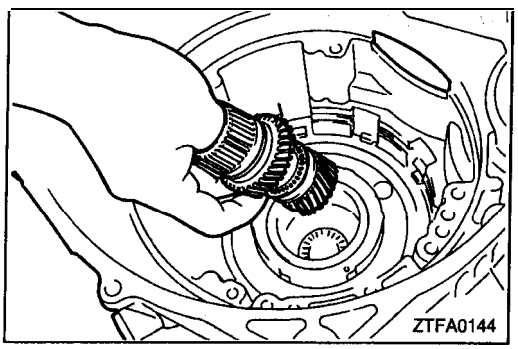

(46) **Remove** the reverse sun gear **and** forward **sun** gear together.

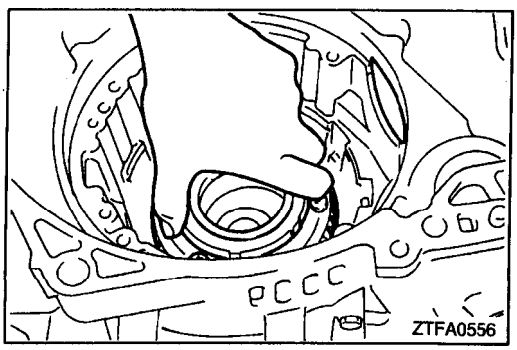

(47) **Remove** the **planetary carrier** assembly.

TSB Revision

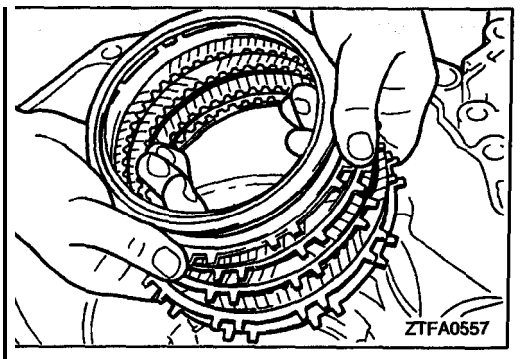

(48) Remove the wave spring, return spring, reaction plate, brake discs, and brake plates.

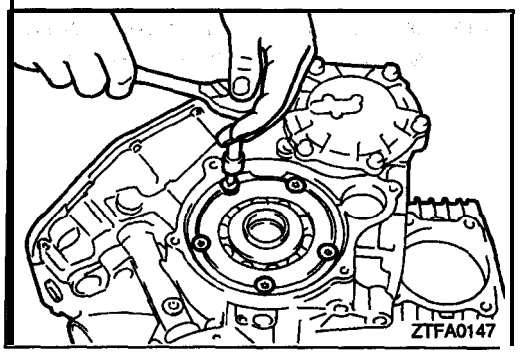

(49) Remove the screws and the rear bearing; retainer.

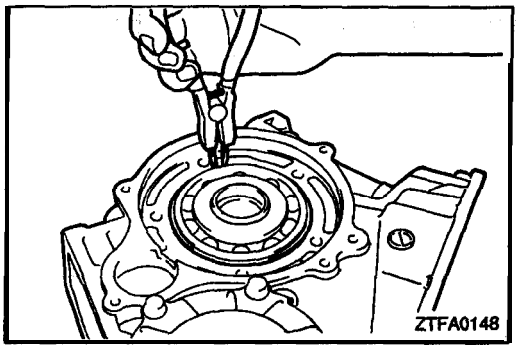

(50) Remove the snap ring-and then remove the output flange assembly.

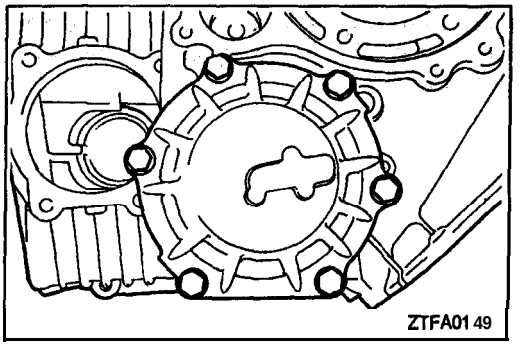

(51) Remove the output bearing retainer mounting bolts and then remove the output bearing retainer, and outer race.

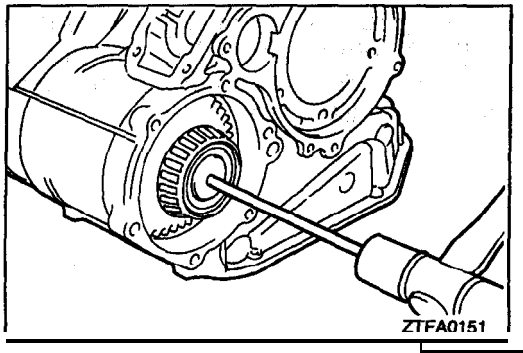

(52) Insert a rod 8 mm (.31 in.) in diameter and 200 mm (7.87 in.) in length from the hole shown in the figure and punch out the rear output shaft.

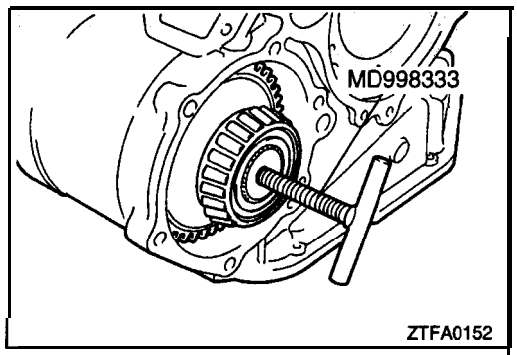

(53) Using the special tool, remove the center differential.

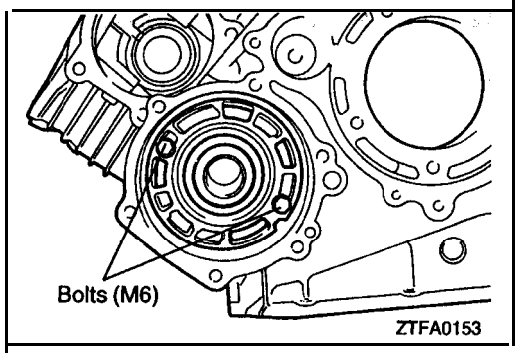

(54) Put a bolt (M6) into the center bearing retainer and, holding that bolt, remove the center bearing retainer and outer race.

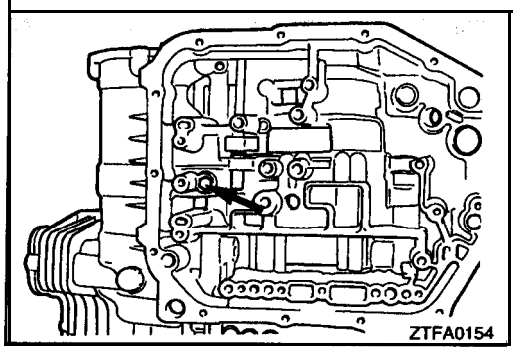

(55) Remove the center bearing retainer stopper bolt.

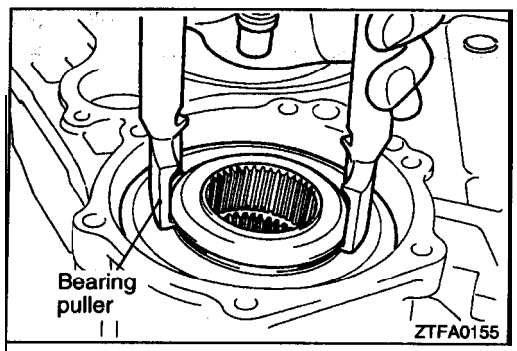

(56) First remove the stopper ring and then put a bearing puller or similar tool in the viscous coupling groove and pull out the viscous coupling.

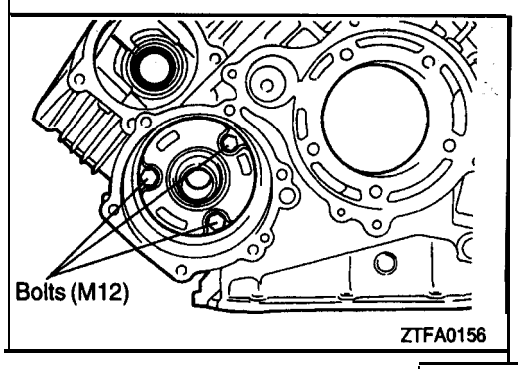

(57) Remove the front bearing retainer mounting bolt (M10). Then, screw a bolt (M12) into the threaded hole of the front bearing retainer and, holding that bolt, remove the front bearing retainer and outer race.

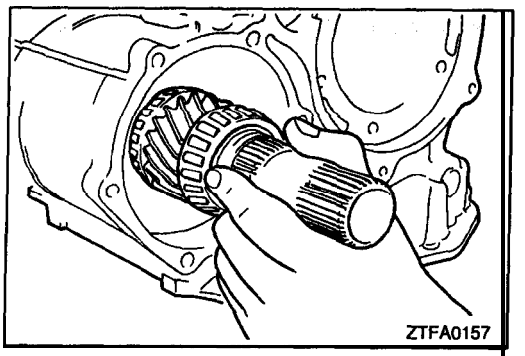

(58) Remove the front output shaft.

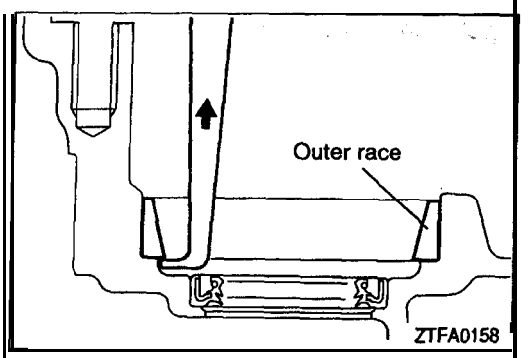

(59) Using a sliding hammer or similar tool, remove the outer race.
(60) Remove the oil seals.

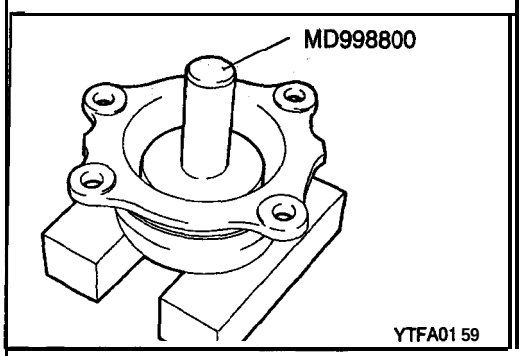

REASSEMBLY

(1) Using the special tool, install the oil seals to the differential bearing retainer and transaxle 'case.

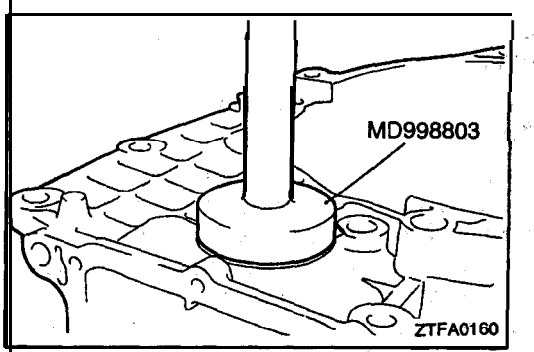

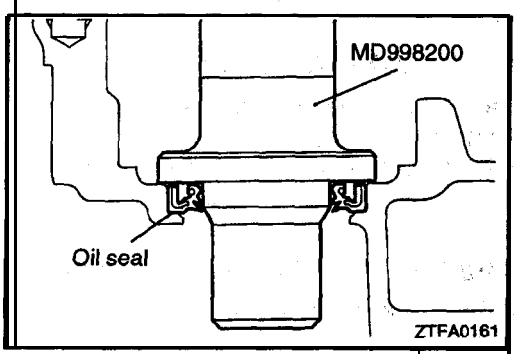

(2) Using- the special tool, install the rear output shaft oil seal.

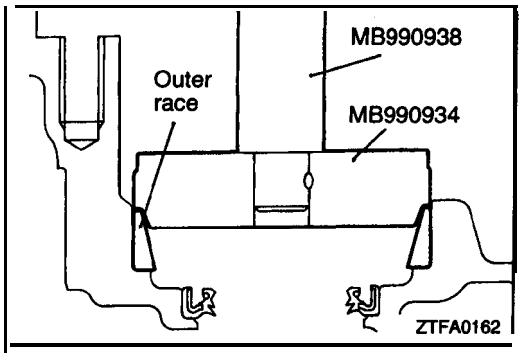

(3) Using the special tool, press-fit the outer race in the transaxle case.

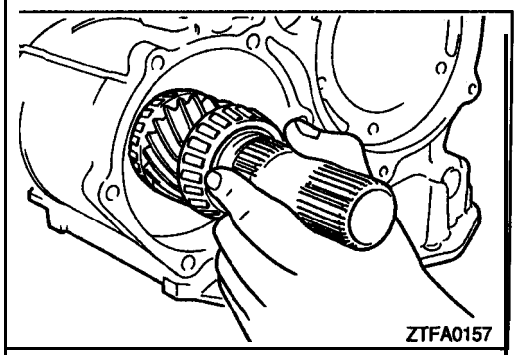

(4) Install the front output shaft assembly.

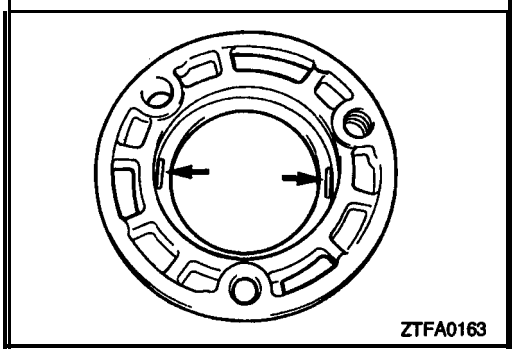

(5) Place solder with a length of approx. 10 mm (.039 in.) and a diameter of 1.6 mm (.063 in.) on the front bearing retainer in the shown positions and then install' the outer race.

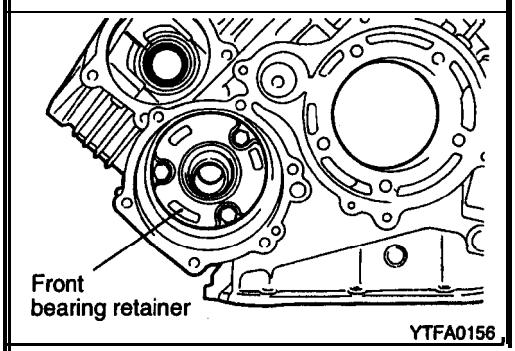

(6) Install the front bearing retainer and tighten the bolt to the specified torque.

Front bearing retainer mounting bolts:.
49 Nm (35 ft.lbs.)

(7) Loosen the bolts and remove the front bearing retainer.
(8) Remove the outer race from the front bearing retainer and remove the solder. If the solder does not break, perform the work in steps 5-8 with large diameter solder. Measure the thickness of the crushed solder with a 'micrometer and select a spacer with the correct thickness so the preload reaches the standard value.

Standard value:
0.055–0.115 mm (.00217–.00453 in.)

(9) Install the spacer selected in the previous step and the outer race in the front bearing retainer.
(lO)First install the front bearing retainer and apply sealant to the bolts and then tighten to the specified torque.

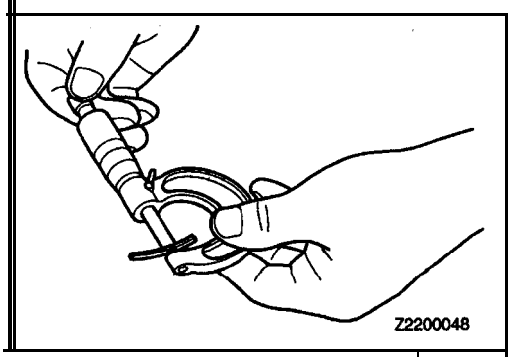

Specified sealant:
3M Stud Locking Part No. 4170 or equivalent

Front bearing retainer mounting bolts:
49 Nm (35 ft.lbs.)

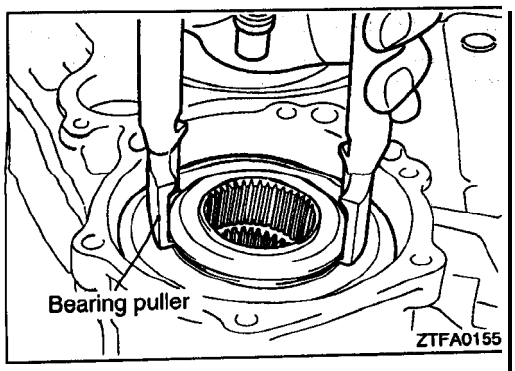

(11) Using a bearing puller, support the viscous coupling and insert in the case. Then, install the stopper ring.

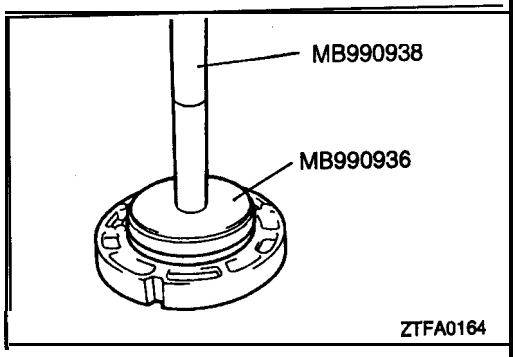

(12) Using the special tool, install the outer race in the center bearing retainer.

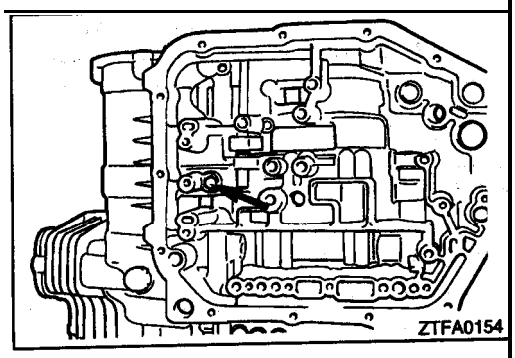

(13) Install the center bearing retainer stopper bolt.

Center bearing retainer stopper bolt: 5 Nm (4 ft.lbs.)

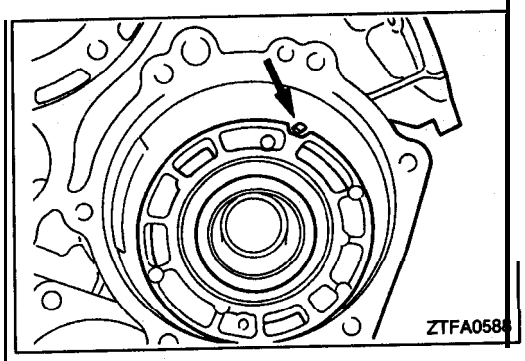

(14) Install the center bearing retainer so the projection of the stopper bolt fits in the groove of the center bearing retainer.

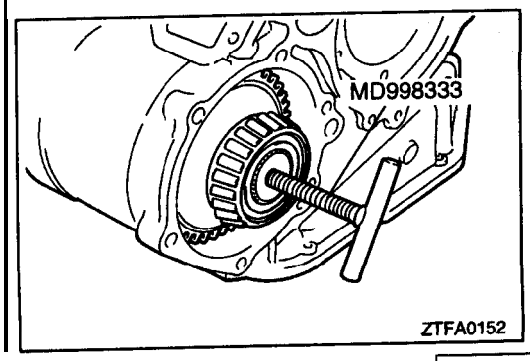

(15) Install the special tool in the center differential and install the center differential in the transaxle case.

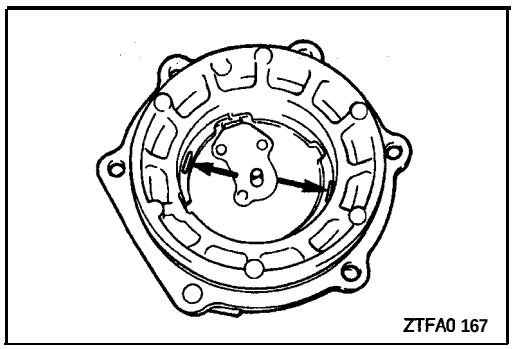

(16) Place solder with a length of approximately lb mm (.39 in.) and diameter of 1.6 mm (.06 in.) on the output bearing: retainer at the shown positions and install the outer race.

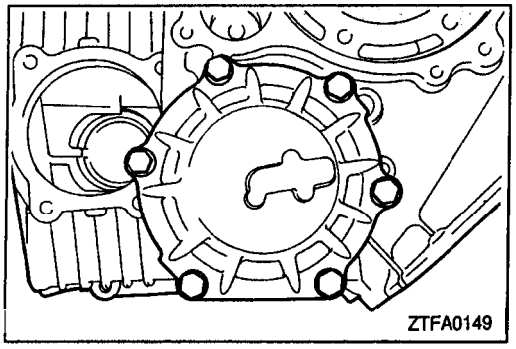

(17) Install the output bearing retainer and tighten the bolts to the specified torque.

Output bearing [retainer mounting bolts:
24 **Nm (18 ft.lbs.)**

(18) Loosen the bolts and remove the output bearing retainer.

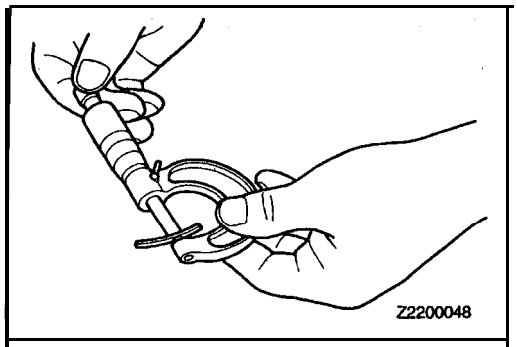

(19) Remove the outer race from the output bearing 'retainer and remove the solder. If the solder is not crushed, repeat steps (16)–(18), using the solder with diameter of 3 mm (.12 in.)
Measure the thickness of the crushed solder 'with a micrometer and select a spacer with' a thickness that will provide the standard. value for the preload.

Standard value:
0.075–0.135 mm (.00295–.00531 in.)

(20) Install the spacer selected in the previous item and the outer race on the output bearing' retainer.

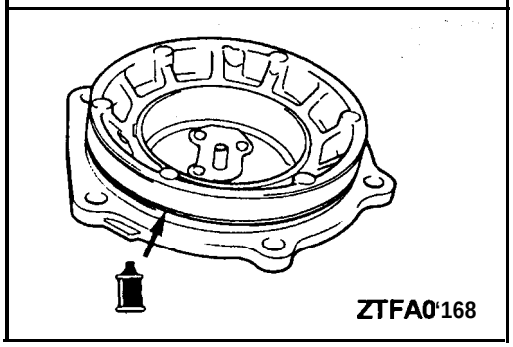

(21) Install a new O-ring around: the outer inside diameter of the outer bearing retainer.

(22) Coat the O-ring with automatic transmission fluid and tighten the output bearing retainer mounting bolts to the specified torque.

Output bearing retainer mounting bolts:
24 **Nm (18 ft.lbs.)**

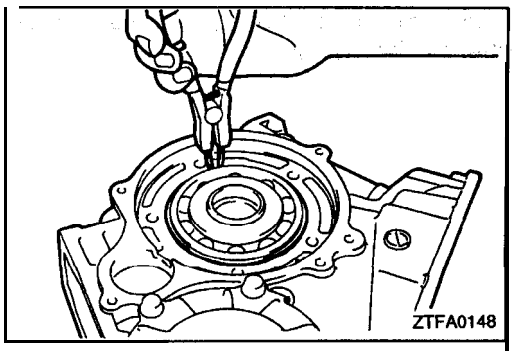

(23) Insert the output flange into the case and install a snap ring around the bearing.

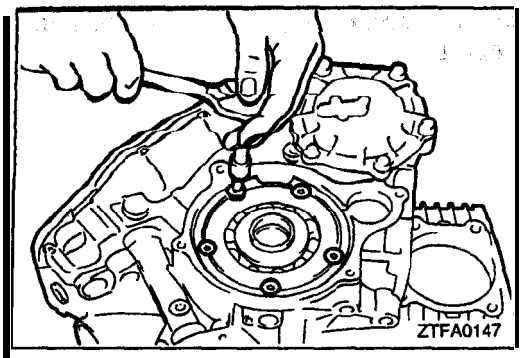

(24) Install the bearing retainer using new bolts.
Bearing retainer mounting bolts: 20 Nm (15 ft.lbs.)

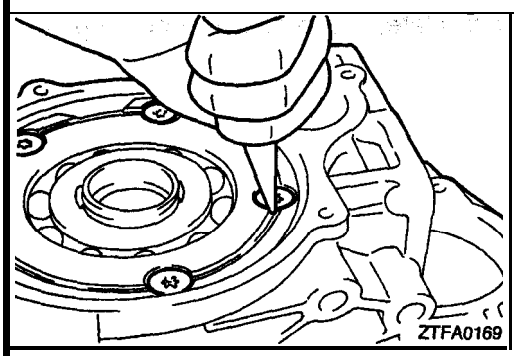

(25) Caulk the heads of the bolts.

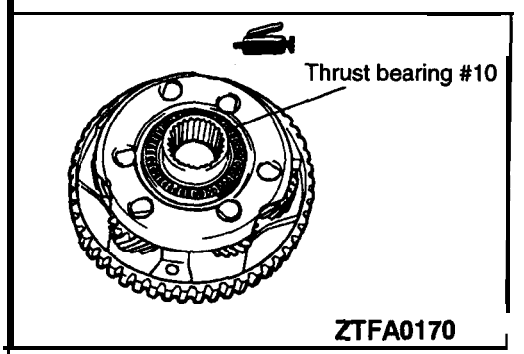

(26) Apply a coating of petrolatum to thrust bearing **#10** and attach to the **planetary** carrier.

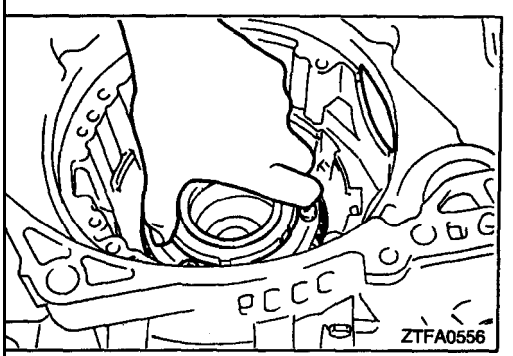

(27) Assemble the planetary carrier.

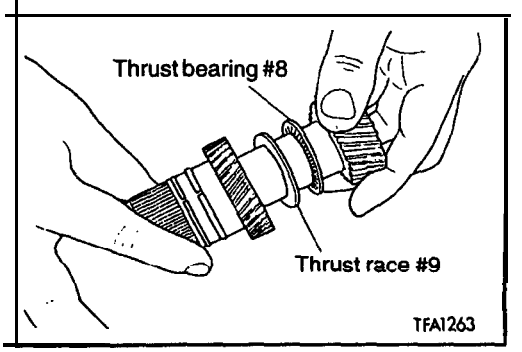

(28) Assemble the forward sun gear, thrust race **#9,** thrust bearing **#8** and reverse sun gear.

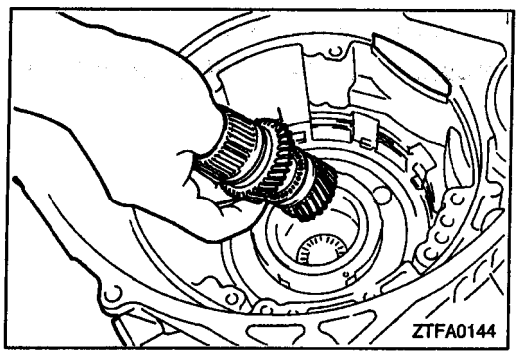

(29) **Install** both sun **gears** assembled' in the previous **item** into the planetary carrier.

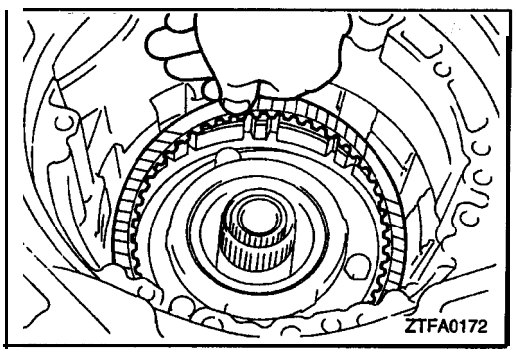

(30) **Assemble** the reaction **plate,** brake **disc** and brake **plate.**

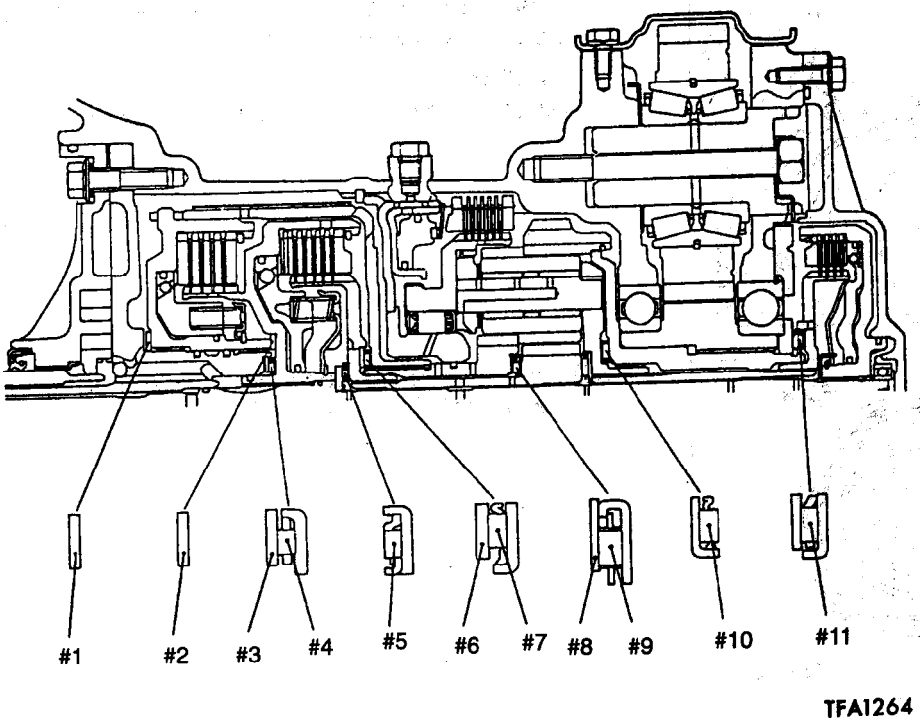

Identification of thrust bearings, thrust races and thrust washers

mm (in.)

Identification marking	O.D.	I.D.	Thickness	Part No.
#1	70.0 (2.756)	55.7 (2.193)	1.4 (.055) 1.8 (.071) 2.2 (0.87). 2.6 (.102)	*1 *2 *3 *4
#2	66.0 (2.596)	54.7 (2.126)	1.8 (.071)	MD731 212
#3	48.9 (1.925)	37.0 (1.457)	1.0 (.039) 1.2 (.047) 1.4 (.055) 1.6 (.063) 1.8 (.071) 2.0 (.079) 2.2 (.087) 2.4 (.094)	MD997854 (incl.*1) MD997847 (incl.*1) MD997848 (incl.*2) MD997849 (incl.*2) MD997850 (incl.*3) MD997851 (incl.*3) MD997852 (incl.*4) MD997853 (incl.*4)
#4	48.1 (1.906)	34.4 (1.354)	—	MD707271
#5	42.6 (1.677)	28.0 (1.102)	—	MD720753
#6	54.0 (2.126)	38.7 (1.524)	1.6 (.063)	MD704936
#7	52.0 (2.047)	36.4 (1.433)	—	MD720010
#8	45.0 (1.772)	28.0 (1.102)	—	MD728762
#9	46.0 (1.811)	31.0 (1.220)	0.8 (.031)	MD735063
#10	52.0 (2.047)	36.4 (1.433)	—	MD720010
#11	58.0 (2.283)	44.0 (1.732)	—	MD724206

TSB Revision

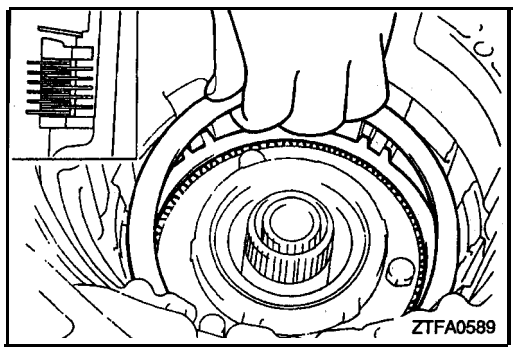

(31) Assemble the pressure plate used in disassembly and install the return spring.

Caution
Position the return spring correctly when installing.

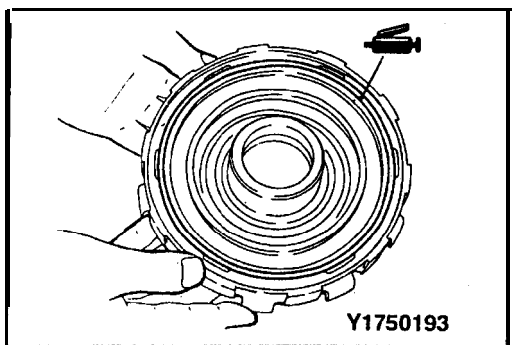

(32) Apply a coating of petrolatum jelly to the wave spring and attach it to the center support.

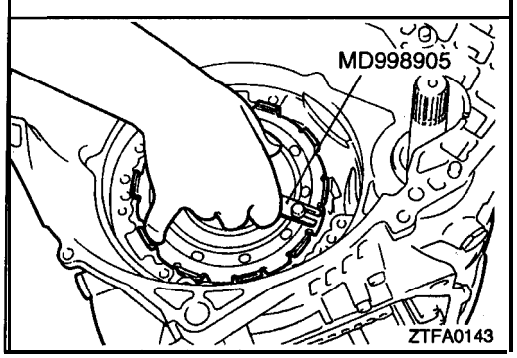

(33) Mount the special tool on the center support, install 2 new O-rings and push into the transaxle case.

Caution
1. **Coat the O-rings with automatic transmission fluid and align the oil holes.**
2. **Do not move the wave spring out of position when installing.**

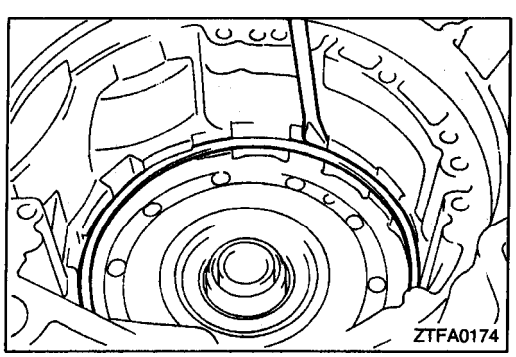

(34) Install the snap ring.

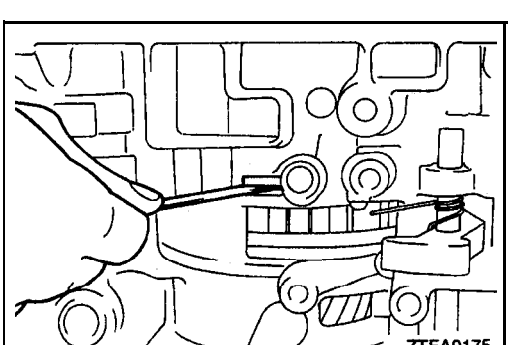

(35) Use a feeler gauge and measure the end play of the low-reverse brake. Adjust to the standard value by selecting the proper pressure plate.

Standard value: 1.0–1.2 mm (.039–.047 in.)

TSB Revision

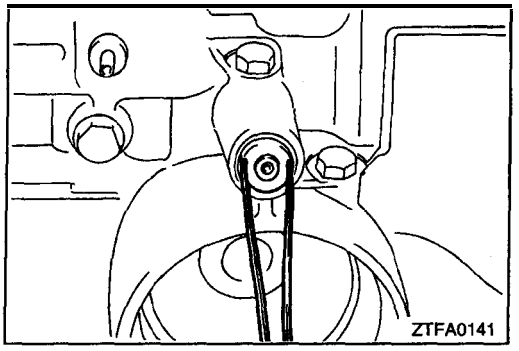

(36) Install the air exhaust plug, and then install the plug.

Air exhaust plug: 33 Nm (24 ft.lbs.)

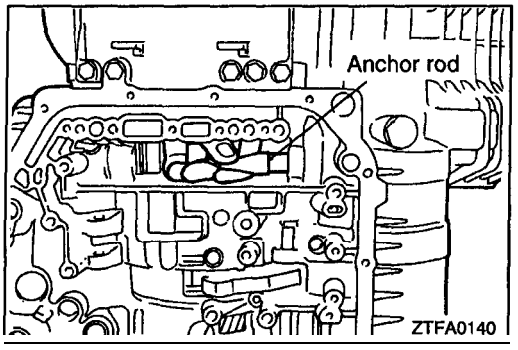

(37) Install the anchor rod.

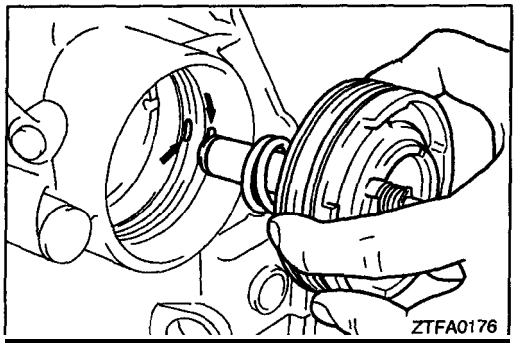

(38) Install the kickdown servo spring, piston and sleeve.'

Caution
The seal ring alignment hole of the kickdown servo piston must not overlap the oil filler port (indicated by the arrow in the diagram).

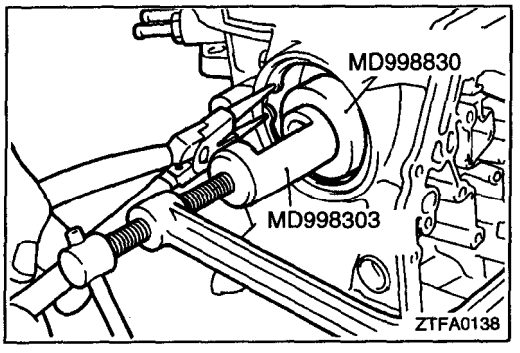

(39) Use the special tool to push in the kickdown servo piston and sleeve, and then install a snap ring.

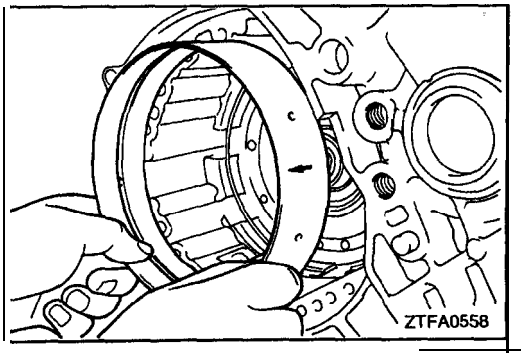

(40) Install the kickdown band.

Caution
Install so the arrow mark is facing forward.

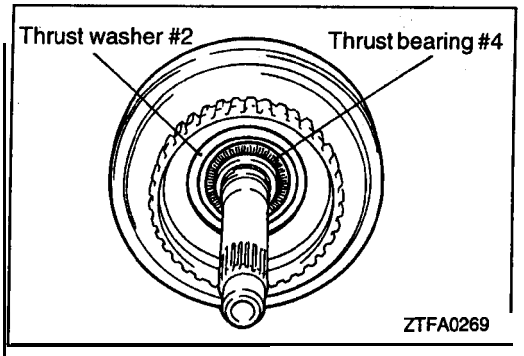

(41) **Install** thrust bearing **#4** and thrust **washer #2 on the** rear clutch.

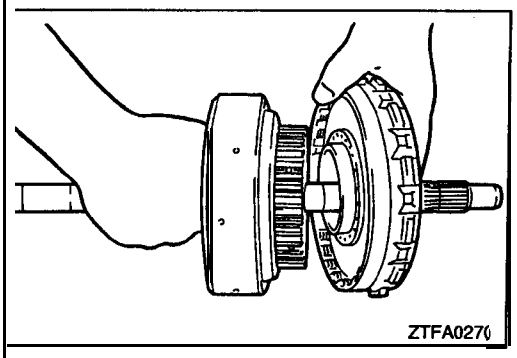

(42) **Combine** the rear clutch assembly and the front **clutch** assembly.

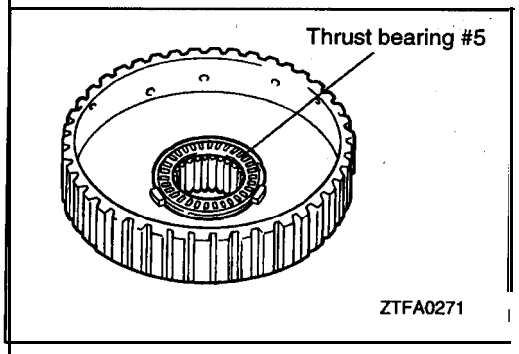

(43) **Install** thrust bearing **#5** on the rear clutch hub.

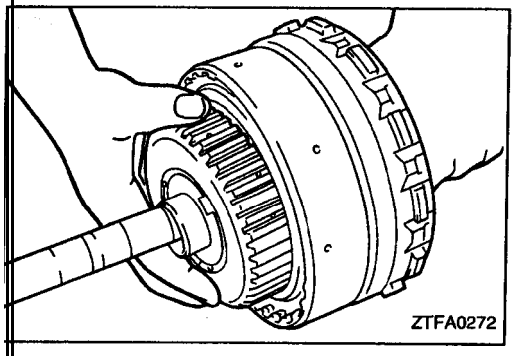

(44) **Install** the rear clutch hub on the **rear clutch.**

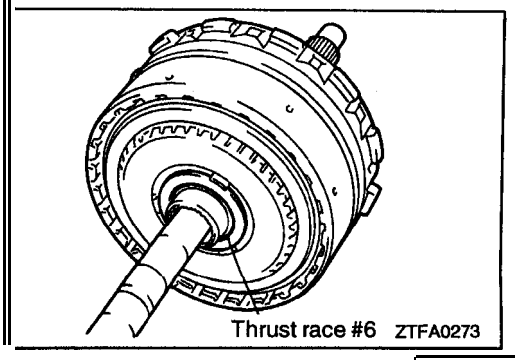

(45) **Install** thrust race **#6** on the end of the rear clutch hub.

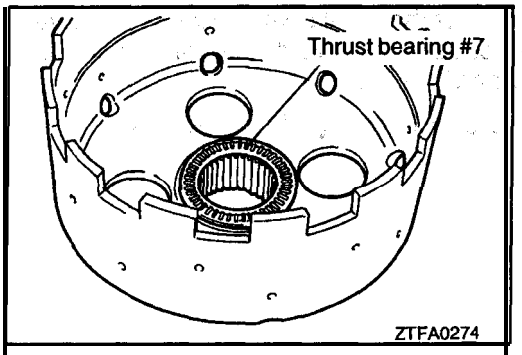

(46) Install thrust bearing #7 in the kickdown drum.

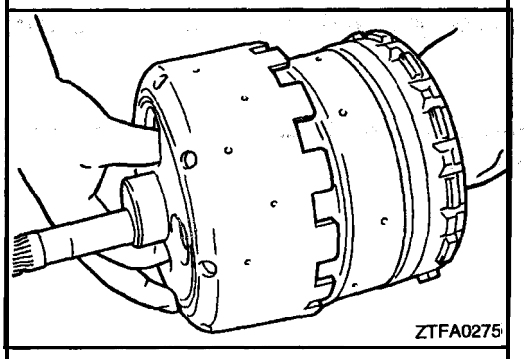

(47) Install the. clutch assembly in the kickdown drum.

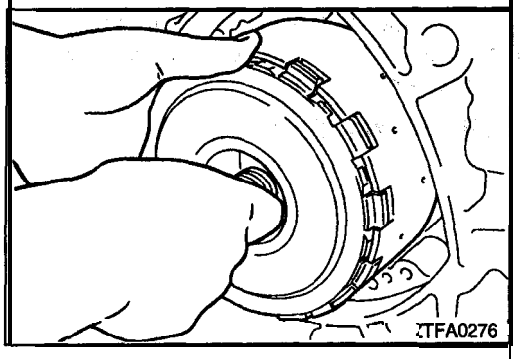

(48) Install the clutch assembly and kickdown drum into the transaxle case at the same time.

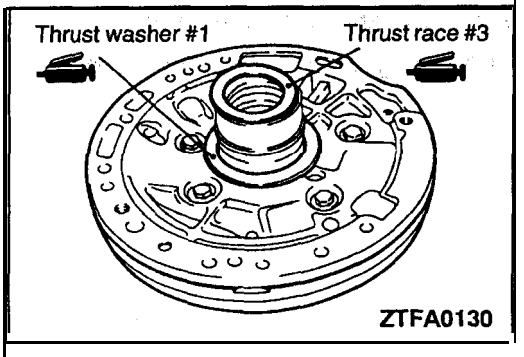

(49) Adhere thrust race #3 and thrust washer #1 to the back of the oil pump with petrolatum.

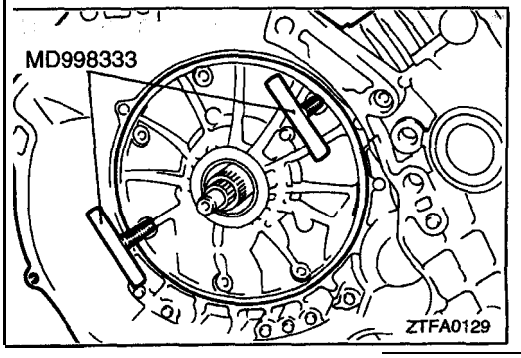

(50) Use the special tool to install a new oil pump gasket and oil pump assembly.

Oil pump assembly mounting bolts: 21 Nm (16 ft.lbs.)

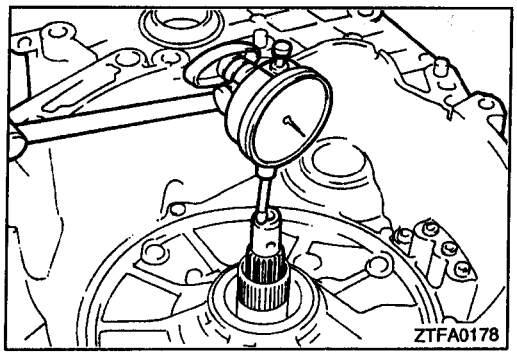

(51) **Measure the** end play of the **input shaft.** If not the standard value, replace thrust race **#3** and thrust washer **#1 and** adjust to the standard value.

Standard value: 0.3–1.0 mm (.012–.039 in.)

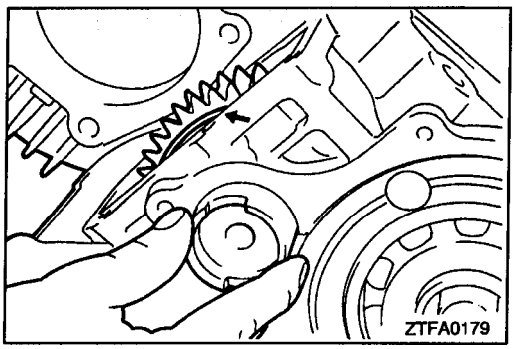

(52) **Install** the spacer, idler **gear and bearing** and then insert the idler shaft.

Caution
Assemble so that the identification groove 'on the idler gear faces backward.

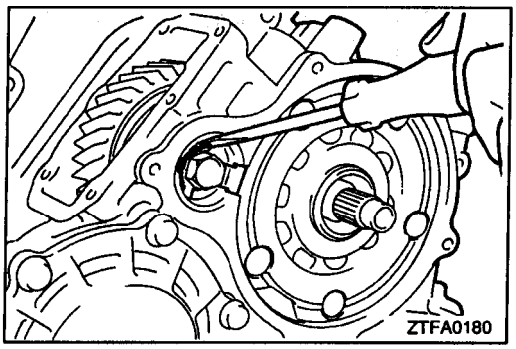

(53) **Tighten** the idler shaft lock **bolt** together **with the new** lock **plat** to the specified torque. Bend the three fingers of the lock plate to prevent turning..

Idler shaft lock bolt: 38 Nm (28 ft.lbs.)

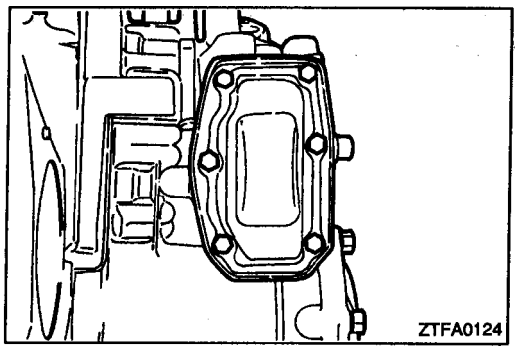

(54) **Install** the idler gear cover and a new **gasket.**

Idler gear cover mounting bolt: 11 Nm (8 ft.lbs.)

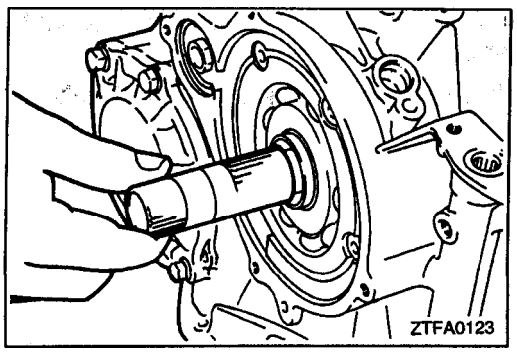

(55) **Insert** the end clutch shaft from the end with the long **spline.**

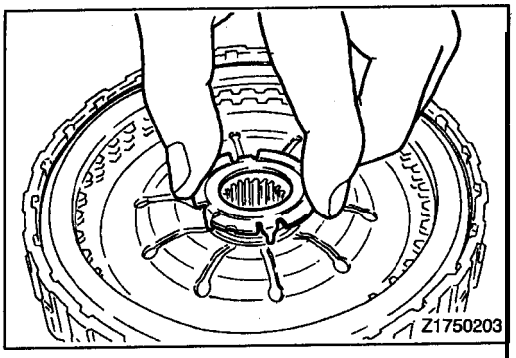

(56) Fit the thrust washer on the return spring of the end clutch.

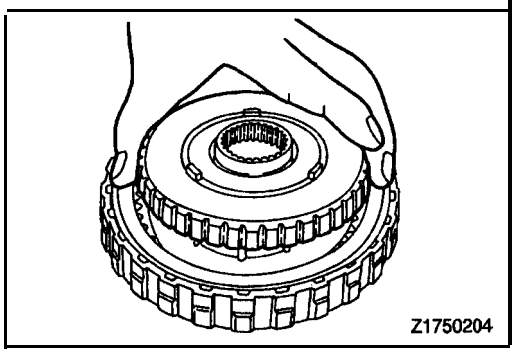

(57) Install the end clutch hub on the end clutch assembly.

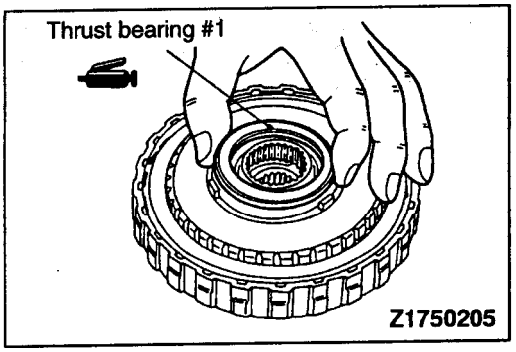

(58) Adhere thrust bearing #1 to the end of the clutch hub with petrolatum.

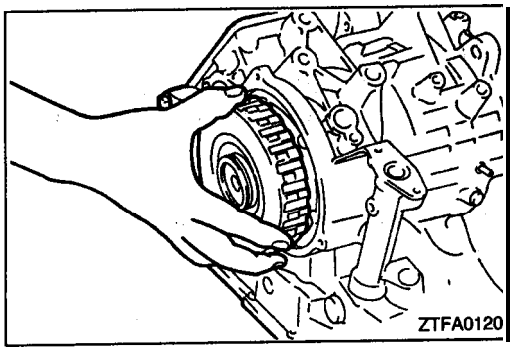

(59) Install the end clutch assembly.

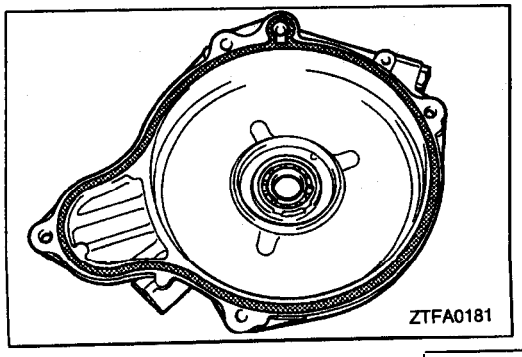

(60) Attach a new O-ring to the end clutch cover.

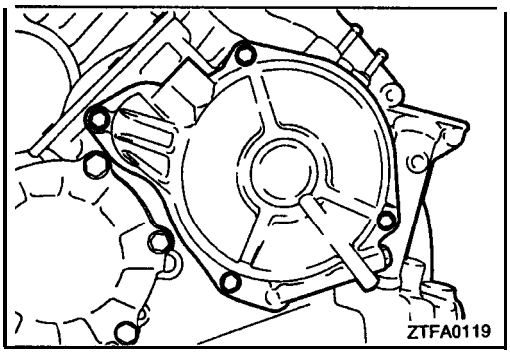

(61) Install the end clutch cover and tighten the bolts to the specified torque.

End clutch cover mounting bolts: 11 Nm (8 **ft.lbs.)**

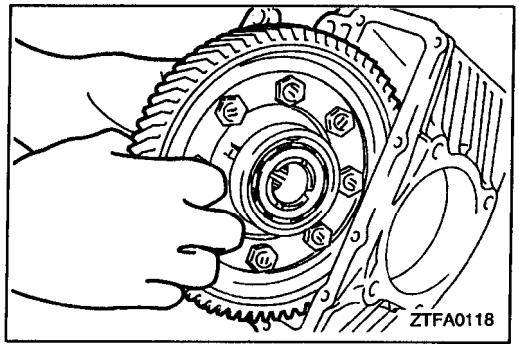

(62) Install the differential assembly.

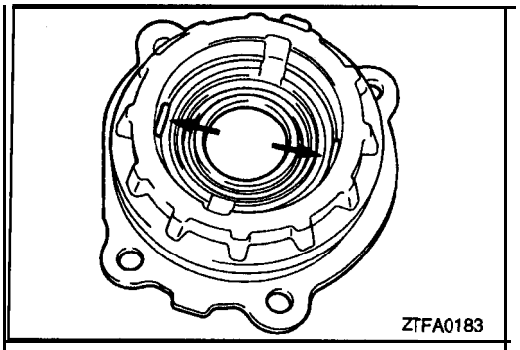

(63) Place solder with a length of approximately 10 mm (.39 in.) and diameter of 1.6 mm (.063 in.) on the differential rear bearing retainer at the shown positions and install the outer race.

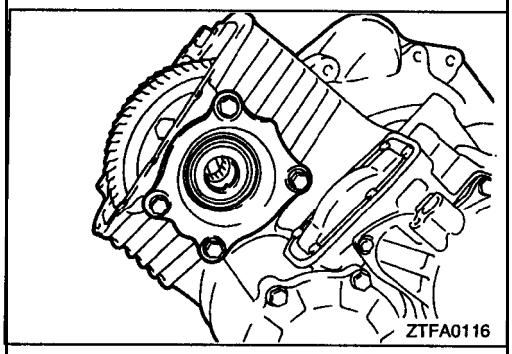

(64) Install the differential rear bearing retainer and tighten the bolts to the specified torque..

(65) Loosen the bolts, remove the differential. rear bearing retainer and remove the solder. If the solder is not crushed, repeat steps (63)–(65), using the solder with the diameter, of 3 mm.

Differential rear bearing retainer mounting bolts:
35 **Nm (26 ft.lbs.)**

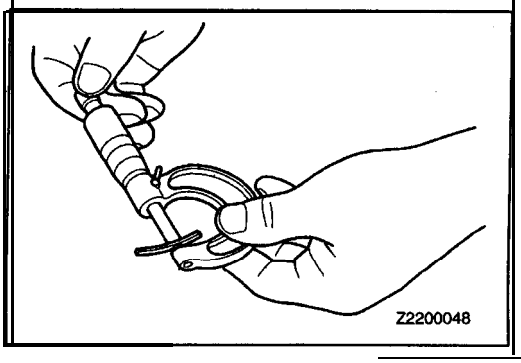

(66) Measure the thickness of the crushed solder with a micrometer and adjust by selecting a spacer with a thickness that will provide the standard value for the. end play and preload.

Standard value:
0.075–0.135 mm (.00295–.00531 in.)

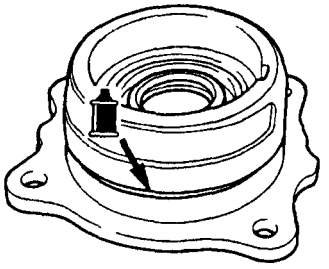
ZTFA0590

(67) Install a new O-ring on the, differential rear bearing retainer, coat the O-ring with automatic transmission fluid; then install in the transaxle case and tighten the mounting bolts to the specified torque.

Differential rear bearing retainer' mounting bolts: 35 **Nm (26 ft.lbs.)**

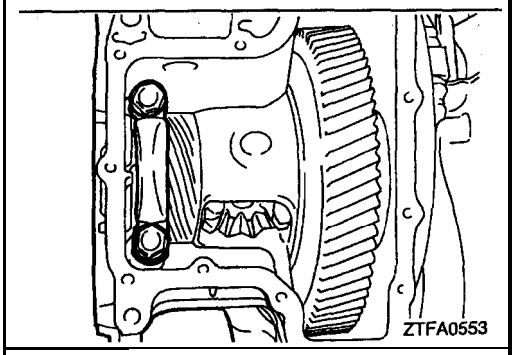
ZTFA0553

(68) Install the front bearing cap and tighten the bolts to the specified torque.

Differential front bearing cap mounting bolts: 70 **Nm (51 ft.lbs.)**

(69) Install the differential cover and a' new gasket,

Differential cover mounting bolts: 11 Nm (8 ft.lbs.)

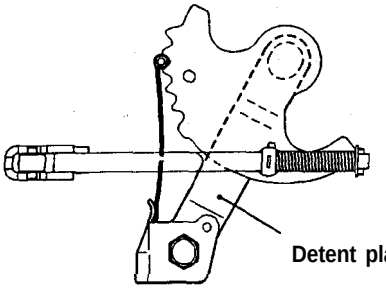

TFA1365

(70) Install the detent plate.

Detent plate mounting bolt: 11 Nm (8 **ft.lbs.)**

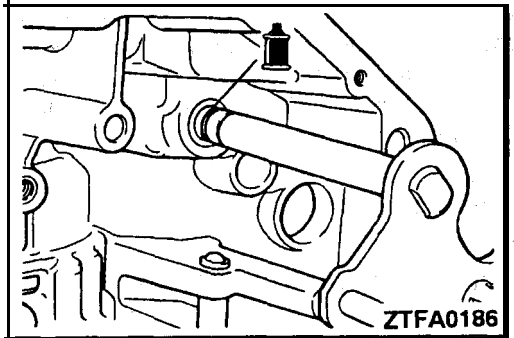
ZTFA0186

(71) Install a new O-ring on the manual control shaft assembly, coat the O-ring with automatic transmission fluid and then insert into the transaxle case.

(72) Align the groove in the manual control shaft and the set screw hole; then install the set screw.

Manual control 'shaft, set screw: 9 Nm (7 ft.lbs.)

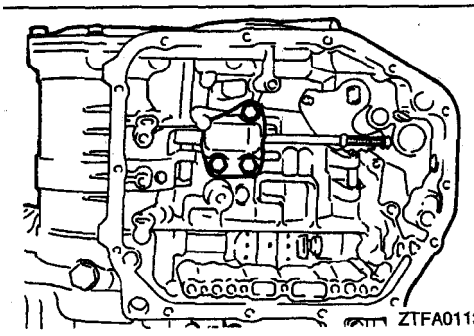
ZTFA0113

(73) Install the parking roller support.

Parking roller support mounting bolts: 24 **Nm (18 ft.lbs.)**

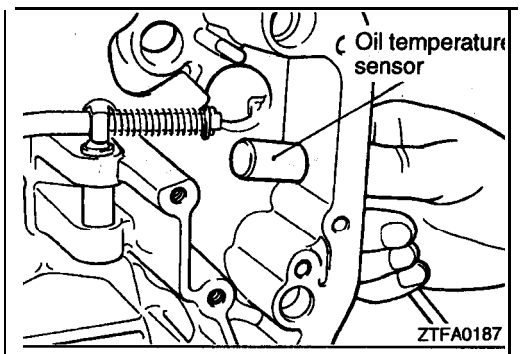

(74) **Insert** the oil temperature sensor into the case.

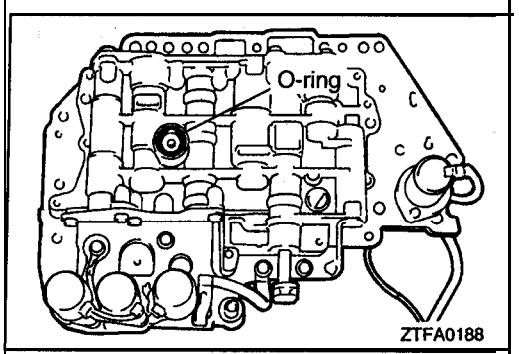

(75) **Install** an O-ring in the O-ring groove at the' top of the valve body assembly.

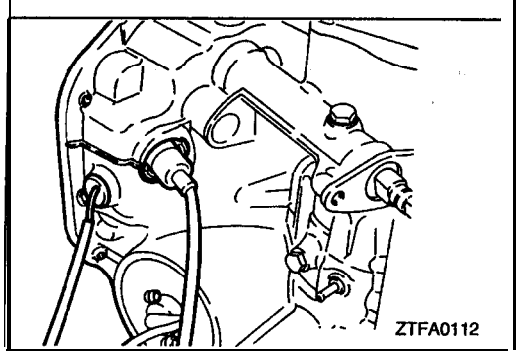

(76) **Replace** the solenoid valve harness grommet **O-ring with** a new one.
(77) **Pass** the solenoid valve connector through the transaxle case hole from the inside.
(78) **Push** the solenoid valve harness grommet into the case hole.

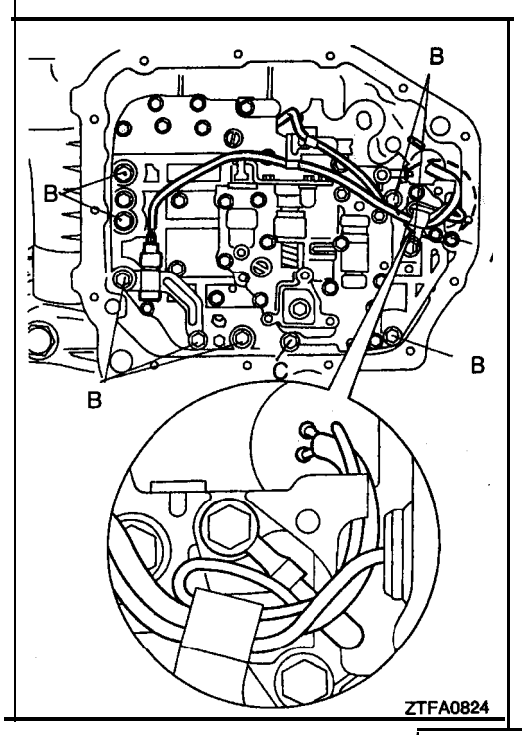

(79) **Insert** the knock pin of the **valve** body, into **the** case, keeping the detent plate pin in the 'manual valve groove. Temporarily install the valve body, **install** the oil' **tempera-**ture sensor and holder; then tighten **the** mounting bolts to the specified torque.

A bolt: 18 mm **(.71** in.)
B bolt: 25 mm **(.98** in.)
C bolt: 40 mm (1.57 in.)

Valve body assembly mounting bolts: 11 Nm (8 ft.lbs.)

Caution

Firmly fasten the solenoid valve and oil temperature! sensor harness at the shown positions.

Especially, be sure to route the pressure control sole-noid valve (PCSV) harness, which is separated from other harness, as shown in the, diagram and clamp the harness. Failure to fasten it 'may result in contact with the detent plate or parking rod.

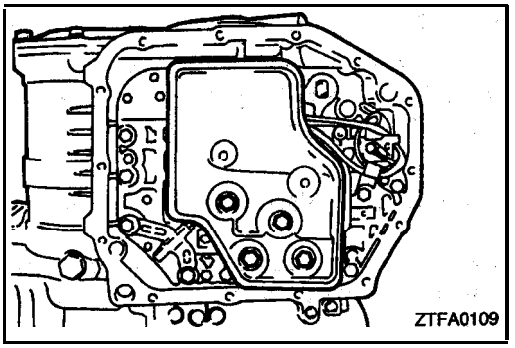

(80) Install the oil screen.

Oil filter mounting, bolts: 8 Nm (5 ft.lbs.)

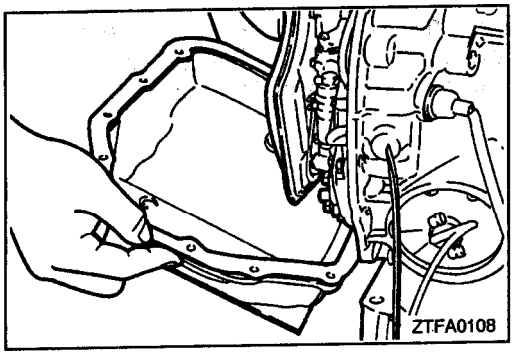

(81) Install the magnets in the Oil pan and install the oil pan.

Oil pan mounting bolts: 11 Nm (8 ft.lbs.)

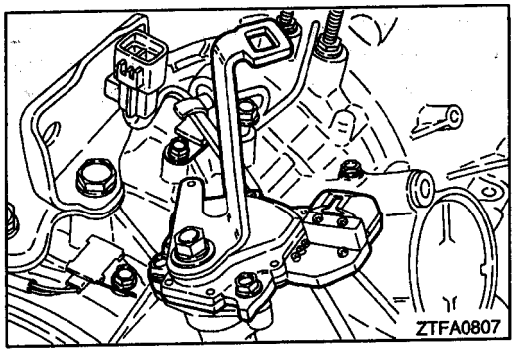

(82) Install the park/neutral position switch (PNP switch) and manual control lever.

Park/neutral position switch, mounting bolts: 11 Nm (8 ft.lbs.)

Manual control lever mounting bolt: 19 Nm (14 ft.lbs.)

(83) Install the speedometer gear assembly.

Speedometer gear locking plate mounting bolt: 5 Nm (4 ft.lbs.)

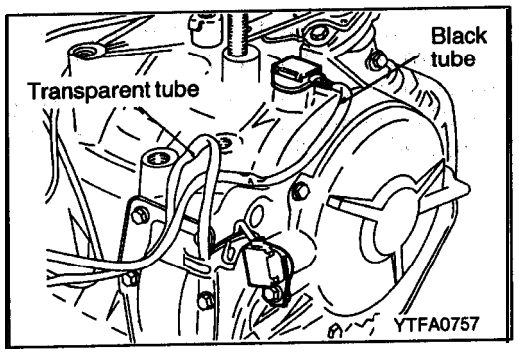

(84) Install the pulse generator A and B.

Pulse generator mounting bolts;, 11 Nm (8 ft.lbs.)

Caution

Install the black tube on the output gear side and the transparent tube on the end clutch side.

(85) Install the oil filler tube and insert the dipstick.

Oil filler tube mounting bolt: 24 Nm (18 ft.lbs.)

(86) Install the brackets.

Transaxle mounting bracket bolts: 70 Nm (51 ft.lbs.)

(87) Adjust the kickdown servo.

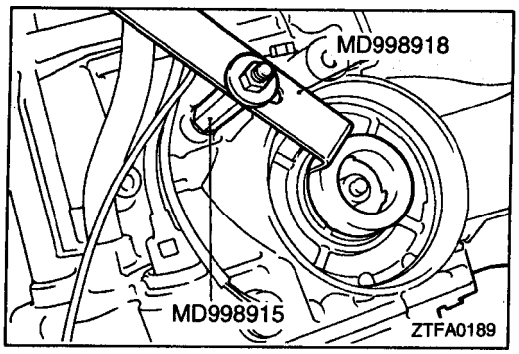

(88) Adjust the kickdown servo by the following procedure;'

(a) Fit the claw of the special tool in the notch' of the piston to prevent the piston from turning, and use adapter to secure it as illustrated at left.

Caution

1. **Do not push in the piston with the special tool.**
2. **When the adapter is installed to the transaxle case, do not apply excessive torque but tighten by hand.**

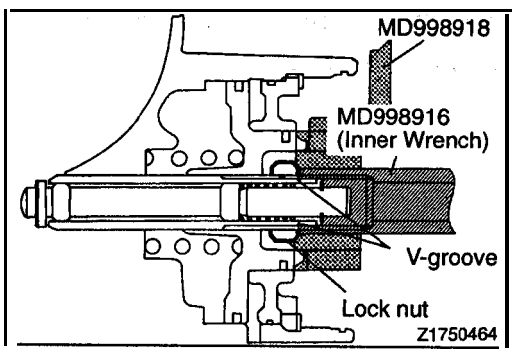

(b) Loosen the lock nut 'until it is about to reach the V-groove in the adjusting rod. Tighten the special tool (inner) until it touches the lock nut.

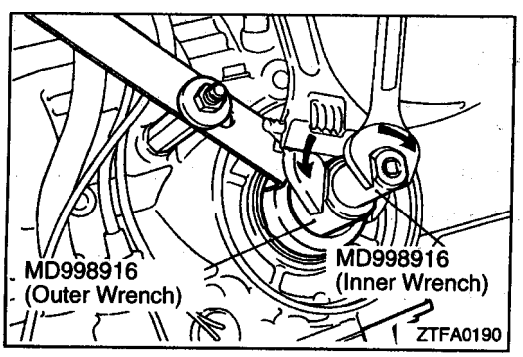

(c) Fit the special tool (outer) to the lock nut.' Turn the outer cylinder counterclockwise and the inner cylinder clockwise to lock the lock nut and, the special tool (inner).

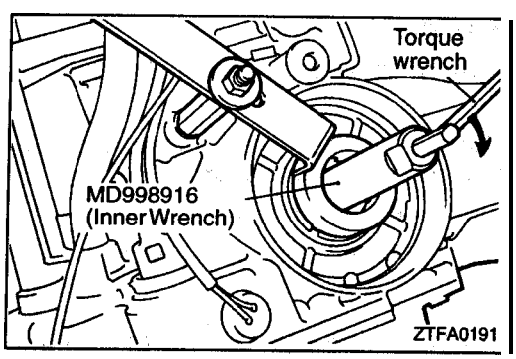

(d) Fit a torque wrench to the special tool (inner) to tighten it to a torque of 10 Nm (7.2 ft.lbs.) and loosen. 'Repeat this sequence twice before tightening the special tool (inner) to 5 Nm (3.6 ft.lbs.) torque. 'Then back off the special tool (outer) 2 to $2^1/_4$ turns.

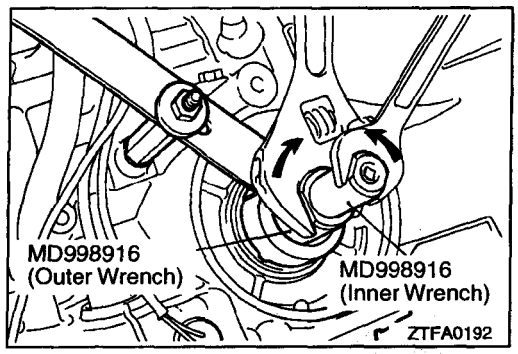

(e) Fit the special tool (outer) to the lock nut. Turn the outer cylinder clockwise and the inner cylinder counterclockwise to unlock the lock nut and the special tool (inner).

Caution
When unlocking is carried out, apply equal force to both special tools to loosen.

(f) Tighten the lock nut by hand until it touches the piston. Then, use a torque wrench to tighten the lock nut to the specified torque.

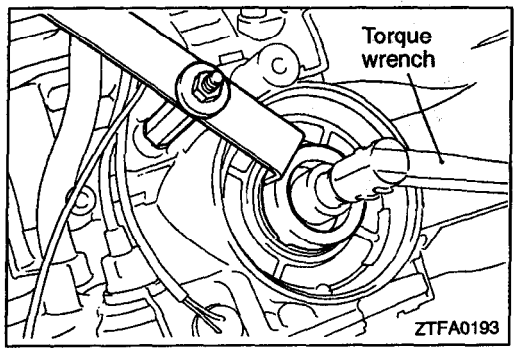

Lock nut: 29 Nm (21 ft.lbs.)

Caution
The lock nut may turn with the adjusting rod if tightened quickly with a socket wrench or torque wrench.

(g) Remove the special tool for securing the piston. Install the plug to the Low/Reverse pressure outlet and tighten to the specified torque.

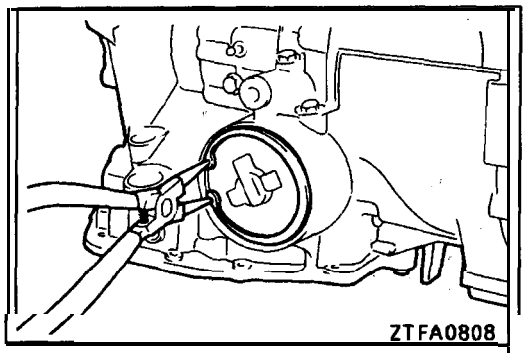

(89) Install the kickdown servo switch and fasten with a snap ring.

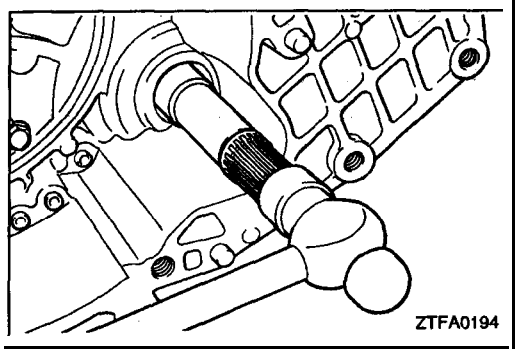

(90) Insert the center shaft and hit it with a plastic hammer or similar instrument to install it securely.

NOTE
Apply ATF to the oil seal lip and do not scratch it.

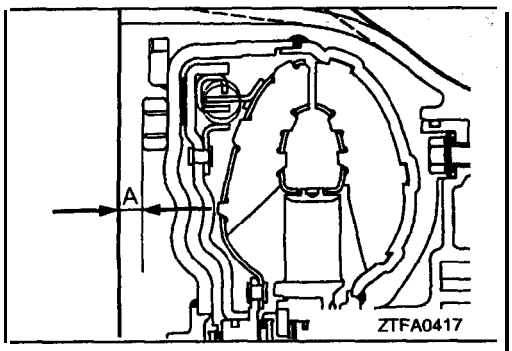

(91) Coat the oil pump drive hub with automatic transmission fluid and install the torque converter. Push in firmly so that dimension A in the diagram is at the standard value.

Standard value: approx. 18.3 mm (.642 in.)

OIL PUMP

23300130065

DISASSEMBLY AND REASSEMBLY

Lubricate all internal parts with automatic transmission fluid during reassembly.

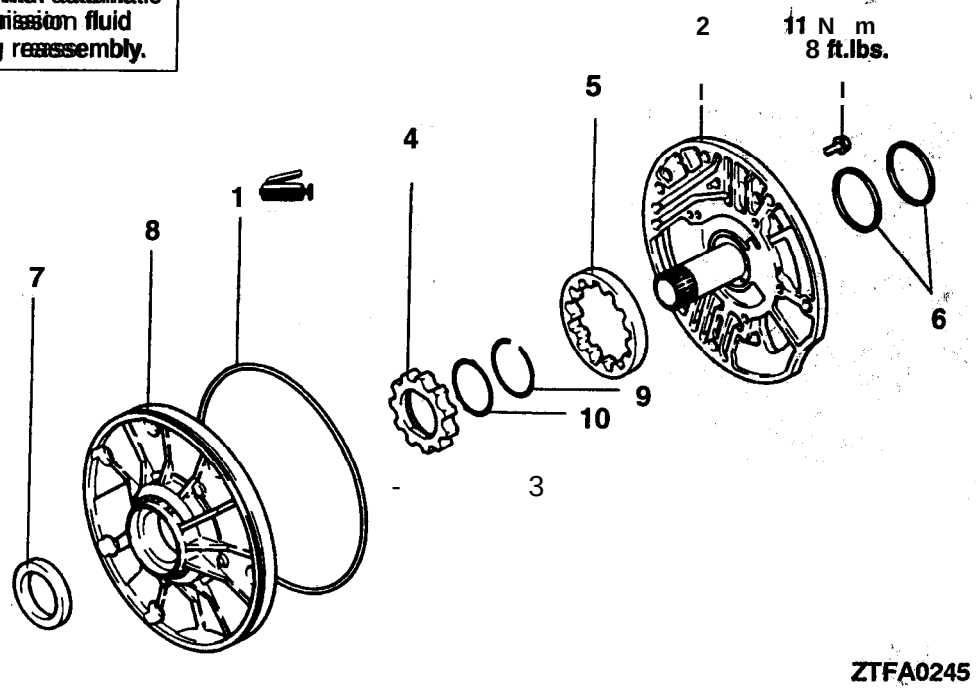

Disassembly steps

- ▶E◀ 1. O-ring
- ▶D◀ 2. Reaction shaft support
- ▶C◀ 3. Steel ball
- ◀A▶ ▶B◀ 4. Drive gear
- ◀A▶ ▶B◀ 5. Driven gear
- 6. Seal ring
- ▶A◀ 7. Oil seal
- 8. Oil pump housing
- 9. Snap ring
- 10. Oil seal

DISASSEMBLY SERVICE POINT,

◀A▶ DRIVE GEAR / DRIVEN GEAR REMOVAL

(1) Place reassembly alignment marks on the drive and driven gears.

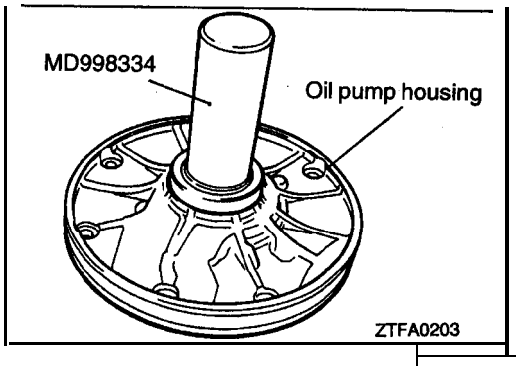

REASSEMBLY SERVICE POINTS

▶A◀ OIL SEAL INSTALLATION

TSB Revision

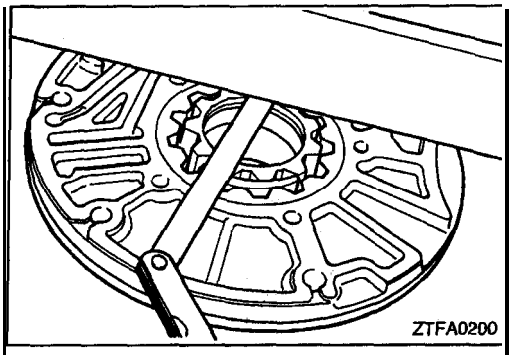

▶B◀ DRIVEN GEAR / DRIVE GEAR SIDE CLEARANCE MEASUREMENT

Standard value: 0.03–0.05 mm (.0012–.0020 in.)

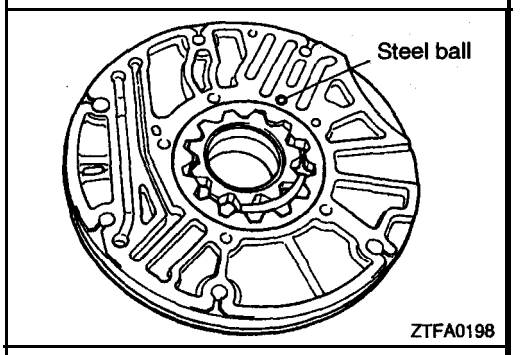

▶C◀ STEEL BALL LOCATION

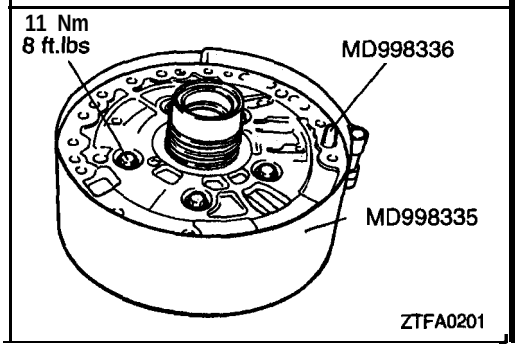

▶D◀ REACTION SHAFT SUPPORT INSTALLATION

(1) Assemble the reaction shaft support and the pump housing, and tighten the five bolts by fingers.
(2) Insert the special tool, Guide Pin MD998336, in the oil pump bolt hole and tighten the peripheries of the support and housing with the special tool, Band MD998335, to locate the support and housing.
(3) Tighten the five bolts to the specified torque.
(4) Make sure that the oil pump gear turns freely.

▶E◀ O-RING INSTALLATION

(1) Install a new O-ring in the groove of the pump housing and apply petrolatum jelly to the O-ring.

FRONT CLUTCH

23300160057

DISASSEMBLY AND REASSEMBLY

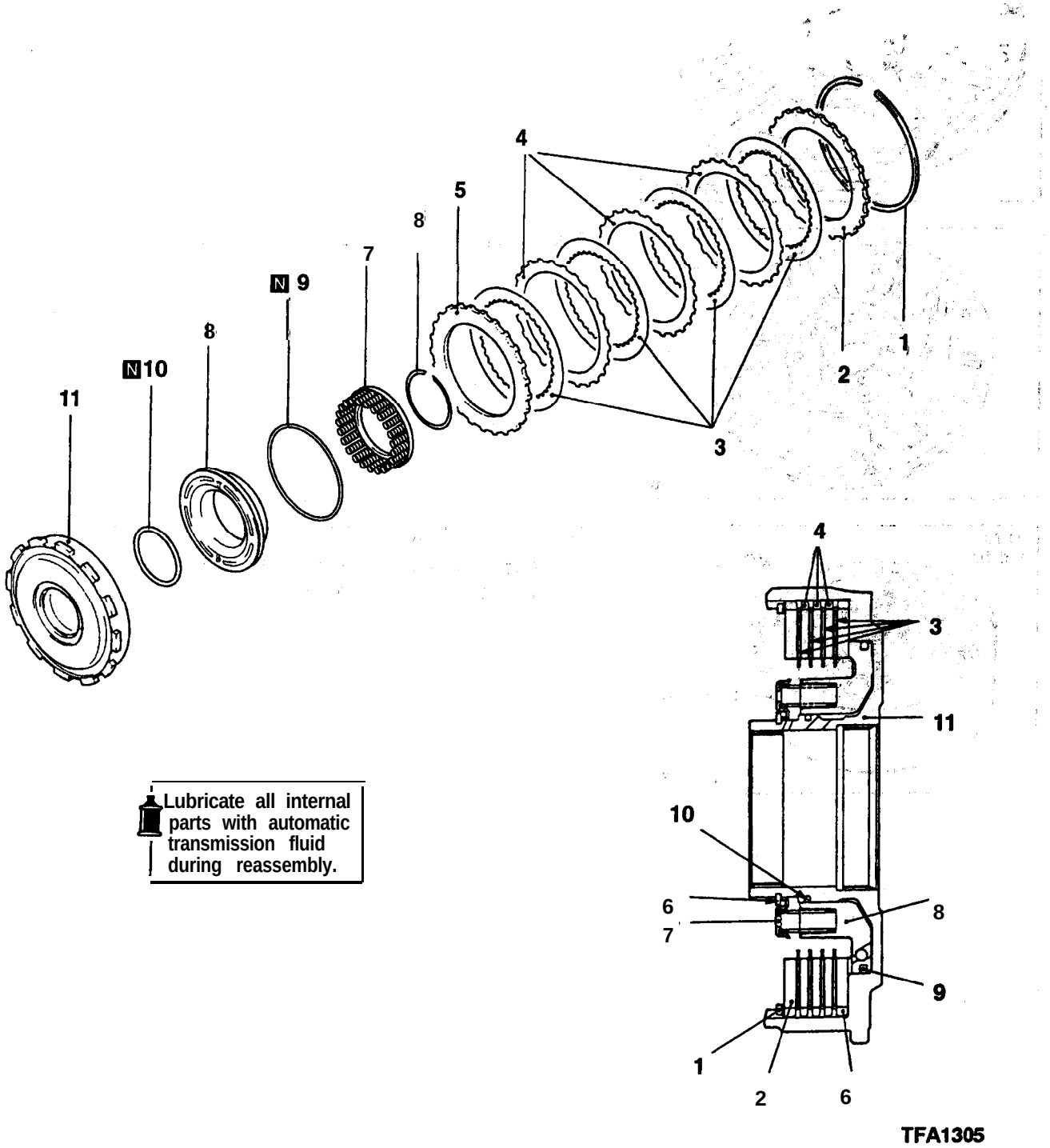

Lubricate all internal parts with automatic transmission fluid during reassembly.

Disassembly steps

▶C◀ 1. Snap ring
▶B◀ 2. Clutch reaction plate
3. Clutch disc
▶B◀ 4. Clutch plate
▶B◀ 5. Clutch pressure plate
◀A▶ ▶A◀ 8. Snap ring
7. Return spring
8. Front clutch piston
10. D-ring D-ring
11. Front clutch retainer

TSB Revision

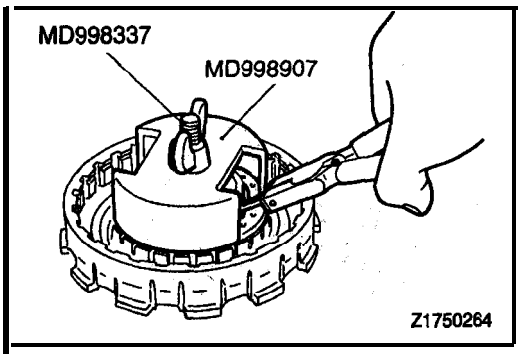

DISASSEMBLY SERVICE POINT

◀A▶ SNAP RING REMOVAL

(1) Compress the return spring with the special tool.
(2) Remove the snap ring.

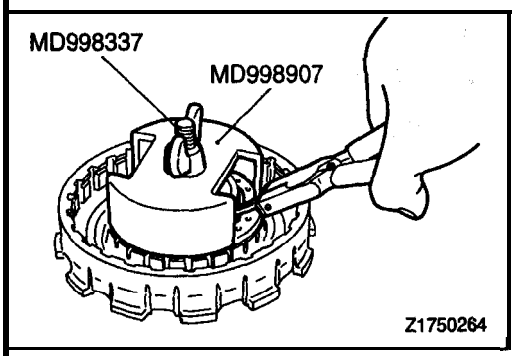

REASSEMBLY SERVICE POINTS

▶A◀ SNAP RING INSTALLATION

(1) Compress the return spring with the special tool.
(2) Install the snap ring.

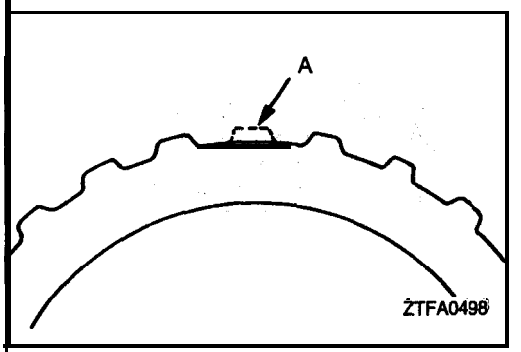

▶B◀ CLUTCH PLATE INSTALLATION

(1) Install the clutch plate with their missing tooth portions (A in the illustration) in alignment.

NOTE
This design helps automatic transmission fluid escape and improve the cooling efficiency of the plate and disc.

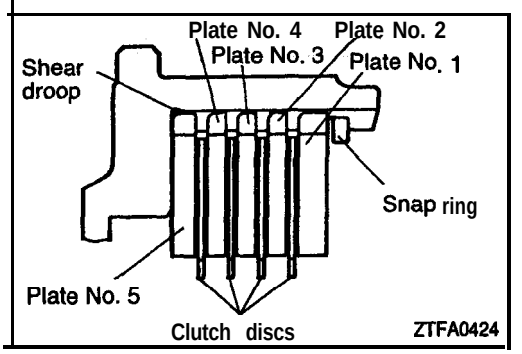

(2) Install the innermost plate with their shear droops directed as shown in the illustration.

Plate No.	Thickness mm (in.)
1	5.0 (.197)
2	2.2 (.087)
3	2.2 (.087)
4	2.2 (.087)
5	3.8 (.150)

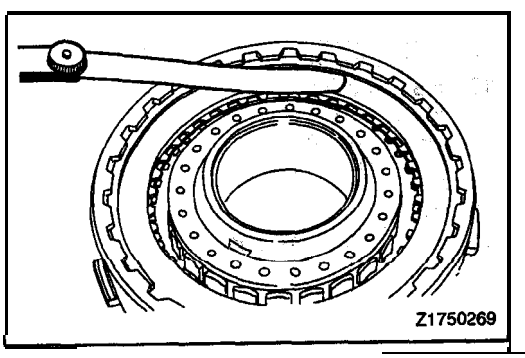

▶C◀ SNAP RING SELECTION

(1) Check clearance between the snap ring and clutch reaction plate. To check the clearance, hold entire inside diameter of the clutch reaction plate down with 50 N (11 lbs.) force. If clearance is out of standard value, select a snap ring to obtain the standard value;

Standard value: 0.8–1.0 mm (.031–.039 in.)

NOTE
Position the gap of the snap ring approx. 180° away from that of the return spring mounting snap ring.

REAR CLUTCH

23300190056

DISASSEMBLY AND REASSEMBLY

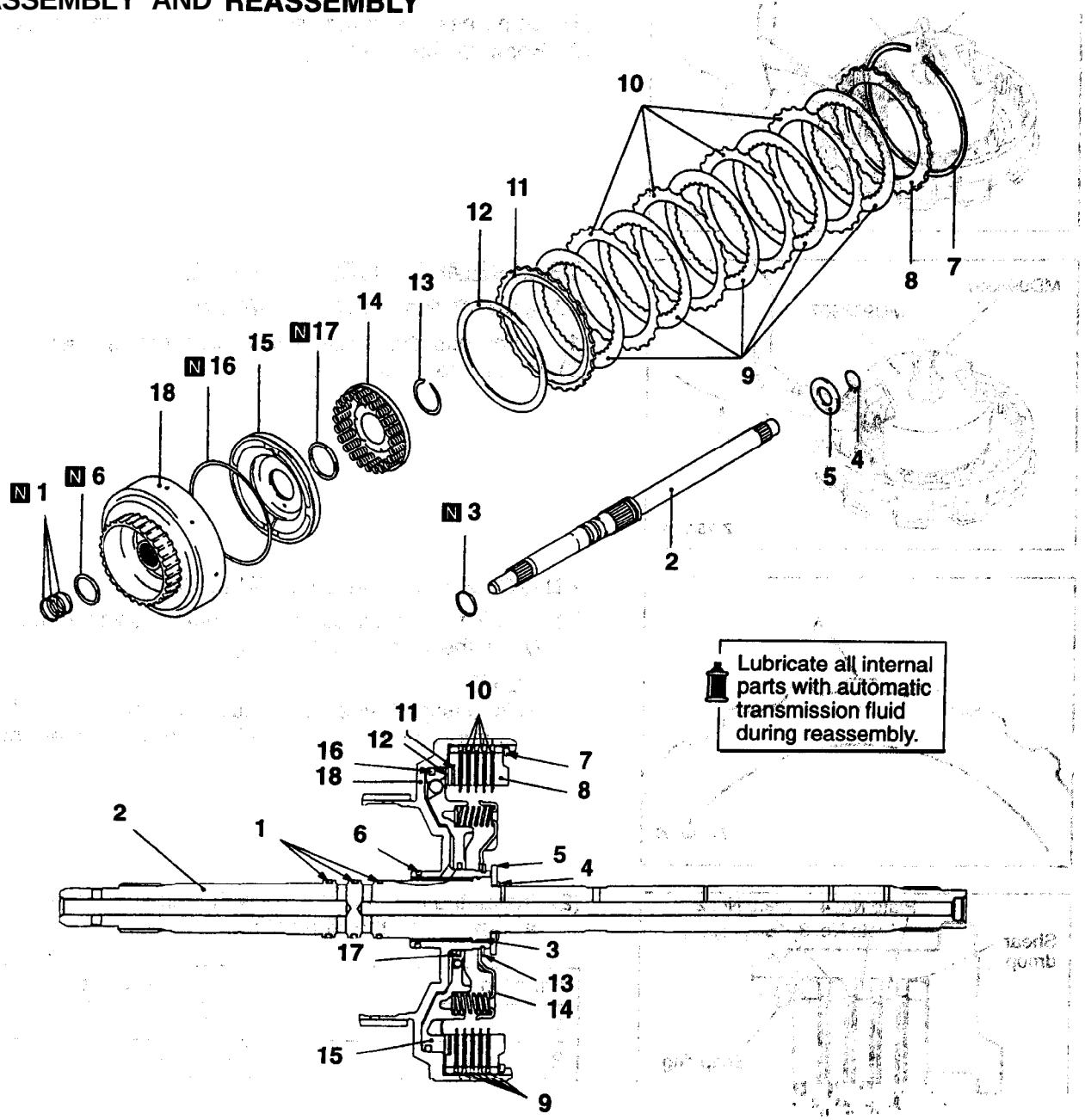

Disassembly steps

1. Seal ring
▶D◀ 2. input shaft
3. O-ring
4. Snap ring
5. Thrust race
6. Seal ring
▶C◀ 7. Snap ring
▶B◀ 8. Clutch reaction plate
9. Clutch disc
▶B◀ 10. Clutch plate
11. Clutch. pressure plate
12. Wave spring
◀A▶ ▶A◀ 13. Snap ring
14. Return spring
15. Rear clutch piston
16. D-ring
17. D-ring
18. Rear clutch retainer

TSB Revision

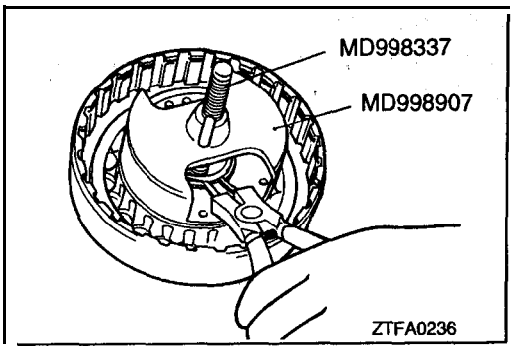

DISASSEMBLY SERVICE POINT

◀A▶ SNAP RING REMOVAL

(1) Compress the return spring with the special tool.
(2) Using a screwdriver, remove the snap ring.

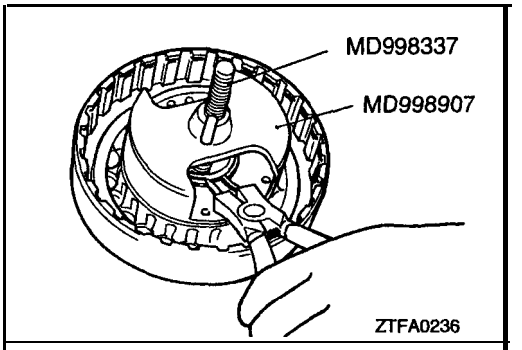

REASSEMBLY SERVICE POINT

▶A◀ SNAP RING INSTALLATION

(1) Compress clutch reaction plate with the special tool.
(2) Install the snap ring.

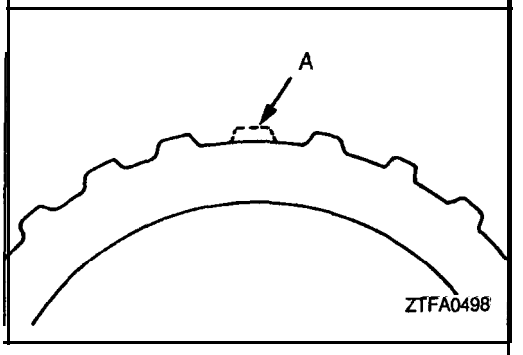

▶B◀ CLUTCH PRESSURE PLATE / CLUTCH PLATE / CLUTCH REACTION PLATE INSTALLATION

(1) Install the clutch pressure plate, clutch plates and clutch reaction plate with their missing tooth portions (A in the illustration) in alignment.

NOTE
This design helps automatic transmission fluid escape and improve the cooling efficiency of the plates and disc.

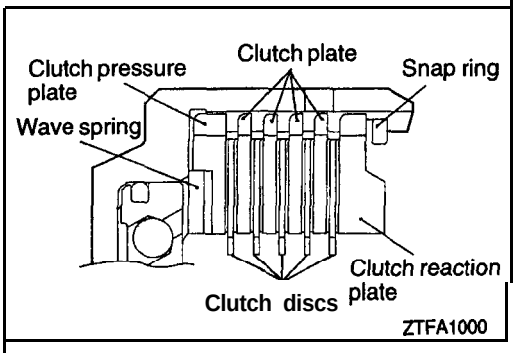

(2) Install the clutch reaction plate with its shear droop directed as shown in the illustration.

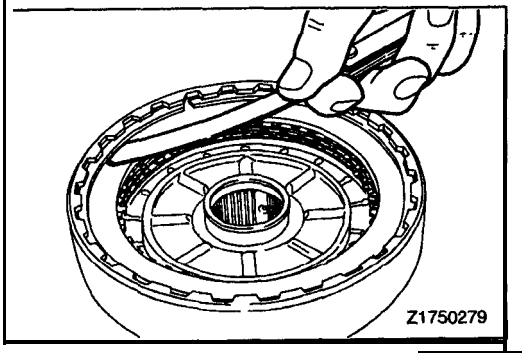

▶C◀ SNAP RING SELECTION

(1) Check clearance between the snap ring and clutch reaction plate. To check the clearance, hold entire circumference of the clutch reaction plate down with **50 N** (11 lbs.) force. If clearance is out of standard value, select a snap ring to obtain the standard value.

Standard value: 1.0–1.2 mm (.039–.047 in.)

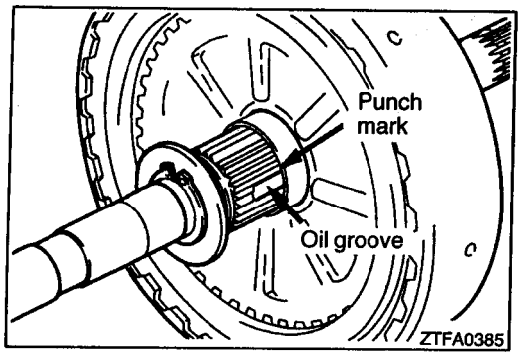

▶D◀ INPUT SHAFT INSTALLATION

(1) Install the input shaft with one of its oil groove aligned with the punch mark on the rear' clutch retainer.

END CLUTCH

23300220052

DISASSEMBLY AND REASSEMBLY

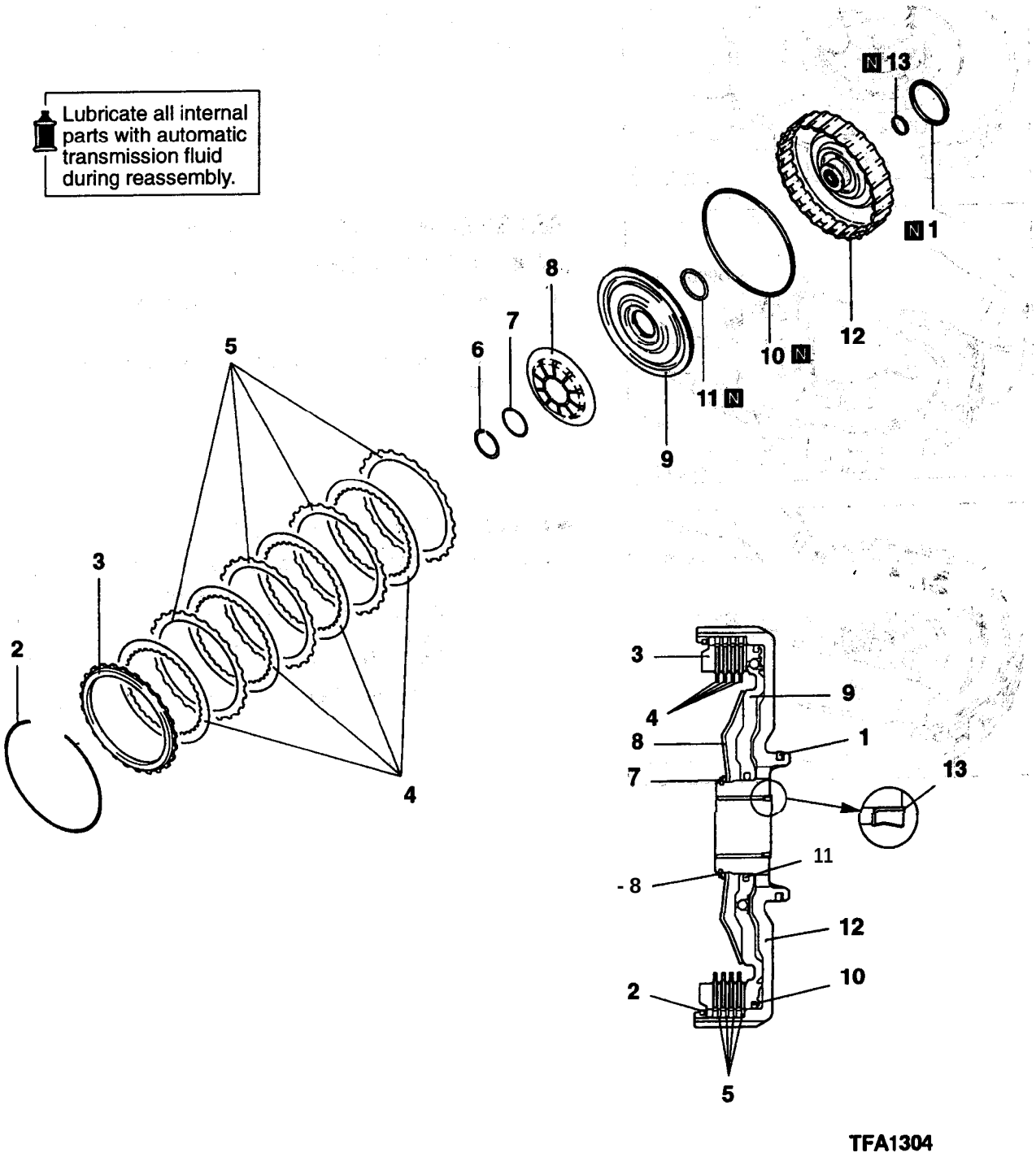

TFA1304

Disassembly steps

1. Seal ring
▶B◀ 2. Snap ring
3. Clutch reaction plate
4. Clutch disc
5. Clutch plate
▶A◀ 6. Snap ring
7. Washer
◀A▶
8. Return Spring
9. End clutch piston
10. Oil seal
11. D-ring
12. End clutch retainer
13. Oil seal

TSB Revision

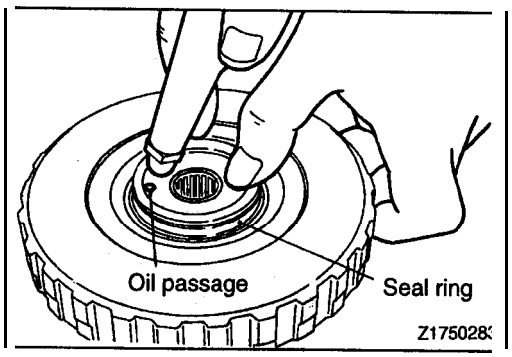

DISASSEMBLY SERVICE POINT

◀A▶ END CLUTCH PISTON REMOVAL

(1) Remove the piston. If it is hard to remove,' place the retainer on the workbench with piston side down and blow air through the oil passage in the back of retainer.

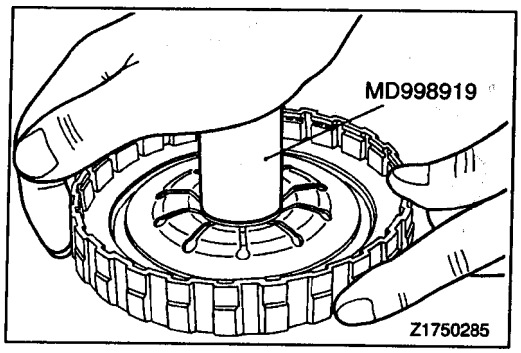

REASSEMBLY SERVICE POINTS

▶A◀ SNAP RING INSTALLATION

(1) Using the special tool, fit the snap ring.

Caution
Make sure that the snap ring is fitted in position in the groove.

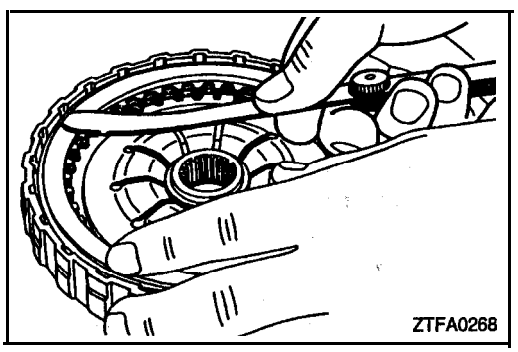

▶B◀ SNAP RING SELECTION

(1) Check clearance between the, snap ring and clutch reaction plate. To check the clearance, hold entire inside diameter of the clutch reaction plate down with 50 N (11 lbs.) force. If clearance is out of standard value, select a snap ring to obtain the standard value.

Standard value: 0.60–0.85 mm (.0236–.0335 in.)

PLANETARY 'GEAR

23300250051

DISASSEMBLY AND REASSEMBLY

Lubricate all internal parts with automatic transmission fluid during reassembly.

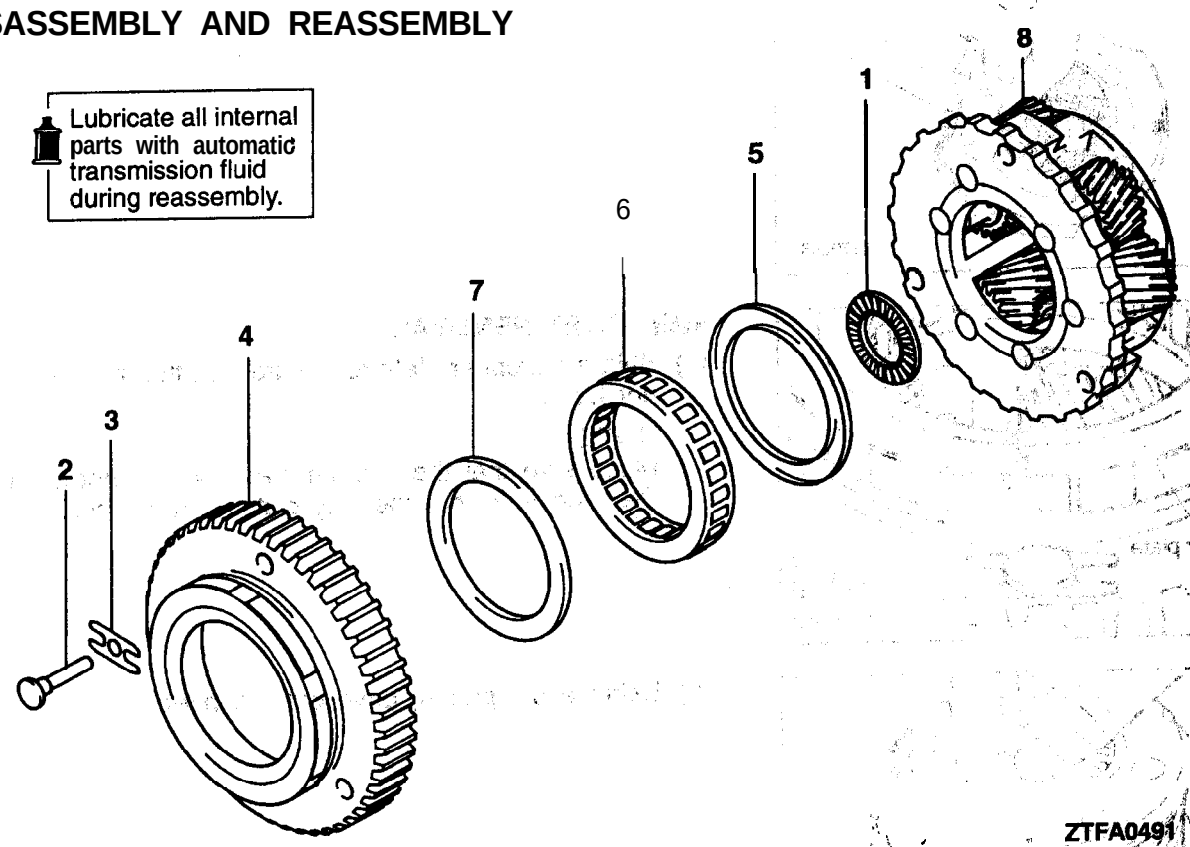

Disassembly steps

◀A▶ ▶A◀ 1. Thrust bearing
◀B▶ ▶D◀ 2. Rivet
▶C◀ 3. Wave washer
4. One way clutch outer race
5. End plate
▶B◀ 6. One way clutch
7. End plate
8. Planetary carrier

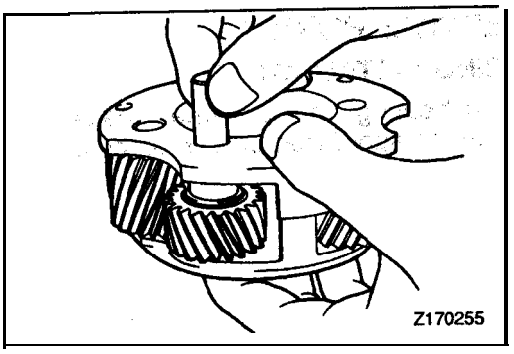

DISASSEMBLY SERVICE POINTS'

◀A▶ THRUST BEARING REMOVAL

(1) Remove the only one short pinion. Use care not to drop and lose the 17 rollers in the short pinion. Do not remove the other short pinions.

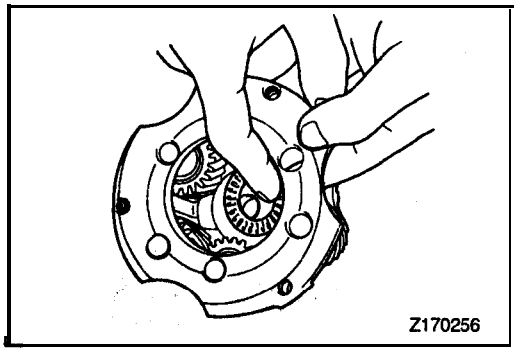

(2) Remove the thrust bearing.

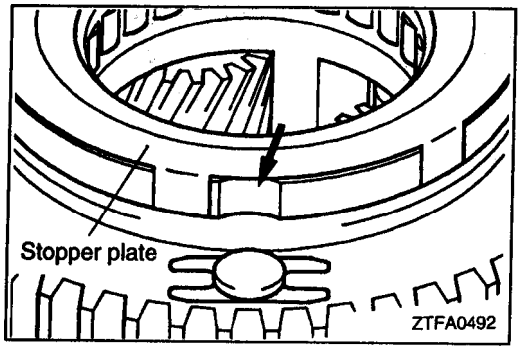

◀B▶ RIVET REMOVAL

(1) Shift the stopper plate to ensure that the rivet head does not hit it.

NOTE
Make sure that the stopper plate claw is not located at the groove in the one-way clutch outer race.

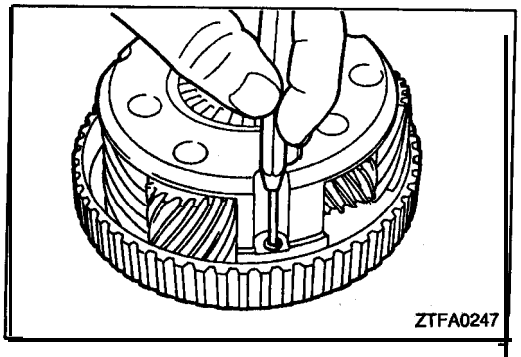

(2) Using a pin punch, drive out the rivet.

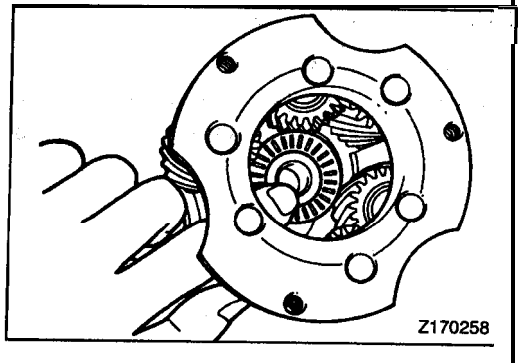

REASSEMBLY SERVICE POINTS

▶A◀ THRUST BEARING INSTALLATION

(1) Install a new thrust bearing on the car&r.. Make sure that it fits correctly in the spot faced portion of the carrier.

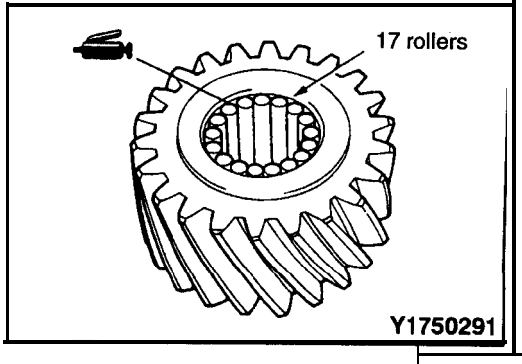

(2) Apply vaseline unsparingly to the inside surface of the short pinion and attach the 17 rollers on the surface.

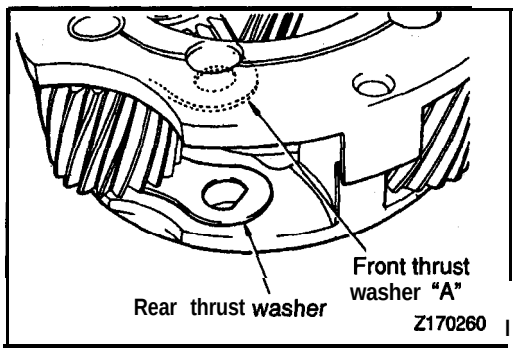

(3) Line up the holes of the rear thrust washer and front thrust washer "A" with the shaft hole of the carrier.
(4) Install the short pinion, spacer bushing and front thrust washer and align the holes. Use care not to allow the rollers to get out of position.

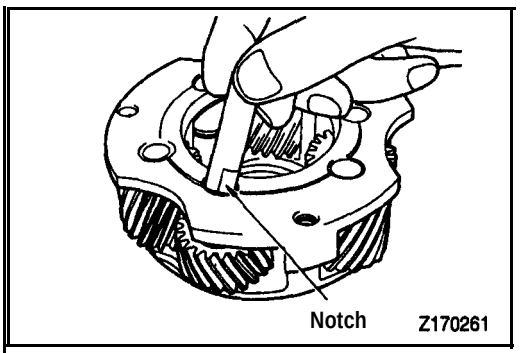

(5) Insert the pinion shaft. Make sure that the flattened end of pinion shaft is correctly fitted in the hole of the rear thrust plate when the pinion shafts is inserted.

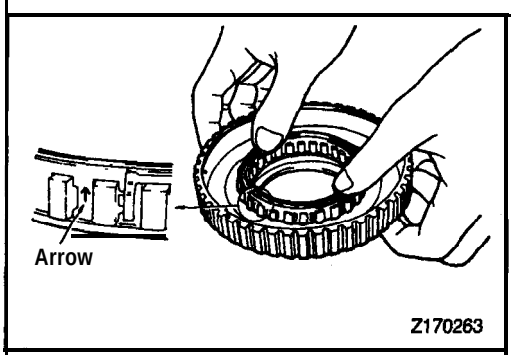

▶B◀ ONE-WAY CLUTCH INSTALLATION:

(1) Push the one-way clutch into the outer race. Make sure that arrow on the outside inside diameter of cage is directed upward as shown in the illustration when the one-way clutch is pushed in.

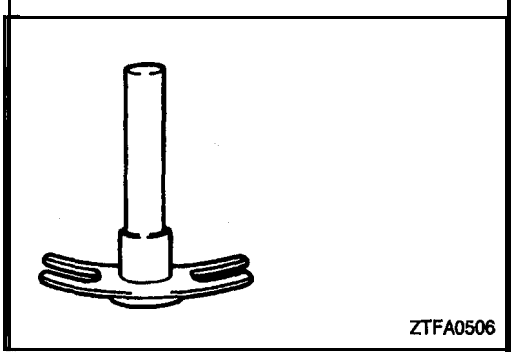

▶C◀ WAVE WASHER INSTALLATION

(1) Install the wave washer to the rivet so that its indentation is placed on the outer race side.

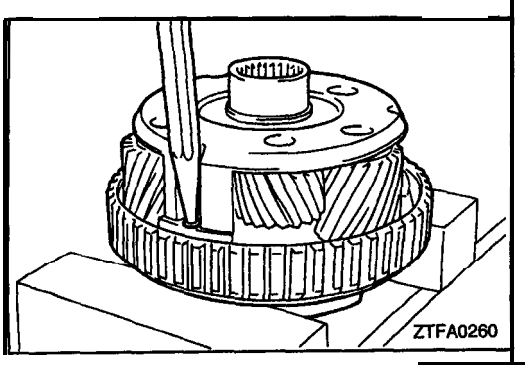

▶D◀ RIVET INSTALLATION

(1) Stake the rivet using a punch and press.

NOTE
(1) Use a punch with a 60° tip angle.
(2) Stake the rivet with a load of 11 ,000–13,000 N (2,425–2,866 lbs.).

ANNULUS GEAR AND TRANSFER DRIVE GEAR SET

23300280050

DISASSEMBLY AND REASSEMBLY

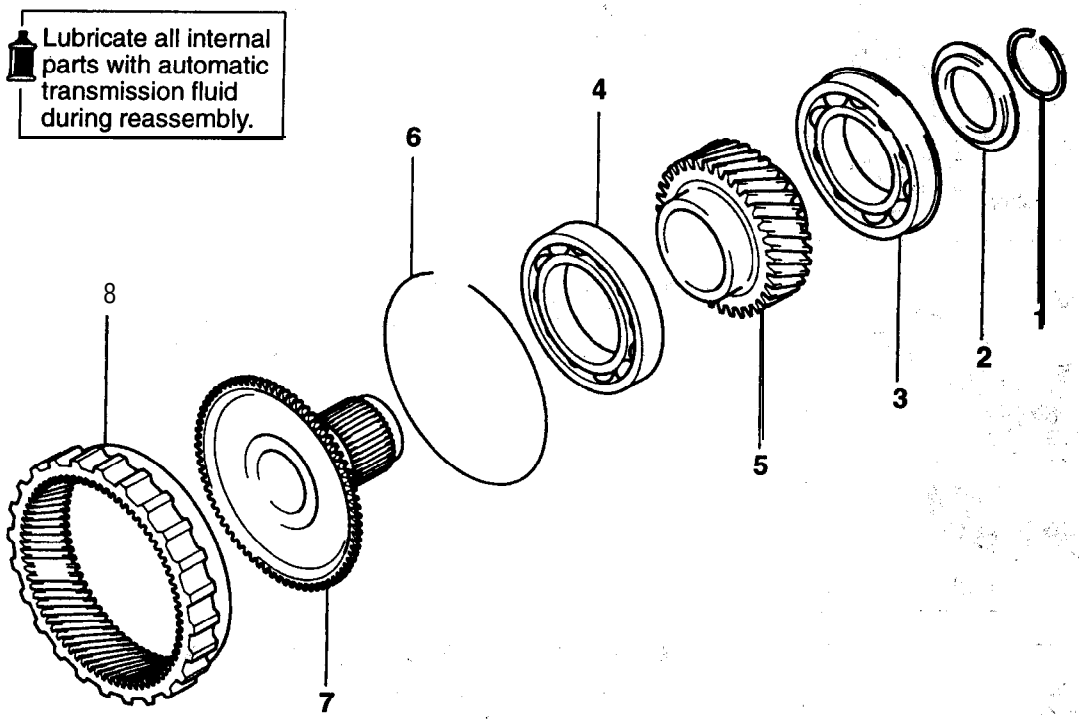

ZTFA0262

Disassembly steps

▶B◀ 1. Snap ring
2. Stopper plate
◀A▶ ▶A◀ 3. Bearing
◀A▶ ▶A◀ 4. Bearing
◀A▶ ▶A◀ 5. Transfer drive gear
6. Snap ring
7. Output flange
8. Annulus gear

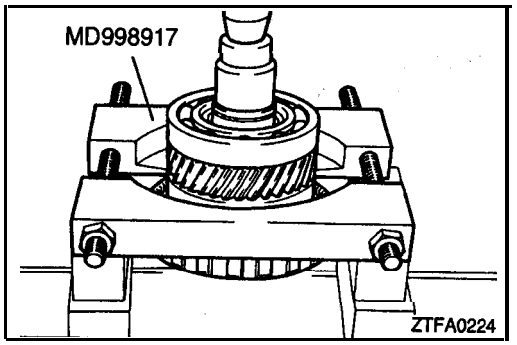

DISASSEMBLY SERVICE POINT

◀A▶ BEARING / TRANSFER DRIVE GEAR REMOVAL

(1) Using the special tool, remove the transfer drive gear together with two bearings from the output flange.

Caution

Install the special tool in position between the output flange and bearings.

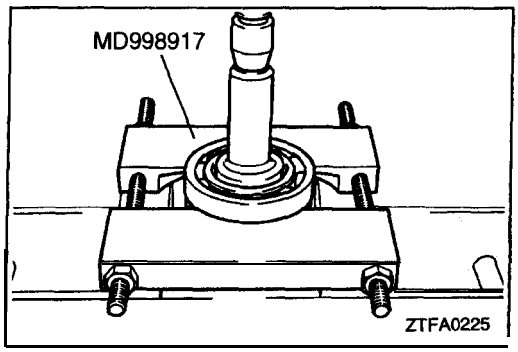

(2) Using the special tool, remove the bearings from both sides of the transfer drive gear.

REASSEMBLY SERVICE POINTS

▶A◀ TRANSFER DRIVE GEAR / BEARING INSTALLATION

(1) Using the special tool, press-fit the bearings into both sides of the transfer drive gear.

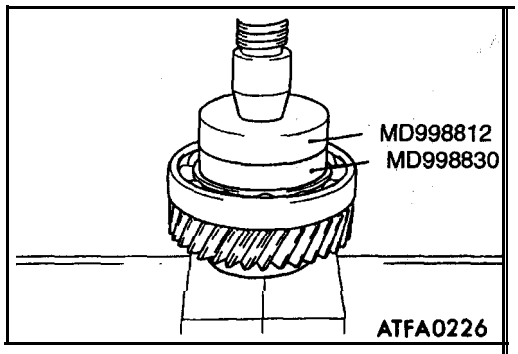

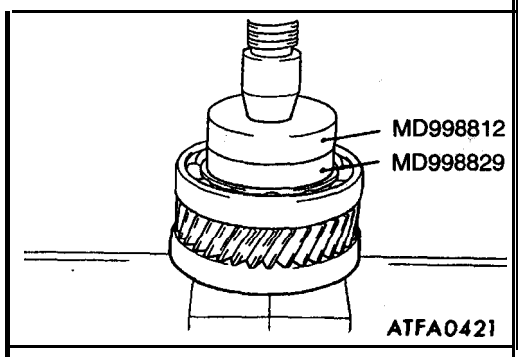

(2) Using the special tool, install the transfer drive gear to the output flange.

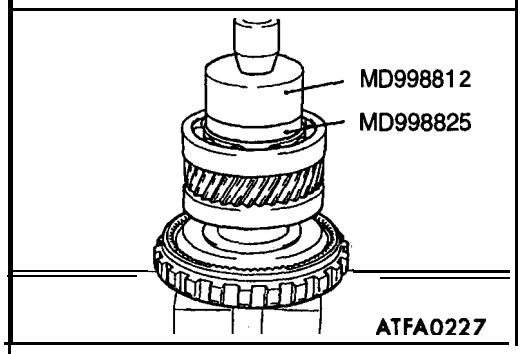

▶B◀ SNAP RING SELECTION

(1) Measure the snap ring groove 'clearance and select the appropriate spacer to obtain the specified end play.

Standard value: 0–0.09 mm (0–.0035 in.)

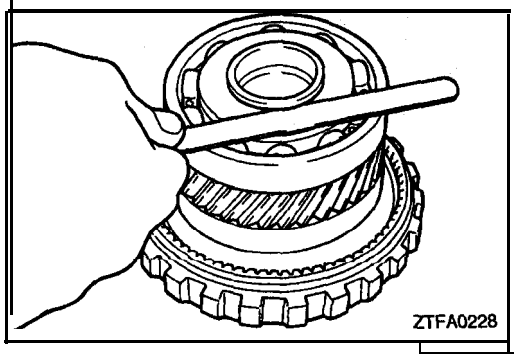

DIFFERENTIAL

23300310063

DISASSEMBLY AND REASSEMBLY

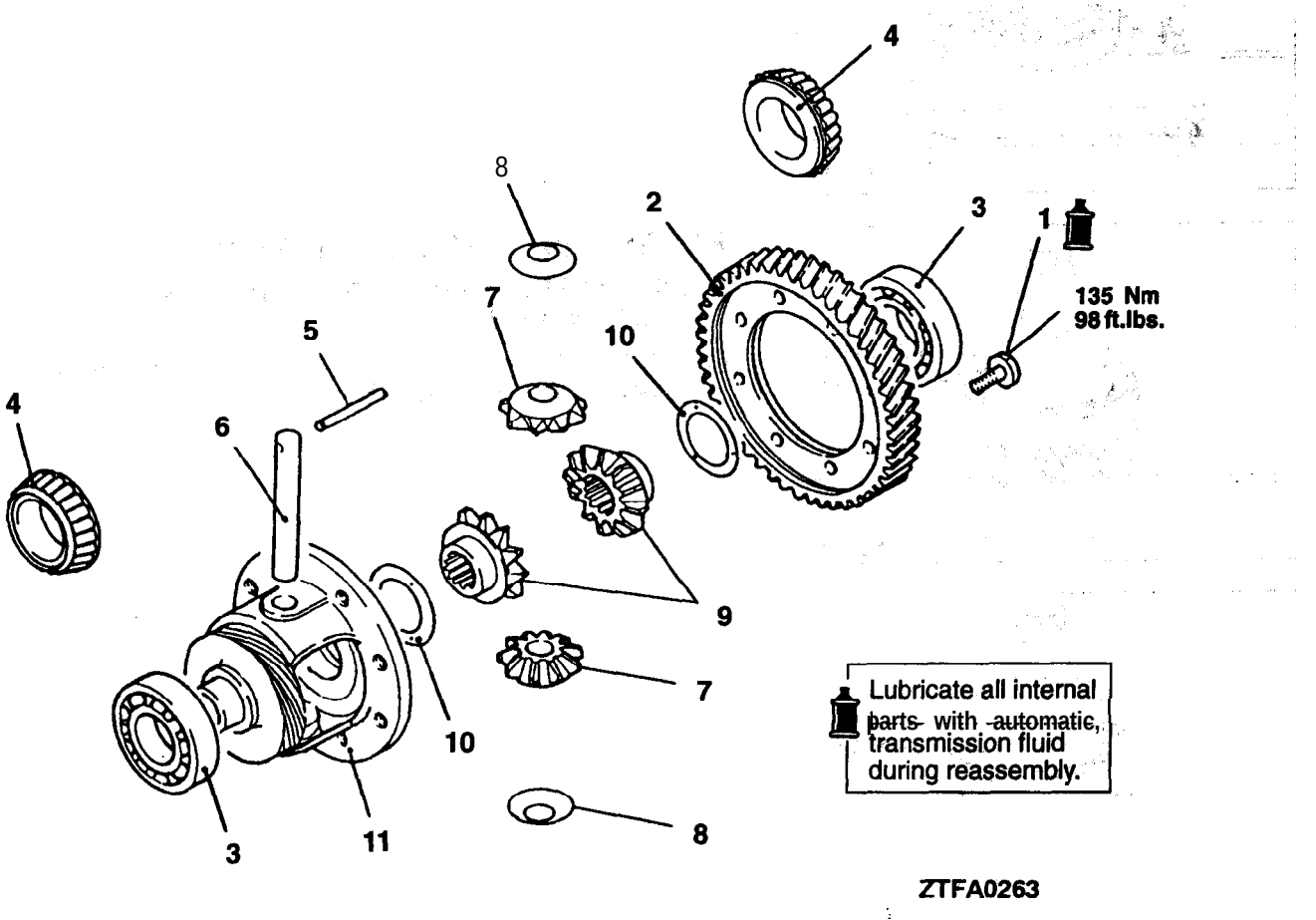

Disassembly steps

- ▶E◀ 1. Bolt
- 2. Differential drive gear
- ◀A▶ ▶D◀ 3. Ball bearing <W4A33>
- ◀B▶ ▶C◀ 4. Taper roller bearing <F4A33>
- ◀C▶ ▶B◀ 5. Lock pin
- ▶A◀ 6. Pinion shaft
- ▶A◀ 7. Pinion
- ▶A◀ 8. Washer
- ▶A◀ 9. Side gear
- ▶A◀ 10. Spacer
- 11. Differential case

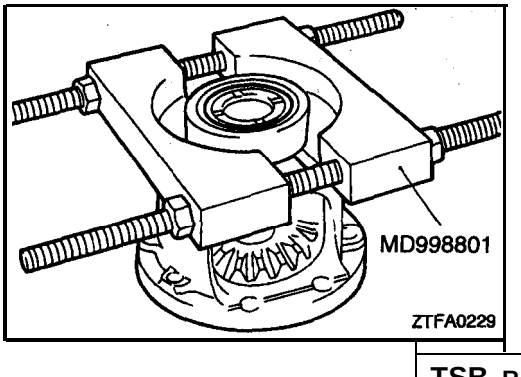

DISASSEMBLY SERVICE POINTS

◀A▶ BEARING REMOVAL

(1) Using the special tool, remove the bearing.

TSB Revision

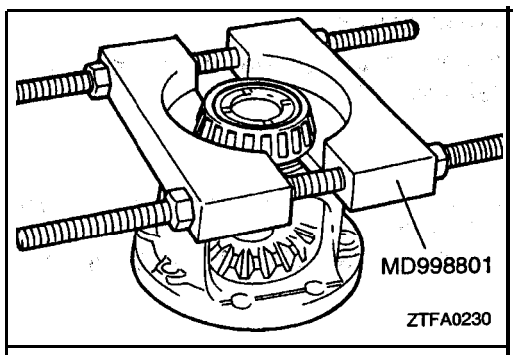

◀B▶ TAPER ROLLER BEARING' REMOVAL

(1) Using the special tool, remove the taper roller bearing.

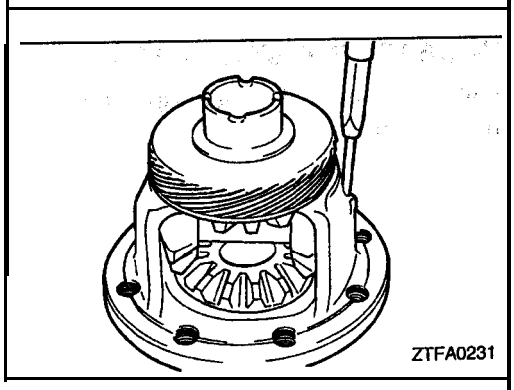

◀C▶ LOCK PIN REMOVAL

(1) Using a pin punch, drive out the lock pin.

NOTE
The lock pin may be removed with a light bunch.

REASSEMBLY SERVICE POINTS

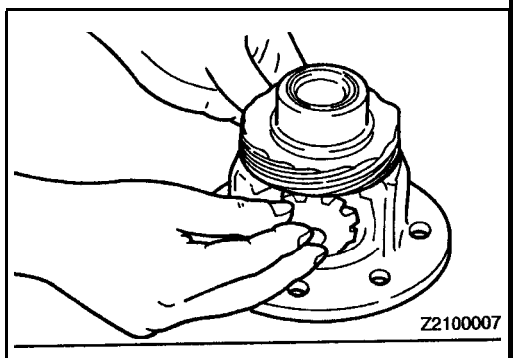

▶A◀ SPACER / SIDE GEAR WASHER / PINION / PINION SHAFT INSTALLATION

(1) Fit the spacer to the back face of the side gear, then install the gear into the differential case.
(2) Fit a washer to back of the pinion and rotate two pinions at the same time into position to mesh with the side gear.'

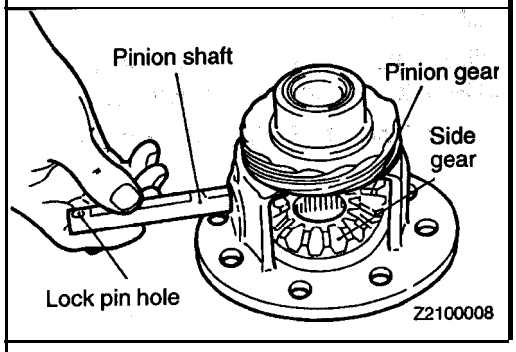

(3) Insert the pinion'shaft.

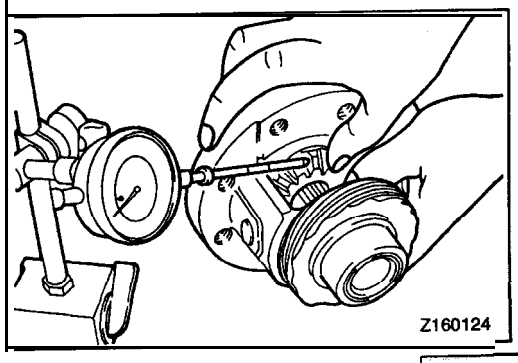

(4) Measure the backlash between the side gear and pinion.

Standard value:
0.025–0.150 mm (.00098–.00591 in.)

(5) If the backlash is out of specification, select the appropriate spacer and disassemble and reassemble the gears as necessary.

NOTE
Adjust so that the backlash in both side gears equals.

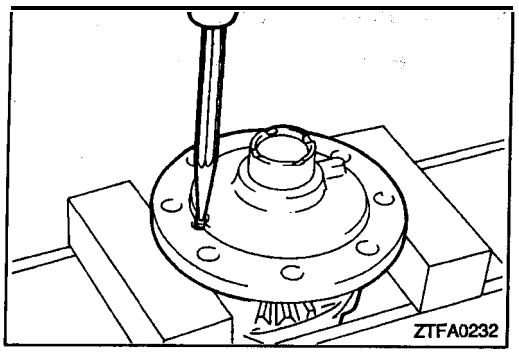

▶B◀ LOCK PIN INSTALLATION

(1) Align the lock pin hole in the pinion, shaft with that in the case and install the lock pin.

Caution
1. Do not reuse lock pins.'
2. Make the lock pin lower than the surface of the differential case flange.
3. Press-fitting load is over 5,000 N (1,100 lbs.).

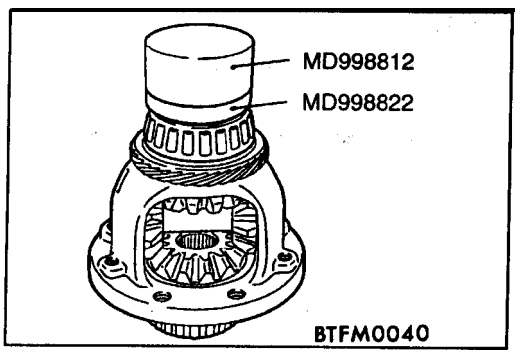

▶C◀ TAPER ROLLER BEARING INSTALLATION

(1) Using the special tool, press-fit the bearings into both sides of the differential case.

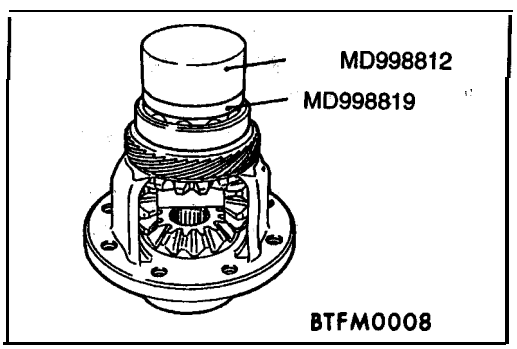

▶D◀ BEARING INSTALLATION

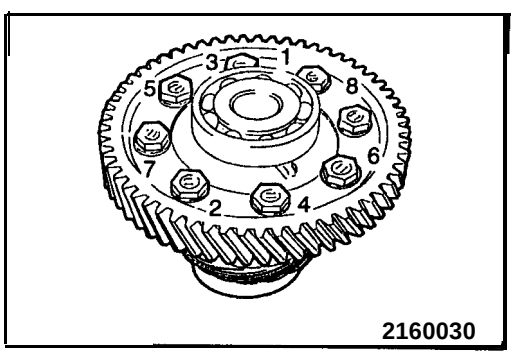

▶E◀ BOLTS INSTALLATION

(1) Apply ATF to the differential drive gear bolts; install and tighten to the specified torque in the shown order.

Differential drive gear bolt: 135 Nm (98 ft.lbs.)

KICKDOWN SERVO

23300340055

DISASSEMBLY AND REASSEMBLY

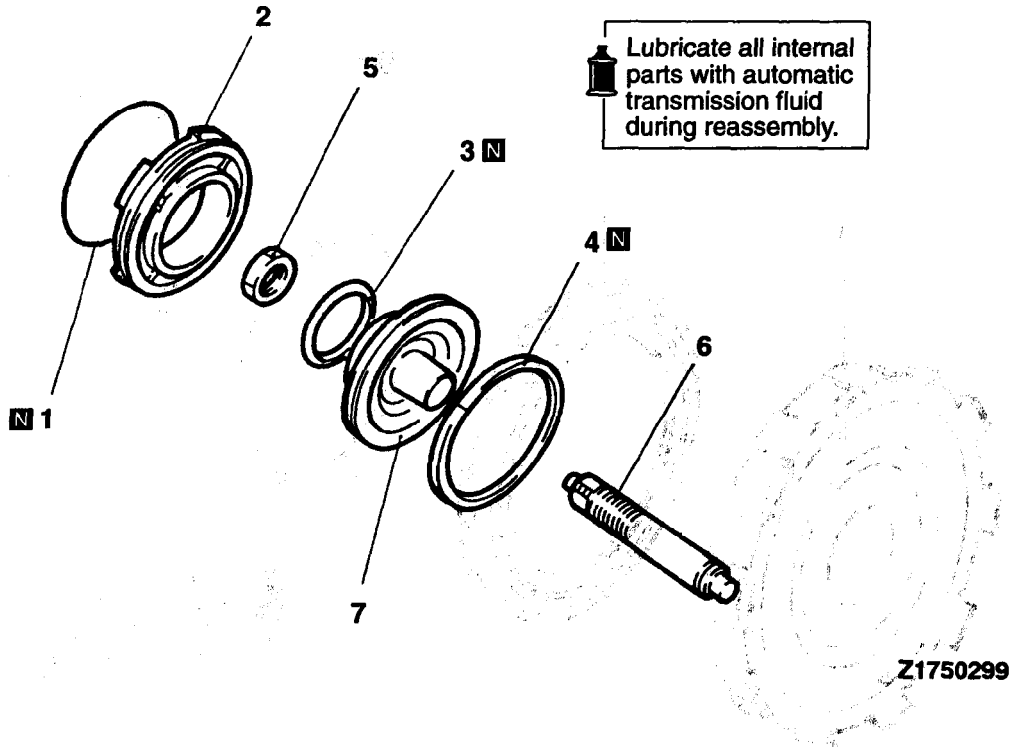

Disassembly steps

1. O-ring
2. Kickdown servo sleeve
3. D-ring
4. Seal ring
5. Lock nut
6. Kickdown servo rod
7. Kickdown servo piston

LOW-REVERSE BRAKE

23300370061

DISASSEMBLY AND REASSEMBLY

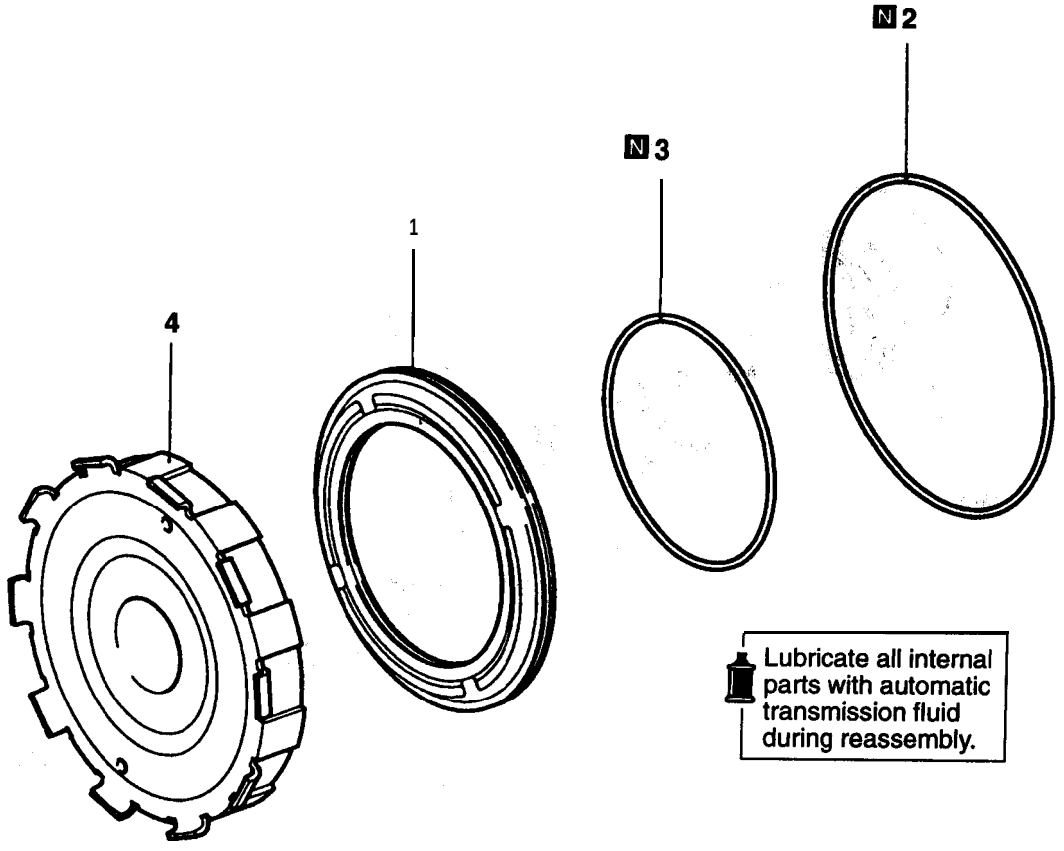

ZTFA0386

Disassembly steps

1. Low-reverse brake piston
2. D-ring
3. D-ring
4. Center support

SPEEDOMETER GEAR

23300400067

DISASSEMBLY AND REASSEMBLY

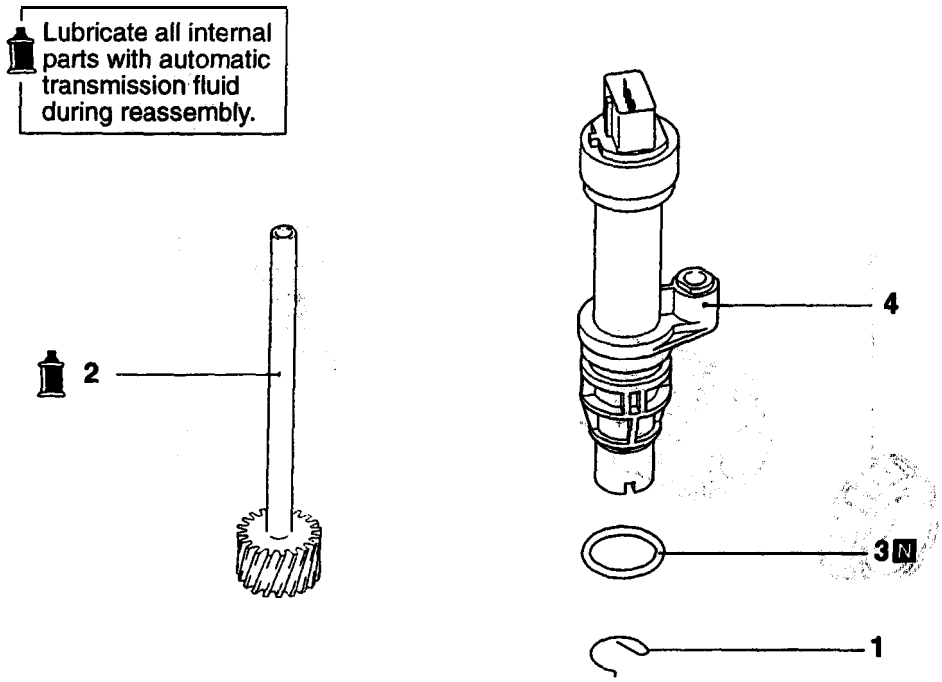

Disassembly steps

1. E-clip
▶A◀ 2. Speedometer driven gear
3. O-ring
4. Sleeve

REASSEMBLY SERVICE POINT

▶A◀ SPEEDOMETER DRIVEN GEAR INSTALLATION

Apply gear oil sparingly to the speedometer driven gear shaft and insert the shaft.

TRANSFER SHAFT <F4A33>

23300490057

DISASSEMBLY AND REASSEMBLY

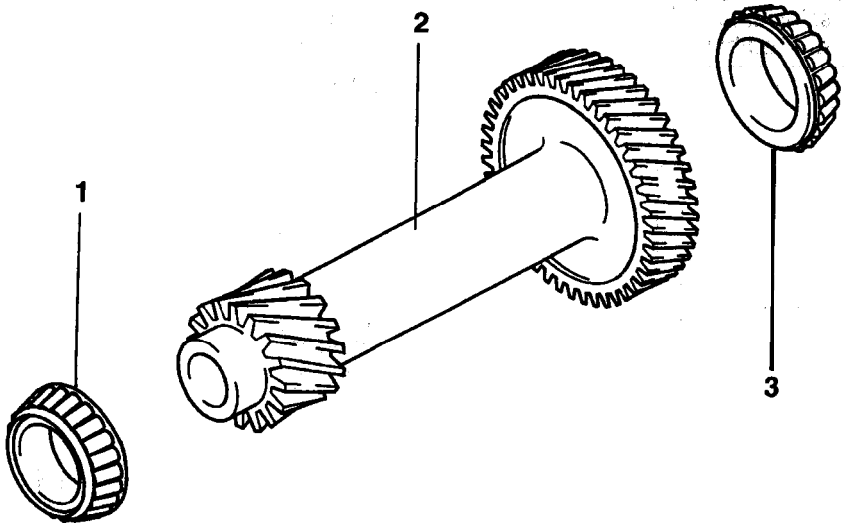

ZTFA0322

Disassembly steps

◀A▶ ▶B◀ 1. Taper roller bearing
2. Transfer shaft
◀A▶ ▶A◀ 3. Taper roller bearing

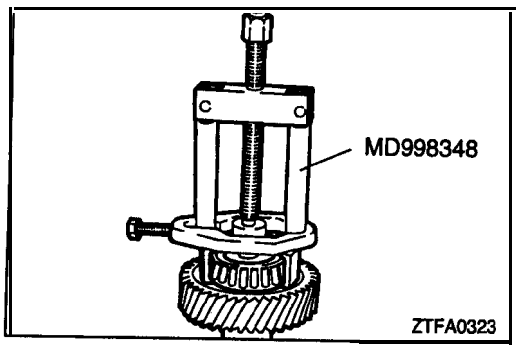

DISASSEMBLY SERVICE POINT

◀A▶ TAPER ROLLER BEARING REMOVAL

TSB Revision

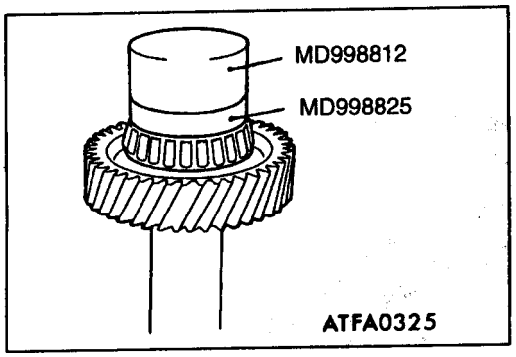

REASSEMBLY SERVICE POINTS

▶A◀ TAPER ROLLER BEARING INSTALLATION

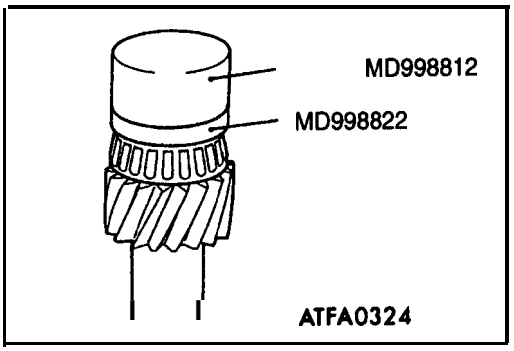

▶B◀ TAPER ROLLER BEARING INSTALLATION

VALVE BODY

29999999999

DISASSEMBLY AND REASSEMBLY

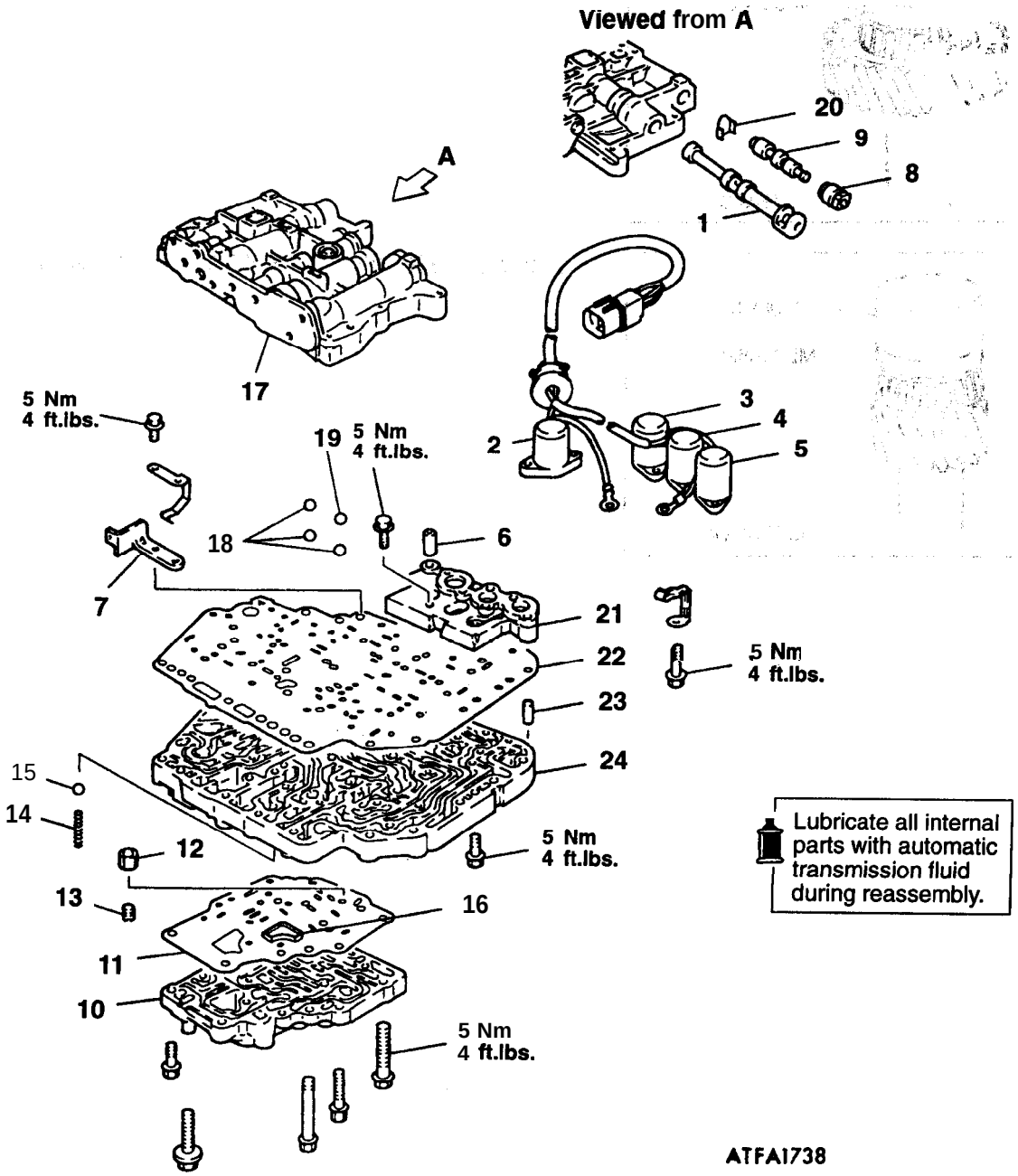

Disassembly steps

1. Manual valve
▶E◀ 2. Pressure control solenoid valve
▶E◀ 3. Torque converter clutch solenoid
▶E◀ 4. Shift control solenoid valve "A"
▶E◀ 5. Shift control solenoid valve "B
6. Pipe
7. Valve stopper
8. N-D control sleeve
9. N-D control valve
▶D◀ 10. Lower valve body sub assembly
11. Lower separating plate
12. Nut
13. Jet
▶C◀ 14. Relief spring
▶C◀ 15. Steel ball
▶C◀ 16. Oil filter
▶B◀ 17. Upper valve body sub assembly
▶A◀ 18. Steel ball
▶A◀ 19. Teflon ball
▶A◀ 20. N-D plate
21. Block
22. Upper separating plate
23. Dowel bushing
24. Intermediate plate

TSB Revision

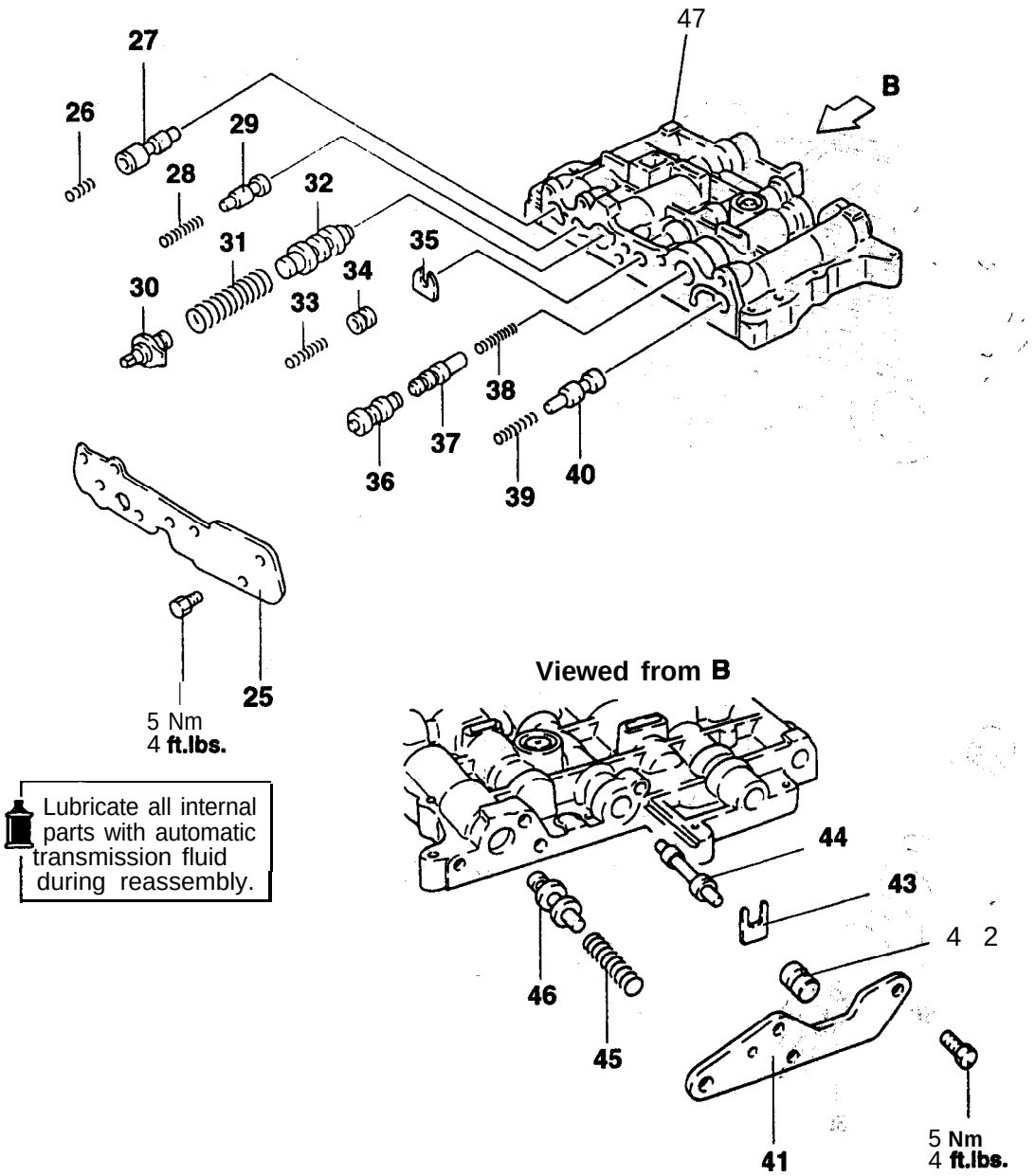

Lubricate all internal parts with automatic transmission fluid during reassembly.

25. Front end cover
26. Pressure control spring
27. Pressure control valve
28. Torque converter control spring
29. Torque converter control valve
30. Adjusting screw
31. Regulator spring
32. Regulator valve
33. Shift control spring
▶A◀ 34. Stopper plate
35. Shift control plug
36. Rear clutch exhaust valve A
37. Rear clutch exhaust valve B
38. Rear clutch exhaust spring
39. 2-3/4-3 shift spring
40. 2-3/4-3 shift valve
41. Rear end cover
42. Shift control plug B
▶A◀ 43. Stopper plate
44. Shift control valve
45. 1-2 shift spring
46. 1-2 shift valve
47. Upper valve body

TSB Revision

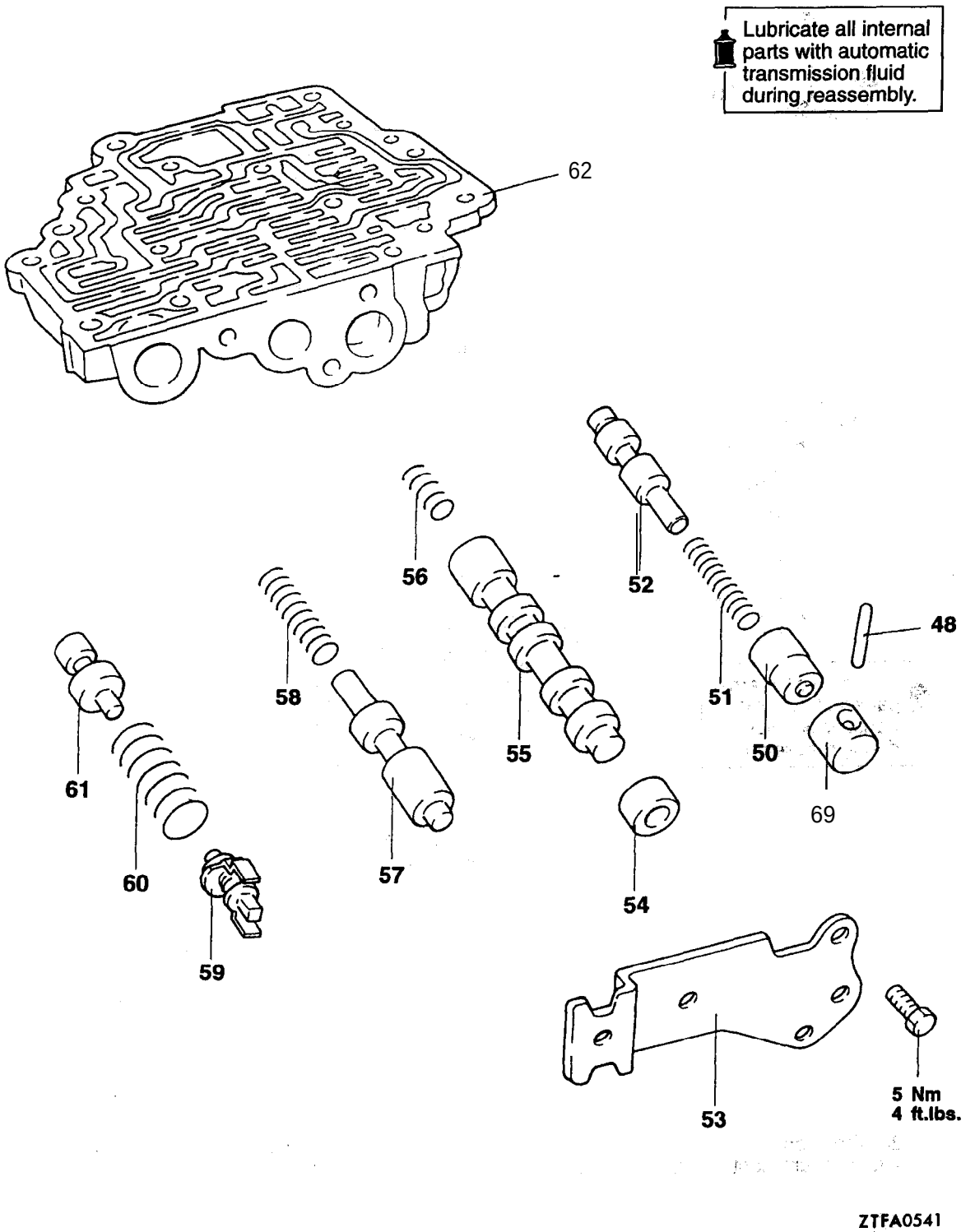

Disassembly steps

48. Pin
49. Stopper
50. End clutch plug
51. End clutch spring
52. End clutch valve
53. End cover
54. Torque converter clutch control sleeve
55. Torque converter clutch control valve
56. Torque converter clutch control spring
57. N-R control valve
58. N-R control spring
59. Adjusting' screw
60. Reducing spring
61. Reducing valve
62. Lower valve body

TSB Revision

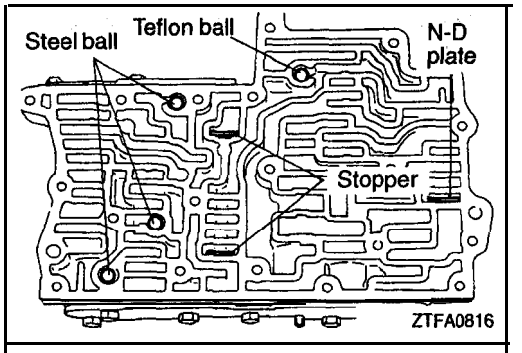

REASSEMBLY SERVICE POINTS

▶A◀ STOPPER PLATE / N-D PLATE / TEFLON BALL / STEEL BALL' LOCATION

(1) Install the stopper plates;' N-D plate, teflon ball, and steel balls into the upper valve body as shown;

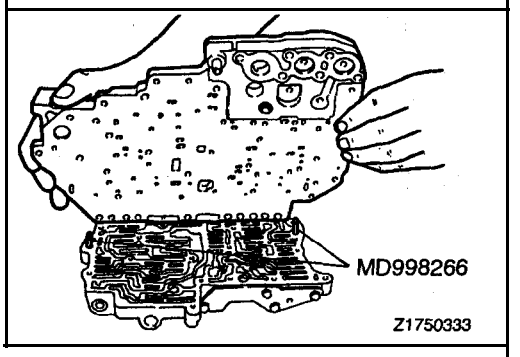

▶B◀ UPPER VALVE BODY SUB ASSEMBLY INSTALLATION

(1) Install the special tool and secure the upper separating plate and intermediate plate with eight mounting bolts. Then, remove the special. tool.

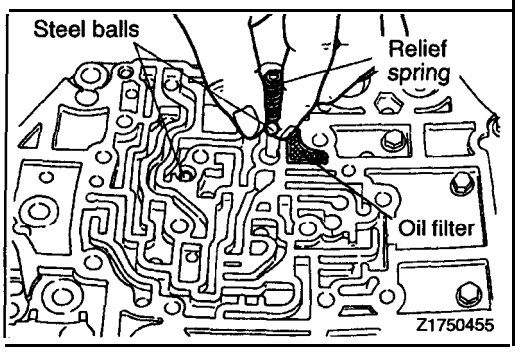

▶C◀ OIL FILTER / STEEL BALL / RELIEF SPRING INSTALLATION

(1) Install the oil filter, two steel balls, and spring to the intermediate plate.

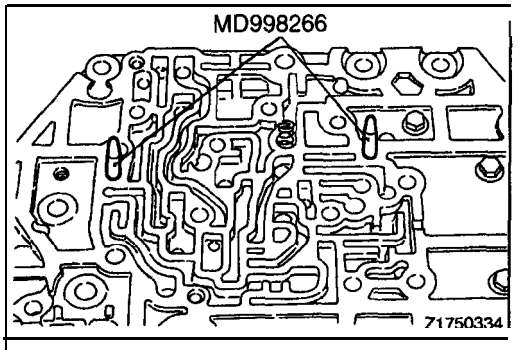

▶D◀ LOWER VALVE BODY SUB ASSEMBLY INSTALLATION

(1) Mount the special tool to the intermediate plate.

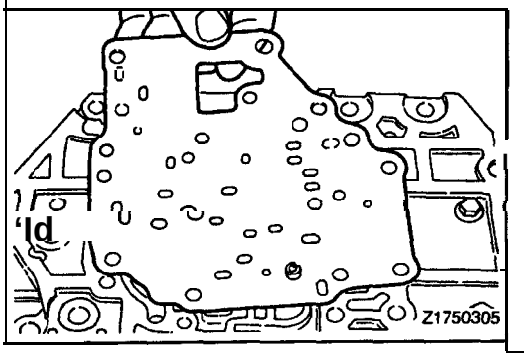

(2) Install the separating plate.

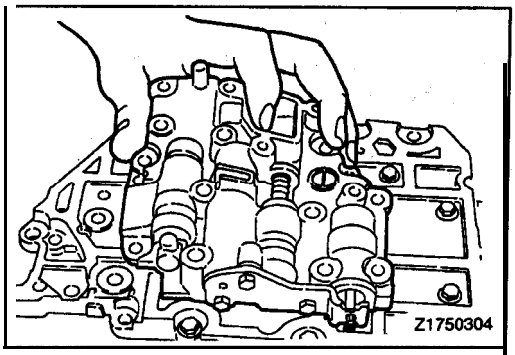

(3) Secure the lower valve body with mounting bolts and then remove the special tool.

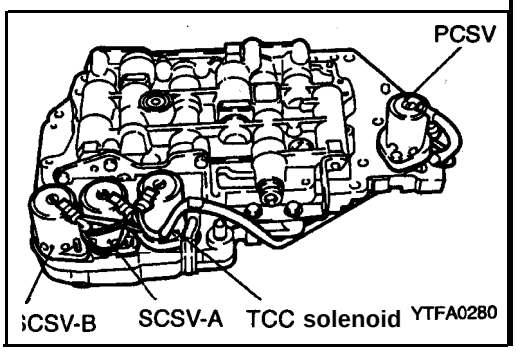

▶E◀ SOLENOID VALVE ASSEMBLY INSTALLATION

(1) Install the solenoid valves as shown.

Solenoid valve	Wire color
Shift control solenoid valve A (SCSV-A)	Orange
Shift control solenoid valve B (SCSV-B)	Yellow,
Torque converter clutch solenoid (TCC solenoid)	Red or Red/Black
Pressure control solenoid valve (PCSV)	Blue

CENTER DIFFERENTIAL <W4A33>

23300580013

DISASSEMBLY AND REASSEMBLY

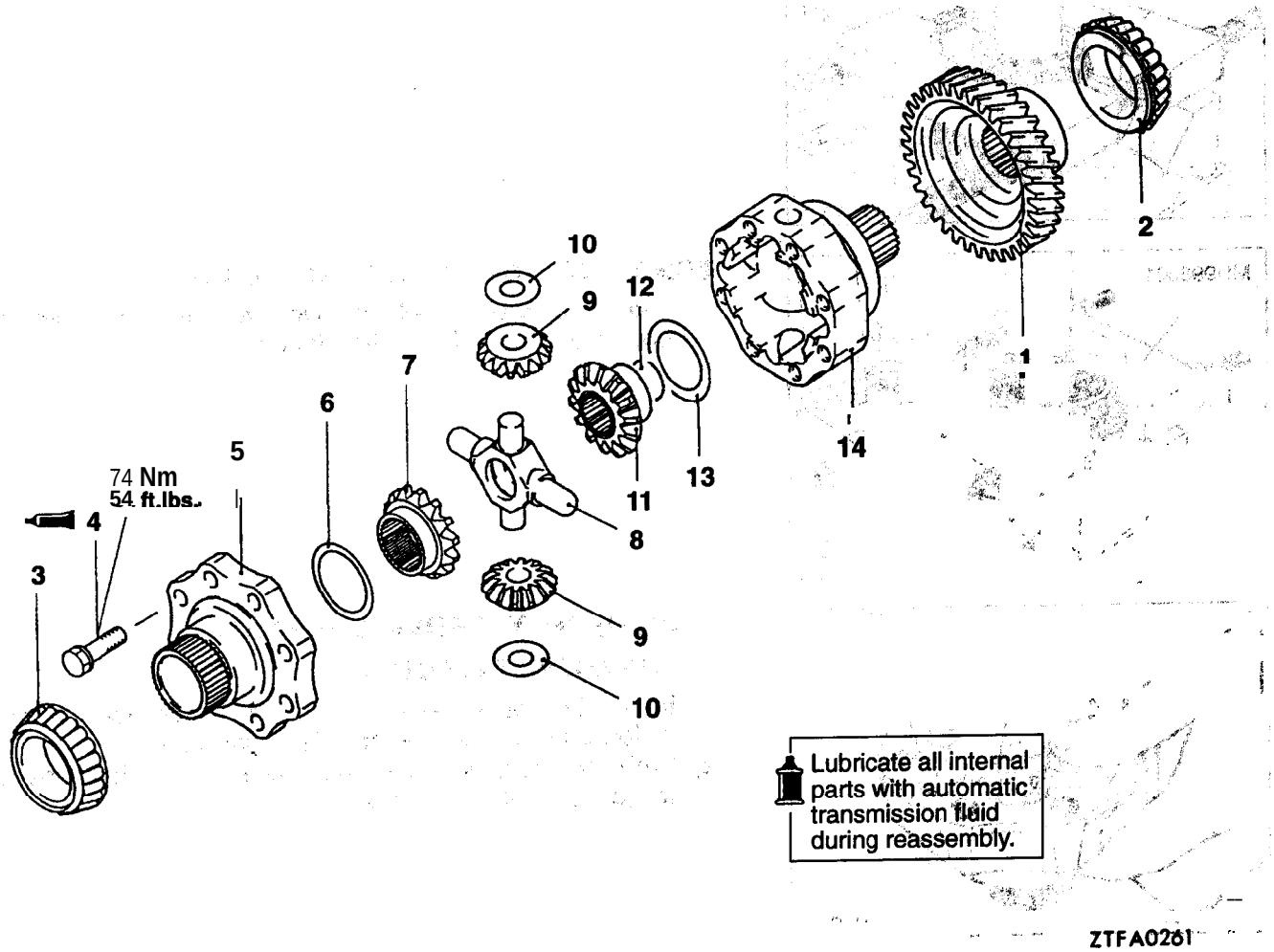

Disassembly steps

◀A▶ 1. Transfer driven gear
◀B▶ ▶D◀ 2. Taper roller bearing
◀C▶ ▶C◀ 3. Taper roller bearing
▶B◀ 4. Bolt
5. Center differential flange
▶A◀ 6. Spacer
7. Side gear (front)
8. Pinion shaft
9. Pinion
10. Washer
11. Side gear (rear)
12. Clip
▶A◀ 13. Spacer
14. Center differential case

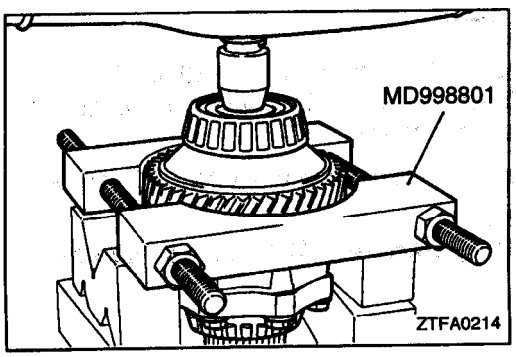

DISASSEMBLY SERVICE POINTS

◀A▶ TRANSFER DRIVEN GEAR REMOVAL

(1) Remove the transfer driven gear.

NOTE
If It is hard to remove, use "the special tool to remove it.

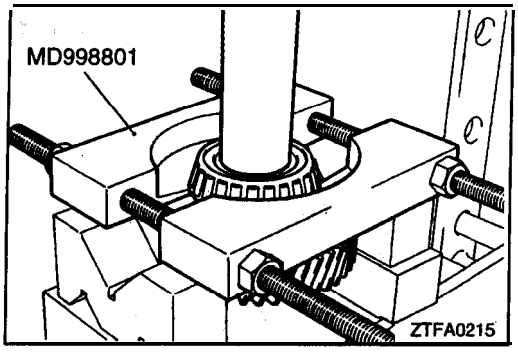

◀B▶ TAPER ROLLER BEARING REMOVAL

Using the special tool, remove the taper roller bearing from the transfer driven gear.

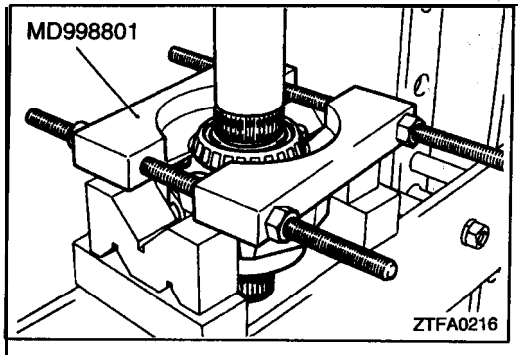

◀C▶ TAPER ROLLER BEARING REMOVAL

Using 'the special tool, remove the taper roller bearing from the center differential flange.

REASSEMBLY SERVICE POINTS

▶A◀ SPACERS SELECTION

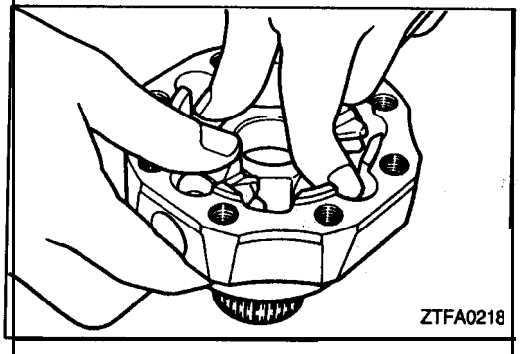

(1) install the spacer, side gear (rear), pinion, washer and pinion shaft in the center differential case.
(2) While pressing the pinion shaft, select the thickest spacer to gently rotate the pinion.

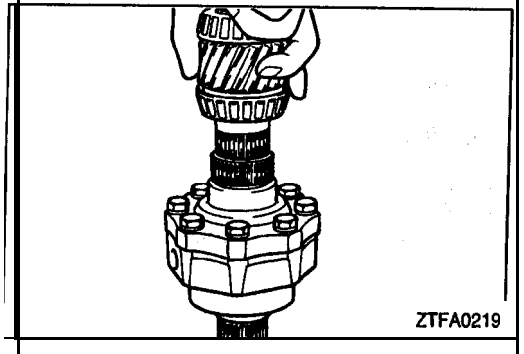

(3) Install the side gear (front), spacer and center differential flange and tighten the bolts to the specified torque.

Center differential drive gear bolt: 75 Nm (54 ft.lbs.)

(4) Using the front output shaft, rotate the side gear front and select the thickest spacer, to gently! rotate the side gear front.

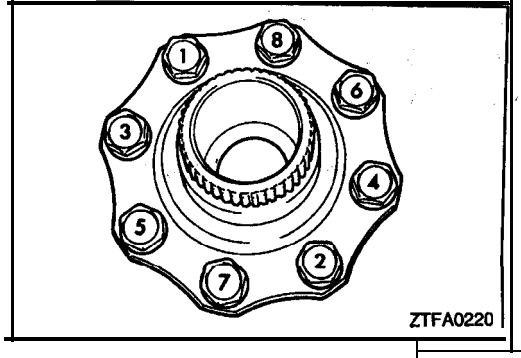

▶B◀ BOLT INSTALLATION

(1) First apply sealant to the end [5 mm (.20 in.)] of the bolt threads and then tighten to the specified torque in the order shown in the figure..,

Center differential drive gear bolt: 75 Nm (54 ft.lbs.)

Specified adhesive:
3M Stud Locking Part No. 4170 or equivalent

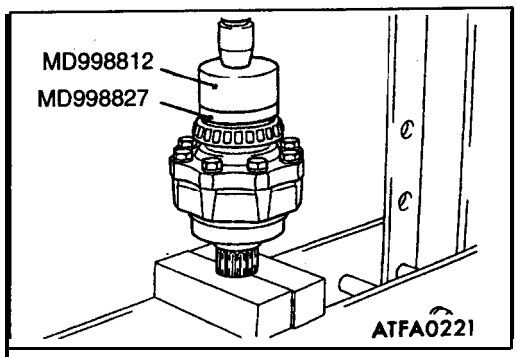

▶C◀ TAPER ROLLER BEARING INSTALLATION

(1) Using the special tool, install the taper roller bearing on the center differential flarige.

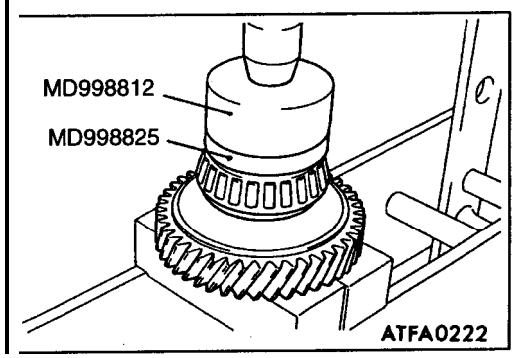

▶D◀ TAPER ROLLER BEARING INSTALLATION

(1) Using the special tool, install the taper roller bearing on the transfer driven gear.

FRONT OUTPUT SHAFT <W4A33>

23300610019

DISASSEMBLY AND REASSEMBLY

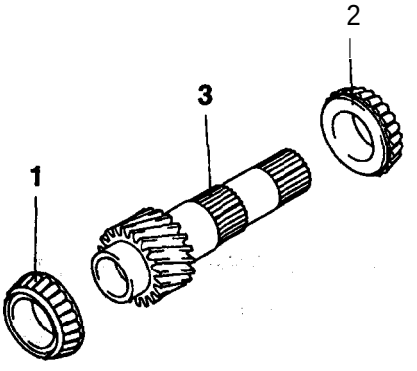

ZTFA0244

Disassembly steps

◀A▶ ▶A◀ 1. Taper roller bearing
◀A▶ ▶A◀ 2. Taper roller bearing
3. Front output shaft

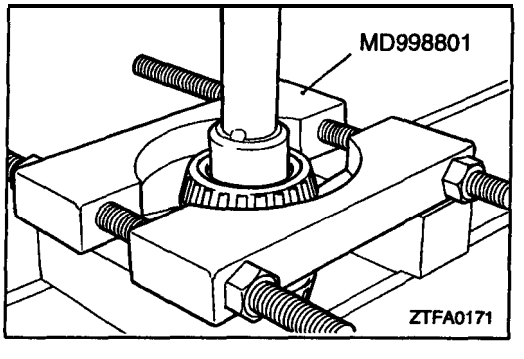

DISASSEMBLY SERVICE POINT

◀A▶ TAPER ROLLER BEARINGS REMOVAL

(1) Using the special tool, remove the taper roller bearings on both ends of the front output shaft.

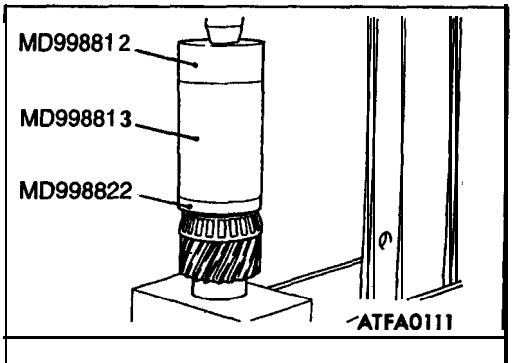

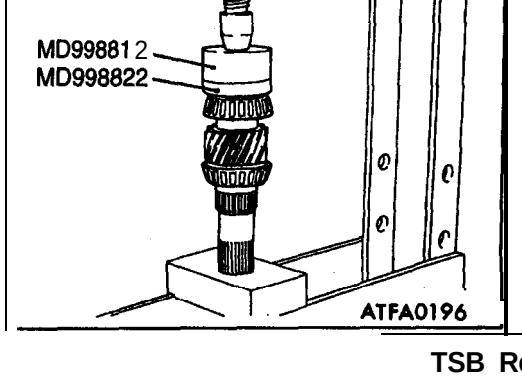

REASSEMBLY SERVICE POINT

▶A◀ TAPER ROLLER BEARINGS INSTALLATION

(1) Using the special tool, press-fit the taper roller bearings on both ends of the front output shaft.

TRANSFER <W4A33>

23300670017

DISASSEMBLY AND REASSEMBLY

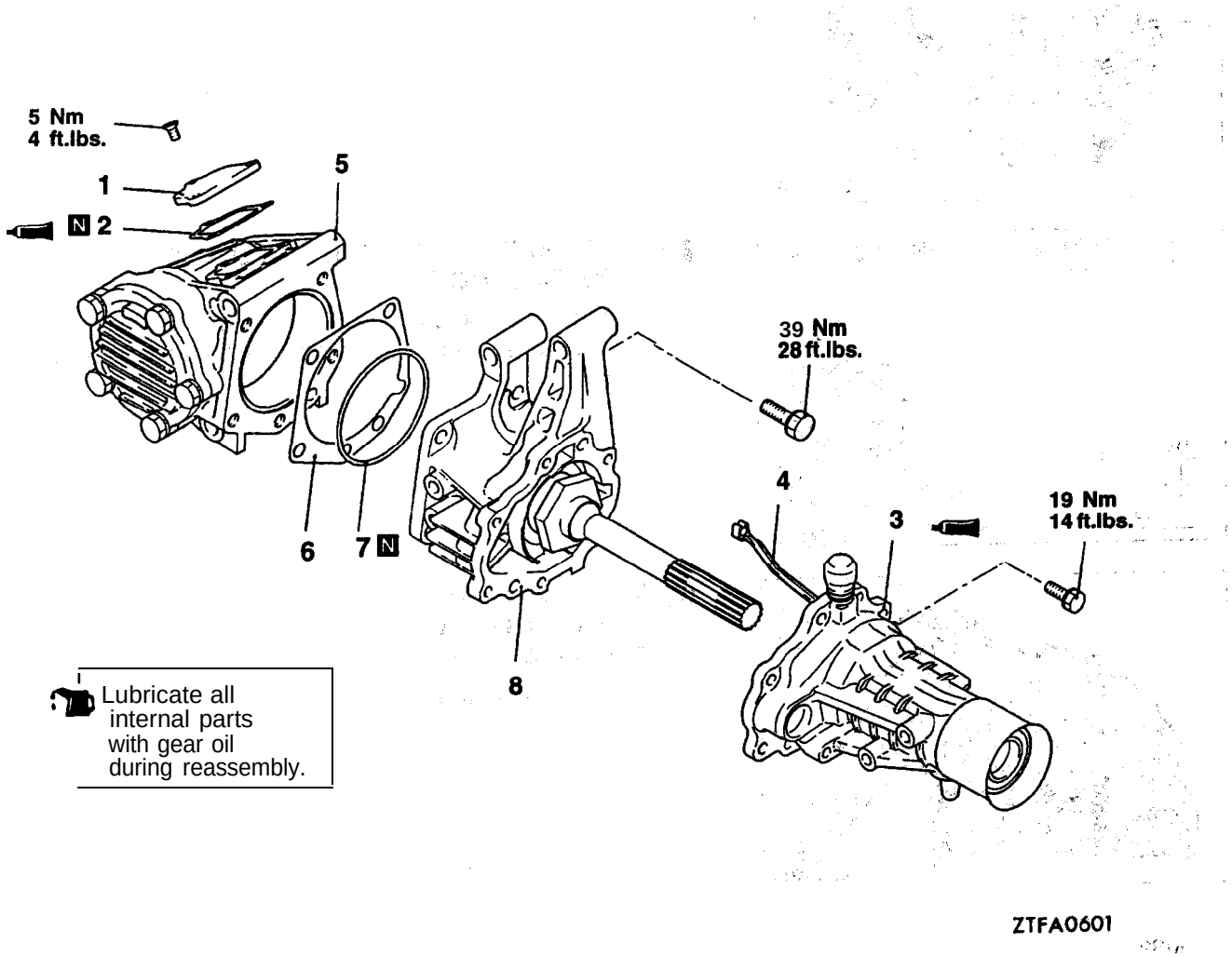

Disassembly steps

1. Cover
▶E◀ 2. Cover gasket
▶D◀ 3. Extension housing assembly
4. Oil guide
▶C◀ 5. Transfer case sub assembly
▶B◀ 6. Spacer
7. O-ring
▶A◀ 8. Transfer case adapter sub assembly

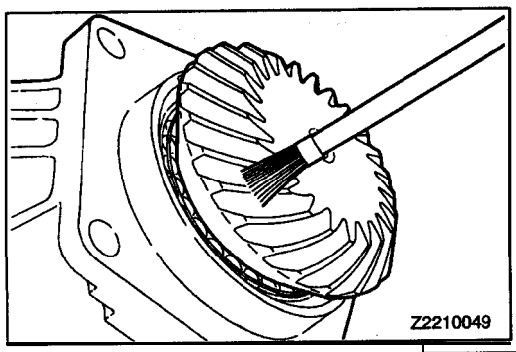

REASSEMBLY SERVICE POINTS

▶A◀ TRANSFER CASE ADAPTER SUB ASSEMBLY INSTALLATION

(1) Apply a light and uniform coat of machine blue or red lead to the driven bevel gear teeth (both sides) using a brush.

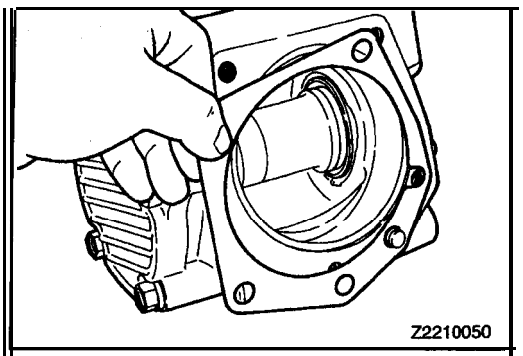

▶B◀ SPACER INSTALLATION,

(I) Install the spacer that has been used.

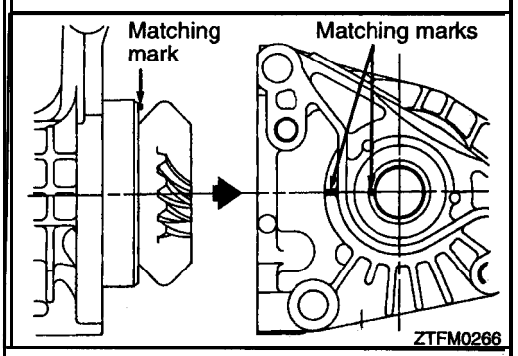

▶C◀ TRANSFER CASE SUB' ASSEMBLY INSTALLATION

(1) With the matching marks in alignment, install the transfer case adapter sub assembly to the transfer case sub assembly.

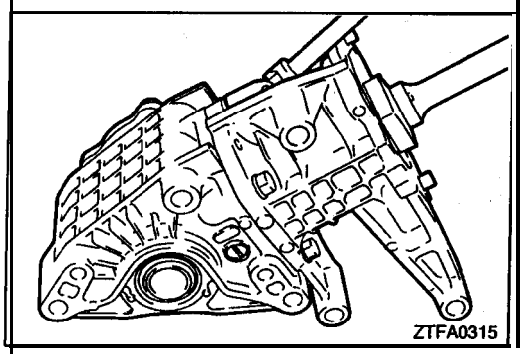

(2) Install the transfer case adapter sub assembly to the transfer case sub assembly and tighten the mounting bolts to specified torque.

Transfer case adapter mounting bolt: 39 Nm (28 ft.lbs.)

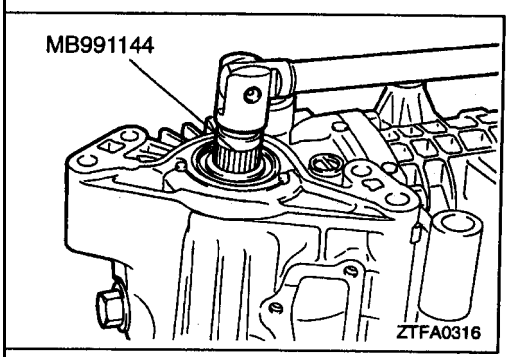

(3) Using the special tool, turn the drive bevel gear shaft (one turn in normal direction, one turn in reverse direction).

NOTE
Do not give the drive bevel gear shaft more than one turn in either direction as this causes unclear tooth contact pattern.

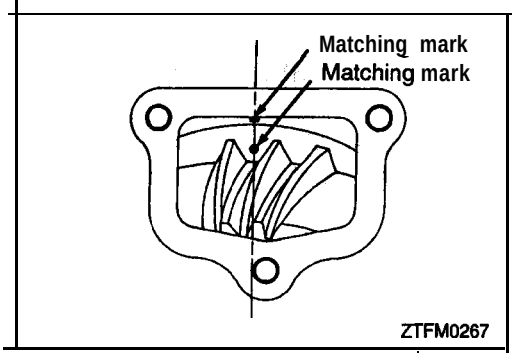

(4) Align the driven bevel gear and transfer case matching marks.

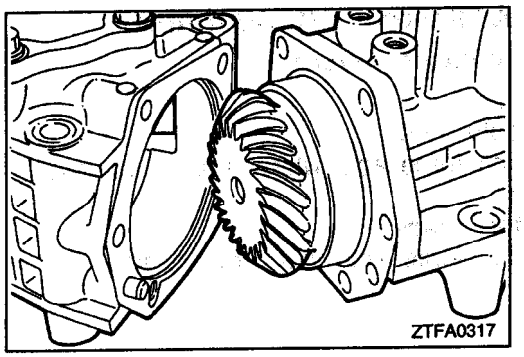

(5) Check that the drive 'bevel gear tooth contact is normal.

NOTE
Refer to the TOOTH CONTACT ADJUSTMENT PROCEDURES on page 23C-xxx for the standard tooth contact.

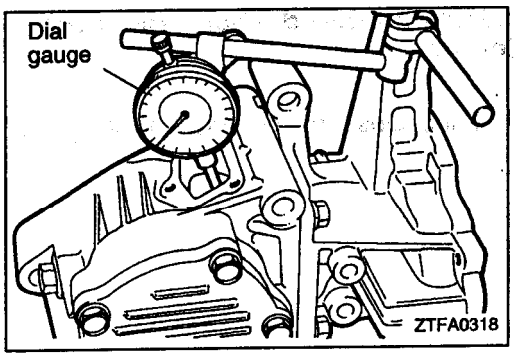

(6) Check that the drive bevel gear and driven bevel backlash is as specified.

Standard value: Bevel gear set backlash 0.08–0.13 m m (.0031–.0051 in.)

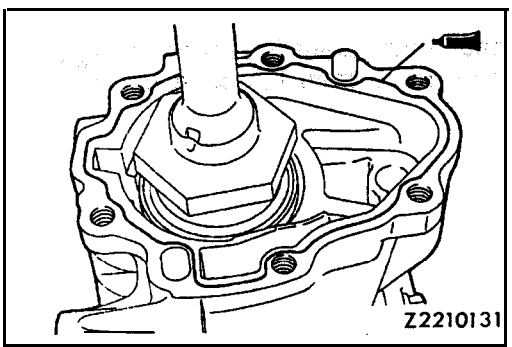

▶D◀ EXTENSION HOUSING INSTALLATION

(1) Apply sealant to the adapter flange surface and install the extension housing.

Specified sealant:
Mitsubishi genuine sealant Part No. MD997740 or equivalent

NOTE
Squeeze out sealant from the tube uniformly and continuously in adequante amount.

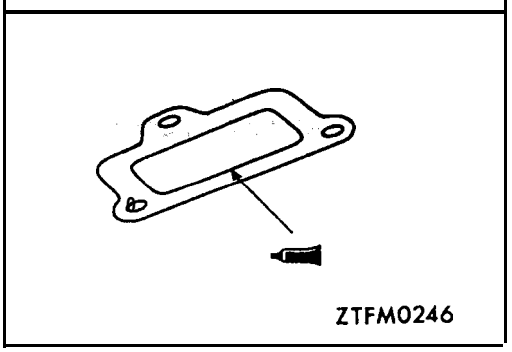

▶E◀ SEALANT TO COVER GASKET APPLICATION

'Specified sealant:
3M ATD Part No. 8660 or, equivalent

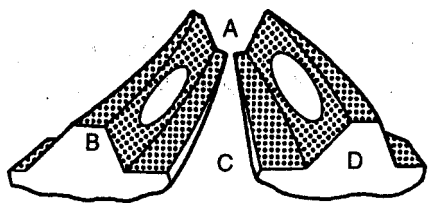

TFM0150

TOOTH CONTACT ADJUSTING PROCEDURES

1. Standard tooth contact 'pattern

A Small end side
B Drive side tooth face
(Side on which force acts when running forward)'
C Big end side
D Coast side tooth face
(Side on which force acts when reversing)

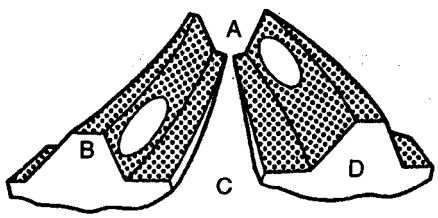

TFM0151

2. Tooth contact pattern- produced when drive bevel gear height is too large

Cause
The driven bevel is too close to the drive bevel gear.

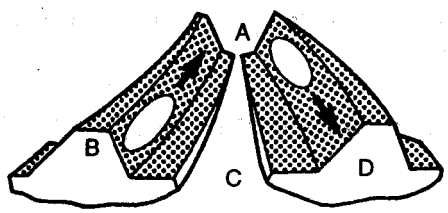

TFM0152

Remedy
Use thicker bevel gear mount adjusting spacer to separate, the driven bevel gear more from the drive. bevel gear.

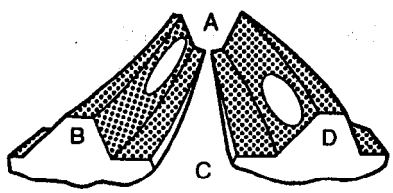

TFM0153

3. Tooth contact pattern produced when driven bevel gear height is too small

Cause
The driven bevel gear is too separated from the drive, bevel gear.

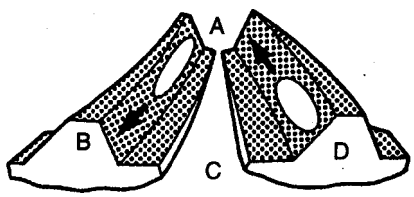

TFM0154

Remedy
Use thinner driven bevel gear mount adjusting spacer to bring the driven bevel gear more closer to the drive bevel gear.

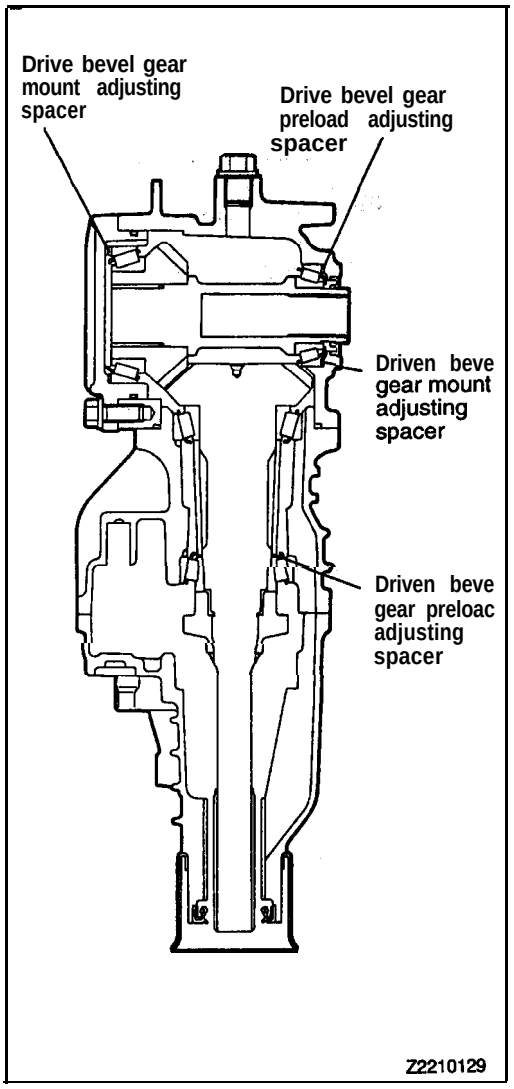

NOTE

(1) If correct tooth contact cannot be obtained even by change of the driven bevel gear mount adjusting spacer, increase or decrease the drive bevel gear preload adjusting spacer and-the drive bevel gear mount adjusting spacer as described below and then adjust tooth contact again.

- When the driven bevel, gear height is too small even if the thinnest driven bevel gear mount adjusting spacer 0.13 mm (.0051 in.) is used:

  Replace the drive bevel gear mount adjusting spacer that is in use with one that is one rank thicker and replace the drive bevel preload adjusting spacer that is in use with one that is one rank thinner.

- When the driven bevel gear height is too large even if the thickest driven bevel gear mount adjusting spacer 0.52 (.0205 in.) is used:

  Replace the drive bevel gear mount adjusting spacer that is in use with one that is one rank thinner and replace the drive bevel gear preload adjusting spacer that is in use with one that is one rank thicker.

  Repeat above steps until the tooth contact pattern equal or close to the standard pattern is obtained.

(2) If the tooth contact pattern cannot be adjusted close to the standard pattern by above adjustment, replace the drive bevel gear and driven bevel gear as a set and readjust the tooth' contact.

TRANSFER CASE ADAPTER <W4A33>

23300700013

DISASSEMBLY AND REASSEMBLY

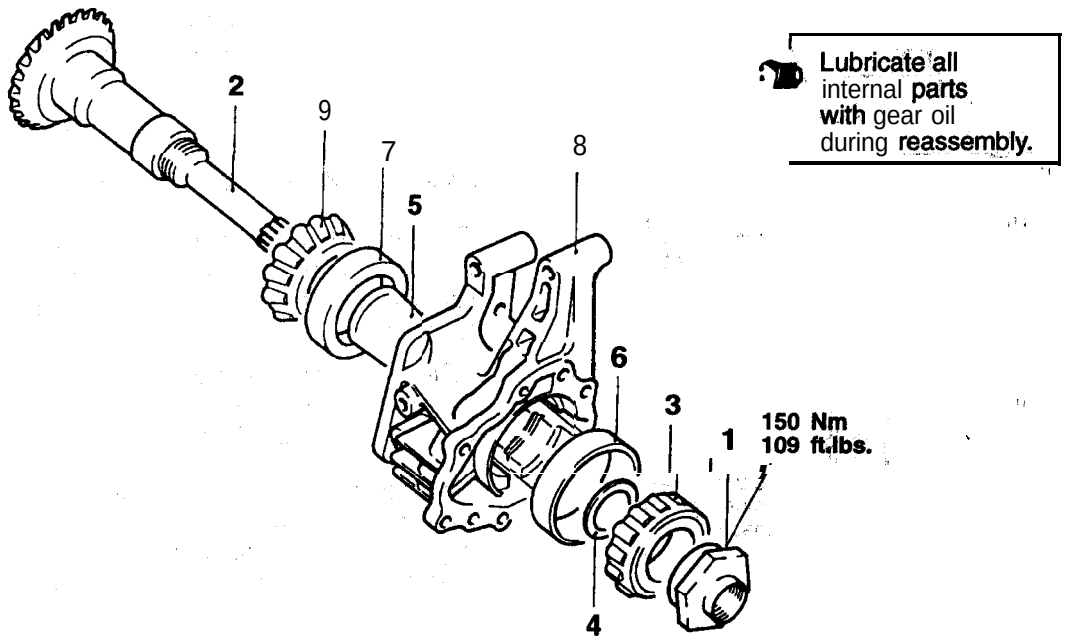

ZTFA0604

Disassembly steps

◀A▶ ▶E◀ 1. Lock nut
◀B▶ ▶D◀ 2. Driven bevel gear
▶C◀ 3. Taper roller bearing
▶B◀ 4. Spacer
5. Collar
◀C▶ 6. Outer race
◀C▶ 7. Outer race
8. Transfer case adapter
◀D▶ ▶A◀ 9. Taper roller bearing

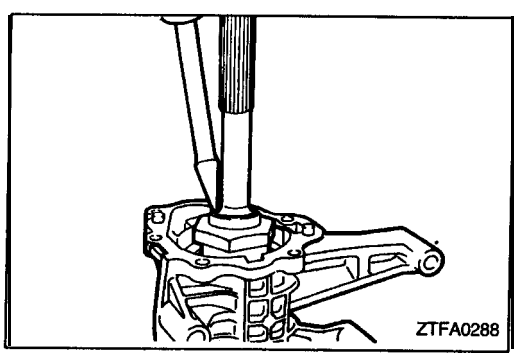

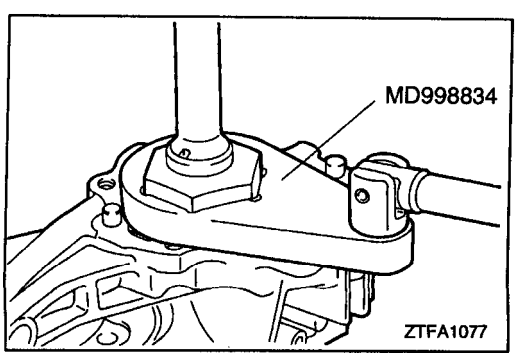

DISASSEMBLY SERVICE POINTS

◀A▶ LOCK NUT REMOVAL

(1) Unlock the lock nut. (Straighten the bent nut.)
(2) Holding the driven bevel gear in a workbench and using the special tool, remove the lock nut.

TSB Revision

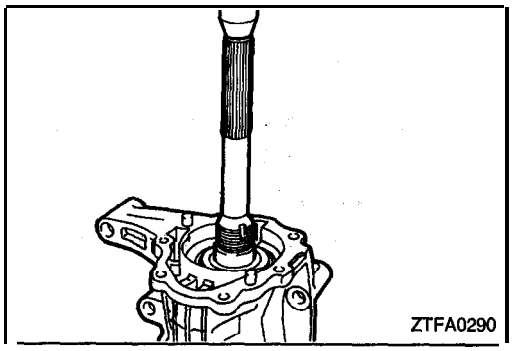

◀B▶ DRIVEN BEVEL GEAR ASSEMBLY REMOVAL

(1) Using a press, remove the driven bevel gear assembly.

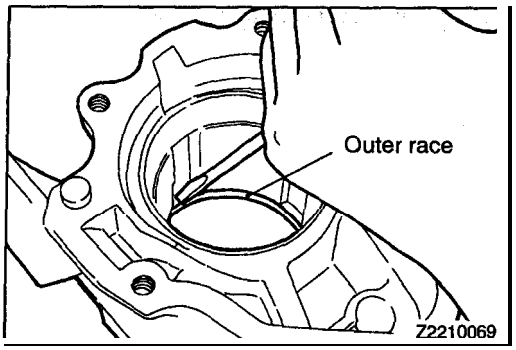

◀C▶ OUTER RACE REMOVAL

(1) Remove the outer race, striking lightly with a screwdriver, etc.

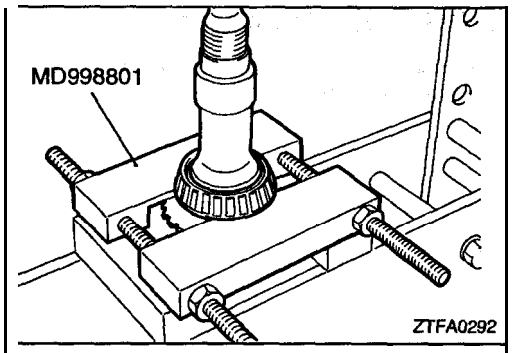

◀D▶ TAPER ROLLER BEARING REMOVAL

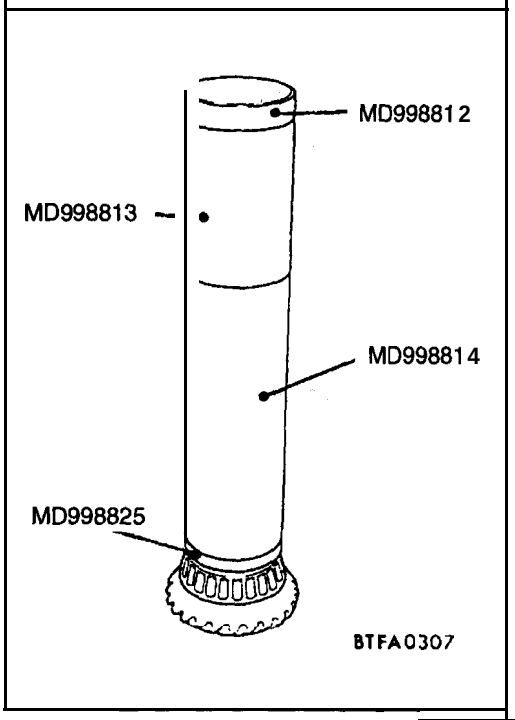

REASSEMBLY SERVICE POINTS

▶A◀ TAPER ROLLER BEARING INSTALLATION

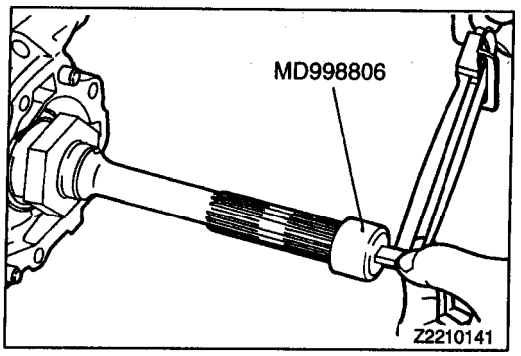

▶B◀ SPACER SELECTION

(1) Use the existing spacer to assemble "the transfer case adapter.
(2) Using the special tool, check that the bevel gear rotating drive torque is within standard range.

Standard value: 1.0–1.7 Nm (.72–1.23 ft.lbs.)

(3) If the rotating drive torque is outside of the standard range, adjust using adjusting spacers.

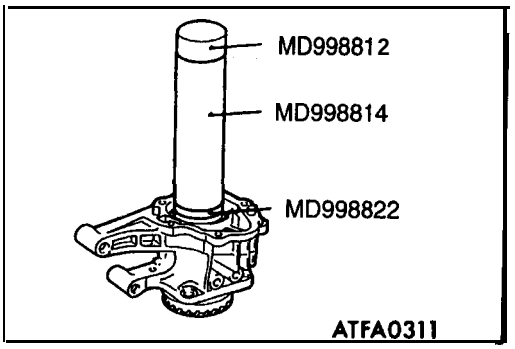

▶C◀ TAPER ROLLER BEARING INSTALLATION

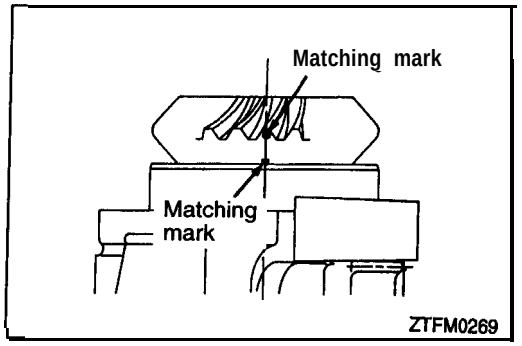

▶D◀ DRIVEN BEVEL GEAR INSTALLATION

(1) Attach the driven bevel gear to the transfer case adapter and then align their matching marks.

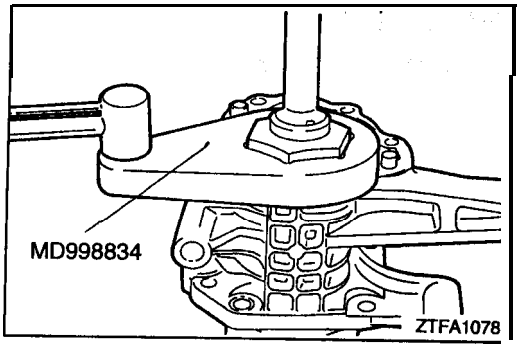

▶E◀ LOCK NUT INSTALLATION

(1) Holding the driven bevel gear in a workbench and using , the special tool, tighten the lock nut to the specified torque.

Driven bevel gear lock nut: 150 Nm (108 ft.lbs.)

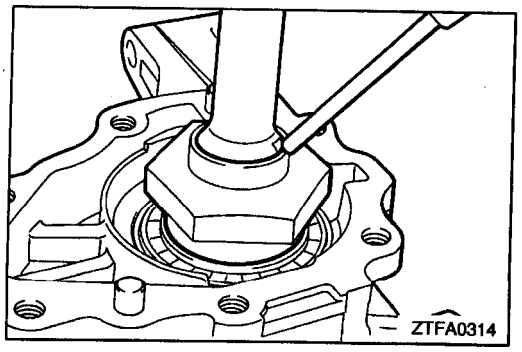

(2) Caulk the lock nut at two positions.

TSB Revision

TRANSFER CASE <W4A33>

23300730012

DISASSEMBLY AND REASSEMBLY

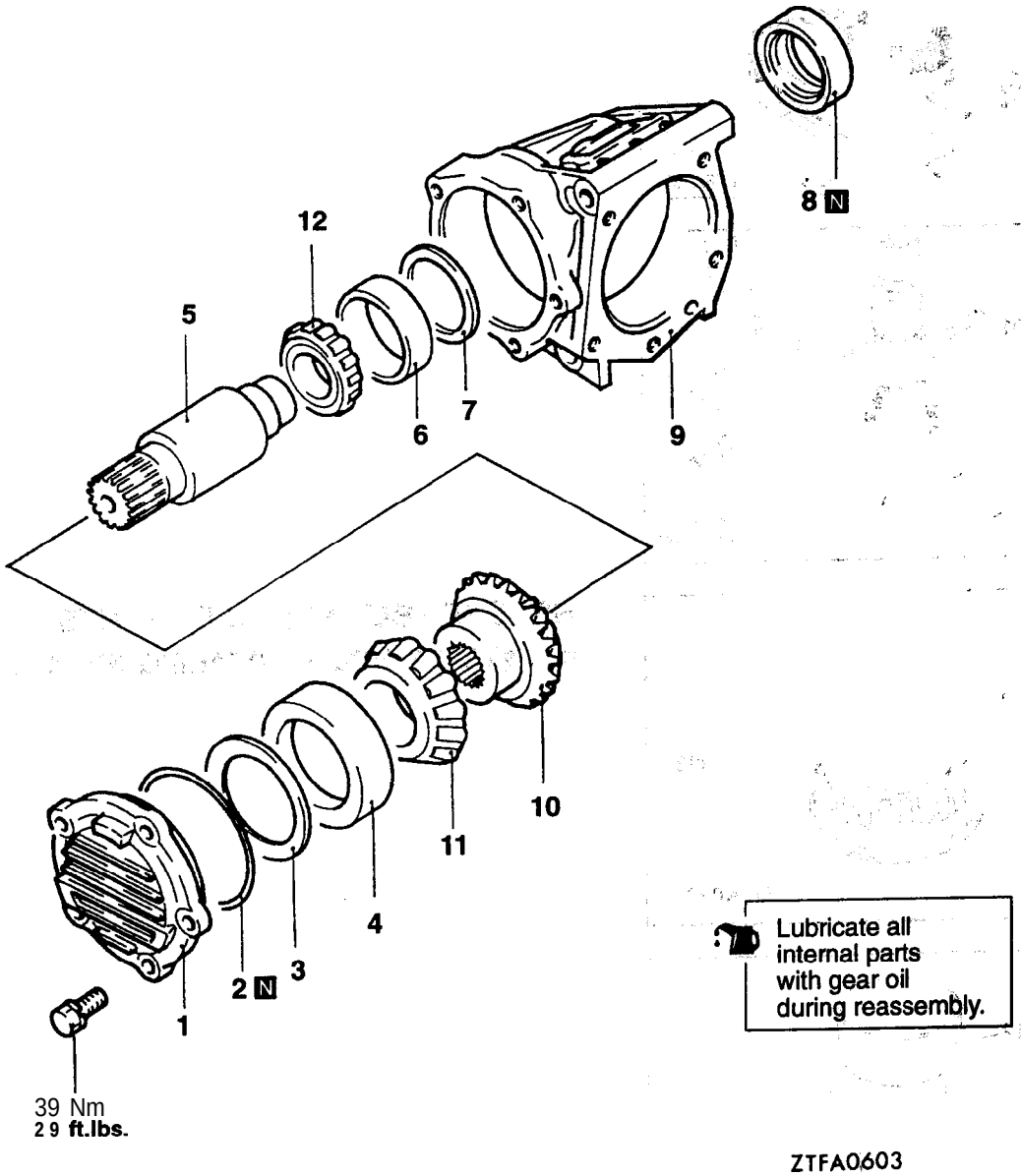

Disassembly steps

1. Transfer cover
2. O-ring
3. ▶E◀ Spacer
4. Outer race
5. ▶D◀ Drive bevel gear shaft
6. Outer race
7. ▶E◀ Spacer
8. ▶C◀ Oil seal
9. Transfer case
10. ▶B◀ Drive bevel gear
11. ◀A▶ ▶A◀ Taper roller bearing
12. ◀A▶ ▶A◀ Taper roller bearing

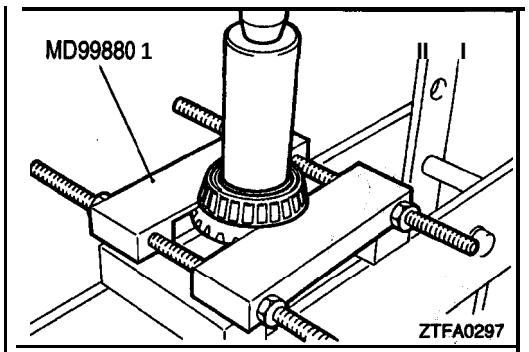

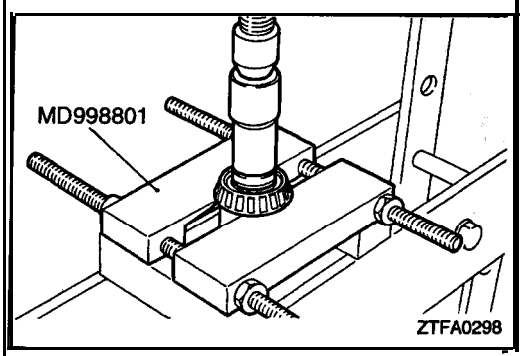

DISASSEMBLY SERVICE POINT

◀A▶ TAPER ROLLER BEARINGS REMOVAL

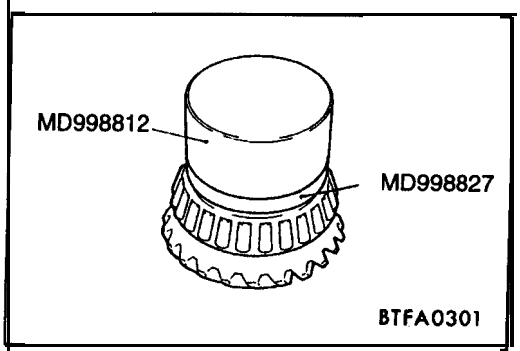

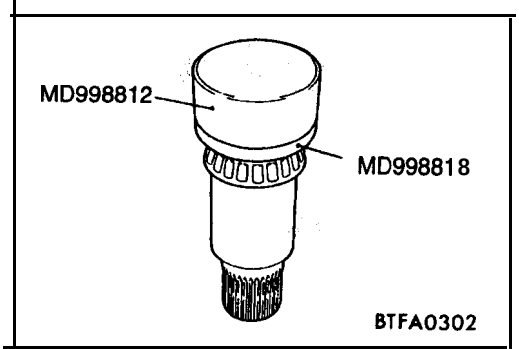

REASSEMBLY SERVICE POINTS

▶A◀ TAPER ROLLER BEARING INSTALLATION

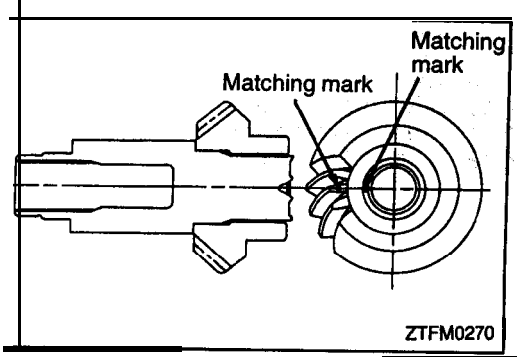

▶B◀ DRIVE BEVEL GEAR INSTALLATION

(1) Install the drive bevel gear to the drive bevel gear shaft with their matching marks in alignment.

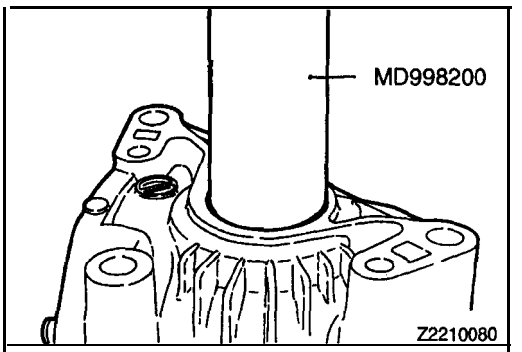

▶C◀ OIL SEAL INSTALLATION

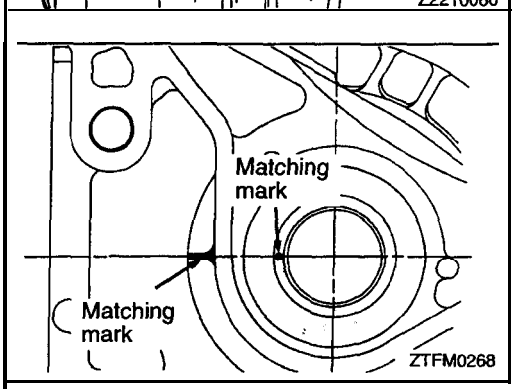

▶D◀ DRIVE BEVEL GEAR SHAFT INSTALLATION

(1) Install the drive bevel gear shaft to the, transfer case and align the matching mark on the transfer case with that on the drive bevel gear shaft.

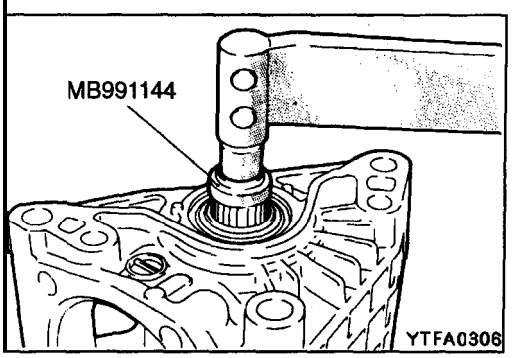

▶E◀ SPACER SELECTION

(1) Use the existing spacer to assemble the transfer case.
(2) Using the special tool, check that the bevel gear rotating drive torque is within standard range.

Standard value: 1.7-2.5 Nm (1.23-1.81 ft.lbs.)

(3) If the rotating drive torque is outside of the standard range, adjust using adjusting spacers.

NOTE
For adjustment, use two spacers of which thickness is as close as possible to each other.

EXTENSION HOUSING <W4A33>

23300760011

DISASSEMBLY AND REASSEMBLY

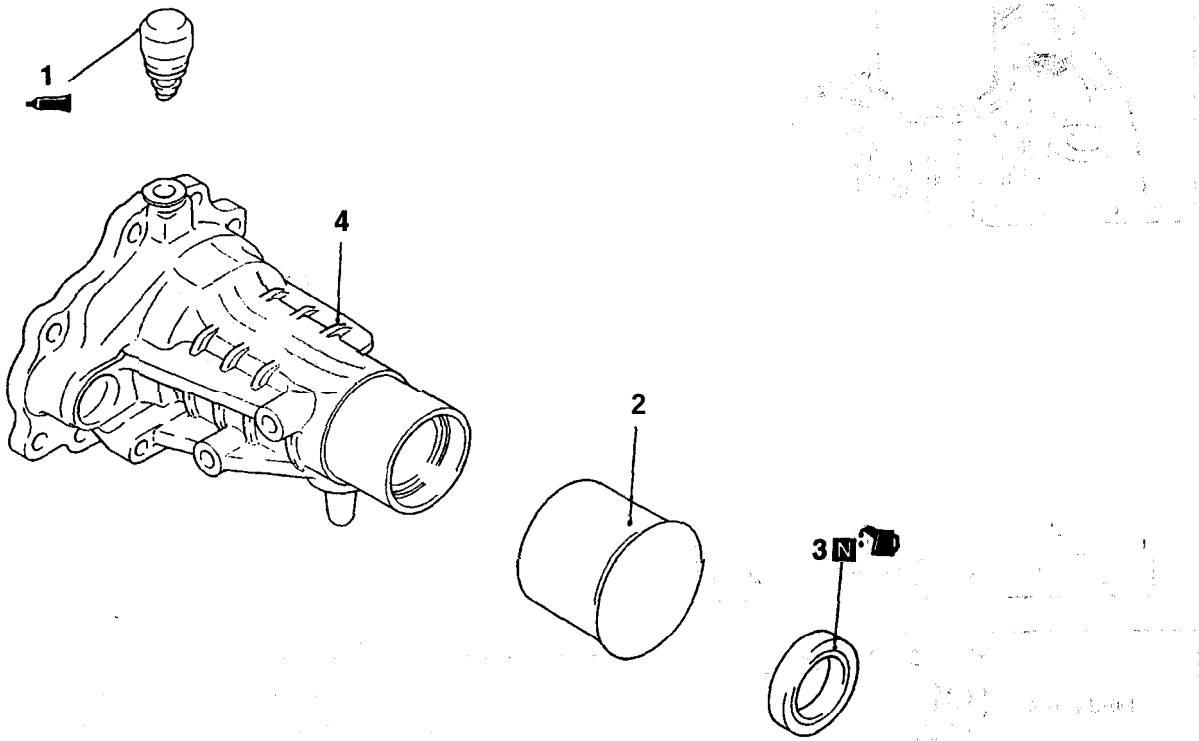

Disassembly steps

▶B◀ 1. Air breather
2. Dust seal guard
▶A◀ 3. Oil seal
4. Extension housing

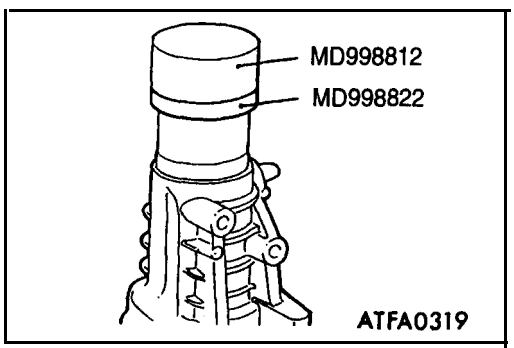

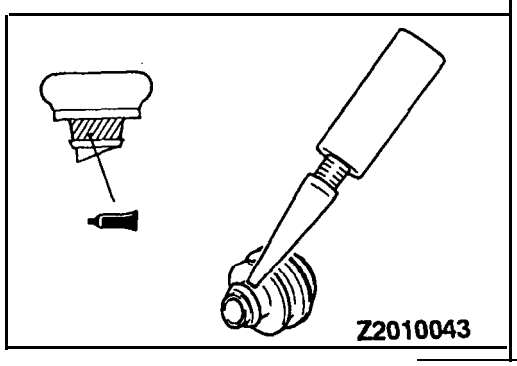

REASSEMBLY SERVICE POINTS

▶A◀ OIL SEAL INSTALLATION

▶B◀ AIR BLEEDER INSTALLATION

(1) Apply sealant to the outer diameter of the air bleeder and install the air bleeder.

Specified sealant:
3M SUPER WEATHERSTRIP No. 8001 or equivalent

TSB Revision

AUTOMATIC TRANSAXLE OVERHAUL <F4AC1>

CONTENTS

23319000016

GENERAL INFORMATION

23310010018

The F4AC1 four-speed FWD transaxle uses fully-adaptive controls. Adaptive controls are those which perform their functions based on real-time feedback sensor information. The t&axle uses hydraulically applied clutches to shift a planetary gear train.

SECTIONAL VIEW

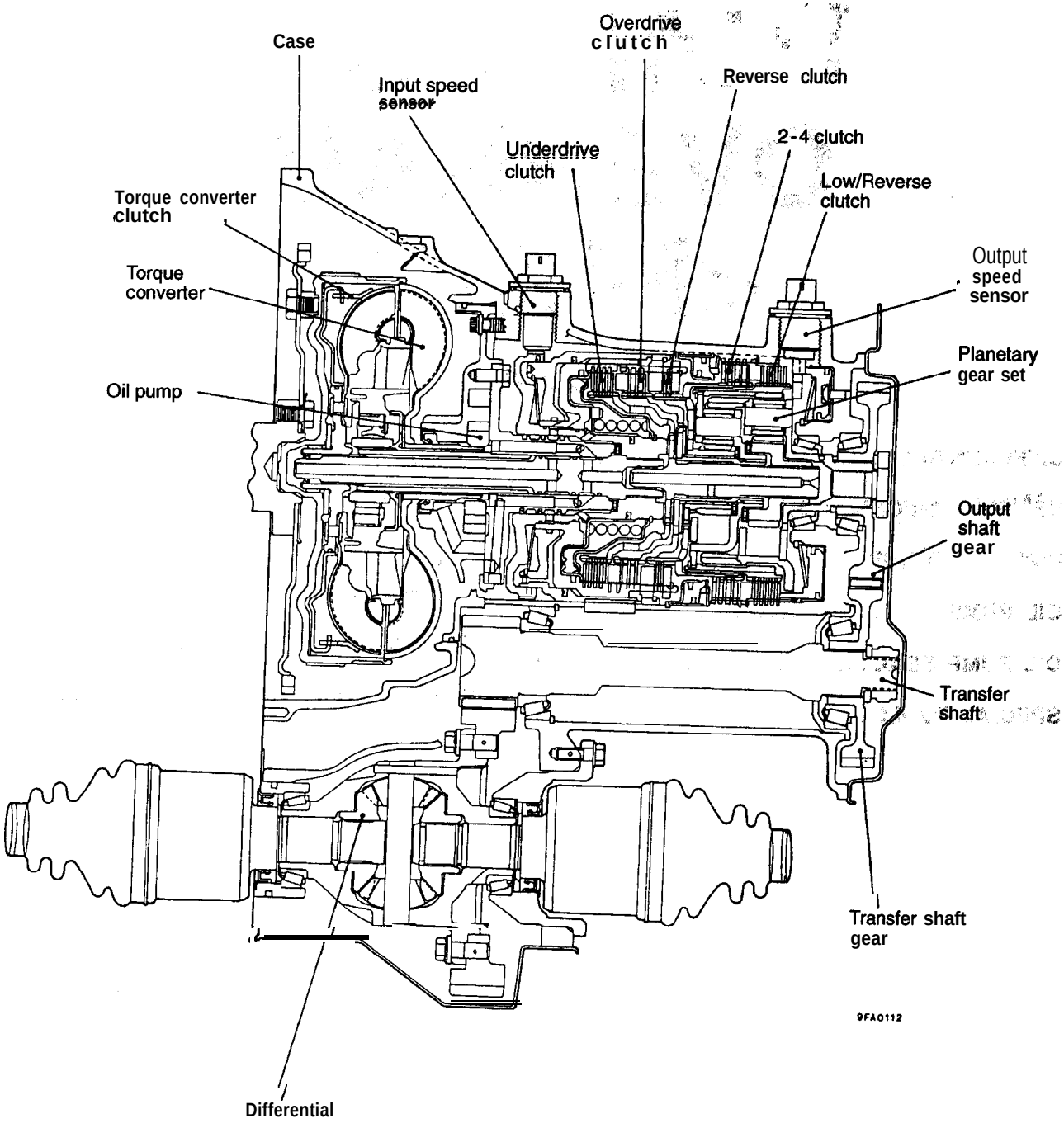

TSB Revision

HYDRAULIC CONTROL SYSTEM

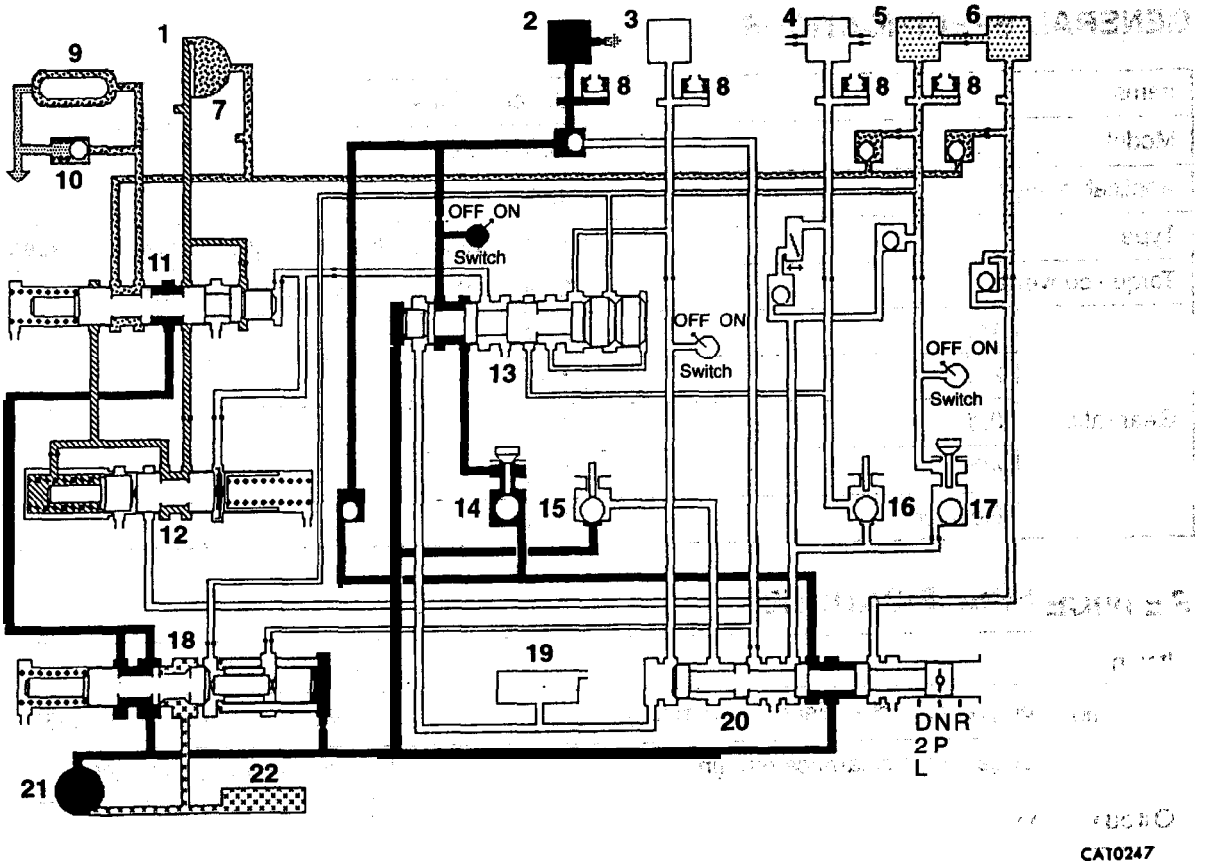

1. Torque converter clutch
2. Low reverse clutch
3. 2-4 clutch
4. Underdrive clutch
5. Overdrive clutch
6. Reverse clutch
7. Torque converter
8. Accumulator
9. Cooler
10. Bypass
11. Torque converter control
12. Torque converter clutch control
13. Switch valve
14. Low reverse, Reverse/Torque converter clutch solenoid
15. 2-4 clutch/low reverse solenoid
16. Underdrive solenoid
17. Overdrive solenoid
18. Regulator
19. Vent reservoir
20. Manual valve
21. Pump
22. Filter

SPECIFICATIONS

23310020011

GENERAL SPECIFICATIONS

Items		Specifications
Model		F4AC1-3-QZAF
Applicable engine		420A
Type		Fully-adaptive, electronically-controlled, four-speed automatic
Torque converter		3-element with torque converter clutch
Gear ratio	1st	2.84
	2nd	1.57
	3rd	1.00
	4th	0.69
	Reverse	2.21

SERVICE SPECIFICATIONS

23310030014

Items	Standard value
Oil pump outer gear to pocket clearance mm (in.)	0.045–0.141 (.00177–.00555)
Oil pump outer gear side clearance mm (in.)	0.020–0.046 (.00079–.00181)
Oil pump inner gear side clearance mm (in.)	0.020–0.046 (.00079–.00181)
Output gear bearing preload mm (in.)	0.02–0.05 (.0008–.0020)
Output gear turning drive torque Nm (ft.lbs.)	0.34–0.90 (0.25–0.65)
Input shaft end play mm (in.)	0.13–0.64 (.0051–.0252)
Transfer shaft bearing end play mm (in.)	0.05–0.10 (.0020–.0039)
Differential bearing preload mm (in.)	0.15–0.29 (.0059–.0114)
Differential side gear end play mm (in.)	0.025–0.330 (.00098–.01299)
Differential turning drive torque Nm (ft.lbs.)	0.56–2.03 (0.41–1.47)
Underdrive clutch clearance mm (in.)	0.91–1.47 (.0358–.0579)
Overdrive clutch clearance mm (in.)	1.07–2.44 (.0421–.0961)
Reverse clutch clearance mm (in.)	0.76–1.24 (.0299–.0488)
2/4 clutch clearance mm (in.)	0.76–2.64 (.0299–.1039)
Low/reverse clutch clearance mm (in.)	1.04–1.65 (.0409–.0650)

TORQUE SPECIFICATIONS

23310040017

Items	Nm	ft.lbs.
Differential cover bolts	19	14
Differential ring gear bolts	95	70
Differential retainer bolts	28	20
Extension housing bolts	28	20
Oil pan bolts	19	14
Output gear bolt	271	200
Pump bolts	22	16
Rear cover bolts	19	14
Transfer shaft gear nut	271	200
Valve body bolts	5	3.6

SEALANTS

22210056010

Items	Specified sealant	Quantity
Oil pan	Loctite 18718 or equivalent	As required
Rear cover	Loctite 18718 or equivalent	As required
Rear cover bolts	Loctite 18718 or equivalent	As required
Differential cover	Loctite 18718 or equivalent	As required
Differential bearing retainer	Loctite 18718 or equivalent	As required
Differential bearing retainer bolts	Loctite 18718 or equivalent	As required
Extension	Loctite 18718 or equivalent	As required

THRUST PLATE, THRUST WASHER, REACTION PLATE," SNAP RING, SHIM FOR ADJUSTMENT

23310060013

Thrust washer (For adjustment of differential side gear end play)

Thickness mm (in.)	Thickness mm (in.)	Thickness mm (in.)	Thickness mm (in.)
0.81 (.0319)	0.93 (.0366)	1.07 (.0421)	1 . 1 9 (.0469)

Reaction plate (For adjustment of low/reverse clutch clearance)

Thickness mm (in.)	Thickness mm (in.)	Thickness mm (in.)	Thickness mm (in.)
5.36 (.2110) 5.62 (.2213)	5.88 (.2315) 6.14 (.2417)	6.40 (.2520) 6.66 (.2622)	6.92 (.2724)

Thrust plate (For adjustment of input shaft end play)

Thickness mm (in.)	Thickness mm (in.)
0.81 – 1.03 (.0319 – .0406)	2.13 – 2.35 (0.839 – .0925)
1.03 – 1.25 (.0406 – .0492)	2.35 – 2.57 (.0925 – .1012)
1.25 – 1.47 (.0492 – .0579)	2.57 – 2.79 (.1012 – .1098)
1.47 – 1.69 (.0579 – .0665)	2.79 – 3.01(.1098 – .1185)
1.69 – 1.91(.0665 – .0752)	3.01 – 3.23 (.1185 – .1272)
1.91 – 2.13 (.0752 – .0839)	3.23 – 3.45 (.1272 – .1358)

Reaction plate (For adjustment of underdrive clutch clearance)

Thickness mm (in.)	Thickness mm (in.)	Thickness mm (in.)	Thickness 'mm (in.)
5.52 (.2173)	6.01 (.2366)	6.50 (.2559)	6.99 (.2752)

Snap ring (For adjustment of reverse clutch clearance)

Thickness mm (in.)	Thickness mm (in.)	Thickness mm (in.)	Thickness mm (in.)
1.56 (.0614)	1.80 (.0709)	2.05 (.0807)	2.30 (.0906)

Shim (For adjustment of output gear bearing preload, transfer shaft bearing end play)

Thickness mm (in.)	Thickness mm (in.)	Thickness mm (in.)	Thickness mm (in.)"
3.22 (.1268)	3.46 (.1362)	3.70 (.1457)	3.94 (.1551)
3.26 (.1283)	3.50 (.1378)	3.74 (.1472)	3.98 (.1567)
3.30 (.1299)	3.54 (.1394)	3.78 (.1488)	4 . 0 2 (.1583)
3.34 (.1315)	3.58 (.1409)	3.82 (.1504)	4.06 (.1598)
3.38 (.1331)	3.62 (.1425)	3.86 (.1520)	4.10 (.1614)
3.42 (.1346)	3.66 (.1441)	3.90 (.1535)	4.14 (.1630)

Shim (For adjustment of output gear bearing preload, transfer shaft bearing end play)
*1: Also used as "test" shim. (Output gear)
*2: Also used as "test" shim. (Transfer shaft)

Thickness mm (in.)	Thickness mm (in.)	Thickness mm (in.)	Thickness mm (in.)
4.18 (.1646)	4.34 (.1709)	4.50 (.1772)*1	4.66 (.1835)*2
4.22 (.1661)	4.38 (.1724)	4.54 (.1787)	
4.26 (.1677)	4.42 (.1740)	4.58 (.1803)	
4.30 (.1693)	4.46 (.1756)	4.62 (.1819)	

Shim (For adjustment of differential bearing preload)
*3: Also used as "test" shim. (Differential bearing)

Thickness mm (in.)	Thickness mm (in.)	Thickness mm (in.)	Thickness mm (in.)
0.50 (.0197)*3	0.65 (.0256)	0.80 (.0315)	0.95 (.0374)
0.55 (.0217)	0.70 (.0276)	0.85 (.0335)	1.00 (.0394)
0.60 (.0236)	0.75 (.0295)	0.90 (.0354)	1.05 (.0413)

TSB Revision

SPECIAL TOOLS

23310070016

Tool	Tool number and name	Supersession	Application
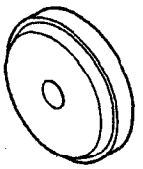	MB990933 Installer adapter	MB990933-01	Installation of differential bearing retainer bearing cup.
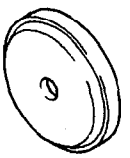	MB990936 Installer adapter	MB990936-01	Installation of transfer shaft gear bearing cup, output bearing cup.
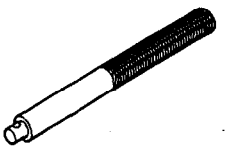	MB990938 Installer bar	MB990938-01	Use with MB990933, MB990936.
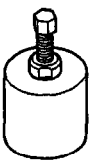	MB995001 Bearing puller	5048	Removal of transfer shaft gear bearing race, rear carrier cone.
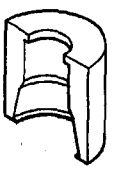	MB995002 Bearing puller	5048-3	Removal of rear carrier cone.
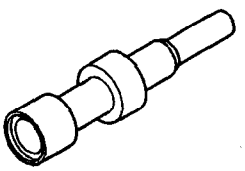	MB995003 Installer remover	5049-A	Installation and removal of transfer shaft.
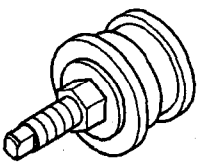	MB995004 Bearing cap installer	5050	Installation of output bearing cup.
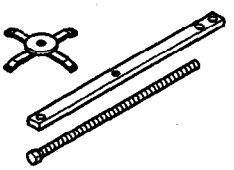	MB995005 Spring compressor	5058	Removal of 2/4 clutch retainer snap ring. Installation and removal of low-reverse clutch snap ring.

Tool	Tool number and name	Supersession	Application
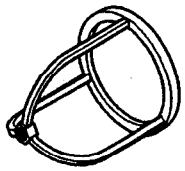	MB995006 Spring compressor	5059	Installation and removal of low-reverse clutch snap ring, underdrive clutch spring retainer snap ring.
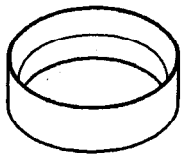	MB995007 Seal installer	5067	Installation of underdrive clutch spring retainer snap ring.
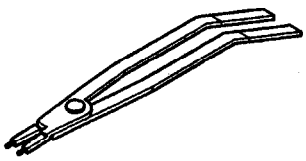	MB995008 Snap ring plier	6051	Installation and removal of transfer shaft bearing snap ring.
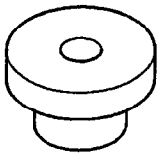	MB995009 Thrust button	6055	Removal of output gear, rear carrier cone.
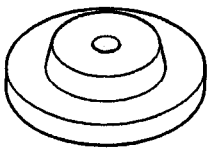	MB995010 Disc	6057	Installation and removal of low-reverse clutch snap ring, overdrive piston snap ring.
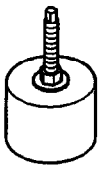	MB995011 Bearing cup remover	6062	Removal of transfer shaft gear bearing cup, output bearing cup.
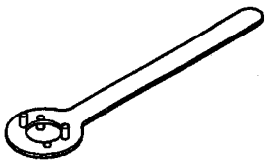	MB995012 Holder	6259	Installation and removal of transfer shaft gear nut, output gear bolt. Adjustment of output gear, transfer shaft.
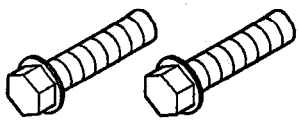	MB995013 Special bolts	6260	Adjustment of output gear clearance.

Tool	Tool number and name	Supersession	Application
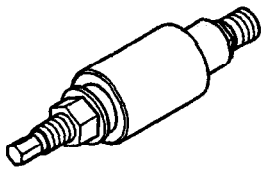	MB995014 Gear installer	General service tool	Installation of transfer shaft gear.
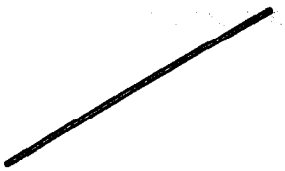	MB995015 Dial indicator tip	MB995015-01	Adjustment of low-reverse clutch.
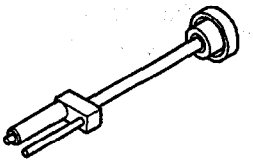	MB995016 Installer remover	General service tool	Installation and removal of T/C control valve, T/C clutch switch valve.
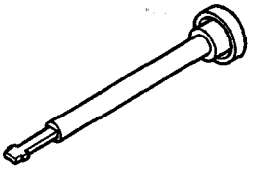	MB995017 Installer remover	MB995017-01	Installation and removal of regulator valve.
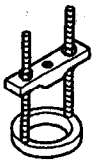	MB995028 Puller	MD998348-01	Removal of differential bearing cone.
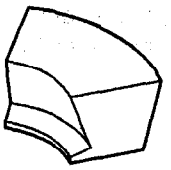	MB995029 Adapter blocks	MD998348-01	Removal of differential bearing cone.
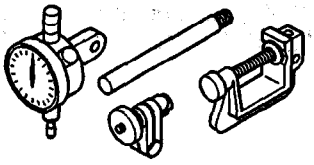	MB995030 Dial indicator set	General service tool	Adjustment of underdrive clutch clearance, overdrive clutch.
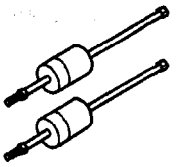	MB995031 Puller set	MIT3752A-1	Removal of oil pump.

Tool	Tool number and name	Supersession	Application
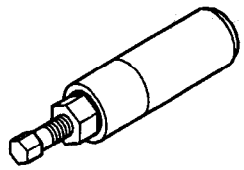	MB995032 Seal remover	C-3981	Removal of oil pump oil seal.
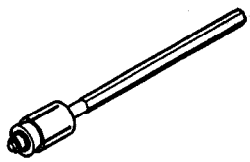	MB995038 Differential bearing torque tool	C-4995	Adjustment of differential bearing.
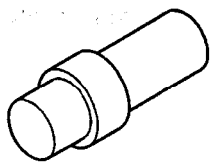	MB995039 Adapter	C-4996	Removal of differential bearing cone. Adjustment of differential side gear clearance.
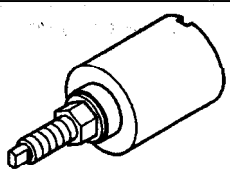	MB995041 Bearing and gear remover	L-4406	Removal of differential bearing cone.
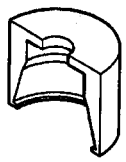	MB995042 Bearing and gear remover	L-4406-3	Removal of differential bearing cone.
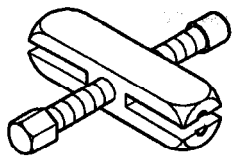	MB995043 Gear puller	L-4407	Removal of transfer shaft gear, output gear. Adjustment of output gear clearance, transfer shaft.
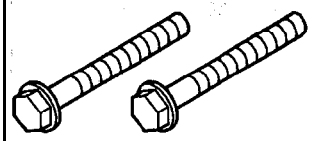	MB995044 Bolts	L-4407-6	Removal of transfer shaft gear, output gear. Adjustment of output gear clearance, transfer shaft.
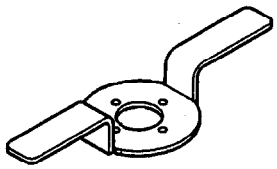	MB995045 Fixture	L-4432	Adjustment of output gear clearance, transfer shaft.

Tool	Tool number and name	Supersession	Application
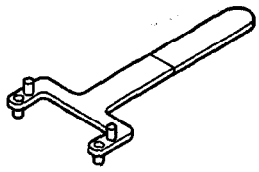	MB995046 Remover	L-4435	Removal of differential bearing retainer.
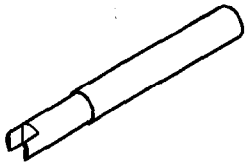	MB995047 Checking tool	L-4436-A	Adjustment of differential clearance, differential turning drive torque.
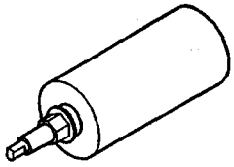	MB995048 Cup remover	L-4518-1	Removal of differential bearing retainer bearing cup. Adjustment of differential bearing.
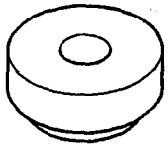	MB995049 Button	L-4539-2	Removal of transfer shaft gear bearing cone.
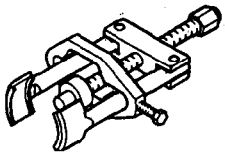	MD998348 Bearing and gear puller	MD998348-01	Removal of transfer shaft gear bearing cone.
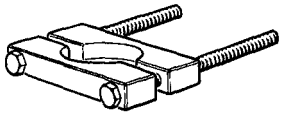	MD998801 Bearing remover	MD998348-01	Removal of transfer shaft bearing cone.
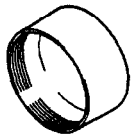	MD998812 Installer cap	General service tool	Use with MD998813, MD998814, MD998821, MD998823, MD998825, MD998827.
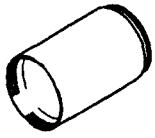	MD998813 Installer-100	General service tool	Use with MD998812, MD998821, MD998825.

Tool	Tool number and name	Supersession	Application
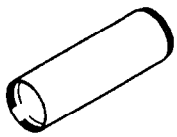	MD998814 Installer-200	MIT304180	Use with MD998812, MD998821.
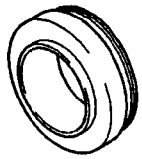	MD998821 Installer adapter (44)	–	Installation of transfer shaft bearing cone, rear carrier cone.
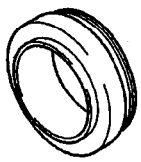	MD998823 Installer adapter (48)	–	Installation of transfer shaft gear bearing cone, output bearing cone.
	MD998825 Installer adapter (52)	General service tool	Installation of oil pump oil seal.
	MD998827 Installer adapter (56)	MD998827	Installation of differential oil seal, differential bearing retainer bearing cup.

TRANSAXLE

23310090012

DISASSEMBLY

Caution
Do not intermix clutch discs or plates, or the unit might fall.

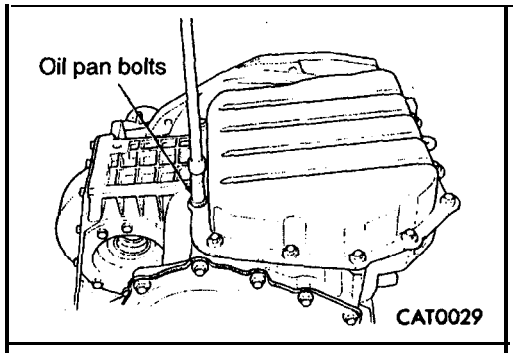

(1) Remove oil pan bolts.

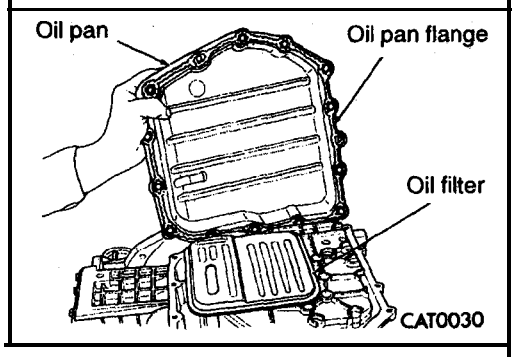

(2) Remove oil pan.

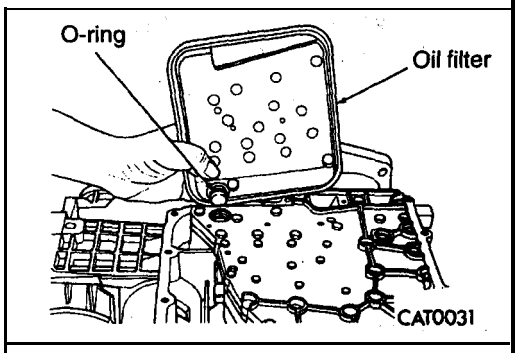

(3) Remove oil filter.

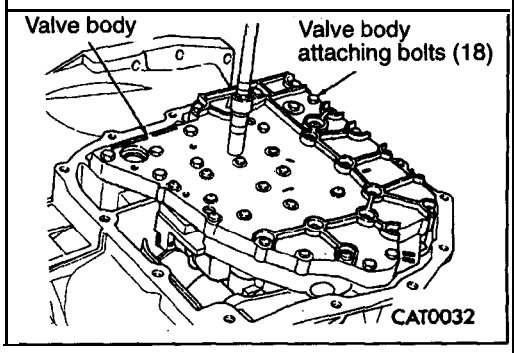

(4) Remove valve body attaching bolts (18).

guide bracket.

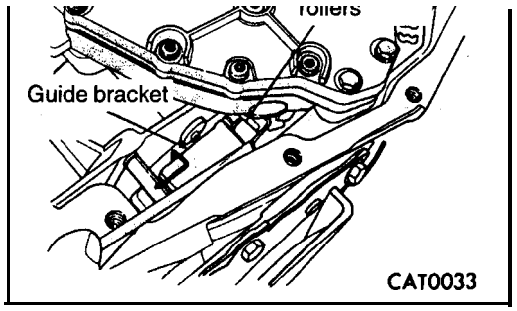

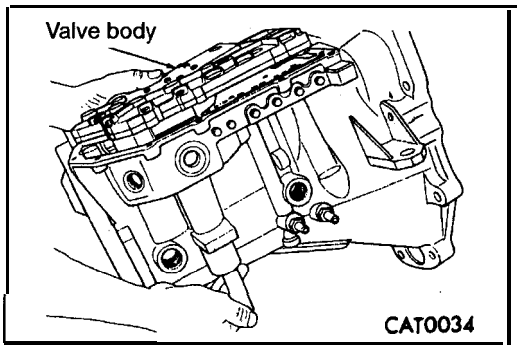

(6) Remove valve body.

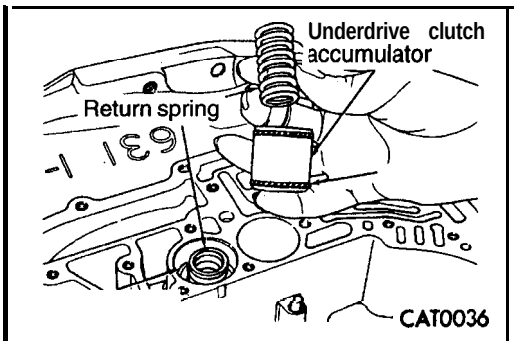

(7) Remove underdrive clutch **accumulator and overdrive** clutch accumulator with **return springs** and seal rings.

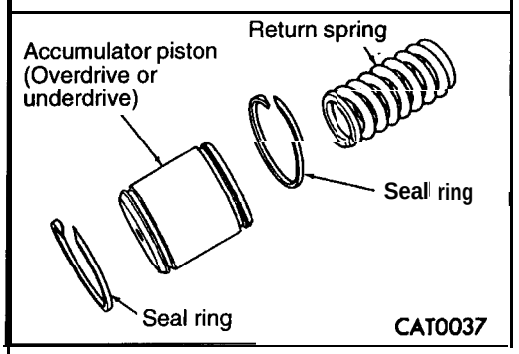

(8) Remove return spring and two **seal** rings from the **overdrive** and underdrive clutch accumulator **pistons.**

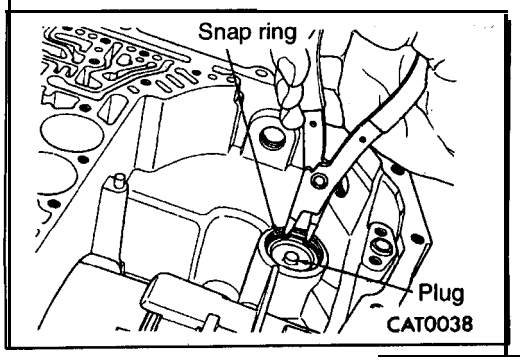

(9) Remove the snap ring 'holding the **low/reverse** accumulator plug (cover) in place.

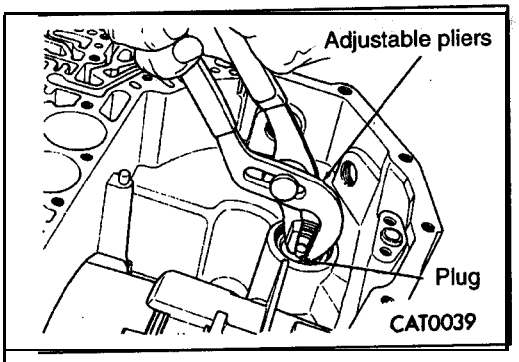

(10) Using adjustable plies, pull out low/reverse accumulator plug.

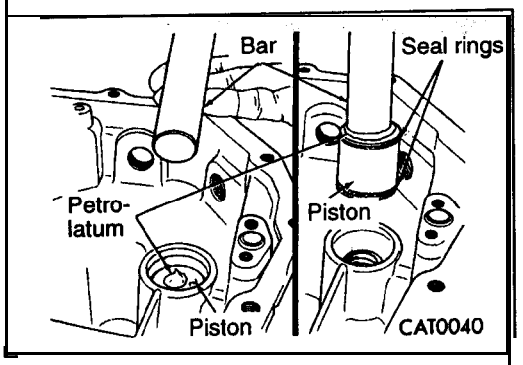

(11) Put a dab of petrolatum on the top of low/reverse, accumulator piston. Using a smooth-surface bar or, equivalent, press the bar evenly against the petrolatum so it sticks to the piston. Pull out the piston'.

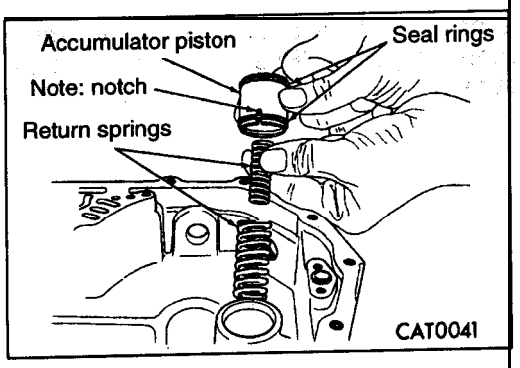

(12) Remove two return springs.

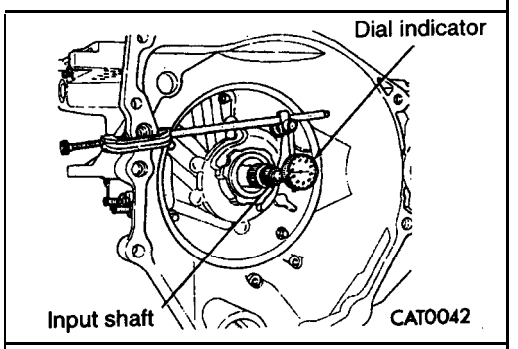

(13) Measuring input shaft end play before disassembly Will usually indicate when a No. 4 thrust plate change is required (except when major parts are replaced). The No. 4 thrust plate is located behind the overdrive clutch hub.

Attach a dial indicator to transaxle bell-housing with its plunger seated against end of input shaft.

Move input shaft in and out to obtain end play reading. End play specifications are 0.13 to 0.64 mm (.005 to .025 inch.). Record indicator reading for reference when reassembling the. transaxle.

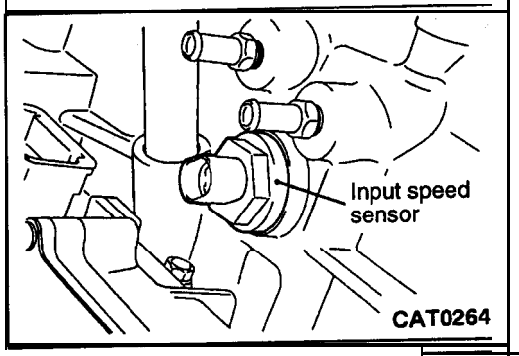

(14) Remove input speed sensor.

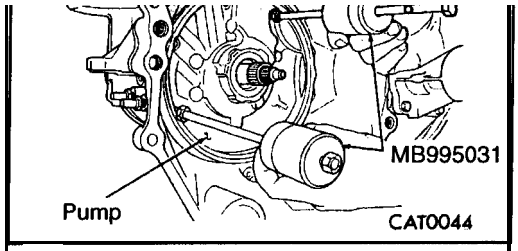

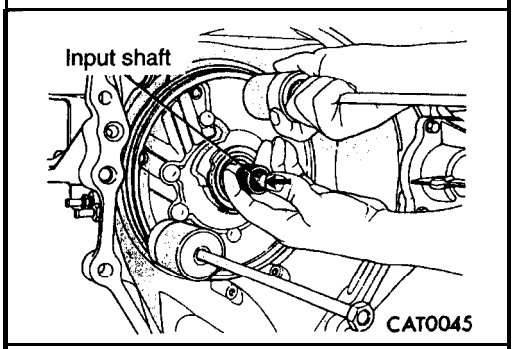

(17) **Strike** the weights of the pullers against the **bolt heads** of the tools to loosen the pump. **"Push in"** on input **shaft** while loosening pump.

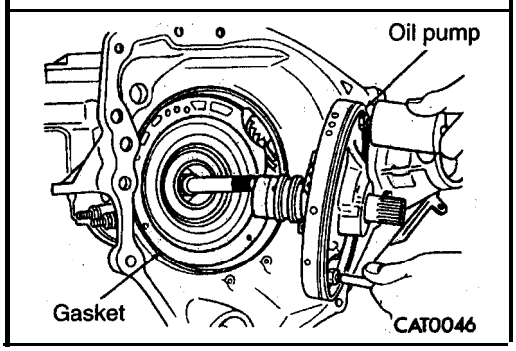

(18) **Remove** oil pump.

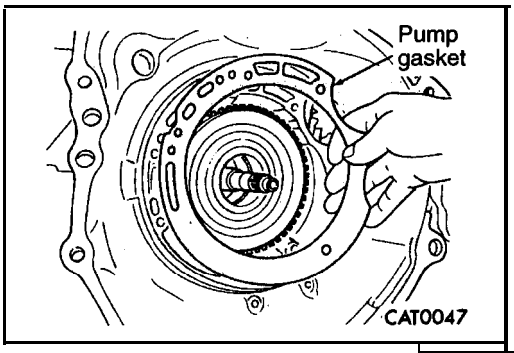

(19) **Remove** oil pump gasket.

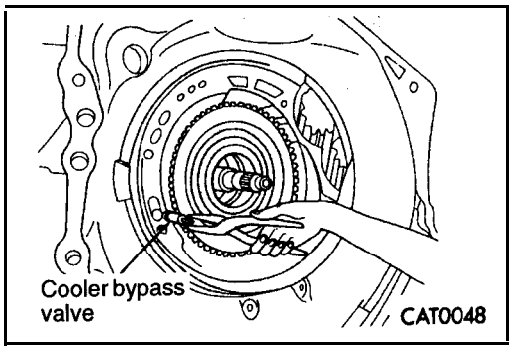

(20) **Remove** cooler **bypass valve.**

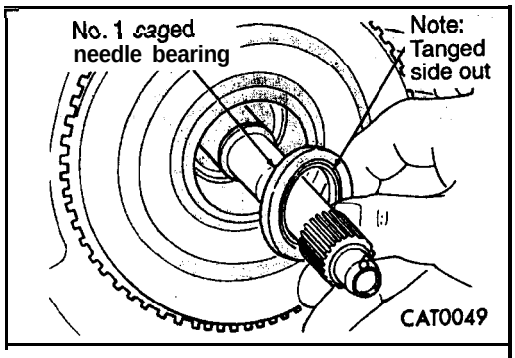

(21) **Remove** No. 1 caged needle **bearing.**

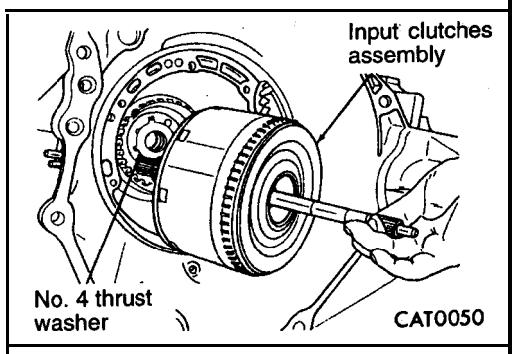

(22) **Remove** input clutches assembly.

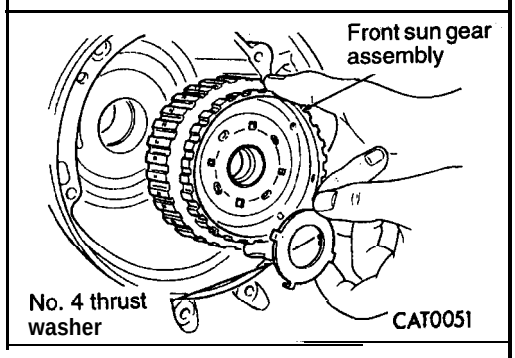

(23) **Remove** No. 4 thrust plate and front sun gear **assembly.**

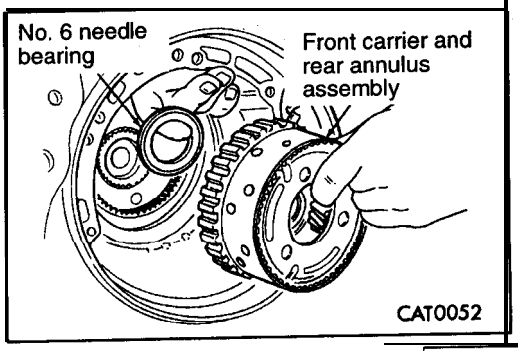

(24) **Twist** and pull to **remove front** carrier and rear **annulus** assembly.
Remove No. 6 needle bearing.

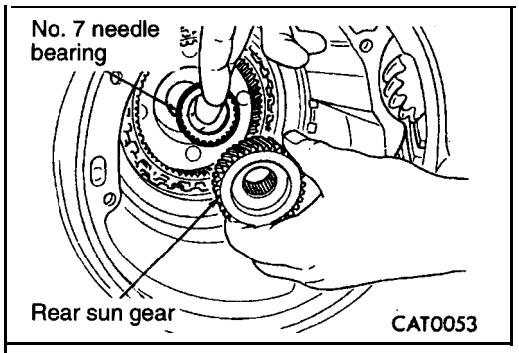

(25) **Remove** rear sun gear and No. 7 needle bearing.

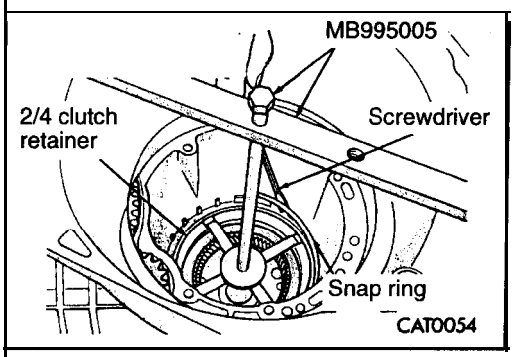

(26) **Install** spring compressor **MB995005.** Using the special tool, compress the **2/4** clutch retainer just enough to remove the snap ring.
Using a screwdriver, remove the **2/4** clutch retainer snap ring.

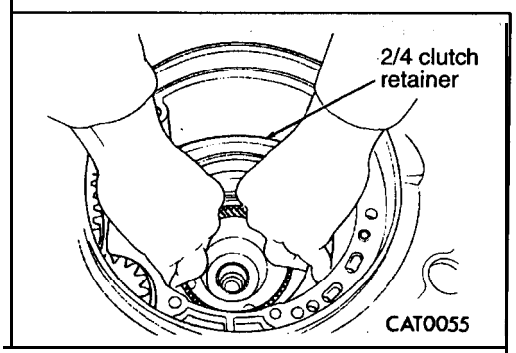

(27) **Pull** up **2/4** clutch retainer by hand.

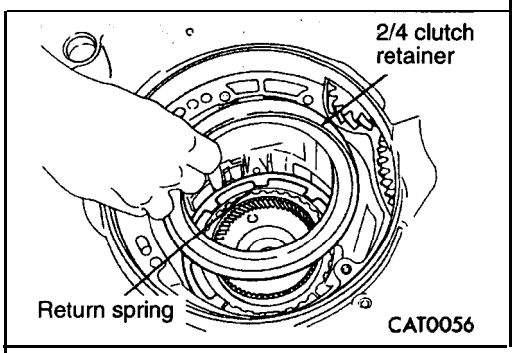

(28) **Remove 2/4** clutch retainer.

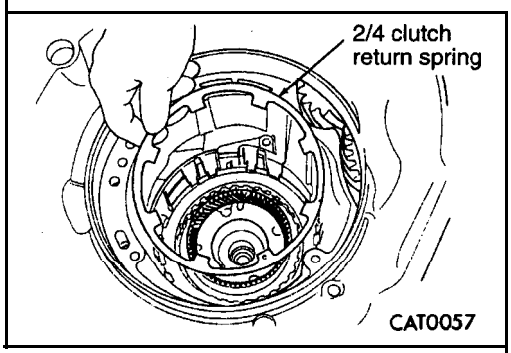

(29) **Remove 2/4** clutch **return** spring.

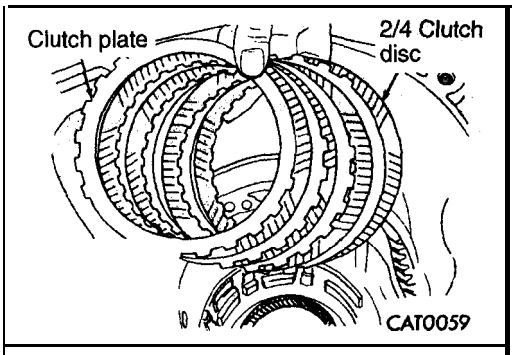

(30) Remove 2/4 clutch pack.

NOTE
Tag 2/4 clutch pack for reassembly identification.

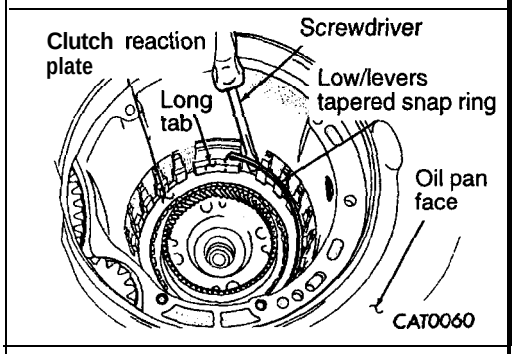

(31) Remove tapered snap ring by prying with a screwdriver as shown.

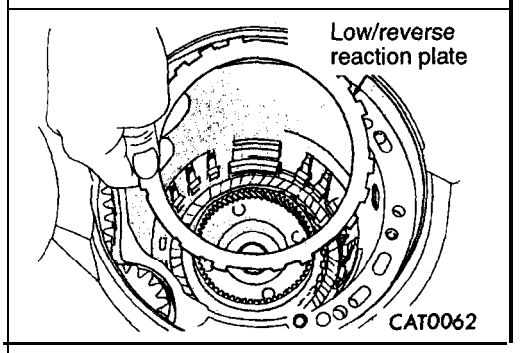

(32) Remove low/reverse reaction plate.

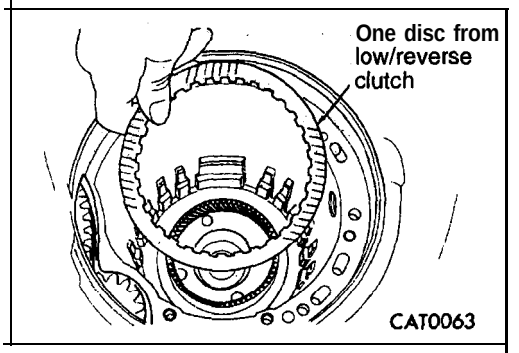

(33) Remove one disc from low/reverse clutch.

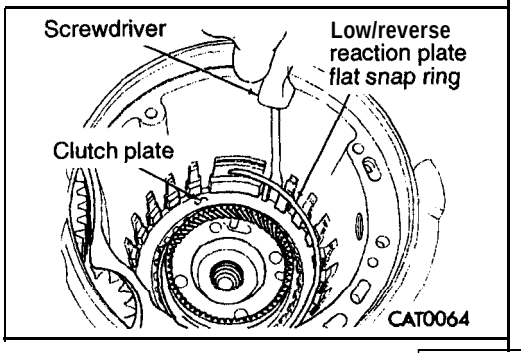

(34) Using a screwdriver, pry out the low/reverse reaction plate flat snap ring.

Caution
Use care not to scratch the clutch plate with screwdriver tip while prying out snap ring.

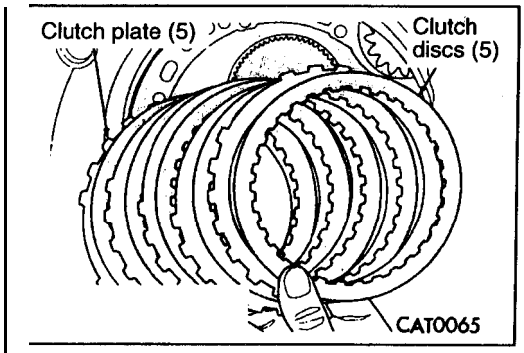

(35) **Remove** low/reverse clutch pack.

NOTE
Tag low/reverse clutch pack for **reassembly** identification.

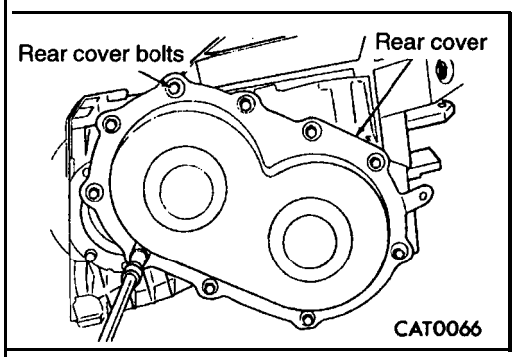

(36) **Remove** rear **cover** bolts.

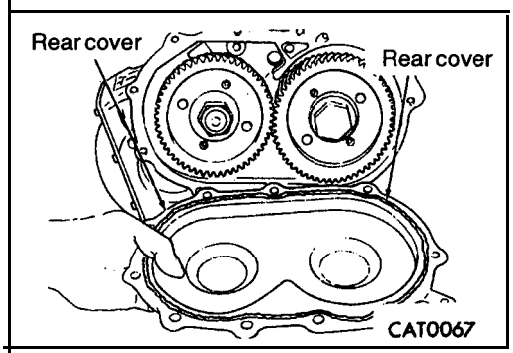

(37) **Remove** rear cover.

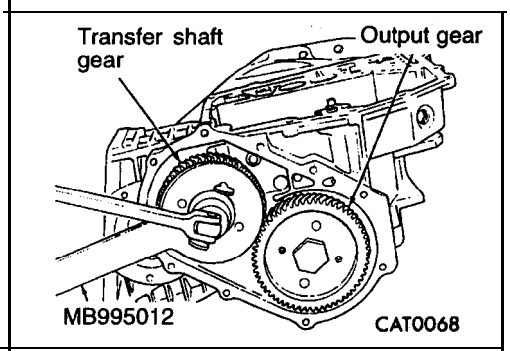

(38) **While** holding transfer shaft gear with Holder **MB995012,** loosen transfer shaft **gear** nut.

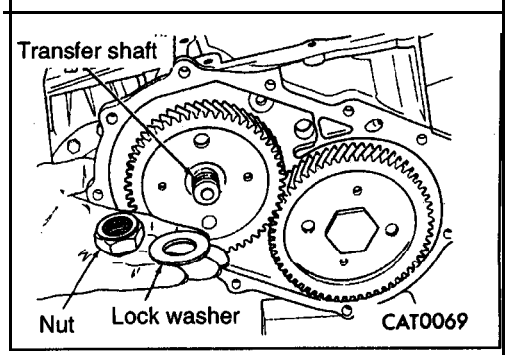

(39) **Remove** transfer shaft gear nut and lock washer.

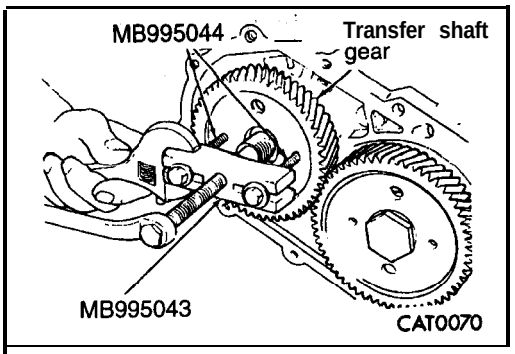

(40) Install Gear Puller **MB995043** and **Bolts MB995044** to transfer shaft gear.
Using the appropriate wrench, turn, "the, center **bolt** clockwise to remove gear.

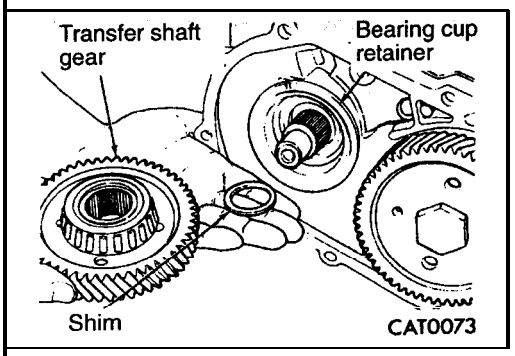

(41) Remove transfer shaft gear and shim.

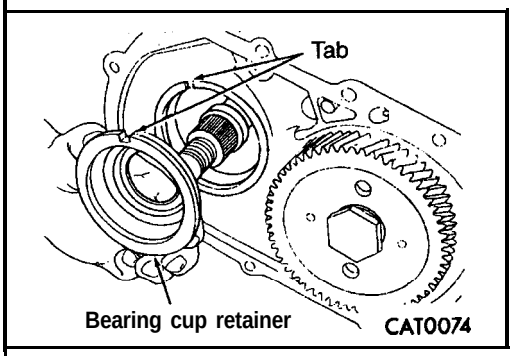

(42) Remove bearing cap retainer.

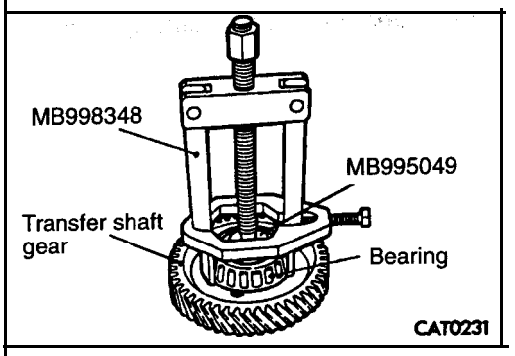

(43) Install Bearing Puller **MD998348** and Button **MB995049** on transfer shaft gear bearing to remove bearing.

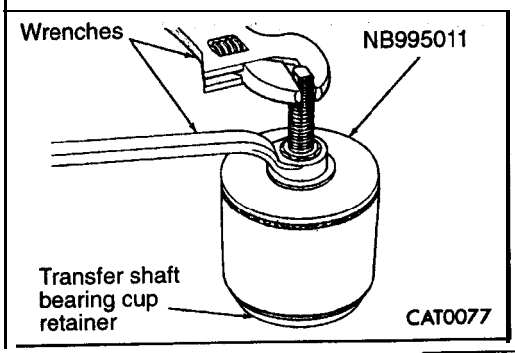

(44) Using Bearing Cup Remover- **MB99501** 1, remove transfer shaft gear bearing cup.

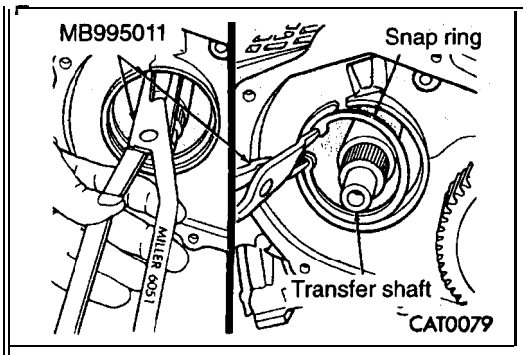

(45) **Remove** transfer shaft 'bearing snap **ring with Snap Ring** Pliers **MB995008**

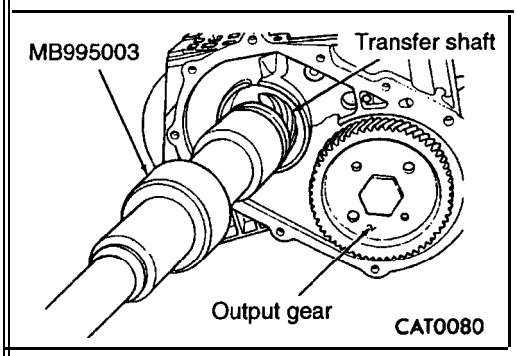

(46) **Remove** transfer shaft with **Installer/Remover MB995003.**

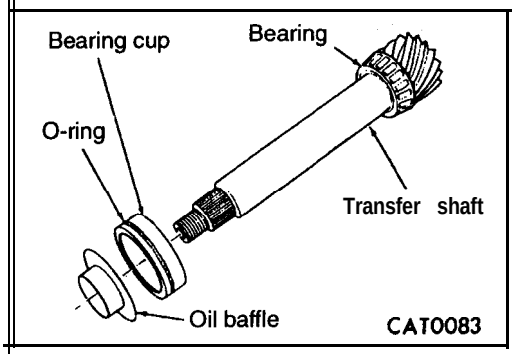

(47) **Remove** oil baffle and bearing cup from **transfer shaft.**

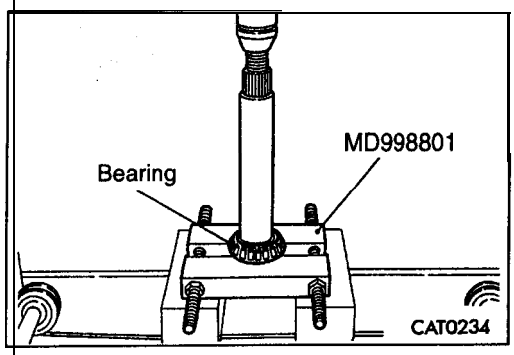

(48) **Remove** transfer shaft **bearing with** Bearing **Splitter MD998801.**

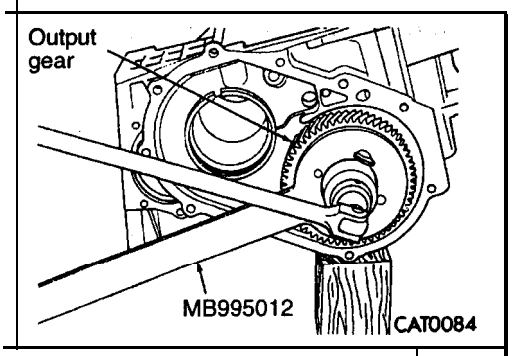

(49) **While** holding output gear with **Holder MB995012, loosen** output gear bolt.

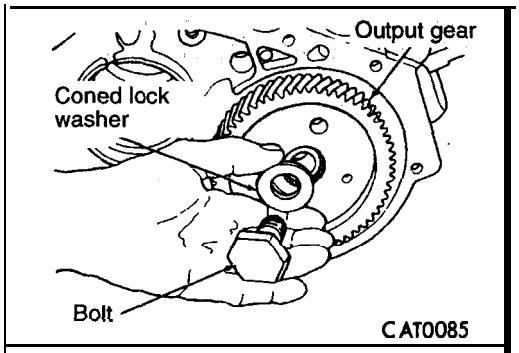

(50) **Remove** output gear bolt and coned lock washer.

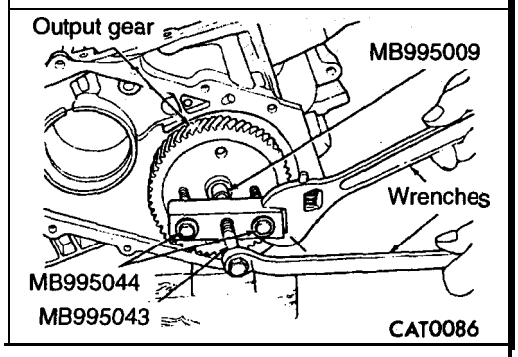

(51) **Install** Gear Puller **MB995043** with Bolts **MB995044** and Thrust Button **MB995009** to output gear. Turn puller center bolt clockwise to remove gear.

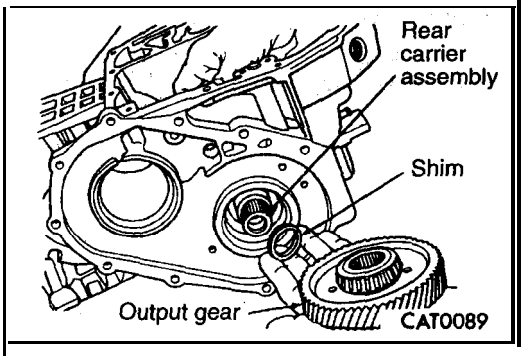

(52) **Remove** output gear and shim.

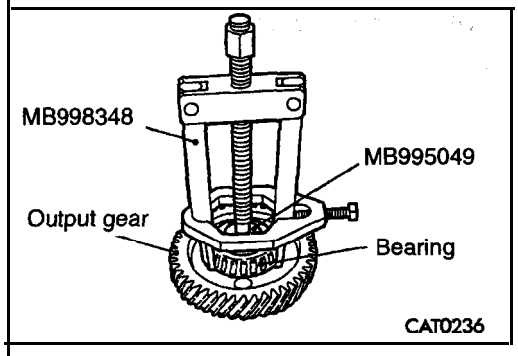

(53) **Install** Bearing and Gear Puller **MD998348** and Button **MB995049** on output gear bearing to remove bearing.

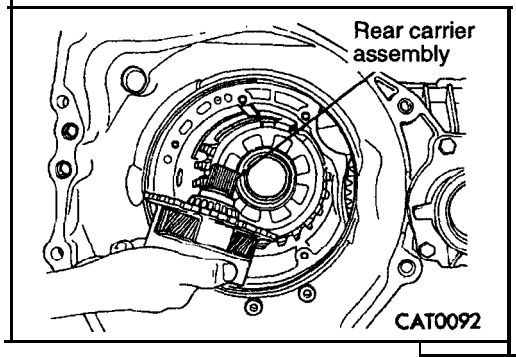

(54) **Remove** gear carrier assembly.

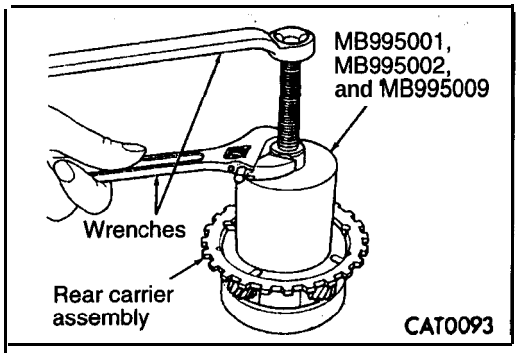

(55) **Remove** gear carrier bearing with-, Rearing **Puller MB995001** and **MB995002 and Thrust** Button **MB995009.**

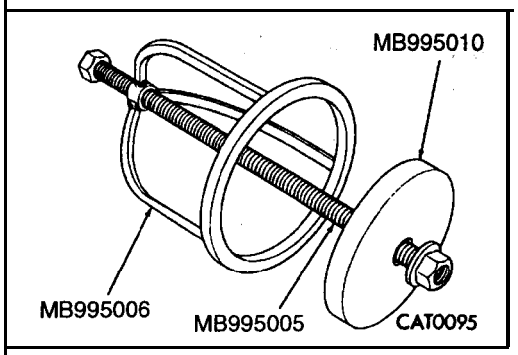

(56) **Use** center bolt of Spring Compressor **MB995005,** Spring Compressor **MB995006 and** Disc **MB99501** 0 to. assemble low/reverse spring compressor tool.

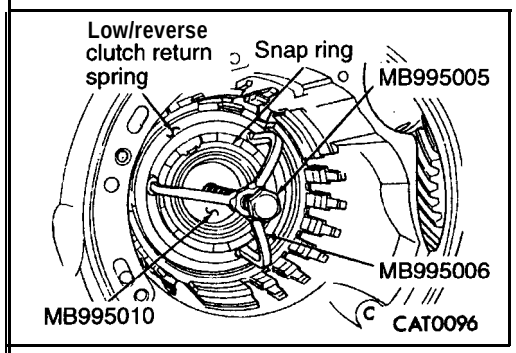

. (57) **Install** compressor tool **to transaxle** as shown. Compress low/reverse piston assembly.
Position Spring Compressor **MB995005** to **allow access** to snap ring.

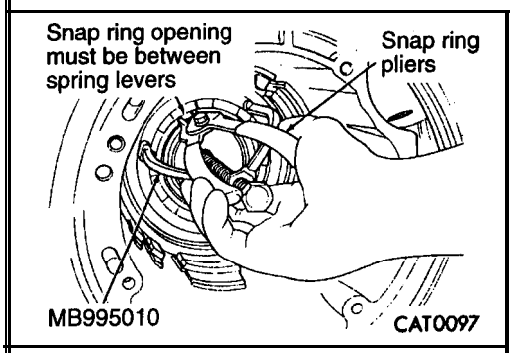

(58) **Remove** snap ring with snap ring pliers.

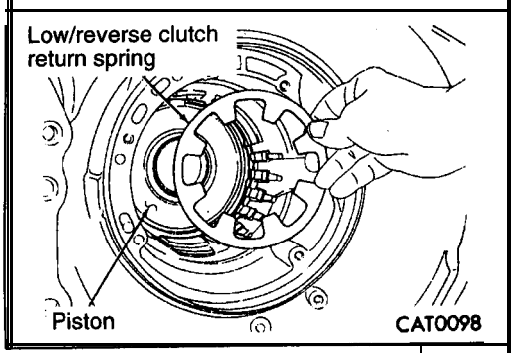

(59) **Remove** low/reverse. piston return spring.

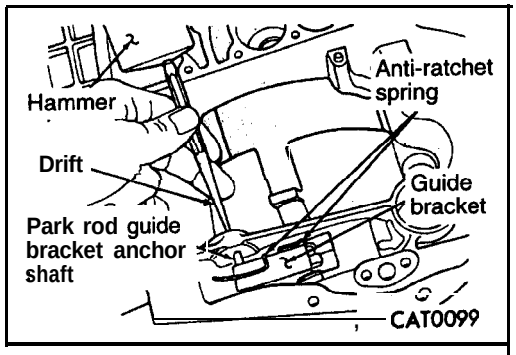

(60) **Drive** out park rod **guide** bracket anchor shaft with **a** hammer and drift.

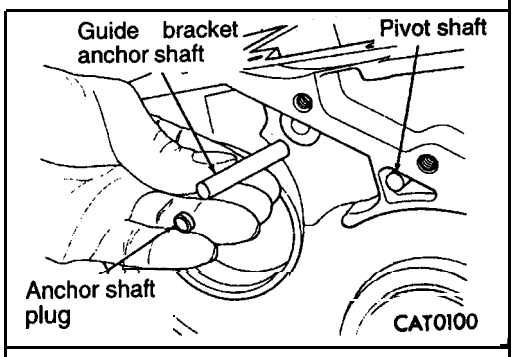

(61) **Remove** guide bracket **anchor** shaft and plug.

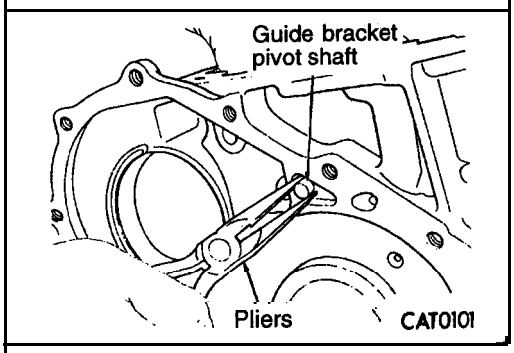

(62) **Pull** out guide bracket pivot **shaft** with pliers.

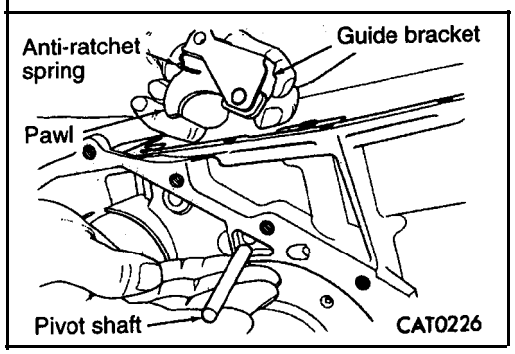

(63) **Remove** pivot shaft **and guide** bracket.

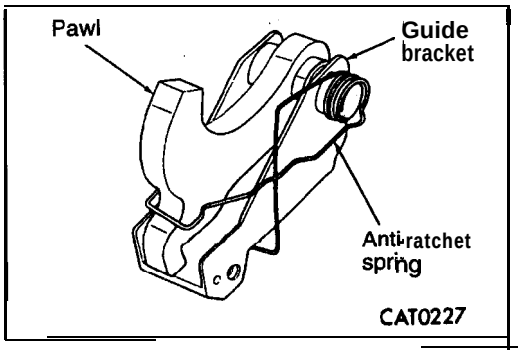

- Guide bracket' (assembled)

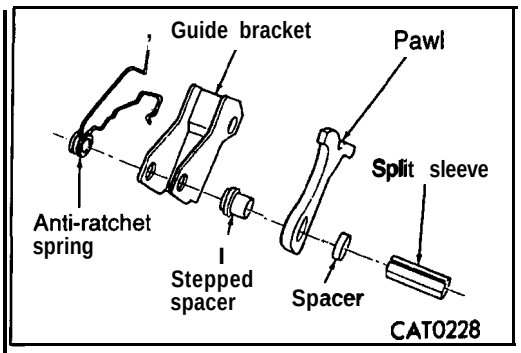

- Guide bracket (disassembled)

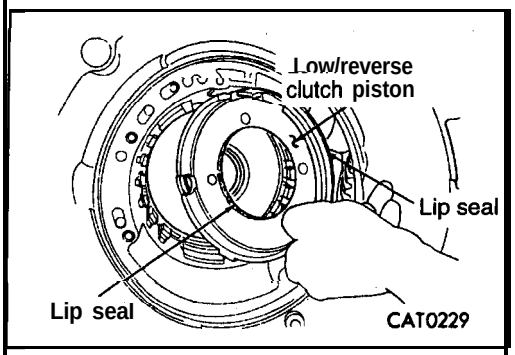

(64) **Remove** low/reverse clutch piston.

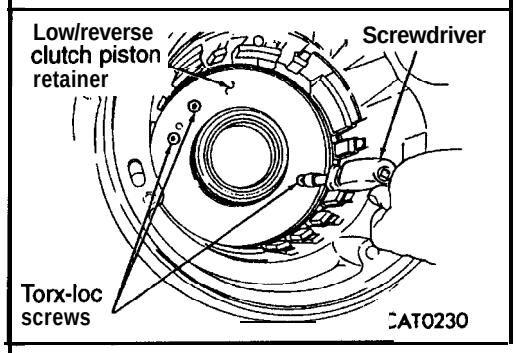

(65) **Remove Torx-loc** screws **attaching** low/reverse **clutch** piston retainer.

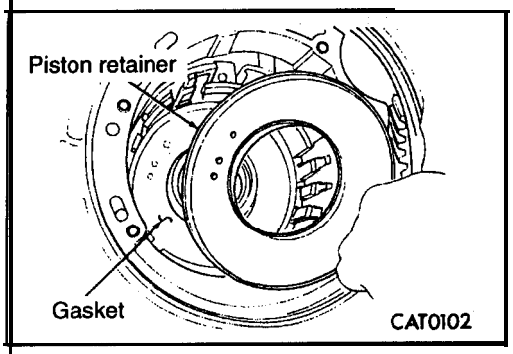

(66) **Remove low/reverse clutch piston retainer.**

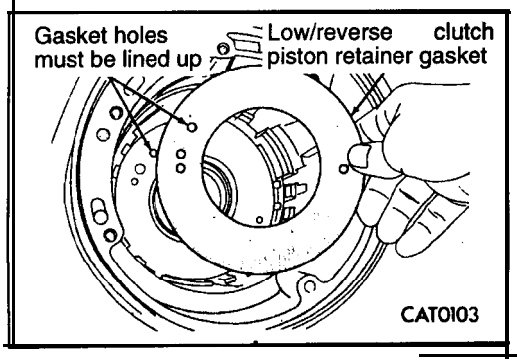

(67) **Remove** low/reverie clutch piston retainer gasket.

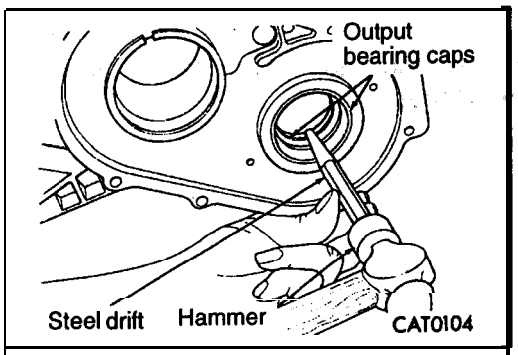

(68) Drive out "output bearing inner cup with a steel drift and hammer.

Caution

Drift bearing cup all the way,. around.

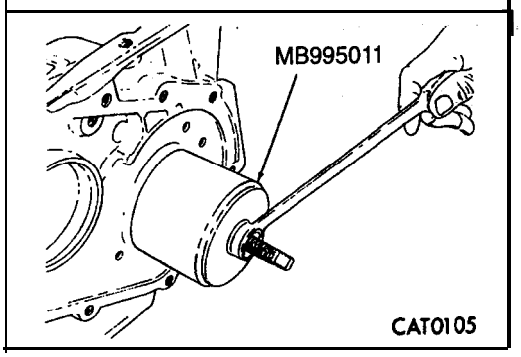

(69) Remove output bearing outer cup with Bearing Cup Remover MB995011.

REASSEMBLY

23310100012

(1) Install both output bearing cups using Bearing Installer MB995004 and wrenches.

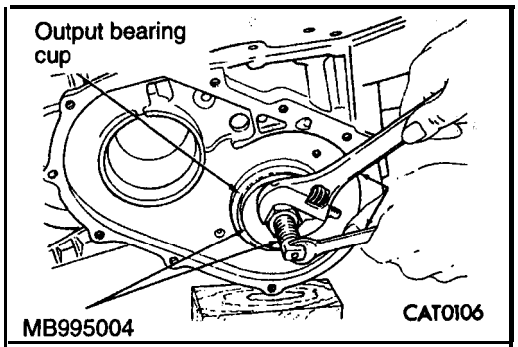

(2) Install low/reverse clutch retainer gasket.

Caution
Be sure to align gasket holes.

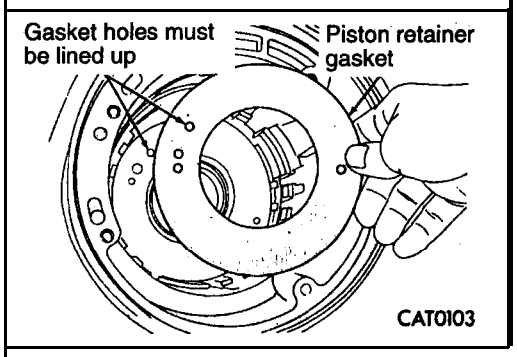

(3) Install low/reverse clutch piston retainer.

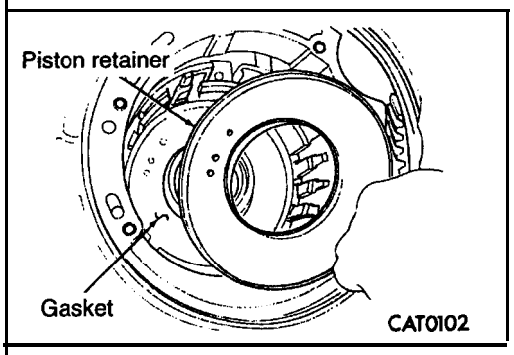

(4) install Torx-loc screws attaching low/reverse clutch piston retainer.

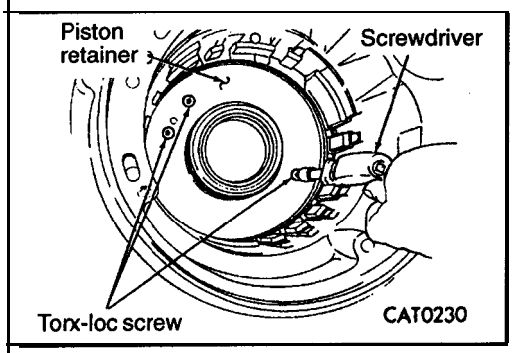

(5) Install low/reverse clutch piston.

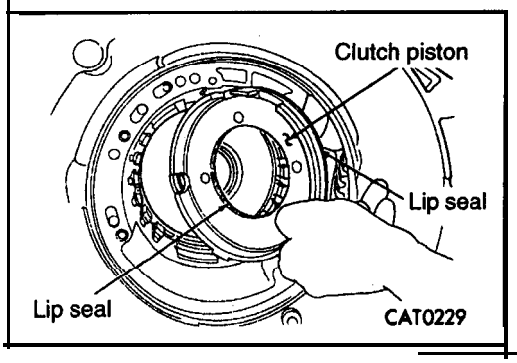

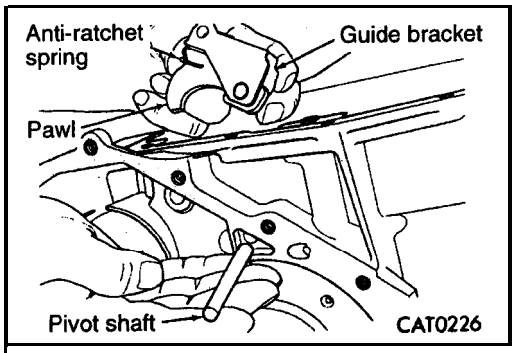

(6) Install pivot shaft and guide bracket.

Caution
Be sure that guide bracket and split sleeve touch the rear of the case.

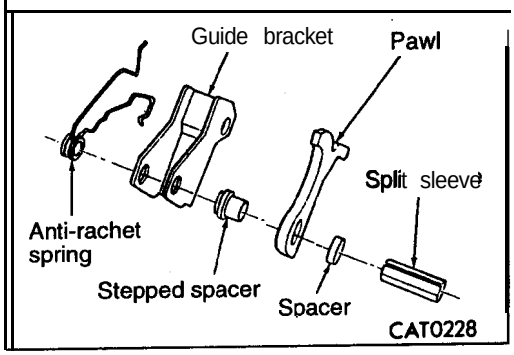

- Guide bracket (disassembled)

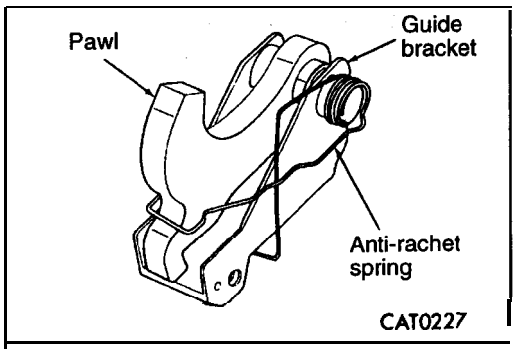

- Guide bracket (assembled)

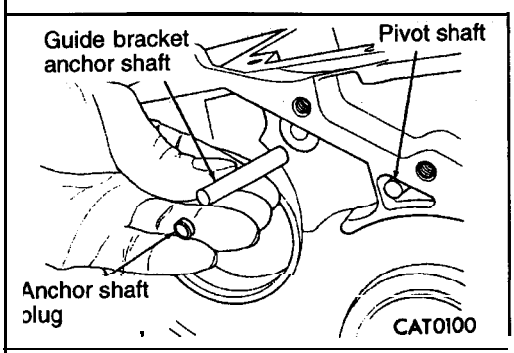

(7) Install guide bracket anchor shaft and plug.

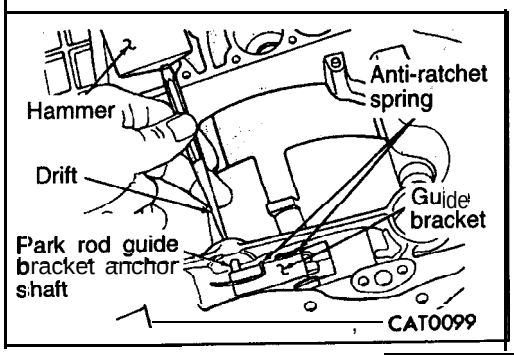

(8) Install park rod guide bracket anchor shaft with a hammer and drift.

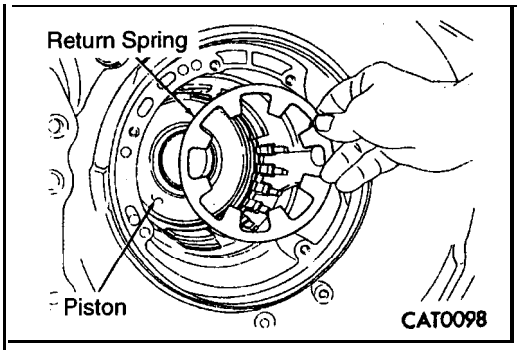

(9) Install low/reverse piston return spring.

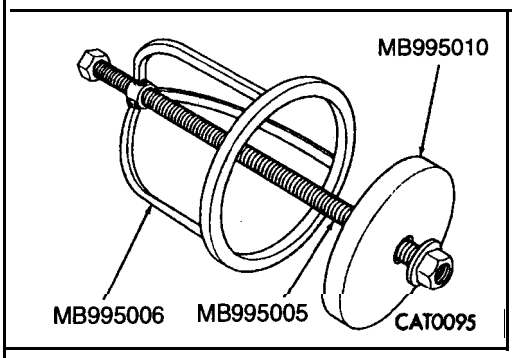

(IO)Use center bolt of Spring Compressor **MB995005,** Spring Compressor **MB995006** and Disc **MB99501** 0 to assemble low/reverse spring compressor tool.

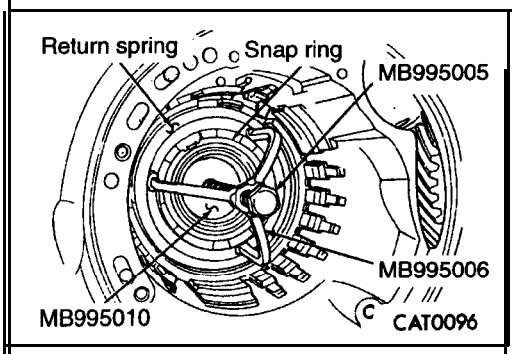

(11) Install compressor tool to transaxle as shown to compress low/reverse piston assembly.

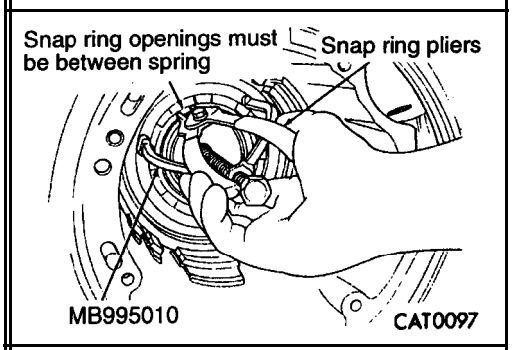

(12)Install snap ring with snap ring pliers.

NOTE
Be sure to place the opening between-spring levers.

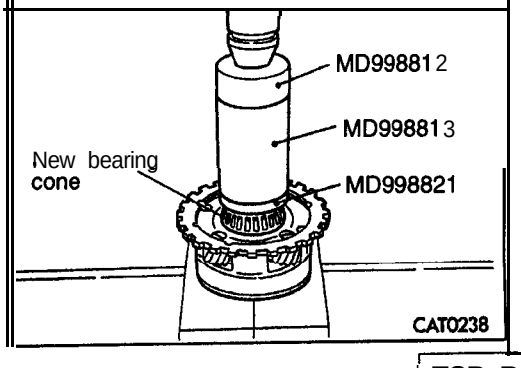

(13)Install rear carrier bearing cone,,. press onto rear carrier using Installer Cap, **MD99881** 2, **Installer-100, MD998813** and Installer Adapter **(44), MD998821.**

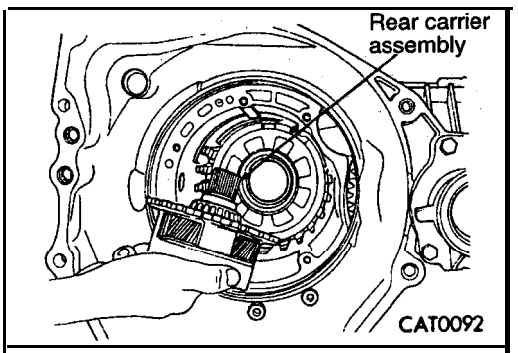

(14) **Install** rear carrier assembly.

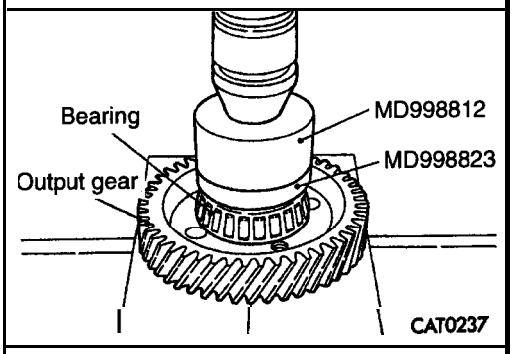

(15) **Install** bearing, press onto output gear using Installer Cap **MD998812** and Installer Adapter (48) **MD998823.**

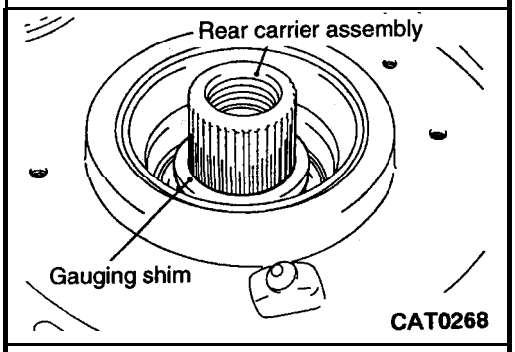

(16) **Install** a 4.50 mm **(.1772** in.) "test" shim on the rear carrier assembly hub, using grease to hold the shim in place.

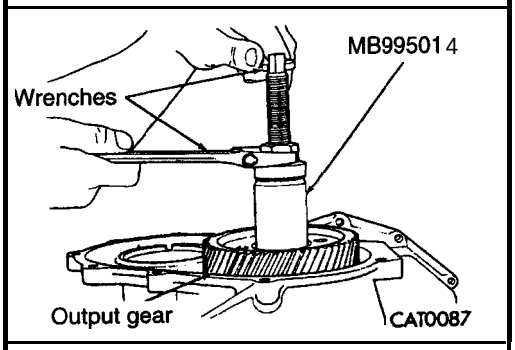

(17) **Install** output gear using Gear Installer **MB995014** and two **wrenches.**

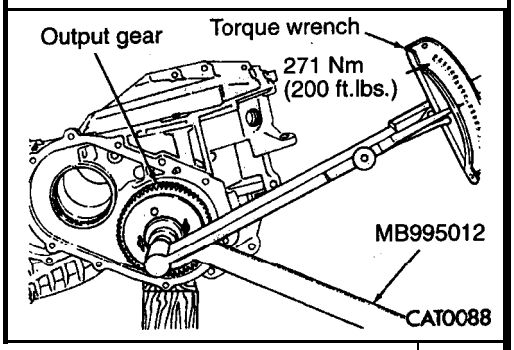

(18) **Tighten** output gear bolt to 271 Nm (200 **ft.lbs.)** while holding output gear with Holder **MB995012.**

Caution
Original retaining bolt must not be re-used. Always use a new retaining bolt when reassembling.

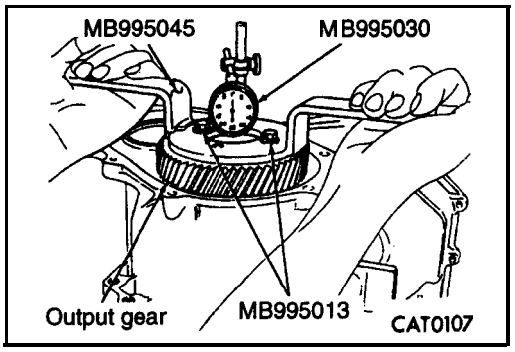

(19) Install Dial Indicator Set MB995030 with Fixture MB995045 and Special Bolts MB995013.
(20) Push and pull the gear while rotating back and forth to ensure seating of the bearing rollers.
(21) Measure output gear end play.
(22) Once bearing end play has 'been determined, refer to the Output Gear Bearing Shim, Chart for the required shim.

OUTPUT GEAR BEARING SHIM CHART

End play with 4.50 mm (.1772 in.) "test" shim installed		Required Shim	
mm	in.	mm	in.
0.05	.0020	4.42	.1740
0.08	.0031	4.38	.1724
0.10	.0039	4.38	.1724
0.13	.0051	4.34	.1709
0.15	.0059	4.30	.1693
0.18	.0071	4.30	.1693
0.20	.0079	4.26	.1677
0.23	.0091	4.22	.1661
0.25	.0098	4.22	.1661
0.28	.0110	4.18	.1646
0.30	.0118	4.14	.1630
0.33	.0130	4.14	.1630
0.36	.0142	4.10	.1614
0.38	.0150	4.10	.1614

End play with 4.50 mm (.1772 in.) "test" shim installed		Required Shim	
mm	in.	mm	in.
0.41	.0161	4.06	.1598
0.43	.0169	4.02	.1583
0.46	.0181	4.02	.1583
0.48	.0189	3.98	.1567
0.51	.0201	3.94	.1551
0.53	.0209	3.94	.1551
0.56	.0220	3.90	.1535
0.58	.0228	3.90	.1535
0.61	.0240	3.86	.1520
0.64	.0252	3.82	.1504
0.66	.0260	3.82	.1504
0.69	.0272	3.78	.1488
0.71	.0280	3.74	.1472
0.74	.0291	3.74	.1472
0.76	.0299	3.70	.1457
0.79	.0311	3.66	.1441

TSB Revision

mm	in.	mm	in.
0.81	.0319	3.66	.1441
0.84	.0331	3.62	.1425
0.86	.0339	3.62	.1425
0.89	.0350	3.58	.1409
0.91	.0358	3.54	.1394
0.94	.0370	3.54	.1394
0.97	.0382	3.50	.1378

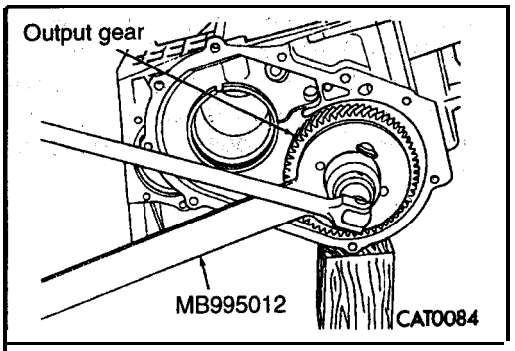

(23) **While** holding output gear with Holder **MB995012,** loosen output gear bolt and washer.

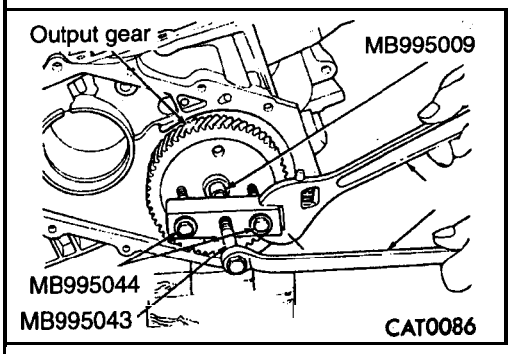

(24) **Install** Gear Puller **MB995043** with Bolts **MB995044** and Thrust Button **MB995009** to output gear. Turn putter center bolt clockwise to remove gear.

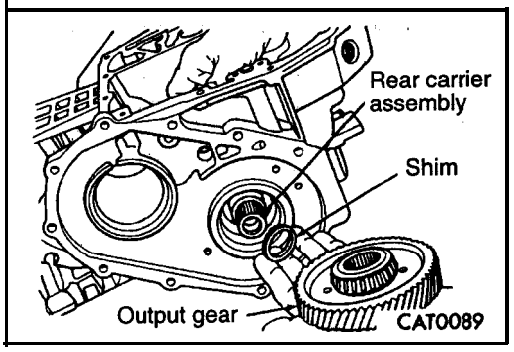

(25) **Remove** the "test" shim and install the proper shim.

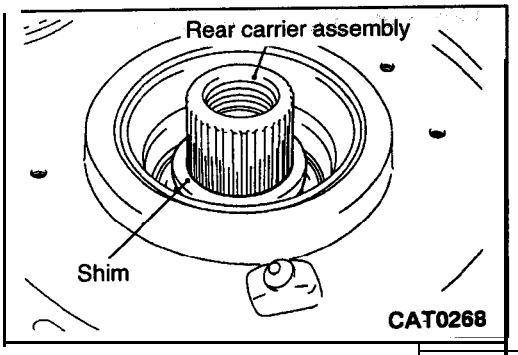

(26) **Use** grease to hold the shim in place. **Install** the output gear.

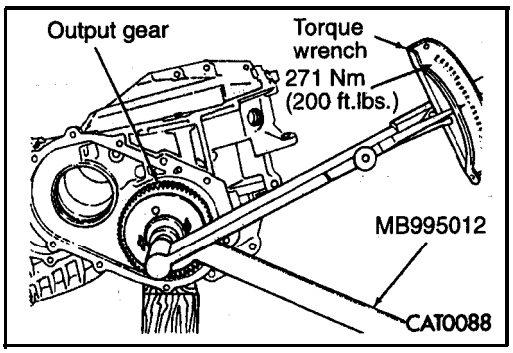

(27) Tighten output gear bolt to 271 Nm (200 ft.lbs.) while holding,. output gear with Holder MB99501 2.

Caution
Original retaining bolt must not be re-used. Always use a new retaining bolt when reassembling.

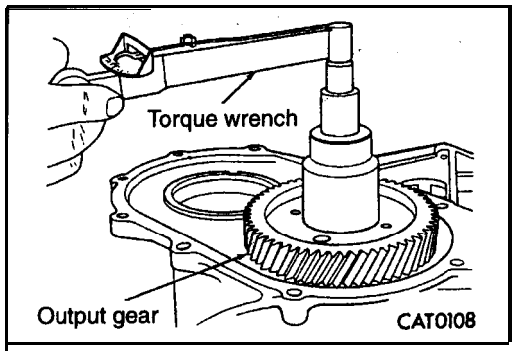

(28) Using torque wrench, check the turning torque. The torque should be between 0.34 to 0.90 Nm (3 to 8 in. lbs.). If the turning torque is too high, install a 0.04 mm (.0016 in.) thicker shim. If the turning torque is too low, install a 0.04 mm (.0016 in.) thinner shim. Repeat until the proper turning torque is obtained.

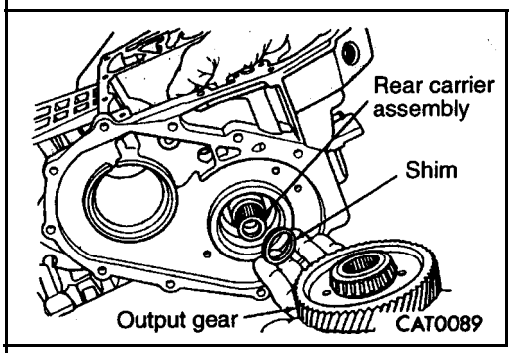

(29) Install output gear and proper shim."

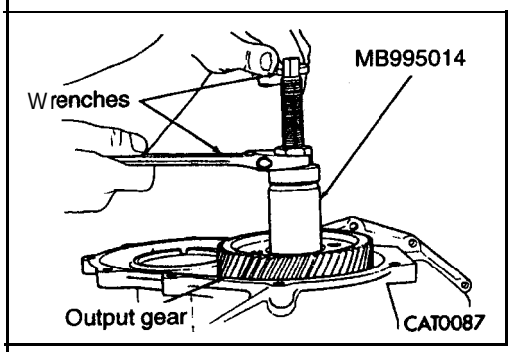

(30) Install output gear, using Gear Installer MB995014 'and two wrenches.

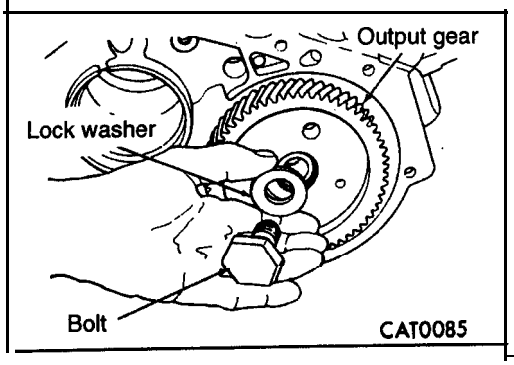

(31) Install output gear bolt and coned lock washer.

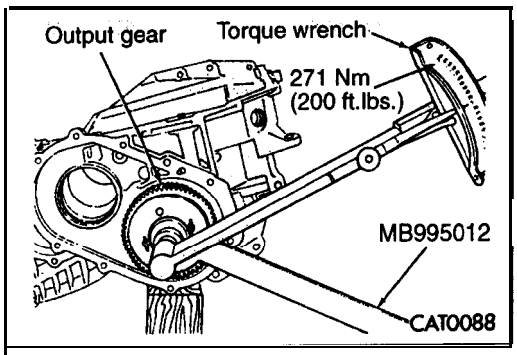

(32) Tighten output gear bolt to 271 Nm (200 ft.lbs.) while holding output gear with Holder MB995012.

Caution
Always use new retaining bolt. Old retaining bolt must not be reused.

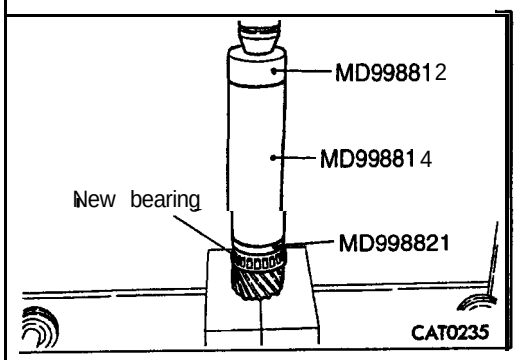

(33) Install transfer shaft bearing press onto transfer shaft using Installer Cap MD998812 Installer-200 MD998814 and Installer Adapter (44) MD998821.

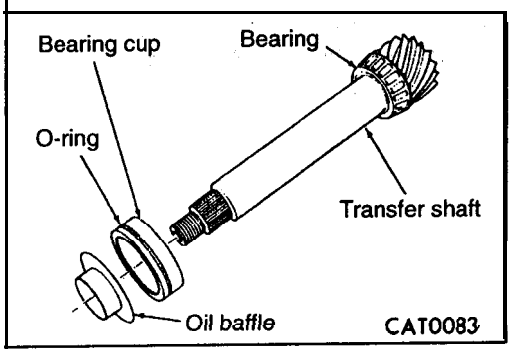

(34) Install oil baffle and bearing cup 'from transfer shaft.

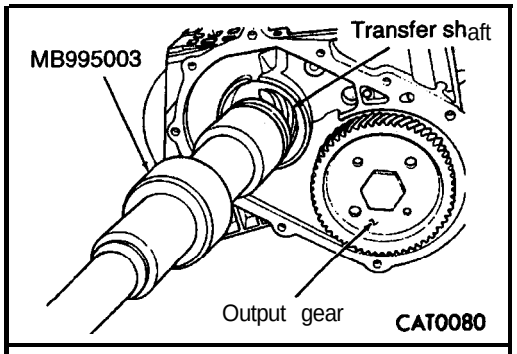

(35) Install transfer shaft' with Installer/Remover MB995003.

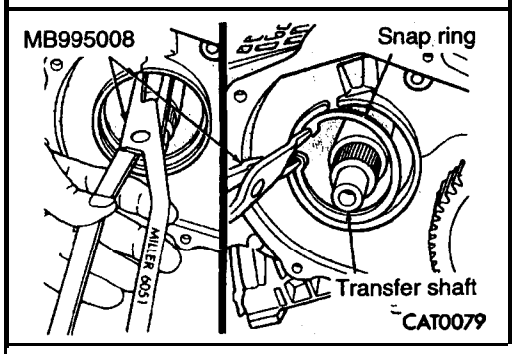

(36) Install transfer shaft bearing snap ring with Snap Ring Pliers MB995008.

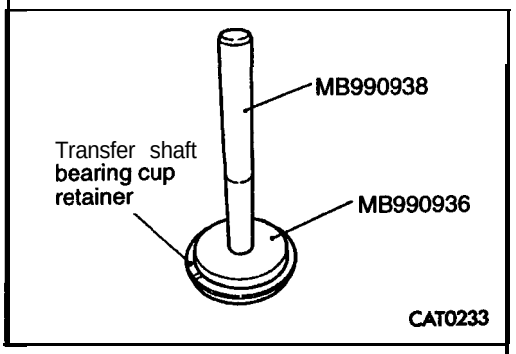

(37) Install transfer shaft gear bearing cup, use Installer Adapter MB990936 and Installer Bar MB990938.

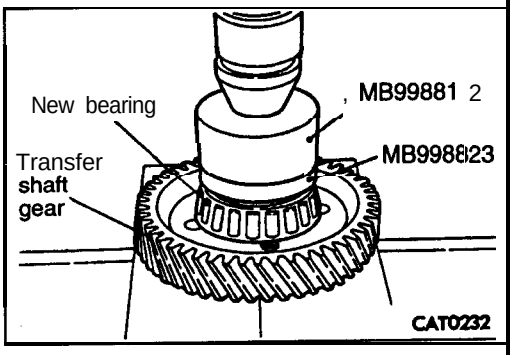

(38) Install bearing, press in using Installer Cap MD998812 and Installer Adapter (48) MD998823.

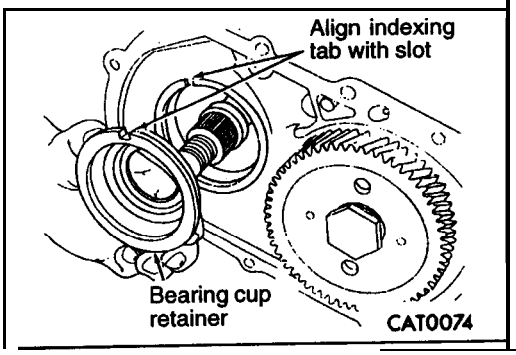

(39) Install bearing cup retainer.

NOTE
Align indexing tab with slot.

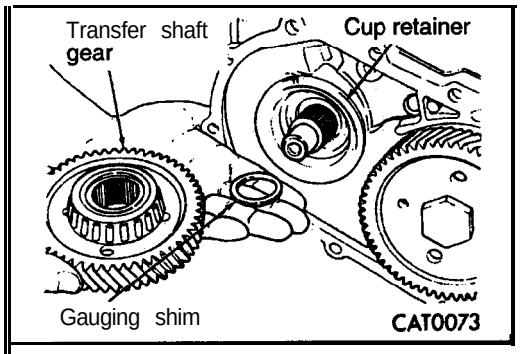

(40) **Install** a 4.66 mm (**.1835** in.) "test" shim on the transfer shaft.

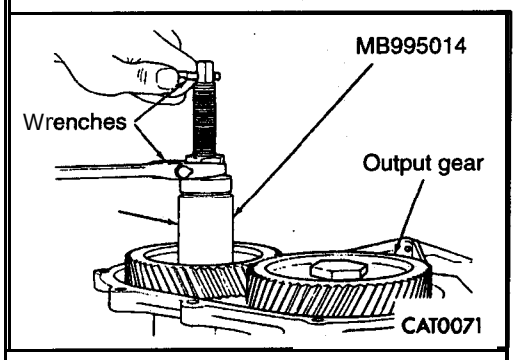

(41) **Install** 'transfer shaft gear, using Gear Installer **MB995014** and two wrenches as shown.

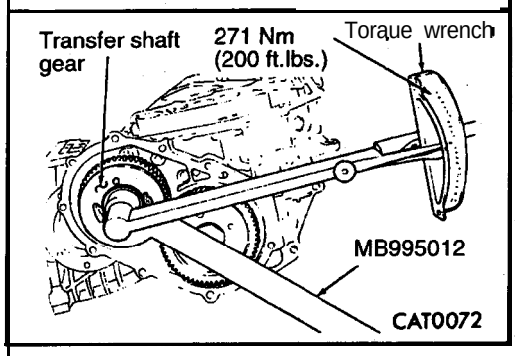

(42) **Tighten** transfer shaft gear nut to 271 Nm (200 **ft.lbs.)** while holding transfer shaft gear with Holder **MB995012.**

Caution
Original retaining nut must not be re-used. Always use a new retaining nut when reassembling.

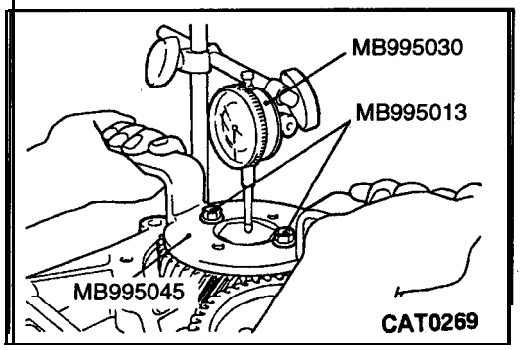

(43) **Install** Dial Indicator Set **MB995030** with Fixture **MB995045** and Special Bolts **MB995013.**
(44) **Push** and pull the gear while rotating back and forth to ensure seating of the bearing rollers.
(45) **Measure** transfer shaft gear end play.
(46) **Once** bearing end play has been determined, refer to the Transfer Bearing Shim Chart for the required shim.
(47) **End** play should be between 0.05 to 0.10 mm (**.0020** to 0039 in.).
If end play is too high, install a 0.04 mm (**.0016** in.) thinner shim. If end play is too low, install a 0.04 mm (**.0016** in.) thicker shim combination. Repeat until 0.05 to 0.10 mm (0.0020 to **.0039** in.) end play is obtained.

TRANSFER GEAR BEARING SHIM CHART

End play with 4.66 mm (.1835 in.) "test" shim installed		Required Shim	
mm	in.	mm	in.
0.05	.0020	4.66	.1835
0.08	.0031	4.62	.1819
0.10	.0039	4.58	.1803
0.13	.0051	4.58	.1803
0.15	.0059	4.54	.1787
0.18	.0071	4.50	.1772
0.20	.0079	4.50	.1772
0.23	.0091	4.46	.1756
0.25	.0098	4.46	.1756
0.28	.0110	4.42	.1740
0.30	.0118	4.38	.1724
0.33	.0130	4.38	.1724
0.36	.0142	4.34	.1709
0.38	.0150	4.30	.1693
0.41	.0161	4.30	.1693
0.43	.0169	4.26	.1677
0.46	.0181	4.22	.1661
0.48	.0189	4.22	.1661
0.50	.0197	4.18	.1646
0.53	.0209	4.18	.1646
0.58	.0220	4.14	.1630
0.58	.0228	4.10	.1614
0.81	.0240	4.10	.1614
0.64	.0252	4.06	.1598
0.66	.0260	4.02	.1583
0.69	.0272	4.02	.1583
0.71	.0280	3.98	.1567
0.74	.0291	3.94	.1551
0.76	.0299	3.94	.1551
6.79	.0311	3.90	.1535
6.81	.0319	3.90	.1535
6.84	.0331	3.86	.1520
0.86	.0339	3.82	.1504
0.89	.0350	3.82	.1504
3.91	.0358	3.78	.1488
3.94	.0370	3.74	.1472
3.97	.0382	3.74	.1472
3.99	.0390	3.70	.1457
1.02	.0402	3.66	.1441
1.04	.0409	3.66	.1441
1.07	.0421	3.62	.1425
1.08	.0425	3.62	.1425
1.12	.0441	3.58	.1409

TSB Revision

End play with 4.66 mm (.1835 in.) "test" shim installed		Required Shim	
mm	in.	mm	in.
1.14	.0449	3.54	.1394
1.17	.0461	3.54	.1394
1.19	.0469	3.50	.1378
1.22	.0480	3.46	.1362
1.24	.0488	3.46	.1362
1.27	.0500	3.42	.1346
1.30	.0512	3.38	.1331
1.32	.0520	3.38	.1331
1.35	.0531	3.34	.1315
1.37	.0539	3.34	.1315
1.40	.0551	3.30	.1299
1.42	.0559	3.26	.1283
1.45	.0571	3.26	.1283
1.47	.0579	3.22	.1268

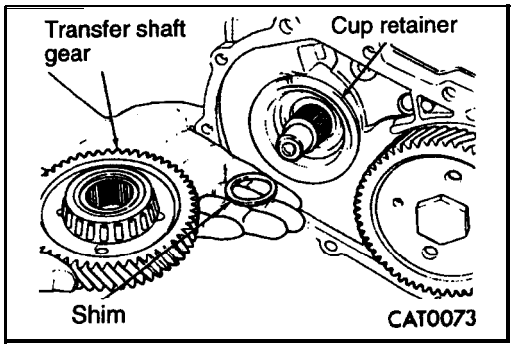

(48) Install iransfer shaft gear and proper shim.

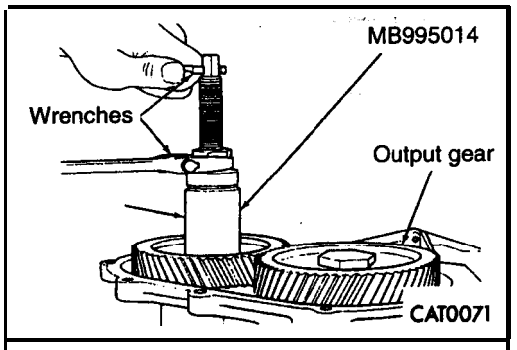

(49) Install tranbfer shaft gear, using Gear Installer MB995014 and two wrenches as shown.

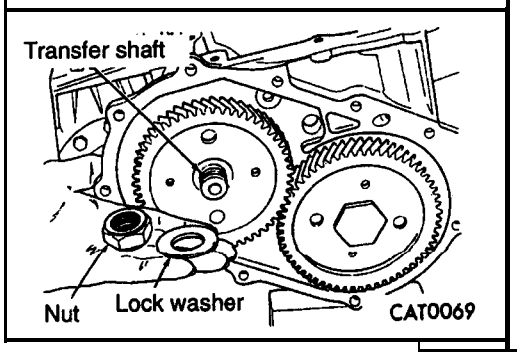

(50) Install transfer shaft gear nut and lock washer.

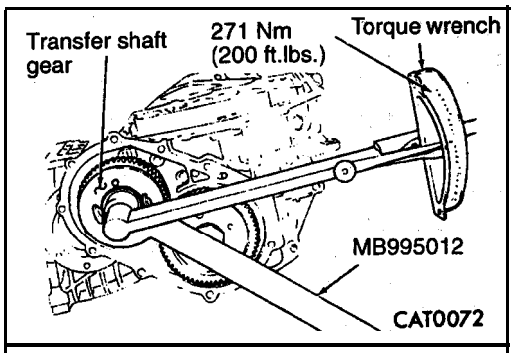

(51) **Tighten** transfer shaft gear nut to 271 Nm (200 **ft.lbs.)** while holding transfer shaft gear with Holder **MB995012.**

Caution
Always use new retaining nut. Never reuse old retaining nut.

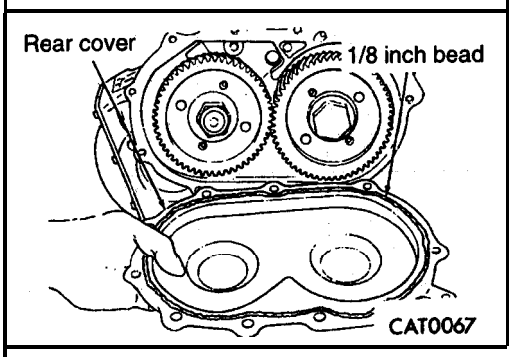

(52) Install rear cover.

NOTE
Apply a, **1/8** inch wide bead of Loctite 18718 or equivalent as shown.

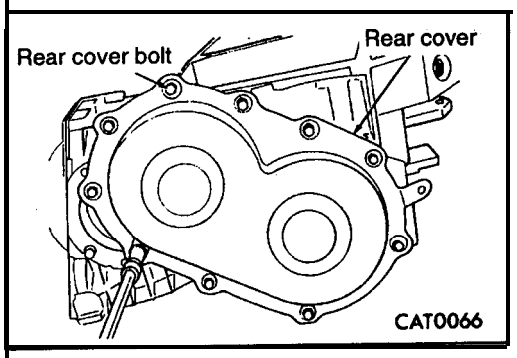

(53) **Install** rear cover' bolts.

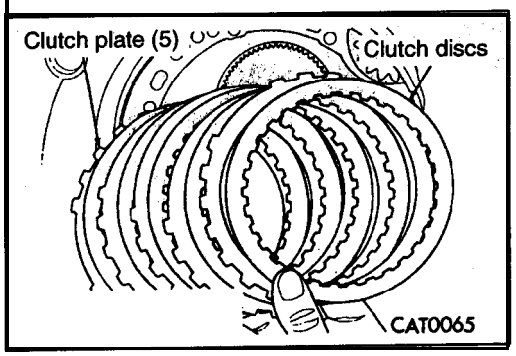

(54) **Install** low/reverse clutch' pack.

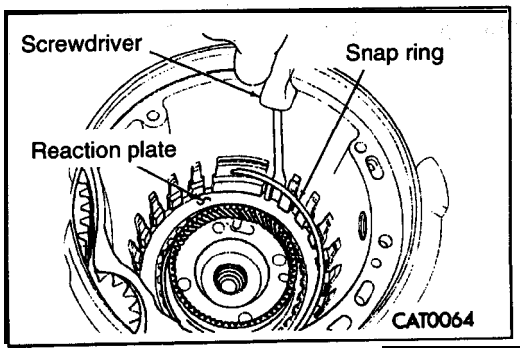

(55) **Using** a screwdriver, install low/reverse reaction plate flat snap ring.

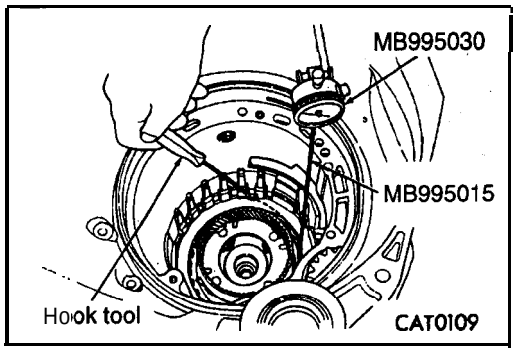

(56) **Check** clutch clearance. 'Set Dial Indicator set **up MB995030** with Dial Indicator Tip **MB995015** as **shown.** Press down on the clutch pack with finger and zero dial indicator. Raise one clutch disc with a hook tool. Read the dial indicator.

(57) **Select** the proper low/reverse reaction plate to achieve specification:
Low/reverse clutch pack clearance is 1.04 to 1.65 mm (.0409 to .0650 inch).

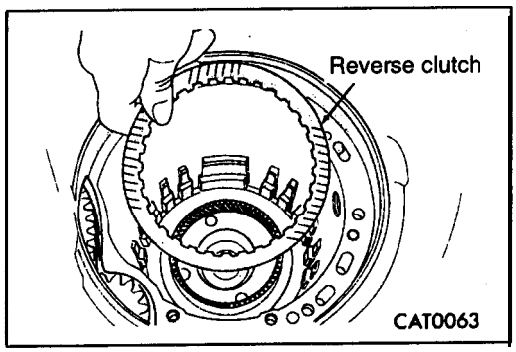

(58) **Install** last **disc** from **low/reverse** clutch.

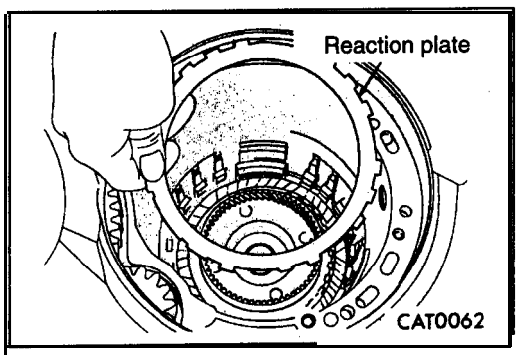

(59) **Install** low/reverse reaction plate with its flat side facing **up.**

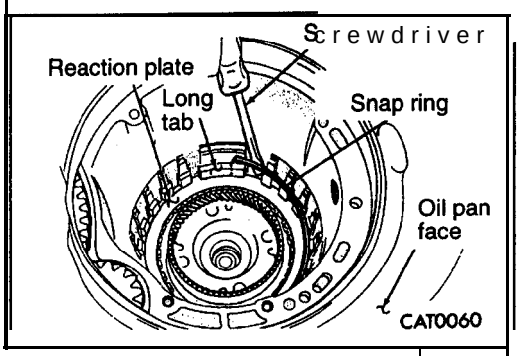

(60) **Install** new tapered snap ring with a screwdriver as shown with its tapered side facing up.

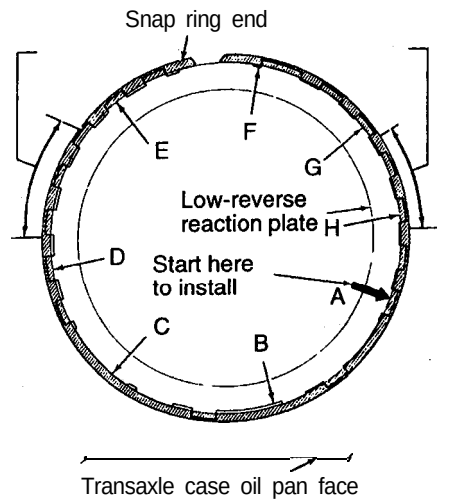

Sequence
A thru H= Install

NOTE
- Do not reuse the old snap. ring.
- When installing a new **snap ring,** position the snap ring ends as shown.
- Follow A – H sequence for best results.

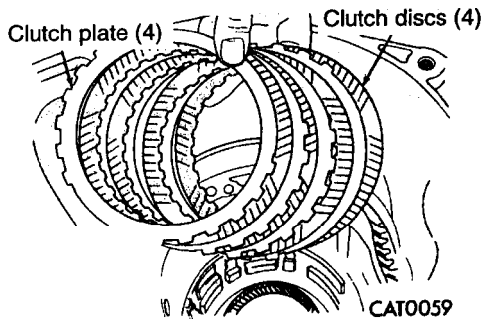

(61) Install 2/4 clutch pack.

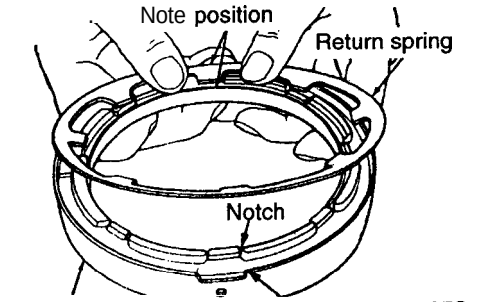

(62) Note correct position of clutch return **spring** in relation with clutch retainer.
Line up the **piston** spring cut-outs with the long tab and notch.

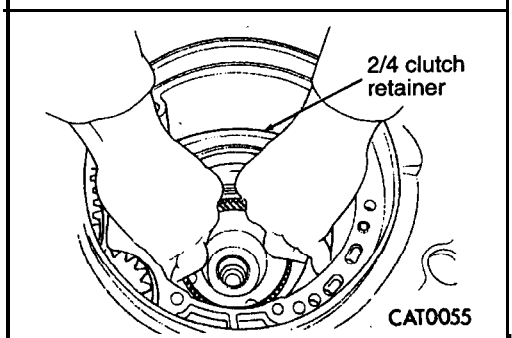

(63) Install 2/4 clutch retainer.

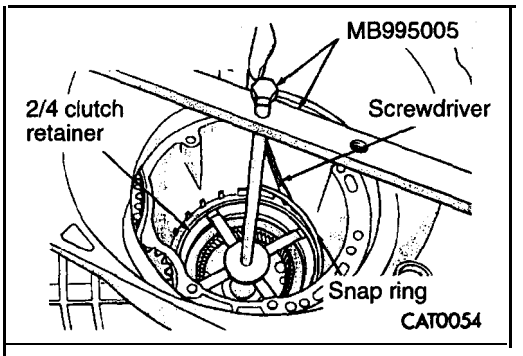

(64) **Install** Spring Compressor **MB995005.**
Using a screwdriver, install the **2/4 clutch** retainer snap ring.

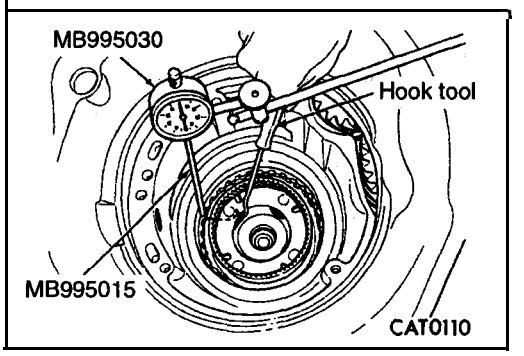

(65) **Check** clutch clearance. Set up Dial Indicator set **MB995030** with Dial Indicator **Tip MB995015** as shown. Press down on the clutch pack with finger and zero dial indicator. Raise one clutch disc with **a** hook tool. Read the dial indicator.

(66) **The 2/4** clutch pack clearance is 0.76 to 2.64 mm **(.0299** to **.1039** inch). If not within specifications, the clutch is not assembled properly. There is no adjustment for the **2/4** clutch clearance.

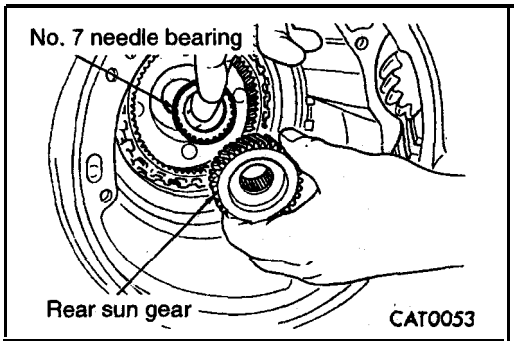

(67) **Install** rear sun gear and No. 7 needle **bearing.**

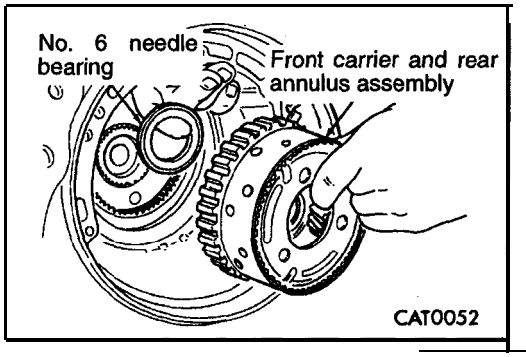

(68) **Install** front carrier and rear **annulus** assembly, push in and twist.

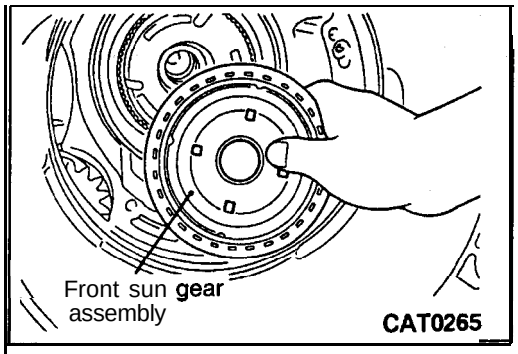

(69) Install front sun gear assembly.

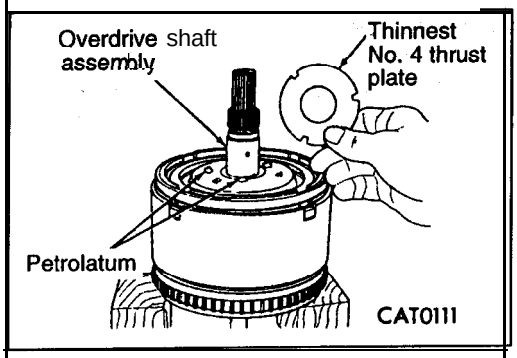

(70) To determine the proper thickness of the No. 4 thrust plate, select the thinnest No. 4 "test" thrust plate; Using, petrolatum to hold thrust plate in position,, install input clutches assembly. Be sure the 'input clutches assembly is completely seated.

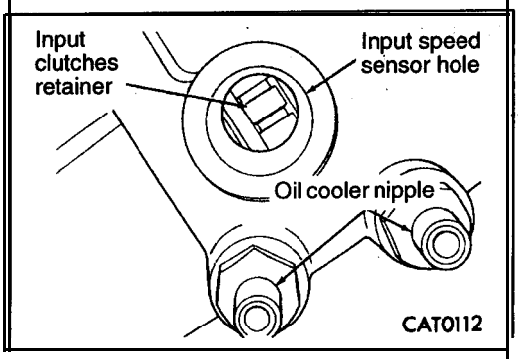

Caution
if view through input speed sensor hole is not as shown above, the input clutches assembly is not seated properly.

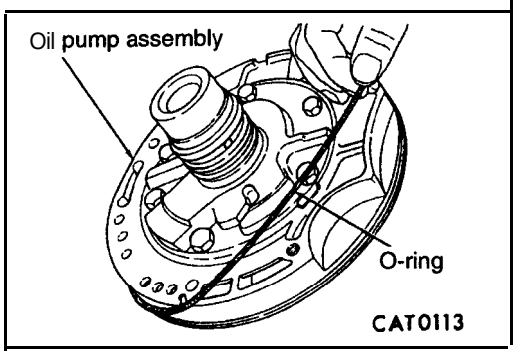

(71) Remove the oil pump O-ring. You can install and remove the oil pump and gasket very easily to select the proper No. 4 thrust plate.

Caution
Be sure to install O-ring on oil pump after selecting the proper No. 4 thrust plate.
Temporarily secure oil pump with 2 oil pump bolts.
Insert a small bolt into end of input shaft.
Measure input shaft end play.
If end play readings are not within specifications, the transaxle assembly. will be damaged.

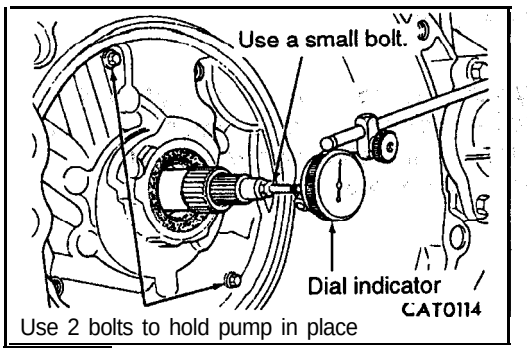

(72) Input shaft end play must be 0.13 to 0.64 mm (.0051 to .0252 inch). Subtract end play specifications from end play readings. Add the result to "test" shim to select proper shim.

For example if end play reading is 1.40 mm (.0551 inch), subtract end play specifications. 1.40 mm (.0551 inch) – [.13 mm (.0051 inch) to 0.64 mm (.0252 inch)] = 1.27 mm to 0.76 mm (.0500 inch to .0299 inch), Add "test" shim. 0.76 mm to 1.27 mm (.0299 inch to .0500 'inch) + 0.81 mm (.0319 inch) = 1.75 mm to 2.08 mm (.0618 inch to .0819 inch). 'Select shim closest to mid paint or 1.69 mm to 1.91 mm (.0665 inch to .0752 inch).

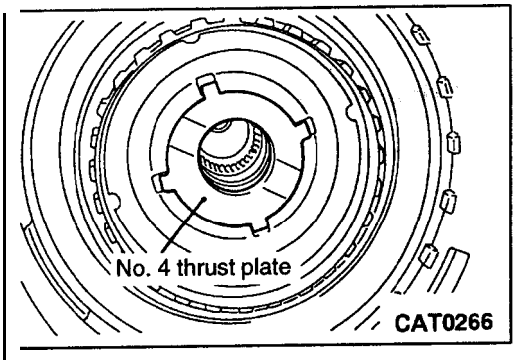

(73) Install No. 4 thrust. plate.

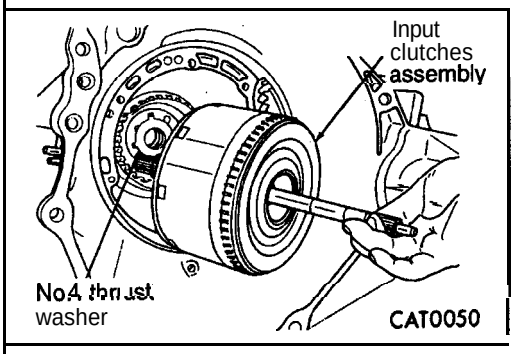

(74) Install input clutches assembly.

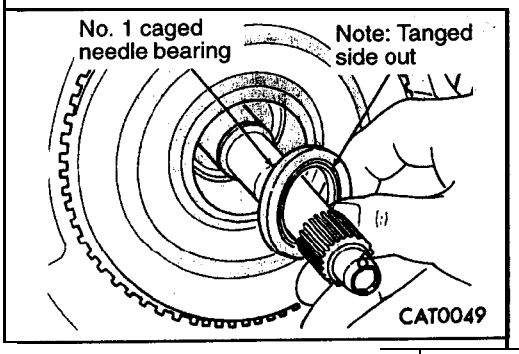

(75) Install No. 1 caged needle bearing with its tanged side facing out.

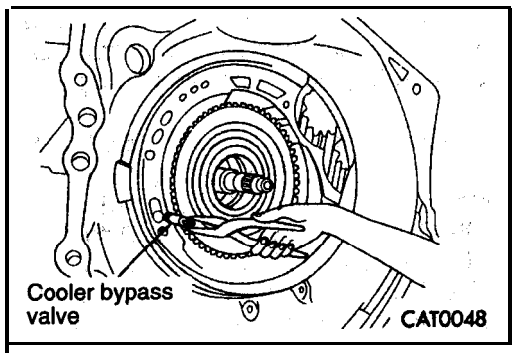

(76) Install cooler bypass valve.

Caution
The cooler bypass valve must be replaced if a transaxle failure has occurred. Do not reuse or attempt to clean old valve. When installing bypass value, insert with O-ring end toward rear of case.

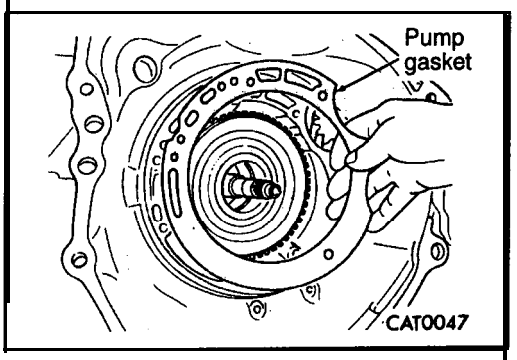

(77) Install oil pump gasket.

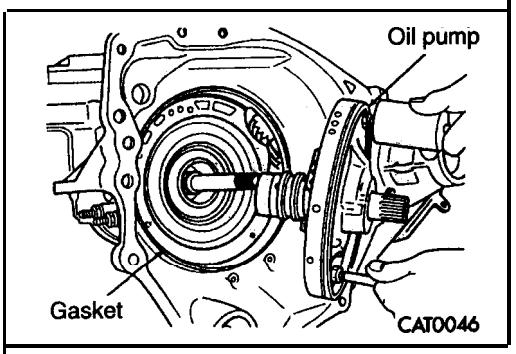

(78) Install oil pump.

Caution
Be sure oil pump O-ring Is installed.

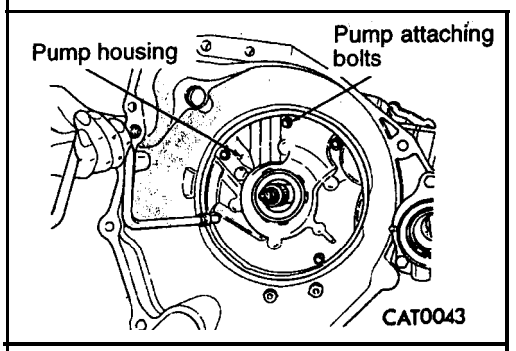

(79) Install pump attaching bolts.

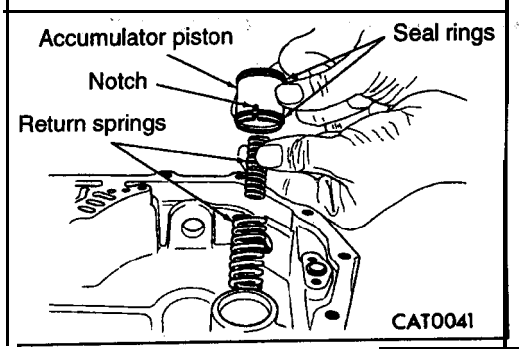

(80) Install two return springs.

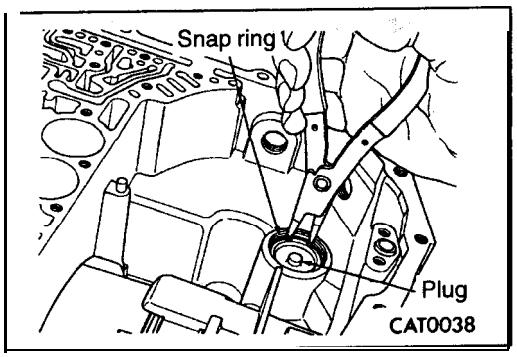

(81) Install the snap ring holding the low/reverse accumulator plug (cover) in place.

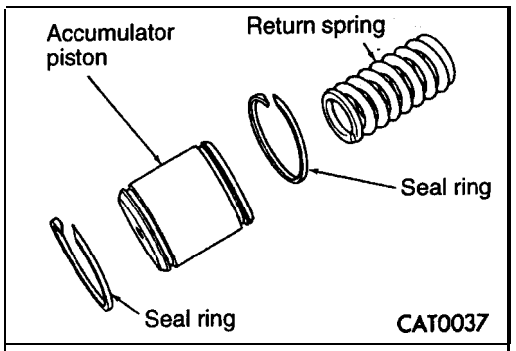

(82) Install return spring and two seal rings from the overdrive and underdrive clutch accumulator pistons.

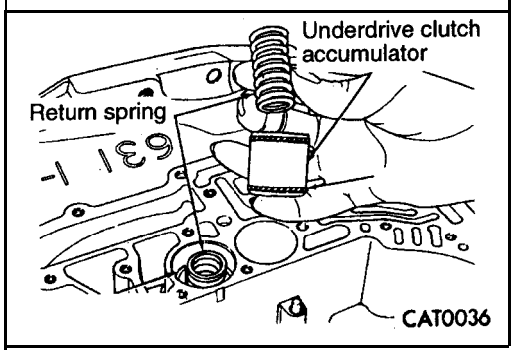

(83) Install underdrive clutch accumulator and overdrive clutch accumulator with return springs and Seal rings:

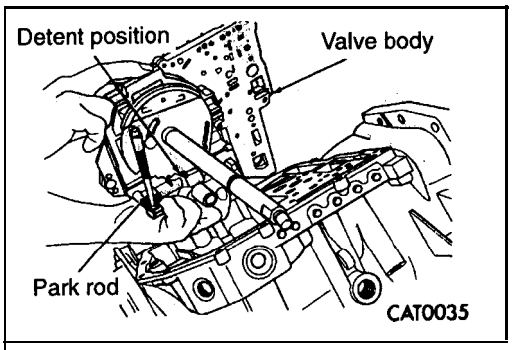

(84) Position detent as shown.

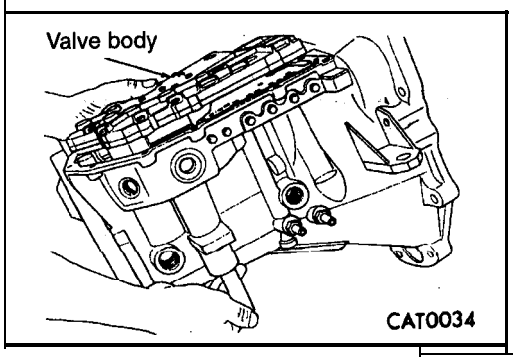

(85) Install valve body.

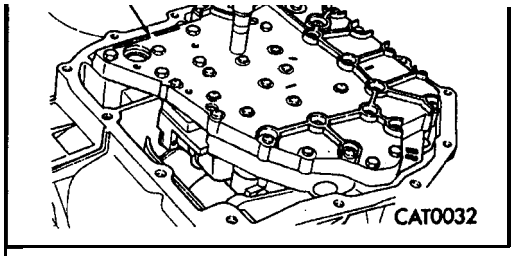

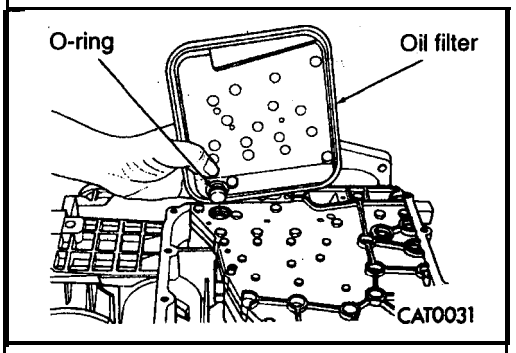

(88) **Install** oil filter.

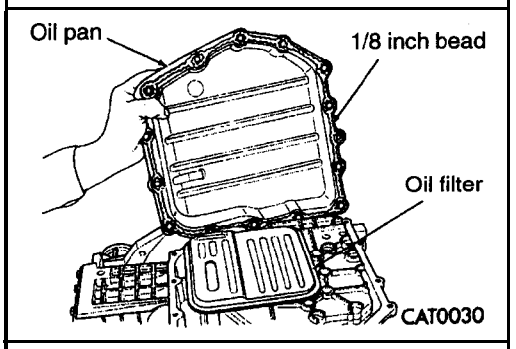

(89) **Install** oil pan.

NOTE
Apply a **1/8** inch wide bead of **Loctite 1** 8718 **or equivalent.**

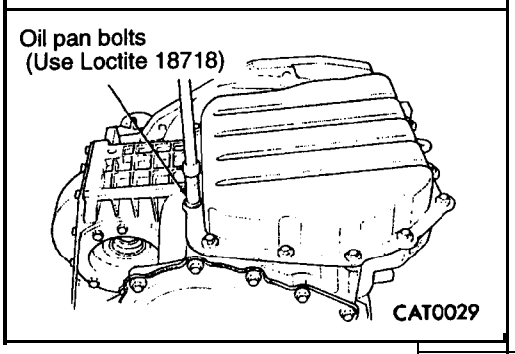

(90) **Install** oil pan bolts.

NOTE
Use **Loctite** 187 18 or equivalent **under bolt beads.**

INPUT CLUTCHES

23310120018

DISASSEMBLY

Place input clutches assembly on wood blocks or equivalent, as shown to facilitate disassembly and reassembly.

(1) Tap down reverse clutch reaction plate to remove (or install) snap ring.

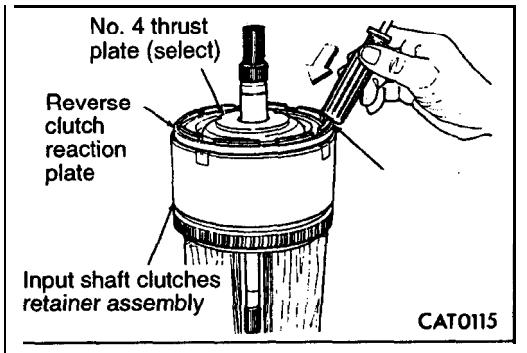

(2) Using a screwdriver, remove the reverse clutch snap ring.

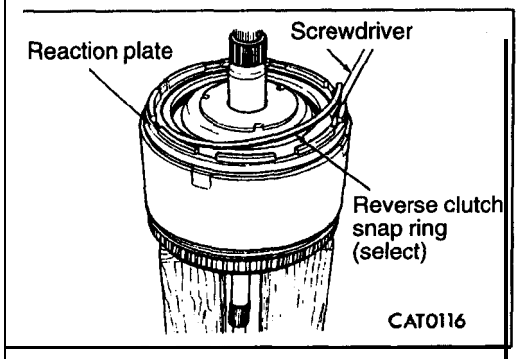

(3) Loosen reverse clutch reaction plate by prying at two locations with screwdrivers as shown.

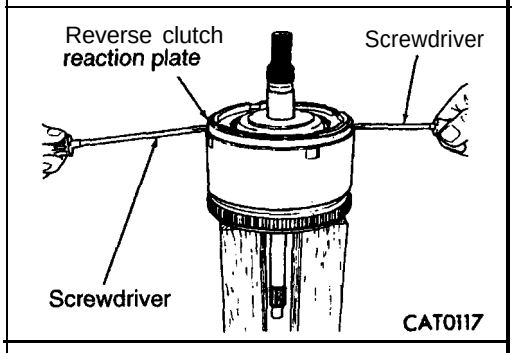

(4) Remove reverse clutch reaction plate.

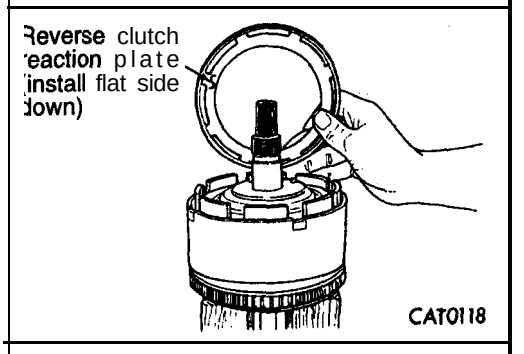

(5) Remove clutch plates and discs.
Tie plates and discs together so they go back in 'the same location.

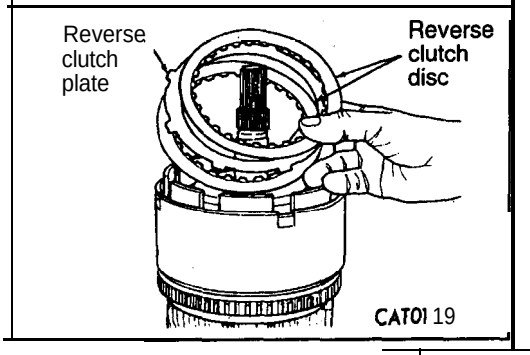

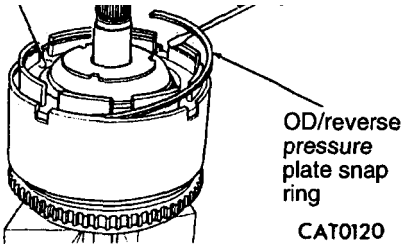

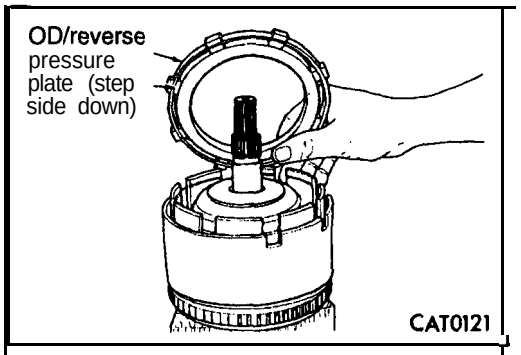

(7) Remove overdrive/reverse pressure plate.

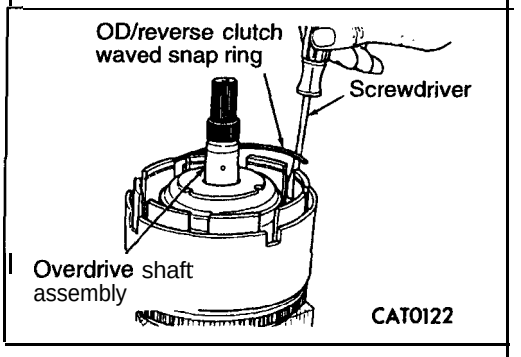

(8) Remove overdrive/reverse clutch waved snap ring with a screwdriver.

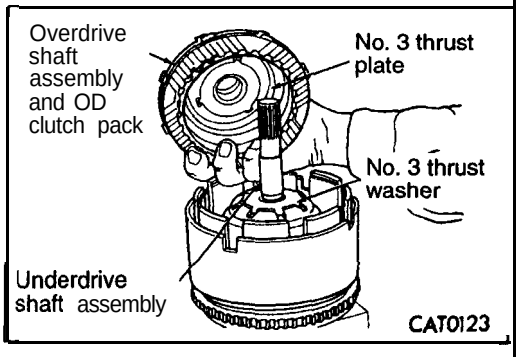

(9) Remove overdrive shaft assembly and overdrive clutch pack.

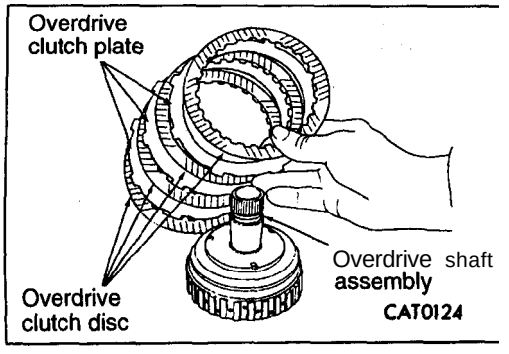

(10) Disassemble overdrive clutch pack.
Tie plates and discs together so they go back 'in 'the same location.

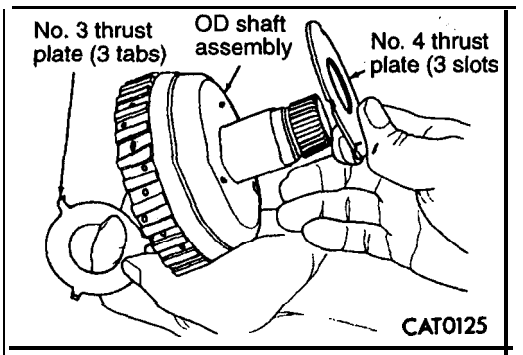

(11) Remove No, 3 and No. 4 thrust plates from overdrive shaft assembly.

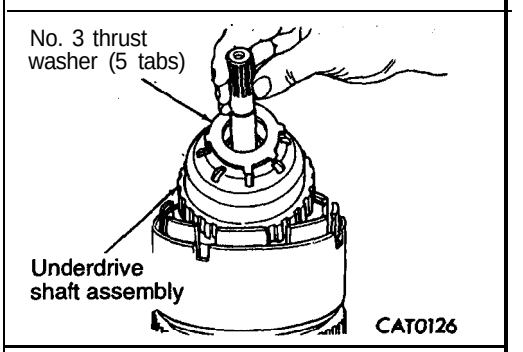

(12) Remove underdrive shaft assembly.

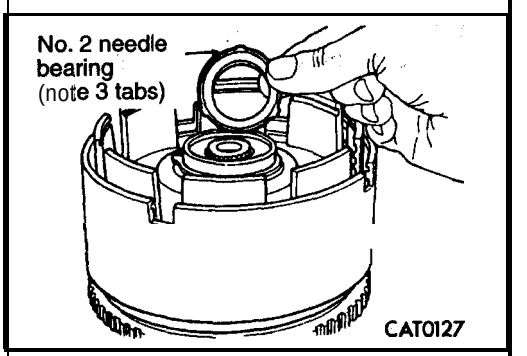

(13) Remove No. 2 needle bearing.

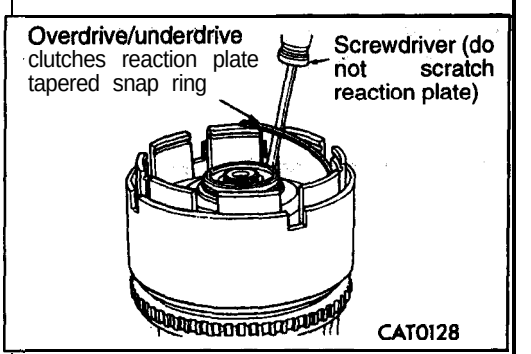

(14) Remove overdrive/underdrive clutches reaction plate tapered snap ring.
Do not scratch reaction plate.

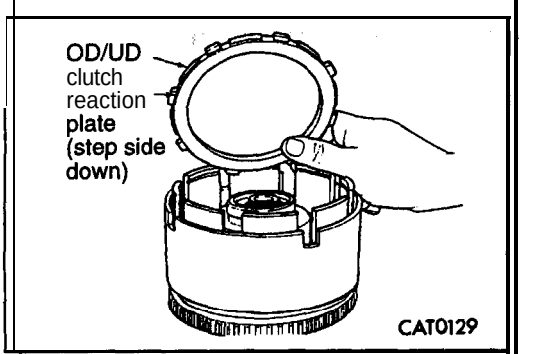

(15) Remove overdrive/underdrive clutch reaction plate.

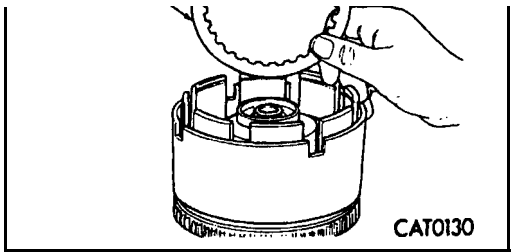

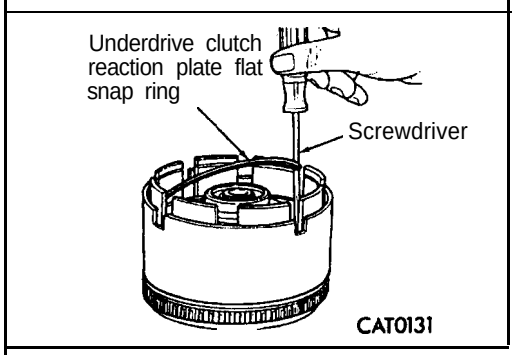

(17) Remove underdrive clutch reaction plate flat snap ring.

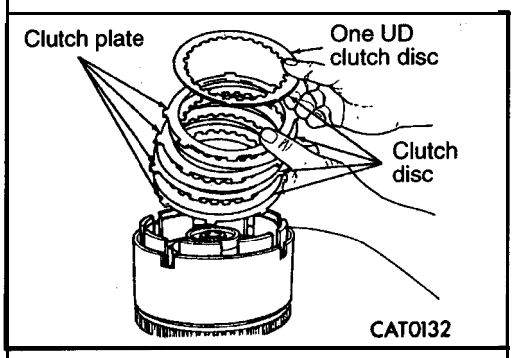

(18) Remove clutch plates and discs.
Tie together so plates and discs go back into the same location.

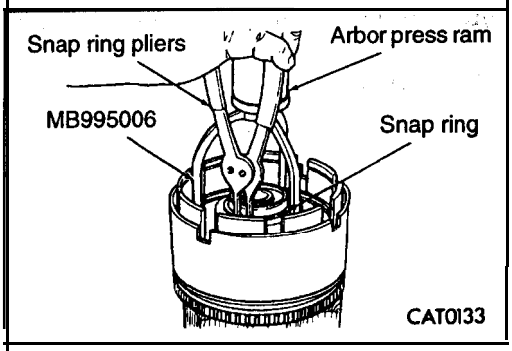

(19) Remove snap ring with snap ring pliers while compressing, return spring with Spring Compressor MB995006 and arbor press ram.

Caution
Compress return spring just enough to remove snap ring.

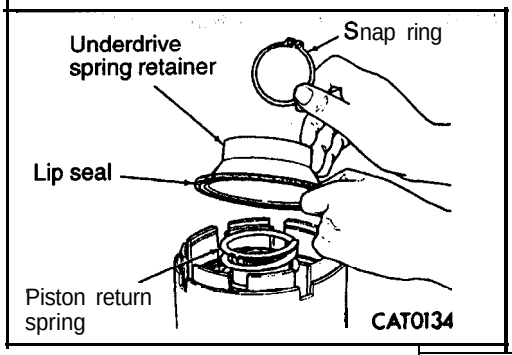

(20) Remove underdrive spring retainer and spring.

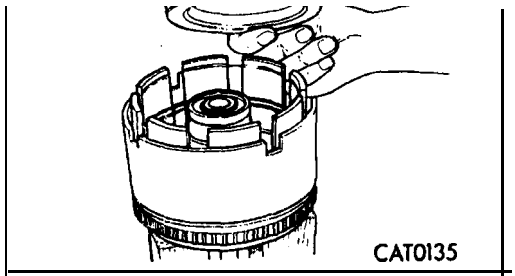

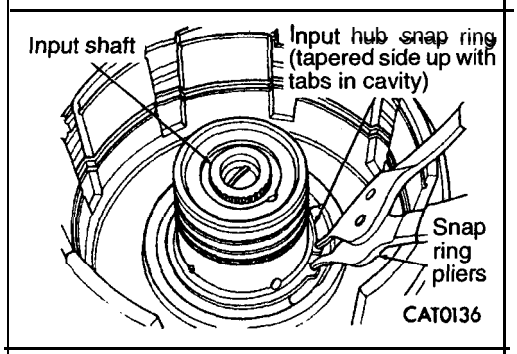

(22) Remove input hub snap ring with snap ring pliers.

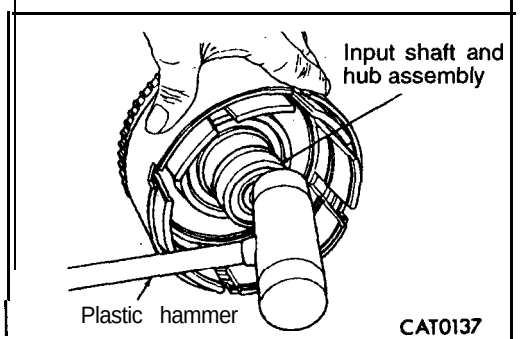

(23) Tap on input shaft and hub assembly with a plastic hammer.

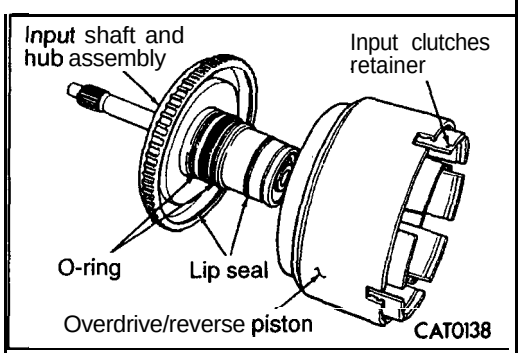

(24) Remove input shaft and hub assembly.

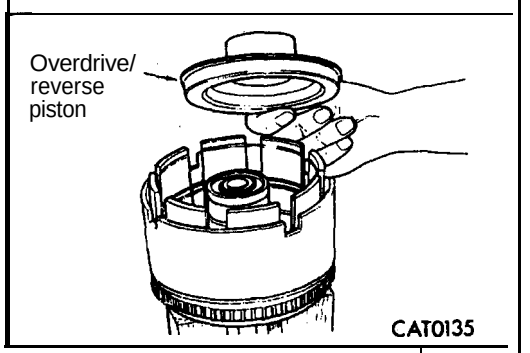

(25) Remove overdrive/reverse piston.

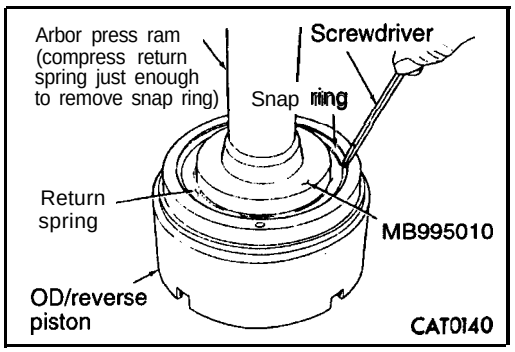

(26) **Remove** snap ring with a screwdriver while compressing return spring with Disc **MB995010 and arbor** press ram.

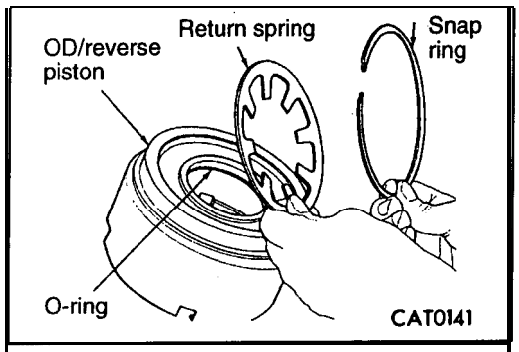

(27) **Remove** snap ring and return spring.

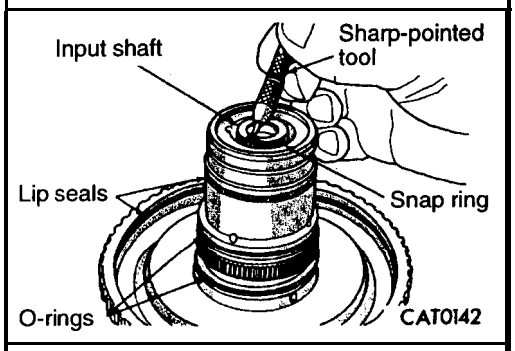

(28) **Remove** input shaft snap ring.

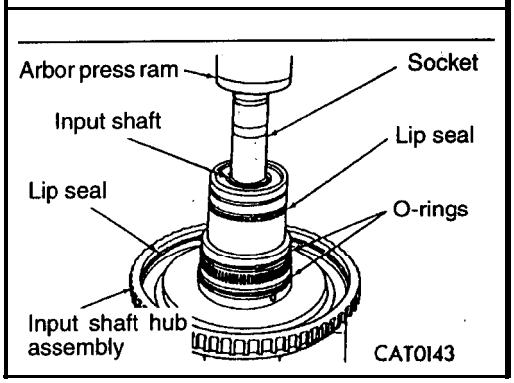

(29) **Remove** input shaft from hub.

REASSEMBLY

23310130011

Use petrolatum on all seals to ease assembly of component.

(1) Install input shaft to hub.

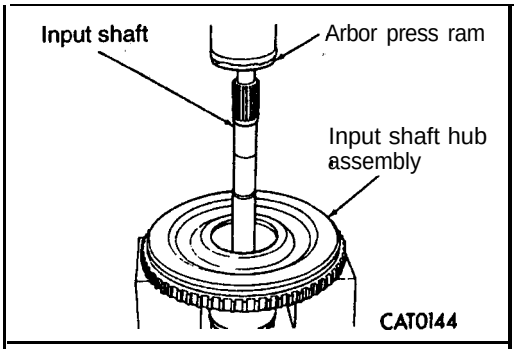

(2) Install input shaft snap ring.
Replace lip seals and O-rings.
Do not scratch bearing surface.

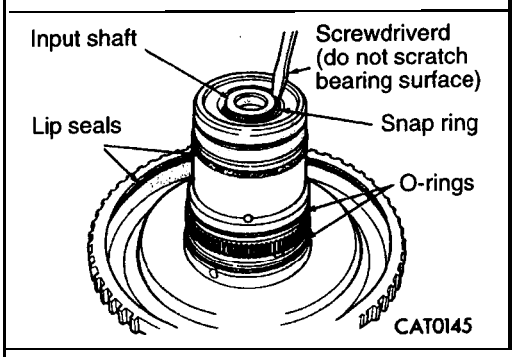

(3) Install return spring and snap ring.
Replace O-ring and lip seal of OD/reverse piston.

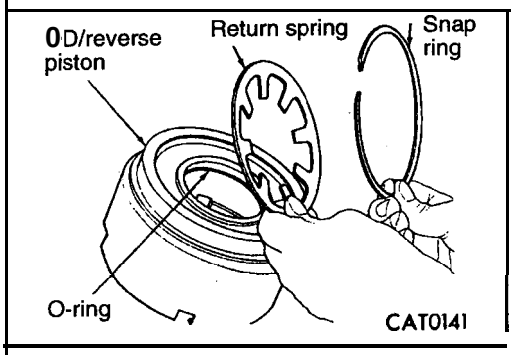

(4) While compressing return spring with Disc MB995010 and arbor press ram, install snap ring with a screwdriver.

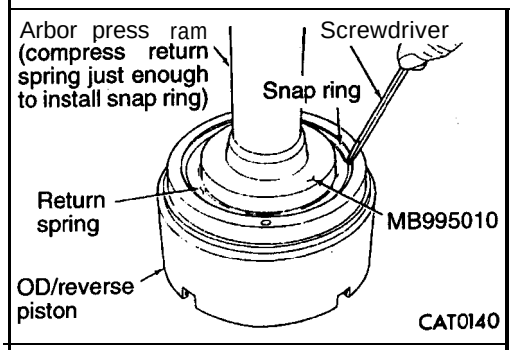

(5) Install overdrive/reverse piston by pushing down. Be sure to lubricate reverse piston O-ring and lip seal prior to installation.

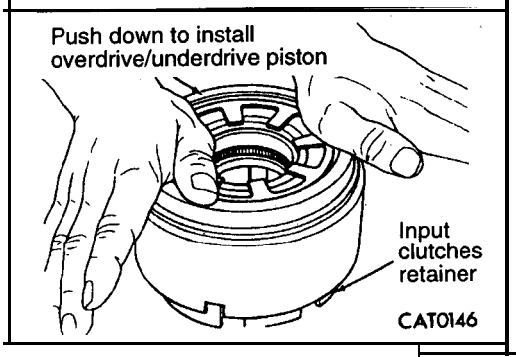

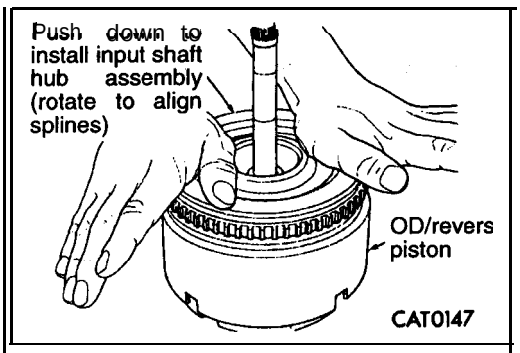

(8) To install input shaft hub assembly to overdrive/reverse piston, rotate input' shaft hub to align **splines with** overdrive/reverse piston and push down by hand.

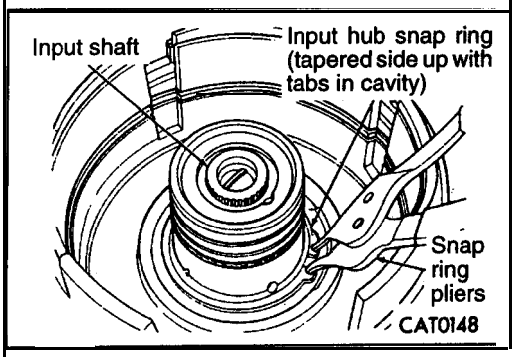

(7) Install input hub tapered **snap ring** with snap' ring pliers.

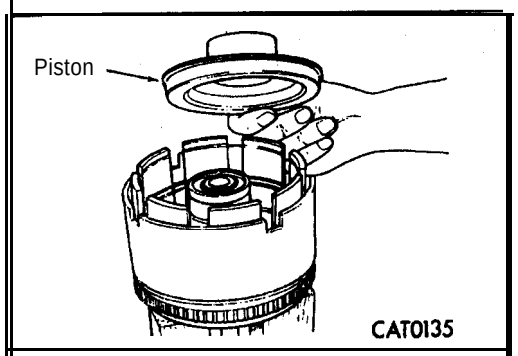

(8) Install underdrive clutch piston.,

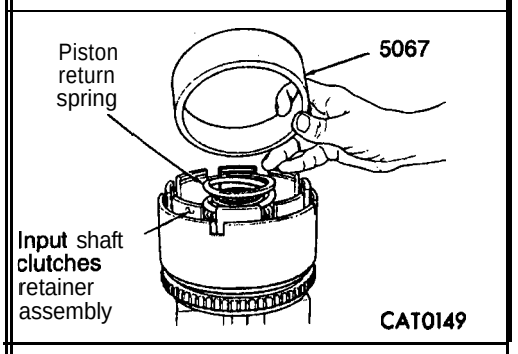

(9) Install piston return spring. **Install Seal** Installer **5067.** Coat Installer inner surface lightly with petroleum' jelly. Place Installer into Input clutch assembly **with its large** inside diameter facing up.

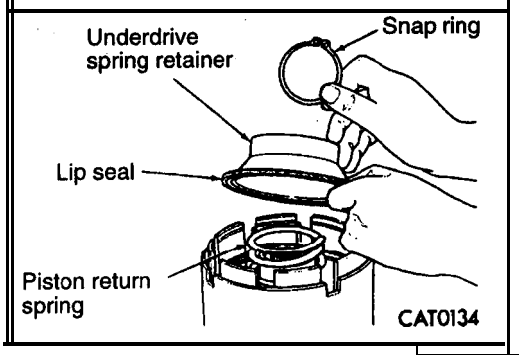

(10) Install underdrive spring retainer. Remove Installer **MB995007.**

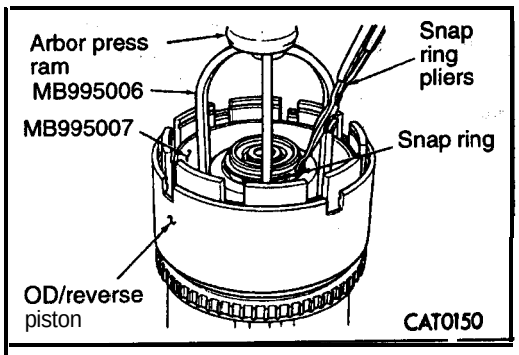

(11) While compressing spring with Spring Compressor MB995006 and arbor press ram, install snap ring with snap ring pliers.

Caution
Compress return spring just enough to install snap ring.

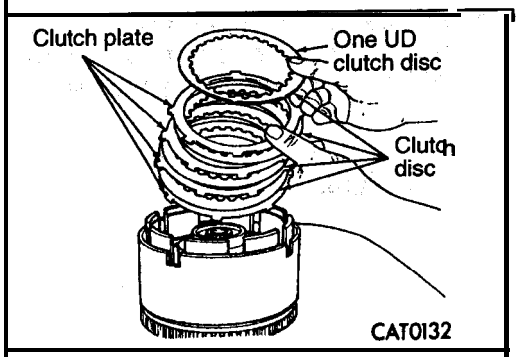

(12) Install underdrive clutch pack excluding one clutch disc.

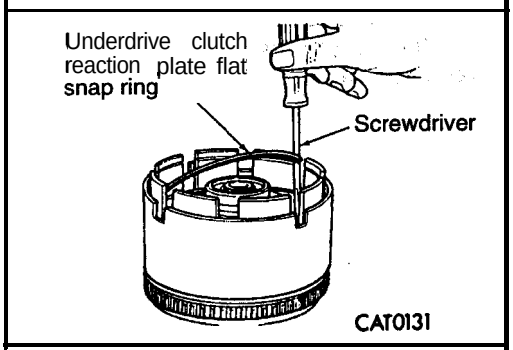

(13) Install underdrive clutch reaction plate flat snap ring with a screwdriver.

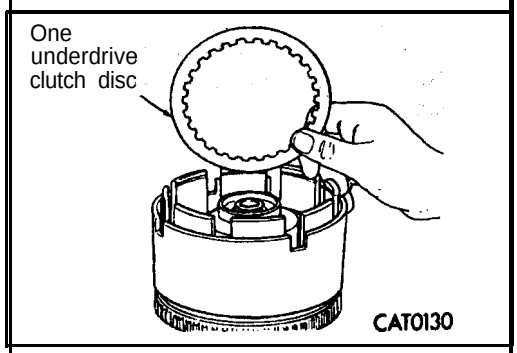

(14) Install last underdrive clutch disc.

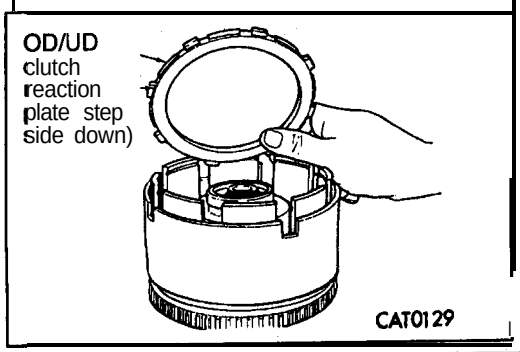

(15) Install overdrive/underdrive clutch reaction plate with stepped side facing down.

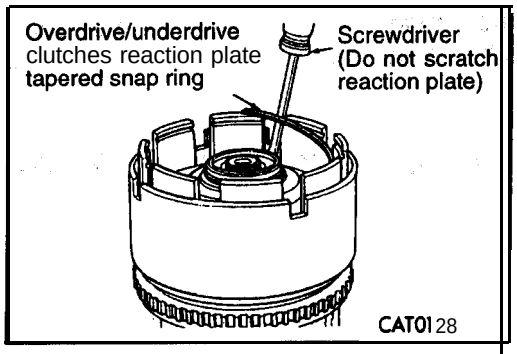

(16) Install a new overdrive/underdrive clutches reaction plate tapered snap ring with its tapered side facing up.

Caution
Do not reuse tapered, snap ring.

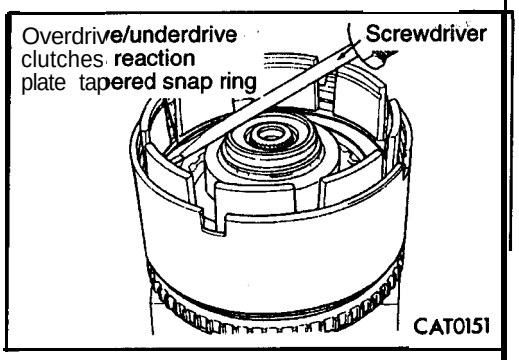

Snap ring ends must be located within one finger of the input clutch hub. Be sure that snap ring is fully seated, by pushing with screwdriver, into snap ring groove all the way around.

Caution
Do not scratch reaction plate.

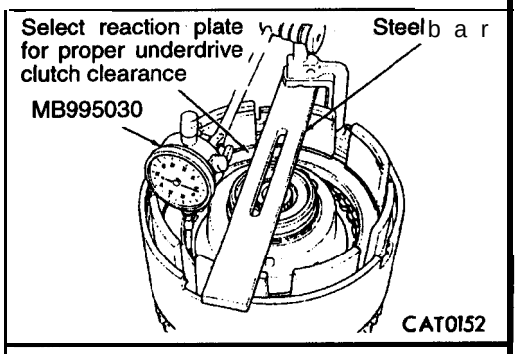

(17) Set up dial indicator set MB995030 and steel bar as shown for checking clutch clearance. Compress clutch pack with finger to zero dial indicator.

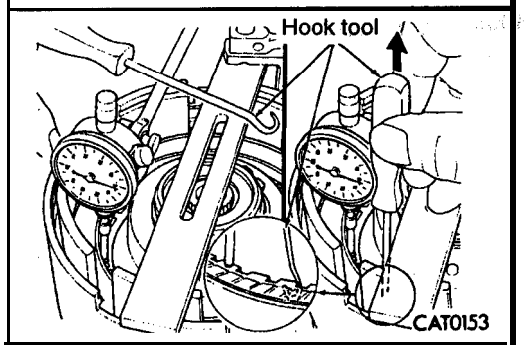

(18) Use hook tool to raise top clutch disc. Read dial indicator. Underdrive clutch pack clearance must be 0.91 to 1.47 mm (.0358 to .0579 inch). Select the proper reaction plate to achieve specifications:,

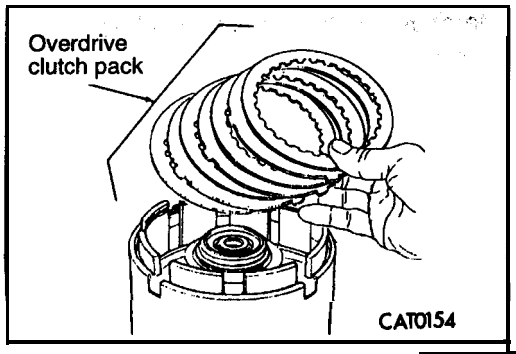

(19) Install overdrive clutch pack starting with a clutch disc.

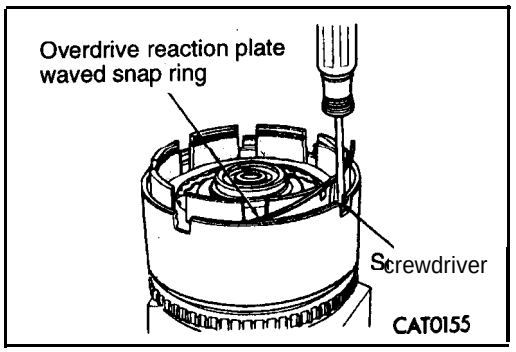

(20) Install overdrive reaction plate waved snap ring into the wide groove.

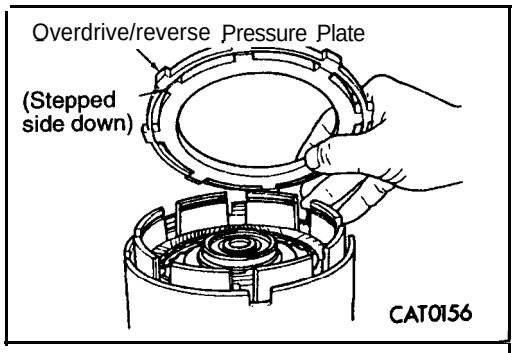

(21) Install overdrive/reverse pressure plate with stepped side down.

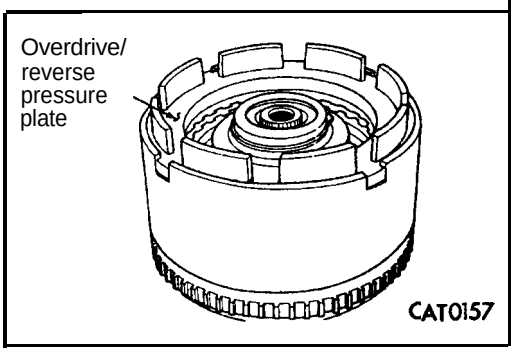

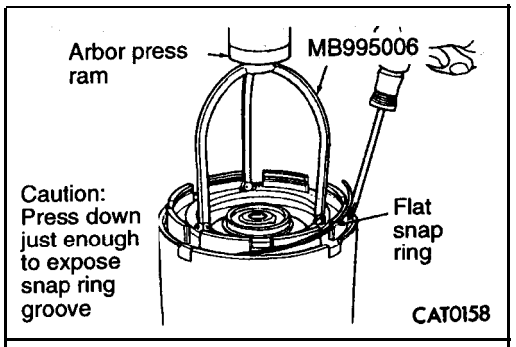

(22) While pressure down overdrive/reverse pressure plate with Spring Compressor MB995006 and arbor press ram, install flat snap ring.

Caution
Press down just enough to expose snap ring groove.

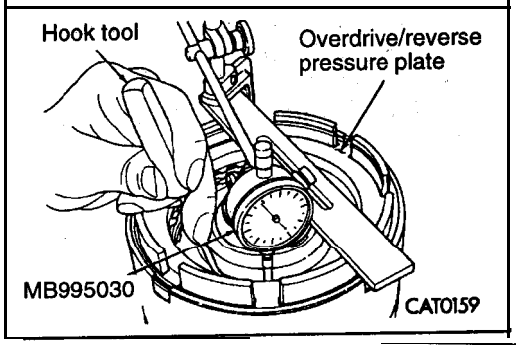

(23) Check overdrive clutch pack clearance.
The overdrive (OD) clutch pack clearance is 1.07 to 2.44 mm (0.421 to .0961 inch). If not within specifications, the clutch is not assembled properly. There is no adjustment for the OD clutch clearance.

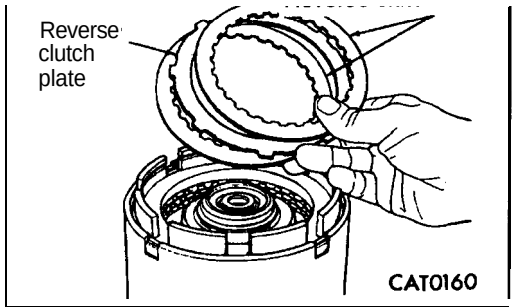

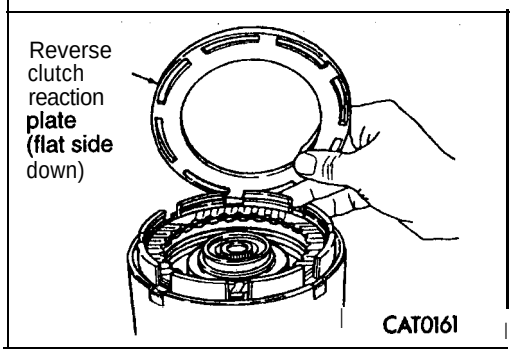

(25) **Install** reverse clutch reaction plate **with** flat side down.

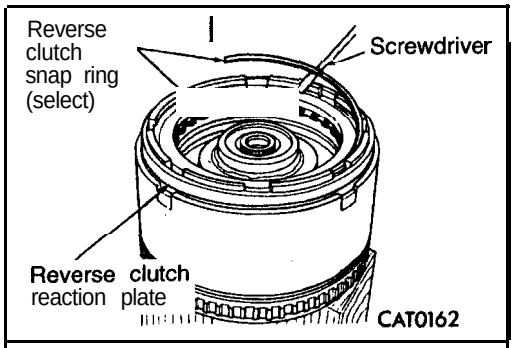

(26) **Install** reverse clutch snap ring with a screwdriver.

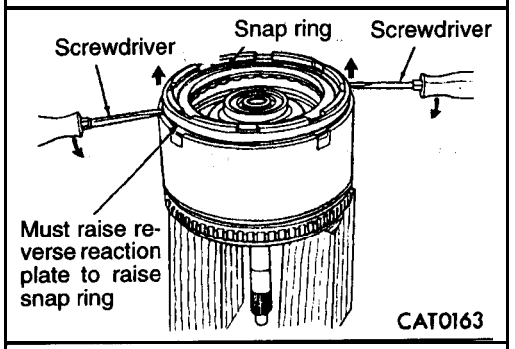

(27) **Raise** reverse clutch reaction plate by prying up at two locations with screwdrivers to seat snap ring.

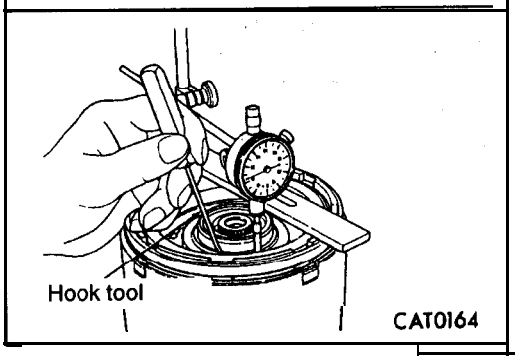

(28) **Check** reverse clutch pack clearance by (ifting **reverse** clutch reaction plate **using** 'a **hook** tool.
The reverse clutch pack clearance is 9.76 **to 1.24** mm (**.0299** to **.0488** inch). Select **the** proper reverse **clutch** snap ring to achieve specifications.

Thickness
1.56 mm (.0614 in.)
1.80 mm (.0709 in.)
2.05 mm (.0807 in.)
2.30 mm (.0906 in.)

All clutch clearances in the input clutch retainer have now been checked and approved. To complete the assembly of the input clutch retainer, the reverse clutch and the overdrive clutch must be removed from the retainer.

Caution
Do not intermix clutch parts. Keep in the same order.

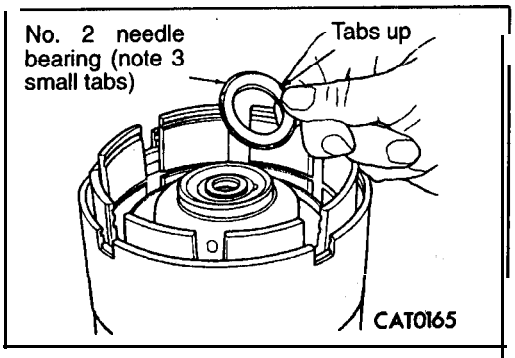

(29) **After** removing reverse and overdrive clutches, install No. 2 needle bearing with 3 small tabs facing up.

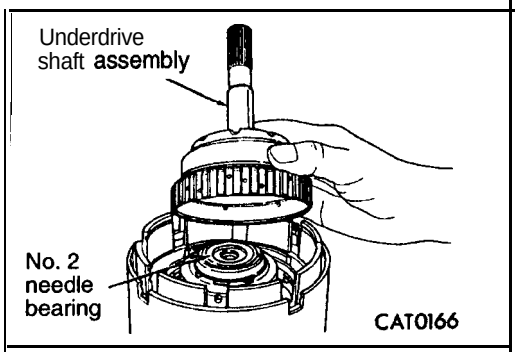

(30) **Install** underdrive shaft assembly.

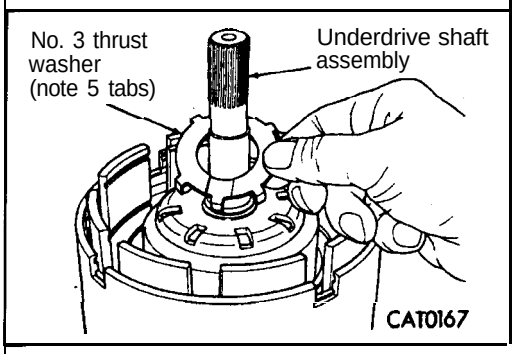

(31) **Install** No. 3 thrust washer.

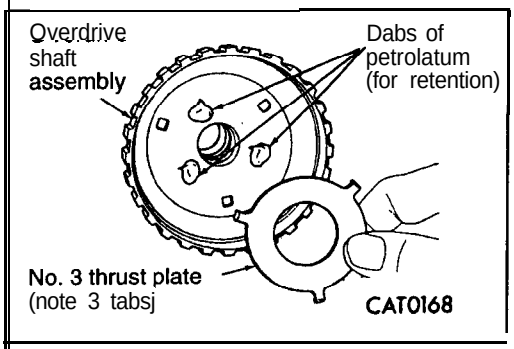

(32) **Stick** No. 3 thrust plate onto overdrive shaft assembly with dabs of petrolatum.

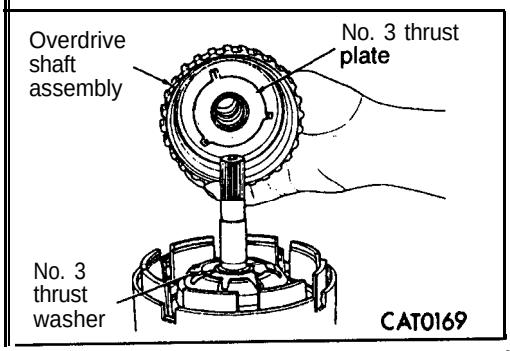

(33) **Install** overdrive shaft assembly.

Now that both shaft assemblies and thrust washers are properly installed, reinstall overdrive clutch and reverse clutch as shown in step 19 – 26. Rechecking these clutch clearances is not necessary, as they were set and approved previously.

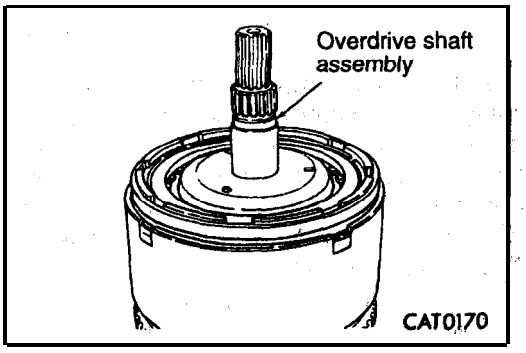

(34) Reassembly of input clutch assembly is now complete.

VALVE BODY

23310150017

Before removing any transaxle subassemblies, plug all openings and thoroughly clean exterior of the unit, preferably by steam. Cleanliness through entire disassembly and assembly cannot be. overemphasized. When disassembling, each part should be washed in a suitable solvent, then dried by compressed air. Do not wipe parts with shop towels. All mating surfaces in the transaxles are accurately machined; therefore, careful handing of all parts must be exercised to avoid nicks or burrs. Tag all springs as they are removed for reassembly identification.

DISASSEMBLY

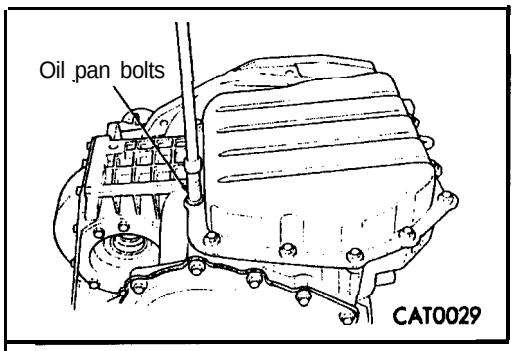

(1) Remove oil pan bolts.

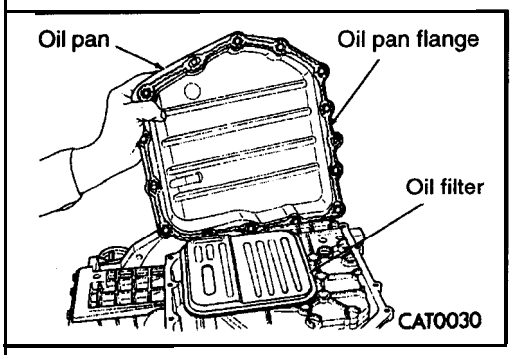

(2) Remove oil pan.

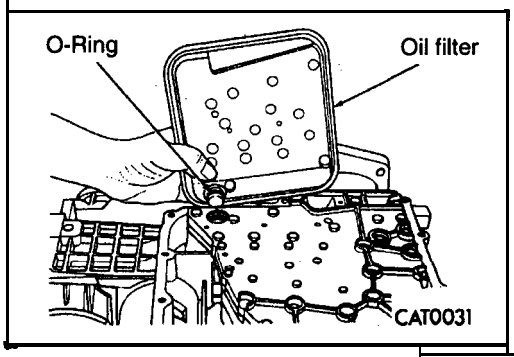

(3) Remove oil filter.

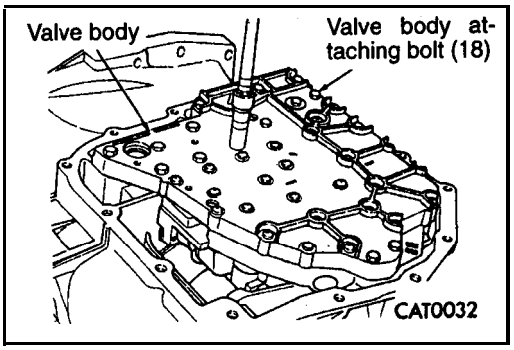

(4) Remove, valve body attaching bolts (18).

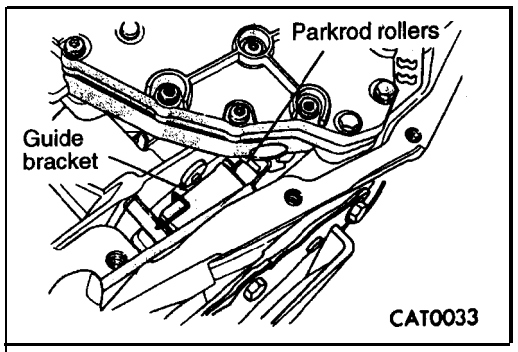

(5) Using a screwdriver, push park sprag rollers away from guide bracket.

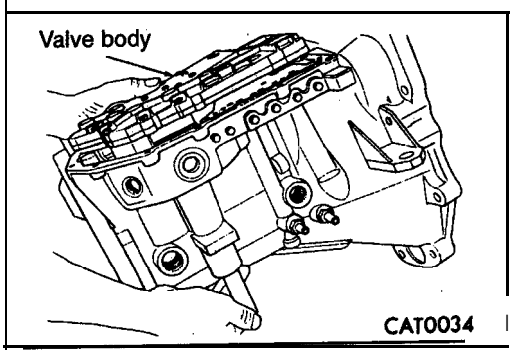

(6) Remove valve body.

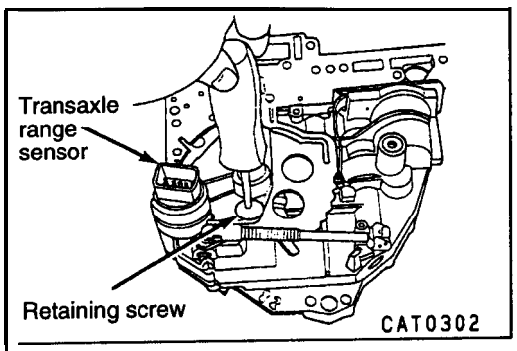

(7) Remove transaxle range sensor **retaining** screw.

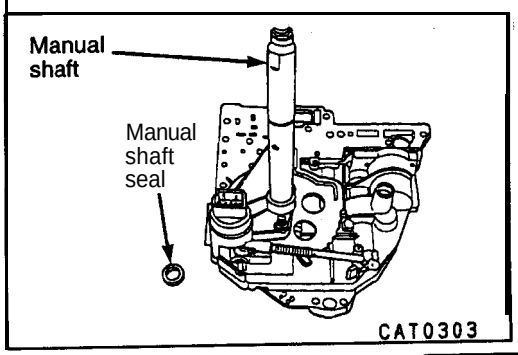

(8) Remove manual shaft seal.

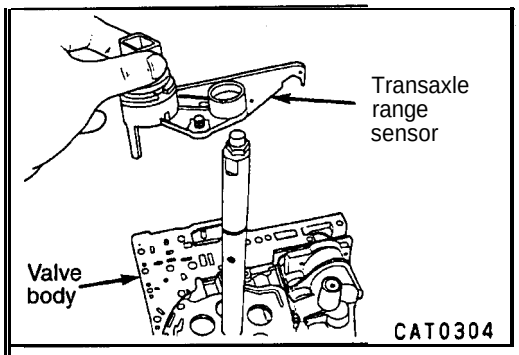

(9) Slide transaxle range sensor up the manual shaft and remove.

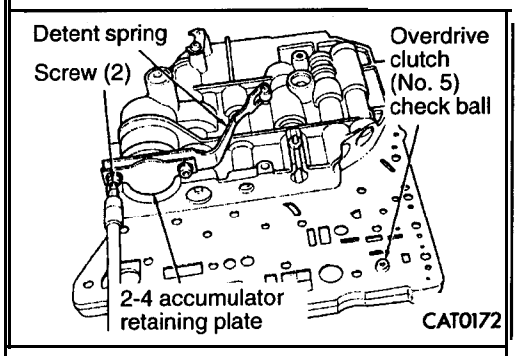

(lO)Remove 2/4 accumulator retaining plate screws (2). Remove the upper valve body.

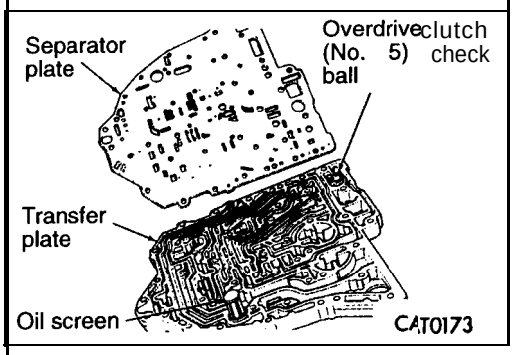

(ll)Remove separator plate from transfer plate. Remove O/D clutch check ball and oil screen.

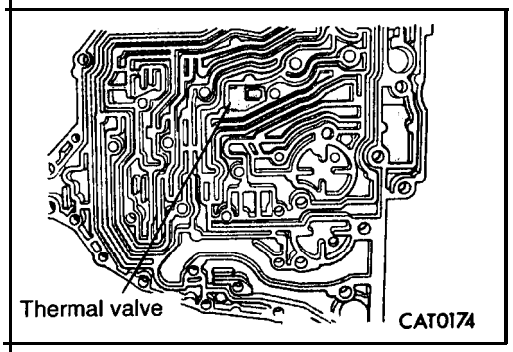

(12)Remove thermal valve.

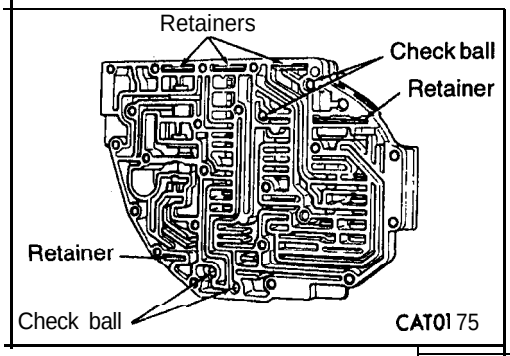

(13)Remove check balls and retainers.

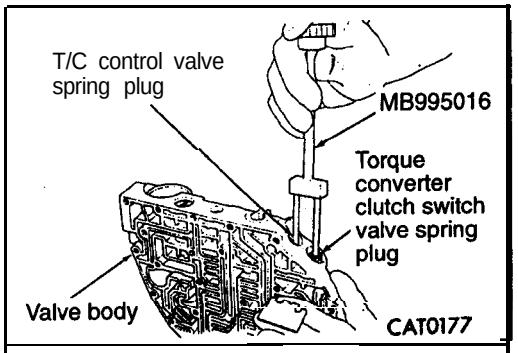

(14) Remove dual retainer plate with Installer/Remover MB995016.
Remove torque converter control valve and torque converter clutch valve.

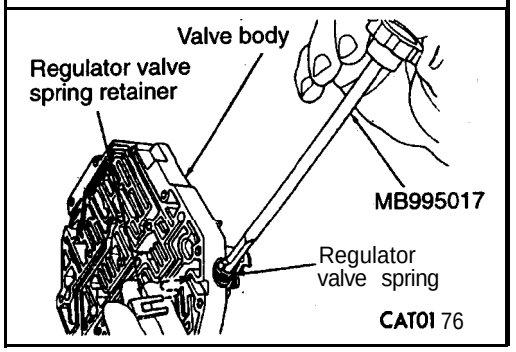

(15) Remove retainer plate using Installer/Remover MB995017.
Remove regulator valve.

SPRINGS AND VALVES IDENTIFICATION

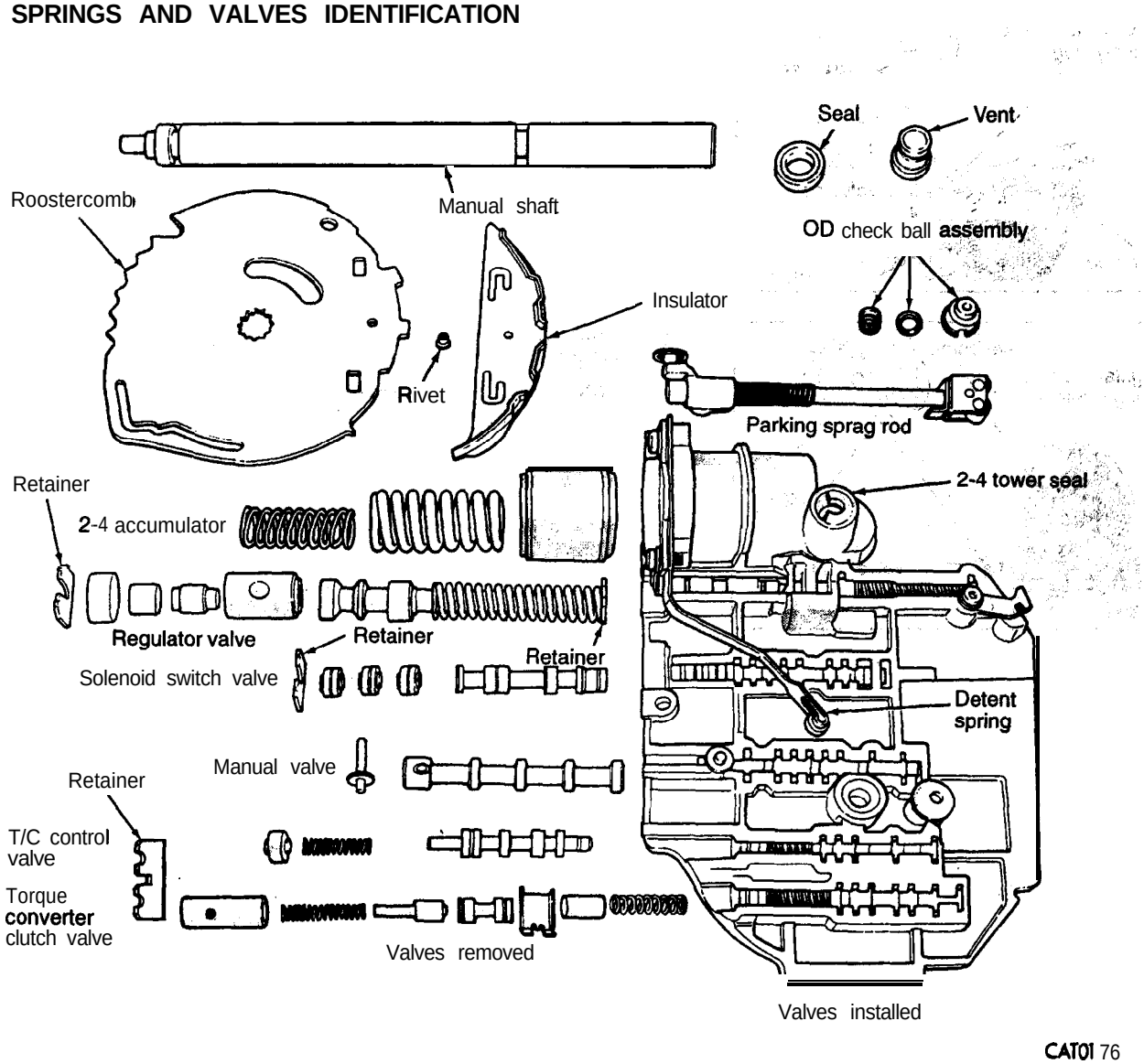

REASSEMBLY

23310160010

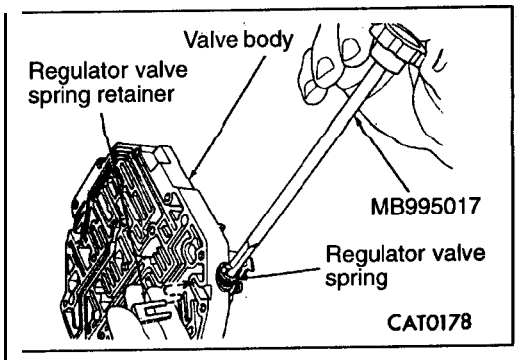

(1) Install regulator valve.
Install retainer plate using **Installer/Remover MB995017**.

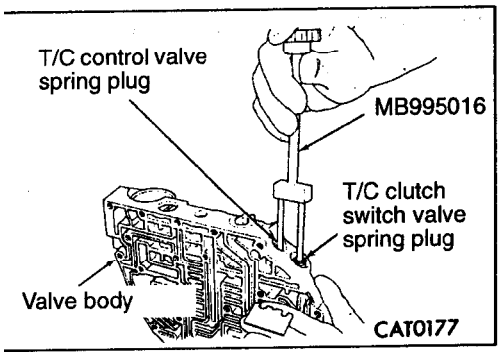

(2) Install torque converter control valve and torque converter clutch valve.
Install dual retainer plate with Installer/Remover **MB995016**.

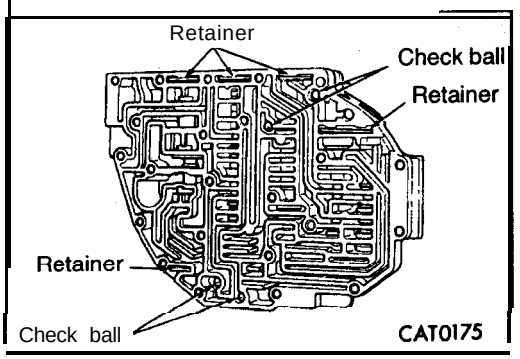

(3) Install check balls and retainers.

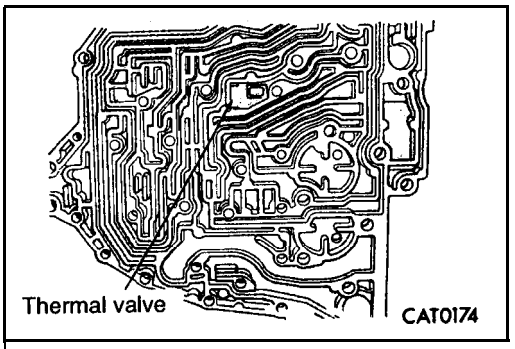

(4) Install thermal valve.

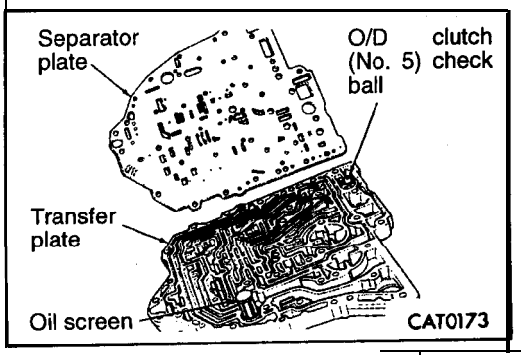

(5) Install separator plate from transfer plate.
Install O/D clutch check ball and oil screen.

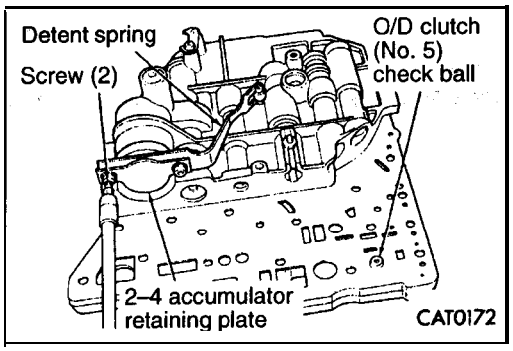

(6) Install 2-4 accumulator retaining plate screws (2).

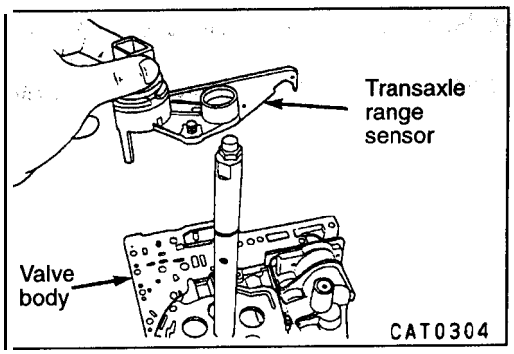

(7) Slide transaxle range sensor down the manual shaft and intall.

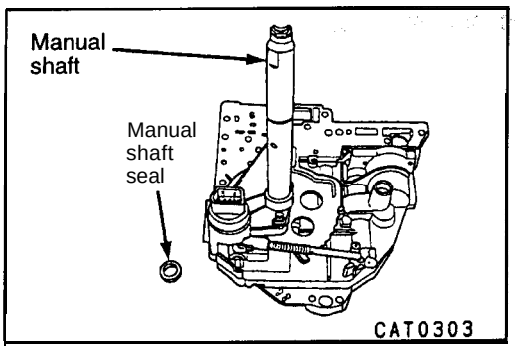

(8) Install manual shaft seal.

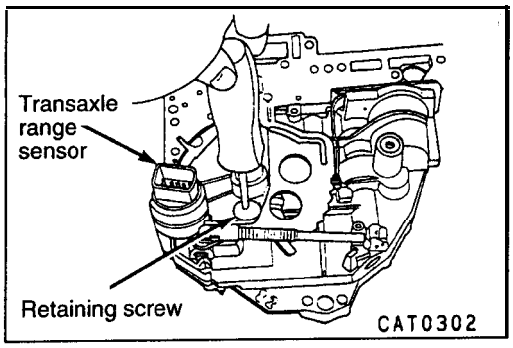

(9) Install transaxle range sensor retaining screw.

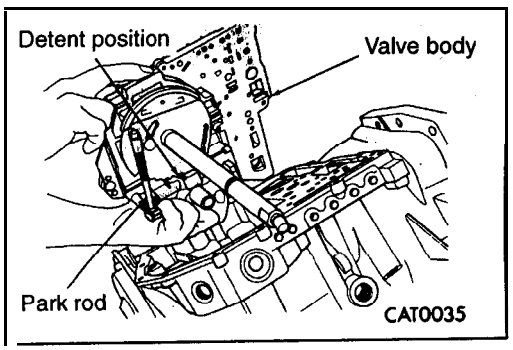

(10) Position detent as shown.

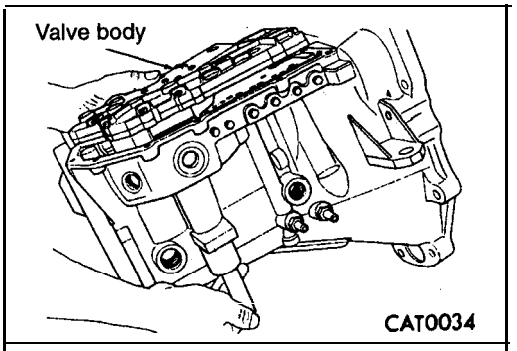

(11) Install valve body.

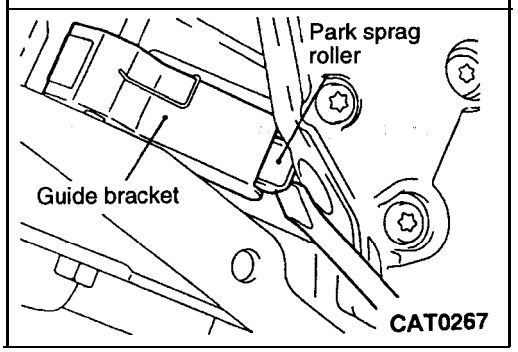

(12) **Using** a screwdriver, push guide bracket' away to park sprag rollers.

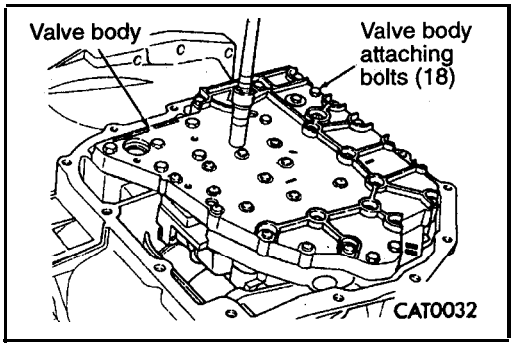

(13) **Install** valve body attaching bolts (18).

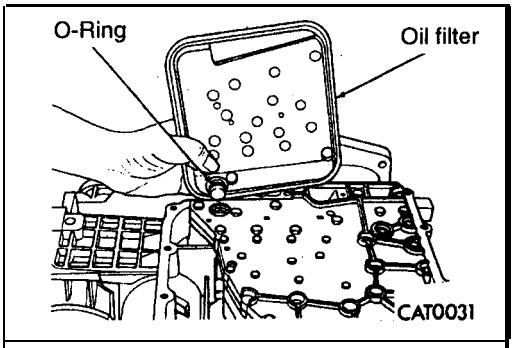

(14) **Install** oil filter.

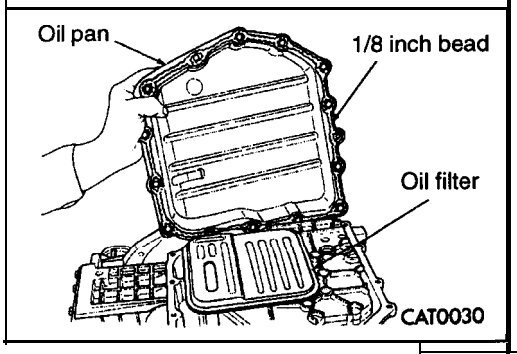

(15) **Install** oil pan.

NOTE
Apply a **1/8** inch **wide** bead of **Loctite** 18718 or equivalent.

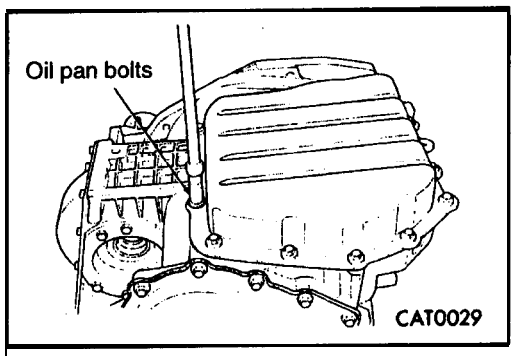

(16) **Install** oil pan bolts.

NOTE
Use Loctite **18718** or equivalent **under** bolt **beads.**

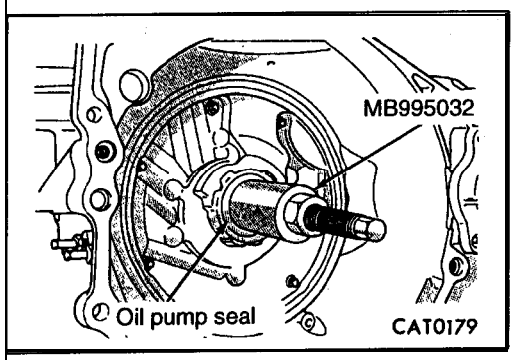

OIL PUMP SEAL

233101800~6

DISASSEMBLY

(1) Remove oil pump seal with Seal Remover **MB995032.**,

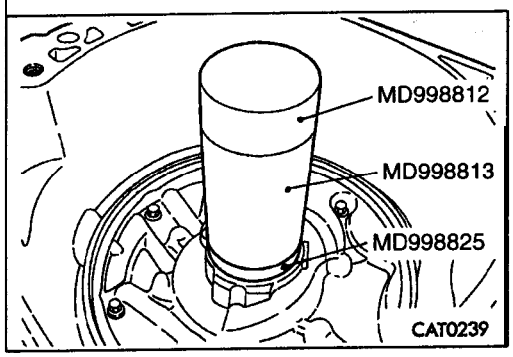

REASSEMBLY

23310190019

(1) Install new oil pump seal with **Installer Cap MD998812 Installer-100 MD99881** 3 and **Installer** Adapter (52) **MD998825.**

OIL PUMP

23310210012

DISASSEMBLY

(1) Remove pump attaching bolts.

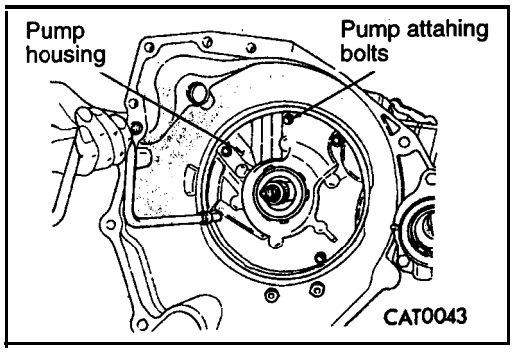

(2) Installer Puller Set MB995031 on two bolts holes.

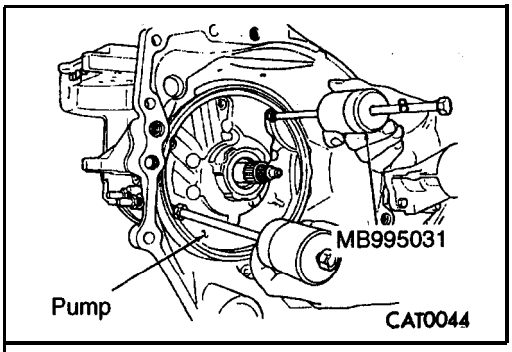

(3) Strike the weights of the pullers against the bolt heads of the tools to loosen the pump. "Push in" on input shaft while loosening pump.

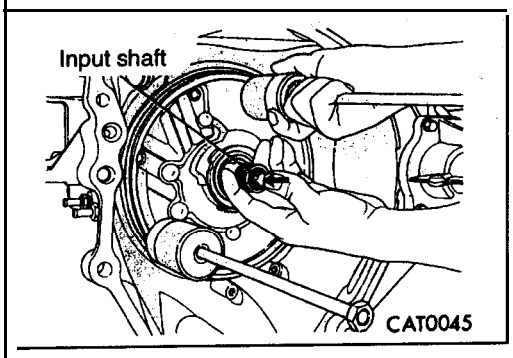

(4) Remove oil pump.

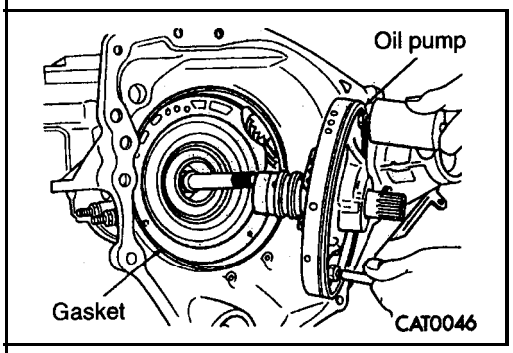

(5) Remove oil pump gasket.

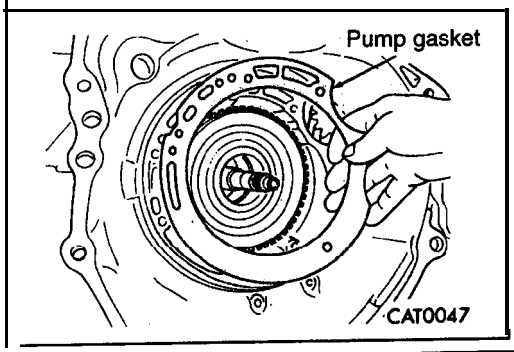

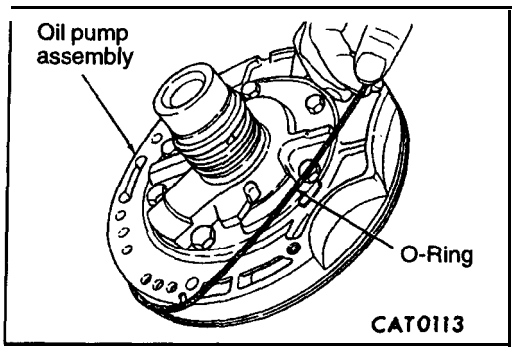

(6) Remove the oil pump O-ring.

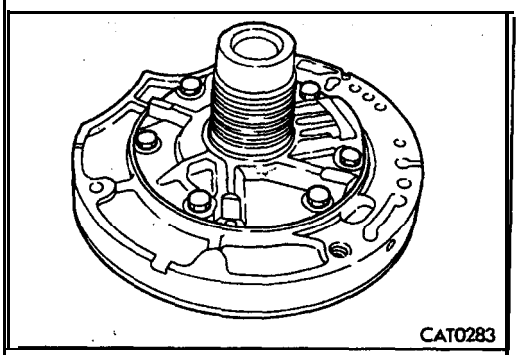

(7) Remove the six bolts, and 'then disassemble the pump housing and reaction shaft support.

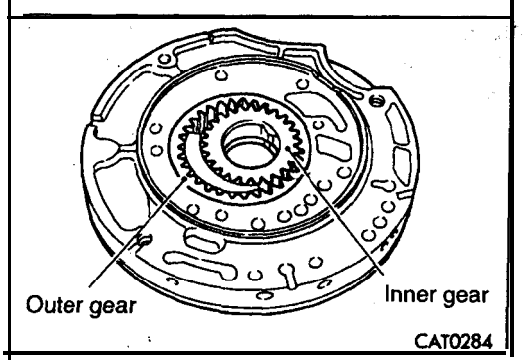

(8). Remove the oil pump outer gear and oil pump inner gear from the pump housing. If the "gears are to be reused, place. mating mark on the gears 'to' ensure that the mounting direction will be correct;' when the gears are installed.
(Use a felt pen or similar to place the mark.)

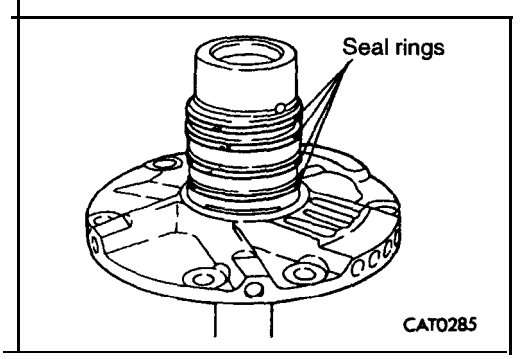

(9) Remove the four seal rings from the reaction shaft support;

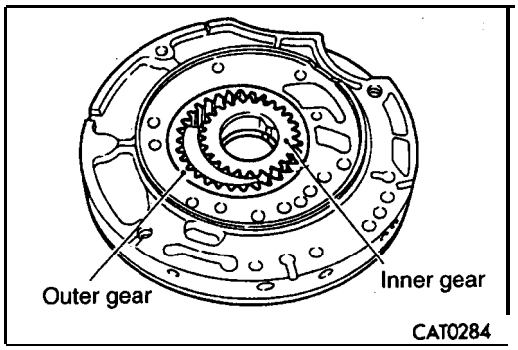

REASSEMBLY

23310220015

(1) Install the oil pump outer gear and oil pump inner gear to the pump housing.
If reusing the old gears, install so that the mating marks' that were made during disassembly are aligned.

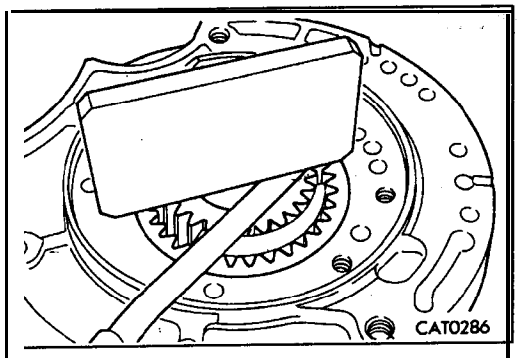

(2) Measure the side clearance between 'the oil pump outer gear and oil pump inner gear. If the clearance is greater than the standard value, replace the oil pump assembly.

Standard value:
Side clearance between oil pump outer gear and oil pump inner gear 0.020 – 0.046 mm (.00079 – .00181 in.)

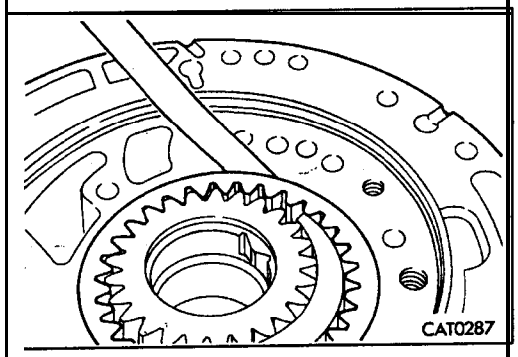

(3) Measure the clearance between the oil pump outer gear and the pump housing pocket. If the clearance is greater than the standard value, replace oil pump assembly.

Standard value:
Clearance between oil pump outer gear and pocket 0.045 – 0.141 mm (.00177 – .00555 in.)

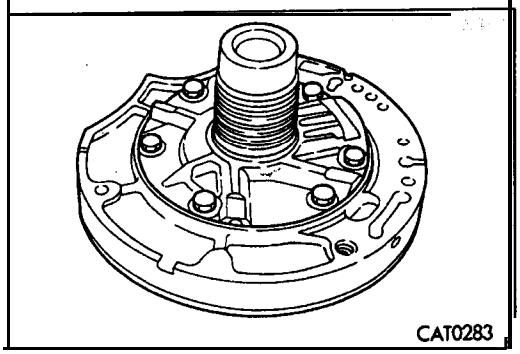

(4) Assemble the pump housing and reaction shaft support, and then install them with the six bolts.

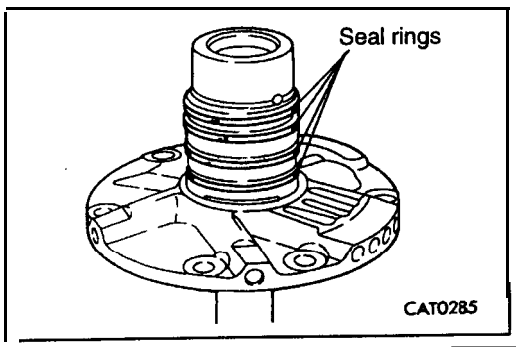

(5) Place the four seal rings onto the reaction shaft support.

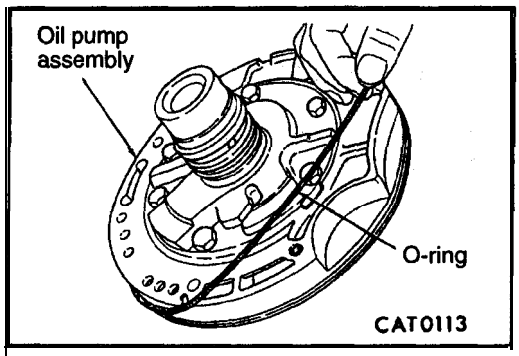

(6) Install the oil pump O-ring.

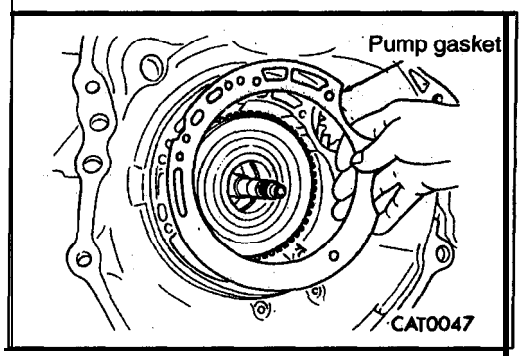

(7) Install oil pump gasket.

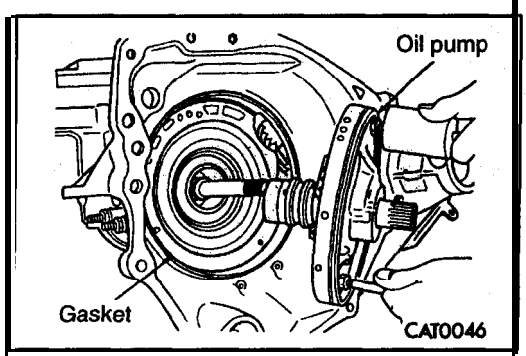

(8) Install oil pump.

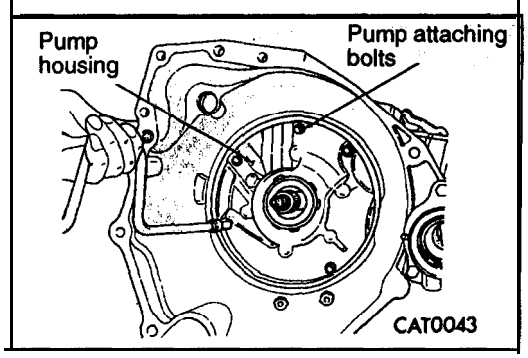

(9) Install pump attaching bolts.

DIFFERENTIAL

23310240011

DISASSEMBLY

(1) Remove oil seal from extension housing.,

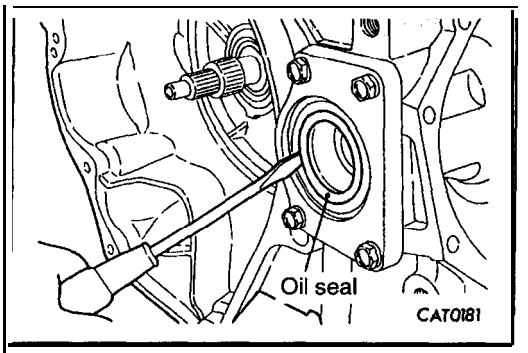

(2) Remove differential cover bolts.

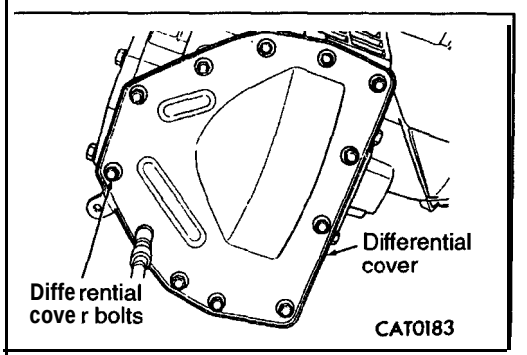

(3) Remove differential cover.

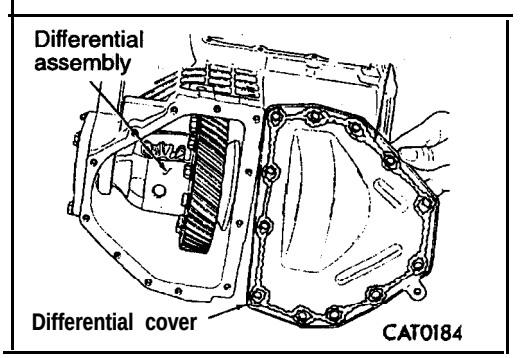

(4) Remove differential retainer bolts.

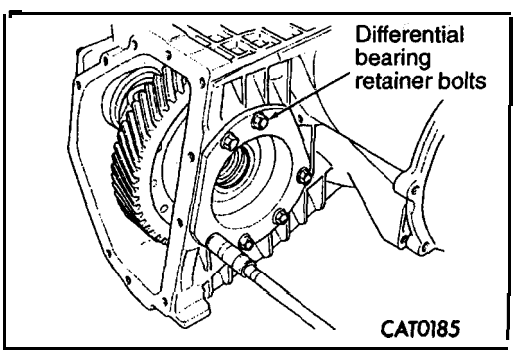

(5) Loosen differential bearing retainer with Remover MB995046.
Walk retainer out of housing using special tool.

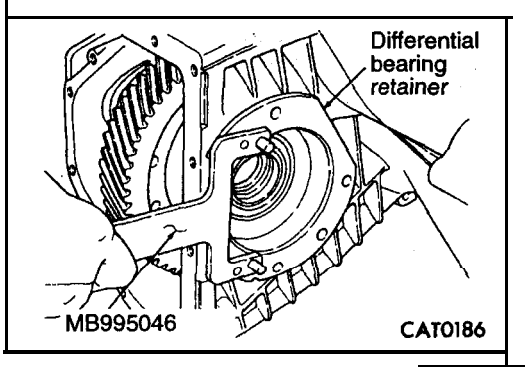

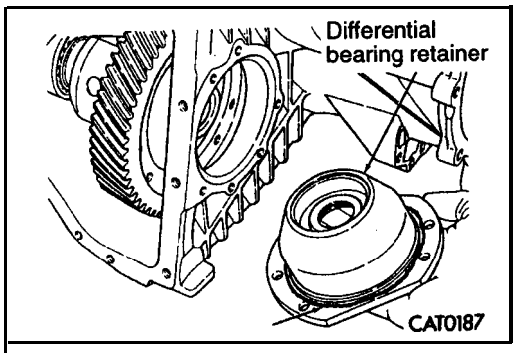

(6) Remove differential bearing **retainer.**

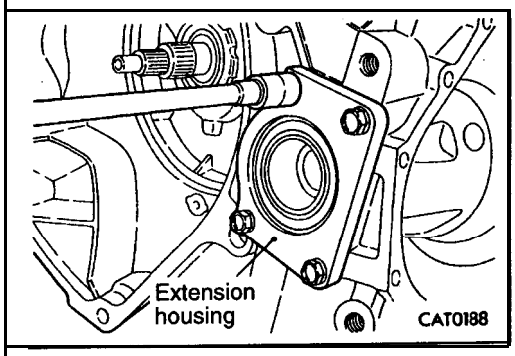

(7) Remove bolts from extension housing.

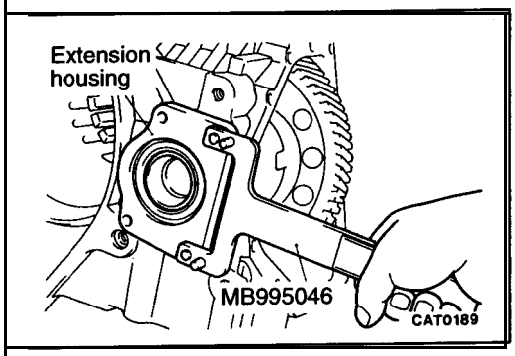

(8) Loosen extension housing with Remover **MB995046.** Walk housing out of transaxle case using special tool.

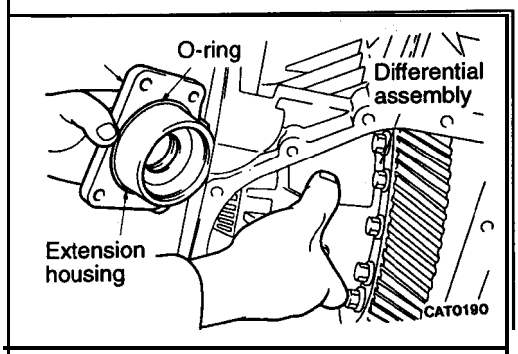

(9) Remove extension housing.

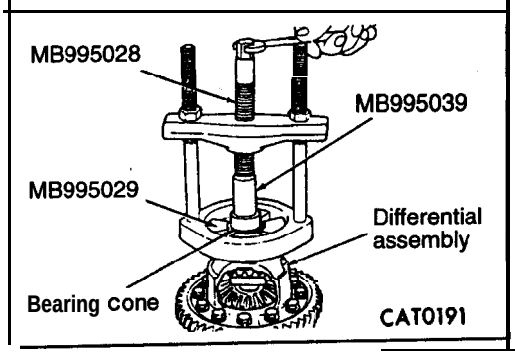

(10) **Remove** differential **bearing** from differential case side using Puller **MB995028,** four Adapter Blocks **MB995029** and Adapter **MB995039.**

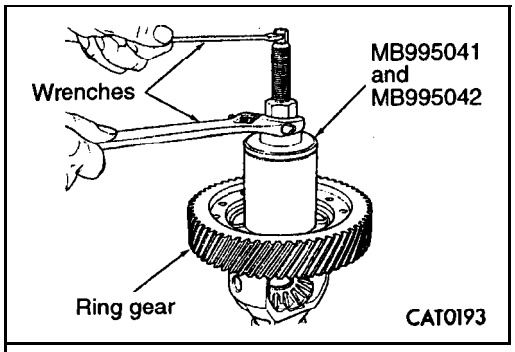

(11) Remove differential bearing from ring gear side with Bearing and Gear remover MB995041 and MB995042.

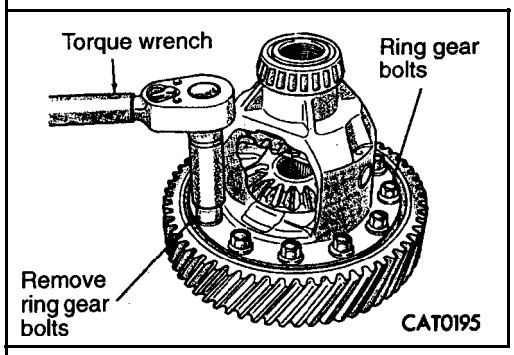

(12) Remove ring gear bolts.

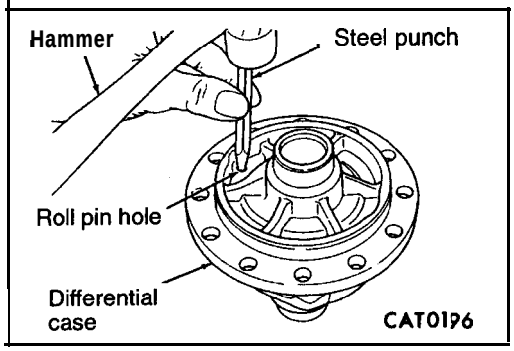

(13) Remove pinion shaft roll pin by tapping out with a hammer and steel punch.

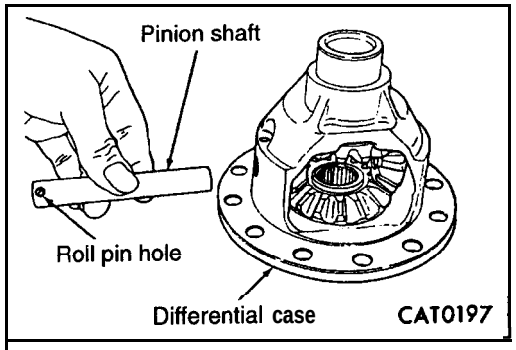

(14) Remove pinion shaft.

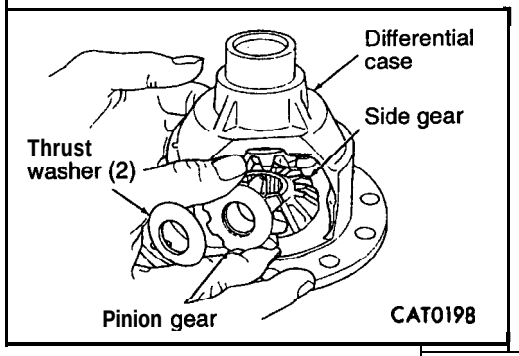

(15) Remove pinion gears, side gears and tabbed thrust washers by rotating pinion gears to opening in differential case.

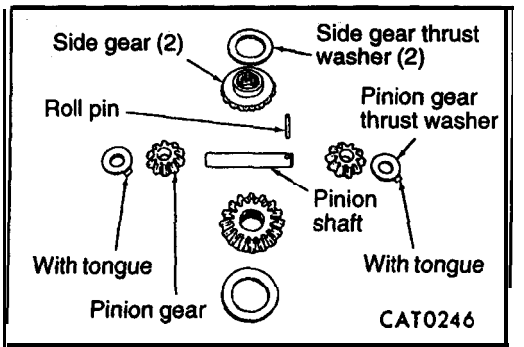

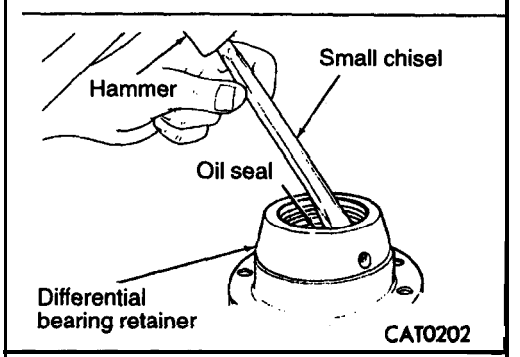

(16) **Remove** oil seal from differential bearing **retainer** with a small chisel and hammer.

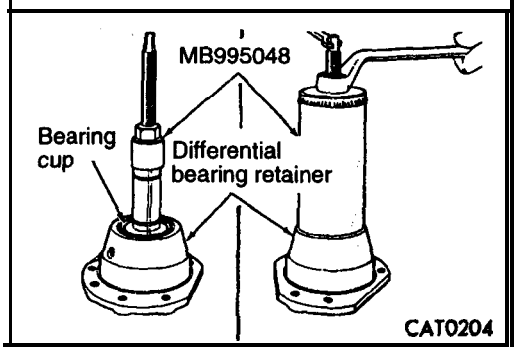

(17) **Remove** bearing cup with Cup Remover **MB995048.**

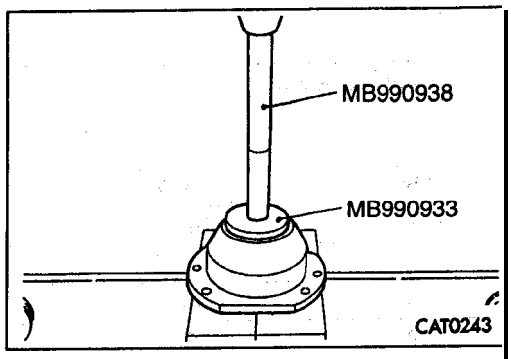

REASSEMBLY 23310250014

(1) Install 'a 0.50 mm (.0197 in.) "test" shim and reinstall the bearing cup into the retainer. Install bearing cup, press in using Installer Bar MB990938 and Installer Adapter MB990933. Oil baffle is not required when making shim selection.

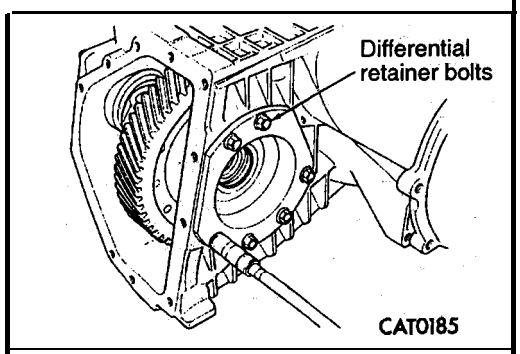

(2) Install bearing retainer into the case and torque bolts to 28 Nm (20 ft.lbs.).

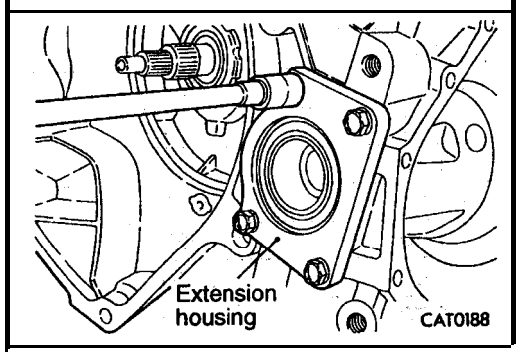

(3) Install extension housing into the case and torque bolts to 28 Nm (20 ft.lbs.).
Position transaxle assembly with oil pump facing up. Rotate ring gear one revolution to seal differential' bearings.

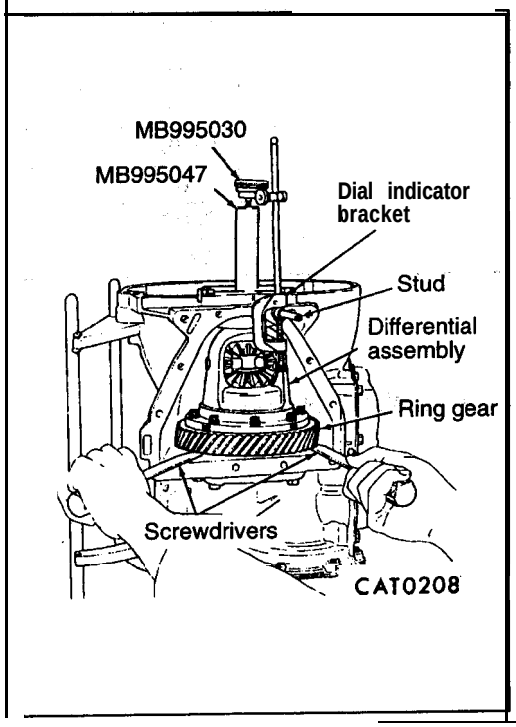

(4) Attach a dial indicator set MB995030 to the case and zero the dial indicator.

(5) Place a large screwdriver to each side of the ring gear and lift. Check the dial indicator for the amount- of end play.

Caution
Do not damage the transaxle case and/or differential cover sealing surface.

(6) When the end play has been determined, refer to the Differential Bearing Shim Chart for correct shim combination.

DIFFERENTIAL BEARING SHIM CHART

End play with 0.50 mm (.0197 in.) gauging shim installed		Required Shim Combination		Total Thickness	
mm	in.	mm	in.	mm	in.
0	0	0.50	.0197	0.50	.0197
0.05	.0020	0.75	.0295	0.75	.0295
0.10	.0039	0.80	.0315	0.80	.0315
0.15	.0059	0.85	.0335	0.85	.0335
0.20	.0079	0.90	.0354	0.90	.0354
0.25	.0098	0.95	.0374	0.95	.0374
0.30	.0118	1.00	.0394	1.00	.0394
0.35	.0138	1.05	.0413	1.05	.0413
0.40	.0157	0.50+0.60	.0197+.0236	1.10	.0433
0.45	.0177	0.50+0.65	.0197+.0256	1.15	.0453
0.50	.0197	0.50+0.70	.0197+.0276	1.20	.0472
0.55	.0217	0.50+0.75	.0197+.0295	1.25	.0492
0.60	.0236	0.50+0.80	.0197+.0315	1.30	.0512
0.65	.0256	0.50+0.85	.0197+.0335	1.35	.0531
End play with 0.50 mm (.0197 in.) gauging shim installed		Required Shim Combination		Total Thickness	
mm	in.	mm	in.	mm	in.
0.70	.0276	0.50+0.90	.0197+.0354	1.40	.0551
0.75	.0295	0.50+0.95	.0197+.0374	1.45	.0571
0.80	.0315	0.50+1.00	.0197+.0394	1.50	.0591
0.85	.0335	0.50+1.05	.0197+.0413	1.55	.0610
0.90	.0354	1.00+0.60	.0394+.0236	1.60	.0630
0.95	.0374	1.00+0.65	.0394+.0256	1.65	.0650
1.00	.0394	1.00+0.70	.0394+.0276	1.70	.0669
1.05	.0413	1.00+0.75	.0394+.0295	1.75	.0689
1.10	.0433	1.00+0.80	.0394+.0315	1.80	.0709
1.15	.0453	1.00+0.85	.0394+.0335	1.85	.0728
1.20	.0472	1.00+0.90	.0394+.0354	1.90	.0748
1.25	.0492	1.00+0.95	.0394+.0374	1.95	.0768
1.30	.0512	1.00+1.00	.0394+.0394	2.00	.0787
1.35	.0531	1.00+1.05	.0394+.0413	2.05	.0807
1.40	.0551	1.05+1.05	.0394+.0413	2.10	.0827

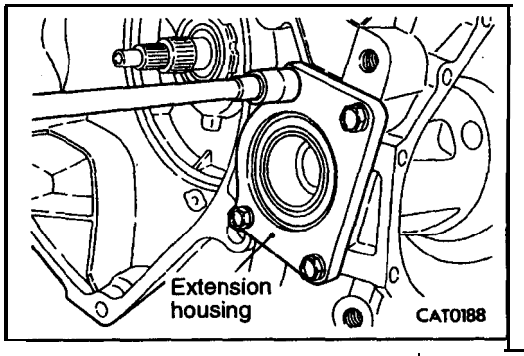

(7) Remove bolts from extension, housing.

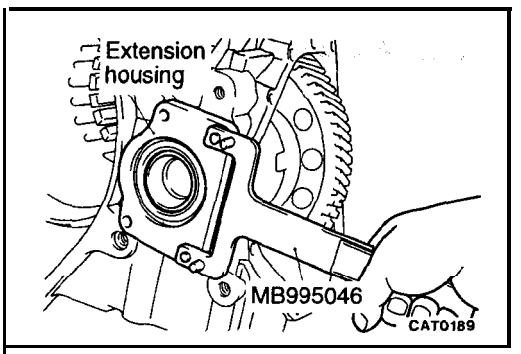

(8) Loosen extension housing with Remover MB995046. Walk housing out of transaxle case using special tool.
(9) Remove extension housing.

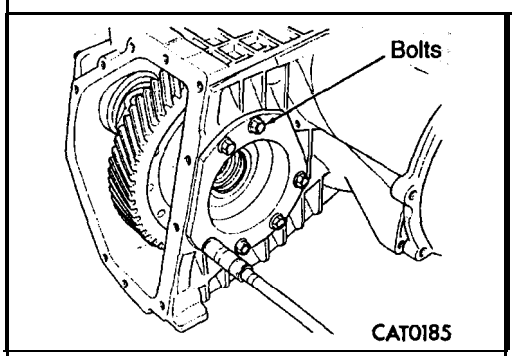

(10) Remove differential retainer bolts.,

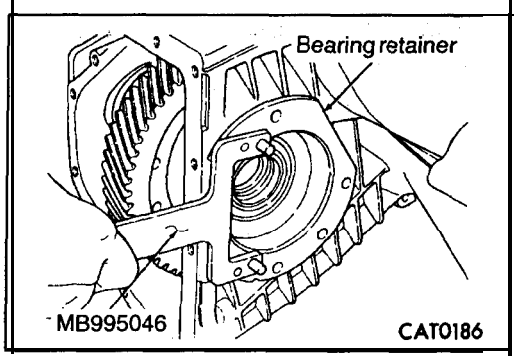

(11) Loosen differential bearing retainer with Remover MB995046. Walk retainer out of transaxle using special tool.
(12) Remove differential bearing retainer.

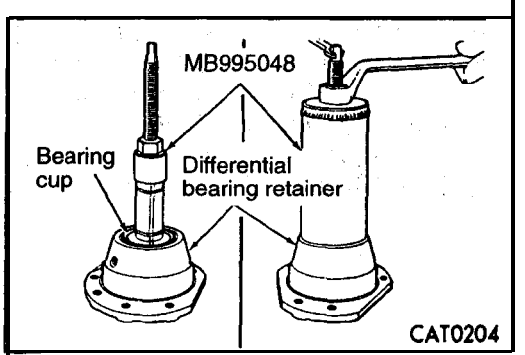

(13) Remove bearing cup with Cup Remover MB995048.
(14) Remove the 0.50 mm (.0197 in.) "test" shim.

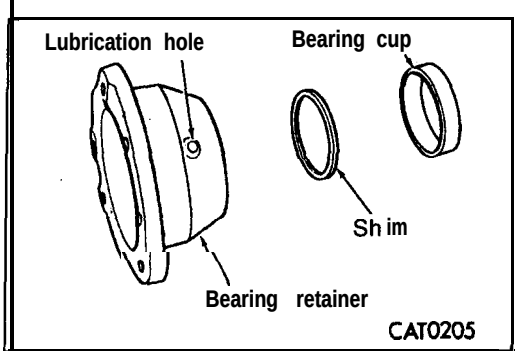

15) Install the proper shim combination under the -bearing cup.

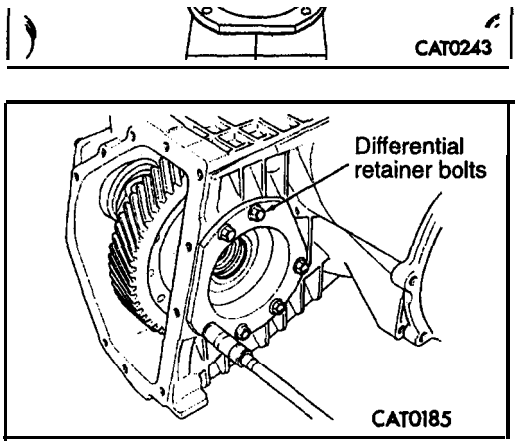

(17) **Install** differential bearing retainer into the case **and** torque bolts to 28 Nm (20 **ft.lbs.).**

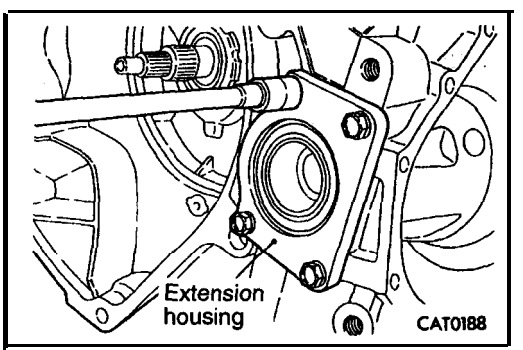

(18) **Install** extension housing into the case **and** torque bolts to 28 Nm (20 **ft.lbs.).**

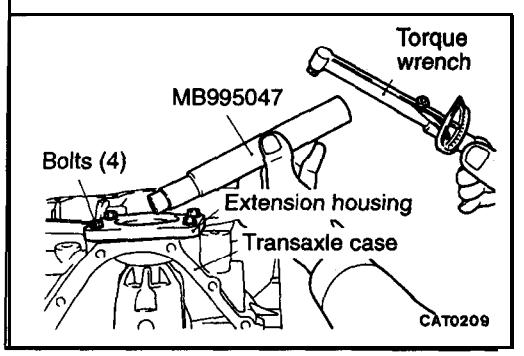

(19) **Install** Checking Tool **MB995047** and a torque wrench to check differential bearings turning torque. The turning torque should be 0.56 to 2.03 **Nm** (5 to 18 in. **lbs.).** If the turning torque is too high, 'install a 0.05 mm **(.0020** in.) thinner shim. If the turning torque is too low, install a 0.05 mm **(.0020** in.) thicker shim. Repeat until prober turning torque is obtained.

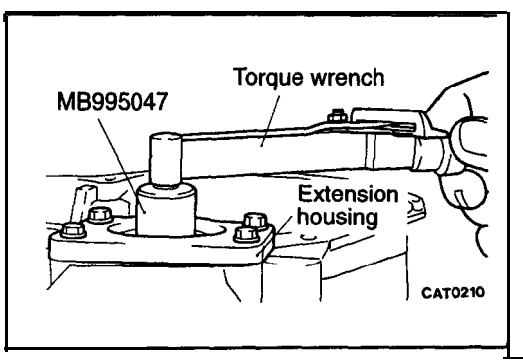

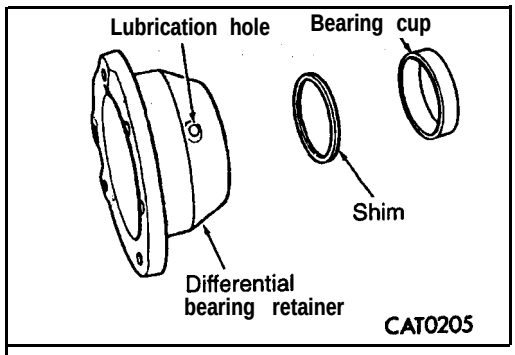

(20) Install proper shim.

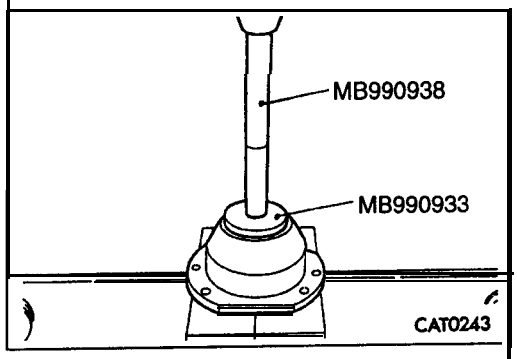

(21) Install bearing cup, and then press in using Installer Bar MB990938 and Installer Adapter MB990933.

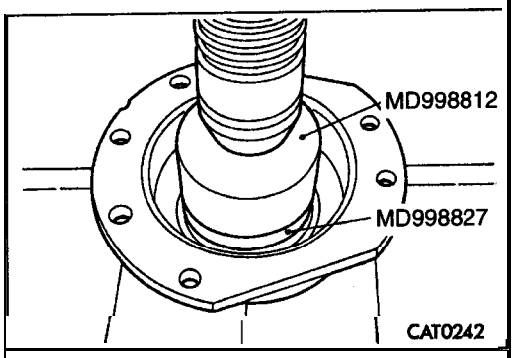

(22) Install new oil seal, press in using Installer Cap MB998812 and Installer Adapter (56) MB998827.

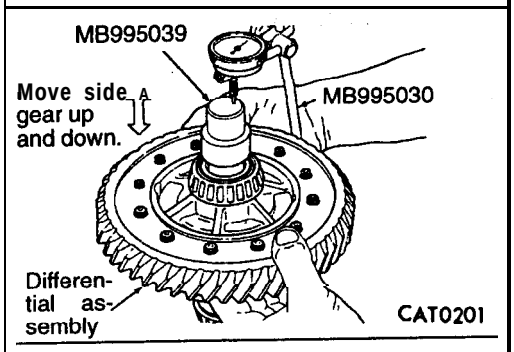

(23) Using dial indicator MB995030 and Adapter MB995039, check side gear end play at ring gear side and differential case side.

NOTE
Side gear end play each side must be 0.025 to 0.330 mm (.00098 to .01299 inch).

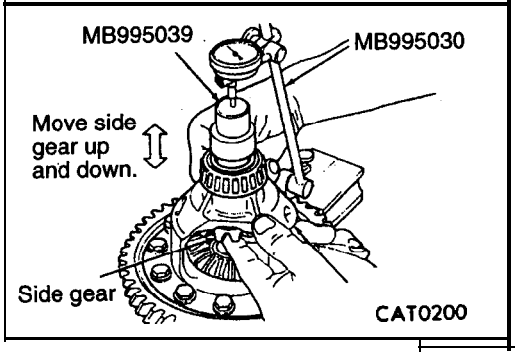

Four select thrust washer are available.
0.81, 0.93, 1.07 and 1.19 mm (.0319, .0366, .0421 and .0469 inch).
If either side gear end play is not within specifications, remove appropriate side gear thrust washer.
Measure existing thrust washer and replace with new thrust washer that provides end play closest to center of end play specifications.

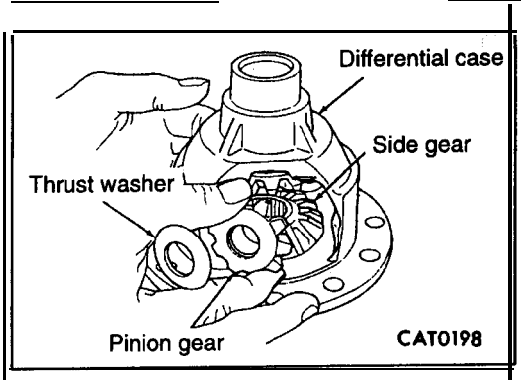

(24) **Install** pinion gears, **side gears and tabbed thrust washers** by rotating pinion gears to opening in **differential** case.

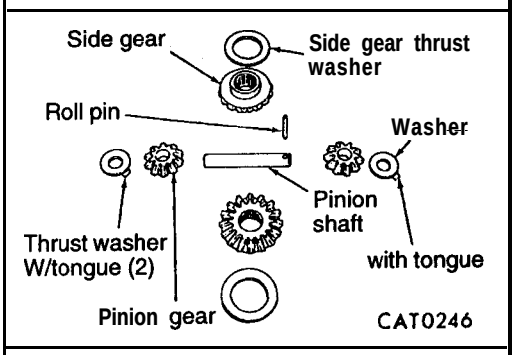

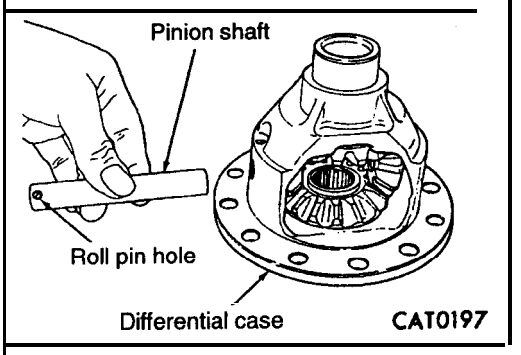

(25) **Install** pinion shaft.

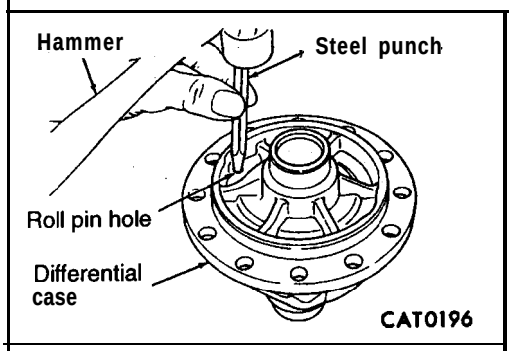

(26) **Install** pinion shaft roll pin by tapping **in with a hammer** and steel punch.

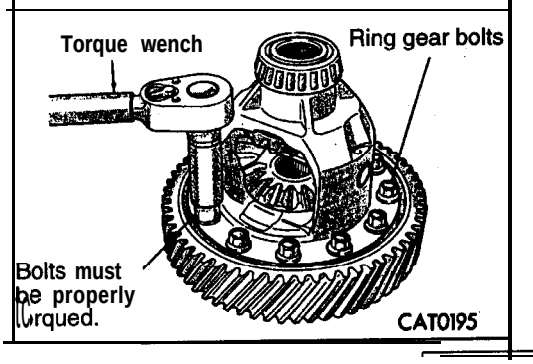

(27) **Install** ring gear bolts.

NOTE
Always use new ring gear bolts arid **torque** to 95 Nm **(70 ft.lbs.).**

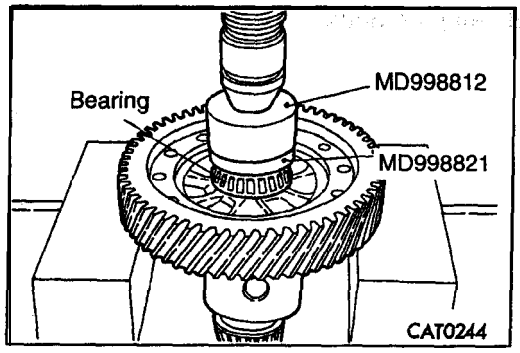

(28) **Install** differential bearing, and then **press in** using **Installer** Cap **MD998812** and **Installer** Adapter (44) **MD998821**.

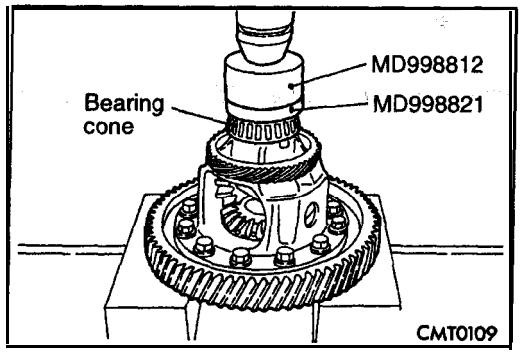

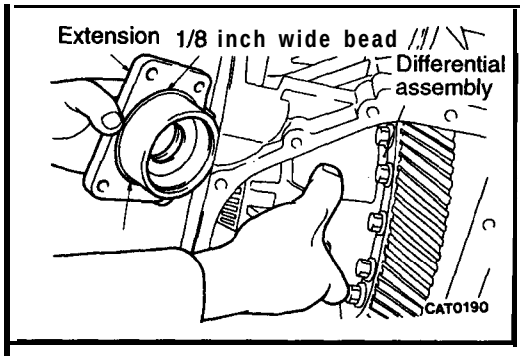

(29) **Install** extension.

NOTE
Apply an **1/8** inch wide bead of Loctite 18718 or equivalent.

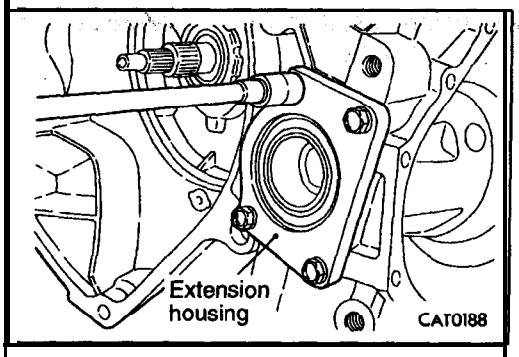

(30) **Install** bolts to extension' housing.

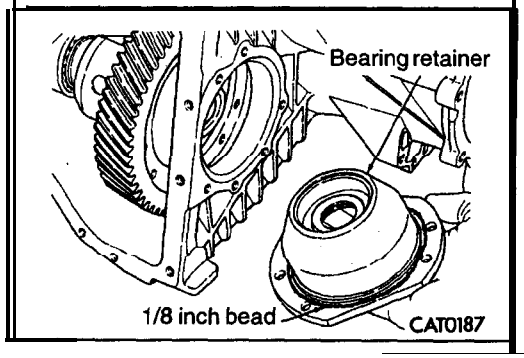

(31) **Install** differential bearing retainer.

NOTE
Apply an **1/8** inch wide bead of Loctite 18718 or equivalent.

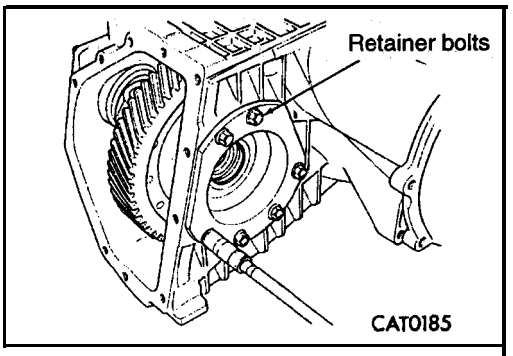

(32) Install differential retainer bolts.

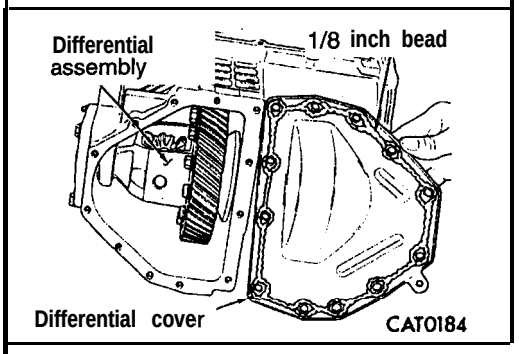

(33) Install differential cover.

NOTE
Apply an 1/8 inch wide bead of Loctite 1 8718 or equivalent:

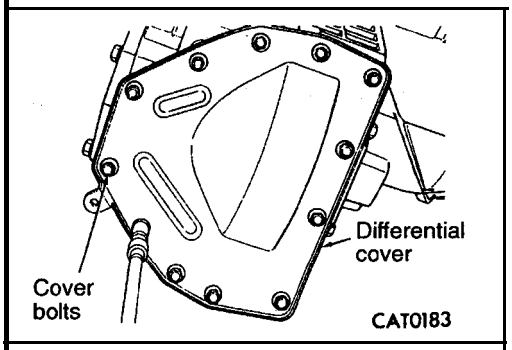

(34) Install differential cover bolts.

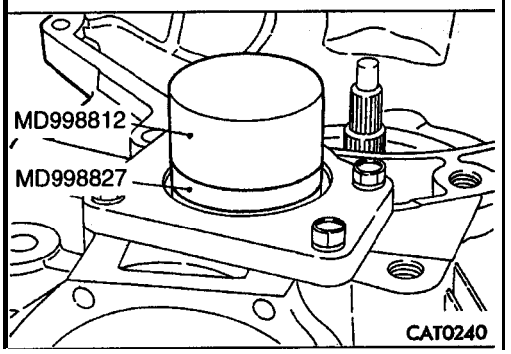

(35) Install new oil seal using Installer Cap MD998812 arid-Installer Adapter (56) MD998827.

TSB Revision

PROPELLER SHAFT

CONTENTS

25109000037

GENERAL INFORMATION

25100010022

Items		Specifications
Propeller shaft	Type	4 joint propeller shaft
	Length×O.D. mm (in.)	Front: 676.5×65 (26.63×2.56)
		Center: 642.5×65 (25.30×2.56)
		Rear: 634.5×50.8 (24.98×2.00)
Universal joint	Type	'No. 1, 2, 4: Cross type
		No. 3: Constant velocity type
	Lubrication	Non-lubrication type
	Cross type joint journal O.D. mm (in.)	14.689 (.5783)
	Constant velocity joint O.D. mm (in.)	94 (3.7)

NOTE
Propeller shaft length indicates the length between center points of each joint.

SERVICE SPECIFICATIONS

25100030035

Items		Standard value	Limit
Journal end play mm (in.)		0.01–0.03 (.0004–.0012)	–
Propeller shaft runout (Dial indicator reading) mm (in.)	Front		0.6 (.024) or 'less
	Center		0.6 (.024) or less
	Rear	–	0.6 (.024) or less

LUBRICANTS

25100040038

Items		Specified lubricant	Quantity
Sleeve yoke surface		API classification GL-4, SAE 75W-90 or 75W-85W	As required
Löbro joint assembly	Outer and inner races ball grooves	Repair kit grease	As required
	Löbro joint assembly inner part	Repair kit grease	45-55 g (1.59–1.94 oz.)

ADHESIVE

25100050024

Item	Specified adhesive	Characteristics
Lobro joint rubber packing	Quick fix adhesive 3M ATD Part No. 8155, or equivalent	Quick-fix adhesive

SPECIAL TOOLS

25100060034

Tool	Tool number and name	Supersession	Application
	MB990840 Universal joint remover and installer	General service tool	Universal joint disassembly and reassembly
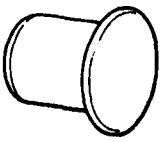	MB991 193 Plug	General service tool	Preventing foreign objects from getting into the transfer
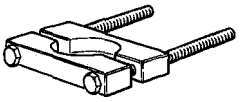	MD998801 Inner shaft remover	MD998348–01	Inner shaft and seal plate removal and installation

TROUBLESHOOTING

25100070020

Symptom	Probable cause	Remedy
Noise at start	Worn journal bearing	Replace
	Worn sleeve yoke spline	Replace
	Loose propeller shaft installation	Retighten
Noise and vibration at high speed	Unbalanced propeller shaft	Replace
	Improper snap ring selection	Adjust the clearance
	Worn journal bearing	Replace

PROPELLER SHAFT

25100100033

REMOVAL AND INSTALLATION

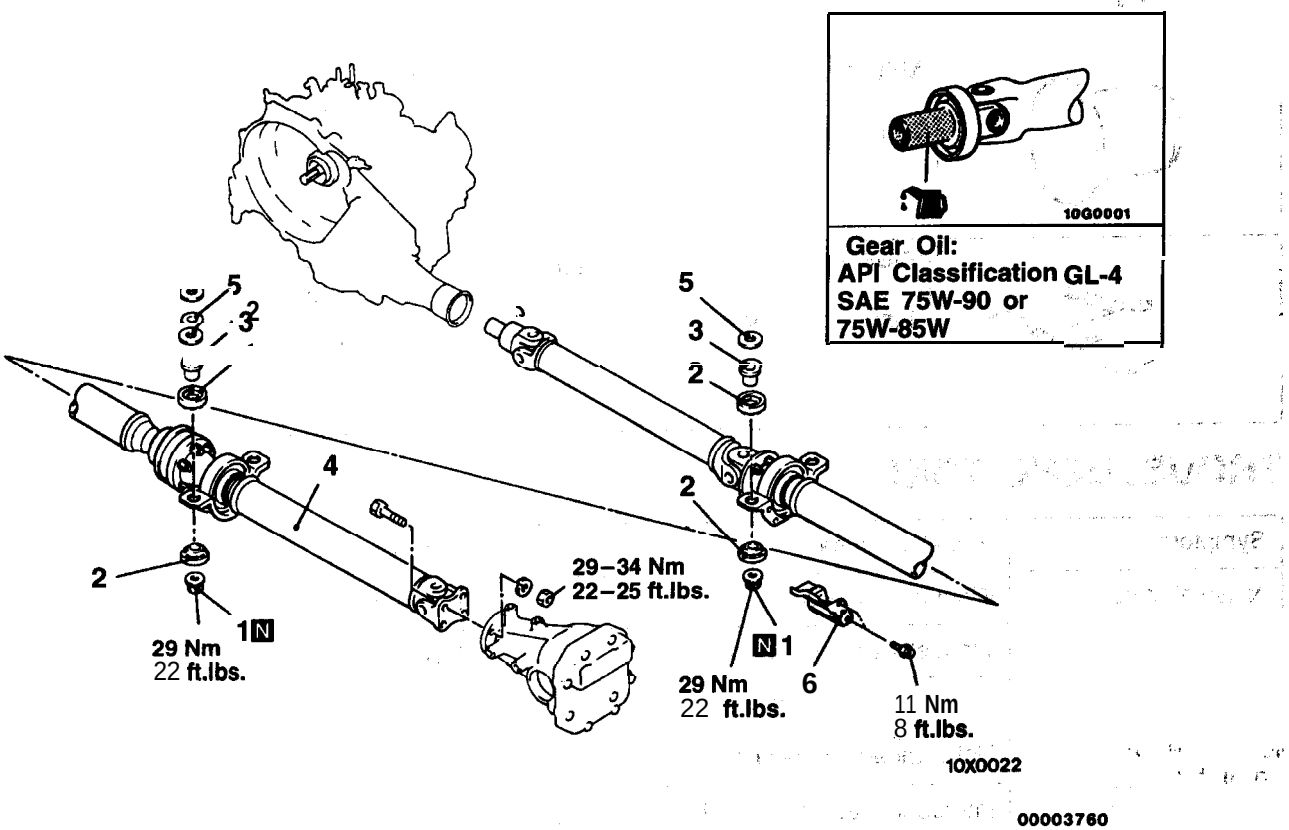

Removal steps

1. Self-locking nut
2. Insulator
3. Spacer

◀A▶ ▶A◀ 4. Propeller shaft assembly
◀B▶ 5. Spacer
6. Heat protector

TSB Revision

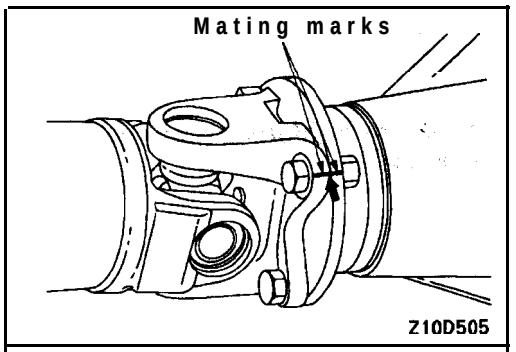

REMOVAL SERVICE POINTS

◀A▶ PROPELLER SHAFT ASSEMBLY REMOVAL

(1) Make mating marks on the differential companion flange and 'flange yoke and remove the propeller shaft.

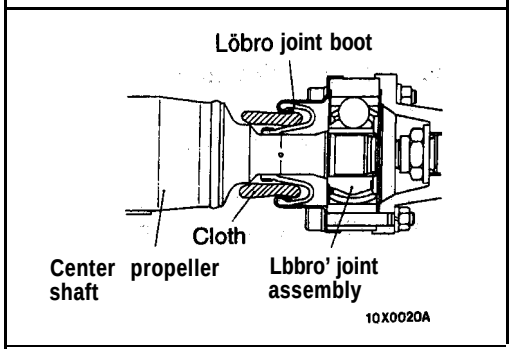

Caution'

Remove the propeller shaft in a straight and level manner so as to ensure that the boot is not damaged through pinching.

NOTE

Damage to the boot can be avoided, and the Work will be easier, if a piece of cloth or similar material is inserted in the boot.

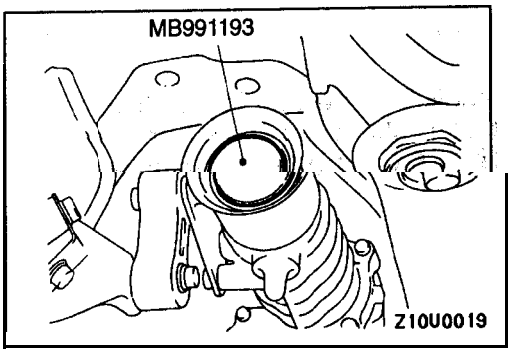

(2) Use the special tool as a cover not to let foreign objects get into the transfer case.

◀B▶ SPACER REMOVAL

The number of spacers depends on models. Check the number of spacers used and write it down for reference during reassembly.

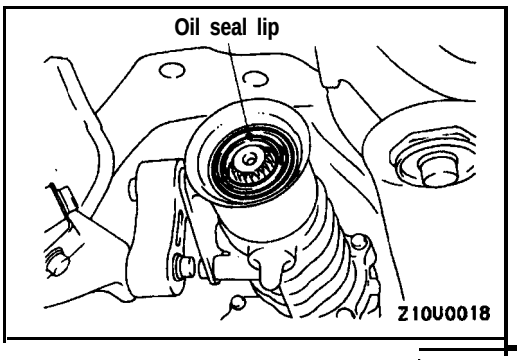

INSTALLATION SERVICE POINT

▶A◀ PROPELLER SHAFT ASSEMBLY INSTALLATION

Caution

Do not damage the transfer case oil seal lip.

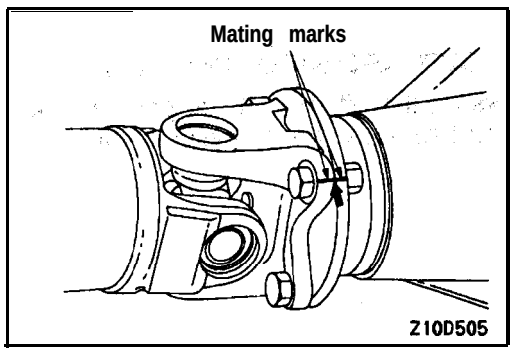

Install the propeller shaft to the companion flange with the mating marks properly aligned.

Caution
Remove oil and grease before tightening the installation bolts, or the bolts will loosen.

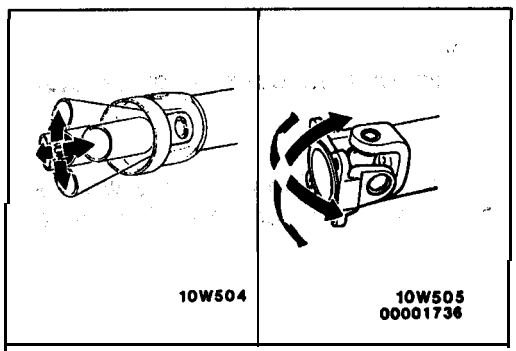

INSPECTION 25100110036

- Check the sleeve yoke, center yoke and flange yoke: for wear, damage or cracks.
- Check the propeller shaft yokes for wear, damage or cracks':
- Check the propeller shaft for bends, twisting or damage.
- Check the universal joints for smooth operation in all' directions.
- Check the center bearing for smooth movement,
- Check the center bearing mounting rubber for damage or deterioration.

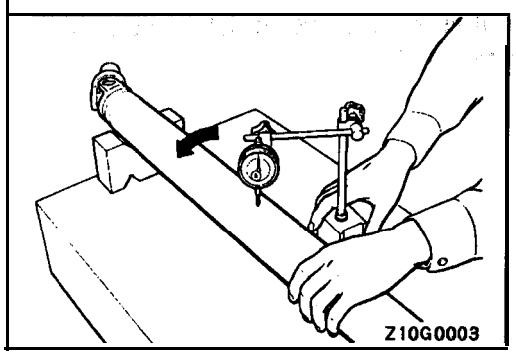

PROPELLER SHAFT RUNOUT CHECK 25100140028

Limit:

Front propeller shaft 0.6 mm (.24 in.) or less
Center propeller shaft 0.6 mm (.24 in.) or less
Rear propeller shaft 0.6 mm (.24 in.) or less

DISASSEMBLY AND REASSEMBLY

25100120039

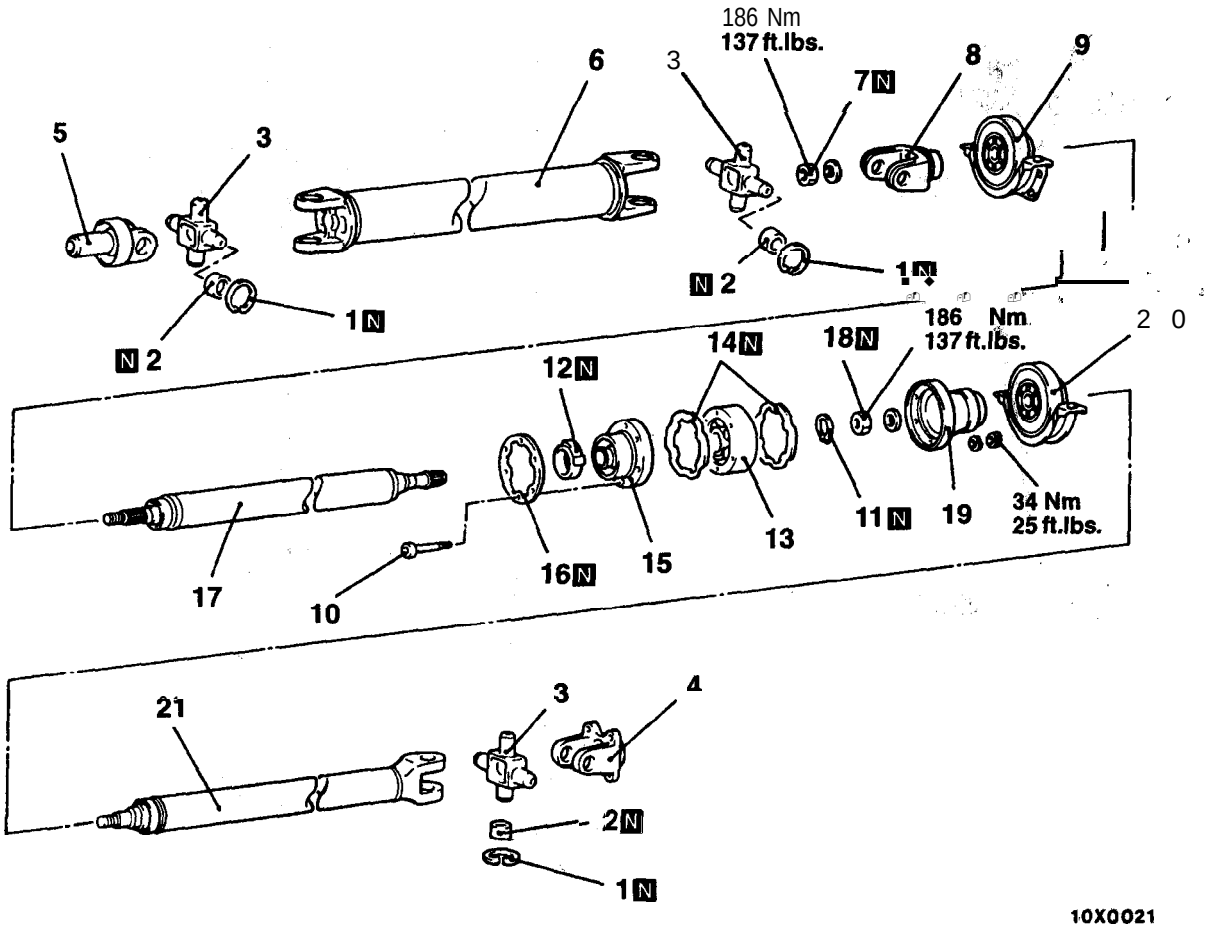

00003761

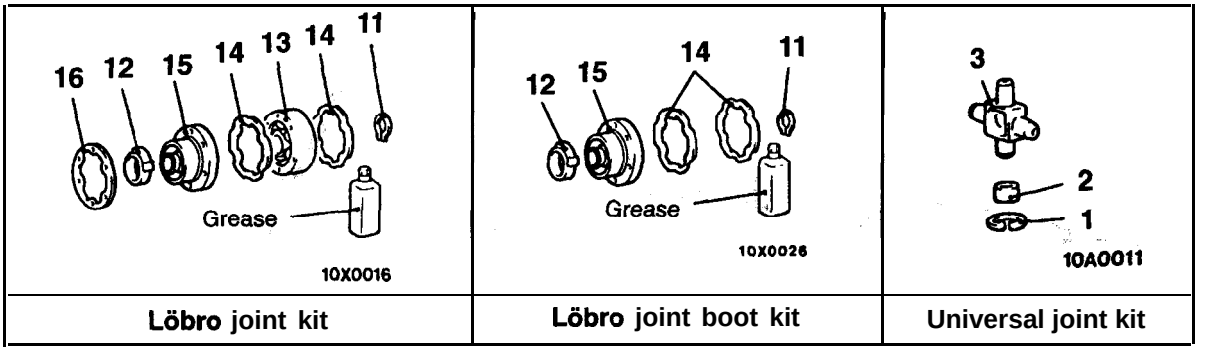

Löbro joint kit	Löbro joint boot kit	Universal joint kit

Disassembly steps

◀A▶ ▶G◀ 1. Snap ring
◀B▶ ▶F◀ 2. Journal bearing
▶F◀ 3. Journal
4. Flange yoke
5. Sleeve yoke assembly
6. Front propeller shaft
▶E◀ 7. Self-locking nut
◀C▶ ▶E◀ 8. Center yoke.
◀D▶ ▶E◀ 9. Center bearing assembly
◀E▶ 10 Bolts
11. Snap ring
▶D◀ 12. Boot band
◀F▶ ▶C◀ 13. Lobro joint assembly
14. Rubber packing
◀G▶ ▶B◀ 15. Lobro joint boot
16. Washer
17. Center propeller shaft
▶A◀ 18. Self-locking nut
◀H▶ ▶A◀ 19. Companion flange
◀D▶ ▶A◀ 20. Center 'bearing assembly
21. Rear propeller shaft

TSB Revision

LUBRICATION AND ADHESION POINTS

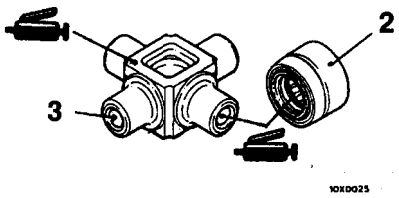

Caution
Do not apply excessive grease, otherwise faulty fitting of bearing caps and errors in the selection of snap rings may result.

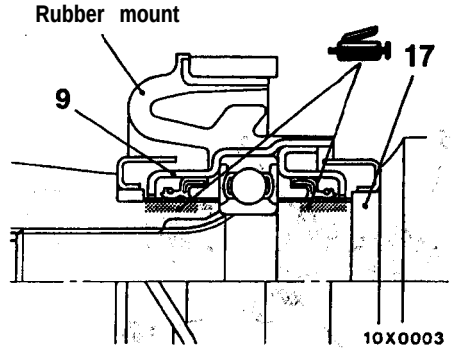

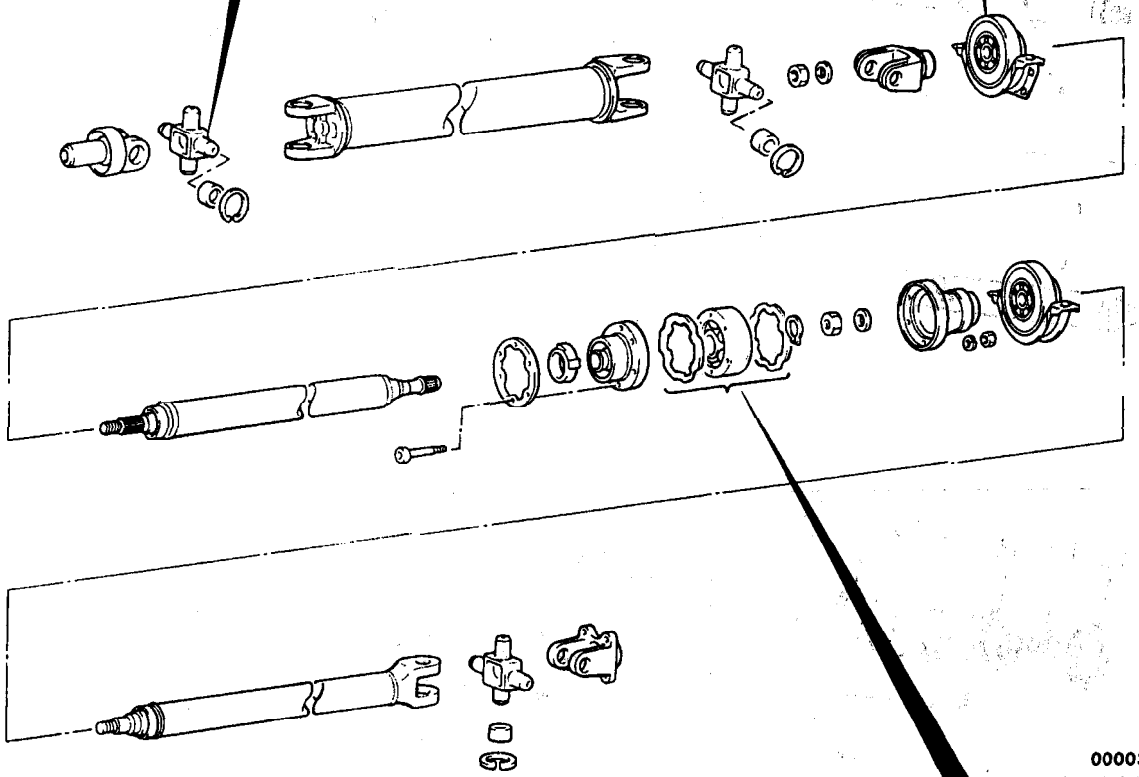

10X0021

Löbro joint assembly		
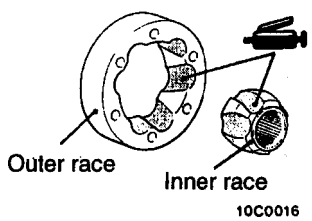	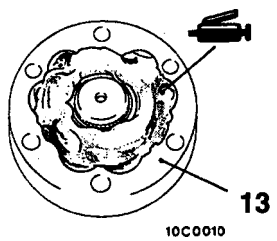	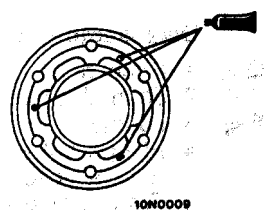
Grease: Repair kit grease	Grease: Repair kit grease [45–55 g (1.59-1.94 oz.)]	Adhesive: Quick fix adhesive 3M ATD Part No. 8155 or equivalent

TSB Revision

DISASSEMBLY SERVICE POINTS

◀A▶ SNAP RINGS REMOVAL

(1) Make mating marks on the yoke and universal joint that is to be disassembled.
(2) Remove the snap rings from the yoke with snap ring pliers.

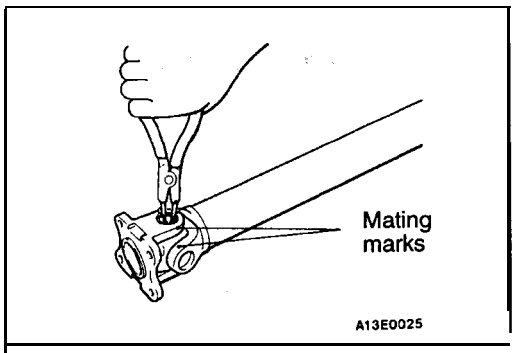

◀B▶ JOURNAL BEARINGS REMOVAL

Use the special tool to force out the journal bearings from the yoke and propeller shaft.

Caution
Do not tap the journal bearings, or the propeller shaft won't function well.

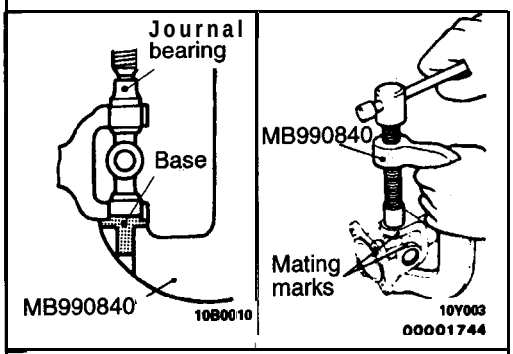

◀C▶ CENTER YOKE REMOVAL

(1) Place mating marks on the center yoke and center propeller shaft assembly.
(2) Remove the center yoke from center propeller shaft.

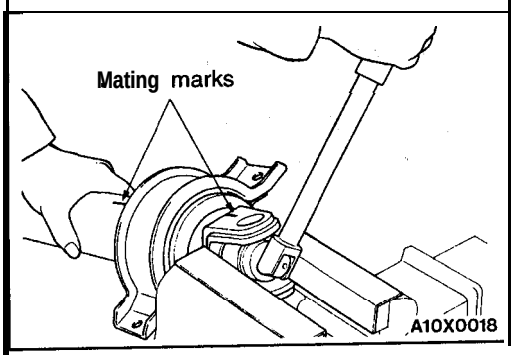

◀D▶ CENTER BEARING ASSEMBLY REMOVAL

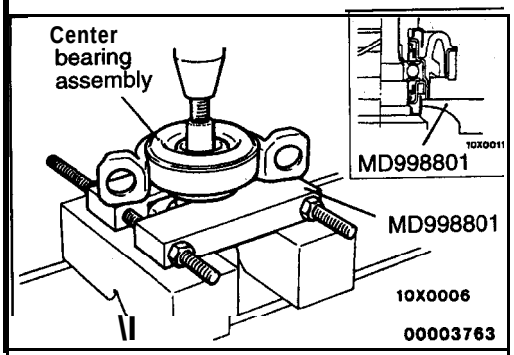

◀E▶ BOLTS REMOVAL

Put mating marks on the center propeller shaft, the Lobro joint assembly and the companion flange before removing the bolts.

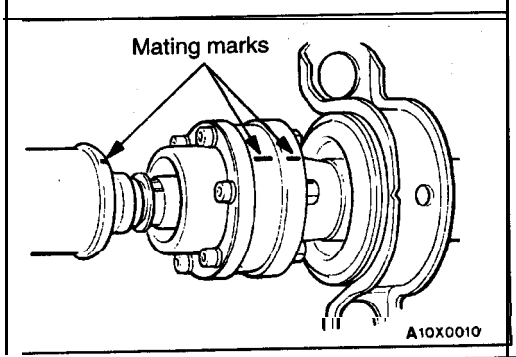

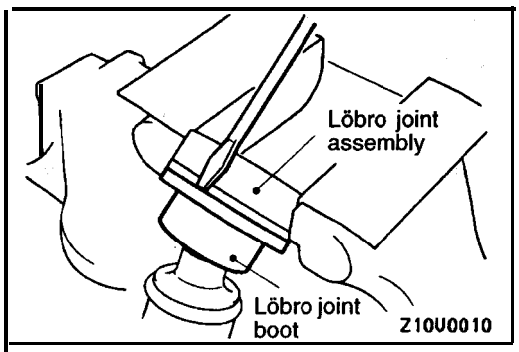

◀F▶ LÖBRO JOINT ASSEMBLY REMOVAL

(1) Remove the Lobro joint boot from the Löbro joint assembly.

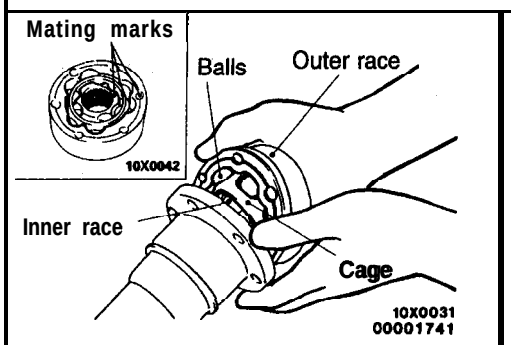

(2) Put mating marks on the outer race, cage and inner race with a scriber.
(3) Remove the outer race and balls.

NOTE
Note the positions of balls so that they can be reinstalled in their original positions.

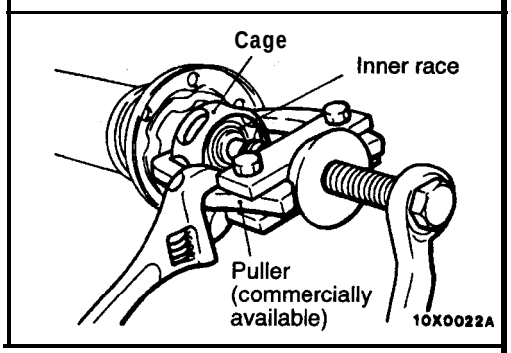

(4) Remove the inner race with cage from the center propeller shaft by using a puller (commercially available).

NOTE
When changing the grease on the Lobro joint assembly, wipe off the grease and clean the outer and inner races, cage and balls.

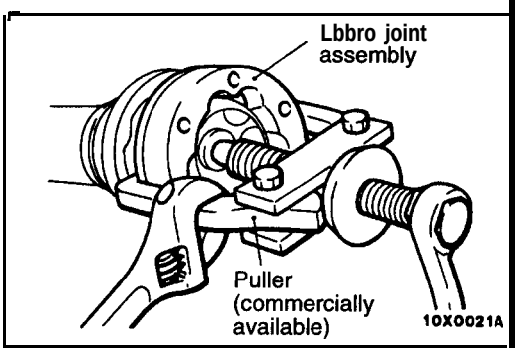

(5) If the outer race cannot be removed, remove the complete Löbro joint assembly from the center propeller shaft by using a puller (commercially available).

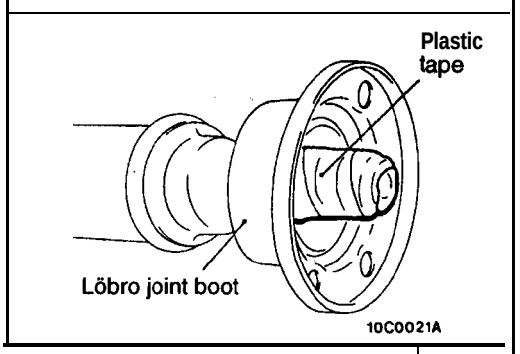

◀G▶ LÖBRO JOINT BOOT REMOVAL

When reusing the Lobro joint boot, apply plastic tape to the spline section of the center propeller shaft before removing.

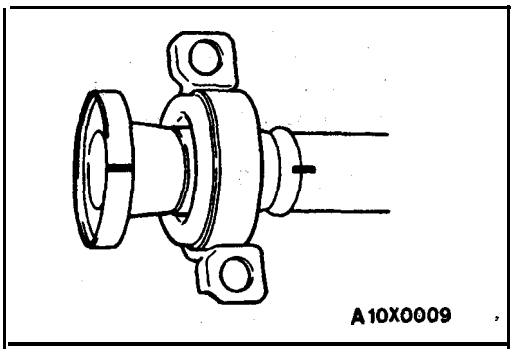

▶H◀ COMPANION FLANGE REMOVAL

Put mating marks on the companion 'flange and the rear, propeller shaft before removing the companion flange.

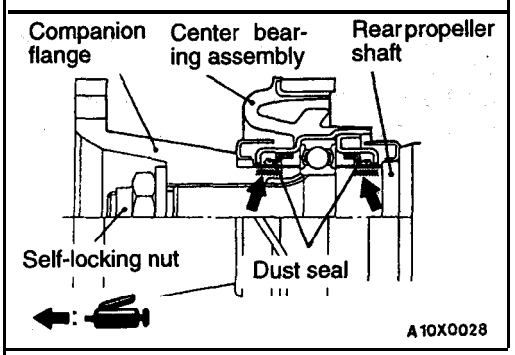

REASSEMBLY SERVICE" POINTS

▶A◀ CENTER BEARING ASSEMBLY/COMPANION FLANGE/SELF-LOCKING NUT INSTALLATION

(1) Apply multipurpose grease as shown in the 'figure.
(2) Install the center bearing assembly to the rear propeller shaft as shown in the illustration.
(3) Align the mating marks on the companion flange and rear propeller shaft.
(4) Press-fit the center bearing assembly with the companion flange while tightening the self-locking nut.

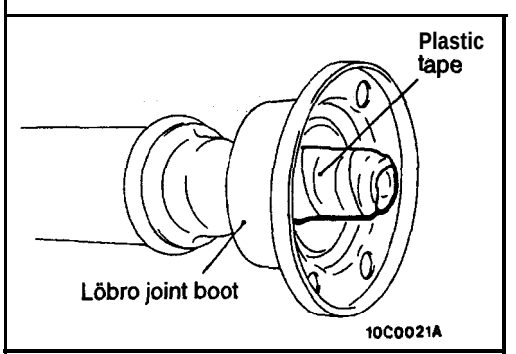

▶B◀ LÖBRO JOINT BOOT INSTALLATION

(1) Before installing the Löbro joint boot, insert the boot band.
(2) Wrap the splined end of propeller shaft with plastic tape and install the Lobro joint boot.

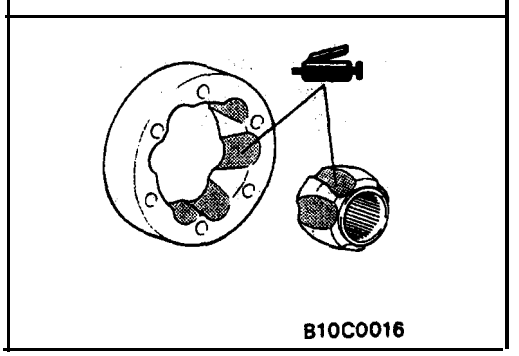

▶C◀ LÖBRO JOINT ASSEMBLY INSTALLATION

Install fhe Lobro joint assembly as follows:

(1) Apply a thin coat of the specified grease to the ball grooves of the inner and outer races.

Specified greasd: Repair kit grease

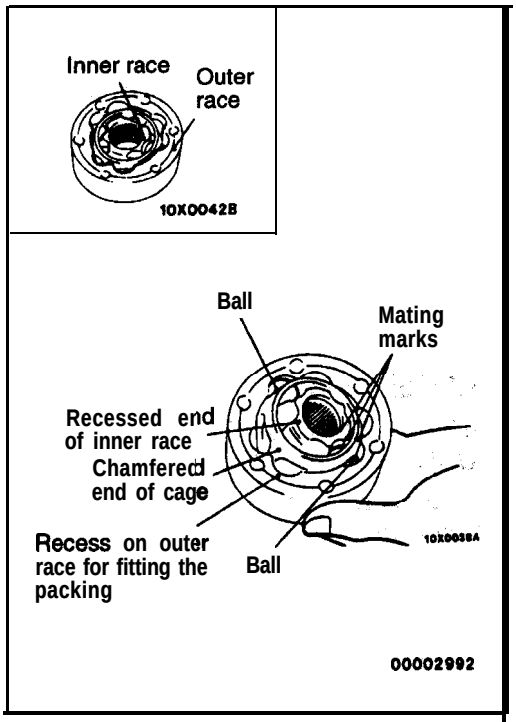

(2) Put the cage on, the inner race with the mating marks aligned and install two balls, one in a groove and the other in the groove opposite to that groove. Both balls should be placed in the grooves where they were before, disassembly.

(3) Assemble the inner race and cage in the, outer race with, their mating marks aligned.

NOTE
Make sure that the recessed end (where snap ring will be fitted) of the inner race, the recessed end (where packing will be fitted) of the outer race, and the chamfered end of the cage are all on the same side. Also ensure that the relative positions' of the inner and outer races are as shown in the illustration.,

(4) Install the remaining balls in their original positibns.

(5) Check that the outer race rotates on the inner race smoothly.

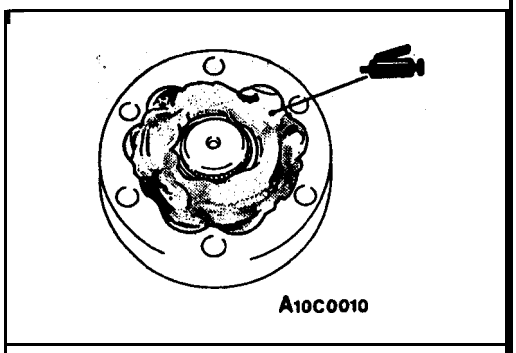

(6) Apply the specified grease to the Lobro joint assembly.

Specified grease:
Repair kit grease 45–55 g (1.59 – 1.94 oz.)

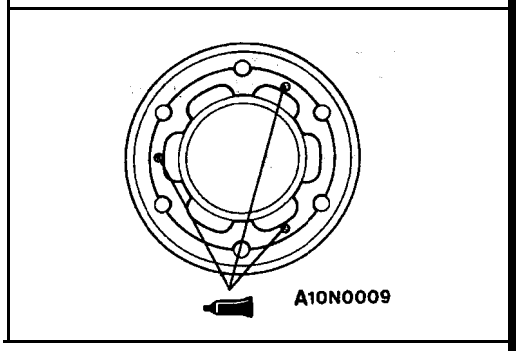

(7) Apply a small amount of specified adhesive in three equally, divided places on the surface on the Löbro joint ball groove where there is a stepped section for the Löbro joint assembly packing, and then fit the rubber packing.

Specified adhesive:
Quick fix adhesive 3M ATD Part No. 8155 or equivalent

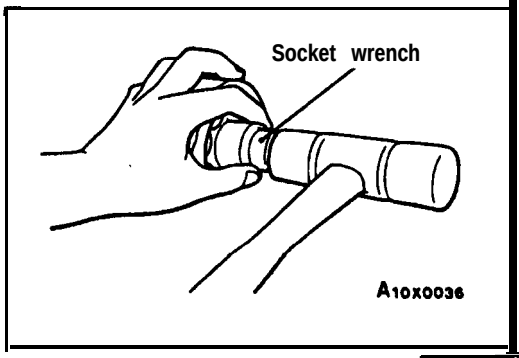

(8) Install the Löbro joint assembly on the center propeller shaft while aligning their bolt holes, and drive the joint assembly with a hammer using a socket wrench on the inner race for complete installation.

NOTE
Install so that the surface where there is a stepped section for the Lobro joint assembly packing is facing toward the Löbro joint boot.

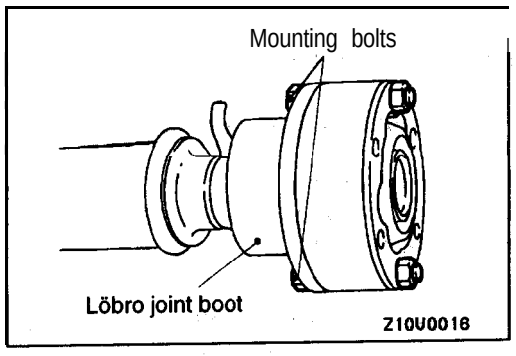

(9) Realign the bolt holes in the boot and Löbro joint assembly utilizing the mounting bolts and fit the boot on the joint assembly.

(IO)Fit the rubber packing for the companion flange to the companion flange using the same procedure as in step (7).

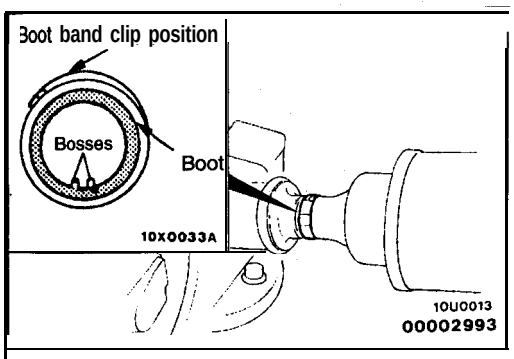

▶D◀ BOOT BAND INSTALLATION

Caution

Position the boot band clip on the side opposite to the bosses which are provided in the boot for ventilation. Be sure to remove grease, if present, from around the bosses. Grease obstructs the ventilation air passage.

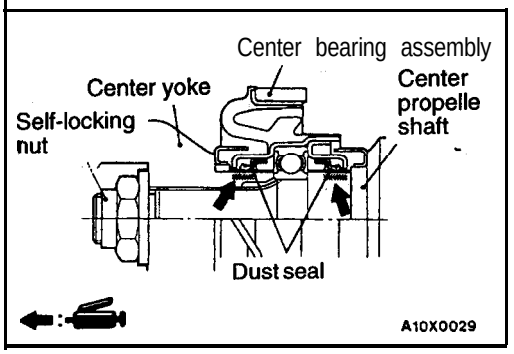

▶E◀ CENTER BEARING ASSEMBLY/CENTER YOKE/SELF-LOCKING NUT INSTALLATION

(1) Apply multipurpose grease as shown in the figure.
(2) Install the center bearing assembly to the center propeller shaft as shown in the illustration.
(3) Align the mating marks on the center yoke and center propeller shaft.
(4) Press-fit the center bearing assembly with the center yoke while tightening the self-locking nut.

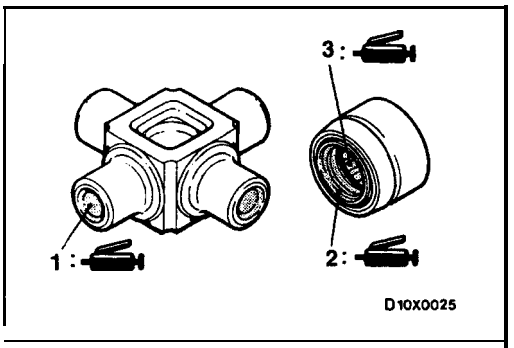

▶F◀ JOURNAL/JOURNAL BEARING INSTALLATION

(1) Apply multipurpose grease to the following parts of the universal joint kit.
  1) Shafts and grease sumps of journal
  2) Dust seal lips
  3) Needle roller bearings

Caution

Do not apply excessive grease. Otherwise, faulty fitting of bearing caps and errors in the selection of snap rings may result.

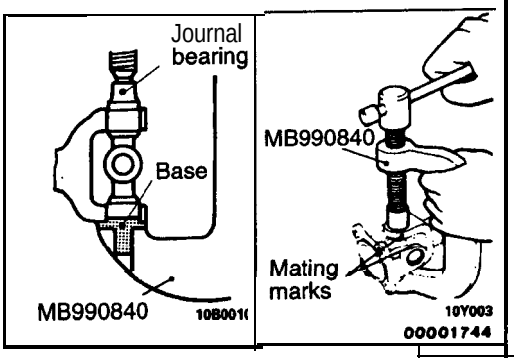

(2) Press fit the journal bearings to the yoke by using the special tool according to the following procedures.
  1) Install the base to the special tool.
  2) Insert both bearings in the yoke, and hold and press fit them by using the special tool.

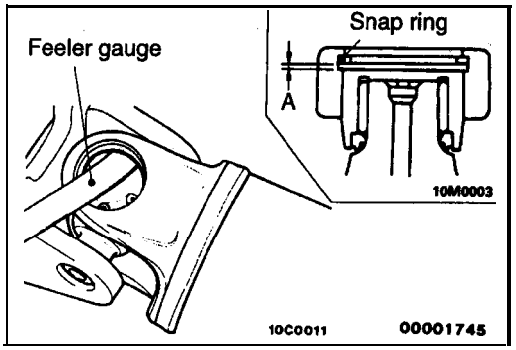

▶G◀ SNAP RINGS INSTALLATION

(1) Install snap rings of the same thickness onto both sides of each yoke.
(2) Press the bearing and journal into one side by using a brass bar.
(3) Measure the clearance between the snap ring and the groove wall of the yoke with a feeler gauge. If the clearance exceeds the standard value, the snap rings should be replaced.

Standard value (A): 0.01–0.03 mm (.0004–.0012 in.)

Snap ring thickness mm (in.)	Identification color
1.28 (.0503)	
1.31 (.0516)	Yellow
1.34 (.0528)	Blue
1.37 (.0539)	Purple
1.40 (.0551)	Brown

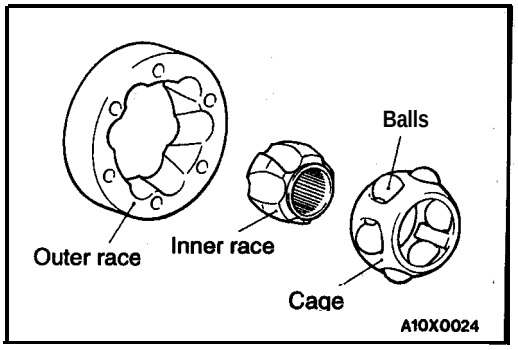

INSPECTION

25100120026

- Check the propeller shaft splines for wear or damage.
- Check the ball grooves in inner and outer races for uneven wear, damage or rust.
- Check ball surface for rust, wear or other damage.
- Check the cage for rust or damage.

FRONT AXLE

CONTENTS

26109000065

GENERAL INFORMATION

26100010067

The front axle consists of a knuckle, front hub, unit bearing and drive shaft, The unit bearing is press-fitted to the front hub and bolted to the kunckle. Also, the unit bearing utilizes a double row angular contact ball bearing. The drive shaft has a tripod joint (T.J.) on the transaxle side and a birfield joint (B.J.) on the wheel side. A center bearing and an inner shaft have been adopted in some models.

CONSTRUCTION DIAGRAM

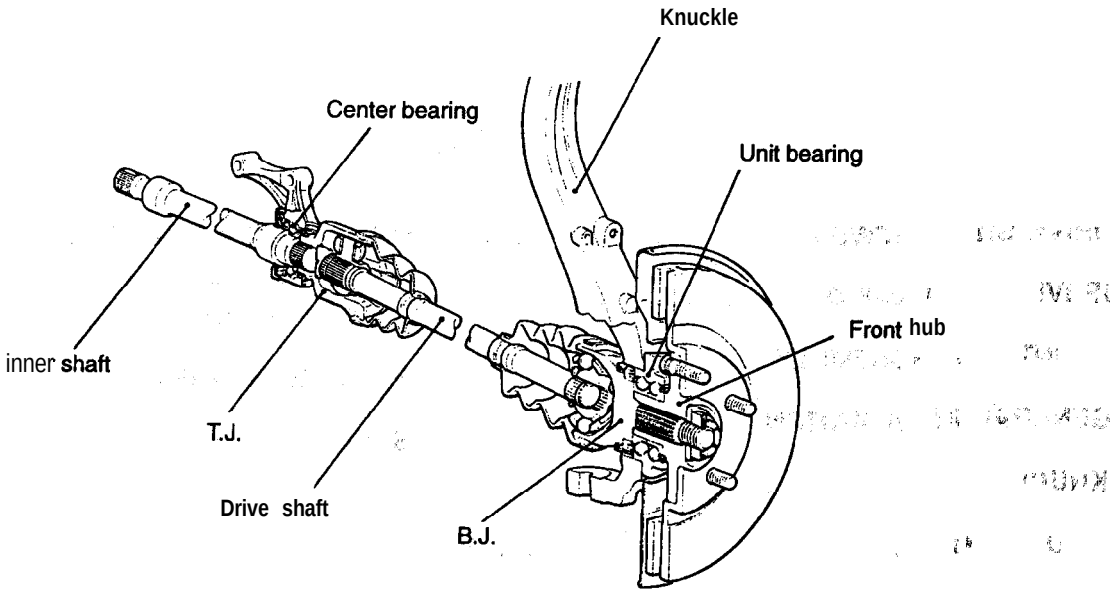

A11X0006

SERVICE SPECIFICATIONS

26100030087

Items		Standard value	Limit
Setting of boot length mm (in.)		80 ± 3 (3.15 ± .12)	–
Opening dimension of the special tool (MB991561) mm (in.)	When the B.J.boot band (small) is crimped	2.9 (.114)	
	When the B.J.boot band (big) is crimped	3.2 (.126)	
Crimped width of the B.J.boot band mm (in.)		2.4 – 2.8 (.094 – .110)	–
Clearance between the B.J.boot (larger diameter side) and the stepped phase of the B.J. housing mm (in.)		0.1 – 1.55 (.004 – .061)	–
Wheel bearing end play mm (in.)			0.05 (.002)
Wheel bearing breakaway torque Nm (in.lbs.)			1.0 (9) or less

LUBRICANTS

26100040080

Items		Quantity g (oz.)	Specified lubricant
T.J.assembly	FWD <2.0L Engine (Non-turbo)>	105 (3.70)	Repair kit grease
	FWD <2.0L Engine (Turbo) and 2.4L Engine>	120 (4.23)	
	AWD	105 (3.70)	
Inner dust seal		7 – 10 (.25 – .35)	Multi-purpose grease
Outer dust seal		4 – 6 (.14 – .21)	
B.J.assembly	FWD <2.0L Engine (Non-turbo)>	110 (3.88)	Repair kit grease
	FWD <2.0L Engine (Turbo) and 2.4L Engine>	130 (4.59)	
	AWD	95 (3.35)	

TSB Revision

SPECIAL TOOLS

26100060086

Tool	Tool number and name	Supersession	Application
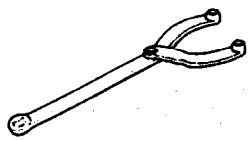	MB990767 End yoke holder	MB990767-01	Hub fixing
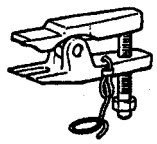	MB991113 Steering linkage puller	MB991113-01	• Upper arm ball joint and knuckle disconnection • Compression lower arm ball joint and knuckle disconnection • Lateral lower arm ball joint and knuckle disconnection • Tie rod end ball joint and knuckle disconnection • Hub bolt replacement
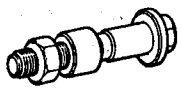	MB990998 Front hub remover and installer	MB990998	Wheel bearing provisional holding
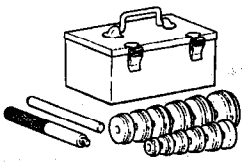	MB990925 Bearing and oil seal installer set	General service tool (Use universal driver set)	• Center bearing press-out MB990932 MB990938 • Center bearing press-fitting MB990932 MB990938 • Dust seal outer press-fitting MB990931 MB990938 • Dust seal inner press-fitting MB990933 MB990938
	MB990326 Preload wrench	General service tool	Wheel bearing breakaway torque measurement
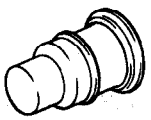	MB991461 <FWD> MB991460 <AWD> Plug	General service tool	Preventing of entry of foreign objects into the transaxle case
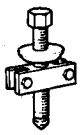	MB990197 Puller body	General service tool	Inner shaft press-out

Tool	Tool number and name	Supersession	Application
	MB990302 Hook	General service tool	Inner shaft press-out
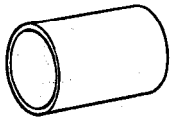	MB991172 Adapter	General service tool	Inner shaft press-fitting
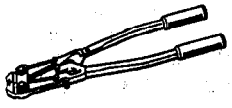	MB991561 Boot band crimping tool	–	B.J.boot band installation
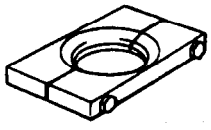	MB991248 Inner shaft remover	–	Press-out of the inner shaft and press-fitting seal plate

TROUBLESHOOTING

26100070041

Symptom	Probable cause	Remedy
Vehicle pulls to one side	Seizure of drive shaft ball joint	Replace
	Abnormal wear, play or seizure of wheel bearing	Replace
	Malfunction of front suspension or steering	Adjust or replace
Vibration	Bend, damage or abnormal wear of drive shaft	Replace
	Play in drive shaft and hub serration	Replace
	Abnormal wear, play or seizure of wheel bearing	Replace
Shimmy	Improper wheel alignment	Adjust or replace
	Malfunction of front suspension or steering	Adjust or replace
Excessive noise	Broken boot, grease leakage	Replace, repack grease
	Bend, damage or abnormal wear of drive shaft	Replace
	Play of drive shaft and hub serration	Replace
	Abnormal wear, play or seizure of wheel bearing	Replace
	Abnormal wear, play or seizure of center bearing	Replace
	Loose wheel nut	Retighten
	Malfunction of front suspension and steering	Adjust or replace

TSB Revision

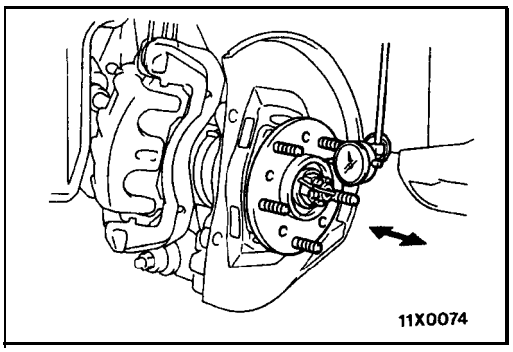

ON-VEHICLE SERVICE

26100110033

WHEEL BEARING END PLAY CHECK

1. Remove the disc brake caliper and suspend it with a wire.
2. Remove the brake disc from the front hub.
3. Attach a dial gauge as shown in the illustration, and then measure the end play while moving the hub in the axial direction.

   Limit: 0.05 mm (.002 in.)
4. If end play exceeds the limit, replace the front hub assembly.

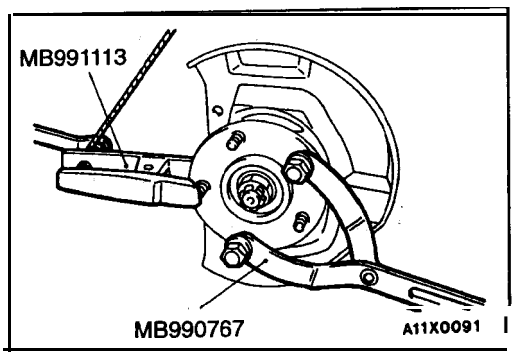

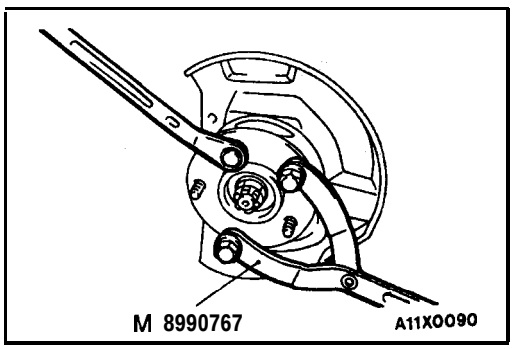

HUB BOLT REPLACEMENT

26100100030

1. Remove the caliper assembly and secure it with wire so that it does not fall.
2. Remove the brake disc.
3. Use the special tools to remove the hub bolts.

   Caution
   Be sure to tie the cord of the special tool to a nearby part.
4. Use the wheel nuts to securely install the new hub bolts, while being careful of the serrations of the hub bolts and hub;

FRONT HUB ASSEMBLY

26100170079

REMOVAL AND INSTALLATION

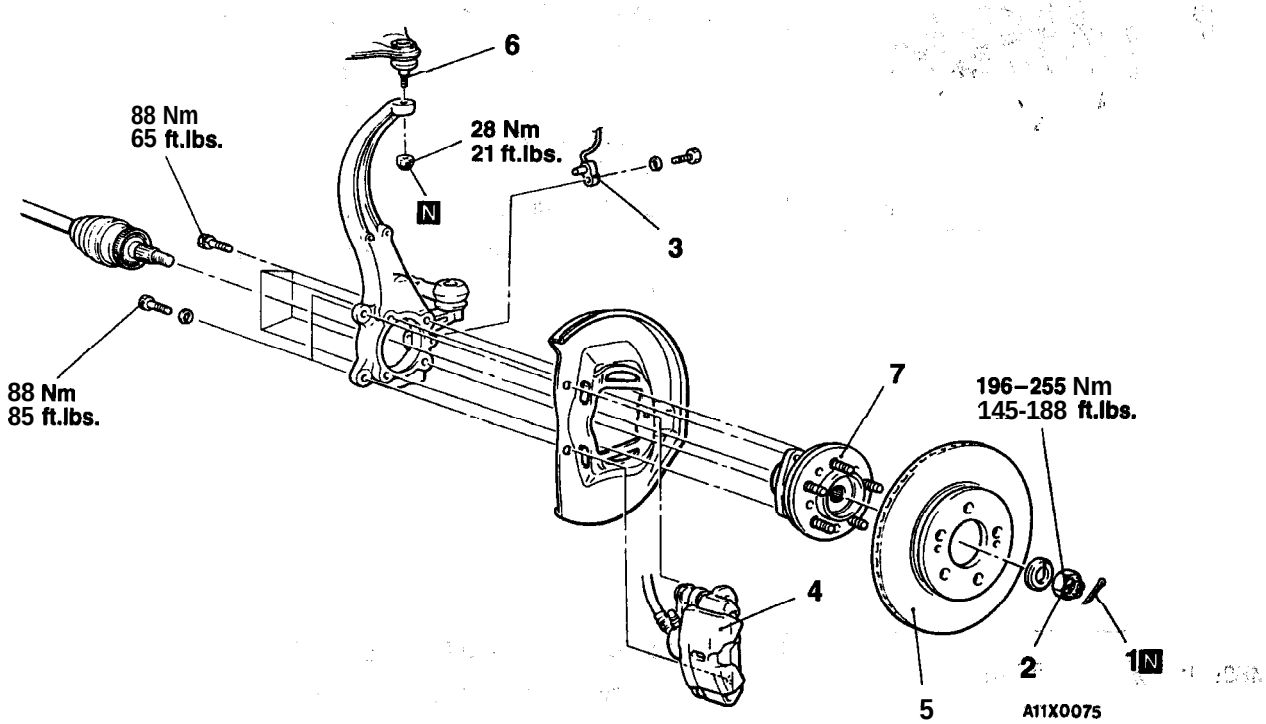

Removal steps

1. Cotter pin
◀A▶ ▶A◀ 2. Drive shaft nut
3. Front wheel speed sensor <Vehicles with ABS>
◀B▶ 4. Caliper assembly
5. Brake disc
◀C▶ 6. Upper arm ball joint and knuckle connection
◀D▶ 7. Front hub. assembly

Caution
The front hub assembly should not be disassembled.

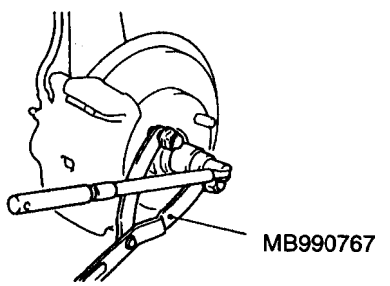

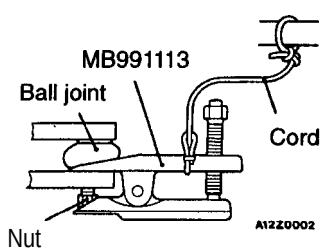

REMOVAL SERVICE POINTS

◀A▶ DRIVE SHAFT NUT REMOVAL.

◀B▶ CALIPER ASSEMBLY REMOVAL

Secure the removed caliper assembly with wire so that it does not fall.

◀C▶ UPPER ARM BALL JOINT AND KNUCKLE DISCONNECTION

Caution

1. **Using the special tool, loosen the tie rod end mounting nut. Only loosen the nut; do not remove it from the ball joint.**
2. **Support the special tool with a cord, etc. to prevent it from coming off.**

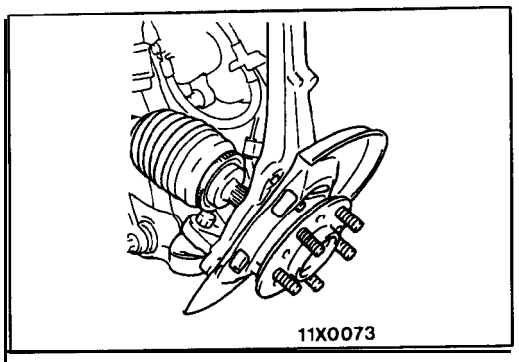

◀D▶ FRONT HUB ASSEMBLY REMOVAL

Shift the knuckle to the outside in order to maintain the clearance between the front hub assembly mounting bolts and the drive shaft.

Caution
1. Do not damage the ball joint boot.
2. For vehicles with ABS, be careful not to damage the rotor.

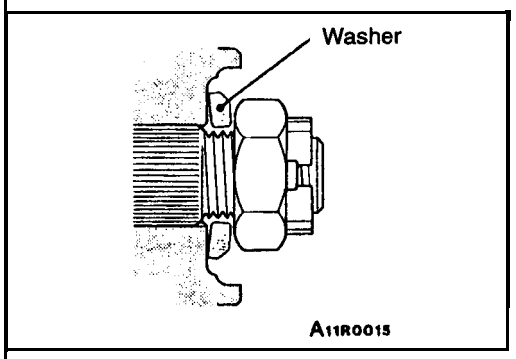

INSTALLATION SERVICE POINT

▶A◀ DRIVE SHAFT NUT INSTALLATION

(1) Install the drive shaft washer in the specified direction.

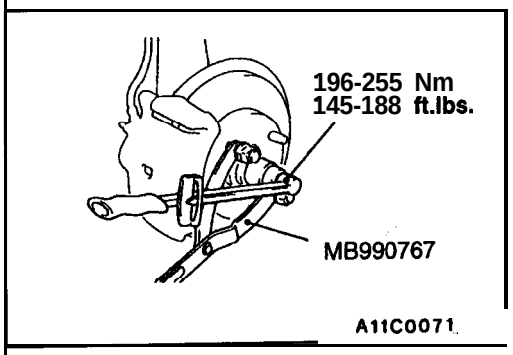

(2) Use the special tool to tighten the drive shaft nut.

Caution
Before securely tightening the drive shaft nuts, make sure there is no load on the wheel bearings.

(3) If the position of the cotter pin holes does not match, tighten the nut up to 255 Nm (188 ft.lbs.) in maximum.
(4) Install the cotter pin in the first matching holes and bend it securely.

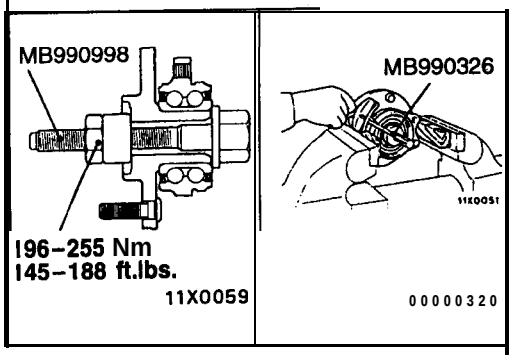

INSPECTION 26100180065

WHEEL BEARING BREAKAWAY TORQUE CHECK

(1) Install the special tool to the front hub assembly and tighten the nut to the specified torque 196-255 Nm (145–186 ft.lbs.).
(2) Use the special tool to measure the hub rotation breakaway torque.
Limit: 1.0 Nm (9 in.lbs.) or less
(3) The hub rotation breakaway torque should be within the limit value range, and there should be no engagement or feeling of roughness.

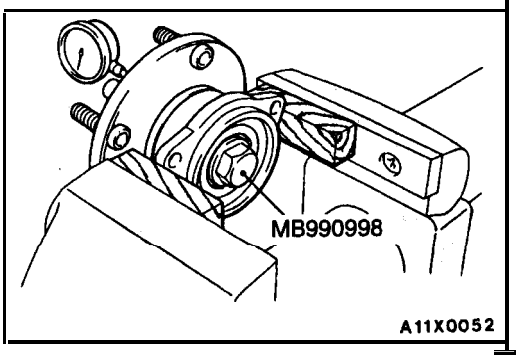

WHEEL BEARING END PLAY CHECK 26100110040

(1) Install the special tool to the front hub assembly and tighten the nut to the specified torque 196-255 Nm (145–188 ft.lbs.).
(2) Measure the play in the hub axial direction.
Limit: 0.05 mm (.002 in.)
(3) If the limit value of wheel bearing end play cannot be obtained, replace the front hub assembly.

KNUCKLE

26100240060

REMOVAL AND INSTALLATION

Pre-removal and **Post-installation Operation**
- **Front Wheel Speed Sensor Removal and Installation <Vehicles with ABS>**
- **Front Hub Assembly Removal and Installation (Refer to P.26-6.)**

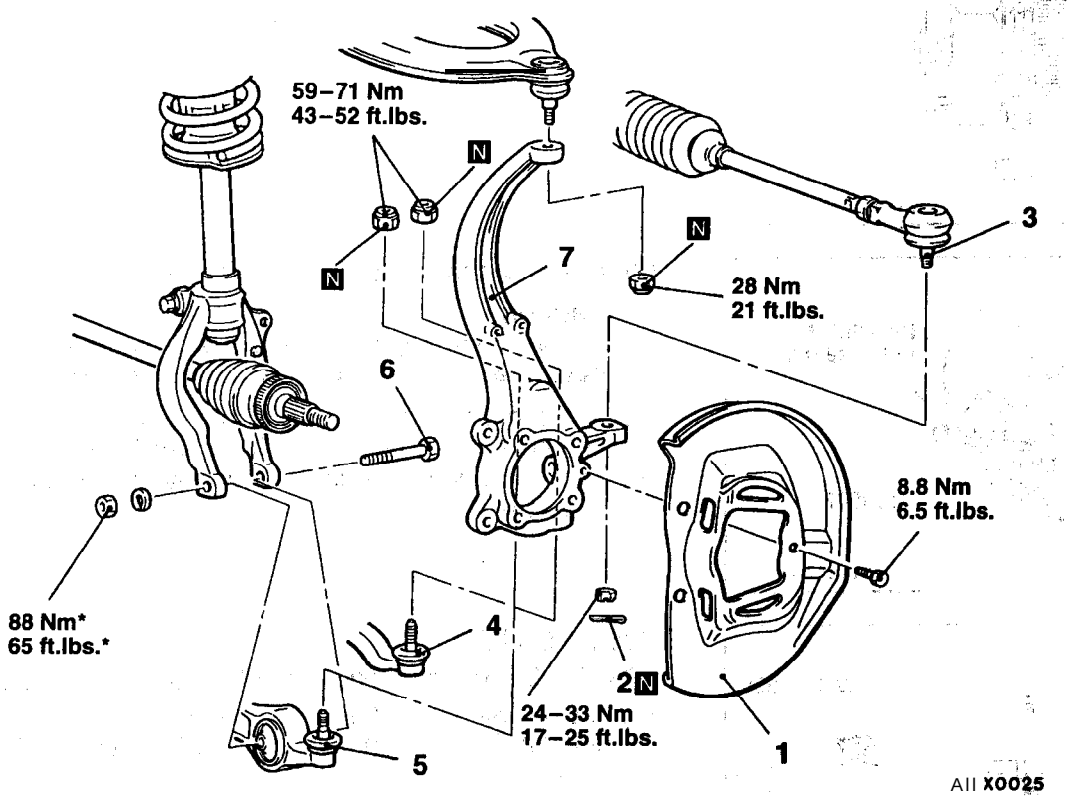

Removal steps

1. Dust shield
2. **Cotter pin**
3. ◀A▶ Tie rod end ball joint and knuckle connection
4. ◀A▶ Compression lower arm ball joint and knuckle connection
5. ◀A▶ Lateral lower arm ball joint and knuckle connection
6. Connecting bolt of damper fork and lateral lower arm
7. **Knuckle**

Caution

*** : Indicates parts which should be temporarily tightened, and then fully tightened with vehicles on the ground**
In the unladen condition.

TSB Revision

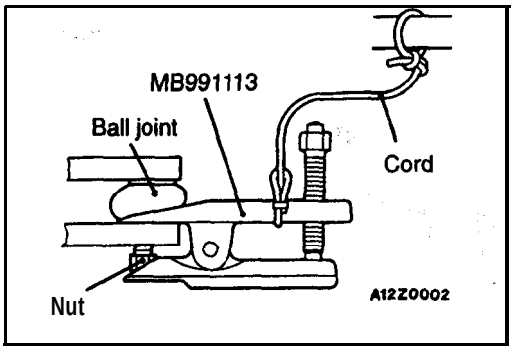

REMOVAL SERVICE POINT

◀A▶ TIE ROD END BALL JOINT AND KNUCKLE/COMPRESSION LOWER ARM BALL JOINT AND KNUCKLE/LATERAL LOWER ARM BALL JOINT AND KNUCKLE DISCONNECTION

Caution

1. **Use the special tool to loosen the tie rod end mounting nut. Only loosen the nut; do not remove it from the ball joint.**
2. **Support the special tool with a cord, etc; to prevent it from coming' off.**

INSPECTION

26100250032

- Check the knuckle for damage, bending or cracking.

DRIVE SHAFT <FWD>

26100350091

REMOVAL AND INSTALLATION

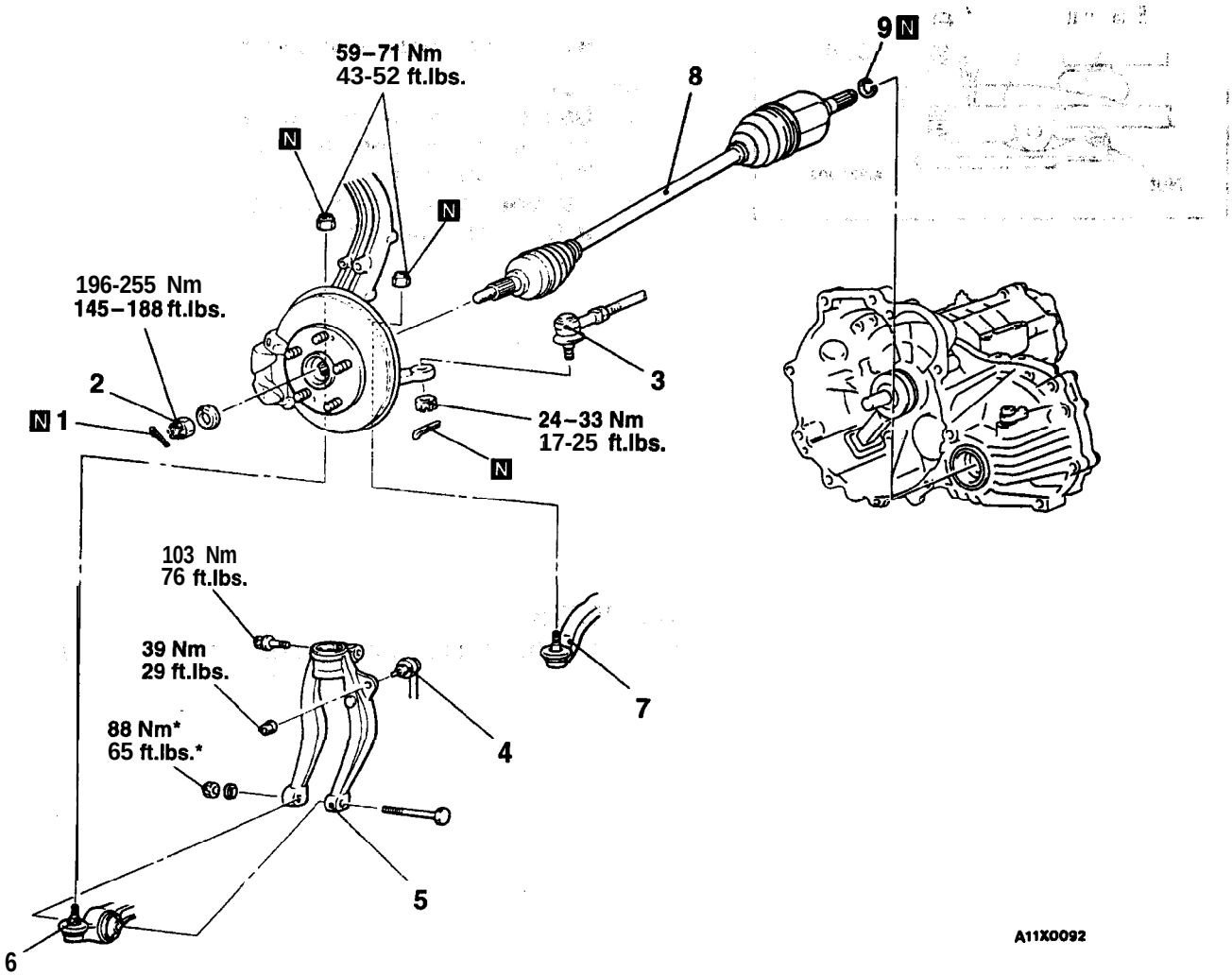

Removal steps

1. Cotter pin
◀A▶ ▶A◀ 2. Drive shaft nut
◀B▶ 3. Tie rod end ball joint and knuckle connection
4. Stabilizer link ball joint and damper fork connection
5. Damper fork
◀B▶ 6. Lateral lower arm ball joint and knuckle connection
◀B▶ 7. Compression lower arm ball joint and knockle connection
◀C▶ 8. Drive shaft
9. Circlip

Caution

- **: Indicates parts which should be temporarily tightened, and then fully tightened with vehicles on the ground in the unladen condition.**

TSB Revision

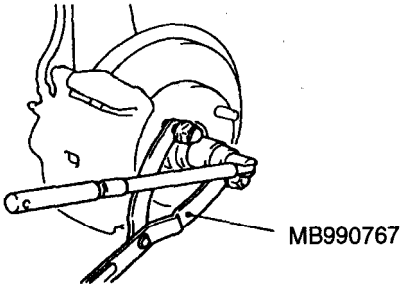

REMOVAL SERVICE POINTS

◀A▶ DRIVE SHAFT NUT REMOVAL

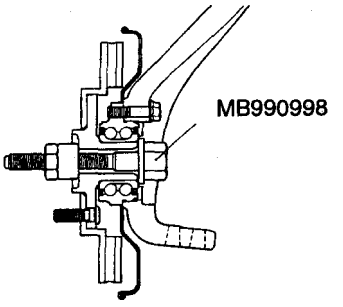

'Caution
Do not apply the vehicle weight to the wheel bearing while loosening the drive shaft nut. If, however, the vehicle weight must be applied to the bearing (because of moving the vehicle), temporarily secure the wheel bearing by using the special tool, MB990998, etc.

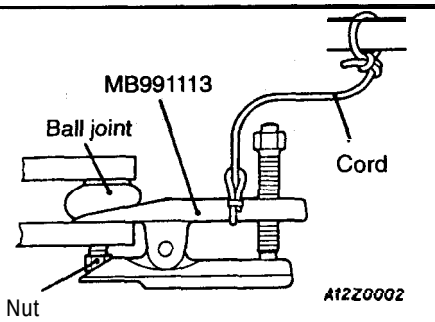

◀B▶ TIE ROD END BALL JOINT AND KNUCKLE/LATERAL LOWER ARM BALL JOINT AND KNUCKLE/COMPRESSION LOWER ARM BALL JOINT AND KNUCKLE DISCONNECTION

Caution
1. Use the special tool to loosen the tie rod end mounting nut. Only loosen the nut; do not remove it from the ball joint.
2. Support the special tool with a cord, etc. to prevent it from coming off.

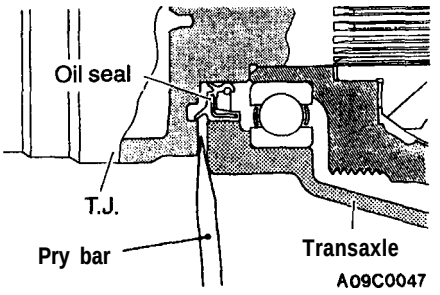

◀C▶ DRIVE SHAFT REMOVAL

(1) Insert a pry bar between the transaxle case and the drive shaft, and then pry the drive shaft from the transaxle.

Caution
1. Always use a pry bar to remove the drive shaft, or the T.J. will be damaged.
2. Do not insert the pry bar so deep as to damage the oil seal.

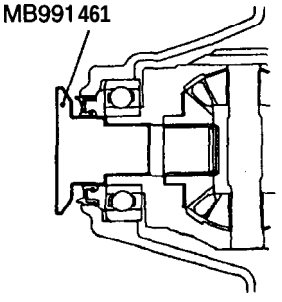

(2) Use the special tool as a cover not to let foreign objects get into the transaxle case.

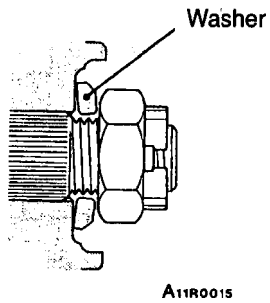

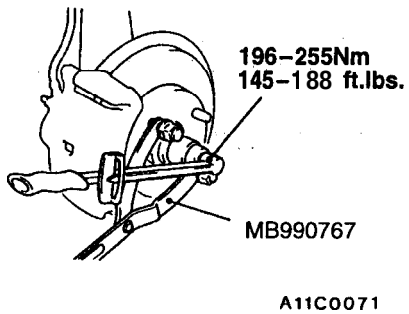

INSTALLATION SERVICE POINT

▶A◀ DRIVE SHAFT NUT INSTALLATION

(1) Install the drive shaft washer in the specified direction.

(2) Use the special tool to tighten the drive shaft nut.

Caution
Before securely tightening the drive shaft nuts, make sure there is no load on the wheel bearings.

(3) If the position of the cotter pin holes, does not match, tighten the nut up to 255 Nm (188 ft.lbs.) 'in maximum.
(4) Install the cotter pin in the first matching holes and bend it securely.

INSPECTION

26100360049

- Check the drive shaft boot for damage or deterioration.
- Check the ball joints for wear or, operating condition.
- Check the spline part for wear or damage.

DISASSEMBLY AND REASSEMBLY

26100370097

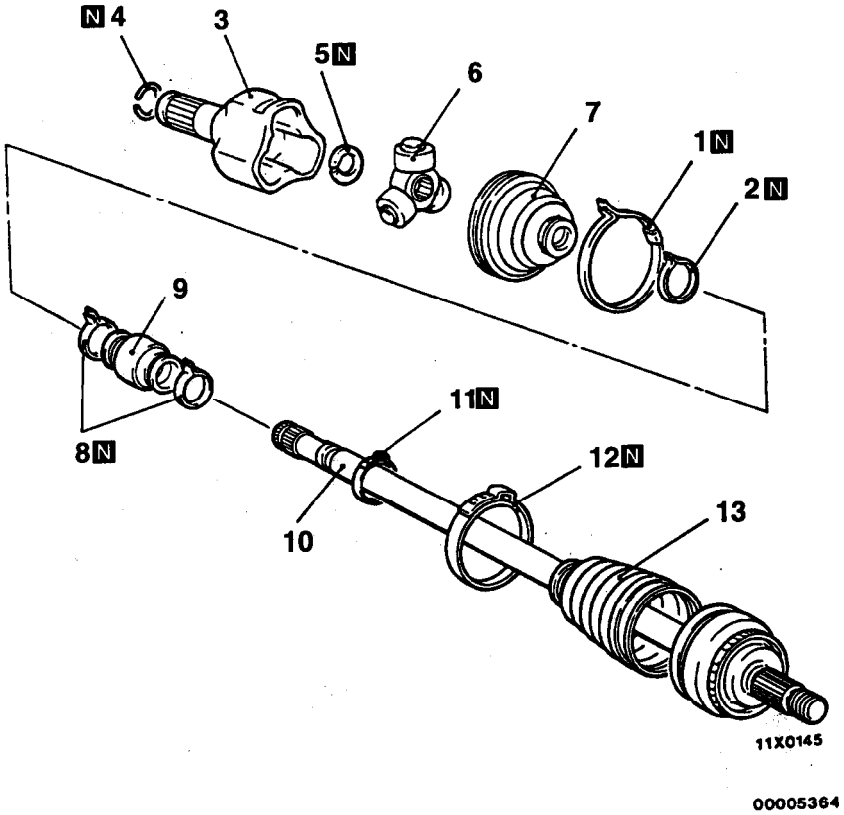

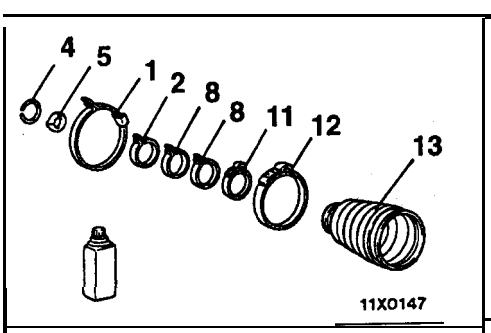

B.J. boot repair kit

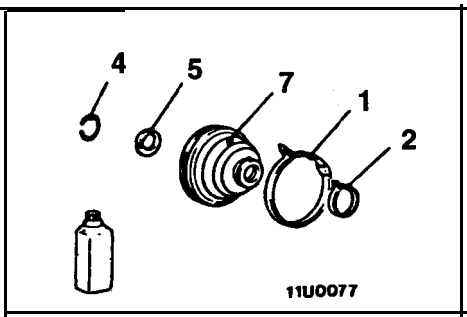

T.J. boot repair kit

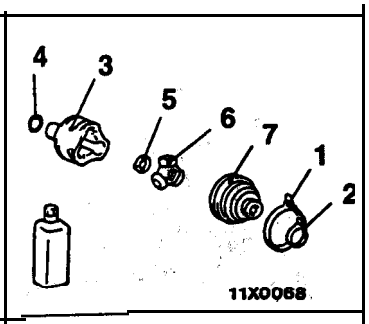

T.J. repair kit'

Disassembly steps

- ▶D◀ 1. T.J. boot band (large)
- ▶D◀ 2. T.J. boot band (small)
- ◀A▶ ▶C◀ 3. T.J. case
- 4. Circlip
- ◀B▶ 5. Snap ring
- ◀B▶ ▶C◀ 6. Spider assembly
- ◀C▶ 7. T.J. boot
- 8. Damper band
- ▶B◀ 9. Dynamic damper
- 10. B.J. assembly
- ◀D▶ ▶A◀ 11. B.J.boot band (small)
- ◀D▶ ▶A◀ 12. B.J.boot band (large)
- ▶A◀ 13. B.J. boot

Caution
Do not disassemble the B.J. assembly except replacement of the B.J. boot.

TSB Revision

LUBRICANT POINTS

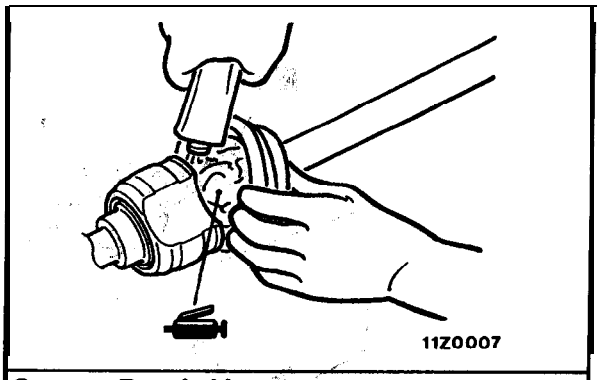

Grease: Repair kit grease
<2.0L Engine (Non-turbo)> 105 g (3.70 oz.)
<2.0L Engine (Turbo) and 2.4L Engine> 120 g (4.23 oz.)

Caution
The drive shaft joint uses special grease. Do not mix old and new or different types of grease.

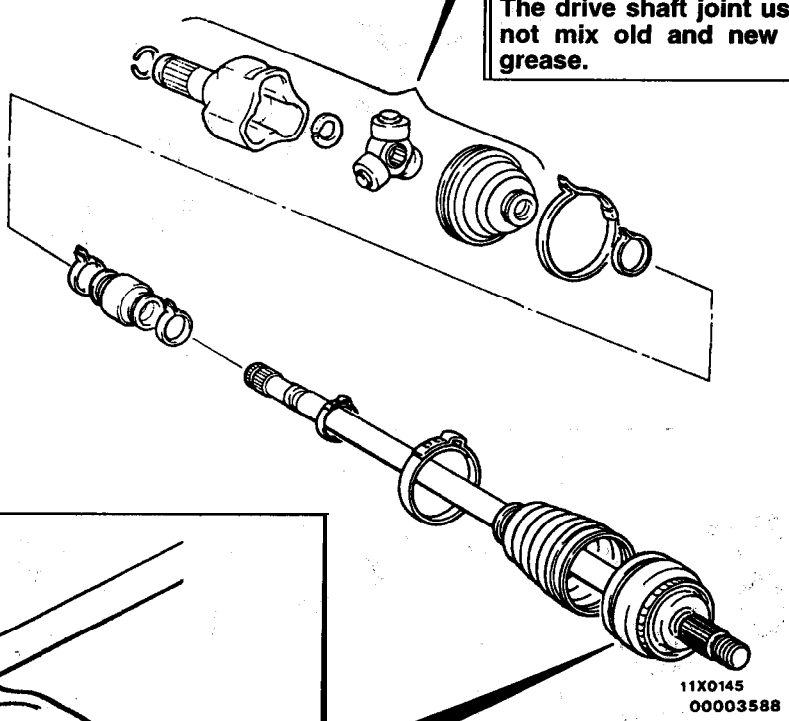

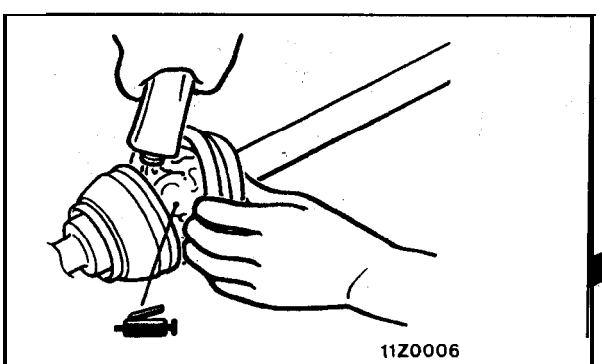

Grease: Repair kit grease
<2.0L Engine (Non-turbo)> 110 g (3.88 oz.)
<2.0L Engine (Turbo) and 2.4L Engine> 130 g (4.59 oz.)

Caution
The drive shaft joint uses special grease. Do not mix old and new or different types of grease.

TSB Revision

DISASSEMBLY SERVICE POINTS

◀A▶ T.J. CASE REMOVAL

Remove the T.J. case from the B.J. assembly, and wipe off the grease inside the T.J. case.

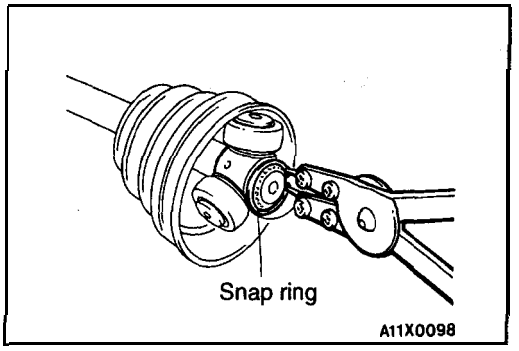

◀B▶ SNAP RING/SPIDER ASSEMBLY REMOVAL

(1) Remove the snap ring from the drive shaft with the snap ring pliers.
(2) Take out the spider assembly from the drive shaft.
(3) Clean the spider assembly.

Caution
1. Do not disassemble the spider assembly.
2. Use care in handling so as not to damage the drive shaft.

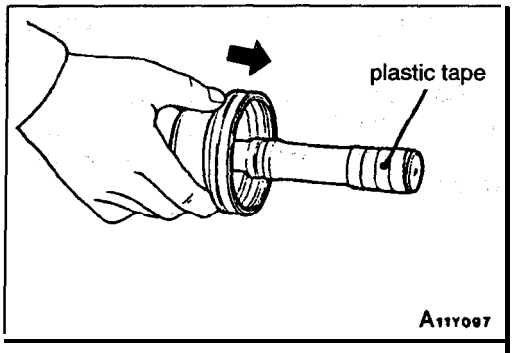

◀C▶ T.J. BOOT REMOVAL

(1) Wipe the grease off of the spline portion.
(2) Remove the T.J. boot.

NOTE
If the boot is reused, wrap plastic tape around the drive shaft spline so that the boot is not damaged when it is removed.

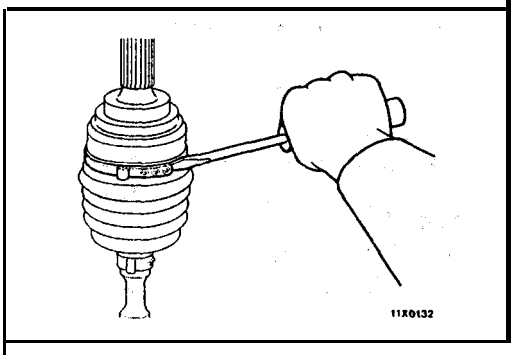

◀D▶ B.J. BOOT BAND (SMALL)/B.J. BOOT BAND (LARGE) REMOVAL

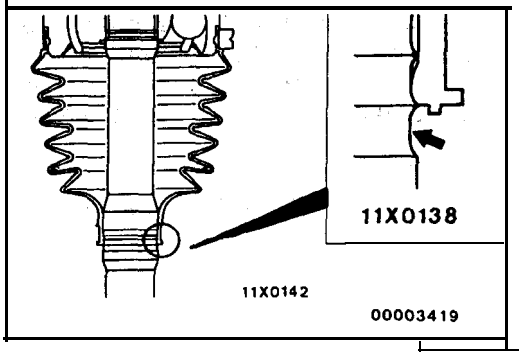

REASSEMBLY SERVICE POINTS

▶A◀ B.J. BOOT/B.J. BOOT BAND (LARGE)/B.J. BOOT BAND (SMALL) INSTALLATION

(1) Wrap plastic tape around the spline part on the drive shaft, and then install the B.J. boot band (small) and B.J. boot.
(2) Install the smaller side of the B.J. boot band so that one shaft groove can be seen.

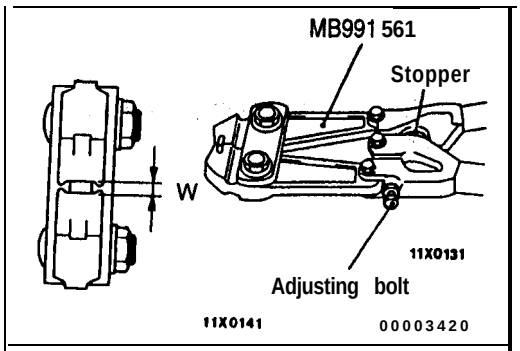

(3) Turn the adjusting bolt of the special tool to adjust the opening dimension (W) to the standard value.

Standard value (W): 2.9 mm (.114 in.)

<When more than 2.9 mm (.114 in.)>
Screw in the adjusting bolt.

<When less than 2.9 mm (.114 in.)>
Loosen the adjusting bolt.

NOTE
(1) The dimension (W) is adjusted by approx. 0.7 mm (.028 in.) per one turn.
(2) Do not turn the adjusting bolt more than one turn.

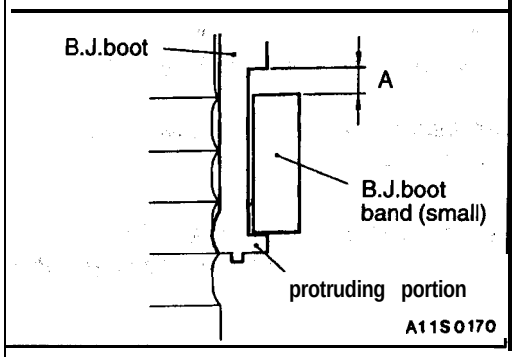

(4) Place the boot band (small) along the protruding portion, and install it so that there is some clearance (A) along the other side.

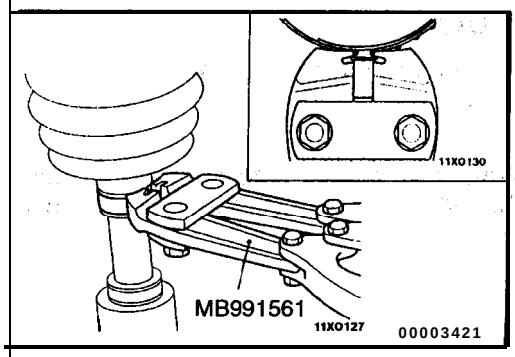

(5) 'Use the special tool to crimp the B.J. boot band (small).

Caution
(1) Hold the drive shaft perpendicularly, and use the special tool to crimp the B.J. boot band securely.
(2) Crimp the B.J. boot band until the special tool touches the stopper.

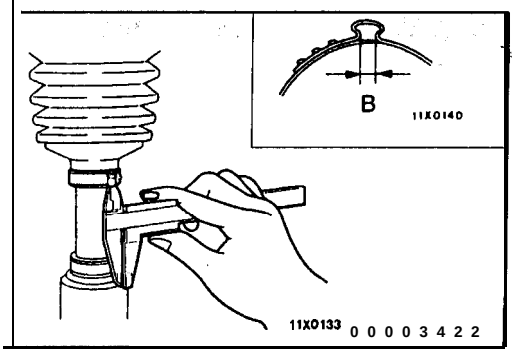

(6) Check that the crimped width (B) 'is within the standard value.

Standard value (B): 2.4 – 2.8 mm (.094 – .110 in.)

<When more than 2.8 mm (.110 in.)>
Readjust the dimension (W) of step (3) to the value calculated by the following equation, and repeat step (5).
W = 5.5 mm (.217 in.) – B
Example: If (B) is 2.9 mm (.114 in.), (W) is 2.8 mm (.102 in.).

<When less than 2.4 mm (.094 in.)>
Remove the B.J. 'boot band, readjust the dimension (W) of step (3) to the value calculated by the following equation, and use a new B.J. boot band to repeat steps (4) to (5).
W = 5.5 mm (.217 in.) – B
Example: If (B) is 2.3 mm (.091 in.), (W) is 3.2 mm (.126 in.).

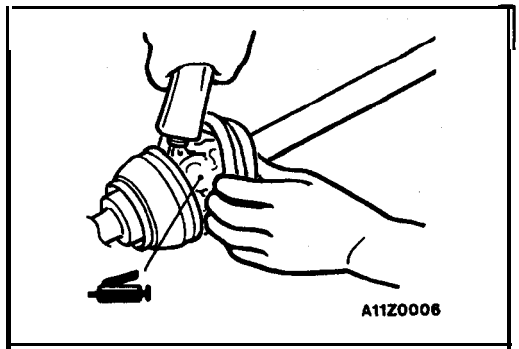

(7) Check that the B.J. boot band is secured correctly. If the band is secured incorrectly, repeat steps (4) to (6) to replace it.

(8) Apply the specified amount of grease to the -boot.

Specified grease: Repair kit grease
<2.0L Engine (Non-turbo)> 110 g (3.88 oz.)
<2.0L Engine (Turbo) and' 2.4L Engine> 130 g (4.59 oz.)

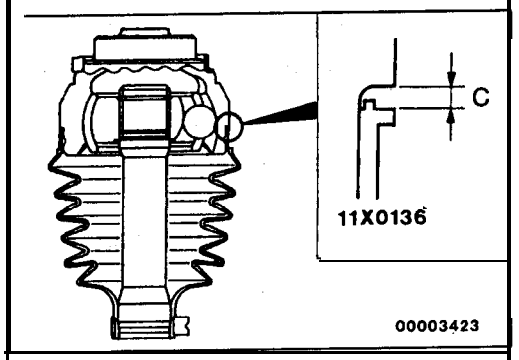

(9) Install the B.J. boot to adjust the clearance (C) between the B.J. boot end and the stepped phase of the B.J. housing is within the standard value.

Standard value (C): 0.1 – 1.55 mm (.004 – .061 in.)

(IO) Adjust the opening dimension (W) to the standard value as mentioned at the step (3).

Standard value (W): 3.2 mm (.126 in.)

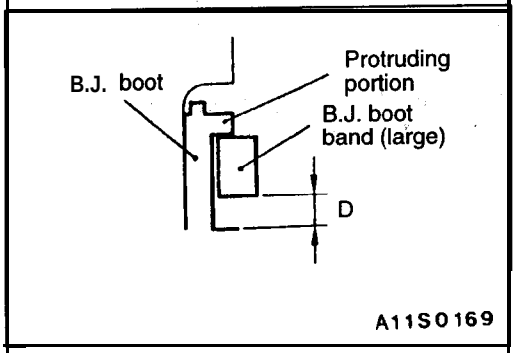

(11) Place the B.J. boot band (large) along the protruding portion, and install it so that there is some clearance (D) along the other side.

(12) Use the special tool to crimp the B.J. boot band (large) in the same way as the step (5). , ,

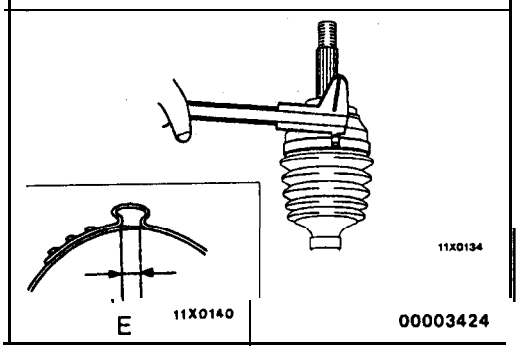

(13) Check that the crimped width (E) is within the standard value.

Standard value (E): 2.4 – 2.8 **mm (.094 – .110 in.)**

<When more than 2.8 mm (.110 in.)>
Readjust the dimension (W) of step (10) to the value calculated by the following equation, and repeat step (12).
W = 5.8 mm (.228 in.) – E
Example: If (E) is 2.9 mm (.114 in.), (W) is 2.9 mm (.114 in.).

<When less than 2.4 mm (.094 in.)>
Remove the B.J. boot band, readjust the dimension (W) of step (10) to the value calculated by the following equation, and use a new B.J. boot band to repeat steps (11) to (12).
W = 5.8 mm (.228 in.) – E
Example: If (E) is 2.3 mm (.091 in.), (W) is 3.5 mm (.138 in.).

(14) Check that the boot band is secured correctly. If the band is secured incorrectly, repeat steps (11) to (13) to replace it.

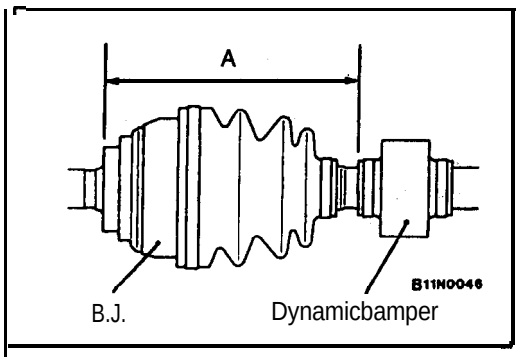

▶B◀ DYNAMIC DAMPER INSTALLATION

Install the dynamic damper in the position shown in the illustration.

Items		2.0L Engine (Non-turbo) <M/T>	2.0L Engine (Non-turbo) <AK>	2.0L Engine (Turbo)	2.4L Engine
A mm (in.)	L.H.	194±3 (7.64±.12)	–	374±3 (14.72±.12)	365±3 (14.37±.12)
	R.H.	374±3 (14.72±.12)	374±3 (14.72±.12)	–	221±3 (8.70±.12)

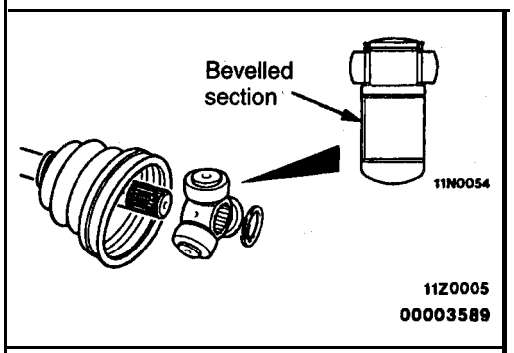

▶C◀ SPIDER ASSEMBLY/T.J. CASE INSTALLATION

(1) Install the spider assembly to the shaft from the direction of the spline bevelled section.
(2) After applying specified grease to the T.J. case, insert the drive shaft and apply grease one more time.

Specified grease: Repair kit grease
<2.0L Engine (Non-turbo)> 105 g (3.70 oz.)
<2.0L Engine (Turbo) and 2.4L Engine> 120 g (4.23 oz.)

NOTE
The grease in the repair kit should be divided in. half for use, respectively, at the joint and inside the boot.

Caution
The drive shaft joint uses special grease. Do not mix old and new or different types of grease.

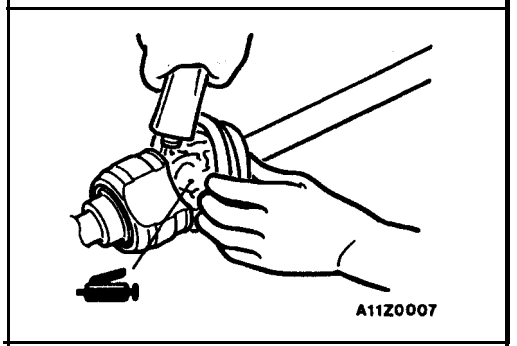

▶D◀ T.J. BOOT BAND (SMALL)/T.J. BOOT BAND (LARGE) INSTALLATION

Set the T.J. boot bands at the specified distance in order to adjust the amout of air inside the T.J. 'boot, and then tighten the T.J. boot bands securely.

Standard value (A) : 80±3 mm (3.15±.12 in.)

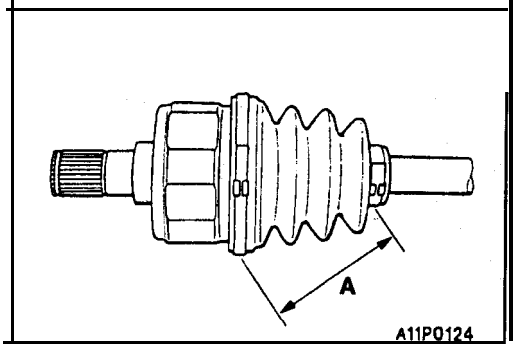

INSPECTION

26100380069

- 'Check the drive shaft for damage, bending or corrosion.
- Check the drive shaft spline part for wear or damage.
- Check the spider assembly for roller rotation, wear or corrosion.
- Check the groove inside T.J. case for wear of corrosion.
- Check the dynamic damper for damage or cracking.
- Check the boots for deterioration, damage or cracking.

DRIVE SHAFT <AWD>

26166366107

REMOVAL AND INSTALLATION

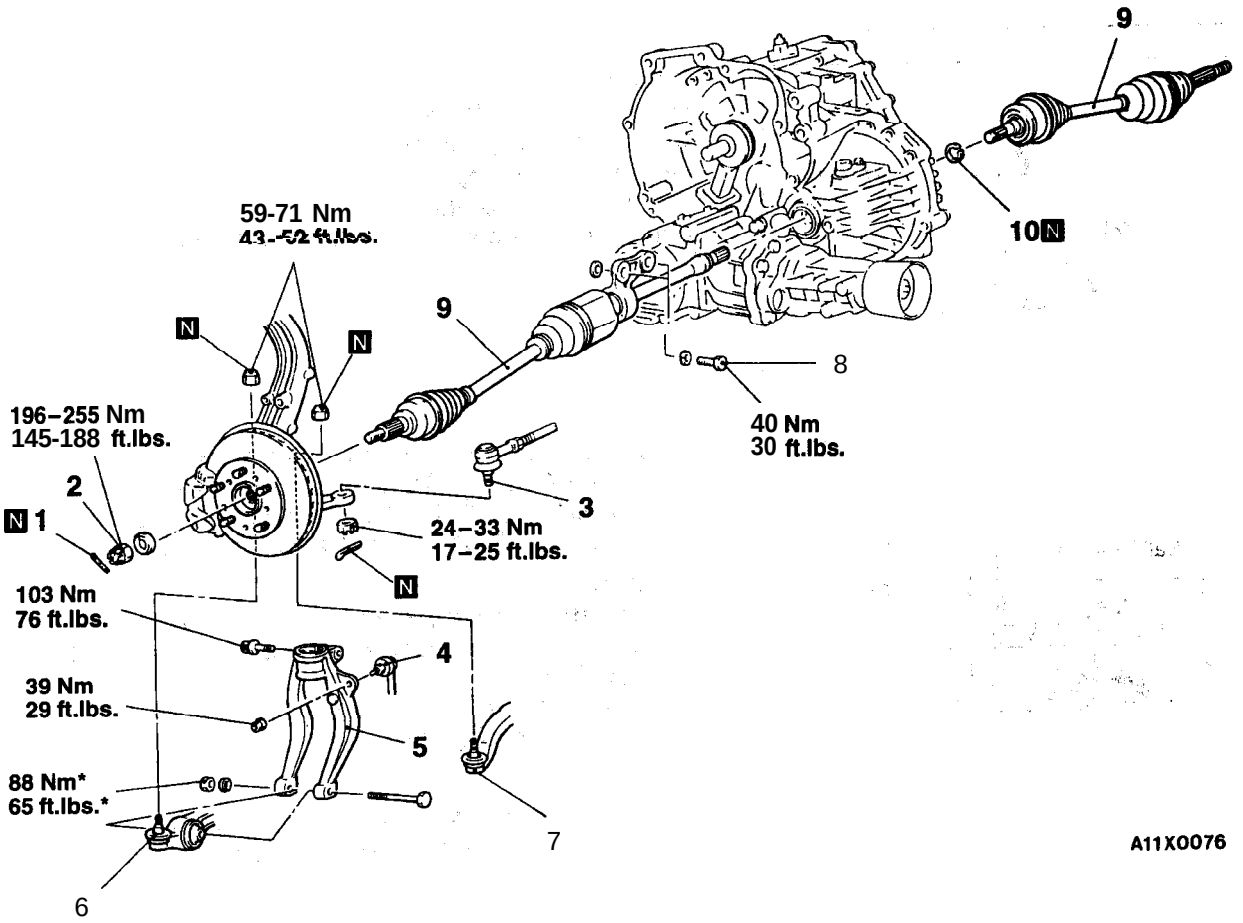

Removal steps

1. Cotter pin
◀A▶ ▶A◀ 2. Dye shaft nut
◀B▶ 3. Tie rod end ball joint and knuckle connection
4. Stabilizer link ball joint and damper fork connection
5. Damper fork
◀B▶ 6. Lateral lower arm ball joint and knuckle connection
◀B▶ 7. **Compression lower arm ball joint** and knuckle connection
8. Bolt
◀C▶ 9. Drive shaft and inner shaft (L.H.) or drive shaft (R.H.)
10. Circlip

Caution

*** : Indicates parts which should be temporarily tightened, and then fully tightened with vehicles on the ground in the unladen condition.**

TSB Revision

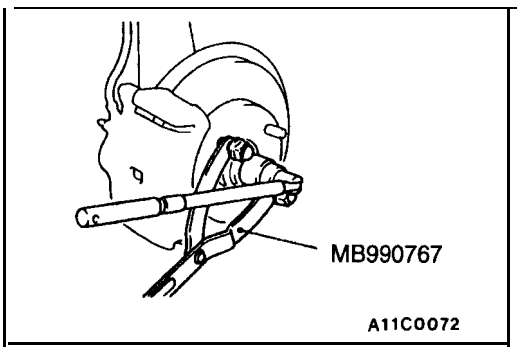

REMOVAL SERVICE POINTS

◀A▶ DRIVE SHAFT NUT REMOVAL

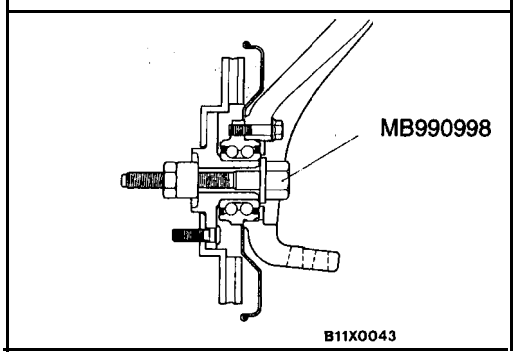

Caution
Do not apply the vehicle weight to the wheel bearing while loosening the drive shaft nut. If, however, the vehicle weight must be applied to the bearing (because of moving the vehicle), temporarily secure the wheel bearing by using the special tool, MB990998, etc.

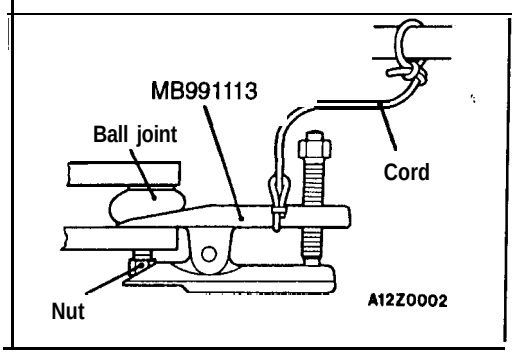

◀B▶ TIE ROD END BALL JOINT AND KNUCKLE/LATERAL LOWER ARM BALL JOINT AND KNUCKLE/COMPRESSION LOWER ARM BALL JOINT AND KNUCKLE DISCONNECTION

Caution
1. **Use the special tool to loosen the tie rod etid mounting nut. Only loosen the nut; do not remove it from the ball joint.**
2. **Support the special tool. with a cord, etc.' to prevent it from coming off.**

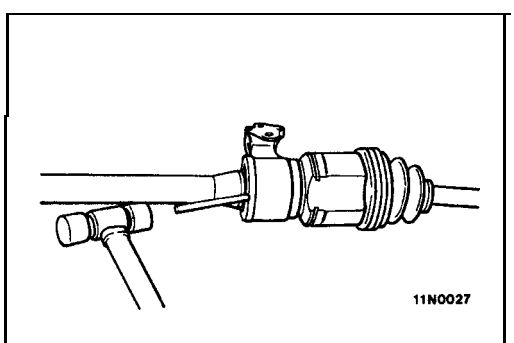

◀C▶ DRIVE SHAFT AND INNER SHAFT (L.H.) OR DRIVE SHAFT (R.H.) REMOVAL

(1) If the inner shaft and transaxle are tightly; joined, tap the center bearing bracket lightly with a plastic hammer, etc. to remove the drive shaft and inner shaft (L.H.) from the transaxle.

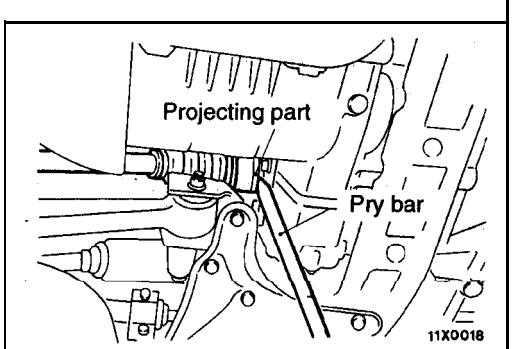

(2) Insert a pry bar to the projecting part of the drive shaft to remove the drive shaft (R.H.) from the. transaxle;.

NOTE
For drive shafts which have no projecting part, refer to P. 26-11.

Caution
Always use a pry bar to. remove the drive shaft, or the T.J. will be damaged..

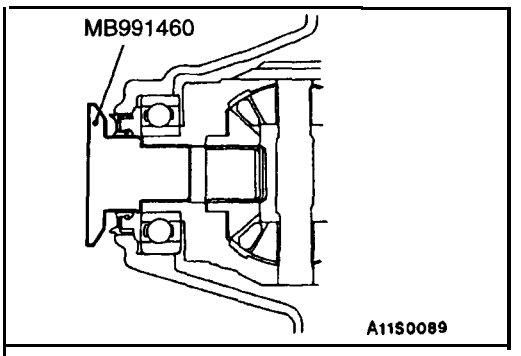

(3) Use the special toot as a cover not to let foreign objects get into the transaxle case.

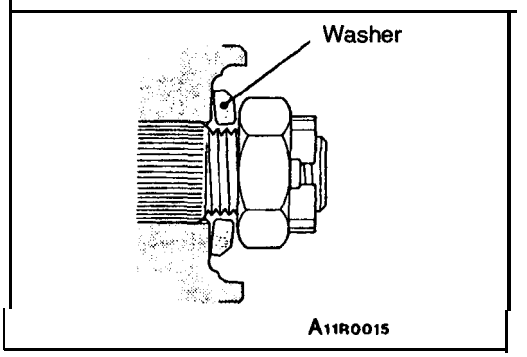

INSTALLATION SERVICE POINT

▶A◀ DRIVE SHAFT NUT INSTALLATION

(1) Install the drive shaft washer in the specified direction.

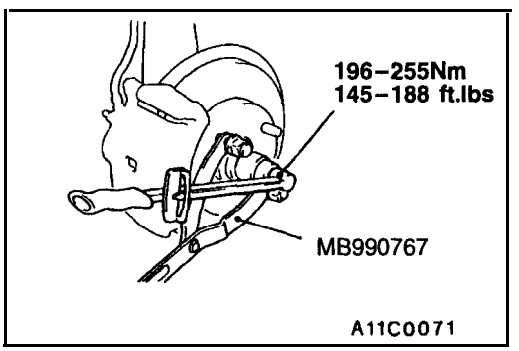

(2) Use the special tool to tighten the drive shaft nut.

Caution
Before securely tightening the drive shaft nuts, make sure there is no load on the wheel bearings.

(3) If the position of the cotter pin holes does not match, tighten the nut up to 255 Nm (188 ft.lbs.) in maximum.

(4) Install the cotter pin in the first matching holes and bend it securely.

INSPECTION

26100360056

- Check the drive shaft boot for damage or deterioration.
- Check the ball joints for wear or operating condition.
- Check the spline part for wear or damage.

DISASSEMBLY AND REASSEMBLY

26100370103

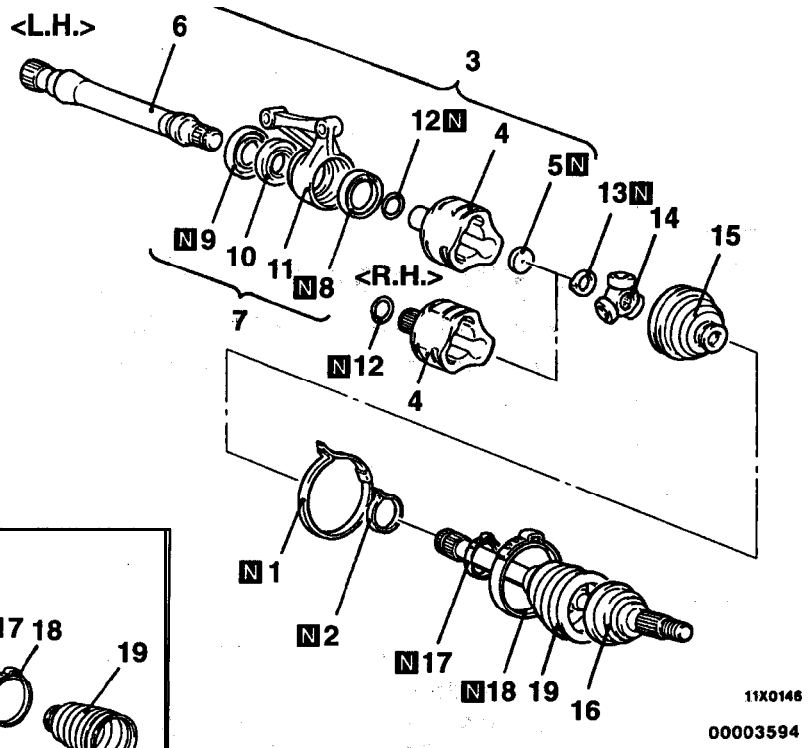

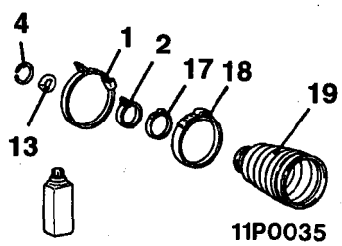

B.J. boot repair kit

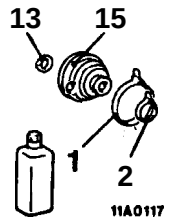

T.J. boot repair kit

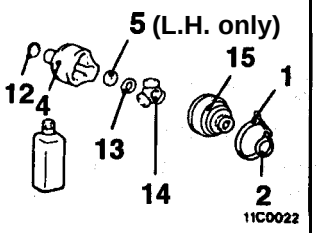

T.J repair kit

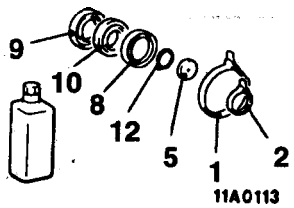

Bearing dust seal repair kit

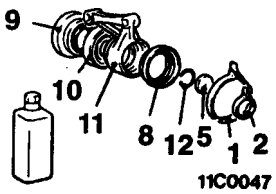

Bracket assembly repair kit

Disassembly steps

- ▶G◀ 1. T.J. boot band (large)
- ▶G◀ 2. T.J. boot band(small)
- ▶F◀ 3. T.J.case and inner shaft assembly
- ◀A▶ 4. T.J. case
- 5. Seal plate
- ◀B▶ ▶E◀ 6. Inner shaft
- 7. Bracket assembly
- ▶D◀ 8. Dust seal (outer)
- ▶D◀ 9. Dust seal (inner)
- ◀C▶ ▶C◀ 10. Center bearing
- 11. Center bearing bracket
- 12. Circlip
- ◀D▶ 13. Snap ring
- ◀D▶ ▶B◀ 14. Spider assembly
- ◀E▶ 15. T.J. boot
- 16. B.J. assembly
- ◀F▶ ▶A◀ 17. B.J. boot band (small)
- ◀F▶ ▶A◀ 18. B.J. boot band (large)
- ▶A◀ 19. B.J. boot

Caution
Do not disassemble the B.J. assembly except replacement of the B.J. boot.

TSB Revision

LUBRICANT POINTS

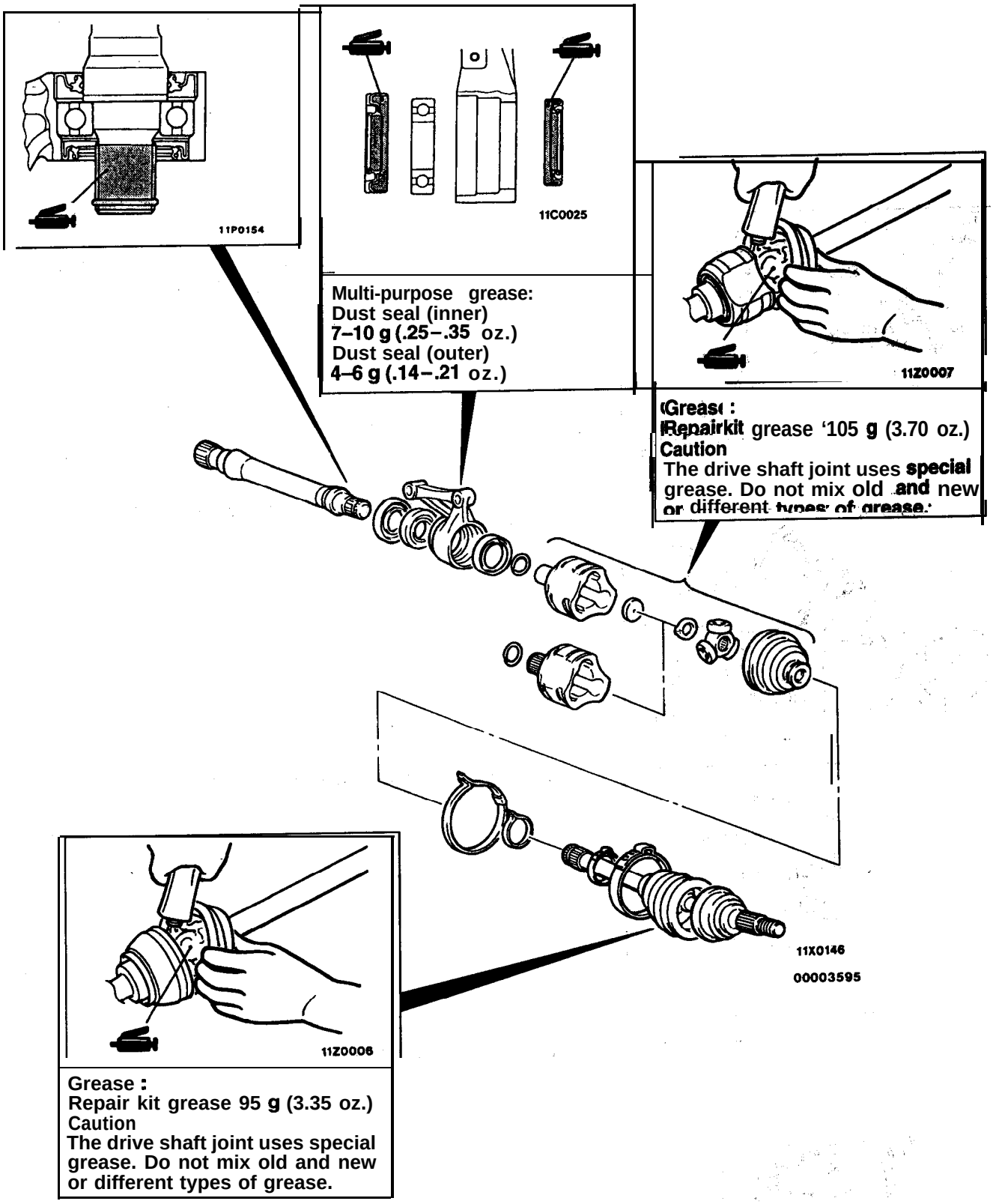

DISASSEMBLY SERVICE POINTS

◀A▶ T.J. CASE REMOVAL

After removing the T.J. case from the B.J. assembly, wipe off the grease on the. T.J. case

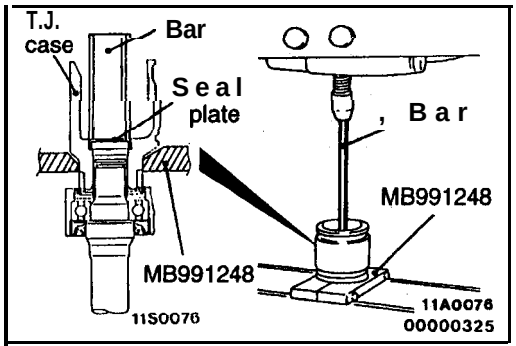

◀B▶ INNER SHAFT REMOVAL

(1) Use the special tool to remove the inner shaft assembly, together with the seal plate, from the T.J. case.

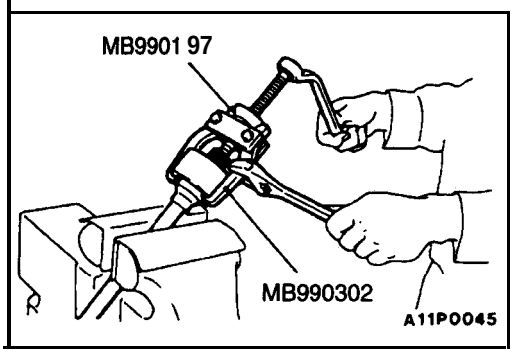

(2) Use the special tools to remove the inner shaft from the bracket.

◀C▶ CENTER BEARING REMOVAL

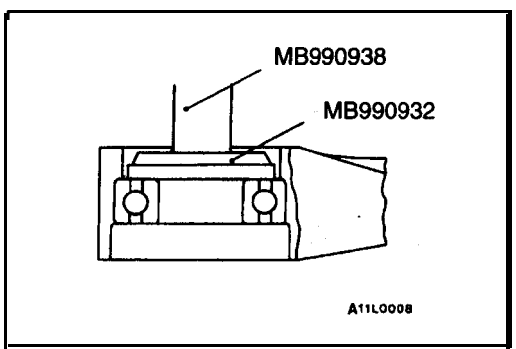

◀D▶ SNAP RING/SPIDER ASSEMBLY REMOVAL

(1) Remove the snap ring from the drive shaft with the snap ring pliers.
(2) Take out the spider assembly from the drive shaft.
(3) Clean the spider assembly.

Caution
1. Do not disassemble the spider assembly.
2. Use care in handling so as not to damage the drive shaft.

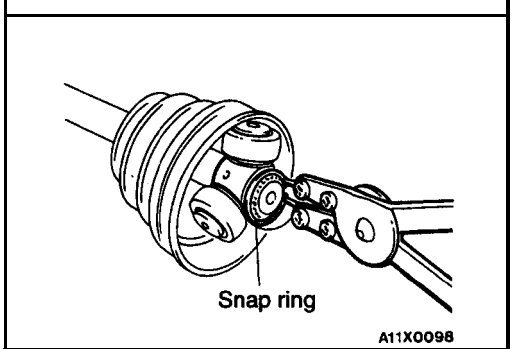

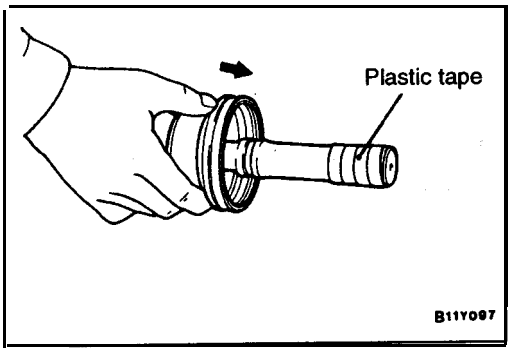

◀E▶ T.J. BOOT REMOVAL

(1) Wipe the grease off of the spline portion.
(2) Remove the T.J. boot.

NOTE
If the boot is reused, wrap plastic tape around the drive shaft spline so that the boot is not damaged when it is removed.

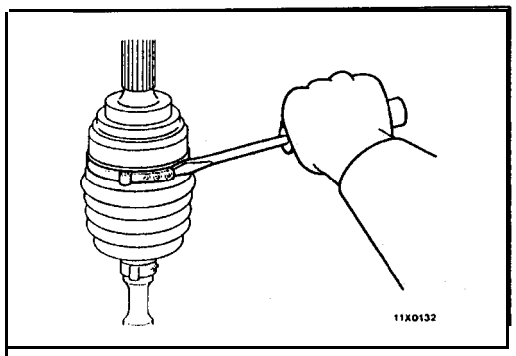

◀F▶ B.J. BOOT BAND (SMALL)/B.J. BOOT BAND (LARGE) REMOVAL

REASSEMBLY SERVICE POINTS

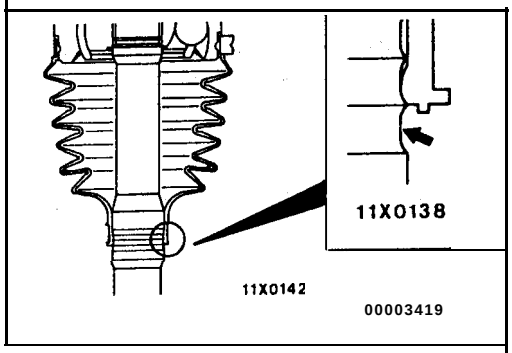

▶A◀ B.J. BOOT/B.J. BOOT BAND (LARGE)/B.J. BOOT BAND (SMALL) INSTALLATION

(1) Wrap plastic tape around the spline part on the drive shaft, and then install the B.J. boot band (small) and B.J. boot.
(2) Install the smaller side of the B.J. boot band so that one shaft groove can be seen.

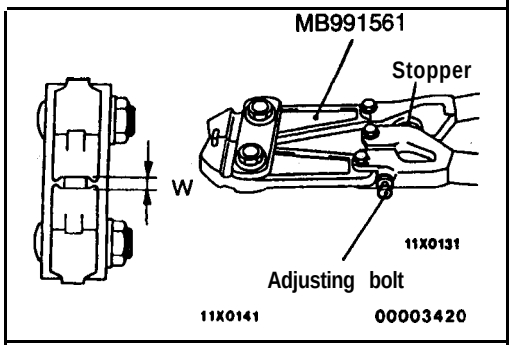

(3) Turn the adjusting bolt of the special tool to adjust the opening dimension (W) to the standard value.

Standard value (W): 2.9 mm (.114 in.)

<When more than 2.9 mm (.114 in.)>
Screw in the adjusting bolt.

<When less than 2.9 mm (.114 in.)>
Loosen the adjusting bolt.

NOTE
(1) The dimension (W) is adjusted by approx. 0.7 mm (.028 in.) per one turn.
(2) Do not turn the adjusting bolt more than one turn.

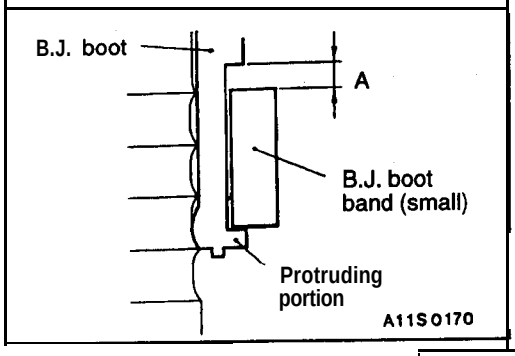

(4) Place the boot band (small) along the protruding portion, and install it so that there is some clearance **(A)** along the other side.

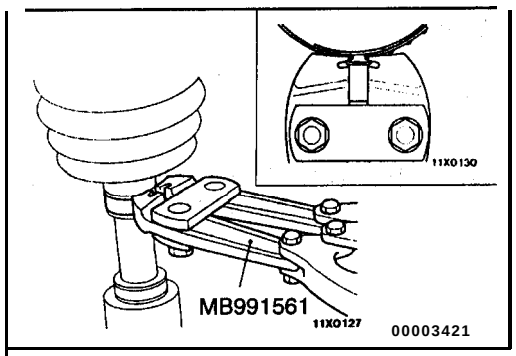

(5) Use the special tool to crimp the B.J. boot band (small).

Caution

(1) Hold the drive shaft perpendicularly, and use the special tool to crimp the B.J. boot band securely.

(2) Crimp the B.J. boot band until the special tool 'touches the stopper.

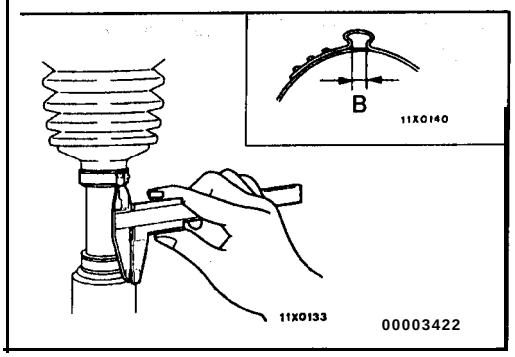

(6) Check that the crimped width (B) is within the stand&d value.

Standard value (B): 2.4 – 2.8 mm (.094 – .110 in.)

<When more than 2.8 mm (.110 in.)>

Readjust the dimension (W) of step (3) to the value calculated by the following equation, and repeat step (5).

W = 5.5 mm (.217 in.) – B

Example: If (B) is 2.9 mm (.114 in.), (W) is 2.6 mm (.102 in.).

<When less than 2.4 mm (.094 in.)>

Remove the B.J. boot band, readjust the dimension (W) of step (3) to the value calculated by the following equation, and use a new B.J. boot band to repeat steps (4) to (5).

W = 5.5 mm (.217 in.) – B

Example: If (B) is 2.3 mm (.091 in.), (W) is 3.2 mm (.126 in.).

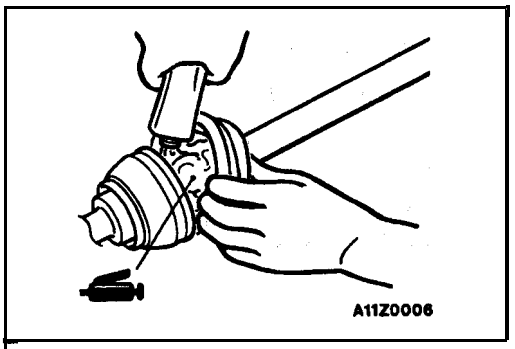

(7) Check that the B.J. boot band is secured correctly. If, the band is secured incorrectly, repeat steps (4) to (6) to replace it.

(8) Apply the specified amount 'of grease to the boot.

Specified grease: Repair kit grease 95 g (3.35 'oz.)

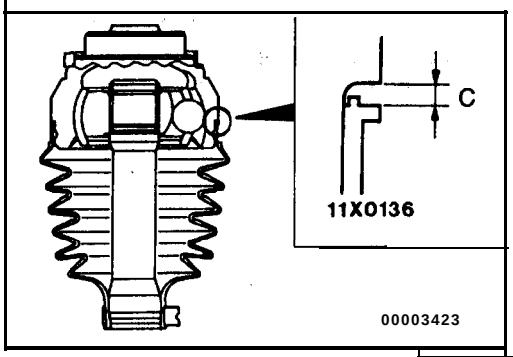

(9) Install the B.J. boot to adjust the clearance (C) between the B.J. boot end and the stepped phase of the B.J. housing is within the standard value.

Standard value (C): 0.1 – 1.55 mm (.004 – .061 in.)

(IO)Adjust the opening dimension (W) to the standard value as mentioned at the step (3).

Standard value (W): 3.2 mm (.126 in.)

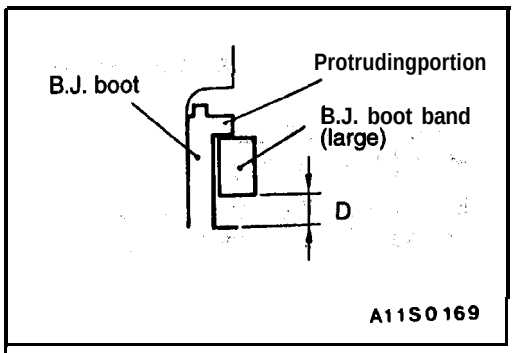

(11) Place the B.J. boot band (large) along, the protruding portion, and install it so that,, there is some clearance (D) along the other side.

(12) Use the special tool to crimp the B.J. boot band (large) in the same way as the step (5).

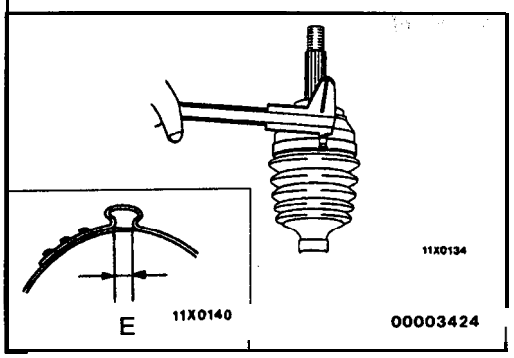

(13) Check that the crimped width (E) is within the standard value.

Standard value (E): 2.4 – 2.8 mm (.094 – .110 in.)

<When more than 2.6 mm' (.110 in.)>

Readjust the dimension (W) of step (10) to the value calculated by the following equation,' and repeat step (12).

W = 5.8 mm (.228 in.) – E

Example: If (E) is 2.9 mm (.114 in.), (W) is 2.9 mm (.114 in.):

<When less than 2.4 mm (.094 in.)>

Remove the B.J. boot band, readjust the dimension (W) of step (10) to the value calculated by the following equation, and use a new B.J. boot band to repeat steps (11) to. (12).

W = 5.8 mm (.228 in.) – E

Example: If (E) is 2.3 mm (.091 in.), (W) is 3.5 mm (.138 in.).

(14) Check that the boot band is secured correctly. If the band is secured incorrectly, repeat steps (11) to (13) to replace it.

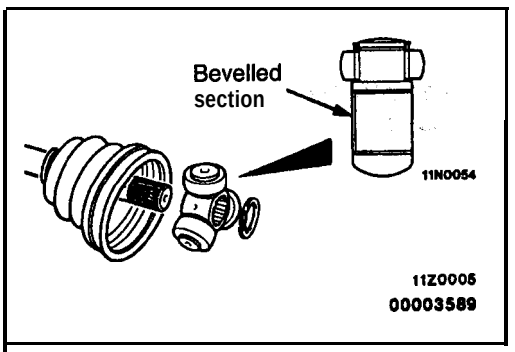

▶B◀ SPIDER ASSEMBLY' INSTALLATION

Install the spider assembly to the shaft from the direction of the spline bevelled section.

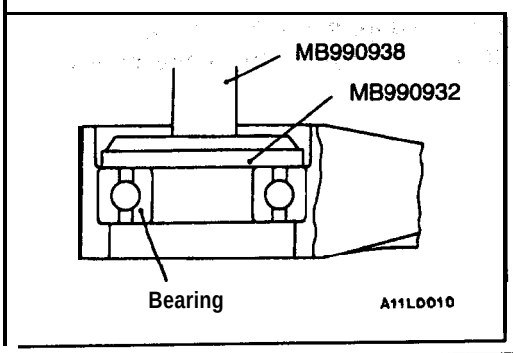

▶C◀ CENTER BEARING INSTALLATION

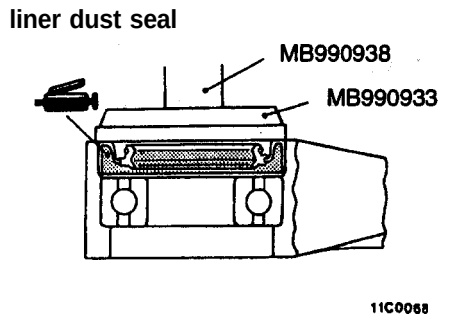

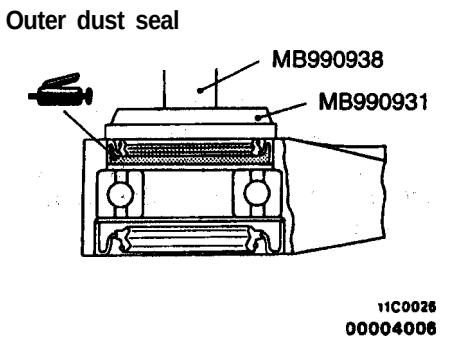

▶D◀ DUST SEAL INSTALLATION

(1) Apply multi-purpose grease to the rear surfaces of all dust seals.

Inner dust seal 7–10 g (.25–.35 oz.)
Outer dust seal 4-5 g (.14–.21 oz.)

(2) Use the special tools to install the dust seal so that its surface runs even with that of the' center bearing bracket:

(3) Apply multi-purpose grease to the lip of each dust seal.

NOTE
When applying grease, make sure that it does not adhere to anything outside the lip.

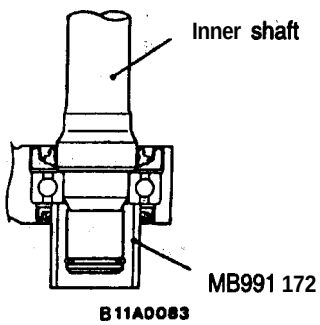

▶E◀ INNER SHAFT INSTALLATION

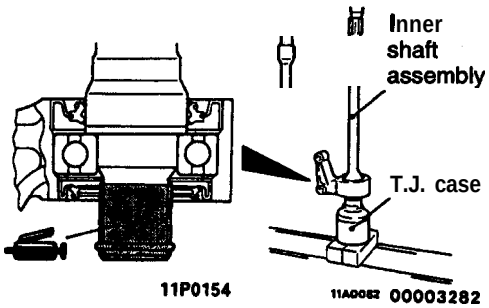

▶F◀ T.J. CASE AND INNER SHAFT ASSEMBLY INSTALLATION

(1) Apply multi-purpose grease to the inner shaft spline, then press fit into the T.J. case.

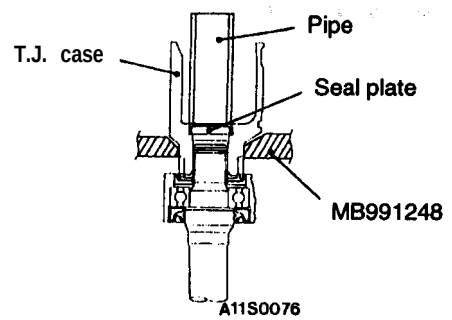

(2) Use the special tool to support 'the T.J. case.
(3) Use a pipe [Ø 30mm (1.18 in)] to press the seal plate into the T.J. case.

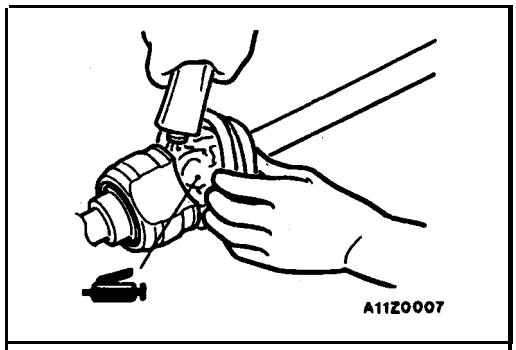

(4) Fill the specified grease to the T.J. case.

Specified grease: Repair kit grease 105 g (3.70 oz.)

NOTE
The grease in the repair kit should be divided in half for use, respectively, at the joint and inside the boot.

Caution
The drive shaft joint uses special grease. Do not mix old and new or different types of grease.

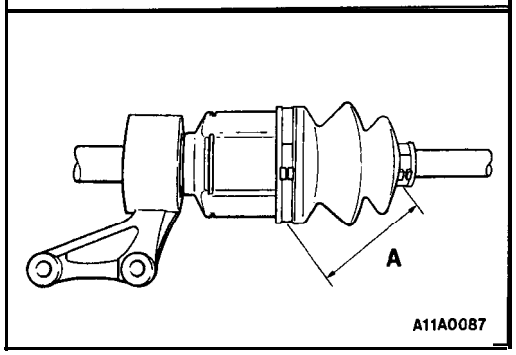

▶G◀ T.J. BOOT BAND (SMALL)/T.J. BOOT BAND (LARGE) INSTALLATION

Set the T.J. boot bands at the specified distance **in order** to adjust the amount of air inside the **T.J.** boot, and then tighten the T.J. boot band securely.

Standard value (A): 80 ± 3 mm (3.15 ± .12 in.)

INSPECTION

26100280076

- Check the drive shaft for damage, bending or corrosion.
- Check the inner shaft for damage, bending or corrosion.
- Check the drive shaft splines for wear or damage.
- Check the inner shaft splines for wear or damage.
- Check the spider assembly for roller rotation, wear or corrosion.
- Check the groove inside T.J. case for wear or corrosion.
- Check the boots for deterioration, damage or cracking.
- Check the center bearing for seizure, discoloration or roughness of rolling surface.
- Check the dust cover for damage or deterioration.

NOTES

REAR AXLE

CONTENTS

27109000062

REAR AXLE <FWD>

27100010064

GENERAL INFORMATION

The rear axle consists of a knuckle, rear hub, unit bearing and axle shaft. The unit bearing is press-fitted to the rear axle shaft and bolted to the knuckle. Also, the unit bearing utilizes the same type of double row angular contact ball bearing as does the front axle. On, vehicles with ABS, a ABS rotor for detecting the vehicle speed is located on the rear axle shaft, and a speed sensor is located on the knuckle.

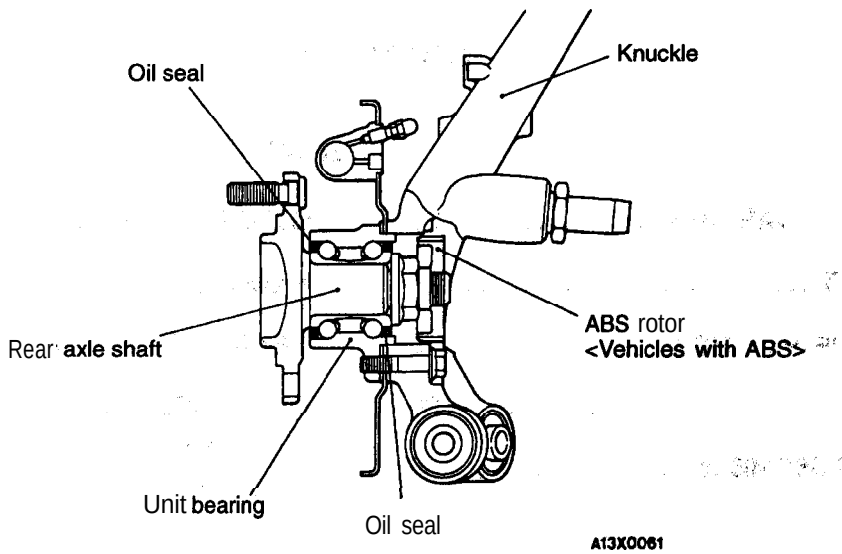

SERVICE SPECIFICATIONS

27100030077

Items	Limit
Wheel bearing end play mm (in.)	0.05 (.002)
Wheel bearing rotary-sliding resistance N (lbs.)	18 (3.9)

SPECIAL TOOLS

27100060069

Tool	Tool number and name	Supersession	Application
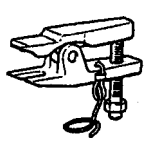	MB991113 Steering linkage puller	MB991113-01	Toe' control arm ball joint and knuckle removal'
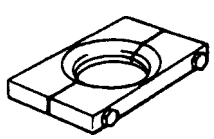	MB991248 Inner shaft remover	–	ABS rotor removal (Vehicles with ABS)

TROUBLESHOOTING

27100070048

Symptom	Probable cause	Remedy
Abnormal sound	Loose wheel nuts	Tighten
	Damaged or worn wheel bearings	Replace
	Bent *or* distorted brake discs	

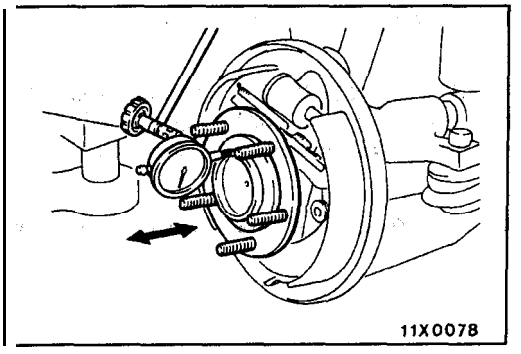

ON-VEHICLE SERVICE

27100090044

WHEEL BEARING END PLAY CHECK

1. Release the parking brake:
2. Remove the brake drum.
3. For vehicles with rear disc brake, remove the caliper assembly and the brake disc.
4. Check the bearing's end play
   Place a dial gauge against the hub surface; then move the hub in the axial direction and check 'whether or not there is end play.

   Limit: 0.05 mm (.002 in.)
5. If the play exceeds the limit value, replace the rear hub assembly.

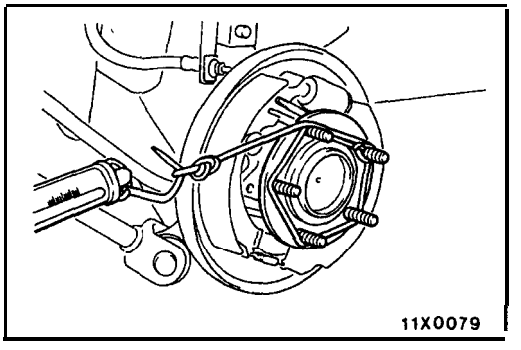

REAR HUB ROTARY-SLIDING RESISTANCE CHECK

27100110061

1. Release the parking brake.
2. Remove the brake drum.
3. For vehicles with rear disc brake, remove the caliper assembly and the brake disc.
4. After turning the hub a few times to seat the bearing, wind a rope around the hub bolt and turn the hub by pulling at a 90° angle with a spring scale. Measure to determine whether or not the rotary-sliding resistance of the rear hub is at the limit value.

   Limit: 18 N (3.9 lbs.) or less
5. If the rotary-sliding resistance exceeds the limit value, replace the rear hub assembly.

HUB BOLT REPLACEMENT 2710010005 1

1. Remove the caliper assembly and support it with wire so that it does not fall.
2. Remove the brake drum and- brake disc.
3. For vehicles with disc brakes;' remove the shoe and lining assembly.

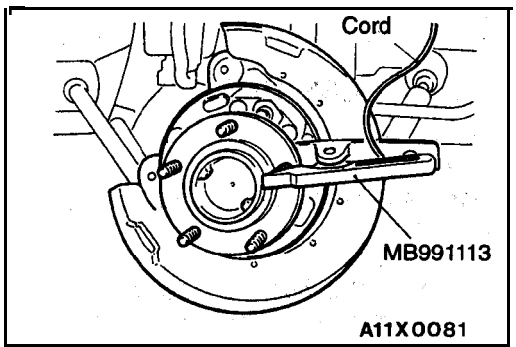

4. Pull the hub bolt out using the special tool.

NOTE
For vehicles with drum brakes, the hub bolts should be removed near the retainer spring installation position in order to maintain enough clearance for removal.

Caution
Be sure to tie the cord of the special tool to a nearby part.

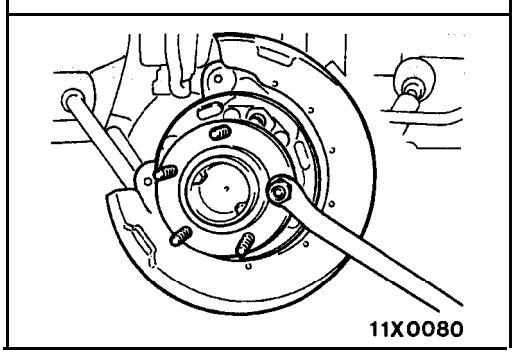

5. Use the wheel nuts to securely install the new hub bolts, while being careful of the serrations of the hub bolts and hub.

REAR HUB ASSEMBLY

27100200072

REMOVAL AND INSTALLATION

<Vehicles with drum brakes>

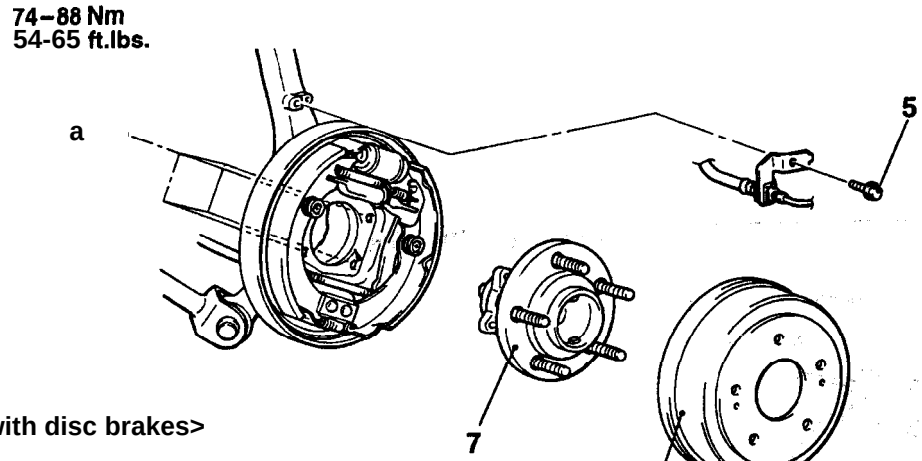

<Vehicles with disc brakes>

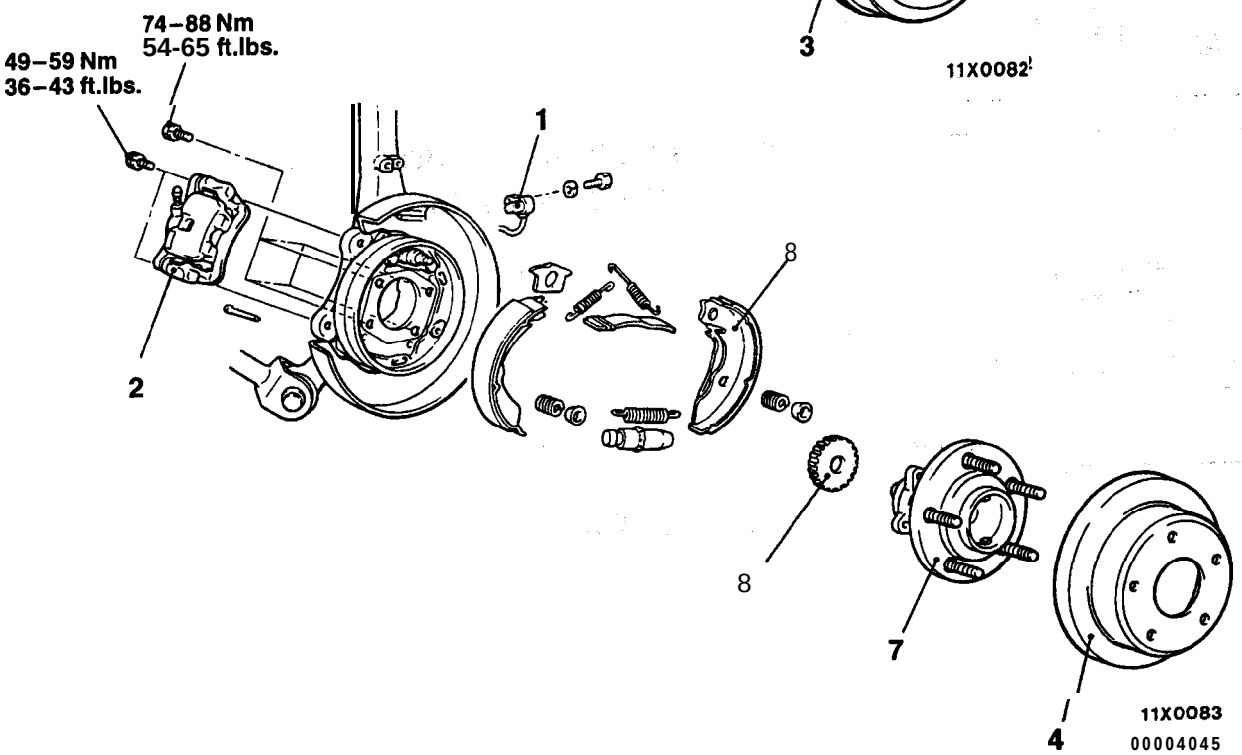

Removal steps

1. Rear wheel speed sensor <Vehicles with ABS> (Refer to GROUP 35B – Wheel Speed Sensor.)
2. ◀A▶ Caliper assembly
3. Brake drum
4. Brake disc
5. Clip mounting bolt
6. Shoe and lining assembly (Refer to GROUP 36 – Parking Brake <Drum-in-disc brakes>.)
7. Rear hub assembly
8. ◀B▶ ▶A◀ ABS rotor<Vehicles with ABS>

Caution
The rear hub assembly should not be disassembled.

REMOVAL SERVICE POINTS

◀A▶ CALIPER ASSEMBLY REMOVAL

Remove the caliper assembly and suspend it.

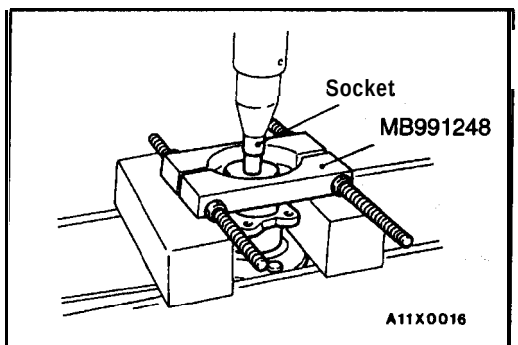

◀B▶ ABS ROTOR REMOVAL

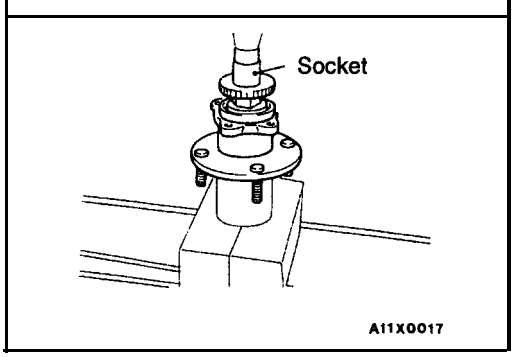

INSTALLATION SERVICE POINT

▶A◀ ABS ROTOR INSTALLATION

INSPECTION

27100210105

- Check the oil seal for crack or damage.
- Check the ABS rotor for chipped teeth.

KNUCKLE

27100300055

REMOVAL AND INSTALLATION

Pre-removal and Post-installation Operation
- Rear Wheel Speed sensor Removal and Installation <Vehicles with ABS>
- Rear Hub Assembly Removal and Installation (Refer to P. 27-5.)

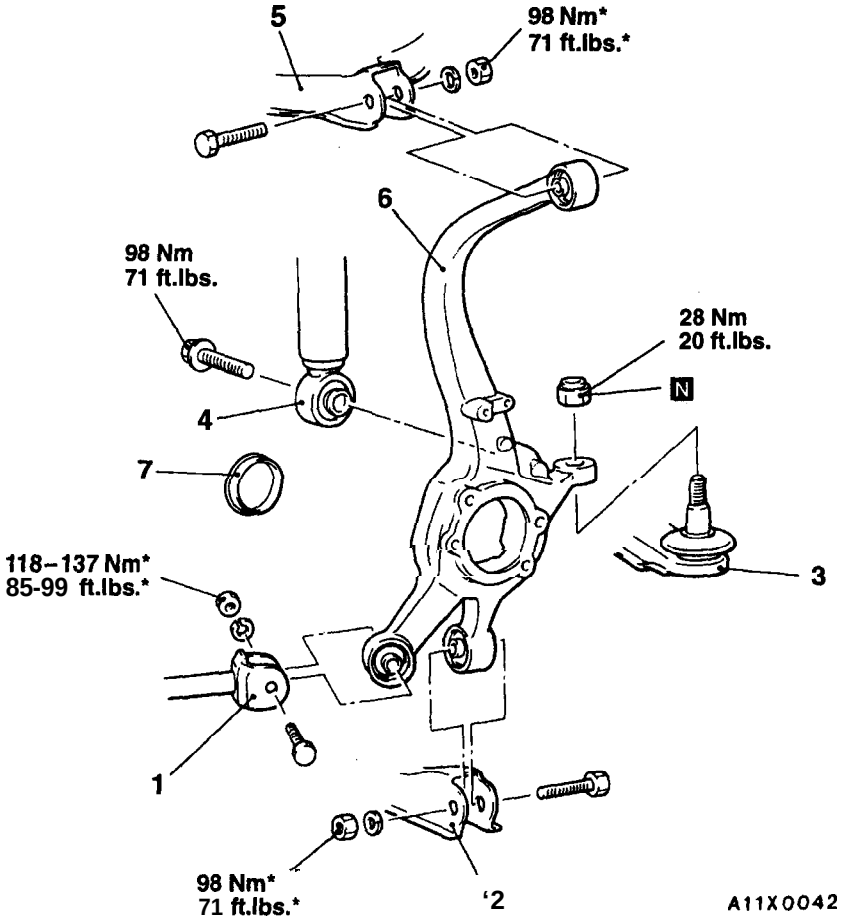

Removal steps

1. **Trailing arm connection**
2. **Lower arm connection**
3. ◀A▶ Toe control arm ball joint and knuckle connection
4. Shock absorber connection
5. Upper arm connection
6. Knuckle
7. Hub cap <Vehicles without ABS>

Caution

- **: Indicates parts which should be temporarily tightened, and then fully tightened with the vehicle on the ground in the unladen condition.**

TSB Revision

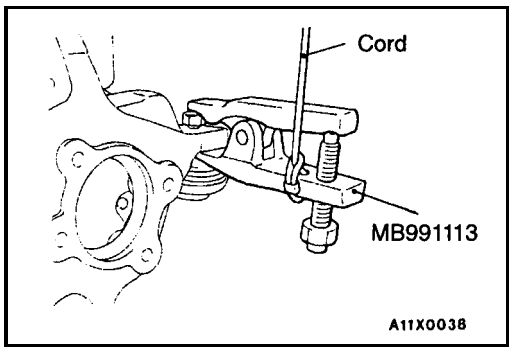

REMOVAL SERVICE POINT

◀A▶ TOE CONTROL ARM BALL JOINT AND KNUCKLE DISCONNECTION

Caution

1. Use the special tool to loosen the tie rod end mounting nut. Only loosen the nut; do not remove it from the ball joint.
2. Suppot the special tool with a cord, etc. to prevent it from coming off.

TSB Revision

REAR AXLE <AWD>

27100010071

GENERAL INFORMATION

In the rear axle structure, the unit bearing is press-fitted to the rear hub and bolted to the knuckle. Also, the unit bearing utilizes a double row angular contact ball bearing. The drive shaft has a T.J. on the differential side and a B.J. constant-velocity joint on the wheel side. In vehicles with ABS, a ABS rotor for detecting the vehicle speed is located on the outer ring of the drive shaft B.J., and a speed sensor is located on the knuckle.
The differential carrier provides elastic support by, means of a bushing. In addition, the VCU-type LSD has been adopted in some models.

Items		Conventional differential <A/T>	Conventional differential <M/T>	Limited slip differential (VCU type) <M/T>	Limited slip differential (VCU type) <A/T>
Reduction gear type		Hypoid gear	Hypoid gear	Hypoid gear	Hypoid gear
Reduction ratio		3.545	3.307	3.545	3.307
Differential gear type (Type×number of gears)	Side gear	Straight bevel gear×2	Straight bevel gear×2	Straight bevel gear×2*	Straight bevel gear×2*
	Pinion gear	Straight bevel gear×2	Straight bevel gear×2	Straight bevel gear×4	Straight bevel gear×4
Number of teeth	Drive gear	39	43	39	43
	Drive pinion	11	13	11	13
	Side gear	14	14	16	16
	Pinion gear	10	10	10	10
Bearing diameter×inside diameter) mm (in.)	Side	72 × 35 (2.83 × 1.38)	72 × 35 (2.83 × 1.38)	72 × 35 (2.83 × 1.38)	72 × 35 (2.83 × 1.38)
	Front	62 × 25 (2.44 × .98)	62 × 25 (2.44 × .98)	62 × 25 (2.44 × .98)	62 × 25 (2.44 × .98)
	Rear	72 × 35 (2.83 × 1.38)	72 × 35 (2.83 × 1.38)	72 × 35 (2.83 × 1.38)	72 × 35 (2.83 × 1.38)

NOTE
*: Denotes the gear (L.H.) which is in a single body with the viscous coupling.

CONSTRUCTION DIAGRAM

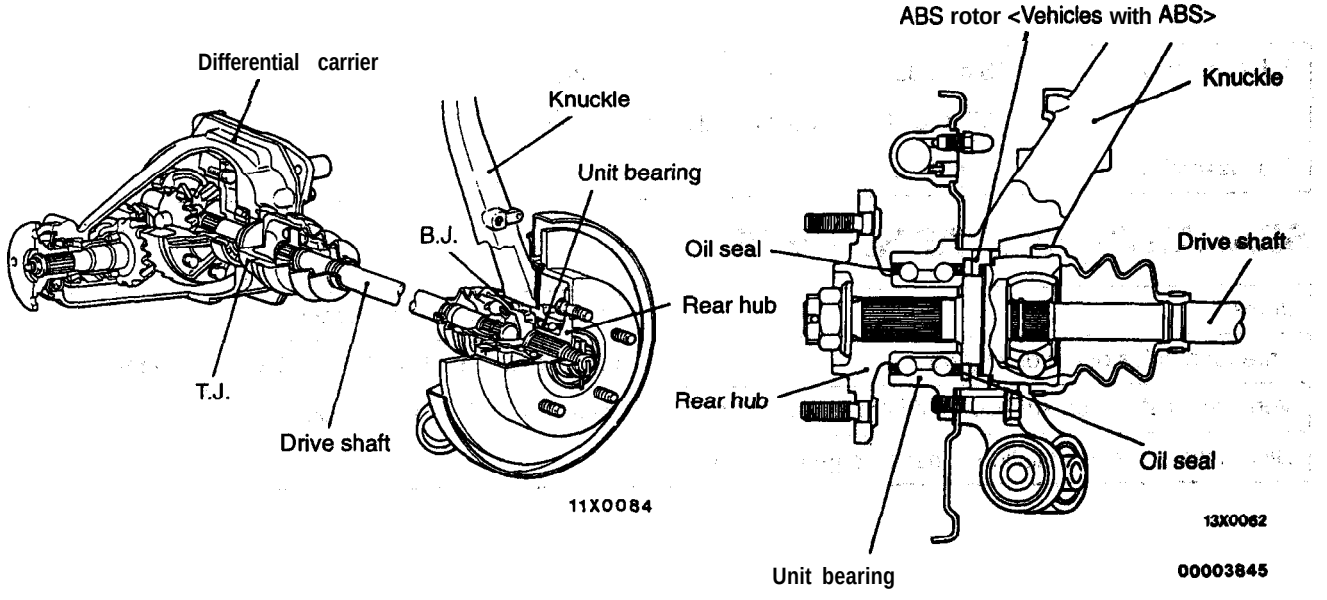

TSB Revision

SERVICE SPECIFICATIONS

27100030084

Items			Standard value	Limit
Setting of T.J. boot length mm (in.)		Conventional differential	79 ± 3 (3.11 ± .12)	–
		Limited slip differential	84 ± 3 (3.31 ± .12)	–
Drive gear backlash mm (in.)			0.11 – 0.16 (.0043 – .0063)	–
Differential gear backlash mm (in.)		Conventional differential	0 – 0.076 (0 – .0030)	0.2 (.008)
		Limited slip differential	0.03 – 0.09 (.001 – .004)	–
Drive pinion turning torque Nm (in.lbs.)	Without oil seal	New bearing	0.9 – 1.2 (8 – 10)*1	–
		New/reused bearing	0.4 – 0.5 (3 – 4)*2	–
	With oil seal	New bearing	1.0 – 1.3 (9 – 11)*1	–
		New/reused bearing	0.5 – 0.6 (4 – 5)*2	–
Rear axle total backlash mm (in.)			–	5 (.2)
Wheel bearing end play mm (in.)			–	0.05 (.002)
Wheel bearing breakaway torque Nm (in.lbs.)			–	1.0 (9) or less
Drive gear runout mm (in.)			–	0.05 (.002)

NOTE
*1: When replacing with a new bearing (with rust-prevention oil)
*2: When using a new bearing or when reusing (gear oil application)

LUBRICANTS

27100040032

Items	Quantity	Specified lubricant
Rear differential gear oil	0.85 dm^3 (.85 qt.)	API classification GL-5 or higher Over –23°C (–10°F) SAE 90, 85W–90, 80W–90 From –34°C (–30°F) to –23°C (–10°F) SAE 80W, 80W–90 Under –34°C (–30°F) SAE 75W
T.J. assembly	95 g (3.35 oz.) <Conventional differential>	Repair kit grease
	105 g (3.70 oz.) <Limited slip differential>	
B.J. assembly	75 g (2.65 oz.)	

SEALANTS AND ADHESIVES

27100050035

Items	Specified sealants and adhesives
Threaded holes of the drive gear	3M Stud Locking Part No. 4170 or equivalent
Vent plug installation surface (to differential carrior)	3M ATD Part No. '8663 or equivalent
Differential cover installation surface (to gear carrier)	

SPECIAL TOOLS

27100060076

Tool	Tool number and name	Supersession	Application
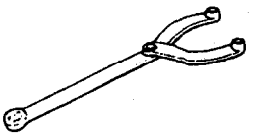	MB990767 End yoke holder	MB990767-01	Hub holding
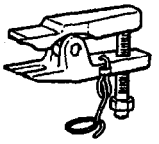	MB991113 Steering linkage puller	MB991113-01	Toe control arm ball joint and knuckle disconnection
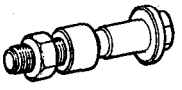	MB990998 Front hub remover and installer	MB990998-01	• Wheel bearing breakaway torque check • Wheel bearing provisiona holding
	MB990326 Preload socket	General service tool	• Breakaway torque of the wheel bearing measurement • Wheel bearing provisional holding
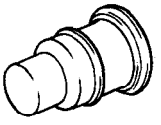	MB991460 Plug	General service tool	Prevention of entry of foreign objects into the differential carrier
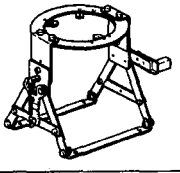	MB990909 Working base	General service tool	Differential carrier supporting
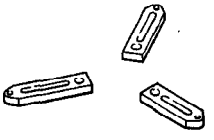	MB991116 Working base adapter	General service tool	

Tool	Tool number and name	Supersession	Application
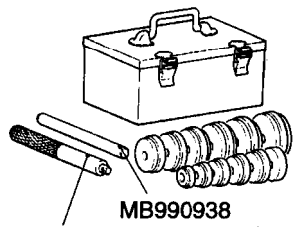	MB990925 Bearing and oil seal installer set	General service tool	• Drive pinion rear bearing outer race press-fitting MB990935, MB990938 • Drive pinion front bearing outer race press-fitting MB990932, MB990938 • Differential side oil.. seal press-fitting MB990938 (Use in conjuction with MB991115) • Tooth contact of drive gear measurement • Driving-out the oil seal, drive pinion front bearing and drive pinion rear bearing outer race MB990939
	MB990810 Side bearing puller	General service tool	• Side bearing inner race removal • Companion flange removal
	MB990850 End yoke holder	MB990757-01	Companion flange removal and installation
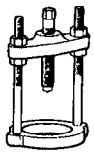	MB990339 Bearing puller	General service tool	Drive pinion rear bearing inner race removal
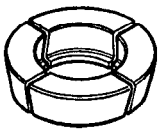	MB990374 Pinion bearing	MIT30173	
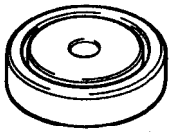	MB991115 Oil seal installer	–	Differential side oil seal press-fitting (Use in conjuction with MB990938)
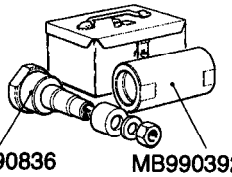	MB990835 Drive pinion setting gauge set	General service tool	Drive pinion height measurement

Tool	Tool number and name	Supersession	Application
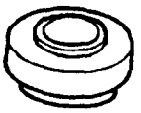	MB990728 Bearing installer	MB990802-01	• Drive pinion rear bearing inner race press-fitting • Side bearing inner race press-fitting
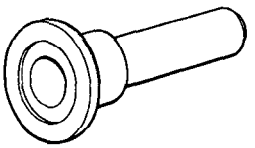	MB990031 or MB990699 Drive pinion oil seal installer	MB990031-01	Drive pinion oil seal press-fitting
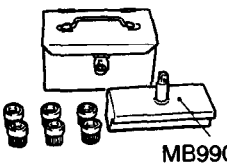	MB990988 Side gear holding tool set	MB990988	Limited slip differential gear backlash inspection
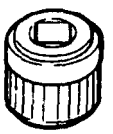	MB991357 Side gear holding tool	–	

TROUBLESHOOTING

27200070010

AXLE SHAFT

Symptom	Probable cause	Remedy
Noise while wheels are rotating	Brake drag	Replace
	Bent axle shaft	
	Worn or scarred axle shaft bearing	
Grease leakage	Worn or damaged oil seal	
	Malfunction of bearing seal	

DRIVE SHAFT

Symptom	Probable cause	Remedy
Noise	Wear, play or seizure of ball joint	Replace
	Excessive drive shaft spline looseness	

DIFFERENTIAL (LIMITED SLIP DIFFERENTIAL)

Symptom	Probable cause	Remedy
Abnormal noise during driving or gear chang-ing"'	Excessive drive gear backlash	Adjust
	Insufficient drive pinion preload	
	Excessive differential gear backlash	Adjust or replace
	Worn spline of a side gear	Replace
	Loose companion flange self-locking nut	Retighten or replace
Abnormal noise when cornering	Damaged differential gears	Replace
	Damaged pinion shaft	
	Insufficient gear oil quantity	Replenish
Gear noise*2	Improper drive gear tooth contact adjustment	Adjust or replace
	Incorrect drive gear backlash	Adjust
	Improper drive pinion preload adjustment	

NOTE

- t In addition to a malfunction of the differential carrier components, abnormal noise can also be caused by the universal joint of the propeller shaft, the axle shafts, the wheel bearings, etc. Before disassembling any parts, take all possibilities into consideration and confirm the source of the noise.
- 2: Noise from the engine, muffler vibration, transaxle, propeller shaft, wheel bearings, tires, body, etc., is easily mistaken as being caused by malfunctions in the differential carrier components. Be extremely careful and attentive when performing the driving test, etc.
  Test methods to confirm the source of the abnormal noise include: coasting, acceleration, constant speed driving, raising the rear wheels on a jack, etc. Use the method most appropriate to the circumstances.

Symptom	Probable cause	Remedy
Gear noise**	Damaged, broken, and/or seized tooth surfaces of the drive gear and drive pinion	Replace
	Damaged, broken, and/or seized drive pinion bearings	
	Damaged, broken, and/or seized side bearings	
	Damaged differential case	
	Inferior gear oil	
	Insufficient gear oil quantity	Replenish
Gear oil leakage	Worn or damaged front oil seal, OF an improperly installed oil seal	Replace,
	Damaged gasket	
	Loose companion flange self-locking nut	Retighten or replace
	Loose filler or drain plug	Retighten or apply adhesive
	Clogged or damaged vent plug	Clean or replace
Seizure*3	Insufficient drive gear backlash	Adjust
	Excessive drive pinion preload	
	Excessive side bearing preload	
	Insufficient differential gear backlash	
	Excessive clutch plate preload	
	Inferior gear oil	Replace
	Insufficient gear oil quantity	Replenish
Breakdown*4	Incorrect drive gear backlash	Adjust
	Insufficient drive pinion preload	
	Insufficient side bearing preload	
	Excessive differential gear backlash	
	Loose drive gear clamping bolts	Retighten
The limited slip differential does not function (on snow, mud, ice, etc.)	The limited slip device is damaged	Disassemble, check the functioning and replace the damaged parts

NOTE

*2: Noise from the engine, muffler vibration, transaxle, propeller shaft, wheel bearings, tires, body, etc., is easily mistaken as being caused by malfunctions in the differential carrier components. Be extremely careful and attentive when performing the driving test, etc.
Test methods to confirm the source of the abnormal noise include: coasting, acceleration, constant speed driving, raising the rear wheels on a -jack, etc. Use the method most appropriate to the circumstances.

*3: In the event of seizure, disassemble and replace the parts involved, and also be sure to check all components for any irregularities and repair or replace as necessary.

*4: In addition to disassembling and replacing the failed parts, be sure to check all components for irregularities and repair or replace as necessary.

TSB Revision

ON-VEHICLE SERVICE

27100120033

REAR AXLE TOTAL BACKLASH CHECK

If the vehicle vibrates and produces a booming sound due to an imbalance of the driving system, measure the rear axle total backlash by the following procedures to see if the differential carrier assembly requires removal.

1. Place the gearshift lever in the neutral position, apply the parking brake and jack up the vehicle.

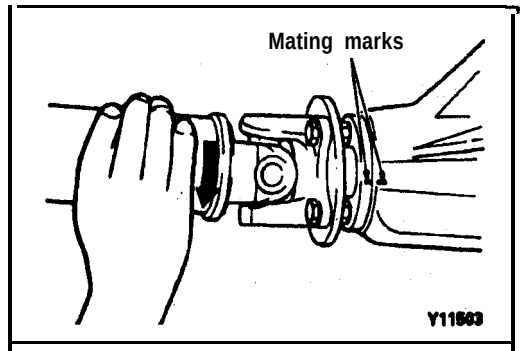

2. Manually turn the propeller. shaft clockwise as far as it will go and make mating marks on the companion flange dust cover and the differential carrier.

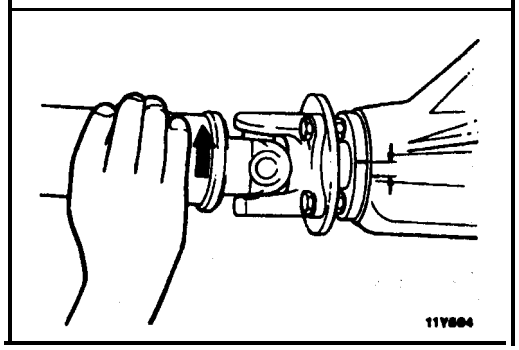

3. Manually turn the propeller shaft counterclockwise as far as it will go and measure the movement of the mating! marks.

   Limit: 5 mm (.2 in.)

4. If the backlash exceeds' the limit, remove the differential carrier assembly (Refer to P.27-29.) and adjust the backlash (Refer to P.27-31.).

GEAR OIL LEVEL CHECK

27200120036

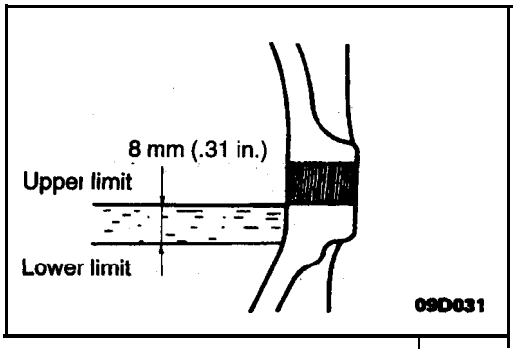

1. Remove the filler plug, and check, the oil level.
2. The oil level is sufficient if it reaches the filler plug hole.

   Specified gear oil:
   API classification GL-5 or higher [0.8 dm³ (.85 qt.)]

   NOTE
   Over –23°C (–10°F): SAE 90, 85W-90, 80W-90
   From –34°C (–30°F) to –23°C (–10°F): SAE 80W, 80W-90
   Under –34°C (–30°F): SAE 75W

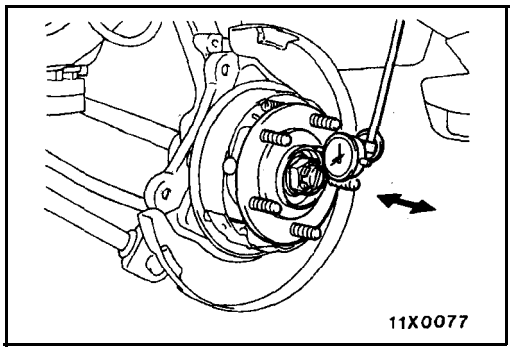

WHEEL BEARING END PLAY CHECK 27100090051

1. Jack up the vehicle and remove the rear wheel.
2. Release the parking brake.
3. Remove the caliper assembly and the brake disc or brake drum.
4. Set a dial gauge as shown in the illustration, and then move the hub in the axial direction and measure the play.

   Limit value: 0.05 mm (.002 in.)
5. If the play exceeds the limit value, **replace** the rear **hub** assembly.

LIMITED SLIP DIFFERENTIAL CONDITION CHECK (VCU TYPE) 27300100019

1. Place the shift lever in the neutral position and block the front wheels with chocks.
2. Release the parking brake lever fully.
3. Jack up the rear wheels and apply rigid racks to the specified positions of the side sills.
4. Disconnect the propeller shaft from the differential.

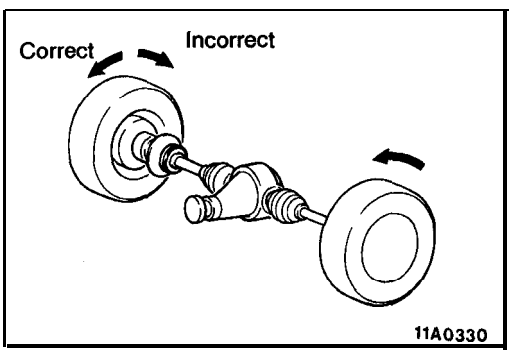

5. While turning one wheel slowly and make sure that **the** opposite wheel turns in the same direction.
6. If the opposite wheel turns in reverse, disassemble the limited slip differential with VCU and replace the VCU.

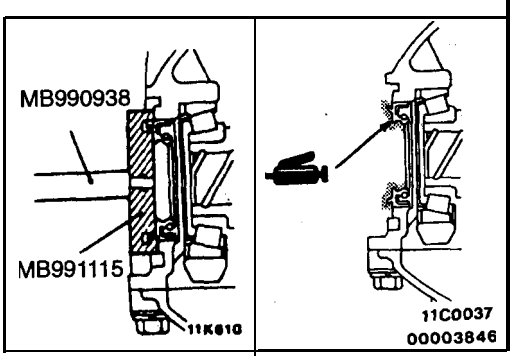

DIFFERENTIAL CARRIER OIL SEAL REPLACEMENT 27200120022

1. Remove the drive shaft. (Refer to **P.27-21.**)
2. Remove the oil seal of the differential carrier.
3. Use the special tool to tap on a new oil seal as far as the end of the differential carrier.
4. Apply multipurpose grease to the lip section of the oil seal and to the oil seal contact surface of the drive shaft.
5. Replace the **circlip** on the drive shaft with a new one, and then install the drive shaft onto the differential carrier.
6. Check the wheel alignment. (Refer to **GROUP 34 –** On-vehicle Service.)

HUB BOLT REPLACEMENT 27100100068

Refer to **P.27-4.**

REAR HUB ASSEMBLY

27100200089

REMOVAL AND INSTALLATION

Pre-removal Operation
- Drive Shaft Removal (Refer to P.27-21.)

1

Post-installation Operation
- Brake Line Bleeding <Vehicles with drum brakes> (Refer to GROUP 35A – On-vehicle Service.)
- Drive Shaft Installation (Refer to P.27-21.)

<Vehicles with drum brakes>

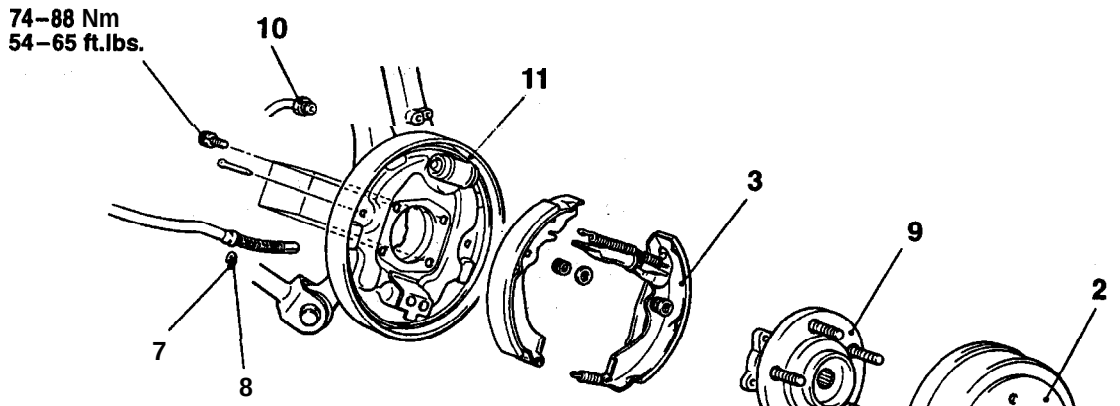

<Vehicles with disc brakes>

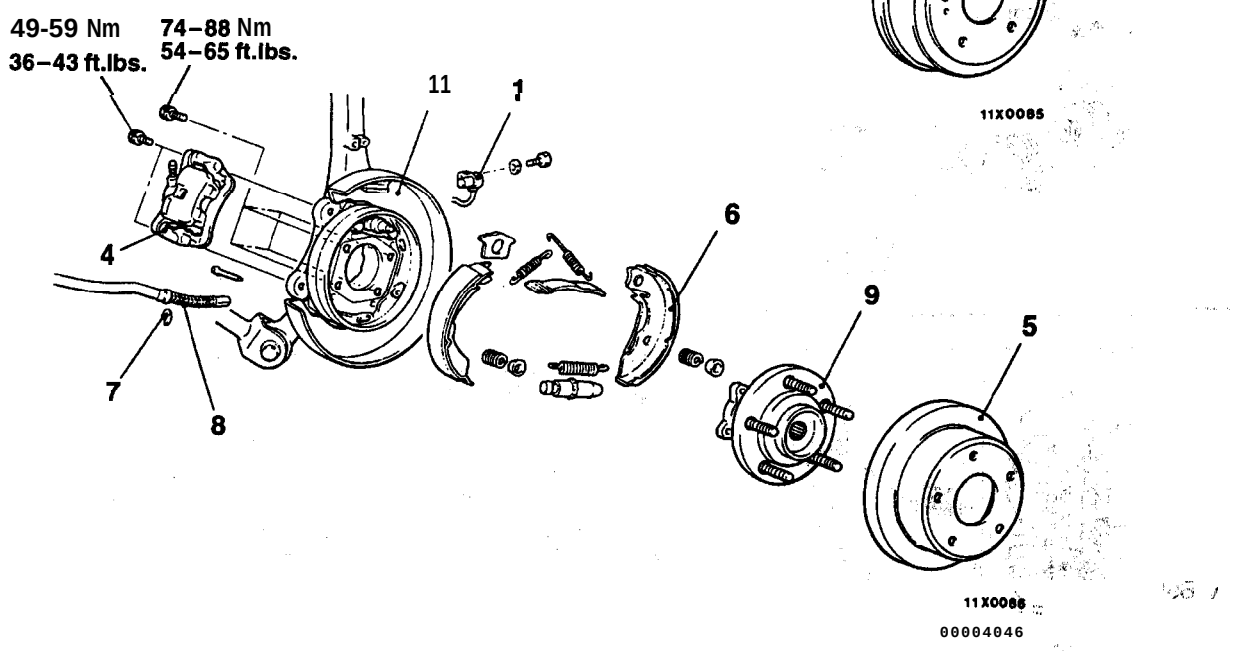

Removal steps

1. **Rear wheel speed sensor** <Vehicles with ABS> (Refer to GROUP 35C – Wheel Speed Sensor.)
2. Brake drum
3. Shoe and lever assembly
4. Caliper assembly (Refer to P.27-5.)
5. Brake disc
6. Shoe and lining assembly (Refer to **GROUP 36 – Parking Brake** <Drum-in-disc brakes>.)
7. Clip
8. Parking brake **cable**
9. Rear hub **assembly**
10. Brake pipe connection
11. Dust seal

Caution
The rear hub assembly should not be disassembled.

TSB Revision

INSPECTION

27100210112

- Check the oil seal for crack or damage.
- Check the rear hub spline for wear or damage.

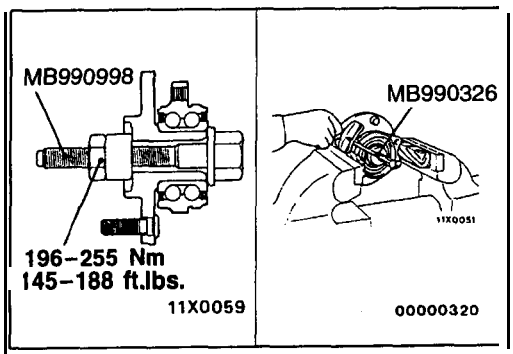

WHEEL BEARING BREAKAWAY TORQUE CHECK

(1) Tighten the special tool to the front hub assembly at the specified torque [196–255 Nm (145-188 ft.lbs.)].

(2) Use the special tool to measure the hub rotation starting torque.

Limit: 1.0 Nm (9 in.lbs.) or less

(3) The hub rotation starting torque should be within the limit value range, and there should be no engagement or feeling of roughness.

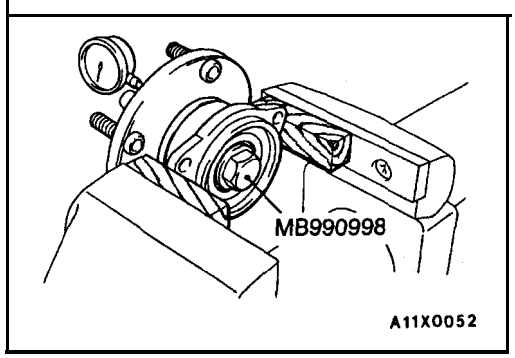

WHEEL BEARING END PLAY CHECK

27100090068

(1) Using the special tool to measure the play in the hub axial direction.

Limit: 0.05 mm (.002 in.)

(2) If the limit value of wheel bearing end play cannot be obtained within the specified tightening torque range of 196-255 Nm (145-188 ft.lbs.), replace the front hub assembly.

KNUCKLE

27100300062

REMOVAL AND INSTALLATION

Pre-removal and Post-installation Operation
- Rear Wheel Speed Sensor Removal and Installation <Vehicles with ABS>
- Rear Hub Assembly Removal and installation (Refer to P.27-18.)

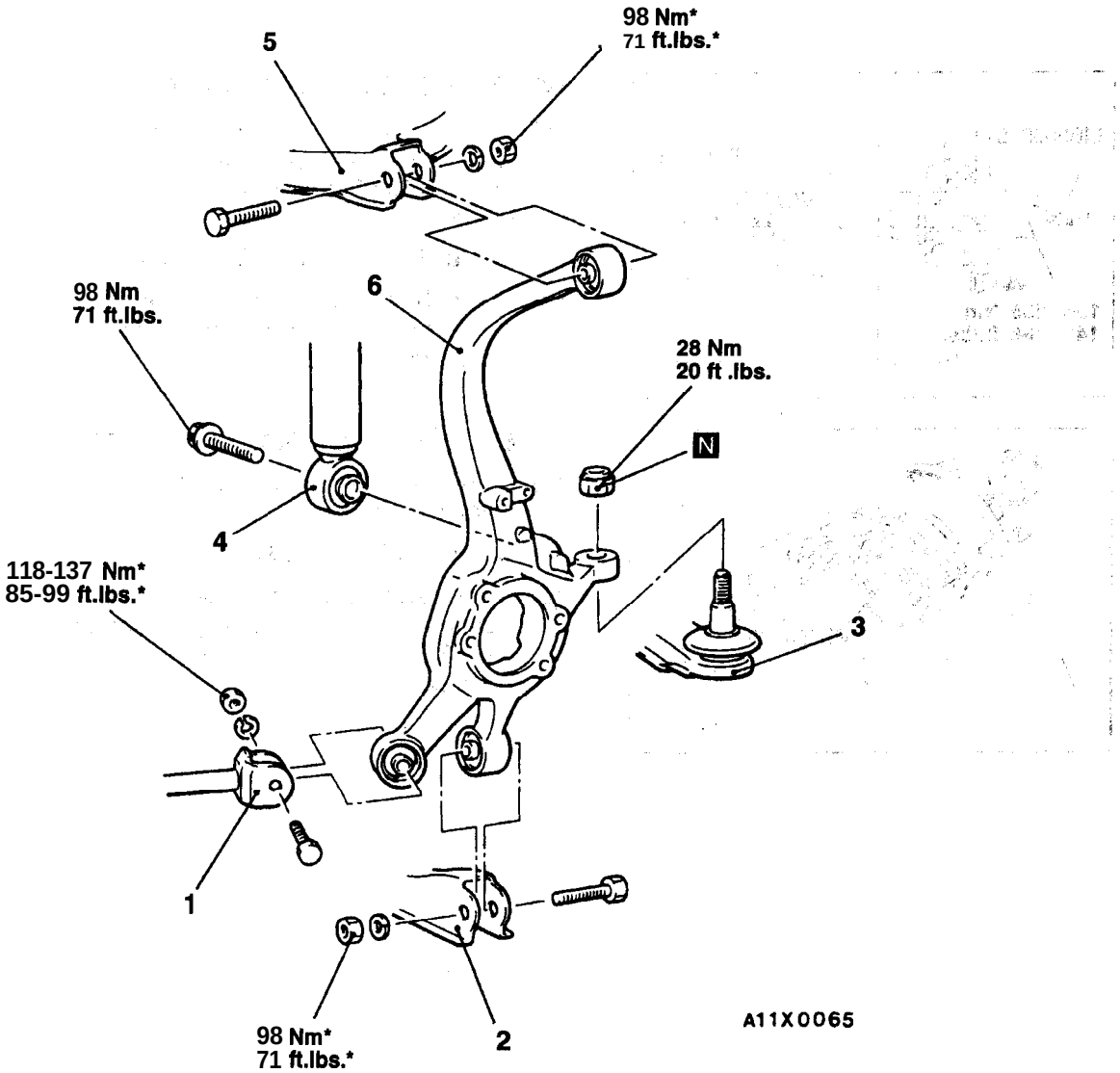

Removal steps

1. Trailing arm connection
2. Lower arm connection
3. Toe control arm ball joint and knuckle connection (Refer to P.27-7.)
4. Shock absorber connection
5. Upper arm connection
6. Knuckle

Caution
*: Indicates parts which should be temporarily tightened, and then fully tightened with the vehicle on the ground in the unladen condition.

TSB Revision

DRIVE SHAFT

27100330023

REMOVAL AND INSTALLATION

Post-installation Operation
- Brake Line Bleeding <Vehicles with drum brakes>
  (Refer to GROUP 35A – On-vehicle Service.)
- Parking Brake Adjustment
  (Refer to GROUP 36 – On-vehicle Service.)

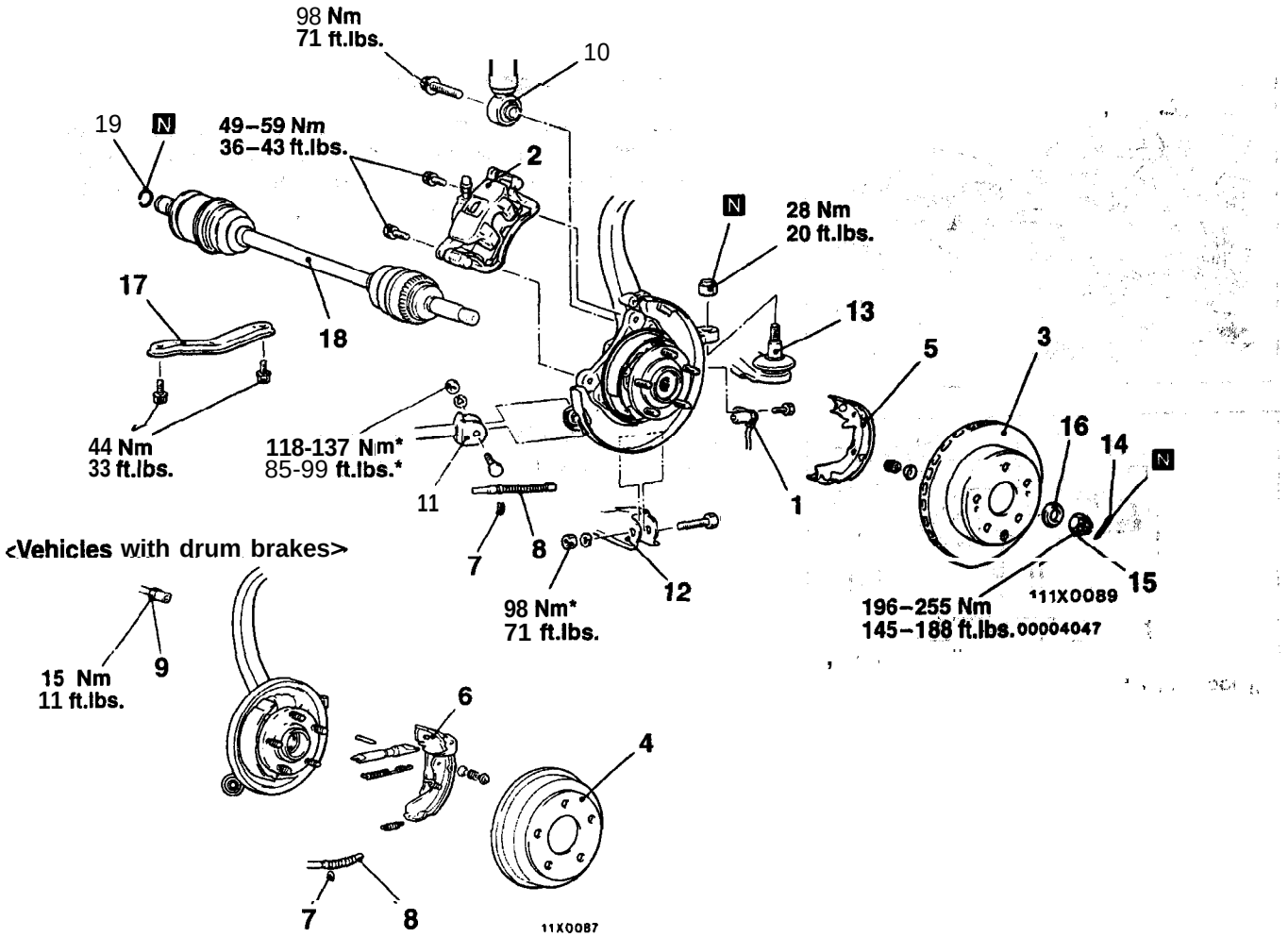

Removal steps

1. Rear wheel speed sensor <Vehicles with ABS>
2. Caliper assembly (Refer to P.27-5.)
3. Brake disc
4. Brake drum
5. Shoe and lining assembly (Refer to GROUP 36 – Parking Brake <Drum-in-disc brakes>.)
6. Shoe and lever assembly
7. Clip
8. Parking brake cable
9. Brake pipe connection
10. Shock absorber connection
11. Trailing arm connection
12. Lower arm connection
13. Toe control arm ball joint and knuckle connection (Refer to P.27-7.)
14. Cottor pin
15. ◀A▶ ▶B◀ Drive shaft nut
16. Washer
17. Differential mount support
18. ◀B▶ ▶A◀ Drive shaft
19. Circlip

Caution

1. For vehicles with ABS, be careful not to damage the drive shaft rotor.
2. ● : Indicates parts which should be temporarily tightened, and then fully tightened with the vehicle on the ground in the unladen condition.

TSB Revision

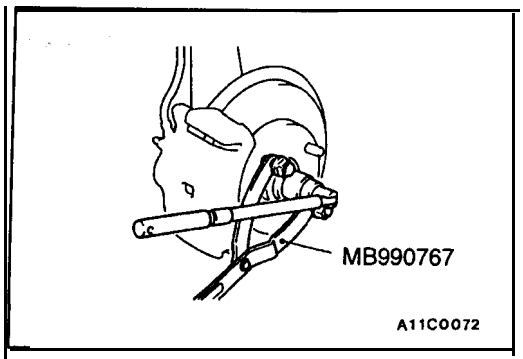

REMOVAL SERVICE POINTS

◀A▶ DRIVE SHAFT NUT REMOVAL

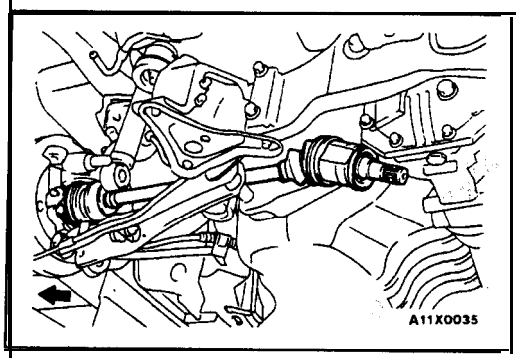

◀B▶ DRIVE SHAFT REMOVAL

(1) Push the lower part of the knuckle to the outside of the vehicle, and then separate the drive shaft from the differential carrier. At fhis time, use a tire lever or similar to separate the drive shaft connection.

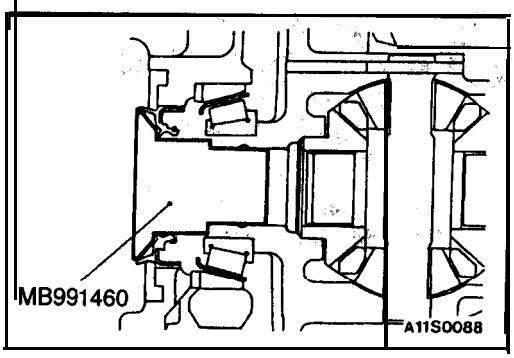

(2) Use the special tool as a cover not to let foreign objects get into the differential carrier.

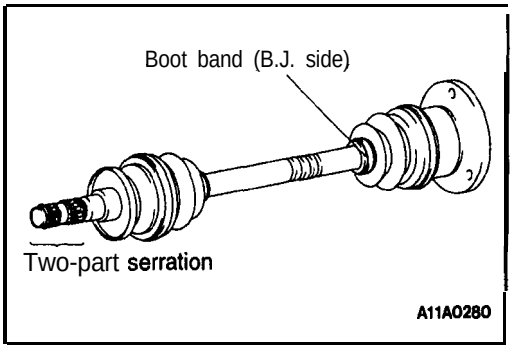

INSTALLATION SERVICE POINTS

▶A◀ DRIVE SHAFT INSTALLATION

Caution

1. **Be cautious to ensure that the differential carrier oil seal is not damaged by the drive shaft spline.**
2. **The right drive shaft for models equipped with the LSD having a VCU has a two-part serration. Install each on the correct side carefully.**

NOTE
The left and right drive shafts can also be distinguished from each other by the identification color of" boat' band (B.J. side).

Item	Drive shaft (L.H.)	Drive shaft (R.H.)
Boot band (B.J. side) identification color	Green	Orange

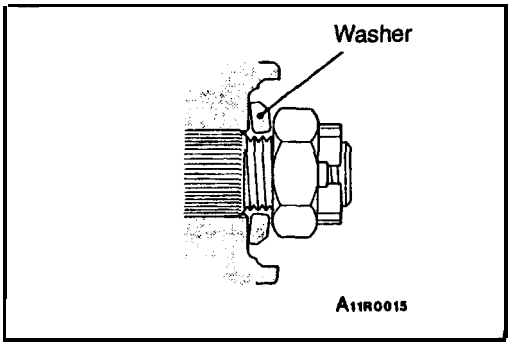

▶B◀ DRIVE SHAFT NUT INSTALLATION

(1) Install the washer and drive shaft nut in the specified direction.
(2) Use the special tool (MB990767) to tighten the drive shaft nut.
(3) If the position of the cotter pin holes does not match, tighten the nut up to 255 Nm (188 ft.lbs.) in maximum.
(4) Install the cotter pin in the first matching holes and bend it securely.

Caution
Before securely tightening the drive shaft nuts, make sure there is no load on the wheel bearings.

INSPECTION

27100340026

- Check the drive shaft boots for damage or deterioration,
- Check the ball joints (B.J. and T.J.) for excessive play or check operation.
- Check the drive shaft spline for wear or damage.

DISASSEMBLY AND REASSEMBLY

27100350029

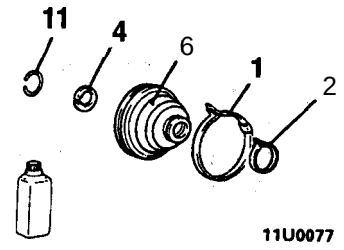

T.J. boot repair kit

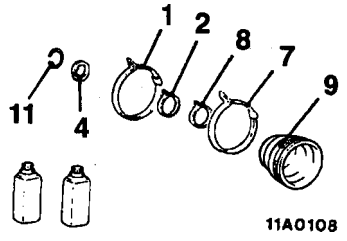

B.J. boot repair kit

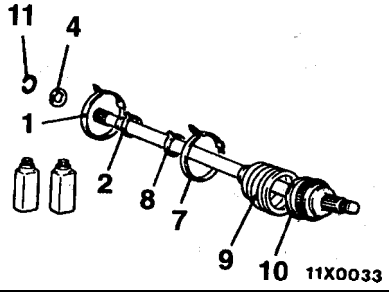

B.J. repair kit

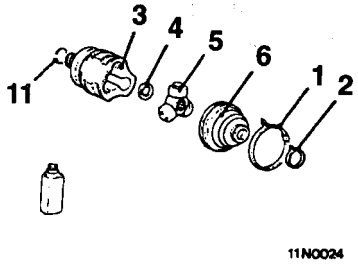

J. repair kit

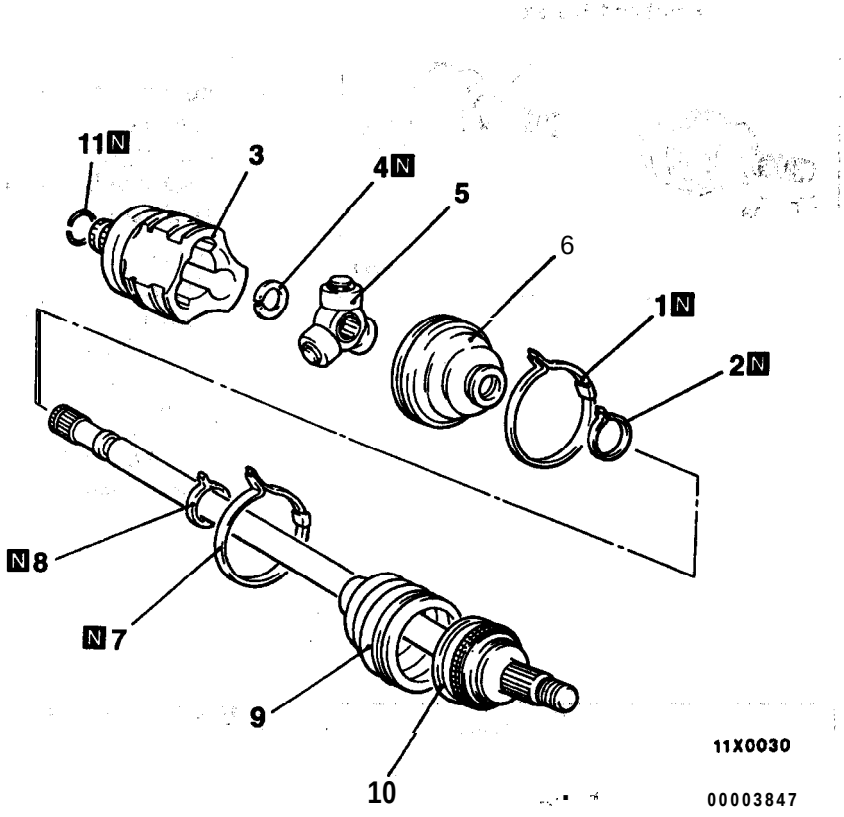

Disassembly steps

- ▶D◀ 1. T.J. boot band (large)
- ▶D◀ 2. T.J. boot band (small)
- ▶C◀ 3. T.J. case
- ◀A▶ 4. Snap ring
- ◀A▶ ▶C◀ 5. Spider assembly
- ◀B▶ ▶C◀ 6. T.J. boot
- ▶B◀ 7. B.J. boot band (large)
- ▶B◀ 8. B.J. boot band (small)
- ◀B▶ ▶A◀ 9. B.J. boot
- 10. B.J. assembly
- 11. Circlip

Caution
Do not disassemble the B.J. assembly.

TSB Revision

LUBRICATION POINTS

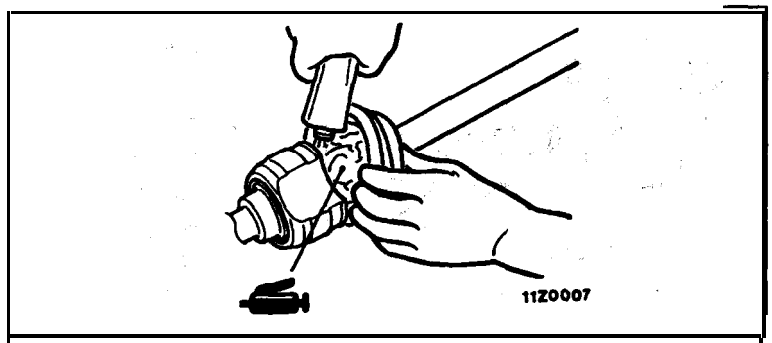

Grease: Repair kit grease
<Conventional differential> 95 g (3.35 oz.)
<Limited slip differential> 105 g (3.70 oz.)

Caution
The drive shaft joint uses special grease.
Do not mix old and new or different types of grease.

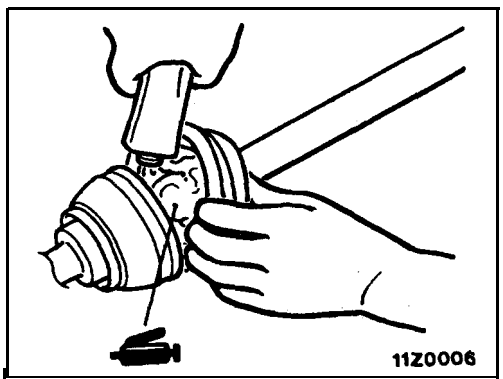

Grease:
Repair kit grease 75 g (2.66 oz.)

Caution
The drive shaft joint uses special grease. Do not mix old and new or different types of grease.

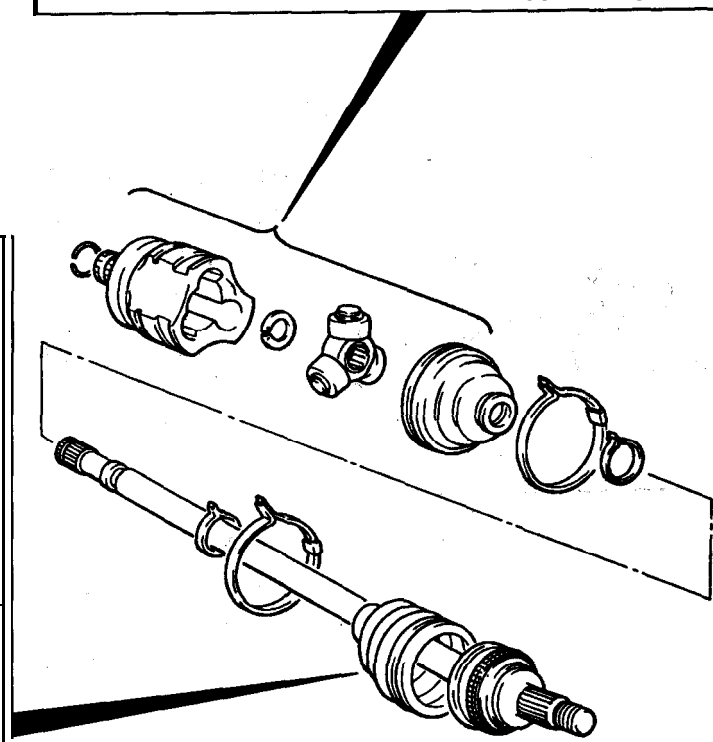

11X0030

00003848

DISASSEMBLY SERVICE POINTS

◀A▶ SNAP RING/SPIDER ASSEMBLY REMOVAL

(1) Wipe out the grease in the T.J. case. ,

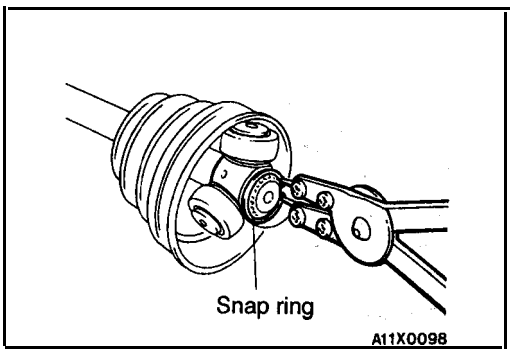

(2) Remove the snap ring with the snap ring pliers and then remove the spider assembly.

Caution
Do not disassemble the spider assembly.

(3) In case foreign objects such as water or dust is mixed in the grease, be sure to wash the spider assembly.

Caution
In case of having washed the spider assembly, when assembling it, make sure to push enough grease between the spider axle and the roller so that grease may not run out.

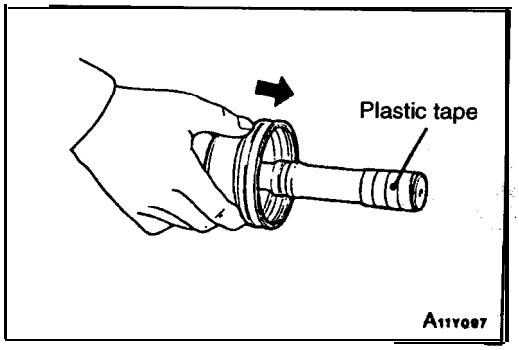

◀B▶ T.J. BOOT/B.J. BOOT REMOVAL

(1) Wipe the grease off of the spline portion.
(2) Remove the T.J. boot and B.J. boot.

N O T E
If the boots are reused, wrap plastic tape around the drive shaft spline so that the boots are not damaged when they are removed.

REASSEMBLY SERVICE POINTS

▶A◀ B.J. BOOT INSTALLATION

(1) Wrap plastic tape around the drive shaft spline.
(2) Insert the drive shaft in' B.J. boot.

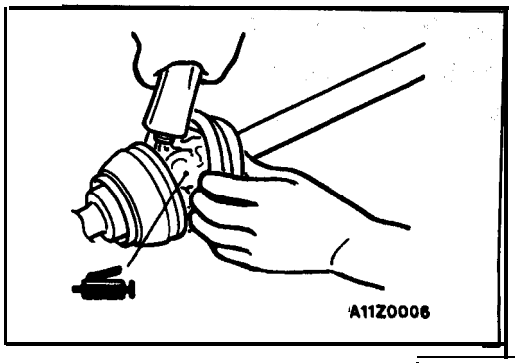

(3) Fill the inside of the B.J. and B.J. boot with the specified grease.

Specified grease: Repair kit grease [75 g (2.66 oz.)]

NOTE
The grease in the repair kit should be divided in half for use, respectively, at the joint and inside the boot.

Caution
The drive shaft joint uses special grease. Do not mix old and new or different types of grease.

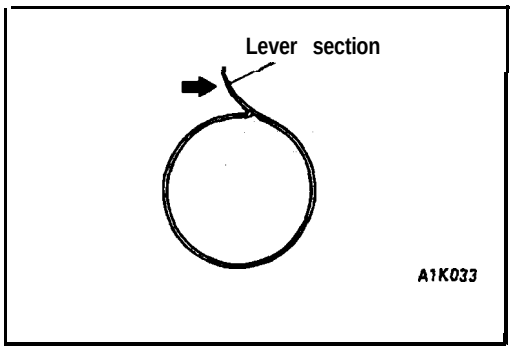

▶B◀ B.J. BOOT BAND (SMALL)/B.J. BOOT BAND (LARGE) INSTALLATION

Be careful that the drive shaft should be. straight when tightening the B.J. boot bands.

Caution
Always check the identification numbers stamped on the boot band levers. Never confuse the 'bands;

Items	Identification number
B.J. boot band (large)	20 – 110 # BJ 87
B.J. boot band (small)	20 – 83 # BJ 82

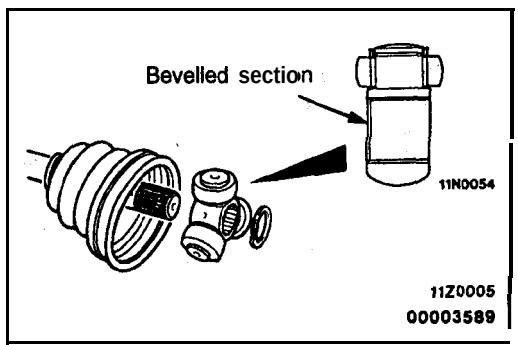

▶C◀ T.J. BOOT/SPIDER ASSEMBLY/T.J. CASE INSTALLATION

(1) Insert the drive shaft in T.J. boot.
(2) Install the spider assembly to the shaft from the direction , of the spline bevelled section.

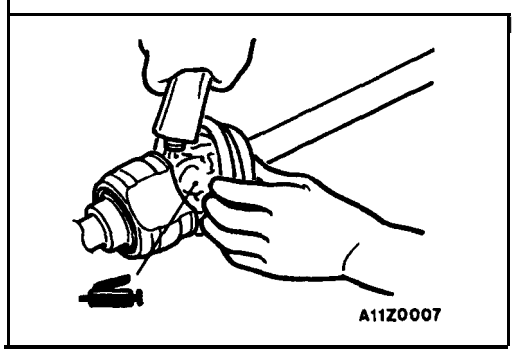

(3) After applying specified grease to the T.J. case, insert the drive shaft and apply grease one more time.

Specified grease:
Repair kit grease
<Conventional differential> 95 g (3.35 oz.)
<Limited slip differential> 105 g (3.70 oz.)

NOTE
The grease in the repair kit should be divided in half for use, respectively, at the joint and inside the boot.

Caution
The drive shaft joint use special grease. Do not mix old and new or different types of grease.

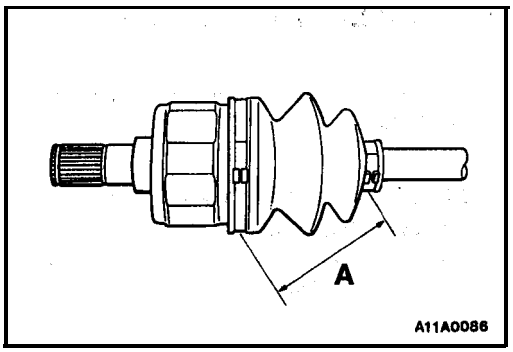

▶D◀ T.J. BOOT BAND (SMALL)/T.J. BOOT BAND (LARGE)
INSTALLATION

Set the T.J. boot bands at the specified distance in order to adjust the amount of air inside the T.J. boot, and then tighten the, T.J. boot bands securely.

Standard value (A):
<Conventional differential> 79 ± 3 mm (3.11 ± .12 in.)
<Limited slip differential> 84 ± 3 mm (3.31 ± .12 in.)

Caution
Always check the identification numbers stamped on the boot band levers. Never confuse the bands.

Items	Identification number
T.J. boot band (large)	20 – 98 # BJ 82
T.J. boot band (small)	20 – 83 # BJ 82

INSPECTION

27100360022

- Check the drive Shaft for damage, bending or corrosion.
- Check the drive shaft spline part for wear or damage.
- Check for entry of water and/or foreign material into B.J.
- Check the spider assembly for roller rotation, wear or corrosion.
- Check the groove inside T.J. case for wear or corrosion.
- Check the boots for deterioration, damage or cracking.

DIFFERENTIAL CARRIER

27200200044

REMOVAL AND INSTALLATION

Pre-removal Operation
- Brake Fluid Draining <Vehicles with drum brakes>
- Differential Gear Oil Draining

Post-installation Operation
- Differential Gear Oil Filling (Refer to P.27-16.)
- Brake Line Bleeding <Vehicles with drum brakes> (Refer to GROUP 35A–On-vehicle Service.)
- Parking Brake Adjustment (Refer to GROUP 36–On-vehicle Service.)

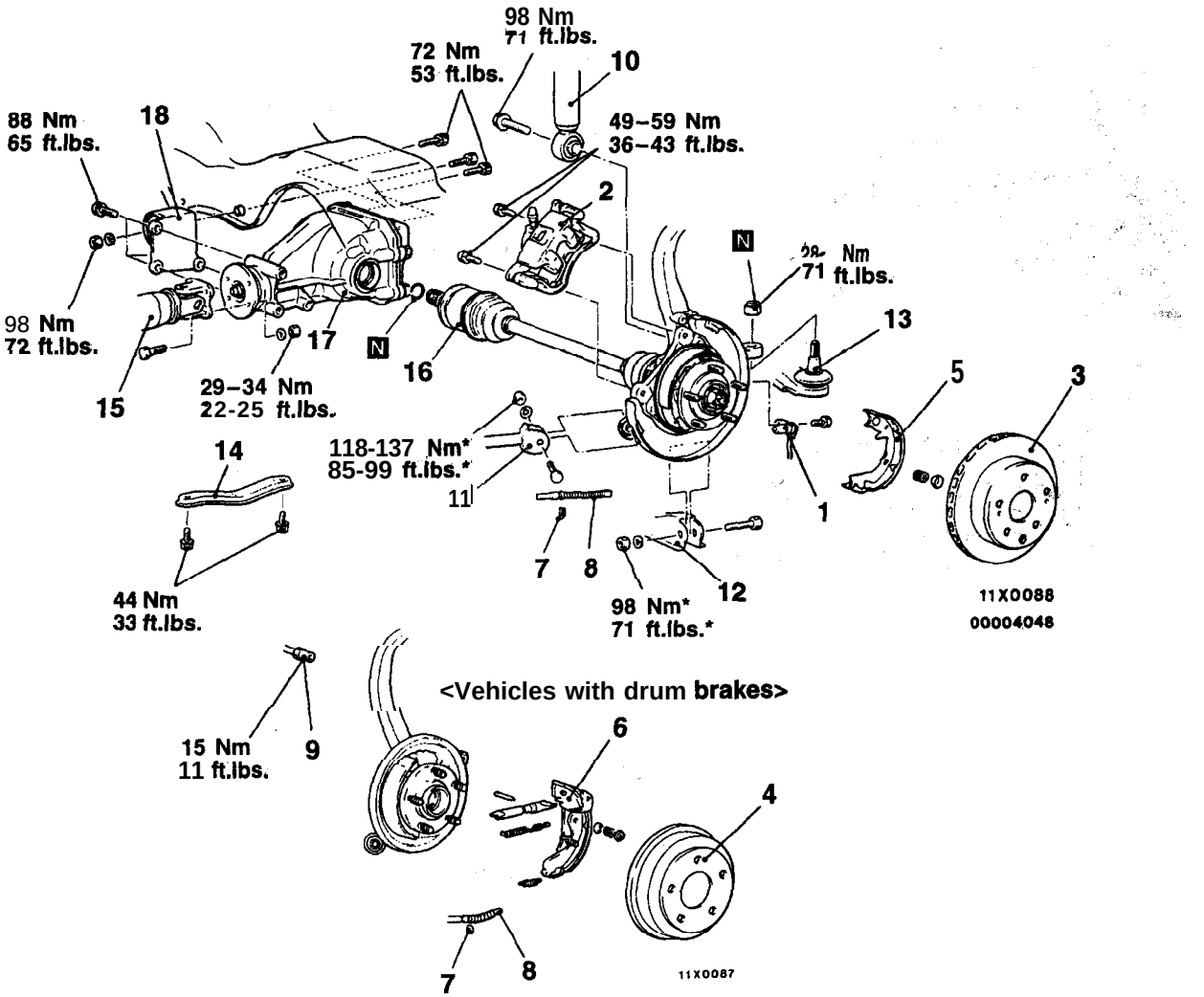

Removal steps

1. Rear wheel speed sensor <Vehicles with ABS>
2. Caliper assembly (Refer to P.27-5.)
3. Brake disc
4. Brake drum
5. Shoe and lining assembly (Refer to GROUP 36 – Parking Brake <Drum-in-disc brakes>.)
6. Shoe and lever assembly
7. Clip
8. Parking brake cable
9. Brake pipe connection
10. Shock absorber connection
11. Trailing arm connection
12. Lower arm connection
13. Toe control arm ball joint and knucle connection (Refer to P.27-7.)
14. Differential mount support
15. Propeller shaft connection ◀A▶ ▶B◀
16. Drive shaft connection ◀B▶ ▶A◀
17. Differential carrier ◀C▶
18. Differential mount bracket assembly

Caution

*: Indicates parts which should be temporarily tightened, and then fully tightened with the vehicle on the ground in the unladen condition.

TSB Revision

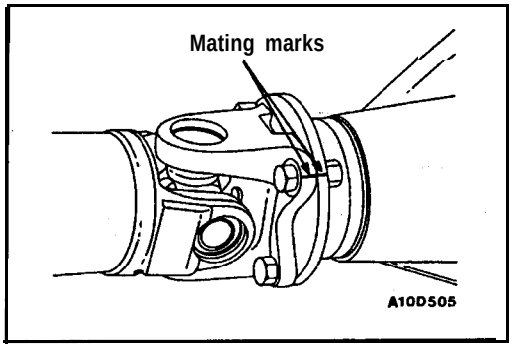

REMOVAL SERVICE POINTS

◀A▶ PROPELLER SHAFT DISCONNECTION

(1) Make mating marks on the differential companion flange and flange yoke, and then separate the differential carrier assembly and the propeller shaft;
(2) Suspend the propeller shaft from the body with wire, etc, so that there are no-sharp bends.

Caution
Be careful that there are no sharp bends in the propeller shaft, as they may damage the Löbro joint.

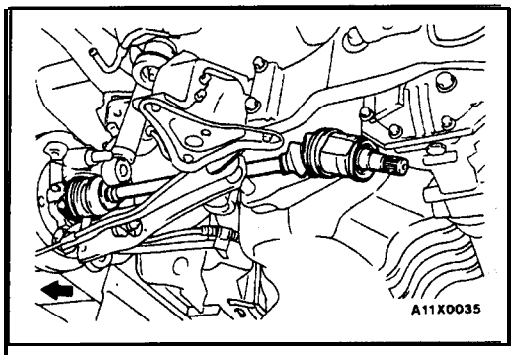

◀B▶ DRIVE SHAFT DISCONNECTION

(1) Push the lower part of the knuckle to the outside of the vehicle, and then separate the drive shaft from the differential carrier. At this time, use a tire lever or similar to separate the drive shaft connection,
(2) Support the separated drive shaft with wire or similar so as not to damage the joint.

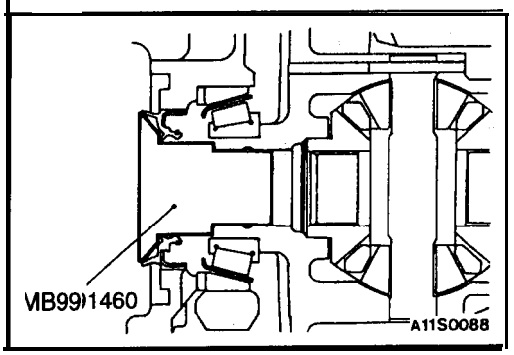

(3) Use the special tool as a cover not to let foreign objects get into the differential carrier.

◀C▶ DIFFERENTIAL CARRIER REMOVAL

Support the differential carrier with a jack. Then remove the connecting bolt between it and the rear crossmember and remove the differential carrier.

INSTALLATION SERVICE POINTS

▶A◀ DRIVE SHAFT CONNECTION

Caution
Do not damage the differential carrier 'oil seal.

▶B◀ PROPELLER SHAFT CONNECTION

Connect the propeller shaft so' that the mating marks on the differential companion flange and the flange yoke are aligned.

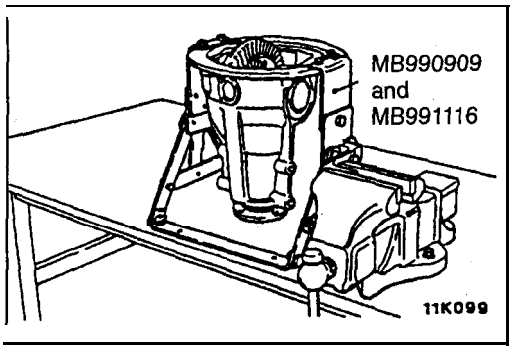

INSPECTION BEFORE DISASSEMBLY 27200290034

Hold the special tool in a vice, and attach the differential carrier to the special tool.

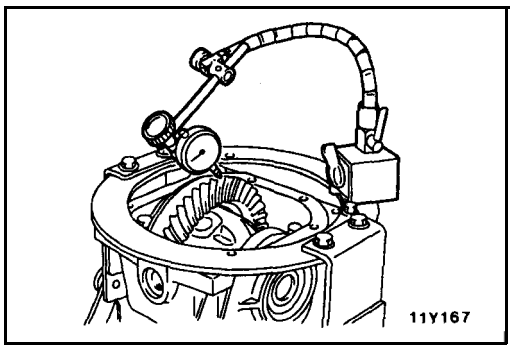

DRIVE GEAR BACKLASH CHECK

(1) With the drive pinion locked in place, measure the drive gear backlash with a dial indicator on the drive gear.

NOTE
Measure at four points or more on the circumference of the drive gear.

Standard value: 0.11 – 0.16 mm (.0043–.0063 in.)

(2) If the backlash is outside the standard value, adjust using the side bearing spacer.

NOTE
After adjustment, inspect the contact of the drive gear.

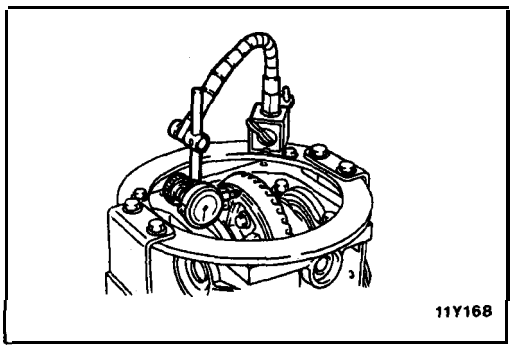

DRIVE GEAR RUNOUT CHECK

(1) Measure the drive gear runout at the shoulder on the reverse side of the drive gear.

Limit: 0.05 mm (.002 in.)

(2) If the runout exceeds the limit value, check that there is no foreign material between the reverse side of the drive gear and the differential case, or that there is no looseness in the drive gear mounting bolt.

(3) If step (2) is normal, change the assembly position of the drive gear and differential case, and then take another measurement.

NOTE
If adjustment is impossible, replace the differential case or the drive gear and drive pinion as a set.

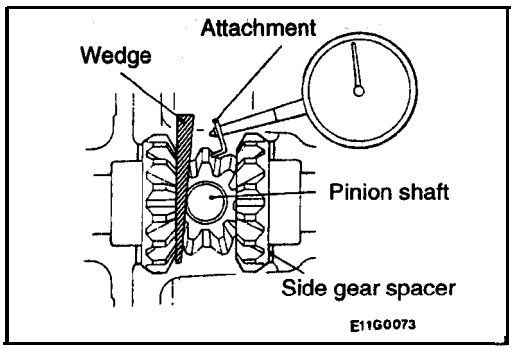

DIFFERENTIAL GEAR BACKLASH CHECK <Conventional differential>

(1) While locking the side gear with the wedge, measure the differential gear backlash with a dial indicator on the pinion gear.

NOTE
(1) The measurement should be made for both pinion gears individually.
(2) Refer to P.27-46 for measurement of the limited slip differential gear backlash.

Standard value: 0 – 0.076 mm (0–.0030 In.)

Limit: 0.2 mm (.008 in.)

(2) If the differential gear backlash exceeds the limit, adjust the backlash by installing thicker side gear spacers.

NOTE
If adjustment is impossible, replace the side gear and pinion gear as a set.

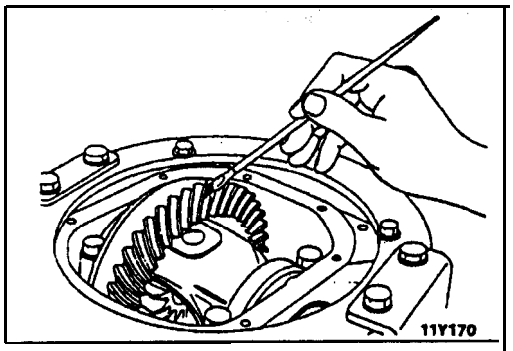

DRIVE GEAR TOOTH CONTACT CHECK

Check the drive gear tooth contact by following the steps below.

(1) Apply a thin, uniform coat of machine blue to both surfaces of the drive gear teeth.

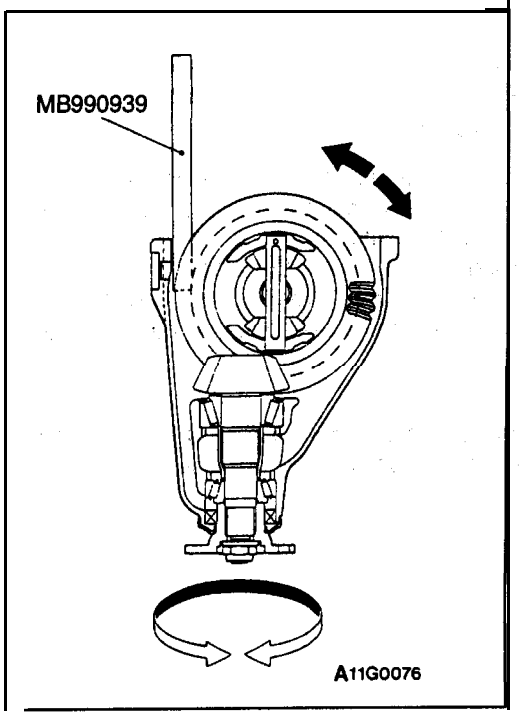

(2) Insert a special tool between the differential carrier and the differential case, and then rotate the companion flange by hand (once in the normal direction, and then once in the reverse direction) while applying a load to the drive gear, so that the revolution torque [approximately 2.5 – 3.0 Nm (22-27 in.lbs.)] is applied to the drive pinion.

Caution
If the drive gear is rotated too much, the tooth contact pattern will become unclear and difficult to check.

(3) Check the tooth contact condition of, the drive gear and drive pinion.

Standard tooth contact pattern	Problem	Solution
1 Narrow tooth side 2 Drive-side tooth surface (the side applying power during forward movement) 3 Wide tooth side 4 Coast-side tooth surface (the side applying power during reverse movement) 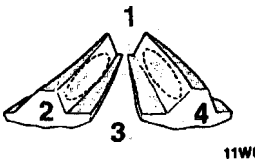 11W0115	Tooth contact pattern resulting from excessive pinion height 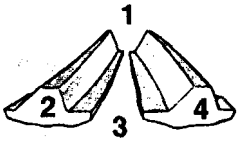 11W0116 The drive pinion is positioned too far from the center of the drive gear.	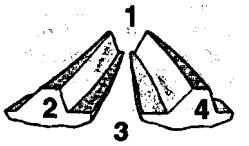 11W0118 Increase the thickness of the pinion height adjusting shim, and position the drive pinion closer to the center of the drive gear. Also, for backlash adjustment, position the drive gear farther from the drive pinion.
	Tooth contact pattern resulting from insufficient pinion height 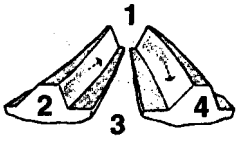 11W0117 The drive pinion is positioned too close to the center of the drive gear.	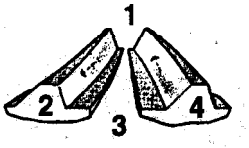 11W0119 Decrease the thickness of the pinion height adjusting Shim, and position the drive pinion farther from the center of the drive gear. Also, for backlash adjustment, position the drive gear closer to the drive pinion.

NOTE

(1) Tooth contact pattern is a method for judging the result of the adjustment of drive pinion height and drive gear backlash. The adjustment of drive pinion height and drive gear backlash should be repeated until tooth contact patterns bear a similarity to the standard tooth contact pattern.

(2) When adjustment is not able to obtain a correct pattern, it may be judged that the drive gear and drive pinion have exceed their usage limits and both gears should be replaced as a set.

DISASSEMBLY

27200220033

Pre-disassembly Inspections
- Drive Gear Backlash Check (Refer to P.27-31.)
- Drive Gear Runout Check (Refer to P.27-31.)
- Differential Gear Backlash Check (Refer to P.27-32.)
- Drive Gear Tooth Contact Check (Refer to P.27-32.)

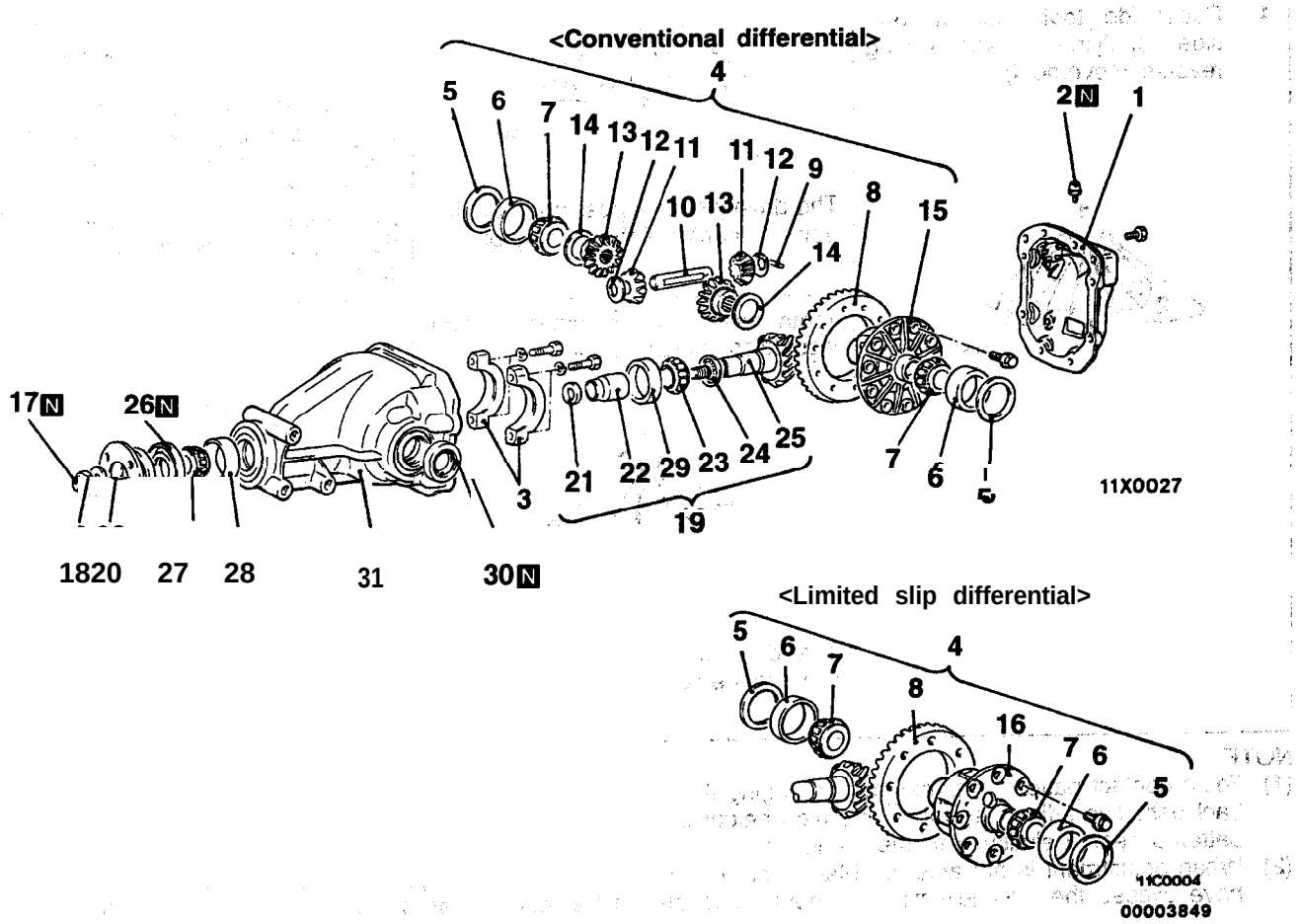

Disassembly steps

- Inspection before disassembly (Refer to P.27-31.)
1. Differential cover assembly
2. Vent plug
3. Bearing cap
4. Differential case assembly ◀A▶
5. Side bearing spacer
6. Side bearing outer race
7. Side bearing inner race ◀B▶
8. Drive gear ◀C▶
9. Lock pin ◀D▶
   <Conventional differential>
10. Pinion shaft
    <Conventional differential>
11. Pinion gear
    <Conventional differential>
12. Pinion washer
    <Conventional differential>
13. Side gear
    <Conventional differentials
14. Side gear spacer
    <Conventional differential>
15. Differential case
    <Conventional differential>
16. Limited slip differential case assembly (Refer to P.27-46.)
17. Self-locking nut ◀E▶
18. Washer
19. Drive pinion assembly ◀F▶
20. Companion flange
21. Drive pinion front shim (for preload adjustment)
22. Drive pinion spacer
23. Drive pinion rear bearing inner race ◀G▶
24. Drive pinion rear shim (for pinion height adjustment)
25. Drive pinion
26. Oil seal ◀H▶
27. Drive pinion front bearing inner race ◀H▶
28. Drive pinion front bearing outer race ◀H▶
29. Drive pinion rear bearing outer race ◀I▶
30. Oil seal
31. Gear carrier

TSB Revision

DISASSEMBLY SERVICE POINTS

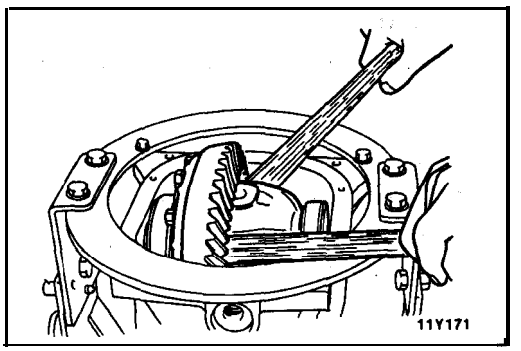

◀A▶ DIFFERENTIAL CASE ASSEMBLY REMOVAL

Caution
Remove the differential case assembly, slowly and carefully so that the side bearing outer race is not dropped.

NOTE
Keep the right and left side bearings separate, so that they do not become mixed at the time of reassembly.

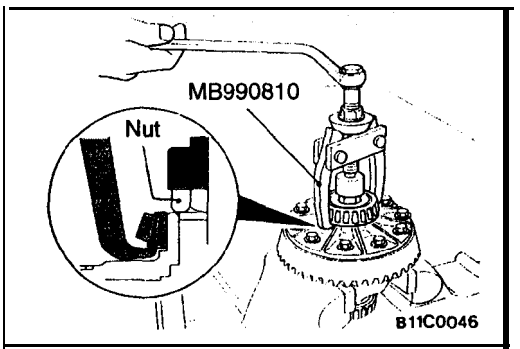

◀B▶ SIDE BEARING INNER RACE REMOVAL

Place the nut on top of the differential case, and then use the special tool to remove the side bearing inner race.

NOTE
Attach the prongs of the special tool to the inner 'race of the side bearing through the openings in the differential case.

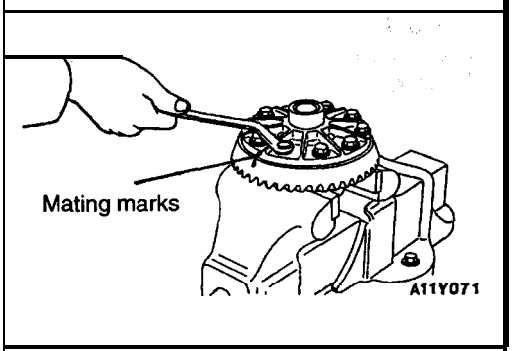

◀C▶ DRIVE GEAR REMOVAL

(1) Make the mating marks to the differential case and the drive gear.
(2) Loosen the drive gear attaching bolts in diagonal sequence to remove the drive gear.

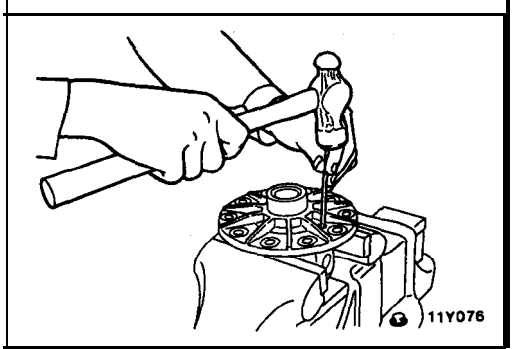

◀D▶ LOCK PIN REMOVAL <Conventional differential>

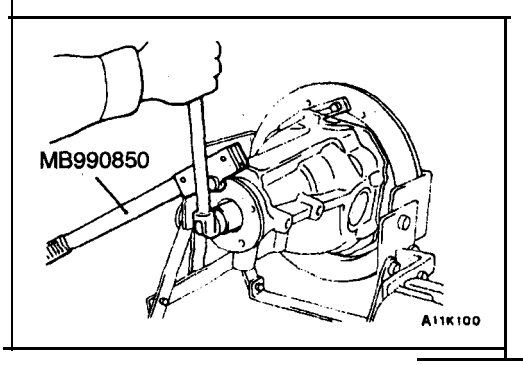

◀E▶ SELF-LOCKING NUT REMOVAL

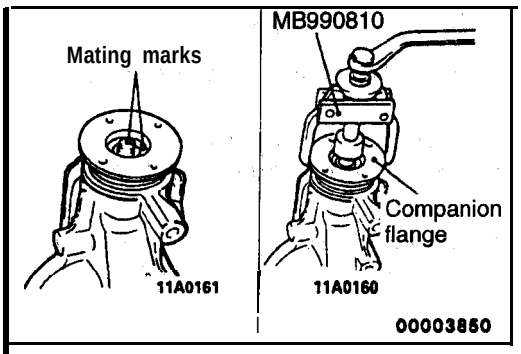

◀F▶ DRIVE PINION ASSEMBLY REMOVAL

(1) Make the mating marks to the drive pinion and companion flange.

Caution
Mating marks should not be made to the contact surfaces of companion flange and propeller shaft.

(2) Drive out the drive pinion together with the drive pinion spacer and drive pinion front shims.

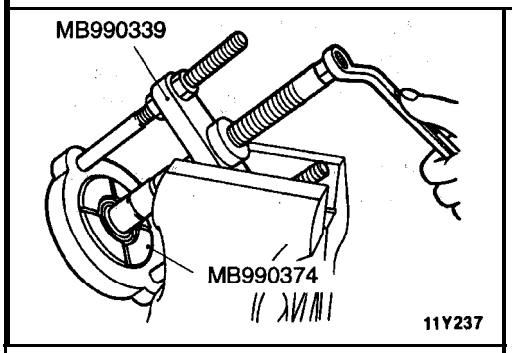

◀G▶ DRIVE PINION REAR BEARING INNER RACE REMOVAL

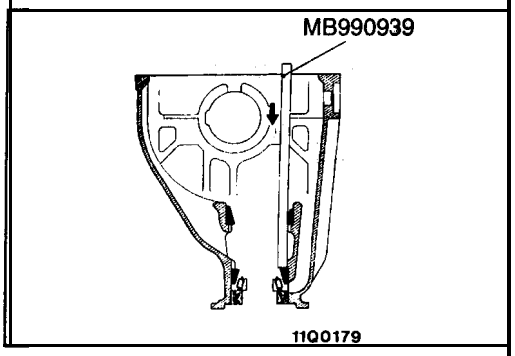

◀H▶ OIL SEAL/DRIVE PINION FRONT BEARING INNER RACE/DRIVE PINION FRONT BEARING OUTER RACE REMOVAL

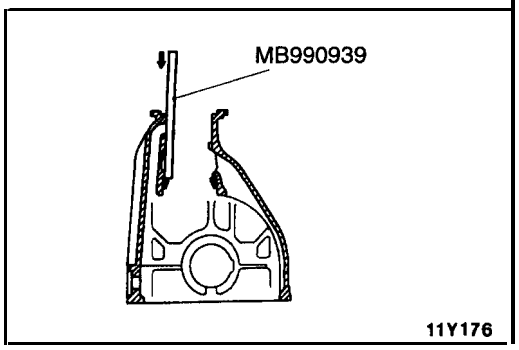

◀I▶ DRIVE PINION REAR BEARING OUTER RACE REMOVAL

INSPECTION

27200250049

- Check the companion flange for wear or damage.
- Check the bearings for wear or discoloration.
- Check the gear carrier for cracks.
- Check the drive pinion and drive gear for wear or cracks.
- Check the side gears, pinion gears and pinion shaft for wear or damage.
- Check the side gear spline for wear or damage

REASSEMBLY

27200230036

<Conventional differential>

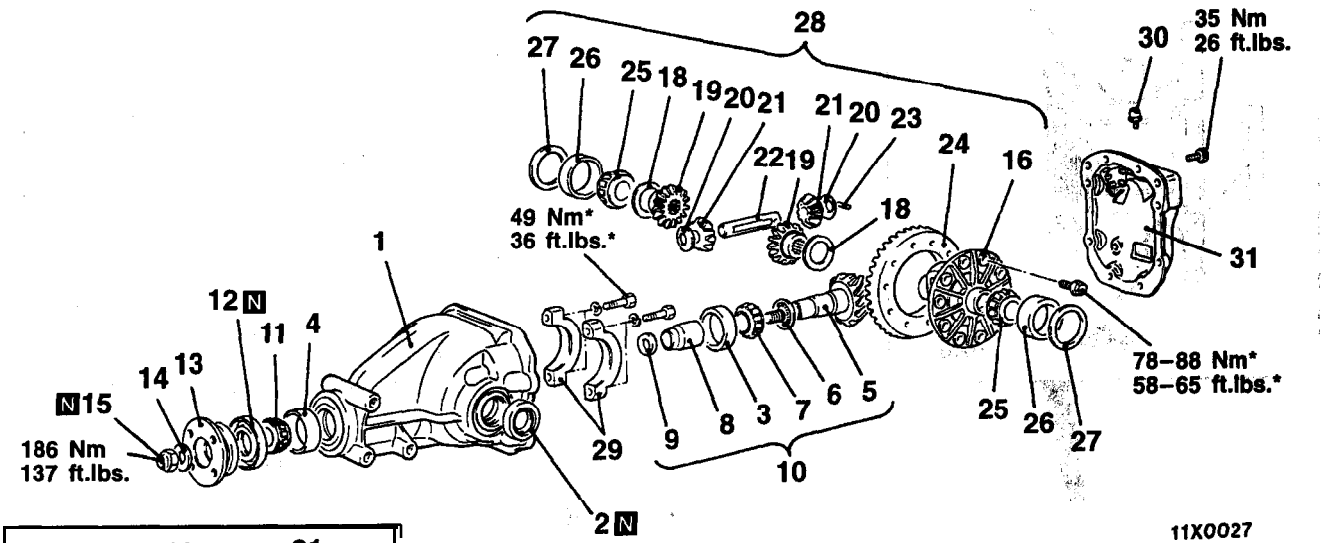

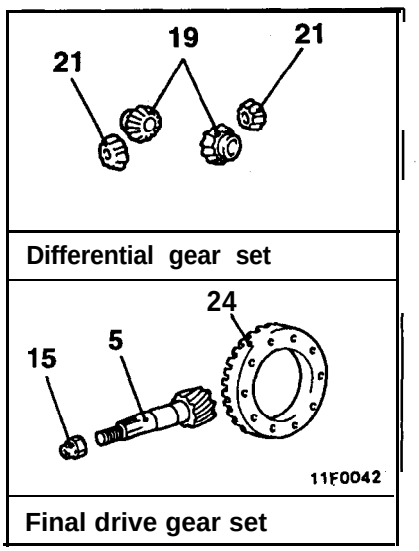

<Limited slip differential>

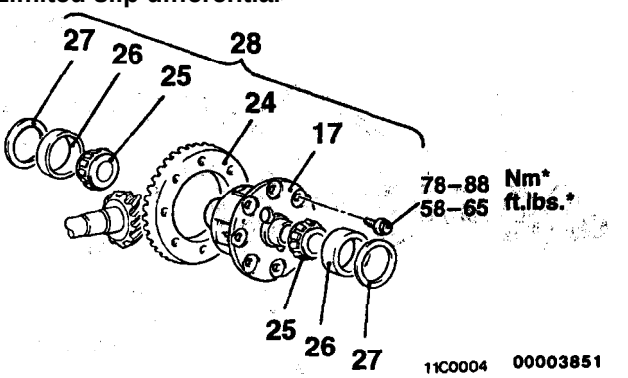

Reassembly steps

1. Gear carrier
▶A◀ 2. Oil seal
▶B◀ 3. Drive pinion rear bearing outer race
▶B◀ 4. Drive pinion front bearing outer race
▶C◀ • Pinion height adjustment
5. Drive pinion
6. Drive pinion rear shim (for pinion height adjustment)
7. Drive pinion rear bearing inner race
6. Drive pinion spacer
▶D◀ • Drive pinion preload adjustment
9. Drive pinion front shim (for preload adjustment)
10. Drive pinion assembly
11. Drive pinion front bearing inner race
12. Oil seal
13. Companion flange
14. Washer
15. Self-locking nut
16. Differential case
17. Limited slip differential case assembly (Refer to **P.27-46.**)
▶E◀ • Differential gear backlash adjustment <Conventional differential>
18. Side gear spacer <Conventional differential>
19. Side gear <Conventional differential>
20. Pinion washer <Conventional differential>
21. Pinion gear <Conventional differential>
22. Pinion shaft <Conventional differential>
▶F◀ 23. Lock pin <Conventional differential>
▶G◀ 24. Drive gear
▶H◀ 25. Side bearing inner race
26. Side bearing outer race
▶I◀ • Drive gear backlash adjustment
27. Side bearing spacer
28. Differential case assembly
29. Bearing cap
30. Vent plug
31. Differential cover assembly

NOTE
• : Tightening torque with gear oil applied

TSB Revision

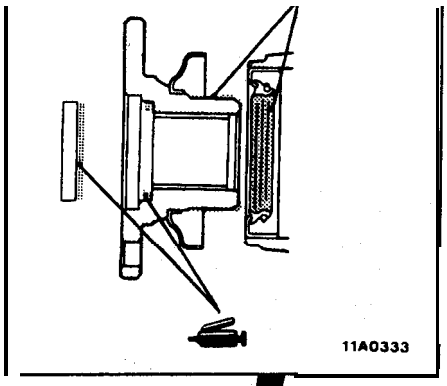

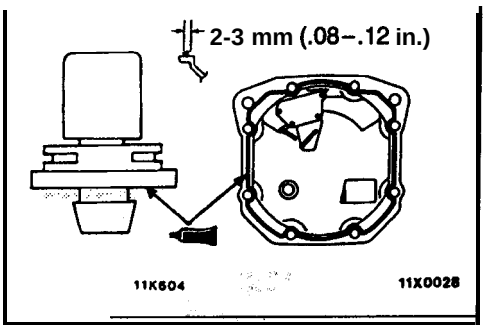

Sealant:
3M ATD Part No. 8663 or equivalent

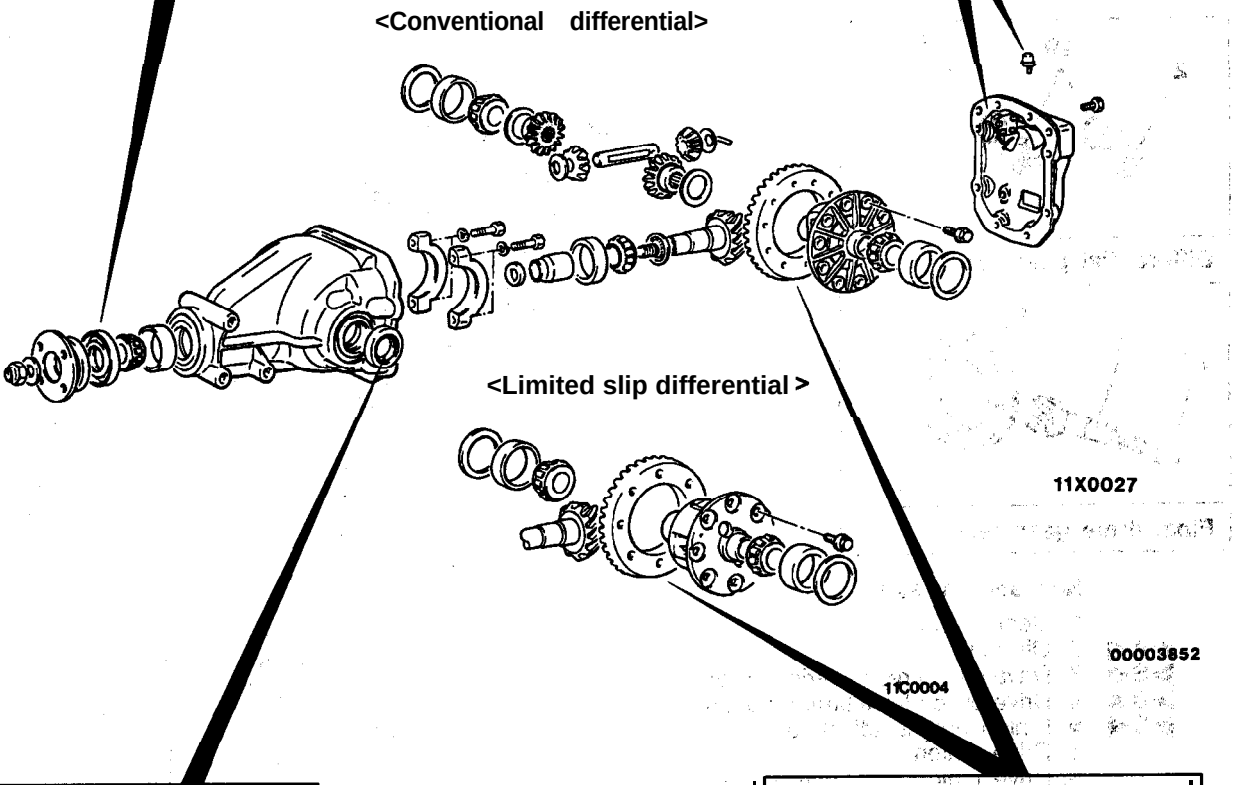

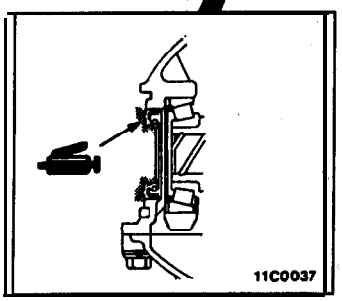

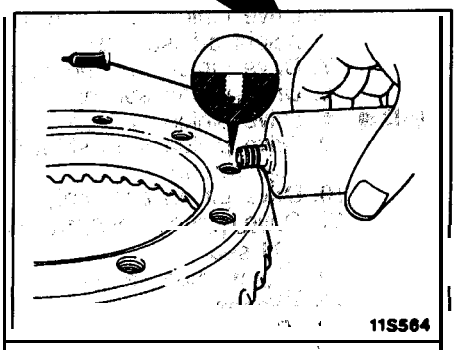

Adhesive:
3M Stud Locking Part No. 4170
or equivalent

TSB Revision

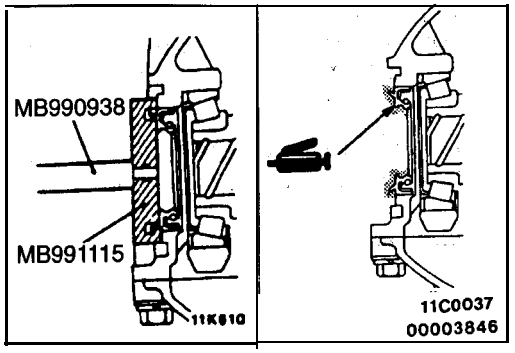

REASSEMBLY SERVICE POINTS

▶A◀ OIL SEAL PRESS FITTING

(1) With the special tool, press fit the oil seal until it is. flush with the end of the gear carrier.
(2) Apply multipurpose grease to the oil seal lip.

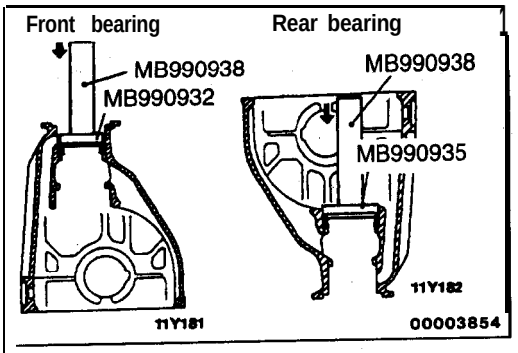

▶B◀ DRIVE PINION REAR BEARING OUTER RACE/DRIVE PINION FRONT BEARING OUTER RACE INSTALLATION

Caution
Be careful not to press in the' quter race at an angle.

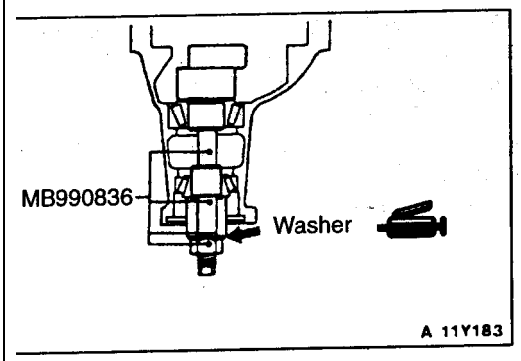

▶C◀ PINION HEIGHT ADJUSTMENT

Adjust the drive pinion height by the following procedures:
(1) Apply a thin coat of the multipurpose grease to the mating face of the washer of the special tool.
(2) 'Install special tools and drive pinion front and rear bearing, inner. races on the gear carrier in the sequence shown in the illustration.

NOTE
Apply a thin coat of the multipurpose grease to the mating face of the washer of the special tool.

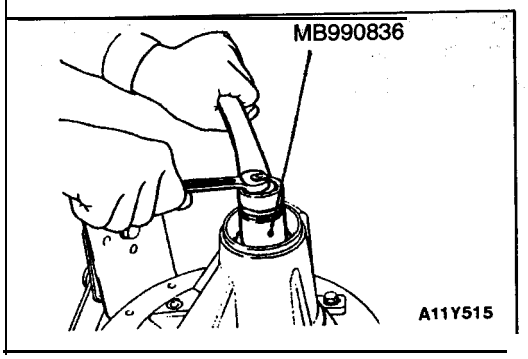

(3) Gradually'tighten the nut of the special tool while checking' the drive pinion turning torque until the standard value, of drive pinion turning torque is obtained.

Standard value:'

Bearing classification	Bearing lubrication	Rotation torque (starting friction torque) Nm (in.lbs.)
New	None (with rust-preventiop oil)	0.9 – 1.2 (8–10)
New/reused	Gear oil--application	0.4 – 0.5 (3–4)

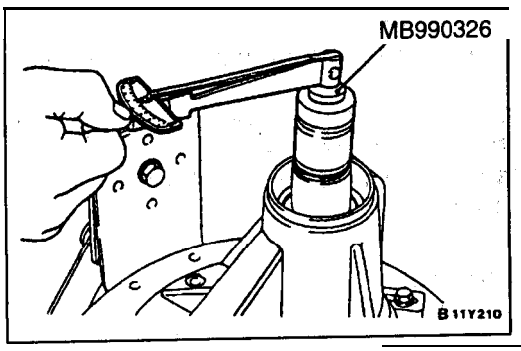

NOTE
Because the special tool cannot be turned one turn, turn it 'several times within the range that it can be turned; then, after fitting to the bearing, measure the rotation torque.

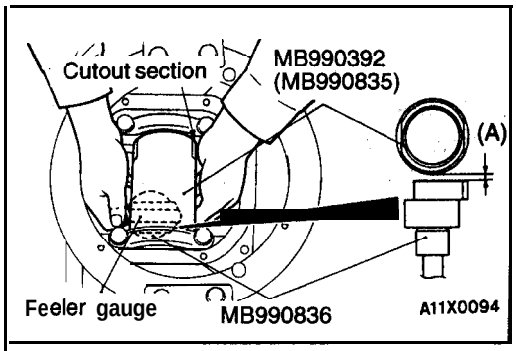

(4) Clean the side bearing seat thoroughly.
(5) Position. the special tool in the side bearing. seat of the gear carrier, and then install the bearing cap.

NOTE
When positioning the special tool', be sure that the cutout sections of the special 'tool are in the. position shown in the illustration.
And check that the special tool is in close contact with the side bearing seat.

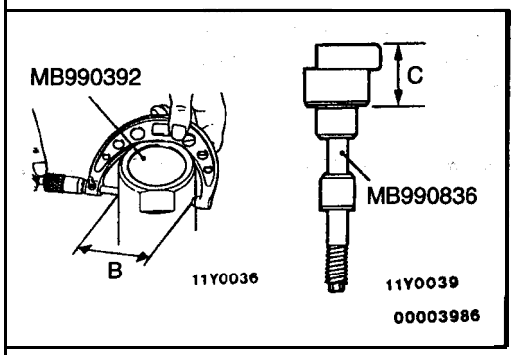

(6) Use a feeler gauge to measure the clearance (A) between the special tools.
(7) Remove the special tools (MB990392 and MB990836).
(8) Use a micrometer to measure the dimensions'(B) and (C) of the special tools.

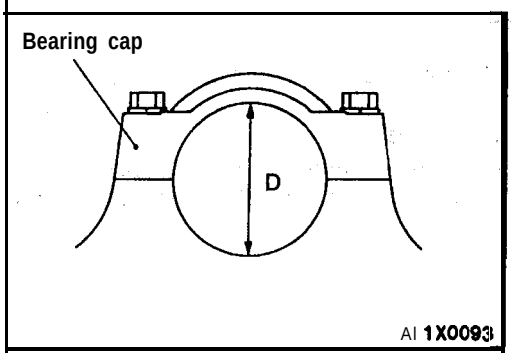

(9) Install. the. bearing cap, and then use a cylinder gage and the micrometer to measure the inside diameter D of the bearing cap as shown in the illustration.
(10) Calculate the thickness (E) of the drive pinion rear shim from the following equation, and select the shim that is' closest in thickness to this value.

$$E = A + B + C - 1/2\,D - 86.00 \text{ mm } (3.39 \text{ in.})$$

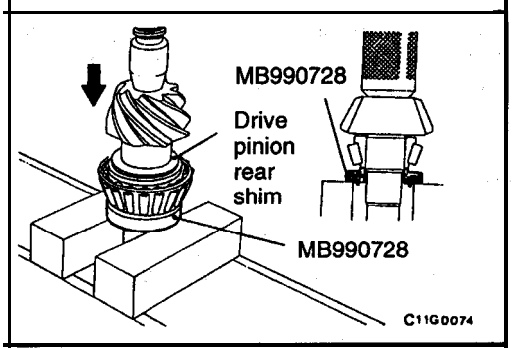

(11) Fit the selected drive pinion rear shim(s) to the drive pinion, and press-fit the drive pinion rear bearing inner race by using the special tool.

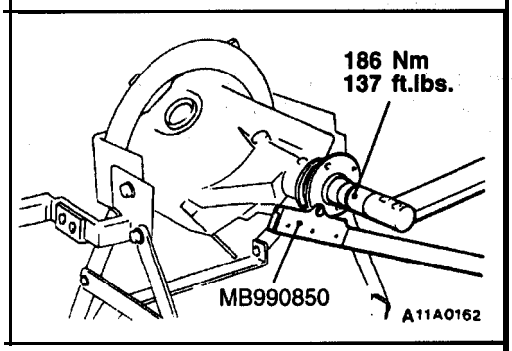

▶D◀ DRIVE PINION PRELOAD ADJUSTMENT

Adjust the drive pinion turning torque by using the, following procedures:
(1) Fit the drive pinion front shim(s) between the drive pinion spacer and the drive pinion front bearing inner race.
(2) Tighten the companion flange to the specified 'torque, by using the special tools.

NOTE
Do not install the oil seal.

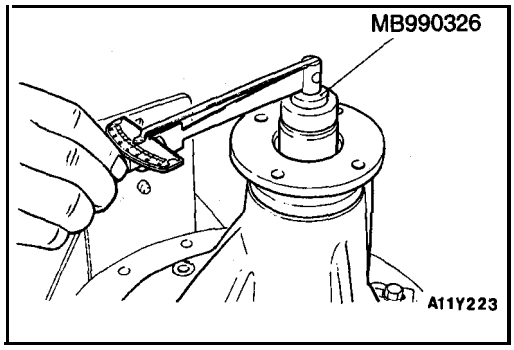

(3) Measure the drive pinion turning torque (without the oil seal) by using the special tools.

Standard value:

Bearing classification	Bearing lubrication	Rotation torque (starting friction torque) Nm (in.lbs.)
New	None (with rust-prevention oil)	0.9 – 1.2 (8–10)
New/reused	Gear oil application	**0.4 – 0.5 (3-4)**

(4) If the drive pinion turning torque is not within the range of the standard value, adjust the turning torque by replacing the drive pinion front shim(s) or the drive pinion spacer.

NOTE
When selecting the drive pinion front shims, if the number of shims is large, reduce the number of shims to a minimum by selecting the drive pinion spacers.

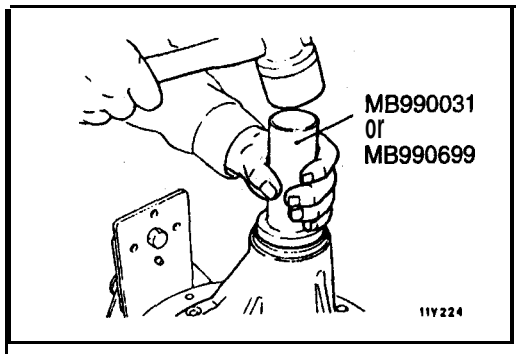

(5) Remove the companion flange and drive pinion once again. Drive the oil seal into the gear carrier front lip by using the special tool. Apply multipurpose grease to the oil seal lip.

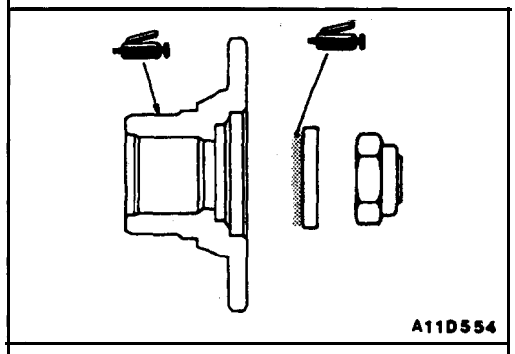

(6) Apply a thin coat of multipurpose grease to the companion flange contacting surface of the washer and oil seal contacting surface before installing drive pinion assembly.

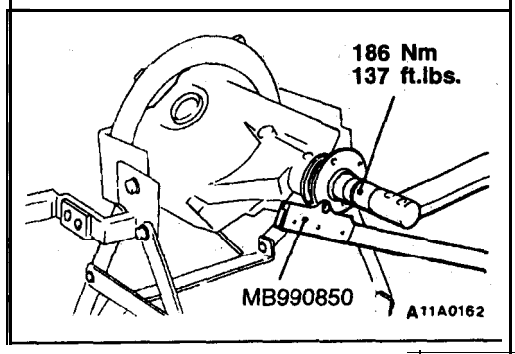

(7) Install the drive pinion assembly and companion flange with mating marks properly aligned, and tighten the companion flange self-locking nut to the specified torque by using the special tools.

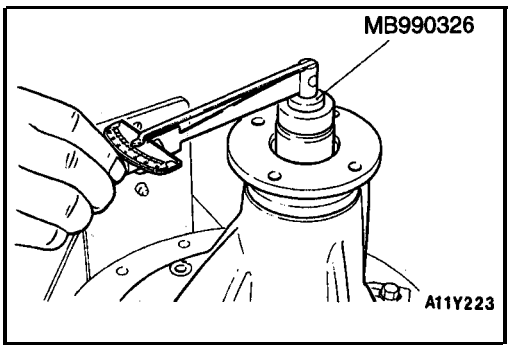

(8) Measure the drive pinion turning torque (with oil seal) by using the special tools to verify that the drive pinion turning torque complies with the standard value.

Standard value:

Bearing classification	Bearing lubrication	Rotation torque (starting friction torque) Nm (in.lbs.)
New	None (with rust-prevention oil)	1.0 – 1.3 (9–11)
New/reused	Gear oil application	0.5 – 0.8 (4-5)

If there is a deviation from the standard value, check whether or not there is incorrect tightening torque of the companion flange tightening self-lock nut, or incorrect fitting of the oil seal.

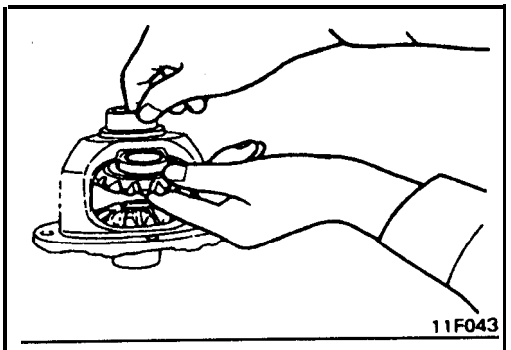

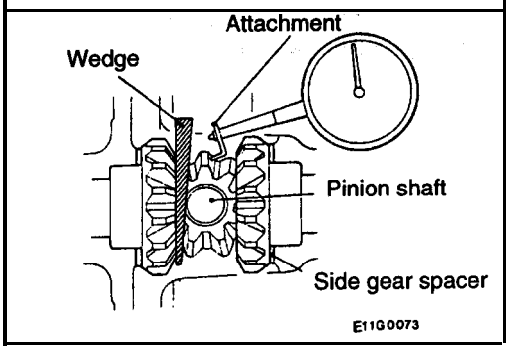

▶E◀ DIFFERENTIAL GEAR BACKLASH ADJUSTMENT <Conventional differential>

Adjust the differential gear backlash by the following procedures:

(1) Assemble the side gears, side gear spacers, pinion gears, and pinion washers into the differential case.

(2) Temporarily install the pinion shaft.

NOTE
Do not drive in the lock pin yet.

(3) While locking the side gear with the wedge,. measure the differential gear backlash with a dial indicator on the' pinion gear.

NOTE
(1) The measurement should be made for both pinion gears individually.
(2) Refer to P.27-45 for measurement of the limited slip differential gear backlash.

Standard value: 0 – 0.076 mm (0–.0030 in.)

Limit: 0.2 mm (.008 in.)

(4) If the differential gear backlash exceeds the limit, adjust the backlash by installing thicker side gear spacers.

(5) Measure the differential gear backlash once again, and confirm that it is within the limit.

NOTE
1. After adjustment, check that the backlash is less than the limit and differential "gear rotates smoothly.
2. When adjustment is impossible,' replace the side gear and the pinion gear as a set.

TSB Revision

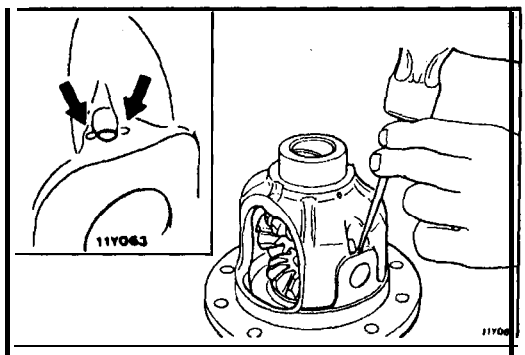

▶F◀ LOCK PIN INSTALLATION
<Conventional differential>

(1) Align the pinion shaft lock pin hole with the 'differential case lock pin hole, and drive in the lock pin.
(2) Stake the lock pin with a punch at, two points.

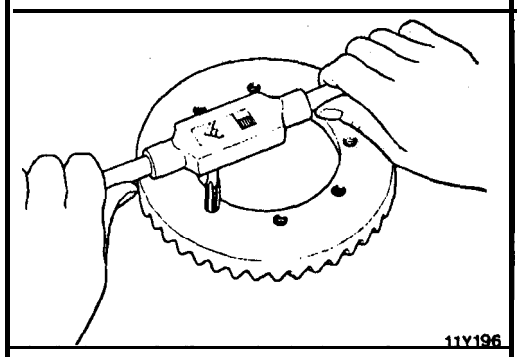

▶G◀ DRIVE GEAR INSTALLATION

(1) Clean the drive gear attaching bolts.
(2) Remove the adhesive adhering to the threaded holes of the drive gear by turning M1 0 × 1.25 tap, and then clean the threaded holes by applying compressed air.

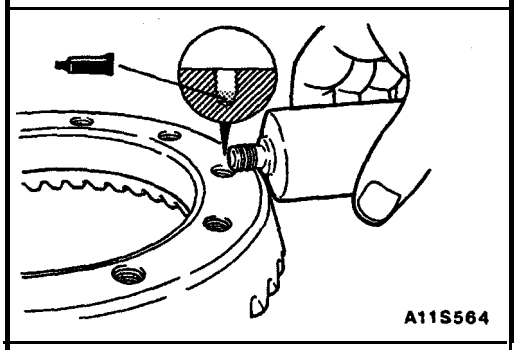

(3) Apply the specified adhesive to the threaded holes of the drive gear.

Specified adhesive:
3M Stud Locking Part No. 4170' or equivalent

(4) Install the drive gear onto the differential case with the mating marks properly aligned: Tighten the. bolts to the specified torque [80 – 90 Nm (58-65 ft.lbs.)] in a diagonal sequence.

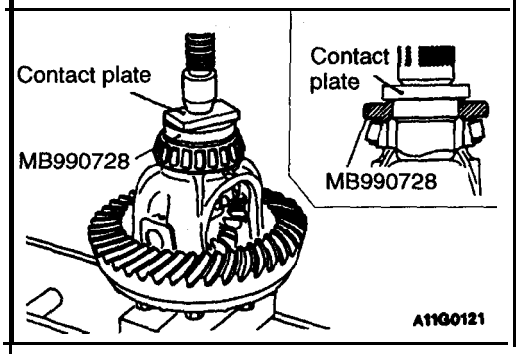

▶H◀ SIDE BEARING INNER RACE PRESS-FITTING

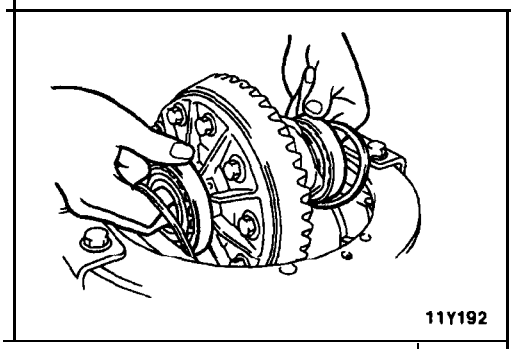

▶I◀ DRIVE GEAR BACKLASH ADJUSTMENT'

Adjust the drive gear backlash by the following procedures:
(1) Install the side bearing spacers,' which are thinner than those removed, to the side bearing outer races,, and then mount the differential case assembly into the gear carrier.

NOTE
Select side bearing spacers with the same thickness for' both the drive pinion side and the drive gear side.

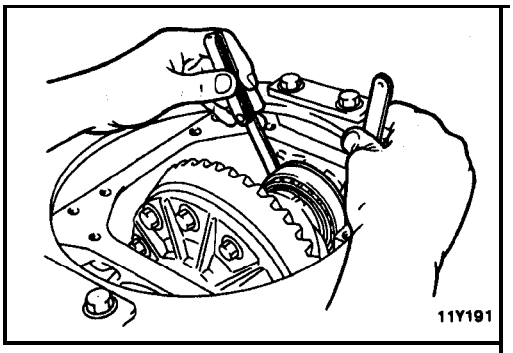

(2) Push the differential case to 'one side, and measure the clearance between the gear carrier and the side bearing.

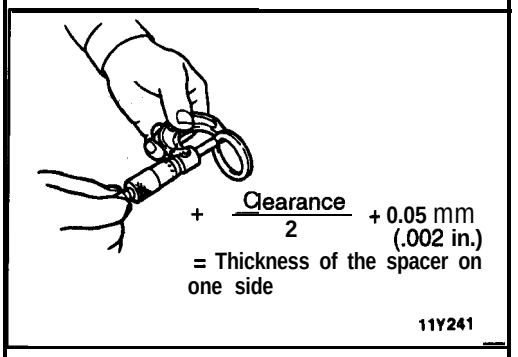

(3) Measure the thickness of the side bearing spacers on one side, select two pairs of spacers which correspond to that thickness plus one half of the clearance plus 0.05 mm, and then install one pair each to the drive pinion side and the drive gear side.

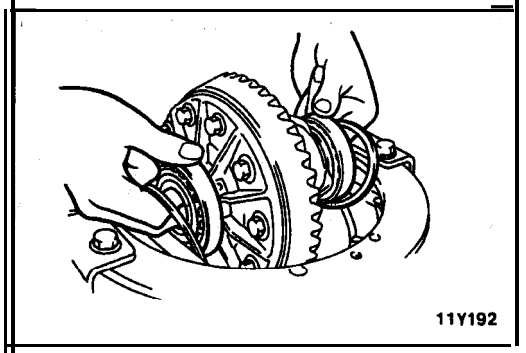

(4) Install the side bearing spacers and differential case assembly, as shown in the illustration;' to the gear carrier.

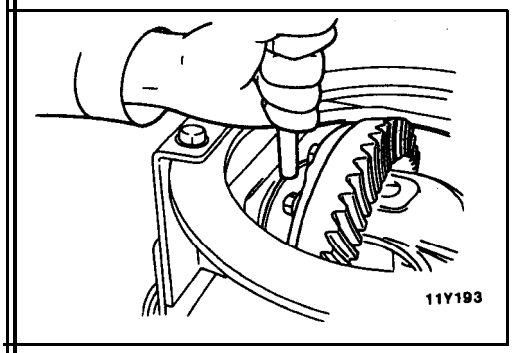

(5) Tap the side bearing spacers with a brass bar to fit them to the side bearing outer race.

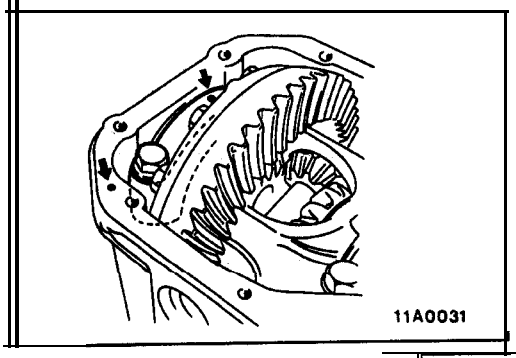

(6) Align the mating marks on the gear carrier and the bearing': cap, and then tighten the bearing cap.

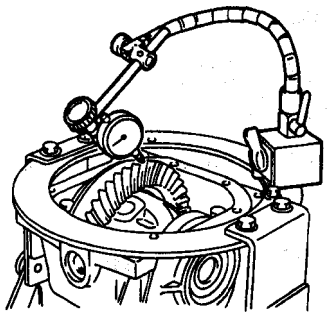

(7) With the drive pinion locked in place, measure' the drive gear backlash with a dial indicator on the drive gear.

NOTE
Measure at four points or more on the circumference of the drive gear.

Standard value: 0.11 – 0.16 mm (.004–.006 In.)

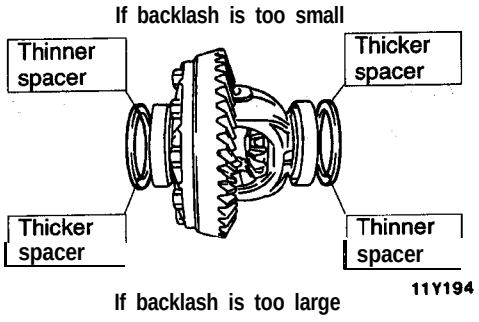

(8) Change the side bearing spacers as illustrated, and then adjust the drive gear backlash between the drive gear and the drive pinion.

NOTE
When increasing the number of side bearing spacers, use the same number for each, and as few as possible.

(9) Check the drive gear and drive pinion for tooth contact; If poor contact is evident, make adjustment. (Refer to P.27-32.)

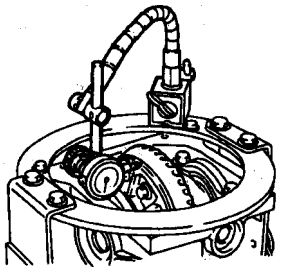

(lO)Measure the drive gear runout at the shoulder on the reverse side of the drive gear.

Limit: 0.05 mm (.002 in.)

(11) If the drive gear runout exceeds the limit, reinstall by changing the phase of the drive gear and differential case, and remeasure.

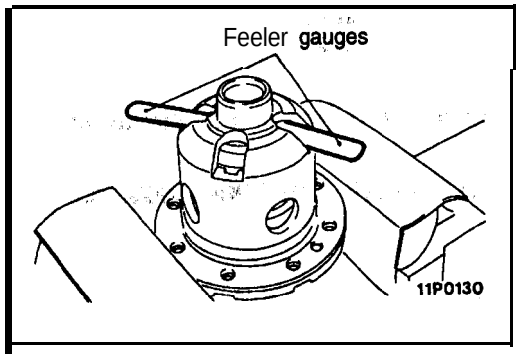

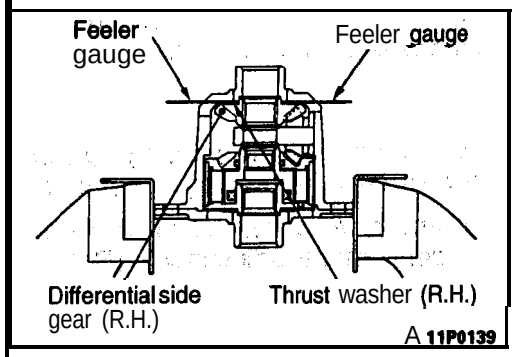

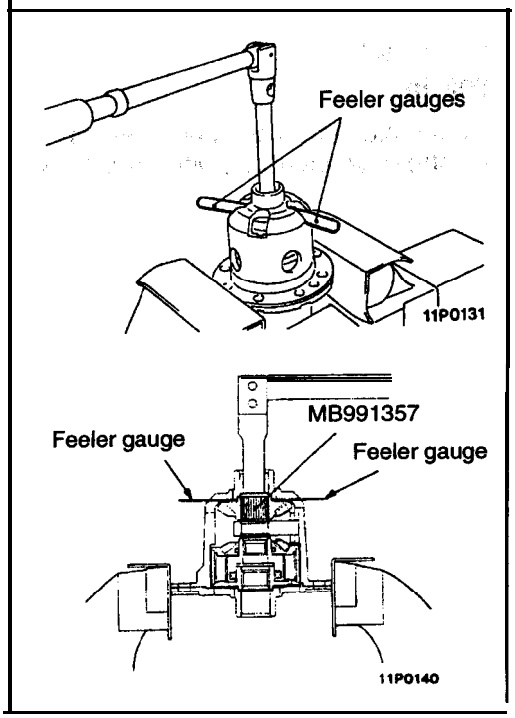

LSD CASE ASSEMBLY

27300160017

INSPECTION BEFORE DISASSEMBLY

DIFFERENTIAL GEAR BACKLASH CHECK

(1) Hold the limited slip differential case assembly in a vice with the differential side gear (R.H.) up.

Caution
When the limited slip differential case is held in a vice, do not tighten excessively.

(2) Install two 0.03 mm (.001 ih.) feeler gauges diagonally between the differential case (B) and the thrust washer (R.H.).

Caution
Do not insert the feeler gauge in the oil groove provided in the differential case (B).

(3) Insert the special tool in the splined portion of the differential' side gear (R.H.) and make sure that the side gear (R.H.) turns.

(4) Replace the feeler gauges with 0.09 mm (.004 in.) feeler: "gauges.

(5) Insert the special tool in the splined portion of the differential side gear (R.H.) and make sure that the side gear' (R.H.) does not turn.

Standard value: Differential gear backlash 0.03–0.09 mm (.001–.004 in.)

NOTE
The differential gear backlash is normal if the side gear clearance in the direction of thrust is within the standard value.

(6) If the side gear clearance in the direction of thrust is not within the standard value, remove the differential case (A) and adjust by means of thrust washer (L.H.).

Thrust washer (L.H.)	
Part No.	Thickness mm (in.)
MB569243	0.8 (.032)
	0.9 (.035)
	1.0 (.039)
	1.1 (.043)
	1.15 (.045)
	1.2 (.047)
	1.25 (.049)
	1.3
	1.35 (.051)/(.053)
	1.4 (.055)
	1.5 (.059)

Thrust washer (R.H.) [Reference]	
Part No.	Thickness mm (in.)
MB569528	0.8 (.032)

NOTE
The thrust washers (L.H.) are available in a kit. Select one appropriate thrust washer from among 11 washers.

DISASSEMBLY AND REASSEMBLY

27300140011

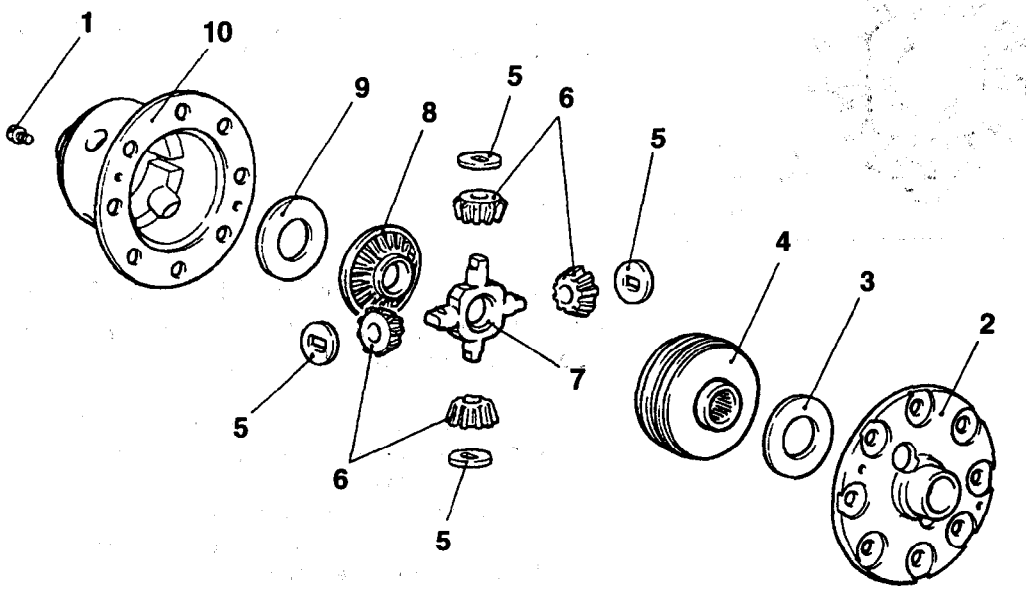

11P0127

Disassembly steps

- Inspection before disassembly , (Refer to P.27-46.)

.. Screw
▶A◀ 2. Differential case (A)
◀A▶ ▶C◀ 3. Thrust washer (L.H.)
4. Viscous coupling (with differential side gear: L.H.)
▶B◀ 5. Pinion mate washer
▶B◀ 6. Differential pinion mate
7. Differential pinion shaft
8. Differential side gear (R.H.)
◀A▶ 9. Thrust washer (R.H.)
▶A◀ 10. Differential case (B)

NOTE
LSD: Limited slip differential

DISASSEMBLY SERVICE POINT

◀A▶ THRUST WASHER (L.H.)/THRUST WASHER (R.H.) REMOVAL

The thrust washer (L.H.) differs from the thrust washer (R.H.) in thickness.
Keep them separately from each other for reference in assembly.

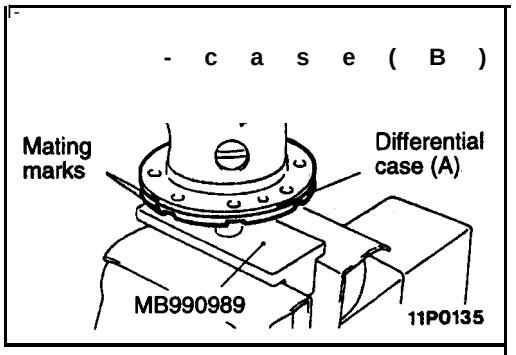

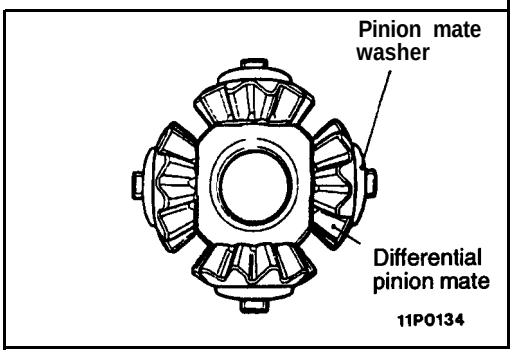

REASSEMBLY SERVICE POINTS

▶A◀ DIFFERENTIAL CASE (B)/DIFFERENTIAL CASE (A) INSTALLATION

Install the differential cases (A) and (B) with their mating marks in alignment.

▶B◀ DIFFERENTIAL PINION MATE/PINION MATE WASHER INSTALLATION

Attach the differential pinion mate to the pinion shaft with the pinion washers directed as shown, then assemble them into the differential case (B).

▶C◀ THRUST WASHER (L.H.) SELECTION

When the differential side gear and pinion mate gear have been replaced, select the thrust washer (L.H.) by the following procedure.

(1) Wash the differential side gear and pinion mate gear with unleaded gasoline and degrease.
(2) Assemble the thrust washers so far used, without confusing the R.H. part with the L.H. part and together with each gear, VCU, pinion mate washer and pinion shaft, to the differential cases (A) and (B), and loosely tighten the screws.
(3) Check the differential backlash, and select a thrust washer (L.H.) to obtain its standard value. (Refer to P.27-46.)

INSPECTION

27300150014

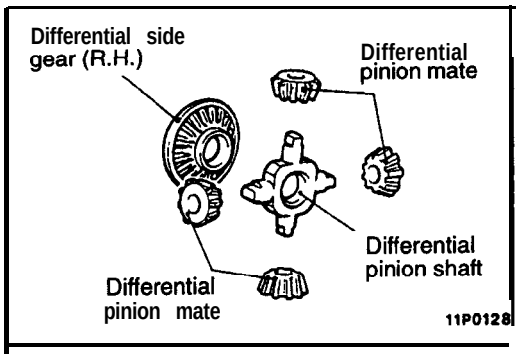

(1) Check each gear and the differential pinion shaft for wear and damage.
(2) Check the splined portion of the differential side gear (R.H.) for damage and shoulder.

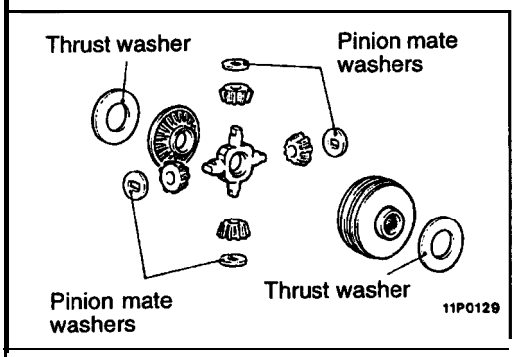

(3) Check the sliding surfaces of the thrust washer and pinion mate washer for wear, seizure and damage.

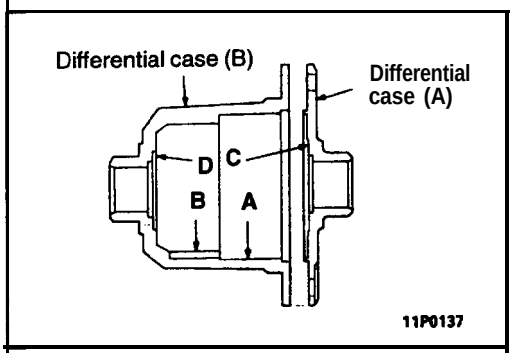

(4) Check the sliding surfaces of the differential cases (A) and (B) for wear, seizure and damage.
A. Surface in sliding contact with VCU
B. Surface in sliding contact with pinion mate washer
C. Surface in sliding contact with thrust washer
D. Surface in sliding contact with thrust washer

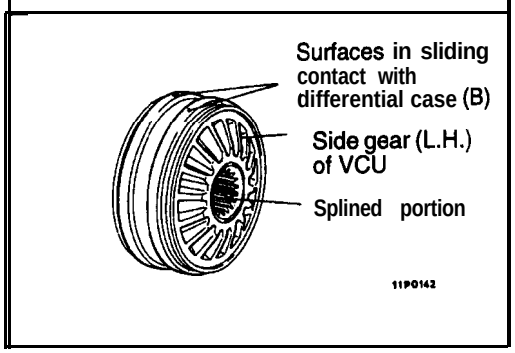

(5) Check the spline of VCU for damage and shoulder and check the surface in sliding contact with the differential case (B).
(6) Check the side gear (L.H.) of VCU for wear and damage.

NOTES

WHEELAND TI RE

CONTENTS

31109000069

GENERAL' INFORMATION

31100010177

Both steel type and aluminum type wheels have been adopted. The type of wheel used depends on the vehicle model.

A compact spare tire has been adopted as the spare tire in all models.

<ECLIPSE>

Item		Medium price	Low price	High price
Wheel	Type	Steel type, Aluminum type*	Steel type	Steel type, Aluminum type*
	Size	14 × 5.5JJ	14 × 5.5JJ	16 × 6JJ
	Amount of wheel offset mm (in.)	46 (1.8)	46 (1.8)	46 (1.8)
	Pitch circle diameter (P.C.D.) mm (in.)	114.3 (4.5)	114.3 (4.5)	114.3 (4.5)
Tire	Size	P195/70R14 90H	P185/70R14 87S	P205/55R16 89H
Spare wheel	Type	Steel type	Steel type	Steel type
	Size	15 × 4T	15 × 4T	15 × 4T
	Amount of wheel offset mm (in.)	46 (1.8)	46 (1.8)	46 (1.8)
	Pitch circle diameter (P.C.D.) mm (in.)	114.3 (4.5)	114.3 (4.5)	114.3 (4.5)
Spare Tire	Size	T125/70D15	T125/70D15	T125/70D15

NOTE
● : optional items

Item		Premium price FWD	Premium price AWD-A/T	Premium price AWD-M/T
Wheel	Type	Aluminum type	Aluminum type	Aluminum type
	Size	16 × 6JJ	17 × 6.5JJ	17 × 6.5JJ
	Amount of wheel offset mm (in.)	46 (1.6)	46 (1.8)	46 (1.8)
	Pitch circle diameter (P.C.D.) mm (in.)	114.3 (4.5)	114.3 (4.5)	114.3 (4.5)
Tire	Size	P205/55R16 89H	P215/50R17 90V	P215/50R17 90V
Spare wheel	Type	Steel type	Steel type	Steel type
	Size	15 × 4T	16 × 4T	16 × 4T
	Amount of wheel offset mm (in.)	46 (1.8)	46 (1.8)	46 (1.8)
	Pitch circle diameter (P.C.D.) mm (in.)	114.3 (4.5)	114.3 (4.5)	114.3 (4.5)
Spare Tire	Size	T125/70D15	T125/90D16	T125/90D16

<ECLIPSE SPYDER>

Item		Medium price	Premium price
Wheel	Type	Aluminum type	Aluminum type
	Size	14 × 5.5JJ, 16 × 6JJ*	16 × 6JJ
	Amount of wheel offset mm (in.)	46 (1.8)	46 (1.8)
	Pitch circle diameter (P.C.D.) mm (in.)	114.3 (4.5)	114.3 (4.5)
Tire	Size	P195/70R14 90H, P205/55R16 89H*	P205/55R16 89V
Spare wheel	Type	Steel type	Steel type
	Size	15 × 4T	16 × 4T
	Amount of wheel offset mm (in.)	46 (1.8)	46 (1.8)
	Pitch circle diameter (P.C.D.) mm (in.)	114.3 (4.5)	114.3 (4.5)
Spare Tire	Size	T125/70D15	T125/90D16

NOTE
* : optional items

TSB Revision

SERVICE SPECIFICATIONS

31100030050

Items			Limit
Tread depth of tire			1.6 (.06)
Wheel runout	Radial runout	Steel wheel	1.2 (.05) or less
		Aluminum wheel	1.0 (.04) or less
	Lateral runout	Steel wheel	1.2 (.05) or less,
		Aluminum wheel	1 .0 (.04) or less

TROUBLESHOOTING

31100070069

Symptom		Probable cause		Remedy	Reference page
Rapid wear at shoulders	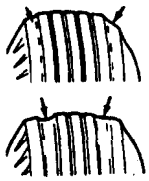 11X0109	Under-inflation or lack of rotation	 11X0116	Adjust the tire pressure.	Refer to P.31-5
Rapid wear at center	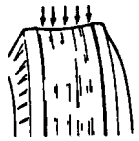 11X0110	Over-inflation or lack of rotation	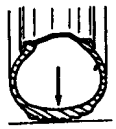 11X0117		
Cracked treads	 11X0111	Under-inflation		Adjust the tire pressure.	Refer to P.31-5
Wear on one side	 11X0112	Excessive camber	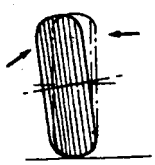 11X0118	Check the camber.	Refer to GROUP 33A – On-vehicle Service.
Feathered edge	 11X0113	Incorrect toe-in	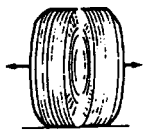 11X0119	Adjust the toe-in.	
Bald spots	 11X0114	Unbalanced wheel	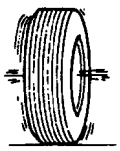 11X0120	Adjust the imbalanced wheels.	–
Scalloped wear	 11X0115	Lack of rotation of tires or worn or out-of-alignment suspension		Rotate the tires, check the front suspension alignment.	Refer to GROUP 33A – On-vehicle Service.

TSB Revision

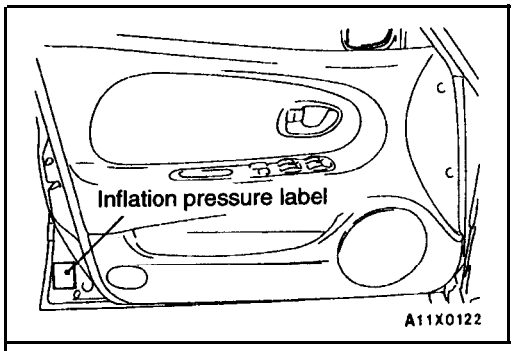

ON-VEHICLE SERVICE

31100090065

TIRE INFLATION PRESSURE CHECK

NOTE
Refer to the inflation pressure label on the driver's side door.

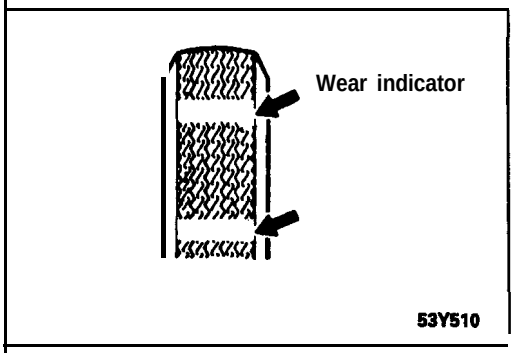

TIRE WEAR CHECK

31100100058

Measure the tread depth of tires.

Limit: 1.6 mm (.06 in.)

If the remaining tread depth is less than the limit, replace the tire.

NOTE
When the tread depth of tires is reduced to 1.6 mm (.06in.) or less, wear indicators will appear.

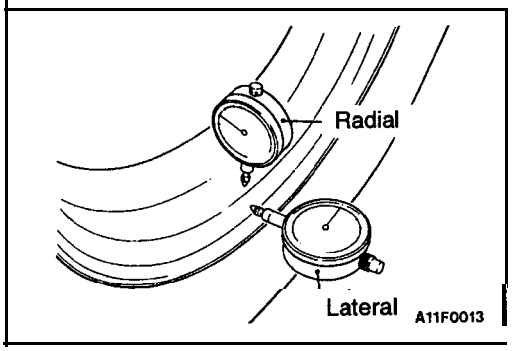

WHEEL RUNOUT CHECK

31100110068

Jack up the vehicle so that the wheels are clear of the floor. While slowly turning the wheel, measure wheel runout with a dial indicator.

Limit:

- **Radial runout.**
  - **Steel wheel; 1.2 mm (.05 in.) or less**
  - **Aluminum wheel; 1.0 mm (.04 in.) or less**
- **Lateral runout.**
  - **Steel wheel; 1.2 mm (.05 in.) or less**
  - **Aluminum wheel; 1.0 mm (.04 in.) or less**

If wheel runout exceeds the limit, replace the wheel.

WHEEL AND TIRE

31100130057

INSTALLATION SERVICE POINT

Tighten the wheel nut to the specified torque.

Tightening torque: 120–140 Nm (87–101 ft.lbs.)

NOTES

POWER PLANT MOUNT

CONTENTS

32109000066

GENERAL INFORMATION

32100010068

The engine-transaxle mount is of an inertial axis supporting type whose excellent features have already been proven in many Mitsubishi vehicles. The inertial axis supporting type mount supports the front upper part of the engine at the front and the rear upper part of the transaxle at the rear. This arrangement effectively suppresses the engine vibration.

CONSTRUCTION, DIAGRAM

<2.0L Engine (Non-turbo)>

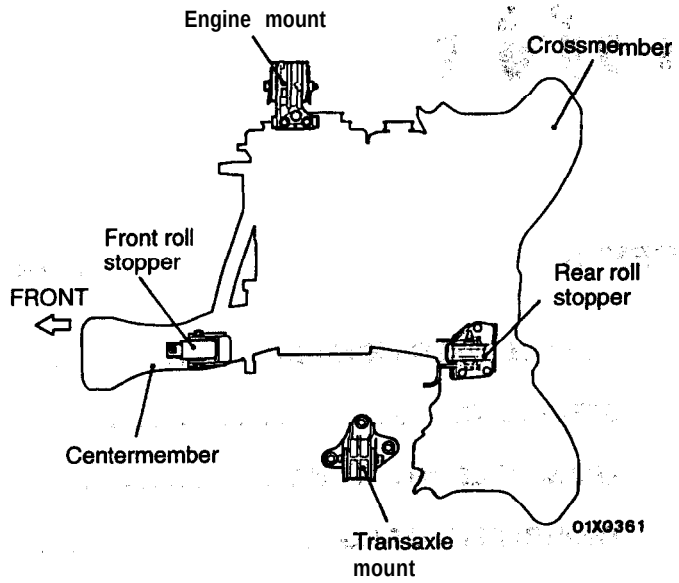

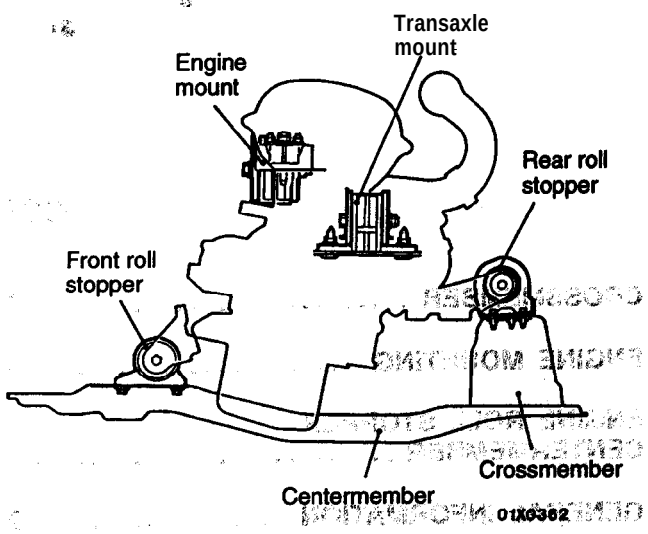

<2.0L Engine (Turbo) and 2.4L Engine>

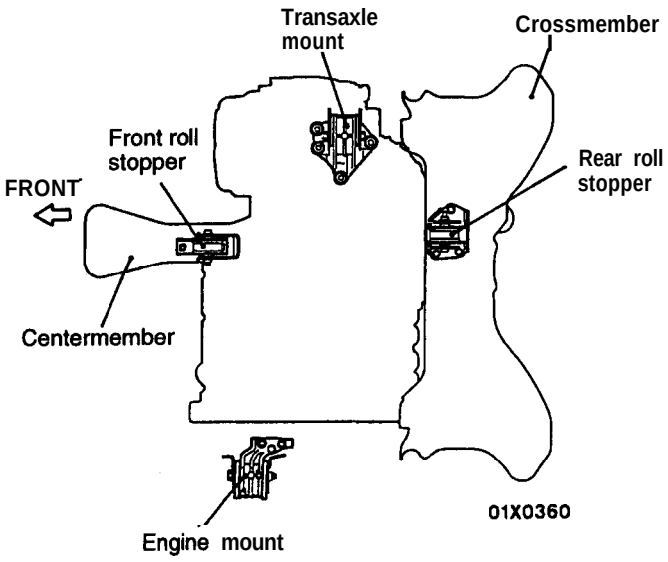

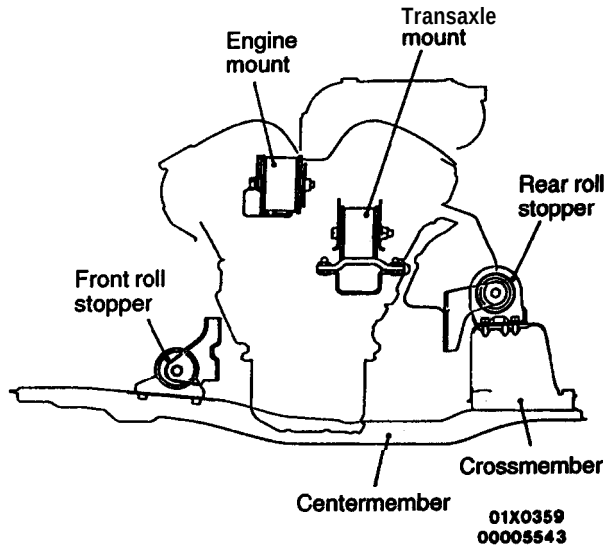

SERVICE SPECIFICATIONS

32100030040

Items		Standard value
Installation dimension of front roll stopper bracket assembly mm (in.)		43±3 (1.69±.12)
Crossmember	Bushing (A) projection mm (in.)	9.0±1.0 (.35±.04)
	Bushing (B) projection mm (in.)	4.0±1.0 (.16±.04)
	Bushing (C) projection mm (in.)	4.0±0.5 (.16±.02)

SPECIAL TOOLS

32100060063

Tool	Tool number and name	Supersession	Application
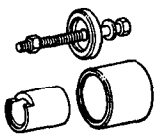	MB991045 Bushing remover and installer	Tool not available	Driving out and press-fitting of crossmember bushing A and B
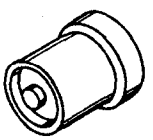	MB990828 Bushing remover and installer	Tool not available	Driving out and press-fitting of crossmember bushing C
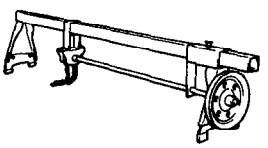	GENERAL SERVICE TOOL MZ203827 Engine lifter	MZ203827-01	To support the engine assembly during removal and installation of the transaxle mounting and the centermember

TROUBLESHOOTING

32100070028

Symptom	Probable cause	Remedy
Excessive engine wobble or vibration (with engine in normal condition)	Cracked rubber parts of insulator	Replace
	Insufficiently tightened parts	Retighten
Abnormal noise	Insufficiently tightened parts	Retighten

ENGINE MOUNTING

32100110072

REMOVAL AND INSTALLATION

Pre-removal Operation
Jack Up the Engine and Transaxle Assembly Until There is no Weight on the Engine Mount Bracket Insulator.

<2.0L Engine (Non-turbo)>

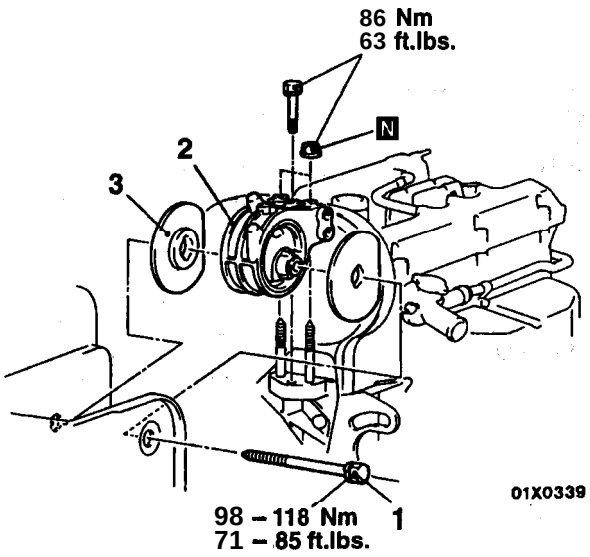

<2.0L Engine (Turbo) and 2.4L Engine>

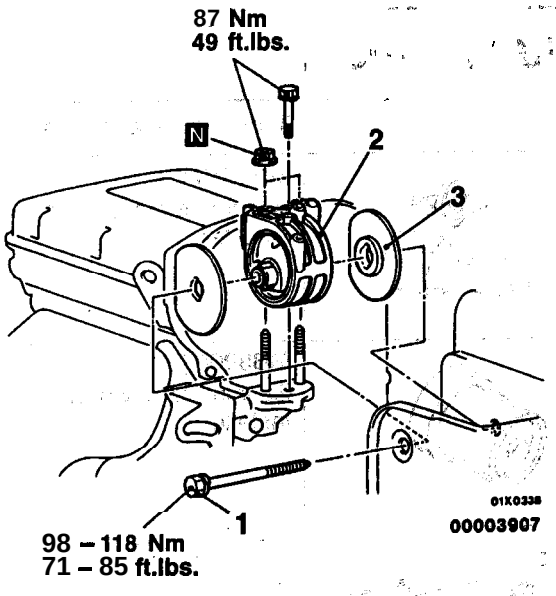

Removal steps

1. Engine mount insulator mounting bolt
2. Engine mount bracket
3. ▶A◀ Engine mount stopper

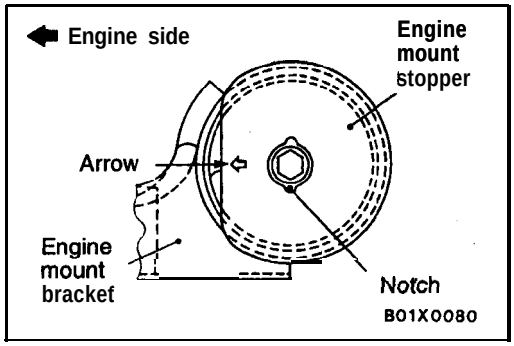

INSTALLATION SERVICE POINT

▶A◀ ENGINE MOUNT STOPPER INSTALLATION

Align the notches on the stopper with the engine mount bracket with the arrow mark facing toward the shown direction. Then install the stopper.

INSPECTION

32100120044

- Check each insulator for cracks or damage.
- Check each bracket for deformations or damage.

TRANSAXLE MOUNTING

32100140132

REMOVAL AND INSTALLATION

Pre-removal and Post-installation Operation
- Air Cleaner Assembly Removal and Installation
- Battery Removal and Installation
- Engine Roll Stopper, Centermember Assembly Removal and Installation (Refer to P.32-7)

<2.0L Engine (Non-turbo)>

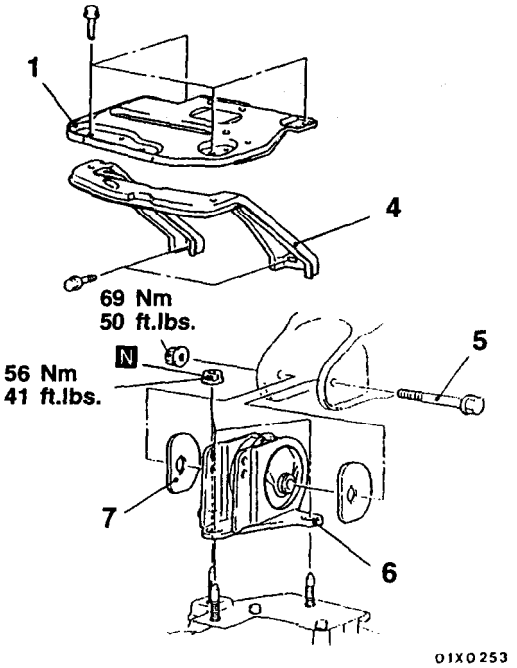

<2.0L Engine (Turbo) and 2.4L Engine>

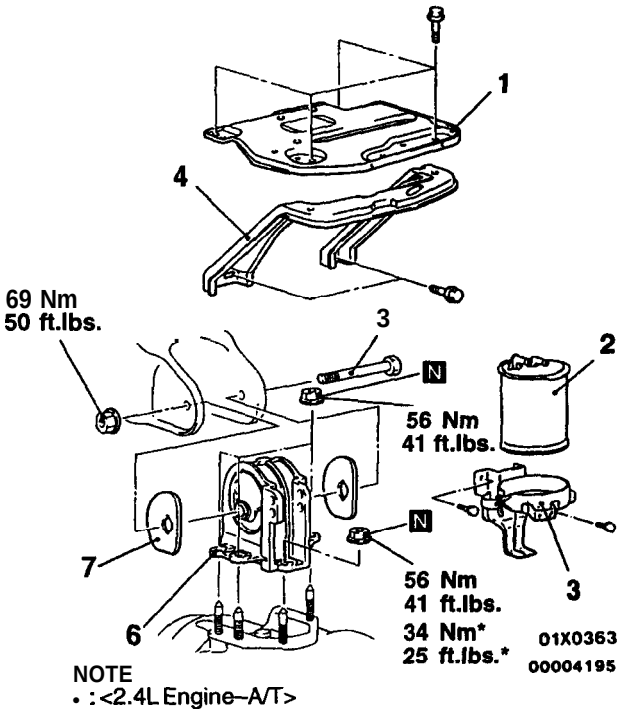

Removal steps

1. Battery bracket
2. Evaporative emission canister <2.0L Engine (Turbo)> (Refer to GROUP 17 – Evaporative Emission Control System)
3. Evaporative emission canister holder assembly <2.0L Engine (Turbo)> (Refer to GROUP 17 – Evaporative Emission Control System)
4. Battery stay
5. Transaxle mount insulator mounting bolt
6. Transaxle mount bracket

◀A▶ ▶A◀ 7. Transaxle mount stopper

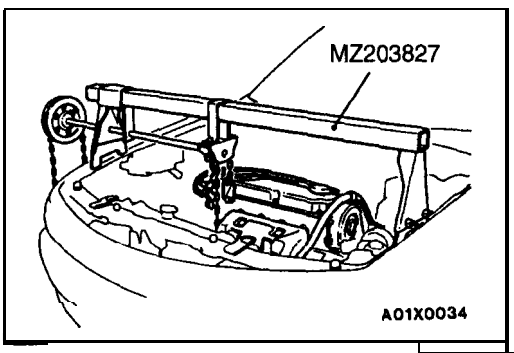

REMOVAL SERVICE POINT

◀A▶ TRANSAXLE MOUNT BRACKET REMOVAL

Slightly lower the transaxle, and then remove the transaxle mount bracket.

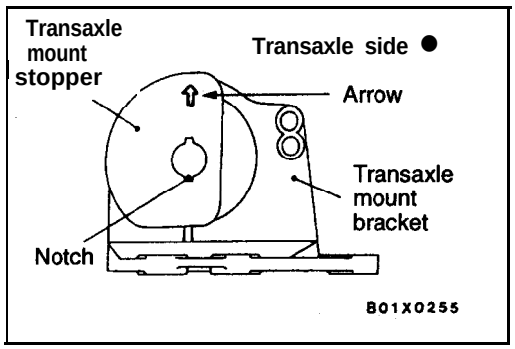

INSTALLATION SERVICE POINT

▶A◀ TRANSAXLE MOUNT STOPPER INSTALLATION

Align the notches on the stopper with the transaxle mount bracket with the arrow mark facing toward the shown direction. Then install the stopper.

INSPECTION

32100150036

- Check each insulator for cracks or damage.
- Check each bracket for deformation or damage.

ENGINE ROLL STOPPER, CENTERMEMBER

32100230068

REMOVAL AND INSTALLATION

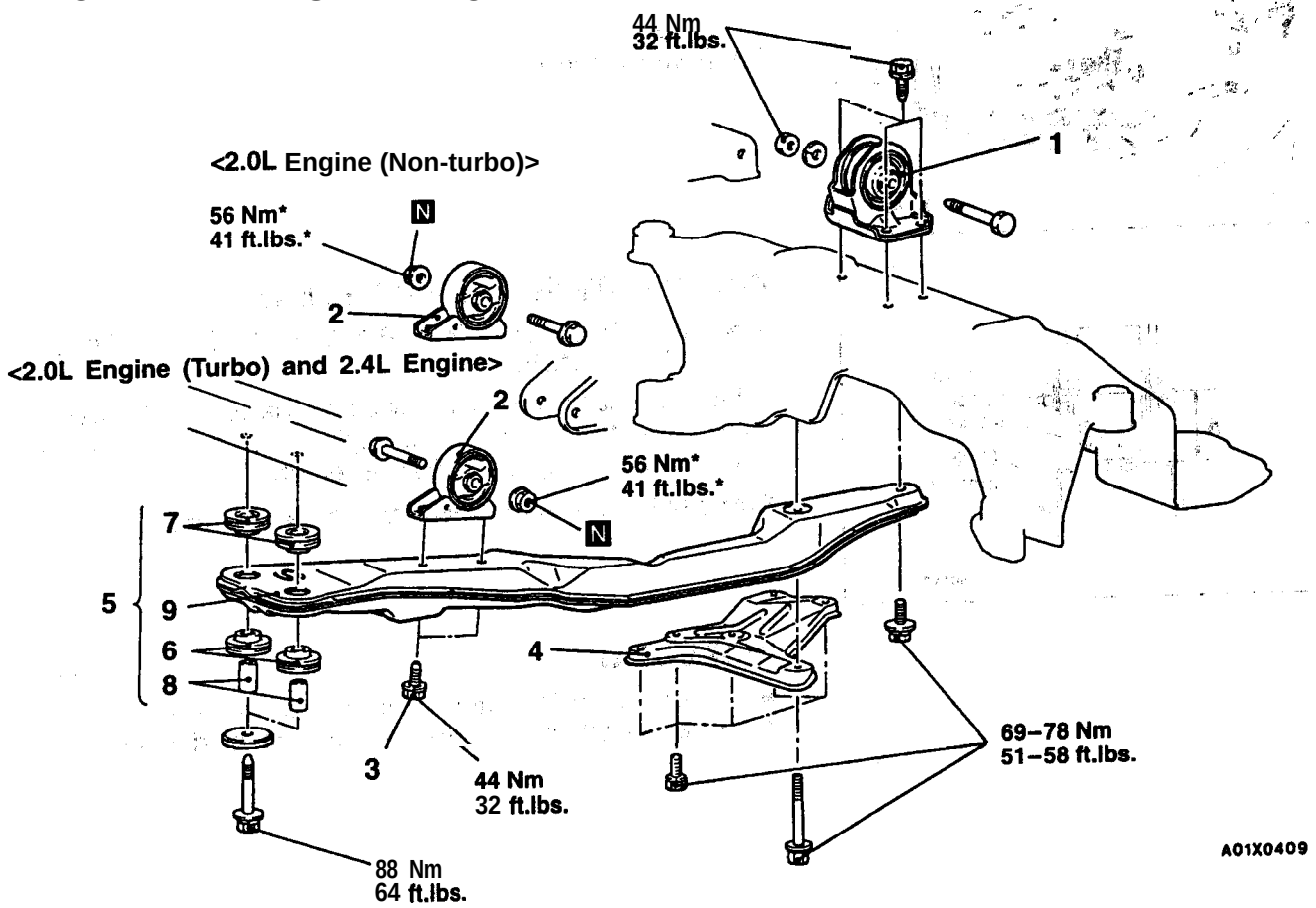

1. Rear roll stopper bracket assembly
▶A◀ 2. Front roll stopper bracket assembly

Centermember removal steps

3. Bolts
4. Stay <2.0L Engine (Turbo) and 2.4L Engine >
◀A▶ 5. Centermember assembly
6. Bushing (lower)
7. Bushing (upper)
8. Collar
9. Centermember

Caution

***: Indicates parts which should be temporarily tightened, and then fully tightened with the vehicle on the ground in the unladen condition.**

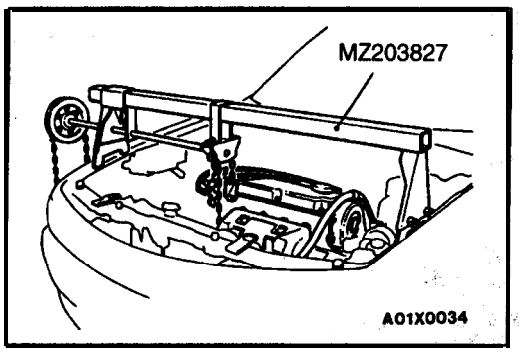

REMOVAL SERVICE POINT

◀A▶ CENTERMEMBER ASSEMBLY REMOVAL

(1) Set the special tool to the vehicle to support the engine assembly.
(2) Remove the centermember assembly.

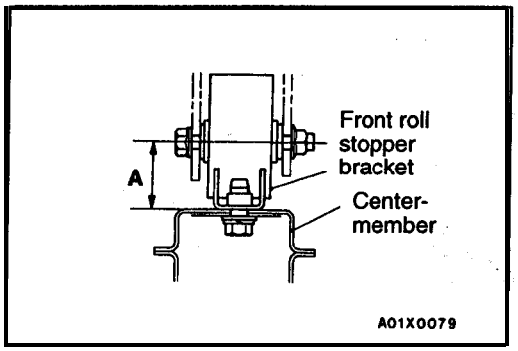

INSTALLATION SERVICE POINT

▶A◀ FRONT ROLL STOPPER BRACKET ASSEMBLY INSTALLATION

If the dimension shown in the illustration is outside the standard value when the weight of the engine is on the body, replace the front roll stopper bracket assembly.

Standard value (A): 43±3 mm (1.69±.12 in.)

INSPECTION

32100240023

- Check each insulator for cracks or damage.
- Check each bracket for deformation or damage.

CROSSMEMBER

32100320130

REMOVAL AND INSTALLATION

Pre-removal and Post Installation Operation
(1) Power Steering Fluid Draining and Supplying (Refer to GROUP 37A – On-vehicle Service.)
(2) Centermember Removal and Instrallation (Refer to P.32-7.)
(3) Stay Removal and Installation (Refer to G33A – Compression lower and lateral lower arm assemblies.)
(4) Front Exhaust Pipe Removal and Installation (Refer to GROUP 15 – Exhaust Pipe and Muffler.)
(5) Stabilizer Bar Removal and Installation (Refer to GROUP 33A – Stabilizer Bar.)
(6) Steering Gear Box Removal and Installation (Refer to GROUP 37A – Power Steering Gear Box.)

<2.0L Engine (Non-turbo)>

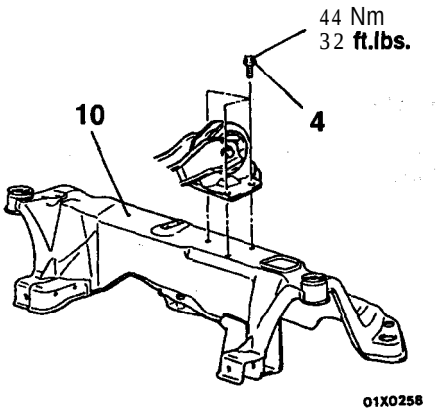

<2.0L Engine (Turbo) and 2.4L Engine>

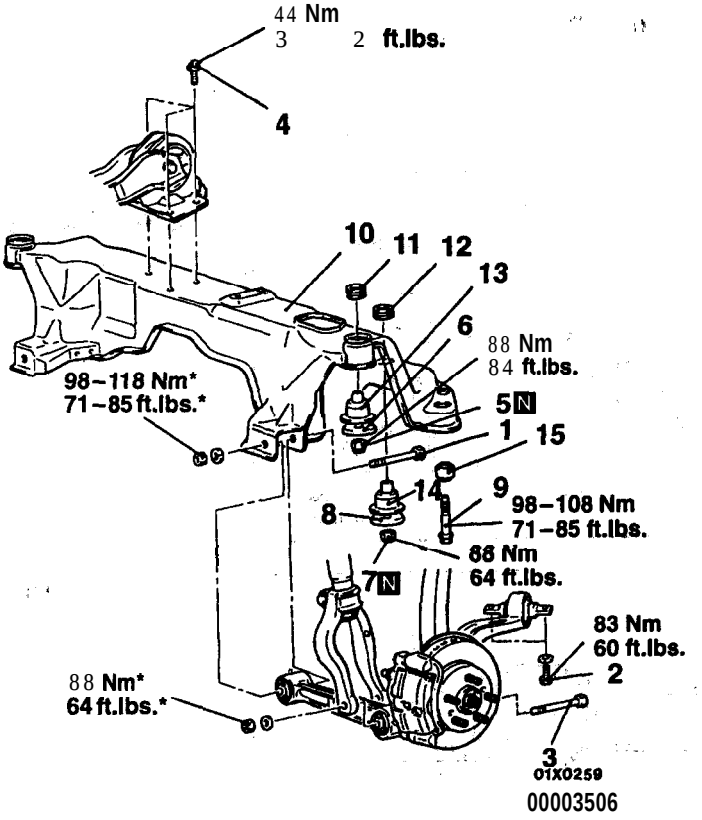

00003506

Crossmember removal steps

1. Lateral lower arm mounting bolt
2. Compression lower arm mounting bolts
3. Shock absorber lower mounting bolt
4. Rear roll stopper bracket mounting bolts
5. Bushing retaining self-locking nut
6. Lower plate
7. Bushing retaining self-locking nut
8. Lower plate
9. Bushing retaining bolt
10. Crossmember
11. Stopper B
12. Stopper A
13. Bushing B
14. Bushing A
15. Bushing C

Caution
• : Indicates parts which should be temporarily tightened, and then fully tightened with the vehicle on the ground in the unladen condition.

TSB Revision

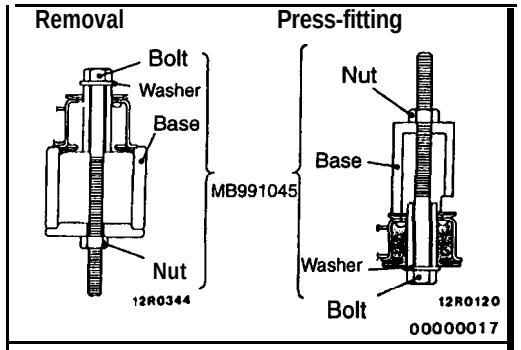

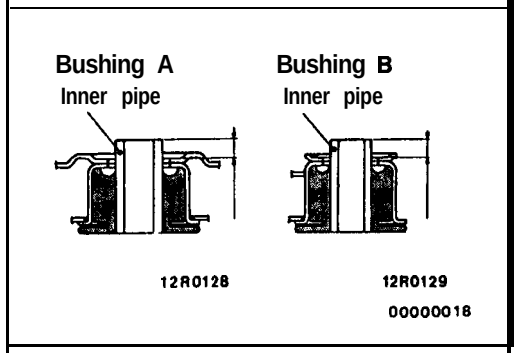

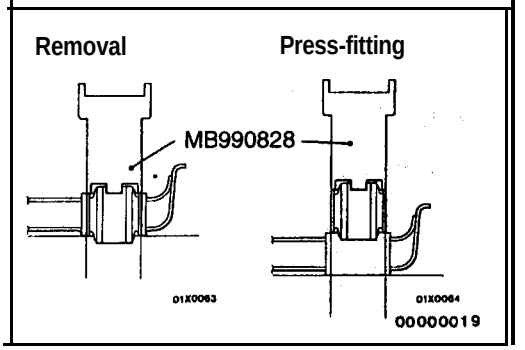

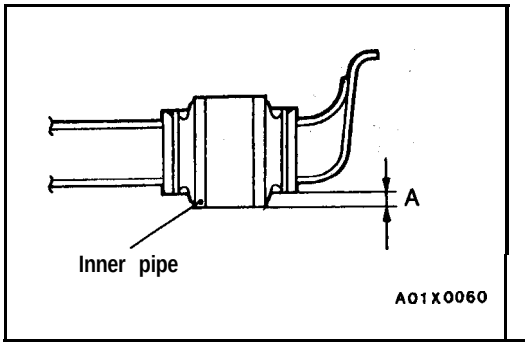

CROSSMEMBER BUSHING REPLACEMENT

32100090031

CROSSMEMBER BUSHING A AND B

(1) Apply soapy water to the contact 'surface of the bush when press-fitting the bush. ,

(2) The bush should be press-fitted so that' the inner pipe projection is at the standard length.

Standard values
Bushing A: 9.0±1.0 mm (.35±.04 in.)
Bushing B: 4.0±1.0 mm (.16±.04 in.)

CROSSMEMBER BUSHING C

(1) Use the special tool to drive out and press-fit the cross-member bushing C.

(2) The bushing should be press-fitted so that the inner pipe projection is at the standard length.

Standard value (A): 4.0±0.5 mm (.16±.02 in.)

INSPECTION

32100330027

- Check the crossmember for cracks or deformation.
- Check the bushings for cracks or'deterioration.

FRONT SUSPENSION

CONTENTS

33209000059

GENERAL INFORMATION

33200010136

The front suspension is of a multi-link construction with two lower arms which create the ideal virtual kingpin axis for the suspension system. In addition, by mounting the upper arm in a higher position than the tires, excellent steering stability and ride comfort are obtained.

<ECLIPSE>

items		Medium price <M/T>, High price <M/T>, Low price <M/T>	Medium price <A/T>, High price <A/T>, Low price <A/T>	Premium price – FWD <M/T>	Premium price – FWD <A/T>
Coil spring	Wire diameter × O.D. × free length mm (in.)	13.1 × 84.2 – 124.2 × 309.5 (.516 × 3.315 – 4.890 × 12.185)	13.2 × 84.4 – 124.4 × 315.5 (.520 × 3.323 – 4.898 × 12.421)	13.1 × 84.2 – 124.2 × 309.5 (.516 × 3.315 – 4.890 × 12.185)	13.2 × 84.4 – 124.4 × 315.5 (.520 × 3.323 – 4.898 × 12.421)
	Identification color	White + Pink	White + Grav	White + pink	White + Grav
	Spring constant N/mm (lbs./in.)	43.0 (246)	43.0 (246)	43.0 (246)	43.0 (246)
Shock absorber stroke mm(in.)		118 (4.6)	118 (4.6)	116 (4.6)	118 (4.6)
Shock absorber damping force [at 0.3 m/sec. (0.9 ft/sec.)]	Expansion N (lbs.)	1255 – 1667 (282 – 379), 1167 – 1579 (267 – 355)		1432 – 1902 (322 – 528) 1481 – 1952 (333 – 439)	
	Contraction N (lbs.)	471 -706 (106 – 159), 412 – 627 (93 – 141)		520 – 755 (117 – 170) 441 – 657 (99 – 148)	

Items		Premium price – AWD <M/T>	Premium price – AWD <A/T>
Coil spring	Wire diameter × O.D. × free length mm (in.)	13.3 × 84.6 – 124.6 × 312.0 (.524 × 3.331 – 4.906 × 12.283)	13.5 × 85.0 – 125.0 × 317.5 (.531 × 3.346 – 4.921 × 12.500)
	Identification color	Green + Light blue	Green + Purple
	Spring constant N/mm (lbs./in.)	43.0 (246)	43.0 (246)
Shock absorber stroke mm (in.)		118 (4.6)	118 (4.6)
Shock absorber damping force [at 0.3m/sec. (0.9ft/sec.)]	Expansion N (lbs.)	1432 -1902 (322 – 428)	
	Contraction N (lbs.)	530 – 785 (119 – 176)	

<ECLIPSE SPYDER>

Items		Medium price	Premium price <M/T>	Premium price <A/T>
Coil spring	Wire diameter × O.D. × free length mm (in.)	13.5 × 85.0 – 125.0 × 304.5 (.531 × 3.346 – 4.921 × 11.988)	13.6 × 85.2 – 125.2 × 309.5 (.535 × 3.354 – 4.929 × 12.165)	13.8 × 85.6 – 125.6 × 315.0 (.543 × 3.370 – 4.945 × 12.402)
	Identification color	Cream + Purple	Cream + Red	Cream + Light blue
	Spring constant N/mm (lbs./in.)	43.0 (246)	43.0 (246)	43.0 (246)
Shock absorber stroke mm(in.)		118 (4.6)	118 (4.6)	118 (4.6)
Shock absorber damping force [at 0.3 m/sec. (0.9 ft/sec.)]	Expansion N (lbs.)	1206 – 1638 (271 – 368)		
	Contraction N (lbs.)	471 -706 (106 – 159)		

SERVICE SPECIFICATIONS

33200030101

Items			Standard value
Toe-in mm (in.)			0 ± 3 (0 ± .12)
Steering angle	Inner wheel	FWD	32°30'±2°
		AWD	31°30'±2°
	Outer wheel	FWD	27°00
		AWD	26°30'
Camber	FWD (Vehicles with 16-inch wheels)		–0°20'±30
	FWD (Vehicles with 14-inch wheels), AWD		–0°05'±30
Caster			4°40'±1°30'
Upper arm ball joint breakaway torque Nm (in.lbs.)			0.3 – 2.5 (3 – 22)
Compression lower arm ball joint breakaway torque Nm (in.lbs.)			0.5 – 2.5 (4 – 22)
Lateral lower arm ball joint breakaway torque Nm (in.lbs.)			1.5 (13) or less
Stabilizer link ball joint breakaway torque Nm (in.lbs.)			0.5 – 1.5 (4 – 13)

SPECIAL TOOLS

33200060049

Tool	Tool number and name	Supersession	Application
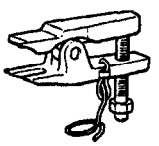	MB991113 Steering linkage puller	MB991113-01	Ball joint and knuckle disconnection
	MB990326 Preload socket	General service tool	Ball joint breakaway torque measurement
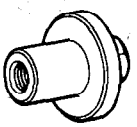	MB991004 Wheel alignment gauge attachment	MB991004-01 or General service tool	Wheel alignment measurement <Vehicles with aluminum wheels>
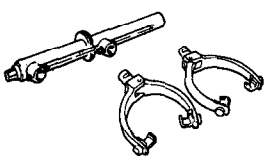	MB991237 Spring compressor body MB991239 Arm set	MIT62220	Front coil spring compression
	MB990800 Ball joint remover and installer	MB990800-01	Dust cover installation"

TSB Revision

TROUBLESHOOTING

33200070028

Symptom	Probable cause	Remedy
Steering wheel is heavy, vibrates or pulls to one side	Suspension malfunction	Adjust or replace
	Ball joint	Adjust or replace
	Coil spring	Adjust or replace
	Wheel alignment	Adjust or replace
	Unbalanced or worn tires	Adjust or replace
Excessive vehicle rolling	Broken or deteriorated stabilizer	Replace
	Shock absorber malfunction	Replace
Poor riding	Improper tire inflation pressure	Adjust
	Broken or deteriorated coil spring	Replace
	Shock absorber malfunction	Replace
Inclination of vehicle	Broken or deteriorated coil spring	Replace
Noise	Lack of lubrication	Lubricate
	Looseness and wear of each part	Replace
	Broken coil spring	Replace
	Shock absorber malfunction	Replace

ON-VEHICLE SERVICE

33100090144

FRONT WHEEL ALIGNMENT CHECK AND ADJUSTMENT

Measure wheel alignment with alignment equipment on a level surface.
The 'front' 'suspension, steering system, and wheels should be serviced to normal condition prior to measurement of wheel alignment.

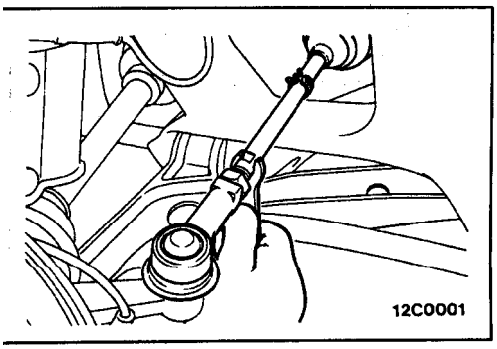

TOE-IN

The rear suspension wheel alignment should be serviced to normal condition before toe-in adjustment.

Standard value: 0 ± 3 mm (0 ± .12 in.)

TSB Revision

NOTE
1. If the toe-in is not within the standard value, adjust the toe-in by undoing, the clips and turning the left arid right tie rod turnbuckles by the same amount (in opposite directions).
2. The toe will move out as the left turnbuckle is turned toward the front of the vehicle and the right turnbuckle is turned toward the rear of the vehicle.

STEERING ANGLE

Standard value:
Inner wheel
32°30'±2° (FWD)
31°30'±2° (AWD)
Outer wheel
27°00' (FWD)
26°30' (AWD)

CAMBER

Standard value:
–0°20'±30' FWD (Vehicles with lbinch wheels)
–0°05'±30' FWD (Vehicles with 14-inch wheels), AWD

CASTER

Standard value: 4°40'±1°30'

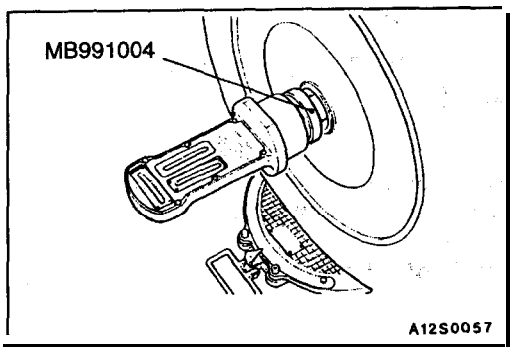

NOTE
1. Camber and caster are preset at the'factory and cannot be adjusted.
2. If camber is not within the standard value, check and replace bent or damaged parts.
3. For vehicles with aluminum type' wheels, attach the camber/caster/kingpin gauge to the drive shaft by 'using the special tool. Tighten the special tool, to the same torque [196–255 Nm (142–184ft.lbs.)] as the drive shaft nut.

Caution
Never subject the wheel bearings to the vehicle load when the drive shaft nuts are loosened.

UPPER ARM ASSEMBLY

33200430062

REMOVAL AND INSTALLATION

Post-installation Operation
Front Wheel Alignment Adjustment
(Refer to P.33A-4.)

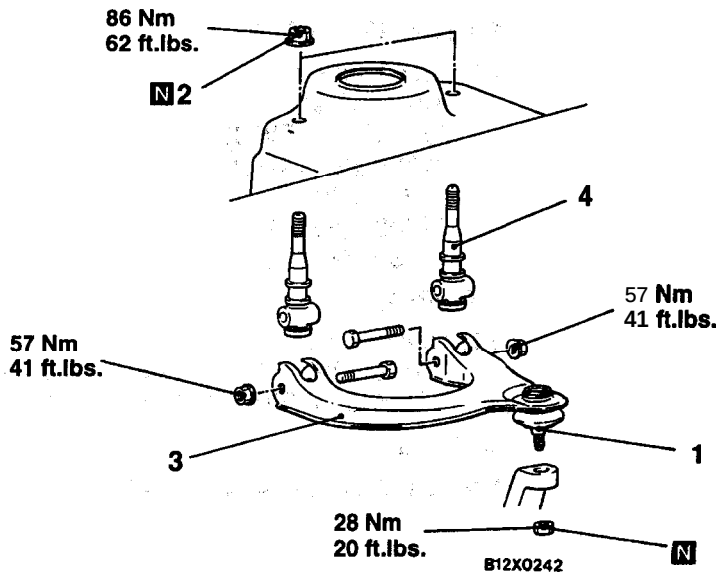

Removal steps

◀A▶ 1. Upper arm ball joint and knuckle connection
2. Upper arm self-locking nut
3. Upper arm assembly
▶A◀ 4. Upper arm shaft assembly

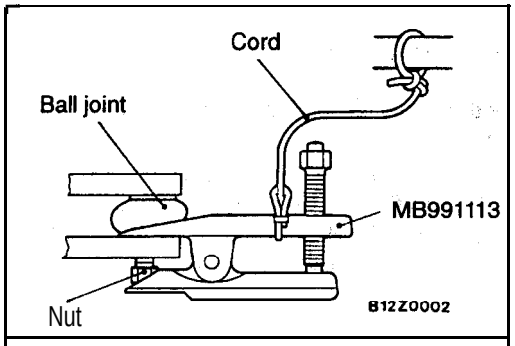

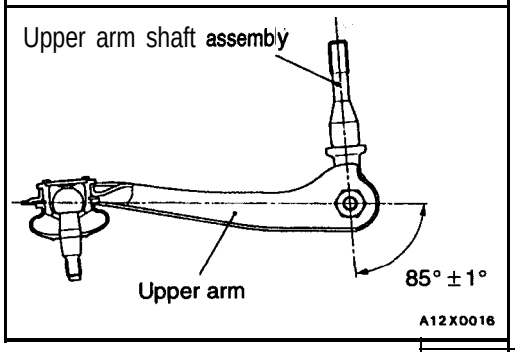

REMOVAL SERVICE 'POINT

◀A▶ UPPER ARM BALL JOINT AND KNUCKLE DISCONNECTION

Caution

1. **Use the special tool to loosen the tie rod end mounting nut. Only loosen the nut: do not remove it from the ball joint.**
2. **Support the special tool with a cord; etc. to prevent it from coming off.**

INSTALLATION SERVICE POINT

▶A◀ UPPER ARM SHAFT ASSEMBLY INSTALLATION

Install the upper arm shaft assembly at the angle shown in the illustration.

NOTE
If the upper arm shaft is installed at the above-mentioned angle, the reference dimension is determined as follows;

TSB Revision

A : 299.9 mm (11.8 in.)
B : 234.0 mm (9.2 in.)

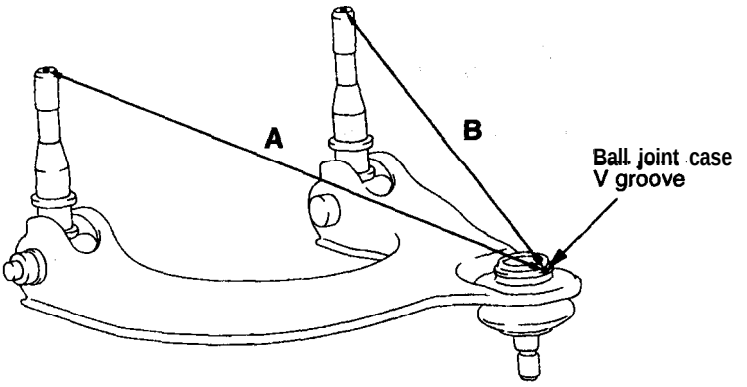

12X0203

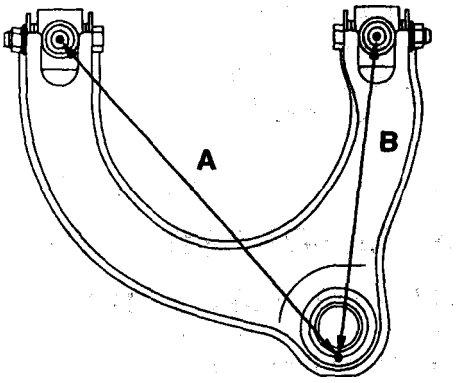

12X0202

00000009

INSPECTION

33200440058

- Check the bushings for wear and deterioration.
- Check the upper arm for bends or damage.
- Check all bolts for condition and straightness.

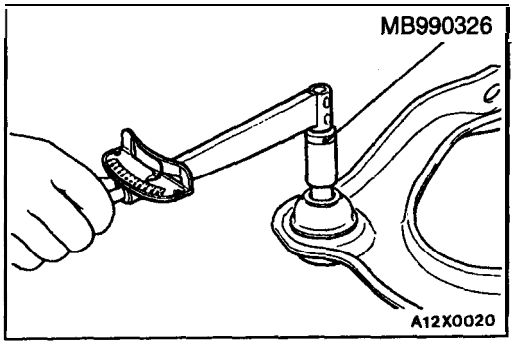

BALL JOINT BREAKAWAY TORQUE CHECK

(1) After shaking the ball joint stud several times, install the nut to the stud and use the special tool to measure the breakaway torque of the ball joint.

Standard value: 0.3–2.5 Nm (3-22 in.lbs.)

(2) When the measured value exceeds the standard value, replace the upper arm assembly.

(3) When the measured value is lower than the standard value, check that the ball joint turns smoothly without excessive play. If so, it is possible to use that ball joint.

BALL JOINT DUST COVER CHECK

If there are any cracks in or damage to the dust cover, replace the arm assembly.

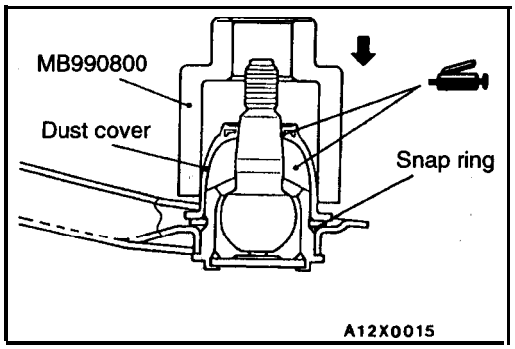

UPPER ARM BALL JOINT DUST COVER REPLACEMENT

33200770041

Replace the dust cover by the following procedure only if the dust cover has become damaged by accident during servicing.

(1) Remove the dust cover.
(2) Apply multipurpose grease to the lip and inside of the dust cover.
(3) Drive in the dust cover with special tool until it is fully seated.

SHOCK ABSORBER ASSEMBLY

33200460061

REMOVAL AND INSTALLATION

Post-installation Operation
Front Wheel Alignment Adjustment
(Refer to P.33A-4.)

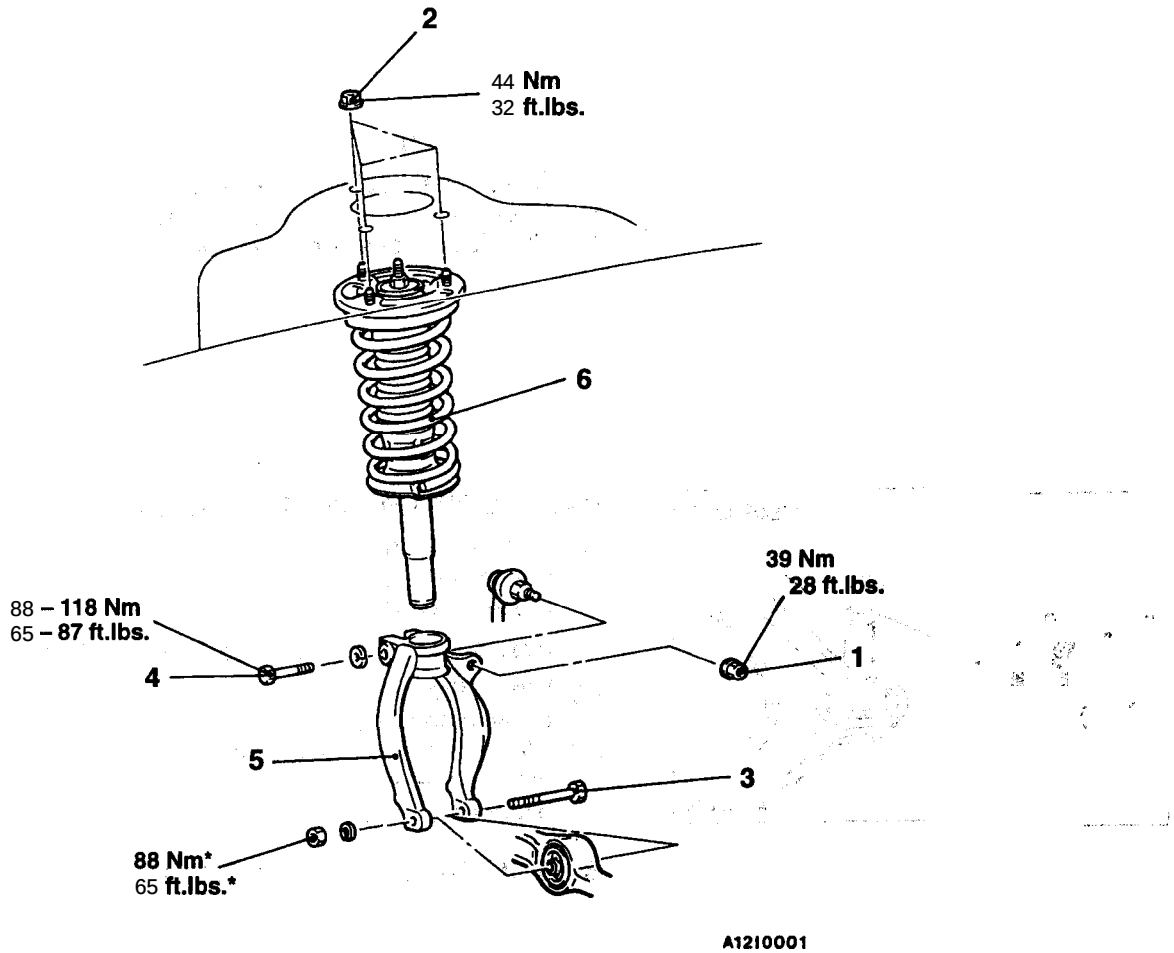

Removal steps

1. Stabilizer link mounting nut
2. Shock absorber upper mounting nuts
3. Shock absorber lower mounting bolt
4. Damper fork mounting bolt
5. Damper fork
6. Shock absorber assembly

Caution
! Indicates parts which should be temporarily tightened, and then fully tightened with the vehicle on the ground in the unladen condition.

TSB Revision

DISASSEMBLY AND, REASSEMBLY

33200480036

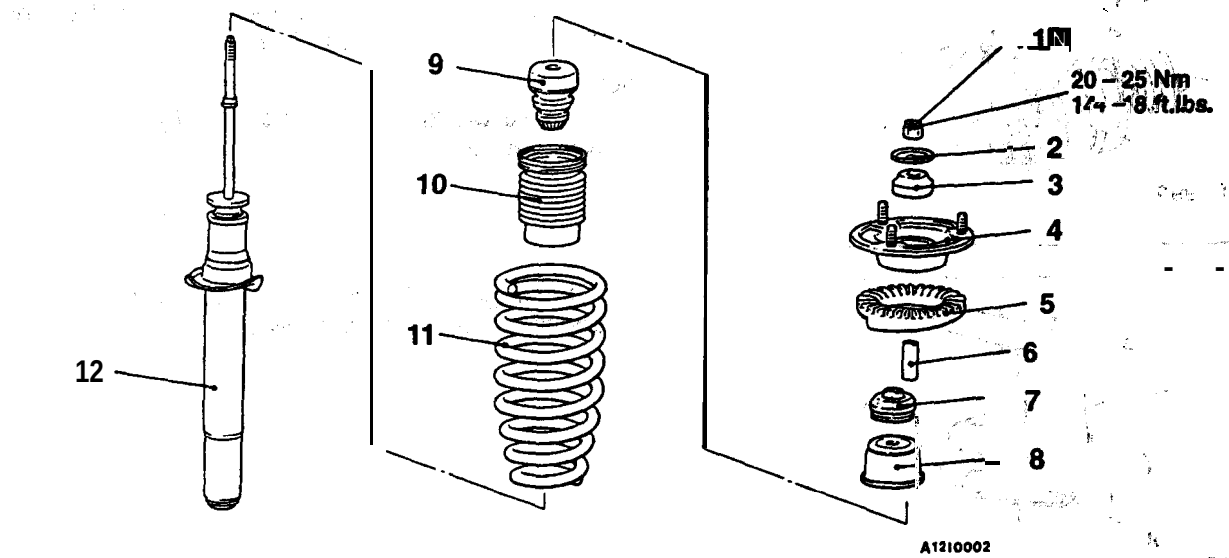

Disassembly steps

◀A▶ ▶C◀ 1. Self-locking nut
2. Washer
3. Upper bushing A
▶B◀ 4. Upper bracket assembly
5. Upper spring pad
6. Collar
7. Upper bushing B
8. Cup assembly
9. Bump rubber
10. Dust cover
▶A◀ 11. Coil spring
12. Shock absorber assembly

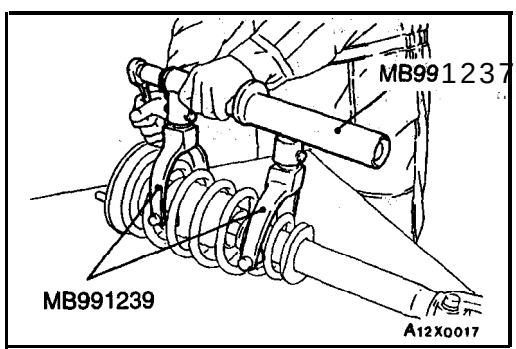

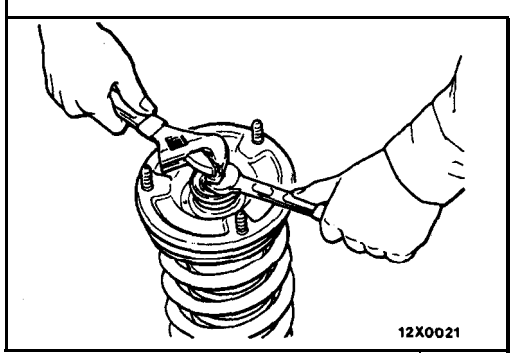

DISASSEMBLY SERVICE POINT

◀A▶ SELF-LOCKING NUT REMOVAL

(1) Compress the coil spring using the special tools.

Caution

1. Install the special tools evenly so that the maximum length will be attained within the installation range.

2. Do not use an impact wrench to tighten the special tool bolt.

(2) While holding the piston rod, remove the self-locking nut.

Caution

Do not use an impact wrench to tighten the special tool bolt.

TSB Revision

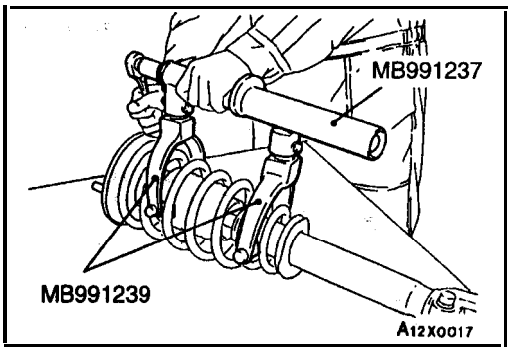

REASSEMBLY. SERVICE POINTS

▶A◀ COIL SPRING INSTALLATION

(1) Use the special tools to compress the coil spring and install it to the shock absorber.

Caution
Do not use an impact wrench to tighten the bolt of the special tool.

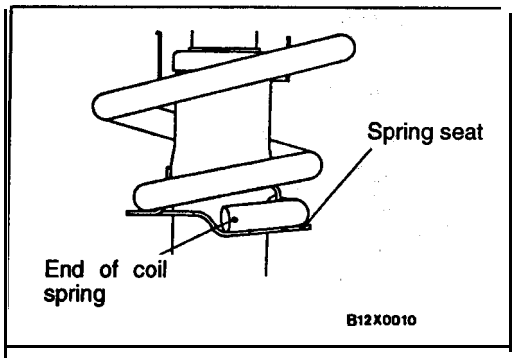

(2) Align the edge of the coil spring to the stepped part of the shock absorber spring seat.

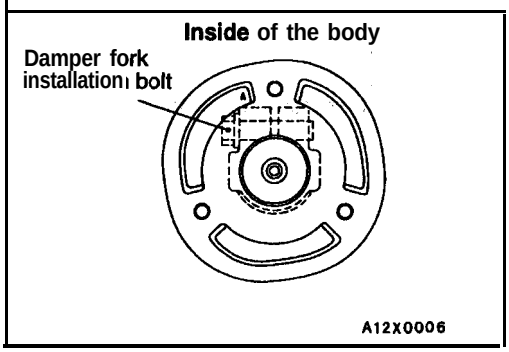

▶B◀ UPPER BRACKET ASSEMBLY INSTALLATION

Install so that the position of the three bolts are as shown in the illustration with respect to the damper fork installation bolt.

▶C◀ SELF-LOCKING NUT INSTALLATION

(1) Temporarily tighten the self-locking nut.

(2). Remove the special tools (MB991237. MB991239), and tighten the self-locking nut to- the specified torque.

Caution
Do not use an impact wrench.

COMPRESSION LOWER ARM AND LATERAL LOWER ARM ASSEMBLIES

33200510070

REMOVAL AND INSTALLATION

Post-installation Operation
- Front Wheel Alignment Adjustment (Refer to P.33A-4.)

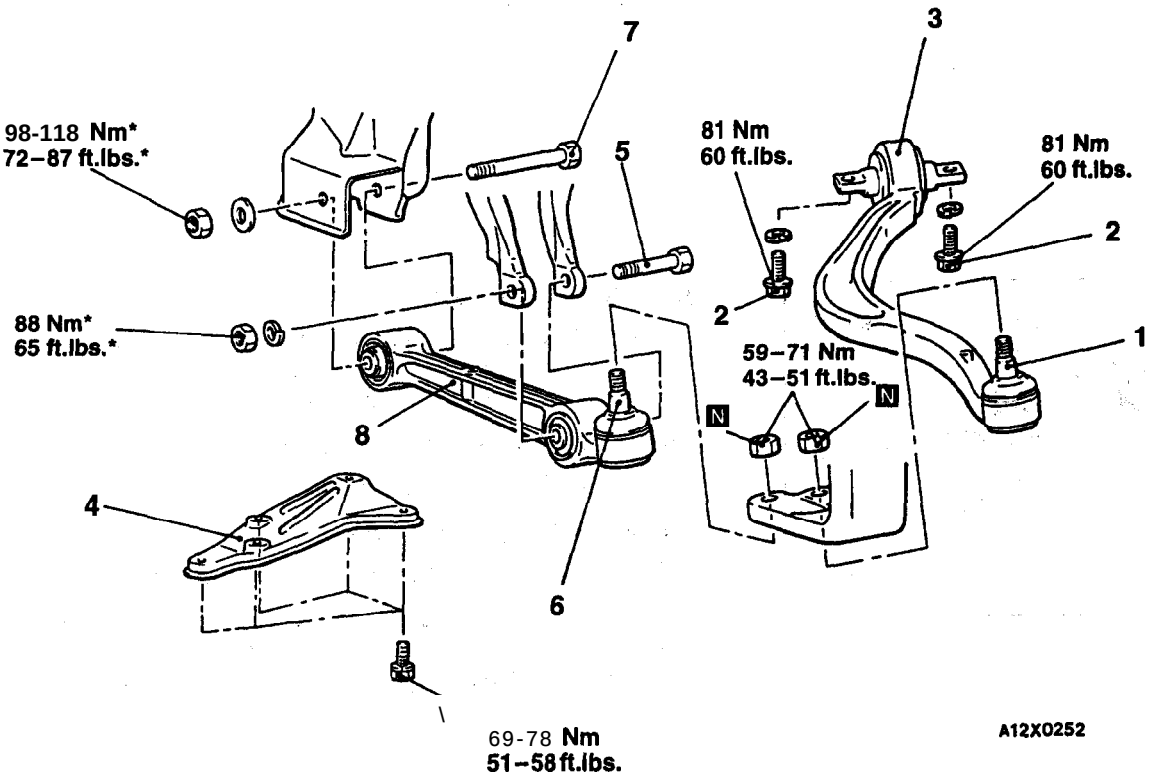

Compression lower arm assembly removal steps

◀A▶
1. Compression lower arm bail joint and knuckle connection
2. Compression lower arm mounting bolts
3. Compression lower arm assembly

Lateral lower arm assembly removal steps

4. Stay
5. Shock absorber lower mounting bolt

◀A▶
6. Lateral lower arm ball joint and knuckle connection
7. Lateral lower arm mounting bolt
8. Lateral lower arm assembly

Caution
***: Indicates parts which should be temporarilly tightened, and then fully tightened with the vehicle on the ground in the unladen condition.**

TSB Revision

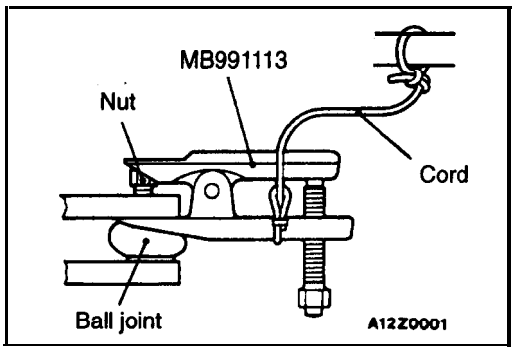

REMOVAL SERVICE POINT

◀A▶ COMPRESSION LOWER ARM BALL JOINT AND KNUCKLE/LATERAL LOWER ARM BALL JOINT AND KNUCKLE DISCONNECTION

Caution

1. **Use the special tool to loosen the tie rod end mounting nut. Only loosen the nut; do not remove it from the ball joint.**
2. **Support the special tool with a cord, etc. to prevent it from coming off.**

INSPECTION

29299929959

- Check the bushings for wear and deterioration.
- Check the lower arm for bends or damage.
- Check all bolts for condition and straightness.

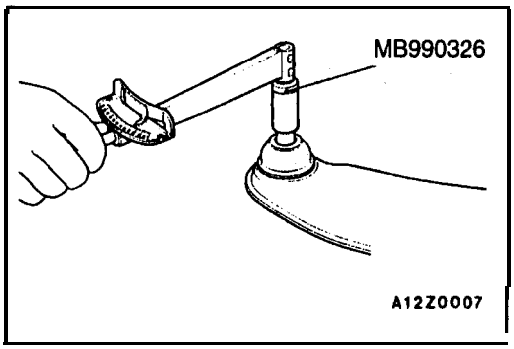

BALL JOINT BREAKAWAY TORQUE CHECK

(1) After shaking the ball, joint stud several times; install the nut to the stud and use the special tool to measure the breakaway torque of the ball joint.

Compression lower arm ball joint

Standard value: 0.5–2.5 'Nm (4-22 in.lbs.)

Lateral lower arm ball joint

Standard value: 1.5 Nm (13 in.lbs.) or less

(2) When the measured value exceeds. the standard value, replace the compression lower arm assembly or lateral lower arm assembly

(3) When the measured value is lower than the standard value, check that the ball joint turns smoothly without excessive play. If so, it is possible to use that ball joint.

BALL JOINT DUST COVER CHECK

If there are any cracks in or damage to the dust cover, replace the arm assembly.

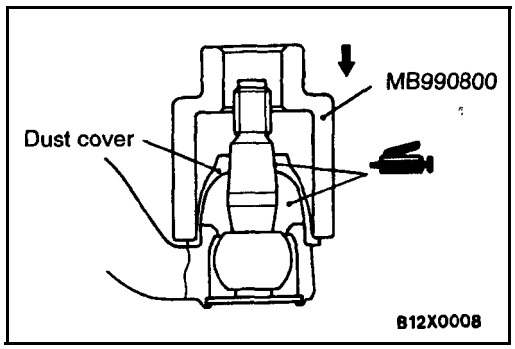

LOWER ARM BALL JOINT DUST COVER REPLACEMENT

33200780037

Replace the dust cover by the following procedure only if the dust cover has become damaged by accident during servicing.

(1) Remove the dust cover.
(2) Apply multipurpose grease to the lip and inside of the dust cover.
(3) Using the special tool, drive in the dust cover to the position shown in the illustration.

STABILIZER BAR

33200540062

REMOVAL AND INSTALLATION

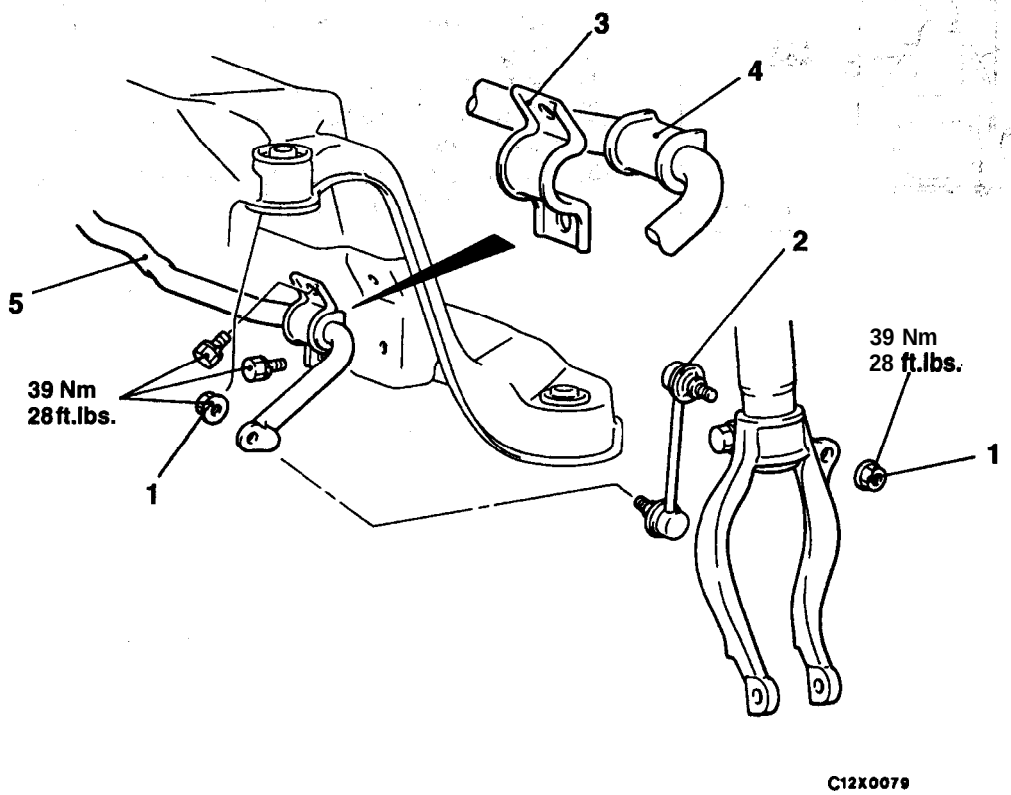

Removal steps

1. Stabilizer link mounting nut
2. Stabilizer link
▶A◀ 3. Stabilizer bar bracket
4. Bushing
5. Stabilizer bar

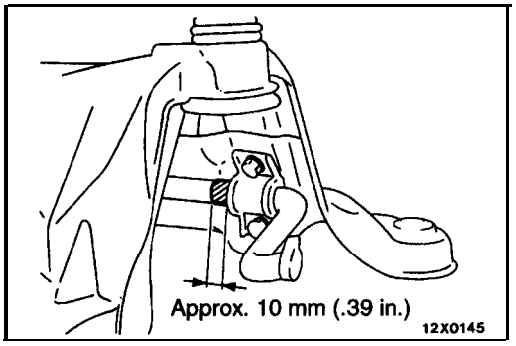

INSTALLATION SERVICE POINT

▶A◀ STABILIZER BAR BRACKET INSTALLATION

Position the stabilizer bar so that the marking on the stabilizer bar and the edge of the bracket becomes the reference value, and then tighten the stabilizer bar bracket mounting bolt.

INSPECTION

33200550065

- Check the bushings for wear and deterioration.
- Check the stabilizer bar for deterioration or damage.
- Check all bolts for condition and straightness.

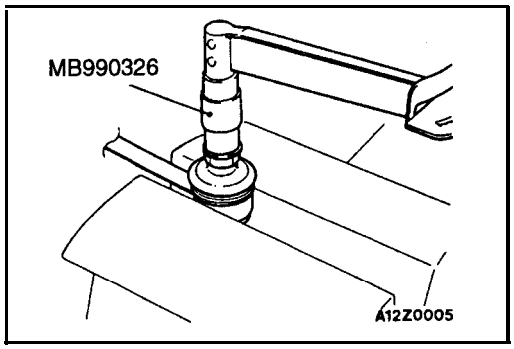

STABILIZER LINK BALL JOINT BREAKAWAY TORQUE CHECK

(1) After shaking the ball joint stud several times, install the nut to the stud and use the special tool to measure the breakaway torque of the ball joint.

Standard value: 0.5–1.5 Nm (4-13 in.lbs.)

(2) When the measured value exceeds the standard value, replace the stabilizer link.
(3) When the measured value is lower than the standard value, check that the ball joint turns smoothly without excessive play. If so, it is possible to use that ball joint.

BALL JOINT DUST COVER CHECK

If there are any cracks in or damage to the dust cover, replace the stabilizer link.

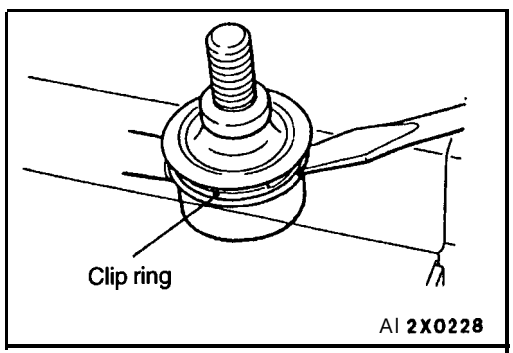

STABILIZER LINK BALL JOINT DUST COVER REPLACEMENT

33200790030

Replace the dust cover by the following procedure only if the dust cover has become damaged by accident during servicing.
(1) Remove the clip ring and the dust cover.

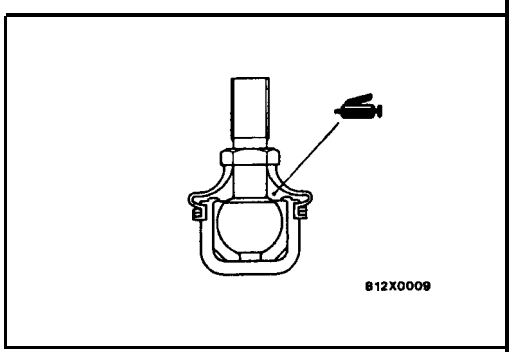

(2) Apply multipurpose grease to the inside of the dust cover.

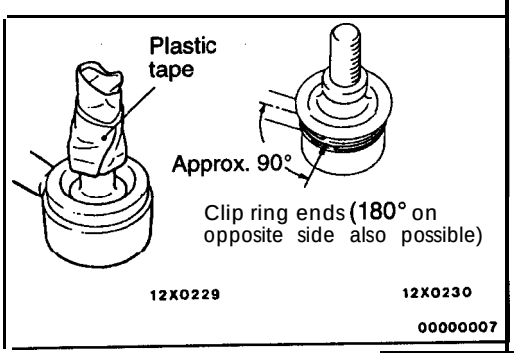

(3) Use plastic tape on the stabilizer link threads as shown in the illustration, and then install the dust cover to the stabilizer link.
(4) Secure the dust cover by the clip ring.

NOTE
When installing the clip ring, align the ends at a **90°** angle from the axis of the stabilizer link.

NOTES

REAR SUSPENSION-

CONTENTS

34109000060

GENERAL INFORMATION

34100010062

A newly-developed multi-link type of suspension has been adopted for the rear suspension. The layout of each arm and the rigidity balance of each bushing have been rationalized to provide both excellent steering stability and riding comfort.

<ECLIPSE>

Items		Medium price, High price,' Low price.	Premium price-FWD	Premium price-AWD
Coil spring	Wire diameterx O.D.xfree length mm(in.)	11.0 × 75.0 – 117.0 × 303.0 (.433 × 2.953 – 4.606 × 11.929)'	11.0×75.0–117.0×303.0 (.433 × 2.953 – 4.606 × 11.929)	11.1 × 75.2 – 117.2 × 360.5 (.433 × 2.961 – 4.614 × 11.830)
	Identification color	Purple × 2	Purple × 2	Orange×2
	Spring constant N/mm(lbs./in.)	26.5 (151)	26.5 (151)	26.5 (151)
Shock absorber stroke mm (in.)		154 (6.1)	154 (6.1)	154 (6.1)
Shock absorber damping force [at 0.3m/sec. (0.9ft. /sec.)]	Expansion N(lbs.)	834–1128(187–254)	794–1069(179–240)	922–1236(207–278)
	Contraction N (lbs.)	353–530(79–119)	392–588(88–132)	392–588(88–132)

<ECLIPSE SPYDER>

Items		Medium price	Premium price
Coil spring	Wire diameterx O.D.xfree length mm (in.)	11.7 × 76.4 – 118.4 × 309.5 (.460 × 3.008 – 4.661 × 12.185)	11.8 × 76.6 – 118.6 × 315.5 (.465 × 3.016 – 4.670 × 12.421)
	Identification color	Blue × 2	Red × 2
	Spring constant N/mm(lbs./in.)	28.4 (162)	28.4 (162)
Shock absorber stroke mm(in.)		169 (6.7)	169 (6.7)
Shock absorber damping force [at 0.3m/sec. (0.9ft. /sec.)]	Expansion N (lbs.)	667 – 902 (150 – 379), 1187 – 1579 (267 – 355)	
	Contraction N (lbs.)	471 – 706 (106 – 159), 412-627 (93 – 141)	

<FWD>

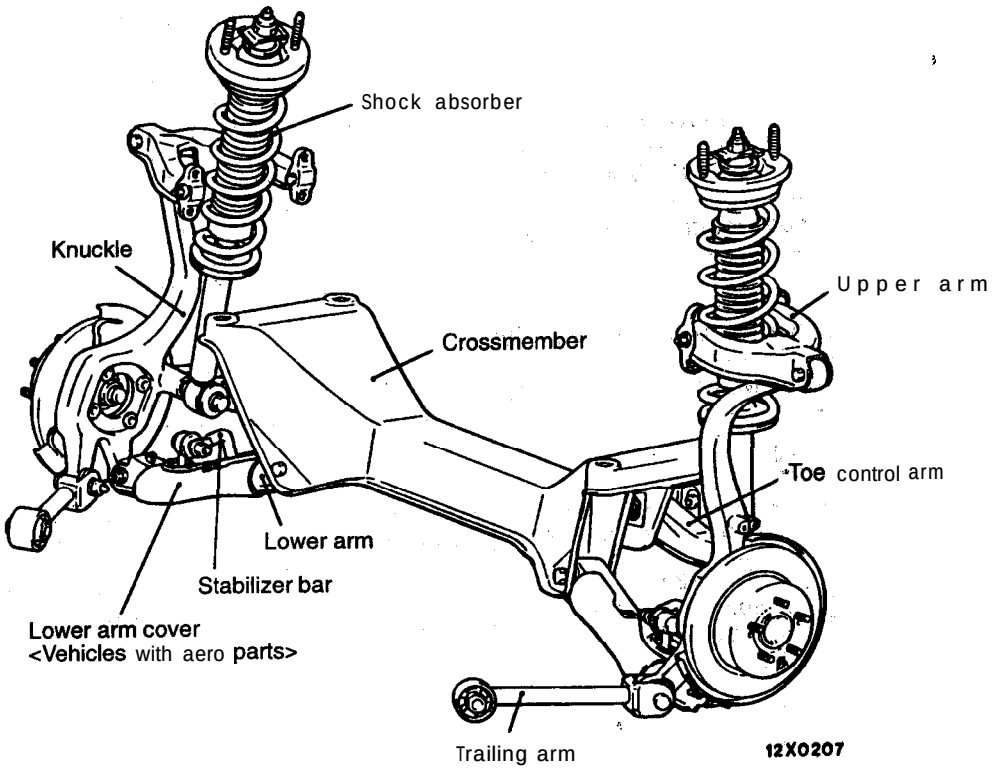

<AWD>

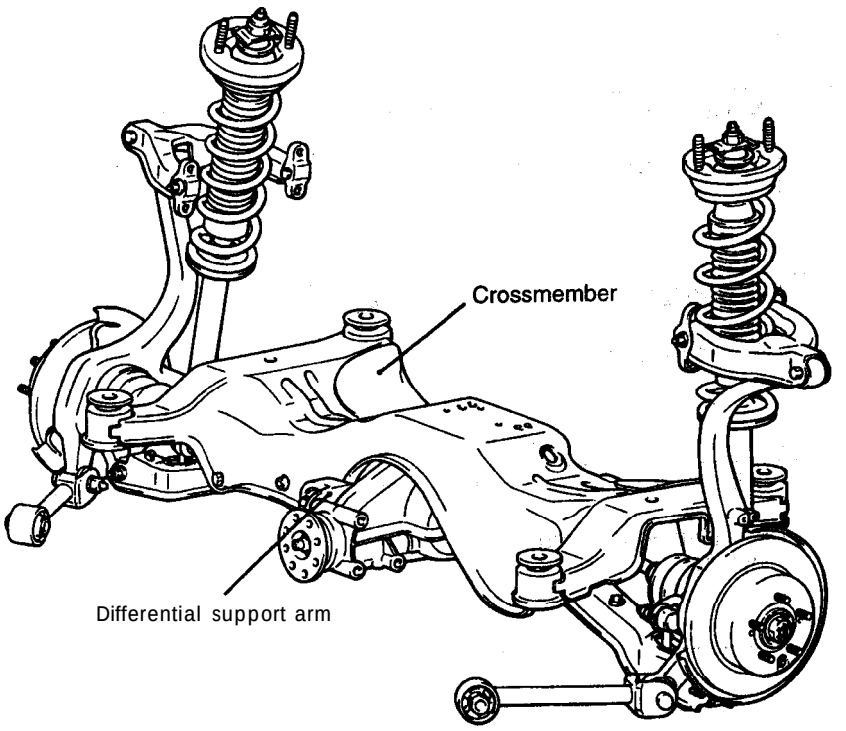

00003694

SERVICE SPECIFICATIONS

34100030150

Items		Standard value
Toe-in mm (in.)		3 ± 3 (.12 ± .12)
Camber	FWD (Vehicles with 1 6-inch wheels)	–1°40'±30'
	FWD (Vehicles with 14-inch wheels), AWD	–1°20'±30'
Dimension for positioning upper arm bracket mm(in.)		37.2% 2 (1.46 ± .08)
Thrust angle		0° ±9
Toe control arm ball joint breakaway torque Nm(in.lbs.)		0.1–2.65 (1–23)
Stabilizer link ball joint breakaway torque Nm(in.lbs.)		0.5–1.5 (4–1 3)

SPECIAL TOOLS

34100060067

Tool	Tool number and name	Supersession	Application
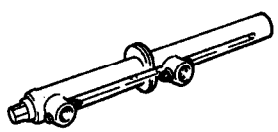	MB991237 Spring compressor body	MIT62220	Coil spring removal and installation
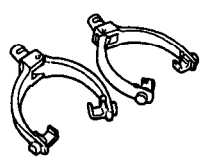	MB991239 Arm set		
	MB991113 Steering linkage puller	MB991113-01	Ball joint disconnection
	MB990326 Preload socket	General service tool	Ball joint breakaway torque check
	MB990800 Ball joint remover and installer	MB990800-01	Dust cover installation

TSB Revision

TROUBLESHOOTING

34100070046

Symptom	Probable cause	Remedy
Squeaks or other abnormal noise	Loose rear suspension mounting bolts and nuts	Retighten
	Malfunction of shock absorber	Replace
	Worn bushings	
	Upper arms and/or lower arms and/or toe control arm deformed or damaged	
	Trailing arms deformed or damaged	
	Crossmember deformed or damaged	
Poor ride	Excessive tire inflation pressure	Adjust the pressure
	Malfunction of shock absorber	Replace
	Weak or broken springs	
	Stabilizer bar and/or stabilizer link deformed or damaged	
Body tilting	Weak or deteriorated bushings	Replace
	Weak or broken springs	
	Upper arms and/or lower arms and/or toe control arm deformed or damaged	
	Trailing arms deformed or damaged	
	Crossmember deformed or damaged	

ON-VEHICLE SERVICE

33100100069

REAR WHEEL ALIGNMENT CHECK AND ADJUSTMENT

Measure. wheel alignment with alignment equipment on level ground.
The rear suspension and wheels should be serviced to the normal condition prior to wheel alignment.

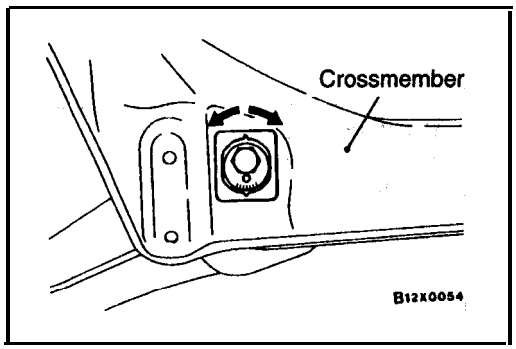

TOE-IN

Standard value: 3 ± 3 mm. (.12 ± .12 in.)

Turn the toe control arm mounting bolt to the left or right by equal amounts to adjust.

L.H.: Turning clockwise toe-out direction

R.H.: Turning clockwise toe-in direction

Furthermore, toe adjustment can be made at graduations of approximately 1.3 mm (.05 tn.).

CAMBER'

Standard value:

–1°40'±30' FWD (Vehicles with 16-inch wheels)
–1°20'±30' FWD (Vehicles with 14-inch wheels), AWD

NOTE
1. Camber is preset at the'factory and can not be adjusted.
2. If camber is not within the standard value, check and replace bent or damaged parts.

REAR SUSPENSION ASSEMBLY

3410033004 5

REMOVAL AND INSTALLATION

Pre-removal Operation
(1) Service Lid Removal (Refer to GROUP 52A – Trims.)
(2) Luggage compartment side trim <ECLIPSE SPYDER> (Refer to GROUP 52A – Trims)
(3) Rear Crossmember Under Cover Panel Removal <FWD> (Refer to GROUP 42 – Under Cover.)
(4) Center Exhaust Pipe Removal (Refer to GROUP 15 – Exhaust Pipe.)

Post-installation Operation
(1) Center Exhaust Pipe Installation (Refer to GROUP 15 – Exhaust Pipe and Main Muffler.)
(2) Brake Line Bleeding <Vehicles with drum brakes> (Refer to GROUP 35A – On-vehicle Service.)
(3) Luggage compartment side trim <ECLIPSE SPYDER> (Refer to GROUP 52A – Trims.)
(4) Service Lid Installation (Refer to GROUP 52A – Trims.)
(5) Parking brake Lever Stroke Check (Refer to GROUP 36 – On-vehicle Service.)
(6) Wheel Alignment Check and Adjustment (Refer to P.34-6.)

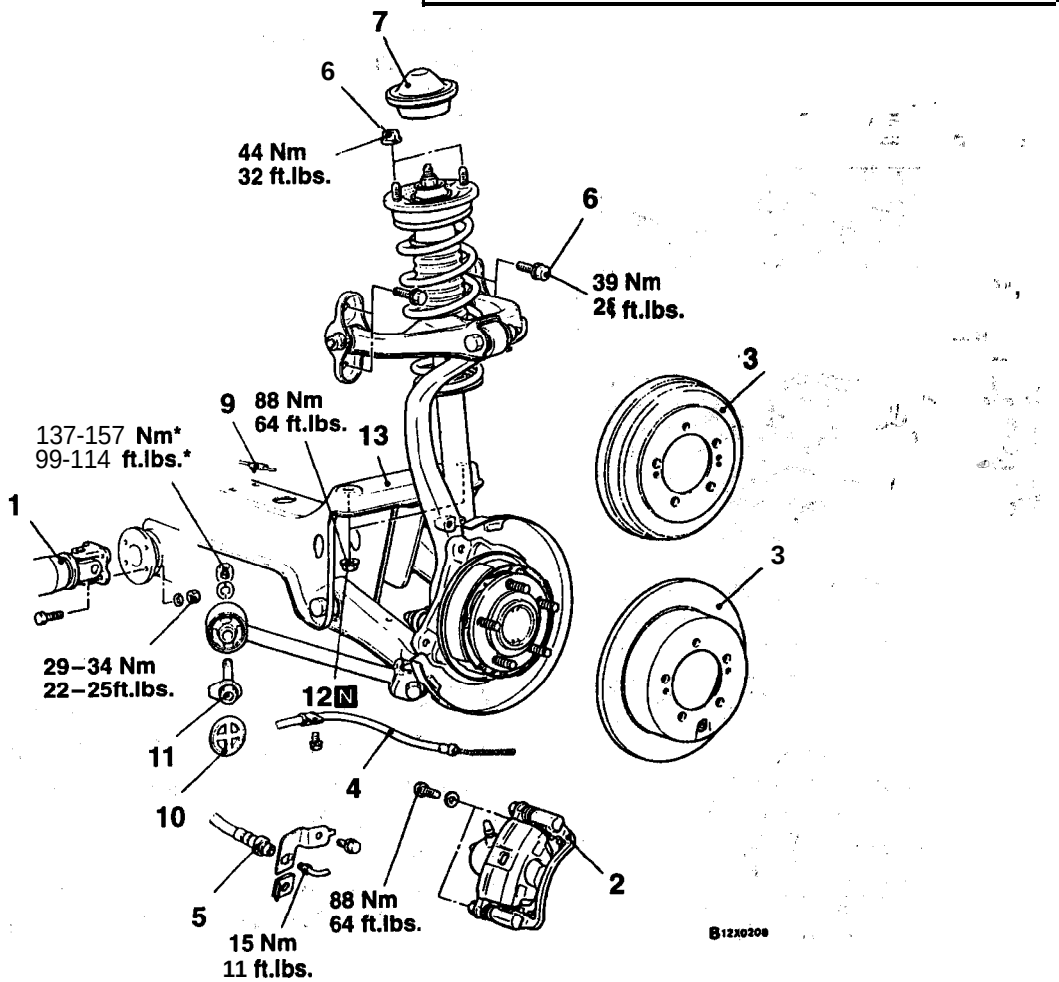

Removal steps

◀A▶ ▶A◀ 1. Propeller shaft connection <AWD>
2. Brake caliper assembly <Vehicles with disc brakes>
3. Brake disc <Vehicles with disc brakes> or brake drum <Vehicles with drum brakes>
4. Parking brake cable end (Refer to GROUP 36 – Parking Brake Cable <Drum Brake>.) (Refer to GROUP 36 – Parking Brake Cable <Drum-In-Disk Brake>.)
5. Brake hose connection <Vehicles with drum brakes>
6. Upper arm bracket mounting bolts
7. Cap
8. Shock absorber mounting nuts
9. Rear wheel-speed sensor connector <Vehicles with ABS>
10. Grommet
11. Trailing arm mounting bolt
◀B▶ 12. Crossmember mounting self-locking nuts
13. Rear suspension assembly

Caution
* : indicates parts which should be temporarily tightened, and then fully tightened with the vehicles on theground in the unladen condition.

TSB Revision

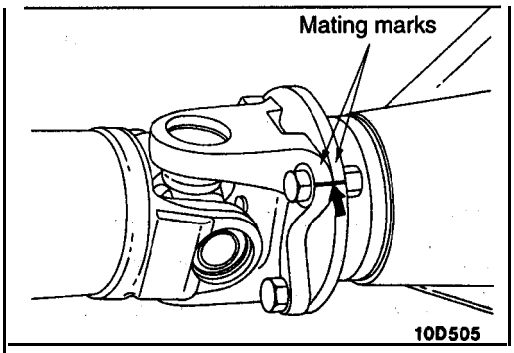

REMOVAL SERVICE POINTS

◀A▶ PROPELLER SHAFT REMOVAL

(1) Make mating marks on the differential- companion flange and flange yoke, and then separate the differential carrier assembly and the propeller shaft.

(2) Suspend the propeller shaft from the body, with wire, etc, so that there are no sharp bends..,

Caution
Be careful that there are no sharp bends in the propeller shaft, as they may damage the Löbro joint.

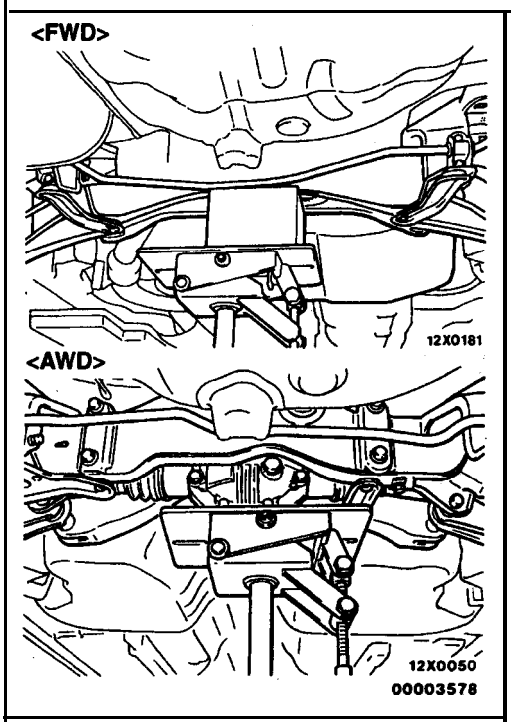

◀B▶ CROSSMEMBER MOUNTING SELF-LOCKING NUTS REMOVAL

After supporting the crossmember in FWD vehicles or the differential case in AWD vehicles with a garage jack or transmission jack respectively, remove the crossmember mounting nuts.

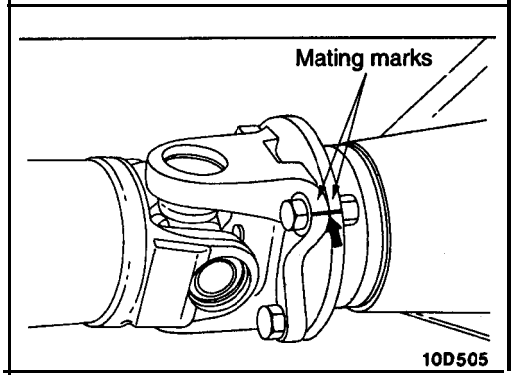

INSTALLATION SERVICE POINT

▶A◀ PROPELLER SHAFT INSTALLATION

Install with the mating marks of the differential carrier and propeller aligned.

Caution
Tighten installation bolts and nuts after removing oil and grease from threads to prevent them from loosening.

INSPECTION

34100340024

- Check crossmember for cracks or other damage.

UPPER ARM ASSEMBLY

34100360044

REMOVAL AND INSTALLATION

Post-installation Operation
- Wheel Alignment Check and Adjustment (Refer to P.34-6.)

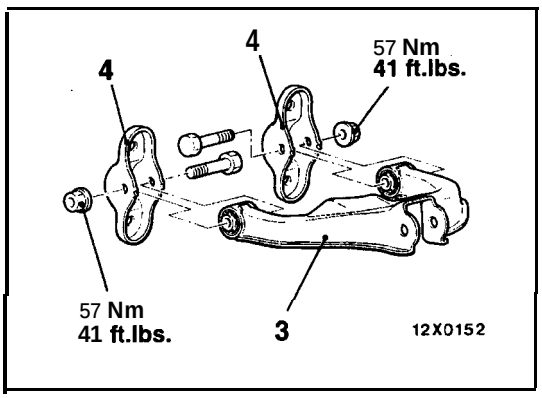

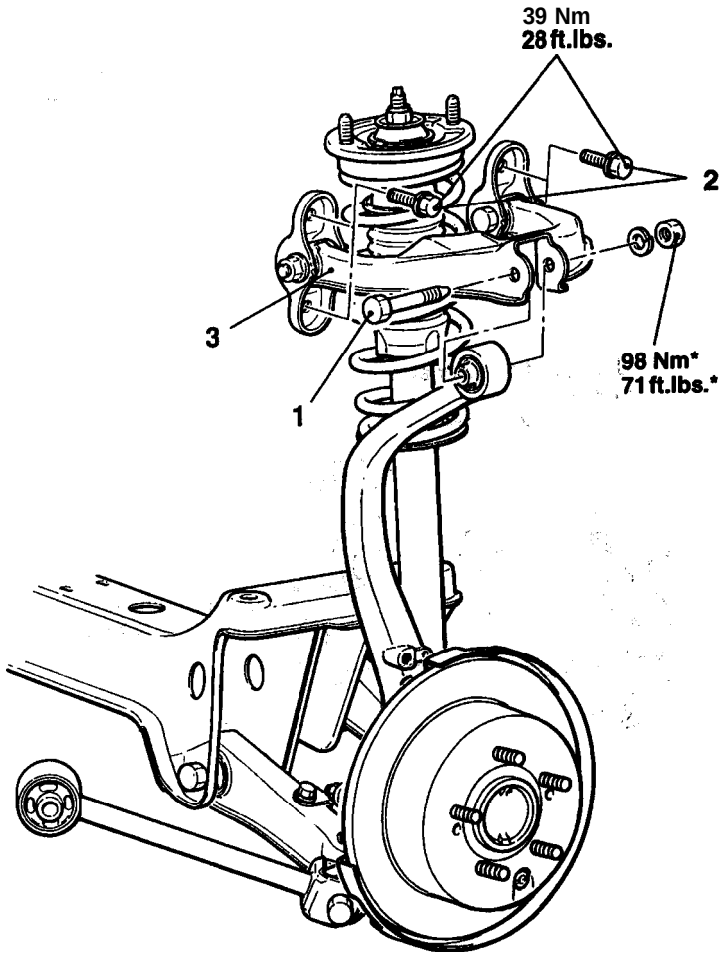

12X0211
00000164

Removal steps

1. Upper arm and knuckle connecting bolt
2. Upper arm assembly mounting bolts
3. Upper arm assembly
▶A◀ 4. Upper arm bracket

Caution
*** : Indicates parts which should be temporarily tightened, and then fully tightened with the vehicles on the ground in the unladen condition.**

TSB Revision

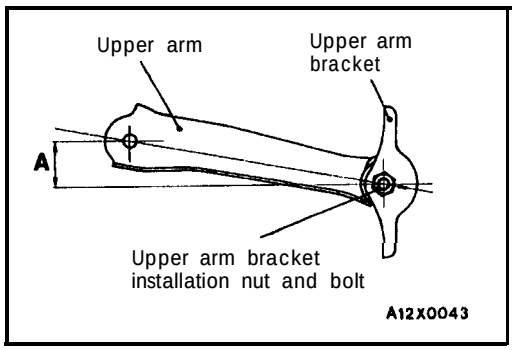

INSTALLATION SERVICE POINT

▶A◀ UPPER ARM BRACKET INSTALLATION

Tighten the upper arm bracket installation nut and bolt so that the dimension shown in the illustration is at the standard value.

Standard value (A) : 37.2 ± 2 mm (1.46 ± .08 in.)

NOTE
If the upper arm bracket is installed with the former-mentioned standard value, the reference dimensibn is determined as follows;

B: 213.5 mm (8.4 in.)
C: 289.2 mm (10.6 in.)

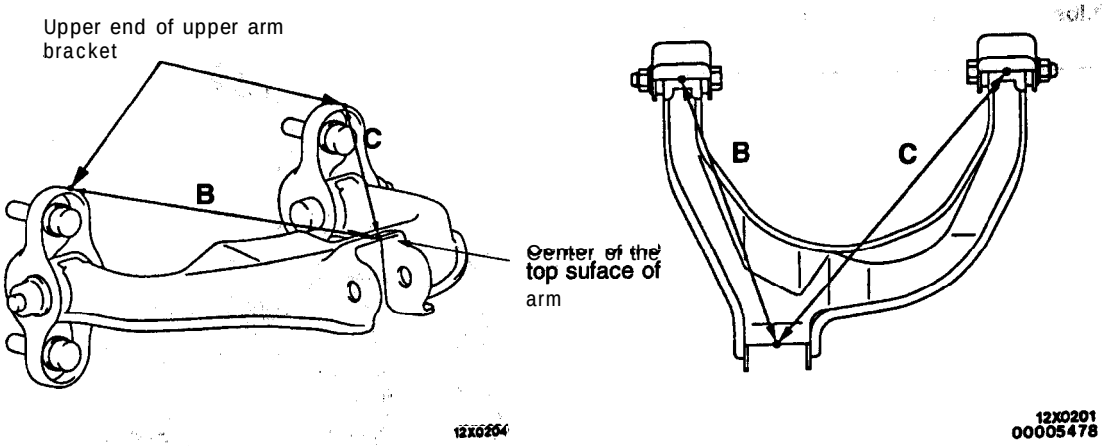

INSPECTION

34100370023

- Check the bushings for wear and deterioration.
- Check the upper arm for bends or damage.
- Check all bolts for condition and straightness.

TSB Revision

TRAILING ARM ASSEMBLY

34100420063

REMOVAL AND INSTALLATION

Post-installation Operation
- Wheel Alignment Check and Adjustment (Refer to P.34-6.)

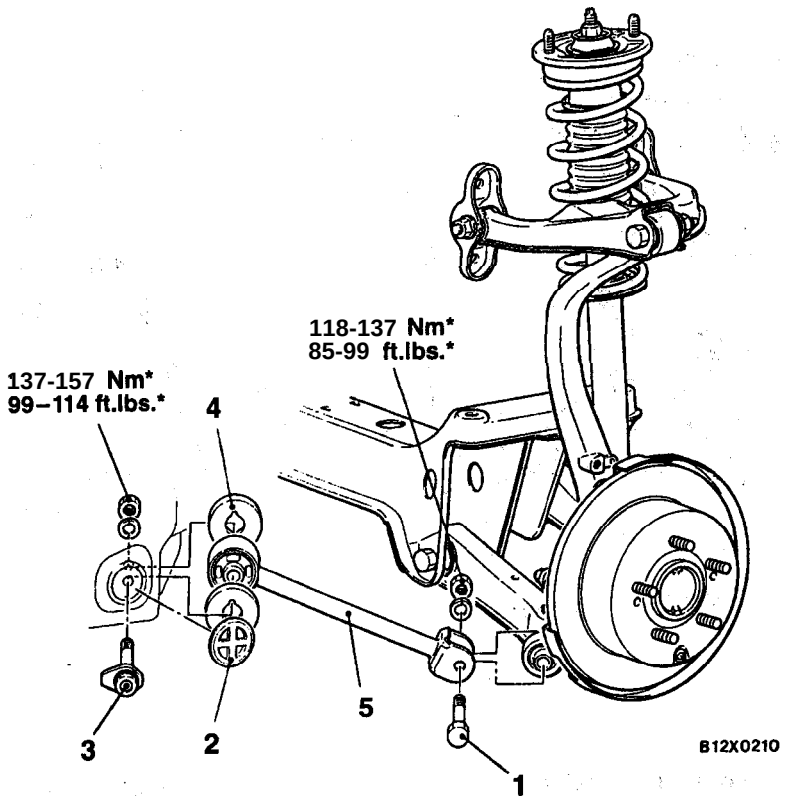

Removal steps

1. Knuckle and trailing arm assembly connecting bolt
2. Grommet
3. Trailing arm assembly mounting bolt
4. Stopper
5. Trailing arm assembly

Caution

*** : Indicates parts which should be temporarily tightened, and then fully tightened with the vehicles on the ground in the unladen condition.**

INSPECTION

34100430042

- Check the bushings for wear and deterioration.
- Check the trailing arm for bends or damage.

LOWER ARM AND TOE CONTROL ARM ASSEMBLIES

34100450048

REMOVAL AND INSTALLATION

Post-installation Operation
- Wheel Alignment Check and Adjustment (Refer to P.34-6.)

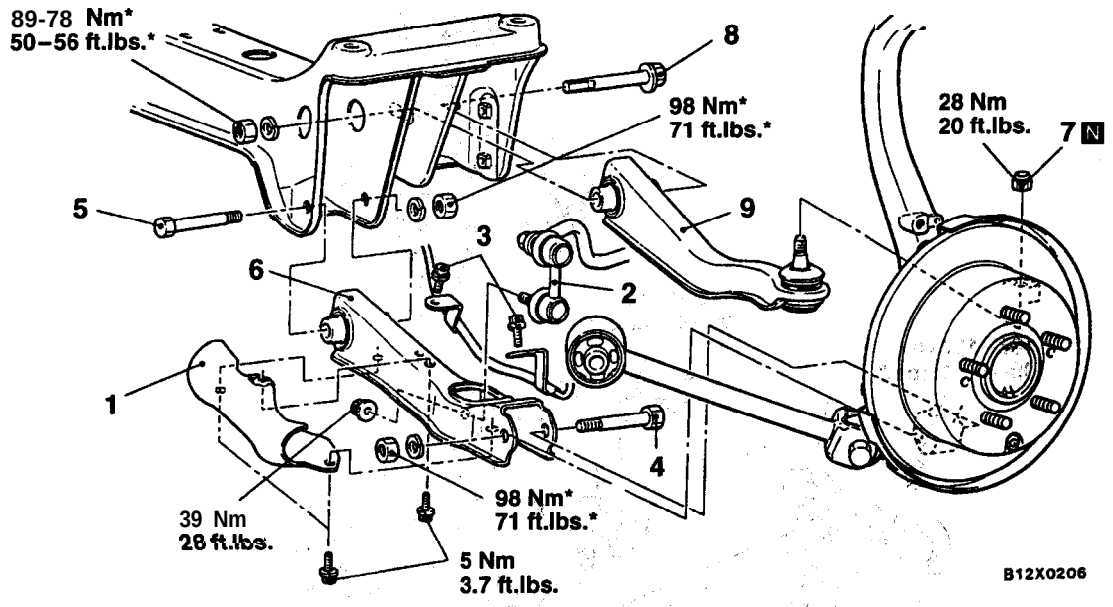

Lower arm assembly removal steps

1. Lower arm cover <Vehicles with aero parts>
2. Stabilizer link ball joint and lower arm connection
3. ABS wheel-speed sensor clamp bolts <Vehicles with ABS>
4. Lower arm assembly and knuckle connecting bolt
5. Lower arm assembly mounting bolt
6. Lower arm assembly

Toe control arm assembly removal steps

◀A▶ 7. Toe control arm ball joint and knuckle connection

◀B▶ 6. Toe control arm assembly mounting bolt

9. Toe control arm assembly

Caution
- : Indicates parts which should be temporarily tightened, and then fully tightened with the vehicles on the ground in the unladen condition.

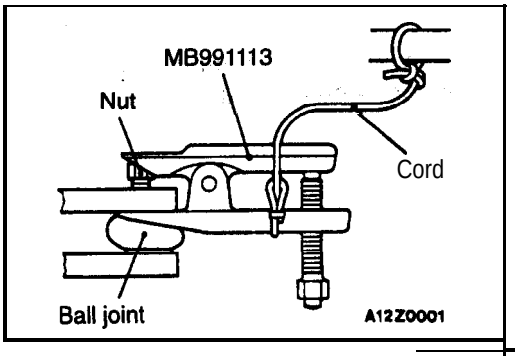

REMOVAL' SERVICE POINTS

◀A▶ TOE CONTROL ARM BALL JOINT AND KNUCKLE DISCONNECTION

Caution

1. Be sure to tie the cord of the special tool to a nearby part.
2. Loosen the nut but do not remove it.

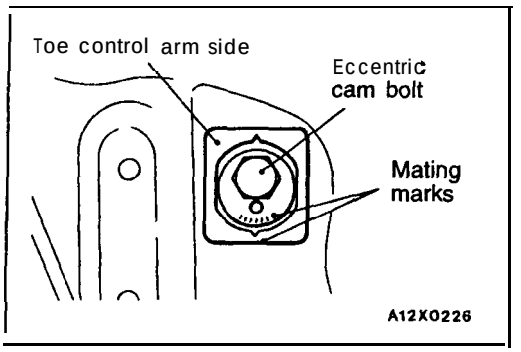

◀B▶ TOE CONTROL, ARM ASSEMBLY MOUNTING BOLT REMOVAL

Make mating marks on the toe control arm' and eccentric cam bolt before removing the bolt.

INSPECTION

34100460072

- Check the bushings for wear and deterioration.
- Check the lower arm or toe control arm for bends or damage.
- Check all bolts for condition and straightness.

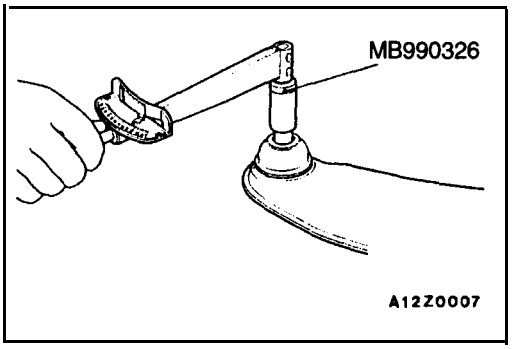

BALL JOINT BREAKAWAY TORQUE CHECK

(1) After shaking the ball joint stud several times, install the nut to the stud and use the special tool to measure the breakaway torque of the ball joint.

Standard value: 0.1–2.65 Nm (1–23 in.lbs.)

(2) When the measured value exceeds the standard value, replace the toe control arm assembly.

(3) When the measured value is lower than the standard value, check that the ball joint turns smoothly without excessive play. If so, it is possible to use that ball joint.

BALL JOINT DUST COVER CHECK

If there are any cracks in or damage to the dust cover, replace the arm assembly.

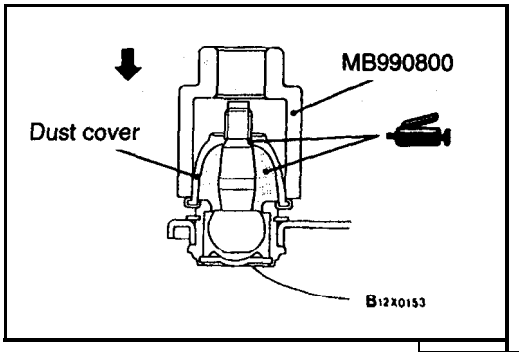

TOE CONTROL ARM BALL JOINT DUST COVER REPLACEMENT

34101080031

Replace the dust cover by the following procedure only if the dust cover has become damaged by accident during servicing.

(1) Remove the dust cover.

(2) Apply multi-purpose grease to the lip and inside of the dust cover.

(3) Drive in the dust cover with the special tool until it is fully seated.

SHOCK ABSORBER ASSEMBLY

34100510067

REMOVAL AND INSTALLATION

Pre-removal and Post-installation Operation
(1) Service Lid Removal and Installation (Refer to GROUP 52A–Trims.)
(2) Luggage compartment side trim <ECLIPSE SPYDER> (Refer to GROUP 52A – Trims.)

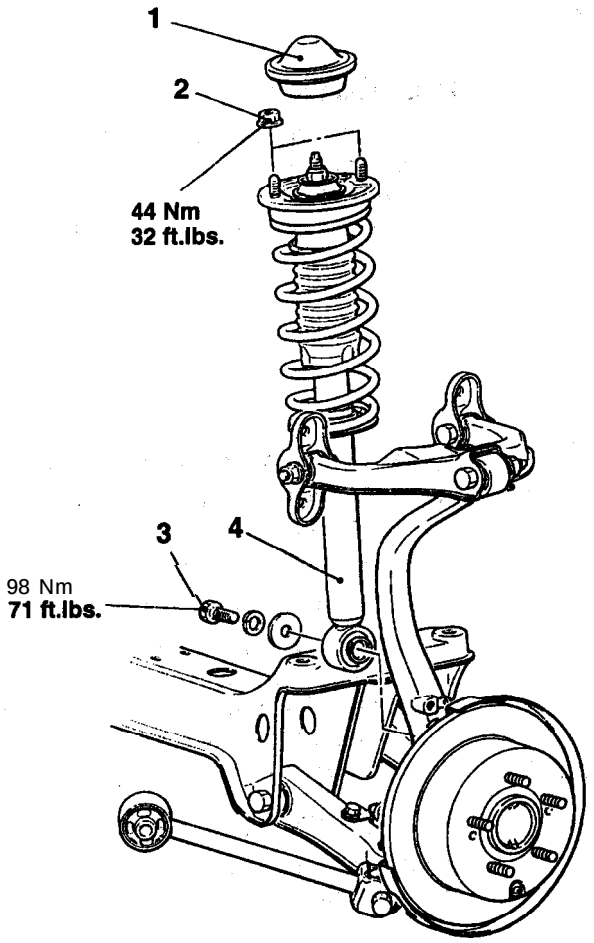

A12X0213

Removal steps

1. Cap
2. Flange nuts
3. Bolt
4. Shock absorber

INSPECTION

34100520039

- Check the rubber parts for cracks and wear.
- Check the shock, absorber for malfunctions, oil leakage or abnormal noise.

DISASSEMBLY AND REASSEMBLY

34100530056

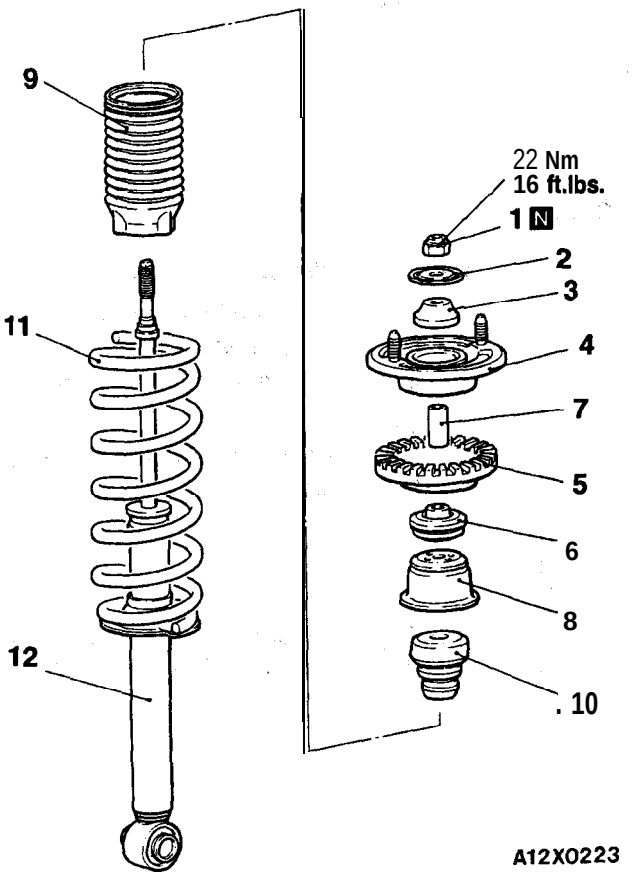

Disassembly steps

◀A▶ ▶C◀ 1. Self-locking nut
2. Washer
3. Upper bushing A
▶B◀ 4. Upper bracket assembly
5. Upper spring pad
6. Upper bushing B
7. Collar
8. Cup assembly
9. Dust cover
10. Bump rubber
▶A◀ 11. Coil spring
12. Shock absorber assembly

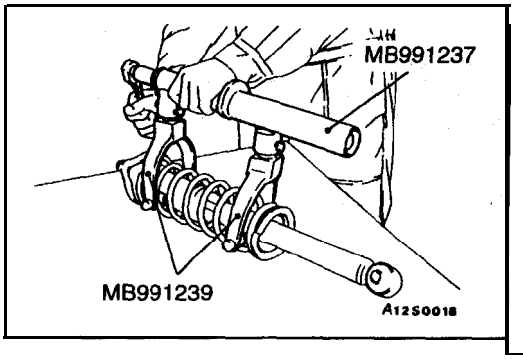

DISASSEMBLY SERVICE POINTS

◀A▶ SELF-LOCKING NUT REMOVAL

(1) Compress the coil spring using the special tools.

Caution

1. Install the special tools evenly, and so that the maximum length will be attained within the installation range.

2. Do not use an impact wrench to tighten the special tool bolt.

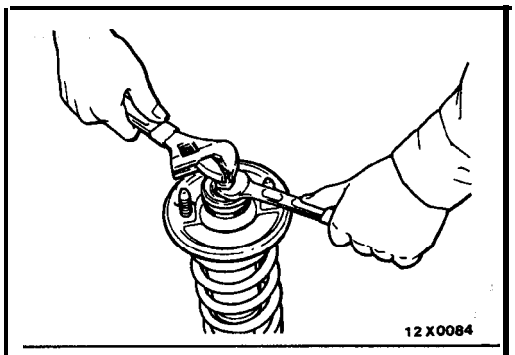

(2) While holding the piston rod, remove the self-locking nut.

Caution
Do not use an impact wrench to tighten the self-locking nut.

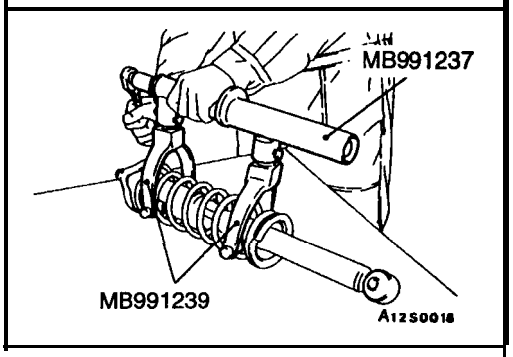

REASSEMBLY SERVICE POINTS

▶A◀ COIL SPRING INSTALLATION

(1) Use the special tools to compress the coil spring and , install it to the shock absorber.

Caution
Do not use an impact wrench to tighten the special tool bolt.

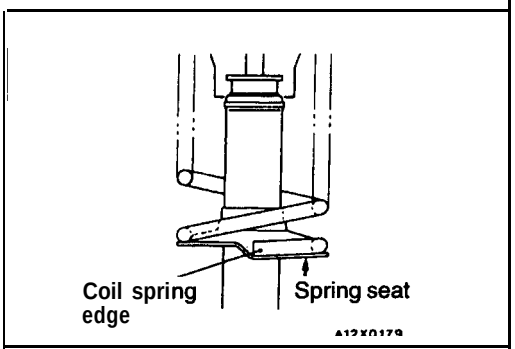

(2) Align the edge of the coil spring to the stepped part of the shock absorber spring seat.

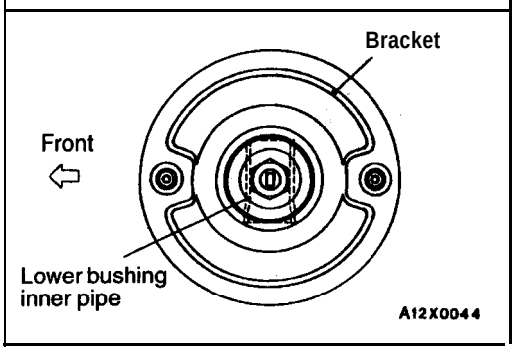

▶B◀ UPPER BRACKET ASSEMBLY INSTALLATION

Install the bracket as shown in the illustration.

▶C◀ SELF-LOCKING NUT INSTALLATION

(1) Temporarily tighten the self-locking nut.
(2) Remove the special tools (MB991237, MB991239), and tighten the self-locking nut to the specified torque.

Caution
Do not use an impact wrench.

INSPECTION

34100280012

- Check the rubber parts for damage.
- Check the coil springs for crack, damage or deterioration.

STABILIZER BAR

34100560048

REMOVAL AND INSTALLATION,

Pre-removal and Post-installation Operation
- Lower Arm Cover Removal and Installation <Vehicles with aero parts> (Refer to P.34-12.)

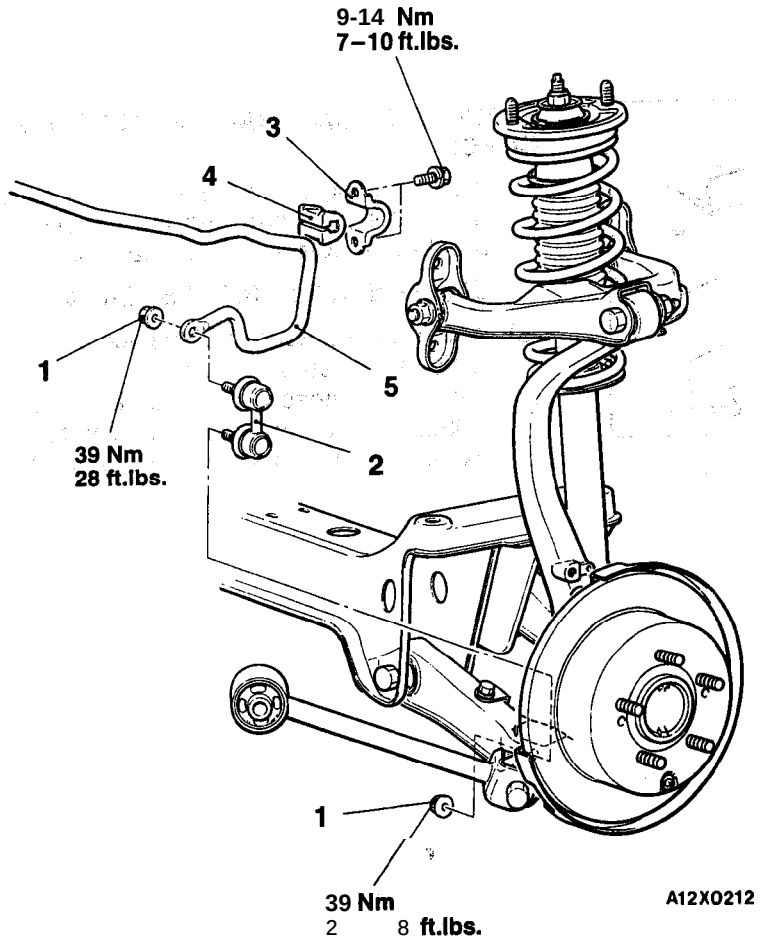

Removal steps

1. Stabilizer link mounting nuts
2. Stabilizer link
3. ▶A◀ Stabilizer bar bracket
4. Bushing
5. Stabilizer bar

TSB Revision

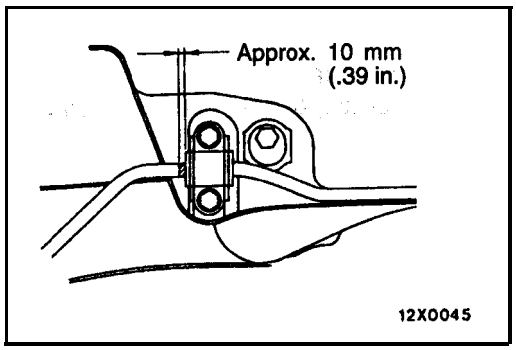

INSTALLATION SERVICE POINT

▶A◀ STABILIZER BAR BRACKET INSTALLATION

Position the stabillizer bar so that the making on the stabilizer bar and the edge of the bracket becomes the reference value, and then tighten the stabilizer bar bracket mounting bolt.

INSPECTION

34100570096

- Check the bushings for wear and deterioration.
- Check the stabilizer bar for deterioration or damage.
- Check all bolts for condition and straightness:-

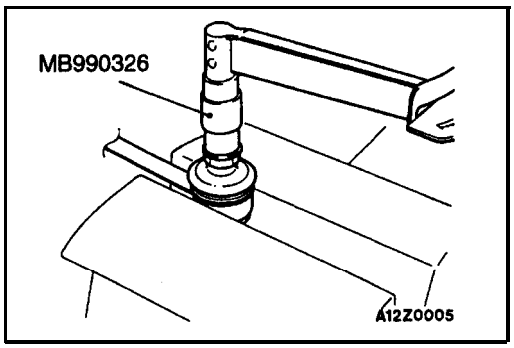

STABILIZER LINK BALL JOINT BREAKAWAY TORQUE CHECK

(1) After shaking the ball joint stud several times, install the nut to the stud and use the special tool to measure the breakaway torque of the ball joint.

Standard value: 0.5–1.5 Nm (4-13 in.lbs.)

(2) When the measured value exceeds the standard value, replace the stabilizer link.

(3) When the measured value is low'er than the standard value, check that the ball joint turns smoothly without excessive play. If so, it is possible to use that ball joint.

BALL JOINT DUST COVER CHECK

If there are any cracks in or damage to the dust cover, replace the stabilizer link.

TSB	Revision

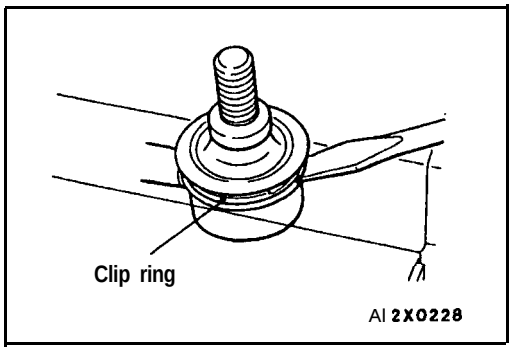

STABILIZER LINK BALL JOINT DUST COVER REPLACEMENT

34101090034

Replace the dust cover by the following procedure only if the dust cover has become damaged by accident during servicing.

(1) Remove the clip ring and the dust cover.

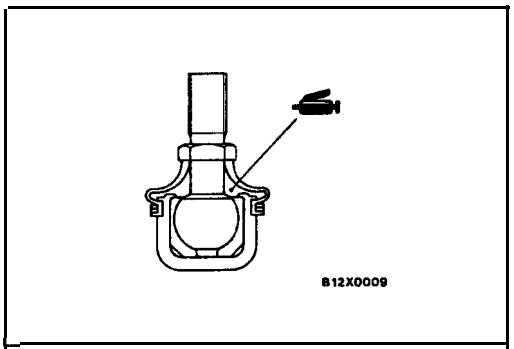

(2) Apply multi-purpose grease to the inside of the dust cover.

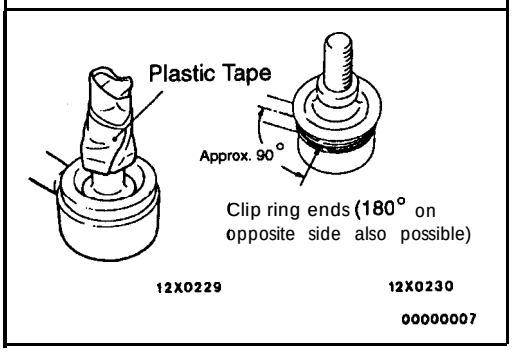

(3) Use plastic tape on the stabilizer link threads as shown in the illustration, and then install the dust cover to the stabilizer link.

(4) Secure the dust cover with the clip ring.

NOTE

When installing the clip ring, align the ends at a 90° angle from the axis of the stabilizer link.

NOTES

SERVICE BRAKES

CONTENTS

35109000111

NOTES

BASIC BRAKE SYSTEM

CONTENTS

35109000128

GENERAL INFORMATION

35100010069

SERVICE BRAKES

The brake system has high reliability and durability which maintains excellent braking performance.
The main features are as follows.

- A dual type master cylinder is equipped on all models.
- Both a single type and a tandem type brake booster have been adopted.
- Disc brakes has been adopted as the front brakes.
  AWD: Floating caliper, double-piston and ventilated disc (M-R56W)
  FWD: Floating caliper, single-piston and ventilated disc (M-R46V)
- Disc brakes has been adopted as the rear brakes. [Floating caliper, single-piston and solid disc (M-R45S)]

Items		Medium price	High price, Special price	Premium price – <FWD>	Premium price – <AWD>
Master cylinder	I.D. mm (in.)	23.8 (15/16) 25.4 (1)*	23.8 (15/16) 25.4 (1)*	23.8 (15/16) 25.4 (1)*	25.4 (1)
Brake booster	Effective diameter of power cylinder mm (in.)	230(9)	230(9) 180+205 (7+8)*	180+205 (7+8)	180+205 (7+8)
	Boosting ratio	6.0	6.0, 6.5*	6.5	6.5
Proportioning valve	Decompression ratio	0.25	0.25	0.25	0.25
Front brakes	Disc effective diameter mm (in.)	204 (8)	204 (8)	204 (8)	228 (9)
	Wheel cylinder I.D. mm (in.)	60.3 (2 3/8)	60.3 (2 3/8)	60.3 (2 3/8)	42.9 (1 11/16×2)
Rear drum brakes	Drum I.D. mm (in.)	229 (9)	–	–	–
	Wheel cylinder I.D. mm (in.)	19.1 (3/4)	–	–	–
	Lining thickness mm (in.)	4.9 (.193)	–	–	–
Rear disc brakes	Disc effective diameter mm (in.)	222 (8.7)	222 (8.7)	222 (8.7)	222 (8.7)
	Wheel cylinder I.D. mm (in.)	34.9 (1 3/8)	34.9 (1 3/8)	34.9 (1 3/8)	34.9 (1 3/8)

NOTE
*: Vehicles with ABS.

CONSTRUCTION DIAGRAM

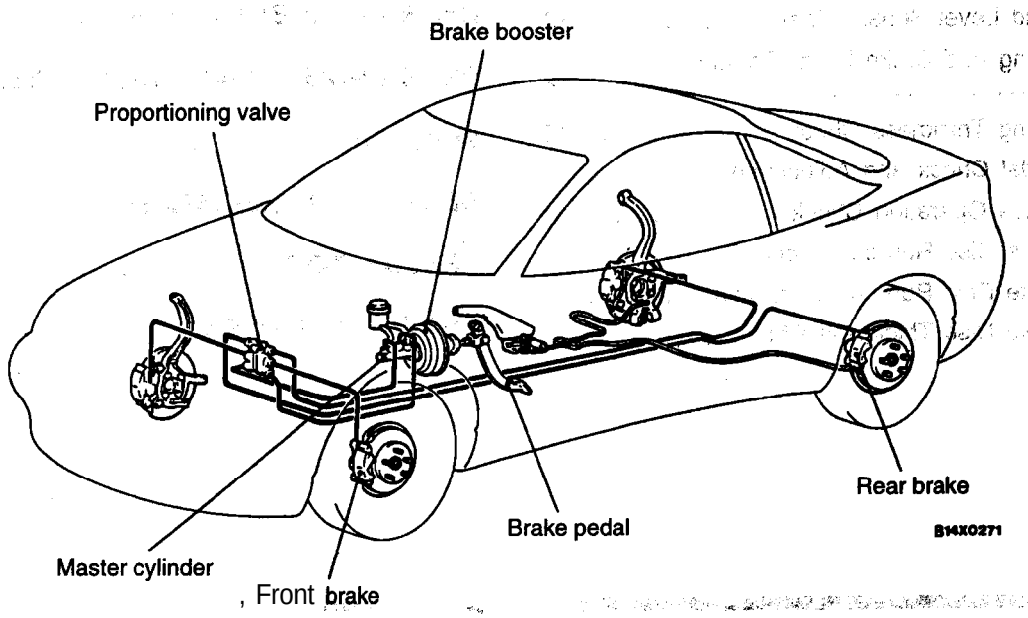

TSB Revision

SERVICE SPECIFICATIONS

35100030072

Items		Standard value	Limit
Brake pedal height mm (in.)		175–180 (6.9-7.1)	–
Brake pedal free play mm (in.)		3-8 (.12–.31)	
Brake pedal to firewall clearance mm (in.)		90 (3.5) or more	–
Output pressure of proportioning valve split point MPa (psi)	Vehicle without ABS	2.21–2.70 (320–391)	–
	Vehicle with ABS	2.70–3.19 (391–462)	–
Output pressure of proportioning valve output fluid pressure MPa (psi)	Vehicle without ABS	3.19-3.68 (462-533)	–
	Vehicle with ABS	3.92-4.41 (569–640)	–
Left/right proportioning valve output pressure difference MPa (psi)		–	0.4 (57)
Front disc brake pad thickness mm (in.)		10 (.39)	2.0 (.08)
Front disc brake drag force (tangential force of wheel mounting bolts) N (tbs.)		69 (15.4) or less	–
Front brake disc run-out mm (in.)			0.08 (.0031)
Front hub end play mm (in.)			0.05 (.0020)
Front brake disc thickness mm (in.)		24 (.94)	22.4 (.88)
Rear brake lining thickness mm (in.)			1.0 (.039)
Rear drum inside diameter mm (in.)			231 (9.1)
Rear disc brake pad thickness mm (in.)		10 (.39)	2.0 (.08)
Rear disc brake drag force (tangential force of wheel mounting bolts) N (lbs.)		69 (15.4) or less	–
Rear brake disc thickness mm (in.)		10 (.39)	8.4 (.33)
Rear brake disc run-out mm (in.)			9.08 (.0031)
Rear hub end play mm (in.)			0.05 (.0020)
Booster push rod to master cylinder piston clearance mm (in.)		0.65–0.85 (.0256–.0335)	

LUBRICANTS

35100040068

Items	Specified lubricant
Brake fluid	DOT3 or DOT4
Brake piston seal	Repair kit grease
Slide pin boot and slide pin bush inner surfaces	
Brake piston boot inner surfaces	
Lock pin boot inner surfaces	
Guide pin boot inner surfaces	
Piston boot mounting grooves	
Piston cup surface	
Rear brake shoe and backing plate contact surfaces	Brake grease SAE J310, NLGI No. 1
Shoe and lining assembly and auto adjuster assembly contact surfaces	
Shoe and lever assembly and auto adjuster assembly contact surfaces	

SEALANT

35100050061

Items	Specified sealant	Remarks
Thread part fitting	3M ATD Part No. 8861 or equivalent	Semi-drying sealant
Vacuum switch		

SPECIAL TOOLS

35100060057

Tool	Tool number and name	Supersession	Application
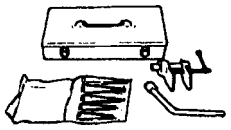	MB990964 MB990520 MB990620 Brake tool set	General service tool	Compressing front disc brake piston Installation of drum brake wheel cylinder piston cup
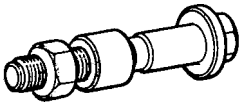	MB990998 Front hub remover and installer	MB990998-01	Removal and installation of front hub

TROUBLESHOOTING

35100070050

Symptom	Probable cause	Remedy
Vehicle pulls to one side when brakes are applied	Grease or oil on pad or lining surface	Replace
	Inadequate contact of pad or lining	Correct
	Auto adjuster malfunction	Adjust
	Drum out of round or uneven wear	Repair or replace as necessary
Insufficient braking power	Low or deteriorated brake fluid	Refill or change
	Air in brake system	Bleed air from system
	Overheated brake rotor due to dragging of pad or lining	Correct
	Inadequate contact of pad or lining	
	Brake booster malfunction	
	Clogged brake line	
	Grease or oil on pad or lining surface	Replace
	Proportioning valve malfunction	
	Auto adjuster malfunction	Adjust
ncreased pedal stroke (Reduced pedal to floorboard clearance)	Air in brake system	Bleed air from system
	Worn lining or pad	Replace
	Broken vacuum hose	
	Faulty master cylinder	
	Brake fluid leaks	Correct
	Auto adjuster malfunction	Adjust
	Excessive push rod to master cylinder clearance	
Brake drag	Incomplete release of parking brake	Correct
	Clogged master cylinder return port	
	Incorrect parking brake adjustment	Adjust
	Incorrect push rod to master cylinder clearance	
	Faulty master cylinder piston return spring	Replace
	Worn brake pedal return spring	
	Broken rear drum brake shoe return spring	
	Lack of lubrication in sliding parts	Lubricate

Symptom	Probable cause	Remedy
Insufficient parking brake function	Worn brake lining	Replace
	Grease or oil on lining surface	
	Parking brake cable sticking	
	Stuck wheel cylinder or caliper piston	
	Excessive parking brake lever stroke	Adjust the parking brake lever stroke or check the parking brake cable routing
	Auto adjuster malfunction	Adjust
Scraping or grinding noise when brakes are applied	Worn brake lining or pad	Replace
	Caliper to wheel interference	Correct or replace
	Dust cover to disc interference	
	Bent brake backing plate	
	Cracked drums or brake disc	
Squealing, groaning or chattering noise when brakes are applied	Missing or damaged brake pad anti-squeak shim	Replace
	Brake drums and linings, discs and pads worn or scored	Correct or replace
	Incorrect parts	
	Burred or rusted calipers	Clean or deburr
	Dirty, greased, contaminated or glazed linings	Clean or replace
	Drum brakes-weak, damaged or incorrect shoe hold-down springs, loose or damaged shoe hold-down pins and springs	Correct or replace
	Incorrect brake pedal or booster push rod setting	Adjust
Squealing noise when brakes are not applied	Bent or warped backing plate causing interference with drum	Replace
	Drum brakes-weak, damaged or incorrect shoe-to-shoe spring	
	Poor return of brake booster, master cylinder or wheel cylinder	
	Loose or extra brake parts	Retighten

Symptom	Probable cause	Remedy
Squealing noise when brakes are not applied	Improper positioning of pads in caliper	Correct
	Improper installation of support mounting to caliper body	
	Improper machining of drum causing interference with backing plate or shoe	Replace drum
	Disc brakes-rusted, stuck	Lubricate or replace
	Worn, damaged or insufficiently lubricated wheel bearings	
	Incorrect brake pedal or booster push rod setting	Adjust
Groaning clicking or rattling noise when brakes are not applied	Stones or foreign material trapped inside wheel covers	Remove stones, etc.
	Loose wheel nuts	Retighten
	Disc brakes-loose installation bolt	
	Worn, damaged or dry wheel bearings	Lubricate or replace
	Disc brakes-failure of anti-rattle shim	Replace
	Disc brakes-wear on sleeve	
	Incorrect brake pedal or booster push rod setting	Adjust

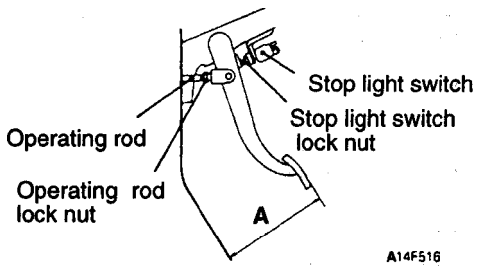

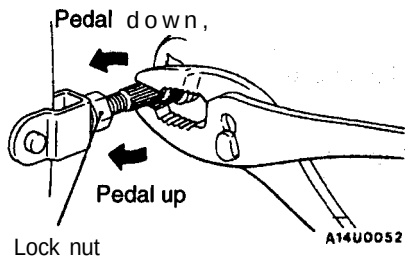

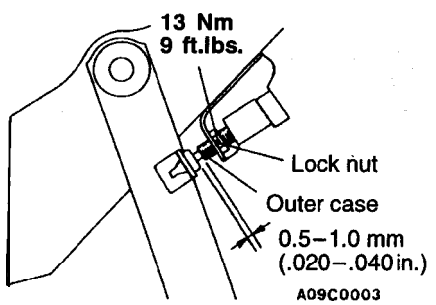

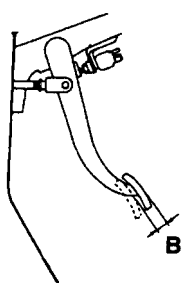

ON-VEHICLE SERVICE

35100090070

BRAKE PEDAL CHECK AND ADJUSTMENT

1. BRAKE PEDAL HEIGHT

(1) Turn up the carpet, etc. under the brake pedal.

(2). Measure the brake pedal "height as illustrated.

Standard value (A): 175–180 mm (6.9-7.1 in.)

(3). If the brake pedal height is'not within the standard; value, adjust as follows.

(a) Disconnect the stop light switch connector, loosen the lock nut, and move the stop light switch to a position 'where it does not contact the brake pedal arm,.,

(b) Adjust the brake pedal height by turning the operating rod with pliers (with the operating rod lock nut loosened), until the correct brake pedal height is obtained.

(c) Screw in the stop light switch until it contacts the brake, pedal- stopper (just before the brake pedal is caused to move). Back off the stop light switch 1/2 to 1 turn and secure by tightening the lock nut.

(d) Connect the connector of the stop light switch.

(e) Check to be sure. that, the stop light is not illuminated with the brake pedal released.

(4) For vehicles with A/T, check the shift locking mechanism.
(Refer to GROUP 23 – On-vehicle Service <2.0L Engine (Non-turbo)>.)
(Refer to GROUP 23 – On-vehicle Service <2.0L Engine (Turbo) and 2.4L Engine>.)

(5) Turn back the carpet, etc.

2. BRAKE PEDAL FREE PLAY

(1) With the engine stopped, press the brake pedal two or three times. After eliminating the vacuum in the power brake booster, press the pedal down by hand, and confirm that the amount of movement before feeling resistance (the free play) is within the standard value range.

Standard value (B): 3-8 mm (.12–.31 in.)

(2) If the free play exceeds the standard value, it is probably due to excessive play between the clevis pin and brake pedal arm.
Check for excessive clearance and replace faulty parts as required.

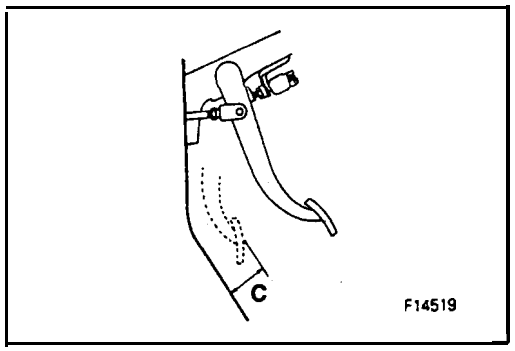

3. CLEARANCE BETWEEN BRAKE PEDAL AND FI REWALL
   (1) Turn up the carpet, etc. under the brake pedal,
   (2) Start the engine, depress the brake pedal with approximately 490 N (110 lbs.) of force.

   Standard value (C): 90 mm (3.5 in.) or more

   (3) If the clearance is less than the standard value, check for air trapped in the brake line, clearance between the lining and the drum, and dragging in the parking brake.
   Adjust and replace defective parts as required.
   (4) Turn back the carpet, etc.

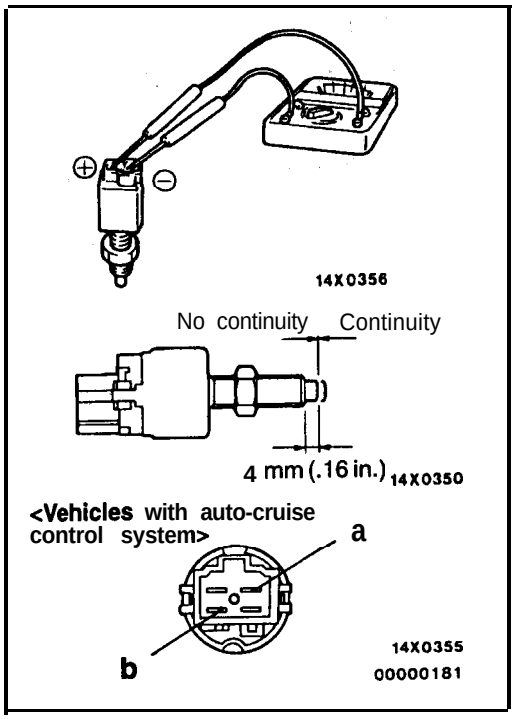

STOP LIGHT SWITCH CHECK

35100890069

Connect a circuit tester to the stop light switch, and check whether or not there! is continuity when the plunger of the stop light switch is pushed in and when it is released.
The stop light switch is in good condition if there is no continuity when the plunger is pushed in to a depth of within 4 mm (.16 in.) from the outer case edge surface, and if there is continuity when it is released.
For vehicles with auto-cruise control system, the check for continuity should be made at connectors "a" and "b" of the stop light switch.

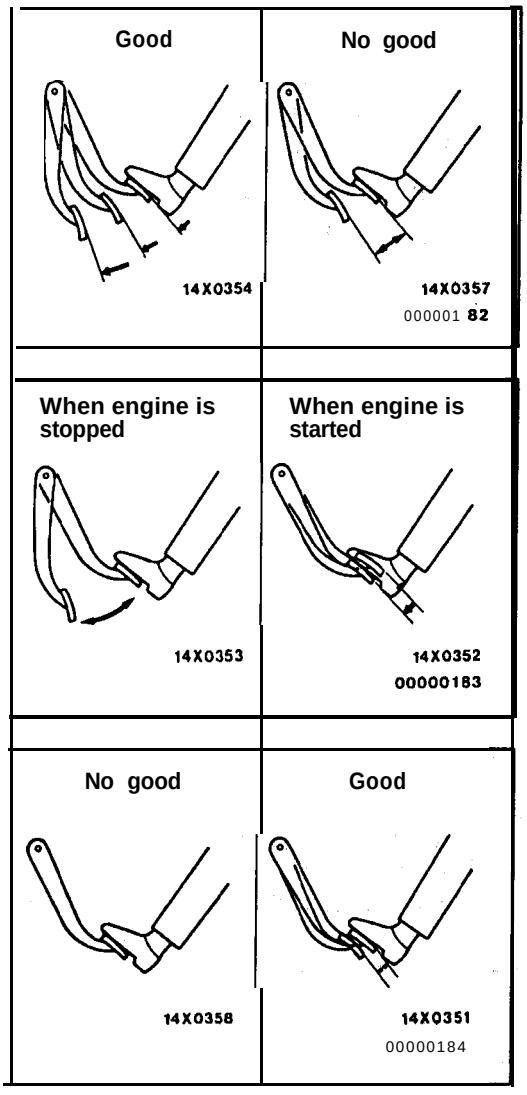

BRAKE BOOSTER OPERATING TEST 35100100063

For simple checking of the brake booster operation, carry out the following tests:

1. Run the engine for one or two minutes; and then turn the engine off.
   If the pedal depresses fully the first time but gradually becomes higher when depressed succeeding times, the booster is operating properly. If the pedal height remains unchanged, the booster is defective.

2. With the engine stopped, step on the brake pedal several times.
   Then step on the brake pedal and start the engine.
   If the pedal moves downward slightly, the booster is in good condition. If there is no change, the booster is defective.

3. With the engine running, step on the' brake pedal and' then stop the engine.
   Hold the pedal depressed for 30 seconds. If the pedal, height does not change, the booster is in good condition. If the pedal rises, the booster is defective.
   Brake booster performance is satisfactory if it passes all three operating tests.
   If the brake booster does not pass all three tests, there' may be a fault in the check valve, vacuum hose or in the booster itself.

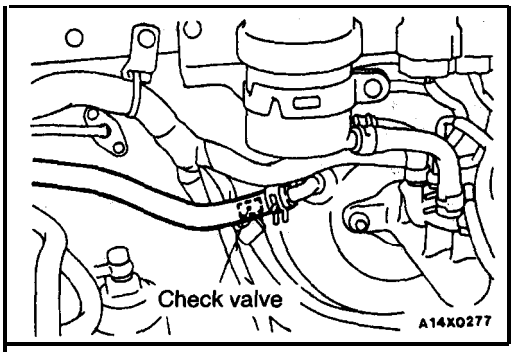

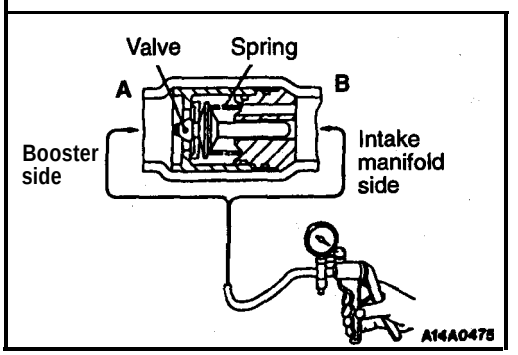

CHECK VALVE OPERATION CHECK 35100900076

When checking the check valve, keep the check valve fit in the vacuum hose.,

1. Remove the vacuum hose.

   NOTE
   The check valve is press-fitted inside the vacuum hose.

2. Check the operation of the check valve by using a vacuum pump.

Vacuum pump connection	Accept/reject criteria
Connection at the brake A booster side (A)	negative pressure (vacuum) is created and held.
Connection at the intake A manifold side (B)	negative pressure (vacuum) is not created.

Caution
If the check valve is defective, replace it as an assembly unit together with the vacuum hose.

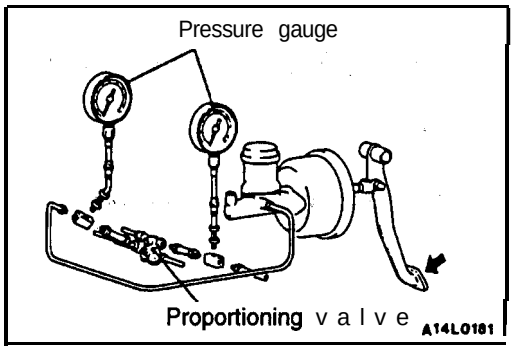

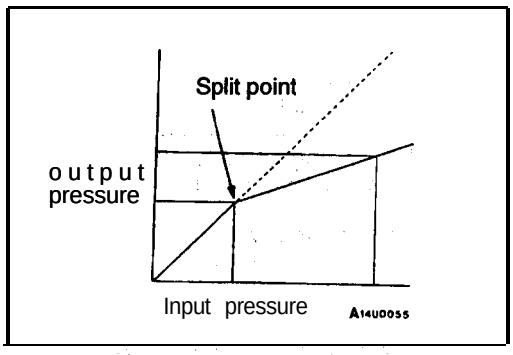

PROPORTIONING VALVE FUNCTION TEST

35100110066

1. Connect two pressure gauges, one each to the input side and output side of the proportioning valve, as shown.
2. Air bleed the brake line and the pressure gauge.
3. While gradually depressing: the brake pedal, make the following measurements and' check to be sure that the measured values are within, the allowable range.

(1) Output pressure 'begins to" drop relative 'to input pressure (split point).

Standard value:

MPa(psi)

Vehicles without ABS	Vehicles with ABS
2.21–2.70 (320–391)	2.70–3.19 (391–462)

(2) Check that the output fluid pressure is at the standard value when the input fluid pressure increases; according to the table below.

Standard value:

MPa(psi)

Items	Vehicles without ABS	Vehicles with ABS
Input fluid pressure	6.07 (925)	6.86 (996)
Output fluid pressure	3.19–3.68 (462-533)	3.92-4.41 (569–640)

(3) Output pressure difference between left and right brake lines

Limit: 0.4 MPa (57 psi)

4. If the measured pressures are not within allowable ranges, replace the proportioning valve.

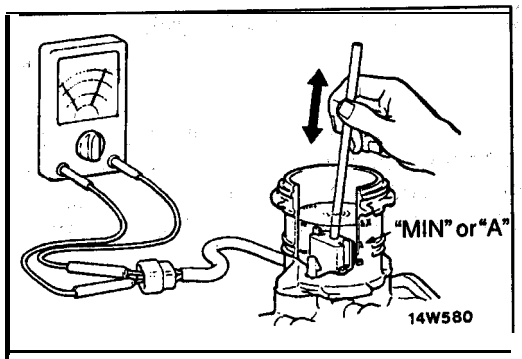

BRAKE FLUID LEVEL SENSOR CHECK 35190919953

The brake fluid level sensor is in good condition if there is no continuity when the float surface is above "MIN" or "A" and if there is continuity when the float surface is below "MIN or "A".

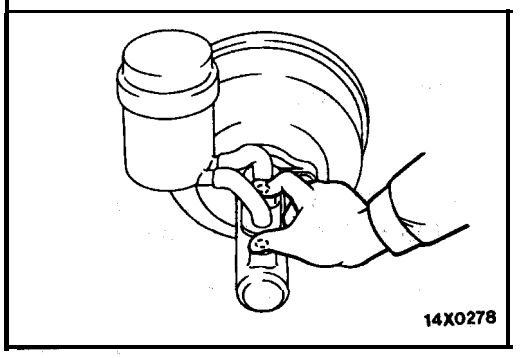

BLEEDING 35199149955

Caution

Use the specified brake fluid. Don't use a mixture of the specified brake fluid and another non-specified fluid.

Specified brake fluid: DOT3 or DOT4

MASTER CYLINDER BLEEDING

The master cylinder has no check valve, so if bleeding is carried out by the following procedure, bleeding of air from the brake line will become easier.

(1) Fill the reserve tank with brake fluid.
(2). Keep the brake pedal depressed.
(3) Have another person cover the master cylinder outlet with a finger.
(4) With the outlet still closed, release the brake pedal.
(5) Repeat steps (2)–(4) three or four times to fill the inside of the master cylinder with brake fluid.

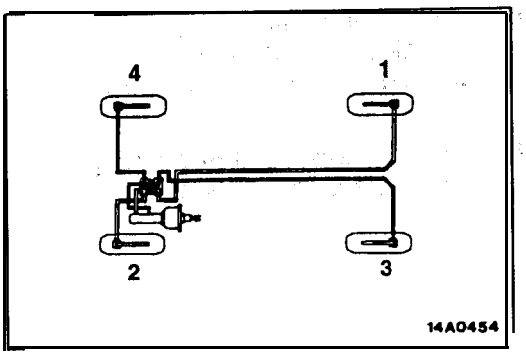

BRAKE LINE BLEEDING

Start the engine and bleed the air in the sequence shown in the figure.

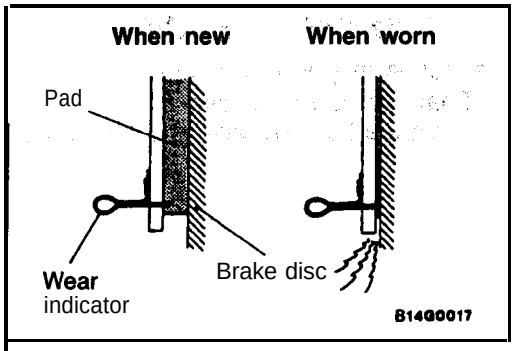

FRONT DISC BRAKE PAD CHECK AND REPLACEMENT

35100150075

NOTE

The brake 'pads have wear indicators that contact the brake disc when 'the brake pad thickness becomes 2 mm (.08 in.). The wear indicators emit a squealing sound to warn the driver to have the pads replaced and to h&e the brake system checked.

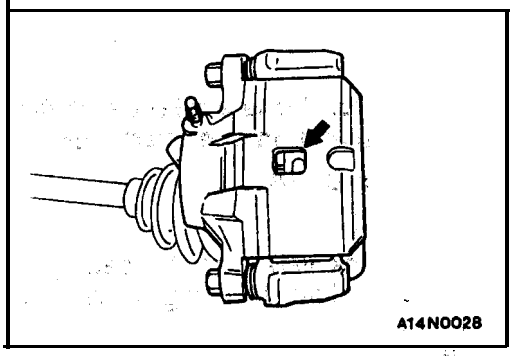

1. Check. brake pad. thickness through caliper body check port.

   Standard' value: 10 mm (.39 in.)
   Limit: 2.0 mm (.08 in.)

   Caution
   1. **When the limit is exceeded, the brake pads on both the left and right wheels must be replaced as a set.**
   2. **If there is, a significant difference in the thicknesses of the pads on the left and right sides, check the sliding condition- of -the piston, lock pin and guide pin.**

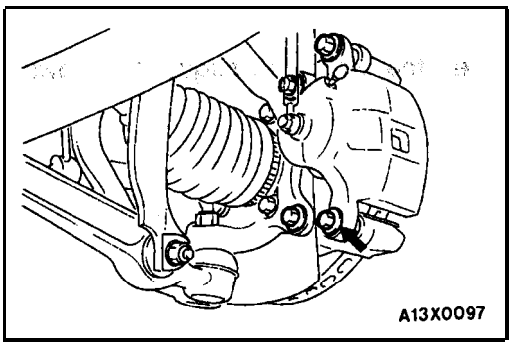

2. Remove guide pin. Lift caliper assembly, slide the" assembly toward, the inside of the wheel well until separated from the lock pin. Support it with wires.

   Caution
   Do **not wipe off the special grease that is on the guide pin or allow it to contaminate the lock pin.**

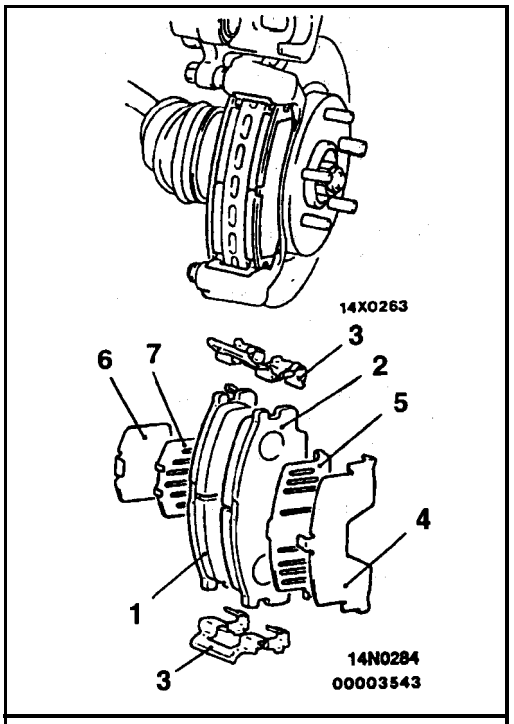

3. Remove the following parts from caliper support.
   1. Pad and wear indicator assembly
   2. Pad assembly
   3. Clip
   4. Outer shim (stainless)
   5. Outer shim (coated with rubber)
   6. Inner shim (stainless)
   7. Inner shim (coated with rubber)

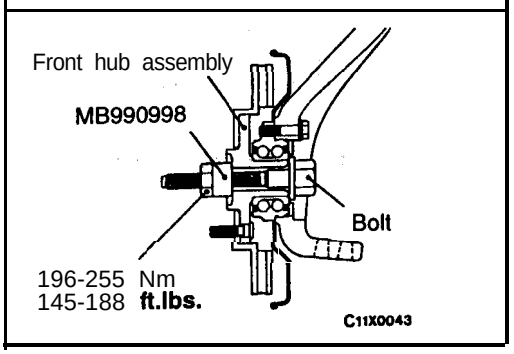

4. Take out the drive shaft. (Refer to GROUP 26 – Drive Shaft <FWD>.)(Refer to GROUP 26 – Drive Shaft <AWD>.)
5. Set the special tool to the front hub assembly as shown in the illustration.'

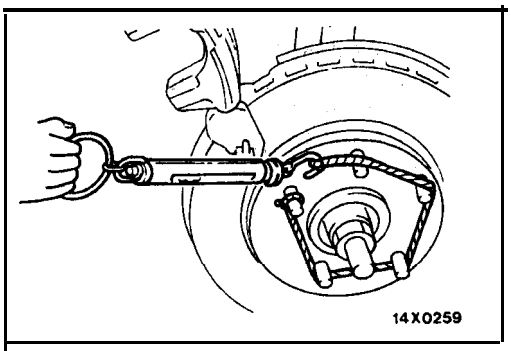

6. Measure hub torque (A) with pads removed to measure brake drag torque. Torque value will be used later to calculate brake drag force with the pads installed.

   NOTE
   Tighten the nuts in order to secure the disc to the hub.
7. Securely attach the pad clip to the caliper support.

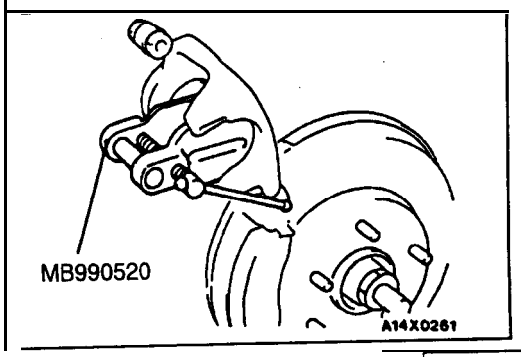

8. Clean piston and insert into cylinder (caliper) with special tool.

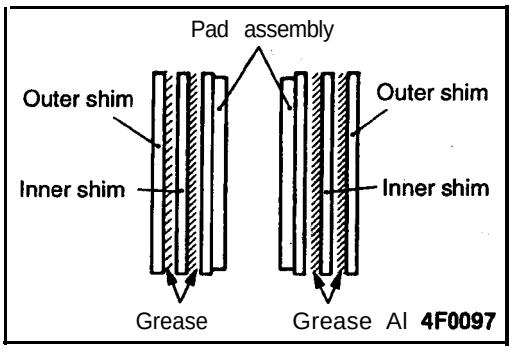

9. Apply grease to the attaching faces of pad and inner shim and to the attaching faces of inner and outer shims. Apply so as not to spread it out from the edge of shim.'

   Specified grease:
   Brake grease SAE J310, NLGI No.1

   Caution
   1. **Do, not deposit grease or other dirt on pad or brake disc friction surfaces'.**
   2. **The grease should be applied so that it does not protrude from the shim surfaces.**

10. Be careful that the piston boot does not catch and tear as the caliper assembly and lock' pin are installed.
11. Check brake drag torque as follows.
    (1) Start engine and hold brake pedal down for 5 seconds. [Pedal depression force: approx. 196 N (44 lbs.)]
    (2) Stop engine.
    (3) Turn brake disc forward. 10 times,

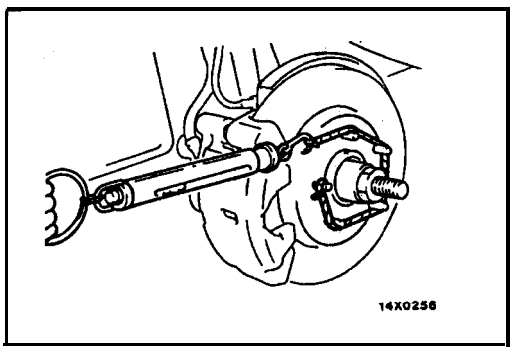

    (4) Check hub torque (B) with spring scale.
    (5) Calculate the drag torque of the disc brake [difference between hub torque (B) and hub torque (A)].

    Standard value:
    69 N (15.4 lbs.) [4 Nm (35 in.lbs.)] or less

12. If the difference between brake drag torque'and hub torque exceeds the standard value, disassemble piston and clean the piston. Check for corrosion or worn piston seal, and check the sliding condition of the lock pin and guide pin.
13. Reinstall the drive shaft. (Refer -to GROUP 26 – Drive Shaft <FWD>.)(Refer to GROUP 26 – Drive Shaft <AWD>.)

FRONT DISC BRAKE ROTOR CHECK

35100270047

Caution

To maintain safe braking performance, the disc brake rotors must be kept within allowable service specifications.

Before re-finishing or re-processing the brake disc surface, the following conditions should be checked.

Inspection items	Remarks
Scratches, rust, saturated lining materials and wear	• If the vehicle is not driven for a certain period, the sections of the discs that are not in contact with lining will become rusty, causing noise and shuddering. • If grooves resulting from excessive disc wear and scratches are not removed prior to installing a new pad assembly, there will momentarily be inappropriate contact between the disc and the lining (pad).
Run-out or drift	Excessive run-out or drift of the discs will increase the pedal depression resistance due to piston knock-back.
Change in thickness (parallelism)	If the thickness of the disc changes, this will cause pedal pulsation, shuddering and surging.
Inset or warping (flatness)	Overheating and improper handling while servicing will cause inset or warping.

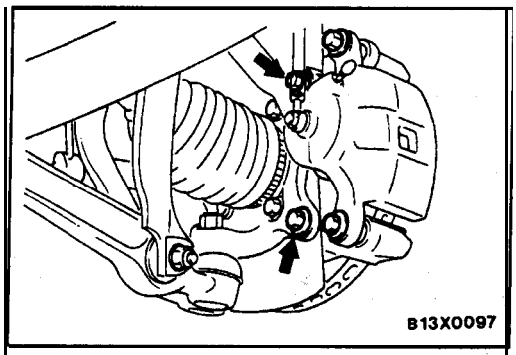

FRONT BRAKE DISC RUN-OUT' CHECK 35100170064

1. Remove the caliper support bolts, then raise the' caliper assembly upward and secure by using wire.
2. Inspect the disc surface for grooves, cracks, and rust. Clean the disc thoroughly and remove all rust.

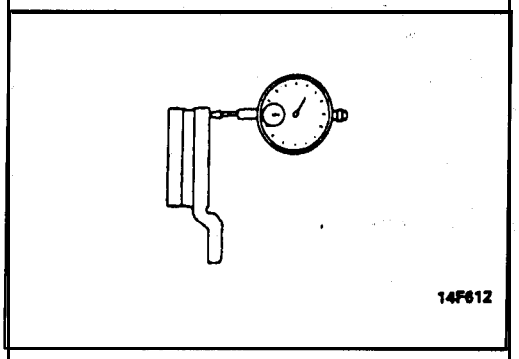

3. Place a dial gauge approximately 5 mm (.2 in.) from the outer circumference of the brake disc, and measure- the. runout of the disc

   Limit: 0.06 **mm (.0031 in.)**

   N O T E
   Tighten the nuts in order to secure! the disc to the hub.

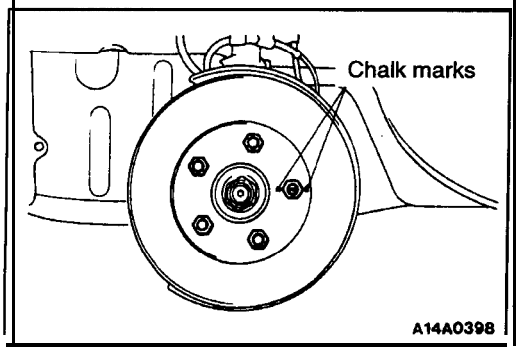

FRONT BRAKE DISC RUN-OUT CORRECTION

35100180111

1. If the run-out of the brake disc is equivalent to or exceeds the limit specification, change the phase of the disc and hub, and then measure the run-out again.
   (1) Before removing the brake disc, chalk both sides of the wheel stud on the side at which run-out is greatest.

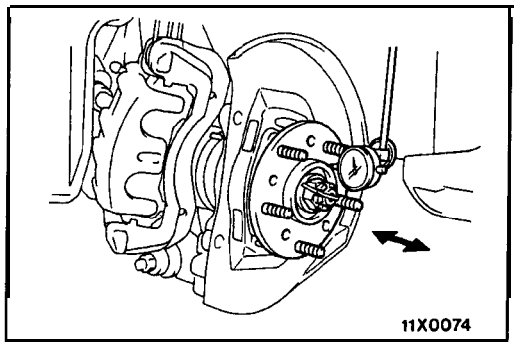

   (2) Remove the brake disc, and then place a dial gauge as shown in the illustration; then move the hub in the axial direction and measure the play.

   Limit: 0.05 mm (.0020 in.)

   If the play is equivalent to or exceeds the limit, disassemble the hub knuckle and check each part.

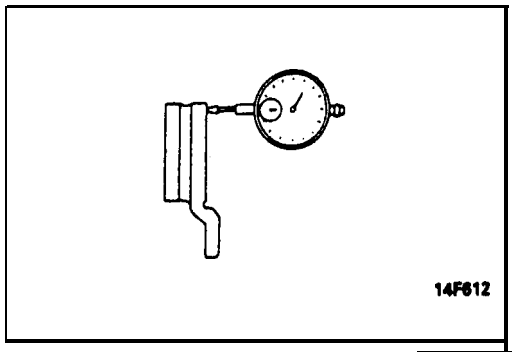

   (3) If the play does not exceed the limit specification, install the brake disc at a position 180° away from the chalk mark, and then check the run-out of the brake disc once again.
2. If the run-out cannot be corrected by changing the phase of the brake disc, replace the brake disc or turn rotor with an on the car type brake lathe ("Accuturn-8750" or equivalent). Be sure to follow the exact brake lathe manufacturer instructions. Rotors turned on the vehicle will often have a lower run-out than a new brake disc.

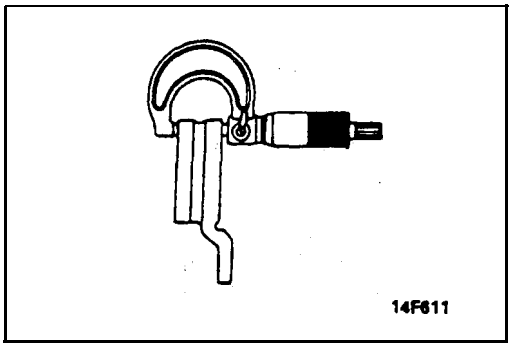

FRONT BRAKE DISC THICKNESS CHECK

35100160122

1. 'Using a micrometer, measure disc thickness at eight positions, approximately 45° apart and 10 mm (.39 in.) in from the outer edge of the disc.

   Brake disc thickness
   Standard value: 24 mm (.94 in.)
   Limit: 22.4 mm (.88 in.)

   Thickness variation (at least 8 positions)
   The difference between any thickness measurements should not be more than 0.015 mm (.0006 in.).

2. If the disc is beyond the limits for thickness, remove it and install a new one. If thickness variation exceeds the specification, replace the brake disc or turn rotor with an on the car type brake, lathe ("Accuturn-8750" or, equivalent). Be sure to follow the exact brake lathe manufacturer instructions.

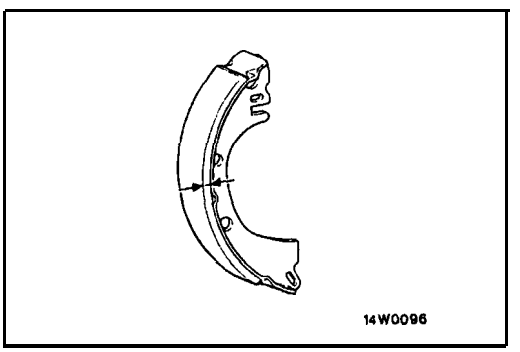

BRAKE LINING THICKNESS CHECK

35100300081

1. Remove the brake drum.
2. Measure the wear of the brake lining at the place worn the most.

   Limit: 1.0 mm (.039 in.)

   Replace the shoe and lining assembly if any location of the brake lining thickness is less than the limit. For information concerning the procedures for installation of the shoe and lining assembly, refer to P. **35A-40.**

   Caution
   1. Whenever the shoe and lining assembly is replaced, replace both RH and LH assemblies as a set to prevent car from pulling to one side when braking.
   2. if there is a significant difference in the thicknesses of the shoe and lining assemblies on the left and right sides, check the sliding condition of the wheel cylinder piston.

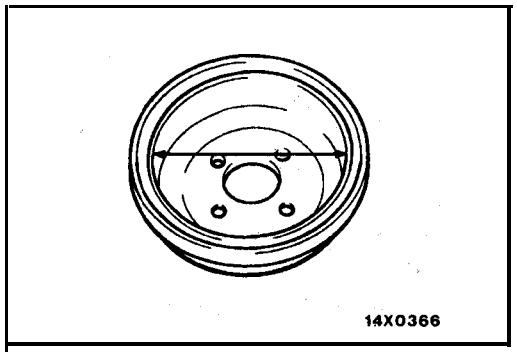

BRAKE DRUM INSIDE DIAMETER CHECK 35100320063

<VEHICLES WITH REAR DRUM BRAKES>

1. Remove the brake drum.
2. Measure the inside diameter of the hub and drum at two or more locations.

   Limit: 231 mm (9.1 in.)

3. Replace brake drums, shoe and lining assemblies when wear exceeds the limit value or is badly out of balance.

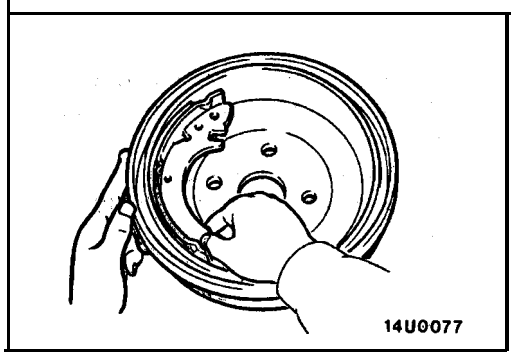

BRAKE LINING AND BRAKE DRUM CONTACT CHECK 35100310077

1. Remove the brake drum.
2. Remove the shoe and lining assembly. (Refer to P. 35A-40.)
3. Chalk inner surface of brake drum and rub with shoe and lining assembly.
4. Replace shoe and lining assembly or brake drum if very irregular contact area is observed.

   NOTE
   Clean off chalk after check.

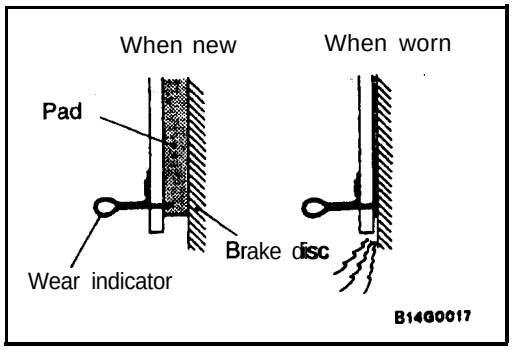

REAR DISC BRAKE' PAD CHECK AND REPLACEMENT

35100190046

NOTE
The brake pads have wear indicators that contact the brake disc when the brake pad thickness becomes 2 mm (.08 in.). The wear indicators emit a squealing sound to warn the driver to have the pads replaced and to have the brake system checked.

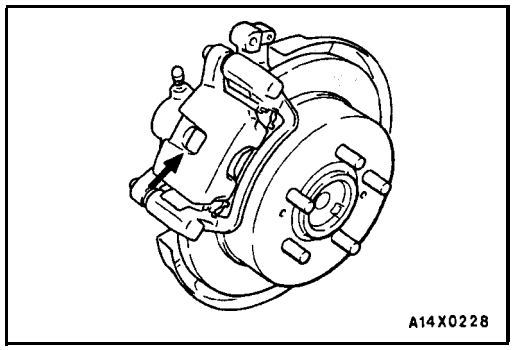

1. Check brake pad thickness through caliper body check port.

   Standard value: 10 mm (.39 in.)
   Limit: 2.0 mm (.08 in.)

   Caution
   1. When the limit is exceeded, the brake pads on both the left and right wheels must be replaced as a set.
   2. If there is a significant difference in the; thicknesses of the pads on the left and right sides, check the sliding condition of the piston, lock pin sleeve and guide pin sleeve.

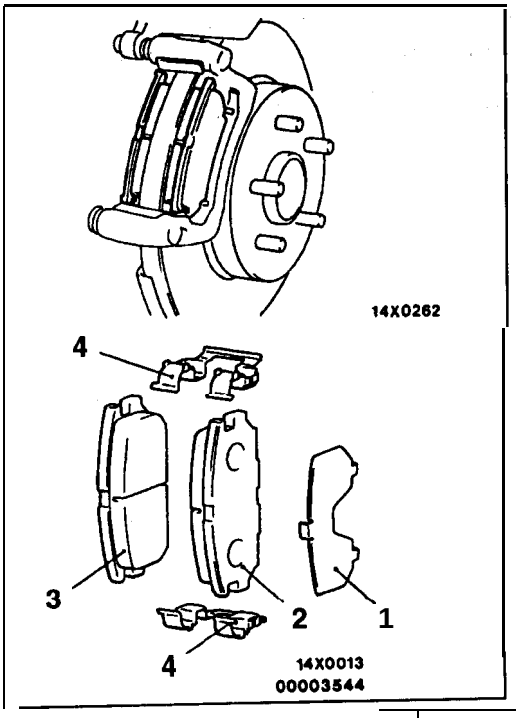

2. Remove guide pin. Lift caliper assembly, slide the assembly toward the inside of the wheel well until separated from the lock pin. Support it with wires.

   Caution
   Do not wipe off the special grease that is on the guide pin or allow it to contaminate the guide pin.

3. Remove the following parts from caliper support.
   1. Outer shim
   2. Pad assembly
   3. Pad and wear indicator assembly
   4. Clip

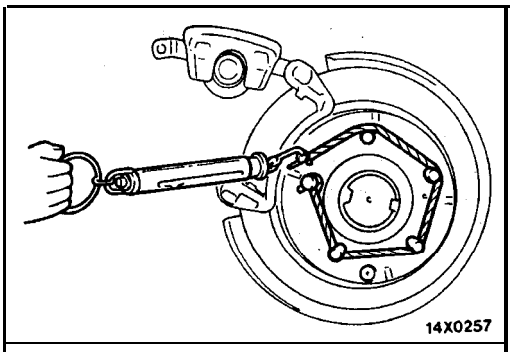

4. Measure hub torque (A) with pads removed to measure -brake drag torque. Torque value (A) will be used later to calculate brake drag force with the pads installed.

NOTE
To secure the disc to the hub, tighten the nuts.

5. Securely attach the pad clip to the caliper support.

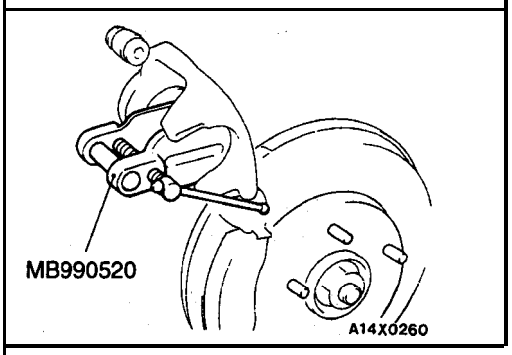

6. Clean the piston; then use the special tool to thread the piston into the cylinder (caliper).
7. Be careful that the piston boot does not catch and tear as the caliper assembly and lock pin are installed.

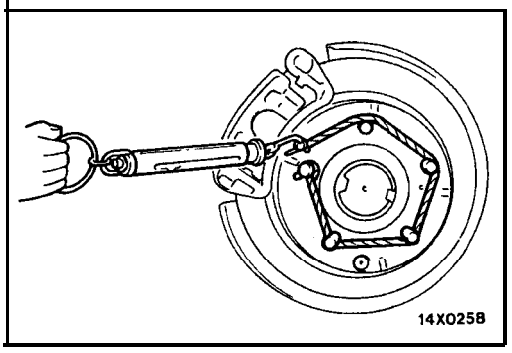

8. Check brake drag torque as follows.
   (1) Start engine and hold brake pedal down for 5 seconds. [Pedal depression force: approx. 196 N (44 lbs.)]
   (2) Stop engine.
   (3) Turn brake disc forward 10 times.
   (4) Check brake hub torque (B) with spring scale.
   (5) Calculate the drag torque of the disc brake [difference between hub torque (B) and hub torque (A)].

   Standard value:
   69 N (15.4 lbs.) [4 Nm (35 in.lbs.)] or less

9. If the difference between brake drag torque and hub torque exceeds the standard value, disassemble piston and clean piston. Check for corrosion or worn piston seal, and check' the sliding condition of the lock pin and' guide pin.

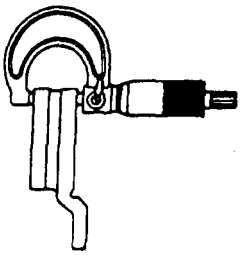
14F611

REAR BRAKE DISC THICKNESS CHECK

35100200046

1. Remove dirt and rust from brake disc surface.
2. Measure disc thickness at 4 locations or more.

   Standard value: 10 mm (.39 in.)

   Limit: 8.4 mm (.33 in.)

   Replace the discs and pad assembly for both sides left and right of the vehicle if they are worn beyond the specified limit.

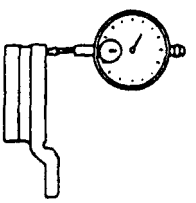
14F612

REAR BRAKE DISC RUN-OUT CHECK 35100210049

1. Remove the caliper support, raise the caliper assembly, and secure it by using a wire, etc.
2. Place a dial gauge, approximately 5 mm (.2 in.) from the outer circumference of the brake disc, and measure the run-out of the disc."

   Limit: 0.08 mm (.0031 in.)

   NOTE
   To secure the disc to the hub, tighten the nuts.

REAR BRAKE DISC RUN-OUT CORRECTION

35100220042

1. If the run-out of the brake disc is equivalent to or exceeds the limit specification, change the phase of the disc and hub, and then measure the run-out again.

   NOTE
   The procedures for checking and changing the rear disc phase are the same as those for the front brake discs. However, the play (limit value) in the hub axial direction is different. (Refer to P. 35A-18.)

   Limit: 0.05 mm (.0020 in.)

2. If the problem cannot be corrected by changing the phase of the brake disc, replace the disc or turn rotor using an on the car type brake lathe. Be sure to follow the exact brake lathe manufacturer instructions. Rotors turned on the vehicle will often have a lower' run-out than a new brake disc.

BRAKE PEDAL

35100340103

REMOVAL AND INSTALLATION

Post-installation Operation
- Brake Pedal Adjustment (Refer to **P.35A-8.**)

<M/T>

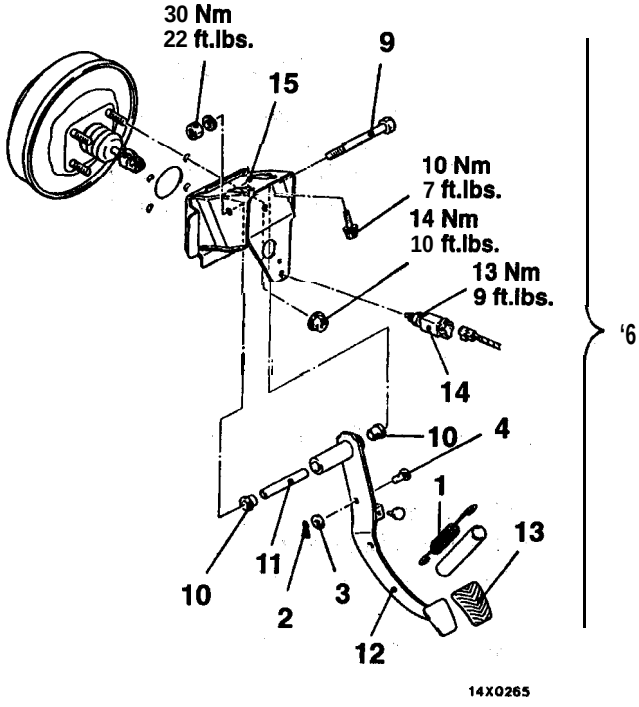

<A/T>

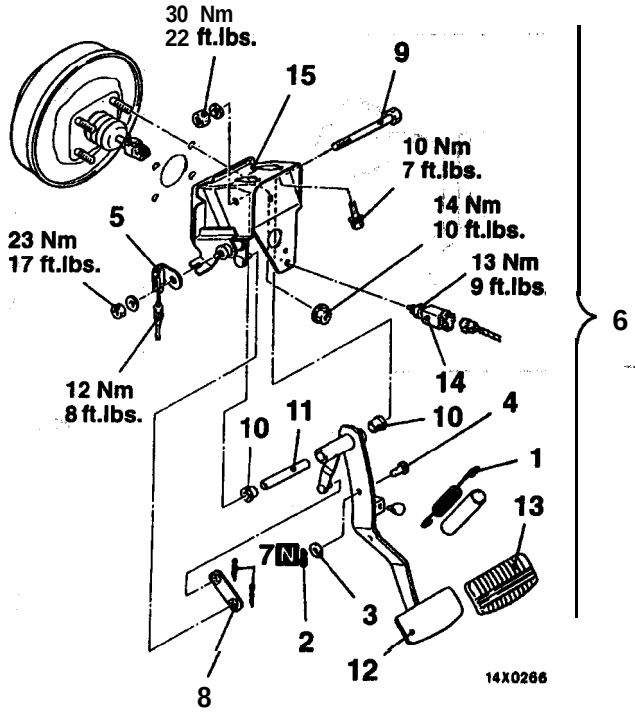

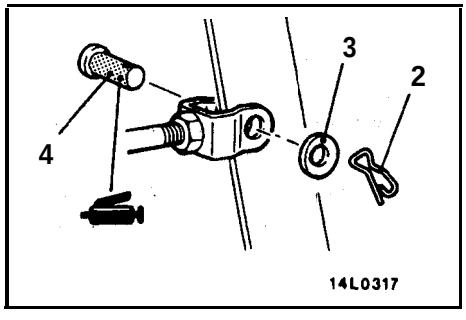

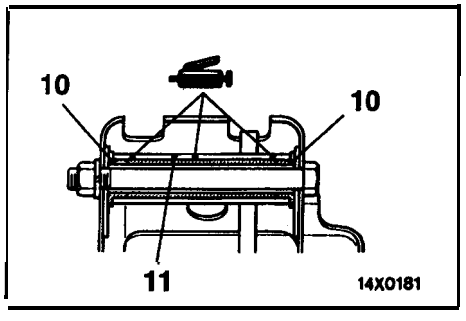

00000067

Removal steps

1. Brake pedal return spring
2. Snap pin
3. Washer
4. Clevis pin
5. Shift lock cable connection
6. Brake pedal assembly
7. Cotter pin
8. Link assembly
9. Brake pedal shaft bolt
10. Bushing
11. Spacer
12. Brake pedal
13. Pedal pad
14. Stop light switch
15. Pedal support member assembly

TSB Revision

MASTER CYLINDER AND BRAKE BOOSTER

35100370198

REMOVAL AND INSTALLATION

Pre-removal Operation
- Brake Fluid Draining
- Clutch Fluid Reservoir Bracket <M/T> (Refer to GROUP 21A – Clutch Control.)
- Battery Removal <2.0L Engine (Non-turbo)>
- Relay Assembly Mounting Bolts Removal <2.0L Engine (Non-turbo)>
- Washer Tank Mounting Bolts Removal <2.0L Engine (Non-turbo)>
- Centermember Assemblv Mounting Bolts Removal <2.0L Engine (Turbo) arid 2.4L Engine> (Refer to GROUP 32 – Engine Roll Stopper, Centermember.)
- Engine Mount Bracket Removal <2.0L Engine (Turbo) and 2.4L Engine> (Refer to GROUP 32 – Engine Mounting.)
- Air Conditioning Compressor Mounting Bolts Removal <2.0L Engine (Turbo) and 2.4L Engine> (Refer to GROUP 55 – Compressor and Tension Pulley.)
- Air Conditioning High Pressure Hose Clamp Mounting Bolts Removal<2.0L Engine (Turbo) and 2.4L Engine>
- Power Steering Pressure Hose, Pipe and Return Pipe Clamp Mounting Bolts Removal <2.0L Engine (Turbo) and 2.4L Engine> (Refer to GROUP 37A – Power Steering Hoses.)

Post-installation Operation
- Power Steering Pressure Hose, Pipe and Return Pipe Clamp Mounting Bolts Installation <2.0L Engine (Turbo) and 2.4L Engine> (Refer to GROUP 37A – Power Steering Hoses.)
- Air Conditioning High Pressure Hose Clamp Mounting Bolts Installation <2.0L Engine (Turbo) and 2.4L Engine>
- Air Conditioning Compressor Mounting Bolts Installation <2.0L Engine (Turbo) and 2.4L Engines (Refer to GROUP 55 – Compressor and Tension Pulley.)
- Engine Mount Bracket Installation <2.0L Engine (Turbo) and 2.4L Engine> (Refer to GROUP 32 – Engine Mounting.)
- Centermember Assembly Mounting Bolts Installation <2.0L Engine (Turbo) and 2.4L Engine> (Refer to GROUP 32 – Engine Roll Stopper Centermember.)
- Washer Tank Mounting Bolts Installation <2.0L Engine (Non-turbo)>
- Relay Assembly Mounting Bolts Installation <2.0L Engine (Non-turbo)>
- Battery Installation<2.0L Engine (Non-turbo)>
- Clutch Fluid Reservoir Bracket <M/T> (Refer to GROUP 21A – Clutch Control.)
- Brake Fluid Supplying
- Brake Line Bleeding (Refer to P.35A-13.)
- Brake Pedal Adjustment (Refer to P.35A-8.)

Flared brake line nuts

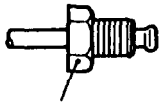

15 Nm
11 ft.lbs.

14X0343

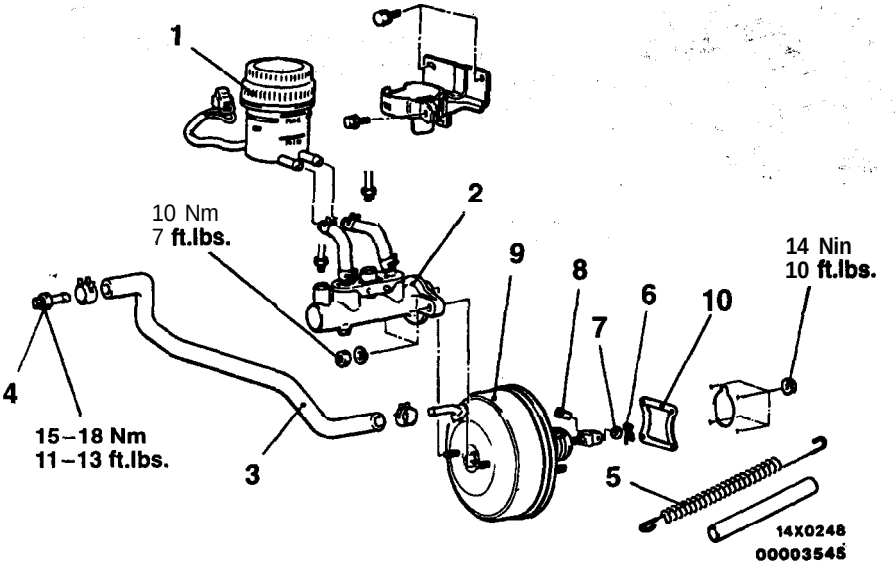

Master cylinder removal steps

1. Reservoir
2. Master cylinder

▶B◀ • Adjustment of clearance between brake booster push rod and primary piston

Caution
The check valve should not be removed from the vacuum hose. If the check valve is **defective, replace it together** with the vacuum hose.

Brake booster removal steps

2. Master cylinder

▶B◀ • Adjustment of clearance between brake booster push rod and primary piston

▶A◀ 3. Vacuum hose (With built-in check valve)
4. Fitting
5. Brake pedal return spring
6. Snap pin
7. Washer
8. Clevis pin
9. Brake booster
10. Sealer

Grease points

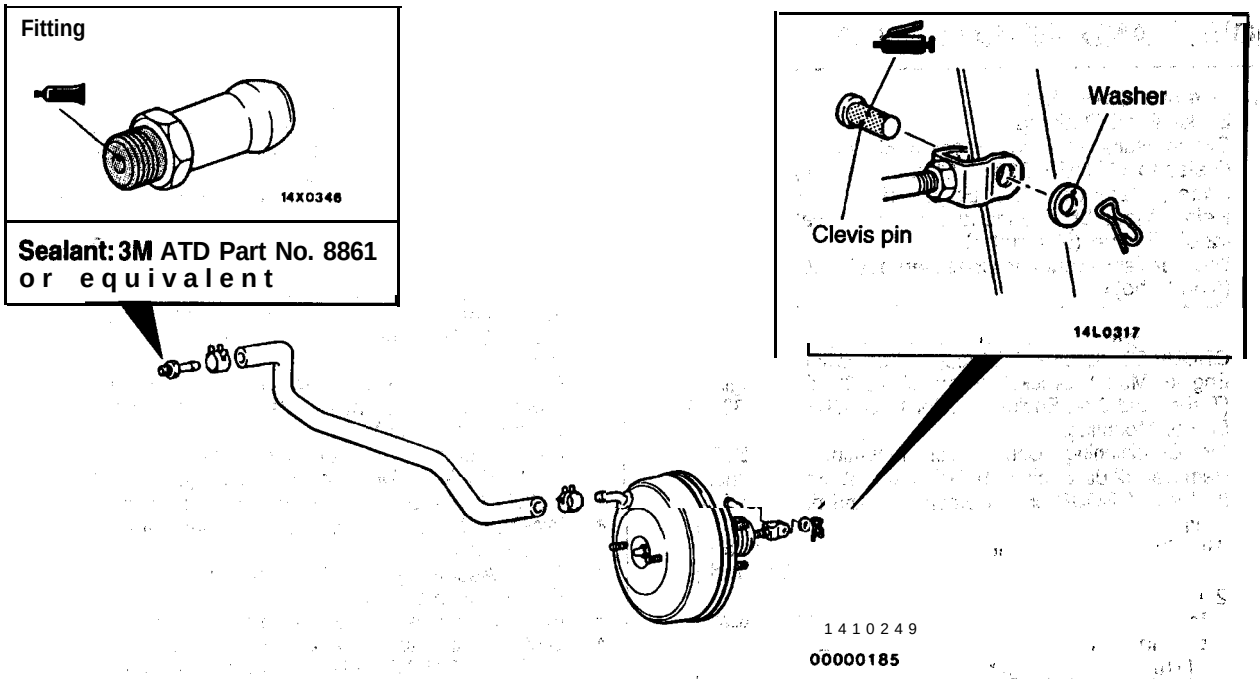

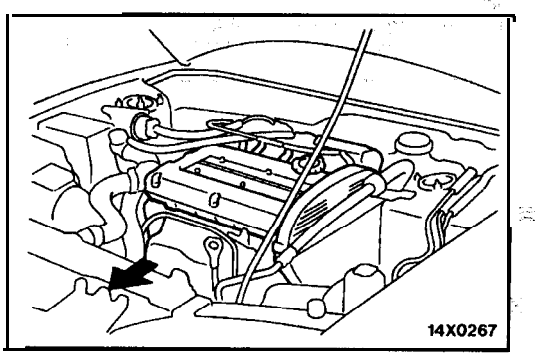

REMOVAL SERVICE POINT

◀A▶ BRAKE BOOSTER REMOVAL <2.0L Engine (Turbo) and 2.4L Engine>

Slide the engine forward and remove the brake booster from the body.

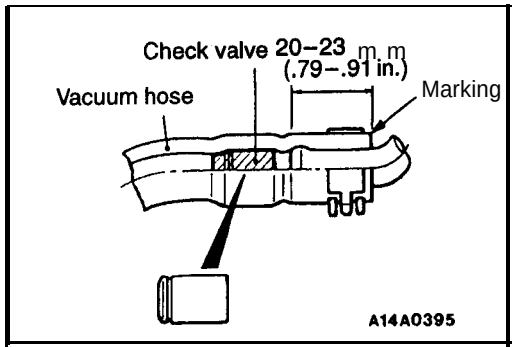

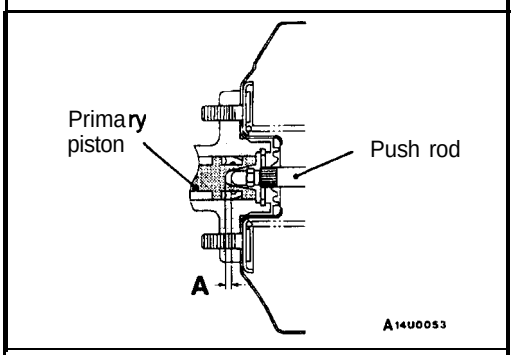

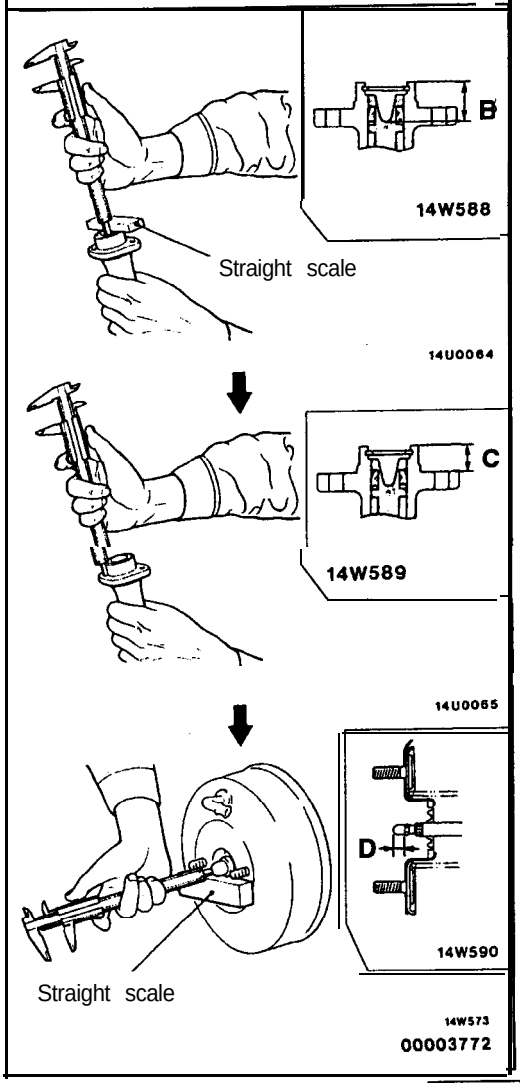

INSTALLATION SERVICE POINTS

▶A◀ VACUUM HOSE CONNECTION

(1) Install the vacuum hose to the brake booster nipple as shown in the figure. Secure the hose with the hose clip.

Caution

1. The check valve and the pipe part of the brake booster must not contact each other.

2. Connect so that the marking faces upwards.

(2) Install the other end of the vacuum hose fully onto its port on the engine. Secure the hose using the hose clip.

▶B◀ CLEARANCE ADJUSTMENT BETWEEN BRAKE BOOSTER PUSH ROD AND PRIMARY PISTON

Adjust the clearance (A) between the brake booster push rod and primary piston as follows:

Calculate clearance A from the B, C and D measurements.
A = B – C – D

Standard value: 0.65–0.85 mm (0.256–.0335 in.)

NOTE
When brake booster negative pressure 67 kPa (9.7 psi) is applied, clearance value will become 0.1–0.3 mm (.004–.012 in.)

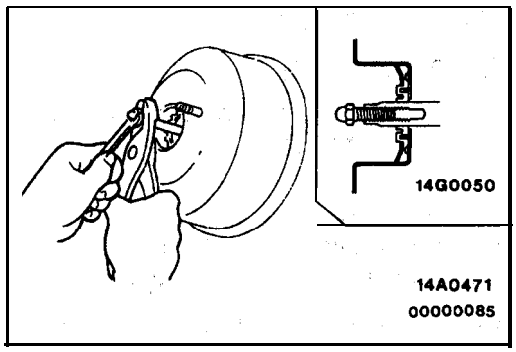

If the clearance is not within the standard value range, turn the push rod screw to achieve desired length.

MASTER CYLINDER

35100420077

DISASSEMBLY AND REASSEMBLY

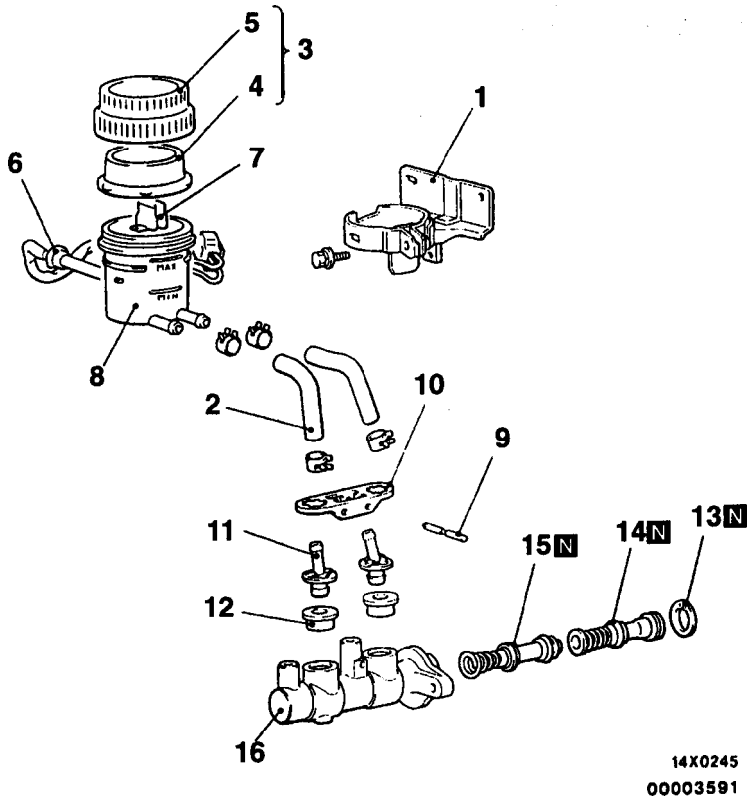

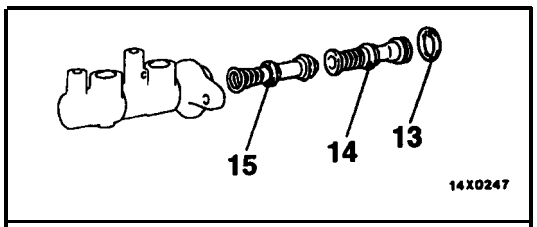

Master cylinder kit

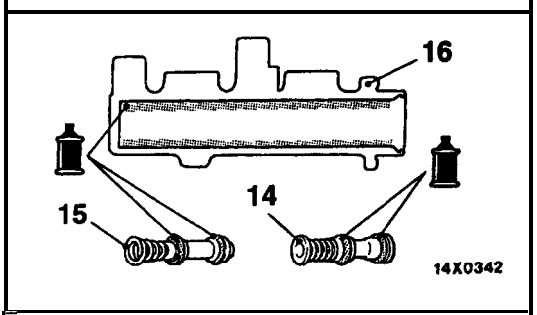

Brake fluid: DOT3 or DOT4

Disassembly steps

1. Reservoir bracket
2. Reservoir hoses
3. Reservoir cap assembly
4. Diaphragm
5. Reservoir cap
6. Brake fluid level sensor
7. Float
8. Reservoir
9. Pin
10. Retainer

◀A▶

11. Connector
12. Grommet
13. Piston stopper ring
14. Primary piston assembly
15. Secondary piston assembly
16. Master cylinder body

Caution
Do not disassemble the primary and secondary piston assemblies.

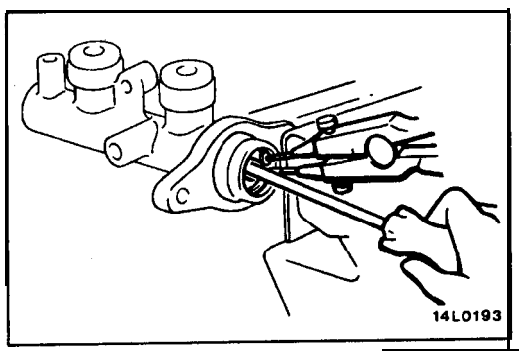

DISASSEMBLY SERVICE POINT

(A, PISTON STOPPER RING DISASSEMBLY

Remove the piston stopper ring, while depressing the piston.

INSPECTION

35100430032

- Check the inner surface of master cylinder body for rust or pitting.
- Check the primary and secondary pistons for rust, scoring, wear, damage or wear.
- Check the diaphragm for cracks and wear.

TSB Revision

FRONT DISC BRAKE

35100600075

REMOVAL AND INSTALLATION

Pre-removal Operation
- Brake Fluid Draining

Post-installation Operation
- Brake Fluid Supplying
- Brake Line Bleeding (Refer to P.35A-13.)

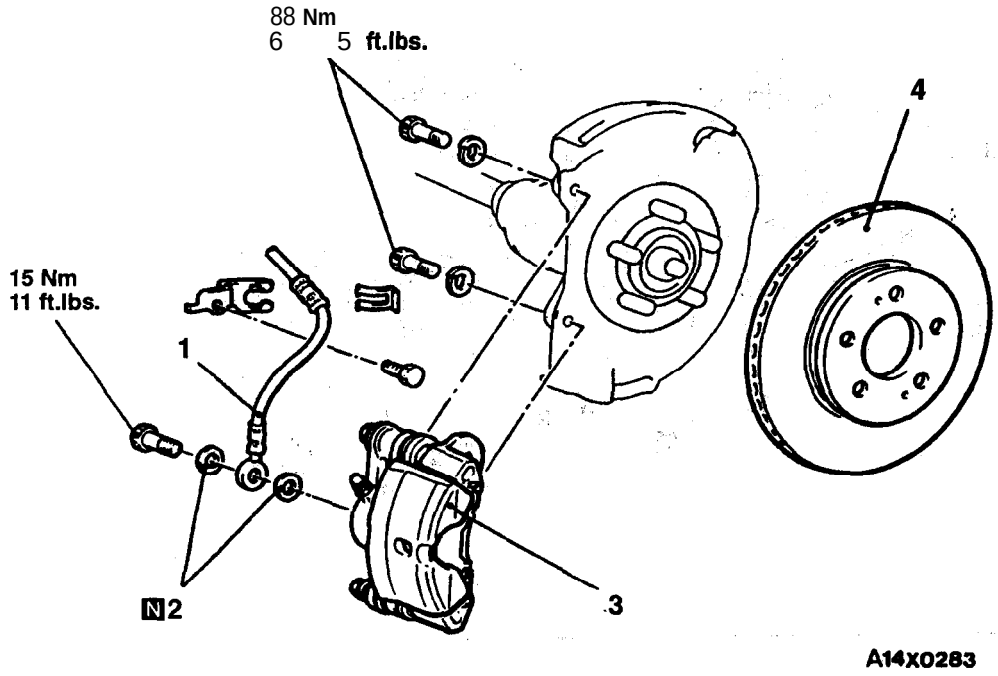

Removal steps

1. Brake hose connection
2. Gasket
3. ▶A◀ Front brake assembly
4. Brake disc

INSTALLATION SERVICE POINT

▶A◀ FRONT BRAKE ASSEMBLY INSTALLATION

Install the front brake assembly and measure the disc brake drag torque. (Refer to P.35A-14.)

INSPECTION

35100610030

Check the brake disc for damage.

TSB Revision

DISASSEMBLY AND REASSEMBLY

35100620071

<SINGLE PISTON TYPE DISC BRAKE>

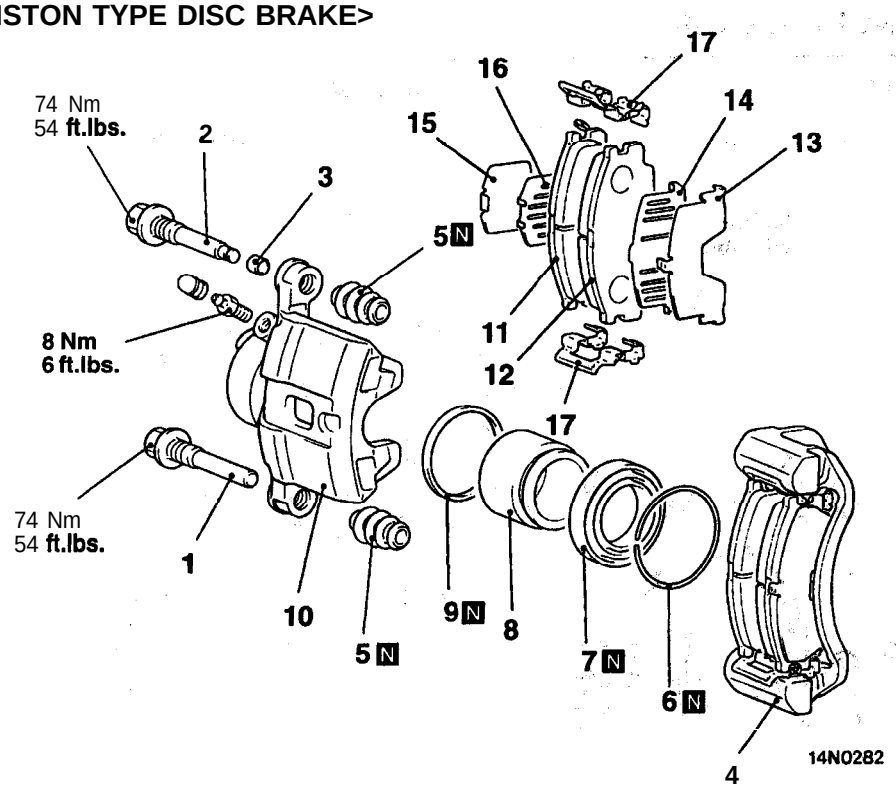

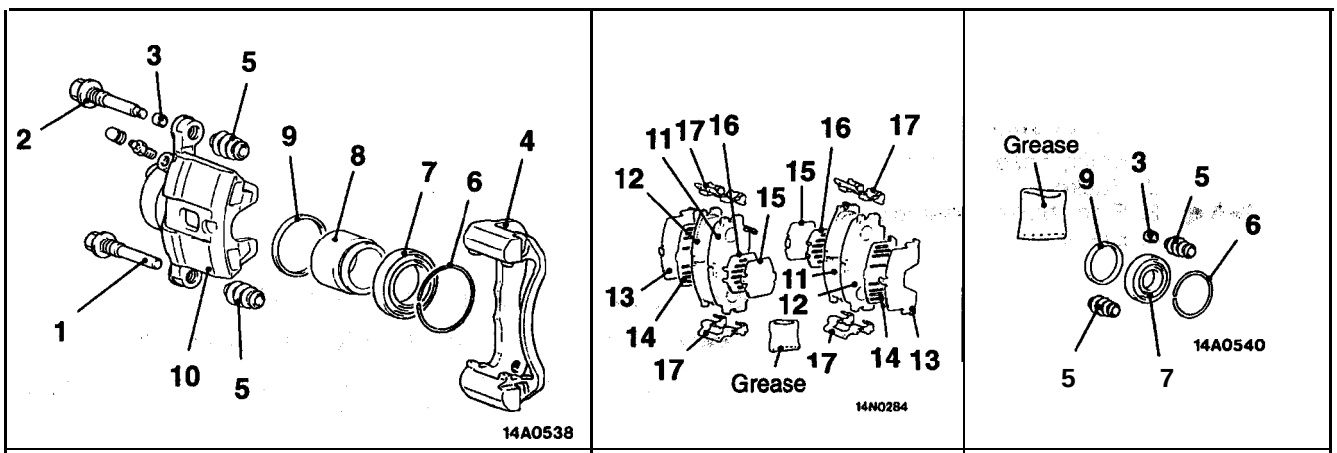

Brake caliper kit	Pad repair kit	Seal and boots repair kit

00000070

Caliper assembly disassembly steps

- ▶A◀ 1. Guide pin
- ▶A◀ 2. Lock pin
- ▶A◀ 3. Bushing
- 4. Caliper support (pad, clip, shim)
- ▶A◀ 5. Boot
- 6. Boot ring
- ◀A▶ 7. Piston boot
- ◀A▶ 8. Piston
- ◀B▶ 9. Piston seal
- 10. Caliper body

Pad assembly disassembly steps

- ▶A◀ 1. Guide pin
- ▶A◀ 2. Lock pin
- ▶A◀ 3. Bushing
- 4. Caliper support (pad, clip, shim)
- 11. Pad and wear indicator assembly
- 12. Pad assembly
- 13. Outer shim (stainless)
- 14. Outer shim (coated with rubber)
- 15. Inner shim (stainless)
- 16. Inner shim (coated with rubber)
- 17. Clip

TSB Revision

LUBRICATION POINTS

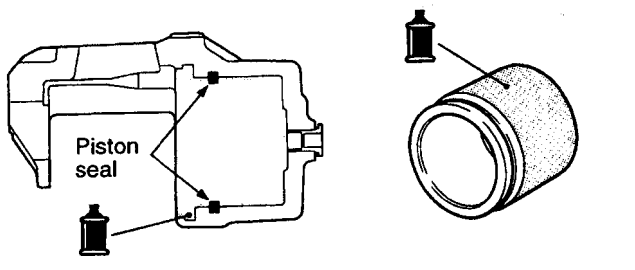

Caution
The piston seal inside the seal and boot kit is coated with special grease. Do not wipe this grease off.

Brake fluid: DOT3 or DOT4

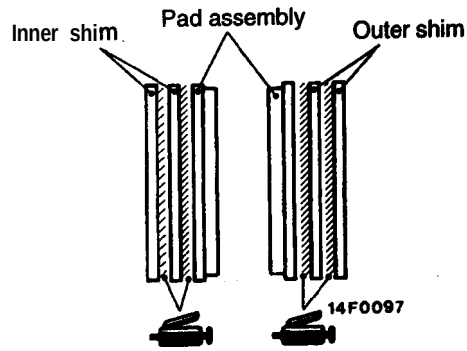

Grease: Brake grease SAE J310, NLGI No.1

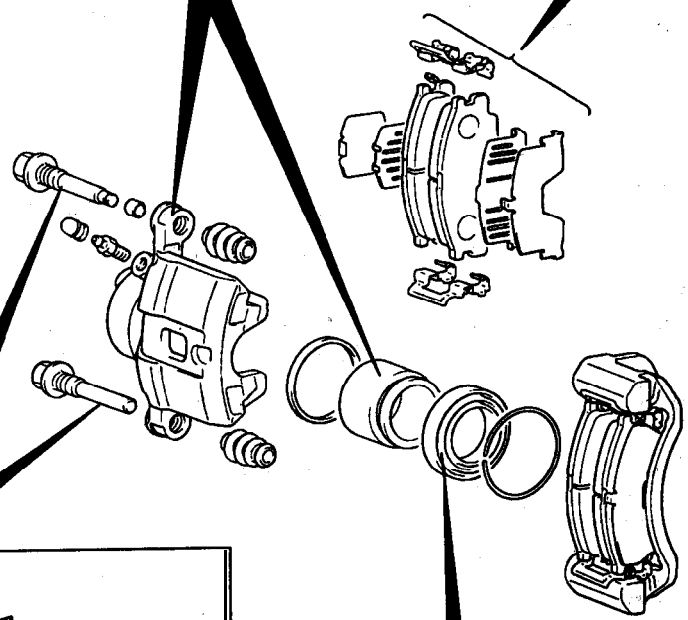

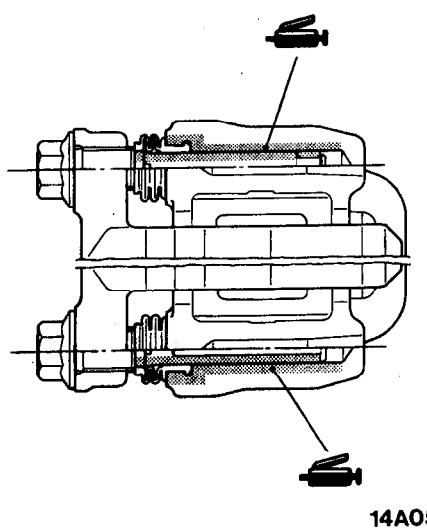

Grease: Repair kit grease

00000071

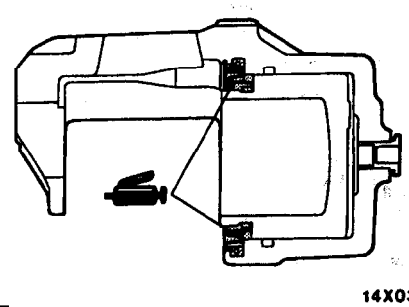

Grease: Repair kit grease

TSB Revision

DISASSEMBLY SERVICE POINTS

When disassembling the disc brakes, disassemble both sides (left and right) as a set.

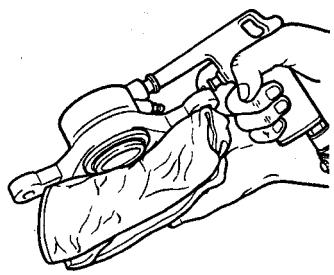

◀A▶ PISTON BOOT/PISTON REMOVAL

Protect caliper body with cloth. Blow compressed air through brake hose to remove piston boot and piston.

Caution
Blow compressed air gently.

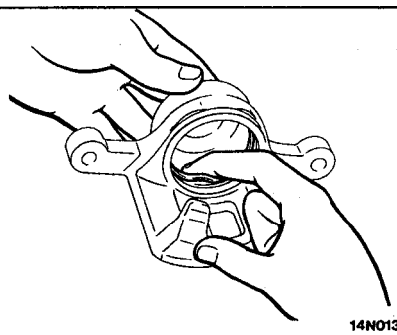

◀B▶ PISTON SEAL REMOVAL

(1) Remove piston seal with finger tip.

Caution
Do not use a flat-tipped screwdriver or other tool to prevent damage to inner cylinder.

(2) Clean piston surface and, inner cylinder with trichloro-ethylene, alcohol, or specified brake fluid.

Specified brake fluid: DOT3 or DOT4

REASSEMBLY SERVICE POINTS

▶A◀ BOOT/BUSHING/LOCK PIN/GUIDE PIN INSTALLATION

(1) Grease parts as illustrated with specified grease.

Specified grease: Repair kit grease (orange)

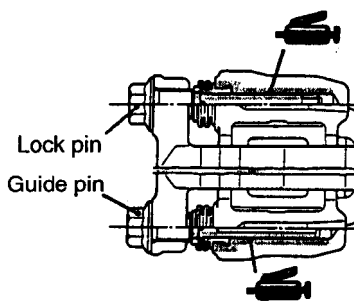

(2) Install the guide pin and lock pin as illustrated that eath head mark of the auide pin and the lock pin matches the indication mark ("G" or "L") located on the caliper body.

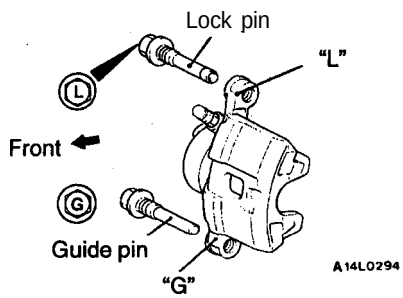

INSPECTION

35100630050

- Check cylinder for wear, damage or rust.
- Check piston surface for wear, damage or rust.
- Check caliper body or sleeve for wear.
- Check pad for damage or adhesion of grease, check backing metal for damage.

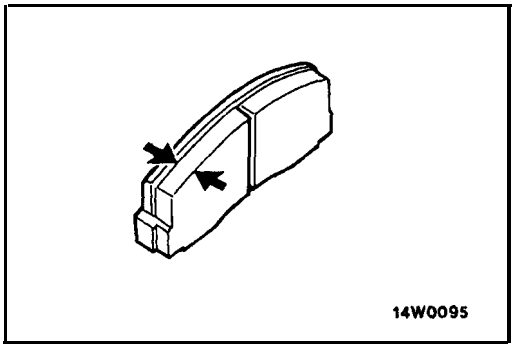

PAD WEAR CHECK

Measure thickness at the thinnest and worn area of the pad. Replace pad assembly when pad thickness is less than the limit value.

Standard value: 10 mm (.39 in.)
Limit *value: 2.0* **mm (.08 in.)**

Caution

1. **When the limit is exceeded, the brake pads on both the left and right wheels must be replaced as a set.**
2. **If there is a significant difference in the thicknesses of the pads on the left and right sides, check the sliding condition of the piston, lock pin and guide pin.**

DISASSEMBLY AND REASSEMBLY

35100530055

<DUAL PISTON TYPE DISC BRAKE>

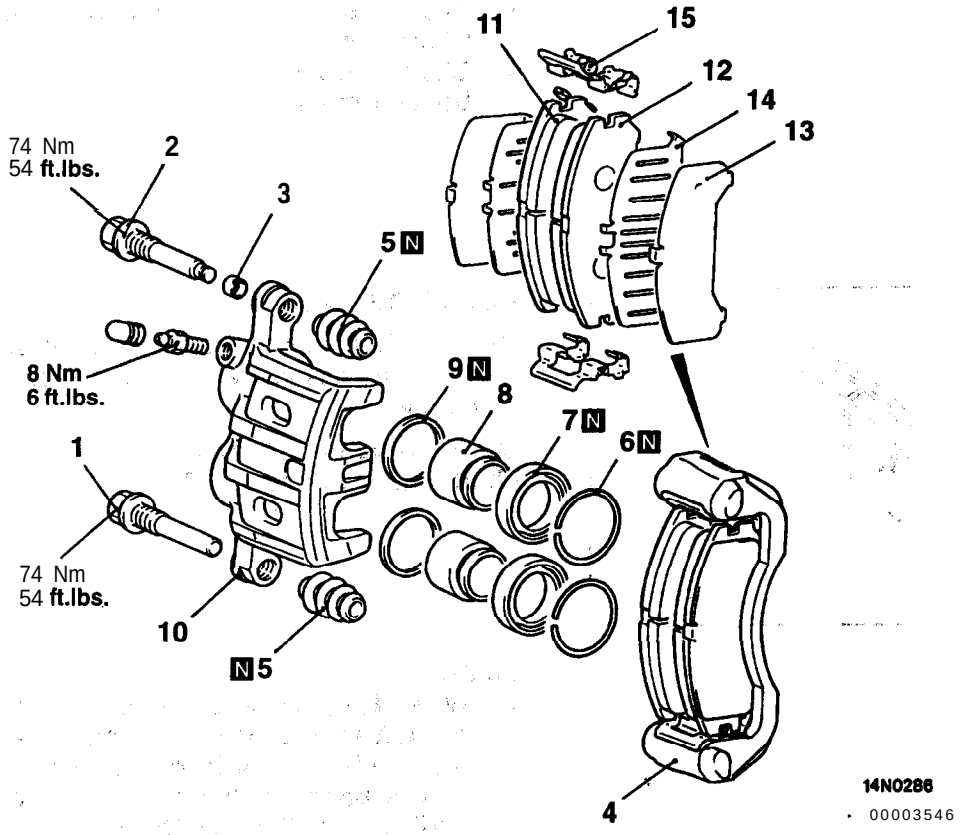

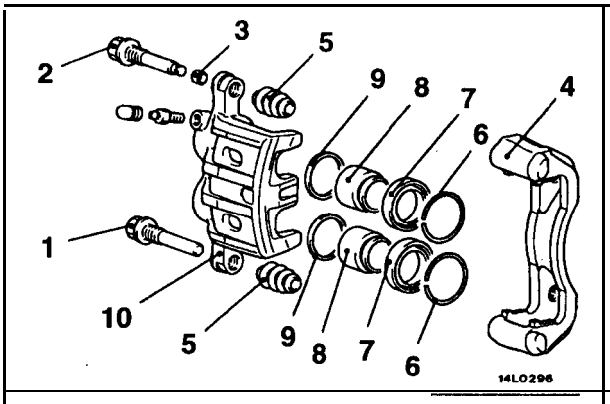

Brake **caliper kit**

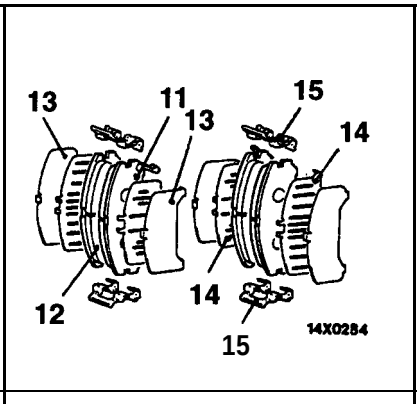

Pad repair kit

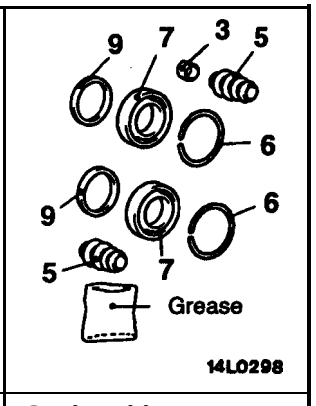

Seal and boots repair kit

Caliper assembly disassembly steps

- ▶A◀ 1. Guide pin
- ▶A◀ 2. Lock pin
- ▶A◀ 3. Bushing
- 4. Caliper support (pad, clip, shim)
- ▶A◀ 5. Boot
- 6. Boot ring
- ◀A▶ 7. Piston boot
- ◀A▶ 8. Piston
- ◀B▶ 9. Piston seal
- 10. Caliper body

Pad assembly disassembly steps

- ▶A◀ 1. Guide pin
- ▶A◀ 2. Lock pin
- ▶A◀ 3. Bushing
- 4. Caliper support (pad, clip shim)
- 11. Pad assembly (with wear indicator)
- 12. Pad assembly
- 13. Outer shim
- 14. Inner shim
- 15. Clip

TSB Revision

LUBRICATION POINTS

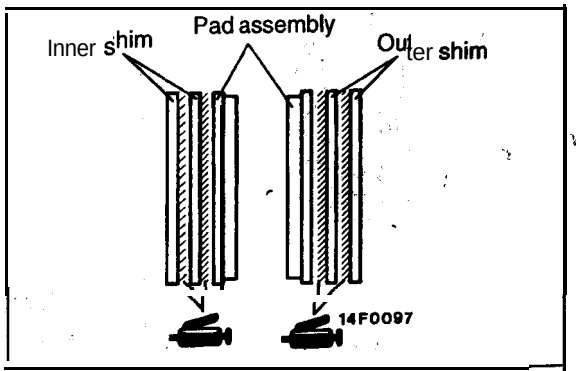

Grease: Brake grease SAE J310, NLGI No.1

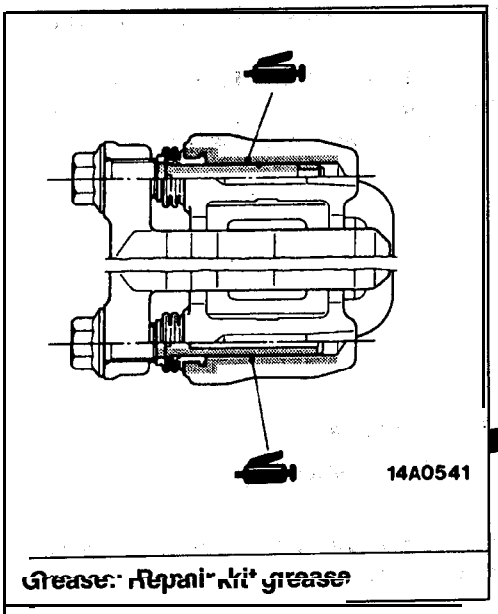

Grease: Repair kit grease

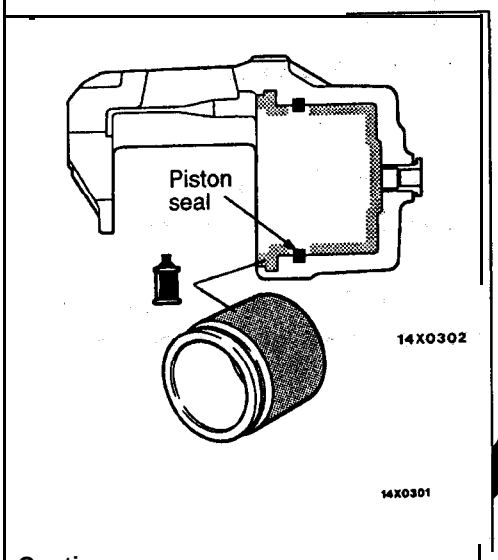

Cautiqn
The piston seal inside the seal and boot kit is coated with special grease, so do not wipe this grease off.

Brake fluid: DOT3 or DOT4

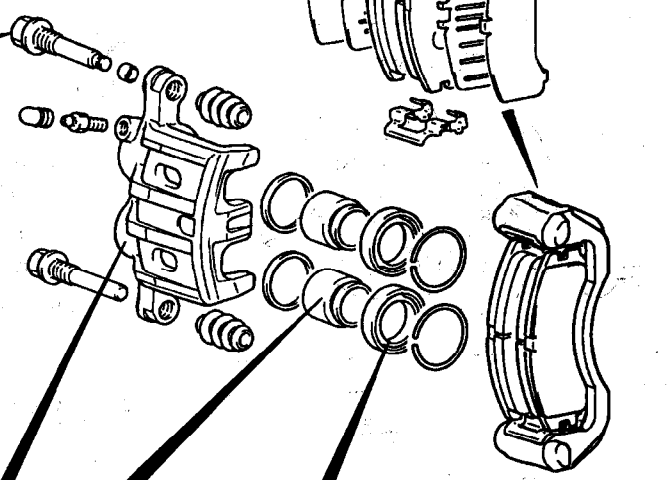

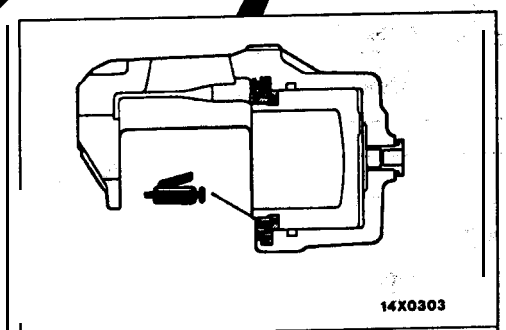

Grease: Repair kit grease

TSB Revision

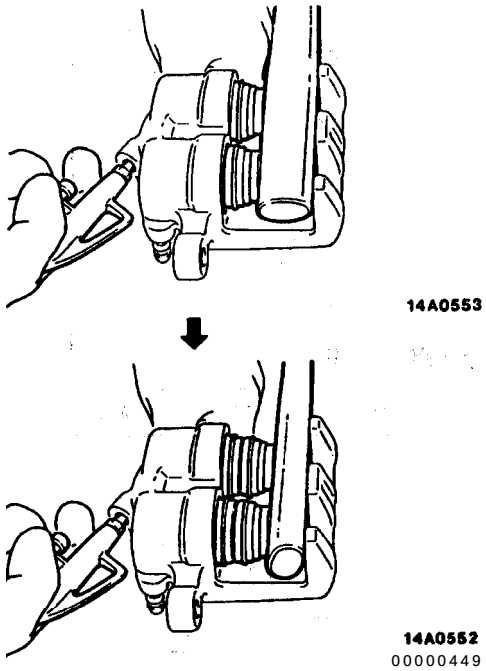

DISASSEMBLY SERVICE POINTS

When disassembling the disc brakes, disassemble both sides (left and right) as a set.

◀A▶ PISTON BOOT/PISTON REMOVAL

Pump in compressed air through the brake hose installation hole and remove the pistons and piston boot.

Caution
When removing the pistons, be sure to use the handle of a plastic hammer and adjust the height of the two pistons while pumping in air slowly in so that the pistons protrude evenly.
Do not remove one piston completely before trying to remove the other piston because it will become impossible to remove the second piston.

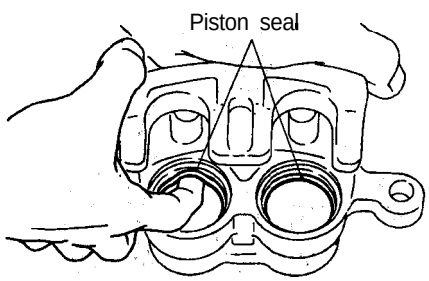

◀B▶ PISTON SEAL REMOVAL

(1) Remove piston seal with fingertip.

Caution
Do not use a screwdriver or other tool to prevent damage to inner cylinder.

(2) Clean piston surface and inner' cylinder with trichloro-ethylene, alcohol or specified brake fluid.

Specified brake fluid: DOT3 or DOT4

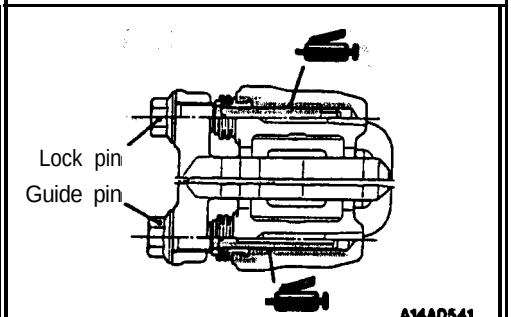

REASSEMBLY SERVICE POINTS

▶A◀ BOOT/BUSHING/LOCK PIN/GUIDE PIN INSTALLATION

(1) Grease parts as illustrated with specified grease.

Specified grease: Repair kit grease (orange)

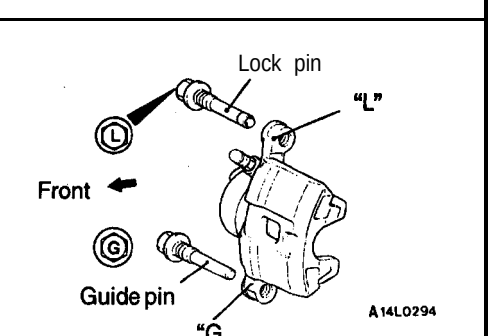

(2) Install the guide pin and lock pin as illustrated so that each head mark of the guide pin and the lock pin matches the indication mark ("G" or "L") located on the caliper body.

INSPECTION

35100630067

- Check cylinder for wear, damage or rust.
- Check piston surface for wear, damage or rust:
- Check caliper body or sleeve for wear.
- Check pad for damage or adhesion of grease, check backing metal for damage.

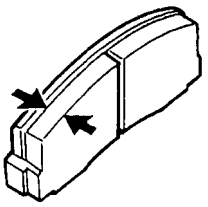

14W0095

PAD WEAR CHECK

Measure thickness at the thinnest and worn area of the pad. Replace pad assembly when pad thickness is less than the limit value.

Standard value: 10 mm (.39 in.)
Limit value: 2.0 mm (.08 in.)

Caution

1. **When the limit is exceeded, the brake pads on both the left and right wheels must be replaced as a set.**
2. **If there is a significant difference in the thicknesses of the pads on the left and right sides, check the sliding condition of the piston, lock pin and guide pin.**

REAR DRUM BRAKE SHOE

35100750060

REMOVAL AND INSTALLATION

Pre-removal Operation
- Loosening Parking Brake Cable Adj
- Brake Fluid Draining

Post-installation Operation
- Brake Fluid Filling and Air Bleeding leeding (Refer to P.35A-13.)
- Parking Brake Lever Stroke Adjustment Parking Brake Lever Stroke Adjustment (Refer to GROUP 36 (Refer to GROUP 36 On-vehicle Service.)

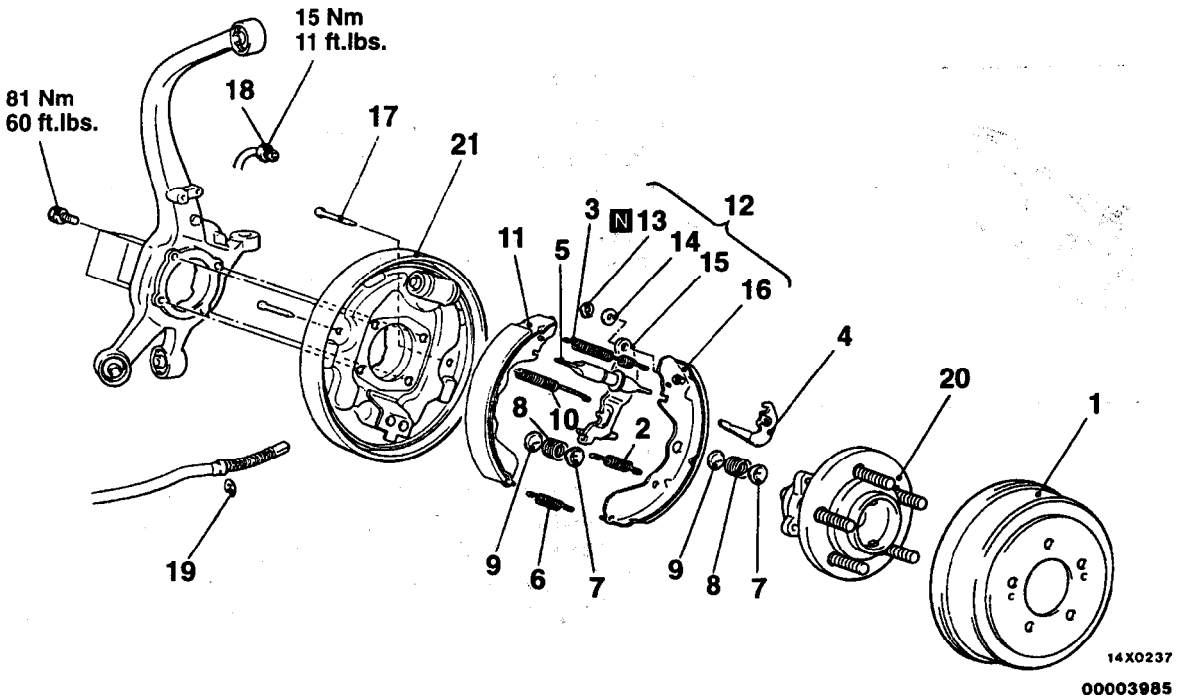

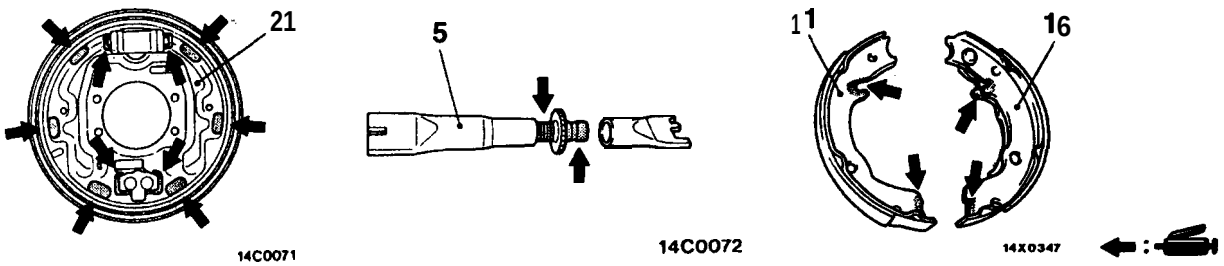

Specified grease: Brake grease SAE J310, NLGI No. 1

Removal steps

1. Brake drum
2. Lever return spring
3. Shoe-to-lever spring
4. Adjuster lever
5. Auto adjuster assembly
6. Retainer spring
7. Shoe hold-down cup
8. Shoe hold-down spring
9. Shoe hold-down cup
10. Shoe-to-shoe spring
11. Shoe and lining assembly
12. Shoe and lever assembly
13. Retainer ◀A▶ ▶B◀
14. Wave washer ▶A◀
15. Parking lever
16. Shoe and lining assembly
17. Shoe hold-down pin
18. Connection for the brake pipe
19. Snap ring
20. Rear hub assembly
21. Backing plate

TSB Revision

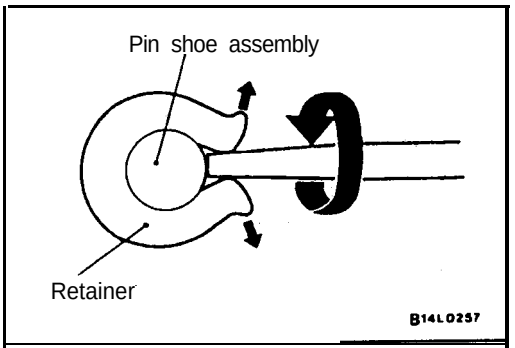

REMOVAL SERVICE POINT

◀A▶ RETAINER REMOVAL

Use an flat-tipped screwdriver or the like to open up the retainer joint, and remove the retainer.

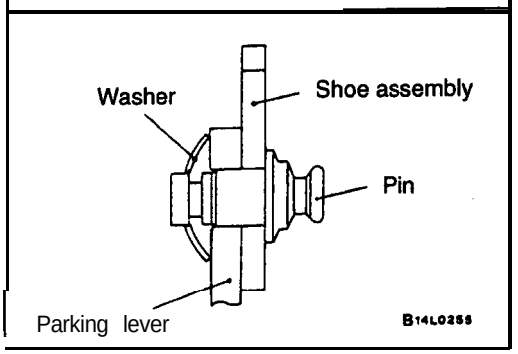

INSTALLATION SERVICE POINTS

▶A◀ WAVE WASHER INSTALLATION

Install the washer in the direction shown in the illustration.

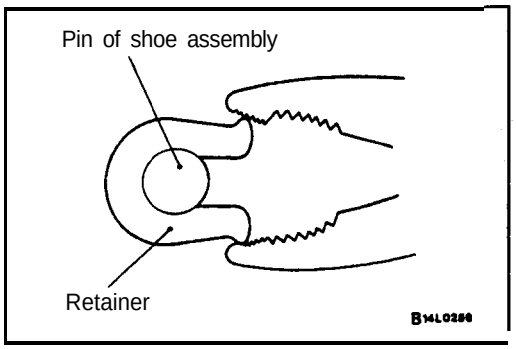

▶B◀ RETAINER INSTALLATION

Use pliers or the like to install the retainer on the pin securely.

REAR DRUM BRAKE WHEEL CYLINDER

35100930068

REMOVAL AND INSTALLATION

Pre-removal Operation
- Brake Fluid Draining

Post-installation Operation
- Brake Fluid Filling
- Brake Line Bleeding (Refer to P.35A-13.)

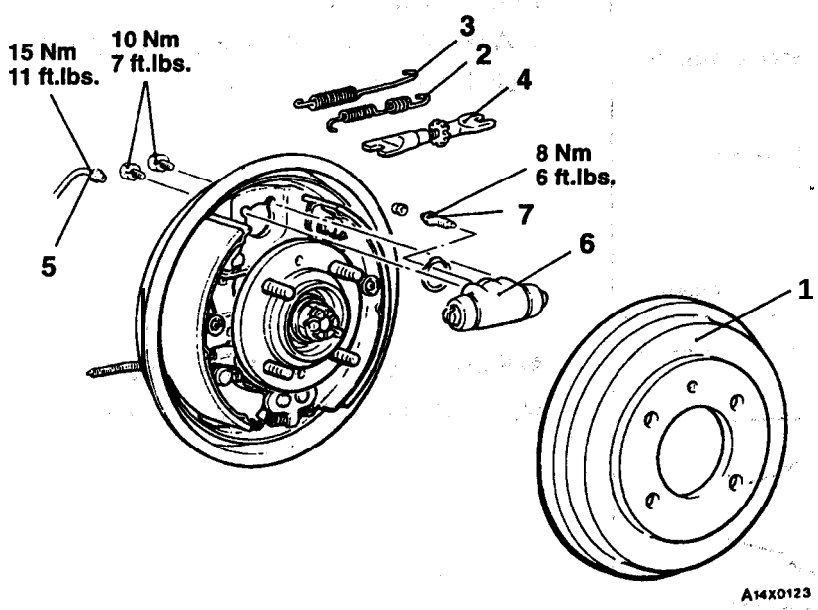

Removal steps

1. Brake drum
2. Shoe-to-lever spring
3. Shoe-to-shoe spring
4. Auto adjuster assembly
5. Brake pipe connection
6. Wheel cylinder
7. Bleeder screw

TSB Revision

DISASSEMBLY AND REASSEMBLY

35100770059

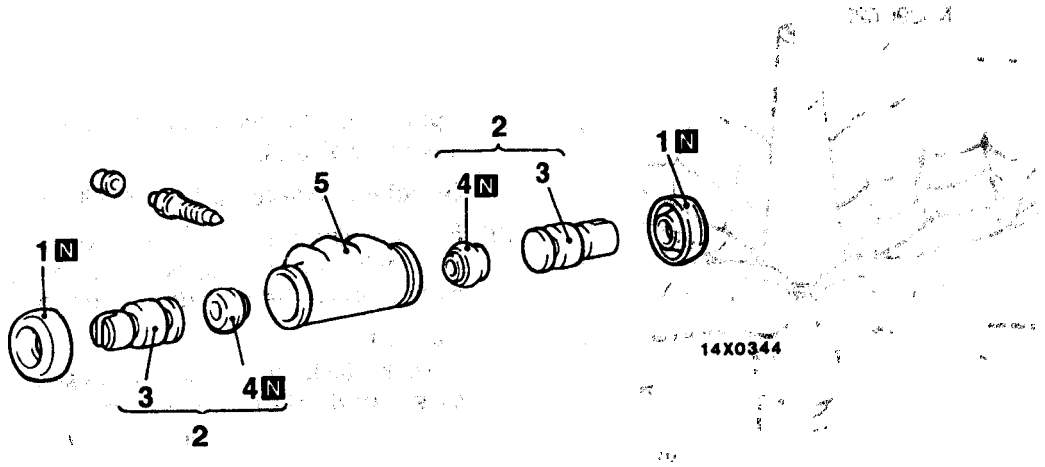

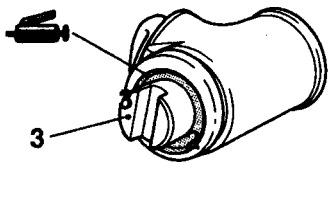	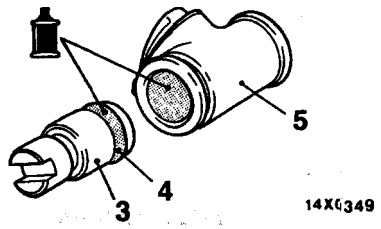	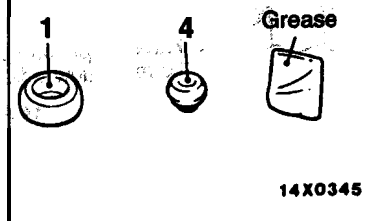
Grease: Repair kit grease (orange')	Brake fluid: DOT3 or DOT4	Wheel cylinder repair kit

00000186

Disassembly steps

1. Boots
2. Piston assembly
3. ▶A◀ Pistons
4. ▶A◀ Piston cups
5. Wheel cylinder body

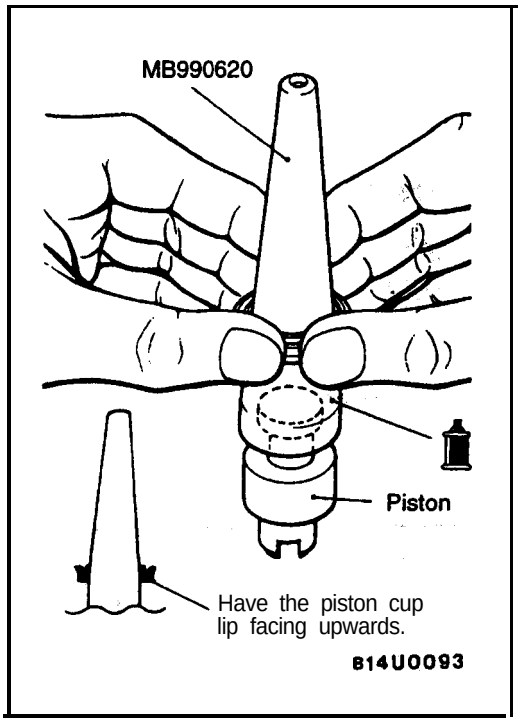

REASSEMBLY SERVICE POINT

▶A◀ PISTON CUP/PISTON REASSEMBLY

(1) Use alcohol or specified brake fluid to clean the wheel cylinder and the piston.
(2) Apply the specified brake fluid to the piston cups and the special tool.

Specified brake fluid: DOT3 or DOT4

(3) Set the piston cup 'on the special tool with the lip of the cup facing 'up. Fit the cup onto the special tool, and then slide it down the outside of the tool into the piston groove.

Caution
In order to keep the piston cup from becoming twisted or slanted, slide the piston cup down the tool slowly and carefully, without stopping.

INSPECTION

35100780045

Check the piston and wheel cylinder walls for rust or damage. If there is any abnormality, replace the entire wheel cylinder assembly.

REAR DISC BRAKE

35100700058

REMOVAL AND INSTALLATION

Pre-removal Operation
- Loosening Parking Brake Cable Adjusting Nut..
- Brake Fluid Draining

Post-installation 'Operation
- Brake Fluid Filling and Air Bleeding (Refer to P.35A-13.)
- Parking Brake Lever Stroke Adjustment (Refer to GROUP 36 – On-vehicle Service.)

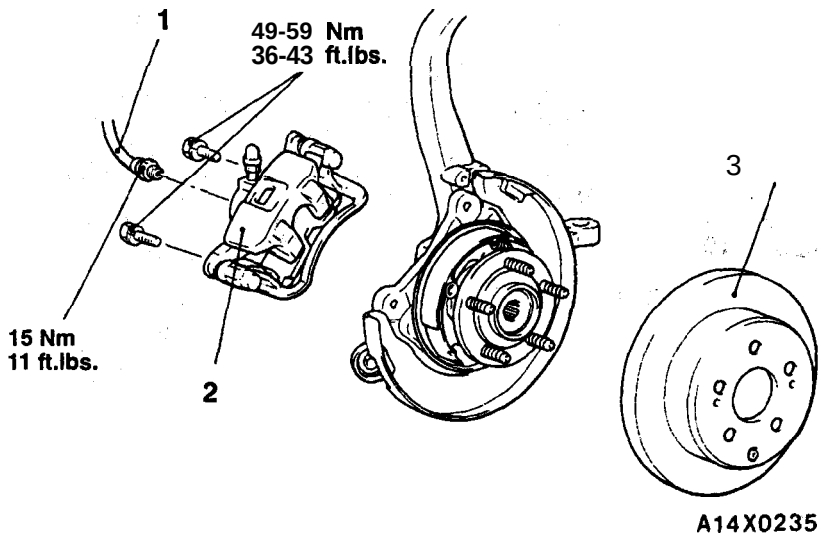

Removal steps

1. Brake hose connection
▶A◀ 2. Rear brake assembly
3. Brake disc

INSTALLATION SERVICE POINT

▶A◀ REAR BRAKE ASSEMBLY INSTALLATION

Install the rear brake assembty and measure the disc brake drag torque. (Refer to P.35A-21.)

INSPECTION

35100710037

- Check the brake disc for damage.
- Check the brake disc for thickness.
- Check the brake disc for run-out.

DISASSEMBLY AND REASSEMBLY

35100720054

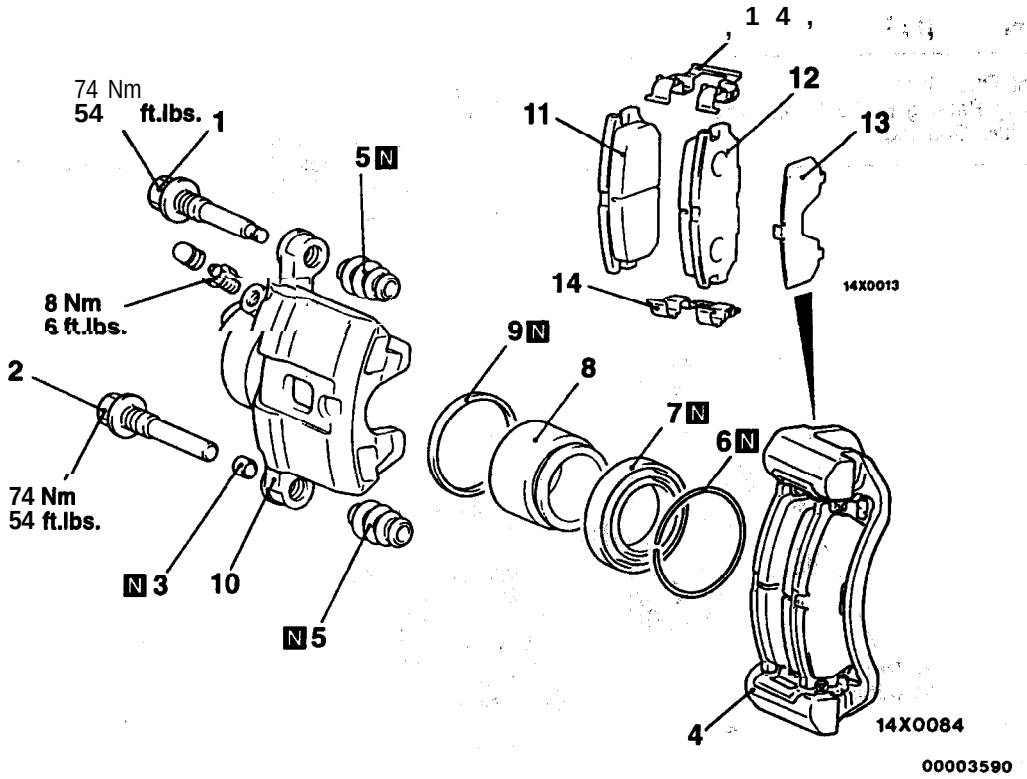

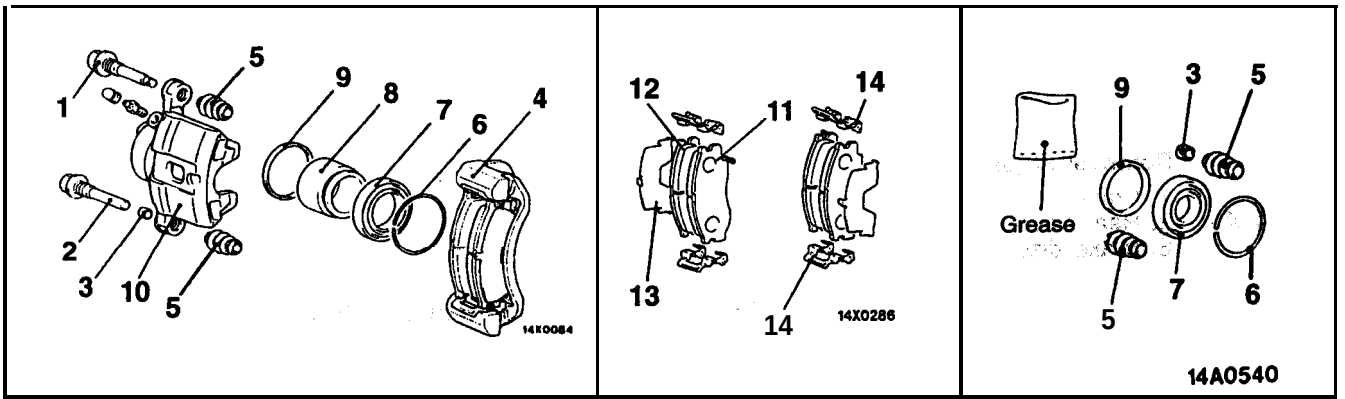

Brake caliper kit	Pad repajr kit	Seal and boots repair kit

C&per assembly disassembly steps

- ▶A◀ 1. Guide pin
- ▶A◀ 2. Lock pin
- ▶A◀ 3. Bushing
- 4. Caliper support (pad, clip, shim)
- ▶A◀ 5. Boot
- 6. Boot ring
- ◀A▶ 7. Piston boot
- ◀A▶ 8. Piston
- ◀B▶ 9. Piston seal
- 10. Caliper body

Pad assembly disassembly steps

- ▶A◀ 1. Guide pin
- ▶A◀ 2. Lock pin
- ▶A◀ 3. Bushing
- 4. Caliper support (pad, clip, shim)
- 11. Pad and wear indicator assembly
- 12. Pad assembly
- 13. Outer shim
- 14. Clip

TSB Revision

LUBRICATION POINTS

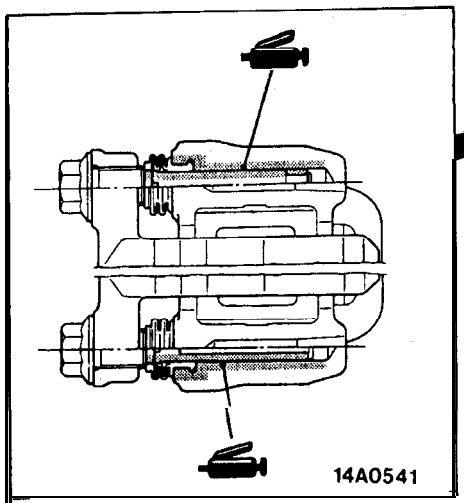

Grease: Repair kit grease

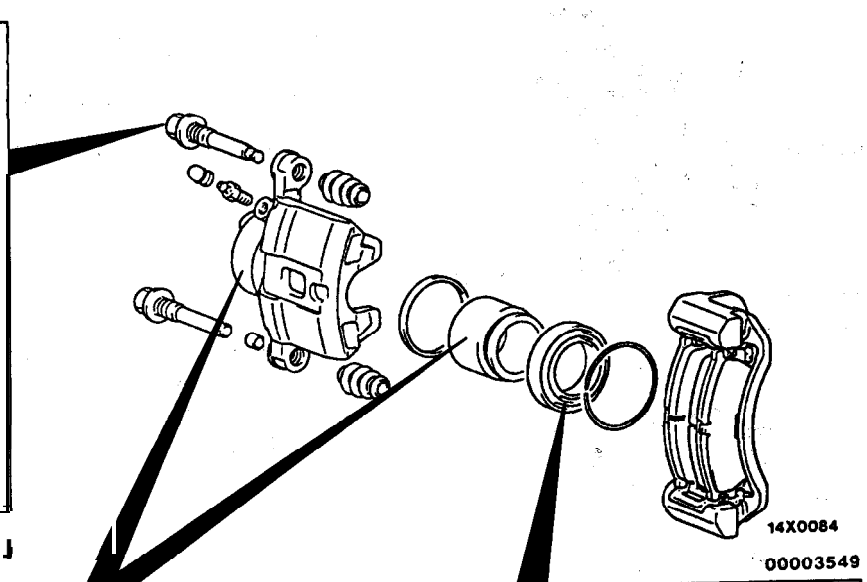

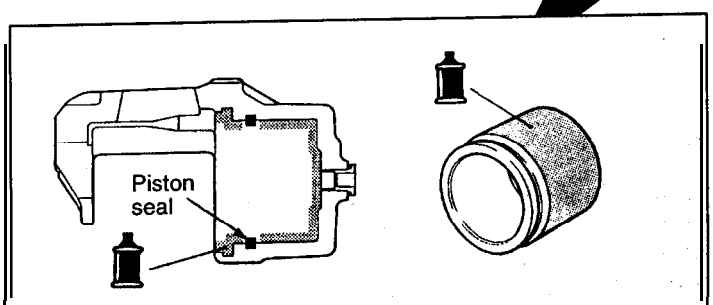

Caution
The piston seal inside the seal and boot kit is coated with special grease. Do not wipe this grease off.

Brake fluid: DOT3 or DOT4

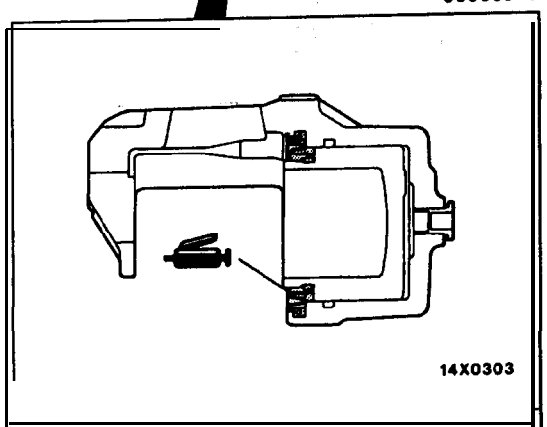

Grease: Repair kit grease

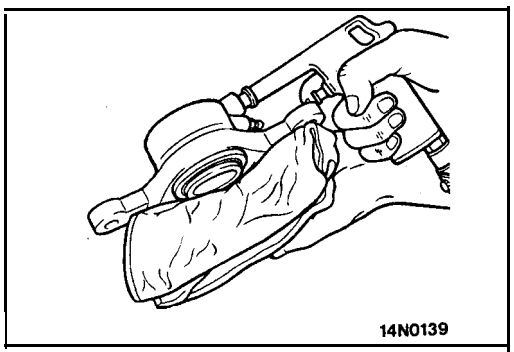

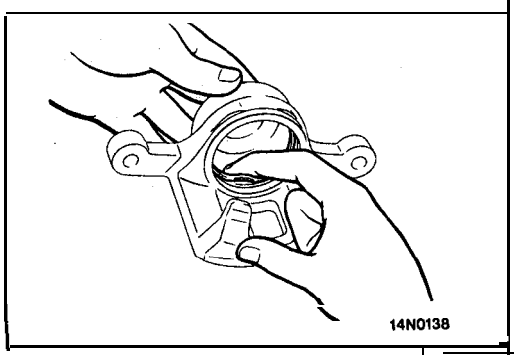

DISASSEMBLY SERVICE POINTS

When disassembling the disc brakes, disassemble both sides (left and right) as a set.

◀A▶ PISTON BOOT/PISTON REMOVAL

Protect caliper body with cloth. Blow compressed air through brake hose to remove piston boot and piston.

Caution
Blow compressed air gently.

◀B▶ PISTON SEAL REMOVAL

(1) Remove piston seal with finger tip.

Caution
Do not use a flat-tipped screwdriver or other tool to prevent damage to inner cylinder.

(2) Clean piston surface and inner cylinder with trichloro-ethylene, alcohol or specified brake fluid.

Specified brake fluid: DOT3 or DOT4

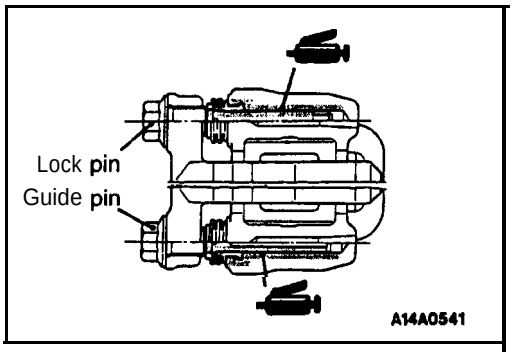

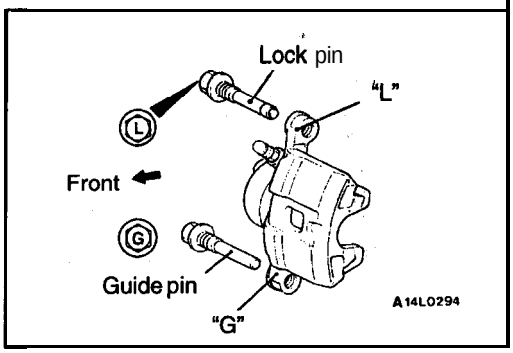

REASSEMBLY SERVICE POINTS

▶A◀ BOOT/BUSHING/LOCK PIN/GUIDE PIN INSTALLATION

(1) Grease parts as illustrated with specified grease.

Specified grease: Repair kit grease (orange)

(2) Install the guide pin and lock pin as illustrated so that each head mark of the guide pin and the lock pin matches the indication mark ("G" or "L") located on the caliper body.

INSPECTION

35100730057

- Check cylinder for wear, damage or rust.
- Check piston surface for wear, damage or rust.
- Check caliper body or sleeve for wear.
- Check pad for damage or adhesion of grease, check backing metal for damage.

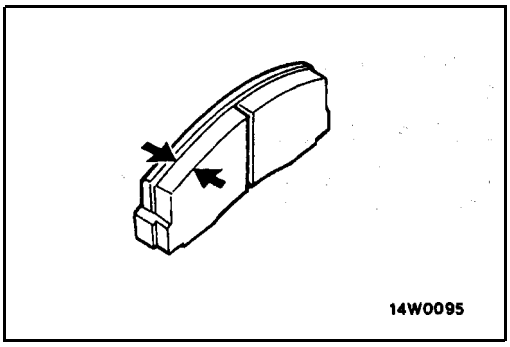

PAD WEAR CHECK

Measure thickness at the thinnest and worn area of the pad. Replace. pad assembly when pad thickness is less than the limit value.

Standard value: 10 mm (.39 in.)
Limit value: 2.0 mm (.08 in.)

Caution

1. **When the limit is exceeded, the brake pads on both the left and right wheels must be replaced as a set.**
2. **If there is a significant difference In the thicknesses of the pads on the left and rlght sides, check the sliding condition of the piston, lock pin and guide pin.**

PROPORTIONING VALVE

35100570062

REMOVAL AND INSTALLATION'

Pre-removal Operation
- Brake Fluid Draining
- Link Assembly Mounting Bolts Removal
  <2.0L Engine (Turbo) and 2.4L Engine>
  (Refer to GROUP 17–Auto-Cruise Control.)
- Intake Manifold Removal
  <2.0L Engine (Non-turbo)>
  (Refer to GROUP 15–Intake Manifold.)

Post-installation Operation
- Brake Fluid Supplying
- Brake Line Bleeding (Refer to P.35A-13.)
- Link Assembly Mounting Bolts Installation
  <2.0L Engine (Turbo) and 2.4L Engine>
  (Refer to GROUP 17–Auto-Cruise Control.)
- Intake Manifold Installation
  <2.0L Engine (Non-turbo)>
  (Refer to GROUP 15–Intake Manifold.)

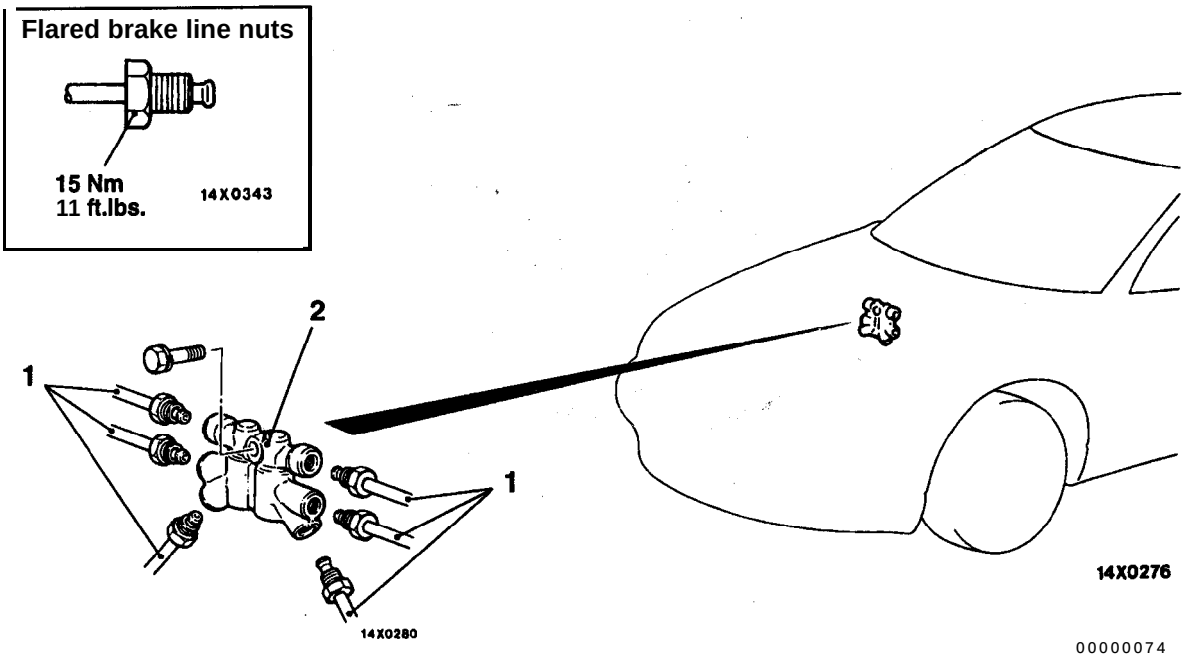

Removal steps

▶A◀ 1. Brake pipe connection
2. Proportioning valve

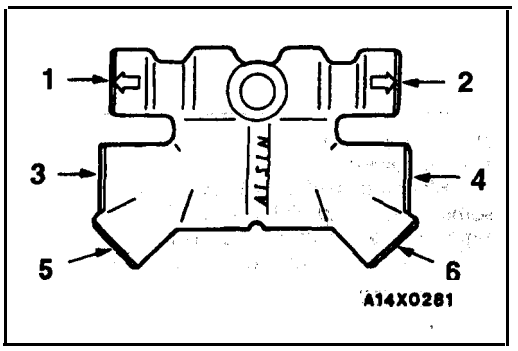

INSTALLATION SERVICE POINT

▶A◀ BRAKE PIPE CONNECTION

Connect the pipes to the proportioning valve as shown in the illustration.

1. Proportioning valve – Rear brake (L.H.)
2. Proportioning valve – Rear brake (R.H.)
3. Proportioning valve – Front brake (R.H.)
4. Proportioning valve – Front brake (L.H.)
5. Proportioning valve – Master cylinder (secondary)
6. Proportioning valve – Master cylinder (primary)

ANTI-LOCK BRAKING SYSTEM (ABS) <FWD>

CONTENTS

35209000077

Refer to GROUP 35A for the following items.

BRAKE PEDAL
FRONT DISC BRAKE
LUBRICANTS
REAR DISC BRAKE
REAR DRUM BRAKE SHOE
REAR DRUM BRAKE WHEEL CYLINDER
ON-VEHICLE SERVICE

- Brake Booster Operating Test
- Brake Drum inside Diameter Check <Vehicles with Rear Drum Brakes>
- Brake Fluid Level Sensor Check
- Brake Lining and Brake Drum Contact Check
- Brake Lining Thickness Check
- Brake Pedal Check and Adjustment
- Check Valve Operation Check
- Front Brake Disc Run-out Check
- Front Brake Disc Run-out Correction
- Front Brake Disc Thickness Check
- Front Disc Brake Pad Check and Replacement
- Front Disc Brake Rotor Check
- Proportioning Valve Function Test
- Rear Brake Disc Run-out Check
- Rear Brake Disc Run-out Correction
- Rear Brake Disc Thickness Check
- Rear Disc Brake Pad Check and Replacement
- Stop Light Switch Check

GENERAL INFORMATION

35200010079

The ABS consists of wheel speed sensors, stop light switch, hydraulic unit and the ABS-ECU. If a problem occurs in the system, the malfunctioning system can be identified by means of the diagnostic function.

The diagnostic trouble code will not be erased even if the ignition switch is turned to OFF.
In addition, reading of diagnostic trouble codes, service data and actuator testing are possible using the scan tool.

Items	Specifications
Wheel speed sensor	Magnet coil type
Front ABS rotor teeth	4 3
Rear ABS rotor teeth	43

CONSTRACTION DIAGRAM

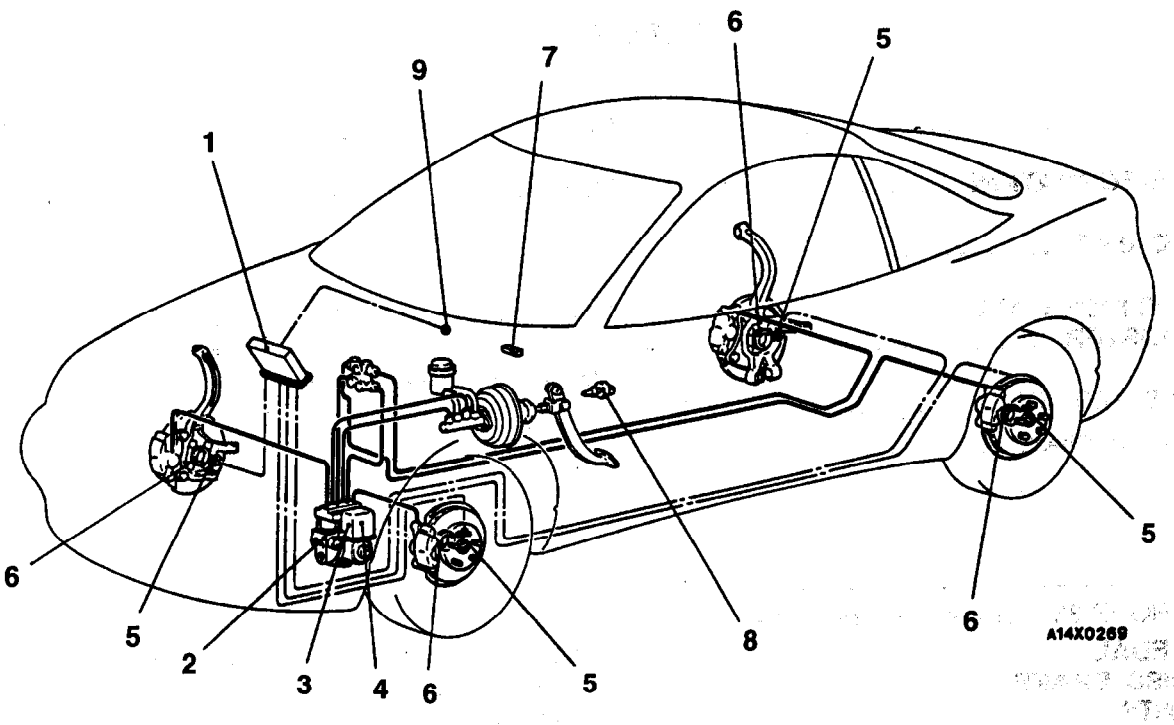

1. ABS-ECU
2. Hydraulic unit
3. ABS valve relay
4. ABS motor relay
5. Wheel speed sensor
6. ABS rotor
7. Data link connector
6. Stop light switch
9. ABS warning light

SERVICE SPECIFICATIONS

35200030062

Items	Standard value
Hydraulic unit solenoid valve internal resistance Ω	1.0–1.3
Wheel speed sensor internal resistance kΩ	1.0–1.2
Clearance between the wheel speed sensor mounting surface and the ABS rotor mm (in.)	28.2-28.5 (1.11-1.12)
Wheel speed sensor insulation resistance kΩ	ioo or more

SPECIAL TOOLS

35200060081

Tool	Tool number and name	Supersession	Application
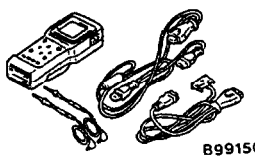 B991502	MB991502 Scan tool (MUT-II)	MB991502	• Reading diagnostic trouble codes • Erasing diagnostic trouble codes • ABS system inspection
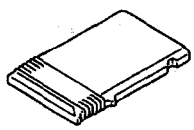 B991325	ROM pack	–	
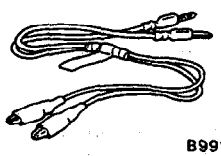 B991529	MB991529 Diagnostic trouble code check harness	Tool not necessary if scan tool (MUT-II) is available.	ABS inspection with ABS warning light
 B991356	MB991356 ABS check harness	–	ABS-ECU terminal voltage measurement

TROUBLESHOOTING

35201110075

DIAGNOSTIC TROUBLESHOOTING FLOW

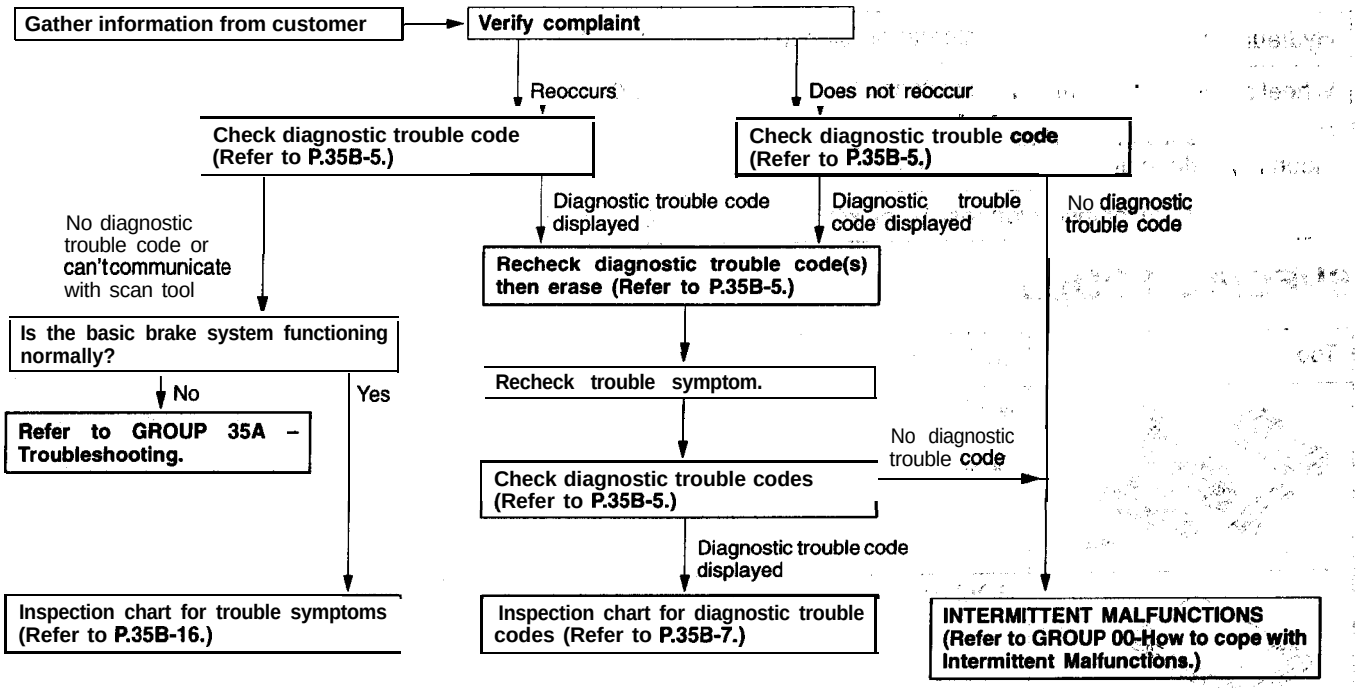

NOTES WITH REGARD TO DIAGNOSIS

The condition listed in the following table are considered normal.

Condition	Explanation of condition
System check sound	When starting the engine, a thudding sound can sometimes be heard coming from inside the engine compartment, but this is because the system operatioh check is being performed. This is considered normal.
ABS operation sound	1. Sound of the motor inside the ABS hydraulic unit. operating (whine), 2. Sound is generated along with vibration of the brake' pedal. (scraping) 3. When ABS operates, sound is generated from the vehicle chassis due to repeated brake application and release. (Thump: suspension; squeak: tires)
ABS operation (Long braking distance)	For road surfaces such as snow-covered roads and gravel roads, the braking distance for vehicles with ABS can sometimes be longer than that for other vehicles. Accordingly, advise the customer to drive safely on such roads by lowering the vehicle speed and not being overconfident.

Diagnosis detection condition depends on the diagnostic trouble code.
Make sure that checking requirements listed in the "Comment" are satisfied when checking the trouble symptom again after the diagnostic trouble code has been erased.

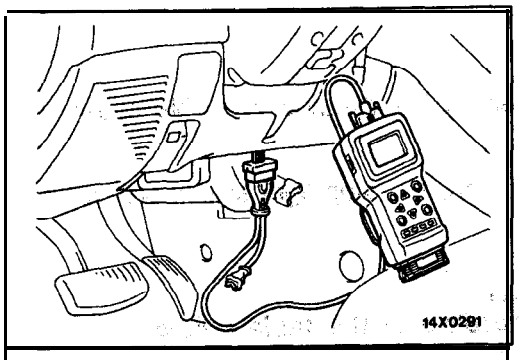

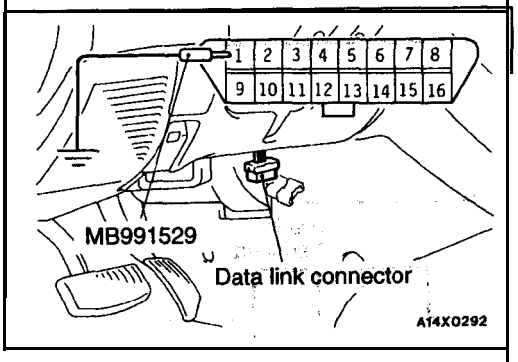

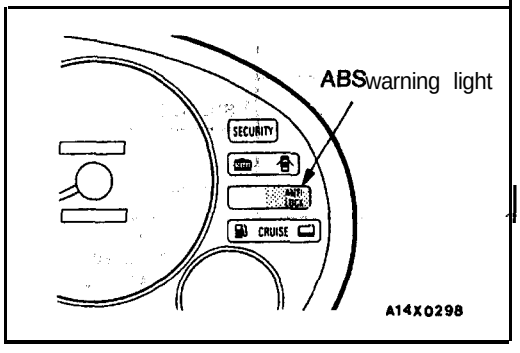

DIAGNOSTIC FUNCTION 35201120001

DIAGNOSTIC TROUBLE CODES CHECK

With the Scan Tool

Connect the scan tool to the data link connector, then check diagnostic trouble codes.

Caution
Turn the ignition switch off before disconnecting or conecting the scan tool.

NOTE
Diagnostic trouble code No. 16 can be output when the ABS system fails because of a battery surge.

With the ABS Warning Light

(1) Use the special tool (diagnostic trouble code check harness) to ground the terminal (1) of the data link connector.

(2) Take a 'reading of the diagnostic trouble code from the flashing of the ABS warning light.

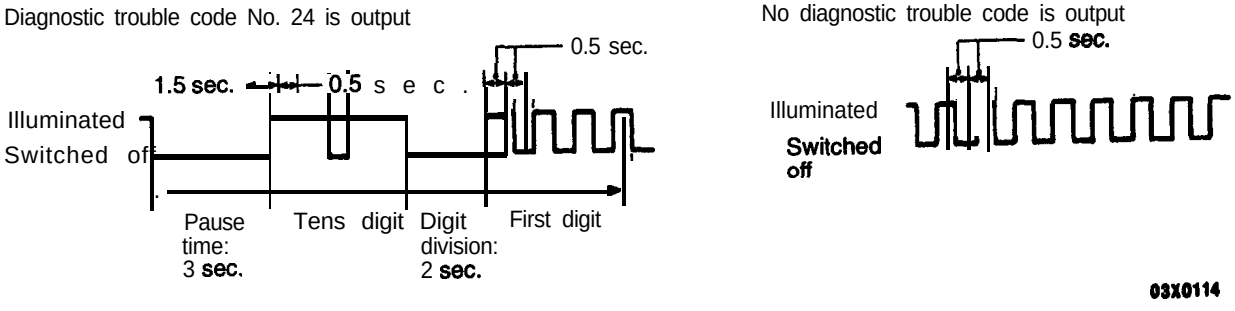

NOTE
Diagnostic trouble code No. 16 can be output when the ABS system fails because of a battery surge.

ERASING DIAGNOSTIC TROUBLE CODES

With the Scan Tool

Connect the scan tool to the data link connector (16-pin), then erase the diagnostic trouble codes.

With the ABS Warning Light

When the ignition switch is turned on while the stop light switch is on, the stop light switch will operate 10 times in succession according to the timing given below.

Caution

The memory cannot be erased under the following conditions.
(1) When the stop light switch is not turned on and off according to the table below.
(2) When the generator L terminal voltage increased (HI state).

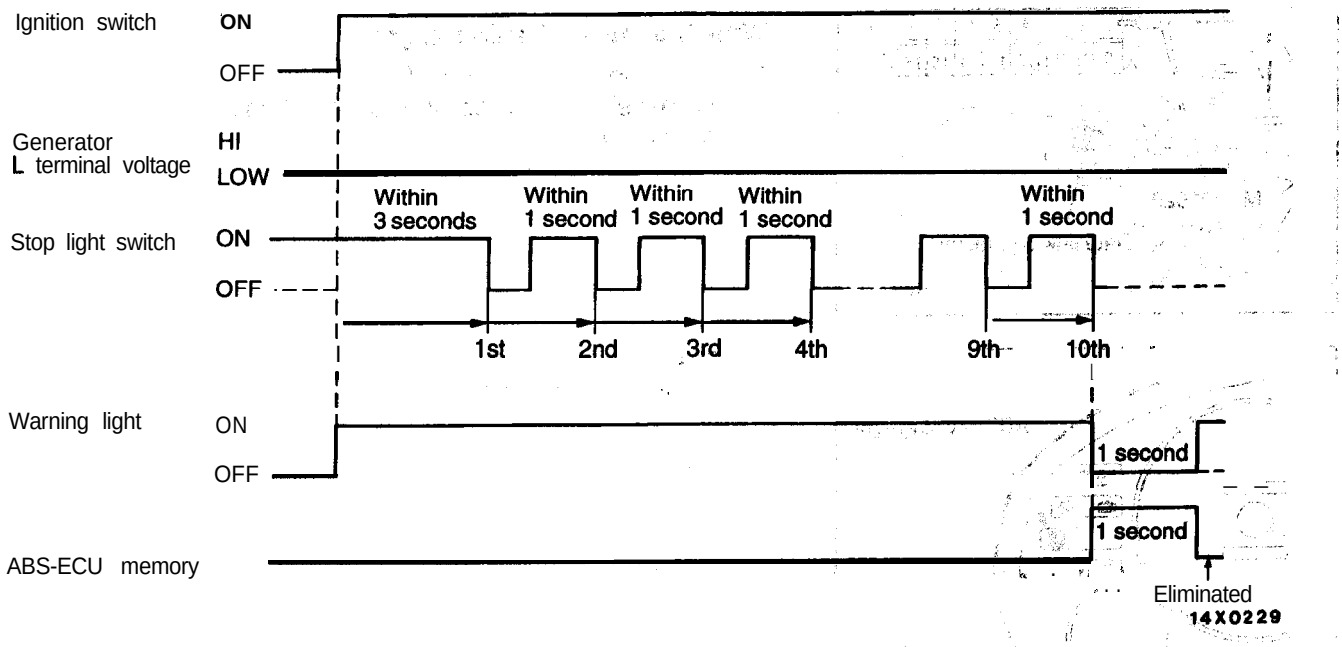

INSPECTION CHART FOR DIAGNOSTIC TROUBLE CODES'

35201130088

Check according to the inspection chart that is appropriate for the diagnostic trouble code.

Diagnostic trouble code No.	Inspection item	Diagnostic content	Detection conditions	Reference page
11	Right front wheel speed sensor	Open circuit	A, B	P.35B-8
12	Left front wheel speed sensor			
13	Right rear wheel speed sensor			
14	Left rear wheel speed sensor			
15	Wheel speed sensor system	Abnormal output signal	El	P.35B-9
16	Power supply system	Abnormal battery positive voltage	A, B	P.35B-10
21	Right front wheel speed sensor	Excessive gap or short circuit	B	P.35B-10
22	Left front wheel speed sensor			
23	Right rear wheel speed sensor			
24	Left rear wheel speed sensor			
38	Stop light switch system	Open circuit or ON malfunction	A, B	P.35B-11
41	Right front solenoid valve system	No response to solenoid valve drive signal	A, B	P.35B-12
42	Left front solenoid valve system			
43	Rear solenoid valve system			
51	Valve relay system	Valve relay OFF failure	A, B	P.35B-13
53	Motor relay or motor system	Motor relay OFF failure and motor drive failure	B	P.35B-14
53	ABS-ECU	Malfunction in ABS-ECU (program maze, etc.)	A, B	–

Detection conditions

A: During system check immediately after starting
B: When driving

INSPECTION PROCEDURE CLASSIFIED BY DIAGNOSTIC TROUBLE

Code No. 11, 12, 13, 14 Wheel speed sensor open circuit	Probable cause
[Comment] The ABS-ECU detects breaks in the wheel speed sensor wire.	• Malfunction of wheel speed sensor • Malfunction of wiring harness or connector • Malfunction of ABS-ECU

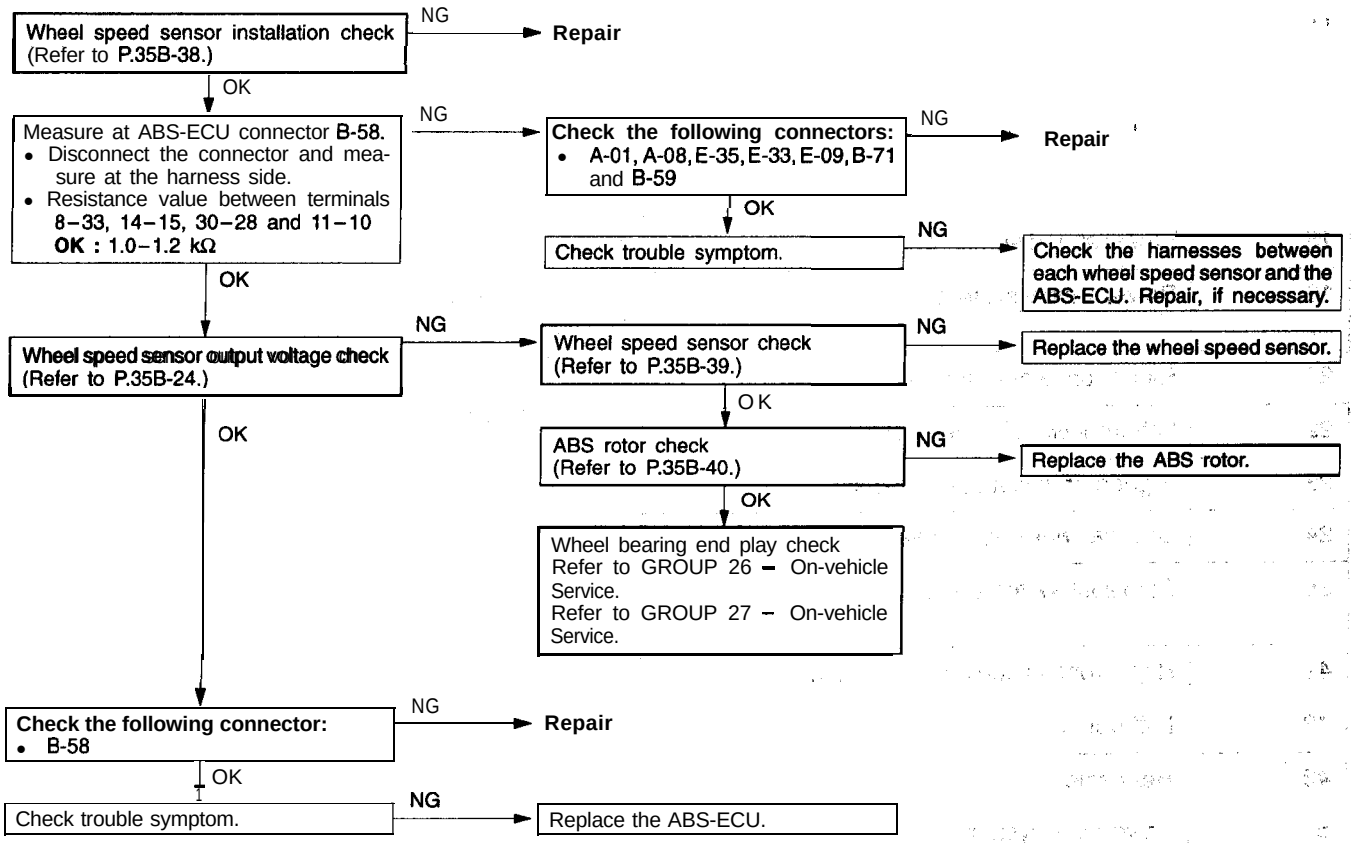

Code No. 15 Wheel speed sensor system	Probable cause
[Comment] This diagnostic trouble code is output when there is a malfunction (other than broken wire or short circuit) in any of the wheel speed sensor output signals while driving. The following can be considered as the cause of the wheel speed sensor output malfunction. • Distortion of rotor, teeth missing • Low frequency noise interference when sensor harness wire is broken • Noise interference in sensor signal • Sensor output signal is below the standard value or amplitude modulation is over the standard value. Using an oscilloscope to measure the wave shape of the wheel speed sensor output signal is very effective. • Broken sensor harness • Poor connection of connector	• Malfunction of wheel speed sensor • Malfunction of wiring harness • Malfunction of ABS rotor • Malfunction of wheel bearing • Malfunction of ABS-ECU

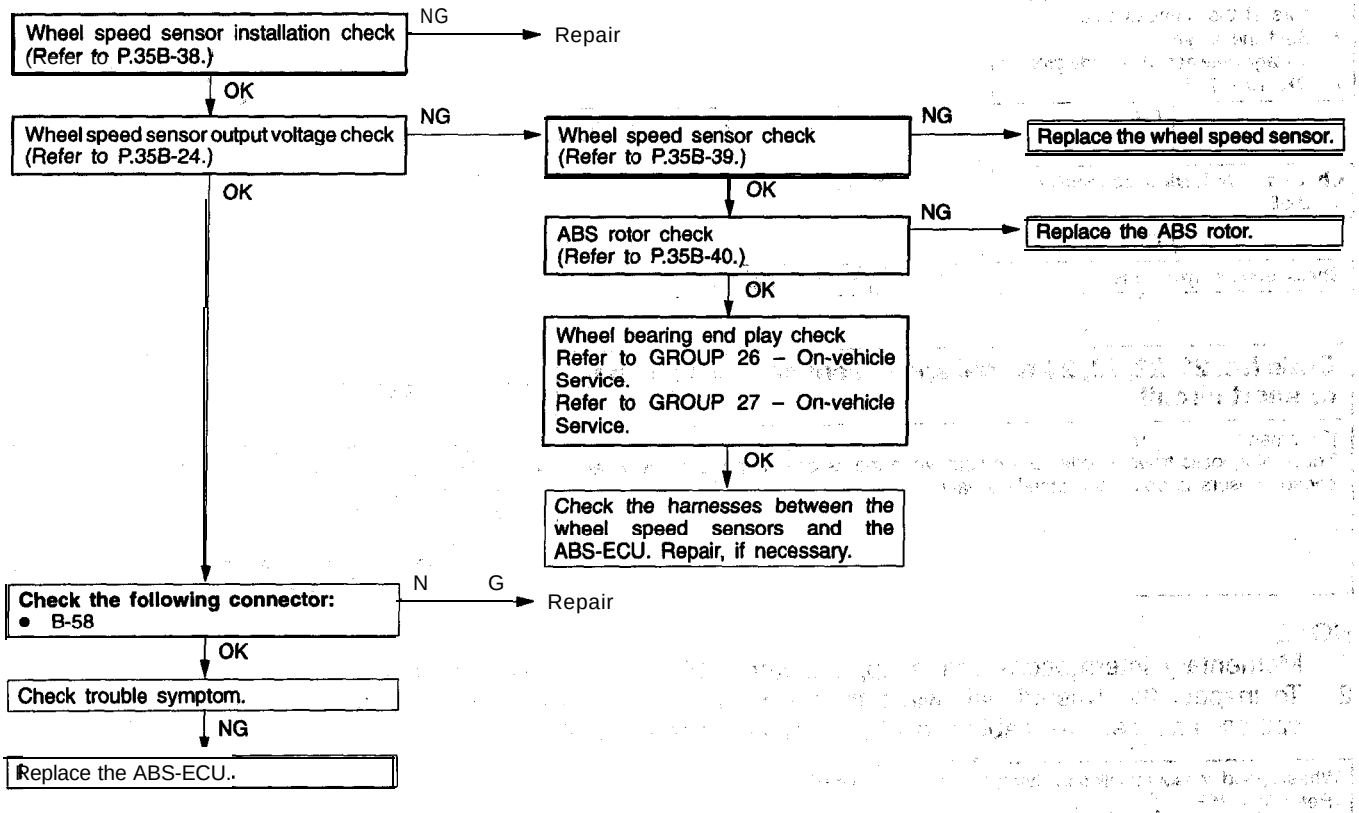

Code No. 16 Power supply system	Probable cause
[Comment] This diagnostic trouble code is output when the ABS-ECU power voltage is outside the standard value. Furthermore, if the voltage returns to normal, this diagnostic trouble code will not be output.	• Malfunction of wiring harness or connector, • Malfunction of battery or generator' • Malfunction of ABS-ECU

Caution

If the battery voltage drops during check, this code will be output as a current problem, and correct diagnostic of the problem cannot be made.
Before carrying out the following check, check the battery condition; and recharge it if necessary.

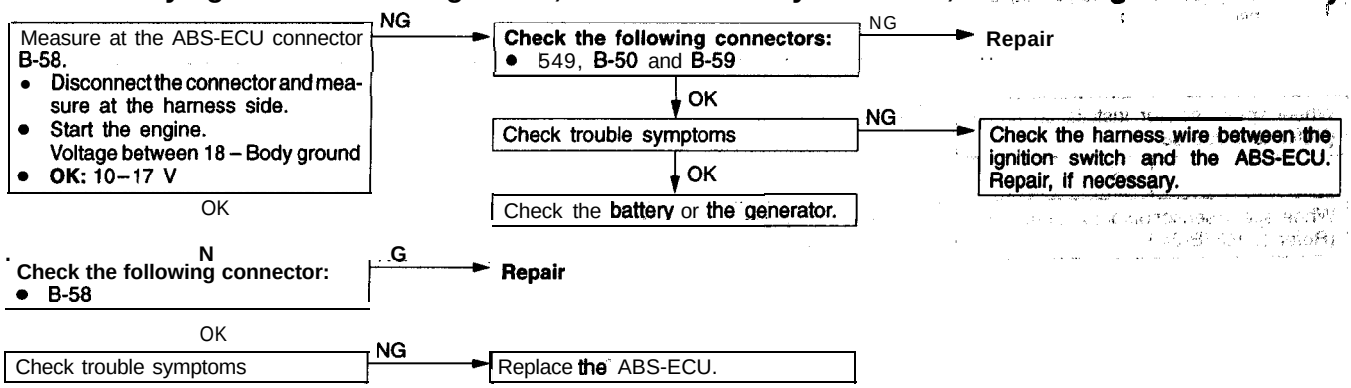

Code No. 21, 22, 23, 24 Wheel speed sensor excessive gap or short circuit	Probable cause
[Comment] These diagnostic trouble codes are output when the detection speed of the wheel speed sensors is below the standard value.	• Improper installation of wheel speed sensor • Malfunction of wheel speed sensor (intermittent open circuit or short circuit) • Malfunction of ABS rotor (chipped tooth or rotor not installed) • Noise interference in wheel speed sensor • Malfunction of ABS-ECU

NOTE
1. Momentary interruptions within approximately 100 ms are not detected.
2. To inspect the twisted pair wires in the wheel speed sensor, check if there is any damage to the cables, and flex the cables to check for any open circuits.

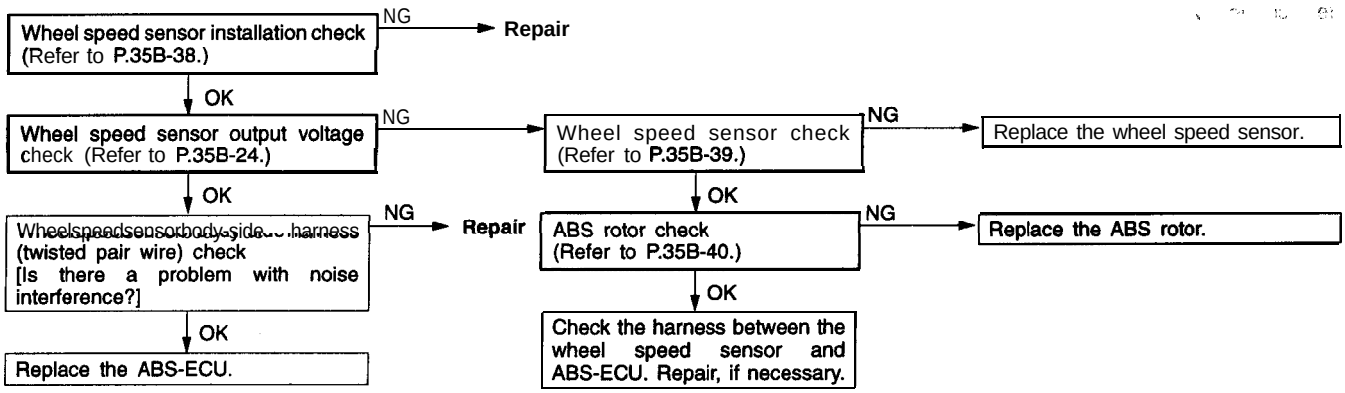

TSB Revision

Code No. 38 Stop light switch system	Probable cause
[Comment] The ABS-ECU outputs this diagnostic trouble code in the following cases. • Stop light switch remains on for more than 15 minutes while the ABS is not functioning. • The harness wire for the stop light switch may be open-circuited. If the stop light operates normally, there is an open circuit in the harness for the stop light switch input circuit or there is a malfunction in the ABS-ECU.	• Malfunction of stop light switch • Malfunction of harness or connector • Malfunction of ABS-ECU

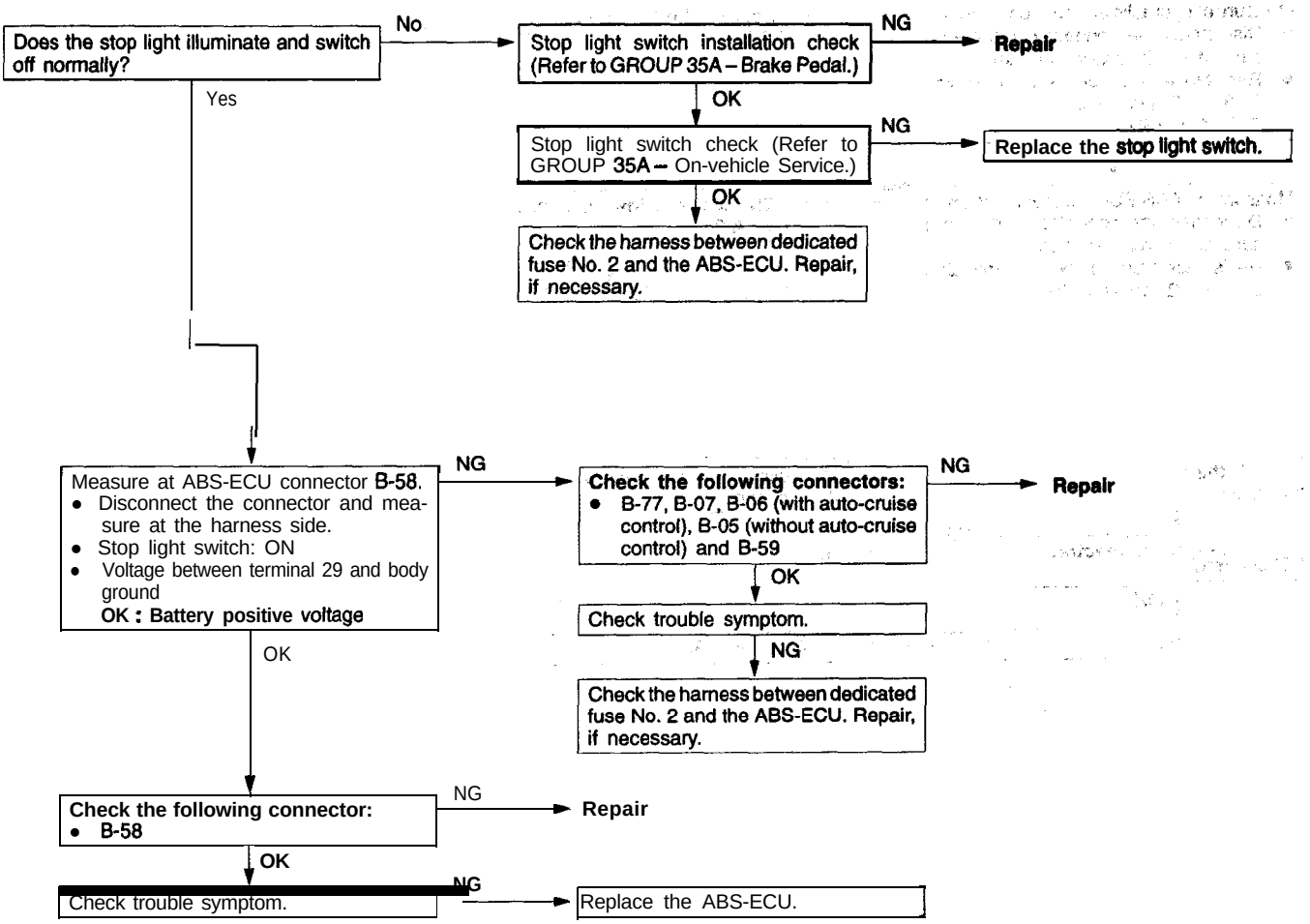

TSB Revision

Code No. 41, 42, 43 Solenoid valve system	Probable cause
[Comment] The ABS-ECU normally monitors the solenoid valve drive circuit. If no current flows in the solenoid even if the ECU turns the solenoid ON or if it continues to flow even when turned OFF, the ECU determines the solenoid coil wire is broken/short-circuited or the harness is broken/ short-circuited, and then these diagnostic trouble codes are output.	• Malfunction of hydraulic unit • Malfunction of wiring harness or connector • Malfunction of ABS-ECU

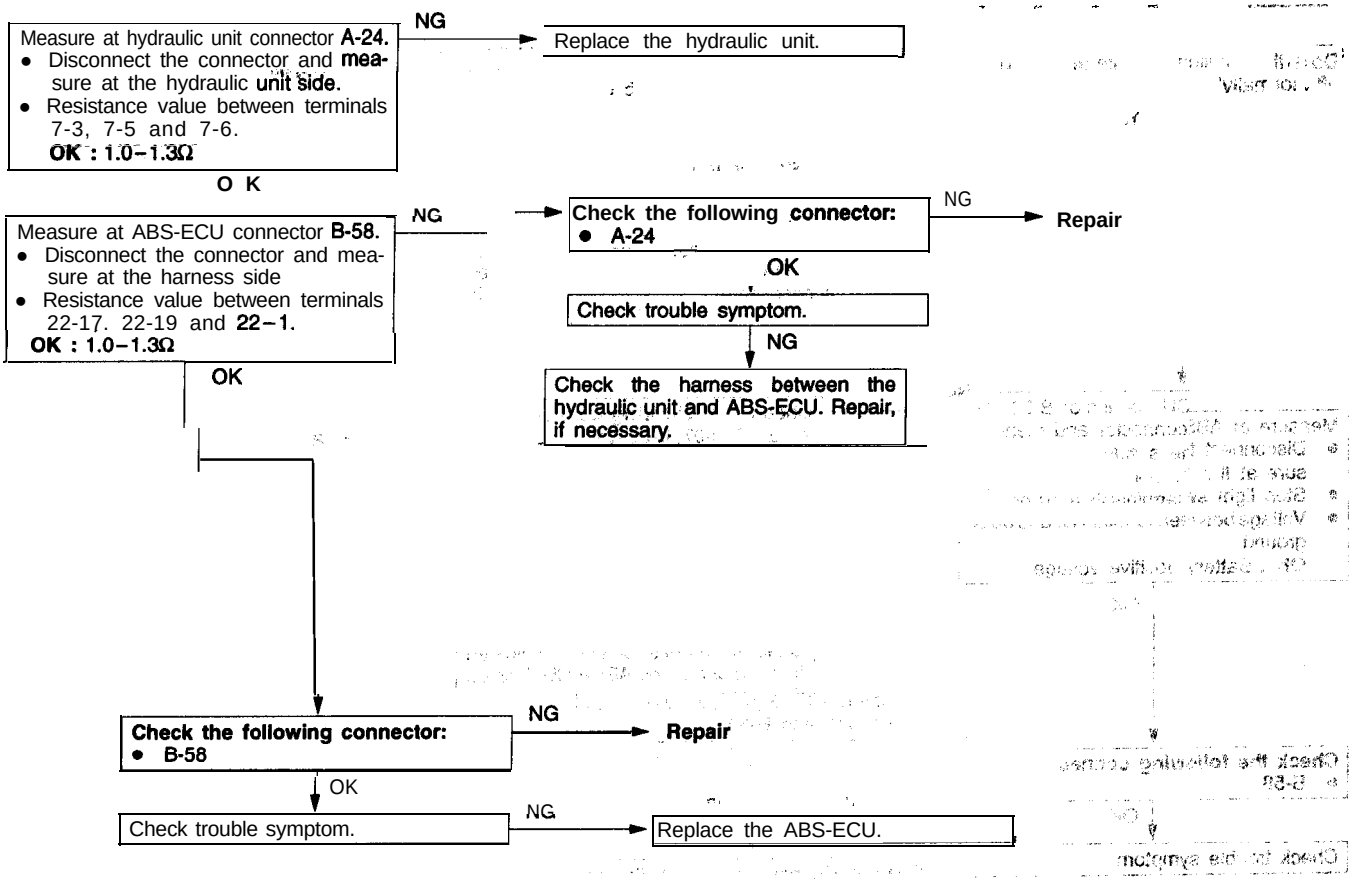

TSB Revision

Code No. 51 Valve relay system	Probable cause
[Comment] When the ignition switch is turned ON, the ABS-ECU switches the valve relay OFF and ON for an initial check, compares the voltage of the signal to the valve relay and valve power monitor line voltage to. check whether the valve relay operation is normal. In addition, normally it monitors whether or not there is power in the valve power monitor line since the valve relay is normally ON. If the supply of power to the valve power monitor line is interrupted, this diagnostic trouble code will be output.	• Malfunction of ABS valve relay • Malfunction of wiring harness or connecter • Malfunction of hydraulic unit • Malfunction of ABS-ECU

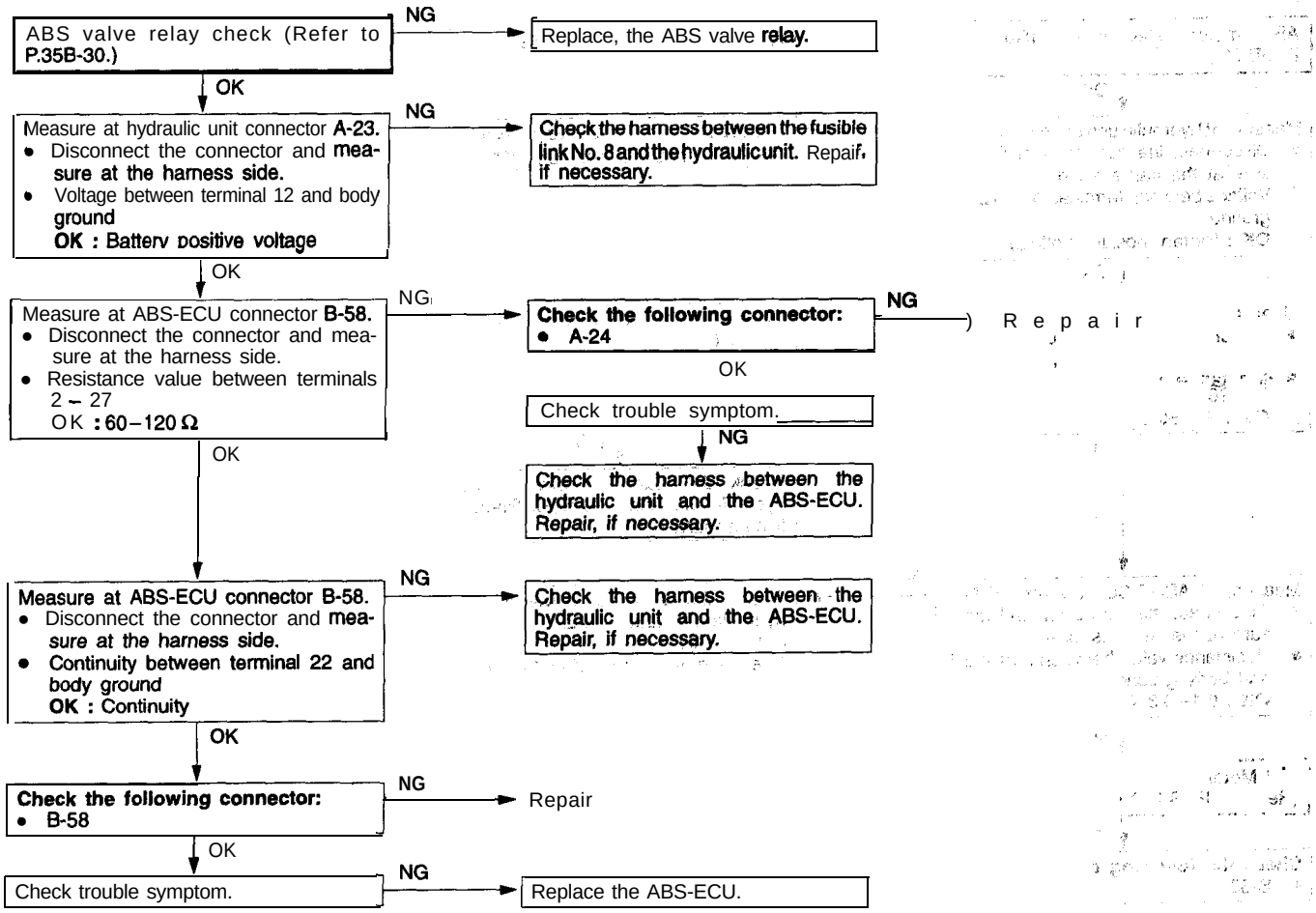

TSB Revision

Code No. 53 Motor relay, motor system	Probable cause
[Comment] The ABS-ECU outputs this diagnostic trouble code for the motor relay and motor in the following cases. • When motor relay is ON and no signal is input to the motor monitor line (when motor is not operating, etc.) • When motor relay is OFF and signal is input to the motor monitor line for approximately 5 seconds or more (when motor continues operating, etc.) • When the motor relay does not function	• Malfunction of ABS motor relay • Malfunction of wiring harness or connector • Malfunction of hydraulic unit • Malfunction of ABS-ECU

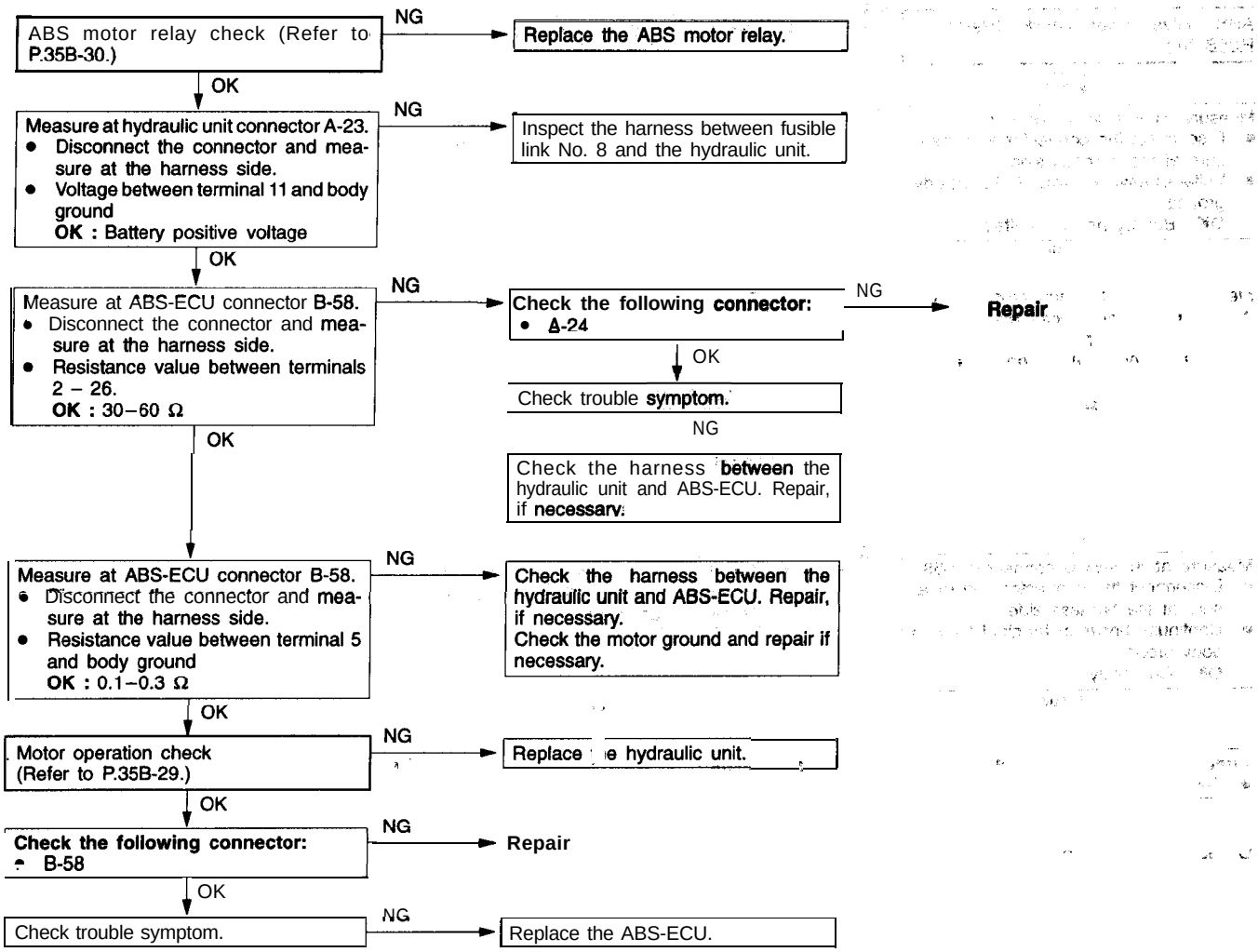

TSB Revision

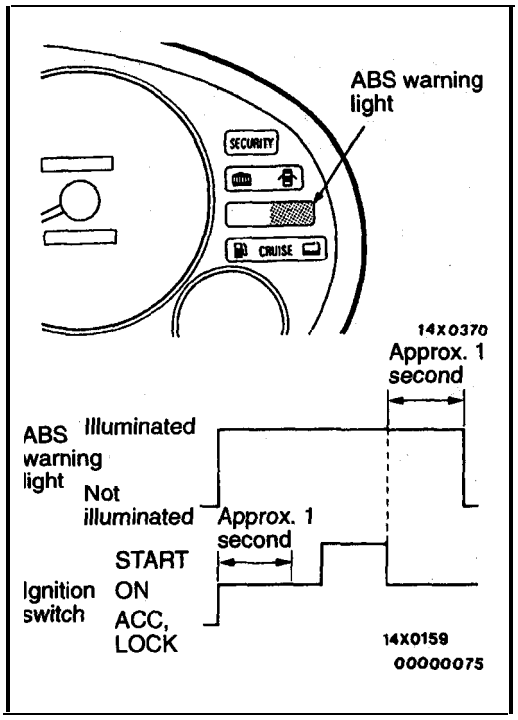

ABS WARNING LIGHT CHECK'

35201200024

Check that the ABS warning light illuminates as- follows.

1. When the ignition switch is turned to "ON", the ABS warning light illuminates.
2. When the ignition switch is turned to "START", to start the engine, the ABS warning light switches off after approx. 1 second.
3. If the illumination is other' than the above, check the diagnostic trouble codes.

INSPECTION CHART FOR TROUBLE SYMPTOMS

35201140074

Get an understanding of the trouble symptoms and check according to the inspection procedure chart.

Trouble symptom		Inspection procedure No.	Reference page
Communication with scan tool is not possible.	Communication with all systems is not possible.	1	P.35B-17
	Communication with ABS only is not possible.	2	P.35B-17
When the ignition key is turned to "ON" (engine stopped), the ABS warning light does not illuminate.		3	P.35B-18
After the engine starts, the ABS warning light remains illuminated.		4	P.35B-18
When the ignition key is turned to "START", the ABS warning light does not illuminate.		5	P.35B-19
After the ignition key is turned to "ON", the ABS warning light blinks once, and when turned to "START", it illuminates. When returned to "ON", the light flashes once, and then switches off.		6	P.35B-19
Faulty ABS operation	Unequal braking power on both sides	7	P.35B-20
	Insufficient braking power		
	ABS operates under normal braking conditions		
	ABS operates before vehicle stops under normal braking conditions		
	Large brake pedal vibration (Caution 2.)		

Caution

1. **if steering movements are made when driving at high speed, or when driving on road surfaces with low frictional resistance, or when passing over bumps, the ABS may operate even though sudden braking is not being applied. Because of this, when getting information from the customer, check if the problem occurred while driving under such conditions as these.**
2. **During ABS operation, changes in the feeling of the brake pedal (vibration may occur or pedal may not be able to be depressed). Such changes are due to intermittent changes in hydraulic pressure inside the brake line to prevent the wheels from locking, and is considered normal.**

INSPECTION PROCEDURE FOR TROUBLE SYMPTOMS

INSPECTION PROCEDURE 1

Communication with scan tool is not possible. (Communication with all systems is not possible.)	Probable cause
[Comment] The reason is probably a defect in the power supply system (including ground) for the diagnostic line.	• Malfunction of connector • Malfunction of harness
Refer to GROUP 13A -Troubleshooting.	

INSPECTION PROCEDURE 2

Communication with scan tool is not possible. (Communication with ABS only is not possible.)	Probable cause
[Comment] When communication with the s&an tool is not possible, the cause is probably an open circuit in the ABS-ECU power circuit or an open circuit in the diagnostic output circuit.	• Blown fuse • Malfunction of wiring harness or connector • Malfunction of ABS-ECU

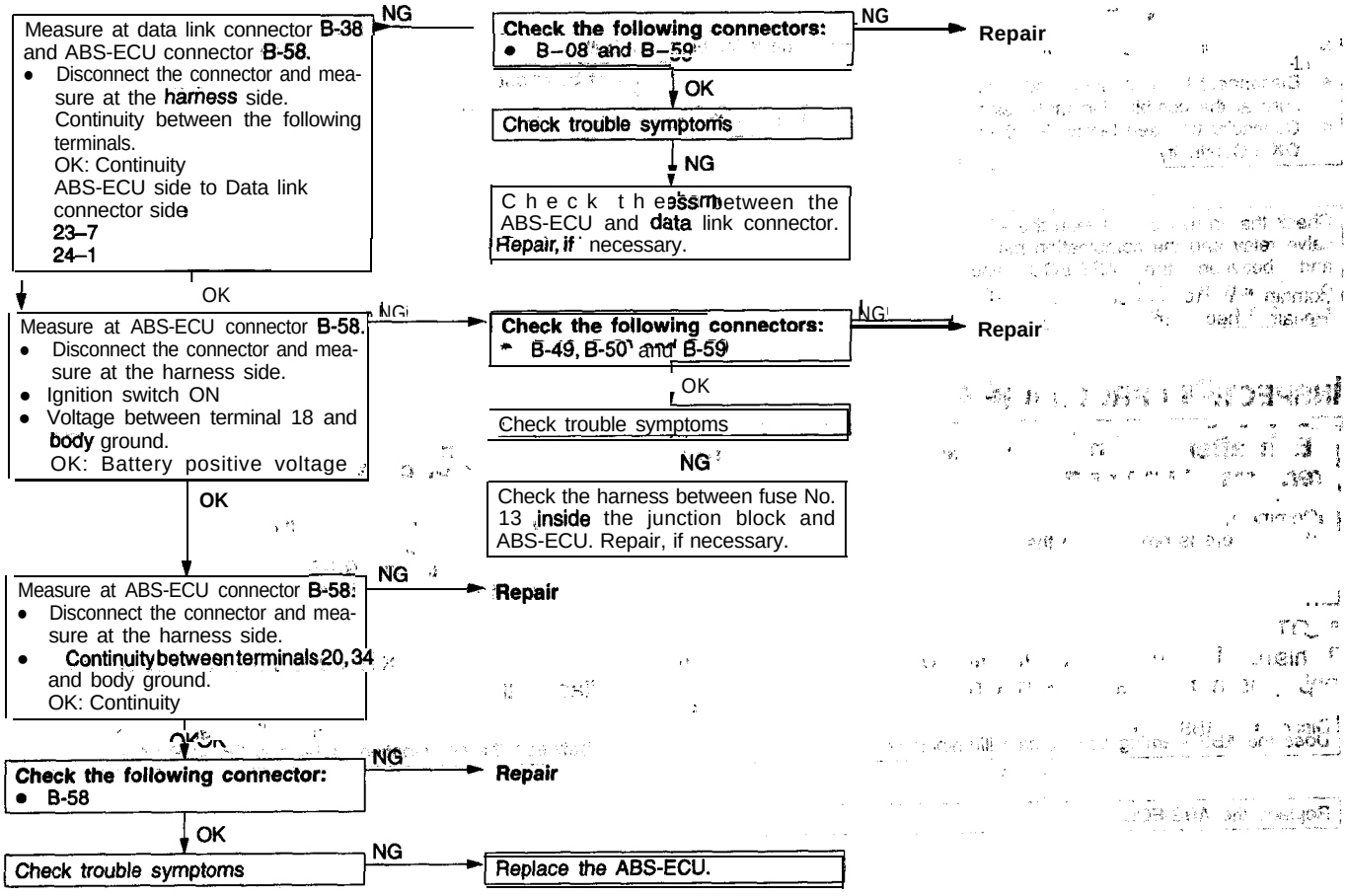

INSPECTION PROCEDURE 3

When ignition key is turned to "ON" (engine stopped), ABS warning light does not illuminate	Probable cause
[Comment] When power is supplied to the ABS-ECU, the valve relay changes from ON to OFF → ON by the initial check, and thus even if there is a problem with the circuit between ABS warning light and ABS-ECU, the light will illuminate once when the valve relay is OFF. Accordingly, the cause of the light not illuminating is probably an open circuit in the light power circuit, a blown light bulb, or an open circuit in both the circuit between the ABS warning light and the ABS-ECU and the circuit between the ABS warning light and the ABS valve relay. When other warning lights also do not illuminate, the cause is probably a blown fuse.	• Blown fuse • Burnt out ABS warning light bulb • Malfunction of wiring harness or connector

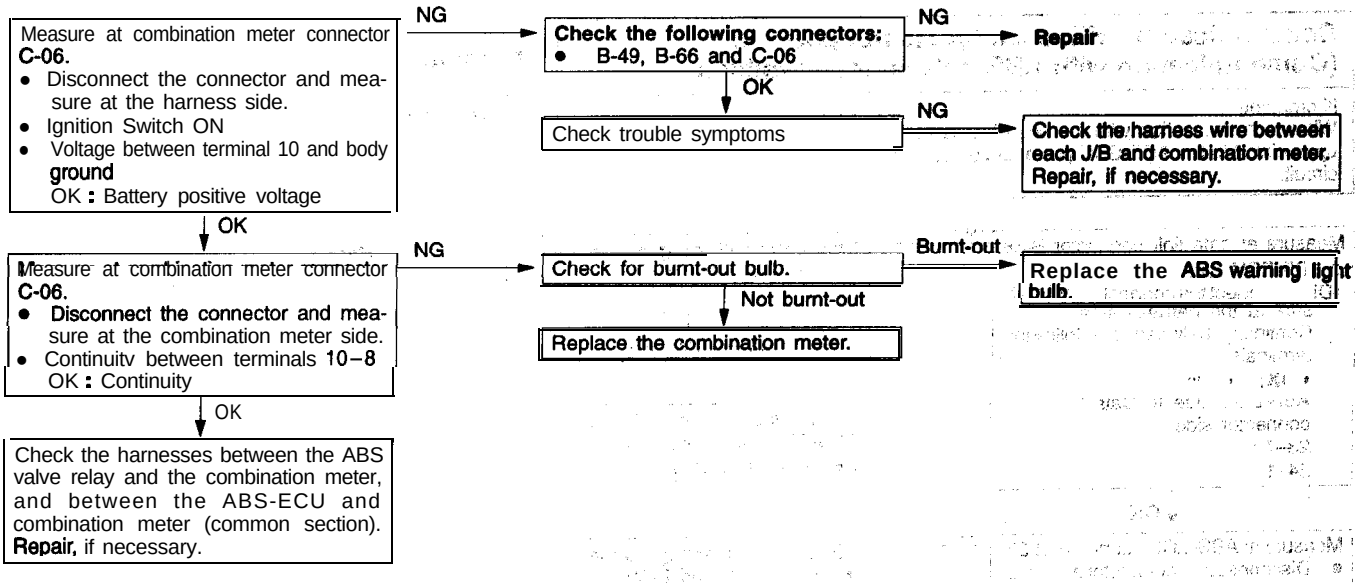

INSPECTION PROCEDURE 4

Even after the engine is started, the ABS Warning light remains illuminated.	Probable cause
[Comment] There is probably a short in the ABS warning light illumination circuit.	• Malfunction of combination meter • Malfunction of ABS valve relay • Malfunction of ABS-ECU • Malfunction of wiring

NOTE
This trouble symptom is limited to cases where communication with the scan tool is' possible (ABS-ECU power supply is normal) and the diagnostic trouble code is a normal diagnostic trouble code.

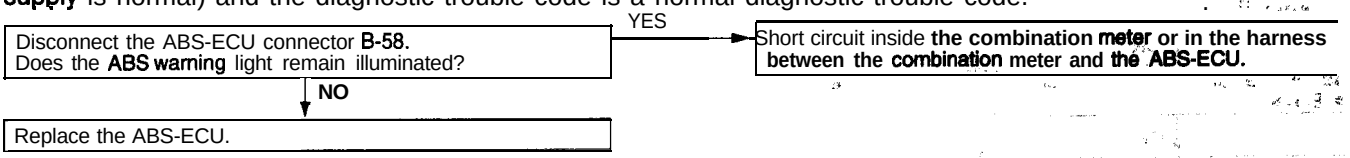

INSPECTION PROCEDURE 5

When ignition key is turned to "START", ABS warning light does not illuminate.	Probable cause
[Comment] The ABS-ECU uses the power to the IG2 which is cut when the ignition switch is' turned to "START". The ABS warning light uses IG1 power which is not cut even when the ignition switch is turned to "START". Accordingly, because the power to the ABS-ECU is stopped in "START" position, if the warning light does not illuminate at this time, the cause is a problem in the light illumination circuit in the valve relay.	• Malfunction of wiring harness or connector • Malfunction of hydraulic unit

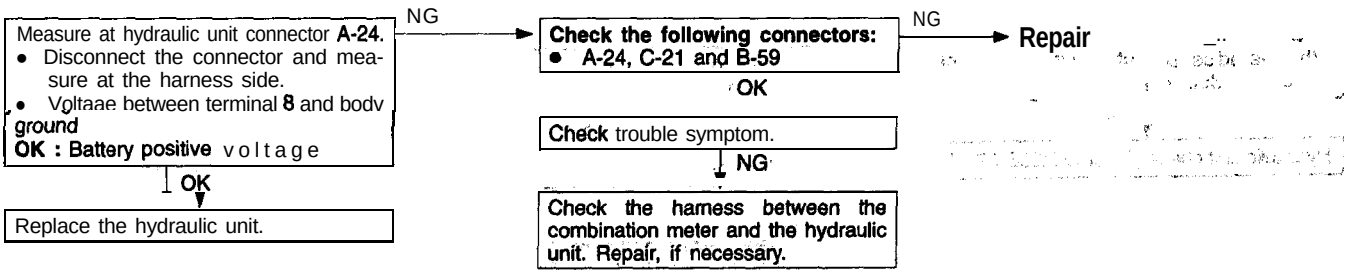

INSPECTION PROCEDURE 6

The ABS warning light flashes once after the ignition key is turned to "ON". The light illuminates when the ignition key is turned to "START", and when the key is returned to "ON", it flashes once.	Probable cause
[Comment] When power flows, the ABS-ECU turns on the warning light for approximately 1 second while it performs a valve relay test. If there is a break in the harness between the ECU and the warning light illuminates only when the valve relay is off in the valve relay test, etc.	• Malfunction of wiring harness or connector • Malfunction of ABS-ECU

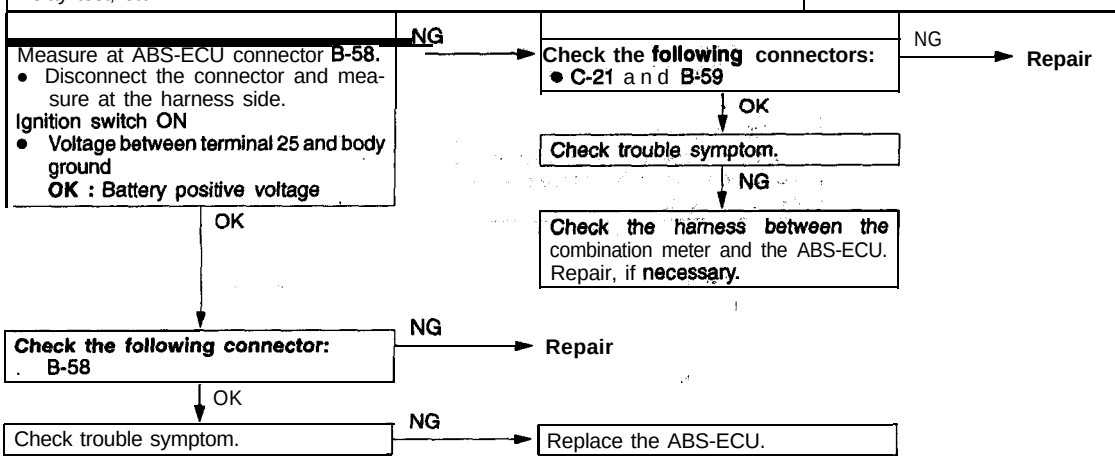

INSPECTION PROCEDURE 7

Break operation is abnormal	Probable cause
[Comment] This varies depending on the driving conditions and the road surface conditions, so problem diagnosis is difficult. However, if a normal diagnostic trouble code is displayed, carry out the following inspection.	• Malfunction of wheel speed sensor • Malfunction of ABS rotor • Malfunction of wheel bearing • Malfunction of hydraulic unit • Malfunction of ABS-ECU

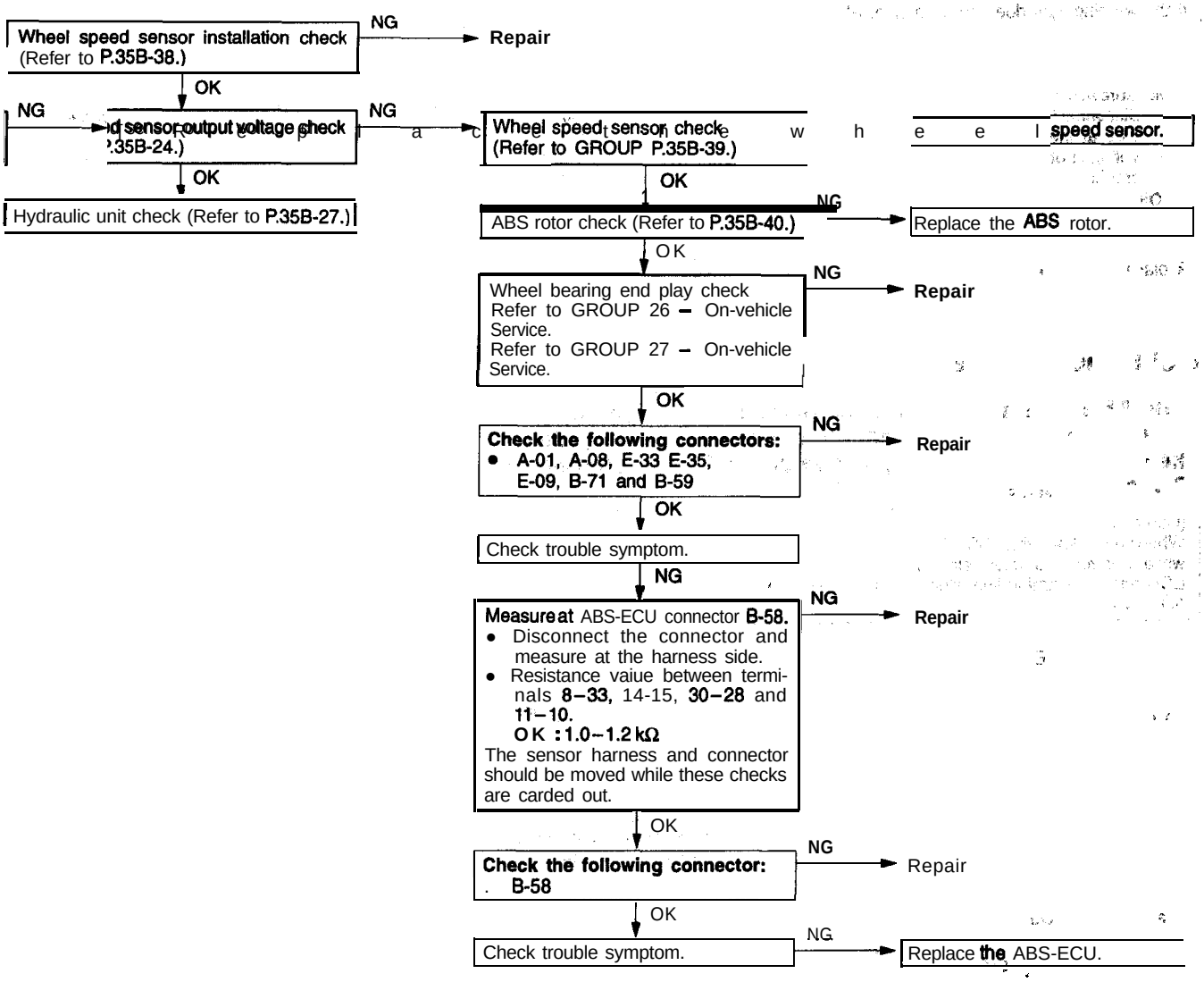

TSB Revision

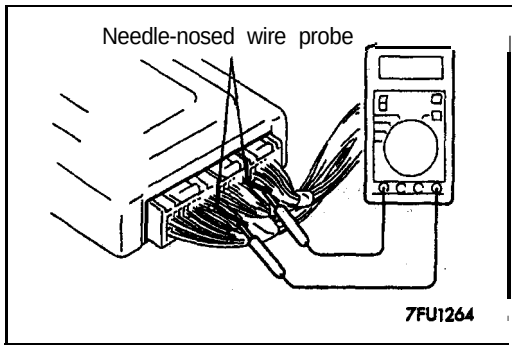

ABS-ECU CHECK

35201180076

TERMINAL VOLTAGE CHECK CHART

1. Connect a needle-nosed wire probe (paper clip etc.) to a voltmeter probe.
2. Insert the needle-nosed wire probe into each of the ABS-ECU connector terminals from. the wire side, and measure the voltage while referring to the check chart.

   NOTE
   1. Measure voltage with the ABS-ECU connectors connected.
   2. You may find it convenient to pull out the ABS-ECU to make it easier to reach the connector terminals.:
   3. Checks don't have to be carried out in the order given in the chart.

   Caution
   Short-circuiting the positive (+) probe between a connector terminal and ground could damage the vehicle wiring, the sensor, ABS-ECU, or all three. Use care to prevent this!
3. If voltmeter shows any division from standard value, check the corresponding sensor, actuator and related electrical wiring, then repair or replace.
4. After repair or replacement, recheck with the voltmeter' to confirm that the repair has corrected the problem.

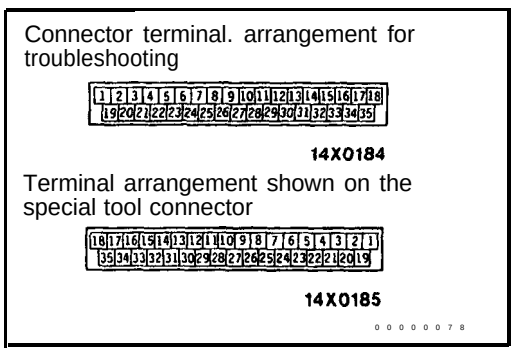

ABS-ECU Connector Terminal Arrangement

Caution

1. **Use the special tool (MB991356) to check the ABS-ECU terminal voltage and resistance.**
2. **The ABS-ECU connector terminal arrangement for troubleshooting is different from the terminal arrangement shown on the special tool connector. So take the readings from the terminal numbers of the special tool when checking.**

   Example

ABS-ECU connector terminal number for troubleshooting	Terminal number shown on the special tool connector
18	1

14X0184

Terminal No.	Check point	Check condition	Normal condition
1	Rear solenoid valve (Output)	Ignition switch: OFF	0 V
		Ignition switch: ON	Battery positive voltage
2	Relay power supply (Output)	Ignition switch: OFF	0 V
		Ignition switch: ON	Battery positive voltage
4	Generator (Input)	Ignition switch: ON (while engine is stopped)	2-5 V
		Ignition switch: ON (while engine is running)	Battery positive voltage
17	F.L. solenoid valve (Output)	Ignition switch: OFF	0 V
		Ignition switch: ON	Battery positive voltage
18	Ignition switch (Input)	Ignition switch: ON	Battery positive voltage
		Ignition switch: START	0 V
19	F.R. solenoid valve (Output)	Ignition switch: OFF	0 V
		Ignition switch: ON	Battery positive voltage
22	Valve relay monitor (Input)	Ignition switch: OFF	0 V
		Ignition switch: ON	Battery positive voltage
23	Diagnostic communication (Input/Output)	Scan tool: connected	Serial communication with the scan tool
		Scan tool: disconnected	1 V or less
24	Diagnostic selection (Input)	Scan tool: connected	0 V
		Scan tool: disconnected	Approx. 12 V
25	ABS warning light (Output)	Ignition switch: ON	Battery positive voltage
29	Stop light switch (Input)	Ignition switch: ON (stop light switch ON)	5 V or more
		Ignition switch: OFF (stop light switch OFF)	1.5 V or more

TSB Revision

TERMINAL RESISTANCE AND CONTINUITY CHECK

1. Turn. the ignition switch to OFF.
2. Disconnect the ABS-ECU connector.
3. Measure the resistance and check for continuity between the terminals of the ABS-ECU **harness-side** connector while referring to the check chart.

NOTE

1. When measuring resistance and checking continuity, a 'harness for checking contact pin pressure should be used instead of inserting a test probe.
2. Checks do not have to be carried out in the order given in this chart.

Caution

If resistance or continuity checks are performed on the wrong terminals, damage to the vehicle wiring, sensors, ABS-ECU, and/or ohmmeter may occur. Use care to prevent this!

4. If the ohmmeter shows any deviation from the normal condition, check the corresponding sensor, actuator and related electrical wiring, and then repair or replace.
5. After repair or replacement, recheck with the ohmmeter to confirm that the repair or replacement has corrected the problem.

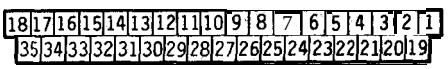

14X0310

Terminal No.	Check point	Check condition	Normal condition
5–ground	Motor monitor	At all times	Continuity
8–33	F.R.sensor	Ignition switch: OFF	1.0–1.2 kΩ
11–10	R.L. sensor	Ignition switch: OFF	1.0–1.2 kΩ
14–15	F.L. sensor	Ignition switch: OFF	1.0–1.2 kΩ
20–ground	ABS-ECU ground	At all times	Continuity
26–2	Motor relay	Ignition switch: OFF	Approx. 50 Ω
27–2	Valve relay	Ignition switch: OFF	Approx. 100 Ω
30–28	R.R. sensor	Ignition switch: OFF	1.0–1.2 kΩ
34–ground	ABS-ECU ground	At all times	Continuity

ON-VEHICLE SERVICE

35200150047

BLEEDING

Caution

Use the specified brake fluid. Avoid using a mixture of the specified brake fluid and other fluid.

Specified brake fluid: DOT3 or DOT4

MASTER CYLINDER BLEEDING

Refer to GROUP 35A – On-vehicle Service.

BRAKE LINE BLEEDING

Refer to GROUP 35A – On-vehicle Service.

Caution

For vehicles with ABS, be sure to filter/strain the brake fluid 'being added to the master cylinder reservoir tank. Debris may damage the HU.

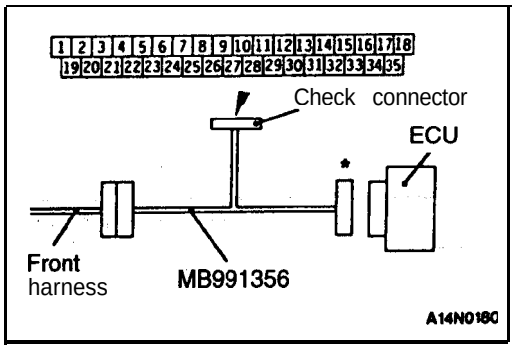

ABS OPERATION CHECK

35200130101

WHEEL SPEED SENSOR OUTPUT VOLTAGE CHECK

1. Lift up the vehicle and release the parking brake.
2. Disconnect the ECU harness connector and measure from the harness side connector.

   Caution

   Set the special tool and use the check connector to check. Do not connect the connector "(Special Tool) marked with "*" except when recording the waveform on' a driving test. In such a case, connect the connector to the ECU.

3. Rotate the wheel to be measured at approximately.; 1/2 - 1 rotation per second, and check the output voltage using a circuit tester or an oscilloscope.

Wheels	Front left	Front right	Rear left	Rear right
Terminal No.	4	21	9	26
	5	11	8	24

Output voltage

When measuring with a voltmeter:
70 mV or more
When measuring with an oscilloscope:
200 mV p-p or more

TSB Revision

Connector terminal arrangement

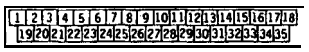

14X0184

Terminal arrangement shown on the special tool connector

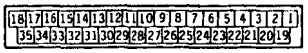

14X0185

00000076

Caution

1. **Use the special tool (MB991356) to check the ABS-ECU terminal voltage and resistance.**
2. **The ABS-ECU connector terminal arrangement for troubleshooting is different from the terminal arrangement shown on the special tool connector. So take the readings from the terminal numbers of the special tool when checking.**

Example

ABS-ECU connector terminal number	Terminal number shown on the special tool connector
18	1

4. If the output voltage is lower than the above values, the reason could be as follows:
   - Faulty wheel speed sensor.

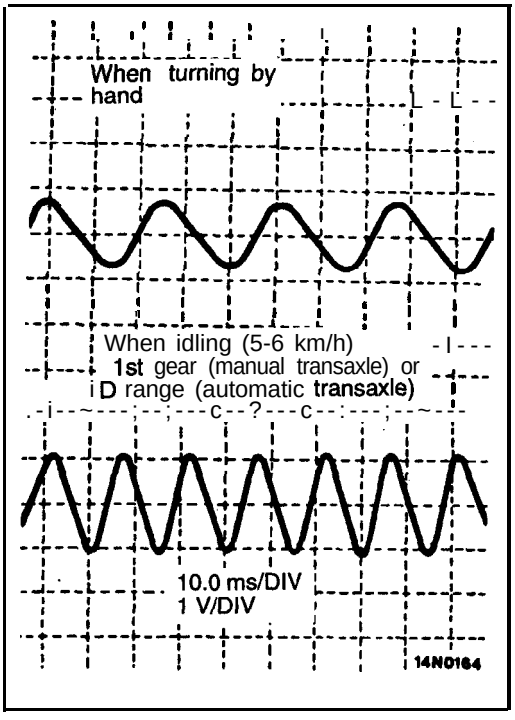

Inspecting Wave Forms With An Oscilloscope

Use the following method to observe the output voltage wave form from each wheel sensor with an oscilloscope

- Start the engine, and rotate the front wheels by engaging 1st gear (vehicles with manual transaxle) or D range (vehicles with automatic transaxle). Turn the rear wheels manually so that they rotate at a constant speed.

NOTE

1. Check the connection of the sensor harness and connector before using the oscilloscope.
2. The wave form measurements can also be taken while the vehicle is actually moving.
3. The output voltage will be low when the wheel speed is low, and similarly it will be higher as the wheel speed increases.

Points In Waveform Measurement

Symptom	Probable causes	Remedy
Too small or zero waveform amplitude	Faulty wheel speed sensor	Replace sensor
Waveform amplitude fluctuates excessively (this is no problem if the minimum amplitude is 100 mV or more)	Axle hub eccentric or with large runout	Replace hub
Noisy or disturbed waveform	Open circuit in sensor	Replace sensor
	Open circuit in harness	Correct harness
	Incorrectly mounted wheel speed sensor	Mount correctly
	ABS rotor with missing or damaged teeth	Replace ABS rotor

NOTE
The wheel speed sensor cable moves following motion of the front or rear suspension. Therefore, it is likely that it has an open circuit only when driving on rough roads and it functions normally on ordinary roads. It is, therefore, recommended to observe sensor output voltage waveform also under special conditions, such as rough road driving.

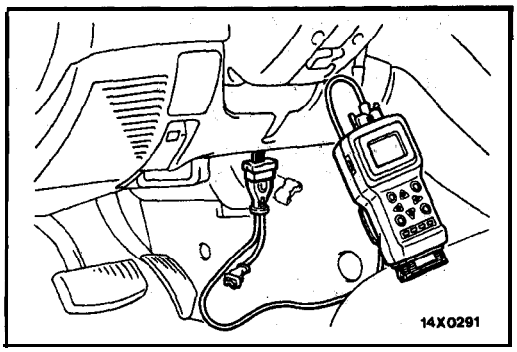

HYDRAULIC UNIT (HU) CHECK

35200170111

Caution

Turn the ignition switch off before connecting or disconnecting the scan tool.

1. Jack up the vehicle and support the vehicle with rigid racks placed at the specified jack-up points or place the wheels which are checked on the rollers of the braking force tester.

   Caution

   1. **The roller of the braking force tester and the tire should be dry during testing.**
   2. **When testing the front brakes, apply the parking brake, and when testing the rear brakes, stop the front wheels by chocking them.**

2. Release the parking brake, and feel the drag force (drag torque) on each road wheel.
   When using the braking force tester, take a reading of' the brake drag force.
3. Turn the ignition key to 'the OFF position and set the scan tool as shown in the diagram.
4. After checking that the shift lever <M/T> or the selector lever <A/T> is in neutral, start the engine.

   NOTE

   1. At this time, the ABS system will switch to the scan tool mode -and the ABS warning light will illuminate.
   2. When the ABS has' been interrupted by the -fail-safe ' function, the scan tool actuator testing cannot be used.

5. Use the scan tool to force-drive the actuator.

6. Turn the wheel by hand and check the change in braking force when the brake pedal is depressed
When using the braking force tester, depress the brake pedal, until the braking force is at the following values, and check to be sure that the braking farce changes! to the brake drag force, inspected in step 2 when the, actuator is force-driven.

N (lbs.)

Front wheel	785–981 (176–220)
Rear wheel	588–785 (132–176)

The result should be as shown in the following diagram.

7. If the result of inspection is abnormal, correct according to the "Diagnostic Table."

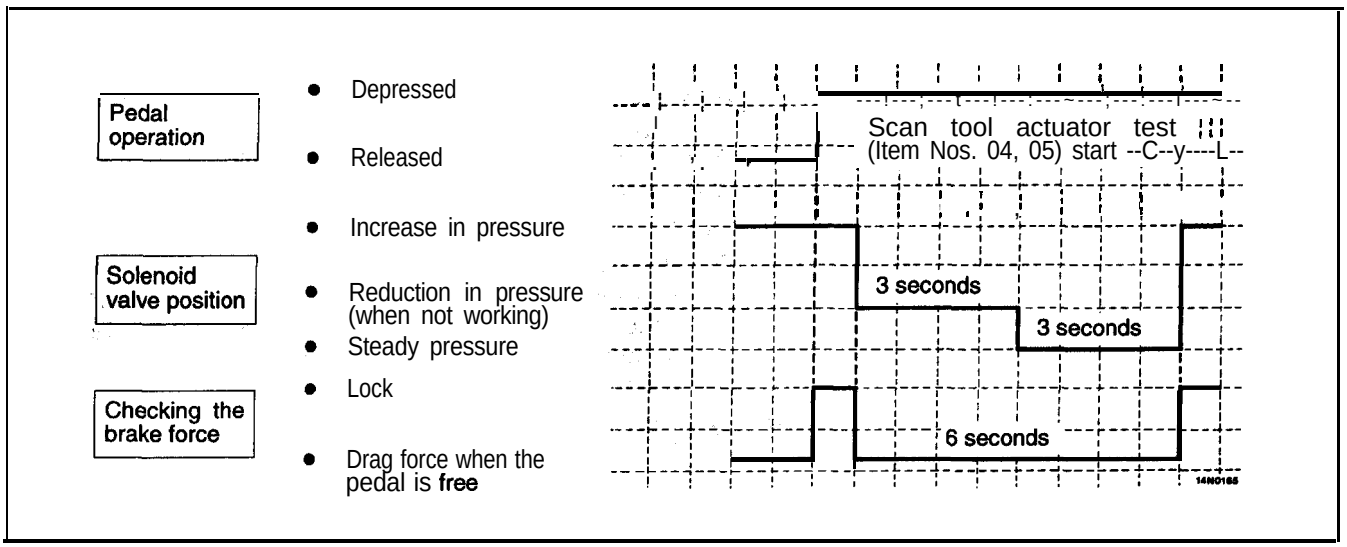

Diagnosis Table

No.	Operation	Judgement– Normal	Judgement– Abnormal	Probable cause	Remedy
04	(1) Depress brake pedal to lock wheel. (2) Using the scan tool, select the wheel to be checked and force the actuator to operate. (3) Turn the selected wheel manually to check the change of brake force.	Brake force released for 6 seconds after locking.	Wheel does not lock when brake pedal is depressed.	Clogged brake line other than HU	Check and clean brake line
				Clogged hydraulic circuit in HU	Replace HU assembly
05			Brake force is not released	Incorrect HU brake tube connection	Connect correctly
				HU solenoid valve not functioning correctly	Replace HU assembly

8. After inspection, disconnect the scan tool immediately after turning the ignition switch to OFF.

TSB Revision

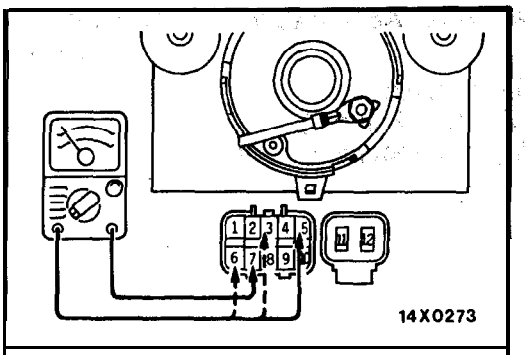

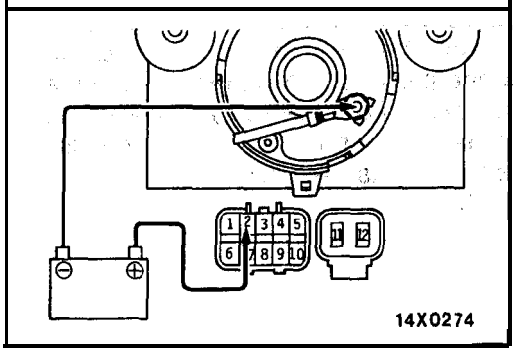

SOLENOID VALVE CHECK

35201070083

Measure the resistance between terminals.

Standard value: 1.0–1.3Ω

MOTOR OPERATION CHECK

35200180084

Connect the battery 'and check to be sure that the sound! of the hydraulic unit motor operating can be heard.

Caution

The battery power should not be applied for more than, 1 second.

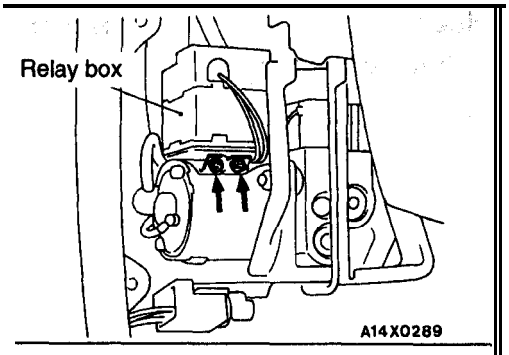

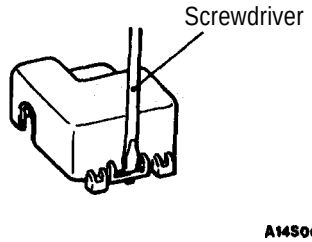

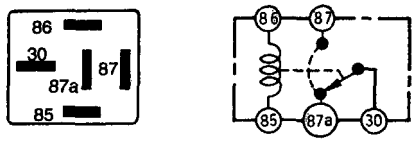

ABS MOTOR RELAY AND ABS VALVE RELAY CHECK

35201090065

1. Remove the splash shietd.
   (Refer to GROUP 42 – Fender.)
2. Remove the relay box mounting bolts.

3. Insert the tip of a screwdriver into the space between the hydraulic unit and the relay "box cover and use it to open the tab at one place, and then remove the cover.'
4. Take out all of the relays from the relay box, and check the continuity between the terminals when power is not supplied and when power is supplied.

ABS Motor Relay

When no current flows	Between terminals 85–86	30–60 Ω
	Between terminals 30–87	No continuity
When current flows between terminals 85–86	Between terminals 30–87	Continuity (approx. 0 Ω)

ABS Valve Relay

When no current flows	Between terminals 85–86	60–120 Ω
	Between terminals 30–87a	Continuity (approx. 0 Ω)
	Between terminals 30–87	No continuity
When current flows between terminals 85–86	Between terminals 30 – 87a	No continuity
	Between terminals 30 – 87	Continuity (approx. 0 Ω)

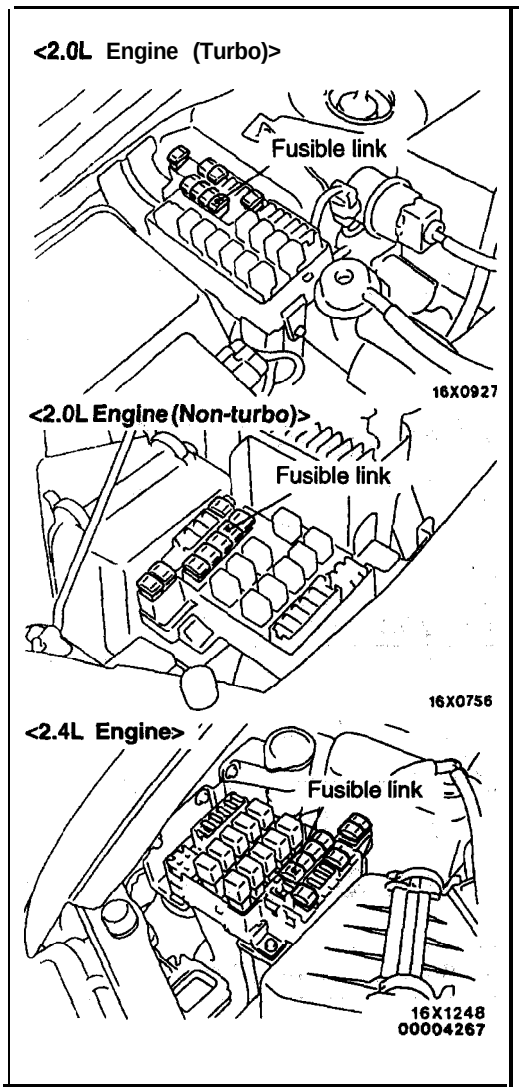

REMEDY FOR A DISCHARGED BATTERY 35200350065

When booster cables are used to start the engine when the battery is completely discharged and then the vehicle is immediately driven without waiting for the battery to recharge itself to some extent, the engine may, misfire or stall, making driving difficult.

This happens because ABS consumes. a great amount of current for its self-check function. The remedy is to either allow the battery to recharge sufficiently, or to remove the fusible link for ABS circuit, thus disabling the anti-lock brake system.

The ABS warning light will illuminate, when the fusible link (for ABS) is removes.

After the battery has sufficiently charged, install the fusible link (for ABS) and restart the engine; then check to be sure the ABS warning light is not, illuminated.

MASTER CYLINDER AND BRAKE BOOSTER

35200400111

REMOVAL AND INSTALLATION

(Refer to GROUP 35A – Master Cylinder and Brake Booster.)

MASTER CYLINDER

35200450079

DISASSEMBLY AND REASSEMBLY

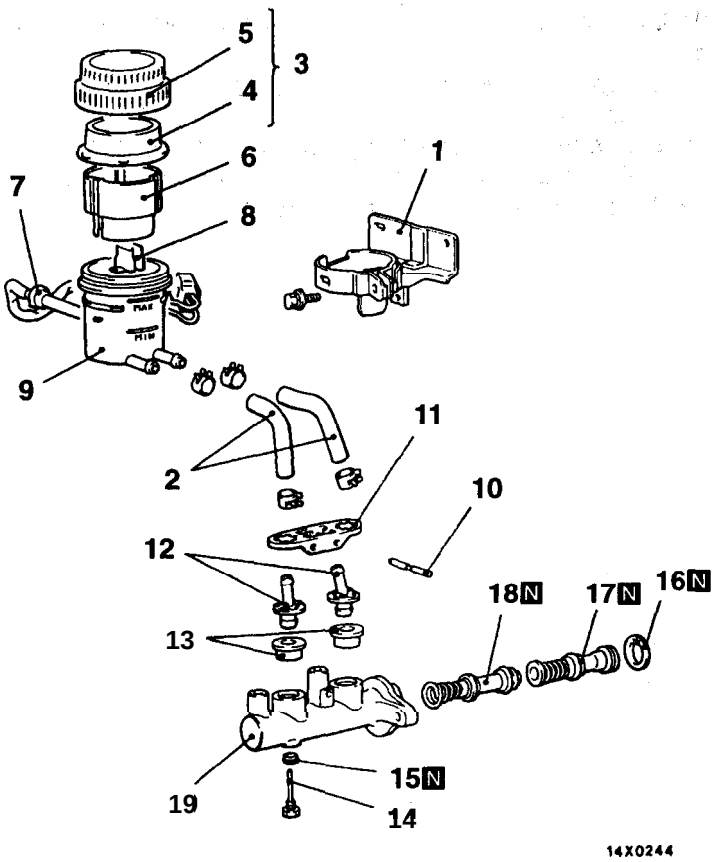

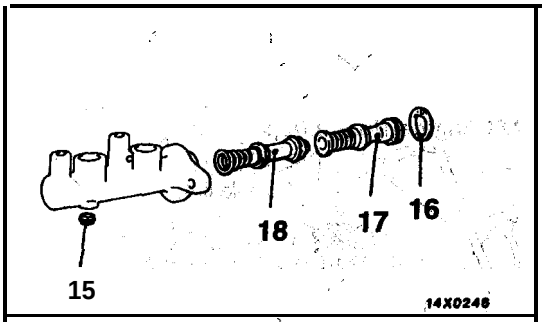

Master cylinder kit

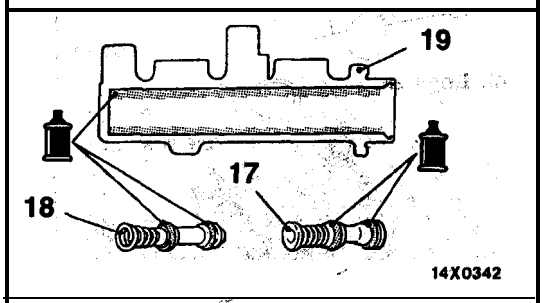

Brake fluid: DOT3 or DOT4

00003593

Disassembly steps

1. Reservoir bracket
2. Reservoir hose
3. Reservoir cap assembly
4. Diaphragm
5. Reservoir cap
6. Filter
7. Brake fluid level sensor
8. Float
9. Reservoir
10. Pin
11. Retainer
12. Connector
13. Grommet

◀A▶ 14. Piston stopper bolt

15. Gasket

◀B▶ 16. Piston stopper ring

17. Primary piston assembly
18. Secondary piston assembly
19. Master cylinder body

Caution
Do not disassemble the primary and secondary piston assembly.

TSB Revision

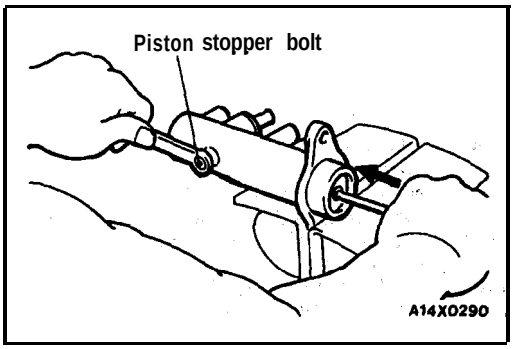

DISASSEMBLY SERVICE POINTS

◀A▶ PISTON STOPPER BOLT DISASSEMBLY

Remove the piston stopper bolt, while depressing the piston.

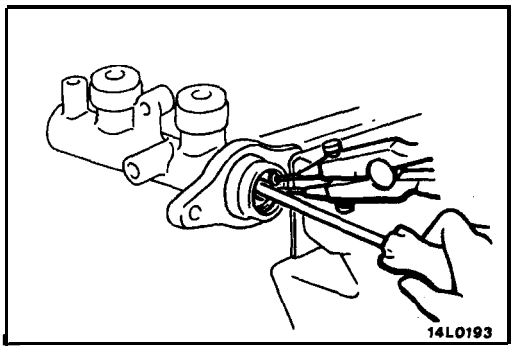

◀B▶ PISTON STOPPER RING DISASSEMBLY

Remove the piston stopper ring, while depressing the piston.

INSPECTION

35200460034

- <' Check the inner surface of master cylinder body for corrosion or pitting.
- Check the primary and secondary pistons for corrosion, scoring, damage or wear.
- Check the diaphragm for cracks and wear.

PROPORTIONING VALVE

35200570058

REMOVAL AND INSTALLATION

Pre-removal Operation
- Brake Fluid Draining
- Link Assembly Mounting Bolts Removal <2.0L Engine (Turbo) and 2.4L Engine> (Refer to GROUP 17 – Auto-Cruise Control.)
- Intake Manifold Removal <2.0L Engine (Non-turbo)> (Refer to GROUP 15 – Intake Manifold.)

Post-installation Operation
- Brake Fluid. Supplying
- Brake Lines Bleeding (Refer to P.35B-24.)
- Link Assembly Mounting bolts' Installation <2.0L Engine (Turbo) and 2.4L Engine> (Refer to GROUP 17 – Auto-Cruise Control.)
- Intake Manifold Installation <2.0L Engine (Non-turbo)> (Refer to GROUP 15 – Intake Manifold.)

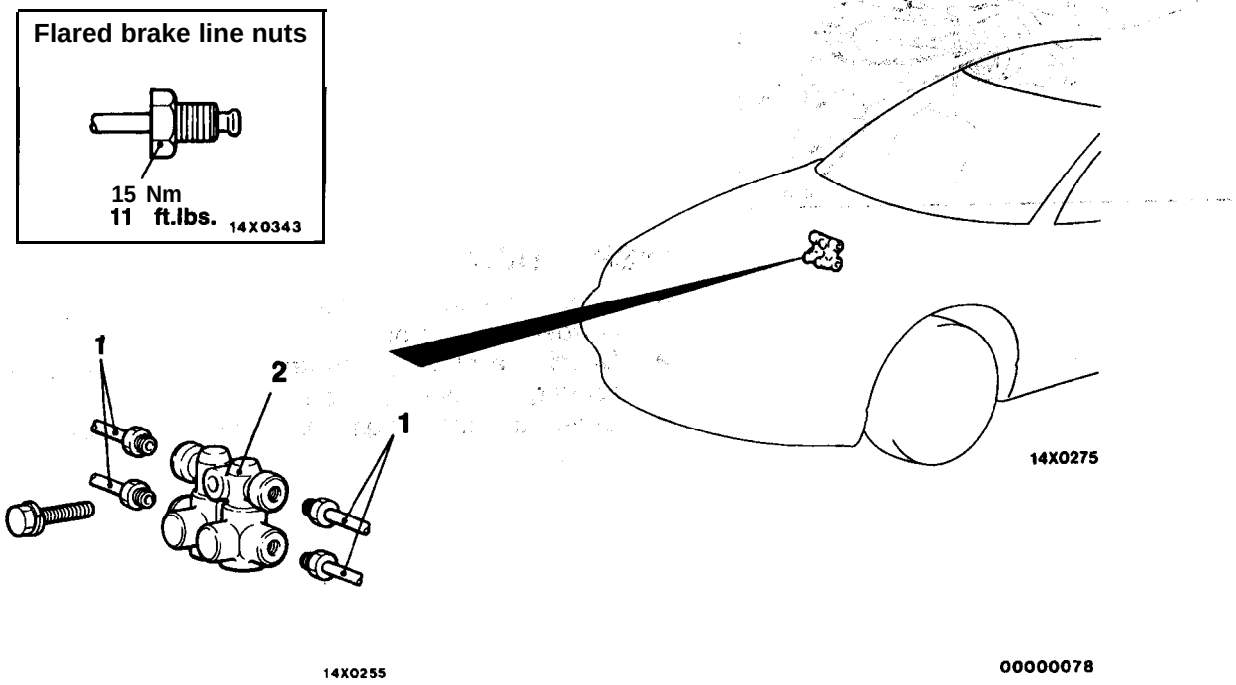

Removal steps

▶A◀ 1. Brake pipe
2. Proportioning valve

TSB Revision

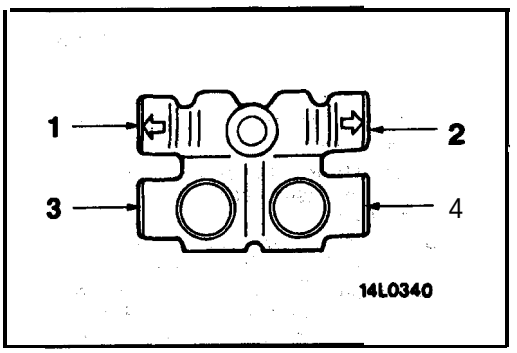

INSTALLATION SERVICE POINT

▶A◀ BRAKE PIPE CONNECTION

Connect the pipes to the proportioning valve as shown in the illustration.

1. Proportioning valve – Rear brake (L.H.)
2. Proportioning valve – Rear brake (R.H.)
3. Proportioning valve – Hydraulic unit
4. Proportioning -valve – Hydraulic unit

HYDRAULIC UNIT

35200860124

REMOVAL AND INSTALLATION

Pre-removal Operation
- Brake Fluid Draining
- Splash Shield (L.H.) Removal (Refer to GROUP 42 – Fender.)
- Headlight Assembly (L.H.) Removal (Refer to GROUP 54 -Headlight, Front Turn-Signal Light and Position Light Assembly.)
- Air Cleaner Assembly Removal <2.0L Engine (Non-turbo)>
- Engine Control Module (ECM) Removal <2.0L Engine (Non-turbo)>
- Relay Box Bracket Removal <2.0L Engine (Non-turbo)>
- Power Steering Oil Reservoir Mounting Bolts Removal <2.0L Engine (Turbo) and 2.4L Engine> (Refer to GROUP 37A – Power Steering Hoses.)
- Power Steering Pressure Pipe and Return Pipe Clamp Mounting Bolts Removal <2.0L Engine (Turbo) and 2.4L Engine> (Refer to GROUP 37A – Power Steering Hoses.)

Post-installation Operation
- Power Steering Pressure Pipe and Return Pipe Clamp: Mounting Bolts Installation <2.0L Engine. (Turbo) and 2.4L Engine> (Refer to GROUP 37A – Power Steering Hoses.)
- 'Power' Steering Oil Reservoir Mounting Bolts Installation <2.0L Engine (Turbo) and 2.4L Engine> (Refer to GROUP 37A – Power Steering Hoses.)
- Relay Box Bracket Installation <2.0L Engine (Non-turbo)>
- Engine Control Module (ECM) Installation <2.0L Engine (Non-turbo)>
- Air Cleaner Assembly Installation <2.0L Engine (Non-turbo)>
- Headlight Assembly (L.H.) Installation (Refer to GROUP 54 – Headlight, Front Turn-Signal Light and Position Light Assembly.)
- Splash Shield (L.H.) Installation (Refer to GROUP 42 – Fender.)
- Brake Fluid Supplying
- Brake Lines Bleeding (Refer to P.35B-24.)
- Hydraulic Unit Check (Refer to P.35B-27.)

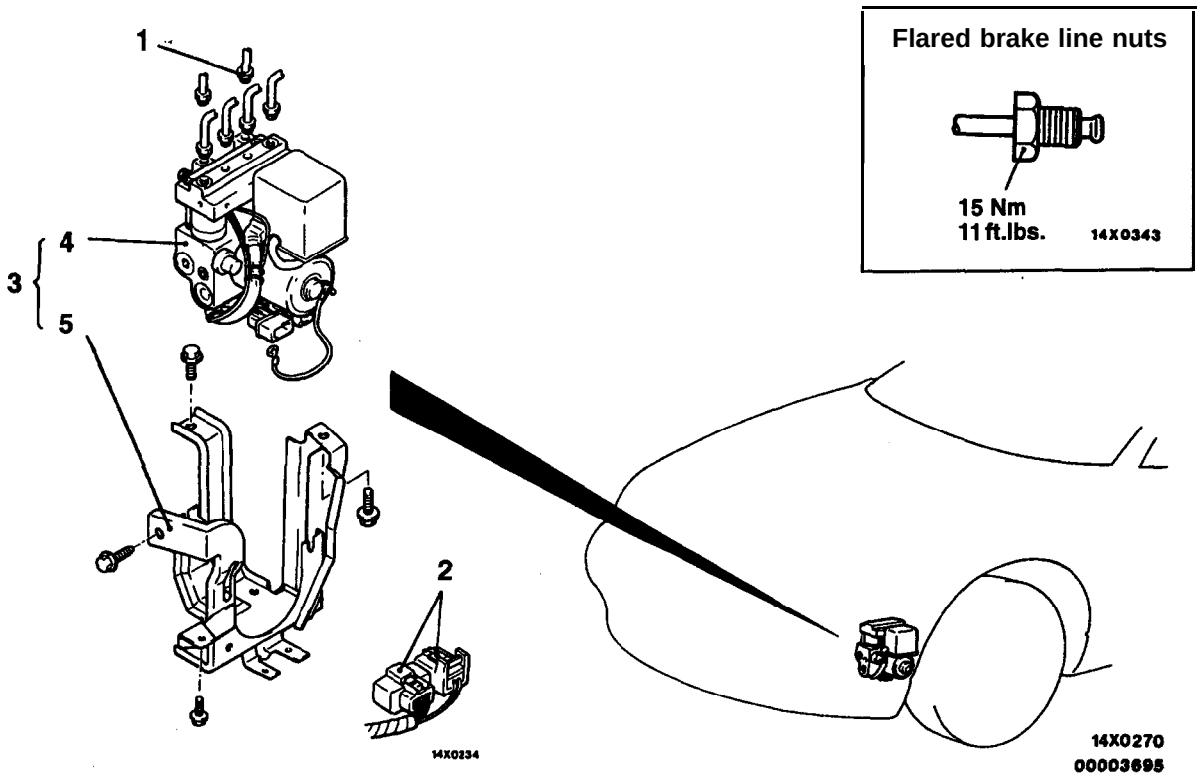

Removal steps

▶A◀ 1. Brake pipe connection
2. Harness connector
3. Hydraulic unit assembly
◀A▶ 4. Hydraulic unit
5. Hydraulic unit bracket

REMOVAL SERVICE POINT

◀A▶ HYDRAULIC UNIT REMOVAL

Caution

1. The hydraulic unit is heavy, and so care should be taken when removing it.
2. The hydraulic unit is not to be disassembled; its nuts and bolts must not be loosened.
3. The hydraulic unit must not be dropped or otherwise subjected to impact shocks.
4. The hydraulic unit must not be turned upside down or laid on its side.

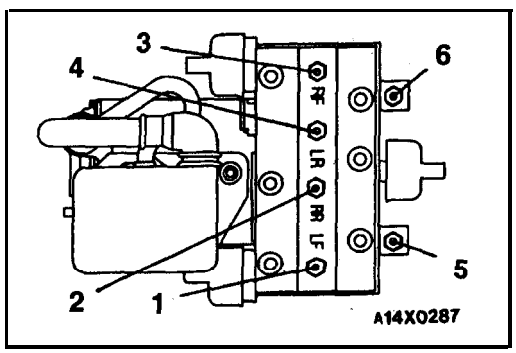

INSTALLATION SERVICE POINT

▶A◀ BRAKE PIPE CONNECTION

Connect the pipes to the hydraulic unit as shown in the illustration.

1. Hydraulic unit – Front brake (L.H.)
2. Hydraulic unit – Rear brake (R.H.)
3. Hydraulic unit – Front brake (R.H.)
4. Hydraulic unit – 'Rear braker (L.H.)
5. Hydraulic unit – Master cylinder (Secondary)
6. Hydraulic unit – Master cylinder (Primary)

WHEEL SPEED SENSOR

35200830095

REMOVAL AND INSTALLATION

Pre-removal Operation
- Splash Shield Removal <Front only>
  (Refer to GROUP 42 – Fender.)

Post-installation Operation
- Wheel speed Sensor Output Voltge Check
  (Refer to P.35B-24.)
- Installation Splash Shield <Front only>
  (Refer to GROUP 42 – Fender.)

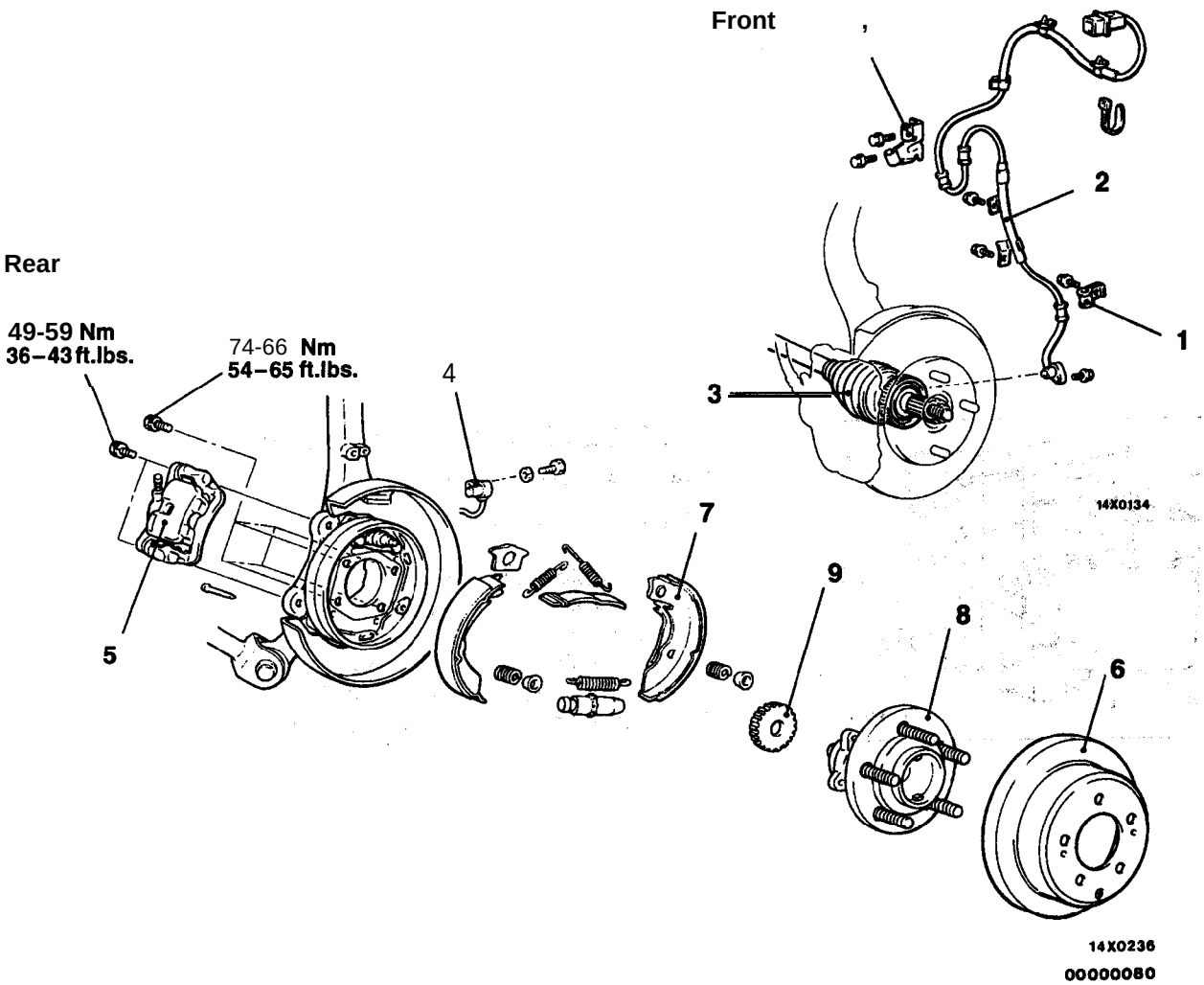

Front wheel speed sensor removal steps

1. Clip
▶A◀ 2. Front wheel speed sensor

Front ABS rotor removal

3. Drive shaft <Front ABS rotor>
   (Refer to GROUP 26 – Drive Shaft.)

Rear wheel speed sensor removal

▶A◀ 4. Rear wheel speed sensor

Rear ABS rotor removal steps

5. Caliper assembly
6. Brake disc
7. Shoe and lining assembly
   (Refer to GROUP 36 – Parking Brake Drum.)
8. Rear hub assembly
9. Rear ABS rotor

NOTE
The front ABS rotor, integrated with the drive shaft, can not be disassembled.

TSB Revision

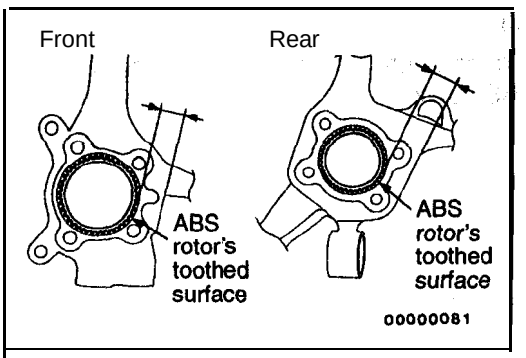

INSTALLATION SERVICE POINT

▶A◀ FRONT WHEEL SPEED SENSOR/REAR WHEEL SPEED SENSOR INSTALLATION

The clearance between the wheel speed sensor and the ABS rotor's toothed surface is not adjustable, but measure the distance between the sensor installation surface and the ABS rotor's toothed surface.

Standard value: 28.2–28.5 mm (1.11-1.12 in.)

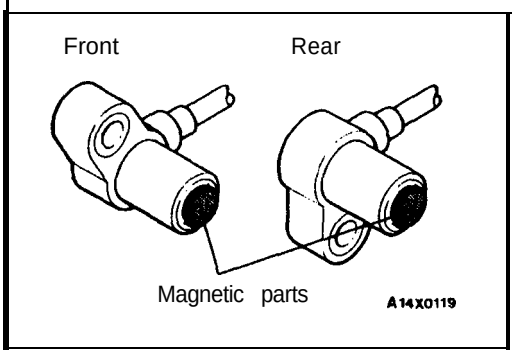

INSPECTION

35200840081

WHEEL SPEED SENSOR CHECK

(1) Check whether any metallic foreign material has adhered to the parts shown in the illustration at the wheel speed sensor tip, and it so, remove it.

NOTE
The section shown in the illustration can become magnetized because of the magnet built into the wheel speed sensor, with the result that foreign metallic material is attached to it.

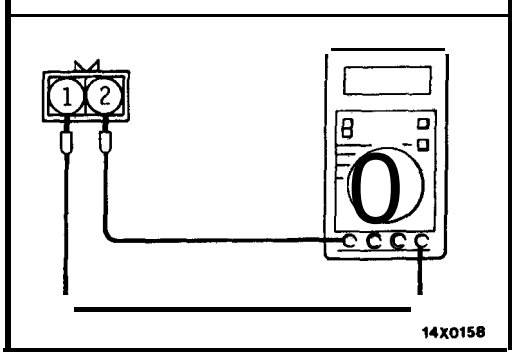

(2) Measure the resistance between the wheel speed sensor terminals.

Standard value: 1.0–1.2 kΩ

If the internal resistance of the wheel speed sensor is not within the standard value, replace with a new wheel speed sensor.

(3) Check the wheel speed sensor cable for breakage, damage or disconnection; replace with a new one if a problem is found.

NOTE
When checking for cable damage, remove the cable clamp part from the body and then bend and pull the cable near the clamp to check whether or not an intermittent contact results. Check the connector connection and the terminal insertion.

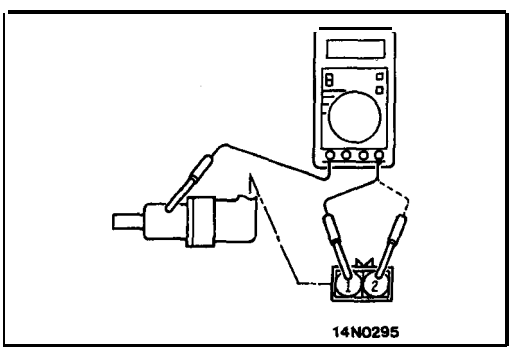

WHEEL SPEED SENSOR INSULATION CHECK

(1) Remove all connections from the wheel speed sensor, and then measure the resistance between terminals (1) and (2) and the body of the wheel speed sensor.

Standard value: 100 kΩ or more

(2) If the wheel speed sensor insulation resistance is outside the standard value range, replace with a new wheel speed sensor.

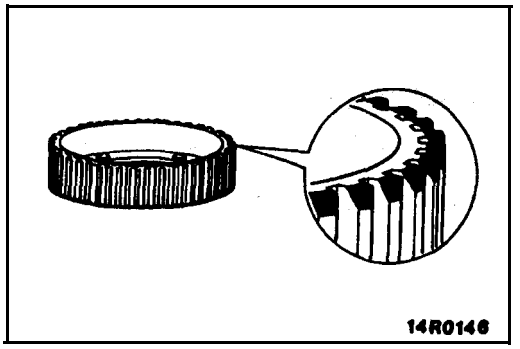

ABS ROTOR CHECK

Check whether ABS rotor teeth are broken or deformed, and, if so, replace the ABS rotor.

35200980172

ABS-ECU

REMOVAL AND INSTALLATION

Pre-removal and Post-installation Operation
- Cowl Side Trim (R.H.) and Front Scuff Plate (Refer to GROUP 52A – Trims.)

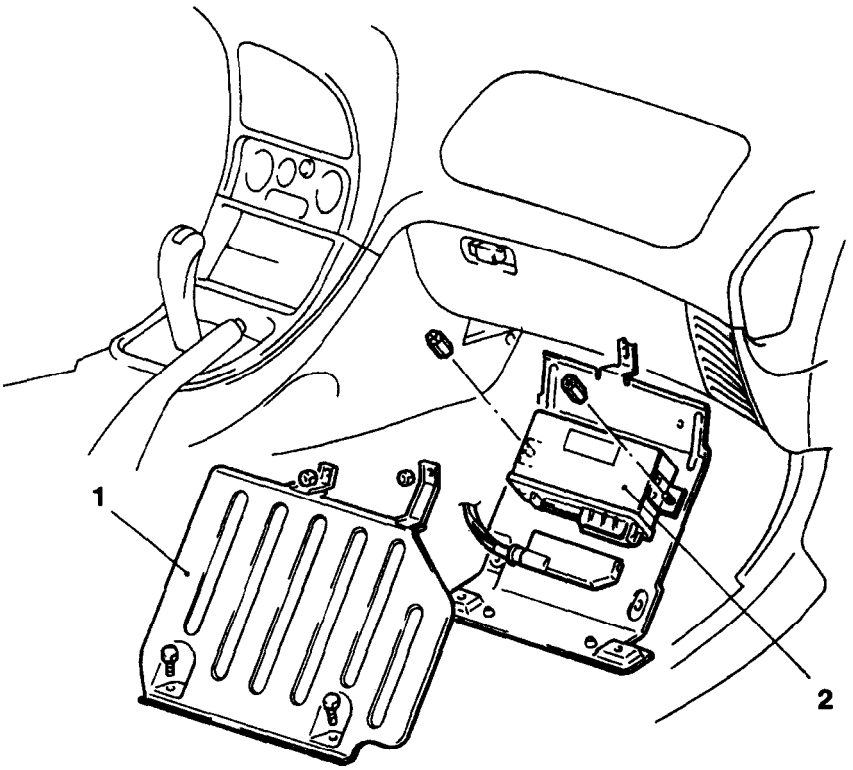

A14X0264

Removal steps
1. Control unit cover
2. ABS-ECU

35200990052

INSPECTION

ABS-ECU CHECK

Refer to P.35B-21.

NOTES

ANTI-LOCK BRAKING SYSTEM (ABS) <AWD>

CONTENTS

35209000084

Refer to GROUP 35A for the following items.

BRAKE PEDAL
FRONT DISC BRAKE
LUBRICANTS
REAR DISC BRAKE
REAR DRUM BRAKE SHOE
REAR DRUM BRAKE WHEEL CYLINDER
ON-VEHICLE SERVICE

- Brake Booster Operating Test
- Brake Drum Inside Diameter Check <Vehicles with Rear Drum Brakes>
- Brake Fluid Level Sensor Check
- Brake Lining and Brake Drum Contact Check
- Brake Lining Thickness Check
- Brake Pedal Check and Adjustment
- Check Valve Operation Check
- Front Brake Disc Run-out Check
- Front Brake Disc Run-out Correction
- Front Brake Disc Thickness Check
- Front Disc Brake Pad Check and Replacement
- Front Disc Brake Rotor Check
- Proportioning Valve Function Test
- Rear Brake Disc Run-out Check
- Rear Brake Disc Run-out Correction
- Rear Brake Disc Thickness Check
- Rear Disc Brake Pad Check and Replacement
- Stop Light Switch Check

Refer to GROUP 35B for the following items.

HYDRAULIC UNIT
MASTER CYLINDER AND BRAKE BOOSTER
PROPORTIONING VALVE
ON-VEHICLE SERVICE

- Bleeding

GENERAL INFORMATION

35200010086

The ABS consists of wheel speed sensors, stop light switch, hydraulic unit and the ABS-ECU. If a problem occurs in the system, the malfunctioning system can be identified by means of the diagnostic function, and the trouble symptom memory will' not be erased even if the ignition switch is turned to OFF.

In addition, reading of diagnostic trouble codes and service data and actuator testing are possible using the scan tool.

Items	Specifications
Wheel speed sensor	Magnet coil type
Front ABS rotor	43 teeth
Rear ABS rotor	43 teeth

CONSTRACTION DIAGRAM

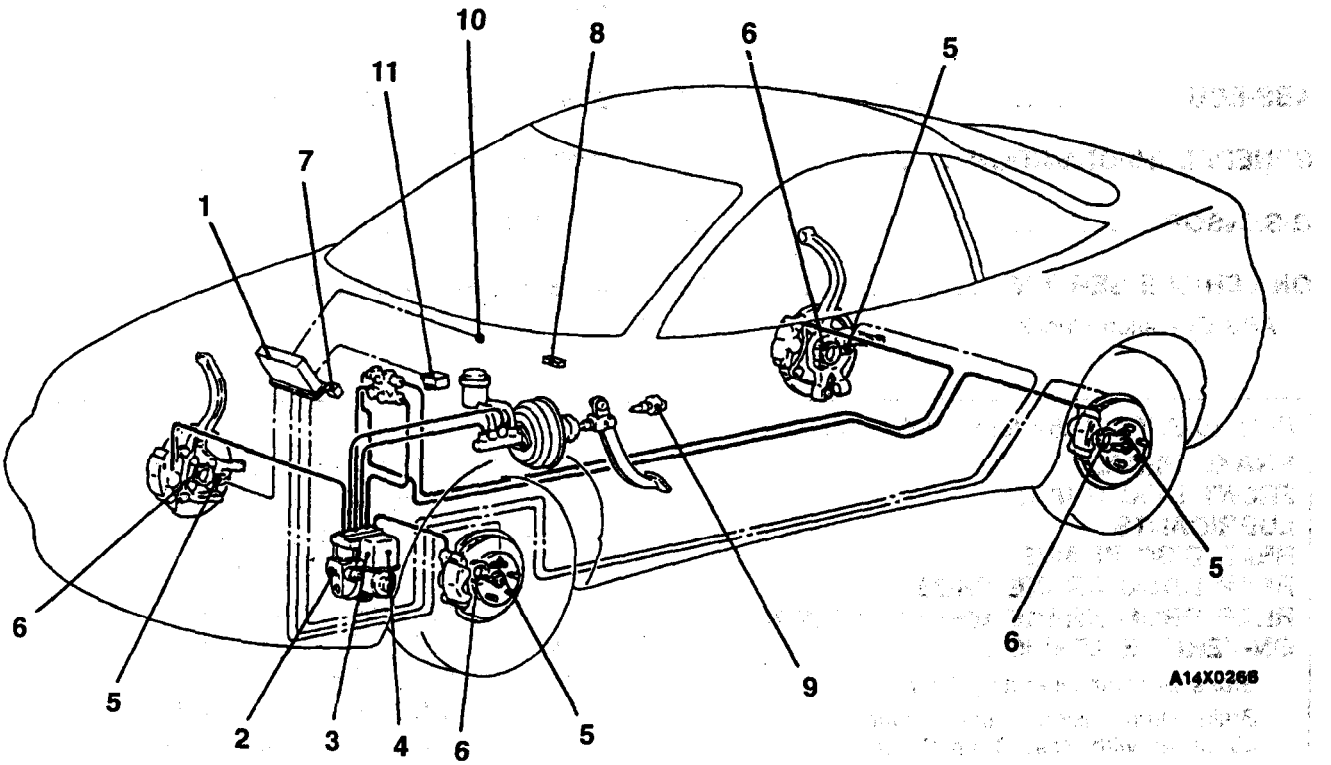

1. ABS-ECU
2. Hydraulic unit
3. ABS valve relay
4. ABS motor relay
5. Wheel speed sensor
6. ABS rotor
7. ABS power relay
8. Data link connector
9. Stop light switch
10. ABS warning light
11. G-sensor

TSB Revision

SERVICE SPECIFICATIONS

35200030167

Items		Standard value
Hydraulic unit solenoid valve internal resistance Ω		1.0–1.3
Clearance between the wheel speed sensor mounting surface and the ABS rotor mm (in.)		28.2–28.5 (1.11-1.12)
G-sensor output voltage V	In laden, stationary vehicle	2.4-2.8
	With FRONT mark downward	3.3-3.7
Wheel speed sensor insulation resistance kΩ		100 or more

SPECIAL TOOLS

35200060098

Tool	Tool number and name	Supersession	Application
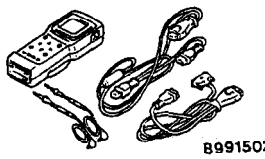 B991502	MB991502 Scan tool (MUT-II)	MB991502	• Reading diagnostic trouble codes • Erasing diagnostic trouble codes • ABS system inspection
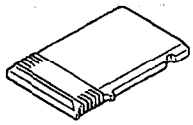 B991325	ROM pack	–	
 B991356	MB991356 ABS check harness	–	Measurement of ABS control unit terminal voltage
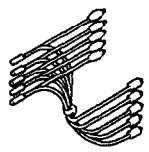 B991348	MB991348 Test harness set	–	For checking of G-sensor
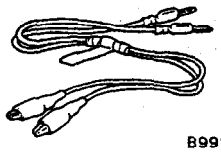 B991529	MB991529 Diagnostic trouble code check harness	Tool not necessary if scan tool (MUT-II) is available	ABS system inspection by using a voltmeter

TROUBLESHOOTING

35201110174

DIAGNOSTIC TROUBLESHOOTING FLOW

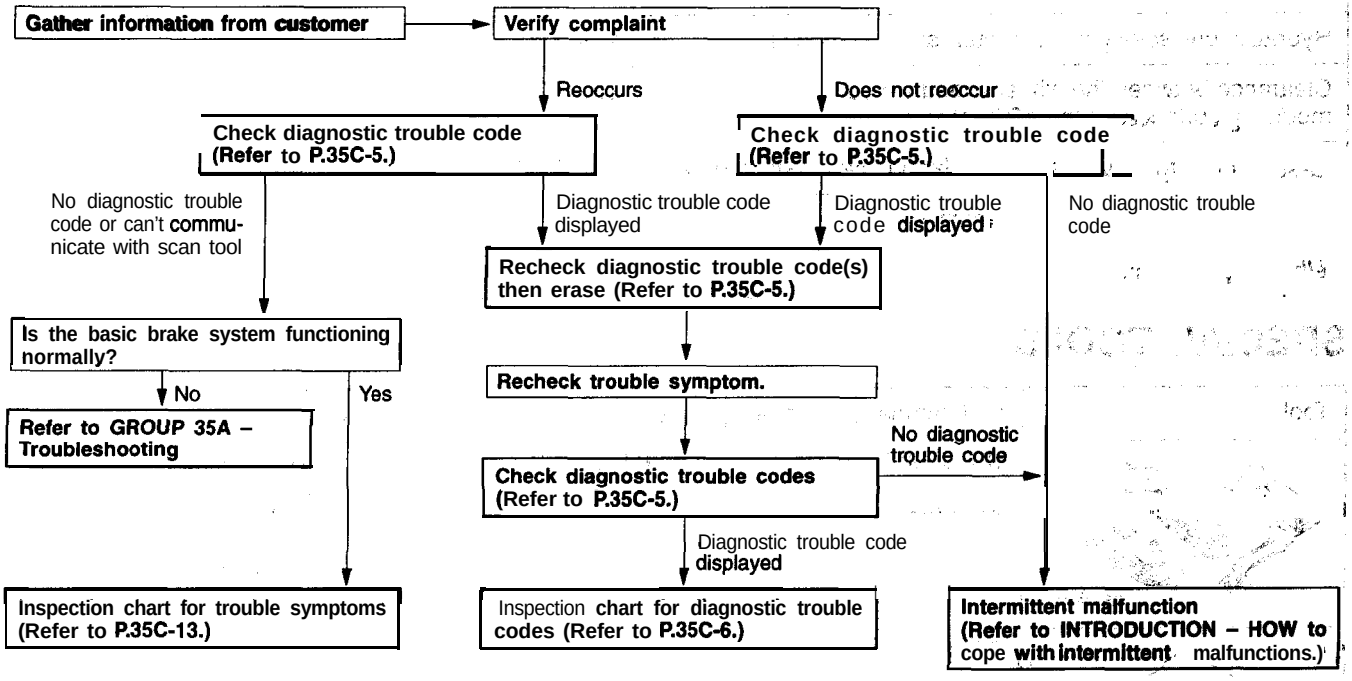

NOTES WITH REGARD TO DIAGNOSIS

The condition listed in the following table are considered normal..

Condition	Explanation of condition
System check sound	When starting the engine, a thudding sound can sometimes be heard coming from inside the engine compartment, but this is because the system operation check is being performed. This is considered normal.
ABS operation sound	1. Sound of the motor inside the ABS hydraulic unit operating (whine) 2. Sound is generated along with vibration of the brake pedal. (scraping) 3. When ABS operates, sound is generated from the vehicle chassis due to repeated brake application and release. (Thump: suspension; squeak: tires)
ABS operation (Long braking distance)	For road surfaces such as snow-covered roads and gravel roads, the braking distance for vehicles with ABS can sometimes be longer than that for other vehicles. Accordingly, advise the customer to drive safely on such roads by lowering the vehicle speed and not being overconfident.

Diagnosis detection condition depends on the diagnostic trouble code.
Make sure that checking requirements listed in the "Comment" are satisfied when checking the trouble symptom again after the diagnostic trouble code has been erased.

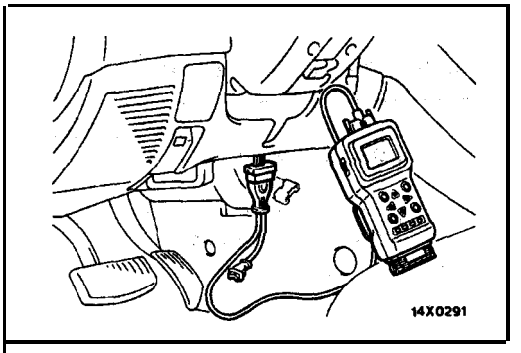

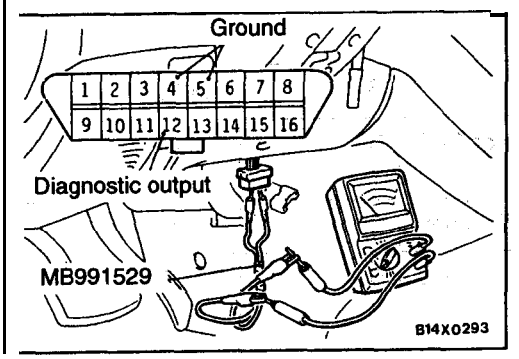

DIAGNOSTIC FUNCTION

35201120078

DIAGNOSTIC TROUBLE CODES CHECK

With the Scan Tool

Connect the scan tool to the data link connector and then check diagnostic trouble codes.

Caution

Turn the ignition switch off before connecting or disconnecting the scan tool.

With a voltmeter

Use the special tool to connect a voltmeter between the diagnostic output 'terminal' and the grounded terminal of the data link connector. Then take a reading of the diagnostic trouble 'codes 'from the movement of the needle of the voltmeter.

ERASING DIAGNOSTIC TROUBLE CODES

Connect the scan tool to the data link connector (16-pin), then erase the diagnostic trouble codes.

INSPECTION CHART FOR DIAGNOSTIC TROUBLE CODES

35201130200

Check according to the inspection chart that is appropriate for the diagnostic trouble code.

Diagnostic trouble code No.	Inspection item	Diagnostic content	Detection conditions	Reference page
11	Right front wheel speed sensor	Open circuit	A,B	P.35C-7
12	Left front wheel speed sensor			
13	Right rear wheel speed sensor			
14	Left rear wheel speed sensor			
15	Wheel speed sensor system	Abnormal output signal	B	P.35C-8
21	G sensor	Broken wire in G sensor or OFF malfunction	B	P.35C-8
22	Stop light switch system	Open circuit or ON malfunction	B	P.35C-9
41	Left front solenoid valve system	No response to solenoid valve drive signal	B	P.35C-10
42	Right front solenoid valve system			
43	Rear solenoid valve system	The currents flowing through right and left valves are different under the same condition:,	B	P.35C-10
51	Valve relay system	Valve relay OFF failure	A,B	P.35C-11
52	Motor relay or motor system	Motor relay OFF failure and motor drive failure	B	P.35C-12
55	ABS-ECU	ABS-ECU internal failure (program maze, etc.)	A,B	–

Detection conditions

A: During system check immediately after starting
B: While driving

INSPECTION PROCEDURE CLASSIFIED BY DIAGNOSTIC TROUBLE CODES

Code No. 11, 12, 13, 14 Wheel speed sensor open circuit	Probable cause
[Comment] The ABS-ECU detects breaks in the wheel speed sensor wire.	• Malfunction of wheel Speed sensor • Malfunction of wiring harness or connector • Malfunction of ABS-ECU

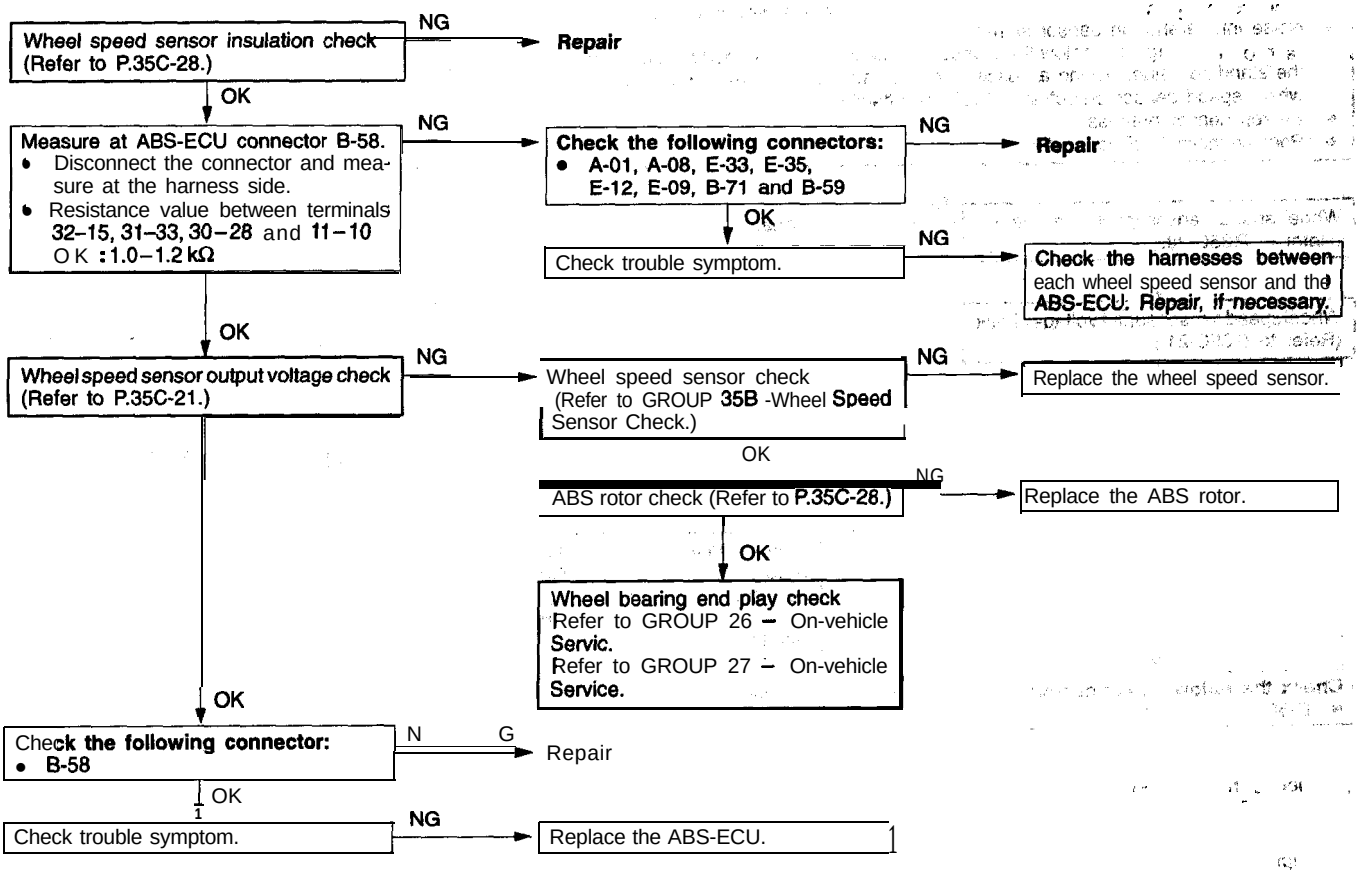

TSB Revision

Code No. 15 Wheel speed sensor svstem	Probable cause
[Comment] This diagnostic trouble code is output when there is an abnormality (other than broken wire or short circuit) in any of the wheel speed sensor output signals while driving. The following can be considered as the cause of the wheel speed sensor output abnormality. • Distortion of ABS rotor, teeth missing • Low frequency noise interference when sensor harness wire is broken • Noise interference in sensor signal • Sensor output signal is below the standard value or amplitude modulation is over the standard value. Using an oscilloscope to measure the wave shape of the wheel speed sensor output signal is very effective. • Broken sensor harness • Poor connection of connector	• Malfunction of wheel speed sensor • Malfunction of wiring harness • Malfunction of ABS rotor • Malfunction of wheel bearing • Malfunction of ABS-ECU

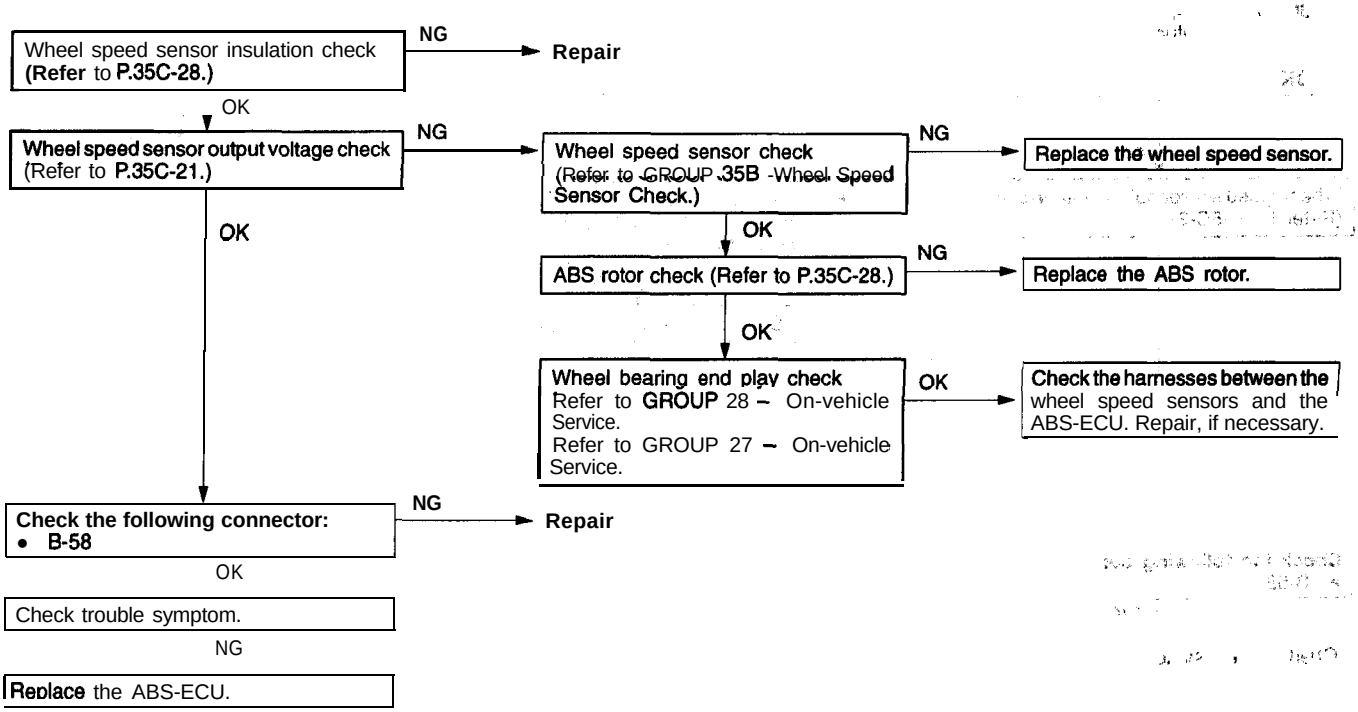

Code No. 21 G-sensor system	Probable cause
[Comment] The ABS-ECU outputs this diagnostic trouble code in the following cases. • When there is an open or short circuit in the harness for the G-sensor system.	• Malfunction of G-sensor • Malfunction of wiring harness or connector • Malfunction of ABS-ECU

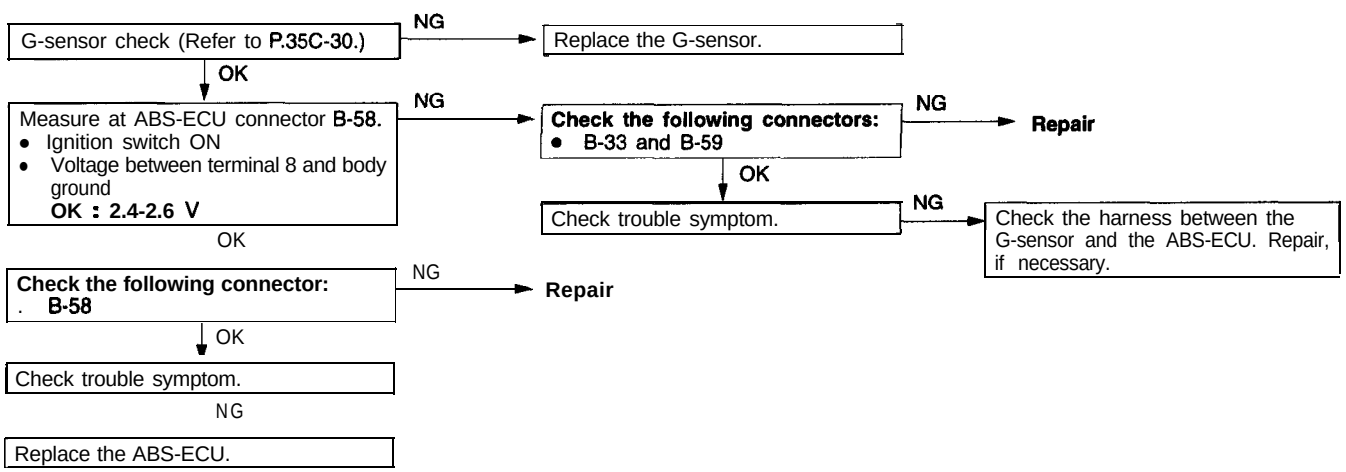

TSB Revision

Code No. 22 Stop light switch system	Probable cause
[Comment] The ABS-ECU outputs this diagnostic trouble code in the following cases. • Stop light switch remains on for more than 15 minutes while the ABS is not functioning. • The harness wire for the stop light switch may be open. If the stop light operates normally, there is an open circuit in the harness for the stop light switch input circuit is broken or there is a malfunction in the ABS-ECU.	• Malfunction of stop light switch • Malfunction of harness or connector • Malfunction of ABS-ECU

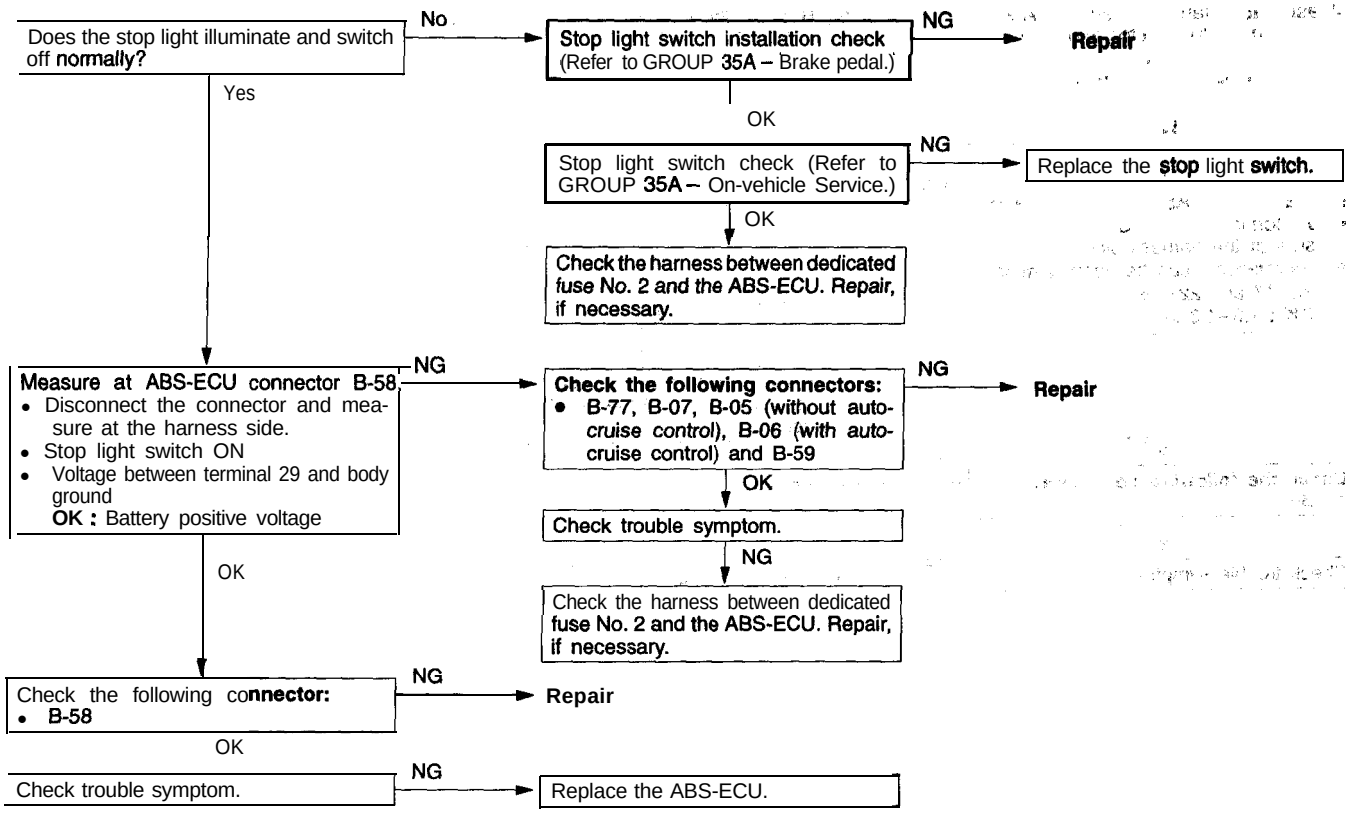

TSB Revision

Code No. 41, 42, 43 Solenoid valve system	Probable cause
[Comment] The ABS-ECU normally monitors the solenoid valve drive circuit. If no current flows in the solenoid even if the ECU turns the solenoid ON or if it continues to flow even when turned OFF, the ECU determines the solenoid coil wire is broken/short-circuited or the harness is broken/ short-circuited, and then these diagnostic trouble codes are output.	• Malfunction of hydraulic unit • Malfunction of wiring harness or connector • Malfunction of ABS-ECU

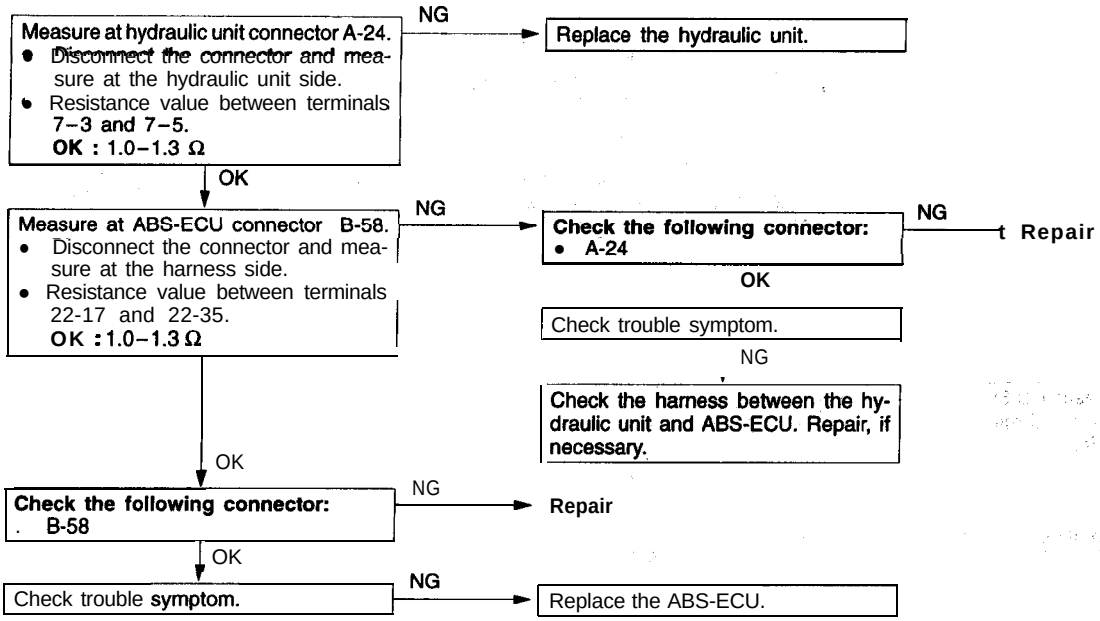

TSB Revision

Code No. 51 Valve relay system	Probable cause
[Comment] When the ignition switch is turned ON, the, ABS-ECU switches the valve relay OFF and ON for an initial check, compares the voltage of the signal to the valve relay and valve power monitor line voltage to check whether the valve relay operation is normal. In addition, normally it monitors whether or not there is power in the valve power monitor line since the valve relay is normally ON. If. the supply of power to the valve power monitor line is interrupted, this diagnostic trouble code will be, output.	• Malfunction of ABS valve relay • Malfunction of wiring harness or connector • Malfunction of hydraulic unit • Malfunction of ABS-ECU

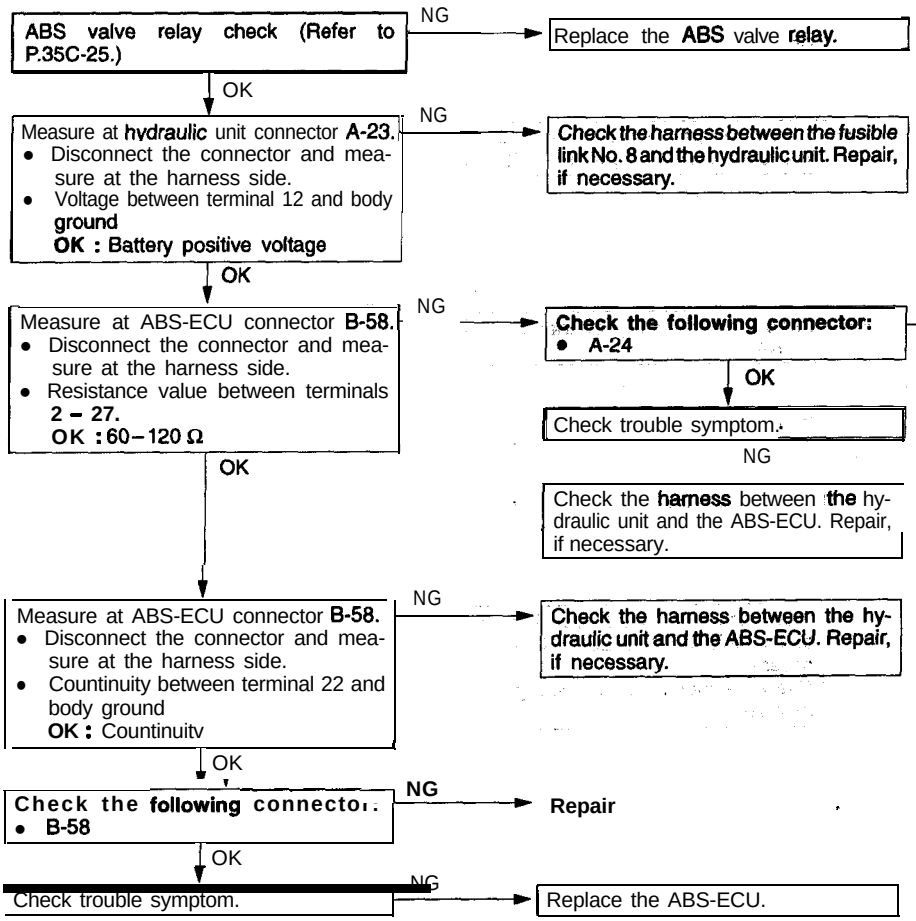

TSB Revision

Code No. 52 Motor relay, motor system	Probable cause
[Comment] The ABS-ECU outputs this diagnostic trouble code for the motor relay and motor in the following cases. • When motor relay is ON and no signal is input to the motor monitor line (when motor is not operating, etc.) • When motor relay is OFF and signal is input to the motor monitor line for approximately 5 seconds or more (when motor continues operating, etc.) • When the motor relay does not function	• Malfunction of ABS motor relay • Malfunction of wiring harness or connector • Malfunction of hydraulic unit • Malfunction of ABS-ECU

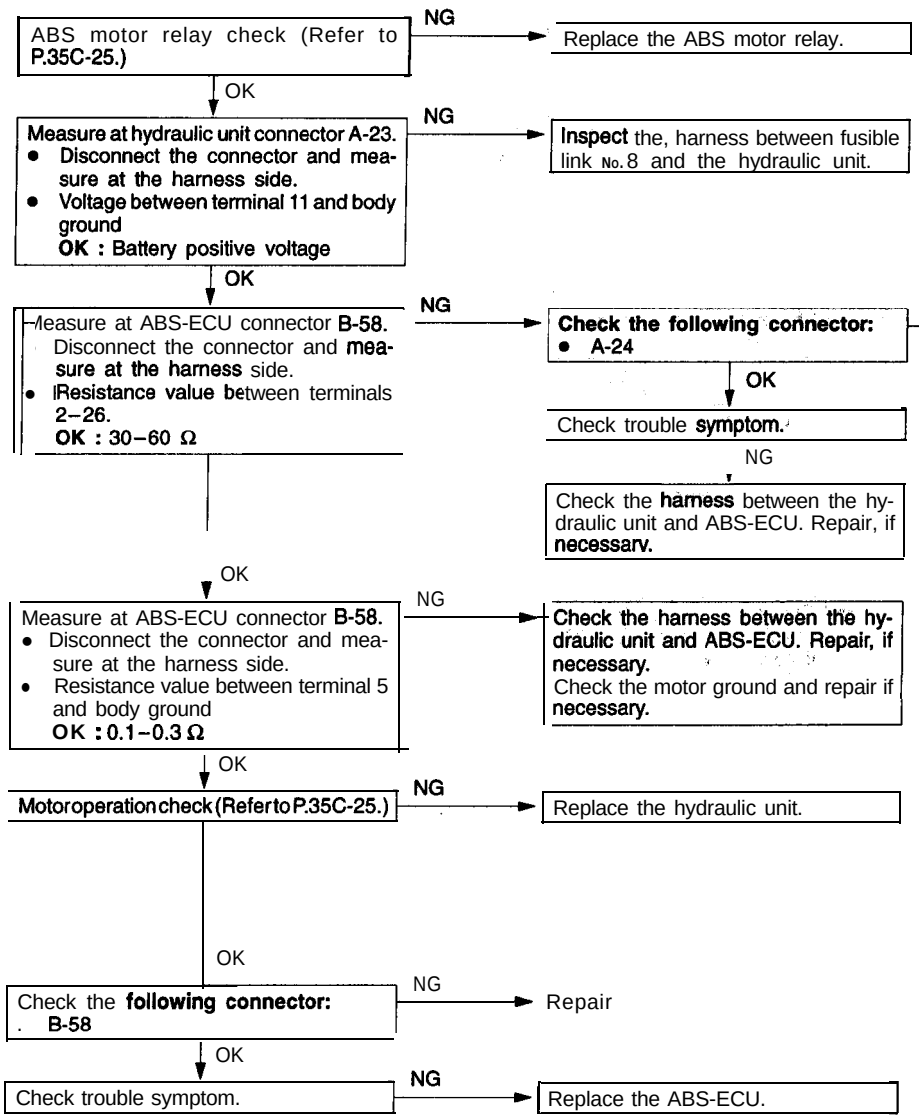

TSB Revision

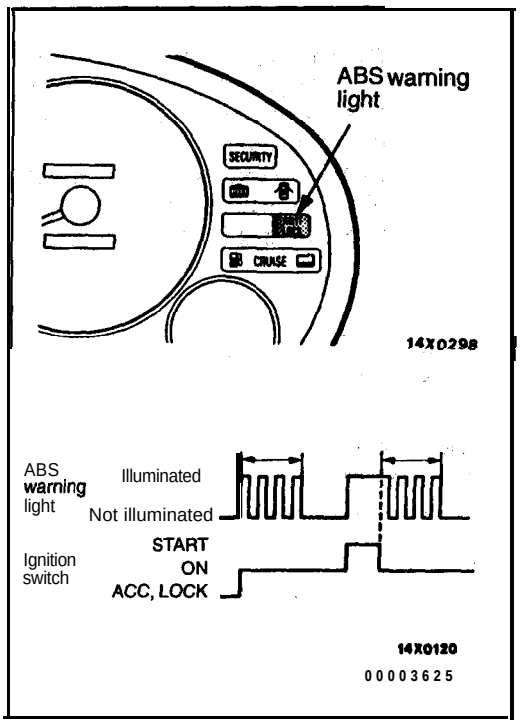

ABS WARNING LIGHT CHECK

35201200031

Check that the ABS warning light illuminates as follows.

1. When the ignition switch is turned to "ON", the ABS warning light flashes 4 times during a 0.6 to 0.8 second period and then the light switches off.
2. When the ignition switch is turned to "START", the ABS warning light remains illuminated.
3. When the ignition switch' is turned back to the "ON", the ABS warning light flashes 4 times and then the light stays switched off.
4. If the illumination is other than the above, check the diagnostic trouble codes.

INSPECTION CHART FOR TROUBLE SYMPTOMS

35201140081

Get an understanding of the trouble symptoms and check according to the inspection procedure chart.

Trouble symptom		Inspection procedure No.,	Reference' page
Communication with scan tool is not possible.	Communication with all systems is not possible.	1	P.35C-14
	Communication with ABS only is not possible.	2	P.35C-14
When the ignition key is turned to "ON" (engine stopped), the ABS warning light does not illuminate.		3	P.35C-15
After the engine starts, the ABS warning light remains illuminated.		4	P.35C-15
When the ignition key is turned to "START", the ABS warning light does not illuminate.		5	P.35C-16
After the ignition key is turned to "ON", the ABS waining light blinks once, and when turned to "START", it illuminates. When returned to "ON", the light flashes once, and then switches off.		6	P.35C-16
Faulty ABS operation	Unequal braking bower on both sides	7	P.35C-17
	Insufficient braking power		
	ABS operates under normal braking conditions		
	ABS operates before vehicle stops under normal braking conditions		
	Large brake pedal vibration (Caution 2.)	–	–

Caution

1. **If steering movements are made when driving at high speed, or when driving on road surfaces with low frictional resistance, or when passing over bumps, the ABS may operate even through sudden braking is not being applied. Because of this, when getting information from the customer, check if the problem occurred while driving under such conditions as these.**
2. **During ABS operation changes in the feeling of the brake pedal (vibration may occur or pedal may not be able to be depressed). Such changes are due to intermittent changes in hydraulic pressure inside the brake line to prevent, the wheels from locking, and considered normal.**

INSPECTION PROCEDURE FOR TROUBLE SYMPTOMS

INSPECTION PROCEDURE 1

Communication with scan tool is not possible. (Communication with all systems is not possible.)	Probable cause
[Comment] The reason is probably a defect in the power supply system (including ground) for the diagnostic line.	• Malfunction of connector • Malfunction of harness

Refer to GROUP 13A – Troubleshooting

INSPECTION PROCEDURE 2

Communication with scan tool is not possible. (Communication with ABS only is not possible.)	Probable cause
[Comment] When communication with the scan tool is not possible, the cause is probably an open circuit in the ABS-ECU power circuit or an open circuit in the diagnostic output circuit.	• Blown fuse • Malfunction of wiring harness or connector • Malfunction of ABS power relay • Malfunction of ABS-ECU

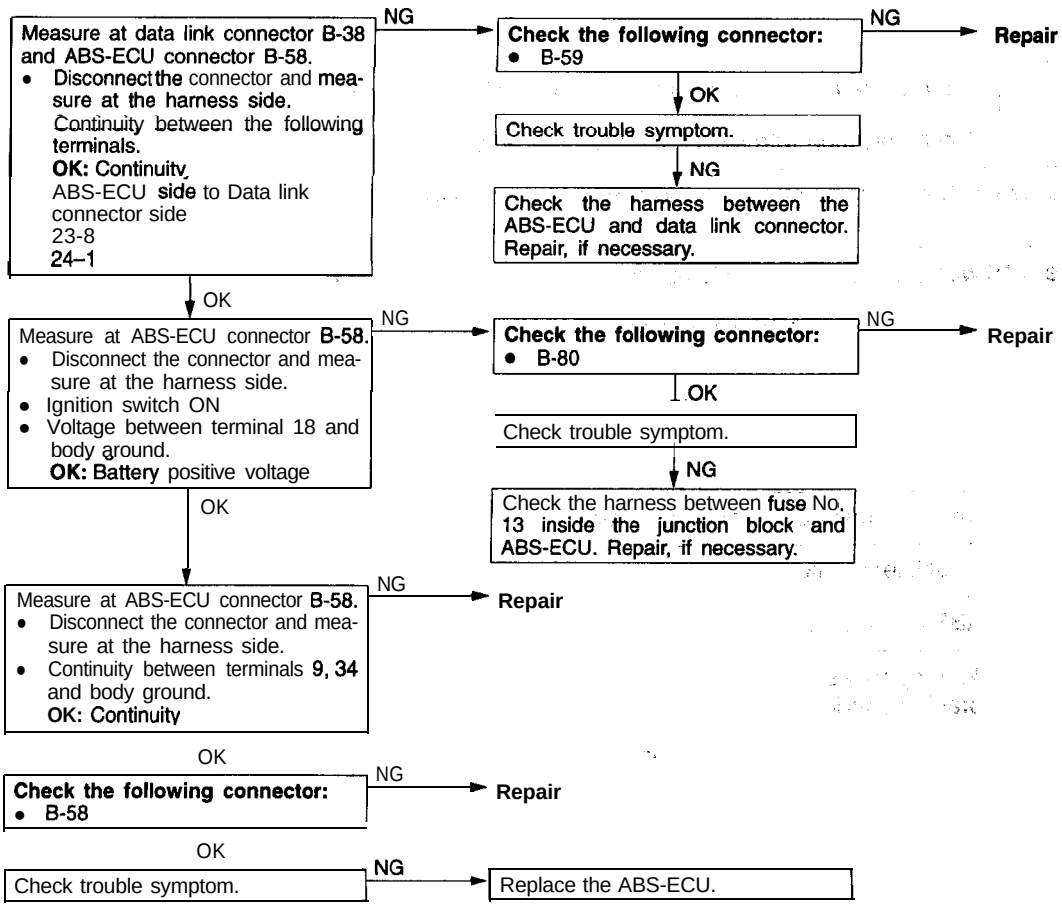

TSB Revision

INSPECTION PROCEDURE 3

When ignition key is turned to "ON'? (engine stopped), ABS warning light does not illuminate	Probable cause
[Comment] When power is supplied to the ABS-ECU, the valve relay changes from ON to OFF → ON by the initial check, and thus even if there is a problem with the circuit between ABS warning light and ABS-ECU, the light will illuminate once when the valve relay is OFF. Accordingly, the cause of the light not illuminating is probably an open circuit in the light power circuit, a blown light bulb, or an open circuit in both the circuit between the ABS warning light and the ABS-ECU and the circuit between the ABS warning light and the ABS valve relay. When other warning lights also do not illuminate, the cause is probably a blown fuse.	• Blown fuse • Burnt out ABS warning light. bulb • Malfunction of wiring. harness or connector

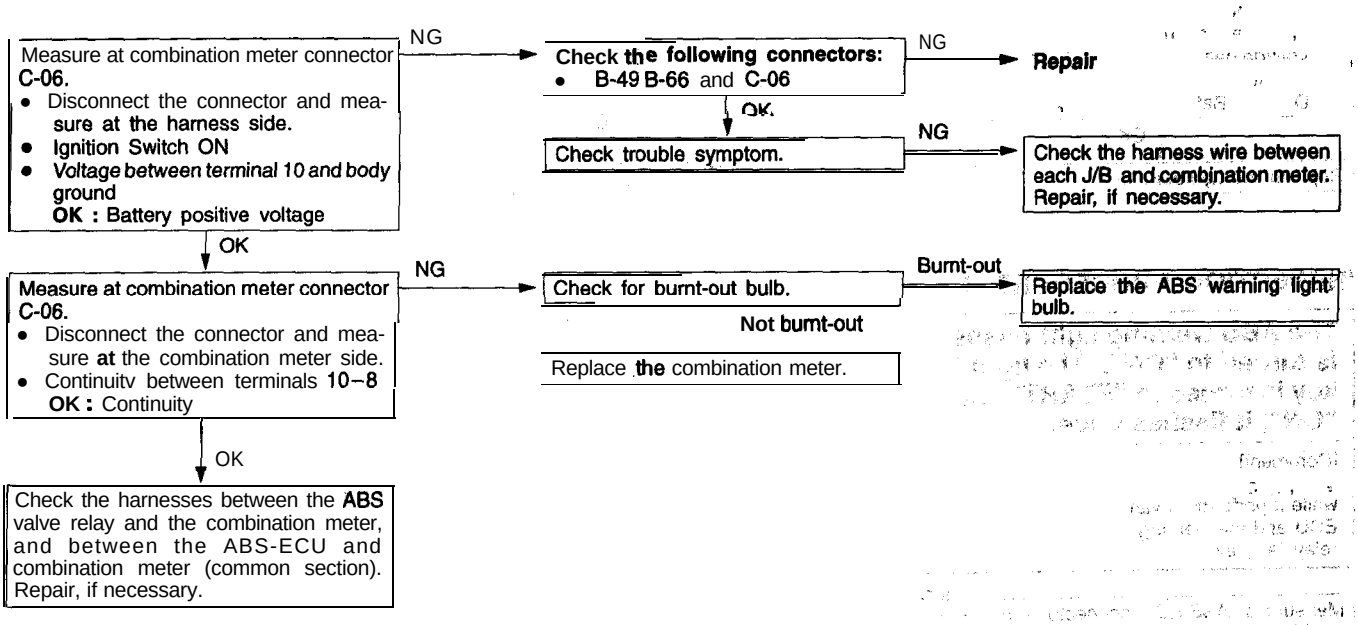

INSPECTION PROCEDURE 4

Even after the engine is started, the ABS warning light remains illuminated.	Probable cause
[Comment] There is probably a short in the ABS warning light illumination circuit.	• Malfunction of combination meter • Malfunction of ABS valve relay • Malfunction of ABS-ECU • Malfunction of wiring

NOTE
This trouble symptom is limited to cases where communication with the scan tool is possible (ABS-ECU power supply is normal) and the diagnostic trouble code is a normal diagnostic trouble code.

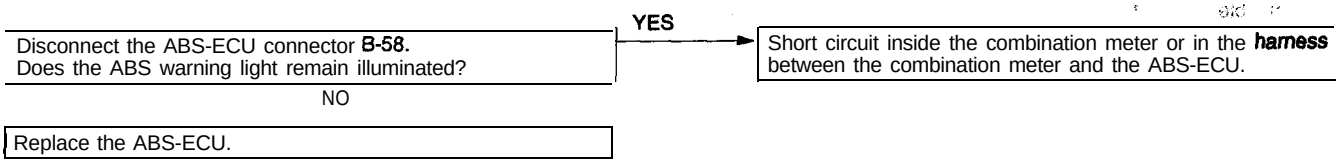

INSPECTION PROCEDURE 5

When ignition key is turned to "START", ABS warning light does not illuminate.	Probable cause
[Comment] The ABS-ECU uses the power to the IG2 which is cut when the ignition switch is turned to "START". The ABS warning light uses IG1 power which is not cut even when the ignition switch is turned to "START". Accordingly, because the power to the ABS-ECU is stopped in "START" position, if the warning light does not illuminate at this time, the cause is a problem in the light illumination circuit in the valve relay.	• Malfunction of wiring harness or connector • Malfunction of hydraulic unit

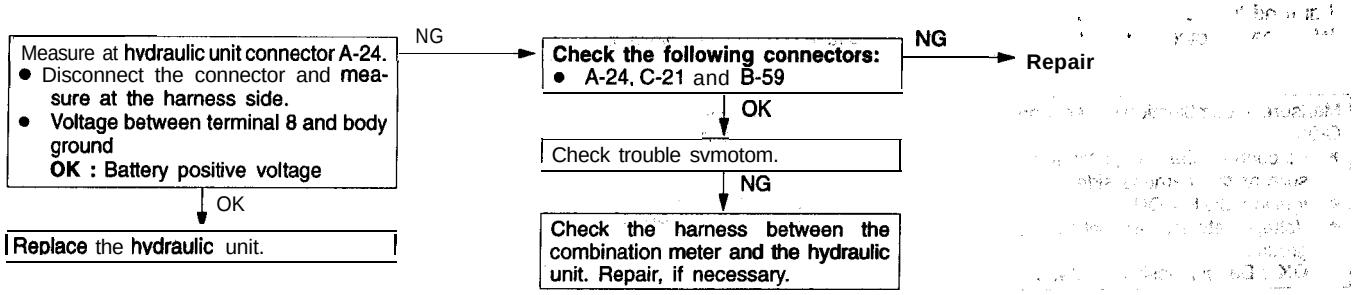

INSPECTION PROCEDURE 6

The ABS warning light flashes once after the ignition key is turned to "ON". The light illuminates when the ignition key is turned to "START", and when the key is returned to "ON", it flashes once.	Probable cause
[Comment] When power flows, the ABS-ECU turns on the warning light for approximately 1 second while it performs a valve relay test. If there is a break in the harness between the ECU and the warning light illuminates only when the valve relay is off in the valve relay test, etc.	• Malfunction of wiring harness or connector • Malfunction of ABS-ECU

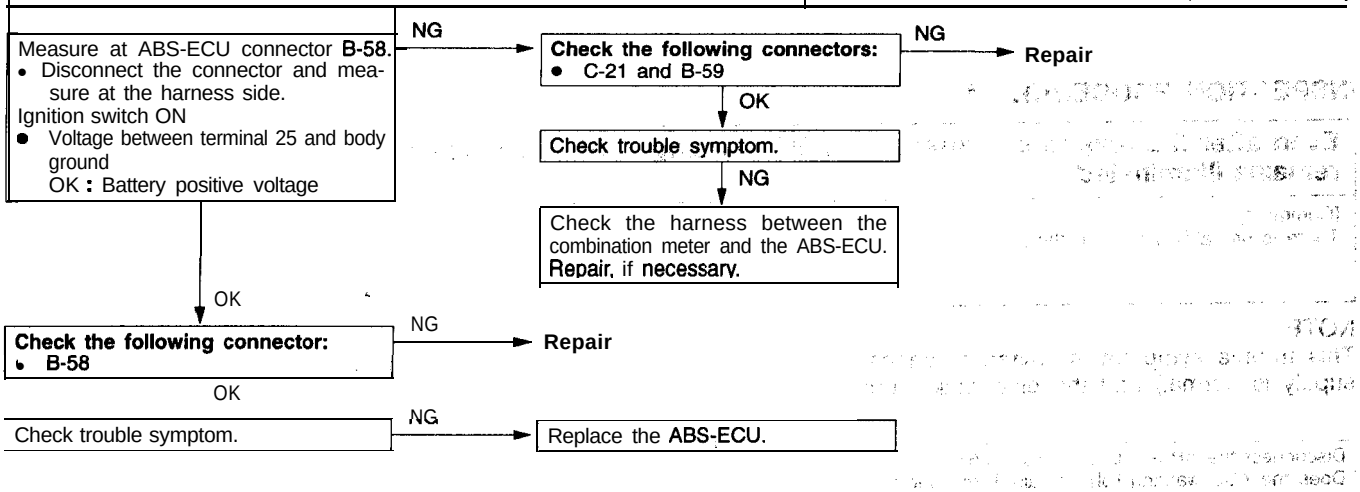

TSB Revision

INSPECTION PROCEDURE 7

Break operation is abnormal	Probable cause
[Comment] This varies depending on the driving conditions and the road surface conditions, so problem diagnosis is difficult. However, if a normal diagnostic trouble code is displayed, carry out the following inspection.	• Malfunction of wheel speed sensor • Malfunction of ABS rotor • Malfunction of wheel bearing • Malfunction of hydraulic unit • Malfunction of: ABS-ECU

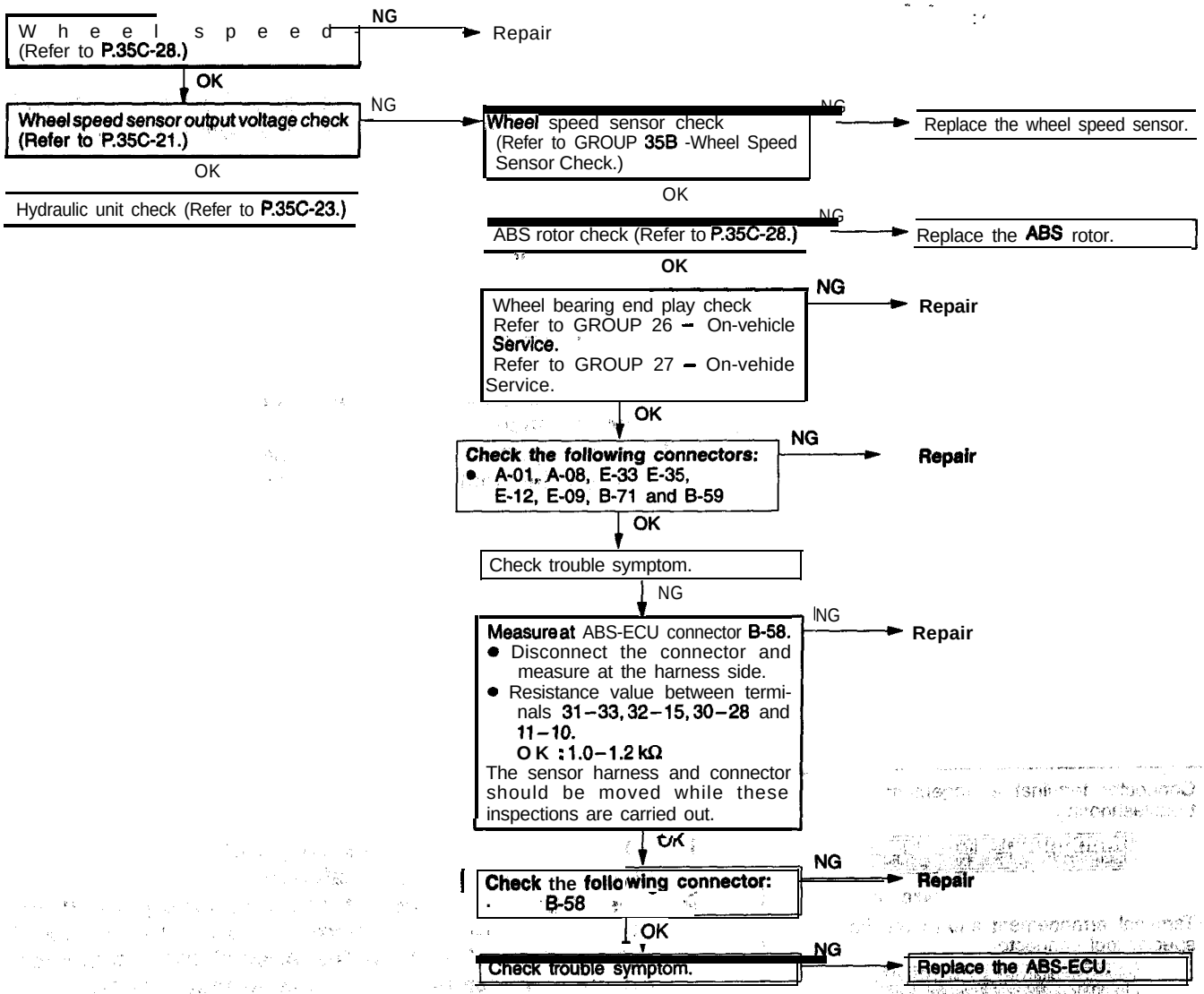

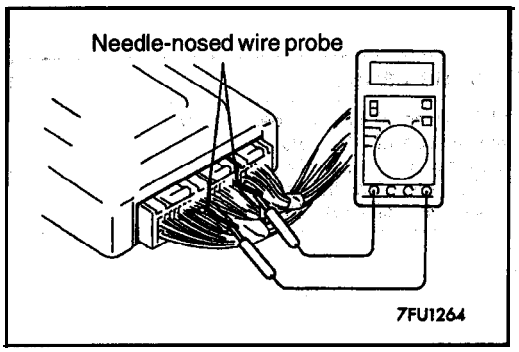

ABS-ECU CHECK

35201180151

TERMINAL VOLTAGE CHECK CHART

1. Connect a needle-nosed wire probe (paper clip etc.) to a voltmeter probe.
2. Insert the needle-nosed wire probe into each of the ABS-ECU connector terminals from the wire side, and measure the voltage while referring to the check chart.

NOTE
1. Measure voltage with the ABS-ECU connectors connected.
2. You may find it convenient to pull out the ABS-ECU to make it easier to reach the connector terminals.
3. Checks don't have to be carried out in the order given in the chart.

Caution
Short-circuiting the positive (+) probe between a connector terminal and ground could damage the vehicle wiring, the sensor, ABS-ECU, or all three. Use care to prevent this!

3. If voltmeter shows any division from standard value, check the corresponding sensor, actuator and related electrical wiring, then repair or replace.
4. After repair or replacement, recheck with the voltmeter to confirm that the repair has corrected the problem.

Connector terminal arrangement for troubleshooting

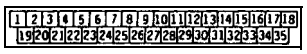

14X0184

Terminal arrangement shown on the special tool connector

14X0185

00000076

ABS-ECU Connector Terminal Arrangement

Caution
1. **Use the special tool (MB991356) to check the ABS-ECU terminal voltage and resistance.**
2. **The ABS-ECU connector terminal arrangement for "troubleshooting is different from the terminal arrangement shown on the special tool connector. So take the readings from the terminal numbers of the special tool when checking.**

Example

ABS-ECU connector terminal number for troubleshooting	Terminal number shown on the special tool connector
18	1

14X0184

Terminal No.	Check point	Check condition	Normal condition
2	Relay power supply (Output)	Ignition switch: OFF	o v
		Ignition switch: ON	Battery positive voltage
6	G sensor (Input)	Ignition switch: ON (Vehicle parked on a level surface)	Approx. 2.5 V
1.7	F.L. (R.R.) solenoid valve (Output)	Ignition switch: OFF	o v
		Ignition switch: ON	Battery positive voltage
18	Ignition switch (Input)	Ignition switch: ON	Battery positive voltage
		Ignition switch: START	o v
22	Valve relay monitor (Input)	ignition switch: OFF	o v
		Ignition switch: ON	Battery positive voltage
23	Diagnostic communication (Input/Output)	Scan tool: connected	Serial communication with the scan tool
		Scan tool: disconnected	1 V or less
24	Diagnostic selection (Input)	Scan tool: connected	0 V
		Scan tool: disconnected	Approx. 12 V
25	ABS warning light (Output)	Ignition switch: ON	Battery positive voltage
29	Stop light switch (Input)	Ignition switch: ON (stop light switch ON)	5 V or more
		Ignition switch: OFF (stop light switch OFF)	1.5 V or more
35	F.R. (R.R.) solenoid valve (Output)	Ignition switch: OFF	0 V
		Ignition switch: ON	Battery positive, voltage

TERMINAL RESISTANCE AND CONTINUITY CHECK

1. Turn the ignition switch to OFF.
2. Disconnect the ABS-ECU connector.
3. Measure the resistance and check for continuity between the terminals of the ABS-ECU harness-side connector while referring to the check chart.

   N O T E
   1. When measuring resistance and checking continuity, a harness for checking contact pin pressure should; be used instead of inserting a test probe.
   2. Checks do not have to be carried out in the order given in this chart.

   Caution
   Be careful not to check at wrong terminals, or the part, such as harness,' ABS-ECU; ohmmeter will be damaged.

4. If the ohmmeter shows any deviation from the normal condition, check the corresponding sensor; actuator and related electrical wiring, and then repair or replace.
5. After repair or replacement, recheck with the ohmmeter to confirm that the repair or replacement has corrected the problem.

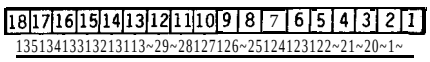

14X0310

Terminal No.	Check point	Check condition	Normal condition
5–ground	Motor monitor	At all times	Continuity
9–ground	ABS-ECU ground	At all times	Continuity
11–10	R.L. sensor	Ignition switch: OFF	1.0–1.2 kΩ
20–ground	G sensor ground	At all times	Continuity
26-2	Motor relay	Ignition switch: OFF	Approx. 50 Ω
27-2	Valve relay	Ignition switch: OFF	Approx. 100 Ω
30–28	R.R. sensor	Ignition switch: OFF	1.0–1.2 kΩ
32-15	F.L. sensor	Ignition switch: OFF	1.0–1.2 kΩ
33-31	F.R. sensor	Ignition switch: OFF	1.0–1.2 kΩ
34–ground	ABS-ECU ground	At all times	Continuity

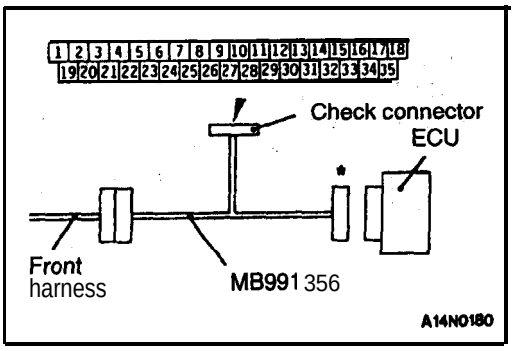

ON-VEHICLE SERVICE .

35200160118

ABS OPERATION CHECK

WHEEL SPEED SENSOR OUTPUT VOLTAGE CHECK

1. 'Lift up the vehicle and release the parking brake.
2. Disconnect the ECU harness connector and measure from the harness side connector.

Caution
Set the special tool and use the check connector to check. Do not connect the connector (Special Tool) marked with "*" except when recording the waveform on a driving test. In such a case, connect the connector to the ECU.

3. Rotate the wheel to be measured at. approximately 1/2 - 1 rotation per second, and. check the output voltage using a circuit tester or an oscilloscope.

Wheel speed sensor	Front left	Front right	Rear left	Rear right
Terminal No.	4	21	9	26
	5	11	8	24

Output voltage
When measuring with a voltmeter:
70 mV or more
When measuring with an oscilloscope:
200 mV p-p or more

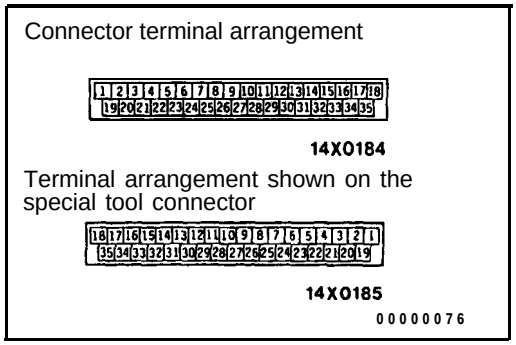

Caution
1. **Use the special tool (MB991 356) to check the ABS-ECU terminal voltage and resistance.**
2. **The ABS-ECU connector terminal arrangement is' different from the terminal arrangement shown on the special tool connector. So take the readings from the terminal numbers of the' special tool when checking.**

Example

ABS-ECU connector terminal number	Terminal number shown on the special tool connector
18	1

4. If the output voltage is lower than the above values, the reason could be as follows:
   - Faulty wheel speed sensor.

   So replace the wheel speed sensor.

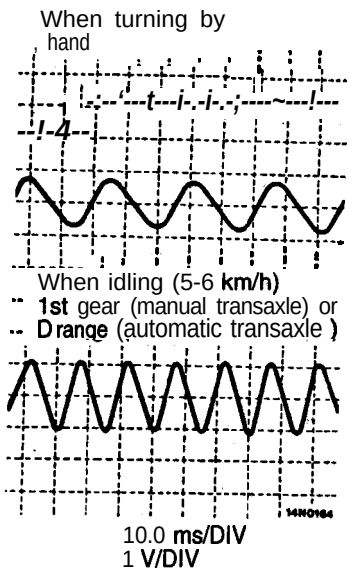

Inspecting Wave Forms With An Oscilloscope

Use the following method to observe the output voltage wave form from each wheel sensor' with an oscilloscope

- Start the engine, and rotate the front wheels by engaging 1st gear (vehicles with manual transaxle) or D range (vehicles with automatic transaxle). Turn the rear wheels manually so that they, rotate at a constant speed.

NOTE

1. Check the connection of the sensor harness and connector before using the oscilloscope.
2. The wave form measurements can also be taken while the vehicle is actually moving.
3. The output voltage will be low when the wheel speed 'is low, and similarly it will be higher as the wheel speed incleases.

Points In Waveform Measurement

Symptom	Probable causes	Remedy
Too small or zero waveform amplitude	Faulty wheel speed sensor	Replace sensor
Waveform amplitude fluctuates excessively (this is no problem if the minimum amplitude is 100 mV or more)	Axle hub eccentric or with large runout	Replace hub
Noisy or disturbed waveform	Open circuit in sensor	Replace sensor
	Open circuit in harness	Correct harness
	Incorrectly mounted wheel speed sensor	Mount correctly
	ABS rotor with missing or damaged teeth	Replace ABS rotor

NOTE

The wheel speed sensor cable moves following motion of the front or rear suspension. Therefore, it is likely that it has an open circuit only when driving on rough roads and it functions normally on ordinary roads. It is, therefore, recommended to observe sensor output voltage waveform also under special conditions, such as rough road driving.

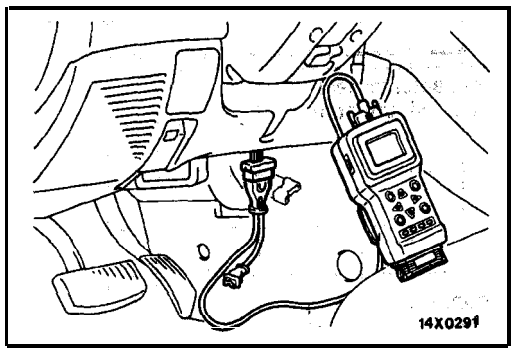

HYDRAULIC UNIT (HU) CHECK

35200170128

Caution

Turn the ignition switch off before connecting or disconnecting the scan tool.

If the scan tool is disconnected while the ignition switch is ON, the ABS diagnostic trouble codes will be memorized! and the ABS warning' light' may illuminate.

1. Jack up the vehicle and support: the vehicle with rigid; racks placed at the specified jack-up points or place the wheels which 'are checked on the rollers of the braking force tester.

   Caution

   1. **The roller of the braking force tester and the tire should be dry during testing.**
   2. **When testing the front brakes, apply the parking! brake, and when testing the rear brakes, stop the front wheels by chocking them.**

2. Release the parking brake, and feel the drag force (drag torque) on 'each road wheel.

   When using "the braking force tester, take "a reading of the 'brake drag force.

3. Turn the ignition key to the OFF position and set the scan tool as shown in the diagram.
4. After checking that the shift lever <M/T> or the selector lever <A/T> is in neutral, start the engine.

   NOTE

   1. At this time, the ABS system will switch to the scan tool mode and the ABS warning light will illuminate.
   2. When the ABS has' been interrupted by the fail-safe function, the scan tool actuator testing cannot be used.

5. Use the scan tool to force-drive the actuator.
6. Turn the wheel by hand and check the change in braking force when the brake pedal is -depressed.

   When using the braking force tester, depress the brake pedal until the braking force is at the following values, and check to be sure that the braking force changes to the brake drag force inspected in step 2 when the actuator is force-driven.

Front wheel N (lbs.)	785–981 (176–220)
Rear wheel N (lbs.)	588–785 (132–176)

   The result should be as shown in the following diagram.

7. If the result of inspection is abnormal, correct according to the "Diagnostic Table."

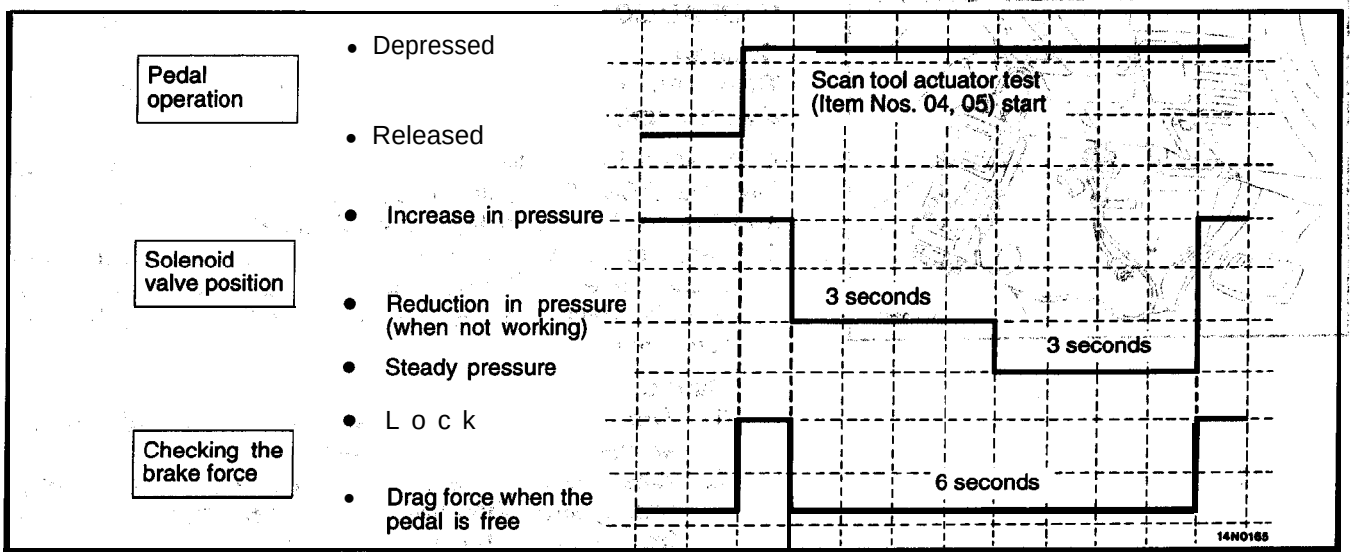

Diagnosis Table

No.	Operation	Judgement– Normal	Judgement– Abnormal	Probable cause	Remedy
04	(1) Depress brake pedal to lock wheel. (2) Using the scan tool, select the wheel to be checked and force the actuator to operate. (3) Turn the selected wheel manually to check the change of brake force.	Brake force released for 6 secondsafter locking.	Wheel does not lock when brake pedal is depressed.	Clogged brake line other than HU	Check and clean brake line
				Clogged hydraulic circuit in HU	Replace HU assembly
05			Brake force is not released	Incorrect HU brake tube connection	Connect correctly
				HU solenoid valve not functioning correctly	Replace HU assembly

8. After inspection, disconnect the scan tool immediately after turning the ignition switch to OFF.

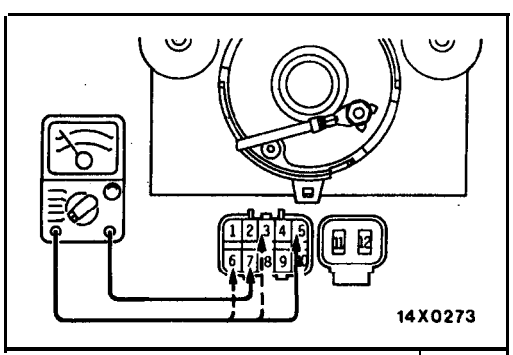

SOLENOID VALVE CHECK 35201070090

Measure the resistance between terminals.

Standard value: 1.0–1.3 Ω

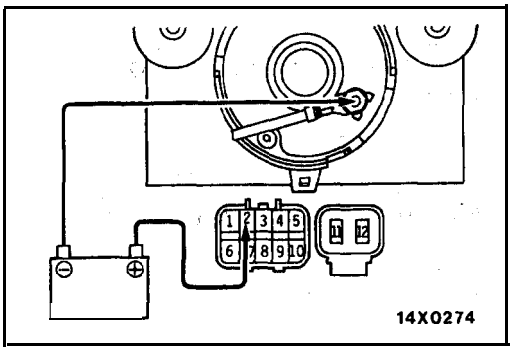

MOTOR OPERATION CHECK 35200180091

Connect the battery and check to be sure that the sound of the hydraulic unit motor operating can be heard.

Caution
The battery power should not be applied for more than 1 second.

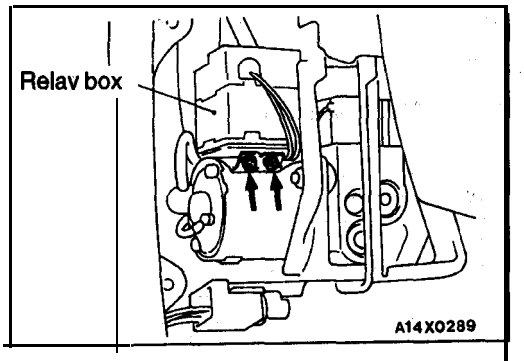

ABS MOTOR RELAY AND ABS VALVE RELAY CHECK 35201090072

1. Remove the splash shield. (Refer to GROUP 42 – Fender.)
2. Remove the relay box mounting, bolts,

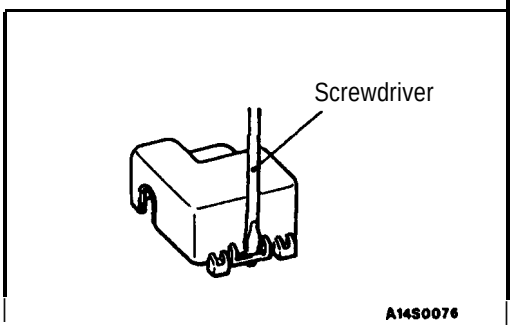

3. Insert the tip of a screwdriver into the space between the hydraulic unit and the relay box cover and use it to open the tab at one place, and then remove the cover.
4. Take out all of the relays from the relay. box and check the continuity between the terminals when power is not supplied and when power is supplied.

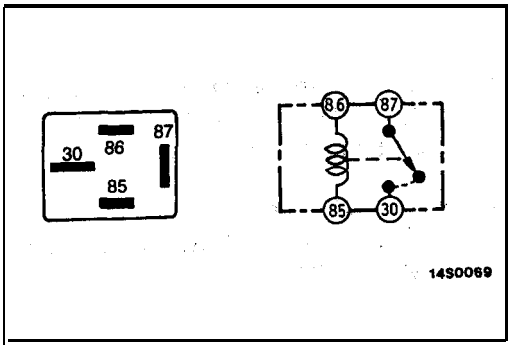

ABS Motor Relay

When no current flows	Between terminals 85–86	30–60 Ω
	Between terminals 30–87	No continuity
When current flows between terminals 85–86	Between terminals 30–87	Continuity (approx. 0 Ω)

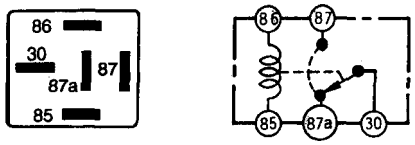

14S0070

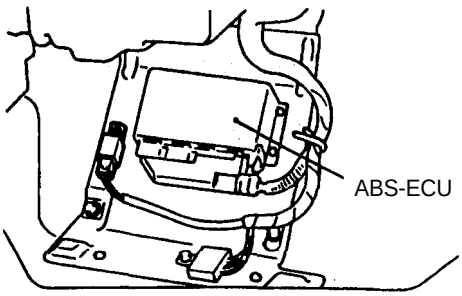

16X0769

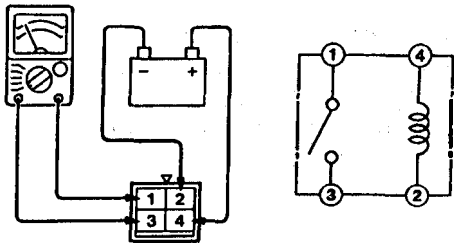

14X0316
00003626

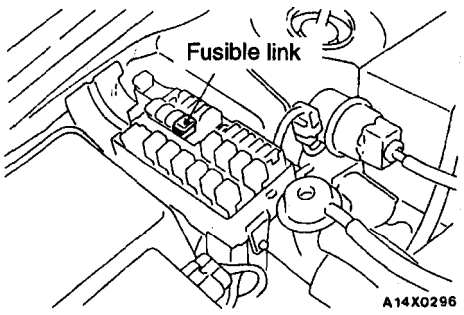

A14X0296

ABS Valve Relay

When no current flows	Between terminals 85–86	60–120 Ω
	Between terminals 30–87a	Continuity (approx. 0 Ω)
	Between terminals 30–87	No continuity
When current flows between terminals 85–86	Between terminals 30 – 87a	No continuity
	Between terminals 30 – 87	Continuity (approx. 0 Ω)

POWER RELAY CHECK

35201100065

Remove the instrument under cover and remove the power relay.

Battery voltage	Terminal No.			
	1	2	3	4
Power is not supplied		0		0
Power is supplied	○	⊖	○	⊕

REMEDY FOR A FLAT BATTERY

35200350072

When booster cables are used to start the engine when the' battery is completely flat and then the vehicle is immediately driven without waiting for the battery to recharge itself to some extent, the engine may misfire, and driving might not be possible.

This happens because ABS consumes a great amount of' current for its self-check function; the remedy is to either allow the battery to recharge sufficiently, or to remove the, fusible link for ABS circuit, thus disabling the anti-skid brake system.

The ABS warning light will illuminate when the fusible link (for ABS) is removes.

After the battery has sufficiently charged, install the fusible link (for ABS) and restart the engine; then check to be sure the ABS warning light is not illuminated.

WHEEL SPEED SENSOR

35200830101

REMOVAL AND INSTALLATION

Pre-removal Operation
- Splash Shield Removal <Front only, (Refer to GROUP 42 – Fender.)

Post-installation Operation
- Wheel Speed Sensor Output Voltage Check (Refer to P.35C-21.)
- Splash Shield Installation <Front only> (Refer to GROUP 42 – Fender.)

Front

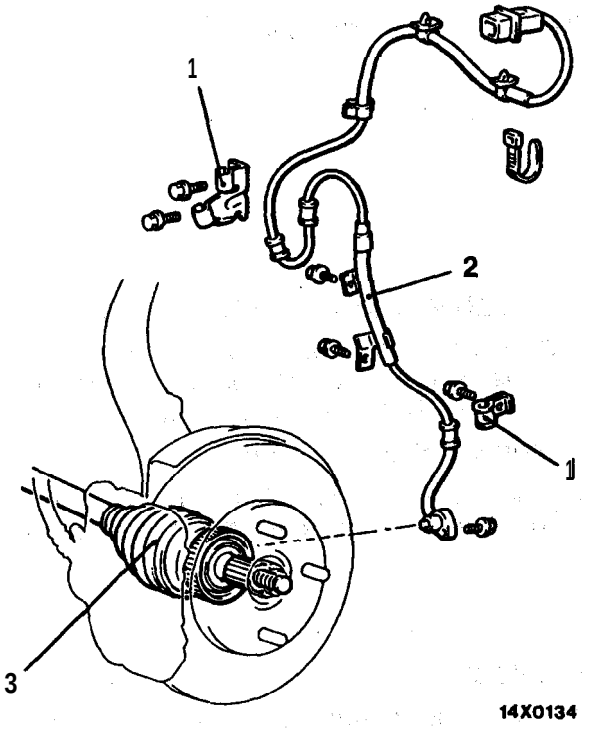

Rear

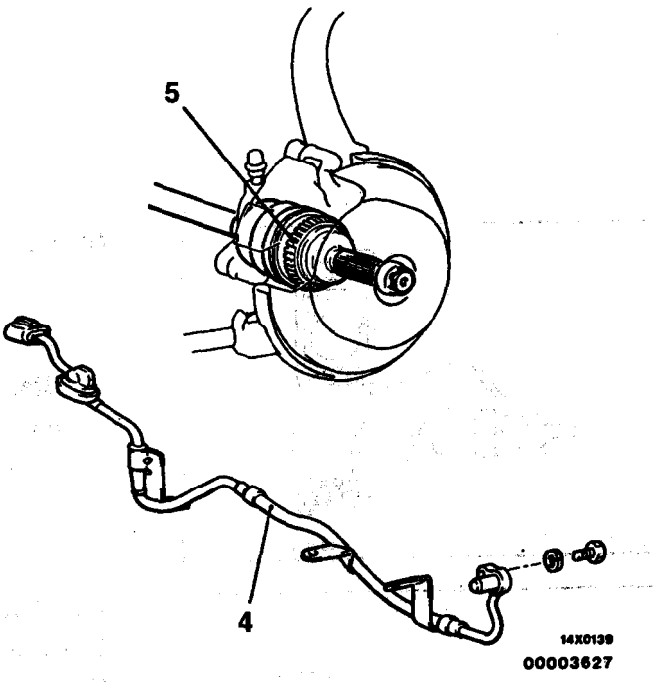

Front wheel speed sensor removal steps

1. Clip
▶A◀ 2. Front wheel speed sensor

Front ABS rotor removal

3. Drive shaft <Front ABS rotoo (Refer to GROUP 26 – Drive Shaft.)

Rear wheel speed sensor removal

▶A◀ 4. Rear wheel speed sensor

Rear ABS rotor removal steps

5. Drive shaft <Rear ABS rotoo (Refer to GROUP 27 – Drive Shaft.)

NOTE
The ABS rotor is integrated with the drive shaft and is not disassembled.

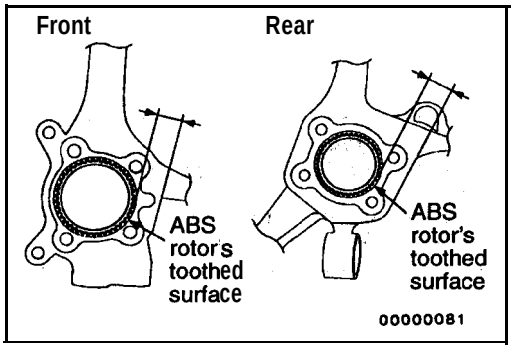

INSTALLATION SERVICE POINT

▶A◀ FRONT WHEEL SPEED SENSOR/REAR WHEEL SPEED SENSOR INSTALLATION

The clearance between the wheel speed sensor and the ABS rotor's toothed surface is not adjustable, but measure the distance between the sensor installation surface and the ABS rotor's toothed surface.

Standard value: 28.2-28.5 mm (1.11-1.12 in.)

INSPECTION

35200840098

WHEEL SPEED SENSOR CHECK

Refer to GROUP 35B – Wheel Speed Sensor Check.

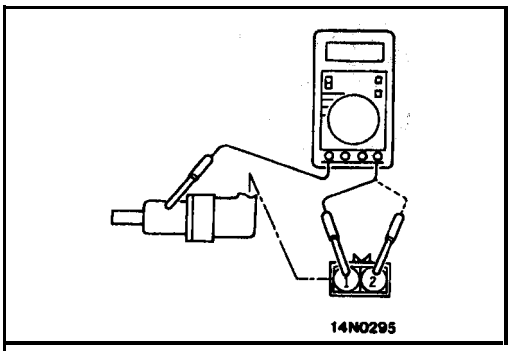

WHEEL SPEED SENSOR INSULATION CHECK

(1) Remove all connections from the wheel speed sensor, and then measure the resistance between terminals (1) and (2) and the body of the wheel speed sensor.

Standard value: 100 kΩ or more

(2) If the wheel speed sensor insulation resistance is outside the standard value range, replace with a new wheel speed sensor.

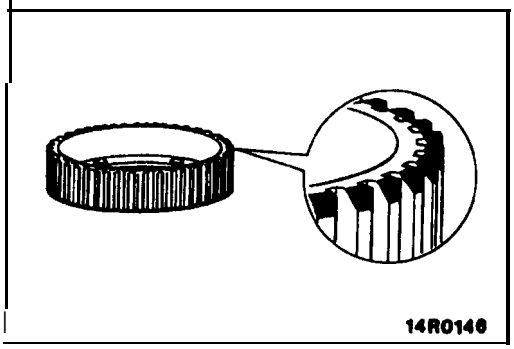

ABS ROTOR CHECK

Check whether ABS rotor is broken or deformed, and, if so, replace the ABS rotor.

G-SENSOR

REMOVAL AND INSTALLATION

Pre-removal and Post-installation Operation
- Radio and Tape Player Removal and Installation (Refer to GROUP 54 – Radio, Tape Player, CD player, Amplifier, Speaker and Antenna.)

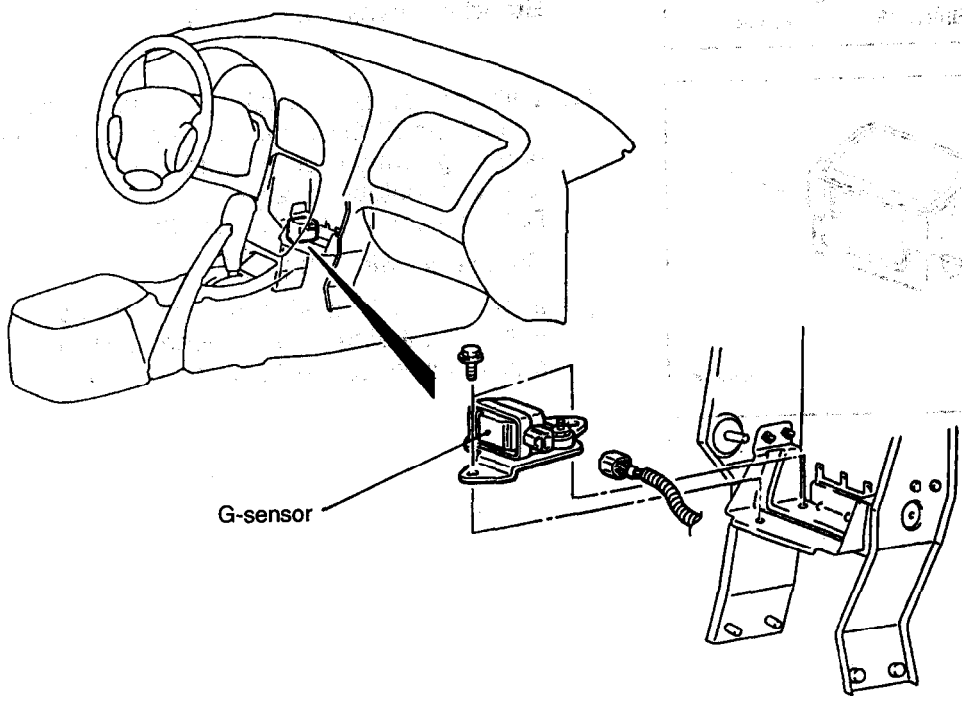

A14X0426

Caution
Do not drop the G-sensor or subject it to shocks.

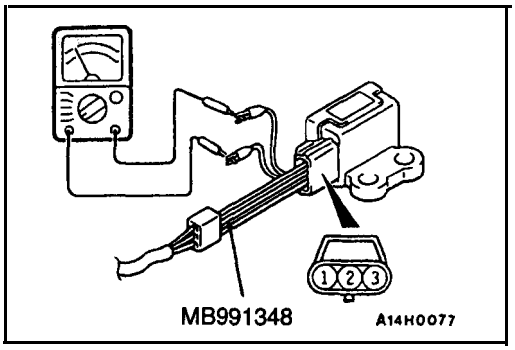

INSPECTION

3520102008B

G-SENSOR CHECK

(1) Disconnect the G-sensor connector and connect the special tool (test,; harness set:,, MB991348) between the terminals of the disconnected connector.

(2) Turn the ignition switch to ON and take a reading of the following output voltage.
Between terminals (2) and (3).

Standard value: 2.4-2.6 V

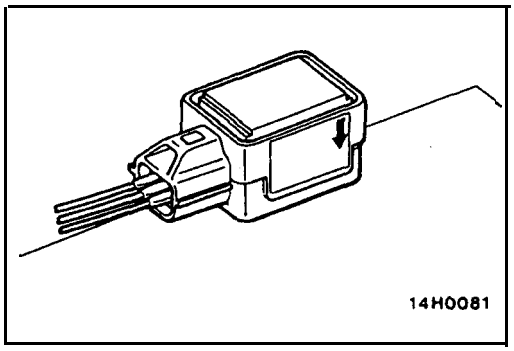

(3) With the special tool still connected, secure the G-sensor so that the FRONT mark on the sensor mounting surface is facing straight down, and then take a reading of the following output voltage.
Between terminals (2) and (3)

Standard value: 3.3–3.7 V

(4) If the voltage is outside the standard value; after checking to be sure that there is no abnormality in the power supply -and earth, wires, replace the G-sensor.

ABS-ECU

35200980165

REMOVAL AND INSTALLATION

Pre-removal and Post-installation Operation
- Cowl Side Trim (R.H.), Front Scuff Plate Removal and Installation (Refer to GROUP 52A – Trims.)

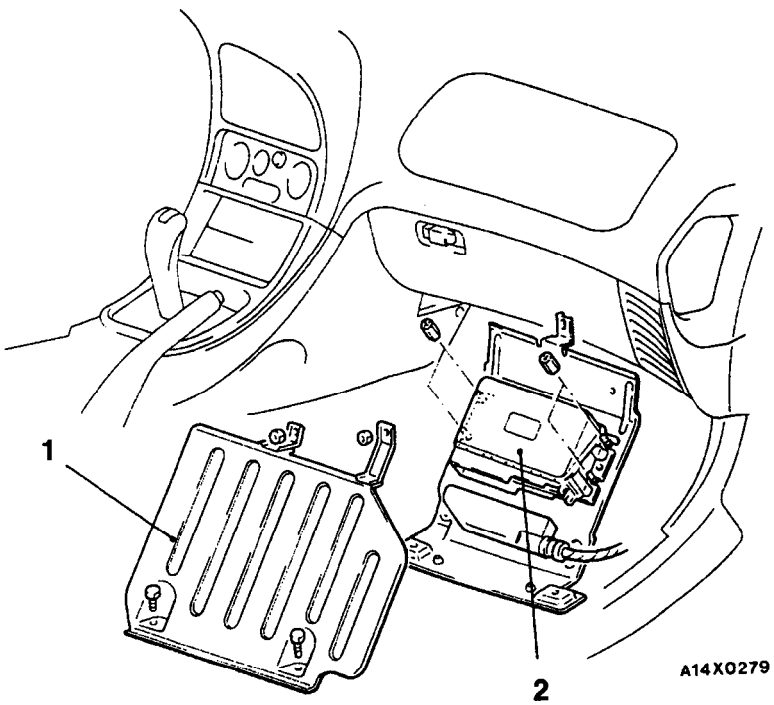

Removal steps
1. Control unit cover
2. ABS-ECU

INSPECTION

35200990113

ABS-ECU CHECK

Refer to P.35C-18.

NOTES

PARKING BRAKES

CONTENTS

36109000064

WARNINGS REGARDING SERVICING OF SUPPLEMENTAL RESTRAINT SYSTEM (SRS) EQUIPPED VEHICLES

WARNING!

(1) Improper **service or maintenance of any component of the SRS, or any SRS-related component, can lead to personal injury or death to service personnel (from inadvertent firingofthealr bag) or to the driver and passenger (from rendering the SRS inoperative).**

(2) Service or maintenance of any SRS component or SRS-related component must be performed only at an authorized MITSUBISHI dealer.

(3) MITSUBISHI dealer personnel must thoroughly review this manual, and especially its GROUP 52B – Supplemental Restraint System (SRS) and GROUP 00 – Maintenance Service before beginning any service or maintenance of any component of the SRS or any SRS-related component.

INOTE

The SRS includes the following **components:SRS-ECU,** SRS warning light, air bag module, clock spring and interconnecting wiring. **Other** SRS-related components (that may have to be **removed/installed** in connection **with** SRS service or maintenance) are indicated **in** the **table** ot contents by an asterisk (*).

GENERAL INFORMATION

29199919999

The parking brake is of a mechanical rear-wheel brake construction in all vehicles. Drum-type or drum in disc-type brakes are employed depending on the vehicle model.

The operation method utilizes a parking brake lever which is in an offset position at the passenger's side.

CONSTRUCTION DIAGRAM

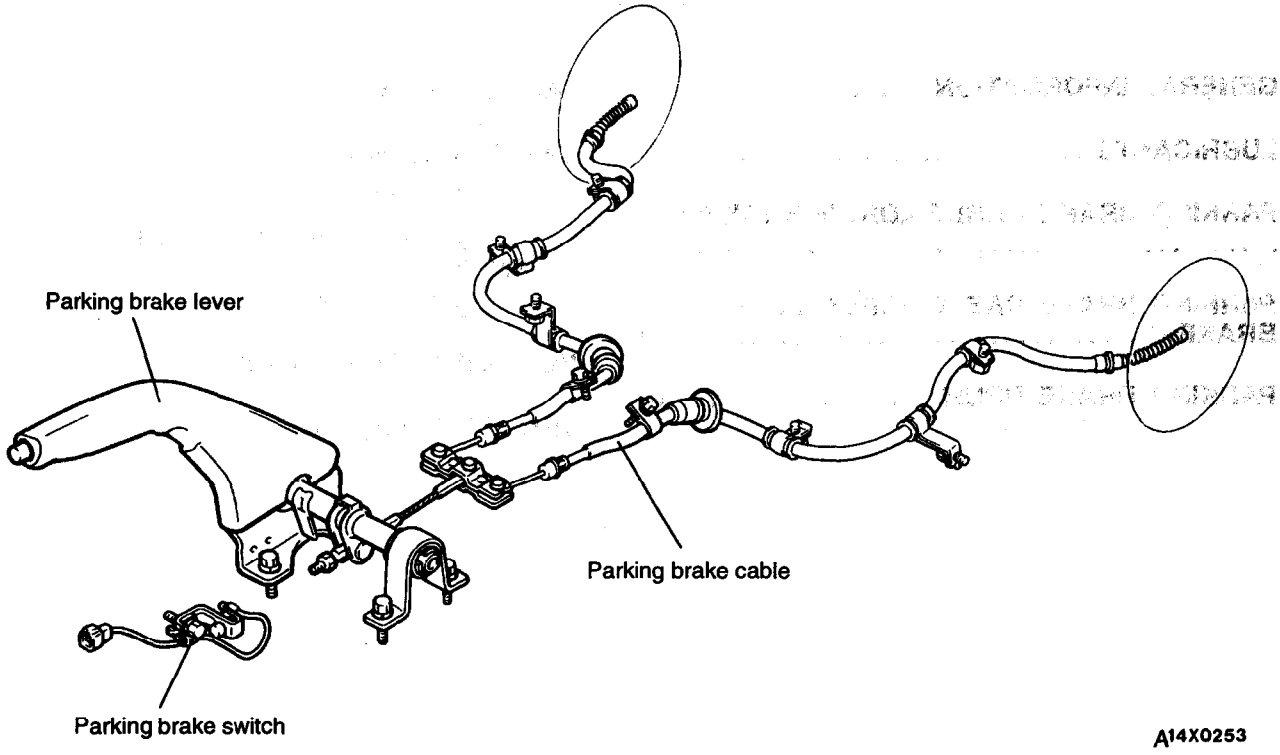

TSB Revision

SERVICE SPECIFICATIONS

36100030062

Item		Standard value	Limit
Parking brake lever stroke	Vehicles with drum-in-disc brake	3-5 notches	–
	Vehicles with drum brake	5-7 notches	–
Brake lining thickness mm (in.)		2.8 (.11)	1.0 (.039)
Brake drum inside diameter mm (in.)		188.0 (6.8)	169.0 (6.7)

LUBRICANTS

36100040065

Items	Specified lubricant
Backing plate	Brake grease SAE J310, NLGI No. 1
Shoe and lining assembly	
Adjuster	

TROUBLESHOOTING

36100070040

Symptom	Probable cause	Remedy
Brake drag	Incomplete release of parking brake.	Correct
	Incorrect parking brake adjustment	Adjust
Insuff icient parking brake function	Worn brake pad	Replace
	Excessive parking brake lever stroke	Adjust the parking brake lever stroke or check the parking brake cable routing
	Grease or oil on pad surface	Replace
	Parking brake cable sticking'	Replace

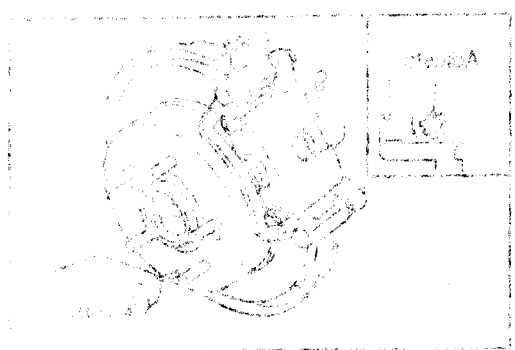

ON-VEHICLE SERVICE

36100090060

PARKING BRAKE LEVER- STROKE CHECK AND ADJUSTMENT

1. Pull 'the parking brake lever with a force of approx. 196 N (45 lbs.) and count the number of notches.

   Standard value:
   3-5 notches
   <Vehicles with drum-in-disc brake>
   5–7 notches
   <Vehicles with drum brake>

   Caution
   The 196 N (45 lbs.) force of the parking brake lever must be strictly observed.

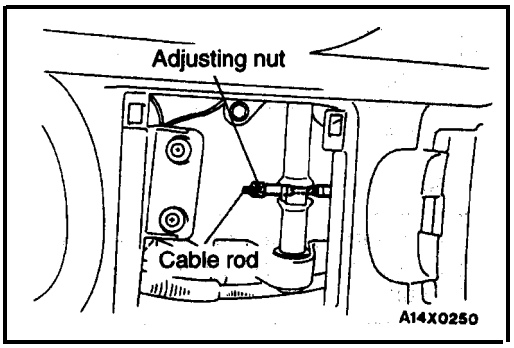

2. If the parking brake lever stroke is not the standard value, adjust as described below.
   (1) Remove the inner compartment mat of the floor c&l-sole.
   (2) Loosen the adjusting nut to the end of. the cable rod, thus freeing the parking, brake cable,,

<Vehicles with drum brake>

With the engine idling, forcefully depress the brake pedal' five of six times and confirm that the pedal stroke stops changing.

NOTE
If the pedal stroke stops changing, the automatic-adjustment mechanism is functioning normally, and the clearance between the shoe and drum is correct.

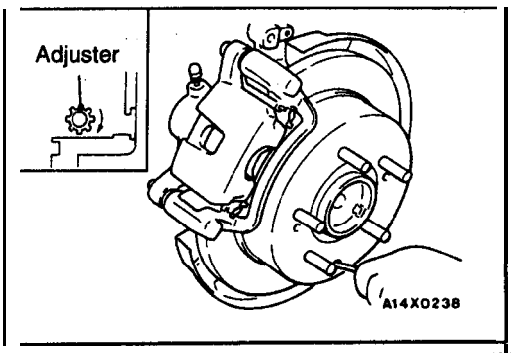

<Vehicles with drum-in-disc brake>

1. Remove the adjustment hole plug, and then use a flat-tip (–) screwdriver to turn the adjuster in the direction of the arrow (the direction which expands the shoe) so that the disc will not rotate.
2. Return the adjuster five notches in the direction opposite to the direction of the arrow.

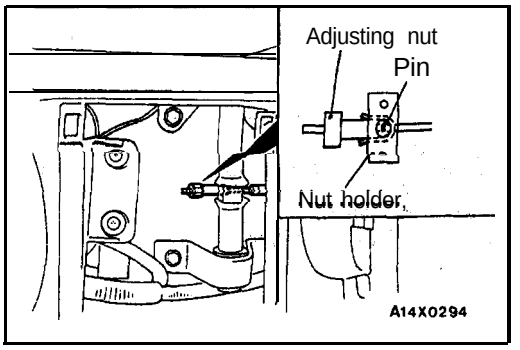

3. Turn the adjusting nut to adjust the parking brake lever stroke to within the standard value range.

Caution
If the number of brake lever notches engaged is less than the standard value, the cable has been pulled excessively. Be sure to adjust it to within the standard value.

4. After making the adjustment, check to be sure that there is no play between the adjusting nut and the pin. Also check that the adjusting nut is securely held at the nut holder;
5. After adjusting the lever stroke, jack up the rear of the vehicle.
6. With the parking brake lever in the released position, turn the rear wheel to confirm that the rear brakes are not dragging.

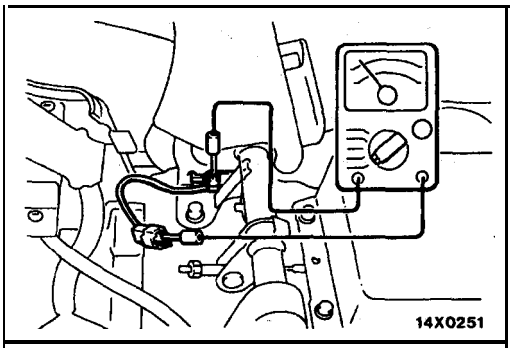

PARKING BRAKE SWITCH CHECK 36100330063

1. Disconnect the connector of the parking brake switch, and connect an ohmmeter to the parking brake switch and the switch installation bolt.
2. The parking brake switch is good if there is continuity when the parking brake lever is pulled and there is no continuity when it is returned.

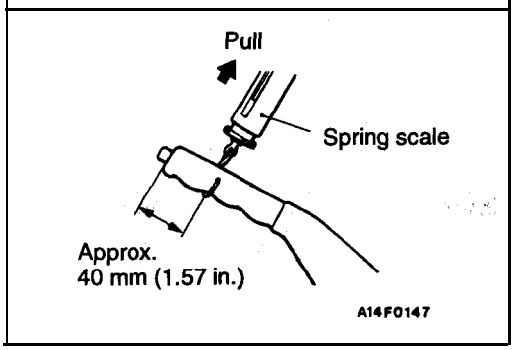

LINING RUNNING-IN 99199119949

<Vehicles with drum-in-disc brake>

Carry out running-in by the following procedure when replacing the parking brake linings or the rear 'brake disc rotors, or when brake performance 'is insufficient.

(1) Adjust the parking brake stroke to the speified value.
(2) Hook a spring scale onto the center of the parking brake lever grip and pull it with a force of 98–147 N (22–33 lbs.) in a direction perpendicular to the handle.
(3) Drive the vehicle at a constant. speed of 35–50 km/h (22-31 mph) for 100 metres (328 ft).
(4) Release 'the parking brake and let the brakes cool for 5–1 0 minutes.
(5) Repeat the procedure in steps (2) to (4) 4-5 times.

Caution
Carry out running-in in a place with good visibility, and pay careful attention to safety.

PARKING BRAKE LEVER

36100130069

REMOVAL AND INSTALLATION

Pre-removal Operation
- Floor Console Removal
  (Refer to GROUP 52A – Floor Console.)

Post-installation Operation
- Parking Brake Lever Stroke Adjustment
  (Refer to P. 36-4.)
- Floor Console Installation
  (Refer to GROUP 52A – Floor Console.)

CAUTION: SRS
1. When removing and installing the floor console, do not let it bump against the SRS-ECU or other components.
2. Before removal of SRS-ECU, refer to GROUP 52B – SRS-ECU.

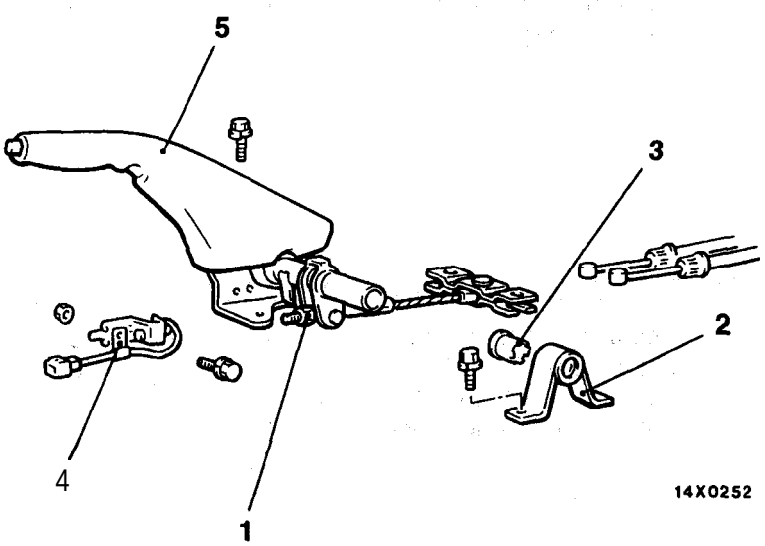

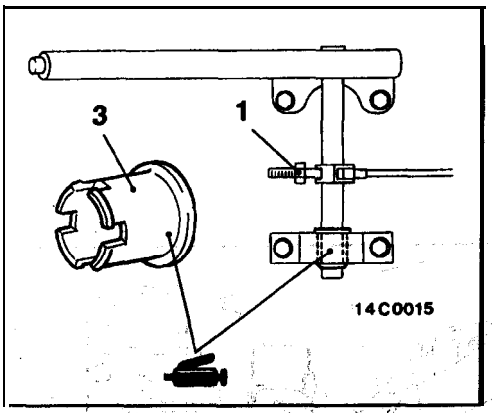

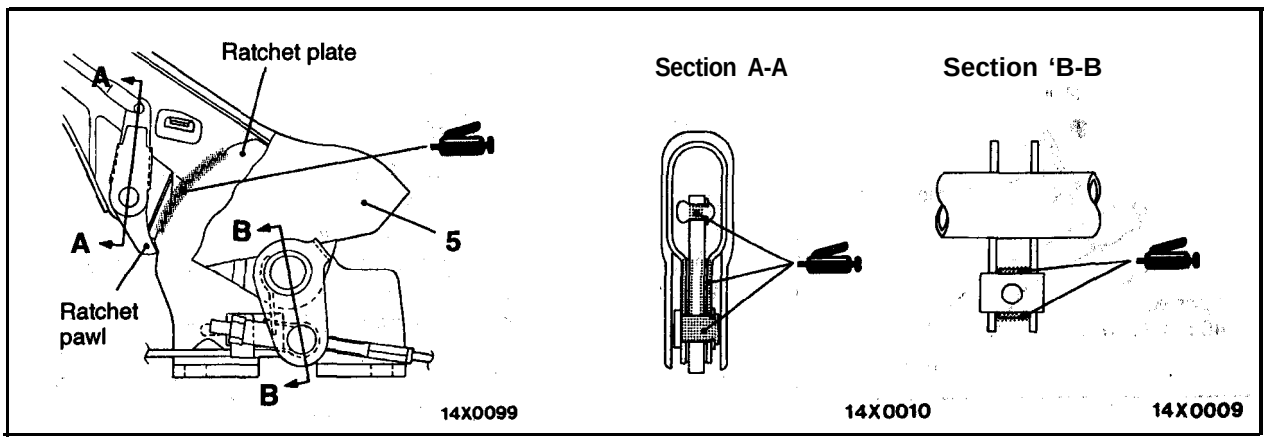

00000086

Removal steps
1. Adjusting nut
2. Parking brake stay
3. Bushing
4. Parking brake switch
5. Parking brake lever

TSB Revision

PARKING BRAKE CABLE <DRUM BRAKE>

36100190081

REMOVAL AND INSTALLATION

Pre-removal Operation
Floor Console Removal
(Refer to GROUP 52A – Floor Console.)

Post-installation Operation
- Parking Brake Lever Stroke Adjustment (Refer to P.36-4.)
- Floor Console Installation (Refer to GROUP 52A – Floor Console.)

CAUTION: SRS
1. When removing and installing the floor console, do not let it bump against the SRS-ECU or other components.
2. Before removal of SRS-ECU, refer to GROUP 52B – SRS-ECU.

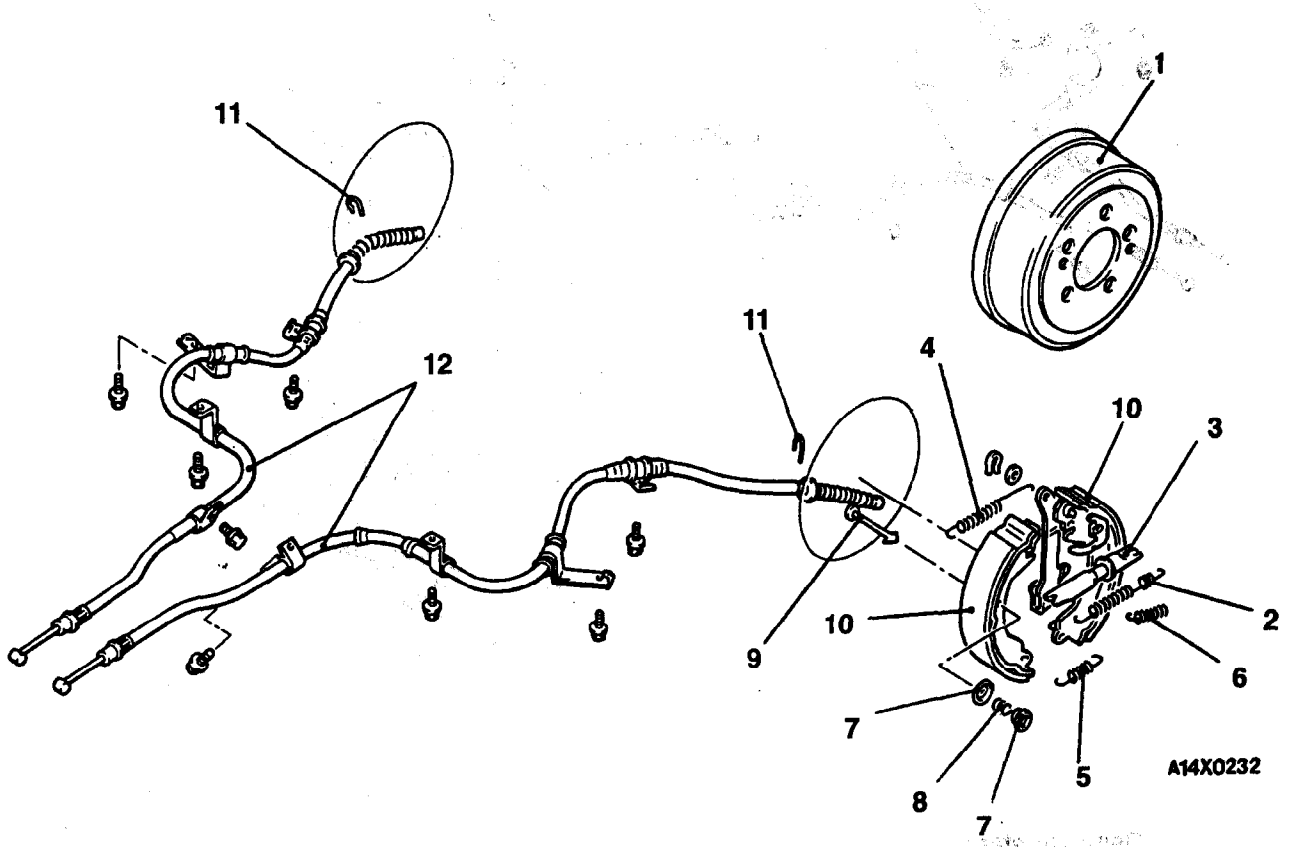

Removal steps

1. Rear brake drum
2. Shoe-to-lever spring
3. Auto adjuster assembly
4. Retainer spring
5. Retainer spring
6. Lever return' spring
7. Shoe hold-down cup
8. Shoe hold-down spring
9. Shoe hold-down pin
10. Shoe' arid lining assembly
12. Parking brake cable

TSB Revision

PARKING BRAKE CABLE <DRUM-IN-DISC BRAKE>

36100190098

REMOVAL AND INSTALLATION

Pre-removal Operation
- Floor Consol Removal
  (Refer to GROUP 52A – Floor Console.)

Post Installation Operation
- Parking Brake Lever Stroke Adjustment
  (Refer to P.36-4.)
- Floor Console Installation
  (Refer to GROUP 52A – Floor Console.)

CAUTION: SRS
1. When removing and installing the floor console, do not let it bump against the SRS-ECU or other components.
2. Before removal of SRS-ECU, refer to GROUP 52B – SRS-ECU.

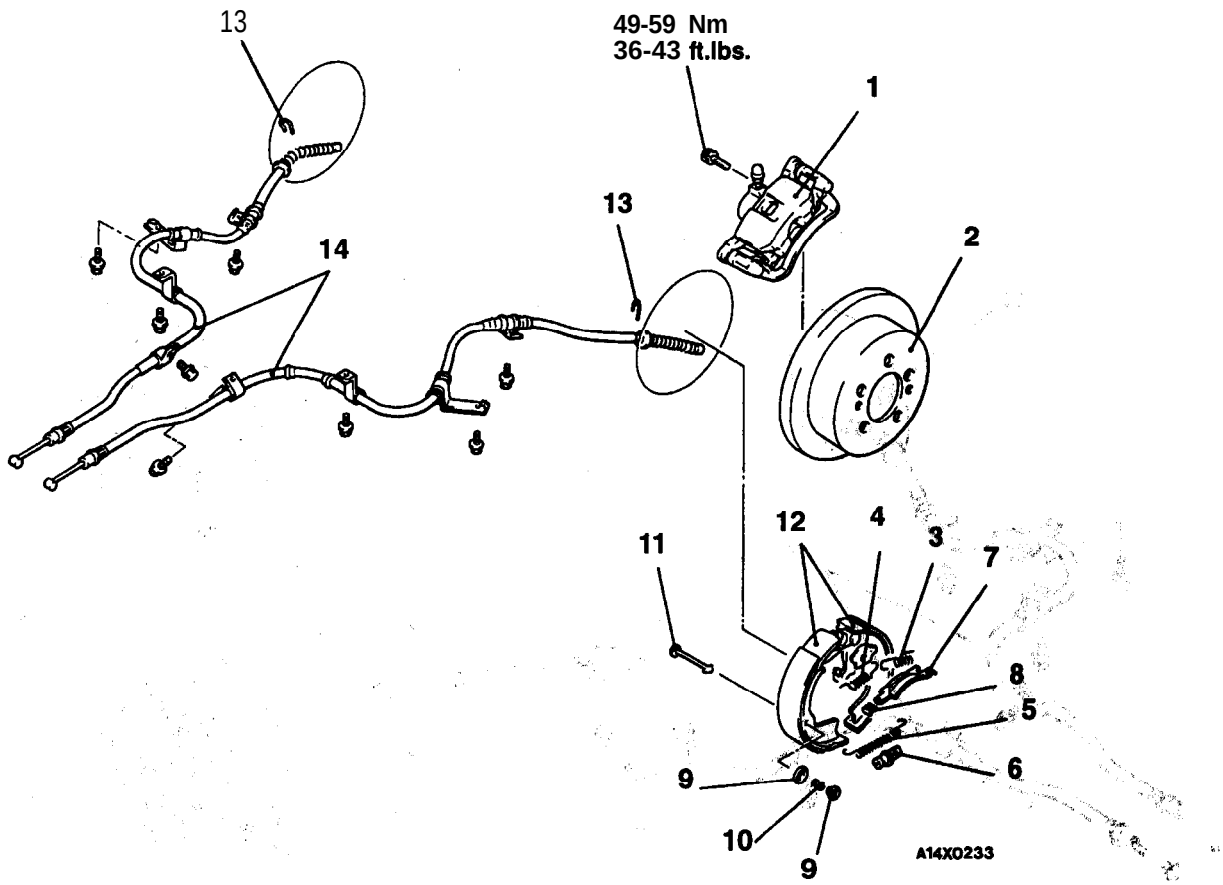

Removal steps

- 1. Rear brake assembly
- 2. Rear brake disc
- ▶B◀ 3. Shoe-to-anchor spring (rear)
- ▶B◀ 4. Shoe-to-anchor spring (front)
- 5. Adjusting wheel spring
- ↗ 6. Adjuster
- 7. Strut
- ◀B▶ 8. Strut return spring
- 9. Shoe hold-down cup
- 10. Shoe hold-down spring
- 11. Shoe hold-down pin
- 12. Shoe and lining assembly
- 13. Clip
- 14. Parking brake cable

TSB Revision

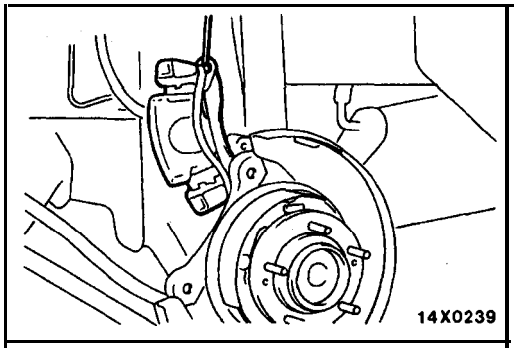

REMOVAL SERVICE POINT

◀A▶ REAR BRAKE. ASSEMBLY REMOVAL

Remove the rear brake assembly and 'support. it with wire or similar.

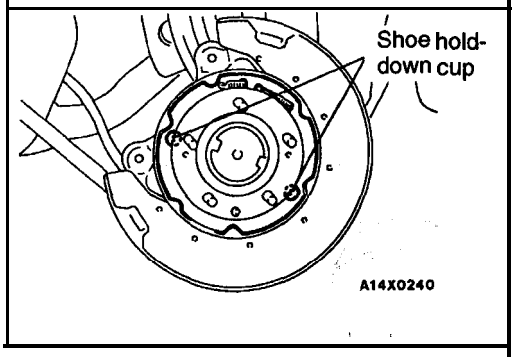

◀B▶ SHOE HOLD-DOWN CUP REMOVAL

Extend the shoe and lining assembly, and remove the shoe hold-down cup.

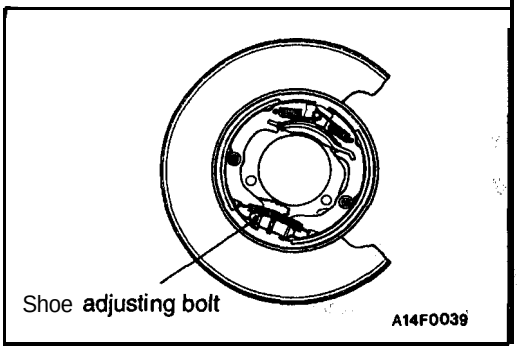

INSTALLATION SERVICE POINTS

▶A◀ ADJUSTER INSTALLATION

Install the adjuster so that the shoe adjusting-bolt of left hand wheel 'is attached towards the front of the' vehicle, and the shoe adjusting bolt of right hand wheel is towards the rear of the vehicle.

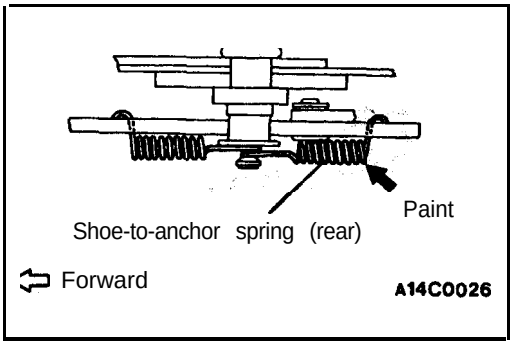

▶B◀ SHOE-TO-ANCHOR SPRING INSTALLATION

The load on the respective shoe-to-anchor springs is different, so the, spring in the figure has been painted.

NOTE
The figure shows the left wheel; for the right wheel, the position is symmetrical.

PARKING BRAKE DRUM

36100250055

REMOVAL AND INSTALLATION

Post-installation Operation
Parking Brake Lever Stroke Adjustment
(Refer to P.36-4.)

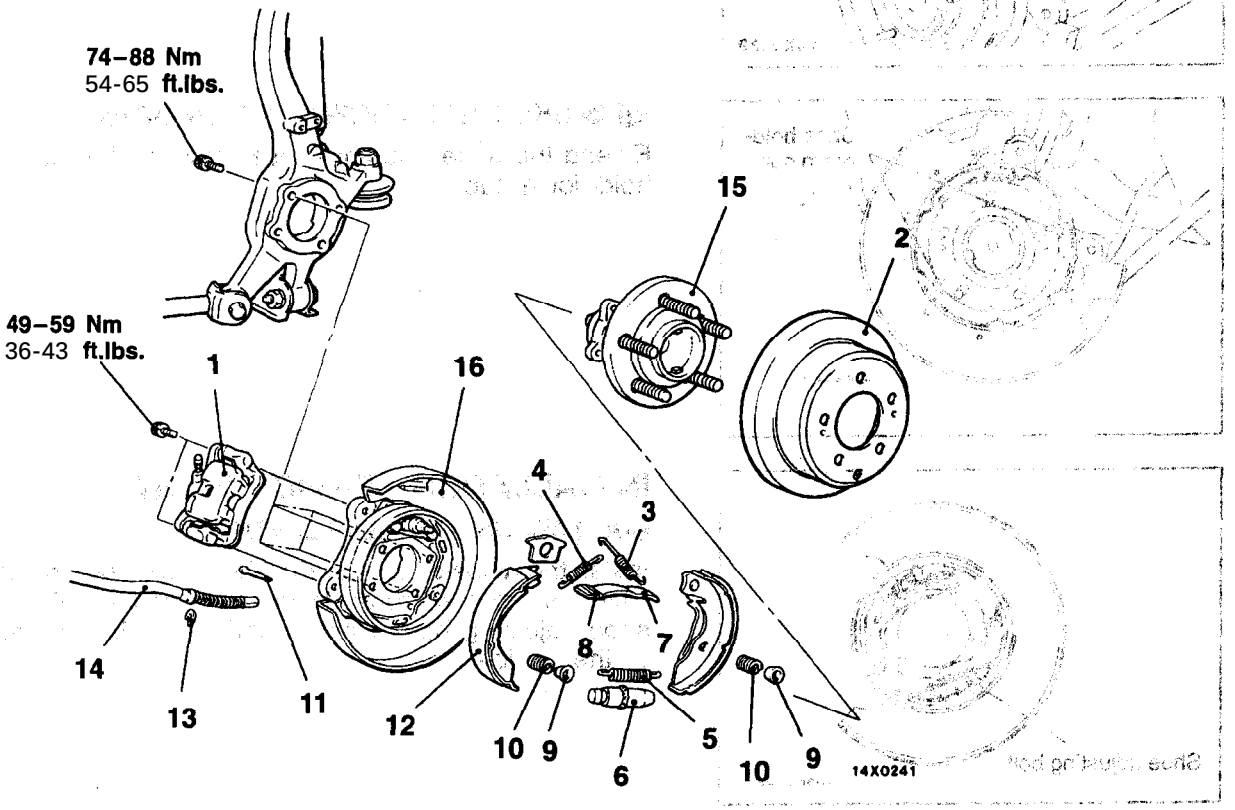

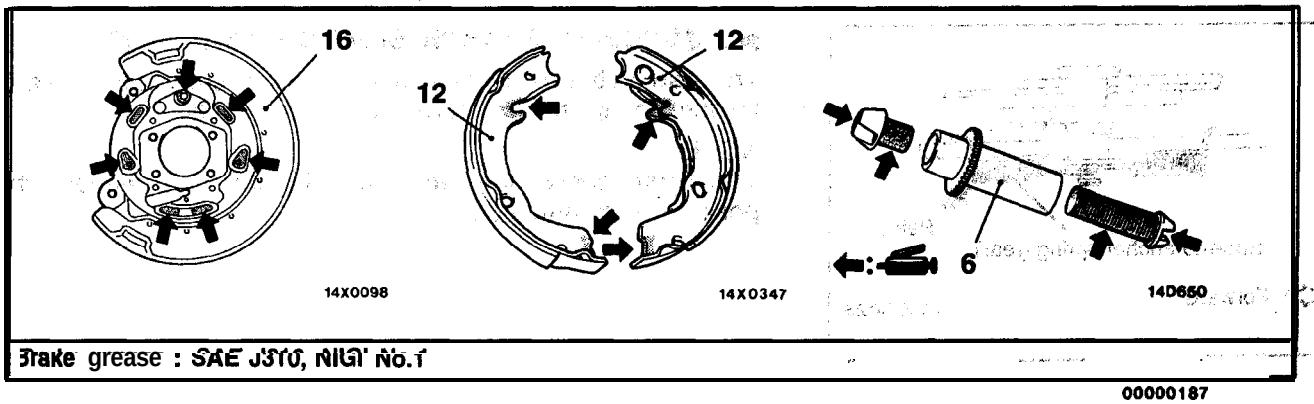

Brake grease : SAE J310, NLGI No.1

00000187

Removal steps

◀A▶ 1. Rear brake assembly
2. Rear brake disc
▶B◀ 3. Shoe-to-anchor spring (rear)
▶B◀ 4. Shoe-to-anchor spring (front)
5. Adjusting wheel spring
↗ ● 6. Adjuster
7. Strut
8. Strut return spring

◀B▶ 9. Shoe hold-down cup
10. Shoe hold-down spring
11. Shoe hold-down pin
12. Shoe and lining assembly
13. Clip
14. Parking brake cable
15. Rear hub assembly
16. Backing plate

TSB Revision

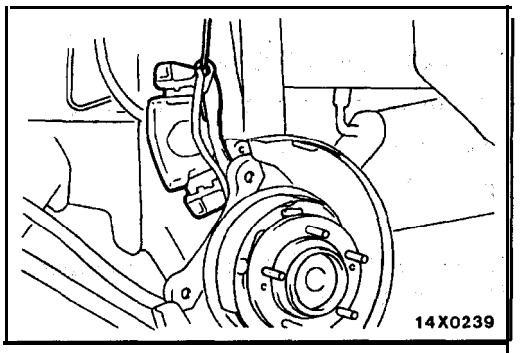

REMOVAL SERVICE POINTS

◀A▶ REAR BRAKE ASSEMBLY REMOVAL

Remove the rear brake assembly and support it with wire or. similar.

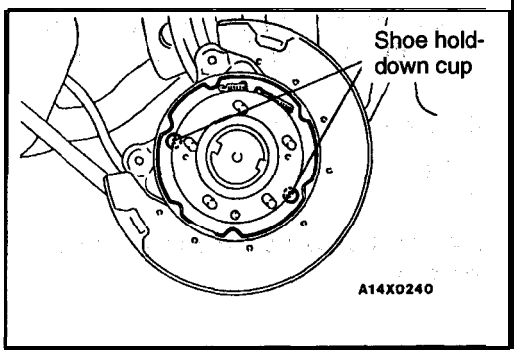

◀B▶ SHOE HOLD-DOWN CUP REMOVAL

-Extend the shoe and lining assembly, and remove the shoe hold-down cup.

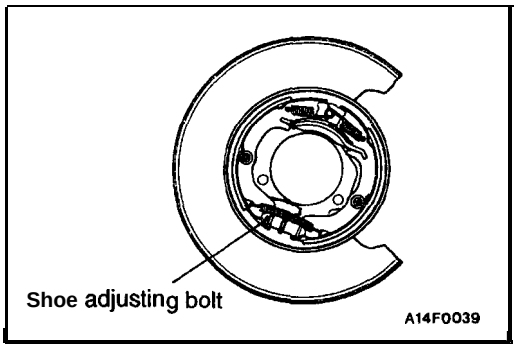

INSTALLATION SERVICE POINTS

▶A◀ ADJUSTER INSTALLATION

Install the adjuster so that the shoe adjusting bolt of left hand wheel is attached towards the front of the vehicle, and the shoe adjusting bolt of right hand wheel is towards the rear of the vehicle.

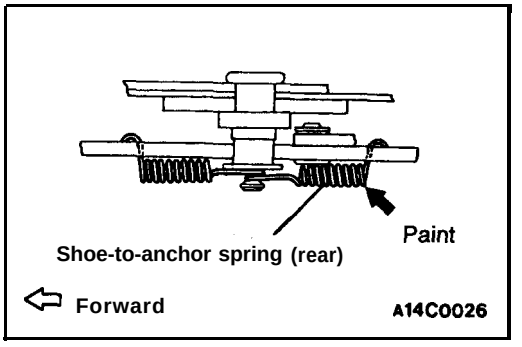

▶B◀ SHOE-TO-ANCHOR SPRING INSTALLATION

The load on the respective shoe-to-anchor springs is different, so the spring in the figure has been painted.

NOTE

The figure shows the left wheel; for the right wheel, the position is symmetrical.

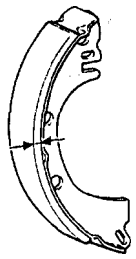

14W0096

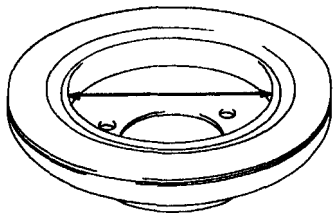

14X0367

INSPECTION

36100260058

BRAKE LINING AND BRAKE DRUM CHECK

(1) Measure the thickness of the brake lining at several places.

Standard value: 2.8 mm (.11 in.)

Limit: 1.0 mm (.039 in.)

Caution

Replace the brake shoes if "the thickness of the brake lining is the limit value or less.

(2) Using a dial gauge caliper or micrometer (for inner side), measure the brake disc drum inner diameter at two or more places.

Standard value: 188.0 mm (8.8 in,)

Limit: 169.0 mm (6.7 in.)

Caution

Replace the drum if the brake disc drum inner diameter is the limit value or more.

STEERING

CONTENTS

37209000095

WARNINGS REGARDING SERVICING OF SUPPLEMENTAL RESTRAINT SYSTEM (SRS) EQUIPPED VEHICLES

WARNING!

(1) Improper service or maintenance of any component of the SRS, or any SRS-related component, can lead to personal injury or death to service personnel (from inadvertent firing of the air bag) or to the driver and passenger (from rendering the SRS inoperative).

(2) Service or maintenance of any SRS component or SRS-related component must be performed only at an authorized MITSUBISHI dealer.

(3) MITSUBISHI dealer personnel must thoroughly review this manual, and especially its GROUP 52B – Supplemental Restraint System (SRS) and GROUP 00 -Maintenance Service before beginning any service or maintenance of any component of the SRS or any SRS-related component.

NOTE

The SRS includes the following components: SRS-ECU, SRS warning light, air bag module, clockspring and interconnecting wiring. Other SRS-related components (that may have to be removed/installed in connection with SRS service or maintenance) are indicated in the table of contents by an asterisk (*).

GENERAL INFORMATION

37200010073

The type of power steering which is responsive to engine speed has been adopted in all models. The main features are as follows.

Four-spoke steering wheel has been adopted. In addition, SRS (Supplemental Restraint System) is provided as a standard in all vehicles.

The steering column in all vehicles has a shock absorber mechanism and a tilt steering mechanism.

A vane-type oil pump with a fluid flow control system included has been adopted.

The steering gear and linkage is an integral rack and pinion type.

Items		2.0L Engine (Non-turbo)	2.0L Engine (Turbo) and 2.4L Engine
Gear box	Steering gear type	Rack and pinion	Rack and pinion
Oil pump	Oil pump type	Vane type	Vane type
	Displacement cm^3/rev. (cu.in./rev.)	10.5 (.64)	9.6 (.59)
	Relief set pressure MPa (psi)	8.8 (1,277)	8.8 (1,277)

CONSTRUCTION DIAGRAM

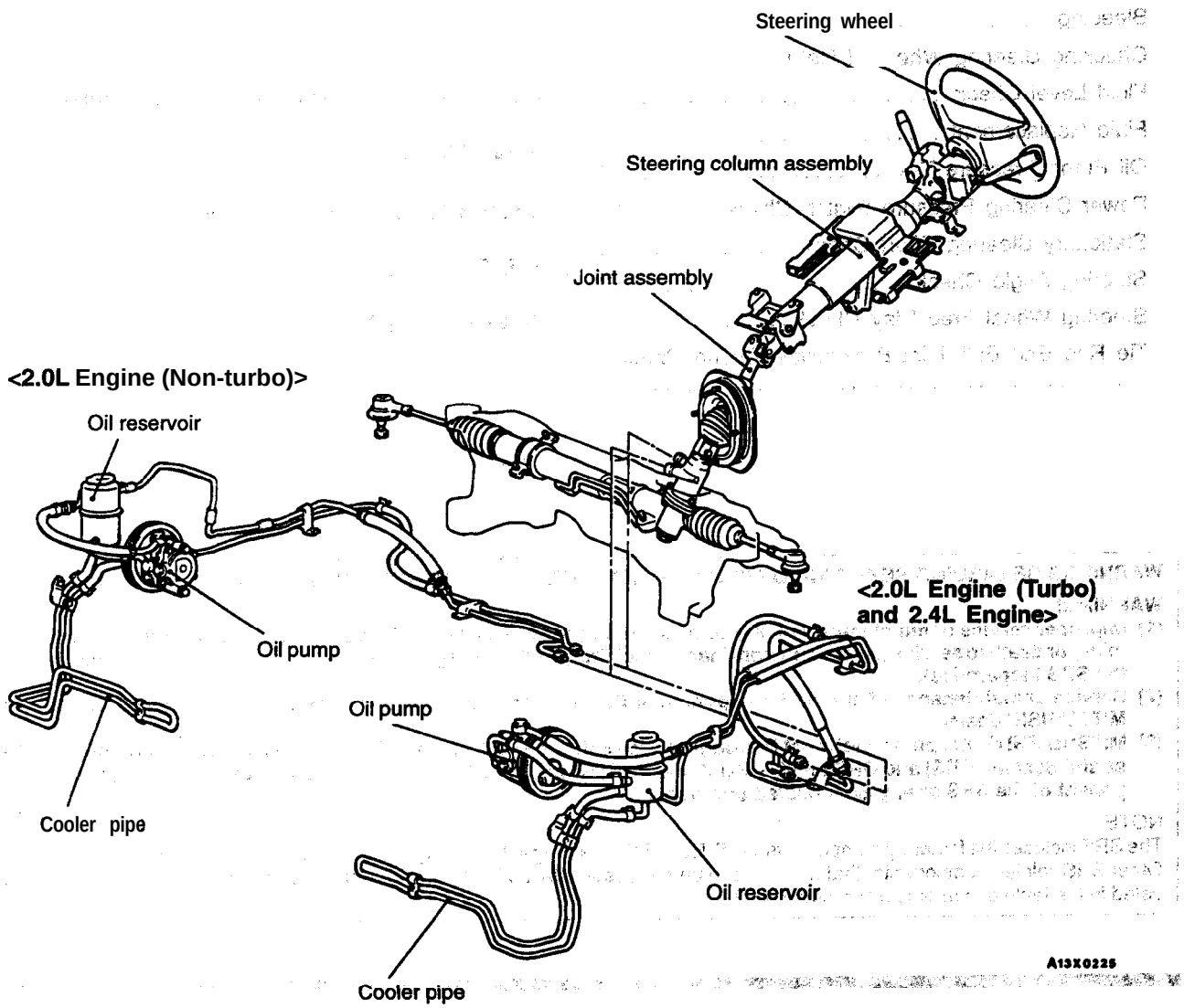

TSB Revision

SERVICE SPECIFICATIONS

37200030123

Items			Standard value	Limit
Steering wheel free play mm (in.)	with engine stopped		15 (.59) or less	–
	with hydraulic operation		–	30 (1.2)
Steering angle	Inner wheel	FWD	32°30' ± 2°	
		AWD	31°30' ± 2°	
	Outer wheel	FWD	27°00'	
		AWD	26°30	–
Tie rod end ball joint breakaway torque Nm (in.lbs.)			0.5–2.5 (4-22)	–
Stationary steering effort N (lbs.)			34 (7.6) or less.	–
Fluctuation allowance N (lbs.)			5.9 (1.3) or less	–
Oil pump pressure MPa (psi)	Oil pump relief pressure		8.3– 9.0 (1,209–1,309)	–
	Pressure under no-load conditions		0.8–1.0 (114-142)	–
	Steering gear retention hydraulic pressure		8.3–9.0 (1,209–1,309)	–
Power steering pressure switch operating pressure MPa (psi)	ON → OFF		1.5–2.0 (213-284)	–
	OFF → ON		0.8 (114) or less	–
Total pinion torque Nm (in.lbs.)			0.7–1.4 (6–12)	–
Tie rod swing resistance N (lbs.)			7.8-27 (1.8–6.2)	–
Tie rod swing torque Nm (in.lbs.)			1.5-4.9 (13–43)	–
Clearance between shaft and oil pump body mm (in.)				0.07 (.0276)

LUBRICANTS

37200040065

Items		Specified lubricant	Quantity
Gear box	Bearing	Automatic Transmission Fluid "DEXRON II"	As required
	O-ring		
	Oil seal		
	Special tool (MB991 214)		
	Pinion and valve assembly seal ring part		
	Bellows	Silicone grease	As required
Oil pump	Power steering fluid	Automatic Transmission Fluid "DEXRON II"	0.9 dm^3 (.95 qt.)
	Flow control valve	Automatic Transmission Fluid "DEXRON II"	As required
	Friction surface of rotor vane, cam ring and pump cover		
	O-ring		

TSB Revision

SEALANTS

37200050051

Items		Specified sealant
Power steering gear box	End plug screw	3M ATD Part 'No. 8663 or 'equivalent
	Power steering rack support cover screw	
	Dust cover lip for tie rod end ball joint	

SPECIAL TOOLS

37200060085

Tool	Tool number and name	Supersession	Application
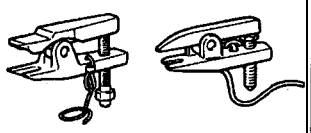	MB991113 or MB990635 Steering linkage puller	MB991113-01	Tie, rod end and knuckle disconnection
	MB990326 Preload socket	General service tool	Tie rod end ball joint breakaway torque check
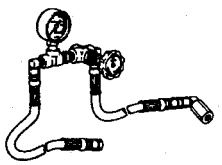	MB990662 Oil pressure gauge assembly	MB990662-01	Oil pump pressure test
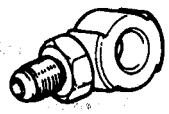	MB991548 <2.0L Engine (Non-turbo)> Power steering oil pressure gauge adapter (pump side)	–	
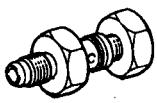	MB991549 <2.0L Engine (Non-turbo)> Power steering oil pressure gauge adapter (hose side)	–	
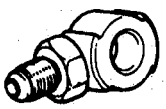	MB990993 or MB991217 <2.0L Engine (Turbo) and 2.4L Engine> Power steering oil pressure gauge adapter (pump side)	MB990993-01	
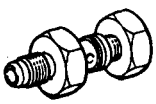	MB990994 <2.0L Engine (Turbo) and 2.4L Engine> Power steering oil pressure gauge adapter (hose side)	MB990994-01	

Tool	Tool number and name	Supersession	Application
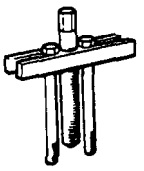	MB990803 Steering wheel puller	General service tool	Steering wheel removal
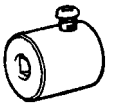	MB991006 Preload socket	MB991006-01	Total pinion torque measurement
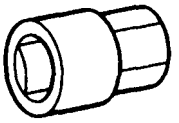	MB991204 Torque wrench socket	–	• Rack support adjustment • Rack support cover removal
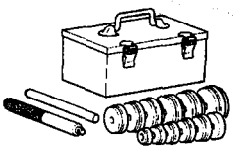	MB990925 Bearing and oil seal installer set	MB990925 or general service tool	• Ball bearing removal MB990939 • Rack bush oil seal installation MB990927 • Oil seal and bearing installation MB990938
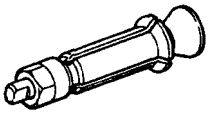	MB991120 Needle bearing puller	Tool not available	Needle roller bearing removal
	MB991197 Bar (long type)	General service tool	Back-up washer and oil seal installation Oil seal installer guide
	MB991199 Oil seal installer	General service tool	
	MB991099 Oil seal installer attachment	General service tool	
	MB991202 Oil seal & bearing installer	General service tool	• Needle rotter bearing installation • Ball bearing installation

Tool	Tool number and name	Supersession	Application
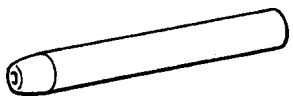	MB991 214 Rack installer	–	Rack installation
	MB991 203 Oil seal & bearing installer	Tool not available	Oil seal and bearing installation
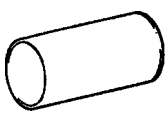	MB991 317 Seal ring installer	Tool not available	'Seal ring installation
	MB991 152 Dust cover installer	General service tool	Oil seal installation,
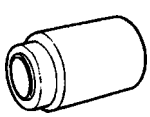	MB990776 Front axle base	MB990776-01	Dust, cover installation
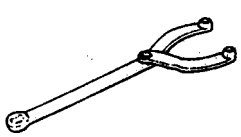	MB990767 End york holder	MB990767-01	Drive pulley removal and installation
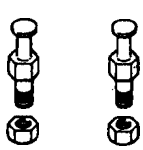	MD998719 or MD998754 Crankshaft pulley holder pin		
	MB990956 Needle bearing installer	MB990956-01	Drive shaft assembly ins&-tion
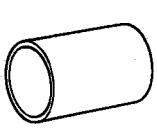	MB991 172 Adapter	General service tool	

ON-VEHICLE SERVICE

37200100060

STEERING WHEEL FREE PLAY CHECK

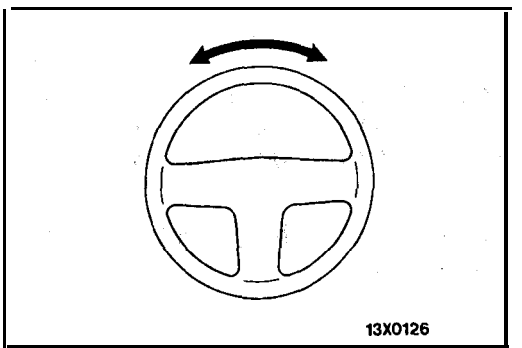

1. With engine running (hydraulic operation), set front wheels straight ahead.
2. Measure the play on steering wheel circumference before wheels start to move when slightly moving steering wheel in both directions.

   Limit: 30 mm (1.2 in.)

3. When play exceeds the limit, check for play on steering shaft connection and steering linkage. Correct or replace.
4. If the free play still exceeds the limit value, set steering wheel straight ahead with engine stopped. Load 5 N (1 lb.) towards steering wheel circumference and check play.

   Standard value (steering wheel play with engine stopped): 15 mm (.59 in.) or less

   If the play exceeds the standard value, remove steering gear box and check total pinion torque.

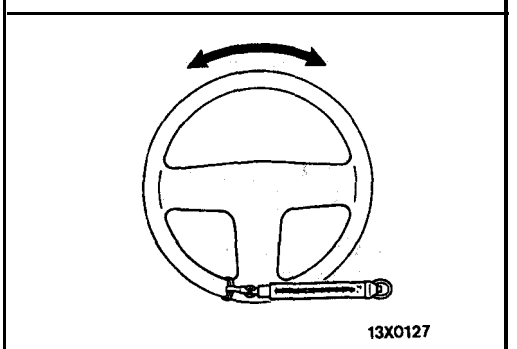

STEERING ANGLE CHECK

37200110131

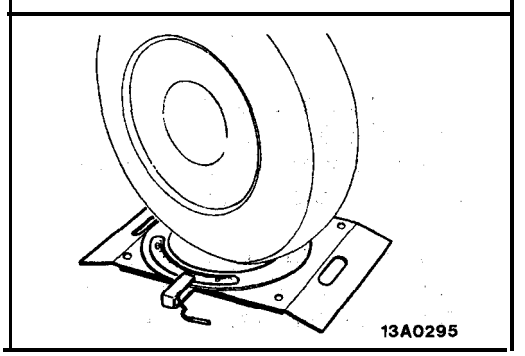

1. Locate front wheels on turning radius gauge and measure' steering angle.

   Standard value:
   Inside wheel: FWD 32°30'±2°; AWD 31°30'±2°
   Outside wheel: FWD 27°00'; AWD 26°30'

2. When the angle is not within the standard value, the' toe is probably incorrect. Adjust toe (Refer to GROUP' 33A – On-vehicle Service.) and recheck steering angle.

TIE ROD END BALL JOINT BREAKAWAY TORQUE CHECK

37200150072

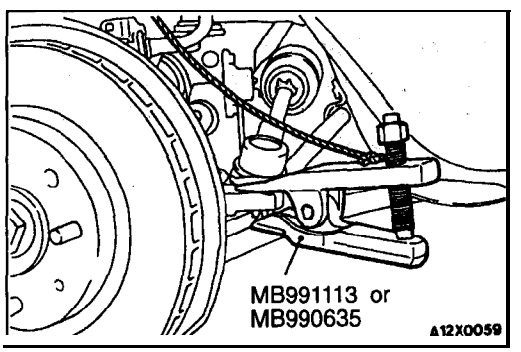

1. Disconnect tie rod and knuckle with special tool.

   Caution
   1. Be sure to tie the cord of the special tool to a nearby part.
   2. Loosen the nut but do not remove it.

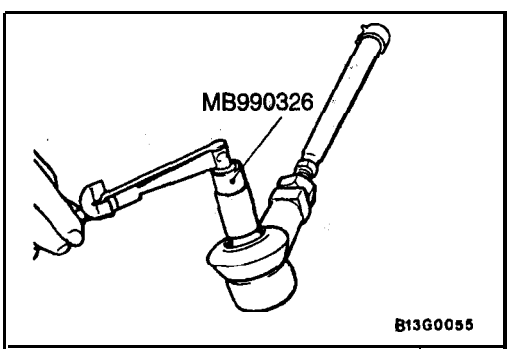

2. Move ball jdint stud several times and install nut on stud. Measure ball joint breakaway torque with special tools.

   Standard value: 0.5–2.5 Nm (4-22 in.lbs.)

3. When the measured value exceeds the standard value, replace the tie rod end.
4. When the measured value is lower than the standard value, check that the ball joint turns smoothly without excessive play. If so, it is possible to use that ball joint.

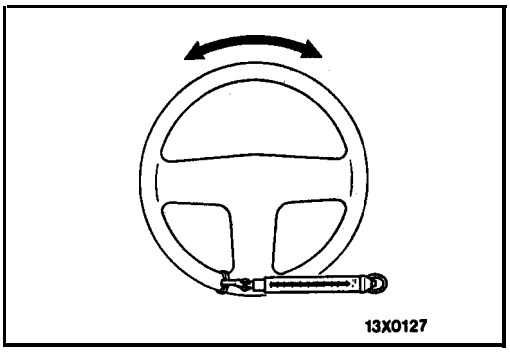

STATIONARY STEERING EFFORT CHECK

37200170078

1. With the vehicle stopped on a flat, paved surface, turn the steering wheel to the straight ahead 'position.
2. Start the engine and set it to 1,000 ± 100 r/min.

   Caution
   After checking the engine rpm., there must be a return to the standard idling rpm.

3. Attach a spring scale to the outer circumference of the steering wheel and measure the steering force required to turn the steering wheel from the straight ahead position to the left and right (within a range of 1.5 turns). Also check to be sure that there is no significant fluctuation of the required steering force.

   Standard value:
   Steering effort: 34 N (7.6 lbs.) or less
   Fluctuation allowance: 5.9 N (1.3 lbs.) or less

4. If the measured force exceeds the standard value, refer to the troubleshooting and make the checks and adjust-' ments described there.

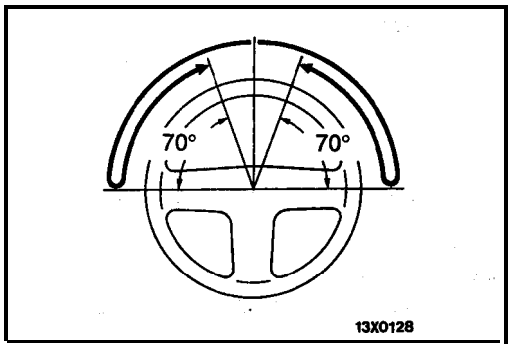

CHECKING STEERING WHEEL RETURN TO CENTER

37200180071

To make this test, conduct a road test and check as follows.'

1. Make both gradual and sudden turns and check the steer-" ing "feeling" to be sure that there is not' difference in the steering force required and the wheel return between, left and right turns.
2. At a speed of 20–30 km/h (12-19 mph), turn the steering wheel 90°, and release the steering wheel after 1 or 2 seconds. If the steering wheel then' returns 70° or more, the return can be judged to the satisfactory.

   NOTE
   There will be a momentary feeling or "heaviness" when the wheel is turned quickly, but this is not abnormal. (This is because the oil pump discharge, amount is especially apt to be insufficient during idling.)

FLUID LEVEL CHECK

37200200067

1. Park the vehicle on a flat, level surface, start the engine, and then turn the steering wheel several times to raise: the temperature of the fluid to approximately 50–60°C (122–140°F).
2. With the engine running, turn the wheel 'all the way to the left and right several times.

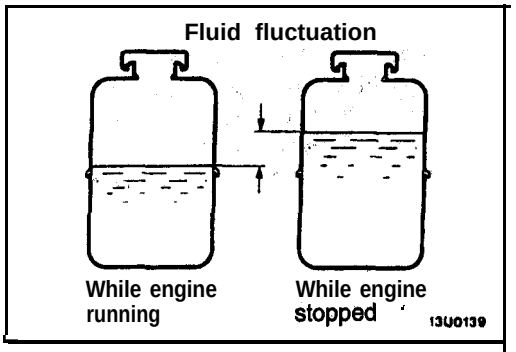

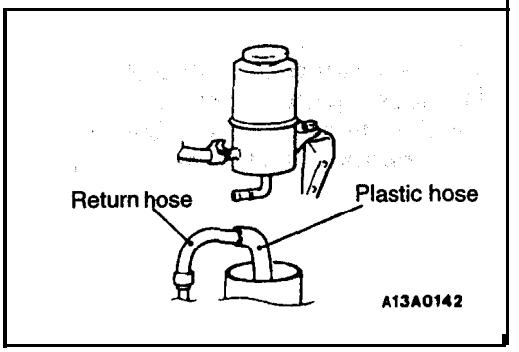

3. Check the fluid in the oil reservoir for foaming or milkiness. Check the difference of the fluid level when the engine is stopped; and while it is running. If the fluid level changes considerably, air, bleeding should be done.

FLUID REPLACEMENT

37200210033

1. Raise the front wheels on a jack, and then support them with rigid racks.
2. Disconnect the return hose connection.
3. Connect a plastic hose to the return hose, and drain the oil into a container.
4. Disconnect the high-tension cable, and then while operating the starting motor intermittently, turn the steering wheel all the way to the left and right several times to drain all of the fluid.

   Caution
   Be careful not to position-the high-tension cable near the carburetor or the fuel rail.

5. Connect the return hoses securely, and then secure it with the clip.
6. Fill the oil reservoir with the specified fluid up to the lower position of the filter, and then bleed the air.

   Specified fluid:
   Automatic transmission fluid "DEXRON II"

BLEEDING

37200220063

1. Jack up the front wheels and support them by using a rigid rack.
2. Manually turn the oil pump pulley a few times.
3. Turn the steering wheel all the way to the left and to the right five or six times.
4. Disconnect the high-tension cable, and then, while operating the starting motor intermittently, turn the steering wheel all the way to the left and right five or six times (for 15 to 20 seconds).

   Caution
   1. **During air bleeding, refill the fluid supply so that the level never falls below the lower position of the filter.**
   2. **If air bleeding is done while engine is running, the air will be broken up and absorbed into the fluid; be sure to do the bleeding only while cranking.**

5. Connect the ignition cable, and then start the engine (idle).
6. Turn the steering wheel to the left and right until there are no air bubbles in the oil reservoir.

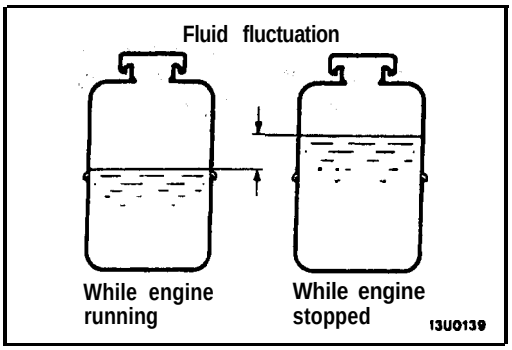

7. Confirm that the fluid is not milky, and that the level is up to the specified position on the dipstick.
8. Confirm that there is very little change in the fluid level when the steering wheel is turned, left and right.
9. Check whether or not the change in the fluid level is within 5 mm (.2 in.) when the engine is stopped and when it is running.

Caution

1. **If the change of the fluid level is 5 mm (.2 in.) or more, the air has not been completely bled, from the system, and thus must be bled completely.**
2. **If the fluid level rises suddenly after the engine, is stopped, the air has not been completely bled.**
3. **If air bleeding is not complete, there will be abnormal noises from the pump and the flow-control; valve, 'and this condition could lessen the life of, the pump, etc..**

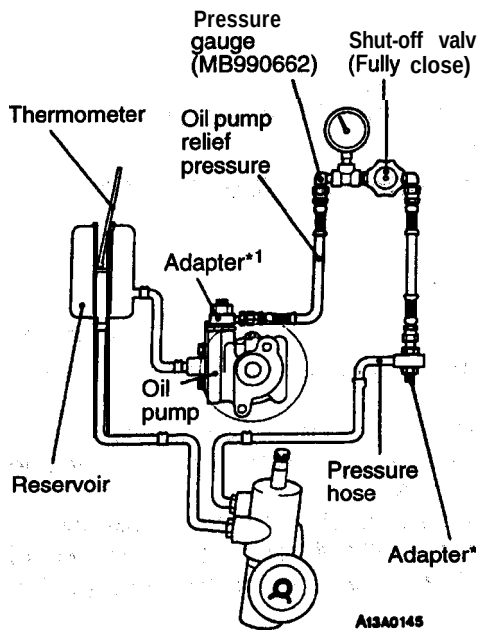

NOTE
- 1: MB990993 or MB991217 <2.0L Engine (Turbo) and 2.4L Engine>
  MB991848 <2.0L Engine (Non-turbo)>
- 2: MB990994 <2.0L Engine (Turbo) and 2.4L Engine>
  MB991549 <2.0L Engine (Non-turbo)>

OIL PUMP PRESSURE TEST

37200230073

OIL PUMP RELIEF PRESSURE CHECK

1. Disconnect the pressure hose from the oil pump, and then connect the special tools.
2. Bleed the air, and then turn the steering wheel several times while the vehicle is not moving so that the temperature' of the fluid rises to approximately 50–60°C (122–140°F).
3. Start the engine and idle it at 1,000 ± 100 r/min.
4. Fully close the shut-off valve of the pressure gauge and measure the oil pump relief pressure to confirm that it is within the standard value range.

   Standard value: 8.3–9.0 MPa (1,209–1,309 psi)

   Caution
   Pressure gauge shut off valve must not remain closed for more than 10 seconds.
5. If it is net within the standard value, overhaul the oil pump.
6. . . Remove the special tools, and the tighten the pressure hose to the specified torque.
7. Bleed the system.

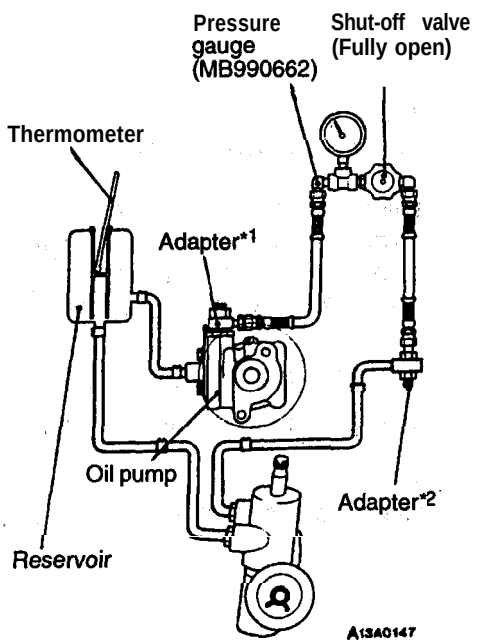

NOTE
*1: MB990993 or MB991217 <2.0L Engine (Turbo) and 2.4L Engine>
MB991548 <2.0L Engine (Non-turbo)>
*2: MB990994 <2.0L Engine (Turbo) and 2.4L Engine>
MB991549 <2.0L Engine (Non-turbo)>

CHECKING PRESSURE UNDER NO-LOAD CONDITIONS

1. Disconnect. the pressure hose from the oil pump, and then connect the special tools.
2. Bleed the air, and then turn the steering wheel several: times while the vehicle is not moving so that the temperature of the fluid rises to approximately 50–60°C (122–140°F).
3. Start the engine and idle it at 1,000 ± 100 r/min.
4. Check whether or not the hydraulic pressure is the standard value when no-load conditions are created by fully opening the shut-off valve of the pressure gauge.

   Standard value: 0.8–1.0 MPa (114–142 psi)
5. If it is not within the standard value, the probable cause is a malfunction of the oil line or steering gear box, so check these parts and repair as necessary.
6. Remove the special tools, and then tighten the pressure hose to the specified torque.
7. Bleed the system.

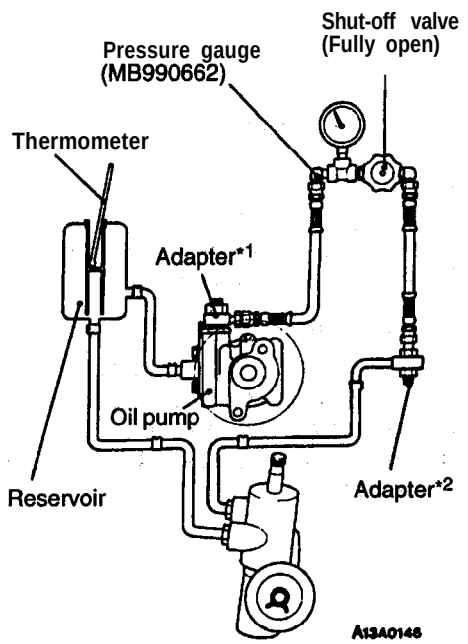

NOTE
'1: MB990993 or MB991217 <2.0L Engine (Turbo) and 2.4L Engine>
MB991548 <2.0L Engine (Non-turbo)>
2: MB990994 <2.0L Engine (Turbo) and 2.4L Engine>
MB991549 <2.0L Engine (Non-turbo)>

STEERING GEAR RETENTION HYDRAULIC PRESSURE CHECK

1. Disconnect the pressure hose from the oil pump, and then connect the' special tools.
2. Bleed the air, and then turn the steering wheel several times while the vehicle is not moving so that the temperature of the fluid rises to approximately 50–60°C (122–140°F).
3. Start the engine and idle it at 1,000 ± 100 r/min.
4. Fully open the shut-off valve of the pressure gauge.
5. Turn the steering wheel all the way to the left or right; then check whether or not the retention hydraulic pressure is the standard value.

   Standard value: 8.3–9.0 MPa (1,209–1,309 psi)
6. When not within the standard value; overhaul the steering gear box.
   Remeasure fluid pressure.:
7. Remove the special tools, and the tighten the pressure hose to the specified torque.
8. Bleed the system.

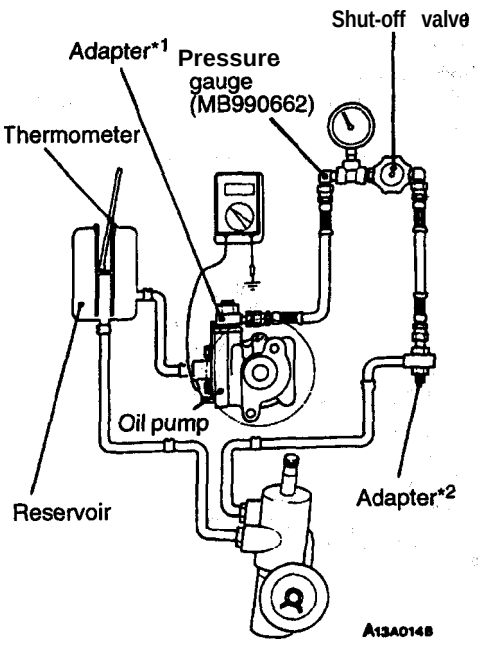

NOTE
- 1: MB990993 or MB991217 <2.0L Engine (Turbo) and 2.4L Engine>
  MB991548 <2.0L Engine (Non-turbo)>
- 2: MB990994 <2.0L Enaine (Turbo) and 2.4L Engine>
  MB991549 <2.0L Engine (Non-turbo)>

POWER STEERING PRESSURE SWITCH CHECK

37200720051

1. Disconnect the pressure hose from the oil bump, and then connect the special tools.
2. Bleed the air, and then turn the steering wheel several times while the vehicle is-not moving so that the temperature of the fluid rises to approximately 50–60°C (122–140°F).
3. The engine should be idling.
4. Disconnect the connection of the connector for the pressure switch, and place an ohmmeter in position.
5. Gradually close the shut-off valve of the pressure gauge and increase the hydraulic pressure then check whether or not the hydraulic pressure that activates the switch is the standard value.

   Standard value: 1.5–2.0 MPa (213-284 psi)
6. Gradually open the shut-off valve and reduce the hydraulic pressure; then check whether or not the hydraulic pressure that deactivates the switch is the standard value.

   Standard value: 0.8 MPa (114 psi) or less
7. Remove the special tools, and then tighten' the pressure hose to the specified torque.
8. Bleed the, system.

STEERING WHEEL AND SHAFT

37200260096

REMOVAL AND INSTALLATION

CAUTION: SRS
Before removal of air bag module, refer to:
GROUP 52B – SRS Service Precautions .
GROUP 52B – Air Bag Module and Clock Spring.

Post-installation Operation
- Checking Steering Wheel Position with , Wheels Straight Ahead

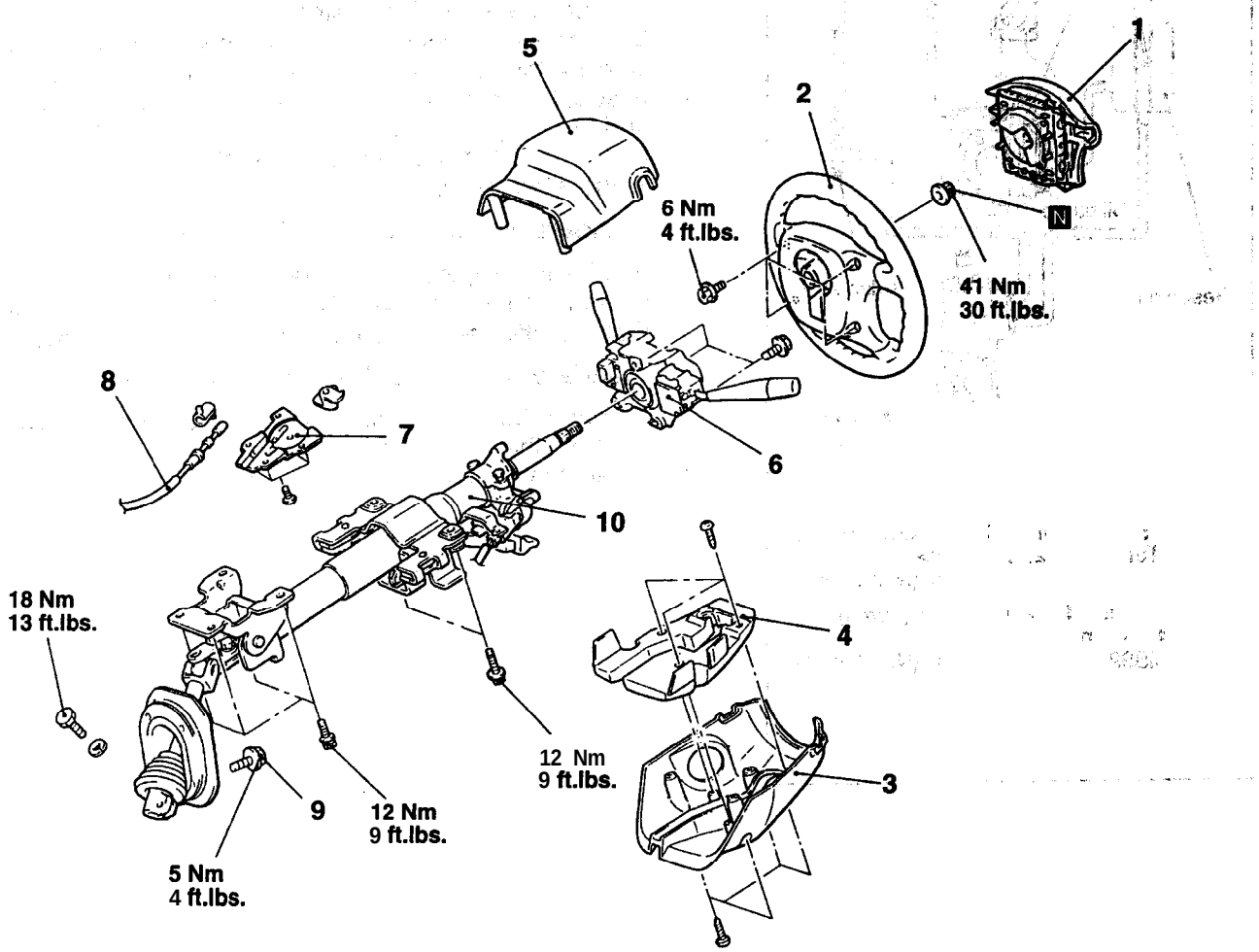

A13X0238

Removal steps

1. Air bag module (Refer to GROUP 52B – Air Bag Module and Clock Spring.)
2. ◀A▶ Steering wheel
3. Lower column cover
4. Column pad
5. Upper column cover
6. Clock spring and column switch assembly (Refer to GROUP 52B – Air Bag Module and Clock Spring.)
7. Cover <A/T> (Refer to GROUP 23A – Automatic Transaxle key Interlock and Shift Lock Mechanisms*)
8. Key interlock cable <A/T> (Refer to GROUP 23A – Automatic Transaxle key Interlock and Shift Lock Mechanisms.)
9. Retainer attachment bolt
10. Steering column assembly

TSB Revision

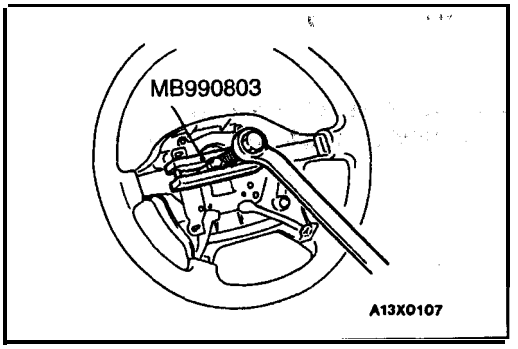

REMOVAL SERVICE POINT'.

◀A▶ STEERING WHEEL REMOVAL

DISASSEMBLY AND REASSEMBLY

37200280085

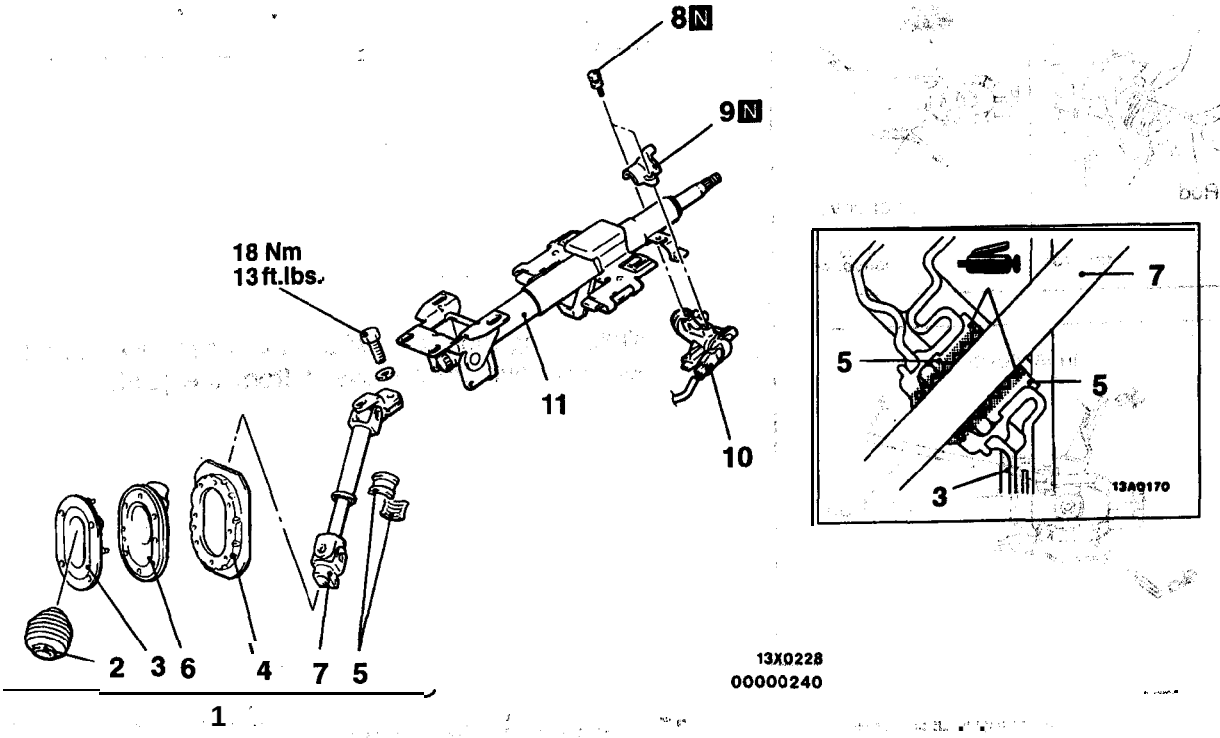

Disassembly steps

1. Joint assembly
◀A▶ ▶D◀ 2. Boot
3. Outer cover
4. Retainer
▶C◀ 5. Bearing
◀B▶ ▶B◀ 6. Inner cover
7. Joint
▶A◀ 8. Special bolt
◀C▶ ▶A◀ 9. Steering lock bracket
◀C▶ ▶A◀ 10. Steering lock cylinder
11. Steering column assembly

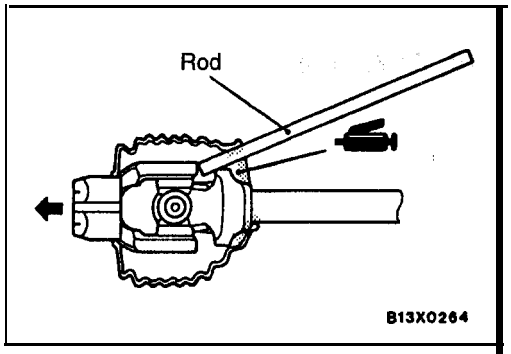

DISASSEMBLY SERVICE POINTS

◀A▶ BOOT REMOVAL

(1) Apply grease to the inside lip of the boot.
(2) Remove the boot while using a rod to widen the lip section.

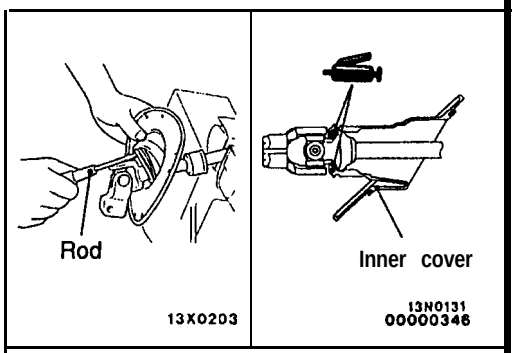

◀B▶ INNER COVER REMOVAL

(1) Apply grease to the inside lip of the inner cover.
(2) Cover the joint while using a rod to widen the lip section.

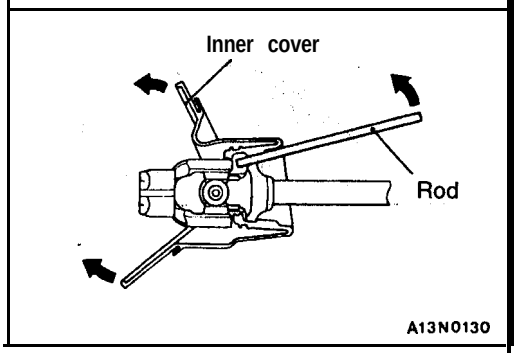

(3) While using the rod to widen the inner cover from behind, pull the cover to remove it from the joint.

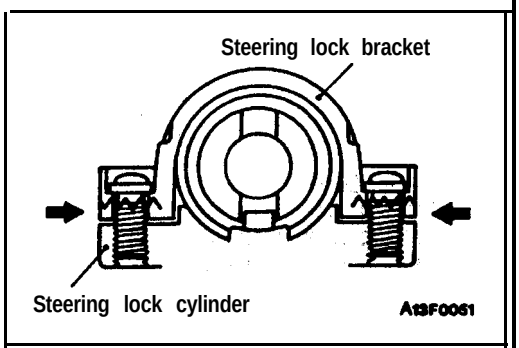

◀C▶ STEERING LOCK BRACKET/STEERING LOCK CYLINDER REMOVAL

If it is necessary to remove the steering lock cylinder, use a hacksaw to cut the special bolts at the steering lock bracket side.

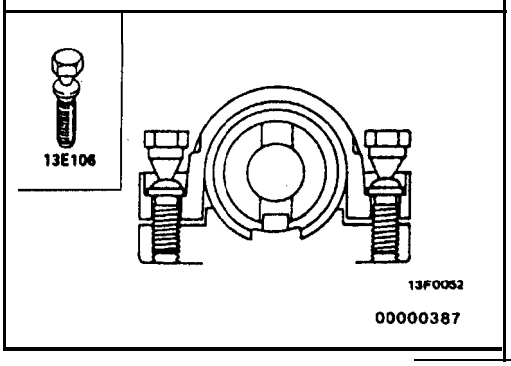

REASSEMBLY SERVICE POINTS

▶A◀ STEERING LOCK CYLINDER/STEERING LOCK BRACKET/SPECIAL BOLT INSTALLATION

(1) When installing the steering lock and steering lock bracket to the column tube, temporarily install the steering lock in alignment with the column boss.
(2) After checking that the lock works properly, tighten the special bolts until the head twists off.

Caution
The steering lock bracket and bolts must be replaced with new ones when the steering lock is installed.

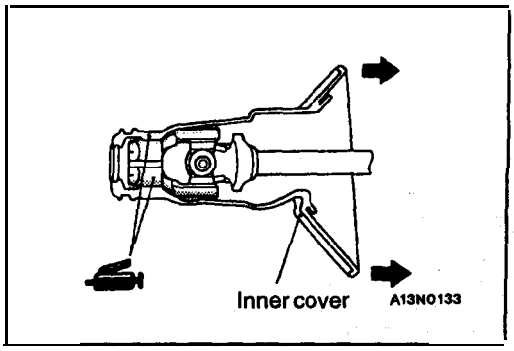

▶B◀ INNER COVER INSTALLATION

Cover the inside lip of the inner cover with grease and pull the outside of the cover' onto the joint.

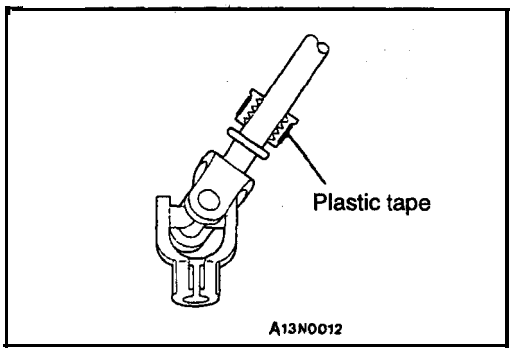

▶C◀ BEARING INSTALLATION

(1)' Fill the inside of the bearing with multipurpose grease.
(2) Install the bearings to the shaft on the joint assembly.
(3) Wrap plastic tape approximately one and one-half times around the concave circumferences of the bearings, and then press fit the bearings into the cover assembly.

▶D◀ BOOT INSTALLATION

Apply grease to the inside of the lip section of the boot, and then install the boot to the joint.

INSPECTION

37200290040

- Check the steering shaft for play and round movement.
- Check the joints for play, damage, or rough movement.
- Check the joint bearing for wear and damage.
- Check the dust shield for damage.

POWER STEERING GEAR BOX

3720039007~

REMOVAL AND INSTALLATION

<2.0L Engine (Non-turbo)>

Pre-removal Operation
- Power Steering Fluid Draining (Refer to P.37A-10.)
- Stabilizer Bar Removal (Refer to GROUP 33A – Stabilizer Bar.)
- Washer Tank Removal (Refer to GROUP 51 – Windshield Wiper and Washer.)

CAUTION: SRS
Before removal of steering gear box, refer to GROUP 52B – General Information, center front wheels and remove ignition key. Failure to do so may damage SRS clock spring and render SRS system inoperative, risking serious driver injury.

Post-installation Operation
- Stabilizer Bar Installation (Refer to GROUP 33A – Stabilizer Bar.),
- Washer Tank Installation (Refer to GROUP 51– Windshield Wiper and Washer.),
- Power Steering Fluid Supplying (Refer to P.37A-10.)
- Power Steering Fluid Line Bleeding (Refer to P.37A-11.)
- Steering Wheel Position with Wheels Straight Ahead Checking
- Front Wheel Alignment Adjustment (Refer to GROUP 33A – On-vehicle Service.)

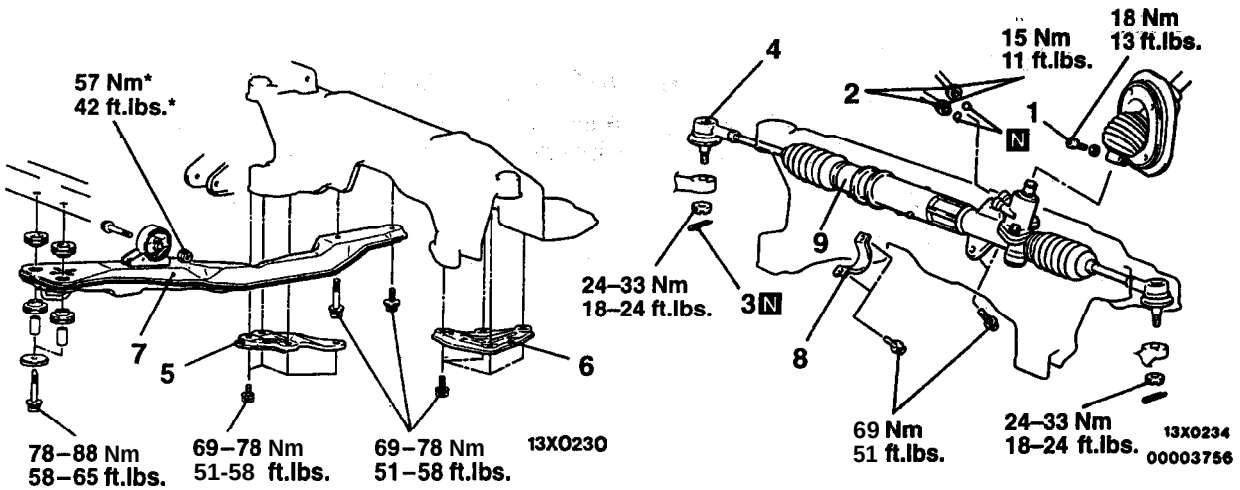

Removal steps

1. Joint assembly and gear box connecting bolt
2. Power steering pipe connection
3. **Cotter pin**
4. **Tie rod end and knuckle connection** ◀C▶
5. Stay (L.H.)
6. Stay (R.H.)
7. Center member assembly
8. Clamp
9. Gear box assembly ◀D▶

Caution
The fasteners marked * should be temporarily tightened before they are finally tightened once the total weight of the engine has been placed on the vehicle body.

TSB Revision

<2.0L Engine (Turbo) and 2.4L Engine>

Pre-removal Operation
- Power Steering Fluid Draining (Refer to P.37A-10.)
- Stabilizer Bar Removal (Refer to GROUP 33A – Stabilizer Bar.)

CAUTION: SRS
Before removal of steering gear box, refer to GROUP 52B – General Information, center front wheels and remove ignition key. Failure to do so may damage SRS clock spring and render SRS system inoperative, risking serious driver injury.

Post-installation Operation
- Stabilizer Bar Installation (Refer to GROUP 33A – Stabilizer Bar.)
- Drive-belt Tension Adjustment (2.0L Engine (Turbo): Refer to 11A – On-vehicle Service, 2.4L Engine; Refer to 11E – On-vehicle Service.)
- Power Steering Fluid Supplying (Refer to P.37A-10.)
- Power Steering Fluid Line Bleeding (Refer to P.37A-11.)
- Steering Wheel Position with Wheels Straight Ahead Checking
- Front Wheel Alignment Adjustment (Refer to GROUP 33A – On-vehicle Service.)

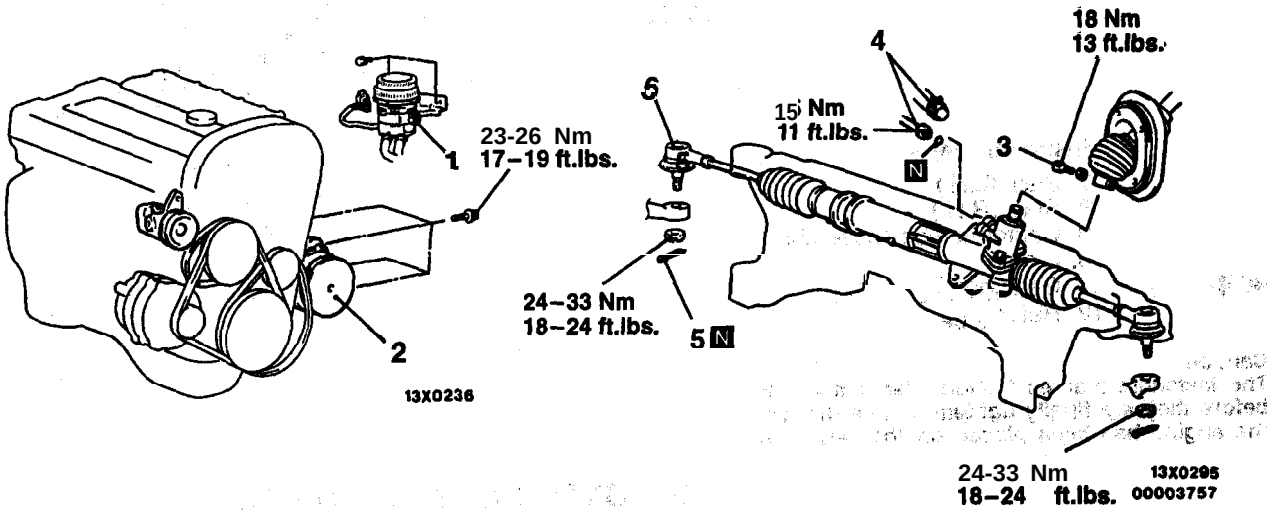

Removal steps

◀A▶ 1. Brake fluid reservoir assembly
◀B▶ 2. A/C compressor
3. Joint assembly and gear box connecting bolt
4. Power steering pipe connection
5. Cotter pin
◀C▶ 6. Tie rod end and knuckle connection

TSB Revision

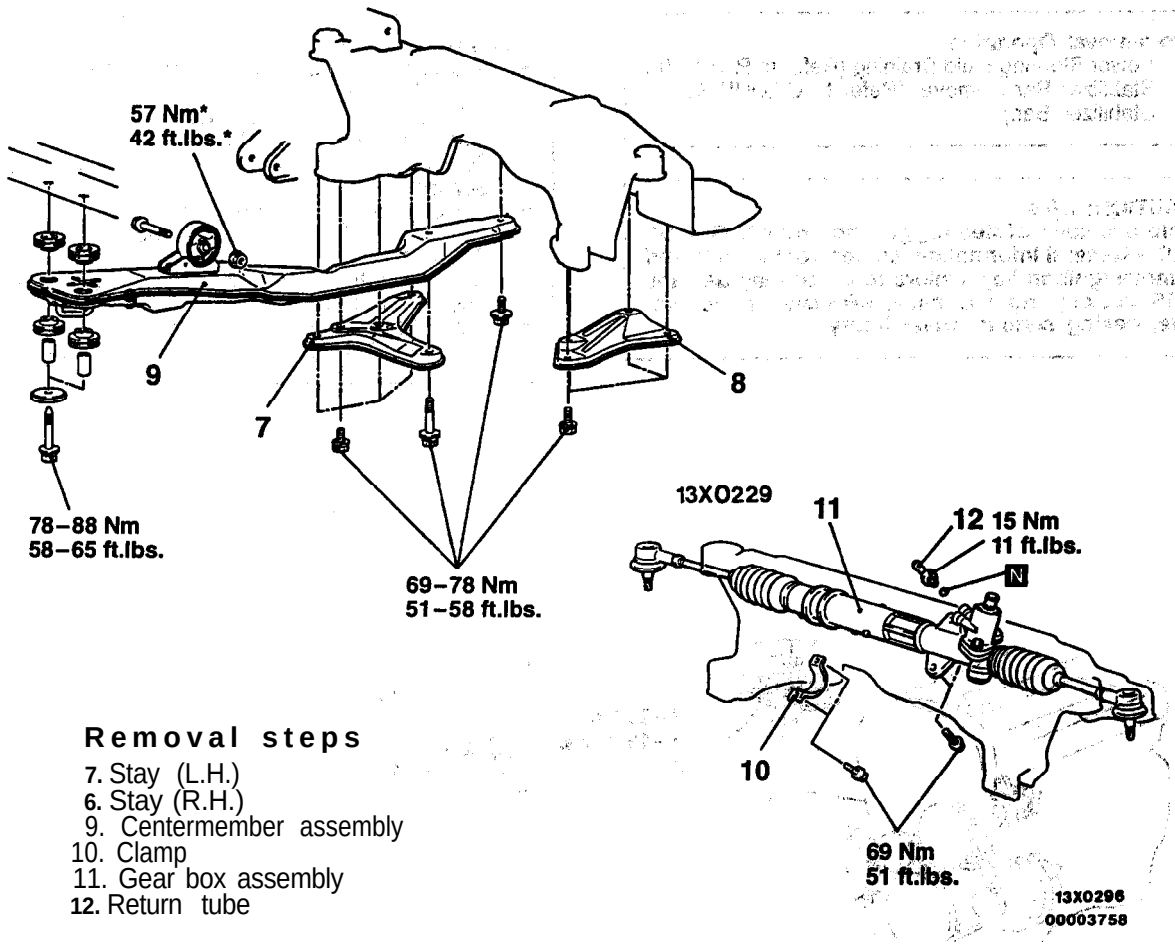

Removal steps

7. Stay (L.H.)
6. Stay (R.H.)
9. Centermember assembly
10. Clamp
◀D▶ 11. Gear box assembly
12. Return tube

Caution
The fasteners marked • should be temporarily tightened before they are finally tightened once the total weight of the engine has been placed on the vehicle body.

REMOVAL SERVICE POINTS

◀A▶ BRAKE FLUID RESERVOIR ASSEMBLY REMOVAL

Disconnect the brake fluid level sensor connector and remove the brake fluid reservoir assembly from the dash panel with the hose still attached.

NOTE
Place the removed reservoir assembly in a place where it will not be a hindrance when removing and installing the power steering gear box, and tie it with a cord.

◀B▶ A/C COMPRESSOR REMOVAL

Disconnect the A/C compressor connector and remove the compressor from the compressor bracket with the hose still attached.

NOTE
Place the removed A/C compressor in a place where it will not be a hindrance when removing and installing the brake fluid reservoir assembly, and tie it with a cord.

Caution
Do not damage the joint between the NC hose and the A/C pipe.

TSB Revision

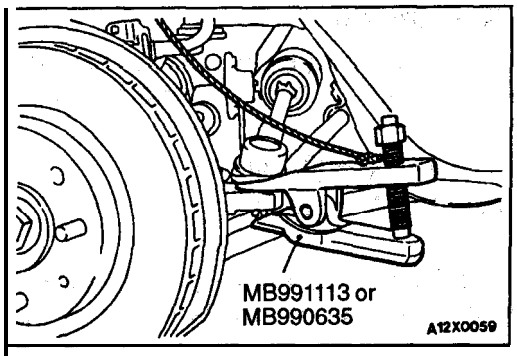

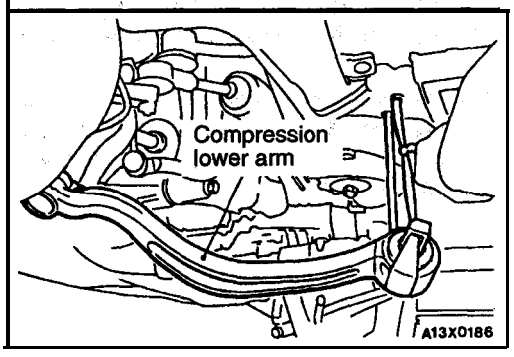

◀C▶ TIE ROD END AND KNUCKLE DISCONNECTION

Caution

1. Tie the cord of the special tool to a nearby part.
2. Loosen the nut but do not remove it.

◀D▶ GEAR BOX ASSEMBLY REMOVAL

(1) Remove- the installation section (vehicle side) of the compression lower arm left side.

Caution'
The compression lower arm should be suspended so that undue force is not applied to the ball joint.

(2) Remove the connection between the gear box assembly and joint assembly, and remove the gear box assembly from the crossmember at the left side.

Caution
Be careful not to damage the bellows and the tie rod end dust cover when removing the gear box assembly.

INSPECTION

37200400054

- Check the rubber parts for cracks and breakage.

DUST COVER CHECK

- If there are any cracks in or damage to the dust cover, replace the tie rod end and the dust cover.

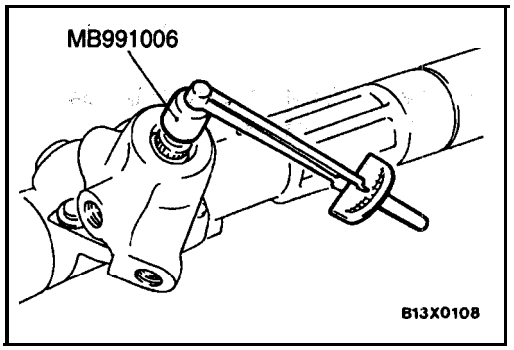

TOTAL PINION TORQUE CHECK

Using the special tools, rotate the pinion gear at the rate of one rotation in approximately 4 to 6 seconds to check the total. pinion torque.

Standard value: 0.7–1.4 Nm (6–12 in.lbs.)

[Change in torque: 0.4 Nm (3 in.lbs.)]

NOTE

When measuring, remove the bellows from the rack housing. Measure the pinion torque through the whole stroke of the rack.

If the measured value is not- within the standard range, first adjust the rack support cover, and then check the total pinion starting torque again.

If the total pinion torque, cannot be; adjusted to within the standard, range by adjusting the rack support cover. check the rack support cover, rack, support spring, rack support and replace any parts if necessary.

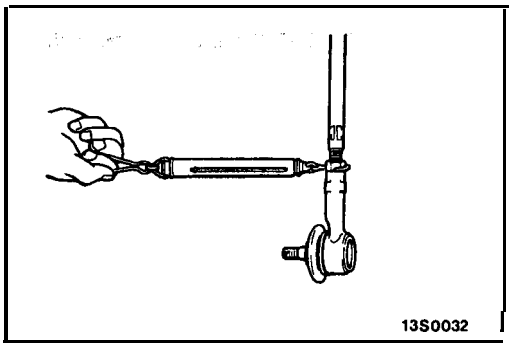

TIE ROD SWING RESISTANCE CHECK

(1) Give 10 hard swings to the tie rod.
(2) Measure the tie rod swing resistance with a spring scale.

Standard value:
7.8-27 N (1.8-6.2 lbs.)
[1.5–4.9 Nm (13-43 in.lbs.)]

(3) When the measured value exceeds the standard value, replace the tie rod assembly.
(4) When the measured value is lower than the standard value, check that the ball joint swings smoothly without excessive play. If so, it is possible to use that ball joint.

DISASSEMBLY AND REASSEMBLY

37200410064

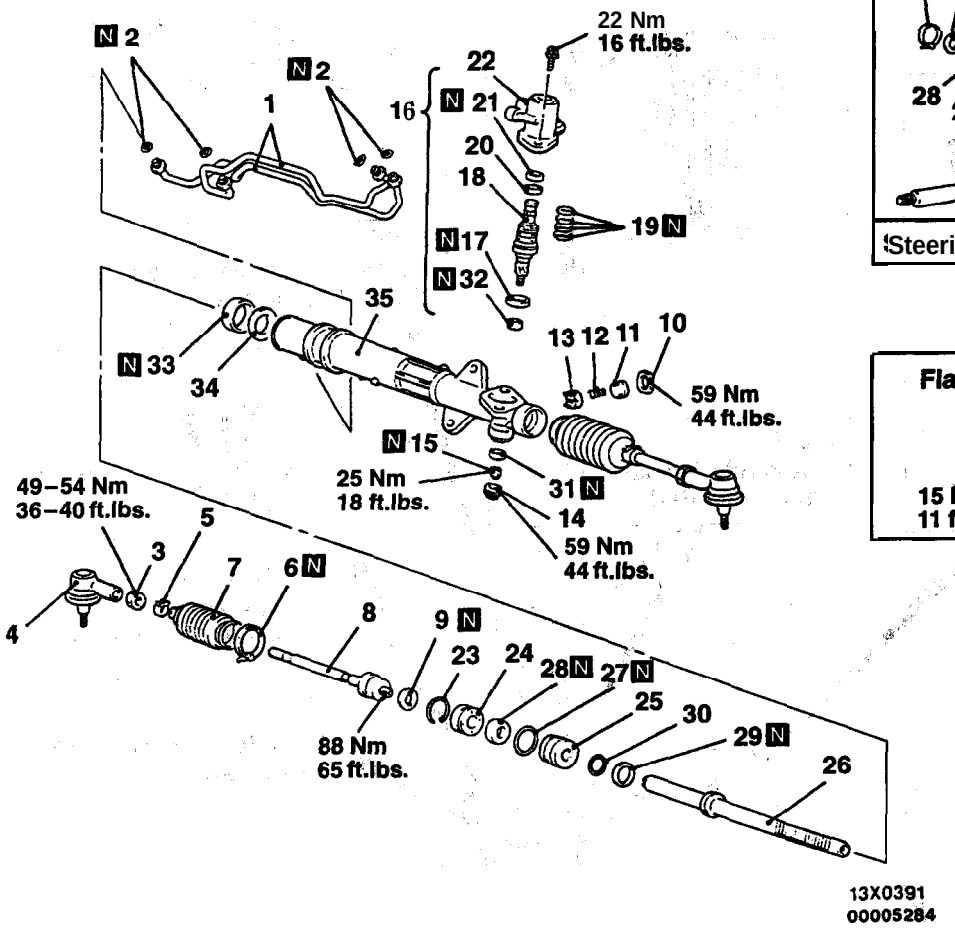

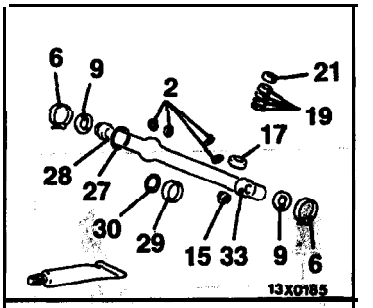

Steering gear box seal kit

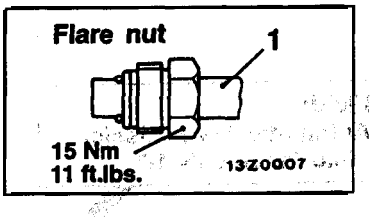

Disassembly steps

1. Feed tube
2. O-ring
3. Tie rod end locking nut
- ▶P◀ 4. Tie rod end assembly
5. Bellows clip
- ▶O◀ 6. Bellows band
7. Bellows
- ◀A▶ ▶N◀ 8. Tie rod
- ◀A▶ ▶N◀ 9. Tab washer
- ▶M◀ • Total pinion torque adjustment
10. Locking nut
- ◀B▶ 11. Rack support cover
12. Rack support spring
13. Rack support
- ▶L◀ 14. End plug
15. Self-locking nut
16. Valve housing assembly
- ◀C▶ ▶K◀ 17. Oil seal
- ◀C▶ 18. Pinion and valve assembly
- ◀D▶ ▶J◀ 19. Seal ring
- ◀E▶ ▶I◀ 20. Ball bearing
- ◀E▶ ▶H◀ 21. Oil seal
22. Valve housing
- ◀F▶ ▶G◀ 23. Circlip
24. Rack stopper
- ▶F◀ 25. Rack bushing
- ◀G▶ ▶E◀ 26. Rack
- ▶D◀ 27. O-ring
- ◀H▶ ▶D◀ 28. Oil seal
- ◀D▶ 29. Seal ring
30. O-ring
- ◀I▶ ▶C◀ 31. Ball bearing
- ◀J▶ ▶B◀ 32. Needle roller bearing
- ◀K▶ ▶A◀ 33. Oil seal
- ◀K▶ ▶A◀ 34. Back-up washer
35. Rack housing

LUBRICATION AND SEALING POINTS

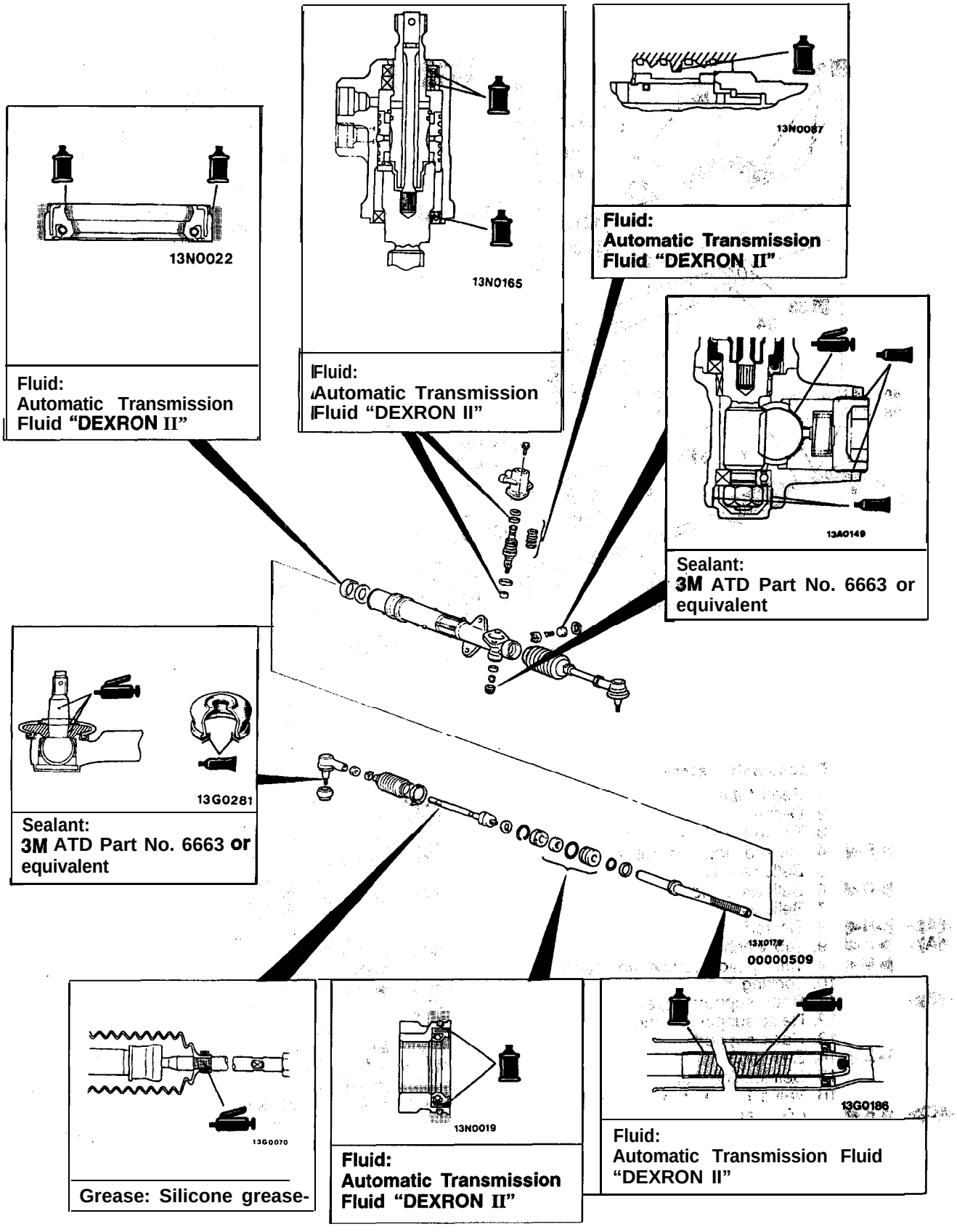

TSB Revision

DISASSEMBLY SERVICE POINTS

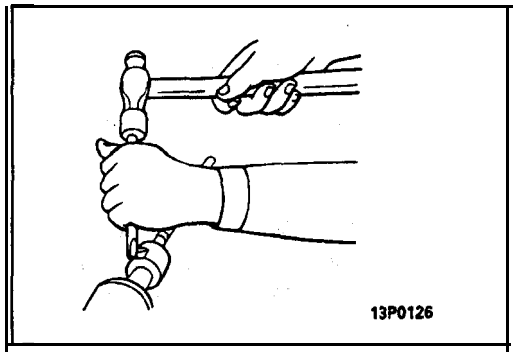

◀A▶ TIE ROD/TAB WASHER REMOVAL

Unstake the tab washer' which fixes the tie rod and rack with a chisel.

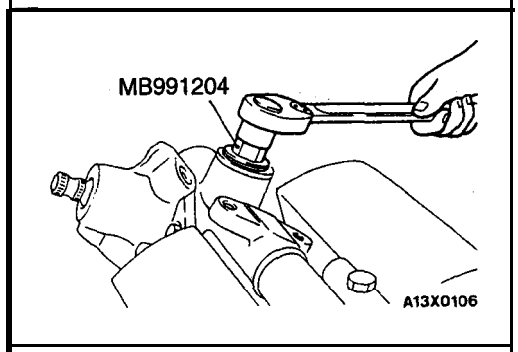

◀B▶ RACK SUPPORT COVER REMOVAL

Using the special tool, remove the rack support cover from the gear box.

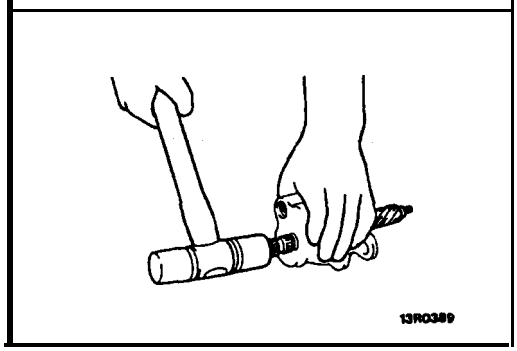

◀C▶ OIL SEAL/PINION AND VALVE ASSEMBLY REMOVAL

Using a plastic hammer, gently tap the pinion to remove it.

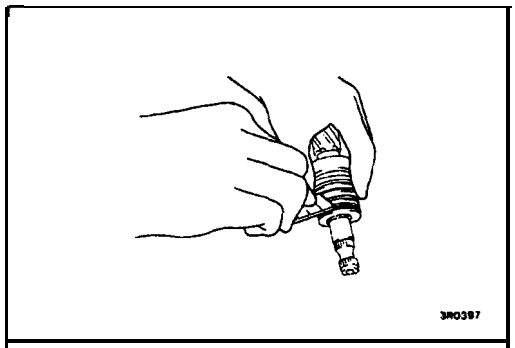

◀D▶ SEAL RING REMOVAL

Cut the seal -ring and remove it from the pinion and valve assembly and the rack.

Caution

When cutting the seal ring, be careful not to damage the pinion and valve assembly or the rack.

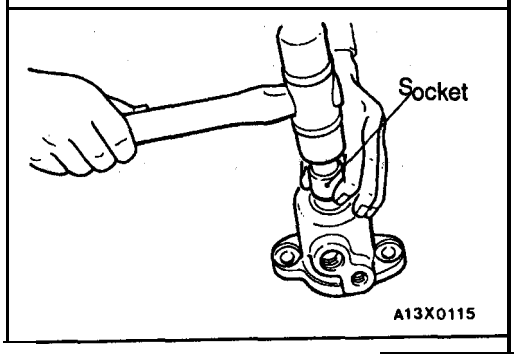

◀E▶ BALL BEARING/OIL SEAL REMOVAL

Using a socket, remove the oil seal and the ball bearing from the valve housing simultaneously.

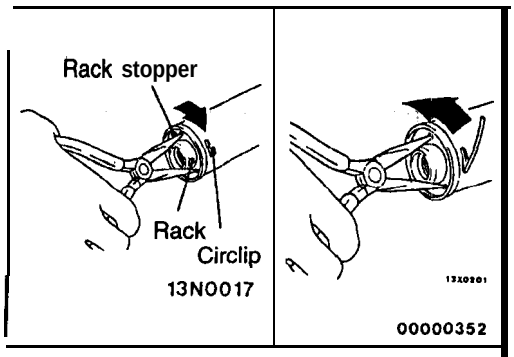

◀F▶ CIRCLIP REMOVAL

(1) Turn the rack stopper clockwise until the end of the circlip comes out of the slot in the rack housing.
(2) Turn the rack stopper counterclockwise to remove the circlip.

Caution
Note that if the rack stopper is first turned counter-clockwise, the circlip will get caught in the slot in the housing and the rack stopper will not turn.

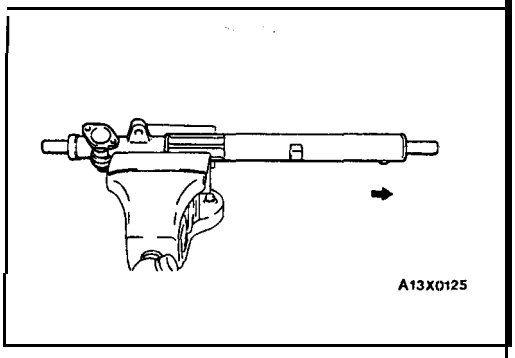

◀G▶ RACK REMOVAL

Pull out the rack slowly.
At this time also take out the rack stopper and the rack bushing, simultaneously.

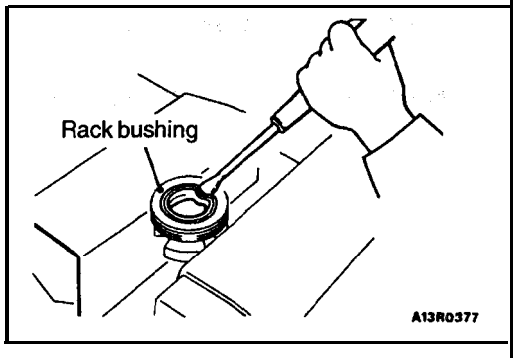

◀H▶ OIL SEAL REMOVAL

Partially bend oil seal and remove from rack bushing.

Caution
Do not damage oil seal press fitting surface.

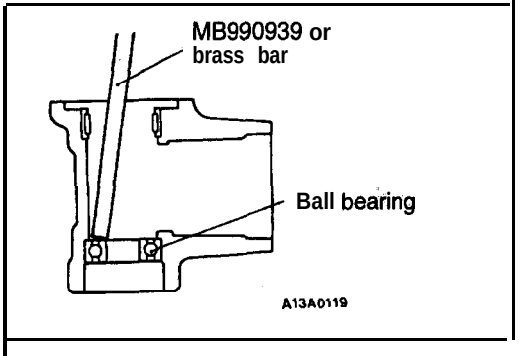

◀I▶ BALL BEARING REMOVAL

Use a brass bar or special tool to remove, the ball bearing from the gear housing.

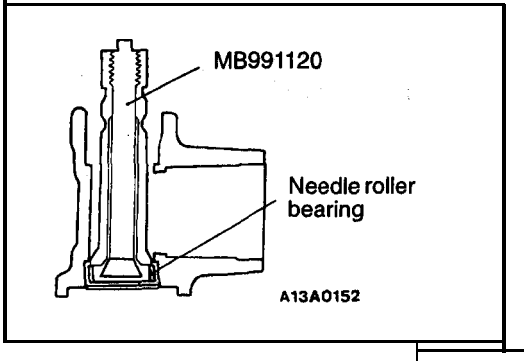

◀J▶ NEEDLE ROLLER BEARING REMOVAL

Use the special tool to remove the needle roller bearing from the rack housing.

Caution
Do not open special tool excessively, or the inner surface will be damaged.

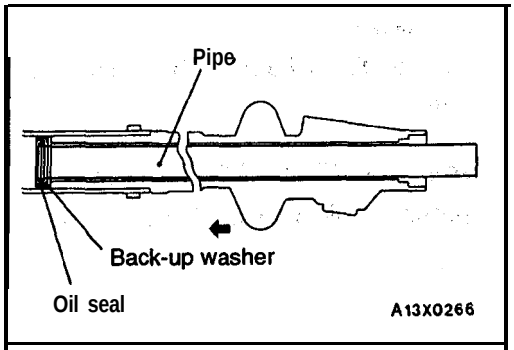

◀K▶ OIL SEAL/BACK-UP WASHER REMOVAL

Use a piece of pipe or similar tool to remove the back-up washer and oil seal from the- gear housing.

Caution
Be careful not to damage the inner surface of the rack cylinder of the gear housing.

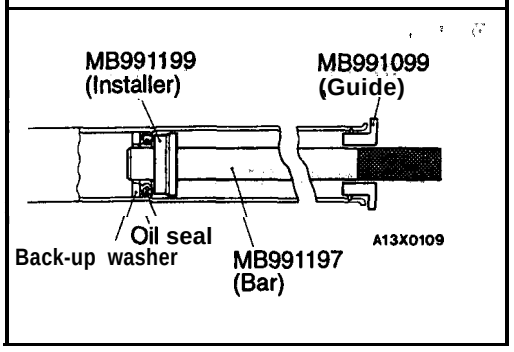

REASSEMBLY SERVICE POINTS

▶A◀ BACK-UP WASHER/OIL SEAL INSTALLATION

(1) Apply a coating of the specified fluid to the outside of the oil seal.

Specified fluid:
Automatic transmission Fluid "DEXRON II"

(2) Using the special tools, press the back-up washer and the oil seal into the rack housing to the specified position (where the upper surface of press-in guide coincides with the stepped part of the press-in tool).

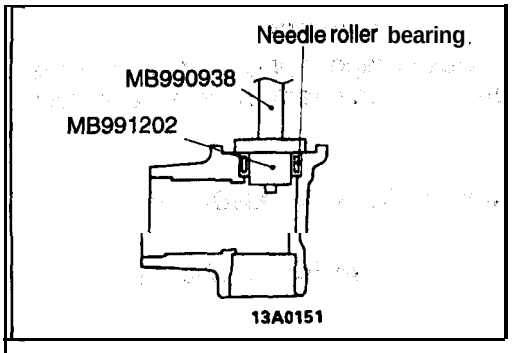

▶B◀ NEEDLE. ROLLER BEARING INSTALLATION

(1) Apply specified fluid to housing, bearing and oil seal press fitting surface.

Specified fluid:
Automatic transmission Fluid "DEXRON II"

(2) Press fit needle roller bearing with special tools.

Caution
Press fit straight as valve housing is aluminum.

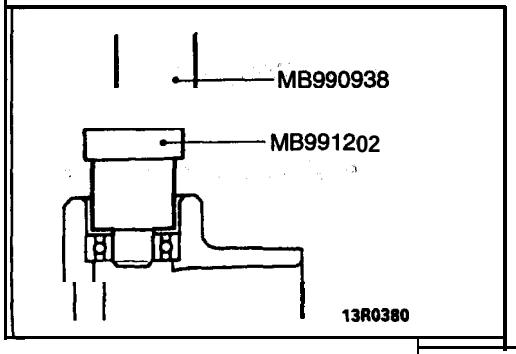

▶C◀ BALL BEARING INSTALLATION

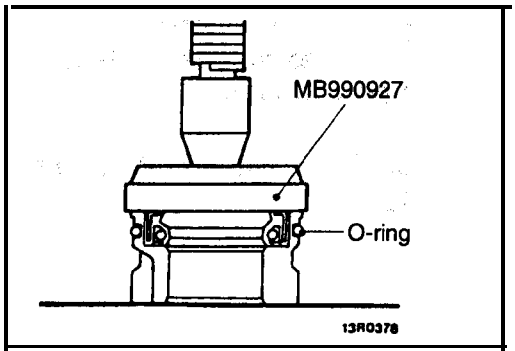

▶D◀ OIL SEAL/O-RING INSTALLATION

(1) Apply a coating of the specified fluid to the outside of the oil seal and O-ring.

Specified fluid:
Automatic transmission Fluid "DEXRON II"

(2) Use special tool to press fit oil seal until touches rack bush end.

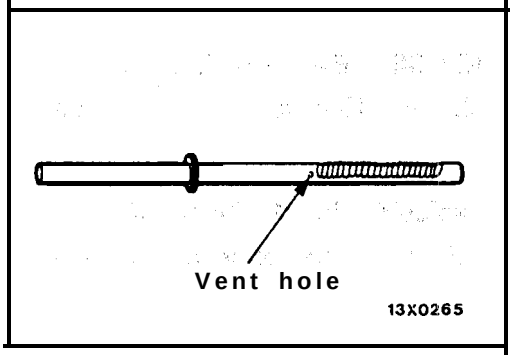

▶E◀ RACK INSTALLATION

(1) Apply a coating of multipurpose grease to the rack teeth face.

Caution
Do not grease the vent hole in the rack.

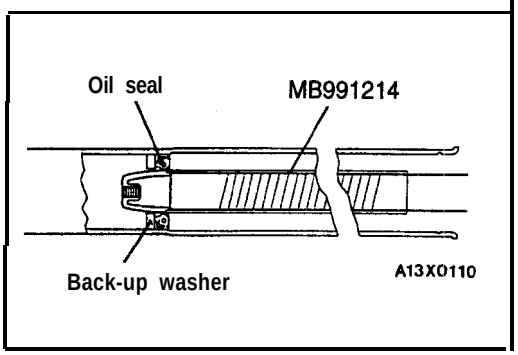

(2) Cover rack serrations with special tool.
(3) Apply specified fluid on special tool.

Specified fluid:
Automatic transmission Fluid "DEXRON II"

(4) Match oil seal centre with rack to prevent retainer spring from slipping and slowly insert rack from power cylinder side.

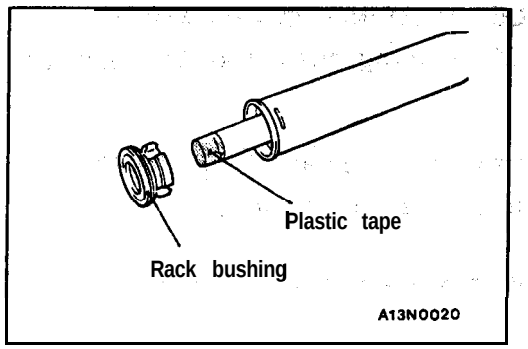

▶F◀ RACK BUSHING INSTALLATION

Wrap the rack end with plastic tape, apply a coating of the specified fluid, and then install the rack bushing and rack stopper.

Specified fluid:
Automatic transmission Fluid "DEXRON II"

Caution
Do not allow oil seal retainer spring to slip out.

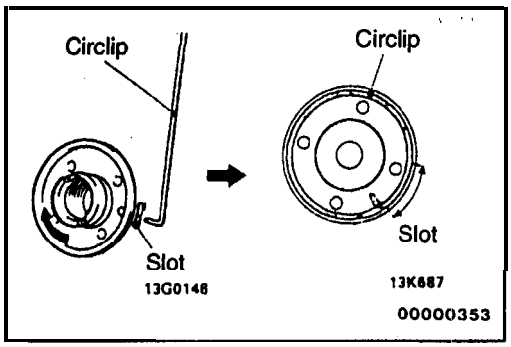

▶G◀ CIRCLIP INSTALLATION

Insert circlip to rack stopper hole through cylinder hole. Turn rack stopper clockwise and insert circlip firmly.

Caution
Insert circlip to rack stopper hole while turning rack stopper clockwise.

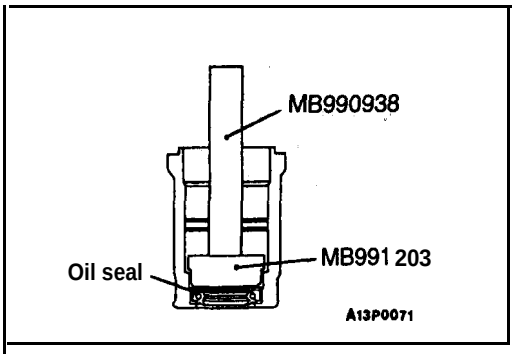

▶H◀ OIL SEAL INSTALLATION

Apply a coating of the specified fluid to the outside of the oil. seal. Using the special 'tools, press the oil seal into the valve housing.

Specified fluid:
Automatic transmission Fluid "DEXRON II"

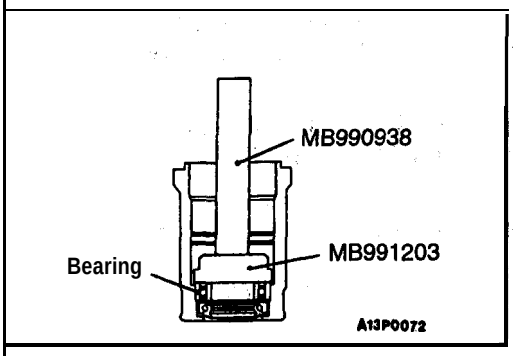

▶I◀ BALL BEARING INSTALLATION

Apply a coating of the specified fluid to the outside of the ball bearing. Using the special tools, press the oil seal into the valve housing.

Specified fluid:
Automatic transmission Fluid "DEXRON II"

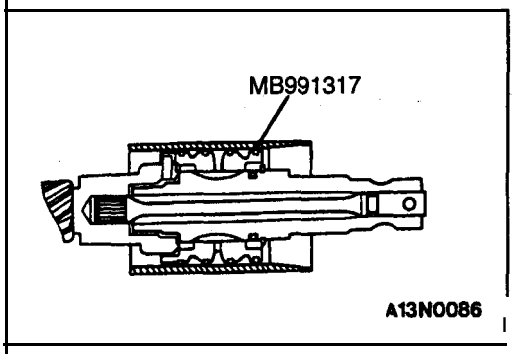

▶J◀ SEAL RING INSTALLATION

Because the seal rings expand at the time of installation, tighten after installation by using the special tool to compress the rings, or press down by hand.

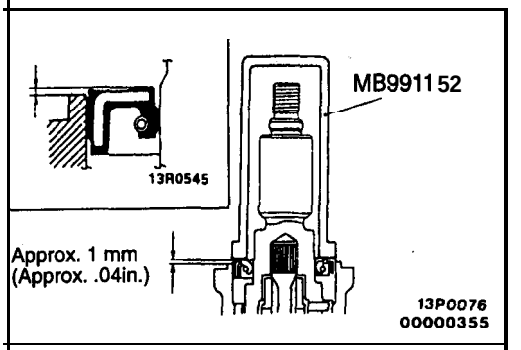

▶K◀ OIL SEAL INSTALLATION

Using the special tool, press the oil seal into the valve housing.

Caution
In order to eliminate a seal malfunction at the valve housing alignment surface, the upper surface of the oil seal should project outward approximately 1 mm (.04 in.) from the housing edge surface.

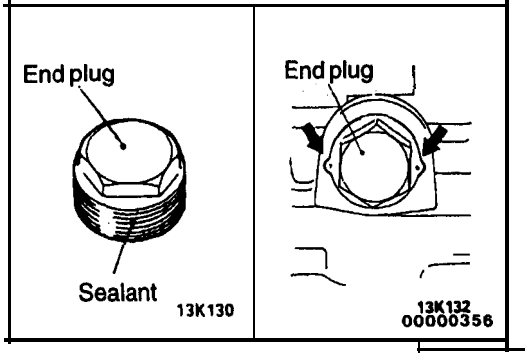

▶L◀ END PLUG INSTALLATION

(1) Apply the specified sealant, to the threaded part of the end plug.

Specified sealant:3M ATD Part No. 8663 or equivalent

(2) Secure the threaded portion of the end plug at two places by using a punch.

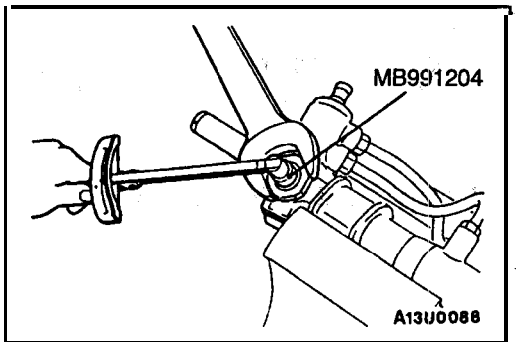

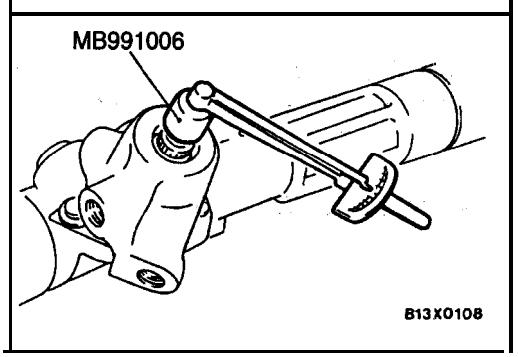

▶M◀ TOTAL PINION TORQUE ADJUSTMENT

(1) Position rack at its center. Tighten rack support cover to 15 Nm (11 ft.lbs.).

(2) in neutral position, rotate pinion shaft clockwise one turn/4–6 seconds with special tool., Return rack support cover 30°–60° and adjust torque to the. standard value.

(3) Using the special tools, rotate the pinion gear at the rate of one rotation in approximately 4 to 6 seconds to check the total pinion torque.

Standard value: 0.7–1.4 Nm (6-12 in.lbs.)
[Change in torque: 0.4 Nm (3 in.lbs.)]

Caution

1. **When adjusting, set the standard value at its highest value.**
2. **Assure no ratcheting or catching when operating, rack towards the shaft direction.**

NOTE
When it cannot be adjusted within the specified return] angle, check rack support cover components or replace.

(4) After adjusting, lock rack support cover with lock nut.

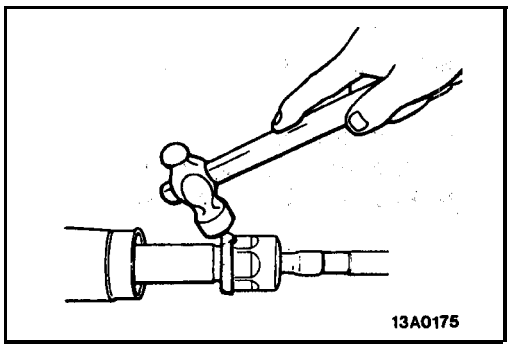

▶N◀ TAB WASHER/TIE ROD INSTALLATION

After installing tie rod to rack, fold tab washer end (2 locations) to tie rod notch.

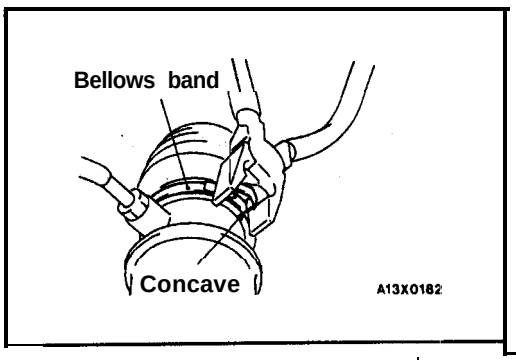

▶O◀ BELLOWS BAND INSTALLATION

(1) Touch pliers against the concave section of the bellows band and tighten the bellows band.

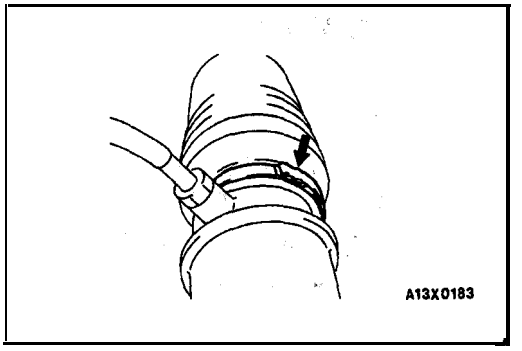

(2) Use a plastic hammer or similar to bend the convex section of the bellows band as shown in the illustration.

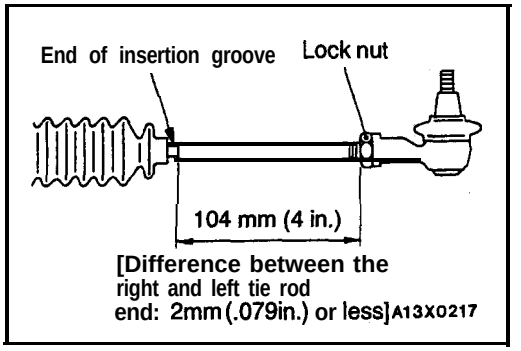

▶P◀ TIE ROD END INSTALLATION

Screw in tie rod end to have the shown dimension. Lock with lock nut.

INSPECTION

37200440056

RACK

- Check the rack tooth surfaces for damage or wear.
- Check the oil seal contact surfaces for uneven wear.
- Check the rack for bends.

PINION AND VALVE ASSEMBLY

- Check the pinion gear tooth surfaces for damage or wear.
- Check for worn or defective seal ring.

BEARING

- Check for roughness or abnormal noise during bearing operation.
- Check the bearing for play.
- Check the needle roller bearings for roller slip-off.

OTHERS

- Check the cylinder inner surface of the rack housing for damage.
- Check the boots for damage, cracking or deterioration.
- Check the rack support for uneven wear or dents.
- Check the rack bushing for uneven wear or damage.

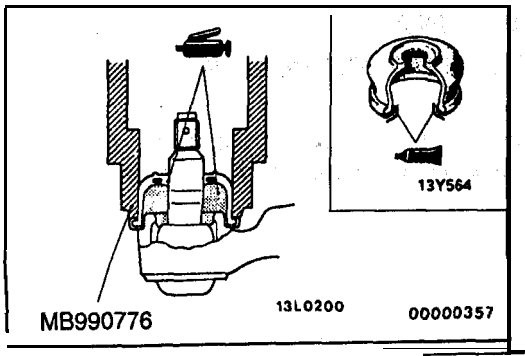

DUST COVER REPLACEMENT

Replace the dust cover by the following, procedure only if the dust cover has become damaged by accident during servicing.

(1) Remove the dust cover.
(2) Pack dust cover interior with multipurpose grease.
(3) Apply specified sealant to dust cover lip.

Specified sealant: 3M ATD Part No. 8663 or equivalent

(4) Using the special tool, install the dust cover to the tie rod end ball joint.

POWER STEERING OIL PUMP <2.0L Engine (Non-turbo)>

37200520088

REMOVAL AND INSTALLATION

Pre-removal Operation
Power Steering Fluid Draining
(Refer to P.37A-10.)

Post-installation Operation
- Power Steering Fluid Supplying (Refer to P.37A-10.)
- Drive Belt Tension Adjusting (<Vehicles wihtout A/C>:Refer to GROUP 11C – On-vehicle Service.,<Vehicles with A/C:Refer to GROUP 11C – On-vehicle Service.)
- Power steering Fluid Line Bleeding (Refer to P.37A-11.)
- Oil Pump Pressure Check (Refer to P.37A-12.)

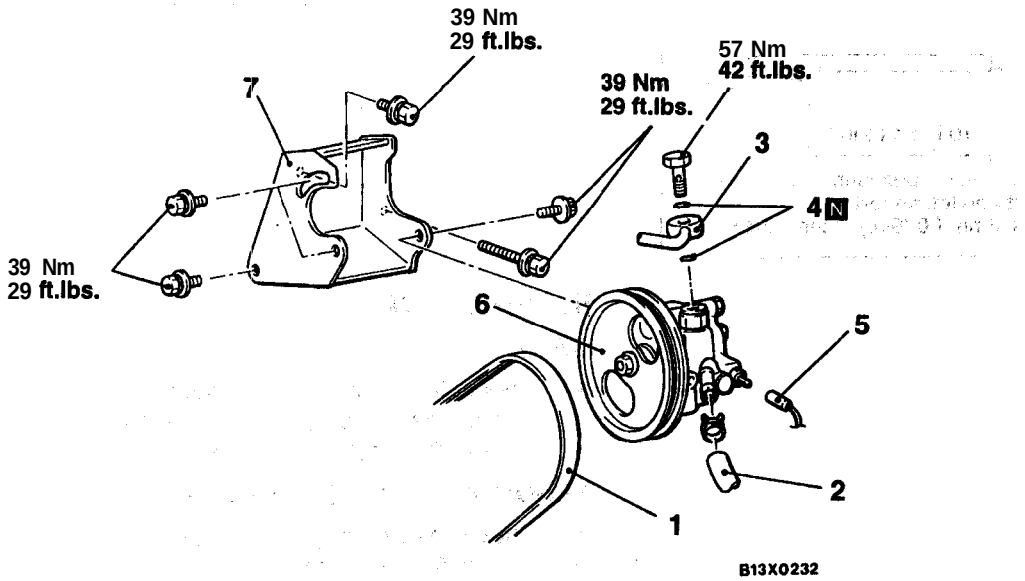

Removal steps

1. Drive-belt
2. ◀A▶ Suction hose
3. ◀A▶ Pressure hose
4. Gasket
5. Pressure switch connector
6. ▶A◀ Oil pump assembly
7. Oil pump bracket

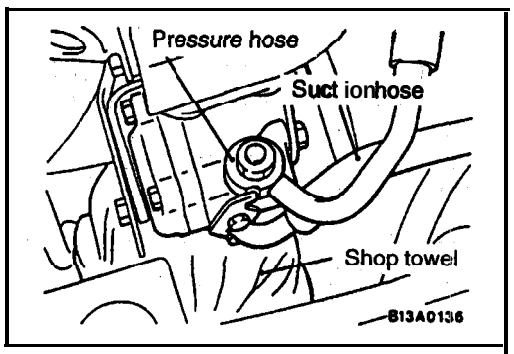

REMOVAL SERVICE POINT

◀A▶ SUCTION HOSE/PRESSURE HOSE REMOVAL

Caution
A/C compressor is below the oil pump, so cover the A/C compressor with a shop towel before removing any hose.

TSB Revision

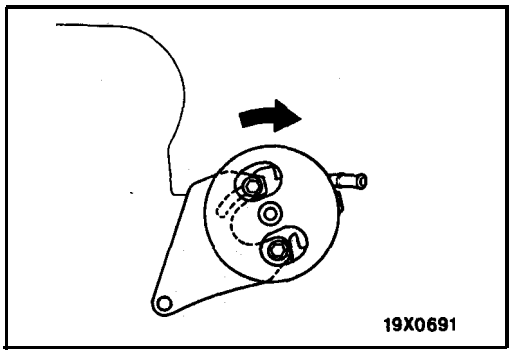

INSTALLATION SERVICE POINT

▶A◀ OIL PUMP ASSEMBLY INSTALLATION

'For the vehicles with air conditioning, install the oil pump assembly to the bracket so that it faces toward the vehicle front. Then use the air coriditioning tension pulley to adjust the belt tension.

INSPECTION

37300530043

- Check the drive-belt for cracks
- Check the pulley, assembly for uneven rotation.

DISASSEMBLY AND REASSEMBLY

37200540077

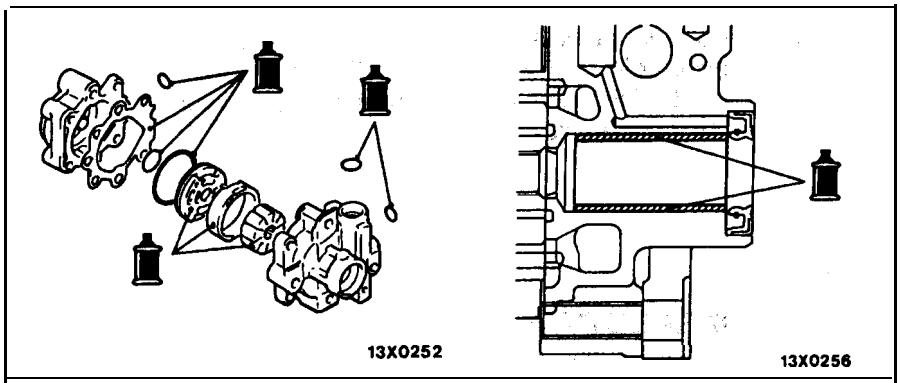

Fluid: Automatic Transmission Fluid "DEXRON II"

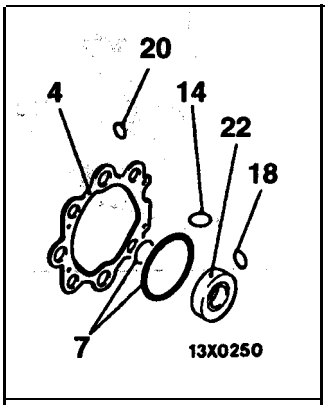

Oil pump seal kit

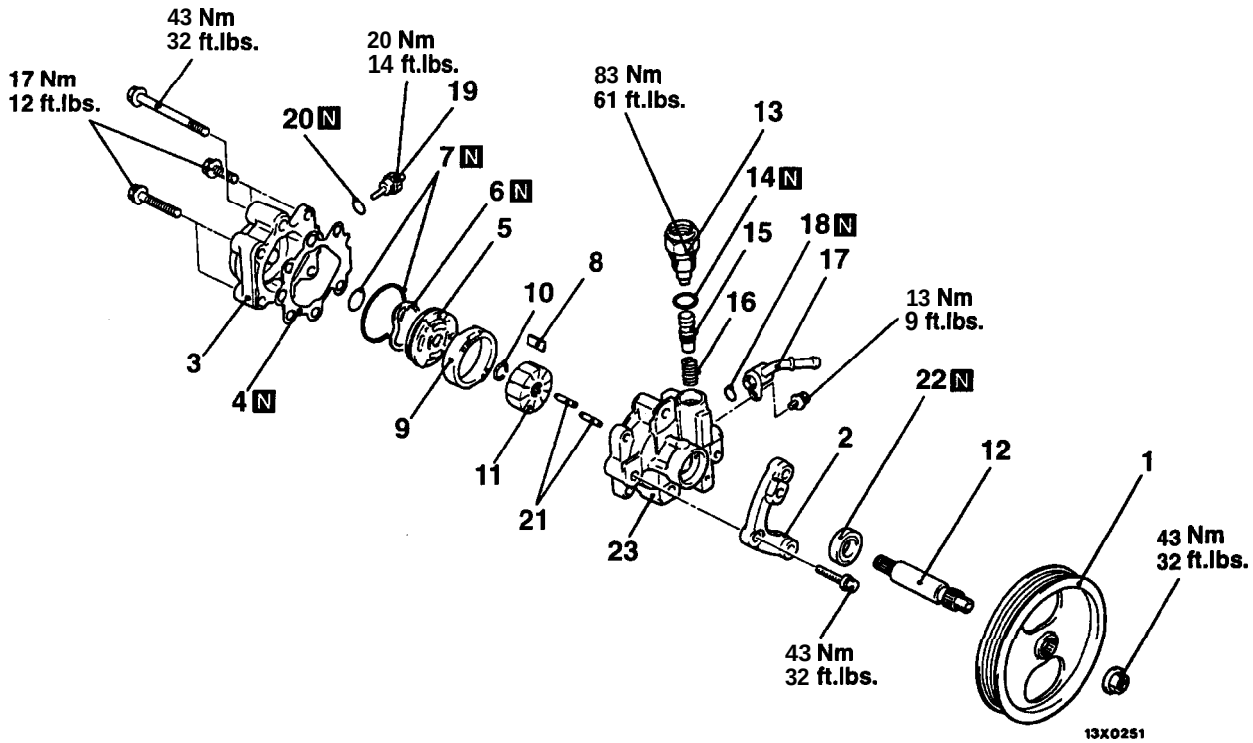

Disassembly steps

◀A▶ ▶J◀ 1. Pulley
2. Pump bracket
3. Pump cover
▶I◀ 4. Pump housing gasket
▶H◀ 5. Side plate
▶G◀ 6. Wave washer
▶B◀ 7. O-ring
▶F◀ 8. Vane
▶E◀ 9. Cam ring
◀B▶ ▶D◀ 10. Snap ring
▶C◀ 11. Rotor
12. Shaft
13. Connector
▶B◀ 14. O-ring
15. Flow control valve
16. Flow control spring
17. Suction connector
▶B◀ 18. O-ring
19. Oil pressure switch
▶B◀ 20. O-ring
21. Dowel pin
▶A◀ 22. Oil seal
23. Oil pump body

Caution
Do not disassemble the flow control valve.

TSB Revision

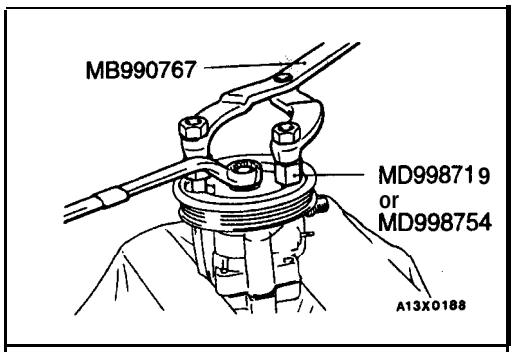

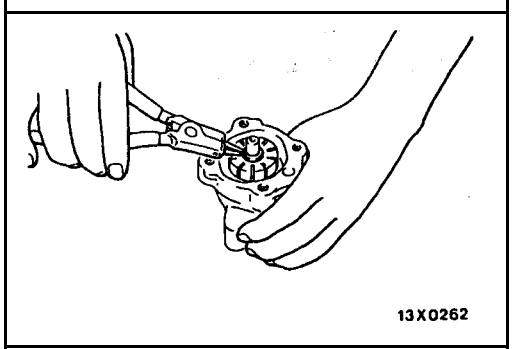

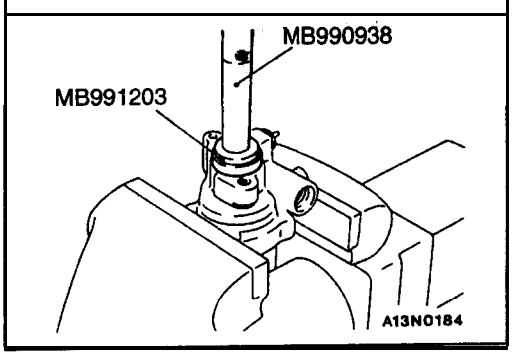

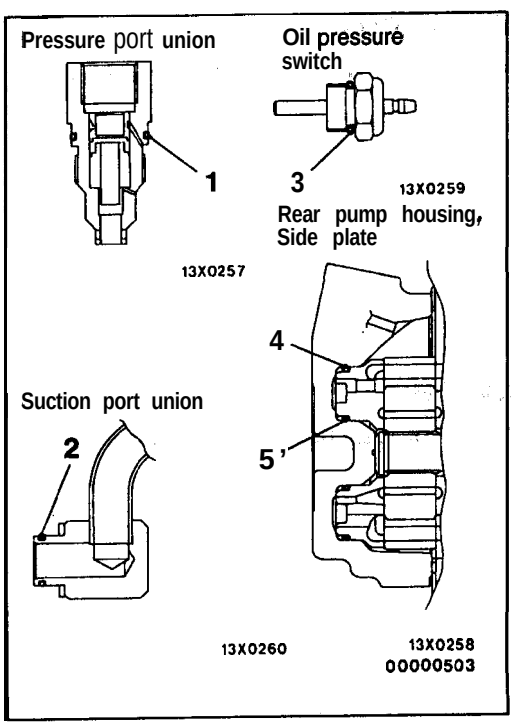

DISASSEMBLY SERVICE POINTS

◀A▶ PULLEY REMOVAL

Use the special tool to secure the pulley, and then remove the pulley mounting nuts.

◀B▶ SNAP RING REMOVAL

Remove the snap ring from the shaft with snap ring pliers and separate the rotor from the shaft.

REASSEMBLY SERVICE. POINTS

▶A◀ OIL SEAL INSTALLATION

▶B◀ O-RINGS INSTALLATION

Apply specified fluid on O-rings to install.

No.	I.D. x Width mm (in.)
1	19.5 x 1.5 (.768 x .039)
2	11.8 x 1.6 (.465 x .063)
3	11.0 x 1.9 (.433 x .075)
4	47.4 x 1.8 (1.866 x .071)
5	18.8 x 1.9 (.740 x .075)

Specified fluid:
Automatic Transmission Fluid "DEXRON II"

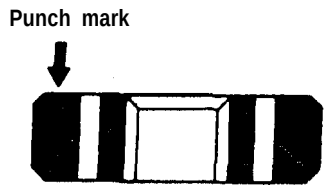

13C214

▶C◀ ROTOR INSTALLATION

install the rotor to the shaft so that the rotor's punch mark is at the pump cover side.

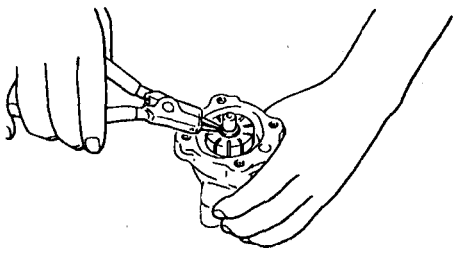

13X0262

▶D◀ SNAP RING INSTALLATION

(1) Install the snap ring with the snap ring plier.

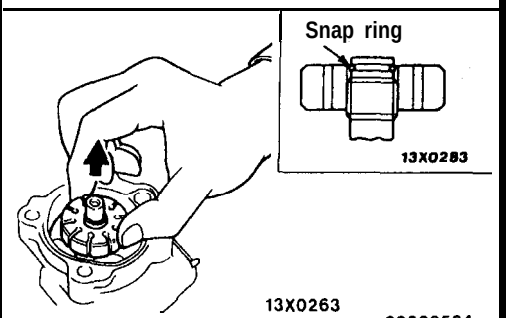

13X0283

13X0263

00000504

(2) After installation of snap ring, lift the rotor and check that the snap ring has entered the countersunk part.

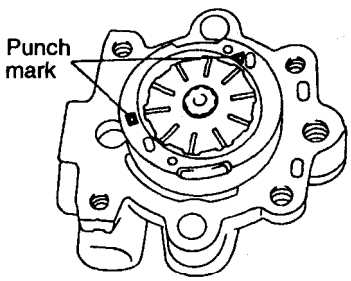

A13X0249

▶E◀ CAM RING INSTALLATION

Install the cam ring with the punch mark facing the pump cover.

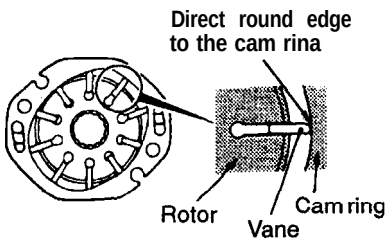

A13R0577

▶F◀ VANE INSTALLATION

Install the vanes on the rotor, paying close attention to the installation direction.

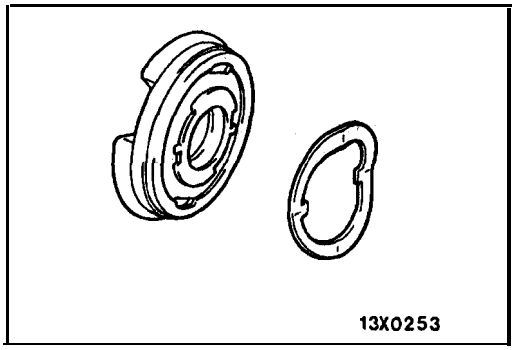

▶G◀ WAVE WASHER INSTALLATION

Fit tabs of the wave washer in concavities of the side plate to install the wave washer.

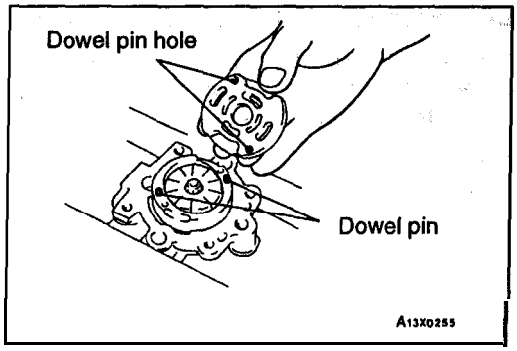

▶H◀ SIDE PLATE INSTALLATION

Line up the dowel pin hole of the side plate with the dowel pin of the oil pump body.

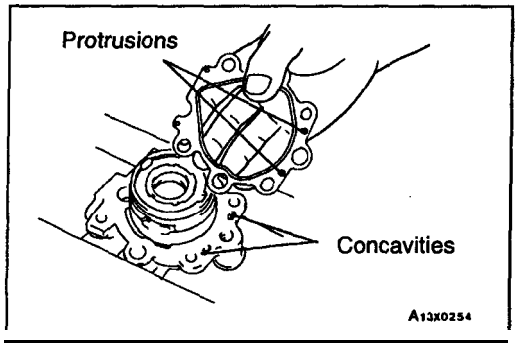

▶I◀ PUMP HOUSING GASKET INSTALLATION

Fit protrusions of the pump housing gasket in concavities of the oil pump body to install the pump housing gasket.

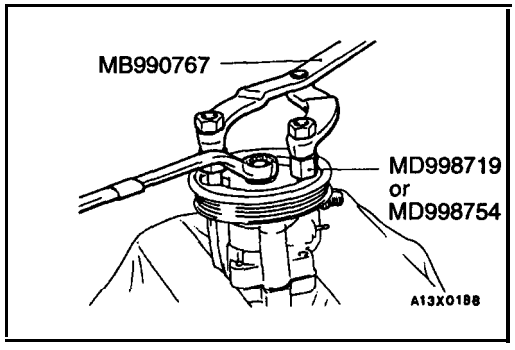

▶J◀ PULLEY INSTALLATION

Use the special tool to secure the pulley, and then install the pulley lock nut.

INSPECTION

37200550056

- Check the flow control valve for clogging.
- Check the shaft for wear or damage.
- Check the groove of rotor and vane for "stepped" wear.
- Check the contact surface of cam ring and vanes for "stepped" wear.
- Check the vanes for damage.

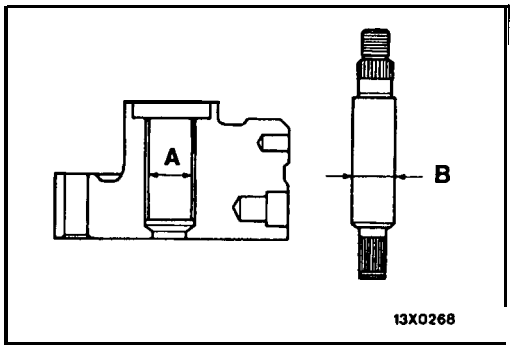

CLEARANCE BETWEEN SHAFT AND OIL PUMP BODY

Use a caliper gauge and a micrometer to measure the dimensions A and B. Subtract value of B from value of A to calculate the clearance between shaft and oil pump body.

Limit (A)-(B): 0.07 mm (.0276 in.)

POWER STEERING OIL PUMP <2.0L ENGINE (TURBO) AND 2.4L ENGINE>

37200520095

REMOVAL AND INSTALLATION

Pre-removal Operation
Power Steering Fluid Draining
(Refer to P.37A-10.)

Post-installation Operation
- Power Steering Fluid Supplying (Refer to P.37A-10.)
- Drive-belt Tension Adjusting (2.0L Engine (Turbo): Refer to GROUP 11A – On-vehicle Service, 2.4L Engine: Refer to GROUP 11E – On-vehicle Service.)
- Power Steering Fluid Line Bleeding (Refer to P.37A-11.)
- Oil Pump Pressure Check (Refer to P.37A-12.)

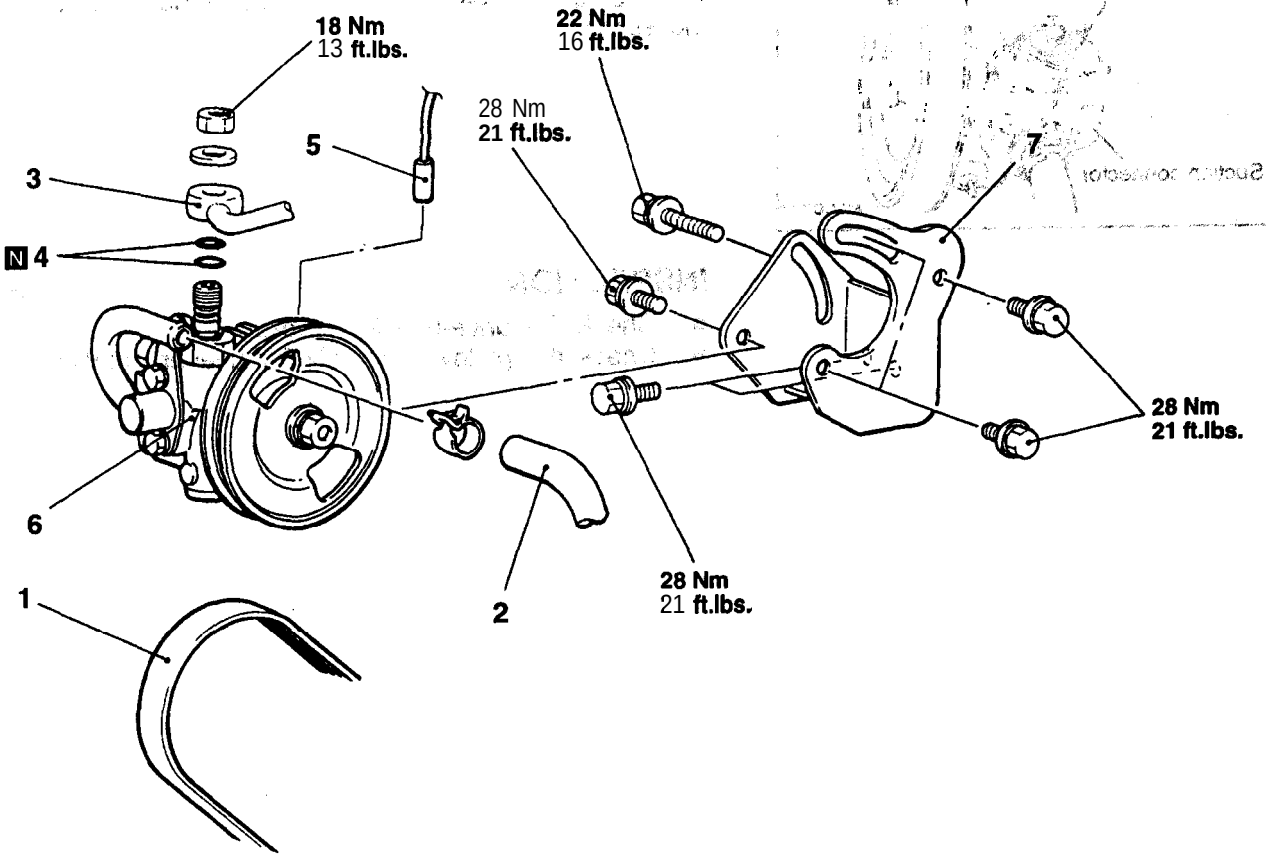

A13X0231

Removal steps

1. Drive-belt
2. Suction hose
3. Pressure hose ◀A▶ ◀A▶ ▶A◀
4. O-ring
5. Pressure switch connector
6. Oil pump
7. Oil pump bracket

TSB Revision

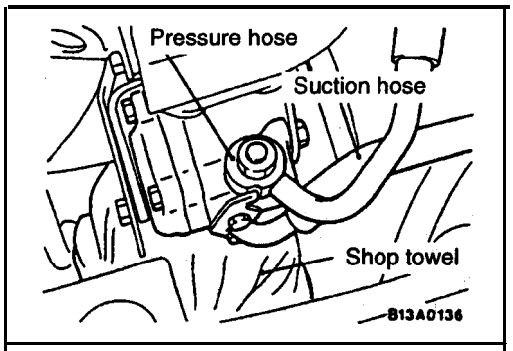

REMOVAL SERVICE POINT

◀A▶ SUCTION' HOSE/PRESSURE HOSE REMOVAL

Caution
Generator is below the oil pump, so cover the generator with a shop towel before removing any of, the 'hoses.

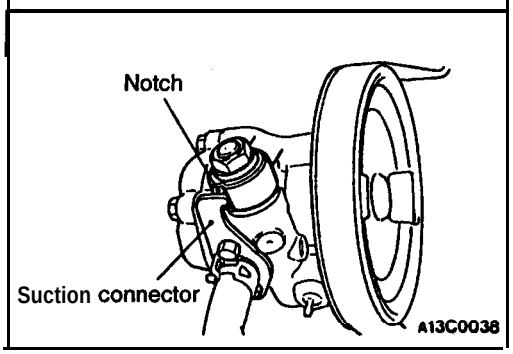

INSTALLATION SERVICE POINT

▶A◀ PRESSURE HOSE INSTALLATION

Connect the pressure hose so that its notch part contacts the suction connector.

INSPECTION

37200530043

- Check the drive-belt for cracks
- Check the pulley assembly for uneven rdtation.

DISASSEMBLY AND REASSEMBLY

37200540084

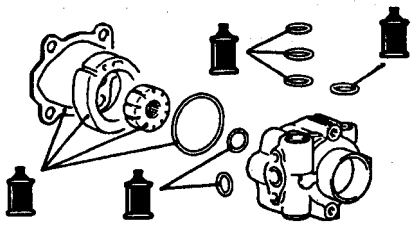

Fluid:
Automatic Transmission Fluid
"DEXRON II"

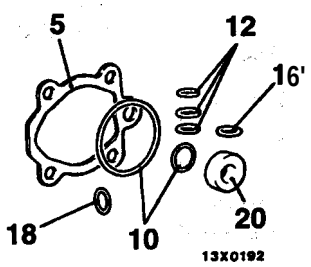

Oil pump seal kit

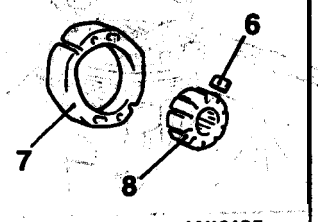

Oil pump cartridge kit

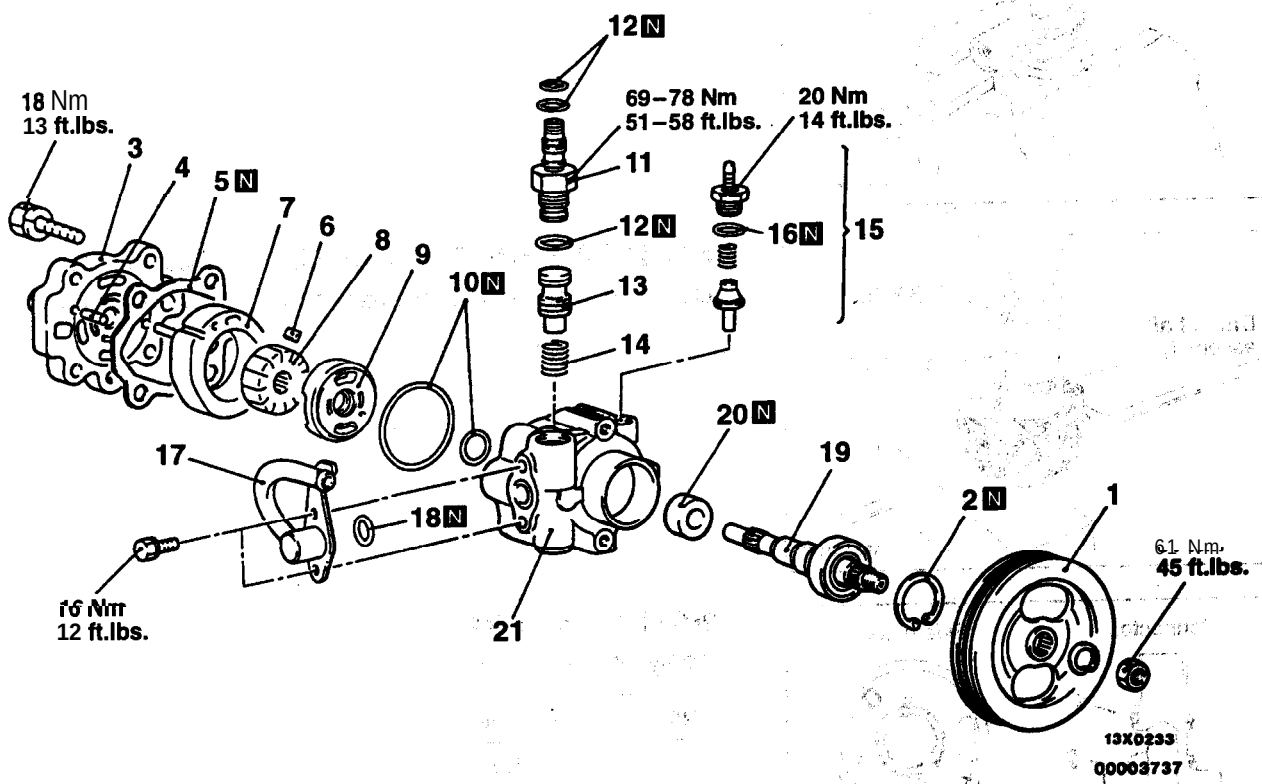

Disassembly steps

◀A▶ ▶H◀ 1. Drive pulley
2. Snap ring
3. Pump cover
4. Lock pin
5. Seal washer
▶G◀ 6. Vanes
▶F◀ 7. Cam ring
▶E◀ 6. Rotor
9. Side plate
▶C◀ 10. O-ring
11. Connector
▶C◀ 12. O-ring
13. Flow control valve
14. Flow control spring
▶D◀ 15. Pressure switch assembly
▶C◀ 16. O-ring
17. Swction connector
▶C◀ 18. O-rin g
▶B◀ 19. Drive shaft assembly?','
▶A◀ 20. Oil seal
21. Oil pump bpdy

Caution
Do not disassemble the flow control valve.

TSB Revision

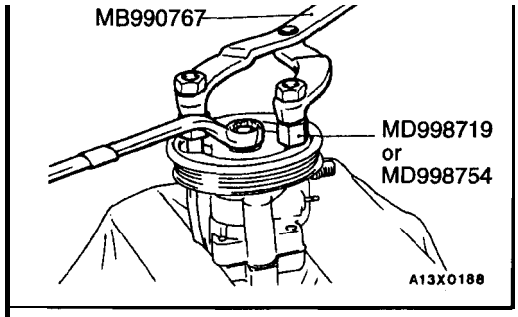

◀A▶ DRIVE PULLEY REMOVAL

Use the special tool to secure the drive pulley, and then remove the drive pulley mounting nuts.

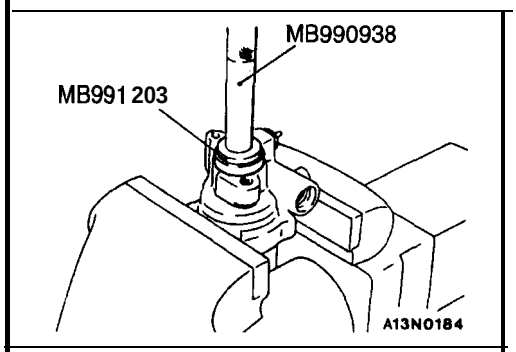

REASSEMBLY SERVICE POINTS

▶A◀ OIL SEAL INSTALLATION

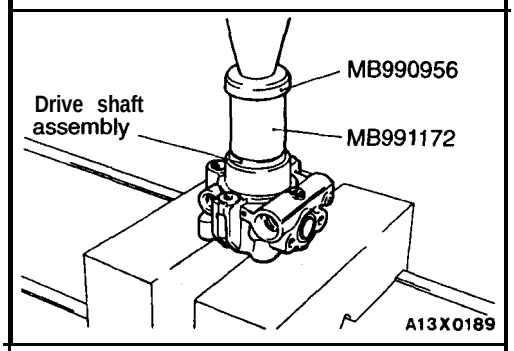

▶B◀ DRIVE SHAFT ASSEMBLY INSTALLATION

Use the special tool to press-fit the drive shaft assembly.

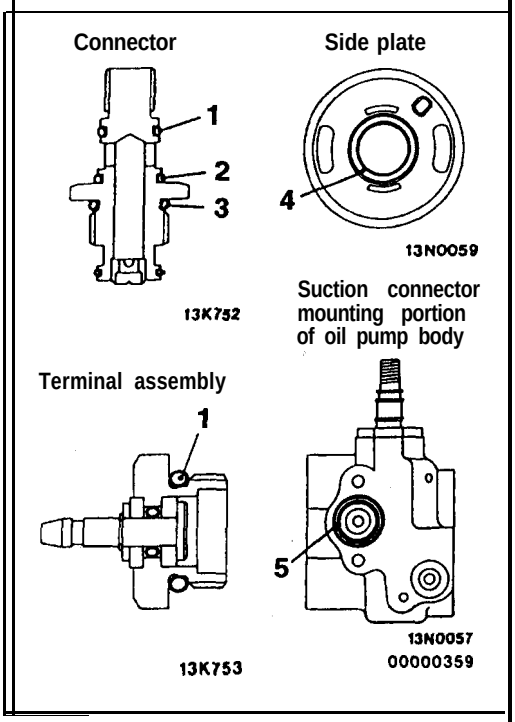

▶C◀ O-RINGS INSTALLATION

Apply specified fluid on O-rings.

No.	I.D.xWidth mm (in.)
1	11 ×1.9 (.433×.075)
2	13×1.9 (.512×.075)
3	15.5×2.4 (.610×.094)
4	14.8×2.4 (.582×.094)
5	19.4×1.9 (.763×.075)

Specified fluid:
Automatic transmission Fluid "DEXRON II"

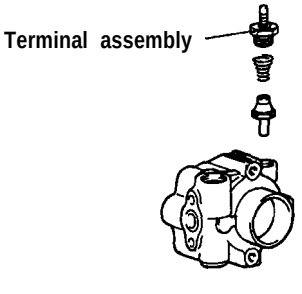

▶D◀ PRESSURE SWITCH ASSEMBLY INSTALLATION

Fit the. spring to the oil pump body with the larger diameter end at. the terminal assembly side.

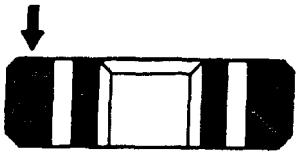

▶E◀ ROTOR INSTALLATION

Install the rotor to the pulley assembly so that the rotor's punch mark is at the pump cover side.

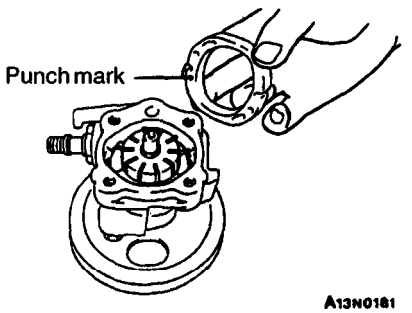

▶F◀ CAM RING INSTALLATION

Install the cam ring with the punch mark facing the side plate.

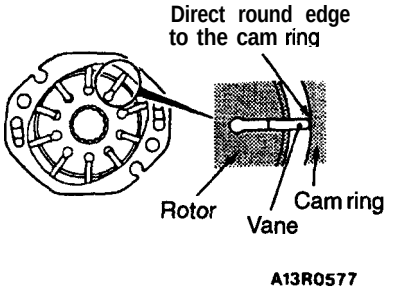

▶G◀ VANE INSTALLATION

Install the vanes on the rotor, paying close attention to the installation direction.

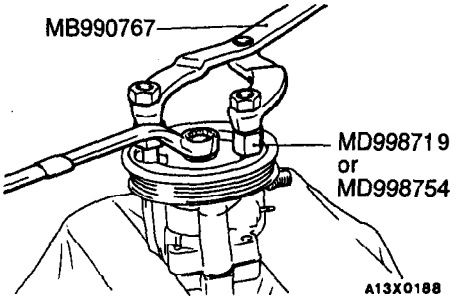

▶H◀ DRIVE PULLEY INSTALLATION

Use the special tool to secure the drive pulley, and then install the drive pulley mounting nuts.

INSPECTION

37200550063

- Check the flow control valve for clogging.
- Check the pulley assembly for wear or damage.
- Check the groove of rotor and vane for “stepped” wear.
- Check the contact surface of cam ring and vanes for “stepped” wear.
- Check the vanes for damage.

POWER STEERING HOSES <2.0L ENGINE (NON-TURBO)> 37200570083

REMOVAL AND INSTALLATION

Pre-removal Operation
- Power Steering Fluid, Draining (Refer to P.37A-10.)
- Front Bumper Removal (Refer to GROUP 51 – Front Bumper.)
- Washer Tank Removal (Refer to GROUP 51 – Windshield Wiper and Washer.)

Post-installation Operation
- Front Bumper Installation (Refer to GROUP 51 – Front Bumper.)
- Washer Tank Installation (Refer to GROUP 51 – Windshield Wiper and Washer.)
- Power Steering Fluid Supplying (Refer to P.37A-10.)
- Power Steering Fluid Line Bleeding (Refer to P.37A-11.)

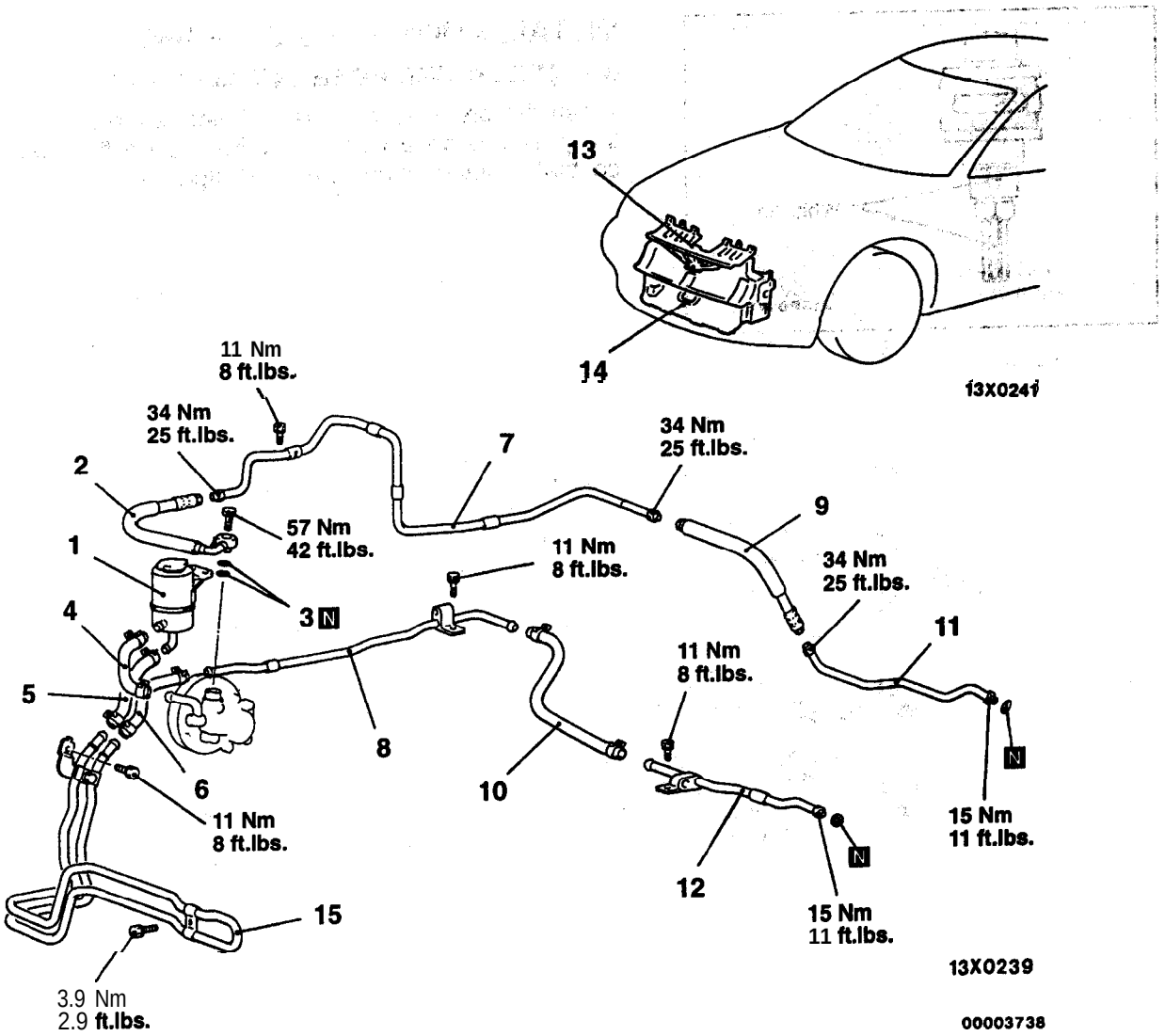

Removal steps
1. Oil reservoir
◀A▶ ▶A◀ 2. Pressure hose
3. Gasket
◀A▶ 4. Suction hose
5. Suction hose
6. Return hose
7. Pressure tube
8. Return tube
▶A◀ 9. Pressure hose
10. Return hose
11. Pressure tubs tube
12. Return fascia bracket
14. Air guide duct
15. Cooler tubs

TSB Revision

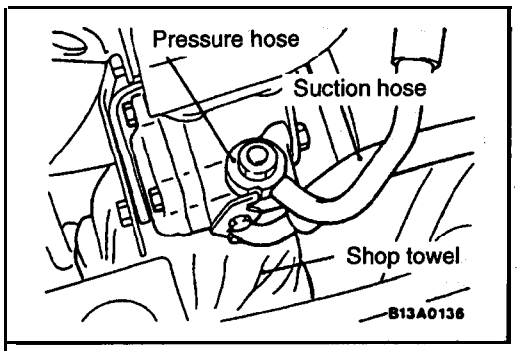

REMOVAL SERVICE POINT

◀A▶ PRESSURE HOSE/SUCTION HOSE REMOVAL

Caution

A/C compressor is below the oil pump, so cover the A/C compressor with a shop towel before removing-any hose.

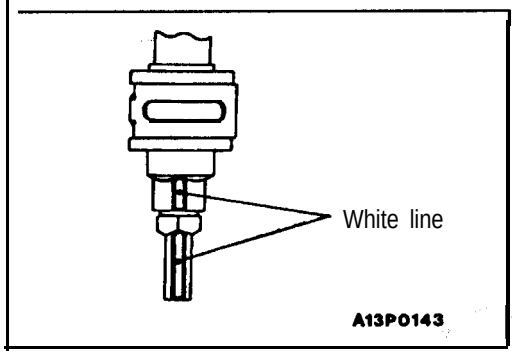

INSTALLATION SERVICE POINT

▶A◀ PRESSURE HOSE INSTALLATION

When the pressure hose is installed, align the white line on the pressure hose with the white line on the pressure tube so that together they form a straight line.

POWER STEERING HOSES <2.0L ENGINE (TURBO) AND 2.4L ENGINE>

37200570090

REMOVAL AND INSTALLATION

Pre-removal Operation
- Power Steering Fluid Draining (Refer to P.37A-10.)
- Front Bumper Removal (Refer to GROUP 51 – Front Bumper.)

Post-installation Operation
- Front Bumper Installation (Refer to GROUP 51 – Front Bumper.)
- Drive-belt Tension Adjustment (2.0L Engine (Turbo): Refer to GROUP 11A – On-vehicle Service, 2.4L Engine: Refer to GROUP 11 E-On-vehicle Service.)
- Power Steering Fluid Supplying (Refer to P.37A-10.)
- Power Steering Fluid Line Bleeding (Refer to P.37A-11.)

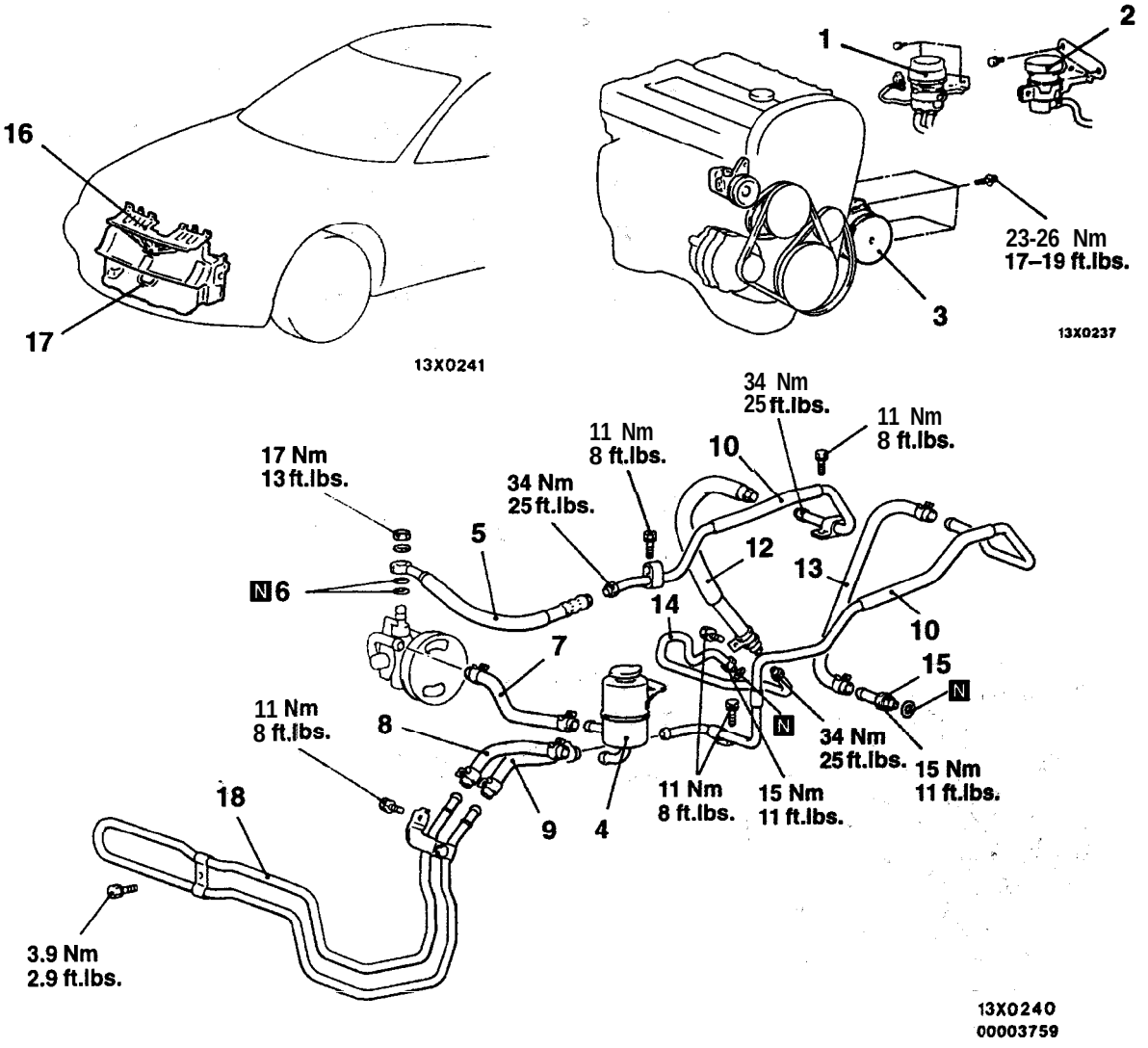

Removal steps

◀A▶ 1. Brake fluid reservoir assembly
◀B▶ 2. Clutch fluid reservoir assembly
◀C▶ 3. A/C compressor
4. Oil reservoir
◀D▶ ▶A◀ 5. Pressure hose
6. O-ring
◀D▶ 7. Suction hose
8. Return hose
9. Return hose
10. Return tube
11. Pressure tube
▶A◀ 12. Pressure hose
13. Return hose
14. Pressure tube
15. Return tube
16. Front fascia bracket
17. Air guide duct
18. Cooler tube

TSB Revision

REMOVAL SERVICE POINTS

◀A▶ BRAKE FLUID RESERVOIR ASSEMBLY REMOVAL

Disconnect the brake fluid level sensor connector and remove the brake fluid reservoir assembly from the dash panel with the hose still attached.

NOTE
Place the removed reservoir assembly in a place where it will not be a hindrance when removing and installing the power steering gear box, and tie it with a cord.

◀B▶ CLUTCH FLUID RESERVOIR ASSEMBLY REMOVAL

Remove the clutch fluid reservoir assembly from the dash panel with the hose still attached.

NOTE
Place the removed reservoir assembly in a place where it will not be a hindrance when removing and installing the power steering hoses, and tie it with a cord.

◀C▶ A/C COMPRESSOR REMOVAL

Disconnect the A/C compressor connector and remove the compressor from the compressor bracket with the hose still attached.

NOTE
Place the removed in a where it will not be a hindrance when removing and installing the power steering hoses and tie it with a cord.

Caution
Do not damage the joint between the A/C hose and the A/C pipe.

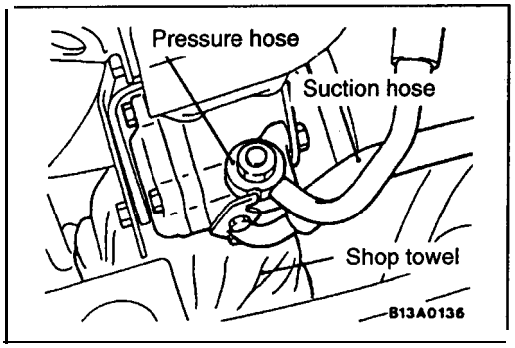

◀D▶ PRESSURE HOSE/SUCTION HOSE REMOVAL

Caution
Generator is below the oil pump, so cover the generator with a shop towel before removing any of the hoses.

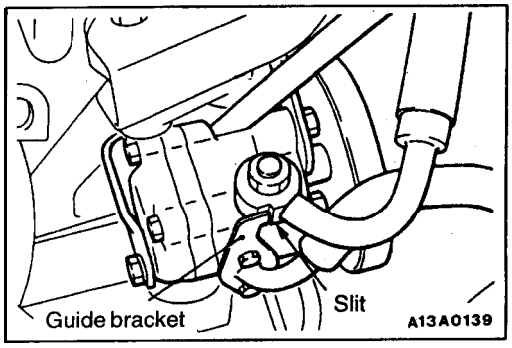

INSTALLATION SERVICE POINT

▶A◀ PRESSURE HOSE INSTALLATION

(1) Connect the pressure hose so that its slit part contacts the oil pump's guide bracket.

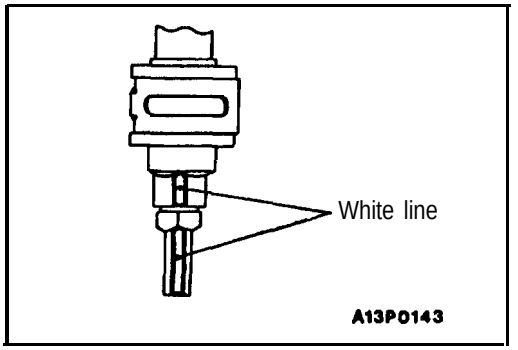

(2) When the pressure hose is installed, align the white line on the pressure hose with the white line on the pressure tube so that together they form a straight line.

NOTES

BODY

CONTENTS

42109000188

HOOD

42100070058

TROUBLESHOOTING

Symptom	Probable cause	Remedy
Improper closure	Striker and latch not properly aligned	Adjust the alignment
Difficult locking and unlocking	Striker and latch not properly aligned	Adjust the alignment
Uneven body clearance	Incorrectly installed hood	Adjust the installation of hood
Uneven height	Incorrect hood bumper height	Adjust the hood bumper height

HOOD

42100160175

REMOVAL AND INSTALLATION

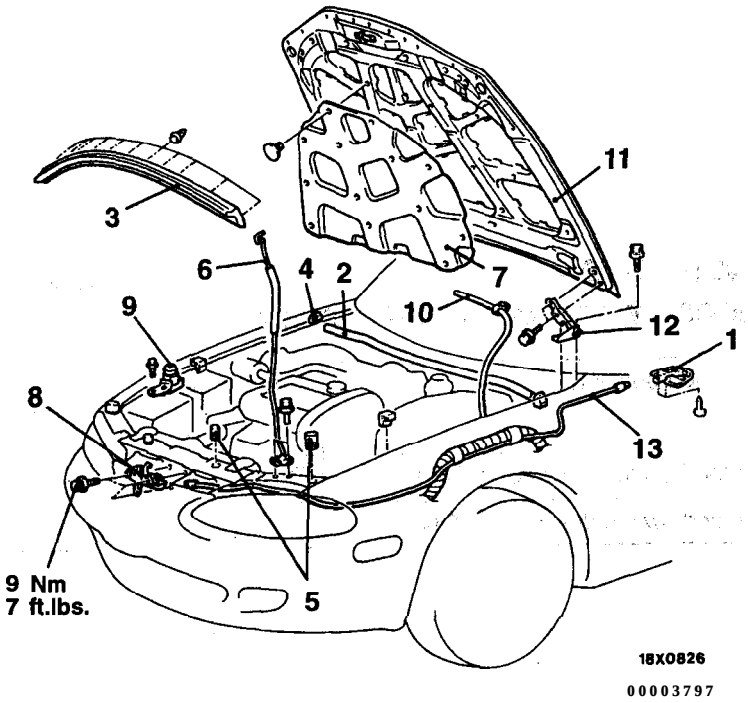

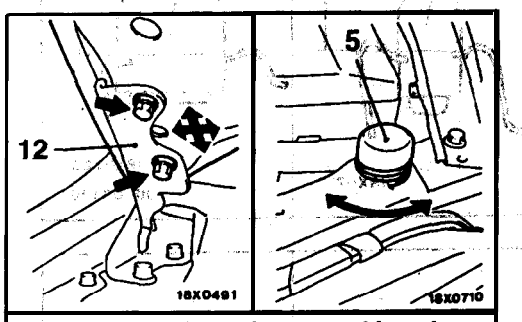

Adjustment of hood step and hood striker linkage

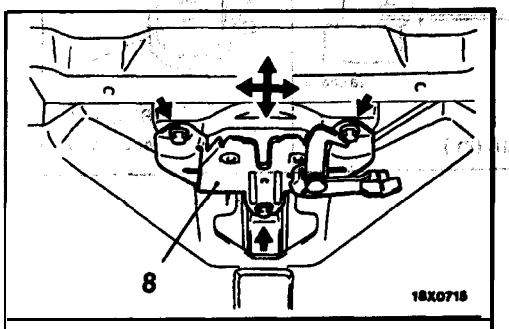

Adjustment of clearance around hood and height

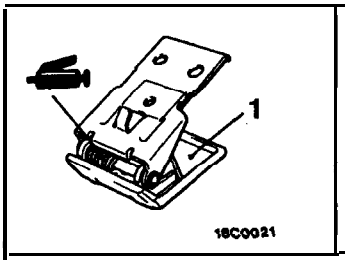

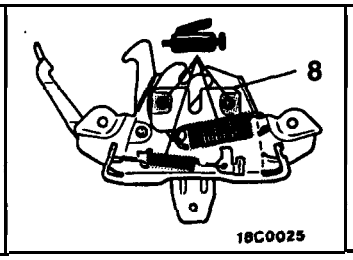

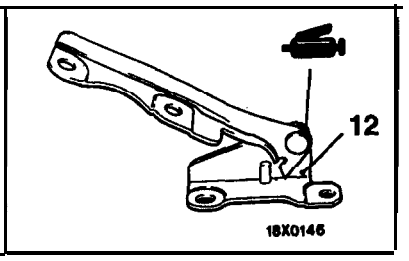

1. Hood lock release handle
2. Hood weatherstrip
3. Hood front weatherstrip
4. Hood side weatherstrip
▶A◀ 5. Bumper
6. Hood support rod
7. Hood silencer
9. Hood switch (Vehicles with theft-alarm system)

Hood and hood hinge removal steps

- Front deck garnish (Refer to GROUP 51 – Windshield and Washer.)

10. Washer hose connection
11. Hood
12. Hood hinge

Hood lock release cable removal steps

- Front bumper and front fascia bracket (Refer to GROUP 51 – Front Bumper.)
- Headlight (driver's side) (Refer to GROUP 54 – Headlight.)

1. Hood lock release handle
8. Hood latch
13. Hood lock release cable

TSB Revision

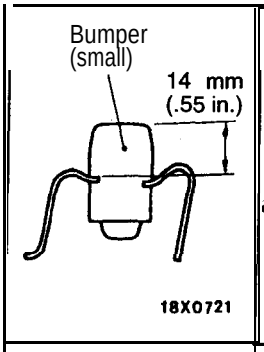

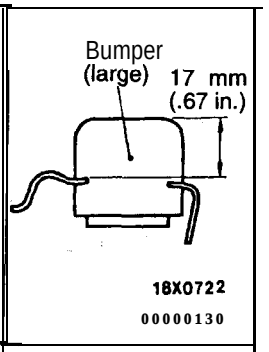

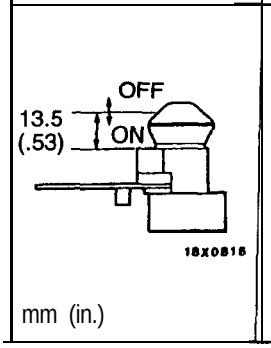

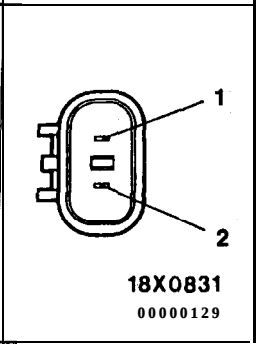

INSTALLATION SERVICE POINT

▶A◀ BUMPER INSTALLATION

Install the bumper as shown in the diagram.

INSPECTION

42100390031

HOOD SWITCH CONTINUITY CHECK

Switch position	Terminal No.	
	1	2
Hood switch unpressed (OFF)	0 ———	○
Hood switch depressed (ON)		

FENDER

42100050069

SEALANTS

Items	Specified sealants
Fender to body panel	3M ATD Part No: 8531 or 3M ATD Part No. 8646, or equivalent
Splash shield to fender	3M ATD Part No. 8625 or equivalent

FENDER

42100190143

REMOVAL AND INSTALLATION

Pre-removal and post-installation Operation
Front Bumper Removal and Installation
(Refer to GROUP 51 – Front Bumper.)

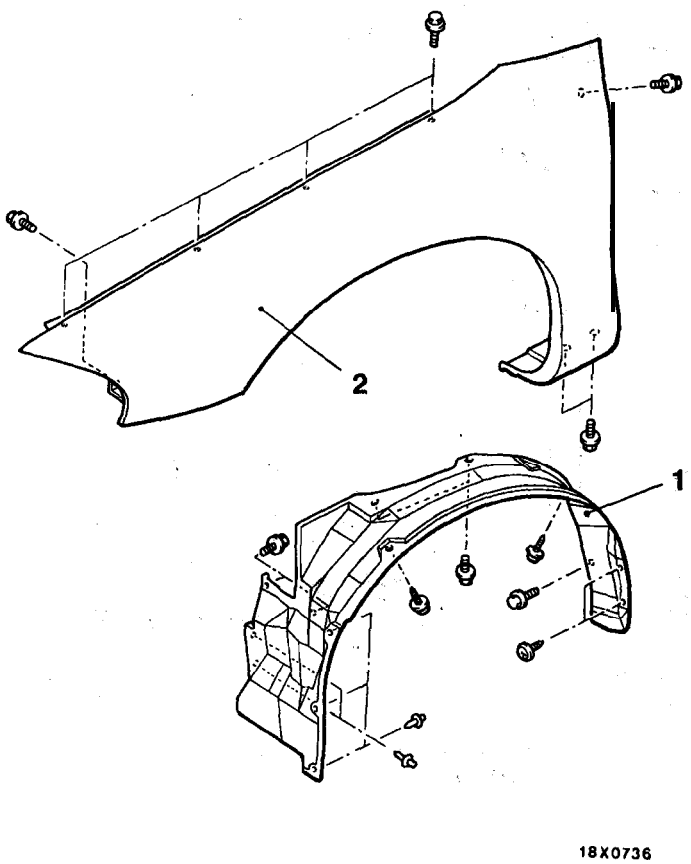

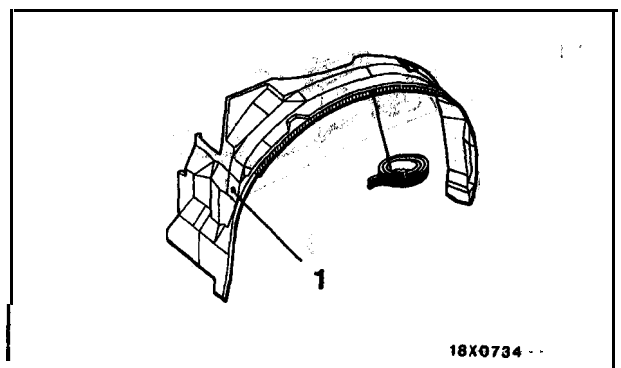

Sealant:
3M ATD Part No. 8625 or equivalent

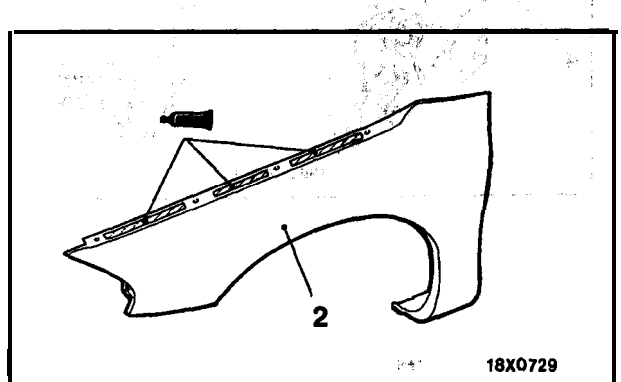

Sealant:
3M ATD Part No. 8531 or 3M ATD Part No. 8848, or equivalent

00000131

Removal steps

1. Splash shield
- Side air dam
  (Refer to GROUP 51 – Aero Parts.)
2. Front fender panel

TSB Revision

FUEL FILLER DOOR

42100250186

REMOVAL AND INSTALLATION

Pre-removal and Post-installation Operation
- Removal and Installation of Rear Side Trim, Quarter Trim and Scuff Plate (Refer to GROUP 52A–Trims.)

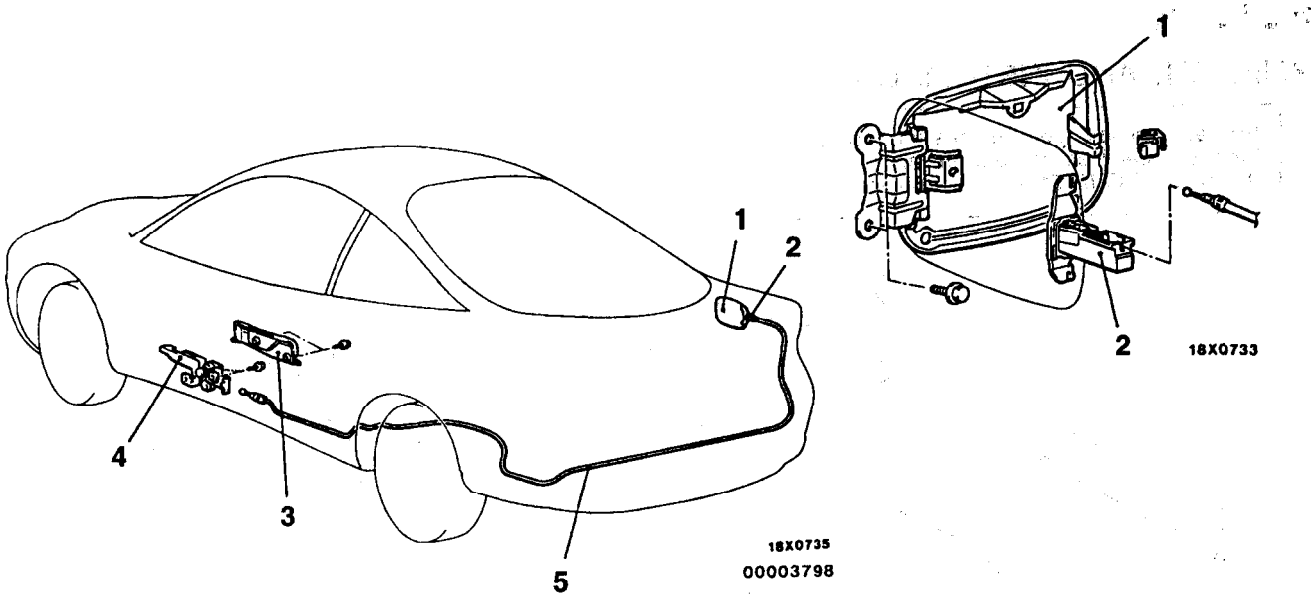

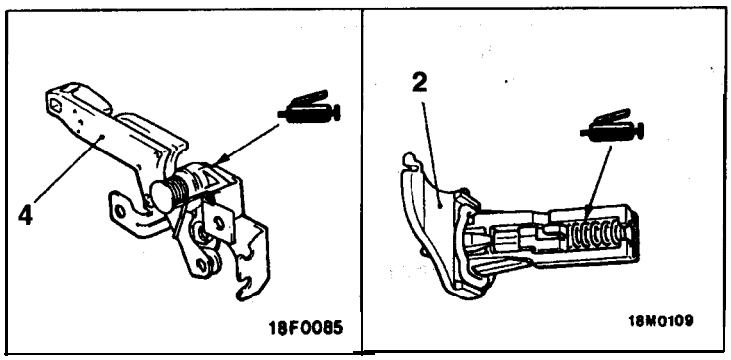

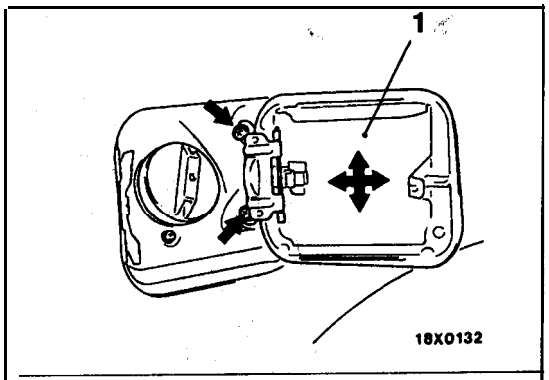

Adjustment of step and clearance around fuel filler door

Removal steps

1. Fuel **filler door**
2. Fuel filler door hook
3. Release handle cover
4. Fuel filler door lock release handle
5. Fuel filler door lock release **cable**

WINDSHIELD AND WINDOW GLASS

SERVICE SPECIFICATIONS <ECLIPSE SPYDER>

42200030011

Items		Standard' value
Difference in quarter window glass height from door window glass height mm (in.)		0 ± 2.0 (0 ± .08)
Clearance between quarter window glass sash weatherstrip and door window glass mm (in.)		8.3 ± 2.0 (.33 ± .08)
Distances between quarter window glass and quarter belt moulding and between quarter window glass and quarter belt line outer weatherstrip flushness mm (in.)	Front of quarter window glass	7.0 ± 2.0 (.28 ± .08)
	Rear of quarter window glass	9.0 ± 2.0 (.35 ± .08)
Quarter window glass tilt mm (in.)		3.0 ± 2.0 (.12 ± .08)

SEALANTS AND ADHESIVES

42200050048

Items	Specified sealants and adhesives
Windshield	3M ATD Part No. 8609 Super Fast Urethane and 3M ATD Part No. 8608 Super Fast Urethane Primer or equivalent
Quarter window glass	
Liftgate glass	
Windshield to molding	3M ATD Part No. 6382 or equivalent
Liftgate glass to molding	

SPECIAL TOOL

4220006004

Tool	Tool number and name	Supersession	Application
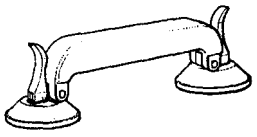	MB990480 Glass holder	General service tool	Removal and installation of windshield and window glass

TROUBLESHOOTING

42200070051

INSPECTION CHART FOR TROUBLE SYMPTOMS

WINDSHIELD

Symptom	Probable cause	Remedy
Water leak	Defective seal	Fill sealant
	Defective body flange	Correct

LIFTGATE WINDOW <ECLIPSE>

Symptom	Probable cause	Remedy
Water leak	Defective seal	Fill sealant
	Defective body flange	Correct

QUARTER WINDOW <ECLIPSE SPYDER>

Symptom	Probable cause	Remedy
When ignition switch is turned to ON, power windows do not operate.	• Broken wire in power window switch circuit or in each harness. • Power window switch is faulty. • Power window motor is faulty. • Convertible top control module is faulty.	Check according to Flow Chart A (Refer to P.42-9.)
When the power windows are not lowered fully, the power windows do not lower automatically if the convertible top switch is set to open or close.	• Broken wire in power window up signal circuit • Convertible top control module	Check according to Flow Chart B (Refer to P.42-9.)
When the power windows are not lowered fully and the power window main switch's lock switch is OFF, the power windows do not lower automatically if the convertible top switch is set to open or close. However, the power windows lower automatically when the lock switch is ON.	• Broken wire in ground input signal circuit • Power window main switch (driver's side) is faulty. • Convertible top control module is faulty.	Check according 'to Flow' Chart C (Refer to P.42-10.)

TROUBLE SYMPTOM INSPECTION CHART

A When ignition switch is turned to ON, power windows do not operate.

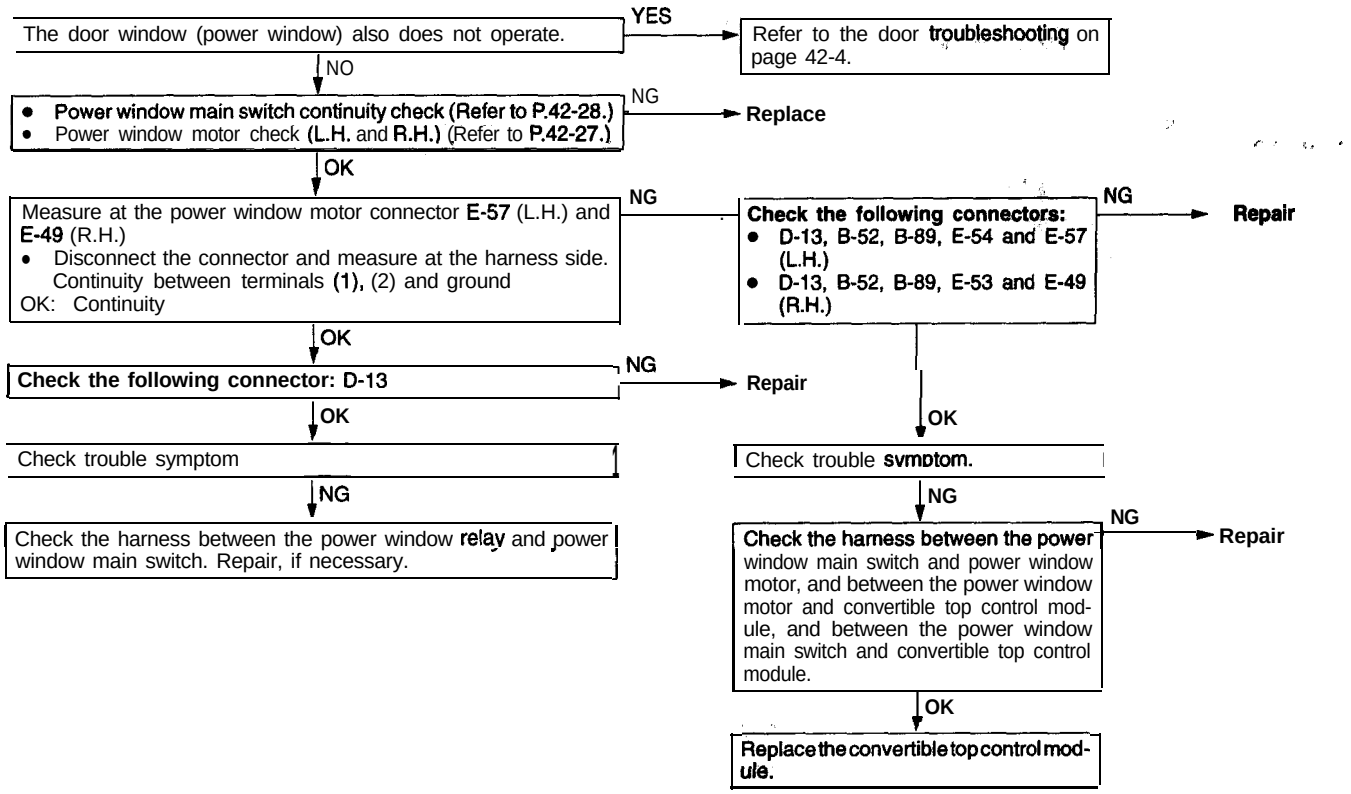

B When the power windows are not lowered fully the power windows do not lower automatically if the convertible top switch is set to open or close.

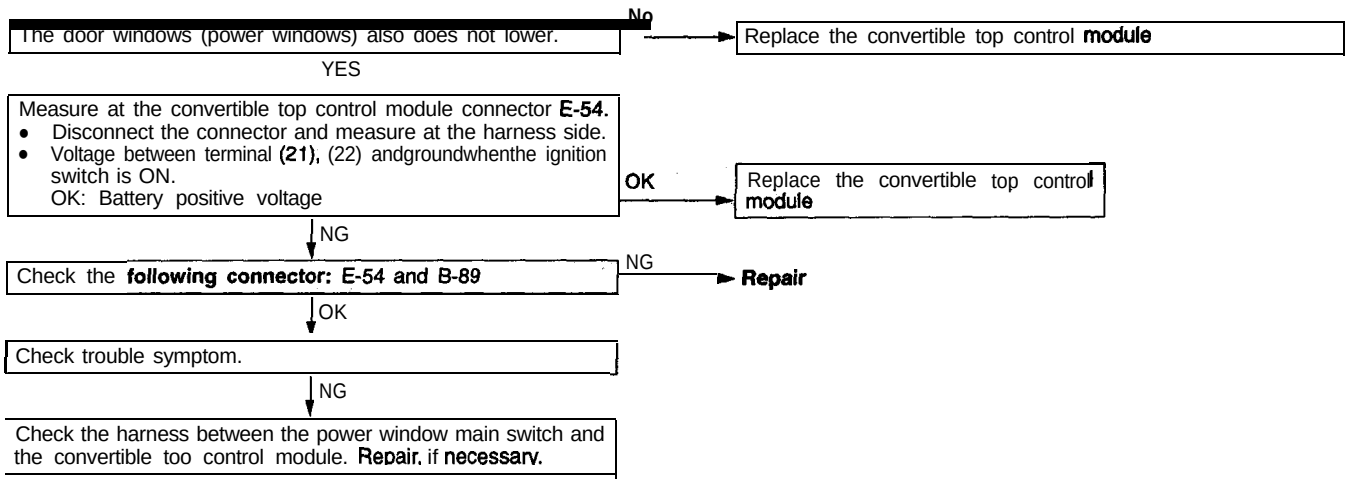

C When the power windows are not lowered fully and the power window main switch's lock switch is OFF, the power windows do not lower automatically if the convertible top switch is set to open or close. However, the power windows lower automatically' when the lock switch is 'ON.

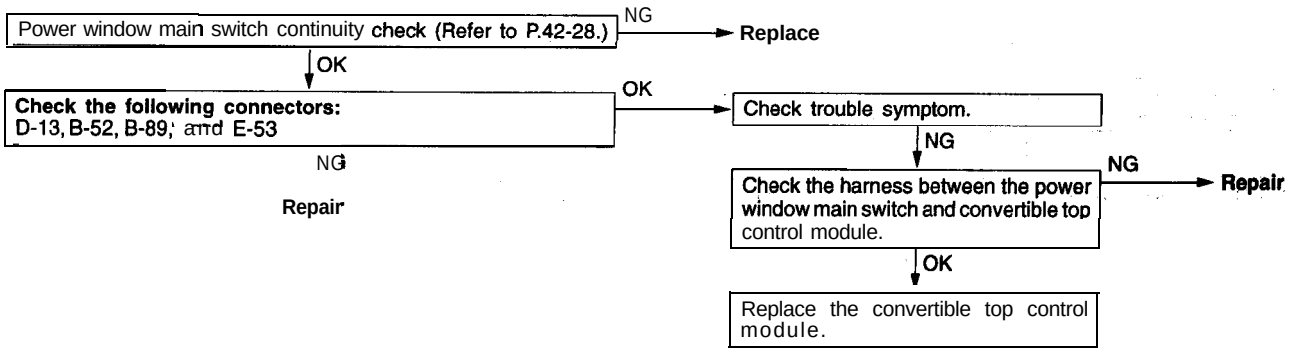

ON-VEHICLE SERVICE

42200580028

QUARTER WINDOW GLASS ADJUSTMENT <ECLIPSE SPYDER>

NOTE
Ensure door glass is adjusted properly. Refer to DOOR WINDOW GLASS ADJUSTMENT P.42-48 – Door in order to ensure that cross section A – A and B – B are correct.

1. Remove the quarter trim, lower. (Refer to GROUP' 52A – Trims.)
2. Check that the quarter window glass moves up and down smoothly. Non-smooth operation may be caused by improper adjustment, defective quarter window motor, or binding quarter window guide assembly. Refer to this section for proper adjustments. Refer to P.42-27 for quarter window motor testing and guide assembly.
3. After completely opening the electric convertible top, completely raise the door window glass and quarter window glass.
4. Measure gaps, check for sealing 'quality (wet glass and look for at least 12.7 mm (.50 in.) wide seal all glass-to-seal locations), check tilt before and after completing each adjustment.

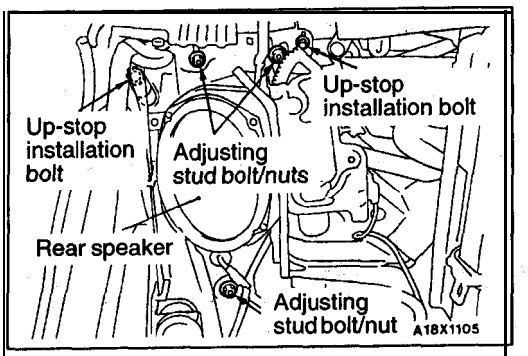

5. Before proceeding with **these adjustments,**
   a) Mark each adjusting stud bolt prior to loosening.

   NOTE
   Scratch around adjusting stud bolt as point of reference after starting to adjust **window.**

   b) Loosen one adjusting stud bolt/nut at a time.

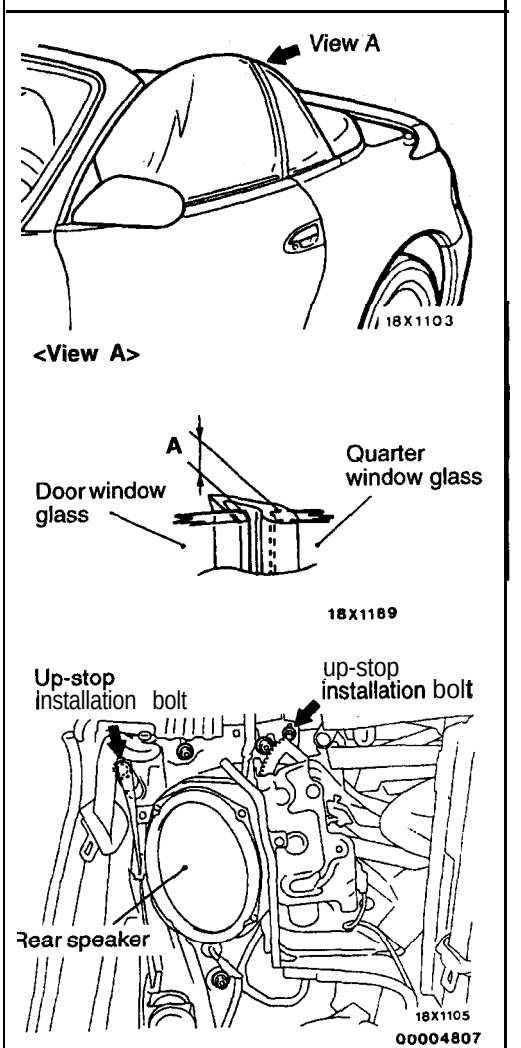

6. Lower the quarter window slightly, loosen the up-stop installation bolt(s).
7. Adjust using the up-stop installation bolts so that the difference in the quarter window glass height from the door window glass height is at the standard value.

   Standard value (A): 0 ± 2.0 mm (0 ± .08 in.)

   NOTE
   Any adjustment to the up-stop installation bolts affects front door glass gap (illustration A – A, A' – A').

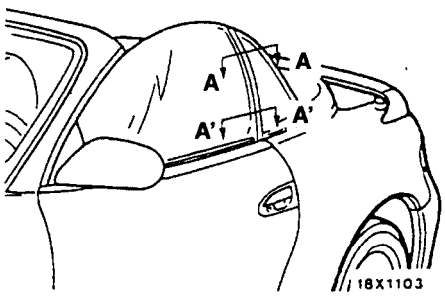

:Section A – A>

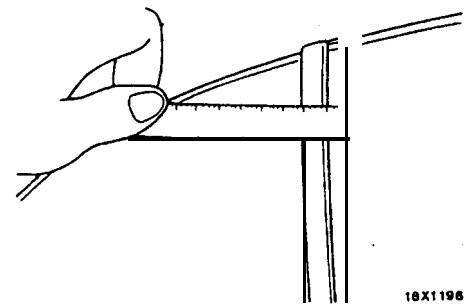

Section A' – A'>

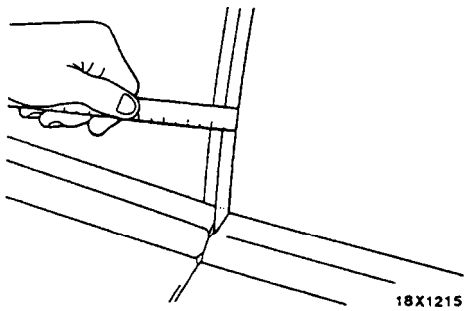

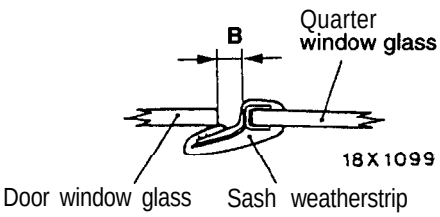

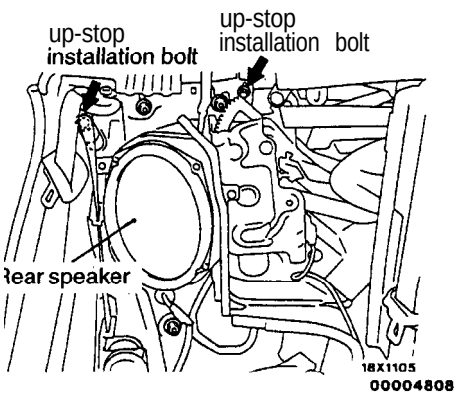

8. Adjust using the up-stop installation bolts so that the clearance between the quarter window glass sash weatherstrip and the door window glass is at the standard value.

   Standard value (B): 8.3 ± 2.0 mm (.33 ± .08 in.)

   NOTE
   If dimensions of section A – and A' – A' are adjusted, the height of the quarter window glass may be changed. Confirm the height of the quarter window glass again. (Refer to view A in the illustration.)

9. Measure the quarter window to front door gap 76.2 mm (3.0 in.) from the top of the, door glass and 76.2 mm (3.0 in.) from the top of the front door. Adjust so that, gap is same at both locations.
10. Open and close the front door several times after adjustment to ensure settings are good.

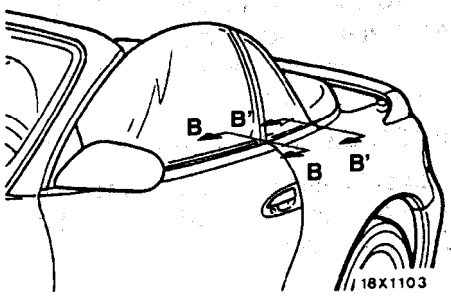

<Section B – B>

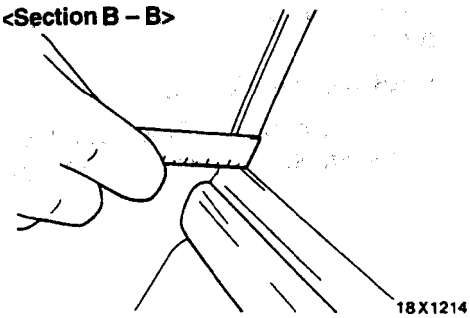

<Section B' – B'>

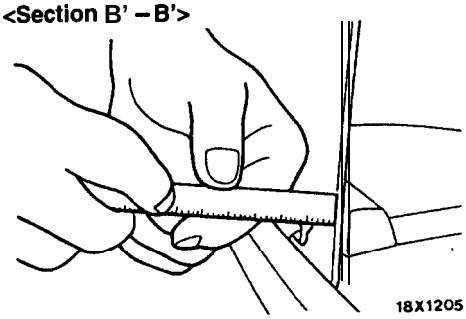

<Section B – B, B' – B'>

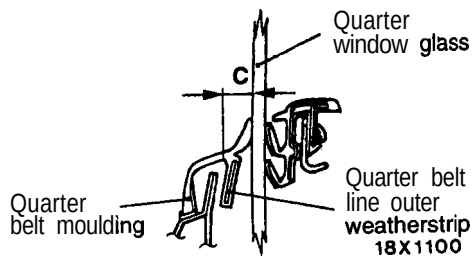

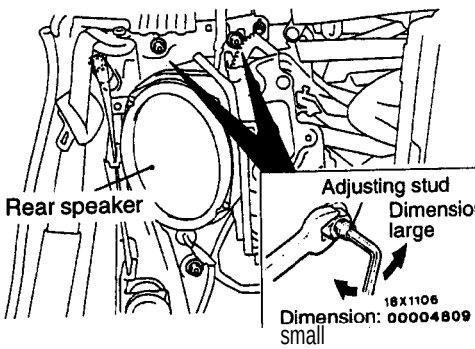

11. Adjust by the following procedure so that the distances between the quarter window glass and the quarter belt line outer weatherstrip flushness and between the quarter window glass and the quarter belt moulding are at the standard value.

Standard value (C):
7.0 ± 2.0 mm (.28 ± .08 in.) <Section B-B>
9.0 ± 2.0 mm (.35 ± .08 in.) <Section B'-B'>

A. Loosen the 2 upper adjusting stud nuts.
B. Adjust the front, adjusting stud first, then the' back, adjusting stud to the, specified value.

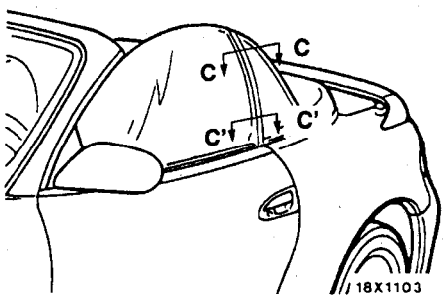

<Section C – C>

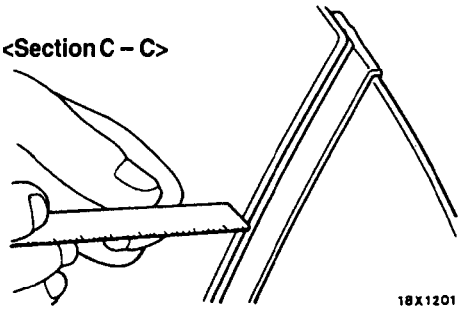

<Section C' – C'>

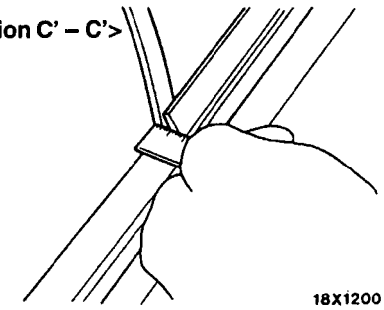

<Section C-C, C' – C'>

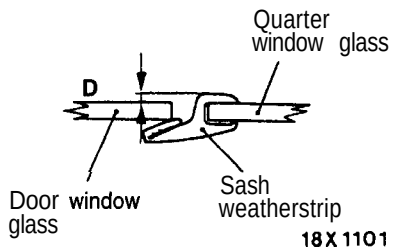

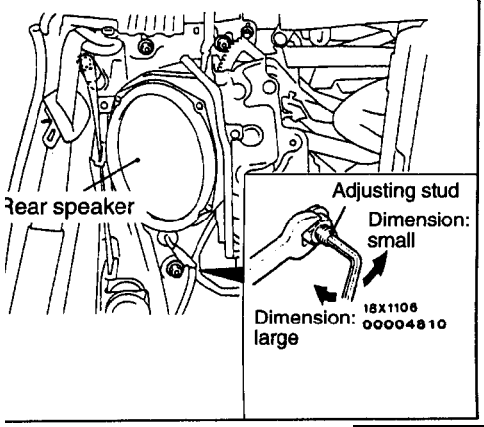

C. Loosen the lower adjusting stud nut.

D. With the lower adjusting stud adjust the quarter window glass tilt so that the quarter window glass sash weatherstrip is at the standard value. If not within the standard value, additional adjustment to the upper adjusting studs may be necessary.

Standard value (D): 3.0 ± 2.0 mm (.12 ± .08 in.)

E. Tighten the 2 upper adjusting stud nuts to the specified torque value. Tighten the lower adjusting stud nut to the specified torque value.

Caution
Hold the adjusting stud in place while tightenlng any adjusting stud nut.

Specified torque: 28 Nm (20 ft.lbs.)

F. Open and close door several times. Raise and lower quarter window several times. Recheck gap. Readjust as necessary.

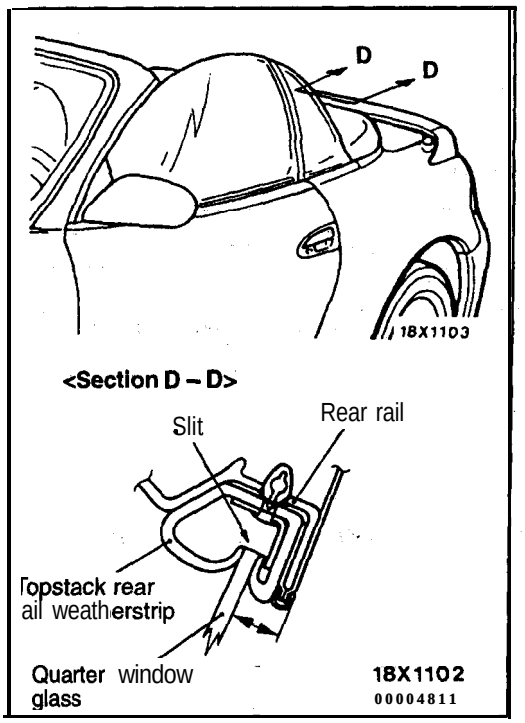

12. Close the convertible top completely. Check that the quarter window glass enters the slit on the rear rail weatherstrip smoothly when the quarter windows are raised.
13. Recheck all measurements. Adjustment to any of the adjusting devices will affect other settings.
14. Check for sealing quality (wet glass and look for at least 12.7 mm (.50 in.) wide seal all glass-to-seal locations.)
15. Install the quarter trim, lower (Refer to GROUP 52A – Trims.)

WINDSHIELD AND WINDOW GLASS

42200560022

GENERAL

The windshield and window glass are attached by a urethane-base adhesive, to the window -frame. This adhesive not only provides improved glass holding and sealing, but also permits use of body openings having a greater structural strength.

ADHESIVE

Adhesive kit	Quantity
3M ATD Part No. 8609 SUPER FAST URETHANE	One cartridge
3M ATD Part No. 8608 SUPER FAST URETHANE PRIMER	As required

RESERVE ITEMS

Items	Applications	Quantity
Wire (dia.× length)	For cutting adhesive	Five pieces of wire 0.6 mmx 1m (.02 in. × 3.3 ft.)
Adhesive gun	For adhesive application	One
Wiping rags		As required
Sealer	For prevention of water leaks and gathering after adhesive application	As required
3M ATD Part No.8906 or eauivalent	For cleaning	As required
Glass holder		T w o
Spacers (Service part)		As required
Window molding (Service part)		One
Dam (Service part)		As required
Tectyl 506T (Valvoline Oil Company)	–	As required

WORKING PROCESS

42200540040

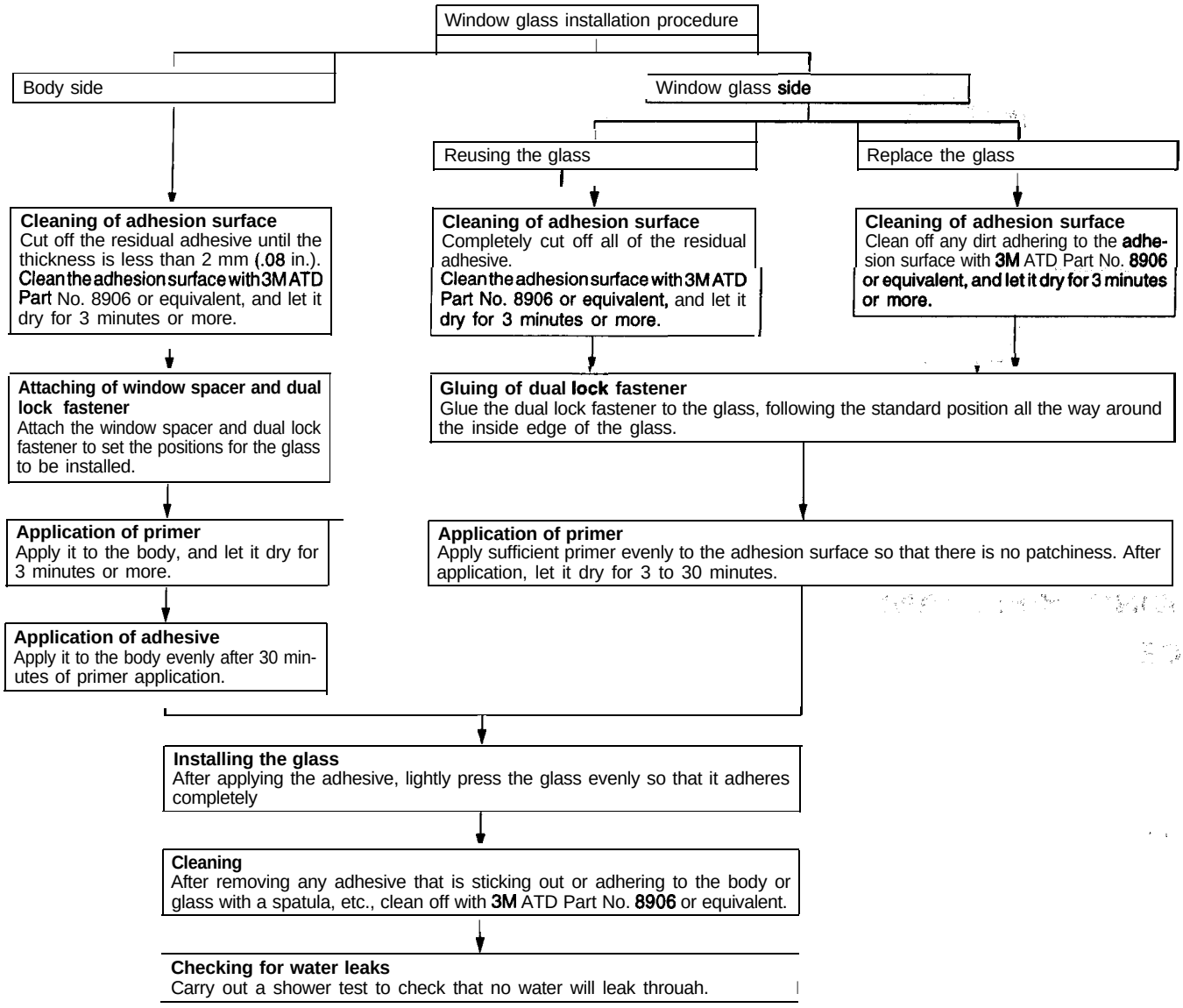

WINDSHIELD

42200100156

REMOVAL AND INSTALLATION

Pre-removal and Post-installation Operation
Removal and Installation
- Front Deck Garnish
  (Refer to GROUP 51 – Garnishes.)
- Front Pillar Trim (Refer to GROUP 52A – Trims.)
- Headlining (Refer to GROUP 52A – Headlining.)

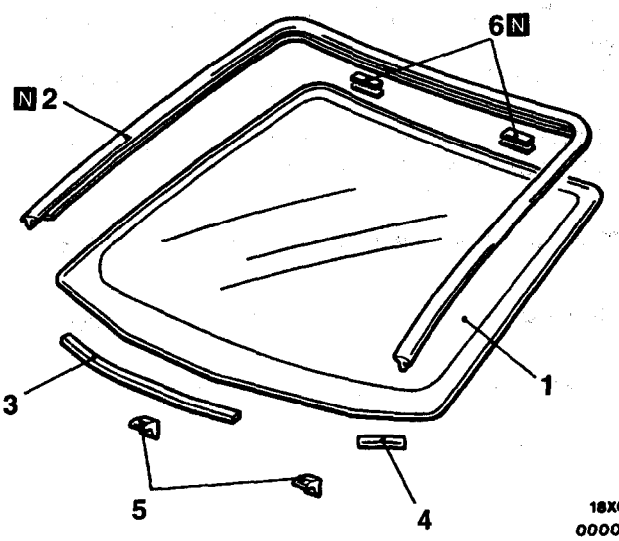

18X0785
00003799

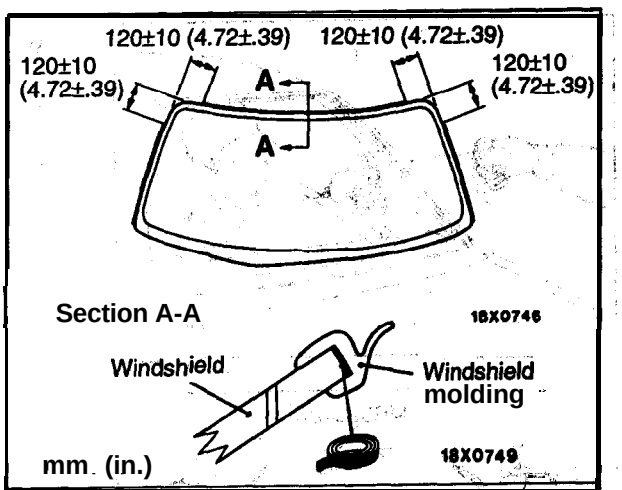

Adhesive tape:
3M ATD Part No. 6382 or equivalent

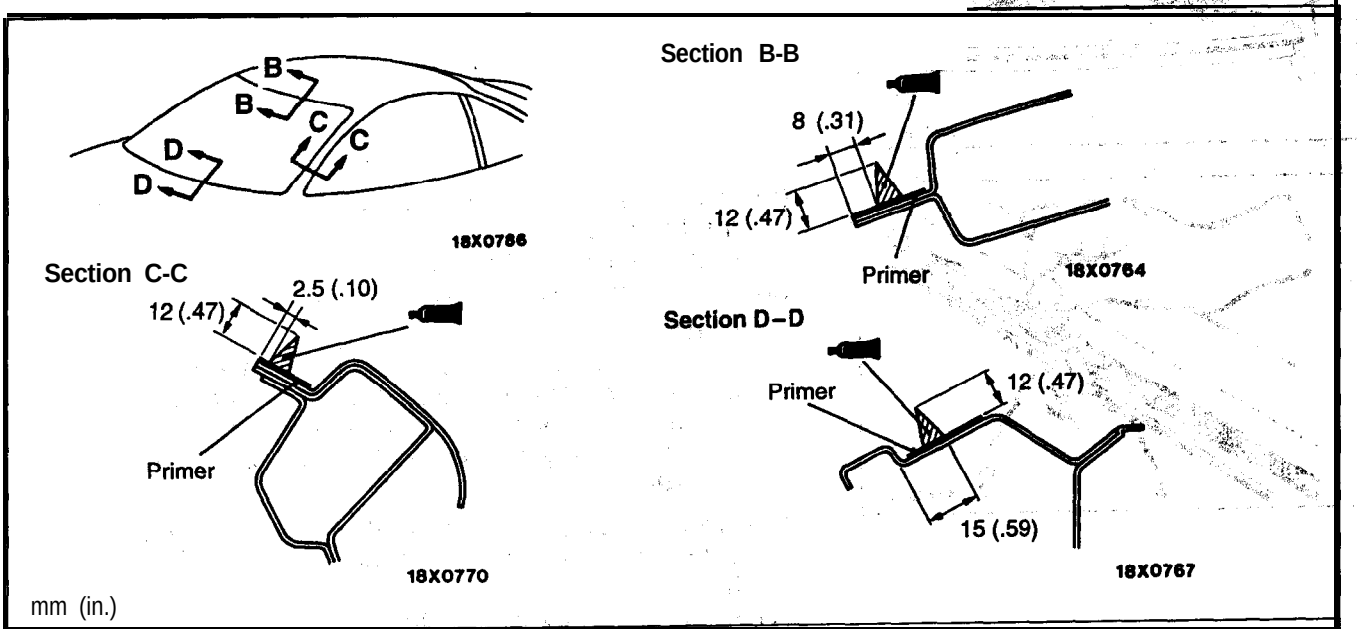

Adhesive:
3M ATD Part No. 8609 Super Fast Urethane and 3M ATD Part No.8608 Super Fast Urethane Primer or equivalent

Removal steps

◀A▶ ▶D◀ 1. Windshield
▶C◀ 2. Windshield molding
▶B◀ 3. Window spacer
▶B◀ 4. Window spacer
5. Window spacer
▶A◀ 6. Dual-lock fastener

TSB Revision

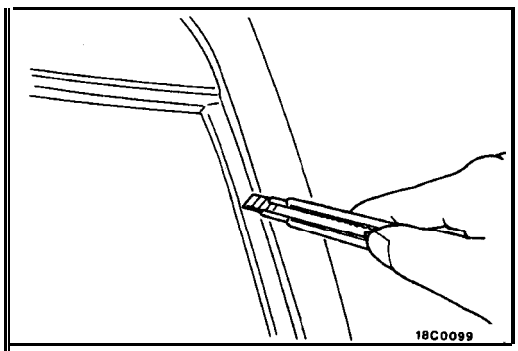

REMOVAL SERVICE POINT

◀A▶ WINDSHIELD REMOVAL

(1) To protect the body (paint surface), apply cloth tape. to all body areas around the installed windshield.
(2) Cut the molding with a cutter knife.

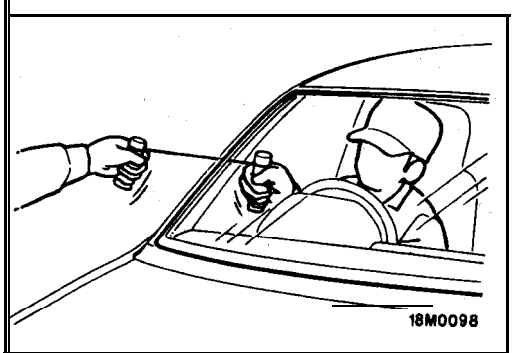

(3) Using a sharp-point drill, make hole in the windshield adhesive.
(4) Pass the piano wire from the inside of the vehicle through the hole.
(5) Pull the piano wire alternately from the inside and outside along the windshield to cut the adhedve.

Caution
Do not let the piano wire touch the edge of the windshield.

(6) Make mating marks on the windshield and body.

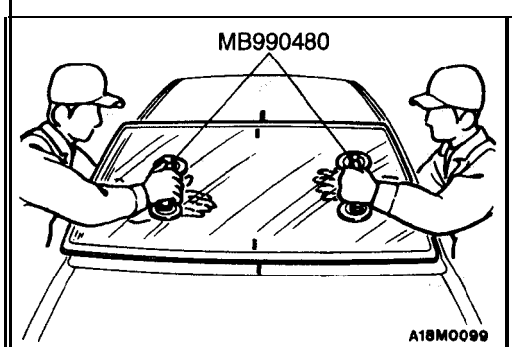

(7) Use the special tool to remove the windshield.

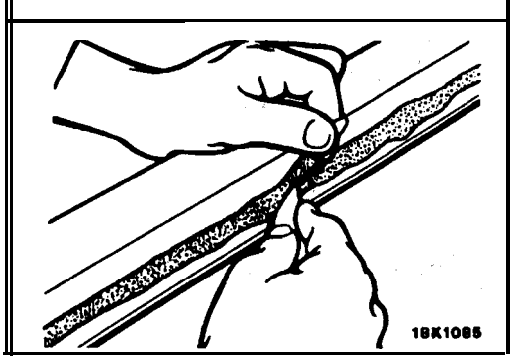

(8) Use a knife to cut away the remaining adhesive so that the thickness is within 2 mm (.08 in.) around the entire circumference of the body flange.
(9) Finish the flange surfaces so that they are smooth.

Caution
1. **Do not remove more adhesive than is necessary.**
2. **Do not damage the paintwork on the body surface with the knife. If the paintwork is damaged, repair the damaged area with repair, paint or anti-rust agent.**

(lO)When reusing the windshield, remove the adhesive still adhering to the windshield, and clean with isopropyl alcohol.
(ll)Clean the body side in the same way.

Caution
Let the cleaned places stand for 3 minutes or more, and carry out the next procedures after they have dried. Also, do not touch any surface that has been cleaned.

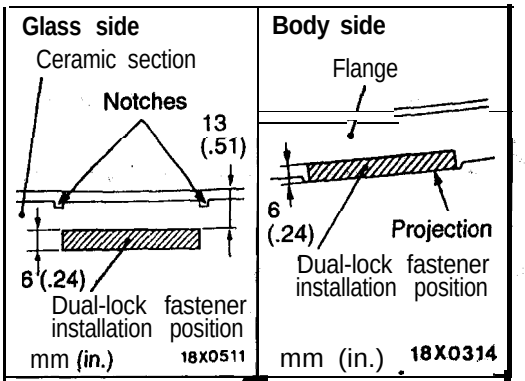

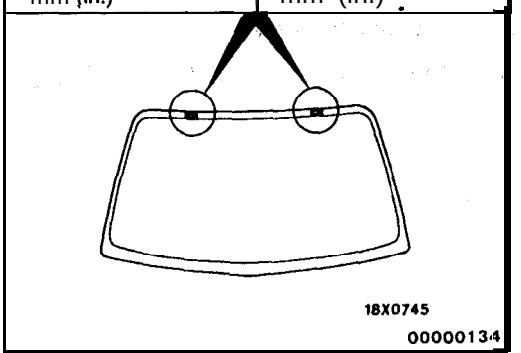

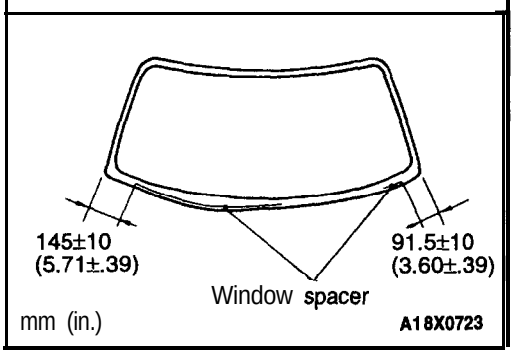

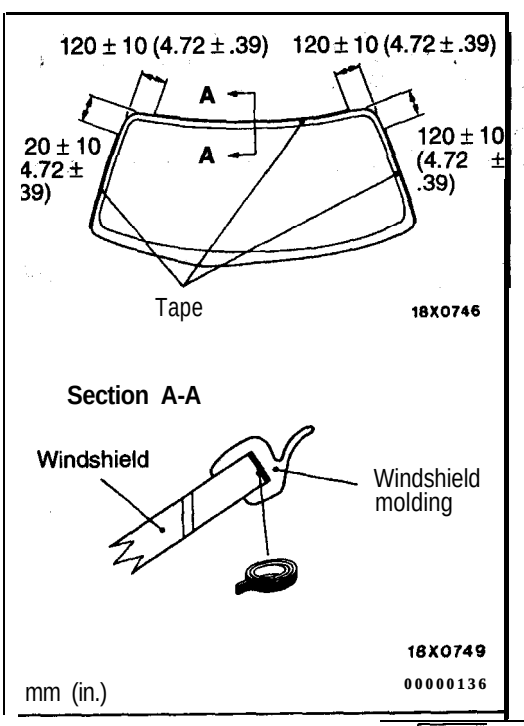

INSTALLATION SERVICE POINTS

▶A◀ DUAL-LOCK FASTENER INSTALLATION

(1) Wipe the windshield section' in the figure with isopropyl alcohol to clean it and to remove all grease, etc.

(2) Attach the dual-lock fastener in the places shown in the illustration so that there are no bends or wrinkles on the windshield or the body.

▶B◀ WINDOW SPACER INSTALLATION

Install the window spacers to the windshield in the places shown in the illustration.

▶C◀ WINDSHIELD MOLDING INSTALLATION

Apply specified double-sided tape to the windshield in the places shown in the illustration, and then install the windshield molding.

Specified adhesive tape:
3M ATD Part No. 6362 or equivalent

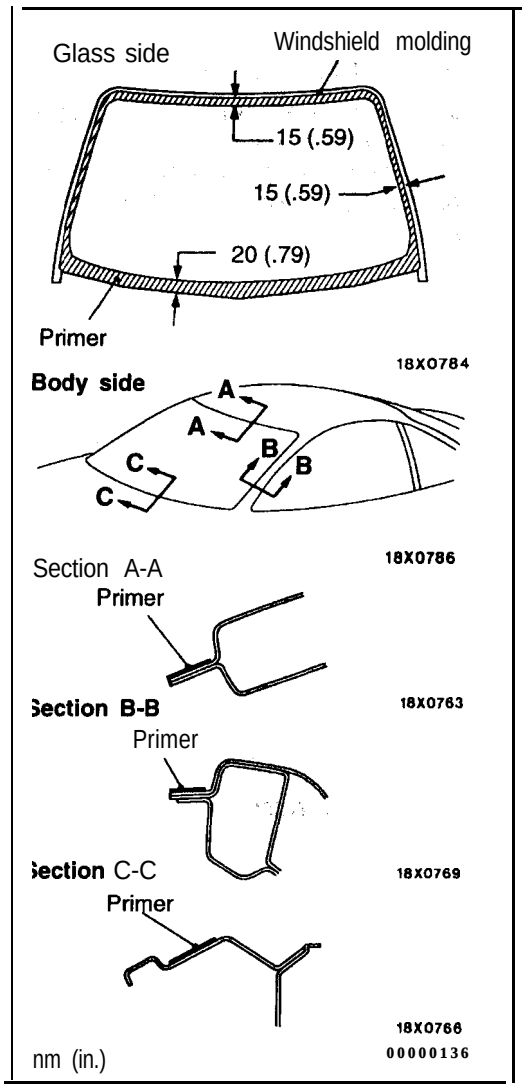

▶D◀ WINDSHIELD INSTALLATION

(1) Soak a sponge in the primer, and apply evenly to the glass and the body in the places shown in the illustration.

Specified primer:
3M ATD Part No. 8808 Super Fast Urethane Primer or equivalent

Caution

1. **Apply the primer evenly around the entire circumference, because it strengthens the adhesive. Otherwise, a too thick application will cause lowering of the adhesive strength.**
2. **Do not touch the coated surface.**

(2) After applying the primer, let it dry for 3 to 30 minutes.

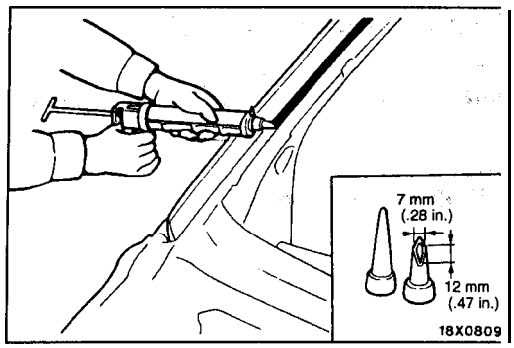

(3) Within 30 minutes after applying the primer, use a sealant gun to apply the adhesive evenly over the adhesive surface of the vehicle body. (Refer to P.42-17.)

Specified adhesive:
3M ATD Part No. 8809 Super Fast Urethane or equivalent

NOTE
Cut the nozzle tip of the sealant gun into a V shape to facilitate adhesive application.

(4) After aligning the mating marks, press the glass gently and evenly so that" it "adheres completely.

(5) After completion of this operation (after installing the glass), place it somewhere where it will not be disturbed, until the adhesive sets.

Caution

If heat is applied with an infra-red light to shorten the setting time, keep the surface temperature of the adhesive below 60°C (140°F).

(6) After attaching the windshield to the body, let it stand far 30 minutes or more, and then test for water leakage.

Caution

1. If moving the vehicle: it should be done gently.
2. When testing for water leakage, do not pinch the end of the hose to spray the water.

QUARTER WINDOW GLASS <ECLIPSE>

42200250059

REMOVAL AND INSTALLATION

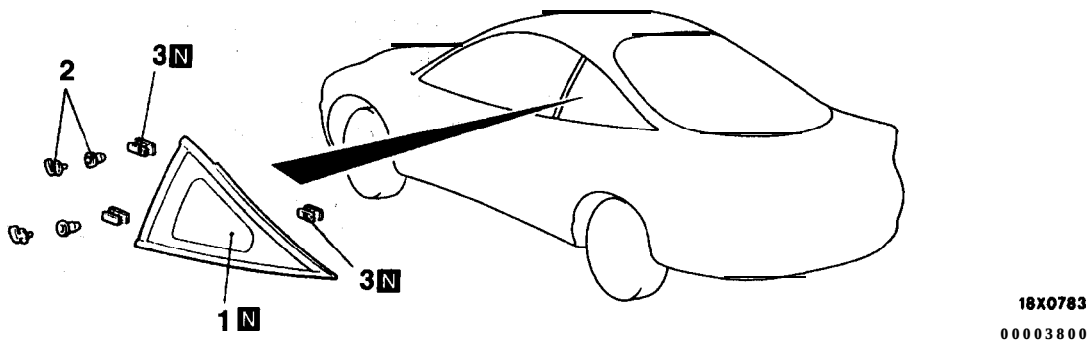

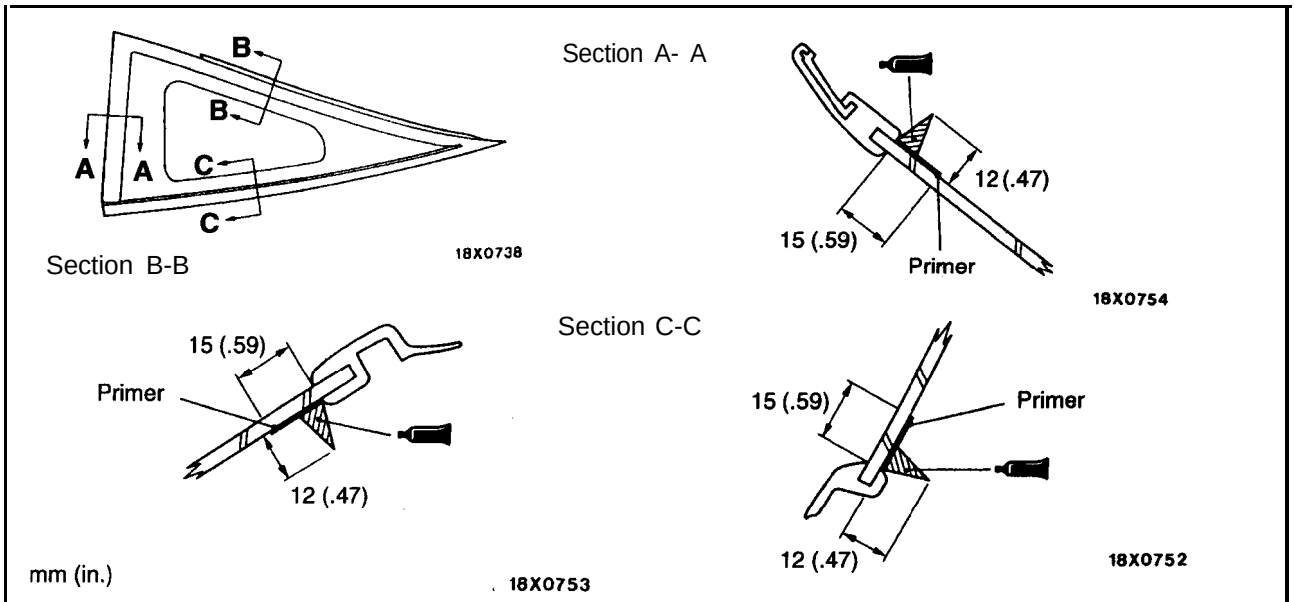

Adhesive:
3M ATD Part No. 8609 Super Fast Urethane and 3M ATD Part No. 8608 Super Fast Urethane Primer or equivalent

Removal steps

◀A▶ ↗ 1. Quarter window glass assembly
2. Clip grommet
▶A◀ 3 : Dual-lock fastener

TSB Revision

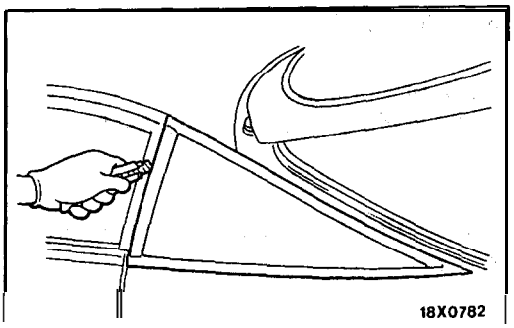

REMOVAL SERVICE POINT

◀A▶ QUARTER WINDOW GLASS ASSEMBLY REMOVAL

(1) For protection of the body (coated surface), apply cloth 'tape to all around the body where the glass is installed.
(2) Using a cutter knife, cut off the quarter window molding along its edge.

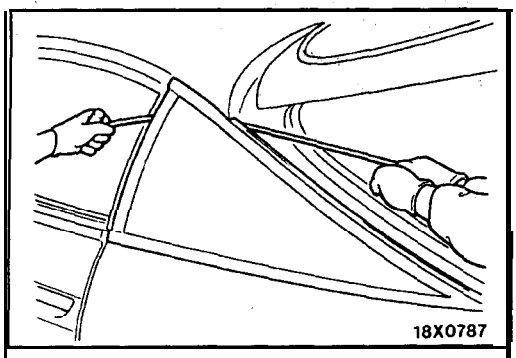

(3) Run a wire between the glass and the body at the upper portion of the quarter window and pull it back and forth along the glass to cut through the adhesive.
When doing so, pay attention to the clip grommet.

Caution
Hold the window glass with the glass holders to pre-, vent it from falling when the adhesive& cut through.

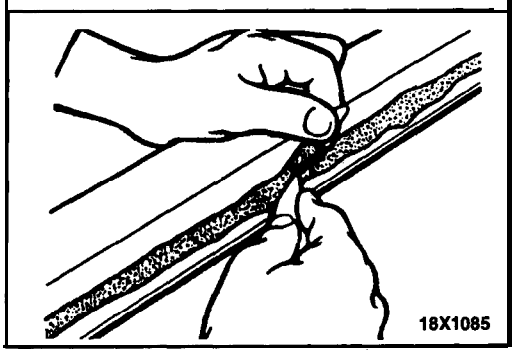

(4) Using a sharp knife, scoop out existing adhesive from. the body flange to 2 mm (.08 in.) or less thickness all around the window opening.
(5) Finish smooth the flange surface.

Caution
1. **Do not remove the adhesive more than necessary.**
2. **Use care not to damage the coated surface of the body with the knife. If it is' damaged, apply retouch paint or anti-corrosive.**

(6) Degrease using with isopropyl alcohol.

Caution
After degreasing, allow three minutes or more to dry well before next work. Do not touch the degreased surface.

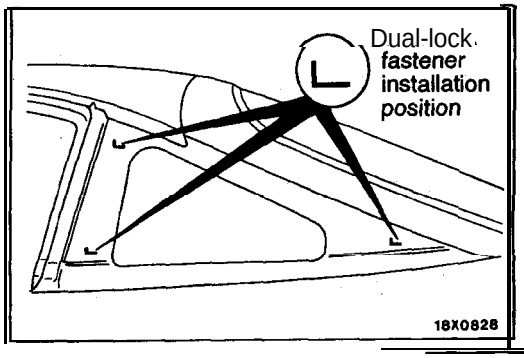

INSTALLATION SERVICE POINTS

▶A◀ DUAL-LOCK FASTENER INSTALLATION

After making sure that there are no bends or raised sections in the dual-lock fasteners, attach the dual-lock fasteners to the places shown in the illustration.,

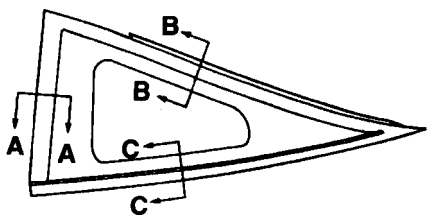

Section A-A

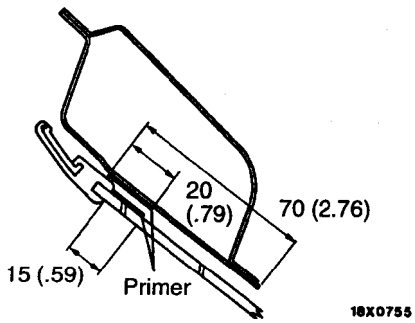

Section B-B

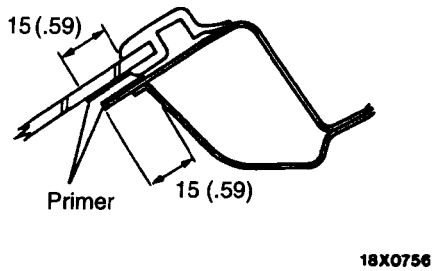

Section C-C

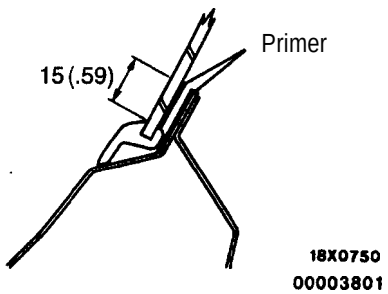

m (in.)

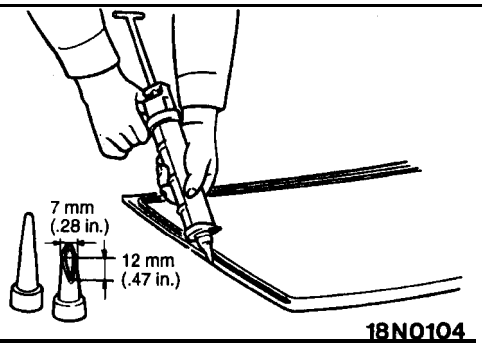

▶B◀ QUARTER WINDOW GLASS ASSEMBLY INSTALLATION

(1) Apply a uniform coat of primer to the illustrated areas of the body and glass making sure it is applied without breaks or thin spots.

Specified primer:
3M ATD Part No. 8608 Super Fast Urethane Primer or **equivalent**

Caution
1. **Always use the primer to strengthen bonding power. Make sure that it covers the surfaces completely. Note that the primer if applied too thick can cause loss of bonding power.**
2. **Never touch the primer coated surface.**

(2) Allow 3 to 30 minutes to dry the primer.

(3) Within 30 minutes after applying the primer, fill the sealant gun with adhesive and apply the adhesive evenly around the entire circumference of the glass.
(Refer to P.42-22.)

Specified adhesive:
3M ATD Part No. 8609 Super Fast Urethane or equivalent

NOTE
Cut the nozzle tip of the sealant gun into a **V** shape to facilitate adhesive application.

(4) After application of the adhesive, force the glass lightly and evenly onto the body for complete fitting.

(5) Remove the adhesive from around and on the glass and body surfaces using a spatula and wipe the surfaces clean.

(6) After the work (installation of the glass), allow the glass to stand until the adhesive hardens.

Caution

When using an infrared lamp or other means for quicker hardening, keep the surface temperature 60°C (140°F) or lower.

(7) After about 30 minutes or more following bonding of the quarter window glass to the body, check for water leaks.

Caution

1. If the vehicle is to be moved, do so gently.

2. When checking for water leaks, do not squeeze the hose end.

QUARTER WINDOW GLASS AND REGULATOR ASSEMBLY <ECLIPSE SPYDER>

42200600021

REMOVAL AND INSTALLATION

Post-installation Operation
Quarter Window Glass Adjustment (Refer to P.42-11.)

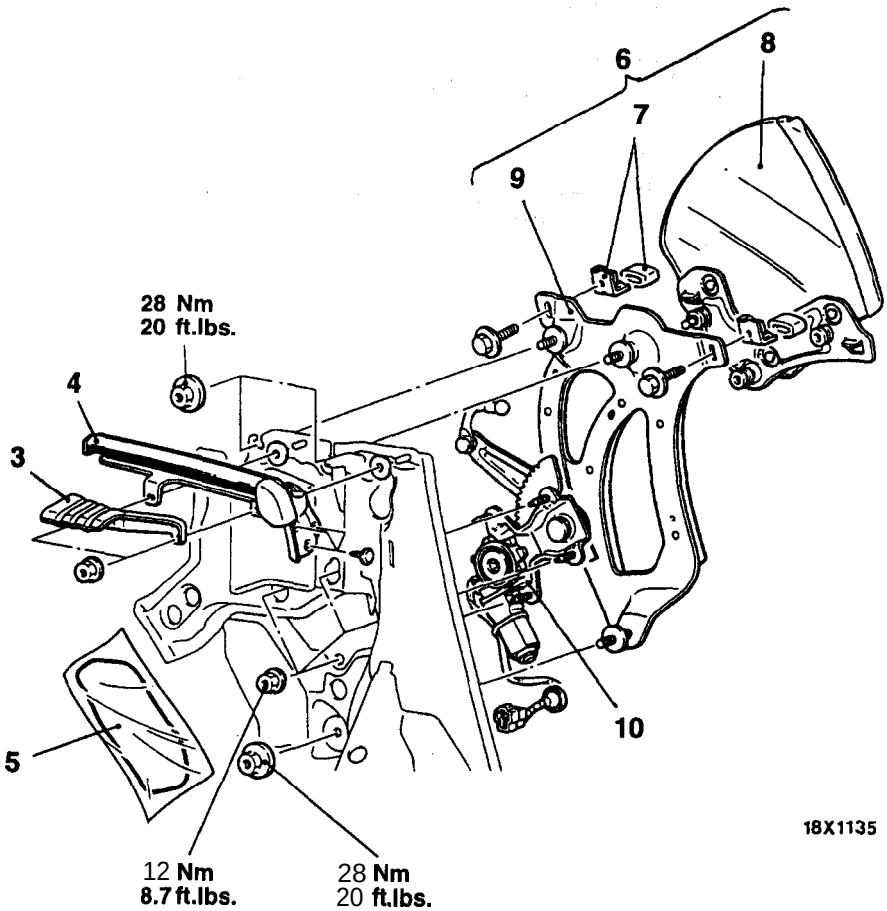

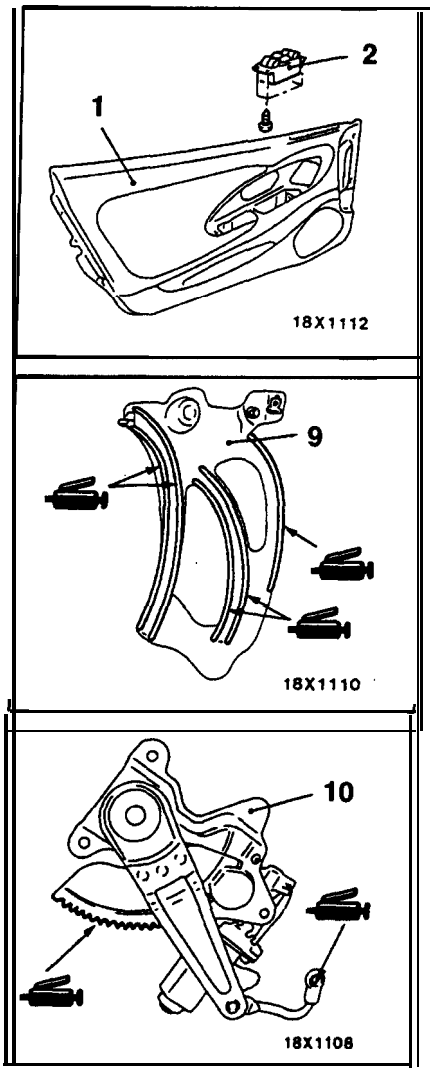

Power window switch removal steps

1. Door trims (Refer to GROUP 42 – Door.)
2. Power window switch

Quarter window glass removal steps

- Quarter trim, lower (Refer to GROUP 52A – Trims.)
- Quarter belt moulding (Refer to GROUP 51 – Mouldings.)

3. Quarter trim bracket
4. Quarter belt line inner weatherstrip and quarter window front weatherstrip
5. Waterproof film

◀A▶ ▶A◀ 6. Quarter window glass assembly

7. Up-stop
8. Quarter window glass
9. Guide assembly

Regulator assembly removal steps

◀A▶ ▶A◀ 6. Quarter window glass assembly

- Rear speaker bracket A (Refer to GROUP 54 – Speaker.)

◀B▶ 10. Regulator assembly

TSB Revision

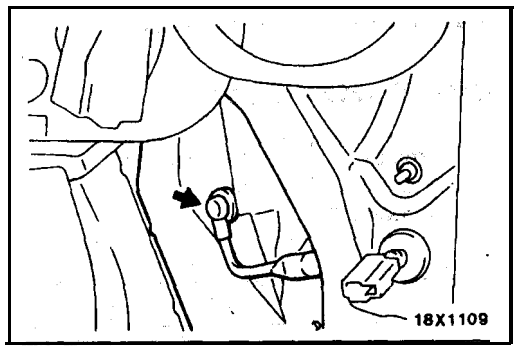

REMOVAL SERVICE POINT

◀A▶ QUARTER WINDOW GLASS ASSEMBLY REMOVAL

(1) Completely lower the quarter window glass.
(2) Remove the waterproof film.
(3) Disconnect the ball joint of regulator assembly from the quarter window glass through the service hole.

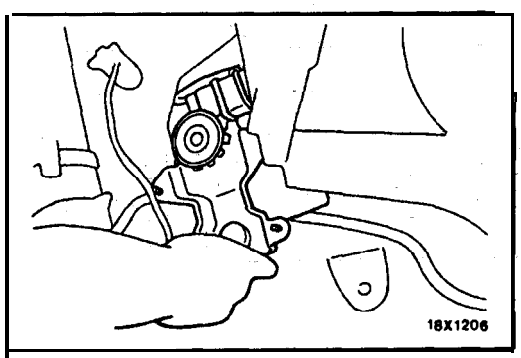

◀B▶ REGULATOR ASSEMBLY REMOVAL

Disconnect motor connector, remove from bottom opening.

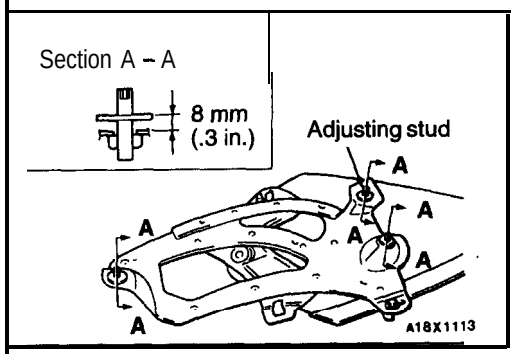

INSTALLATION SERVICE POINT

▶A◀ QUARTER WINDOW GLASS ASSEMBLY INSTALLATION

Set the length of the adjusting stud to the dimension shown in the illustration to make adjustment of the quarter window glass easier.

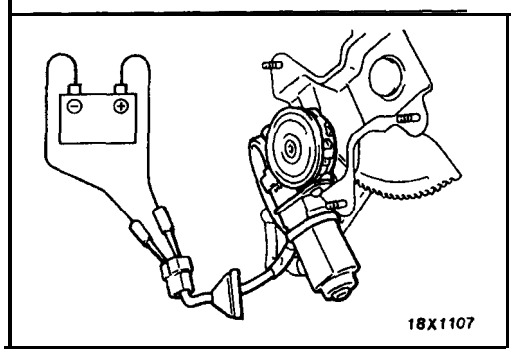

INSPECTION

42200610017

POWER WINDOW MOTOR CHECK

(1) Check that the motor runs smoothly when the battery is connected directly to the motor terminals.
(2) Furthermore, check that the motor operates in reverse when the terminal connections are switched.

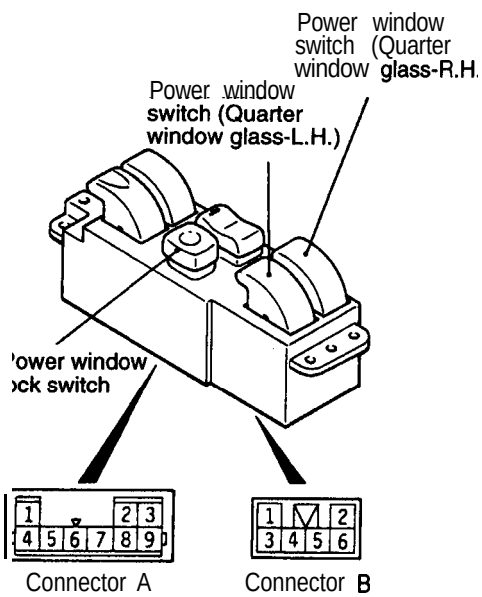

POWER WINDOW SWITCH CONTINUITY CHECK

422000620010

Main switch <For Quarter Window Glass>

Switch position		Terminal No. of connector A	Terminal No. of connector B					
		2	1	2	3	4	5	6
Switch for L.H. quarter window glass	UP			○				○
	OFF				○		○	○
	DOWN			○	○			
Switch for R.H. quarter window glass	UP		○	○				
	OFF		○			○	○	
	DOWN			○		○		
ock switch	ON	0	○		○	○	○	○
	OFF		○		○	○	○	○

LIFTGATE GLASS <ECLIPSE>

42200370106

REMOVAL AND INSTALLATION

Pre-removal and Post-installation Operation
Removal and Installation
- Rear Wiper Arm
  (Refer to GROUP 51 – Rear Wiper and Washer.)
- Liftgate Upper Trim, Liftgate Lower Trim and Liftgate Side Trim (Refer to GROUP 52A – Trims.)
- High-mounted Stop Light <Vehicles without rear spoiler, (Refer to GROUP 54 – High-mounted Stop Light.)

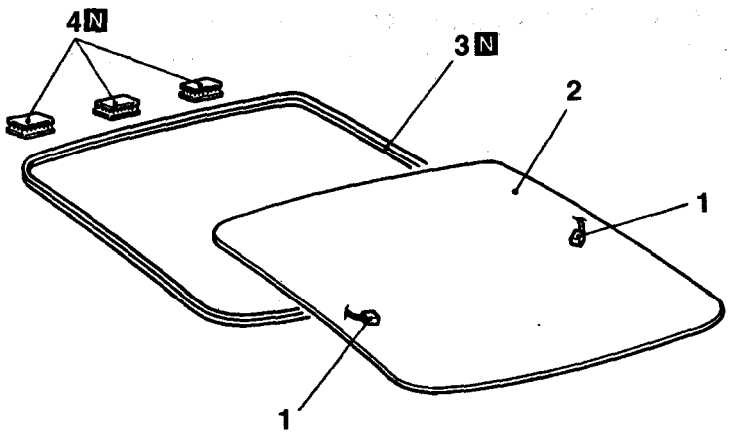

18X0781
00003802

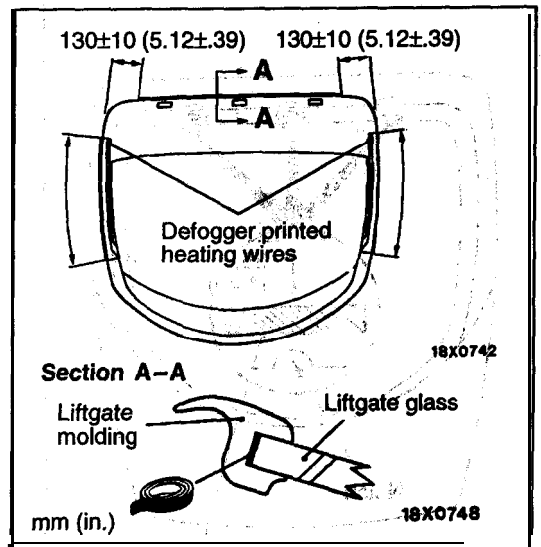

Adhesive tape:
3M ATD Part No. 6382 or equivalent

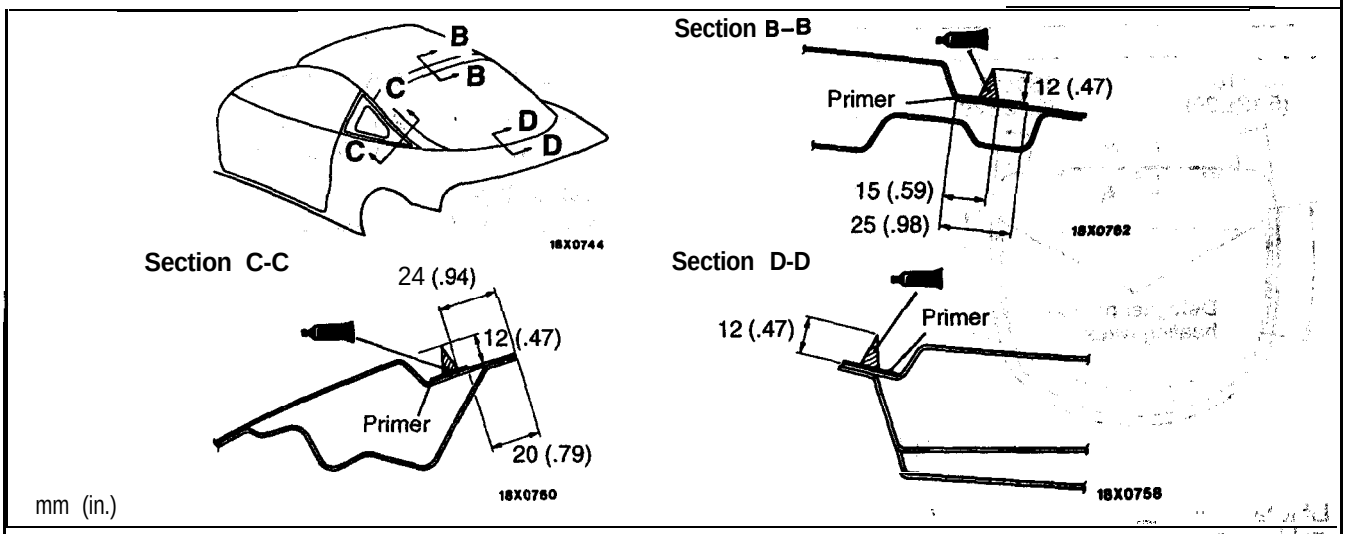

Adhesive:
3M ATD Part No. 8609 Super Fast Urethane and 3M ATD Part No. 8608 Super Fast Urethane prim& or equivalent

Removal steps

1. Harness connector
◀A▶ ▶C◀ 2. Liftgate glass
▶B◀ 3. Liftgate molding
▶A◀ 4. Dual-lock fasteners

TSB Revision

REMOVAL SERVICE POINT

◀A▶ LIFTGATE GLASS REMOVAL

Remove the same way as the windshield. (Refer to P.42-17.)

INSTALLATION SERVICE POINTS

▶A◀ DUAL-LOCK FASTENER INSTALLATION

After making sure that there are no bends or raised sections in the dual-lock fasteners, attach the dual-lock fasteners to the notches in the body as shown in the illustration.

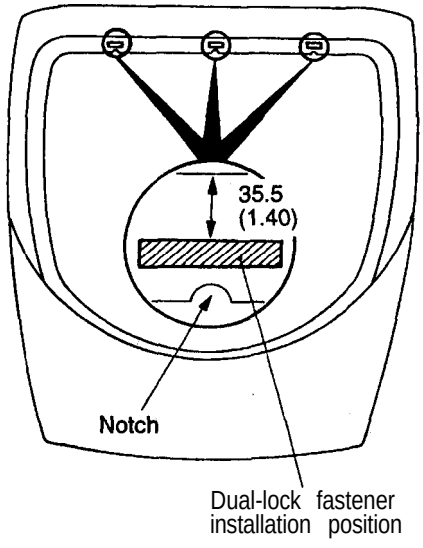

mm (in.) A18X0829

▶B◀ LIFTGATE MOLDING INSTALLATION

Apply specified double-sided tape to the glass in the places shown in the illustration, and then install the liftgate molding.

Specified adhesive tape:
3M ATD Part No. 6382 or equivalent

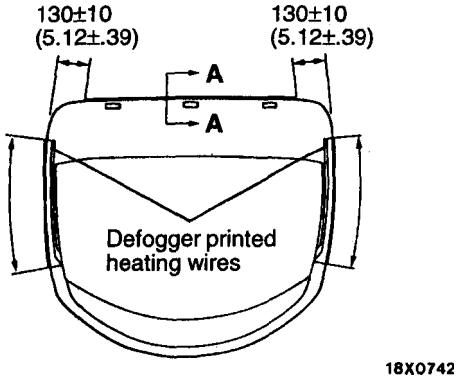

18X0742

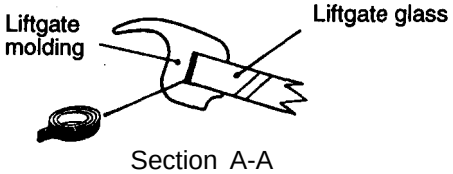

Section A-A

18X0748
00003877

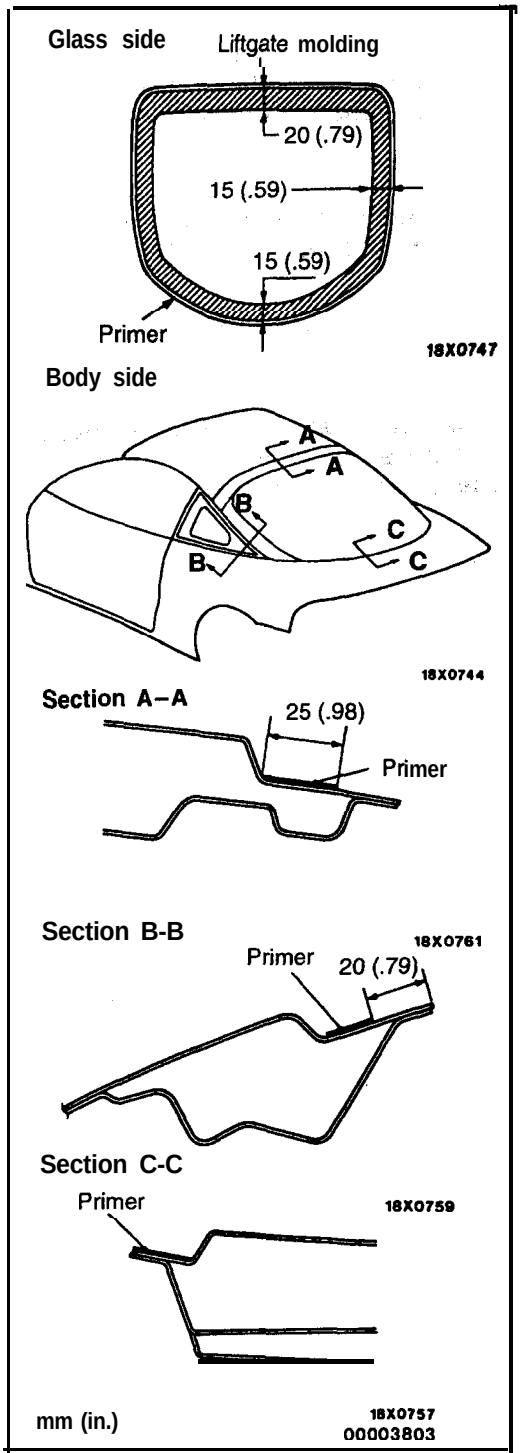

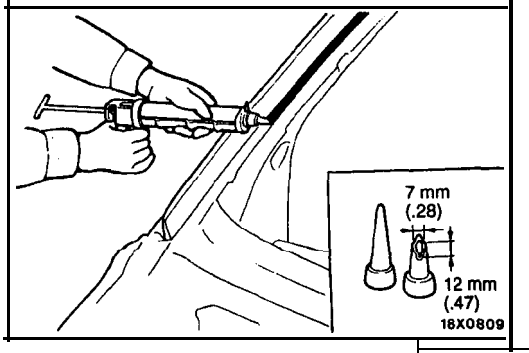

▶C◀ LIFTGATE GLASS INSTALLATION

(1) Soak a sponge in the primer, and apply evenly to the glass and the body in the places shown in the illustration.

Specified primer:
3M ATD Part No. 8608 Super Fast Urethane Primer or equivalent

Caution
1. **Apply the primer evenly around the entire circumference, because it strengthens the adhesive. Otherwise, a too thick application will cause lowering of the adhesive strength.**
2. **Do not touch the coated surface.**

(2) After applying the primer, let it dry for 3 to 30 minutes.

(3) Within 30 minutes after applying the primer, use a sealant gun to apply the adhesive evenly over the adhesion surface of the vehicle body. (Refer to **P.42-29.**)

Specified adhesive:
3M ATD Part No. 8609 Super Fast Urethane or equivalent

NOTE
Cut **the nozzle tip of the sealant gun into a V** shape to facilitate adhesive application.

(4) After aligning the mating marks, press the glass gently and evenly so that it adheres completely.

(5) After completion of this operation' (after installing the glass), place it somewhere where it will not be disturbed, until the adhesive sets.

Caution

When using an infrared lamp or other means for quicker hardening, keep the surface temperature 60°C (140°F) or lower.

(6) After attaching the glass to the body, let it stand for 30 minutes or more, and then test for water leakage.

Caution

1. If moving the vehicle, it should be done gently.

2. When testing for water leakage, do not pinch the end of the hose to spray the water.

DOOR

42300030113

SERVICE SPECIFICATIONS

Items			Standard value
Inside handle play mm (in.)			6.2 (.24) or more
Outside handle play mm (in;)			4.4 (.17) or more
Clearance of door window glass to weatherstrip holder mm (in.)	Adjustment of glass inclination amount	Front pillar	37.0 (1.46)
		Roof or convertible top	3 1 .0 (1.22)
	Adjustment of glass longitudinal inclination	Front pillar	1.6 (.06)
		Roof or convertible top	1 .9 (.07)
		Quarter pillar <ECLIPSE>	13.0 ± 1.0 (.51 ± .04)
Clearance between door window glass and door window glass catch mm (in.)		Front pillar	4.8 ± 1.0 (.19 ± .04)
		Roof or Convertible top	6.3 ± 1 .0 (.25 ± .04)
		Quarter pillar <ECLIPSE>	13.0 ± 1 .0 (.51 ± .04)
Overlap margin between door window glass and door window glass catch mm (in.)		Front pillar	1.6 (.06)
		Roof or Convertible top	1 .9 (.07)
Distance between door window glass and weatherstrip step line mm (in.)		Front pillar	1.6 (.06)
		Roof or Convertible top	1 .9 (.07)

SEALANT

42300050027

Items	Specified sealant
Waterproof film	3M ATD Part No. 8625 or equivalent

SPECIAL TOOLS

42300060044

Tool	Tool number and name	Supersession	Application
	MB990784 Ornament remover	General service tool	Removal of switch, trim,. etc.
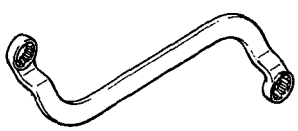	MB990834 Door adjusting wrench	MB990834–01	Adjustment of door fit

Tool	Tool number and name	Supersession	Application
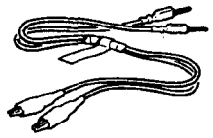	MB991529 Diagnostic trouble codecheckharness	Tool not necessary if scan tool <MUT-II> is available	Checking the power-window system and the central door-locking system by using a voltmeter
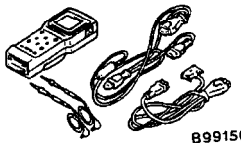 B991502	MB991502 Scan tool (MUT-II)	MB991502	Checking the power-window system and the central door-locking system (ETACS' input check)
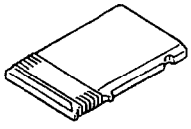 B991325	ROM pack		

TROUBLESHOOTING

42300070146

STANDARD FLOW OF DIAGNOSTIC TROUBLESHOOTING

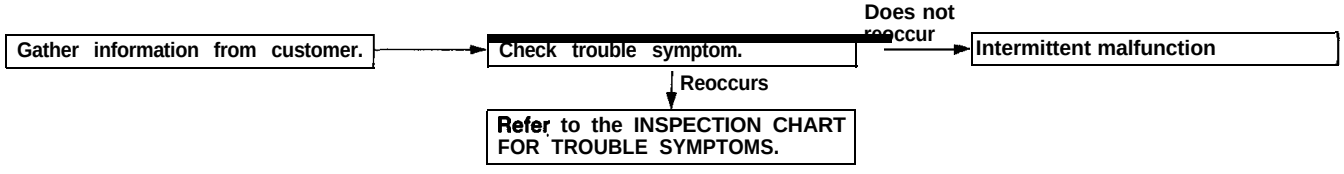

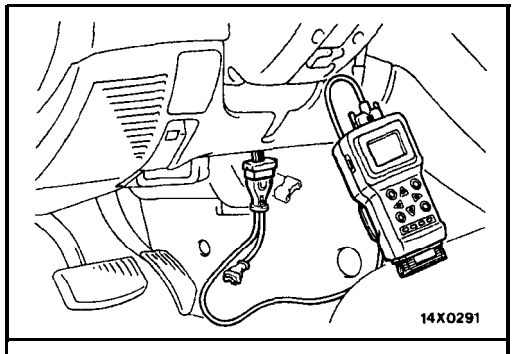

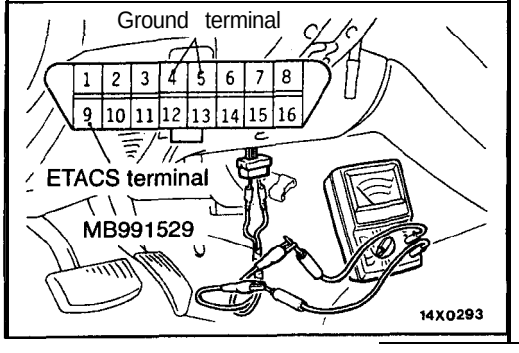

DIAGNOSTIC FUNCTION

INPUT SIGNAL INSPECTION POINTS

When Using the Scan Tool

1. Connect the scan tool to the data link connector.

   Caution
   Always turn the ignition switch OFF before disconnecting or connecting the scan tool.

2. If buzzer of the scan tool sounds once when a switch is operated (ON/OFF), the ECU input signal for that switch circuit system is normal.

When Using a Voltmeter

1. Use the special tool to connect a voltmeter between the grounded terminal and the ETACS terminal of data link connector.
2. If the voltmeter indicator deflects once when a switch is operated (ON/OFF), the ECU input signal for that switch circuit system is normal.

POWER WINDOW

INSPECTION CHART FOR TROUBLE SYMPTOMS

Trouble symptom	Probable cause	Remedy
When ignition switch is turned to ON, power windows do not operate.	• Broken wire in power window switch circuit. or in each harness. • Power window switch is faulty. • Power window motor is faulty. • ETACS-ECU is faulty. • Convertible top control module is faulty. <ECLIPSE SPYDER>	Check according to Flow Chart A (Refer to P.42-36.)
Power windows can be operated even when a door is opened within 30 seconds after the ignition switch has been turned to OFF.	• Broken wire in input circuit in door switch. • Door switch is faulty. • ETACS-ECU is faulty.	Check according to Flow Chart B (Refer to P.42-38.)
After turning the ignition switch to OFF, the timer does not operate.	• ETACS-ECU is faulty.	Replace the ETACS-ECU.
Power windows can be operated over 30 seconds after the ignition switch has been turned to OFF.	• ETACS-ECU is faulty.	Replace the ETACS-ECU
Power windows can be operated by means of the power window sub switches (passengers' side), but can not by means of the power window main switch (driver's side).	• Power window main switch (driver's side door) is faulty.	Check according to Flow Chart C (Refer to P.42-38.)
Passenger's side power window can be operated by means of the power window main switch (driver's side), but can not by means of the power window sub switches (passengers' side).	• Power window sub switch (passenger's side door) is faulty.	Check according to Flow Chart D (Refer to P.42-38.)
When the power windows are not lowered fully, the power windows do not lower automatically if the convertible top switch is set to open or close. <ECLIPSE SPYDER>	• Broken wire in power window up signal circuit. • Convertible top control module.	Check according to Flow Chart E (Refer to P.42-39.)
When the power windows are not lowered fully and the power window main switch's lock switch is OFF, the passenger's side power window does not lower automatically if the convertible top switch is set to open or close. However, the passenger's side power window lowers automatically when the lock switch is ON. <ECLIPSE SPYDER>	• Broken wire in ground input signal circuit. • Power window main switch (driver's side door) is faulty. • Convertible top control module is faulty.	Check according to Flow Chart F (Refer to P.42-39.)

TROUBLE SYMPTOM INSPECTION CHART

A When ignition switch is turned to ON, power window does not operate. <ECLIPSE>

Check the Scan Tool Input Signal
Ignition switch input signal
OK: The scan tool buzzer sounds once when the ignition switch is ON.

NG → Check the harnesses between the ignition switch and the ETACS-ECU. NG → **Repair**

OK ↓

- Power window relay continuity check (Refer to P.42-57.)
- Power window main switch continuity check (Refer to P.42-57.)
- Power window sub switch continuity check (Refer to P.42-58.)
- Power window motor check (driver's side and passengers' side) (Refer to P.42-57.)

NG → **Replace**

OK ↓

Measure at the power window relay connector B-42X.
- Disconnect the connector and measure at the harness side. Voltage between terminal (1), (5) and ground

OK: Battery positive voltage

NG → **Check the following connectors:** B-77 and B-42X NG → **Repair**

OK ↓

Check trouble symptom. NG → **Check the harnesses between the power window relay and fusible link No. 9. Repair, if necessary.**

OK ↓

Check the harness between the power window relay and the ETACS-ECU. NG → **Repair**

OK ↓

Check the harness between the power window relay and the power window main switch and the power window sub switch. NG → **Repair**

OK ↓

Measure at the power window main switch connector D-09.
- Disconnect the connector and measure at the harness side. Continuity between terminal (2) and ground

OK: Continuity

NG → **Check the following connectors:** D-09 and B-52 NG → **Repair**

OK ↓

Check trouble symptom. NG → Check the harness between the power window main switch and ground. Repair, if necessary.

OK ↓

Measure at the power window motor connector D-11 (driver's side) and D-01 (passenger's side).
- Disconnect the connector and measure at the harness side. Continuity between terminals (1), (2) and ground

OK: Continuity

NG → Check the **following connectors:** D-11, D-01, D-04, B-27, B-52 and D-09 NG → **Repair**

OK ↓

Check trouble symptom. NG → Check the harness between the power window main switch and the power window motor (driver's side and passengers' side). **Repair, if necessary.**

OK ↓

Replace the ETACS-ECU

A When ignition switch is turned to' ON, power windows do not operate. <ECLIPSE SPYDER>

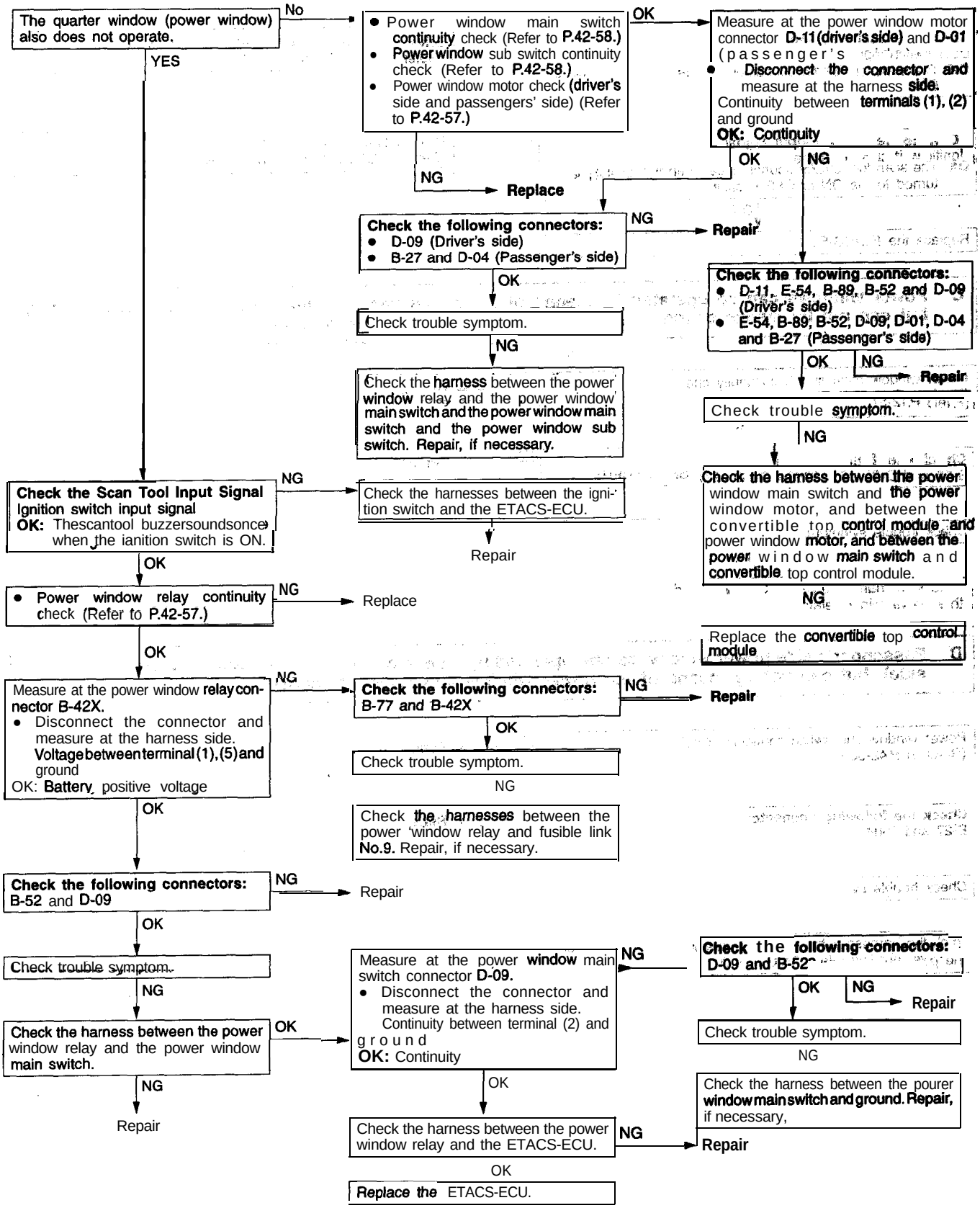

B Power windows can be operated even when a door is opened within 30 seconds after the ignition switch has been turned to OFF.

Check the Scan Tool Input Signal
Door switch input signal
OK: The scan tool buzzer sounds once when the door switch is ON.
→ NG → Driver's side door switch input circuit system check (Refer to GROUP 54 – Ignition Switch)
↓ OK

Check the Scan Tool Input Signal
Ignition switch input signal
OK: The scan tool buzzer sounds once when the ignition key is turned to the ON or OFF position.
→ NG → Ignition switch continuity check (Refer to GROUP 54 – Ignition Switch)
↓ OK

Replace the ETACS-ECU

C Power windows can be operated by means of the power window sub switches (passengers' side), but can not by means of the power window main switch (driver's side).

Power window main switch continuity check
(Refer to P.42-57.)
→ NG → **Replace**
↓ OK

Check the following connectors:
B-52 and D-09 <ECLIPSE> D-09 <ECLIPSE SPYDER>
→ NG → **Repair**
↓ OK

Check trouble symptom.
↓ NG

Check the harness between the power window main switch and the power window relay. Repair, if necessary.

D Passenger's side power window can be operated by means of the power window main switch (driver's side), but can not by means of the power window sub switches (passengers' side).

Power window sub switch continuity check
(Refer to P.42-58.)
→ NG → **Replace**
↓ OK

Check the following connectors:
B-27 and D-04
→ NG → **Repair**
↓ OK

Check trouble symptom.
↓ NG

Check the harness between the power window sub switch and the power window relay. Repair, if necessary.

TSB Revision

E When the power windows are not lowered fully, the power windows do not lower automatically if the convertible top switch is set to open or close.

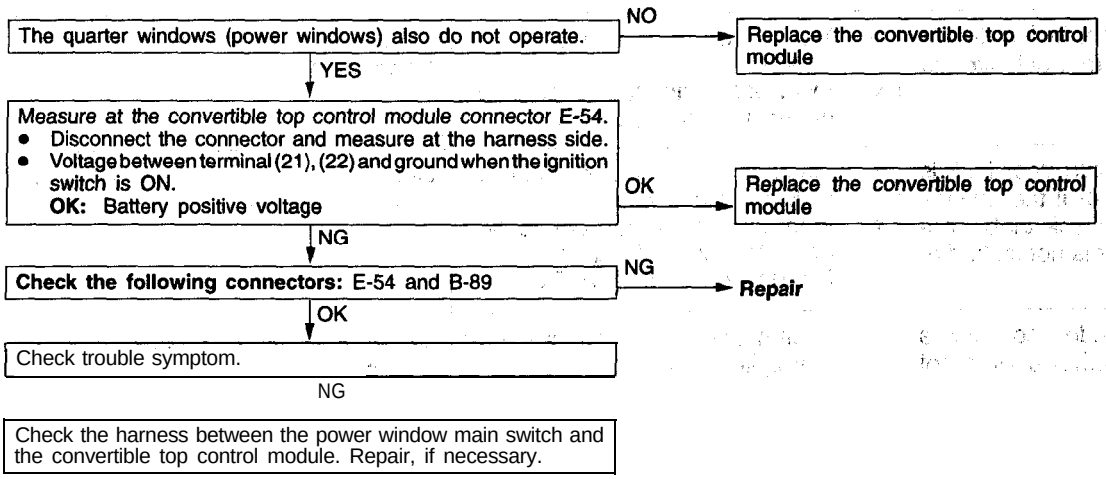

F When the power windows are not lowered fully and the power window main switch's lock switch is OFF, the passenger's side power window does not lower automatically if the convertible top switch is set to open or close. However, the passenger's, side. power window lowers automatically when the lock switch is ON;

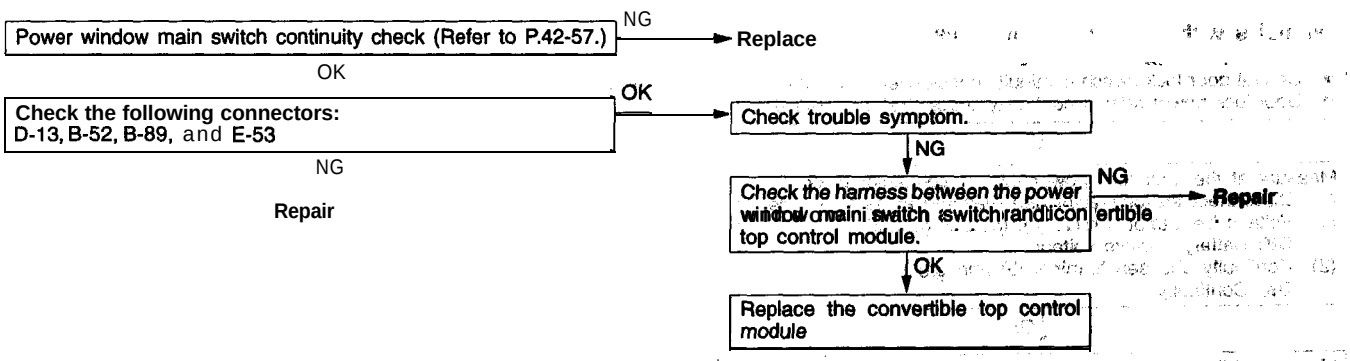

CENTRAL DOOR LOCKING SYSTEM

INSPECTION CHART FOR TROUBLE SYMPTOM

Trouble symptom	Probable cause	Remedy
When the central door lock switch is operated, all doors are not locked or unlocked.	• Malfunction of central door lock switch • Incorrect connector connection or malfunction of harness	Check according to Flow Chart A (Refer to P.42-40.)
When the driver's side door lock is turned with the key or if the driver's side door inside door lock knob is operated, another door is not locked or unlocked.	• Malfunction of driver's side door lock actuator switch • Incorrect connector connection or malfunction of harness • Malfunction of ETACS-ECU	Check according to Flow Chart B (Refer to P.42-42.)
When the driver's side door lock is turned with key, another door is not unlocked.	• Malfunction of driver's side door key cylinder switch • Incorrect connector connection or malfunction of harness • Malfunction of ETACS-ECU	Check according to Flow Chart C (Refer to P.42-42.)
When the passenger's side door lock s turned with key, another door is not ocked or unlocked.	• Malfunction of passenger's side door key cylinder switch • Incorrect connector connection or malfunction of harness	Check according to Flow Chart D (Refer to P.42-43.)

TROUBLE SYMPTOM INSPECTION CHART

A When the central door lock switch is operated, all doors are not locked or unlocked.

<Vehicles without keyless entry system>

- Central door lock switch continuity check (Refer to P.42-61).
- Door lock power relay 1 continuity check (Refer to P.42-61).

NG → Replace

↓ OK

Measure at the door lock power relay 1 connector B-32
- Disconnect the connector and measure at harness side.

(1) Voltage between terminal (2), (7) and ground
OK: Battery positive voltage
(2) Continuity between terminal (5) and ground
OK: Continuity

(1) NG → Check the harness between the fusible link No.2 and the door lock power relay 1. Repair, if necessary.

(2) NG → Check the harness between the door lock power relay 1 and the ground. Repair, if necessary.

↓ OK

Measure at the door lock switch connector D-09 (L.H.) and D-04 (R.H.)
- Disconnect the connector and measure at harness side.

(1) L.H.: Voltage between terminal (1), (4) and ground
OK: Battery positive voltage
R.H.: Voltage between terminal (8), (5) and ground
OK: Battery positive voltage
(2) L.H.: Continuity between terminal (2) and ground
OK: Continuity
R.H.: Continuity between terminal (7) and ground
OK: Continuity

(1) NG → Check the harness between the door lock switch and the door lock power relay 1. Repair, if necessary.

(2) NG → Check the harness between the door lock switch and the ground. Repair, if necessary.

↓ OK

Door lock actuator check (Refer to P.42-60.)

NG → Replace

↓ OK

Check the harness between the door lock actuator and the door lock power relay 1. Repair, if necessary.

<Vehicles with keyless entry system>,

- Central door lock switch continuity check (Refer to P.42-61).
- Door lock power relay 1 continuity check (Refer to P.42-61).
- Door lock power relay 2 continuity check (Refer to P.42-62).

NG → Replace

OK ↓

Measure at the door lock power relay 1 connector B-32 and the door lock power relay 2 connector E-41
- Disconnect the connector and measure at harness side.

(1) Voltage between terminal (2), (7) and ground
OK: Battery positive voltage
(2) Continuity between terminal (2) and ground
OK: Continuity

(1) NG → Check the harness between the fusible link No.2 and the door lock power relay 1, and between the fusible link No.2 and door lock power relay 2. Repair, if necessary.

(2) NG → Check the harness between the door lock power relay 1 and the ground, and between the door lock power relay 2 and ground. Repair, if necessary.

OK

Measure at the door lock switch connector D-09 (L.H.) and D-04 (R.H.)
- Disconnect the connector and measure at harness side.

(1) L.H.: Voltage between terminal (I), (4) and ground
OK: Battery positive voltage
R.H.: Voltage between terminal (8), (5) and ground
OK: Battery positive voltage
(2) L.H.: Continuity between terminal (2) and ground
OK: Continuity
R.H.: Continuity between terminal (7) and ground
OK: Continuity

(1) NG → Check the harness between the door lock switch and the door lock power relay 1, and between the door lock switch and the door lock power relay 2. Repair; if necessary.

(2) NG → Check the harness between the door lock switch and the ground. Repair, if necessary.

OK ↓

Door lock actuator check (Refer to P.42-60.)

NG → Replace

OK ↓

Check the harness between the door lock actuator and the door lock power relay 1, and between the door lock actuator and the door lock power relay 2. Repair, if necessary.

TSB Revision

B When the driver's side door lock is turned with the key or if the driver's side door inside door lock knob is operated, another door is not locked.

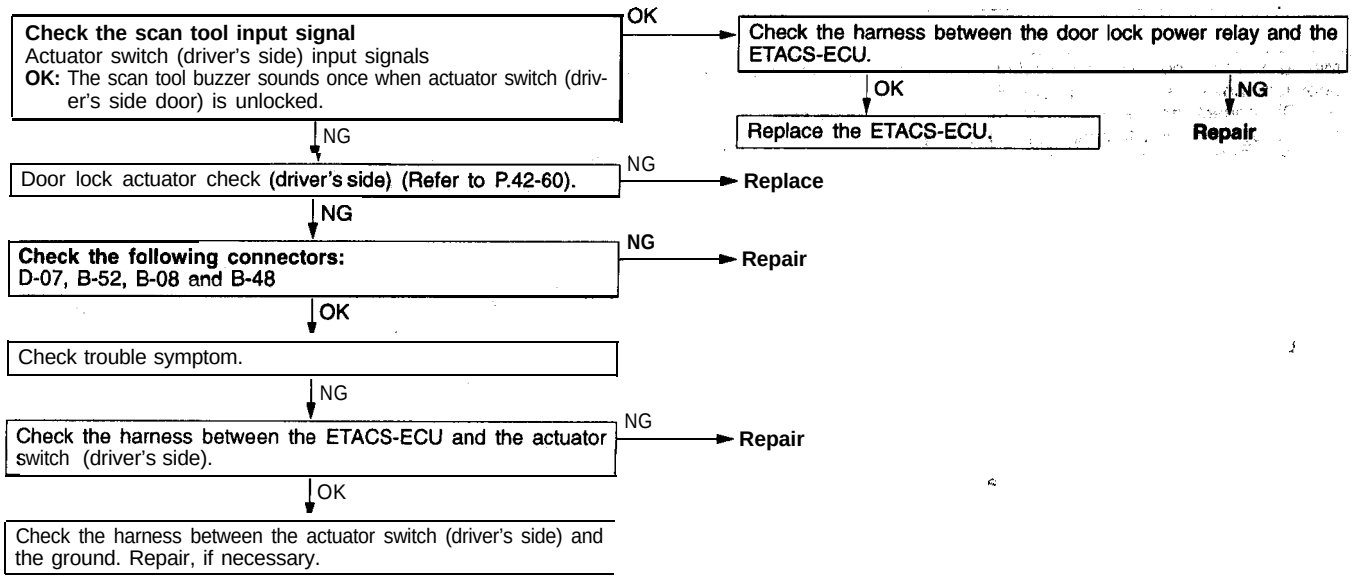

C When the driver's side door lock is turned with key, another door is not unlocked.

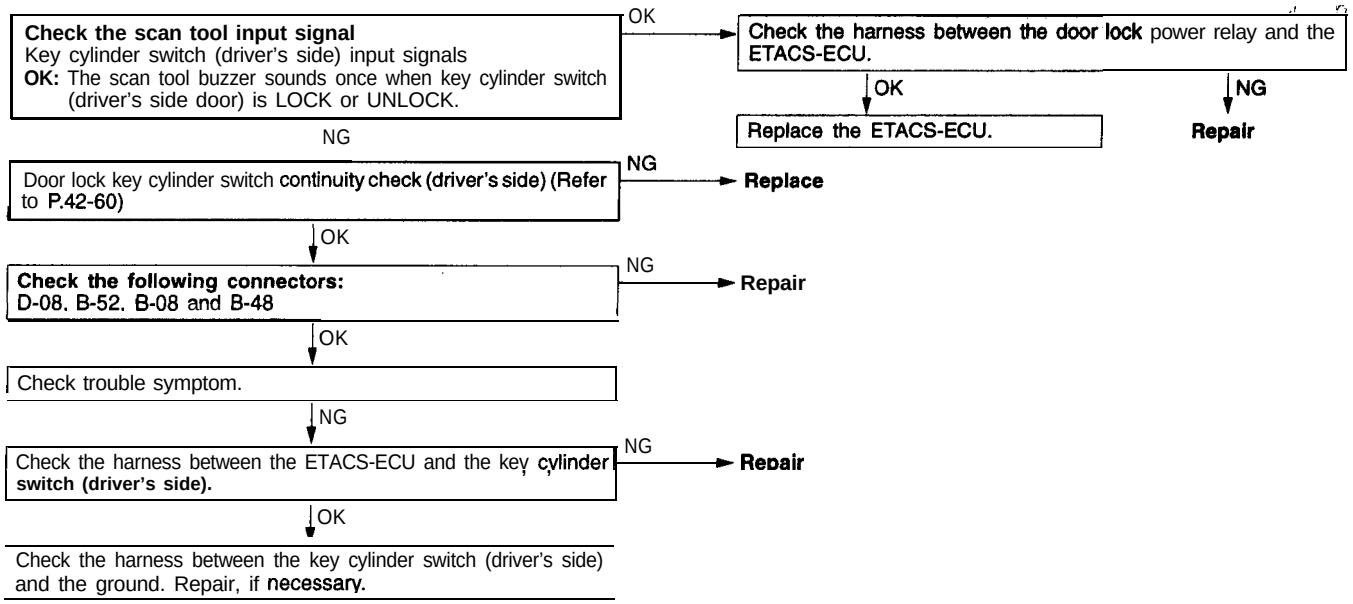

TSB Revision

D When the passenger's side door lock is turned with key, another door is not locked or unlocked.

Door lock key cylinder switch check (passenger's side) (Refer to P.42-60) → NG → **Replace**

↓ OK

Check the following **connectors:** D-05 and B-27 → NG → **Repair**

↓ OK

Check trouble symptom.

NG

Measure at the key cylinder switch (passenger's side) connector D-05.
- Disconnect the connector and measure at harness side
- Voltage between terminal (1), (3) and ground
  OK: Battery positive voltage

→ NG → Check the harness between the key cylinder switch (passenger's side) and the door lock power relay. Repair, if necessary.

↓ OK

Check the harness between the key cylinder switch (passenger's side) and the ground. Repair, if necessary.

KEY REMINDER SYSTEM

INSPECTION CHART FOR TROUBLE SYMPTOMS

Trouble symptom	Probable cause	Remedy
If the driver's side inside lock knob is locked under the following conditions, the door can not be locked: • The key is inserted in the ignition key cylinder. • The driver's side door is closed.	• Broken wire in input circuit in door switch. • Door switch is faulty. • ETACS-ECU is faulty.	Check according to Flow Chart A (Refer to P.42-44).
If the driver's side inside lock knob 'is locked under the following conditions, the door will be locked: • The key is inserted in the ignition key cylinder. • The driver's side door is opened.	• Broken wire in input circuit in door switch. • Door switch is faulty. • Key reminder switch is faulty. • Broken wire in input circuit in key reminder switch. • ETACS-ECU is faulty	Check according to Flow Chart B (Refer-to P.42-44).
If the driver's side inside lock knob is locked under the following conditions, the door can not be locked: • The key is removed from the ignition key cylinder. • The driver's side door is opened.	• Broken wire in input circuit in key reminder switch. • Key reminder. switch is faulty. • ETACS-ECU is faulty.	Check according to Flow Chart C (Refer to P.42-45).

TROUBLE SYMPTOM INSPECTION CHART

A If the driver's side inside lock knob is locked under the following conditions, the door can not be locked:
- **The key is inserted in the ignition key cylinder.**
- **The driver's side door is closed.**

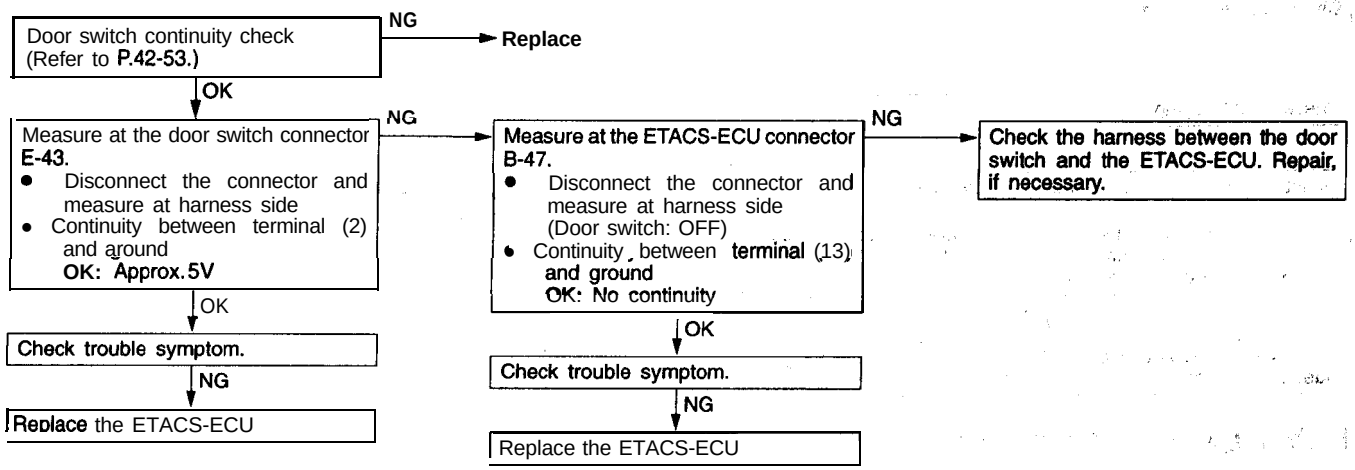

B If the driver's side inside lock knob is locked under the following conditions, the door will be locked:
- **The key is inserted in the ignition key cylinder.**
- **The driver's side door is opened.**

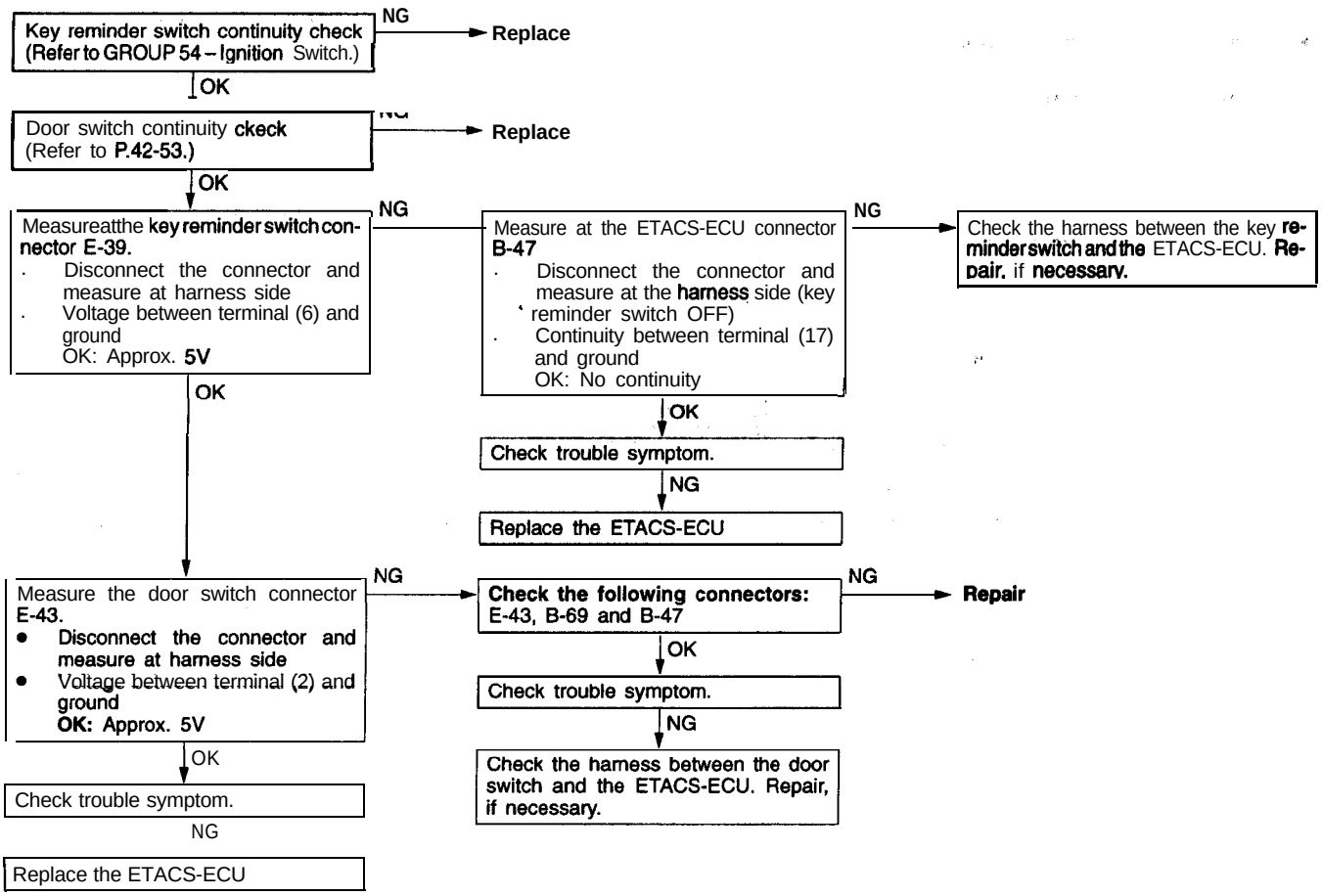

TSB Revision

C If the driver's side inside lock knob is locked under the following conditions, the door can not be locked:
- **The key is removed from the ignition key cylinder.**
- **The driver's side door is opened.**

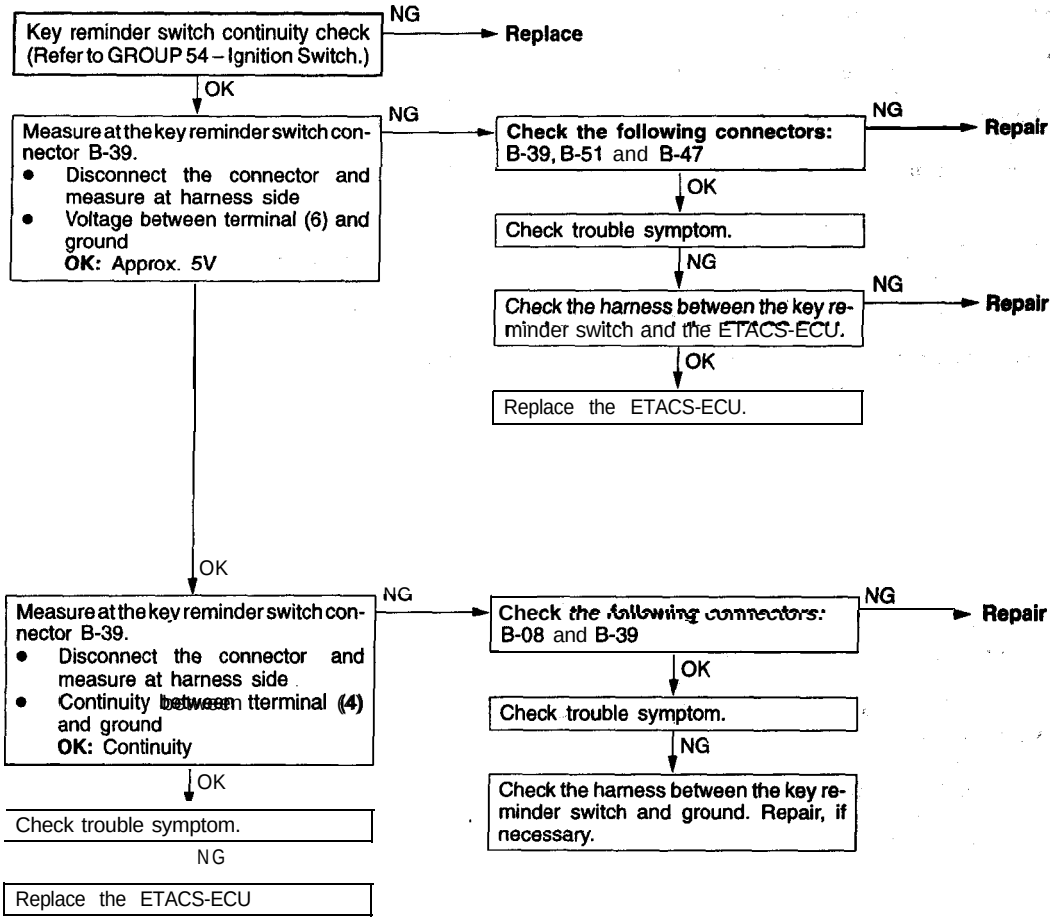

GLASS AND DOORS

Symptom	Probable cause	Remedy
Water leak through door window glass	Incorrect window glass installation	Adjust position
	Gap at upper window glass	Adjust position
Door window malfunction	Incorrect window glass installation	Adjust position
	Damaged or faulty regulator	Correct or replace
Water leak through door edge	Cracked or faulty weatherstrip	Replace
Water leak from door center	Drain hole clogged	Remove foreign objects
	Inadequate waterproof film contact or damage	Correct or replace
Door hard to open	Incorrect latch or striker adjustment	Adjust
Door does not open or close completely	Incorrect door installation	Adjust position
	Defective door check strap	Correct or replace
	Door check strap and hinge require grease	Apply grease
Uneven gap between body	Incorrect door installation	Adjust position
Wind noise around door	Weatherstrip not holding firmly	Adjust fit of door
	Improperly installed weatherstrip or setting of weatherstrip	Repair or replace
	Improperly closed door	Adjust
	Improperly fit door	Adjust
	Improper clearance between door glass and door weatherstrip holder	Adjust
	Deformed door	Repair or replace

HOW TO LOCATE WIND NOISES

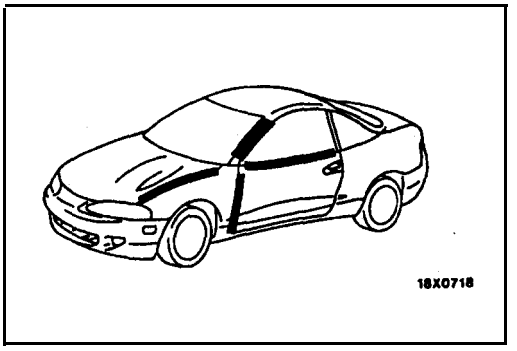

(1) Attach cloth tape to every place, such as panel seams, projections, molding seams, glass and body seams, etc. which might conceivably be the source of wind noise.
(2) Then make a road test to check that the places not covered by tape are not sources of wind noise.

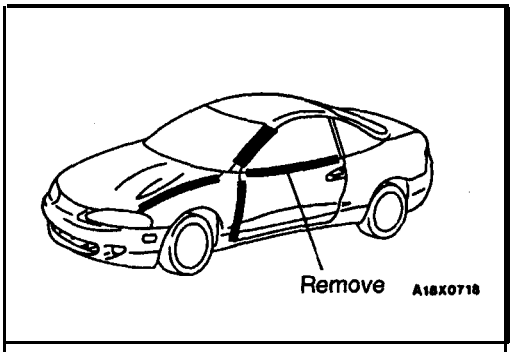

(3) Then remove the strips of tape one by one, making a road test after each is removed, 'until a wind noise source is discovered.

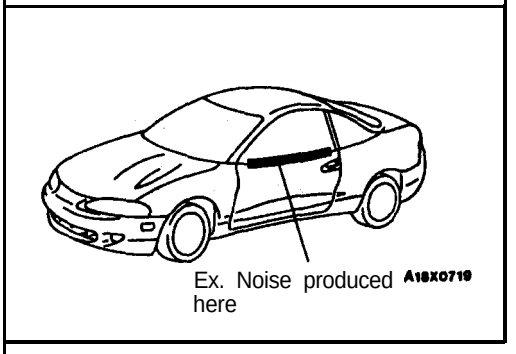

(4) When such a place is found, cover it again and repeat the procedure to check if there are any other noise source.
(5) If no others are found, the' last remaining tape is the only source.

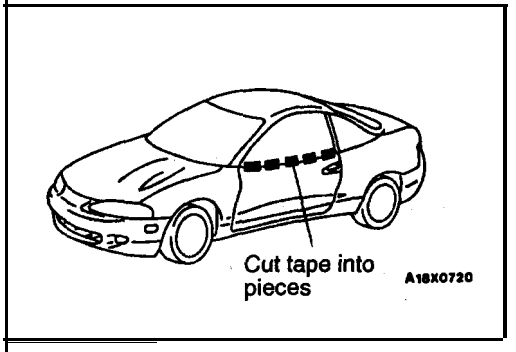

(6) Cut the remaining piece of tape into smaller pieces, attach it again as it was before,' and then remove the pieces one by one to narrow down' the source.

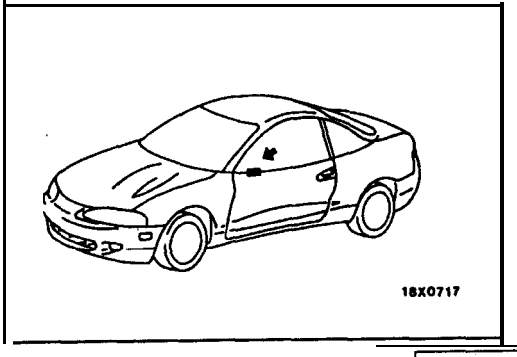

(7) Check to confirm that wind noise occurs when the last remaining tape is removed, and that noise does not occur when it is re-attached.
(8) When the source(s) of the wind noise is finally located, attach butyl tape, body sealer or similar material to obstruct this source as much as possible.

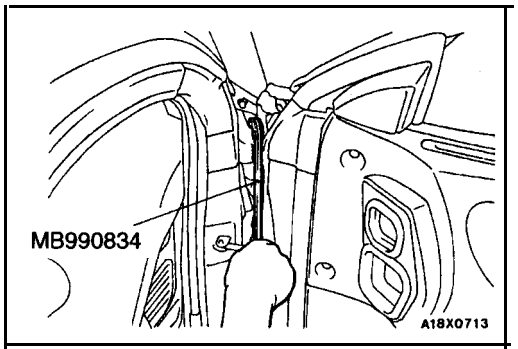

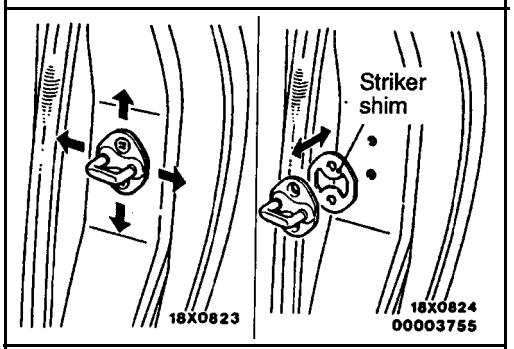

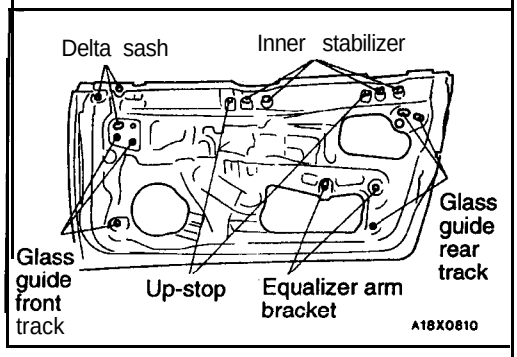

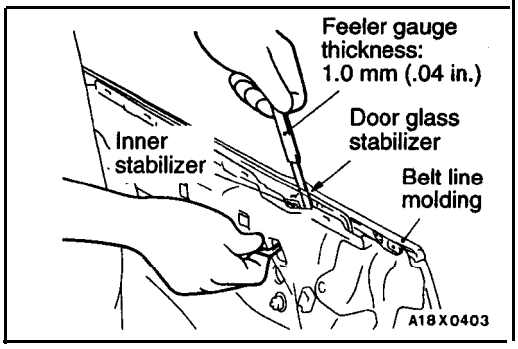

ON-VEHICLE SERVICE 42300090050

DOOR FIT ADJUSTMENT

1. Use the special tool to loosen the hinge mounting bolts on the body side.Caution
2. When there is a stepped section in the door and body, use the special tool to loosen the door hinge mounting bolt on the door side and adjust the door fit.

   Caution
   Attach protection tape to the fender. edges where the hinge is installed.
3. If the door is hard to open or close, use the shim or move the striker up and down or left and right to adjust the linking of the striker and the door latch.

DOOR WINDOW GLASS ADJUSTMENT 423001001~0

1. Remove the door trim and waterproof film. (Refer to P.42-54.)
2. Remove the drip line weatherstrip. <ECLIPSE> (Refer to P.42-63.)
3. Loosen the bolts and nuts of the following parts.
   - Delta sash
   - Equalizer arm bracket
   - Glass guide front track
   - Glass guide rear track
   - up-stop
   - Inner stabilizer

   NOTE
   Move the window glass down to the lowest position before removing the delta sash bolt.
4. Lower the door window glass fully. Insert a feeler gage with a thickness of 1.0 mm (.04 in.) 'between the door glass stabilizer (nylon fiber surface) of the belt line molding and the glass.
   Adjust the two bolts so that the inner stabilizer is pressing against the glass, and then tighten the inner stabilizer nuts.
5. Raise the door window glass, and adjust it so that the following dimensions are at the standard value.

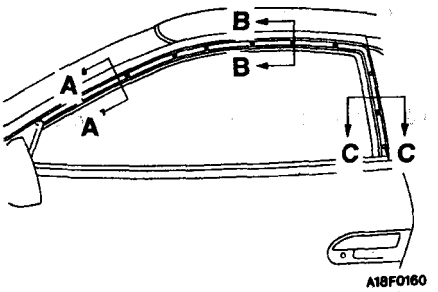

Measurement points and standard value mm (in.)

Cross section A-A

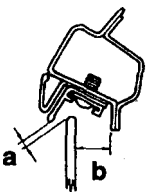

Cross section B-B

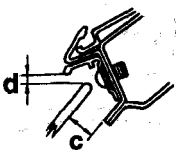

Gross section C–C

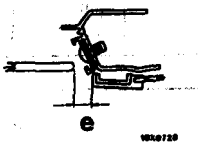

Items		Adjustment procedures	a	b	c	d	e <ECLIPSE>
1	Tilt adjustment	Adjust by turning the two glass guide track adjusting bolts by equal amounts for both the front and rear side. (Refer to Fig.1)		37.0 (1.46)	31.0 (1.22)		– –
2	Longitudinal adjustment	Adjust by moving the equalizer arm bracket up and down. (Refer to Fig.2)	1.6 (.06)	–	I-	1.9 (.07)	13.0±1.0 (.51±.04)
	Longitudinal adjustment	Adjust by moving the glass guide rear track forward or backward. (Refer to Fig.3)	1.6 (.06)	–	–	–	13.0±1.0 (.51±.04)

NOTE
Glass longitudinal adjustments should be carried -out at the same time.

Fig.1

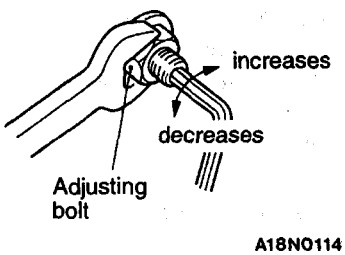

Fig.2

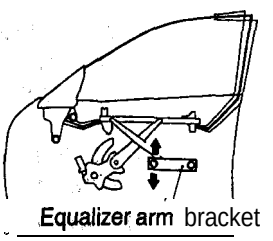

Fig.3

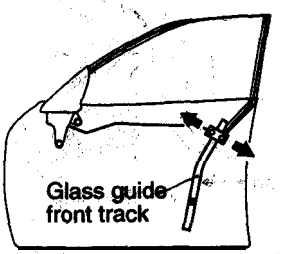

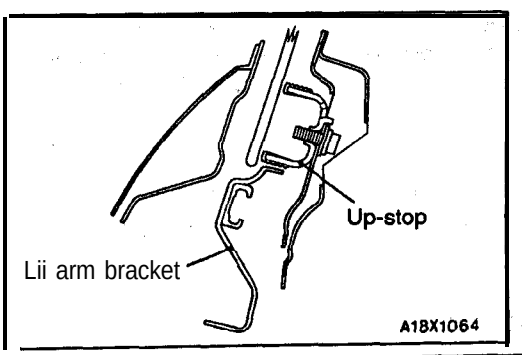

6. Push the up-stops firmly against the lift arm bracket of the regulator, and then install the bolts. Dimensions a and d in step 5. should be maintained at this time.
7. Tighten the mounting bolts and nuts of the front and rear glass guide tracks.

   Caution
   Do not turn the adjusting bolts of the glass guide tracks.
8. Install the mounting bolt of the equalizer arm bracket for the regulator.

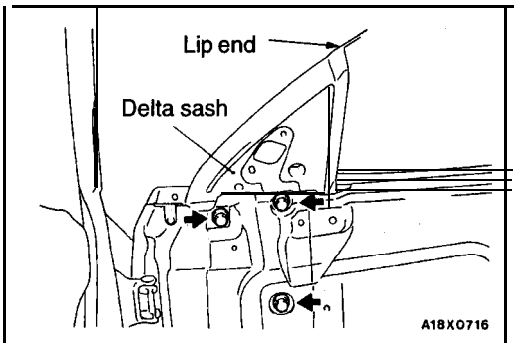

9. Tighten the three delta sash mounting bolts so that the edges of the delta sash and window glass run on smoothly with there being no difference in height at the lip end.
10. Install the drip line weatherstrip to the weatherstrip holder. <ECLIPSE>

Caution
The weatherstrip should not slip or become wrinkled.'

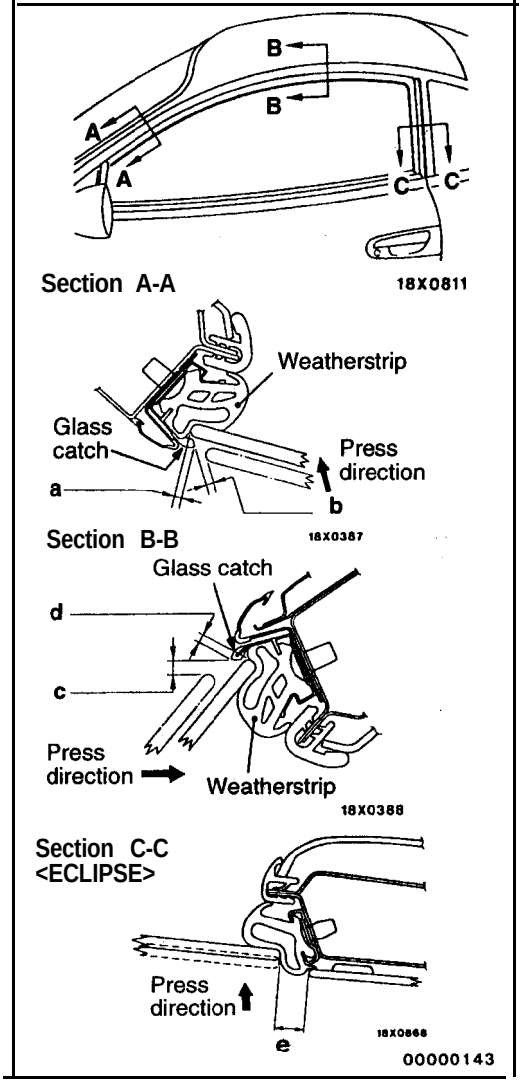

11. Open and close the door and raise and lower the window glass and check the glass installation against the following points.
    (1) The clearance between the glass and the glass catch should be within the range of standard values (b,c,e) <ECLIPSE> when the window is fully closed and the door is closed gently

    Standard value (b): 4.8 ± 1.0 mm (.19 ± .04 in.)
    (c): 6.3 ± 1.0 mm (.25 ± .04 in.)
    (e): 13.0 ± 1.0 mm (.51 , ± .04 in.)
    <ECLIPSE>

    NOTE
    If the clearance is too small, the glass catch will move above the glass when the door is closed. If the clearance is too large, wind noise may be generated at high vehicle speeds because the glass catch is not' hooked onto the glass.

    (2) The amount of catch of the door catch on the door' glass and the amount of step between the door glass and the weatherstrip should be at the standard values a, d under the following conditions:
    when the door is closed and then-the window is closed fully
    when the window is closed fully and then the door is closed

    Standard value (a): 1.6 mm (.06 in.)
    (d): 1.9 mm (.07 in.)

    (3) The door glass should slide smoothly over its full range of movement when the door is closed.

    (4) There should be 1 mm (.04 in.) of play available between the outer stabilizer of the belt line molding and the glass when the glass is half open and fully open.

    NOTE
    If there is no clearance, the glass will be damaged. If the clearance is too great, rattling noise will occur.

    (5) The glass catch and the weatherstrip should be parallel with the door glass and the two up-stops should touch simultaneously when the glass is fully closed.

TSB Revision

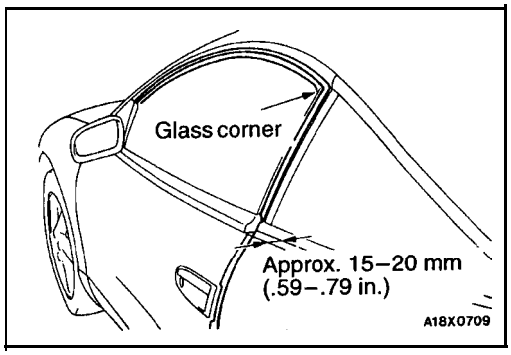

(6) Check the amount of glass tilt by the following procedure.
<ECLIPSE>
Close the door glass fully and then gently close the door. Check that the difference in height between the door and side panels is 15–20 mm (.59–.79 in.) when the corner of the door glass is touching the weatherstrip at the top of the center pillar.

NOTE
If the amount of tilt is too small, the glass catch will move above the glass when the door is closed and when the glass is raised. If the amount of tilt is too large, the door will be difficult to close and the glass will not be fully sealed when the door is closed.
<ECLIPSE SPYDER>
Refer to P.42-11 for quarter window glass adjustment.

12. Install the waterproof film and the, door trim.

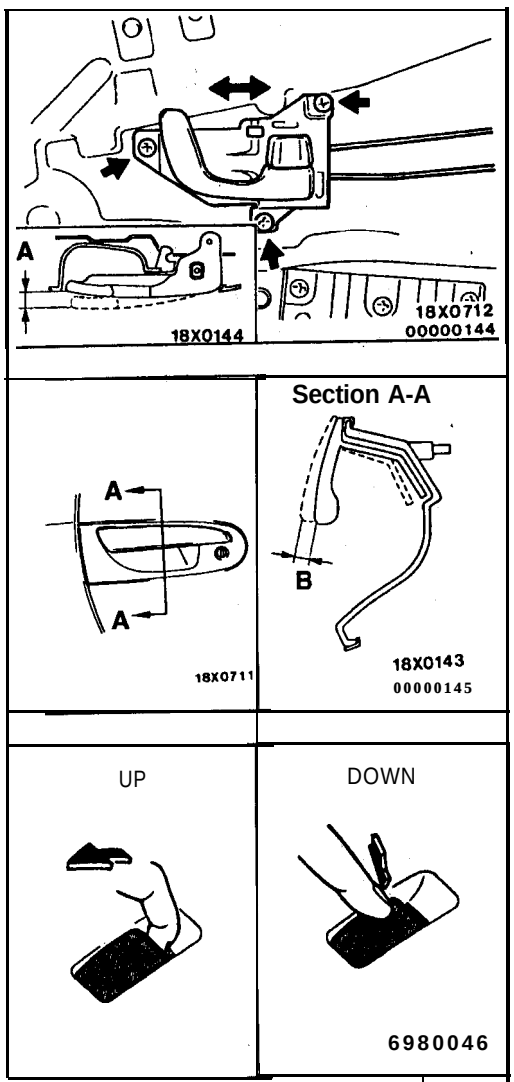

INSIDE HANDLE PLAY ADJUSTMENT 42300150079

1. Remove the door trim and waterproof' film. (Refer to P.42-54.)
2. Move the door inside handle installation position back and forth to adjust so that the inside handle play allowance agrees with the standard value.

Standard value (A): 6.2 inm (.24 in.)or more

OUTSIDE HANDLE PLAY CHECK 42300160058

If the door outside handle play does not conform to the, standard value, check the door outside handle or door latch assembly, and replace if necessary.

Standard value (B): 4.4 mm (.17 in.)or more

CIRCUIT BREAKER (INCORPORATED IN THE POWER WINDOW MOTOR) CHECK 42900170028

1. Lift the UP switch to fully close the window glass, and continue to lift the switch for 40 seconds.
2. As soon as the UP switch is released, press the DOWN switch. The circuit-breaker can be considered good if at this time the door window glass begins to open within **60 seconds.**

DOOR ASSEMBLY

42300220107

REMOVAL AND INSTALLATION

Door Post-installation Operation
- Door Adjustment (Refer to P.42-48.)

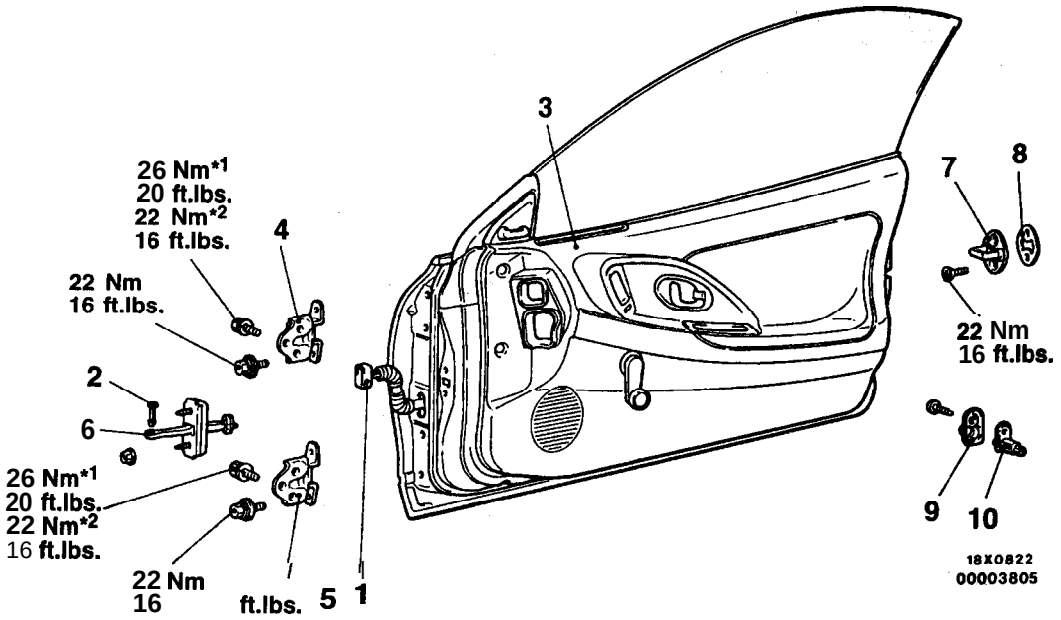

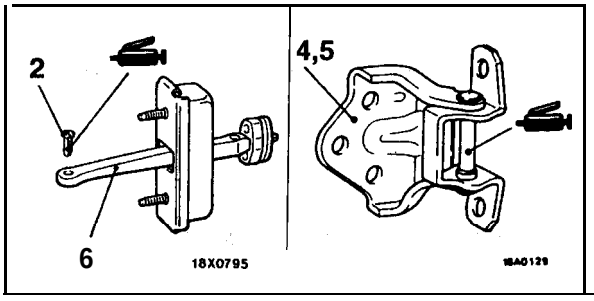

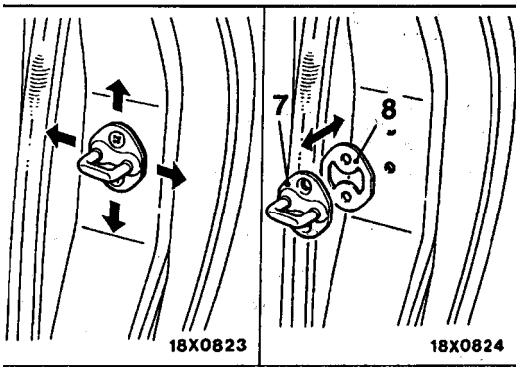

Adjustment of the door stepping arid the door latch linkage

Door assembly removal steps

1. Harness connector
2. Spring pin
3. Door assembly
4. Door upper hinge
5. Door lower hinge

Door check removal steps

- Door trim (Refer to P.42-54.)
- Waterproof film (Refer to P.42-54.)

2. Spring pin

▶A◀ 6. Door check

Striker removal steps

7. Striker
8. Striker shim

Door switch removal steps

9. Door switch cap
10. Door Switch

NOTE
'1: For flange bolts
- 2: For washer-assembled bolts

TSB Revision

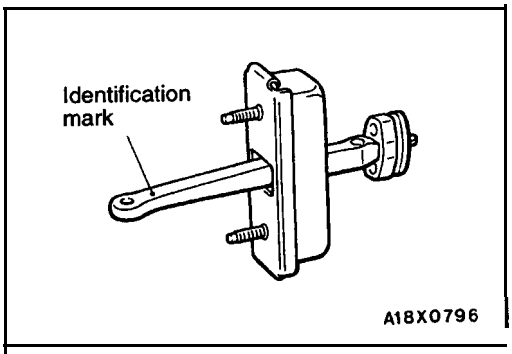

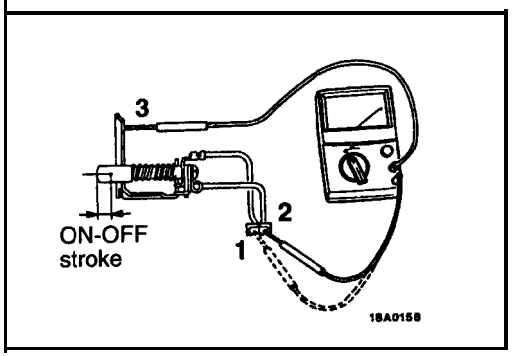

INSTALLATION SERVICE POINT

▶A◀ DOOR CHECK **INSTALLATION**

Install the door check so that the identification mark faces upwards.

Position	Identification mark
Door (LH)	WL or L
Door (RH)	WR or R

INSPECTION

42300600055

DOOR SWITCH CONTINUITY CHECK

Switch position	Terminal No.		
	1	2	3
Open (ON)	○	○	○
Depressed (OFF)			

DOOR TRIM AND WATERPROOF FILM

42300430098

REMOVAL AND INSTALLATION

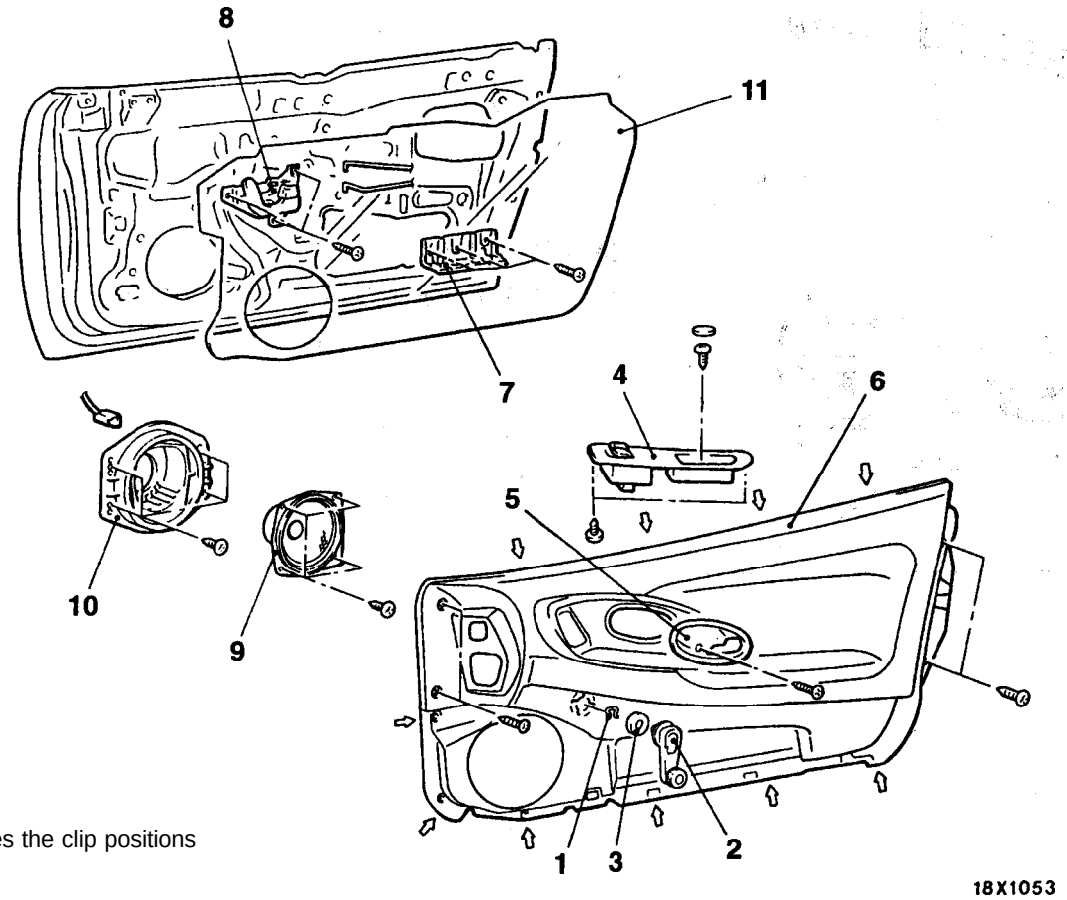

NOTE
⇦: Indicates the clip positions

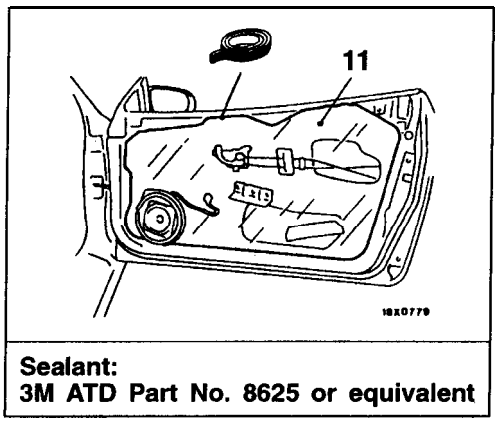

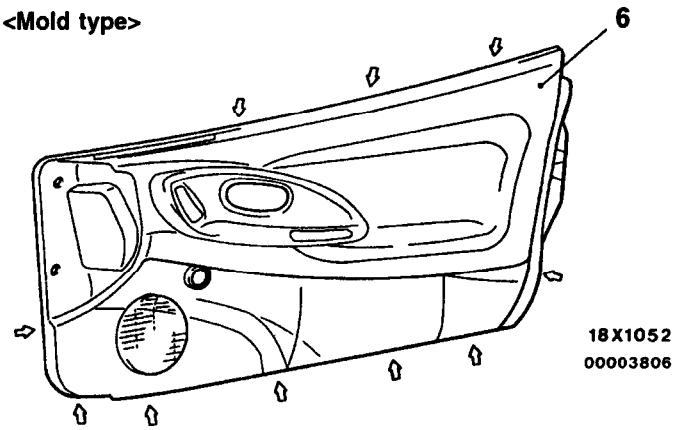

Removal steps

◀A▶ 1. Clip
▶A◀ 2. Regulator handle
3. Escutcheon
4. Pull handle box

◀B▶
◀C▶ 5.6. Cover Door trim

7. Pull handle bracket
8. Door inside handle
9. Door speaker assembly
10. Speaker cover
11. Waterproof film

TSB Revision

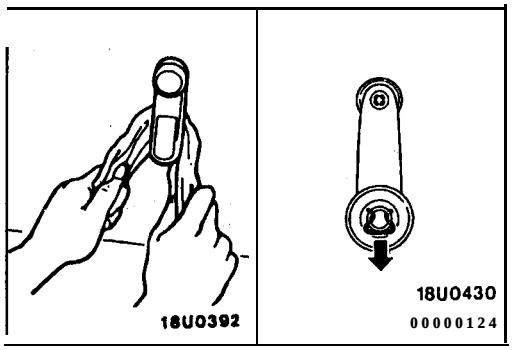

R E M O V A L SERVICE POINTS

(A, CLIP REMOVAL

Remove the clip by using a shop towel, and then remove the regulator handle.

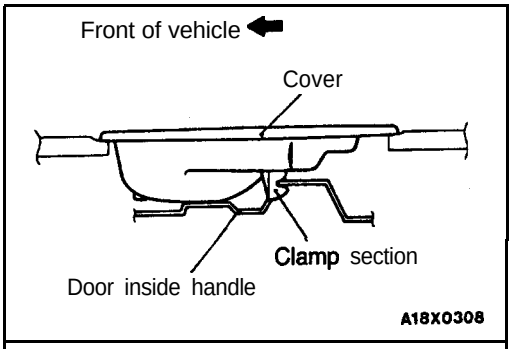

◀B▶ COVER REMOVAL

Remove the cover mounting screw and remove the cover by pushing it toward the front of the vehicle to 'remove the clamp section from the door inside handle.

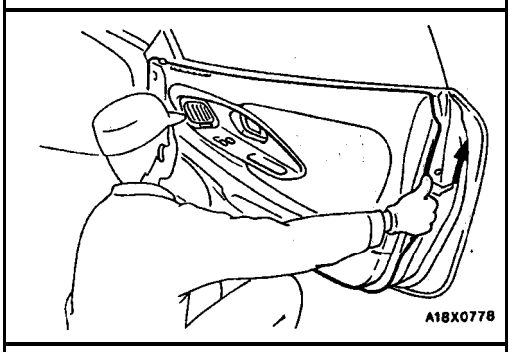

◀C▶ DOOR TRIM REMOVAL

After removing the trim mounting screws and clips, push up the trim to remove it from the door window inner weatherstrip clips.

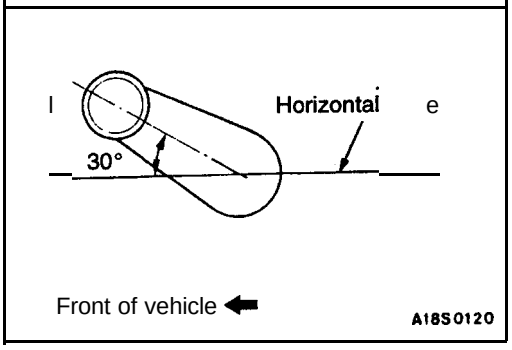

INSTALLATION SERVICE POINT

▶A◀ REGULATOR HANDLE INSTALLATION

(1) Install the escutcheon and the clip to the regulator handle.
(2) Fully close the door glass, and install the regulator handle so that it faces as shown in the illustration.

DOOR GLASS AND REGULATOR

42900130088

REMOVAL AND INSTALLATION

Pre-removal Operation
- Door Trim and Waterproof Film Removal (Refer to P.42-54.)
- Belt Line Molding Removal (Refer to P.42-63.)

Post-installation Operation
- Door Window Glass Adjustment (Refer to P.42-48.)
- Belt Line Molding Installation (Refer to P.42-63.)
- Door Trim and Waterproof Film Installation (Refer to P.42-54.)

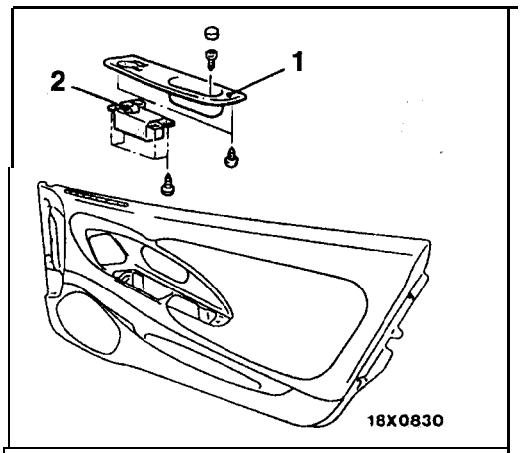

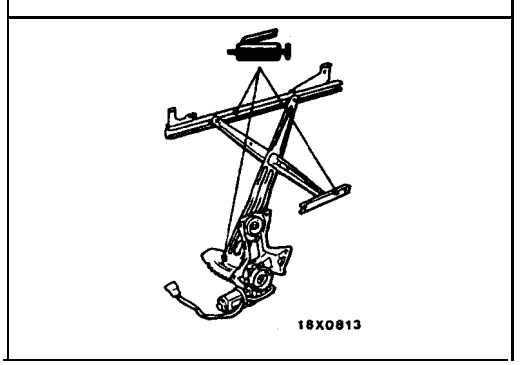

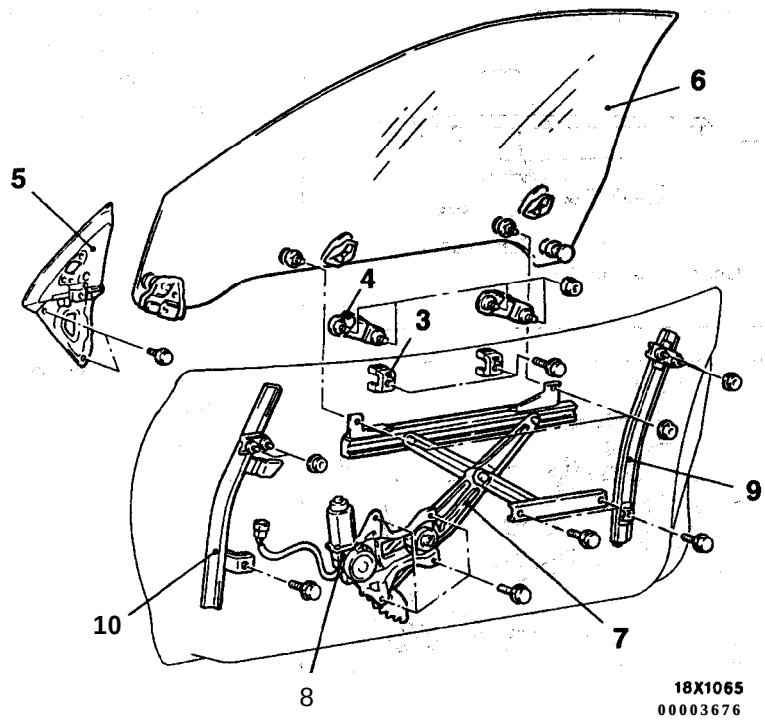

Power window switch removal steps

1. Pull handle box
2. Power window switch

Door glass and regulator removal steps

3. up-stop
4. Inner stabilizer
5. Delta sash
6. Door window glass
7. Window regulator assembly
8. Power window motor (Vehicles with power window)
9. Glass guide rear track
10. Glass guide front track

TSB Revision

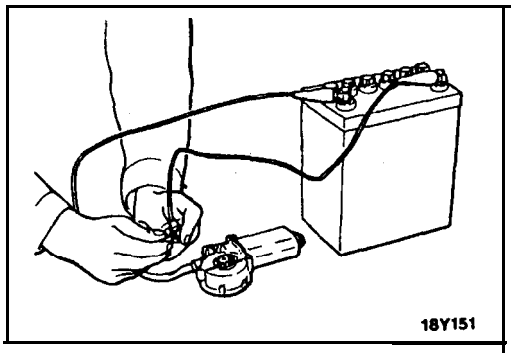

INSPECTION

42900150046

POWER WINDOW MOTOR CHECK

(1) Check that the motor runs smoothly when the battery is connected directly to the motor terminals:
(2) Furthermore, check that the motor operates in reverse when the terminal connections are switched:

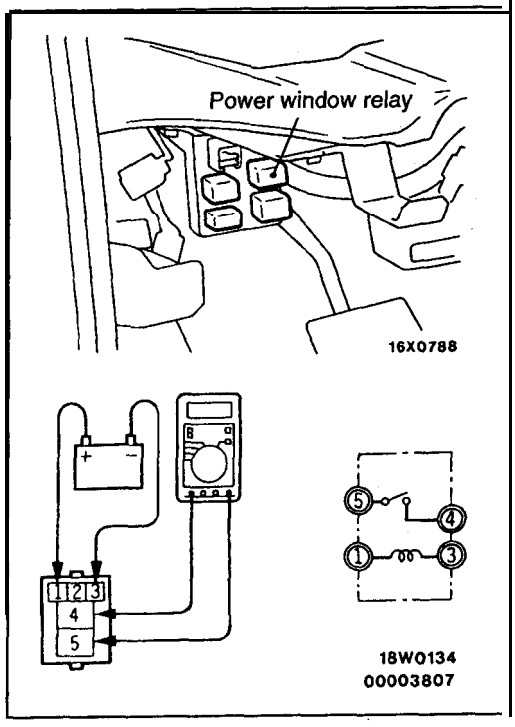

POWER WINDOW RELAY CONTINUITY CHECK 42900180038

Battery voltage	Terminal No.			
	1	2	3	4
Power is not supplied	0	0		
Power is supplied	⊕	⊖	0	○

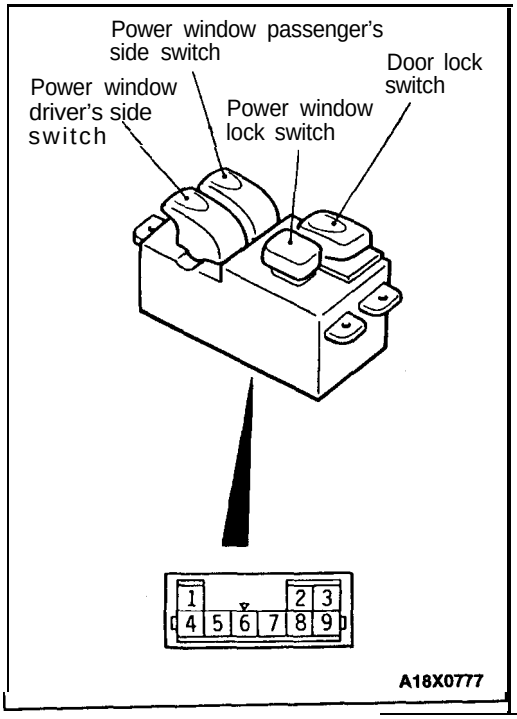

POWER WINDOW SWITCH CONTINUITY CHECK

42900160087

Main switch <ECLIPSE>

Switch position		Terminal No.					
		2	3	6	7	8	9
Driver's Side Switch	UP	○		○		○	○
	OFF	○		○			○
	DOWN, AUTO DOWN	○		○		○	○
Passenger's Side Switch	UP		○			○	
	OFF		○		○		
	DOWN				○	○	
Window Lock Switch	NORMAL	○	○				
		○			○		
	LOCK						

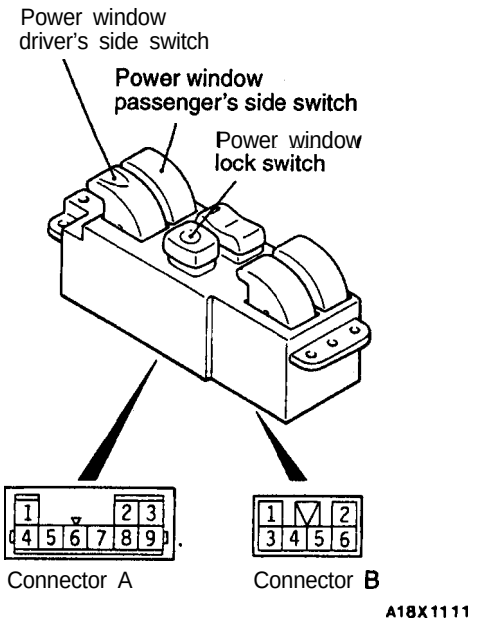

Main switch <ECLIPSE SPYDER>

Switch position		Connector A terminal No.							Connector B terminal No.
		2	1	3	1	6	1 7	1 8	1 9	5
Driver's Side Switch	UP	○		○				○	○	
	OFF	○		○					○	
	DOWN, AUTO DOWN	○			○			○	○	
Passenger's Side Switch	UP	○						○		
	OFF		0			○				0
	DOWN					○		○		
Window Lock Switch	ON	○	○			○				○
	OFF		○			○				0

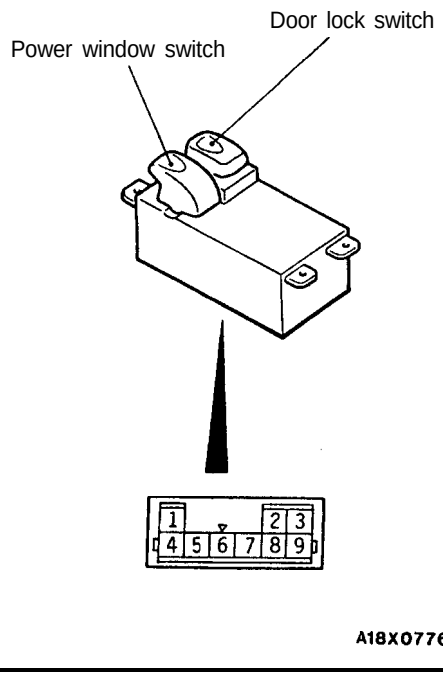

Sub switch

Switch position	Terminal No.				
	1	2	3	4	6
UP	○			○	
			○		○
OFF	○			○	
		○	○		
DOWN	○				○
		○	○		

DOOR HANDLE AND LATCH

42300460080

REMOVAL AND INSTALLATION

Pre-removal operation
Door Trim Removal (Refer to P.42-54.)

Post-installation Operation
- Inside Handle Play Adjustment (Refer to P.42-51.)
- Door Trim Installation (Refer to P.42-54.)
- Door Fit Adjustment (Refer to P.42-48.)

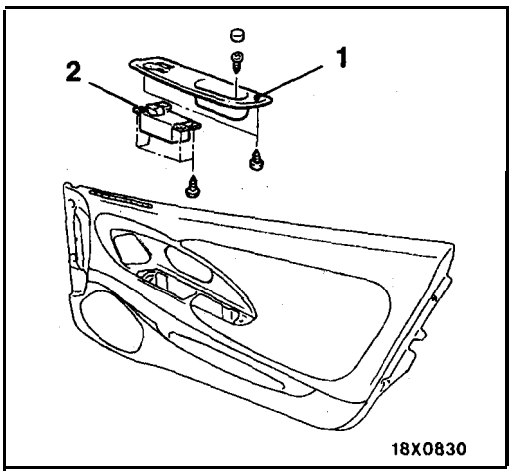

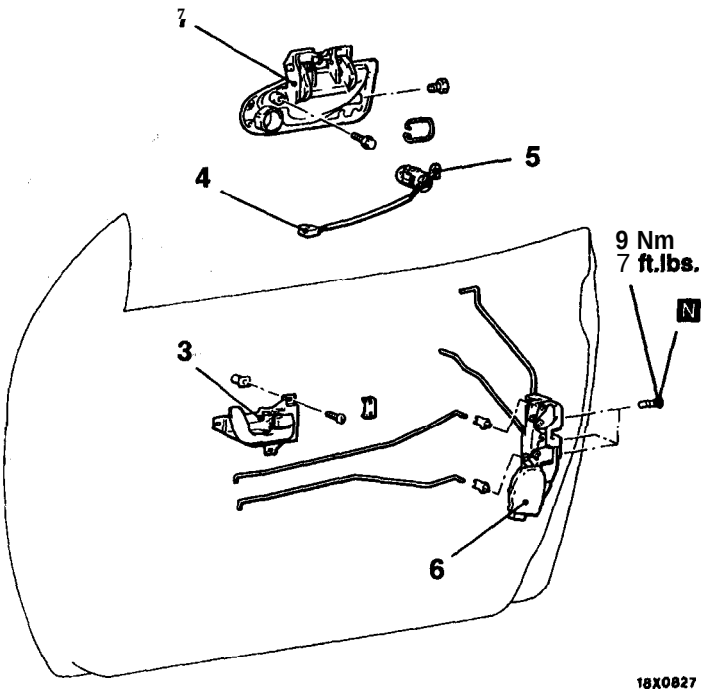

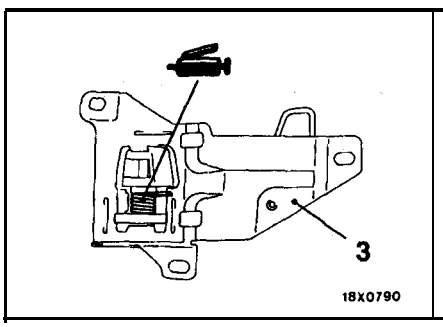

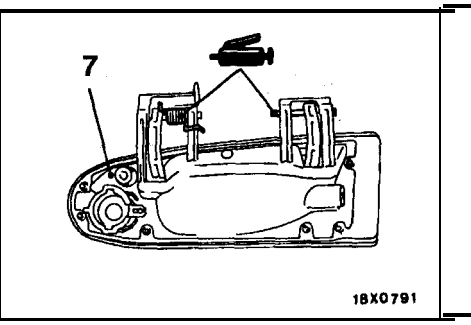

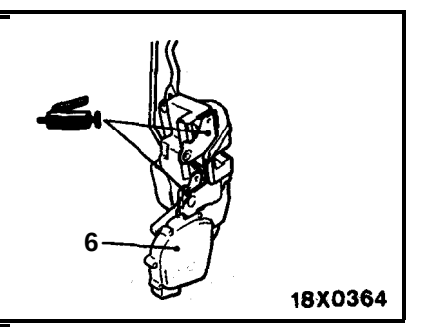

00000150

Central door lock switch removal steps
1. Pull handle box
2. Central door lock switch

Door handle and latch removal steps
3. Door inside handle
- Waterproof film (Refer to P.42-54)
4. Harness connector (Vehicles with central door locking system)
5. Door lock key cylinder assembly
6. Door latch assembly
7. Door outside handle

TSB Revision

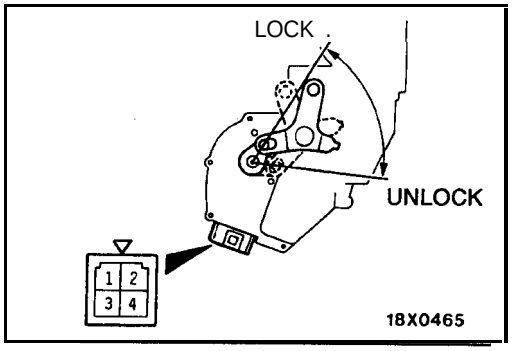

INSPECTION

42300610058

DOOR LOCK ACTUATOR CHECK

<Driver's side>

(1) After setting the rod to the LOCK position, apply battery voltage to terminal 3 and check if the rod moves as far as the UNLOCK position when terminal 4 is grounded.
(2) After setting the rod to the UNLOCK position and applying battery voltage to terminal 4, check if the rod moves as far as the LOCK position when terminal 3 is grounded.
(3) When the rod is set to the UNLOCK position, check if there is continuity between terminal 1 and terminal 2, and when the rod is set to the LOCK position, check that there is no continuity.

<Passenger's side>

(1) After setting the rod to the LOCK position, apply battery voltage to terminal 4 and check if the rod moves as far as the UNLOCK position when terminal 3 is grounded.
(2) After setting the rod to the UNLOCK position and applying battery voltage to terminal 3, check if the rod moves as far as the LOCK position when terminal 4 is grounded.
(3) When the rod is set to the UNLOCK position, check if there is continuity between, terminal 2 and terminal 1. Also, when the rod is set to the LOCK position, check that there is no continuity.

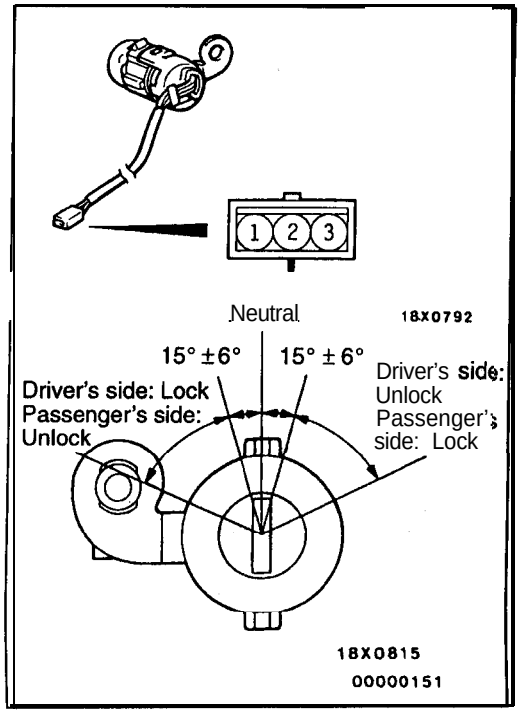

DOOR LOCK KEY CYLINDER SWITCH CONTINUITY CHECK

42300630078

Switch position	Terminal No.					
	Driver's side			Passenger's side		
	1	2	3	1	2	3
LOCK		○—○		○—○		
Neutral (OFF)						
UNLOCK	○—○				○—○	

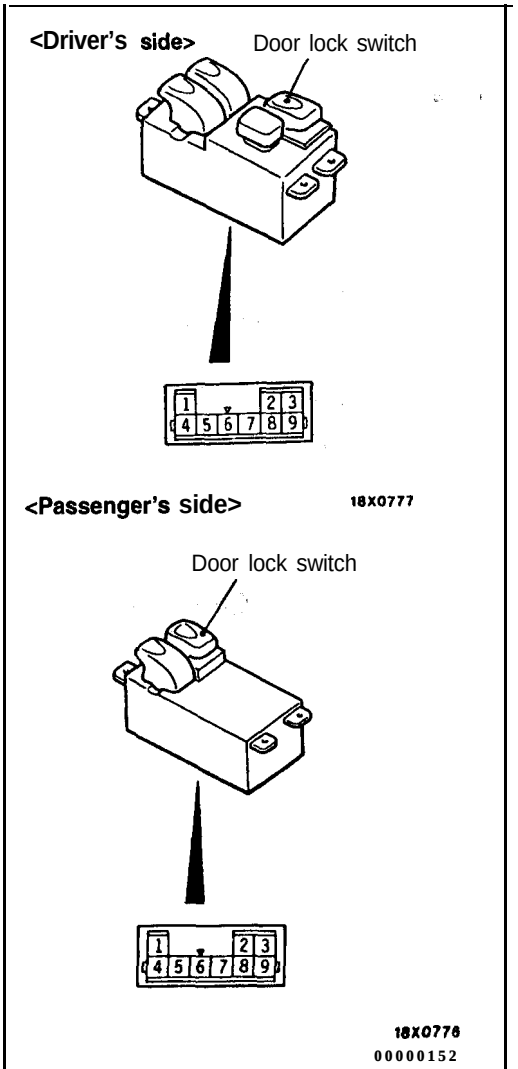

CENTRAL DOOR LOCK SWITCH CONTINUITY CHECK

42700120058

Operate the switch and check continuity between the terminals.

<Driver's side>

Switch position	Terminal No.		
	1	2	4
LOCK	0	0	
Neutral (OFF)			
UNLOCK		○	○

<Passenger's side>

Switch position	Terminal No..		
	5	7	8
LOCK		○	0
Neutral (OFF)			
UNLOCK	0	0	

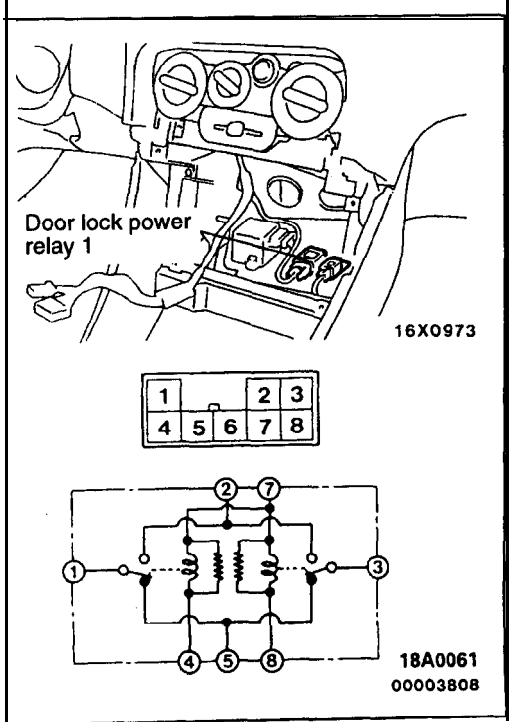

DOOR LOCK POWER RELAY 1 CONTINUITY CHECK

42700130020

(1) Removal the radio, tape player and CD player. (Refer to GROUP 54 – Radio, Tape Player, CD Player, Amplifier, Speaker and Antenna.)
(2) Check for continuity between terminals under the conditions described below.

Battery voltage	Terminal No.						
	1	2	3	4	5	7	8
Power is not supplied	0			0	0		
Power is supplied	○	○		⊖		⊕	
		○	○			⊕	⊖

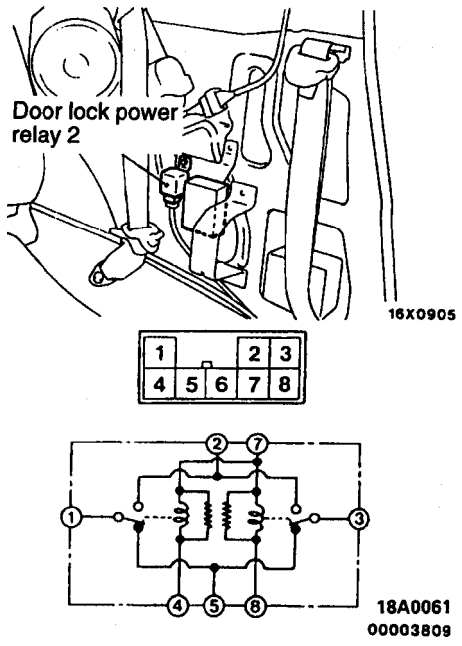

DOOR LOCK POWER RELAY 2 CONTINUITY CHECK

42700130129

<Vehicles with keyless entry system>

(1) <ECLIPSE>
Removal the quarter trim (L.H.).
(Refer to GROUP 52A – Trims.)
<ECLIPSE SPYDER>
Removal the rear seat
(Refer to GROUP 52A – Rear seat.)

(2) Check for continuity between terminals under the conditions described below.

Battery voltage	Terminal No.						
	1	2	3	4	5	7	8
Power is not supplied	0			0	0		0
Power is supplied							
			0				

DOOR OPENING WEATHERSTRIP

42300370048

REMOVAL AND INSTALLATION <ECLIPSE>

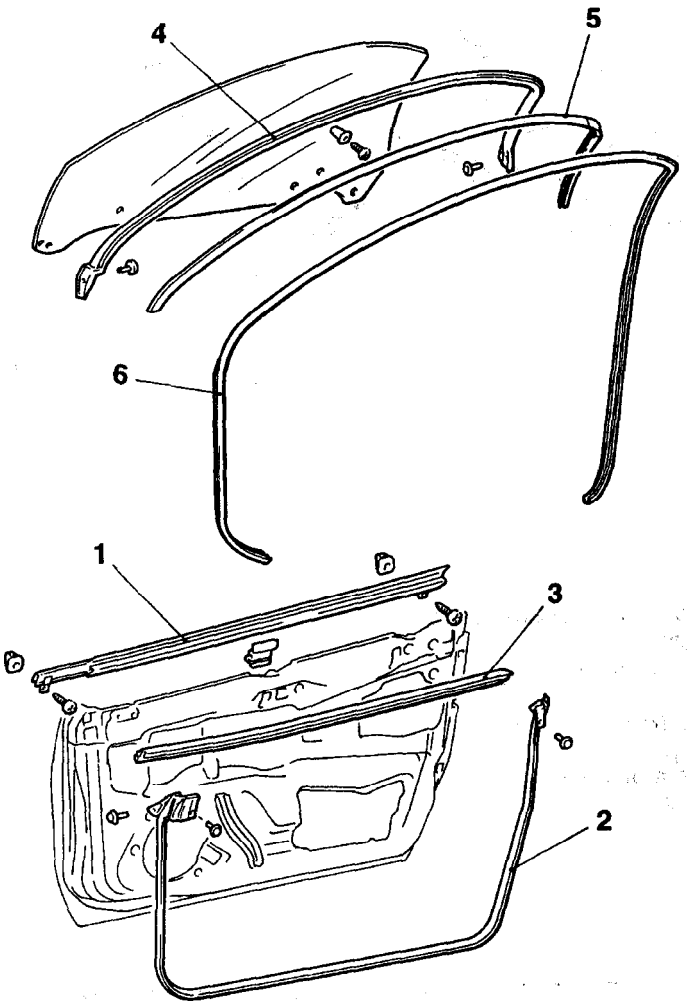

A18X0789

Door window inner weatherstrip removal steps

- Door trim (Refer to P.42-54)
- Delta sash (Refer to P.42-56)

1. Belt line molding
◀A▶ 2. Door outer opening weatherstrip
3. Door window inner weatherstrip

Door inner opening weatherstrip removal steps

4. Drip line weatherstrip
5. Door weatherstrip holder
- Scuff plate (Refer to GROUP 52A – Trims.)

6. Door inner opening weatherstrip

REMOVAL AND INSTALLATION <ECLIPSE SPYDER>

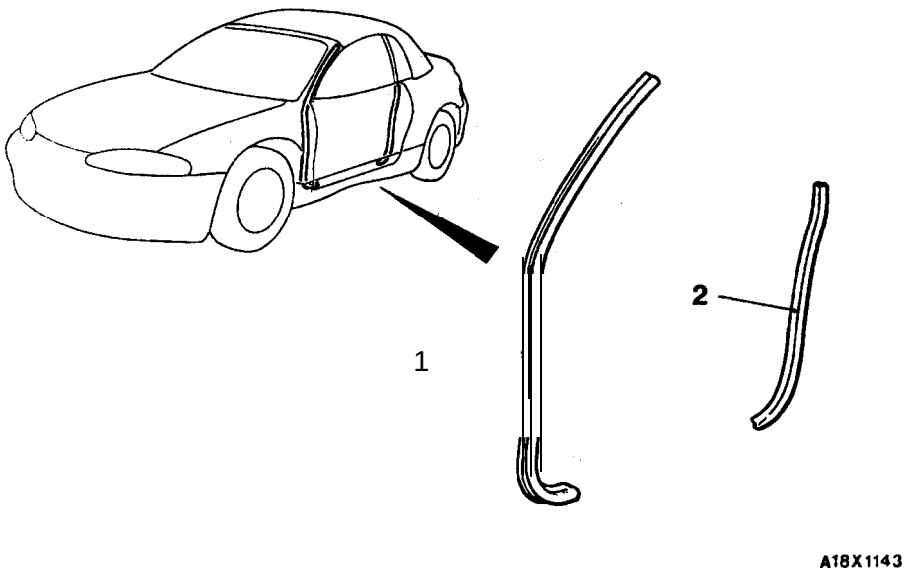

Door inner opening weatherstrip removal steps

- Scuff plate (Refer to GROUP 52A – Trims.)

1. Door inner front opening weatherstrip
2. Door inner rear opening weatherstrip

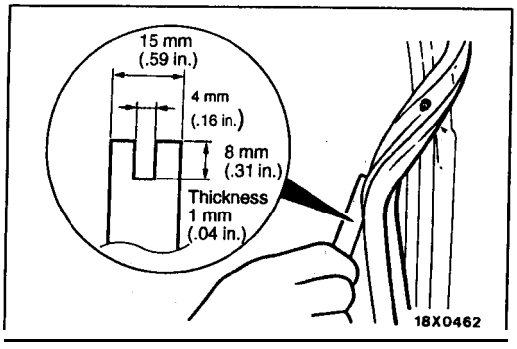

REMOVAL SERVICE POINT

◀A▶ DOOR OUTER OPENING WEATHERSTRIP REMOVAL

Make a tool as shown in the illustration to remove the door opening weatherstrip.

LIFTGATE <ECLIPSE>

42400070064

TROUBLESHOOTING

Symptom	Probable cause	Remedy
Improper closure	Striker and latch not properly aligned	Adjust the alignment
Difficult locking and unlocking	Striker and latch not properly aligned	Adjust the alignment
Uneven body clearance	Incorrectly installed liftgate	Adjust the installation of liftgate
Uneven height	Incorrect liftgate bumper height	Adjust the liftgate bumper height

LIFTGATE

42400110094

REMOVAL AND INSTALLATION

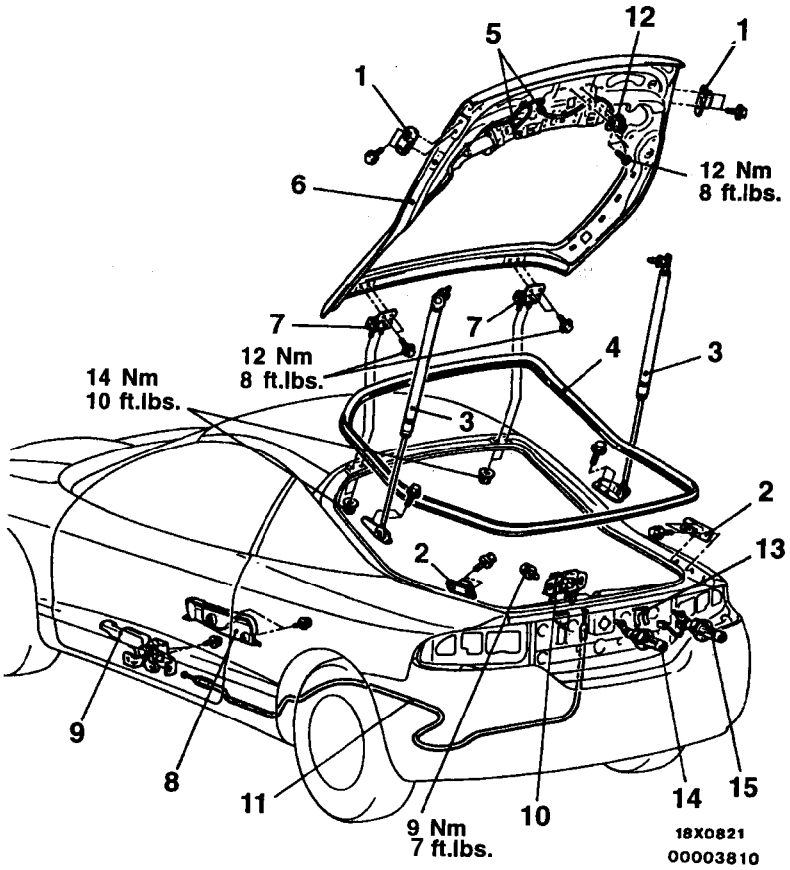

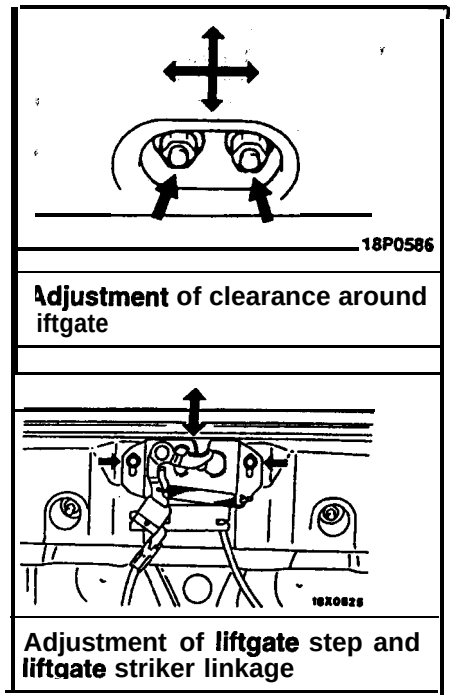

1. Liftgate damper (upper)
2. Liftgate damper (lower)
3. Liftgate gas spring
4. Liftgate opening weatherstrip

Liftgate and liftgate hinge removal steps

- Washer tube (Refer to GROUP 51 – Rear Wiper and Washer.)
- Liftgate trim, liftgate side trim (L.H.) and rear side trim (Refer to GROUP 52A – Trims.)

3. Liftgate gas spring
5. Connection for liftgate wiring harness
6. Liftgate
- Headlining (Refer to GROUP 52A – Headlining.)

7. Liftgate hinge

Liftgate lock release cable and handle removal steps

- Scuff plate (driver's side) (Refer to GROUP 52A – Trims.)

8. Release handle cover
9. Liftgate lock release handle
- Quarter trim, rear side trim and rear end trim (Refer to GROUP 52A – Trims.)

10. Liftgate latch
11. Liftgate lock release cable

Liftgate latch removal steps

- Rear end trim (Refer to GROUP 52A – Trims.)

10. Liftgate latch

Liftgate striker removal steps

- Liftgate trim (Refer to GROUP 52A – Trims.)

12. Liftgate striker

Liftgate lock cylinder removal steps

- Rear end trim (Refer to GROUP 52A – Trims.)
- Rear combination light (Refer to GROUP 54 – Rear Combination Light and Back-up Light.)

13. Retainer
14. Liftgate lock cylinder (Vehicles without theft-alarm system)
15. Liftgate lock cylinder switch (Vehicles with theft-alarm system)

Caution

1. **Never try to disassemble the liftgate gas spring or burn it.**
2. **Always bore a hole in the gas spring to release the interior gas before the spring is discarded.**

TSB **Revision**

LUBRICANT POINTS

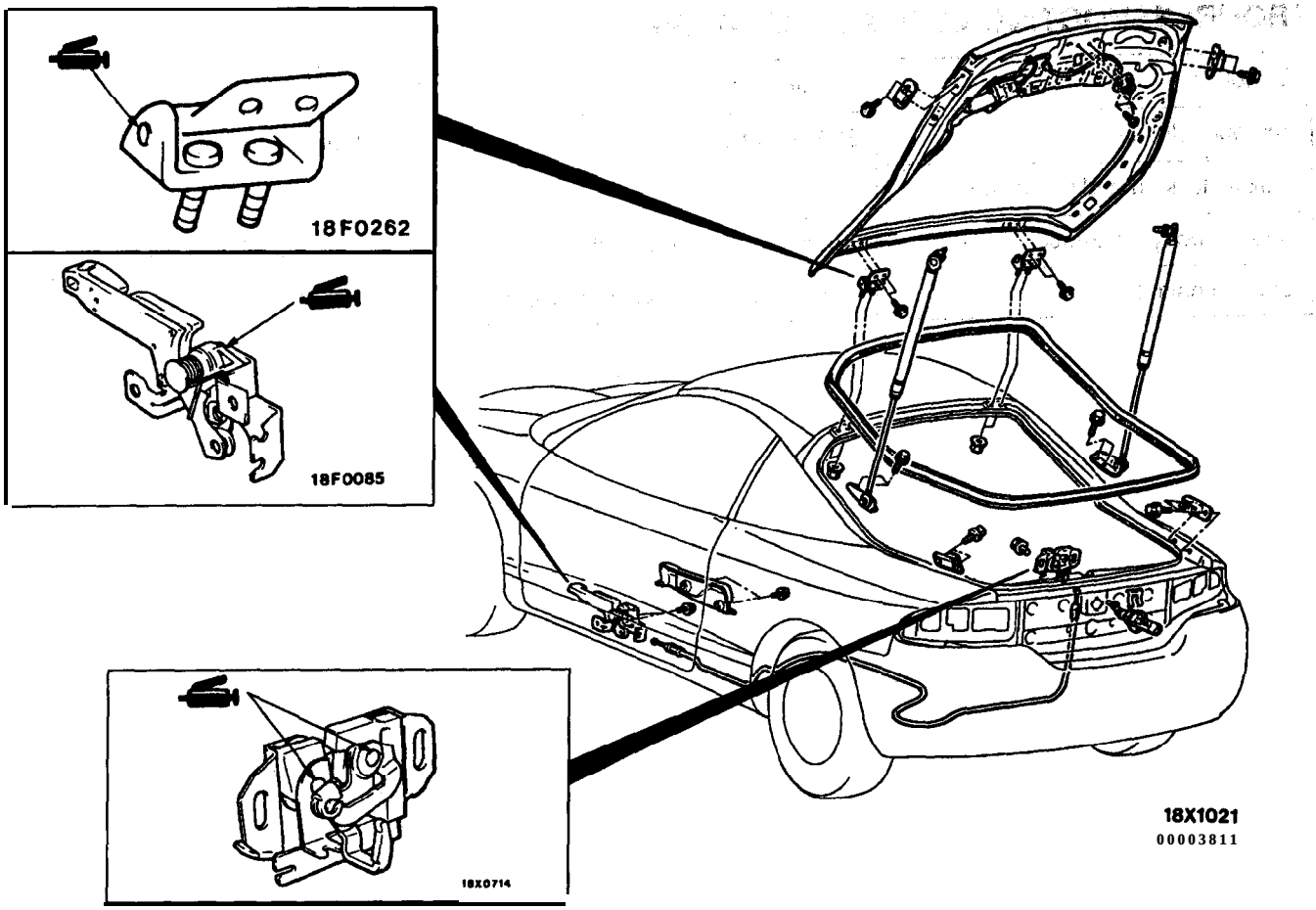

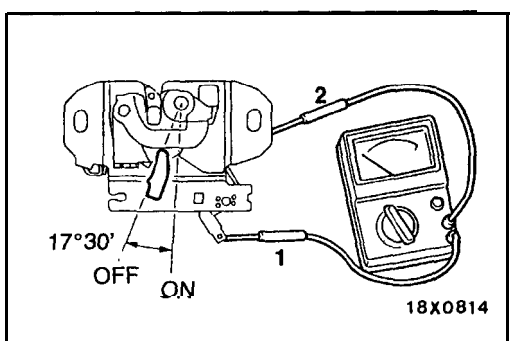

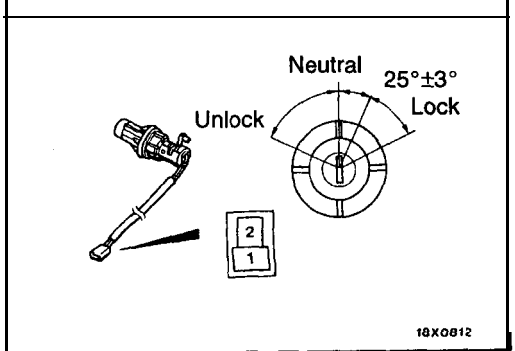

INSPECTION

42400190043

LUGGAGE COMPARTMENT LIGHT SWITCH CONTINUITY CHECK (INCLUDING LATCH)

Switch position	Terminal No.	
	1	2 (Ground)
ON (Latch open)	0 ———	0
OFF (Latch shut)		

LIFTGATE LOCK CYLINDER SWITCH CONTINUITY CHECK

42400200036

Switch position	Terminal No.	
	1	2
LOCK	0 ———	0
Neutral (OFF)		
UNLOCK		

TRUNK LID

42100070069

TROUBLESHOOTING <ECLIPSE SPYDER>

Symptom	Probable cause	Remedy
Improper closure	Striker and latch not properly aligned	Adjust the alignment
Difficult locking and unlocking		
Uneven body clearance	Incorrectly installed trunk lid	Adjust the installation of trunk lid
Uneven height	Incorrect trunk lid bumper height	Adjust the trunk lid bumper height

TRUNK LID

42100220088

REMOVAL AND INSTALLATION <ECLIPSE SPYDER>

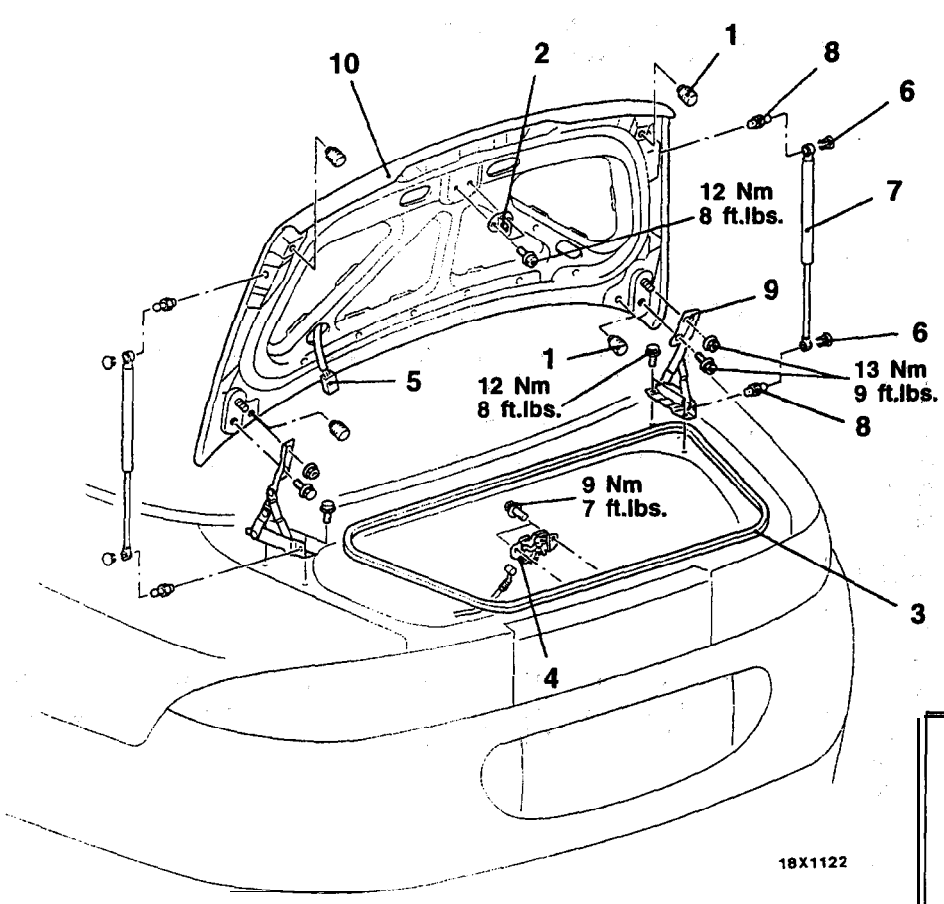

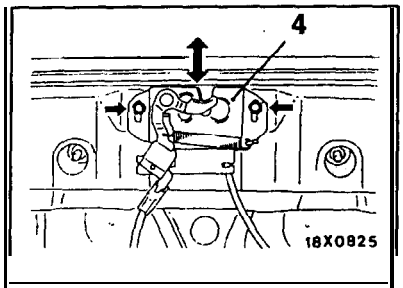

Adjustment of trunk lid step and trunk lid striker linkage

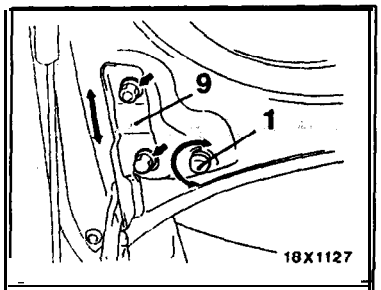

Adjustment of clearance around trunk lid

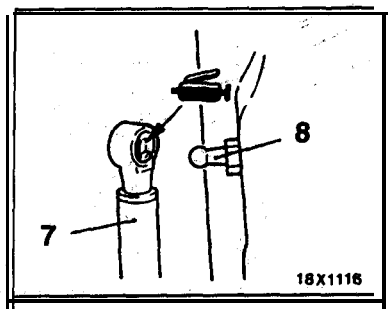

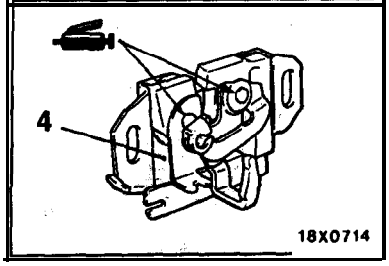

00004752

▶B◀ 1. Bumper
2. Trunk lid striker
▶A◀ 3. Trunk lid opening weatherstrip

Trunk lid latch removal steps

- Rear end trim (Refer to GROUP 52A – Trims.)

4. Trunk lid latch ◀A▶

Caution

1. **Never try to disassemble the liftgate gas spring or burn it.**
2. **Always bore a hole in the gas spring to release the interior gas before the spring is discarded.**

Trunk lid gas spring removal steps

6. Lock cover
7. Trunk lid gas spring
8. Ball joint ◀A▶

Trunk lid removal steps

5. Harness connector
6. Lock cover
7. Trunk lid gas spring
9. Trunk lid hinge
10. Trunk lid

TSB Revision

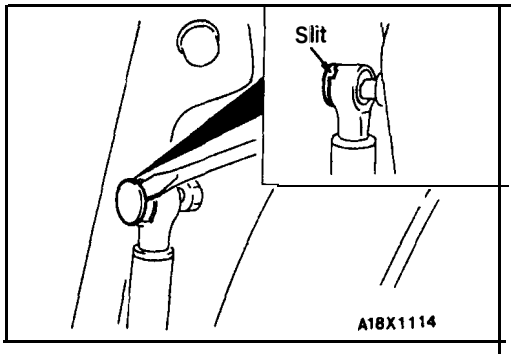

REMOVAL SERVICE POINT

◀A▶ LOCK COVER REMOVAL

Insert a flat-tip screwdriver, etc., into the slit, and remove the lock cover.

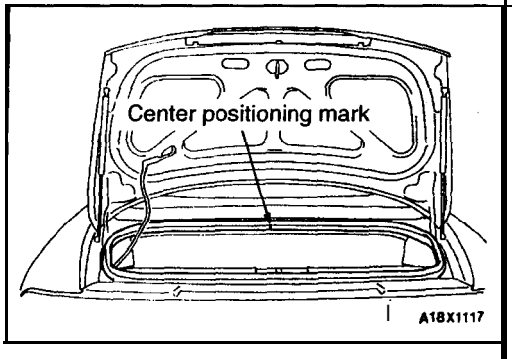

INSTALLATION SERVICE POINTS

▶A◀ TRUNK LID OPENING WEATHERSTRIP INSTALLATION

(1) Install the trunk lid opening weatherstrip so that the marked part is at the position shown in the illustration.

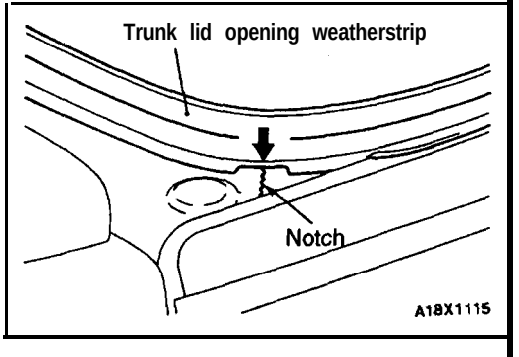

(2) Install so that the notch on the trunk lid opening weatherstrip is approximately at the center of the panel notch shown in the illustration.

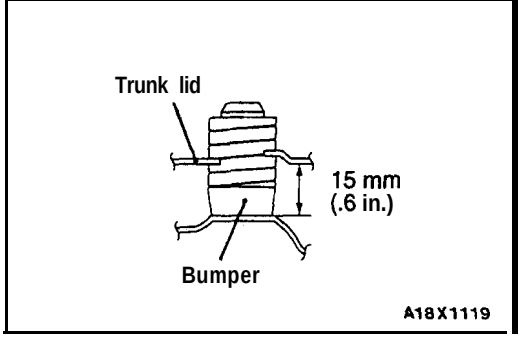

▶B◀ BUMPER INSTALLATION

Install the bumper as shown in the figure.

TRUNK LID LOCK RELEASE HANDLE AND CABLE

42100450029

REMOVAL AND INSTALLATION <ECLIPSE SPYDER>

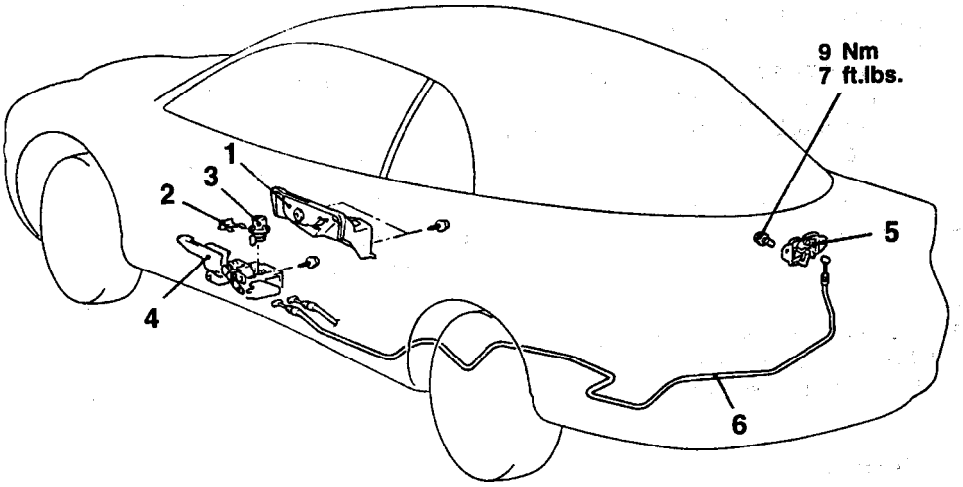

18X1123

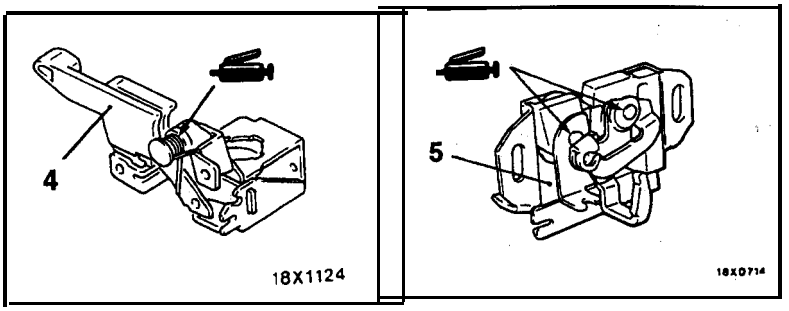

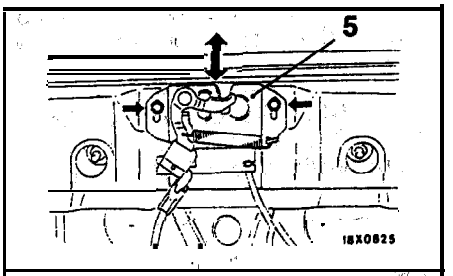

Adjustment of trunk lid step and frunk lid striker linkage

00004745

Trunk lid lock release handle removal steps

1. Release handle cover
2. Retainer
3. Lock cylinder
- Scuff plate (Driver's side) (Refer to GROUP 52A – Trims.)
- Front seat (Driver's side) (Refer to GROUP 52A – Front seat.)
4. Trunk lid lock release handle

Trunk lid lock release cable removal steps

1. Release handle cover
- Scuff plate (Driver's side) (Refer to GROUP 52A – Trims.)
- Front seat (Driver's side) (Refer to GROUP 52A – Front seat.)
4. Trunk lid lock release handle
- Quarter trim, lower (L.H.) and luggage compartment side trim (L.H.) (Refer to GROUP 52A – Trims.)
5. Trunk lid latch
6. Trunk lid lock release cable

KEYLESS ENTRY SYSTEM

42800070059

TROUBLESHOOTING

INSPECTION CHART FOR TROUBLE SYMPTOMS

Trouble symptom		Probable cause	Remedy
No doors can be locked or unlocked.	The indicator light of the transmitter does not illuminate when the transmit switch is pressed.	• Dead transmitter battery • Malfunction of transmitter	Check according to Flow Chart A (Refer to P.42-72)
	A transmission signal is being sent from the transmitter (indicator light illuminates) but the door lock does not operate.	• Malfunction of central door locking system • Malfunction of receiver • Malfunction of ETACS-ECU	Check according to Flow Chart B (Refer to P.42-73)
Not all of the doors can be locked or unlocked.		• Malfunction of door lock actuator	Check according to Flow Chart C (Refer to P.42-73)
All doors can be locked and unlocked with the transmitter, but the dome light and foot light do not flash or illuminate. (However, the dome light operation is normal when a door is opened and closed.)		• Malfunction of receiver	Check according to Flow Chart D (Refer to P.42-74)
No secret code can be registered.		• Malfunction of receiver • Malfunction of scan tool	Check according to Flow Chart E (Refer to P.42-74)
When all doors are locked with the transmitter, the theft-alarm system is not set. (The SECURITY indicator doesn't illuminate, and the alarm doesn't function.) <Vehicles with theft-alarm system>		• Malfunction of receiver • Malfunction of ETACS-ECU.	Check according to Flow Chart F (Refer to P.42-75)
When the PANIC switch of the transmitter is pressed, the headlights do not flash and the horns do not sound. (However, the theft-alarm functions normally.) <Vehicles with theft-alarm system>		• Malfunction of receiver • Malfunction of ETACS-ECU	Check according to Flow Chart G (Refer to P.42-75)

TROUBLE SYMPTOM INSPECTION CHART

A The indicator light of the transmitter does not illuminate when the transmit switch is pressed.

Replace the batteries (Refer to P.42-79.)

↓ YES

Does the indicator light illuminate when the batteries are replaced? → NO → Replace the transmitter.

B A transmission signal is being sent from the transmitter (indicator light illuminates) but the door lock does not operate.

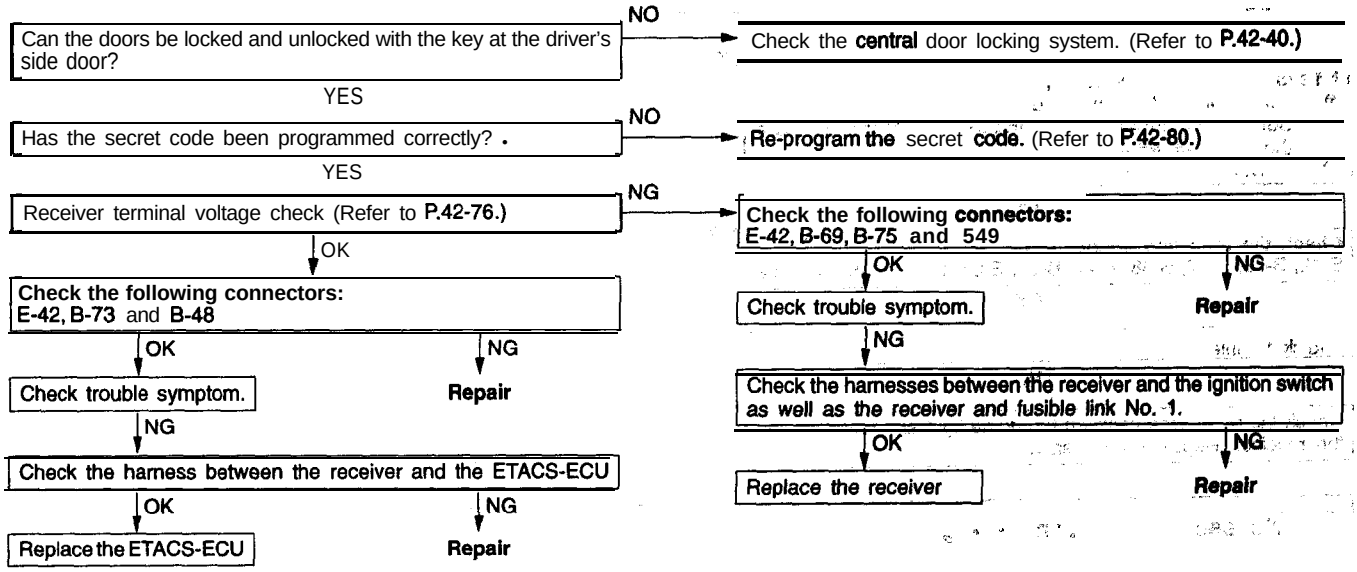

NOTE
- Carry out when replacing the transmitter or receiver or if the secret code has been programmed incorrectly.

C Not all of the doors can be locked or unlocked.

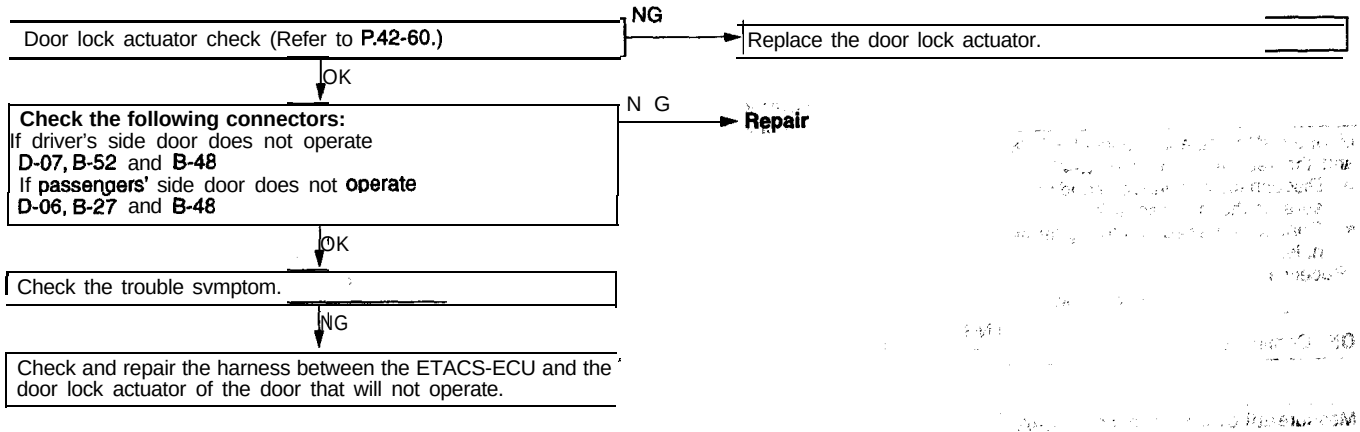

D All doors can be locked and unlocked with the transmitter, but the dome light and foot light do not flash or illuminate. (However, the dome light operation is normal when a door is opened and closed.)

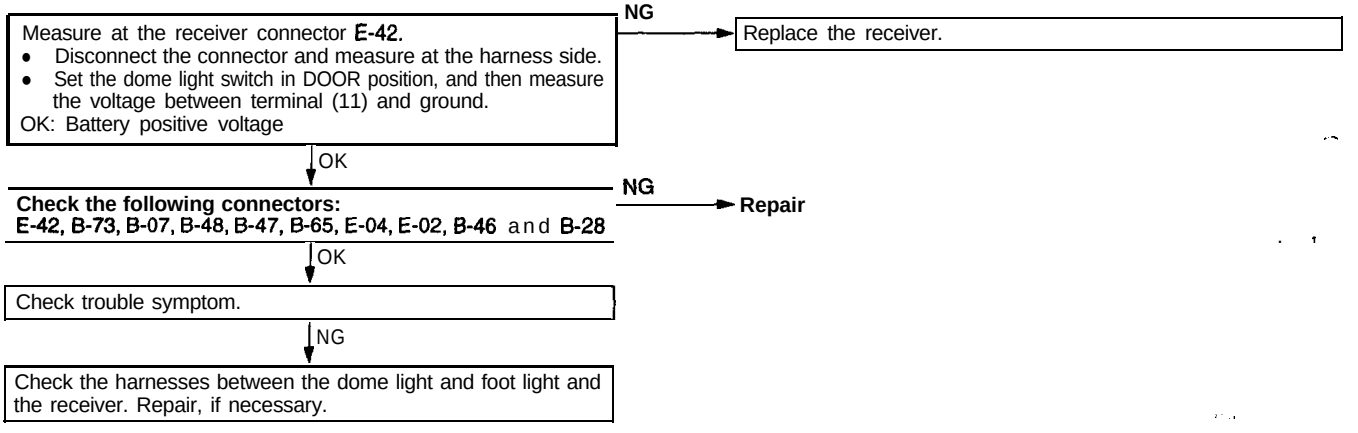

E No secret code can be registered.

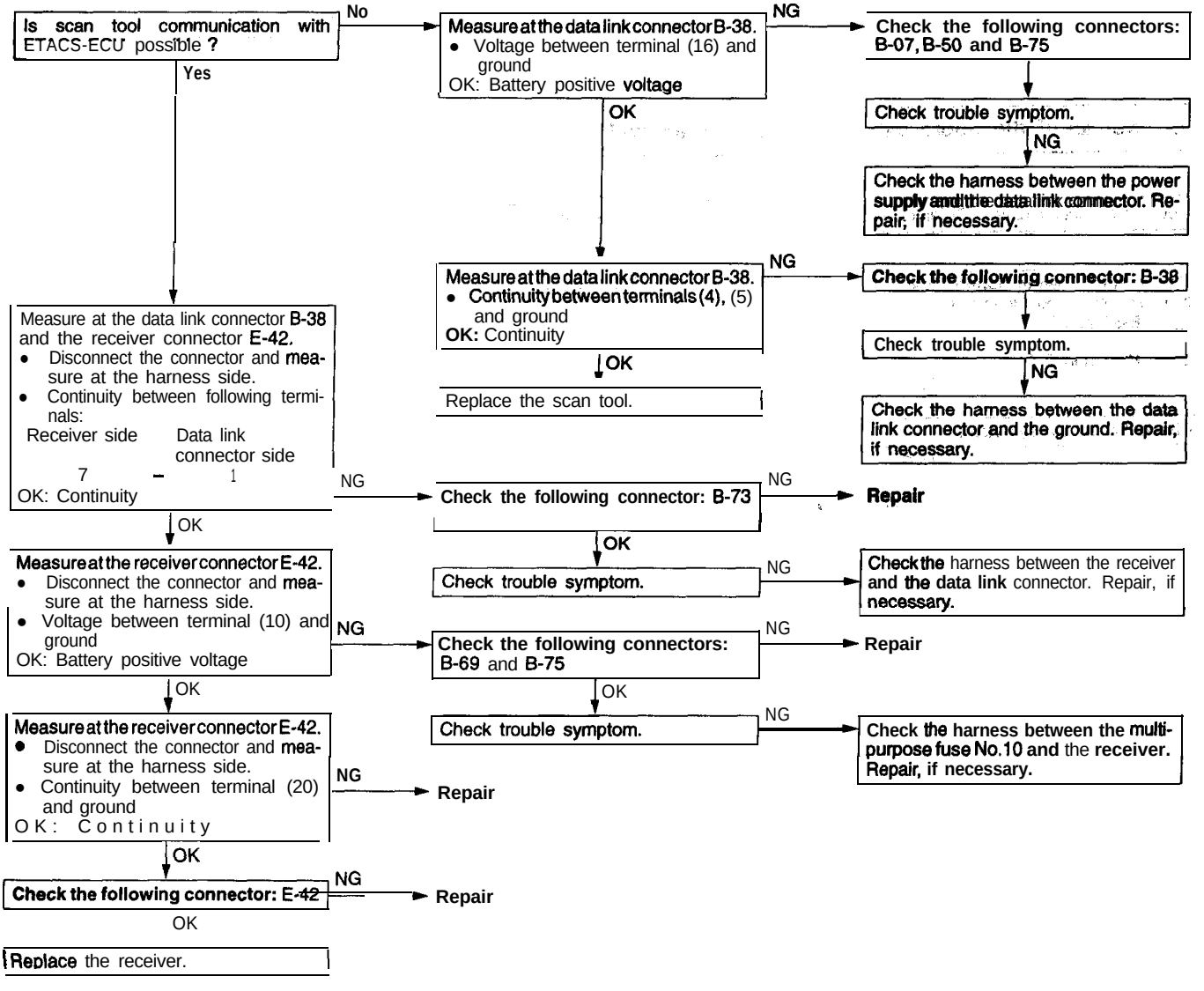

TSB Revision

F When all doors are locked with the transmitter, the theft-alarm system is not set. (The SECURITY indicator doesn't illuminate, and the alarm doesn't function.) <Vehicles with theft-alarm system>

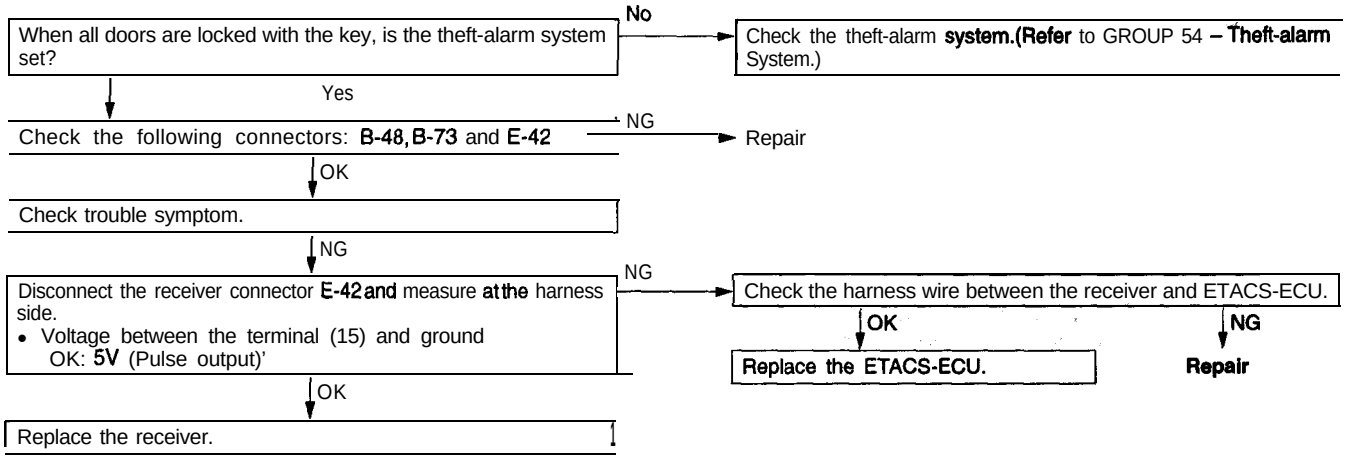

NOTE
● : Using an oscilloscope

G When the PANIC switch of the transmitter is pressed, the headlights do not flash and the horns do not sound. (However, the theft-alarm functions normally.) <Vehicles with theft-alarm system>

[Comment]
When the PANIC switch is pressed, the receiver sends a PANIC signal to the ETACS-ECU. Then the ECU flashes the headlights and sounds the horns intermittently for approx. three minutes.
The headlights and horns share an operation circuit with the theft-alarm system. Because of this, if the theft-alarm system functions normally, the wiring harness between the receiver and the ETACS-ECU mav be defective.

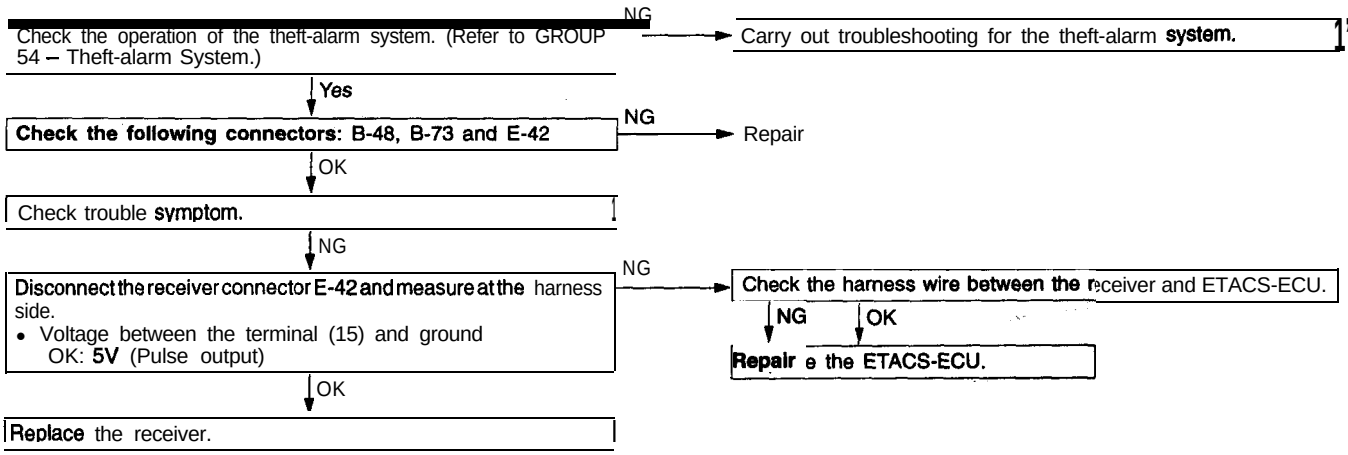

NOTE
● : Using an oscilloscope

TSB Revision

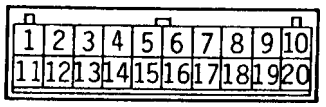

18X0820

Receiver terminal voltage check ,

Terminal No.	Signal	Conditions		Terminal voltage
1	Key reminder switch (vehicles with theft-alarm)	ON (Key removed)		Battery positive voltage
		OFF (Key inserted)		OV
2	Door switch	All doors close (Door switch: OFF)		Battery positive voltage
		One of doors open (Door switch: ON)		OV
6	Door lock actuator (L.H.)	LOCK		5V (Pulse output*)
		UNLOCK		0V
7	Diagnostic selection (Input)	Scan tool: connected		0V
		Scan tool: disconnected		System voltage
9	Receiver power source	Ignition switch (ACC or ON)		Battery positive voltage
		Ignition switch (OFF)		ov
10	Receiver power source	Always		Battery positive voltage
11	Dome light	All doors close (door switch: OFF)	To operate	0V
			Not to operate	Battery positive voltage
12	Door lock output (All doors)	To operate		ov
		Not to operate		Battery positive voltage
13	Door unlock output (All doors)	To operate		0V
		Not to operate		Battery 'positive voltage
14	Door unlock output (Driver's side)	To operate		ov
		Not to operate		Battery positive voltage
15	ETACS-ECU <Vehicle with theft-alarm system>	Transmitter switch: ON		ov
		Transmitter switch: OFF		5V (Pulse output*)
20	Ground	Always		ov

NOTE
- ● : Use an oscilloscope. When using the tester, 0 – 0.03V are indicated repeatedly.

KEYLESS ENTRY SYSTEM

42800130092

REMOVAL AND INSTALLATION<ECLIPSE>

Pre-removal and Post-installation Operation
Removal and Installation
- Quarter trim (L.H.) (Refer to GROUP 52A – Trims.)

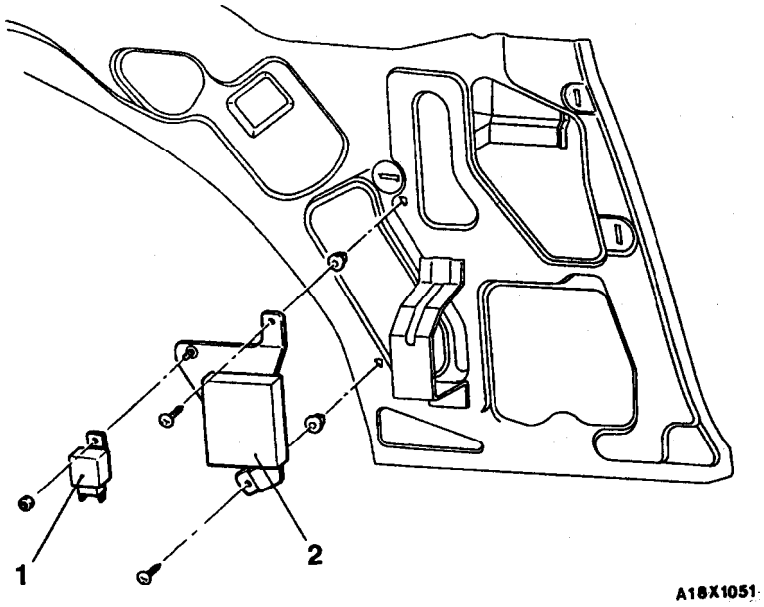

Removal steps

1. Door lock power relay 2
2. Receiver assembly

REMOVAL AND INSTALLATION <ECLIPSE SPYDER>

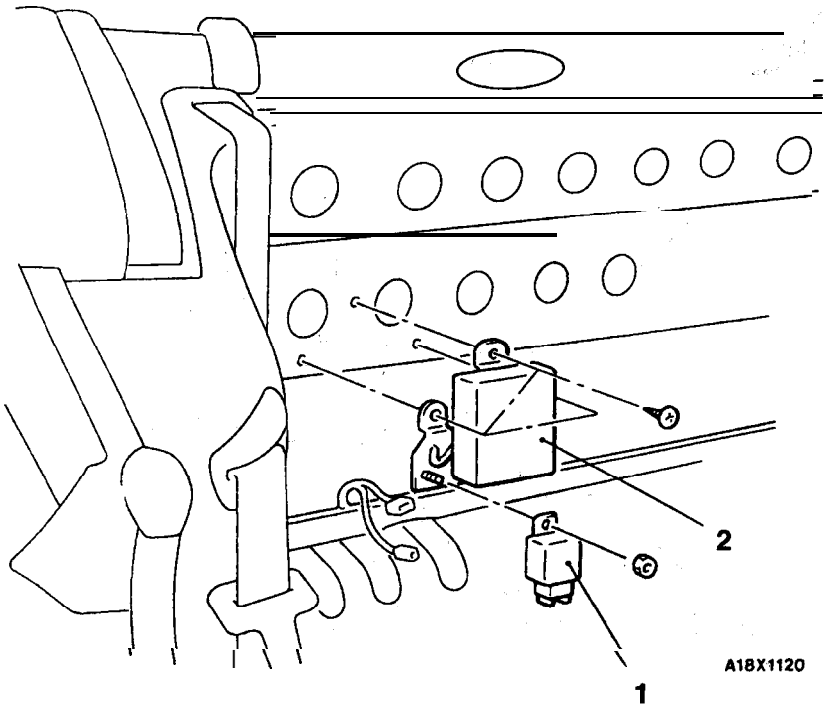

Removal steps

- Rear seat (Refer to GROUP 52A – Rear Seat.)

1. Door lock power relay 2 (for keyless entry system)
2. Receiver assembly

INSPECTION

42700130136

DOOR LOCK POWER RELAY 2 CONTINUITY CHECK

Refer to P.42-62.

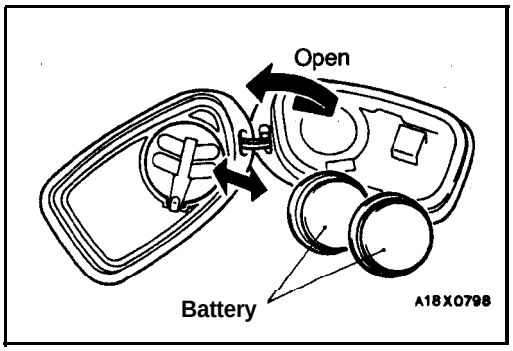

BATTERY REPLACEMENT

42800090048

(1) insert a screwdriver in a slit in the transmitter case and pry it lightly to open the case. Then take the battery out of the transmitter.
(2) Install a new battery with its positive side down.

Replacement battery: Coin type **battery CR2016 × 2**

(3) Firmly close the transmitter case.
(4) Check that the keyless entry system operates properly.

Caution
When the transmitter is opened, be careful not to allow water, dust, etc. to stick to the transmitter. In addition, do not touch the precision electronic device.

METHOD OF REGISTERING A SECRET CODE

42800100079

Each individual secret code is registered inside the transmitter, and so it is necessary to register these codes with the received in the following cases.

- When either the transmitter or receiver is replaced;
- If a second transmitter is to be used;
- If it appears that a problem is occurring because of faulty registration of a code.

A maximum of two different codes per transmitter can be stored in the memory area of the EEPROM, and up to two different transmitters can be used. When the codes for the first transmitter are registered, the previously-registered codes for both transmitters are cleared. Therefore, if you are using two transmitters or are adding a second transmitter, the codes for both transmitters must be registered at the same time.

(1) Check that the door locking function works normally using the door key.

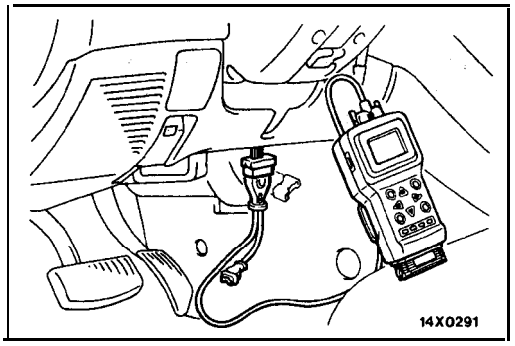

(2) Connect the scan tool to the data link connector.

NOTE
This grounds the data link connector No.1 and gets ready for a code registration.

Caution
Turn the ignition switch to OFF before connecting or disconnecting the scan tool.

(3) Close all doors.

(4) Turn the ignition switch to ACC and return it to OFF.

NOTE
This locks and unlocks the door once, and then a code can be registered.

(5) After pressing any switch on the transmitter once, press it two more times within 10 seconds to register the same code for SET I and SET II.

(6) After registration is completed, the doors will automatically be locked and unlocked once.

(7) If you are using two transmitters or have added a second transmitter, the same registration procedure should be carried out for the second transmitter, and it should be carried out within one minute after registration of the codes for the first transmitter has been completed. After the second registration is completed, the doors will automatically be locked and unlocked once.

(8) Registration mode finishes under the following conditions.

- Registration of two transmitter codes are completed.
- One minute has passed since the registration mode setting.
- Scan tool is disconnected. (ground released.)
- Ignition switch is turned ON.
- Any of the doors are opened.

UNDER COVER

42100280048

REMOVAL AND INSTALLATION

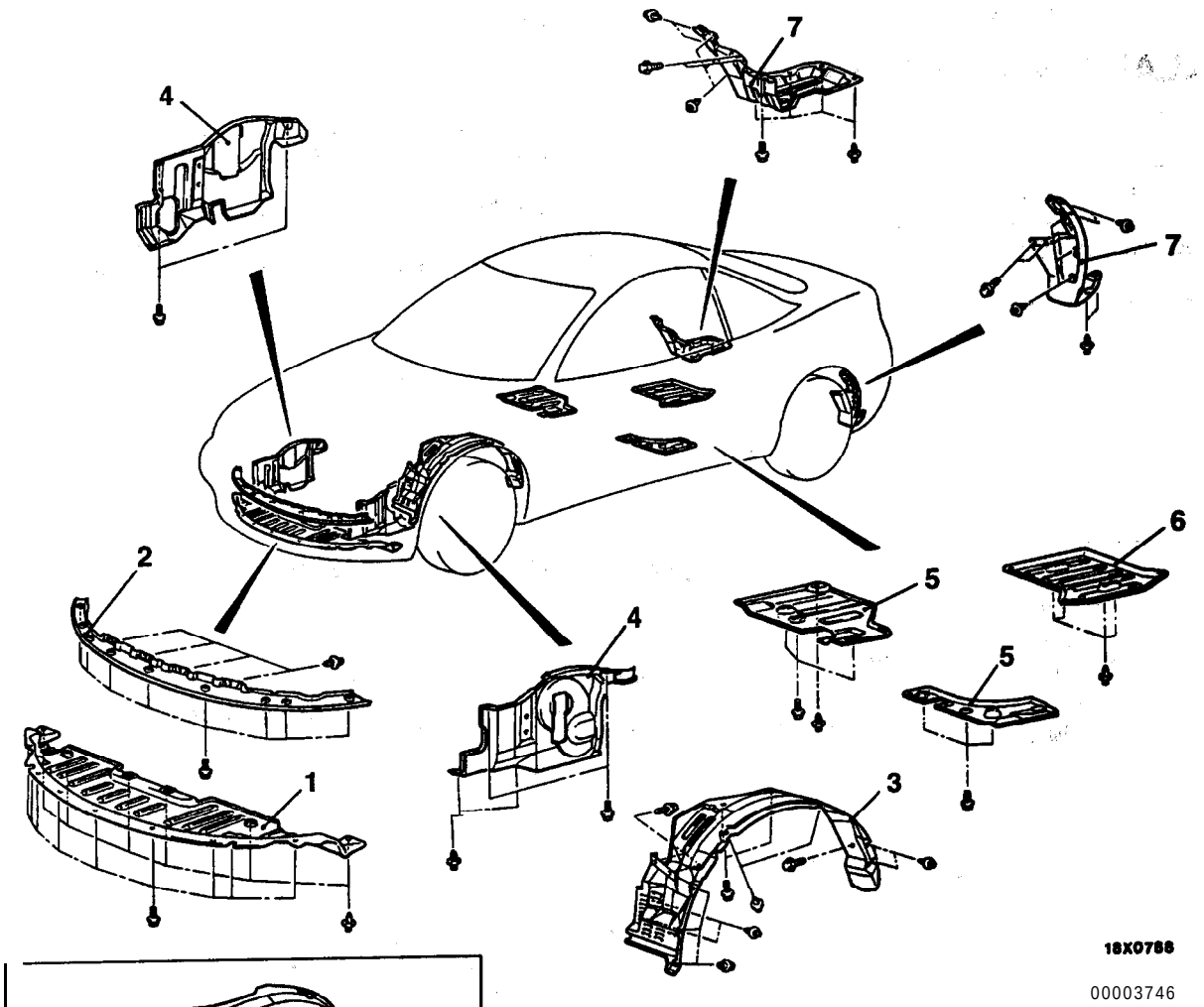

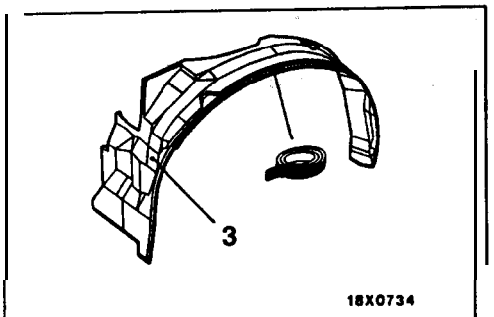

Sealant:
3M ATD Part No. 8625 or equivalent

1. Front center under cover panel
2. Lower front bumper plate
3. Front splash shield
4. Under cover side panel
5. Rear seat under cover panel
6. Rear crossmember under cover panel
7. **Rear floor under cover panel**

TSB Revision

SUNROOF

42600010017

GENERAL

A motor-driven outer slide-type glass sunroof with a tilt-up mechanism is provided as an option for all models. Even when the sunroof is fully closed, a sufficient amount of lighting and a feeling of openness can still be obtained by opening the sunroof sunshade.

SEALANT AND ADHESIVE

42600050033

Items	Specified sealant and adhesive
Sunroof glass attaching screws	Loctite Small Screw Threadlocker 222 or equivalent
Sunroof glass sealing	Loctite 410 Black Toughened Instant Adhesive or equivalent

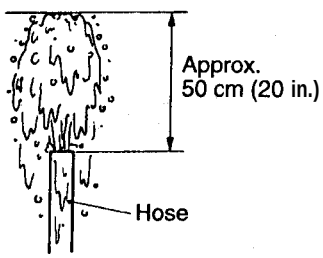

A18X0545

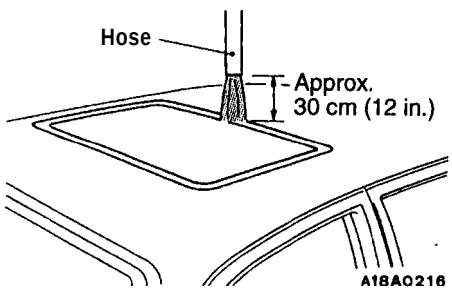

A18AO216

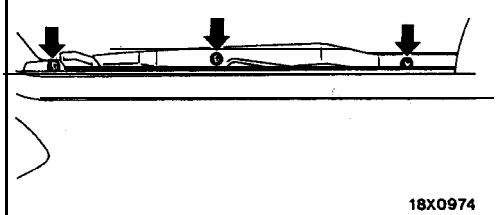

18X0974

ON-VEHICLE SERVICE

42600090059

WATER TEST

1. Close the roof lid tightly.
2. Hold the hose upward and adjust water fountain to about 50 cm (20 in.) high.
3. Pour water over the roof from about 30 cm (12 in.) above roof for more than 5 minutes.
4. While pouring water, check, for leak around the roof lid.
5. In the event of leakage, check the drain pipe, weatherstrip contact and others.

SUNROOF FIT ADJUSTMENT

42600100059

With the sunroof in the closed position, adjust the sunroof glass to 1 mm (.04 in.) below roof surface at front of the glass and 1 mm (.04 in.) above roof surface at rear of the glass and tighten the sunroof glass attaching screws.

OPERATION CHECK

42600260016

Check the following items. If defective, replace the sunroof control unit.

Caution
Check that the following items are normal before carrying out this operation check.
(1) Installation condition of the sunroof assembly
(2) Installation condition, deforms and foreign material of the sunroof drive cable
(3) Unfitted sunroof lid glass
(4) Sunroof switch and sunroof motor

No.	Sunroof initial position	Switch operation	Judgment (normal)
01	Fully closed	Ignition switch: ON 1. Sunroof switch: Open 2. Sunroof switch: Release the open buttom	1. Sunroof tilts up. 2. Sunroof stops before tilt-up finishes.
02	From fully closed position to tilted position	Ignition switch: ON • Sunroof switch: Close	• Sunroof closes fully and stops
03	Fully closed	Ignition switch: ON • Sunroof switch: Open	• Sunroof tilts up and stops.
04	Fully closed	Ignition switch: ON • Sunroof switch: Open Block the sunroof between fully closed position and tilted position	• Sunroof moves until the blodking force -reaches 98N (22.0 Ibs.). At this time check the current to the sunroof motor. If the motor stops at more than 15 A, the motor is normal. [approx. 15 A at 98 N (22.0 Ibs.)]
05	Tilt	Ignition switch: ON • Sunroof switch:Open Block the sunroof between fully tilted position* and fully open position.	• Sunroof moves until the blocking force reaches 98 N (22.0 Ibs.). Sunroof stops when the force has reached 98 N (22.0 Ibs.).
16	Fully open	Ignition switch: ON • Sunroof switch: Close Block the sunroof at 200 mm (7.9 in.) before the sunroof is fully closed.	• Sunroof moves until the blocking force reaches 98 N (22.0 Ibs.). Sunroof stops in one seconds after the blocking force has reached 98 N (22.6 Ibs.).
)7	Fully open	Ignition switch: ON • Sunroof switch: Close Block the sunroof at 5 mm (.20 in.) before the sunroof is fully closed.	• Sunroof moves toward close until the blocking force reaches 98 N (22.0 Ibs.). Then the sunroof moves back toward open when the blocking force reaches 98 N (22.0 Ibs.) and stops after second.
)8	Fully open	Ignition switch: ON • Sunroof switch: Close Block the sunroof at 3 mm (.12 in.) before the sunroof is fully closed.	• Sunroof moves toward close until the blocking force reaches 98 N (22.0 Ibs.). Then the sunroof stops when the blocking force reaches 98 N (22.0 Ibs.). (The sunroof does not move back towara open.)
)9	Fully open	Ignition switch: ON • Sunroof switch: Close Block the sunroof at 18 mm (.71 in.) before the sunroof is fully closed.	• Sunroof moves toward close before the blocking force reaches 98 N (22.0 Ibs.). Then the sunroof moves back toward open when the blocking force reaches 98 N (22.0 Ibs.) and stops after one second.

NOTE
*: "Fully tilted position" is the position where the sunroof has tilted up and begins sliding.

No.	Sunroof initial position	Switch operation	Judgment (normal)
10	Fully open	Ignition switch: ON • Sunroof switch: Close Block the sunroof at 16 mm (.63 in.) before the sunroof is fully closed.	• Sunroof moves toward close until the blocking force reaches 98 N (22.0 lbs.) Then the sunroof stops when the blocking force reaehes 98 N (22.0 lbs.) (The sunroof does not 'move back toward open.)
11	Fully closed	Ignition switch: ON 1. Sunroof switch: Open 2. Sunroof switch: Release the open buttom	1. Sunroof tilts up. 2. Sunroof stops before tilt-up finishes.
12	Tilt up	Ignition switch: ON 1. Sunroof switch: Open 2. Ignition switch: OFF (before the sunroof is fully open)	1. Sunroof moves toward open. 2. Sunroof stops.
13	Fully open	Ignition switch: ON 1. Sunroof switch: Close 2. Ignition switch: OFF (before tilt-up finishes)	1. Sunroof tilts up. 2. Sunroof stops
14	Tilt up	Ignition switch: ON • Sunroof switch: Open Block the sunroof between fully tilted position and fully open position.	• Sunroof moves toward close until the blocking force reaches 98 N (22.0 lbs.). Then the sunroof stops when the blocking force reaches 98 N (22.0 lbs.).

SUNROOF

42600120154

REMOVAL AND INSTALLATION

Post-installation Operation
- Sunroof Fit Adjustment (Refer to P.42-82.)
- Water Test (Refer to P.42-82.)

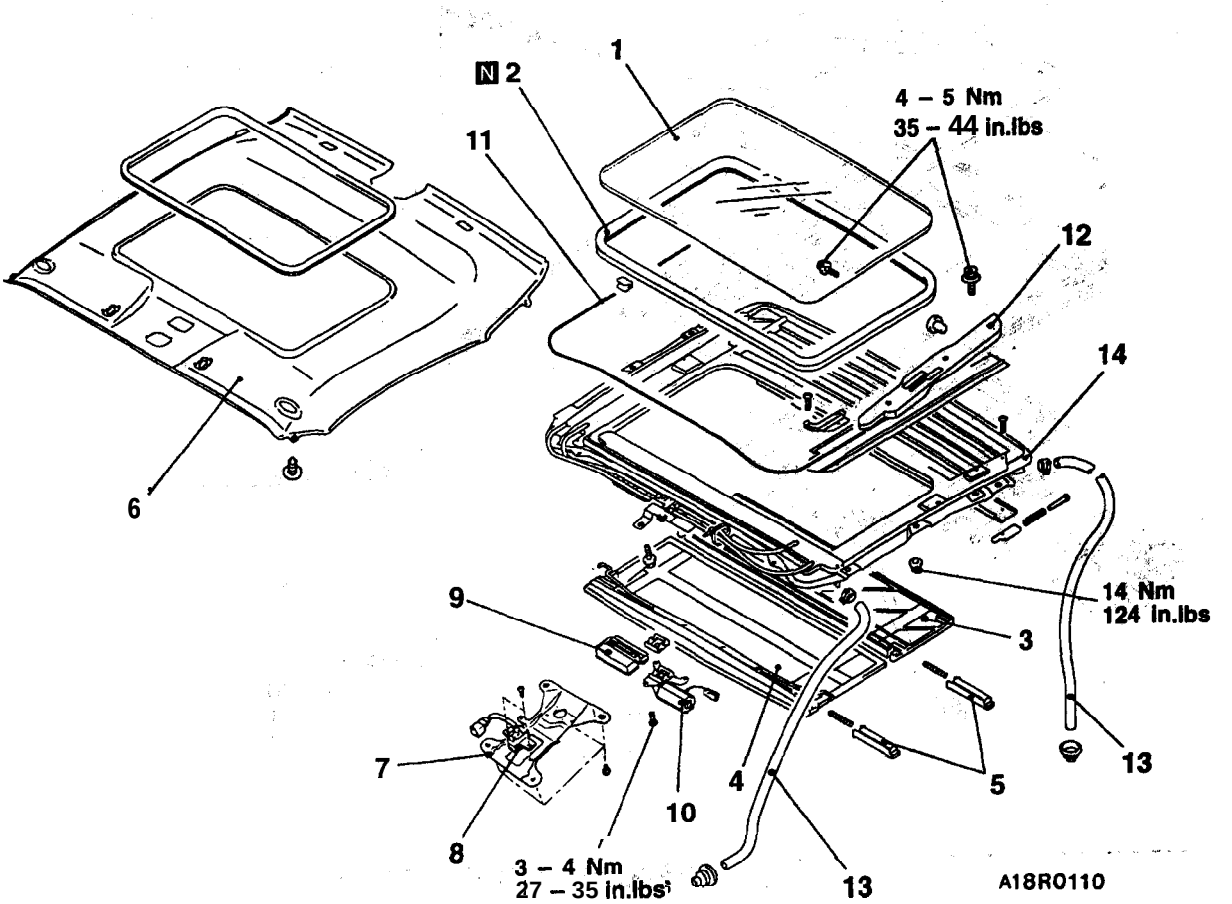

Sunroof glass seal removal steps

◀A▶ ▶F◀ 1. Sunroof glass
◀B▶ ▶E◀ 2. Sunroof glass seal

Sunroof sunshade removal steps

◀A▶ ▶F◀ 1. Sunroof glass
◀C▶ ▶C◀ 3. Rear sunroof sunshade
◀C▶ ▶C◀ 4. Front sunroof sunshade
◀D▶ 5. Sunshade slide block

Sunroof switch

6. Headlining (Refer to GROUP 52A – Headlining.)
7. Bracket
8. Sunroof switch

Sunroof control unit

6. Headlining (Refer to GROUP 52A – Headlining.)
◀E▶ ▶D◀ 9. Sunroof control unit

Sunroof motor removal steps

6. Headlining (Refer to GROUP 52A – Headlining.)
7. Bracket
10. Sunroof motor

Sunroof guide assembly removal steps

◀A▶ ▶F◀ 1. Sunroof glass
◀C▶ ▶C◀ 3. Rear sunroof sunshade”
◀C▶ ▶C◀ 4. Front sunroof sunshade
◀F▶ ▶B◀ 11. Sunroof drive cables connection
◀G▶ 12. Sunroof guide assembly

Sunroof assembly

6. Headlining (Refer to GROUP 52A – Headlining.)
7. Bracket
◀H▶ ▶A◀ 13. Drain hose
‘14. Sunroof assembly

TSB Revision

ADHESION POINTS

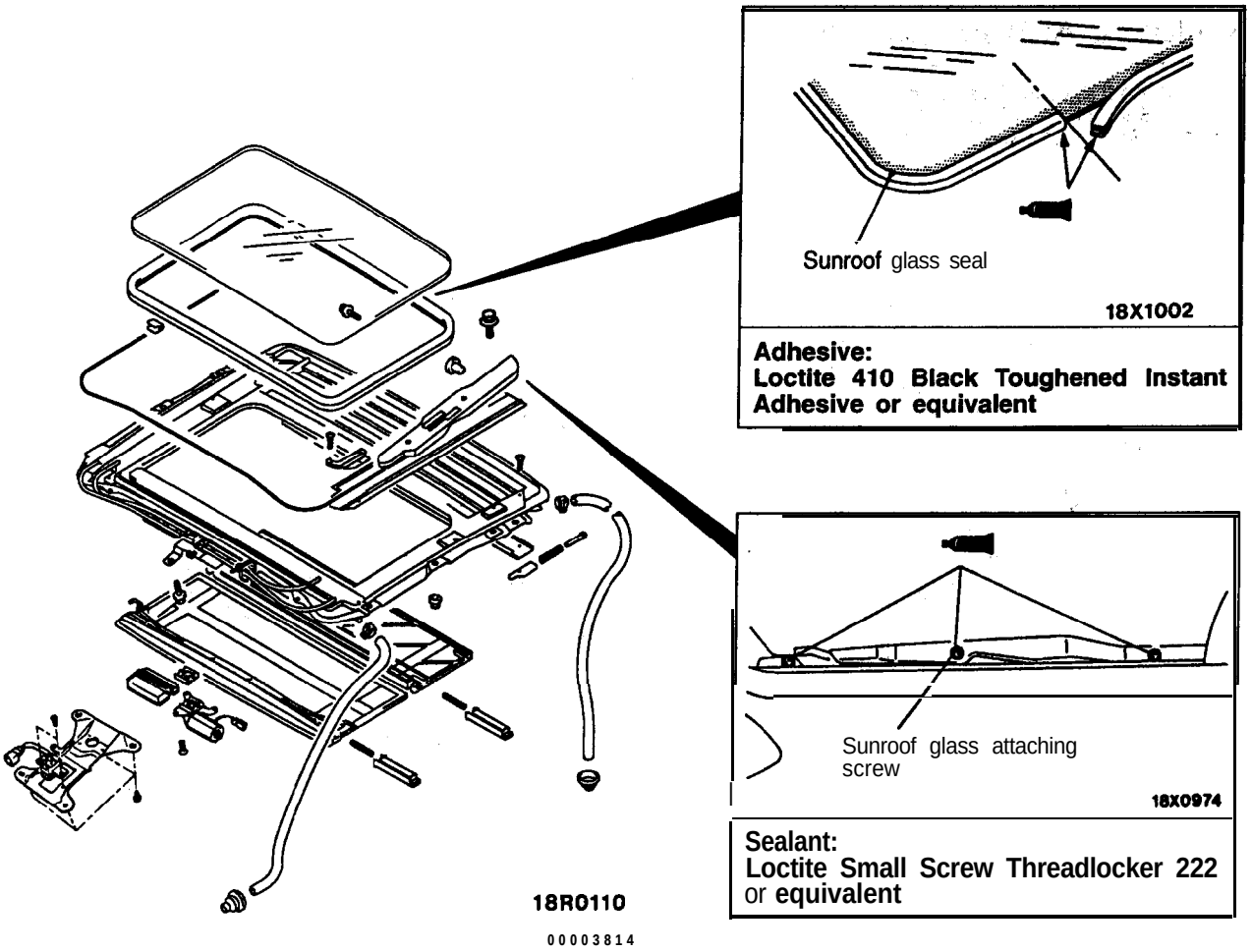

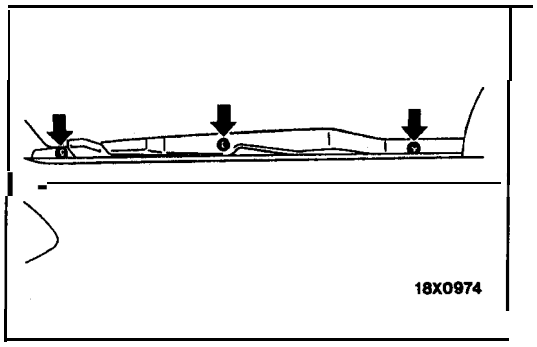

REMOVAL SERVICE POINTS

◀A▶ SUNROOF GLASS REMOVAL

(1) Tilt the sunroof.
(2) Remove the screws attaching sunroof glass to the guide assemblies, and then lift the glass out of roof opening.

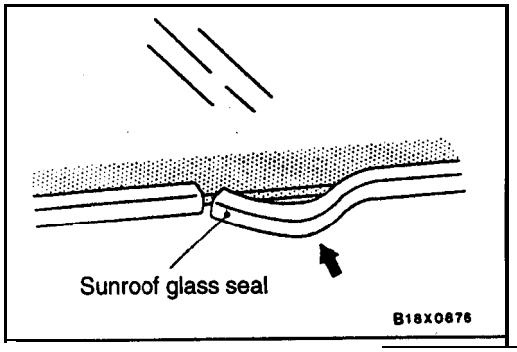

◀B▶ SUNROOF GLASS SEAL REMOVAL

Remove the seal by pulling it off of glass staring at the splice joint.

TSB Revision

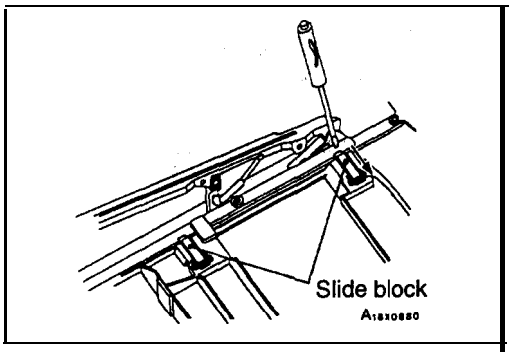

◀C▶ REAR 'SUNROOF SUNSHADE/FRONT SUNROOF SUNSHADE REMOVAL

(1) Remove the rear sunroof sunshade first by pushing. in' the slide blocks to release them from the sunroof guide assembly on one side of the sunshade. Remove the rear sunroof sunshade out of roof opening.
(2) Repeat the step (1) for the front 'sunroof sunshade.

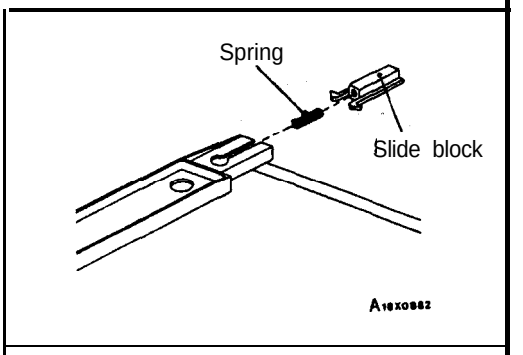

◀D▶ SUNSHADE SLIDE BLOCK REMOVAL

Squeeze together your fingers on inboard end of the slide block to allow the slide block to slide. out of it's channel, and then remove the slide block and spring.

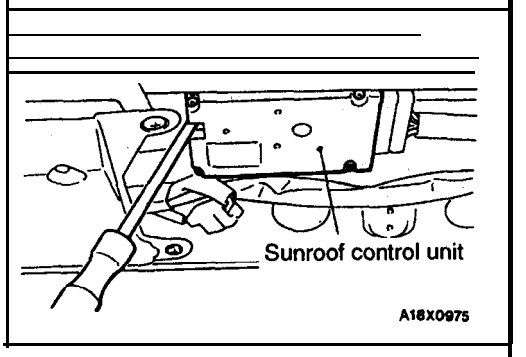

◀E▶ SUNROOF CONTROL UNIT REMOVAL

(1) Close the sunroof glass fully.
(2) Insert a flat-tipped screwdriver, place it on the tab, and then press it to the right.
(3) Lower sunroof control unit and slide to left.

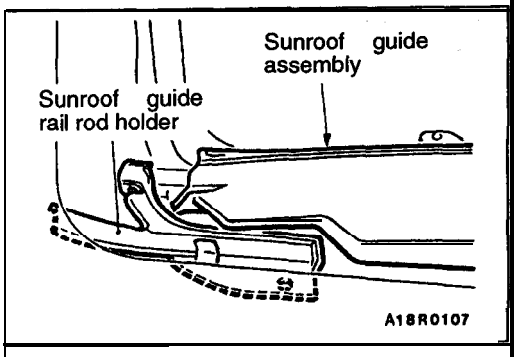

◀F▶ SUNROOF DRIVE CABLES REMOVAL

(1) Tilt the sunroof guide assembly and then remove the sunroof guide rail rod holder.

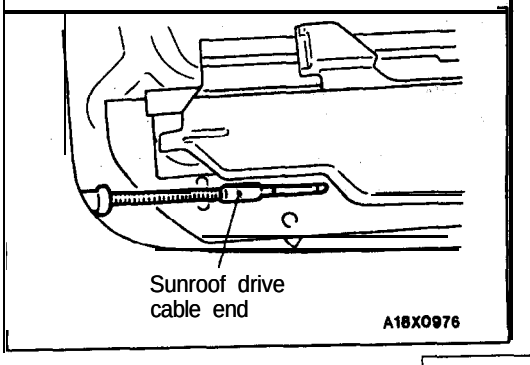

(2) Close the sunroof guide assembly and disconnect the sunroof drive cable end from the sunroof guide assembly.

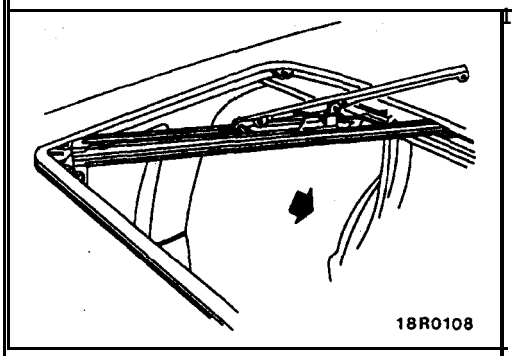

◀G▶ SUNROOF GUIDE ASSEMBLY REMOVAL

(1) Slide the roof drip rear channel backward, and then remove the guide assembly screws, the rear screw and spacer.
(2) Slide the rear of the guide assembly toward center of the vehicle and remove the guide assembly.

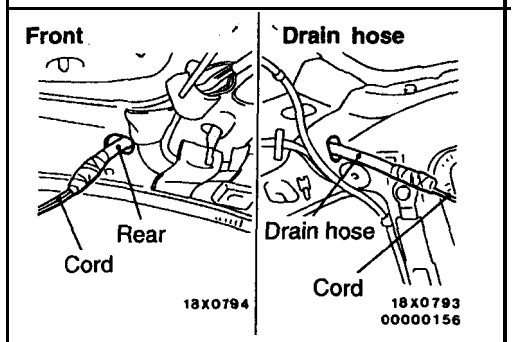

◀H▶ DRAIN HOSE REMOVAL

Remove the grommet. Tie a cord to the end of the drain hose, wind plastic tape around it so that there is no unevenness, and pull the drain hose out into the wheel house.

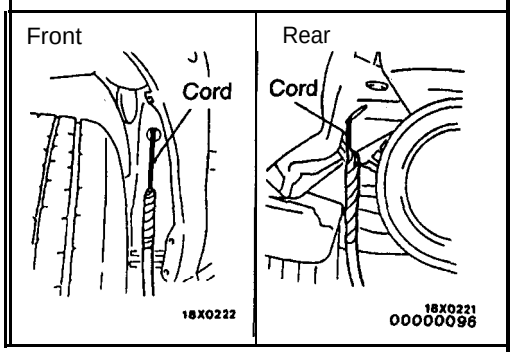

INSTALLATION SERVICE POINTS

▶A◀ DRAIN HOSE INSTALLATION

(1) Tie the cord that was used during removal to the end of the drain hose, and wind the plastic tape around it so that there is no unevenness.
(2) Pull the cord to pull through the drain hose.

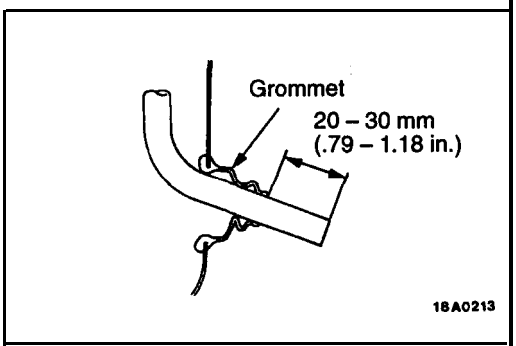

(3) Make the protrusion from the drain hose grommet as shown in the illustration.

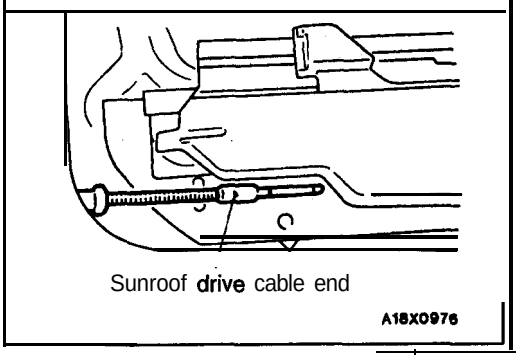

▶B◀ SUNROOF DRIVE CABLES INSTALLATION

Caution
If cables are kinked, replace them. Always replace the cables in pair and grease them before installatioh.

Close the sunroof guide assembly and install the sunroof drive cable end to the sunroof guide assembly.

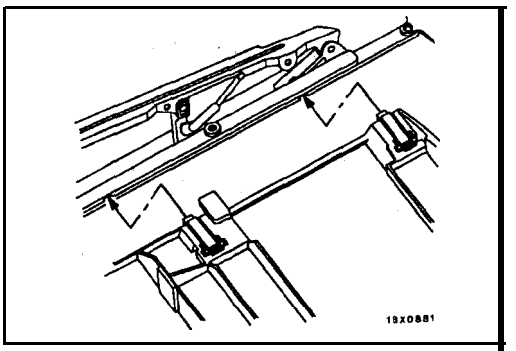

▶C◀ FRONT SUNROOF SUNSHADE/REAR SUNROOF SUNSHADE INSTALLATION

(1) Install the front sunroof sunshade first by inserting the slide blocks on the right side of the sunshade into the lower slide position of the right guide assembly.
(2) Push the sunshade slide blocks on the left side of the sunshade into the sunshade to allow the front sunroof sunshade to drop into position. Once in position, engage the slide blocks into the lower channel of the left guide assembly.

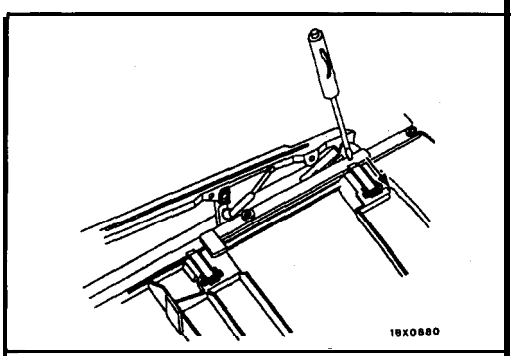

(3) Push the front sunroof sunshade to full forward position.
(4) Position the rear sunroof sunshade so that the stop tabs are against the stop bumpers on the guide assembly. Engage the right side slide blocks of the upper half of the sunshade into the upper channel on the right guide assembly. Engage the slide blocks on the left side of the sunshade into the upper channel in the left guide assembly.
(5) Slide the sunshade back and forth to check that it functions smoothly.

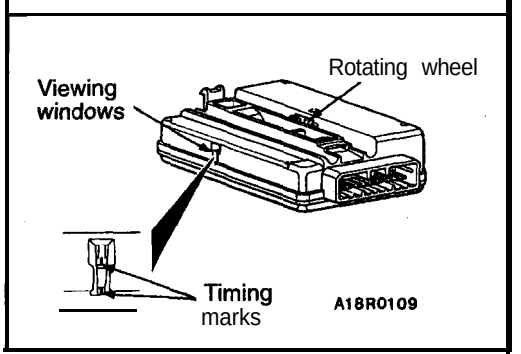

▶D◀ SUNROOF CONTROL UNIT INSTALLATION

(1) Look into the "viewing windows" while turning the rotating wheel. Turn the rotating wheel until the white timing marks appear. When the white timing marks appear in the "viewing windows" at the same time; stop turning the rotating wheel.
(2) Close the sunroof fully. Install "the timed sunroof control unit. Make sure that the sunroof cable is properly-inserted into the control unit.

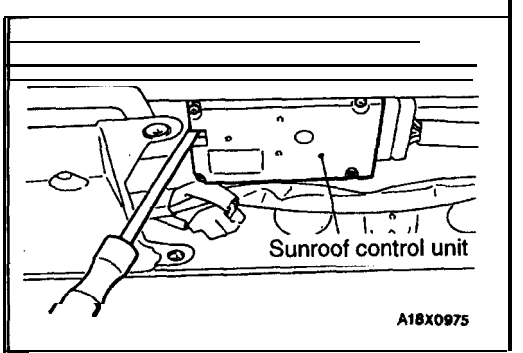

(3) Insert a flat-tipped screwdriver, place it on the tab, and press it to the right, being careful not to pinch wiring.

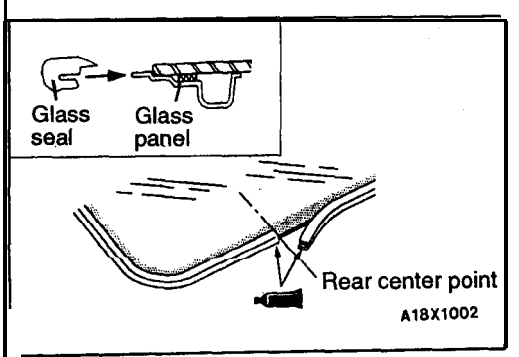

▶E◀ SUNROOF GLASS SEAL INSTALLATION

(1) Starting at the rear center of the sunroof glass, begin installing the seal by pushing it onto the edge of the glass panel and gently pulling on it while" installing.
(2) Approximately 102 mm (4 in.) before completing installation, lay the end of the seal over top of the beginning of the seal. Cut the seal so there 'is an extra. 3.18 mm (1/8 in.) of the seal past the point where the seal lines up with the beginning of the seal.
(3) Apply the specified adhesive to the splice joint area where two ends of the seal meet.

Specified adhesive:
Loctite 410 Black Toughened Instant Adhesive or equivalent

(4) With the approximately 102 mm (4 in.) of the seal unattached, push two ends of the seal together at glue joint.
(5) Install remainder of the seal by pushing the seal onto the edge of the glass panel. The 3.18 mm (1/8") of extra seal material should strengthen the seal at the splice joint.

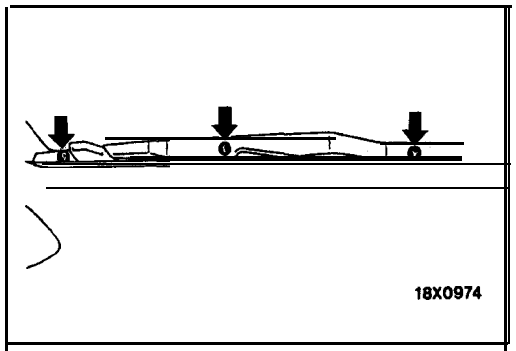

▶F◀ SUNROOF GLASS INSTALLATION

(1) Position the sunroof glass onto the guide assemblies and align the mounting holes.
(2) Apply the specified sealant to the sunroof glass attaching screws and install them, going to the next step before tightening.

Specified sealant:
Loctite Small Screw Threadlocker 222 or equivalent

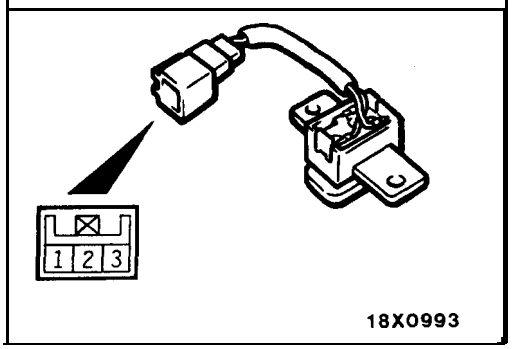

INSPECTION

42600160040

SUNROOF SWITCH CHECK

Operate the sunroof switch and check the continuity between each of the terminals.

Switch position	Terminal No.		
	1	2	3
OPEN	0 ——	—0	
OFF			
CLOSE		0 ——	—0

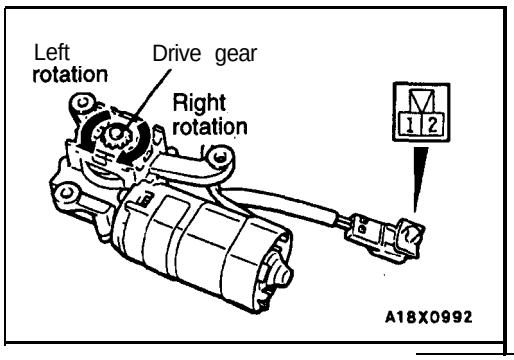

SUNROOF MOTOR CHECK

42600250020

Check the rotation direction of the drive gear when the battery is connected to the connector.

Terminal 1	Terminal 2	Drive gear rotation direction
	+	Right
+	–	Left

ELECTRIC CONVERTIBLE TOP

42620060014

SPECIAL TOOLS

Tool	Tool number and name	Supersession	Application
	MB990784 Oranament remover	General service tool	• Removal of center air outlet assembly, trims, etc. • Installation of weatherstrips
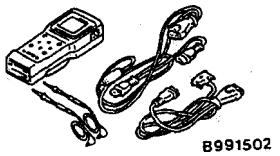	MB991 502 Scan tool (MUT-II)	MB991 502	Simulated vehicle speed output signal checking
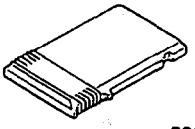	ROM pack		

TROUBLESHOOTING

42620070017

INSPECTION CHART FOR TROUBLE SYMPTOMS

Trouble symptom	Probable cause	Remedy
Operation does not take place when the convertible top switch is set to open and close when the convertible top bypass switch is set to OFF.	• Convertible top switch is faulty • Convertible top bypass switch is faulty • Convertible top control module is faulty	Check -according to Flow Chart A (Refer to P.42-92.)
Opening or closing with the convertible top switch is not possible.	• Broken wire in convertible top switch power supply circuit • Convertible top switch is faulty • Convertible top control module is faulty • Check according to Flow Chart A (Refer to P.42-92.)	Check according to Flow Chart B (Refer to P.42-93.)
Operation takes place when the convertible top switch is set to open or close during travel.	• Broken wire in vehicle speed sensor circuit • Convertible control module is faulty	Check according to Flow Chart C (Refer to P.42-93.)

TROUBLE SYMPTOM INSPECTION CHART

A Operation does not take place when the convertible top switch is set to open or close when the convertible top bypass switch is set to OFF.

- Convertible top switch continuity check (Refer to P.42-104.)
- Convertible top bypass switch continuity check (Refer to P.42-105.)

NG → Replace

OK

Measure at the convertible top switch connector B-88.
- Disconnect the connector and measure at the harness side.
- Voltage between terminal (5) and ground.

OK: Battery positive voltage

NG → Check the following connectors: B-88, B-50 and B-49

NG → Repair

OK → Check trouble symptom

NG → Check the harness between the ignition switch (IG2) and convertible top switch. Repair, if necessary.

OK

Measure at the convertible top control module connector E-53
- Disconnect the connector and measure at the harness side
- Voltage between terminal (12) and ground

OK: Battery positive voltage

NG → Check the following connectors: E-53, B-72 and B-77

NG → Repair

OK → Check trouble symptom

NG → Check the harness between the fusible link (3) and convertible top control module. Repair, if necessary.

OK

Measure at the convertible top control module connector E-53
- Disconnect the connector and measure at the harness side
- Continuity between terminal (15), (16) and ground

OK: Continuity

NG → Check the following connector: E-53

NG → Repair

OK → Check trouble symptom

Check the harness between the convertible top control module and ground. Repair, if necessary.

OK

Check the harness between the convertible top control module and convertible top bypass switch and between the convertible top control module and convertible top motor.

NG → Repair

OK

Replace the convertible top control module

B Opening or closing with the convertible top switch is not possible.

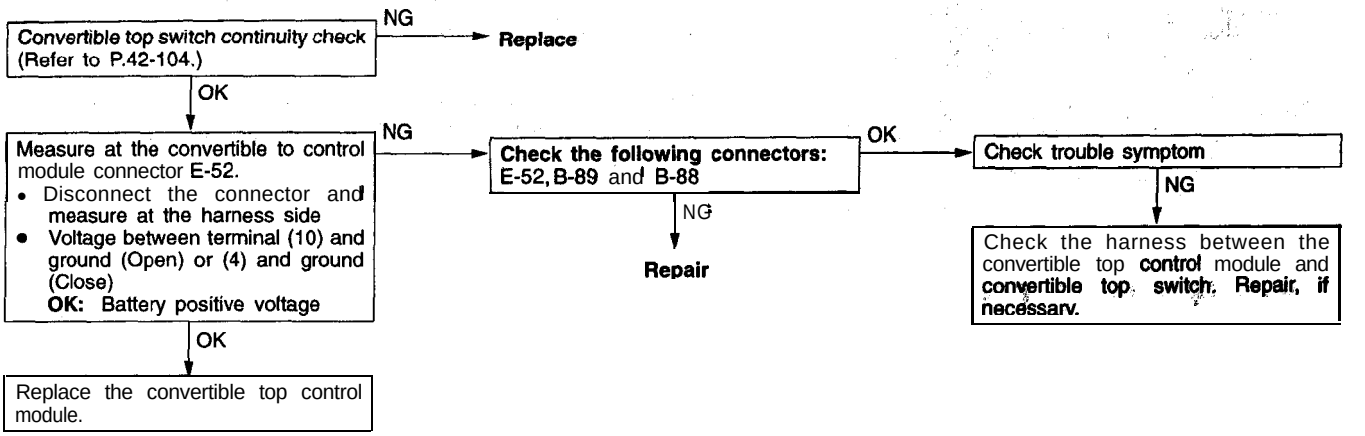

C Operation takes place when the convertible top switch is set to open or close during travel.

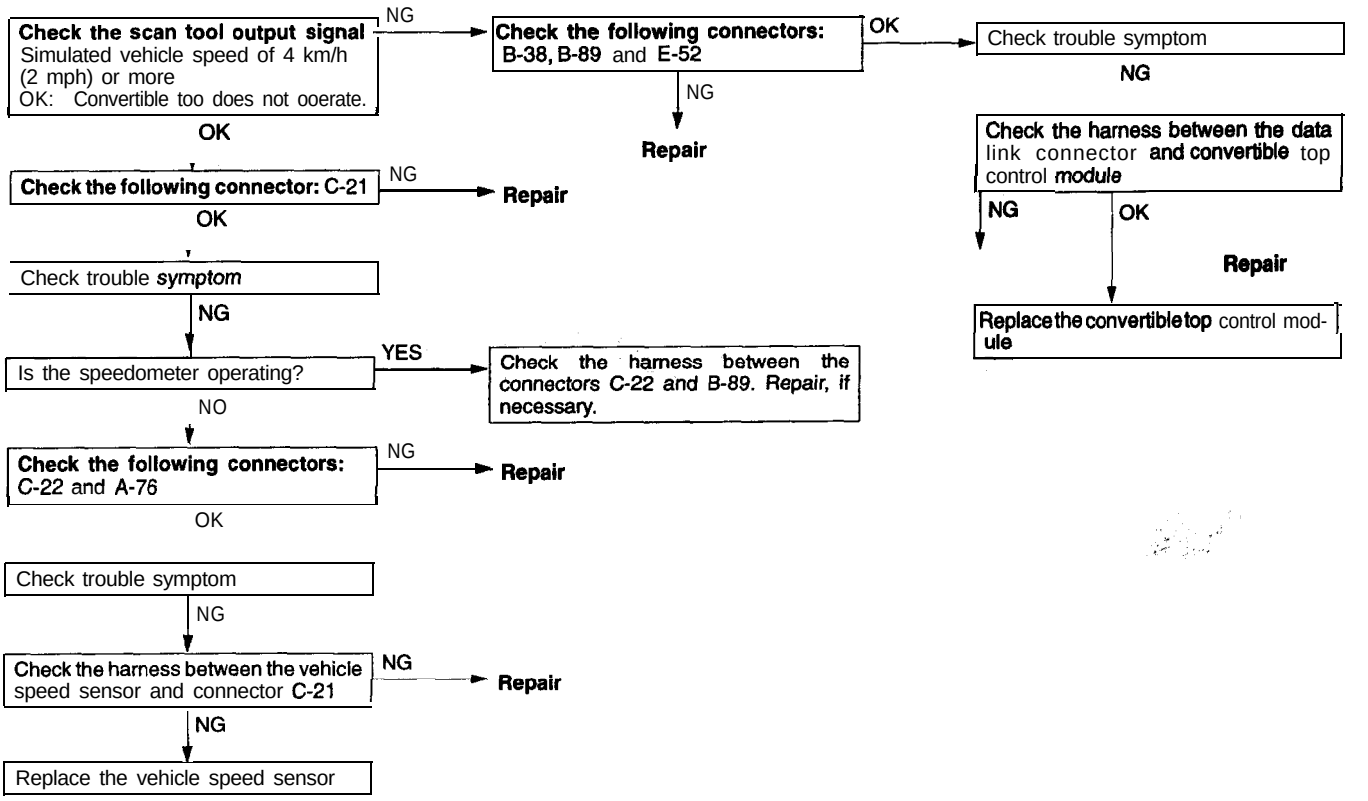

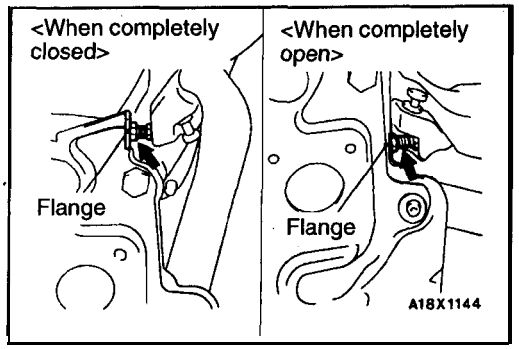

ON-VEHICLE SERVICE

42620090020

CONVERTIBLE TOP FIT ADJUSTMENT

(1) Remove the quarter trim, lower (Refer to GROUP 52A – Trims.)
(2) Fully open or close the top, then adjust the stopper adjusting bolt so it contacts the flange as shown in the illustration.

CONVERTIBLE TOP ASSEMBLY

42620110023

REMOVAL AND INSTALLATION

Pre-removal Operation	Post-installation Operation
Completely open the convertible top.	Convertible top fit adjustment

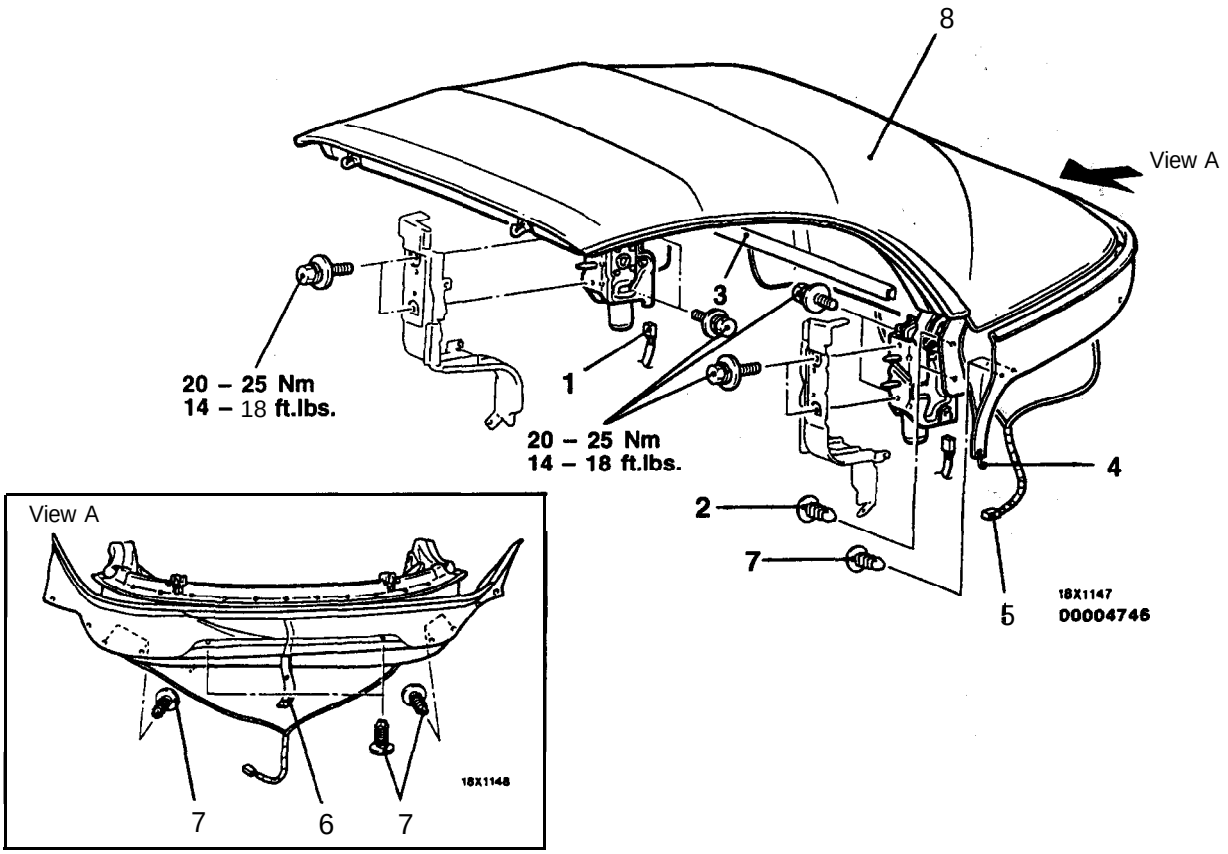

Removal steps

- Quarter belt moulding (Refer to GROUP 51 – Mouldings.)
- Quarter trim, lower (Refer to GROUP 52A – Trims.)
- Rear speaker (Refer to GROUP 54 – Speaker.)

1. Topstack drive motor connector
2. Clip
3. Strip
4. Side attaching hook
5. Defogger connector
- Partition trim (Refer to GROUP 52A – Trims.)

6. Rear attaching strap
7. Drain trough rear attaching clip
8. Convertible top assembly

◀A▶ ◀B▶ ◀C▶ ▶A◀

TSB Revision

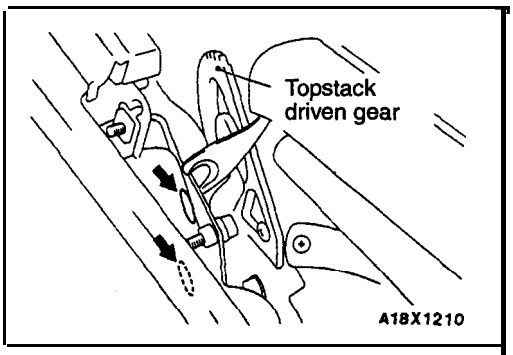

REMOVAL SERVICE POINTS

◀A▶ CLIP REMOVAL

Pry out 2 clips at each side using the prying tool.

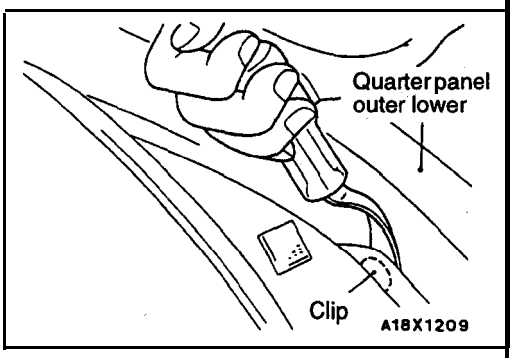

◀B▶ DRAIN TROUGH REAR ATTACHING CLIP REMOVAL

Using the clip prying tool, remove 10 attaching clips.

Caution
Use care not to rip the drain trough during convertible top removal.

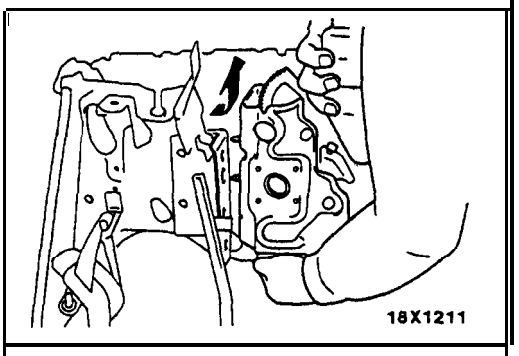

◀C▶ CONVERTIBLE TOP ASSEMBLY REMOVAL

Pty one side back at a time.

Caution
Use care not to rip the drain trough durlng convertible top removal.

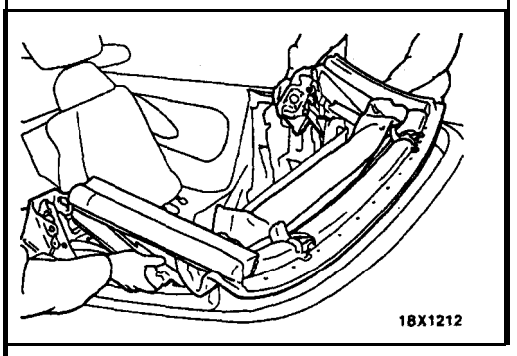

INSTALLATION SERVICE POINT

▶A◀ CONVERTIBLE TOP ASSEMBLY INSTALLATION

(1) Insert rear bow into back of convertible top area first.

Caution
Use care not to rip the drain trough during convertible top removal.

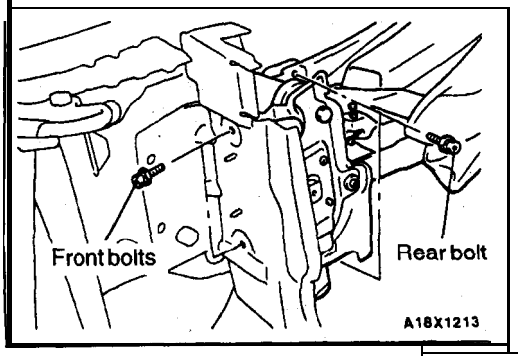

(2) Snug frorit bolts first, then insert rear bolts.

TOPSTACK DRIVEN GEAR

42620130029

REMOVAL AND INSTALLATION

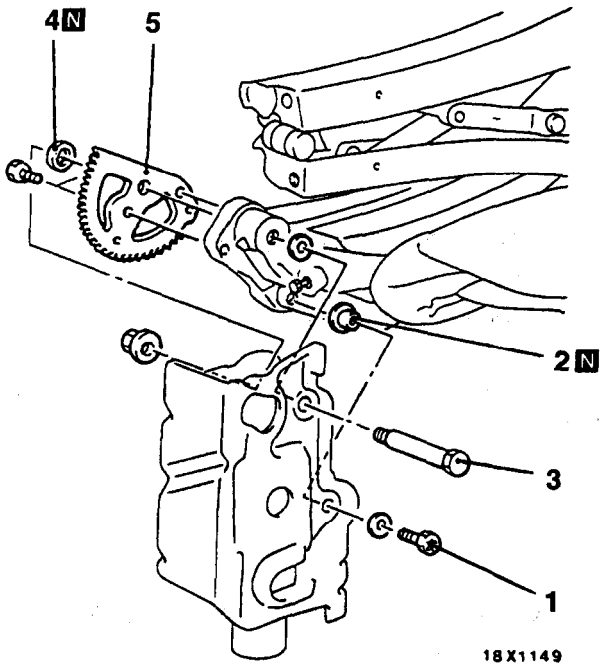

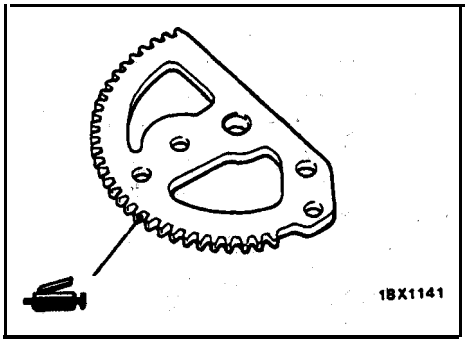

00004747

Removal steps

- Quarter trim, lower (Refer to GROUP 52A – Trims.)

1. Balance link installation screw
2. ▶B◀ Bushing
3. Main pivot bolt
4. ▶A◀ Bushing
5. ◀A▶ ▶A◀ Topstack driven gear

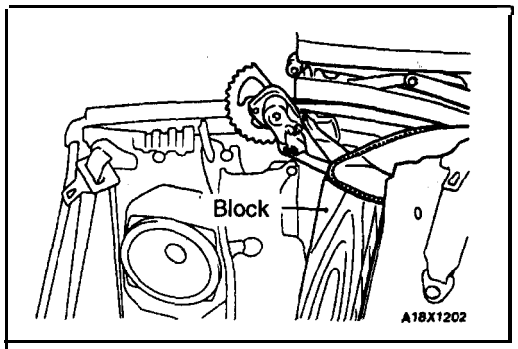

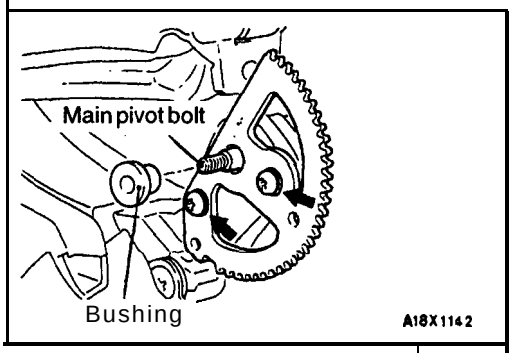

REMOVAL SERVICE POINT

◀A▶ TOPSTACK DRIVEN GEAR REMOVAL

Lift pivot and support with 102 mm × 366 mm × 279 mm (4 in. × 14 in. × 11 in.) block of wood or equivalent.

INSTALLATION SERVICE POINTS

▶A◀ TOPSTACK DRIVEN GEAR/BUSHING INSTALLATION

(1) Position the topstack driven gear and insert the main pivot bolt, then tighten two topstack driven gear installation bolts.
(2) Remove the main pivot bolt.
(3) Install the topstack driven gear to the main pivot complete bracket.

NOTE
To align motor drive gear and topstack driven gear, change Bypass switch in left rear of trunk to manual position.

(4) Insert the main pivot bolt and washer through the topstack driven gear.

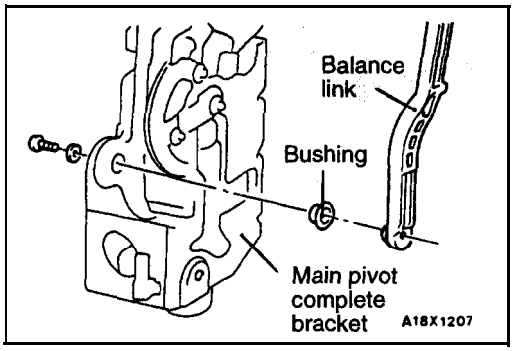

▶B◀ BUSHING INSTALLATION

(1) Insert bushing" to balance link (shown orientation).
(2) Install balance link into main pivot complete bracket.
(3) Insert balance link installation screw, then tighten the screw.

HEADLINER

42620150018

REMOVAL AND INSTALLATION

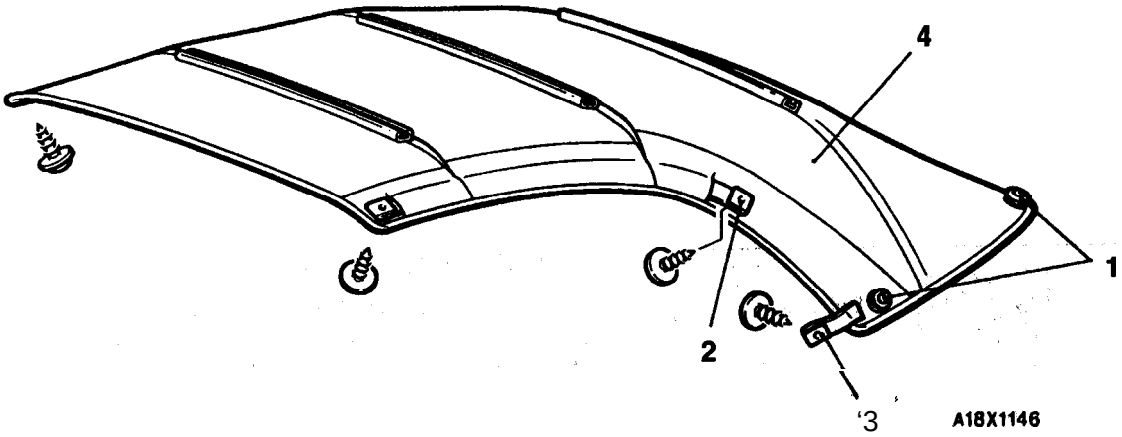

Removal steps

◀A▶ 1. Snaps
2. Front headliner attaching strap
3. Center headliner attaching strap
◀B▶ ▶A◀ 4. Headliner

REMOVAL SERVICE POINTS

◀A▶ FRONT HEADLINER ATTACHING STRAP REMOVAL

From a completely closed position, open the convertible top half-way.

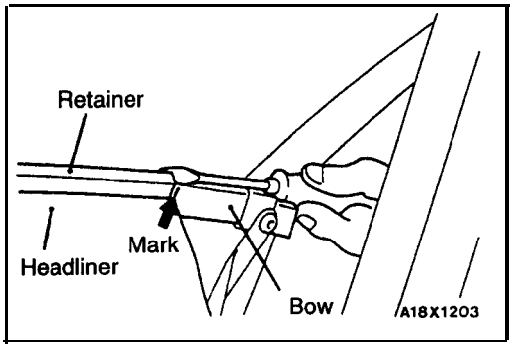

◀B▶ HEADLINER REMOVAL

Mark the bows lightly at the end of each retainer, then pry the retainer from the bow. Remove the headliner.

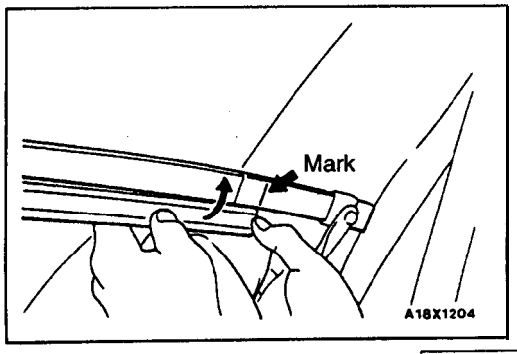

INSTALLATION SERVICE POINT

▶A◀ HEADLINER INSTALLATION

Hook headliner retainer to back side of bow, then align the end of the retainer with the mark and snap front of retainer onto bow completely.

TSB Revision

TOPSTACK DRIVE MOTOR

42620170021

REMOVAL AND INSTALLATION

Post-installation Operation
Convertible top fit adjustment (Refer to P.42-94.) 1

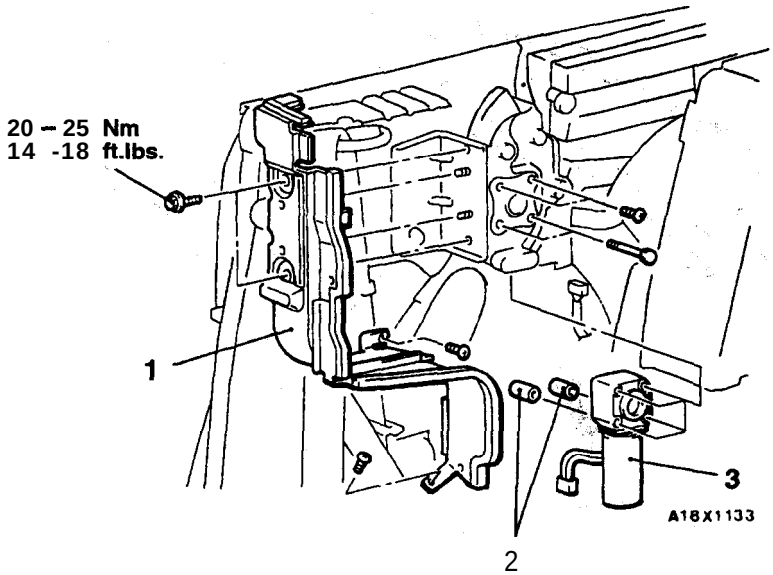

Removal steps

- Quarter trim, lower (Refer to GROUP 52A – Trims.)
- Rear speaker bracket A (Refer to GROUP 54 – Speaker.)

1. Rear speaker bracket B
2. Spacer
3. ◀A▶ Topstack drive motor

NOTE
This illustration shows the right side.
The left side is symmetrical to the right side.

REMOVAL SERVICE POINT

◀A▶ TOPSTACK DRIVE MOTOR REMOVAL

Remove lower bolts with spacers first, then upper bolts.

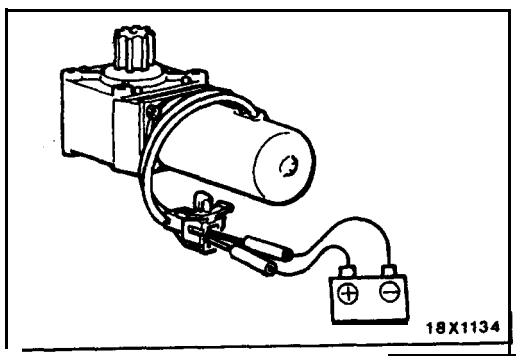

INSPECTION

42620180017

(1) Check that the motor runs smoothly when the battery is connected directly to the motor terminals.
(2) Furthermore, check that the motor operates in reverse when the terminal connections are switched.

FRONT ROOF WEATHERSTRIP

42620200010

REMOVAL AND INSTALLATION

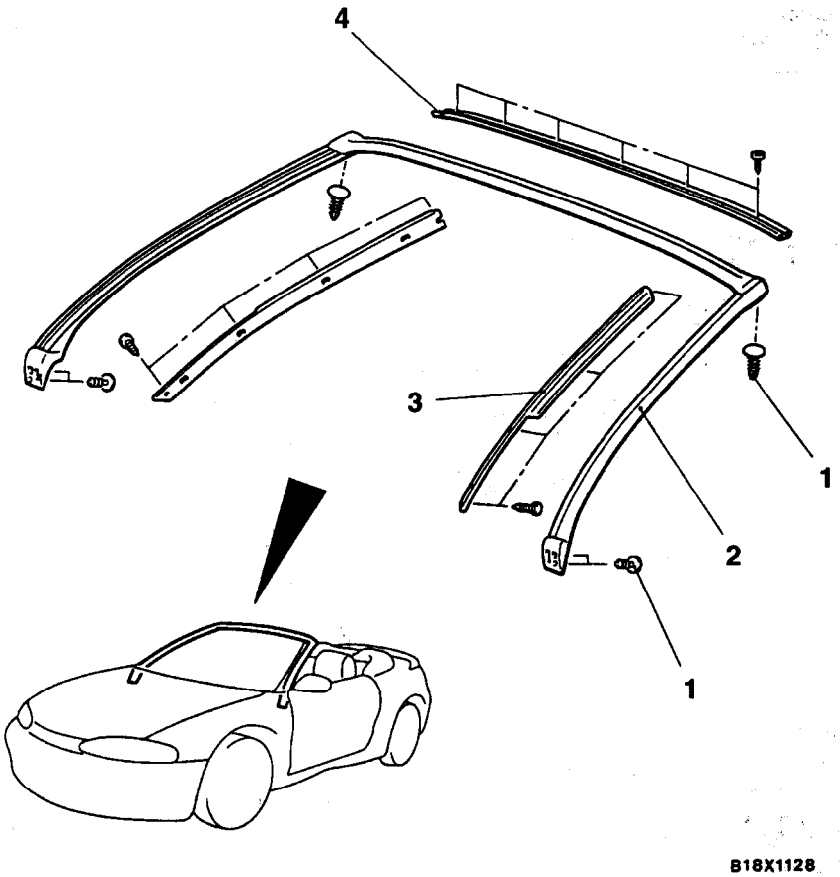

Removal steps

1. Clip
2. Front roof weatherstrip
3. Front pillar weatherstrip holder'
4. Front roof weatherstrip holder

TOPSTACK RAIL WEATHERSTRIP AND TOP COVER RETAINER

42620330016

REMOVAL AND INSTALLATION

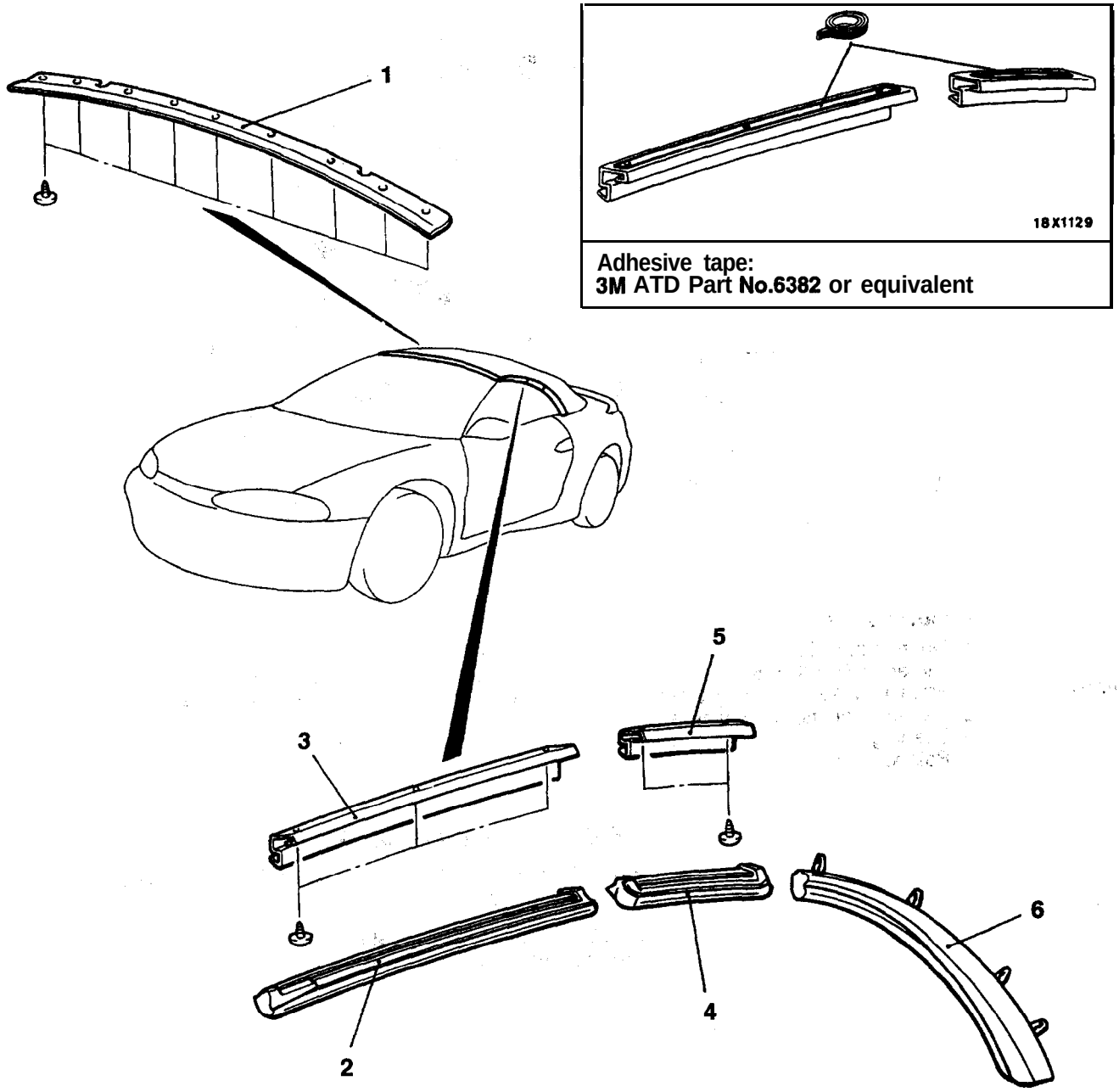

1. Top cover retainer

Topstack rail weatherstrip removal steps

2. Topstack front rail weatherstrip
3. Topstack front rail weatherstrip holder
4. Topstack center rail weatherstrip
5. Topstack center rail weatherstrip holder
6. Topstack rear rail weatherstrip holder

TSB Revision

BALANCE LINK

42620220023

REMOVAL AND INSTALLATION

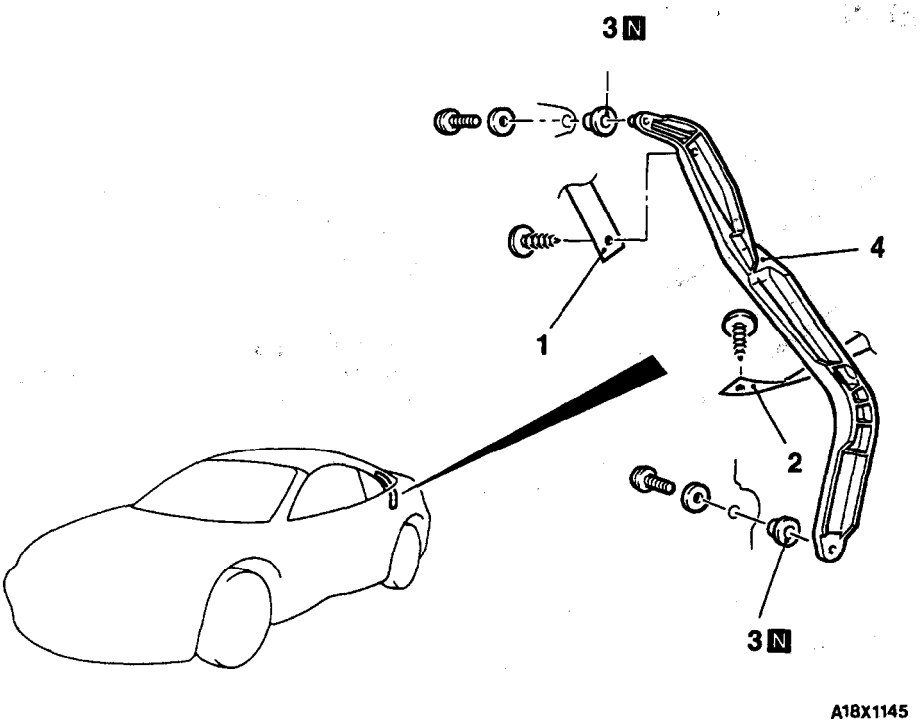

Removal steps

- Quarter trim, lower (Refer to GROUP 52A – Trims.)

◀A▶ 1. Front healiner attaching strap
2. Center headliner attaching strap
3. Bushing
4. Balance link

NOTE
This illustration shows the left side.
The right side is symmetrical to the left side.

REMOVAL SERVICE POINT

◀A▶ FRONT HEADLINER ATTACHING STRAP REMOVAL

From a fully closed position, raise the convertible top 102 mm to 153 mm (4 in. to 6 in.)

CONVERTIBLE TOP SWITCH

42620240012

REMOVAL AND INSTALLATION

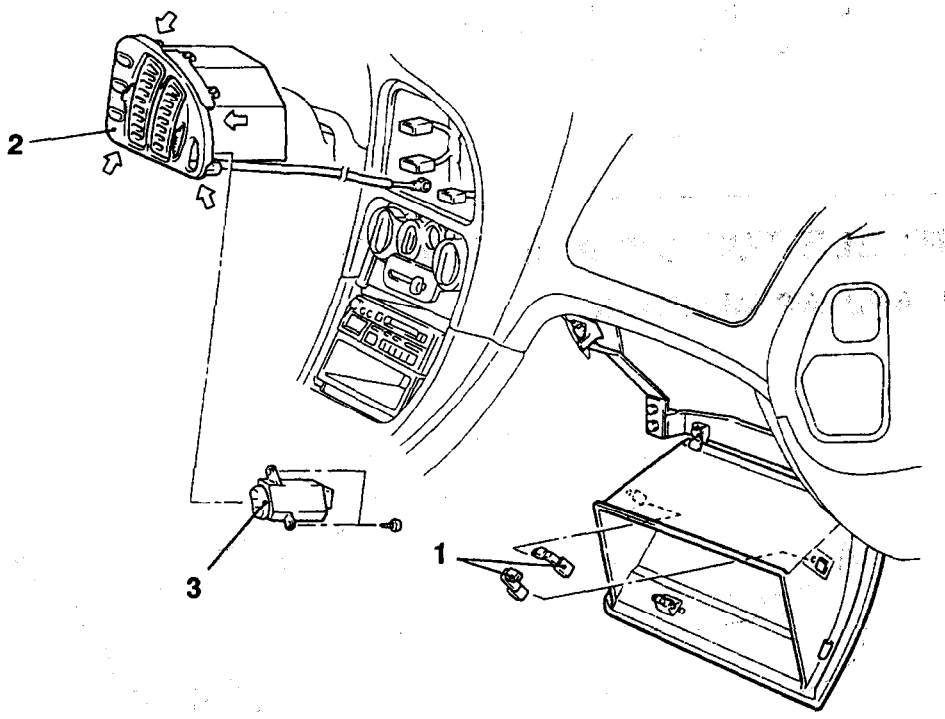

NOTE
⇦: indicates the metal clip position.

A18X1125

Removal steps

1. Stopper
◀A▶ ▶A◀ 2. Center air outlet assembly
3. Convertible top switch

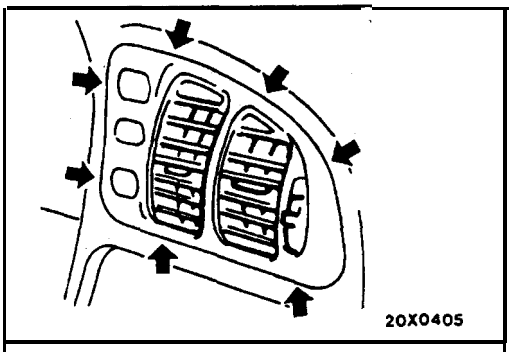

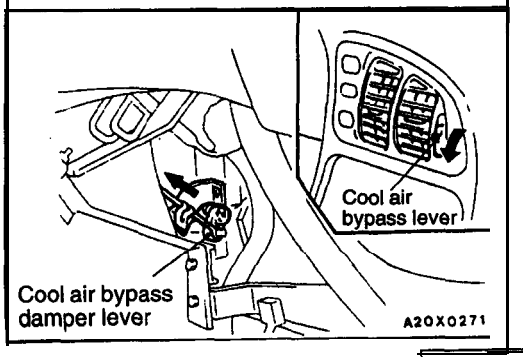

REMOVAL SERVICE POINT

◀A▶ CENTER AIR OUTLET ASSEMBLY REMOVAL

Using the pry tool, carefully pry the assembly out of the dashpanel.

INSTALLATION SERVICE POINT

▶A◀ CENTER AIR OUTLET ASSEMBLY INSTALLATION

(1) Turn the cool air bypass lever of the center air outlet fully downward.
(2) Pull the cool air bypass damper lever on the heater unit side fully toward you, then attach the cable to the pin of the lever.
(3) Push the outer cable in the direction of the arrow so there is no looseness, then secure it with the clip.

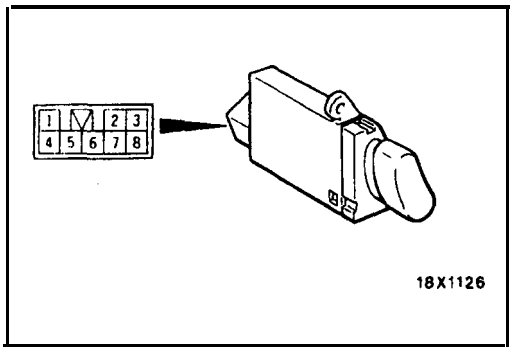

INSPECTION

42620250015

Switch position	Terminal No.		
	4	5	8
OPEN	0 ——	—0	
CLOSE		0 ——	—0

CONVERTIBLE TOP BYPASS SWITCH

42620270011

REMOVAL AND INSTALLATION

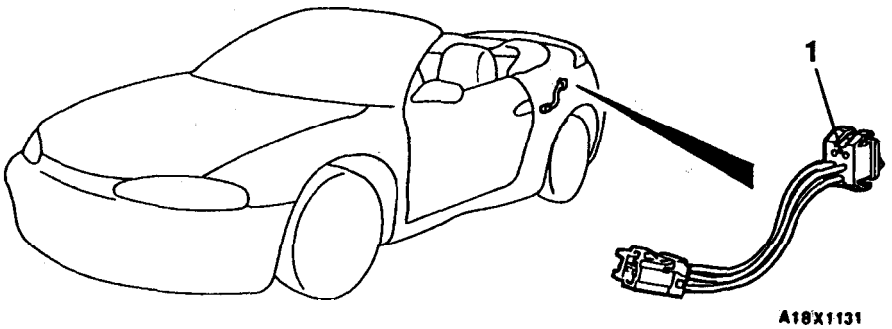

Removal steps

◀A▶ 1. Convertible top bypass switch

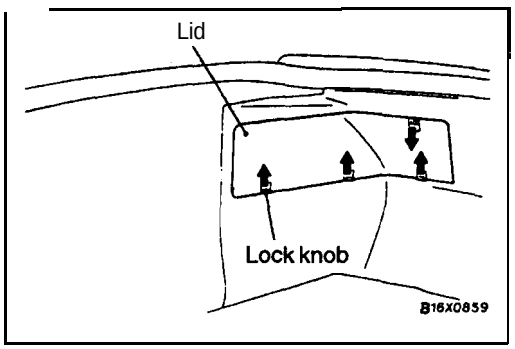

REMOVAL SERVICE POINT

◀A▶ CONVERTIBLE TOP BYPASS SWITCH REMOVAL

(1) Slide the lock knob of the lid in the direction of the arrow in the illustration to remove **the** lid.

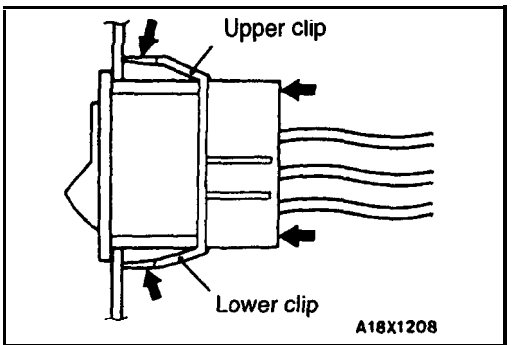

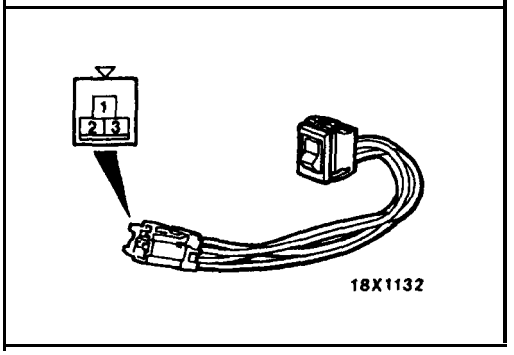

(2) Depress lower clips.
(3) While holding lower clip, push the lower front of the switch past the lower clip [approx. 5 mm (.2 in.)].
(4) Depress upper clip.
(5) While holding upper clip, jiggle and slide switch out.

INSPECTION

42620280014

Switch position	Terminal No.		
	1	2	3
OFF	0	A	0
MANUAL			

CONVERTIBLE TOP CONTROL MODULE

42620300024

REMOVAL AND INSTALLATION

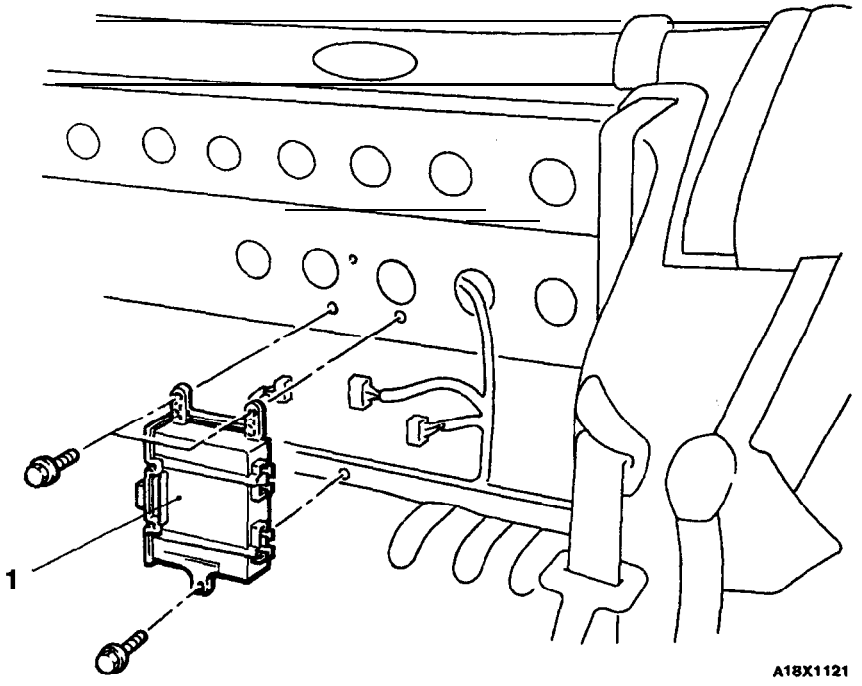

Removal steps

- Rear seat (Refer to GROUP 52A – Rear Seat.)

1. Convertible top control module

TSB Revision

NOTES

EXTERIOR

CONTENTS

51109000067

WARNINGS REGARDING SERVICING OF SUPPLEMENTAL RESTRAINT SYSTEM (SRS) EQUIPPED VEHICLES

WARNING!

(1) Improper service or maintenance of **any** component **of the SRS, or any SRS-related component, can lead to personal injury or death to service personnel (from inadvertent firing of the air bag) or to the driver and passenger (from rendering the SRS inoperative).**

(2) Service or maintenance of any SRS component or SRS-related component must be performed only at an authorized MITSUBISHI dealer.

(3) MITSUBISHI dealer personnel must thoroughly review this manual, and especially its GROUP 52B – Supplemental Restraint System (SRS) and GROUP 00 – Maintenance Service, before beginning any service or maintenance of any component of the SRS or any SRS-related component.

NOTE

The SRS includes the following components: SRS-ECU, SRS warning light, air bag module, clock spring, and interconnecting wiring. Other SRS-related components (that may have to be removed/installed in connection with SRS service or maintenance) are indicated in the table of contents by an asterisk (*).

FRONT BUMPER

51100140157

REMOVAL AND INSTALLATION

Pre-removal **and Post-installation Operation**
Splash shield Removal and Installation
(Refer to GROUP 42 – Under Cover.)

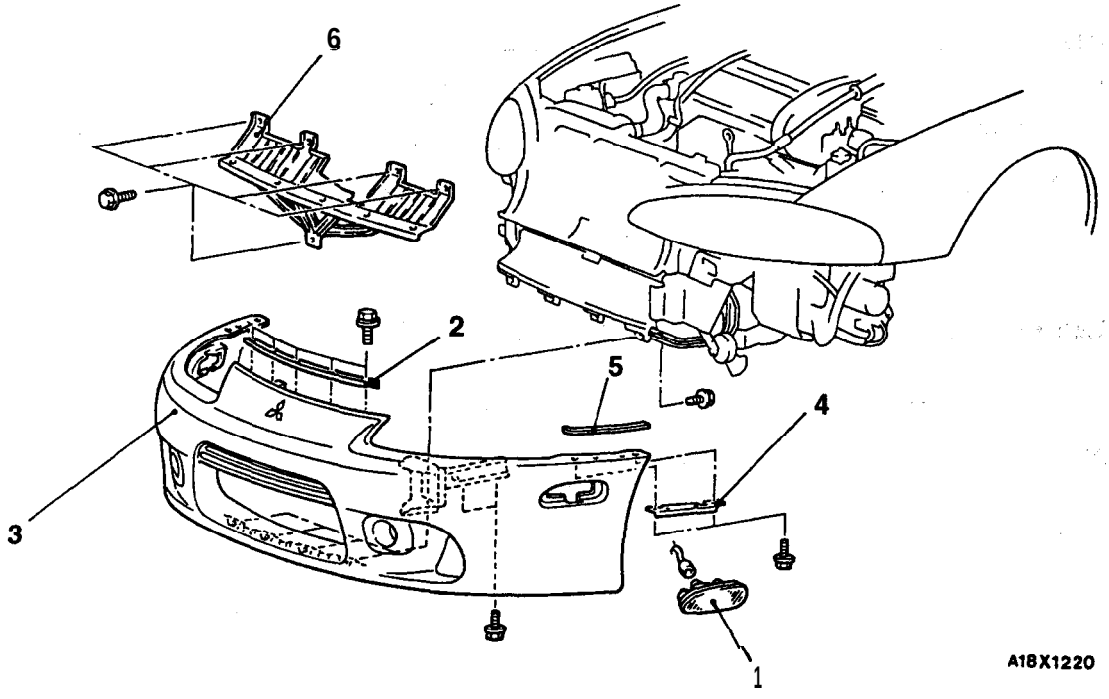

Removal steps

1. Front side-marker light
2. Front bumper center plate
3. Front bumper assembly
4. Front bumper corner plate
5. Pad
6. Front fascia bracket

TSB Revision

DISASSEMBLY AND REASSEMBLY

51100160177

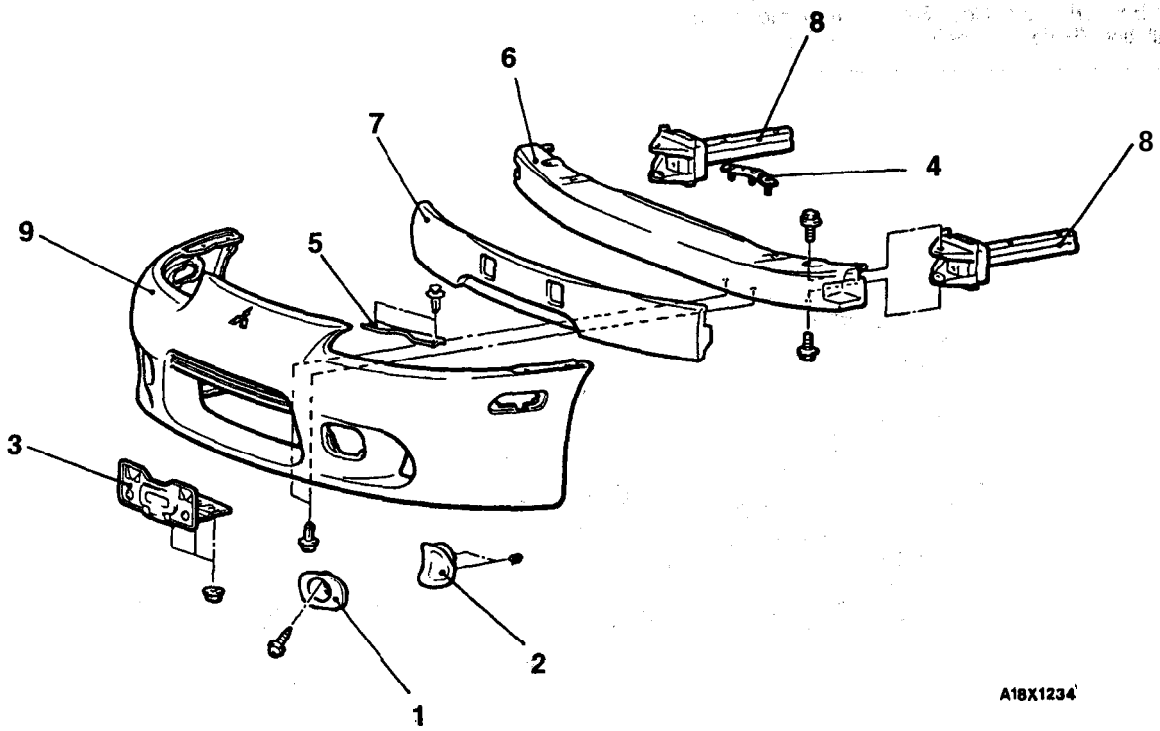

Disassembly

1. Front fog light bezel
2. Air intake cover
3. Front license plate bracket
4. Bolt plate
5. Front bumper side plate
6. Front bumper reinforcement
7. Front bumper core
8. Front bumper stay assembly
9. Front bumper face

TSB Revision

REAR BUMPER

51100190152

REMOVAL AND INSTALLATION

Pre-removal and Post-installation Operation
Rear End Trim and Rear Side Trim Removal and Installation (Refer to GROUP 52A – Trims.)

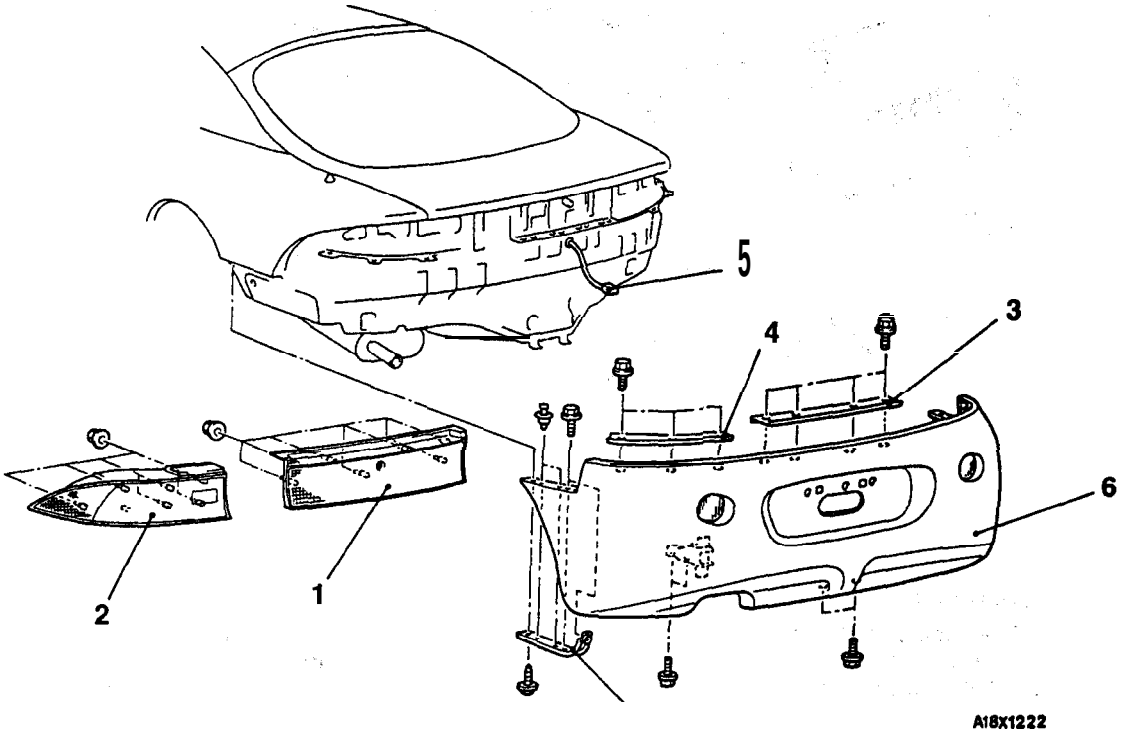

Removal steps

1. Rear panel garnish
2. Rear combination light
3. Rear bumper upper plate (A)
4. Rear bumper upper plate (B)
5. Connector harness
6. Rear bumper assembly
7. Rear bumper side plate

TSB Revision

DISASSEMBLY AND REASSEMBLY

51100210148

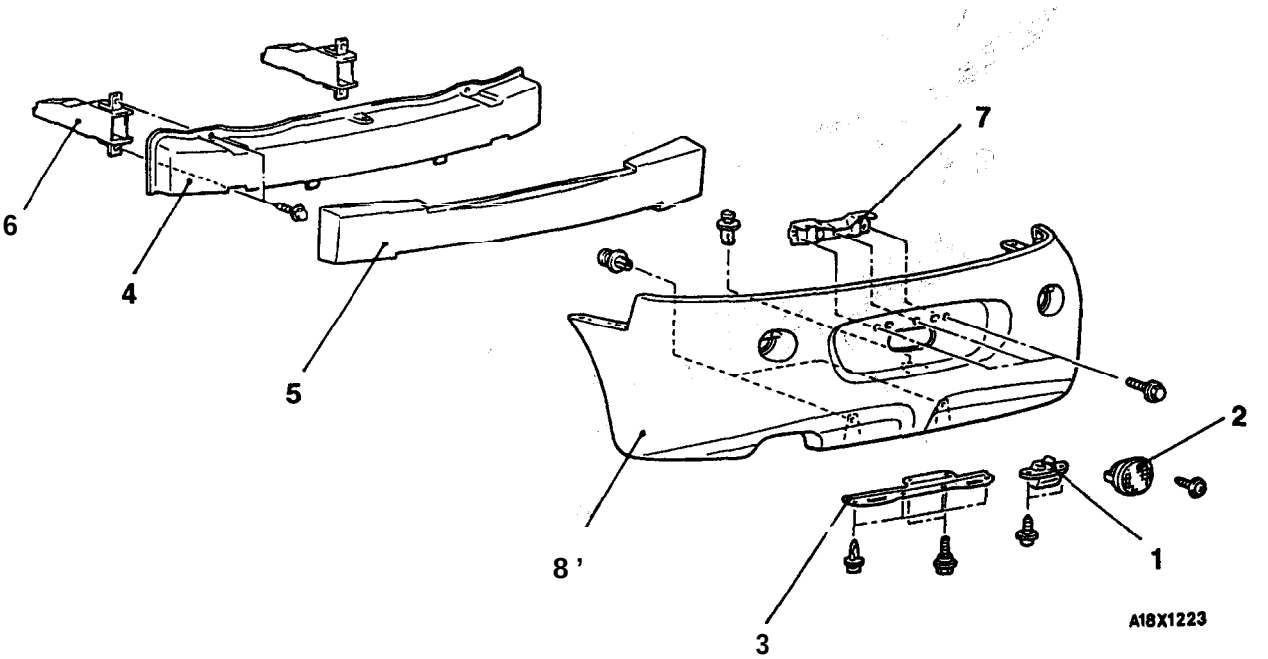

Disassembly steps

1. License plate light
2. Back-up light
3. Rear bumper lower plate
4. Rear bumper reinforcement
5. Rear bumper core
6. Rear bumper stay assembly
7. License plate light bracket
8. Rear bumper face

GARNISHES

51100410029

REMOVAL AND INSTALLATION

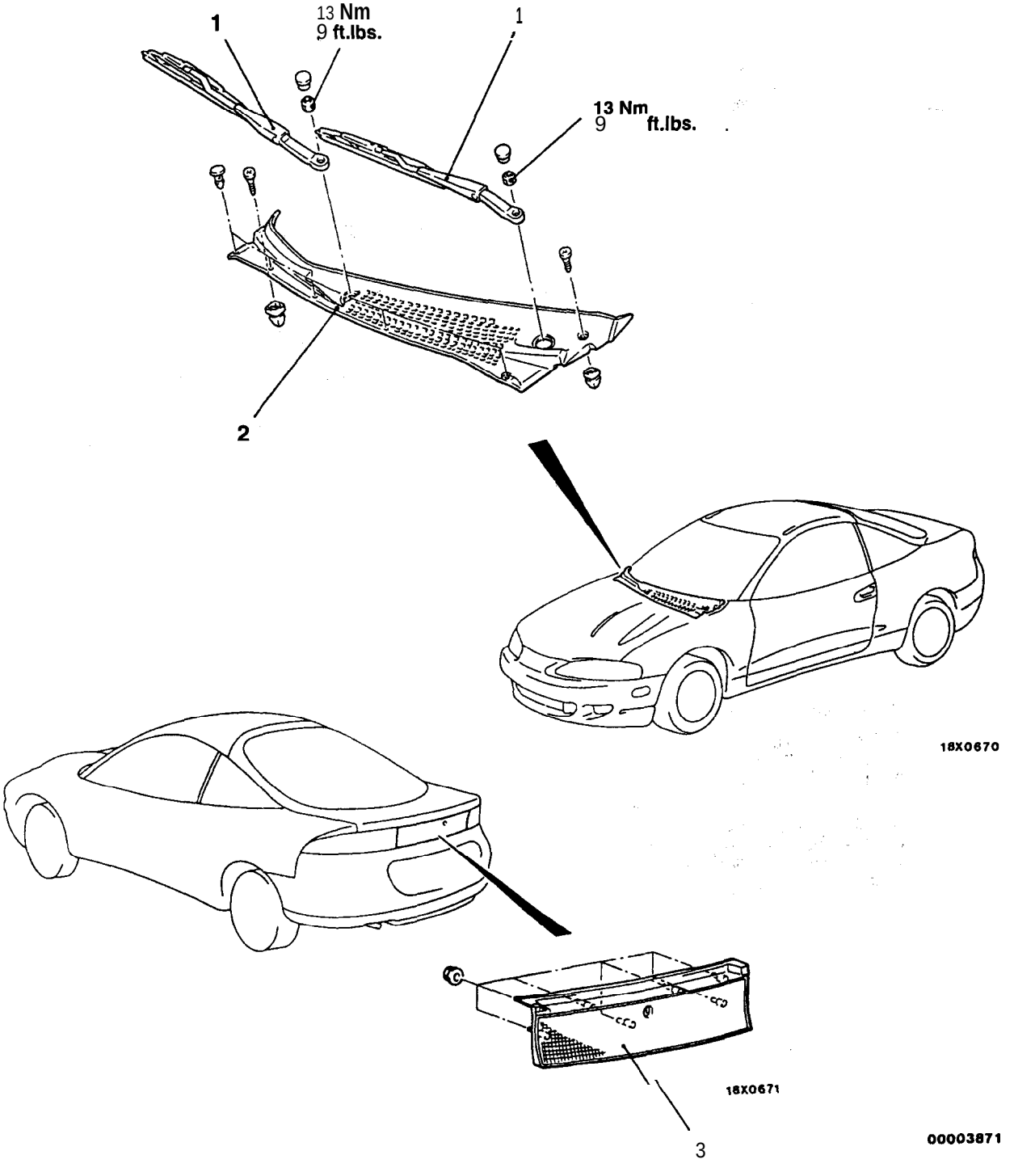

Front deck garnish removal steps

1. Wiper arm assembly
2. Front deck garnish

Rear panel garnish removal steps

- Rear end trim
  (Refer to GROUP 52A – Trims)
3. Rear panel garnish

MOLDINGS

51100050061

SEALANT AND ADHESIVE

Items	Specified sealant and adhesive
Side protector molding	3M ATD Part No. 6382 or equivalent and 3M ATD Part No. 8608 Super Fast Urethane Primer or equivalent

MOLDINGS

51100470126

REMOVAL AND INSTALLATION

<ECLIPSE>

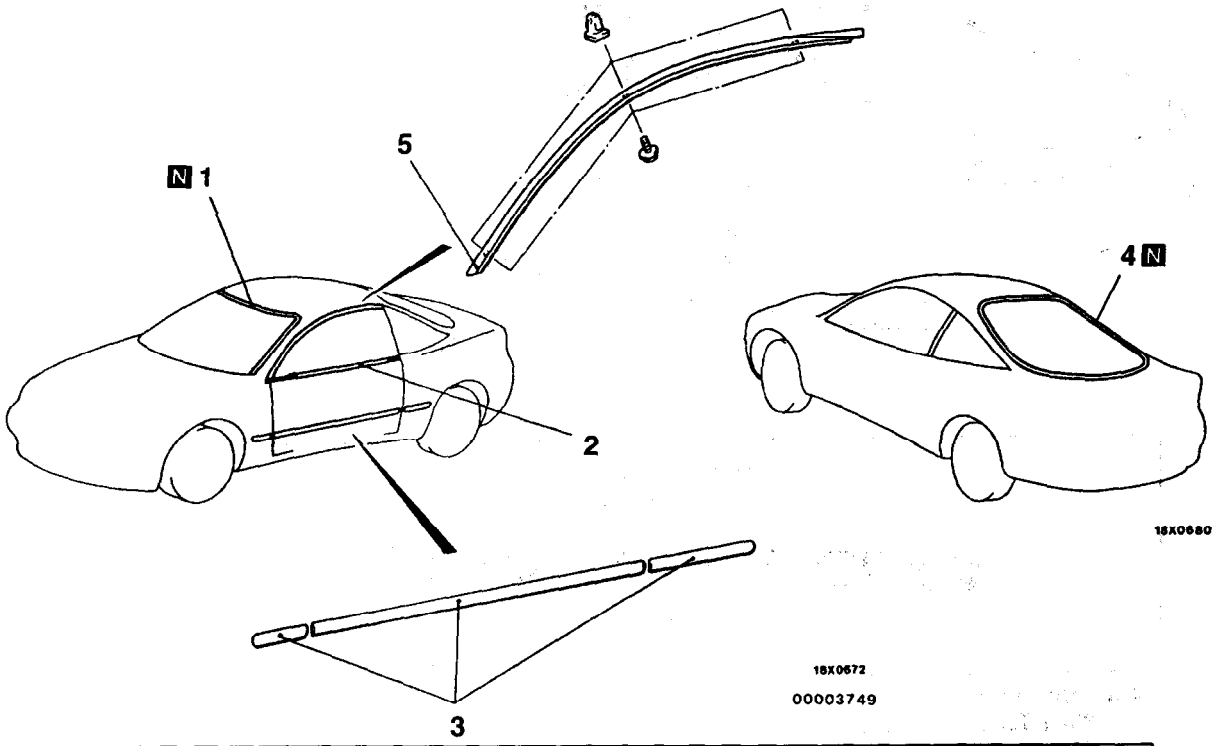

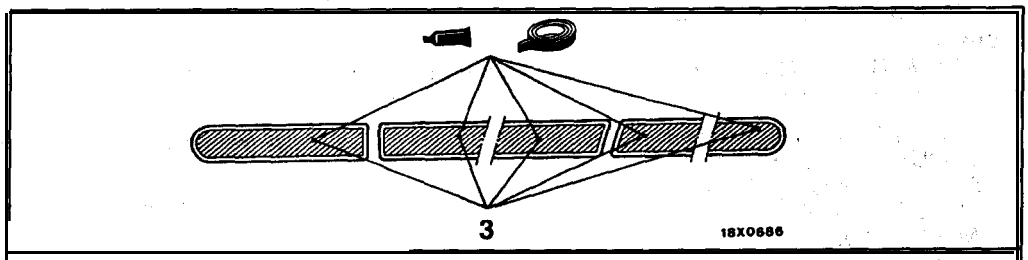

Adhesive tape:
3M ATD Part No. 6382 or equivalent
15 mm (.59 in.) wide and 1.2 mm (.047 in.) thick
Adhesive:
3M ATD Part No. 8608 Super Fast Urethane Primer or equivalent

1. Windshield molding (Refer to GROUP 42 – Windshield.)
2. Belt line molding (Refer to GROUP 42 – Door Opening Weatherstrip.)
3. ◀A▶ ▶A◀ Side protector molding
4. Liftgate molding (Refer to GROUP 42 – Liftgate.)
- Drip line weatherstrip and door weatherstrip holder (Refer to GROUP 42 – Door Opening Weatherstrip.)
5. Drip molding

TSB Revision

<ECLIPSE SPYDER>

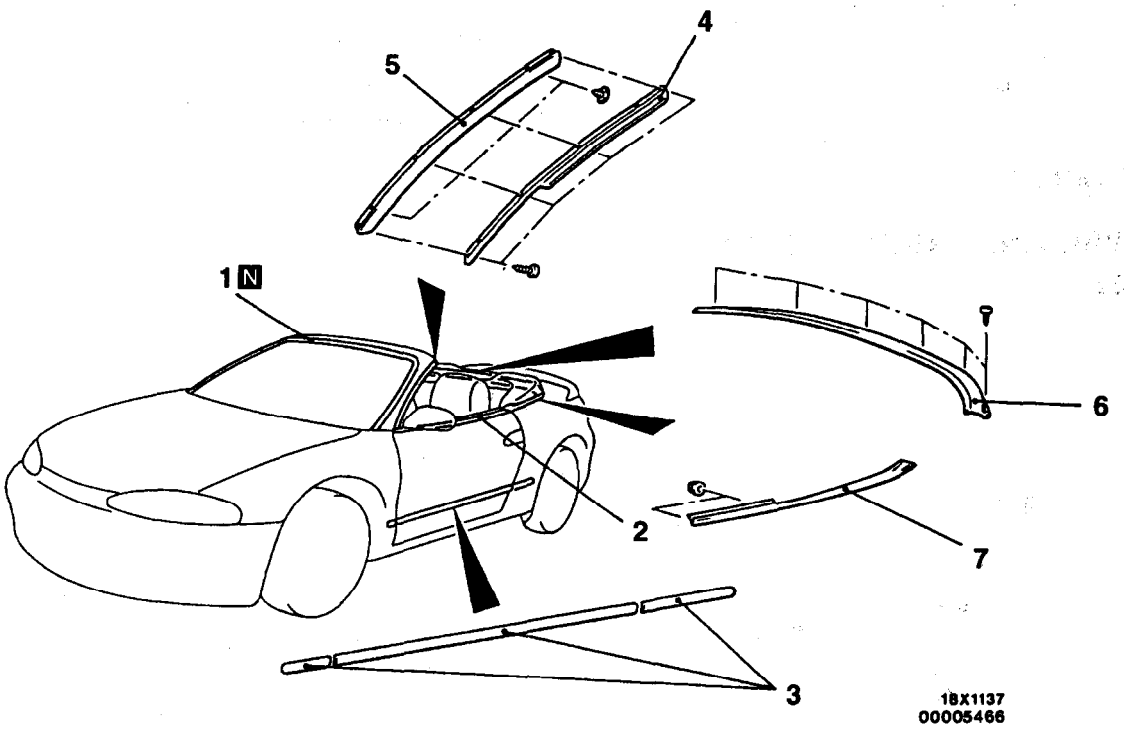

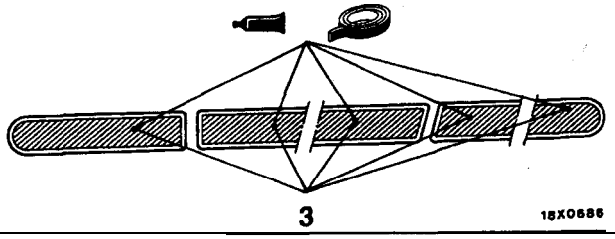

Adhesive tape:
3M ATD Part No. 6382 or equivalent
15 mm (.59 in.) wide and 1.2 mm (.047 in.) thick
Adhesive:
3M ATD Part No. 8608 Super Fast Urethane Primer or equivalent

1. Windshield moulding (Refer to GROUP 42 – Windshield.)
2. Belt line moulding (Refer to GROUP 42 – Door Opening Weatherstrip.)

◀A▶ ▶A◀ 3. Side protector moulding

Drip moulding removal steps

- Front roof weatherstrip (Refer to GROUP 42 – Front Roof Weatherstrip.)

4. Front pillar weatherstrip holder
5. Drip moulding

Belt moulding removal steps

6. Back belt moulding
7. Quarter belt moulding

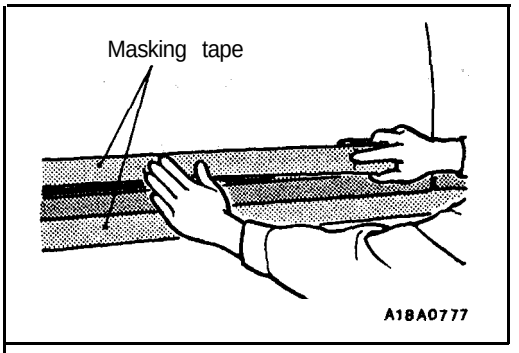

REMOVAL SERVICE POINT

◀A▶ SIDE PROTECTOR MOLDING REMOVAL ,

(1) Apply masking tape to the outside circumference of the side protector molding.

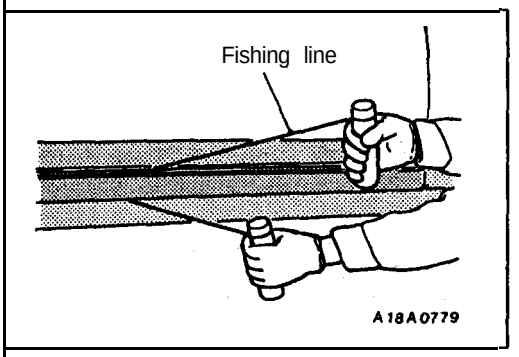

(2) insert fishing line [ø0.8 mm (.03 in.)] in between the body and the side protector molding, pull both ends alternately to cut the adhesive section and remove the side protector molding.

Caution

1. **When reusing the side protector molding, pull the fishing line along the edge of the body so as not to damage the edge of the side protector molding.**
2. **If the adhesive is difficult to remove, heat it to 40°C (104°F).**

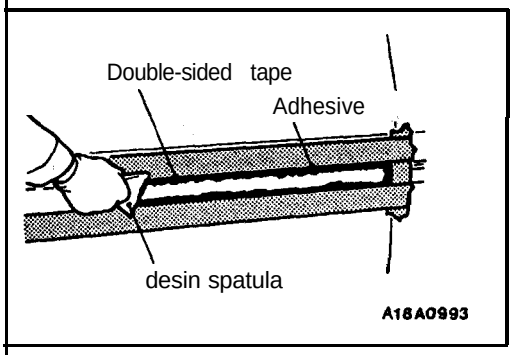

(3) Scrape off the double-sided tape with a resin spatula.
(4) Tear off the masking tape.
(5) Scrape off a small amount of the adhesive with a cutter knife.

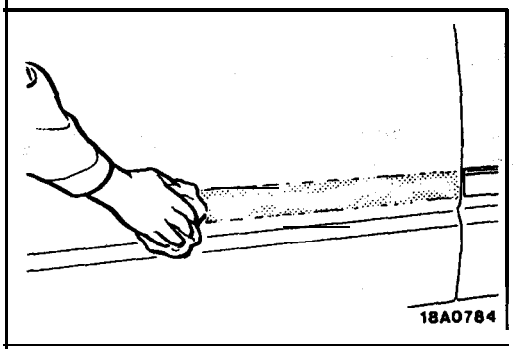

(6) 'Use a shop towel moistened with isopropyl alcohol to' wipe the body surface.

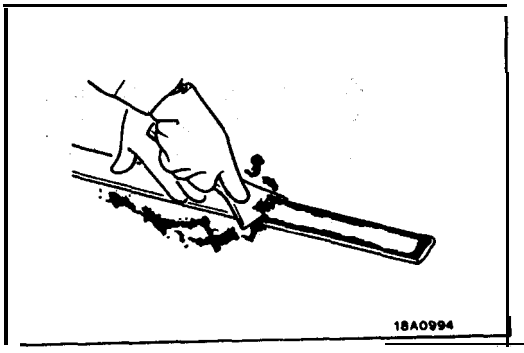

INSTALLATION SERVICE POINT

▶A◀ SIDE PROTECTOR MOLDING INSTALLATION

Double-sided tape affixing to the side protector molding (when reusing)

(1) Scrape off the double-sided tape with a resin spatula or gasket scraper.

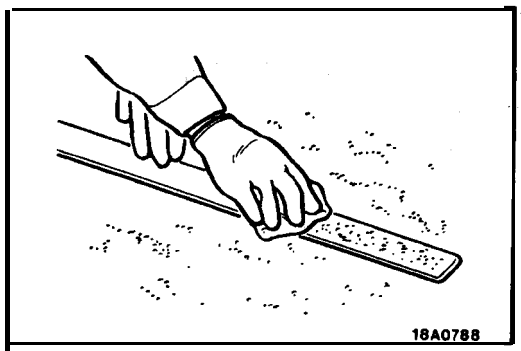

(2) Use a shop towel moistened with isopropyl. alcohol to wipe the molding surface.
(3) Remove a small portion of the residual adhesive.

Caution
Do not remove all of the residual adhesive.

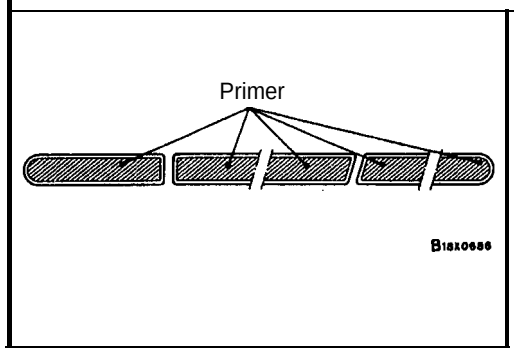

(4) Soak a sponge in the primer, and apply evenly to the side protector molding in the places shown in the illustration.

Specified primer:
3M ATD Part No. 8608 Super Fast Urethane Primer or equivalent

Caution
1. Always apply it on the entire surface, because a lot or little will reduce its strength.
2. Do not touch the coated surface.

(5) After applying the primer, let it dry for 3 to 30 minutes.

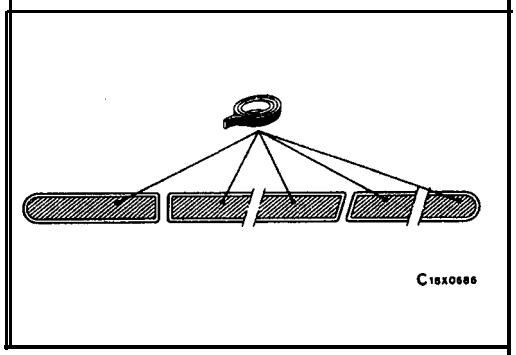

(6) Affix the specified double-sided tape to the side protector molding.

Specified adhesive tape:
3M ATD Part No. 6382 or equivalent
15 mm (.59 in.) wide and 1.2 mm (.047 *in.) thick

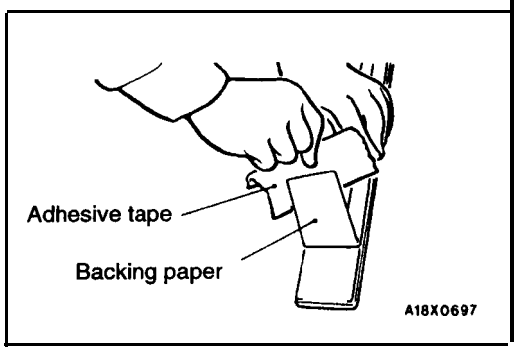

Side protector molding installation

(1) Tear off the double-sided tape backing paper.

NOTE
If you attach the adhesive tape to the edge of the backing paper, it will be easy to tear off.

(2) Install the side protector molding.

NOTE
If the double-sided tape is difficult to affix during winter, etc., warm the bonding surfaces of the body and the side protector molding to about 40–60°C (104–140°F) before affixing the tape.

(3) Firmly press in the side protector molding.

AERO PARTS

51100050078

SEALANT AND ADHESIVE

Items	Specified sealant and adhesive
Door garnish, Side air dam	3M ATD Part No. 6382 or equivalent and 3M ATD Part No. 8608 Super Fast Urethane Primer or equivalent

AERO PARTS

51100500139

REMOVAL AND INSTALLATION

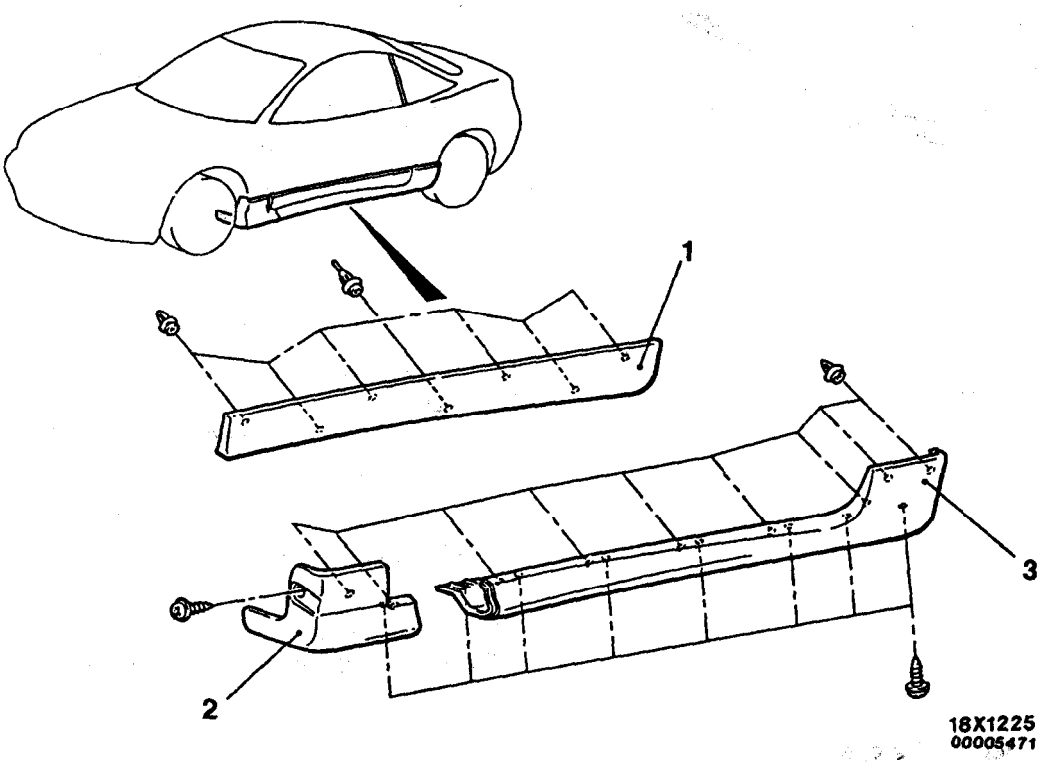

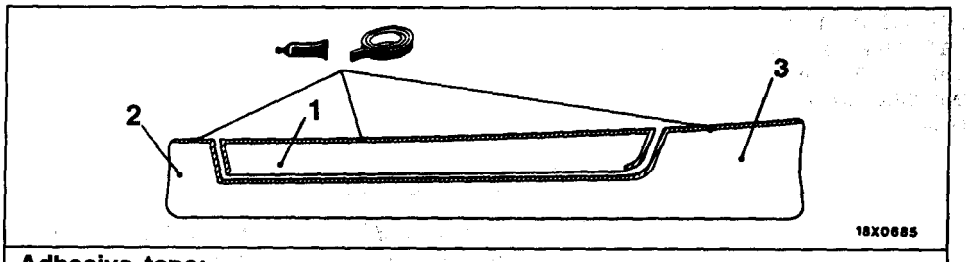

Adhesive tape:
3M ATD Part No. 6382 or equivalent
4 mm (.15 in.) wide and 1.5 mm (.059 in.) thick
Adhesive:
3M ATD Part No. 8608 Super Fast Urethane Primer or equivalent

Door garnish removal

◀A▶ ▶A◀ 1. Door garnish

Side air dam removal steps

◀A▶ ▶A◀ 2. Front side air dam
◀A▶ ▶A◀ 3. Rear side air dam

TSB Revision

<Eclipse – Medium price, Eclipse spyder>

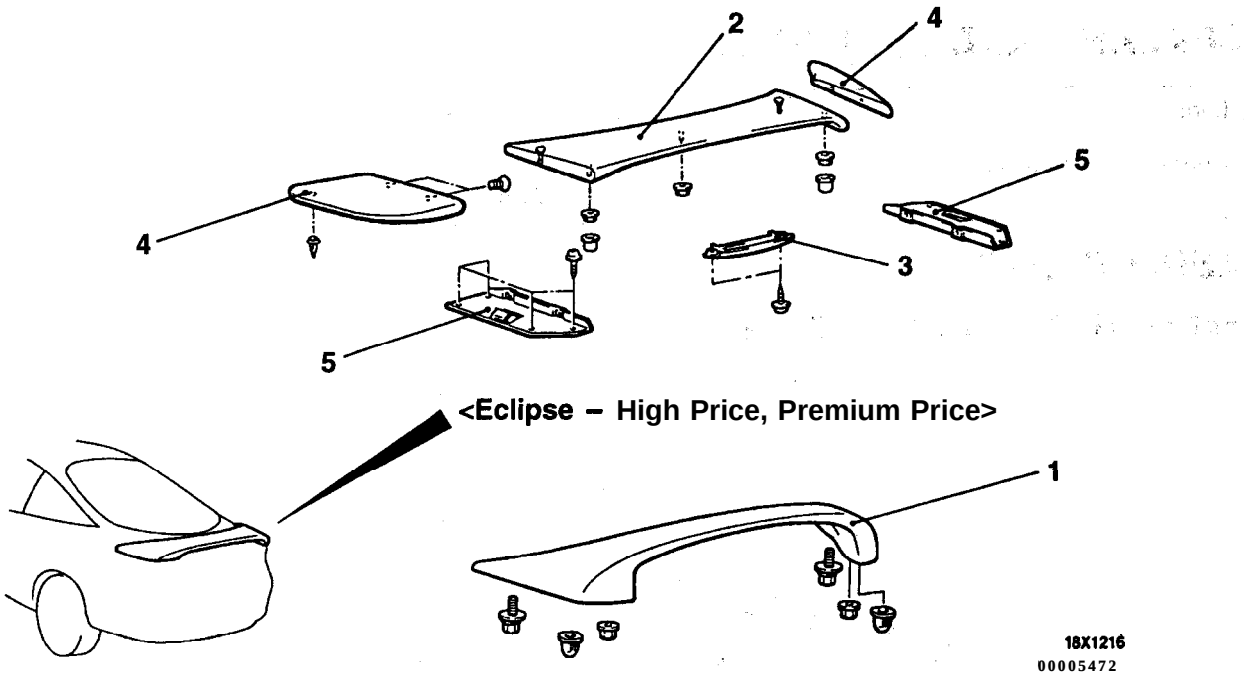

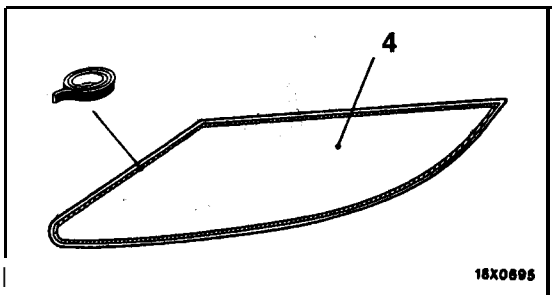

Adhesive tape:
3M ATD Part No. 6383 or equivalent
0.2 mm (.007 in.) thick

Removal steps

1. Rear spoiler assembly
2. Rear center spoiler assembly
3. Rear spoiler cover
4. Rear side spoiler
5. Bracket

REMOVAL SERVICE POINT

◀A▶ DOOR GARNISH/FRONT SIDE-AIR DAM/REAR SIDE-AIR DAM REMOVAL

Carry out the same procedure as for the side protector moldings. (Refer to P.51-7.)

INSTALLATION SERVICE POINT

◀A▶ DOOR GARNISH/FRONT SIDE-AIR DAM/REAR SIDE-AIR DAM INSTALLATION

Carry out the same procedure as for the side protector moldings. (Refer to P.51-7.)

TSB Revision

WINDSHIELD WIPER AND WASHER

51100010038

GENERAL IMFORMATION

OPERATION

Low-speed (and high-speed) wiper operation

- When the wiper switch is placed in the LO position with the ignition switch in the ACC or ON position, wipers operate continuously at low speed.
- Placing the wiper switch in the HI position causes the wipers to operate at high speed.

Auto wiper stop operation

- When the wiper switch is placed in the OFF position, the cam contacts of wiper motor causes current to flow through the auto wiper stop circuit, allowing the wiper blades to cycle before they reach to the stop positions.

Intermittent wiper operation

- When the wiper switch is placed in the INT position with the ignition switch in ACC or ON position, the intermittent wiper relay is energized causing the intermittent wiper relay contacts to close and open repeatedly.
- When the contacts are closed, the wiper motor is energized.
- When the wiper motor is energized, the relay contacts open; however, the cam contacts keep the wiper motor energized until the wiper blades return to their stop position.

Washer-wiper operation-

- When the washer switch is turned ON, the intermittent wiper relay contacts close causing wipers to cycle' one to two times.

Remark

- The washer-wiper operates in the priority even during intermittent operation of the wiper.

Washer fluid level warning light

- When the washer fluid level goes down below a predetermined level with the ignition switch in ON position, the washer level switch makes the washer fluid level warning light illuminate.

SERVICE SPECIFICATION

51100030140

Item	Standard value
Windshield wiper blade installation position mm (in.)	(A): 47±5 (1.85±.20)
	(B): 10±5 (.39±.20)

TROUBLESHOOTING

51100070098

TROUBLESHOOTING HINTS

1. Wipers do not operate.
   1) Washer is not operative, either.
      - Check multi-purpose fuse No. 9.
      - Check ground.
2. Low-speed (or high-speed) wiper operation only is inoperative.
   - Check wiper switch.
3. Wipers do not stop.
   - Check wiper motor.
   - Check intermittent wiper relay.
   - Check wiper switch.
4. Intermittent wiper operation is inoperative.
   - Check terminal voltage of steering-column switch (with a built-in intermittent wiper relay) with the intermittent wiper relay energezed.
5. The length of pause for intermittent operation cannot be varied.
   - Check variable intermittent. wiper 'control switch.
   - Check intermittent wiper relay.
6. Washer is inoperative.
   1) Wiper is operative on washer-wiper operation.
      - Check washer motor.
   2) Washer-wiper operation'is inoperative also.
      - Check washer switch.
7. Washer-wiper operation is inoperative.
   - Check intermittent wiper relay.

Terminal No.	Voltage	Check
8	o v	Intermittent wiper relay or wiper switch
	Battery positive voltage	Intermittent wiper relay
	0↔Battery positive voltage (alternating)	– (Normal)

51100760179

WINDSHIELD WIPER AND WASHER

REMOVAL AND INSTALLATION

<Non-turbo>

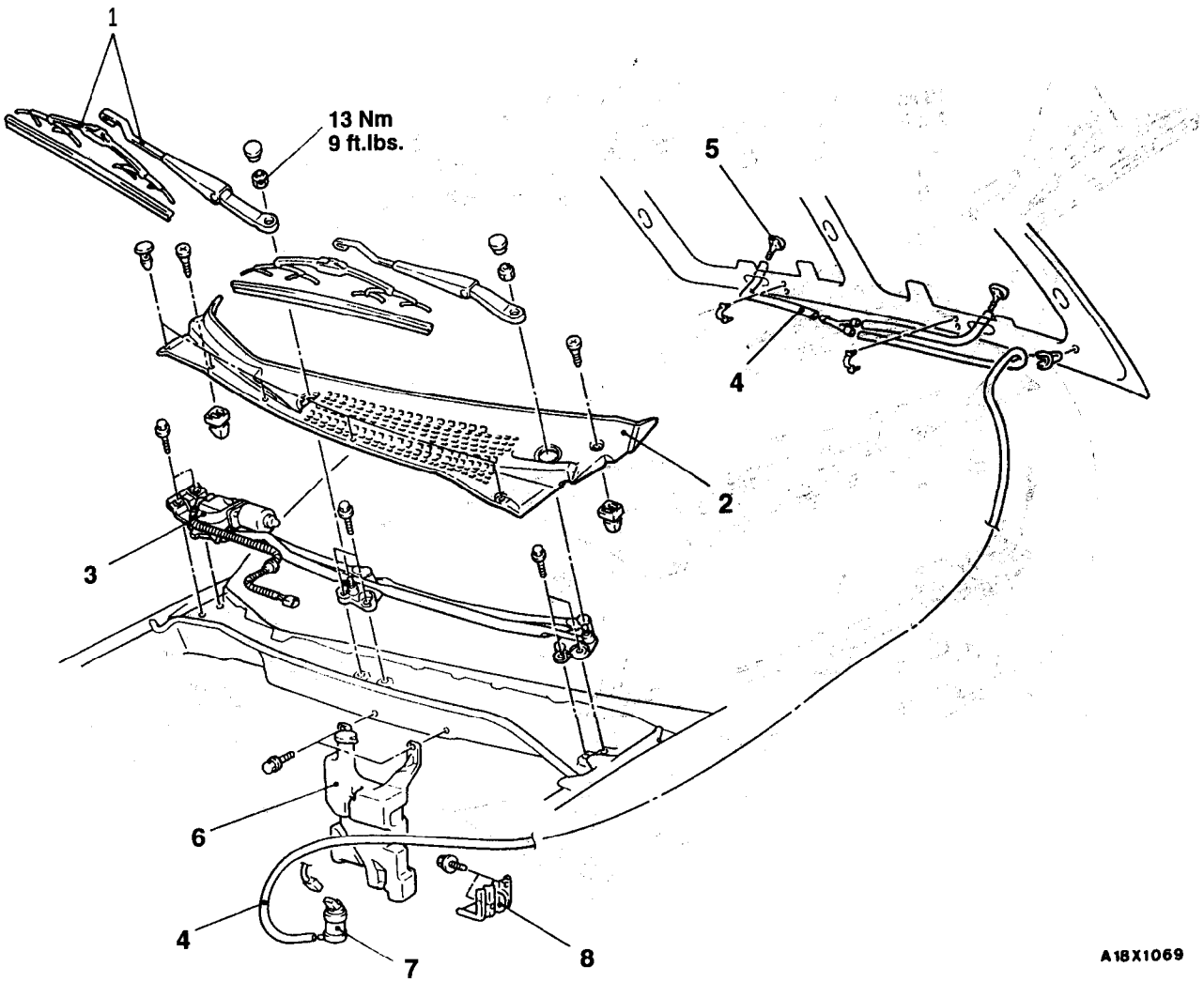

Wiper motor and link assembly removal steps

▶A◀ 1. Wiper arm and blade 'assembly
2. Front deck garnish
3. Wiper motor and link assembly

Washer nozzle and washer hose removal steps

4. Washer hose connection
5. Washer nozzle

Washer tank removal steps

- Brake fluid reservoir tank mounting 'bolt' (Refer to GROUP 35A – Master Cylinder and Brake Booster)

6. Washer tank
7. Washer motor
8. Washer tank bracket

<Turbo>

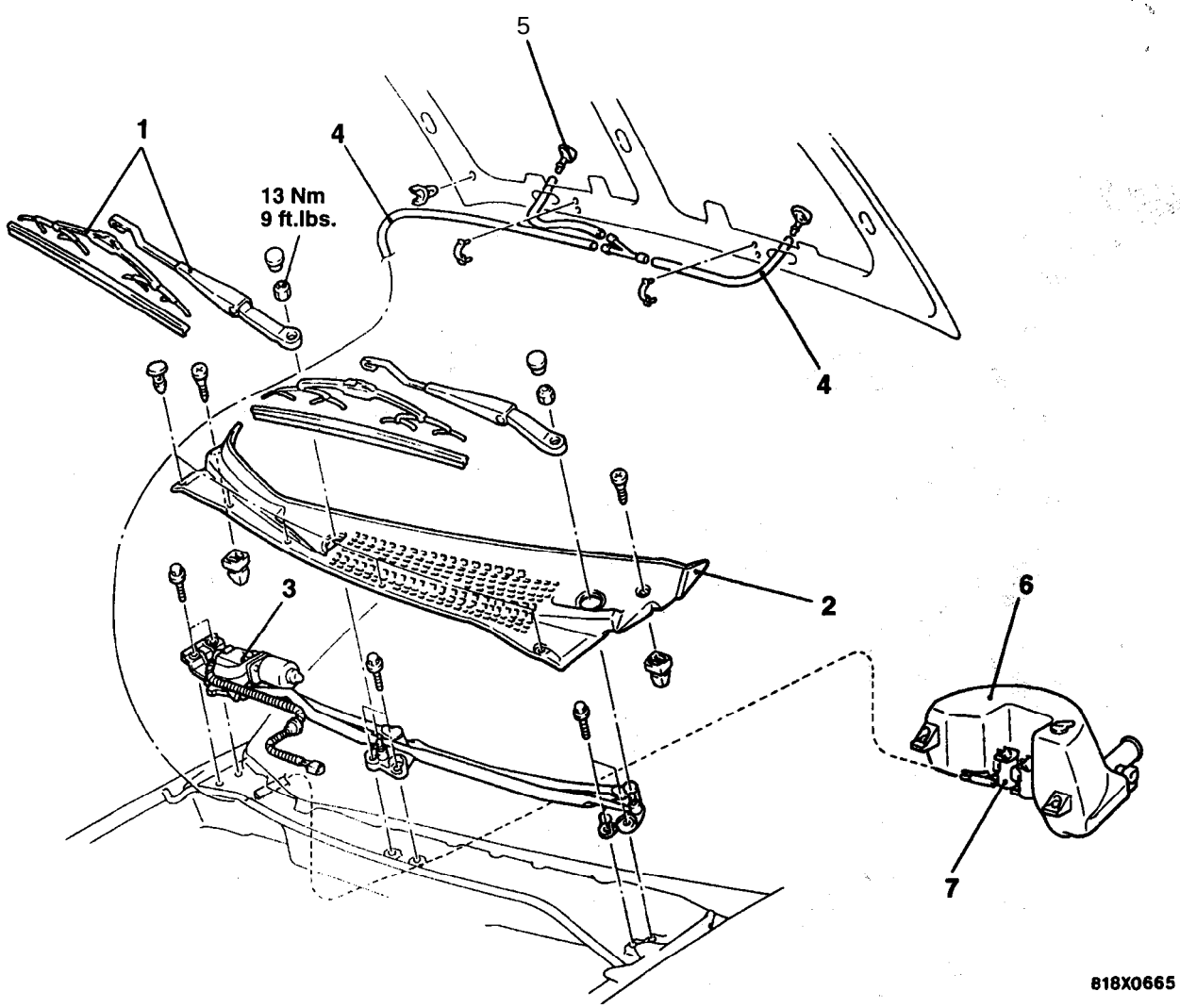

Wiper motor and link assembly removal steps

▶A◀ 1. Wiper arm and blade assembly
2. Front deck garnish
3. Wiper motor and link assembly

Washer nozzle and washer hose removal steps

4. Washer hose connection
5. Washer nozzle

Washer tank removal steps

6. Washer tank (Refer to P.51-17.)
7. Washer motor

TSB Revision

CAUTION: SRS
Before removal of air bag module and clock spring, refer to the follows:
GROUP 52B – SRS Service Precautions.
GROUP 52B – Air Bag Module and Clock Spring.

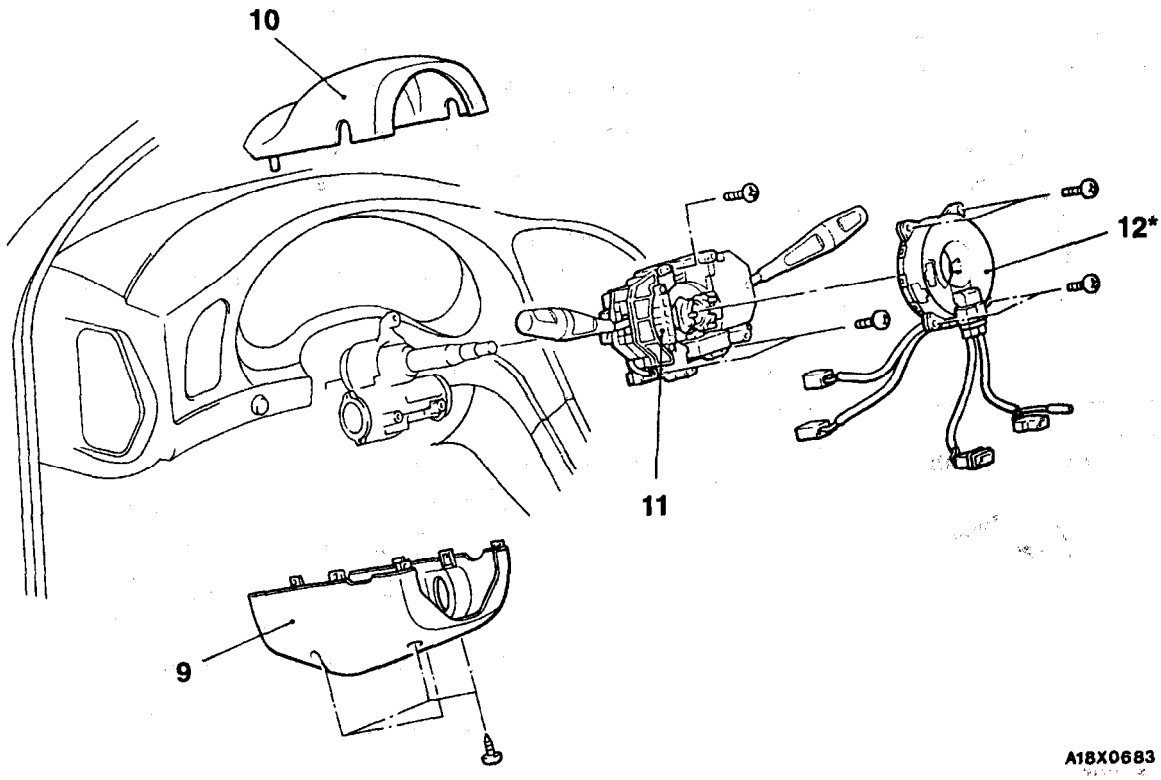

Column switch removal steps

- Air bag module (Refer to GROUP 52B Air Bag Module and Clock Spring.)
- Steering wheel (Refer to GROUP 37A – Steering Wheel and Shaft.)

9. Column cover, lower
10. Column cover, upper
11. Column switch assembly (with built-in wiper and washer switch, and wiper relay)
12. Clock spring* (Refer to GROUP 52B – Air Bag Module and Clock Spring.)

NOTE
Do not remove parts marked with* from the column switch except when removal is absolutely necessary.

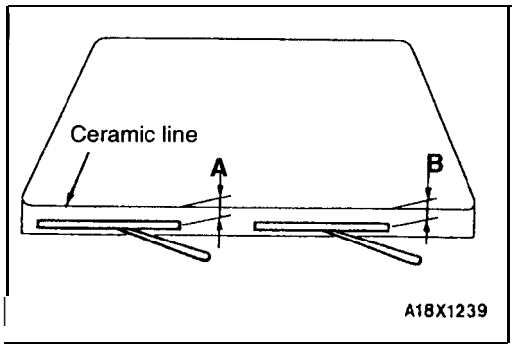

INSTALLATION SERVICE POINT

▶A◀ WIPER ARM AND BLADE ASSEMBLY INSTALLATION

Adjust the wiper and blade assembly so that the clearances between the wiper blade edges and the ceramic line are at the standard value.

Standard value

(A): 47 ± 5 mm (1.85 ± .20 in.)
(B): 10 ± 5 mm (.39 ± .20 in.)

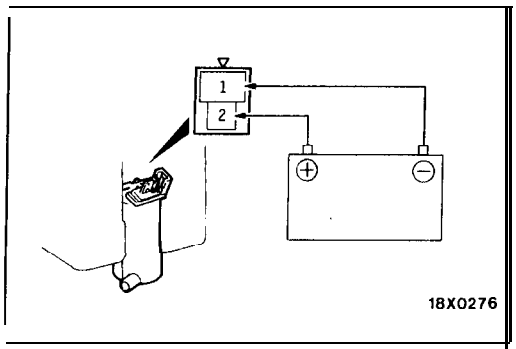

INSPECTION

51101270022

WASHER MOTOR CHECK

(1) With the washer motor installed to the washer tank, fill the washer tank with water.
(2) When the battery is connected as shown in the figure, check that the water squirts out strongly.

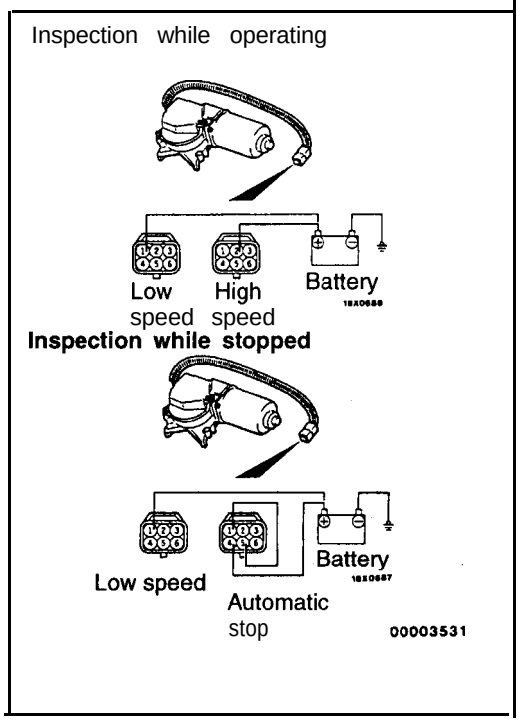

WIPER MOTOR CHECK

51101260029

Do not remove the motor and link assembly when checking.

Wiper Motor at Low Speed and High Speed Operation

Connect a battery to the wiper motor as shown in the illustration and inspect motor operation at low speed and high speed.

Wiper Motor at Stop Position Operation

(1) Run the wiper motor at low speed, disconnect the battery, and stop the motor.
(2) Reconnect the battery as shown in the illustration, and confirm that after the motor starts turning at low speed, it stops at the automatic stop position.

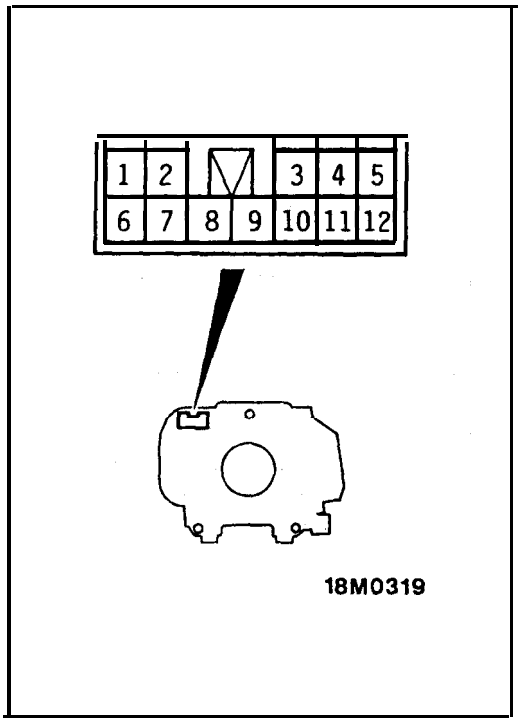

COLUMN SWITCH CONTINUITY CHECK 51100770127

<Wiper and Washer Switch>

Switch position		Terminal No.				
		6	7	8	9	10
Wiper switch	OFF		○—○			
	INT		○—○			
	1 (LO)			○—	——	—○
	2 (HI)				○—	—○
Washer switch	ON	○—	——	——	——	—○

Intermittent Wiper Relay (Intermittent Operation Check)

(1) Connect the column switch connector.
(2) Turn the ignition switch to ACC.
(3) Inspect the intermittent operation time when the wiper switch is turned to INT.

Vehicles with variable intermittent control
FAST Approx. 2 seconds
SLOW: Approx. 15 seconds

REAR WIPER AND WASHER

51100010045

GENERAL IMFORMATION

OPERATION

Low-speed wiper operation

- When the wiper switch is placed in the ON (LO) position with the ignition switch in the ACC or ON position, the wiper operates continuously at low speed.

Auto wiper stop operation

- When the wiper switch is placed in the OFF position, the cam contacts of wiper motor causes current to flow through the auto wiper stop circuit, allowing the wiper blades to cycle before they reach to the stop positions.

Intermittent wiper operation ,

- When the wiper switch is placed in the INT position with the ignition switch in ACC or ON position, the intermittent wiper relay is turned on and off.
- When the contacts are closed, the wiper motor is energized.
- When the wiper motor is energized, the relay contacts open; however, the cam contacts keep the wiper motor energized until the wiper blades return to their stop position.

SERVICE SPECIFICATION

51100030157

Item	Standard value
Rear wiper blade installation position mm (in.)	130±5 (5.18±.20)

TROUBLESHOOTING

51100070043

TROUBLESHOOTING HINTS

1. Wipers does not operate.
   1) Windshield wiper is not operative, either.
      - Check the multi-purpose fuse No. 9.
2. Low-speed wiper operation is inoperative.
   - Check the wiper switch.
3. Intermittent wiper operation is inoperative.
   - Check terminal voltage of wiper switch (with a built-in intermittent wiper relay) with the intermittent wiper relay energezed. (see table below.)
4. Wiper does not stop.
   - Check the wiper motor.
   - Check the intermittent wiper relay.
   - Check the wiper switch.
5. Washer is inoperative.
   1) Wiper is operative.
      - Check the washer motor.
      - Check the washer switch.

Terminal No.	Voltage	Check
6	0V	Intermittent wiper relay or rear wiper switch
	Battery positive voltage	Intermittent wiper relay
	O-Battery positive voltage (alternating)	– (Normal)

REAR WIPER AND WASHER

51100850098

REMOVAL AND INSTALLATION

<ECLIPSE>

Non-turbo

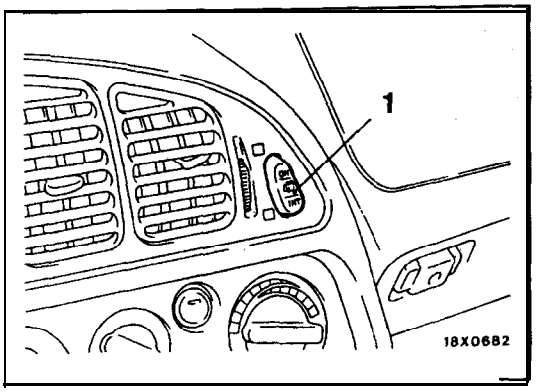

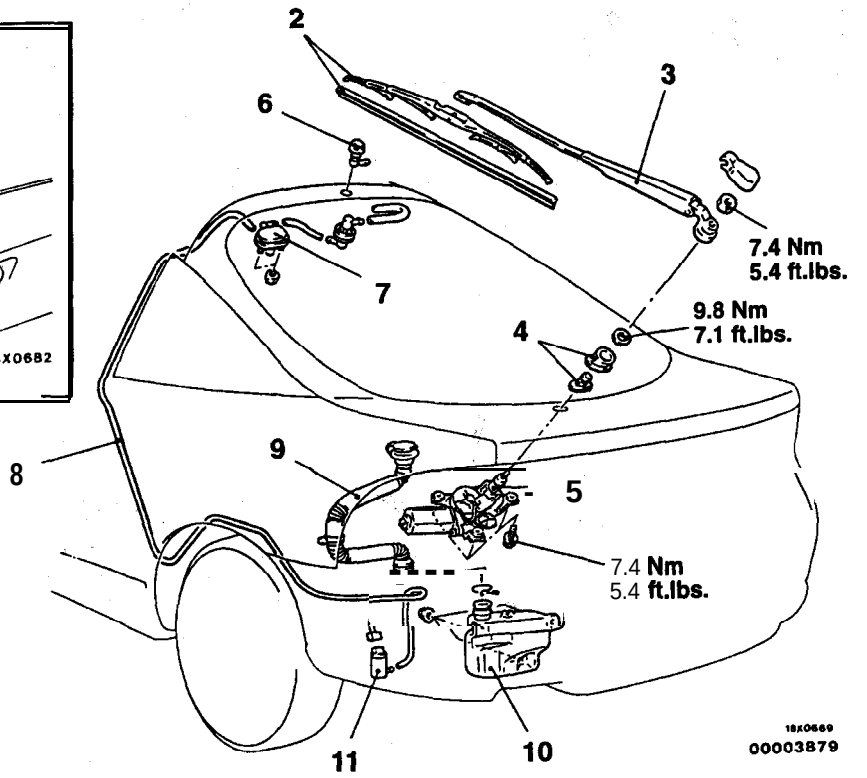

Wiper and washer switch removal steps

- Center air outlet assembly (Refer to GROUP 55 – Ventilators.)

1. Wiper and washer switch

Wiper motor removal steps

▶A◀ 2. Wiper blade
▶A◀ 3. Wiper arm
4. Spacer assembly
- Liftgate lower trim (Refer to GROUP 52A – Trims.)

5. Wiper motor

Washer tank and hose removal steps

- Quarter upper trim (L.H.), quarter lower trim (L.H.) rear end trim, rear side trim, liftgate upper trim (Refer, to GROUP 52A – Trims.)

6. Washer nozzle
7. Joint assembly
8. Tube assembly
9. Hose assembly
10. Washer tank
11. Washer motor

Turbo

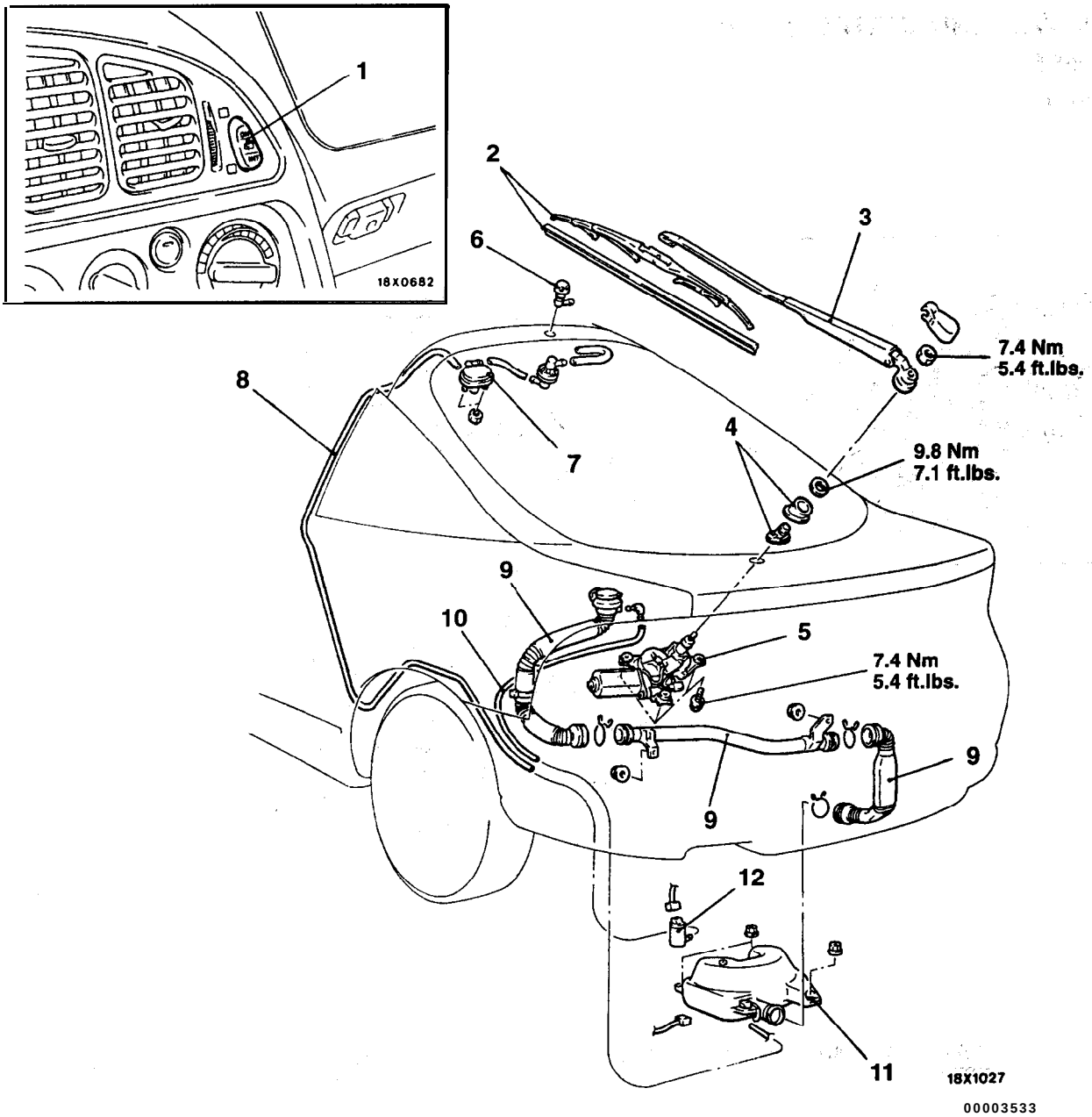

Wiper and washer switch removal steps

- Center air outlet assembly (Refer to GROUP 55 – Ventilators.)

1. Wiper and washer switch

Wiper motor removal steps

▶A◀ 2. Wiper blade
▶A◀ 3. Wiper arm
4. Spacer assembly
- Liftgate lower trim (Refer to GROUP 52A – Trims.)

5. Wiper motor

Washer tank and hose removal steps

- Quarter upper trim (L.H.), quarter lower trim (L.H.), rear end trim, rear side trim, liftgate upper trim (Refer to GROUP 52A – Trims)

6. Washer nozzle
7. Joint assembly
8. Tube assembly
9. Hose assembly
10. Tube assembly
- Spare tire

11. Washer tank
12. Washer motor

TSB Revision

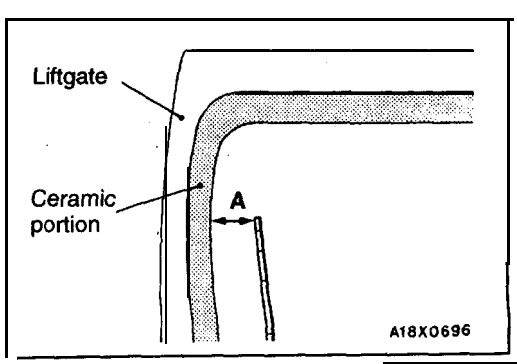

INSTALLATION SERVICE POINT

▶A◀ WIPER ARM/WIPER BLADE INSTALLATION

Adjust the wiper arm so that the clearance **between** the wiper blade edge and the ceramic portion is at the **standard** value.

Standard value (A): 130 ± 5 mm (5.18 ± .20 in.)

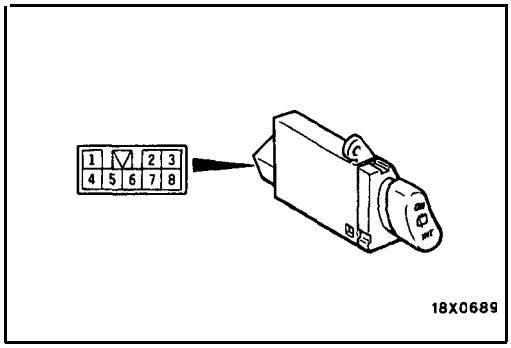

INSPECTION

51100950022

WIPER AND WASHER SWITCH CONTINUITY CHECK

Switch position		Terminal No.						
		3	7	5	6	8	1	4
Wiper switch	OFF			○	○			
	INT	○	○	○	○			
	LO		○		○			
Washer switch	OFF							
	ON		○			○		

ILL

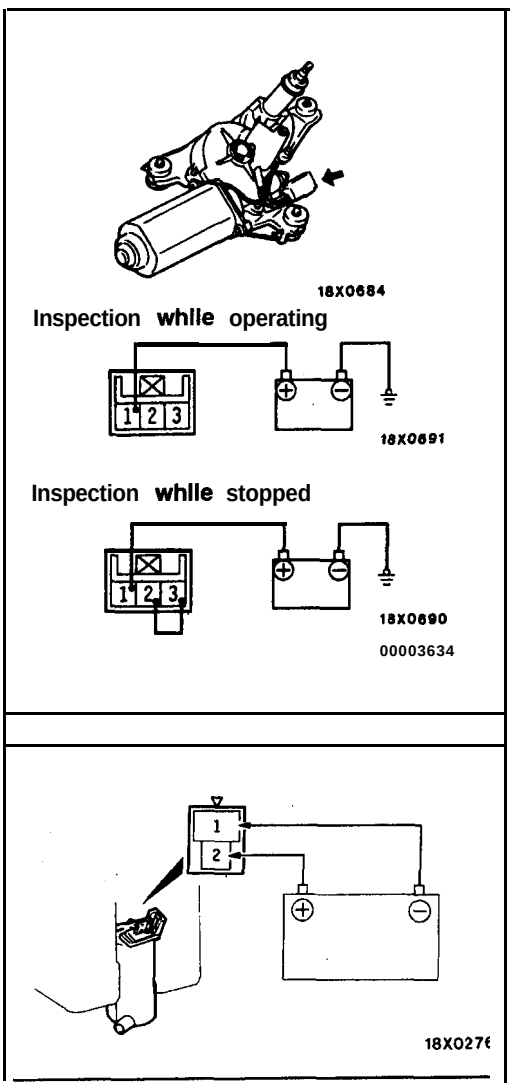

WIPER MOTOR CHECK

51101290025

Do not remove the wiper motor when checking.

Wiper Motor at Low Speed and High Speed Operation

Connect a battery to the wiper motor as shown in the illustration and inspect motor operation at low speed and high speed.

Wiper Motor at Stop Position Operation

(1) Run the wiper motor at low speed, disconnect the battery, and stop the motor.
(2) Reconnect the battery as shown in the illustration, and confirm that after the motor starts turning at low speed, it stops at the automatic stop position.

WASHER MOTOR CHECK

51101310021

(1) With the washer motor installed to the washer tank, fill the washer tank with water.
(2) When the battery is connected as shown in the figure, check that the water squirts out strongly.

DOOR MIRROR

51100060057

SPECIAL TOOL

Tool	Tool number and name	Supersession	Application
	MB990784 Ornament remover	General service tool	Door mirror control switch removal

DOOR MIRROR

51100670052

REMOVAL AND INSTALLATION

<Electrically controlled mirror>

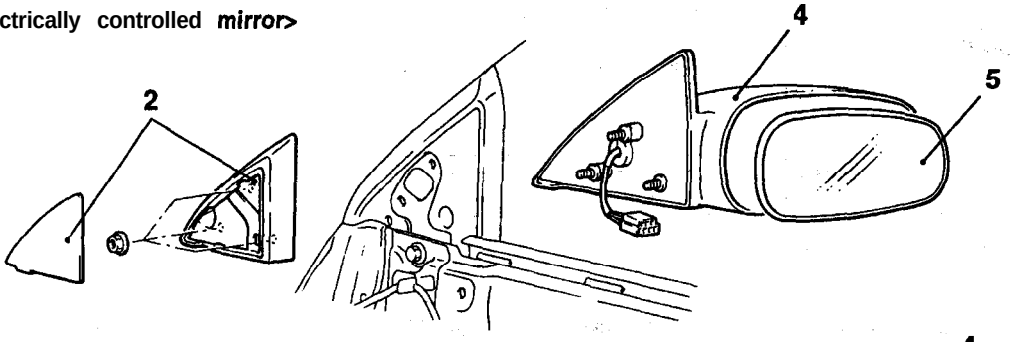

<Manually controlled mirror>

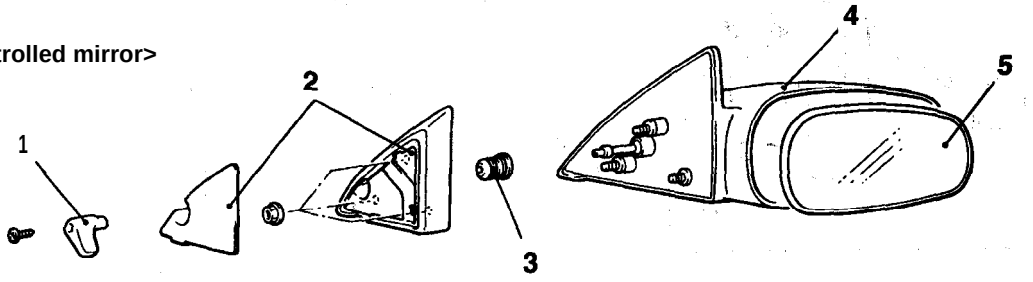

18X0692

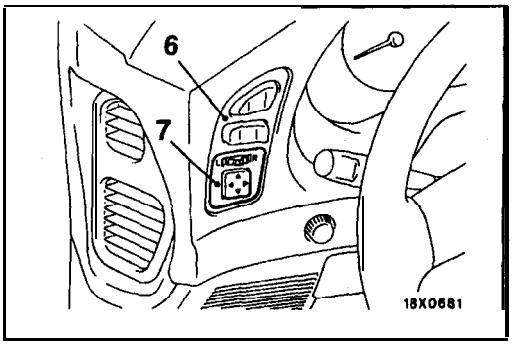

00000159

Door mirror removal steps

- Door trim (Refer to GROUP 42 – Door Trim and Waterproof Film.)

1. Knob
2. Delta cover inner
3. Boot
4. Door mirror
5. Mirror

◀A▶

Door mirror control switch removal steps

6. Instrument panel switch assembly
7. Door mirror control switch

TSB Revision

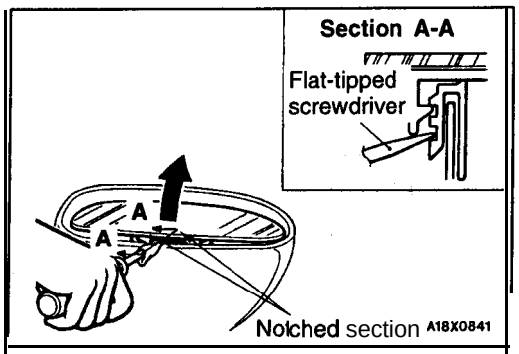

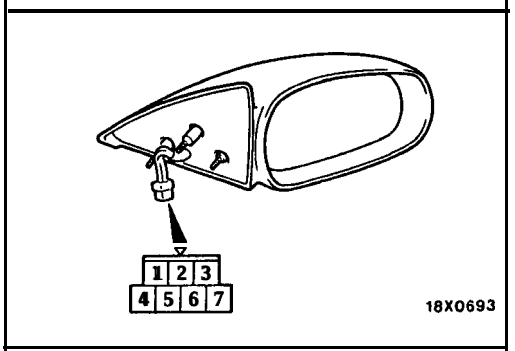

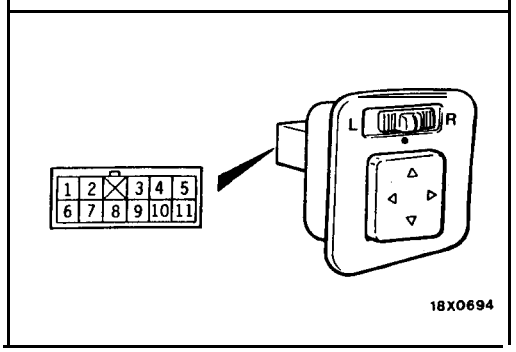

REMOVAL SERVICE POINT

◀A▶ MIRROR REMOVAL

Turn the mirror by hand so that it faces upwards, insert the flat-tipped screwdriver wound with masking tape into the notched section, and lever out. the mirror to remove it.

INSPECTION

51100680017

ELECTRICALLY CONTROLLED MIRROR CHECK

Check that the mirror moves as described in the table when each terminal is connected to the battery.

Battery connection terminal			Direction of operation
5	16	7	
–		⊕	UP
⊕		–	DOWN
⊕	–		LEFT
⊖	⊕		RIGHT

DOOR MIRROR CONTROL SWITCH CONTINUITY CHECK

51100710020

Direction of operation	Selector switch position	Terminal No.						
		3	4	5	8	9	10	11
UP	Left side	○	○	○			○	
	Right side	○	○			○	○	
DOWN	Left side	○	○	○			○	
	Right side	○	○			○	○	
LEFT	Left side	○	○				○	○
	Right side	○	○		○		○	
RIGHT	Left side	○	○				○	○
	Right side	○	○		0		○	

INTERIOR AND SUPPLEMENTAL RESTRAINT SYSTEM (SRS)

CONTENTS

52109000156

NOTES

INTERIOR

CONTENTS

52109000132

WARNINGS REGARDING SERVICING OF SUPPLEMENTAL RESTRAINT SYSTEM (SRS) EQUIPPED VEHICLES

WARNING!

(1) Improper service or maintenance of any component of the SRS, or any SRS-related component, can lead to personal injuryordeath to service personnel (from inadvertent firing of the air bag) or to the driver and passenger (from rendering the SRS inoperative).

(2) Service or maintenance of any SRS component or SRS-related component must be performed only at an authorized MITSUBISHI dealer.

(3) MITSUBISHI dealer personnel must thoroughly review this manual, and especially its GROUP 52B – Supplemental Restraint System (SRS) and GROUP 00 – Maintenance Service, before beginning any service or maintenance of any component of the SRS or any SRS-related component.

NOTE

The SRS includes the following components: SRS-ECU, SRS warning light, air bag module, clock spring, and interconnecting wiring. Other SRS-related components (that may have to be removed/installed in connection with SRS service or maintenance) are indicated in the table of contents by an asterisk (*).

INSTRUMENT PANEL

52100050055

SPECIAL TOOL

Tool	Tool number and name	Supersession	Application
	MB990784 Ornament remover	General Service tool	Removal of switch, trim, etc.

INSTRUMENT PANEL

52100170154

For installation of the instrument panel, the bolts and screws described below are used. They are indicated by symbols in the illustration.

Name	Symbol	Size mm (in.) (D × L)	Color	Shape
Tapping screw	A	5 × 16 (.20 × .62)	–	 19X0645
	B	5 × 12 (.20 × .47)	–	 19X0640
	C	5 × 16 (.20 × .62)	–	
	D	5 × 16 (.20 × .62)	Black	
	E	5 × 20 (.20 × .79)	Black	 19X0639
Washer assembled screw	F	5 × 16 (.20 × .62)	–	 19X0642
	G	5 × 16 (.20 × .62)	Black	
Washer assembled bolt	H	6 × 16 (.24 × .62)	–	 19X0643
	I	6 × 16 (.24 × .62)	Black	
	J	6 × 20 (.24 × .79)	–	
	K	6 × 20 (.24 × .79)	–	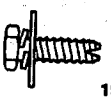 19X0641
	L	6 × 25 (.24 × .79)	Black	
	M	6 × 16 (.24 × .62)	–	 19X0644

D = Thread diameter
L = Effective thread length

REMOVAL AND INSTALLATION

Pre-removal and Post-installation Operation
(1) Floor Console Assembly Removal and Installation (Refer to P.52A-7.)
(2) Steering Wheel **Removal** and Installation (Refer to GROUP 37A – Steering Wheel and Shaft.)
(3) Steering Column Cover Removal and Installation (Refer to GROUP 37A – Steering Wheel and Shaft.)

CAUTION: SRS
(1) When removing and installing the floor console, do not let it bump against the SRS-ECU.
(2) For the passenger's side air bag module removal / installation, always observe the service procedures of GROUP 52B – Air Bag Modules and Clock Spring.

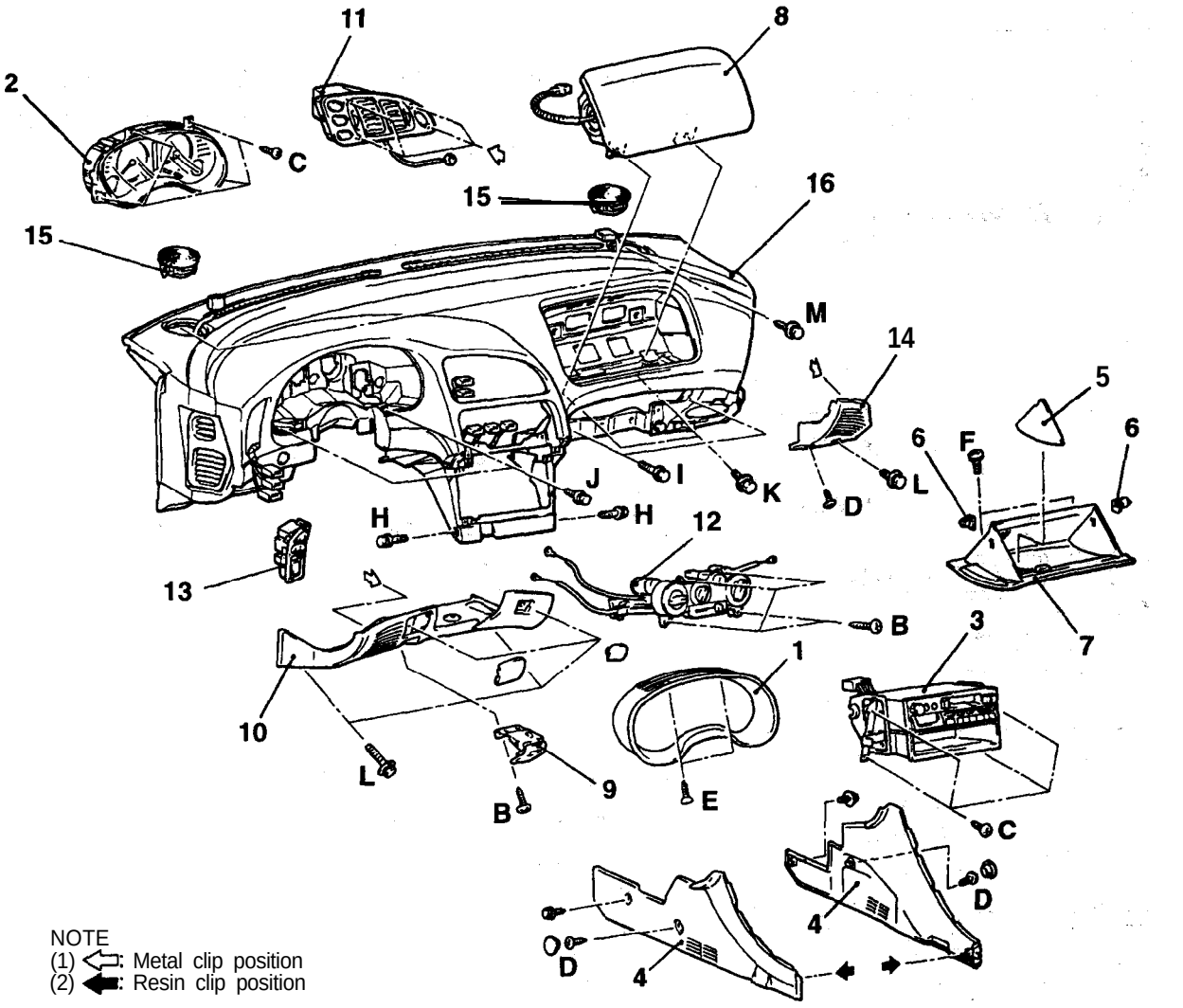

Removal steps

1. Meter bezel
2. Combination meter
3. Radio and tape player, and box
4. Console side cover
5. Sunglasses holder
◀A▶ 6. Stopper
7. Glove box
8. Passenger's side air bag module assembly (Refer to GROUP 52B – Air Bag Modules and Clock Spring.)
9. Hood lock release handle
10. Instrument under cover L.H.
▶B◀ 11. Center air outlet assembly
◀B▶ ▶A◀ 12. Heater control assembly
13. Instrument panel switch
14. Instrument under cover R.H.
15. Front speaker
16. Instrument panel assembly

TSB Revision

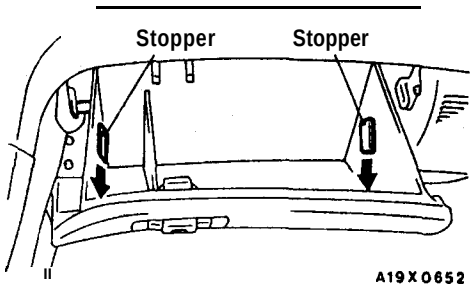

REMOVAL SERVICE POINTS

◀A▶ STOPPER REMOVAL

Push the stopper in the direction of the arrow to **unlock** it.

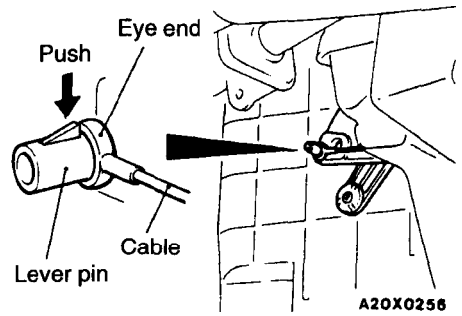

◀B▶ HEATER CONTROL ASSEMBLY REMOVAL

(1) Push the lever pin to disconnect the air outlet changeover damper cable.

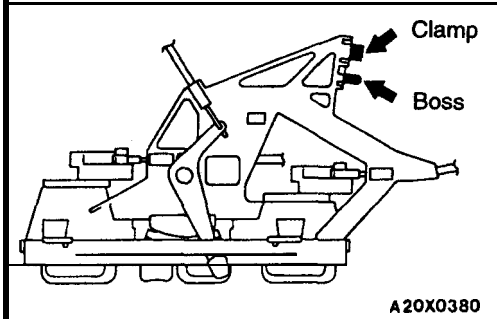

(2) Snap the boss and clamp with nippers or a flat-tipped screwdriver, etc to remove the heater control assembly.

NOTE
The boss and clamp. are needed for assembly line at the factory, but not needed for service work.

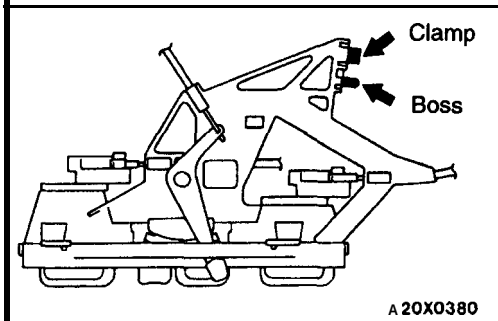

INSTALLATION SERVICE POINTS

▶A◀ HEATER CONTROL ASSEMBLY INSTALLATION

(1) Always snap the boss and clamp before installing a new heater control assembly to the instrument panel.

NOTE
The boss and clamp are needed for assembly line at the factory, but not needed for service work.

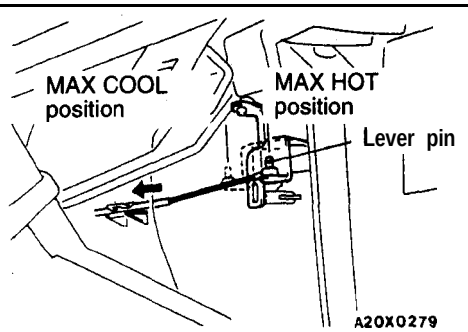

(2) Set the temperature control knob on the heater control assembly to MAX HOT.
(3) Set the air mix damper lever at the top of the heater unit to the MAX HOT position, and install. the cable to the lever pin.
(4) Push the outer cable in the direction of the arrow so that there is no looseness, and then **secure** it with the clip.

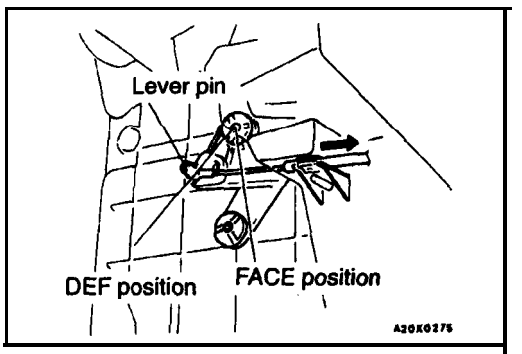

(5) Set the knob for the air outlet changeover on the heater control assembly to the DEF position.
(6) Set the air outlet changeover damper lever of the heater unit to DEF position and install the cable to the lever pin.
(7) Push the outer cable in the *direction of the arrow so that there is no looseness, and then secure it with the clip.

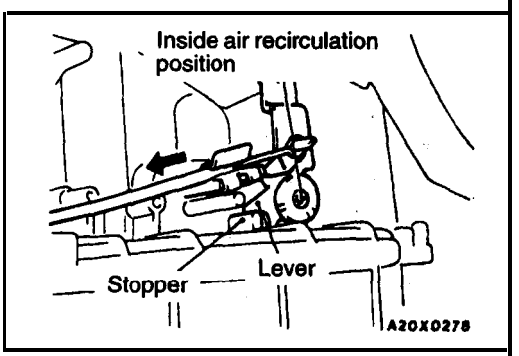

(8) Set the lever for the inside/outside air changeover on the heater control assembly to the inside air recirculation position.
(9) Set the inside/outside air changeover damper lever of the blower unit to inside air recirculation position (while the inside/outside air changeover damper lever touches the stopper of the blower case) and install the cable to the lever pin.
(IO)Push the outer cable in the direction of the arrow so that there is no looseness, and then secure it with the clip.

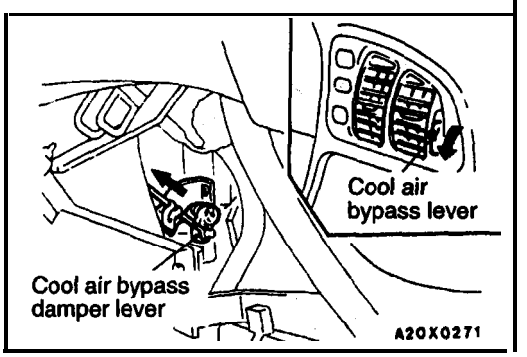

▶B◀ CENTER AIR OUTLET INSTALLATION

(1) Turn the cool air bypass lever of the center air outlet fully downward.
(2) Pull the cool air bypass damper lever fully toward you to install the cable to the lever pin.
(3) Push the outer cable in the direction of the arrow so that there is no looseness, and then secure it with the clip.

DISASSEMBLY AND REASSEMBLY

52100190104

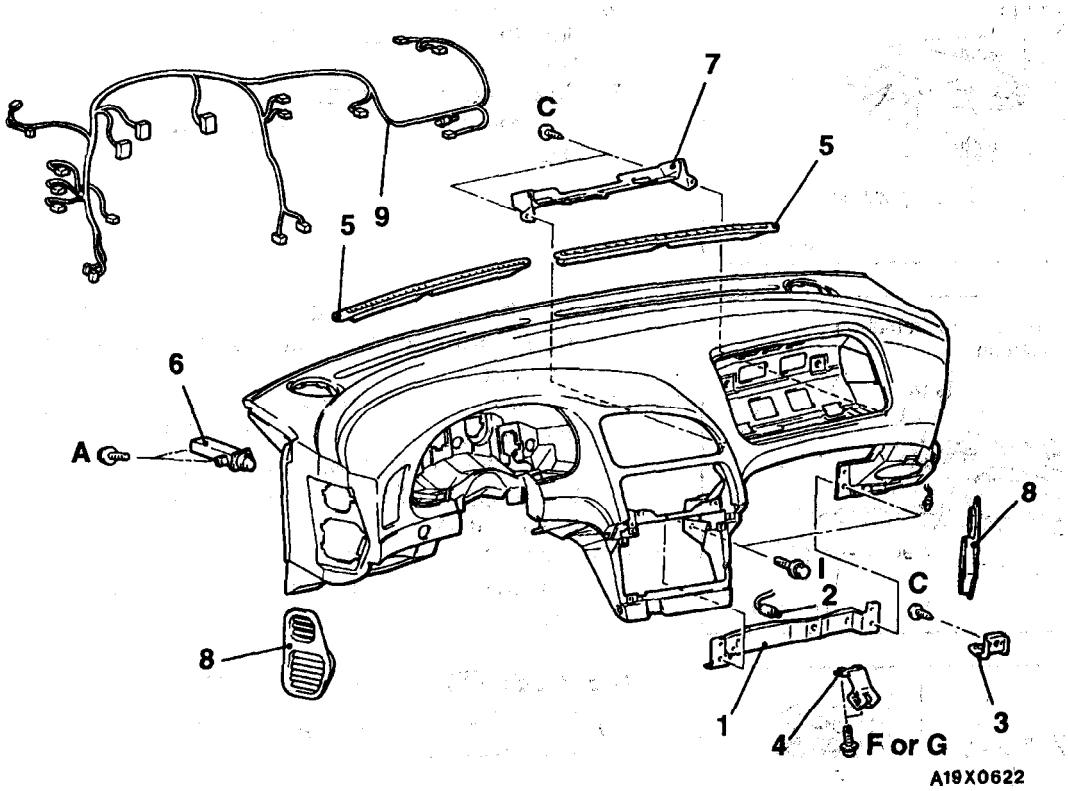

Disassembly steps

1. Glove box under frame
2. Glove box light switch
3. Glove box light bracket
4. Glove box striker
5. Defroster garnish
6. Rheostat
7. Striker reinforcement
8. Side face garnish
9. Instrument panel wiring harness

FLOOR CONSOLE

52100060092

SPECIAL TOOL

Tool	Tool number and name	Supersession	Application
	MB990784 Ornament remover	General service tool	Removal of panel, holder, etc.

FLOOR CONSOLE

52100220070

REMOVAL AND INSTALLATION

CAUTION: SRS
When removing **and installing the floor console assembly, do not let it bump against the SRS-ECU.**

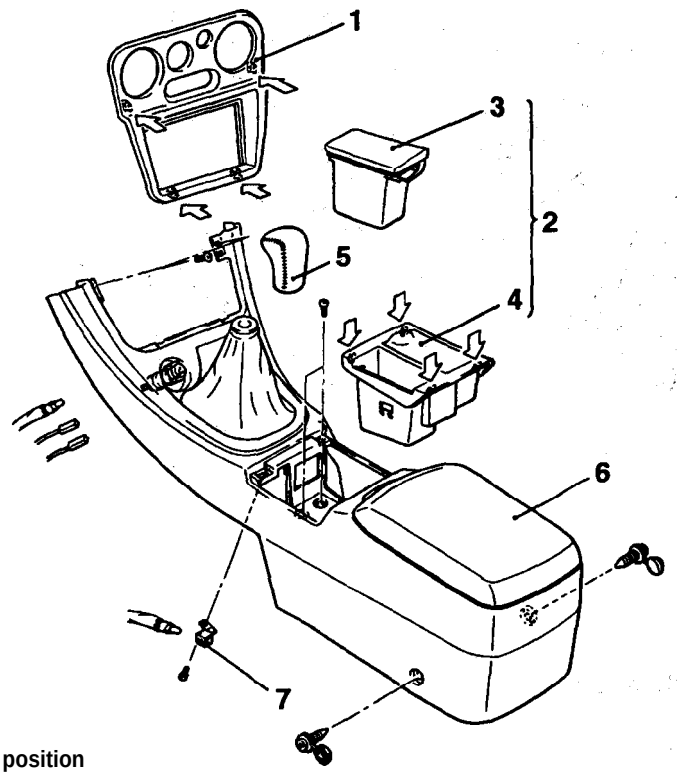

NOTE
⇦: Metal clip position

B19X0638

Removal steps

1. Center console panel
2. Ashtray and cupholder assembly
3. Ashtray
4. Cup holder
5. Shift lever knob **<M/T>**
6. Floor console assembly
7. Ashtray illumination light bracket

TSB Revision

DISASSEMBLY AND REASSEMBLY

52100240069

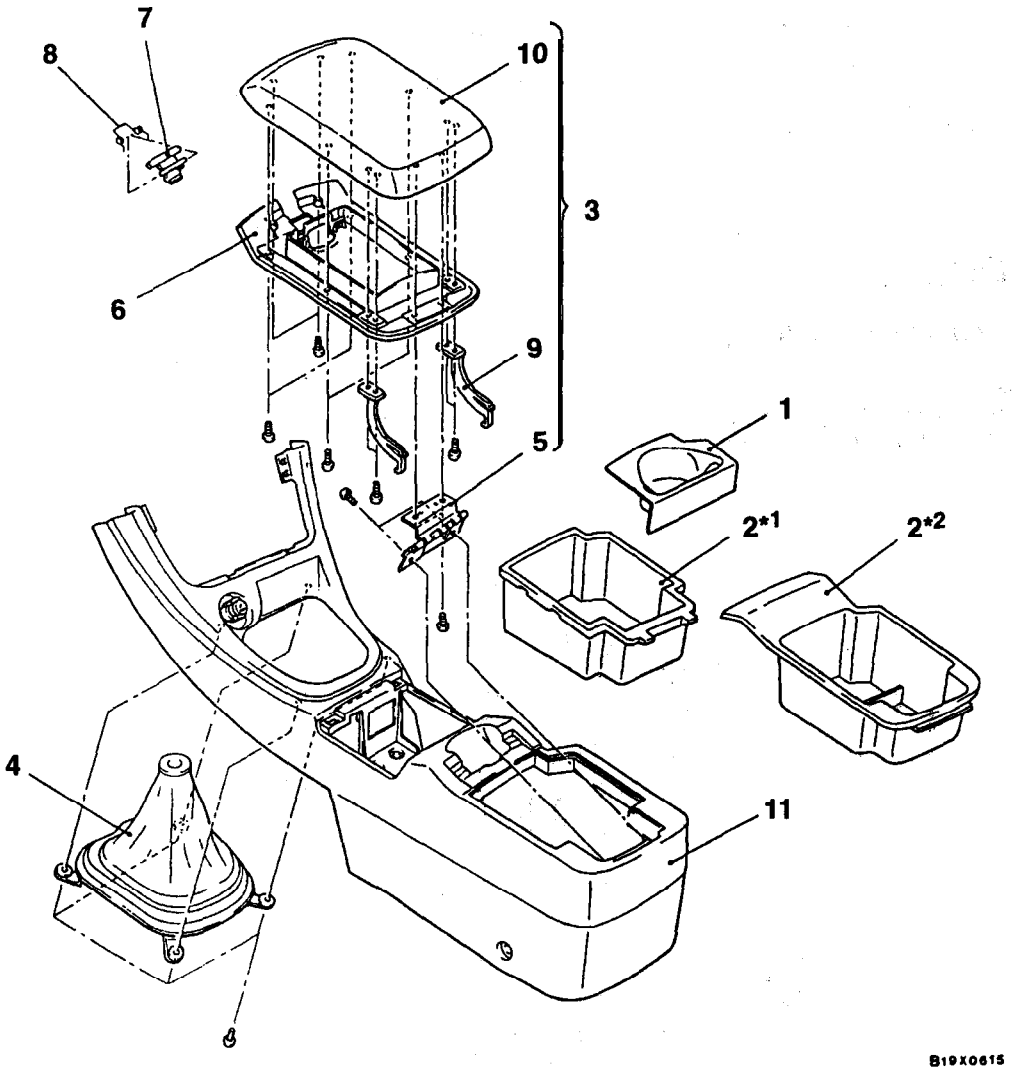

Disassembly steps

1. Cup holder
2. Inner box
3. Floor console lid sub assembly
4. Shift lever cover assembly <M/T>
5. Hinge assembly
6. Inner lid
7. Lock lever
8. Spring
9. Stopper
10. Floor console lid
11. Floor console

NOTE
(1) *1: Vehicles with floor console lid
(2) ● *: Vehicles without floor console lid

TSB Revision

TRIMS

52100060108

SPECIAL TOOL

Tool	Tool number and name	Supersession	Application
	MB990784 Ornament remover	General service tool	Removal of trims, etc.

TRIMS

52100110223

<ECLIPSE>

REMOVAL AND INSTALLATION

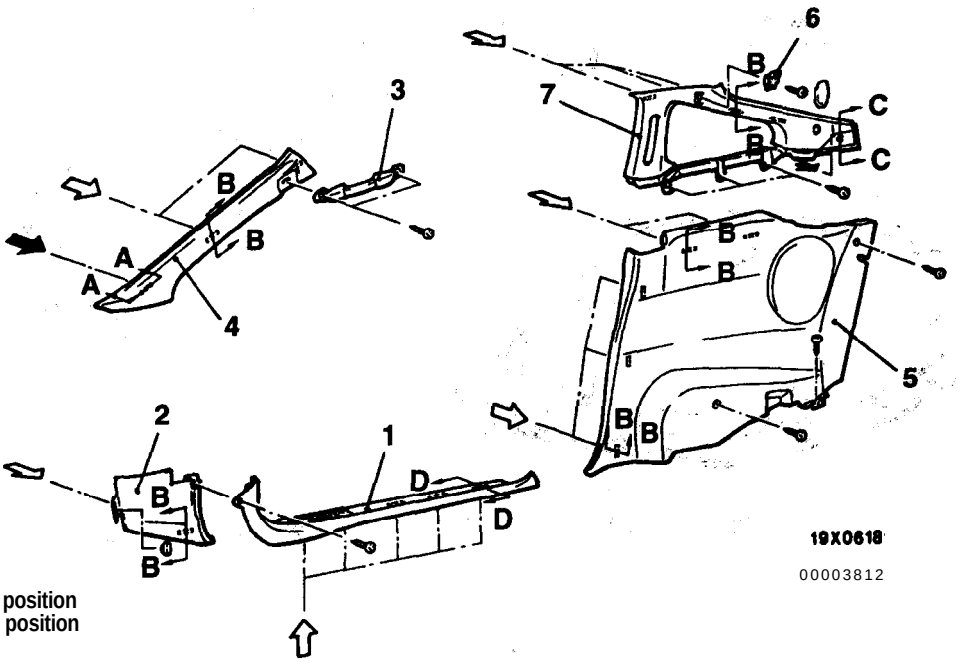

NOTE
(1) ⇦: Metal clip position
(2) ⬅: Resin clip position

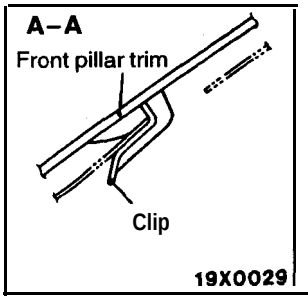

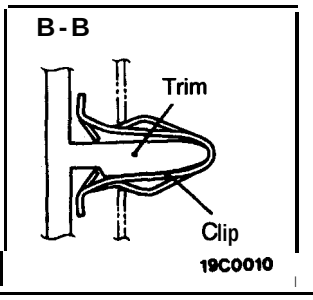

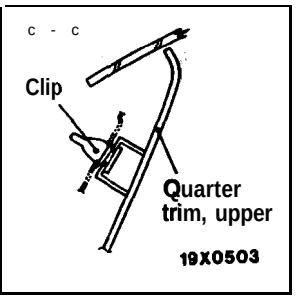

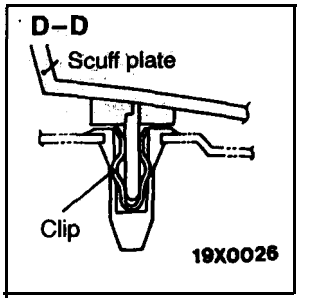

Cowl side trim removal steps

1. Scuff plate
2. Cowl side trim

Front pillar trim removal steps

3. Assist grip <R.H.>
4. Front pillar trim

Quarter trim removal steps

- Rear seat cushion (Refer to P.52A-22.)
- Front seat belt anchor plate (Refer to P.52A-32.)
- Rear seat belt anchor plate (Refer to P.52A-36.)

5. Quarter trim, lower
6. Coat hanger bracket
7. Quarter trim, upper

TSB Revision

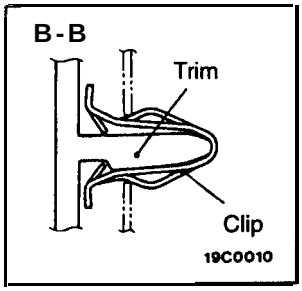

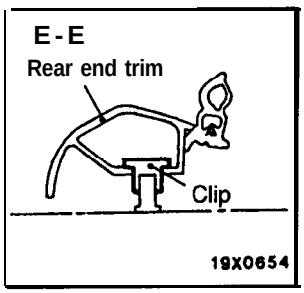

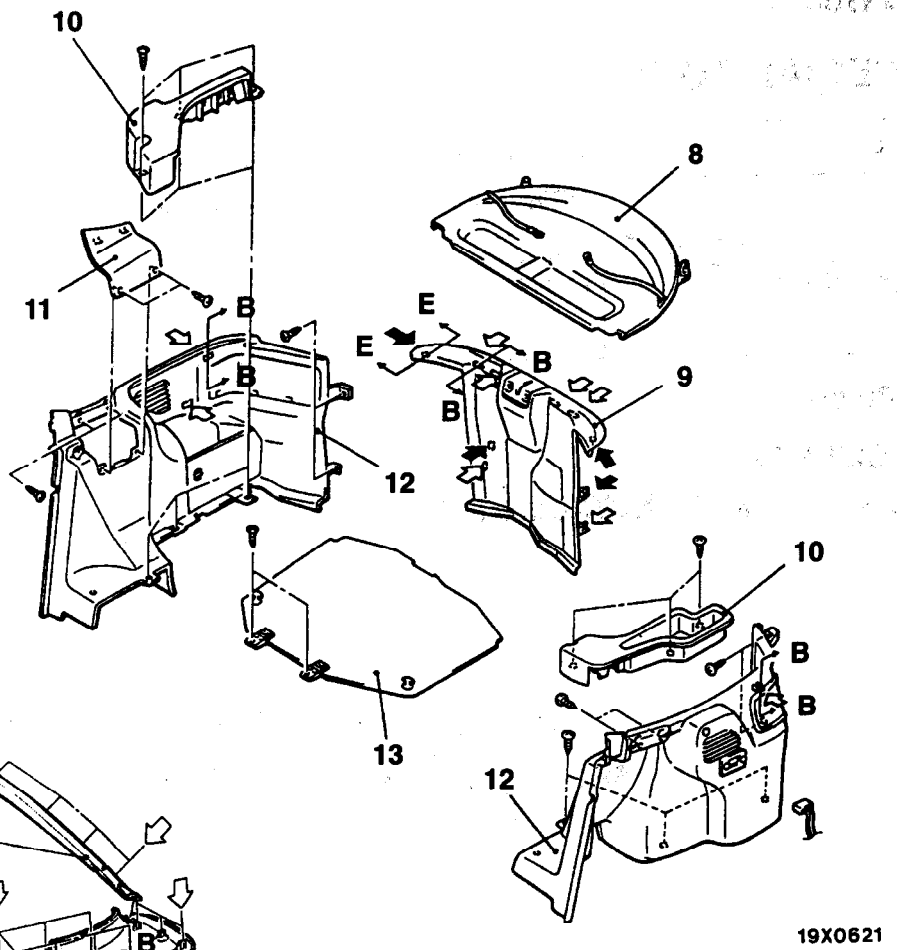

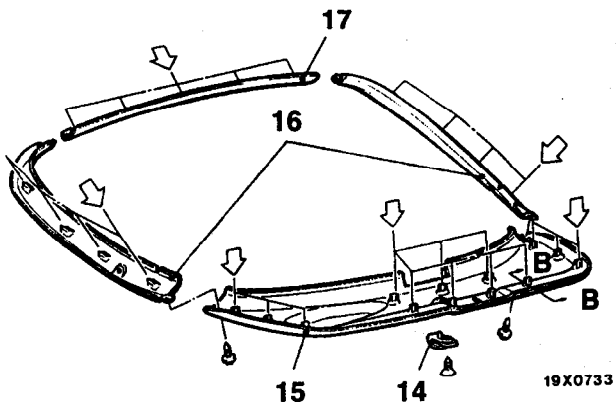

NOTE
(1) ⇦: Metal clip position
(2) ⬅: Resin clip position

00003964

Rear side trim removal steps

8. Rear shelf trim
9. Rear end trim
10. Luggage compartment floor box
11. Absorber lid
12. Rear side trim

◀A▶

Luggage compartment floor board removal

13. Luggage compartment floor board

Liftgate trim removal steps

14. Hook
15. Liftgate lower trim
16. Liftgate side trim
17. Liftgate upper trim

<ECLIPSE SPYDER>

REMOVAL AND INSTALLATION

<Interior side>

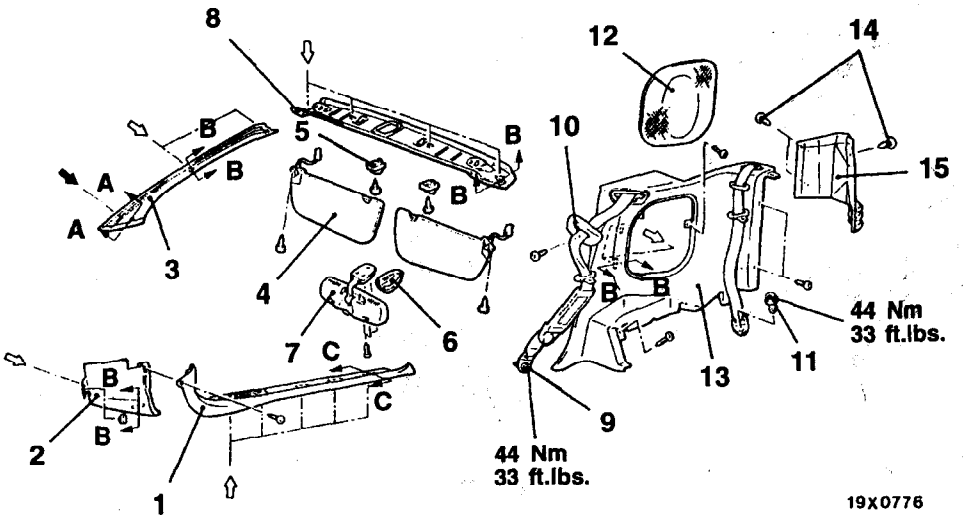

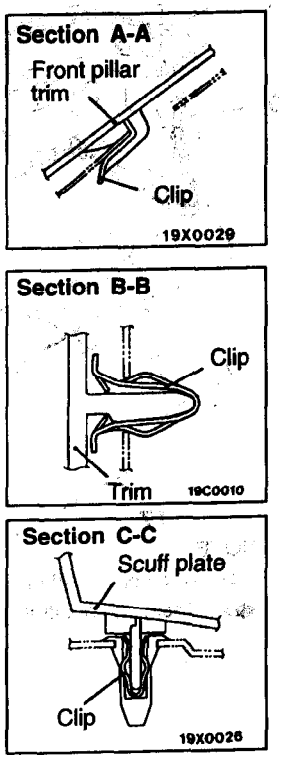

NOTE
⇦: Metal clip position
⬅: Resin clip position

00004754

Cowl side trim removal steps

1. Scuff plate
2. Cowl side trim

Front pillar trim and front roof rail trim removal steps

3. Front pillar trim
4. Sunvisor
5. Sunvisor holder
6. Inside rear view mirror stay cover
7. Inside rear view mirror
8. Front roof rail trim

Quarter trim removal steps

- Door inner rear opening weatherstrip (Refer to GROUP 42 – Door Inner Opening Weatherstrip.)
- Rear seat (Refer to P.52A-22.)

9. Front outer seat belt anchor plate
10. ▶B◀ Belt guide cover
11. ▶A◀ Rear outer seat belt anchor plate
12. Rear speaker garnish
13. Quarter trim, lower
14. Clip
15. Quarter trim, side

<Luggage compartment side>

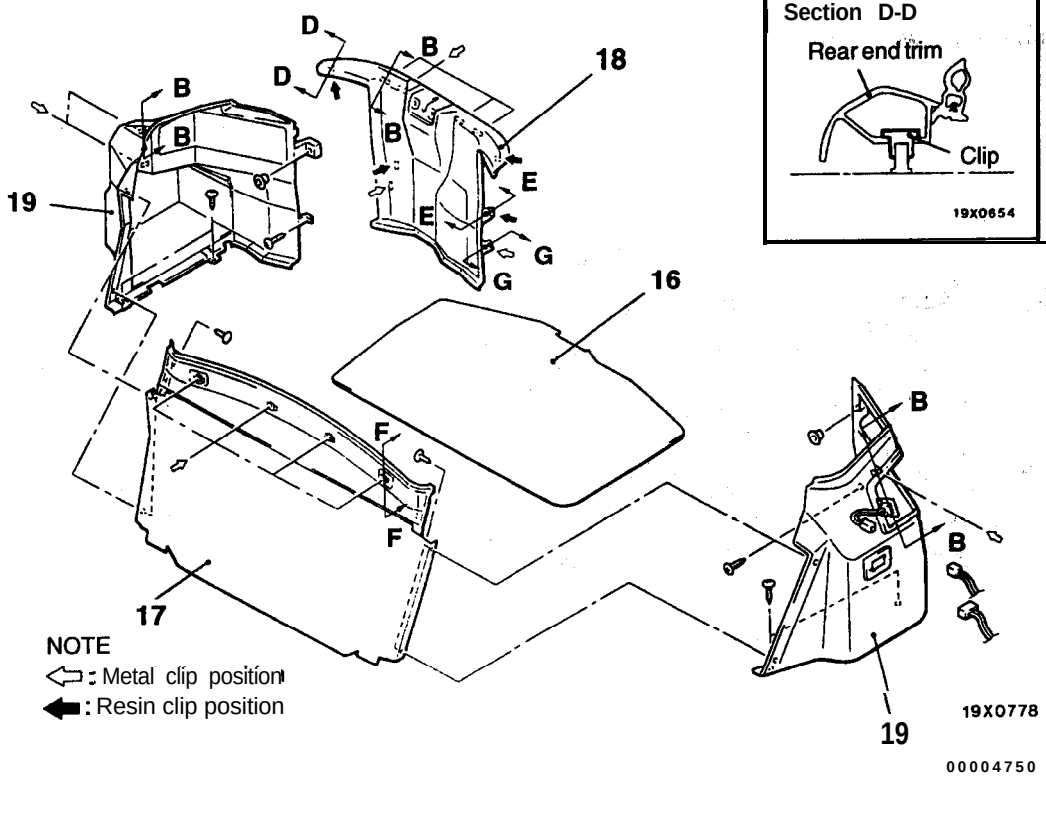

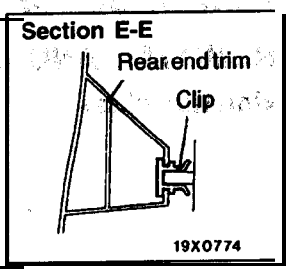

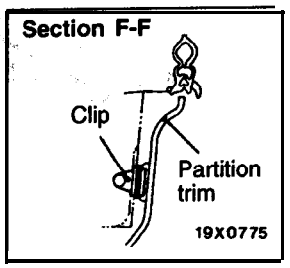

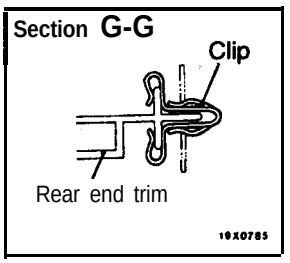

Luggage compartment side trim removal steps

16. Luggage compartment floor board
17. Partition trim
◀A▶ 18. Rear end trim
19. Luggage compartment side trim

Partition trim removal steps

16. Luggage compartment floor board
17. Partition trim

Rear end trim removal steps

16. Luggage compartment floor board
18. Rear end trim

REMOVAL SERVICE POINT

◀A▶ REAR END TRIM REMOVAL

(1) Remove the four lower clips of the rear end trim.
(2) Remove the six upper clips of the rear end trim, and then pull up the trim.

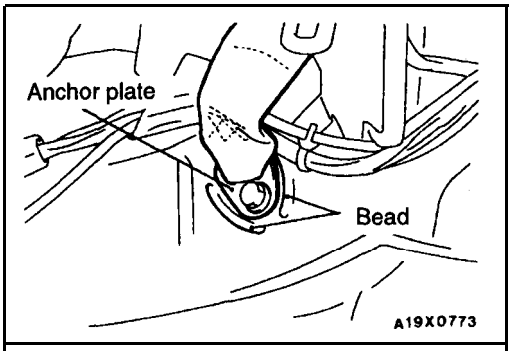

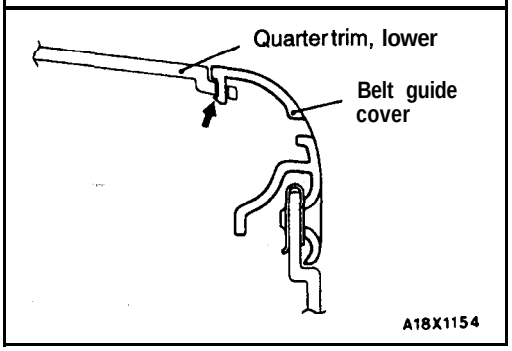

INSTALLATION SERVICE POINT

▶A◀ REAR OUTER SEAT BELT ANCHOR PLATE INSTALLATION

Install the anchor plate along the bead of the body.

▶B◀ BELT GUIDE COVER INSTALLATION

Accurately insert the belt guide 5 claws into the holes on quarter trim, lower.

HEADLINING

52100060115

SPECIAL TOOL

Tool	Tool number and name	Supersession	Application
	MB990784 Ornament remover	General service tool	Removal of trims, etc.

HEADLINING

52100140178

<ECLIPSE>

REMOVAL AND INSTALLATION

Pre-removal and Post-installation Operation
- Front Pillar Trim and Quarter Trim Upper Removal and Installation (Refer to P.52A-9.)

<Vehicles without sunroof>

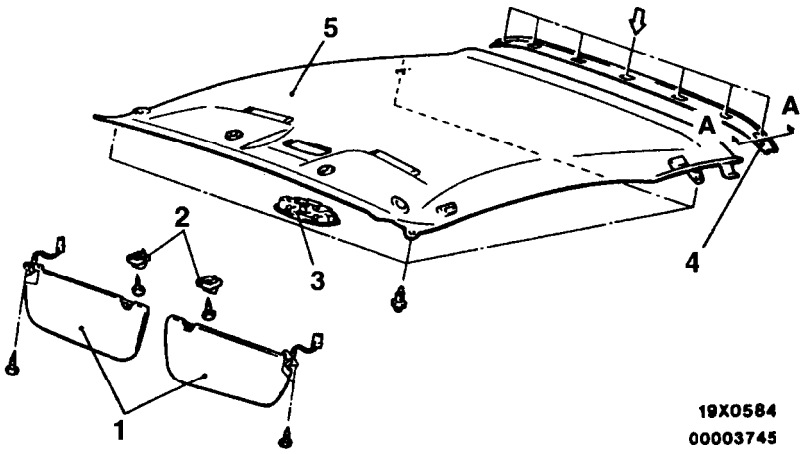

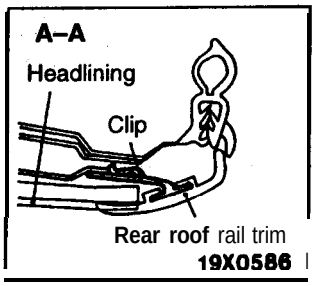

NOTE
⇦: Metal clip position

Removal steps

1. Sunvisor assembly
2. Sunvisor holder
3. ◀A▶ Dome light assembly
4. Rear roof rail trim
5. Headlining

TSB Revision

<Vehicles with sunroof>

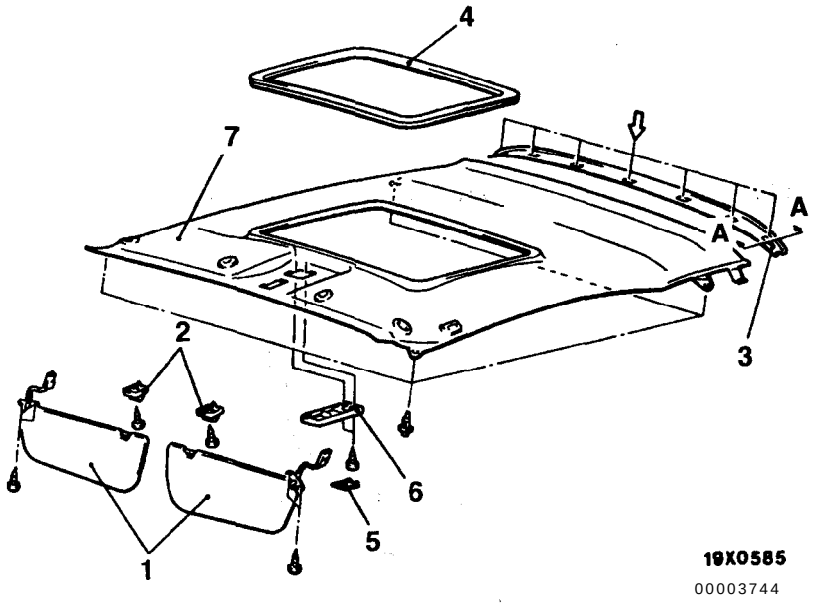

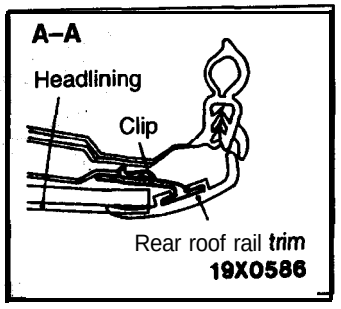

NOTE
⇦: Metal clip position

Removal steps

1. Sunvisor assembly
2. Sunvisor holder
3. Rear roof rail trim
▶A◀ 4. Sunroof inner weatherstrip
5. Sunroof switch cover
6. Sunroof switch panel
7. Headlining

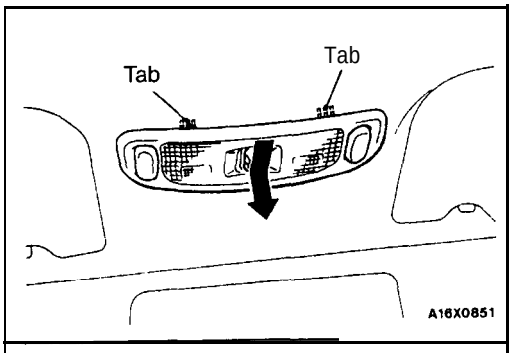

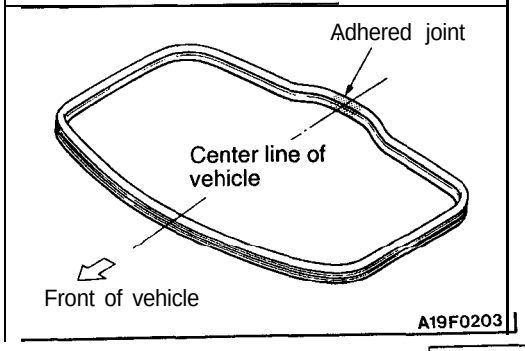

REMOVAL SERVICE POINT

◀A▶ DOME LIGHT ASSEMBLY REMOVAL

Press and pull the tab downward to remove the dome light assembly.

INSTALLATION SERVICE POINT

▶A◀ SUNROOF INNER WEATHERSTRIP INSTALLATION

Install the sunroof inner weatherstrip with its adhered joint located toward the rear of the vehicle and on its center line.

INSIDE REAR VIEW MIRROR

52100270037

<ECLIPSE>

REMOVAL AND INSTALLATION

<Vehicles without sunroof>

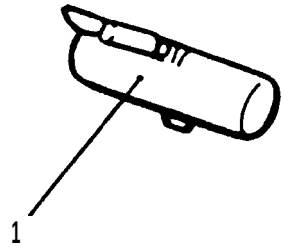

19X0657

<Vehicles with sunrooh

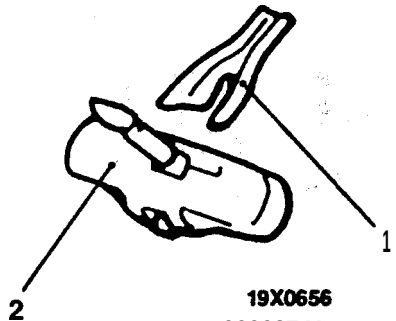

19X0656
00003741

Removal steps

1. Harness cover
◀A▶ 2. Inside rear view mirror

<ECLIPSE SPYDER>

REMOVAL AND INSTALLATION

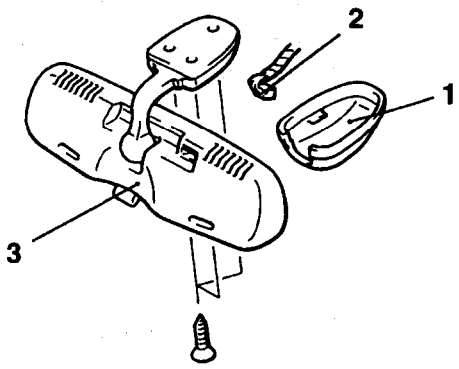

A19X0777

Removal steps

1. Inside rear view mirror stay cover
2. Harness connector
3. Inside rear view mirror

TSB Revision

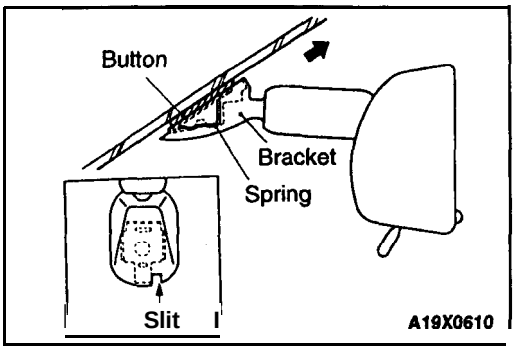

REMOVAL SERVICE POINT'

◀A▶ INSIDE REAR VIEW MIRROR REMOVAL

Insert a narrow flat-tip. screwdriver into the slit in the inside rear view mirror bracket, keep the spring pushed in and remove the inside rear view mirror in the direction of the arrow in the illustration.

NOTE
While the spring is pushed in, the connection between the spring and the pawl of the button is released.

FRONT SEAT

52200130086

REMOVAL AND INSTALLATION

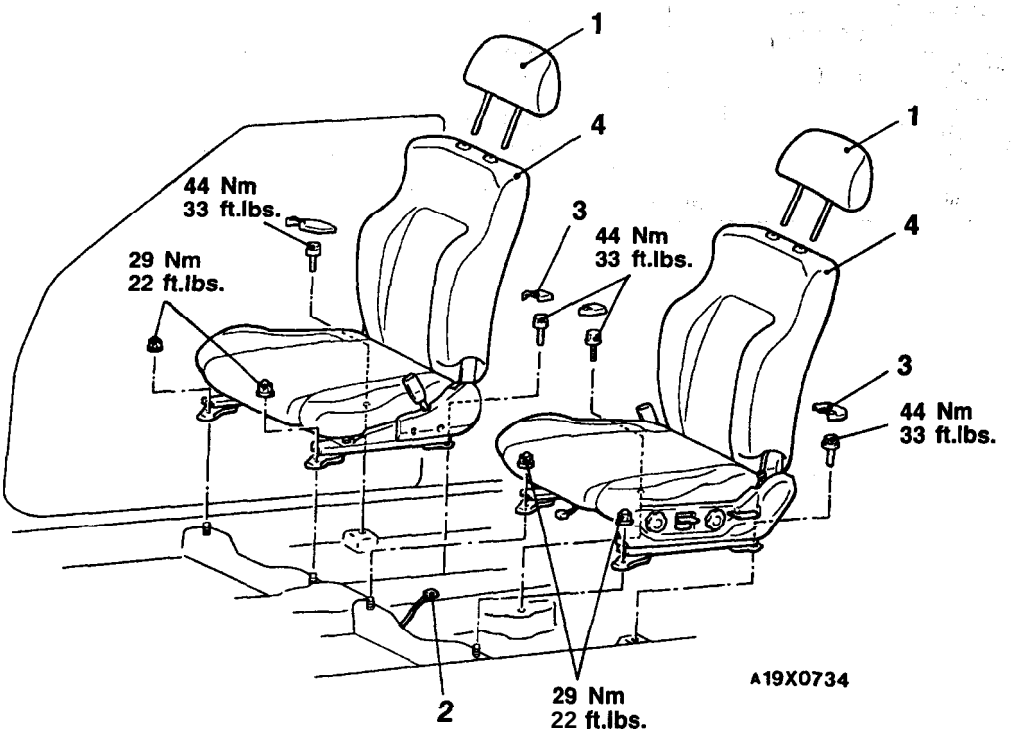

1. Headrestraint

Front seat assembly removal steps

2. Harness connector
▶A◀ 3. Seat anchor cover
4. Front seat assembly

NOTE
After temporarily tightening the seat assembly mounting nuts and bolts in every installation location, fully tighten them to the specified torque.

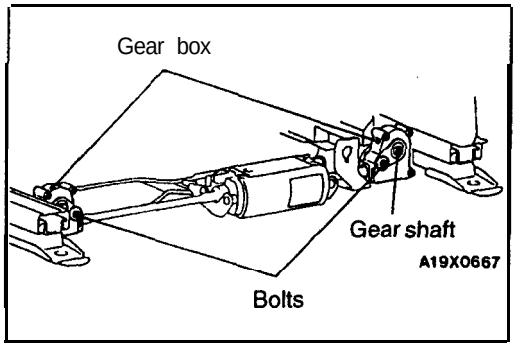

REMOVAL SERVICE POINTS OF FRONT SEAT ASSEMBLY WHEN THERE IS A MALFUNCTION IN THE POWER SEAT SLIDE MECHANISM

If the seat will not slide due to a malfunction of the slide motor or the slide switch and the seat mounting nuts and bolts consequently cannot be removed, slide the seat by the following procedure.

(1) Remove the bolts which secure the gear box to the left and right ends of the rails.
(2) Remove the gear shaft from the left side. Pull the gear box at the right side toward you to disengage the gear of the slide rail.
(3) Push the seat with your hand to slide it to a position where the seat mounting nut and bolt can be removed.

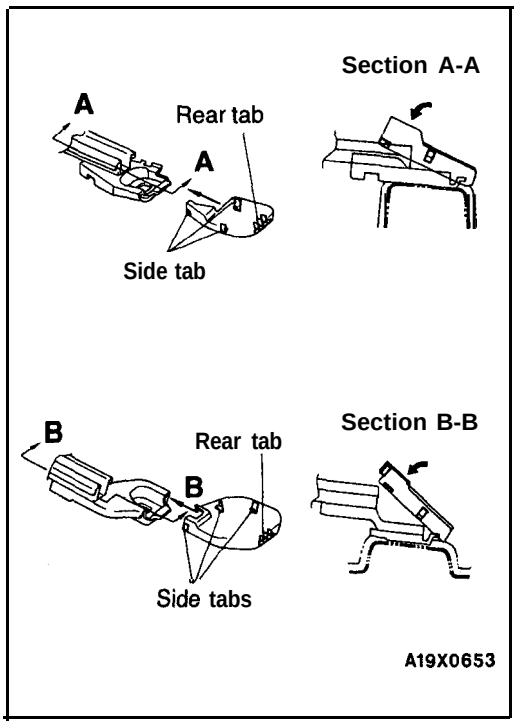

INSTALLATION SERVICE POINT

▶A◀ SEAT ANCHOR COVER INSTALLATION

Insert the rear tab of the seat anchor cover in the front seat rear mounting bracket. Then rotate the cover in the direction of arrow to install the side tabs in the side holes of the bracket.

DISASSEMBLY AND REASSEMBLY

52200150242

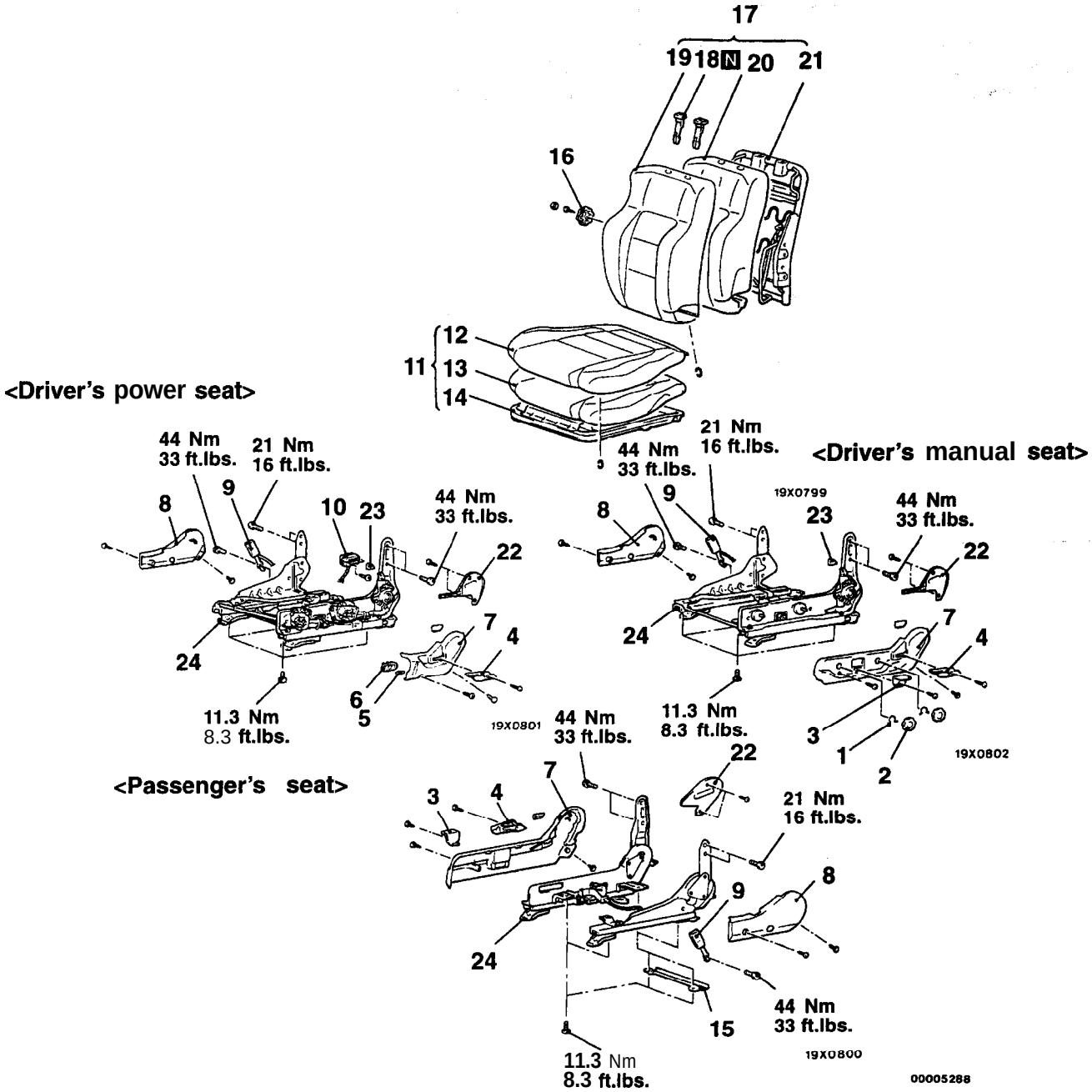

Disassembly steps

1. Clip
2. Height adjuster knob
3. Seat slide adjuster lever
4. Reclining adjuster lever
5. Power seat switch knob
6. Power seat switch cover
7. Front seat side shield cover
8. Front seat hinge cover
9. Front inner seat belt
10. Power seat switch
11. Front seat cushion assembly
12. Front seat cushion cover
13. Front seat cushion pad
14. Front seat cushion frame
15. Stay
16. Lumber support knob (Driver's seat)
17. Front seat back assembly
18. Headrestraint guide
19. Front seat back cover
20. Front seat back pad
21. Front seat back frame
22. Front seat adjuster inner cover
23. Reclining memory knob
24. Seat adjuster assembly

TSB Revision

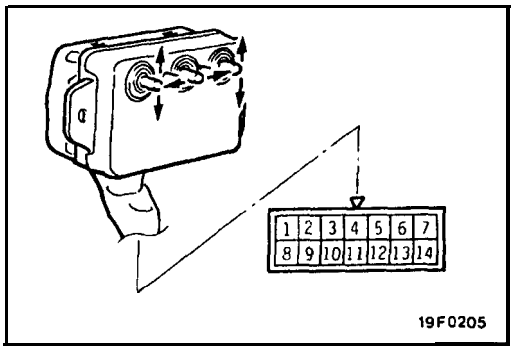

INSPECTION

52200160061

POWER SEAT SWITCH CONTINUITY CHECK

Switch position		Terminal No. 1	2	3	4	5	6	7	8	9	10	11	12	13	14
Slide switch	Forward		○	○											
					○										○
	Backward	○			○										
				○											○
Front height switch	Up									○	○				
												○			○
	Down								○			○			
											○				○
Rear height switch	UP						0						0		
								0							0
	Down					0		0							
													0		0
All switches	OFF														

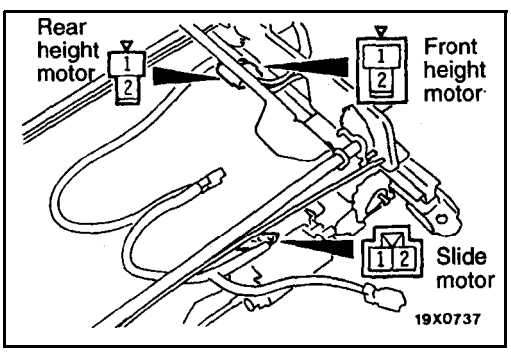

ALL POWER SEAT MOTORS CHECK

(1) Disconnect each motor at the connector.
(2) Connect the terminals of each motor directly to the battery and check that the motor turns freely and each adjusting mechanism operates in the directions shown in the table below.
(3) If there is any malfunction, replace the power seat adjuster assembly.

Name of motor	Direction of operation	Terminal No.1	Terminal No.2	Stop position
Front height, Rear height	Up	+		Stops within the limit of operation range
	Down	–	+	
Slide	Forward	+	–	
	Backward	–	+	

TSB Revision

REAR SEAT

52200180197

REMOVAL AND INSTALLATION

<ECLIPSE (Split Seat)>

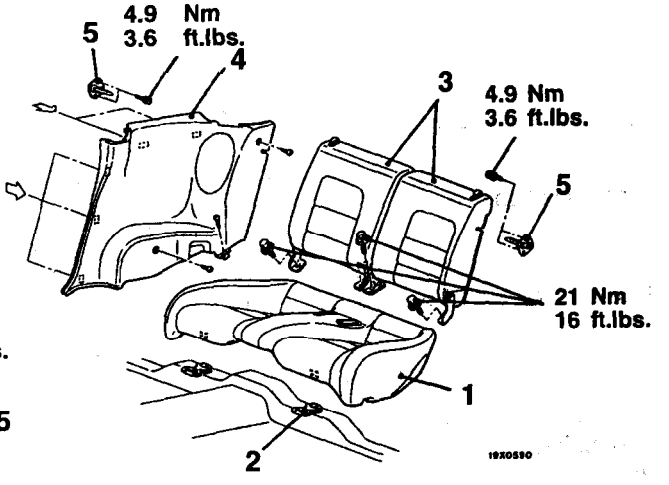

<ECLIPSE (Bench Seat)>

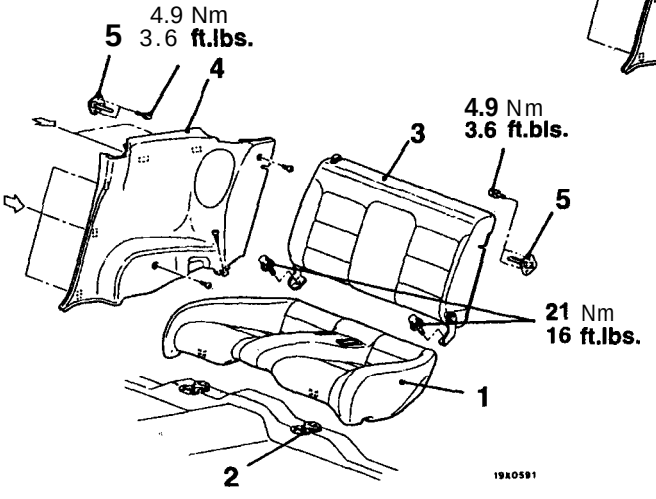

<ECLIPSE SPYDER>

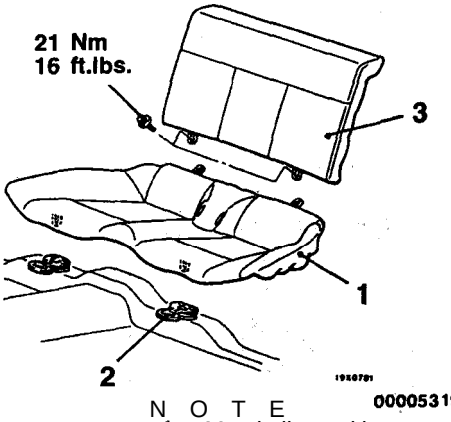

00005319

NOTE
⇦: Metal clip position

Removal steps

◀A▶ ▶B◀ 1. Rear seat cushion
2. Rear seat hook
▶A◀ 3. Rear seat back

Striker removal steps

3. Quarter trim, lower (Refer to P.52A-9.)
4. Striker

TSB Revision

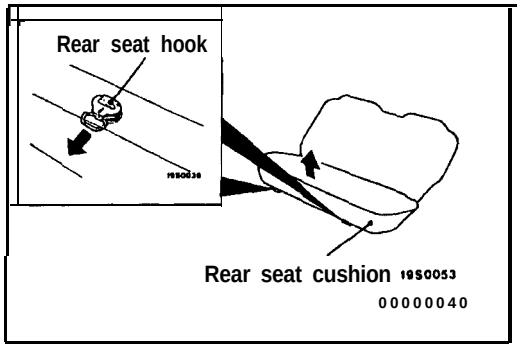

REMOVAL SERVICE POINT

◀A▶ REAR SEAT CUSHION REMOVAL

While keeping the rear seat hook pulled, lift up the rear seat cushion to remove it.

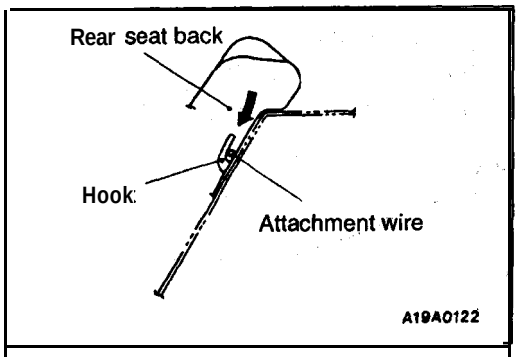

INSTALLATION SERVICE POINTS

▶A◀ REAR SEAT BACK INSTALLATION

Push the rear seat back in the direction indicated in the illustration; then securely attach the attachment wire to the body side hook and install the rear' seat back.

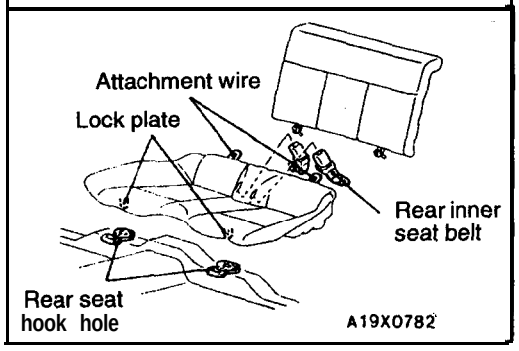

▶B◀ REAR SEAT CUSHION INSTALLATION

(1) Insert the rear seat cushion attachment wire below the rear seat back.
(2) Pass the rear inner seat belt through the rear seat cushion.
(3) Insert the rear seat' cushion lock plate into the rear seat hook holes.

DISASSEMBLY AND REASSEMBLY

52200200022

ECLIPSE

<Split seat> <Bench seat>

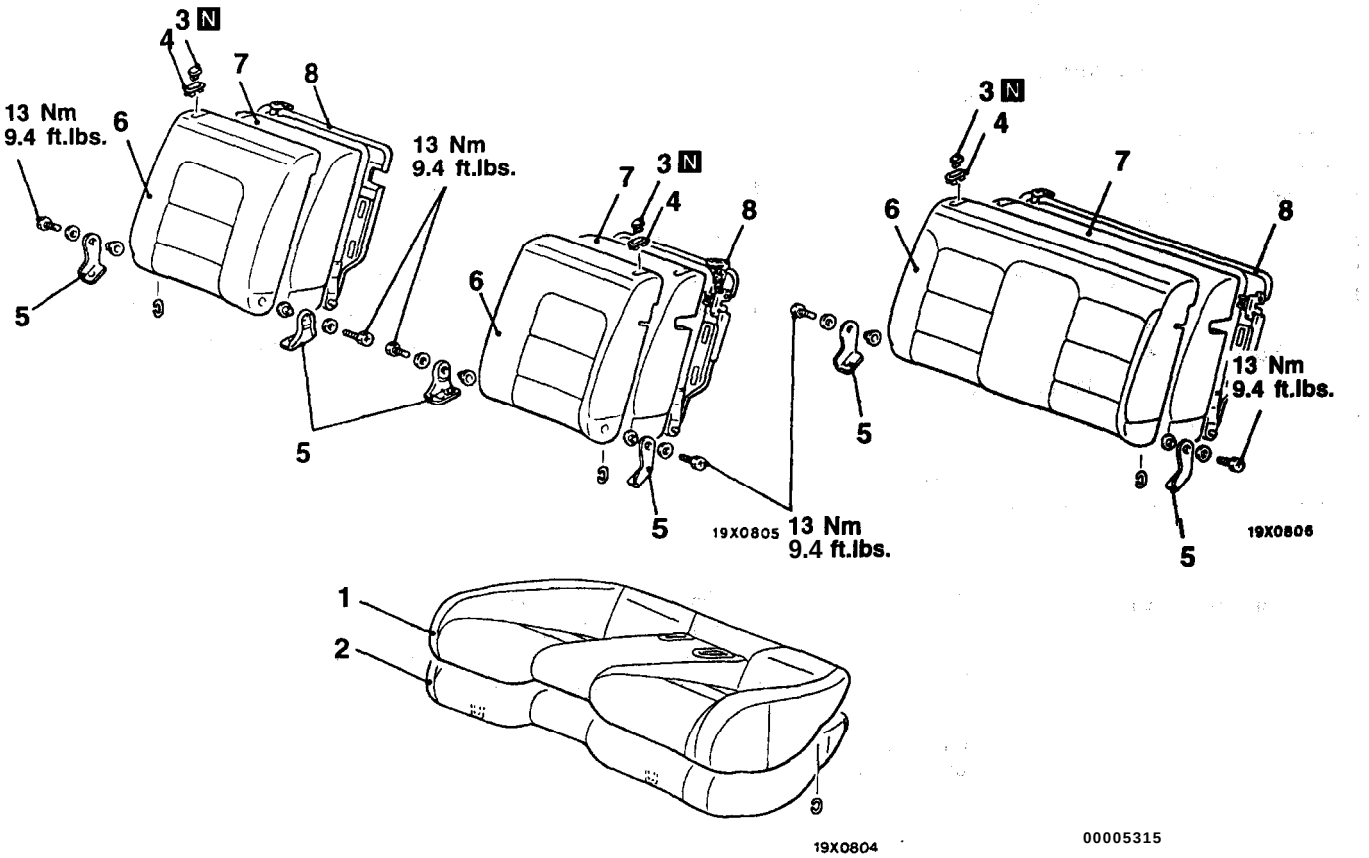

Disassembly steps

1. Rear seat cushion cover
2. Rear seat cushion pad
3. Knob
4. Garnish
5. Rear seat back hinge
6. Rear seat back cover
7. Rear seat back pad
8. Rear seat back frame

ECLIPSE SPYDER

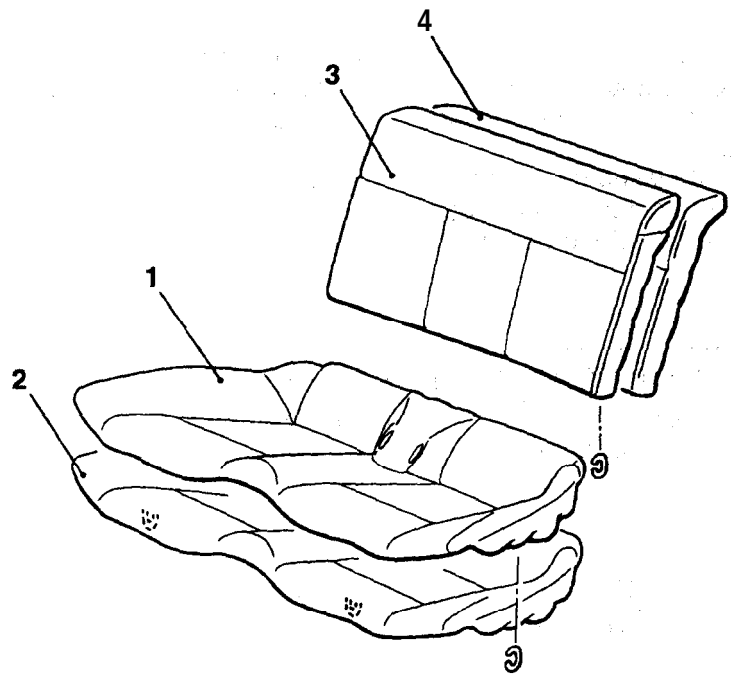

Disassembly steps

1. Rear seat cushion cover
2. Rear seat cushion pad
3. Rear seat back cover
4. Rear seat back pad

FRONT SEAT BELT

52300010031

GENERAL IMFORMATION

OPERATION

- When the ignition switch is turned ON, the decision circuit operates and the seat belt warning light inside of the combination meter flashes four times for 6 seconds.
- The decision circuit output makes the seat belt warning buzzer sound intermittently for 6 seconds to indicate unfastening of the seat belt.
- When the seat belt is buckled (seat belt switch is turned ON), the seat belt warning buzzer stops sounding.
  When the ignition switch is turned OFF, both seat belt warning light and buzzer do not operate.

SPECIAL TOOLS

52300060029

Tool	Tool number and name	Supersession	Application
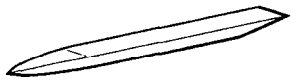	MB990784 Ornament remover	General service tool	Removal of switch, trim, etc.
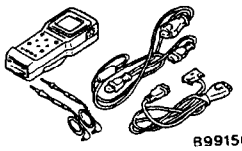	MB991502 Scan tool (MUT-II)	MB991502	ETACS-ECU input signal checking
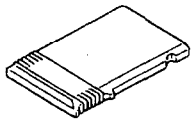	ROM pack	–	
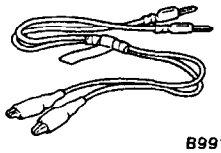	MB991529 Diagnostic trouble code check harness	MB991529-01	ETACS-ECU input signal checking when using a voltmeter

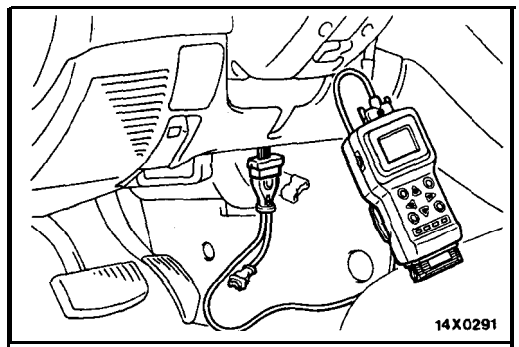

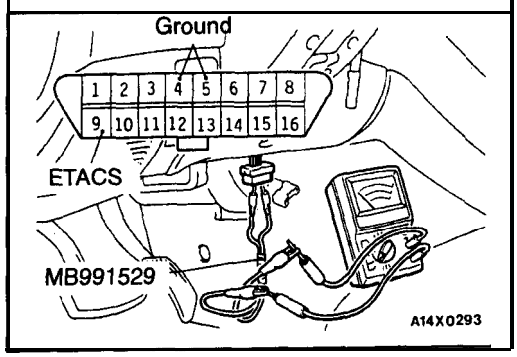

TROUBLESHOOTING

52300280029

DIAGNOSTIC FUNCTION

INPUT SIGNAL INSPECTION POINTS

When Using the Scan Tool

1. Connect the scan tool to the data link connector.

   Caution
   Turn the ignition switch OFF to connect or disconnect the scan tool.

2. If buzzer of the scan tool sounds once when the front seat belt buckle switch (L.H.) is operated (ON/OFF), 'the ETACS-ECU input signal for that switch circuit system is normal.

When Using a Voltmeter

1. Use the special tool to connect a voltmeter between the ground terminal and the ETACS terminal of the data link' connector.
2. If the voltmeter indicator deflects once when the front seat belt buckle switch (LH) is operated (ON/OFF), the ETACS-ECU input signal for that switch circuit system is normal.

INSPECTION CHART FOR TROUBLE SYMPTOM

52300300053

Trouble symptom		Inspection procedure No.	Reference page
Communication with sacn tool is not possible.	Communication with all systems is not possible.	1	52A-28
	Communication with one-shot pulse input signal only is not possible.	2	52A-28
When the seat belts are not fastened and the ignition switch is turned to the ON position, the seat belt warning buzzer does not sound and the seat belt warning light does not illuminate nor flash.		3	52A-29
When the seat belts are not fastened and the ignition switch is turned to the ON position, the seat belt warning light illuminates or flashes, but the seat belt warning buzzer does not sound.		4	52A-30
When the seat belts are not fastened and the ignition switch is turned to the ON position, the seat belt warning buzzer sound, but the seat belt warning light does not illuminate nor flash.		5	52A-30
After having the ignition switch turned to the ON position, the seat belt warning buzzer does not stop sounding for six seconds, even though the seat belt is buckled immediately.		6	52A-31

INSPECTION PROCEDURE FOR TROUBLE SYMPTOMS

INSPECTION PROCEDURE 1

Communication with scan tool is not possible. (Communication with all systems is not possible.)	Probable cause
[Comment] The cause is probably in the defective power supply system (including ground) for the diagnostic line.	• Malfunction of connector • Malfunction of harness

Refer to GROUP 13A -Troubleshooting <2.0L Engine (Non-Turbo)>
Refer to GROUP 13A – Troubleshooting <2.0L Engine (Turbo) and 2.4L Engine>

INSPECTION PROCEDURE 2

Communication with scan tool is not possible. (Communication with the one-shot pulse input signal only is not possible.)	Probable cause
[Comment] The cause is probably a defective one-shot pulse input circuit system of the diagnostic line.	• Malfunction of connector • Malfunction of harness wire • Malfunction of ETACS-ECU

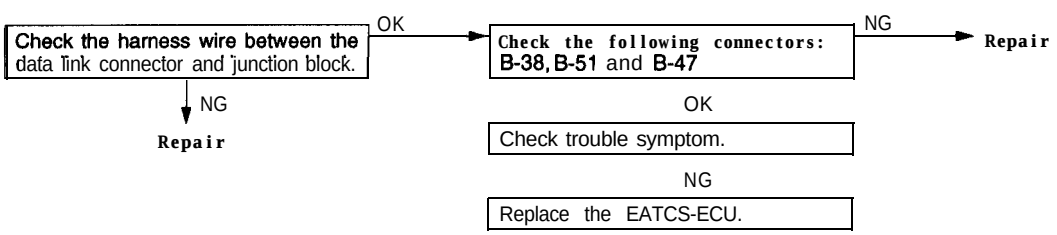

TSB Revision

INSPECTION PROCEDURE 3

When the seat belts are not fastened and the ignition switch is turned to the ON position, the seat belt warning buzzer does not sound, and the seat belt warning light does not illuminate nor flash.	Probable cause
[Comment] It is possible that there is a malfunction of the power supply circuit (including of grounding) of ETACS-ECU.	• Malfunction of connector • Malfunction of harness wire • Malfunction of ETACS-ECU

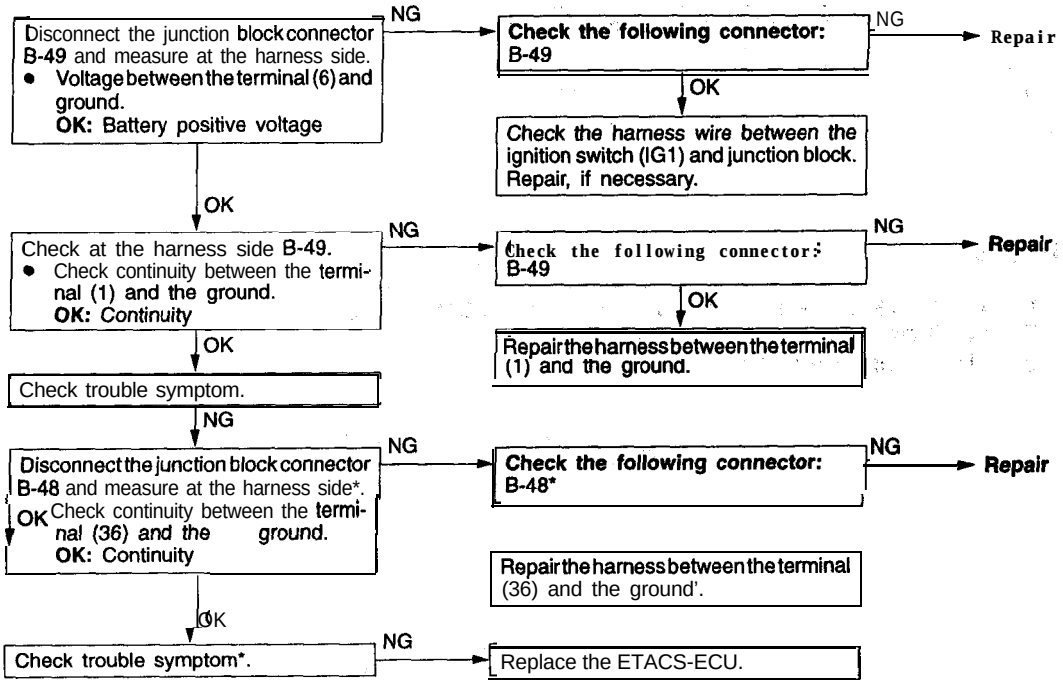

NOTE
*: Without theft-alarm system

INSPECTION PROCEDURE 4

When the seat belts are not fastened and the ignition switch is turned to the ON position, the seat belt warning light illuminates or flashes, but the seat belt warning buzzer does not sound.	Probable cause
[Comment] It is possible that there is a malfunction of the front seat belt buckle switch circuit.	• Malfunction of front seat belt buckle switch • Malfunction of harness wire • Malfunction of ETACS-ECU

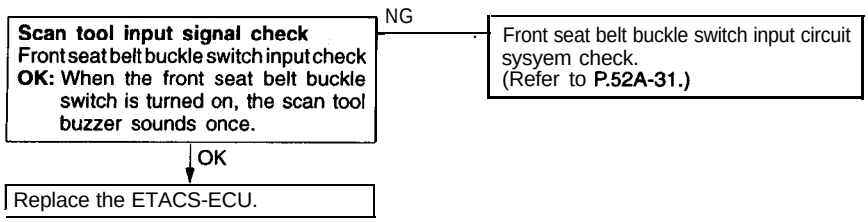

INSPECTION PROCEDURE 5

When the seat belts are not fastened and the ignition switch is turned to the ON position, the seat belt warning., buzzer sounds, but the seat belt warning light does not illuminate nor flash.	Probable cause
[Comment] It is possible that there is a malfunction of the seat belt warning light circuit or ETACS-ECU.	• Malfunction of bulb • Malfunction of connector • Malfunction of harness wire • Malfunction of ETACS-ECU

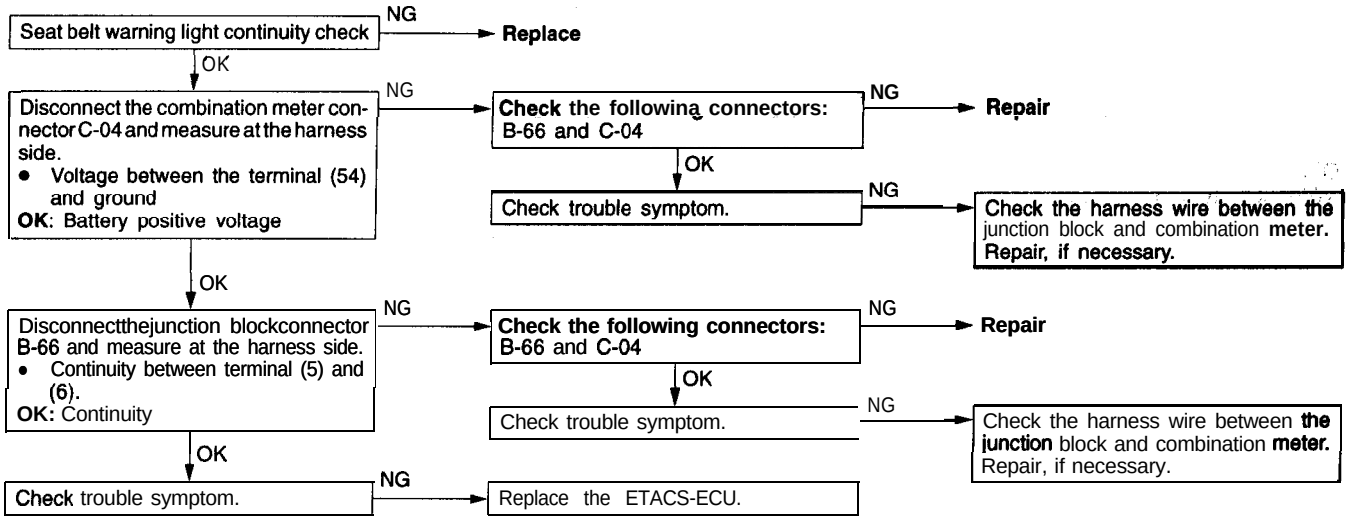

TSB Revision

INSPECTION PROCEDURE 6

After having the ignition switch turned to the ON position, the seat belt warning buzzer does not stop sounding for six seconds, even though the seat belt is buckled immediately.	Probable cause
[Comment] It is possible that there is a malfunction of me front seat belt buckle switch circuit.	• Malfunction of front seat belt buckle switch • Malfunction of connector • Malfunction of harness wire • Malfunction of ETACS-ECU

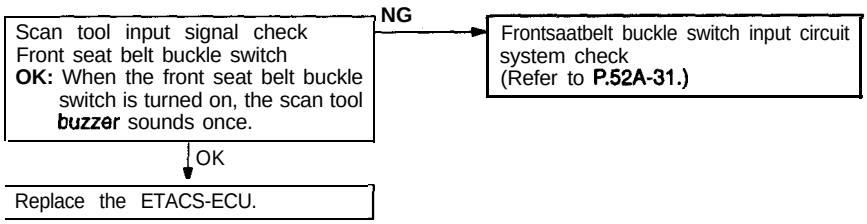

INSPECTION PROCEDURE 7

Front seat belt buckle switch input circuit system check

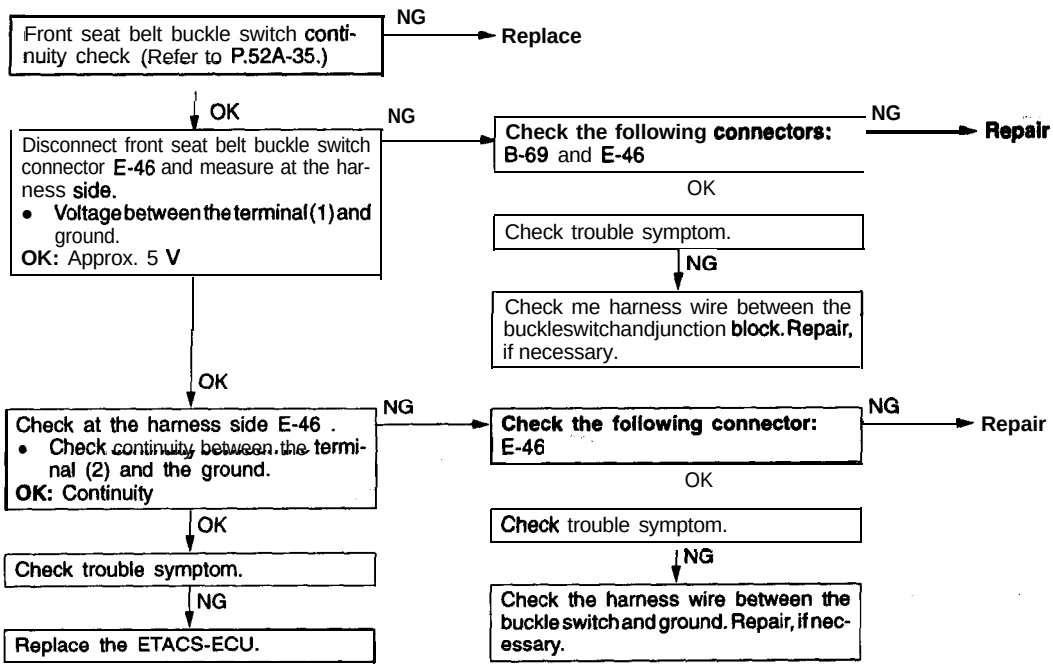

FRONT SEAT BELT

52300130157

<ECLIPSE>

REMOVAL AND INSTALLATION

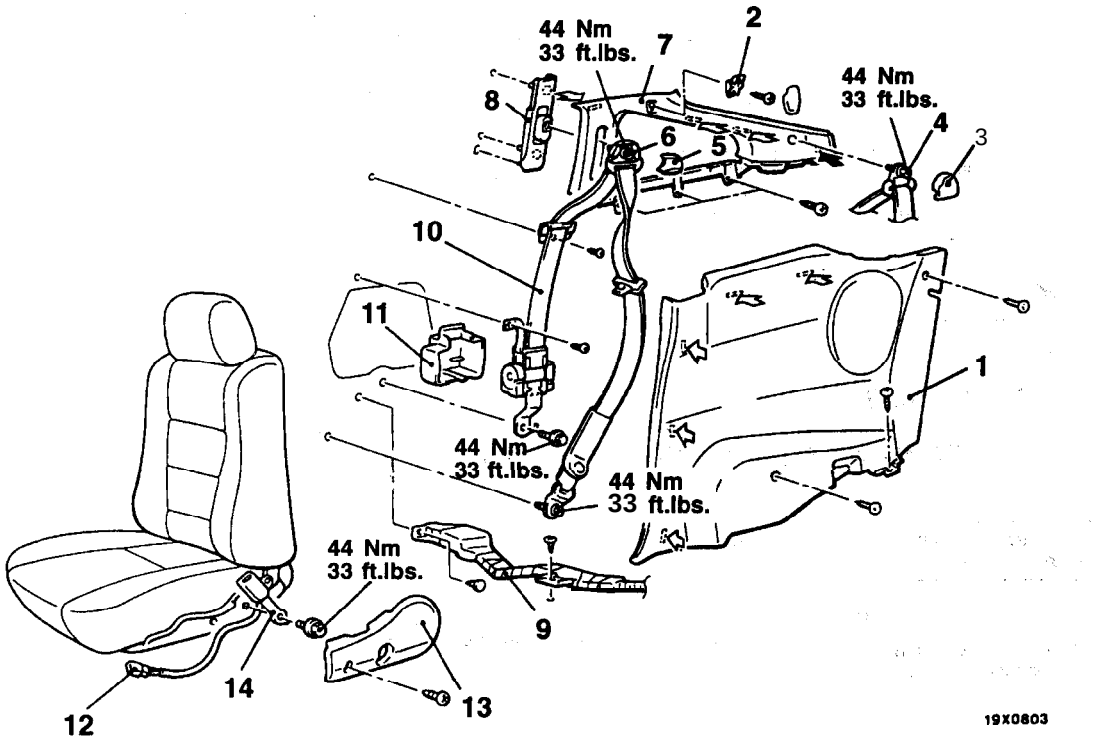

000053 18

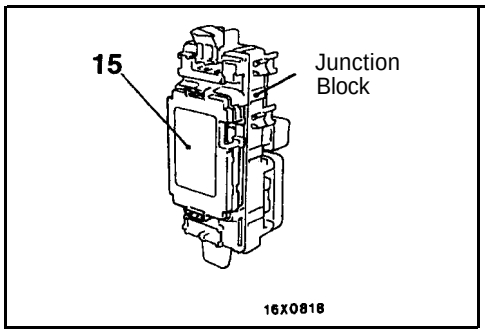

NOTE
(1) ⇦: Metal clip position
(2) ⬅: Resin clip position

Front outer seat belt removal steps

- Rear seat cushion
  (Refer to P.52A-22.)

1. Quarter trim, lower
   (Refer to P.52A-9.)
2. Coat hanger
3. Rear seat belt sash guide cover
4. Rear seat belt anchor plate
5. Front seat belt sash guide cover
6. Front seat belt anchor plate
7. Quarter trim, upper
   (Refer to P.52A-9.)
8. Adjustable seat belt anchor
9. Fuel harness protector

▶B◀ 10. Front outer seat belt

11. Seat belt retractor cover

Front Inner seat belt removal 'steps

- Front seat assembly
  (Refer to P.52A-18.)

12. Harness connector (driver's side)
13. Front seat hinge cover

▶A◀ 14. Front inner seat belt

ETACS-ECU (Seat belt warning light timer and buzzer) removal

15. ETACS-ECU (Refer to GROUP 54 – Ignition Switch.)

TSB Revision

<ECLIPSE SPYDER>
REMOVAL AND INSTALLATION

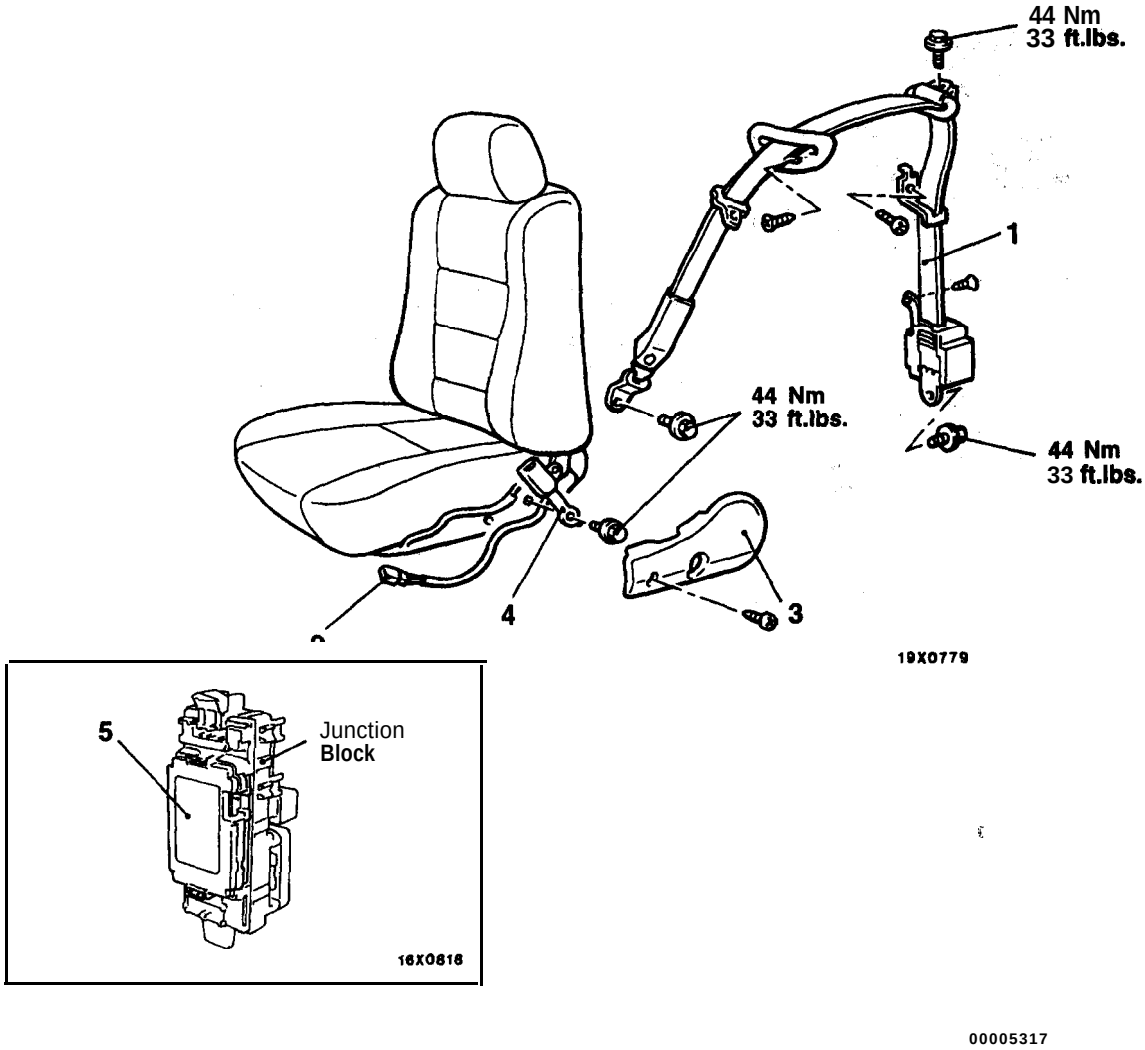

Front outer seat belt removal steps

- Quarter trim, lower (Refer to P.52A-9.)

▶B◀ 1. Front outer seat belt

Front inner seat belt removal steps

- Front seat assembly (Refer to P.52A-18.)

2. Harness connector (Driver's seat)
3. Front seat hinge cover

▶A◀ 4. Front inner seat belt

ETACS-ECU (Seat belt warning light timer and buzzer) removal

5. ETACS-ECU (Refer to GROUP 54 – Ignition Switch.)

TSB Revision

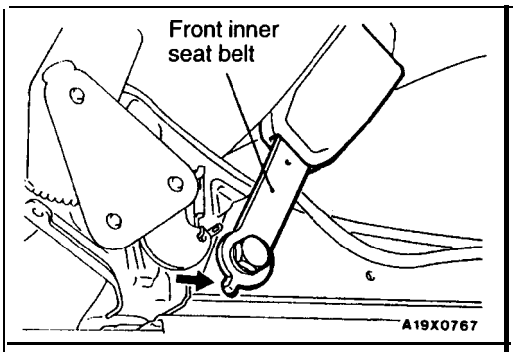

INSTALLATION SERVICE POINTS

▶A◀ FRONT INNER SEAT BELT INSTALLATION

Accurately insert the front inner seat belt claws into the holes on the seat adjuster.

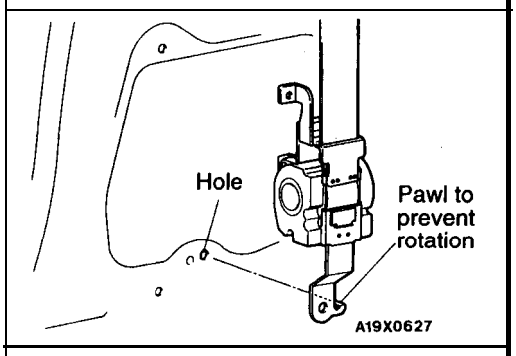

▶B◀ FRONT OUTER SEAT BELT INSTALLATION

<ECLIPSE>

Insert the pawl to prevent the retractor from rotating in the hole on the body.

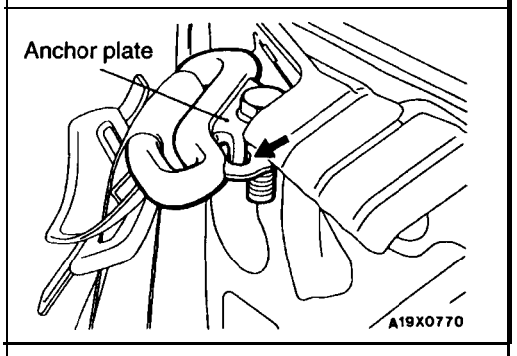

<ECLIPSE SPYDER>

(1) Accurately insert the anchor plate claws into the holes on the body.

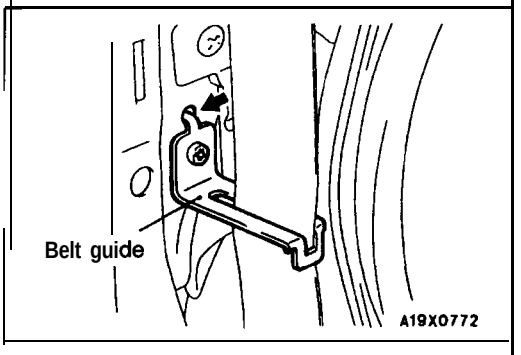

(2) Accurately insert the belt guide claws into the holes on the body.

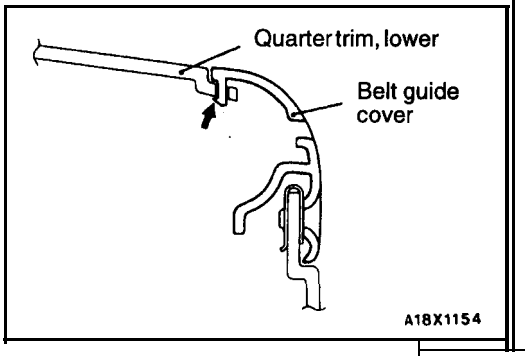

(3) Accurately insert the belt guide 5 claws into the holes on quarter trim, lower.

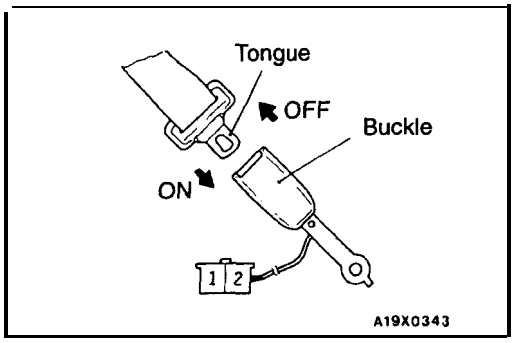

INSPECTION

52300110021

FRONT SEAT BELT BUCKLE SWITCH CONTINUITY CHECK

Switch position	Terminal No.	
	1	2
ON	○	○
OFF		

REAR SEAT BELT

52300060036

SPECIAL TOOL

Tool	Tool number and name	Supersession	Application
	MB990784 Ornament remover	General service tool	Removal of switch, trim etc.

REAR SEAT BELT

52300160132

<ECLIPSE>

REMOVAL AND INSTALLATION

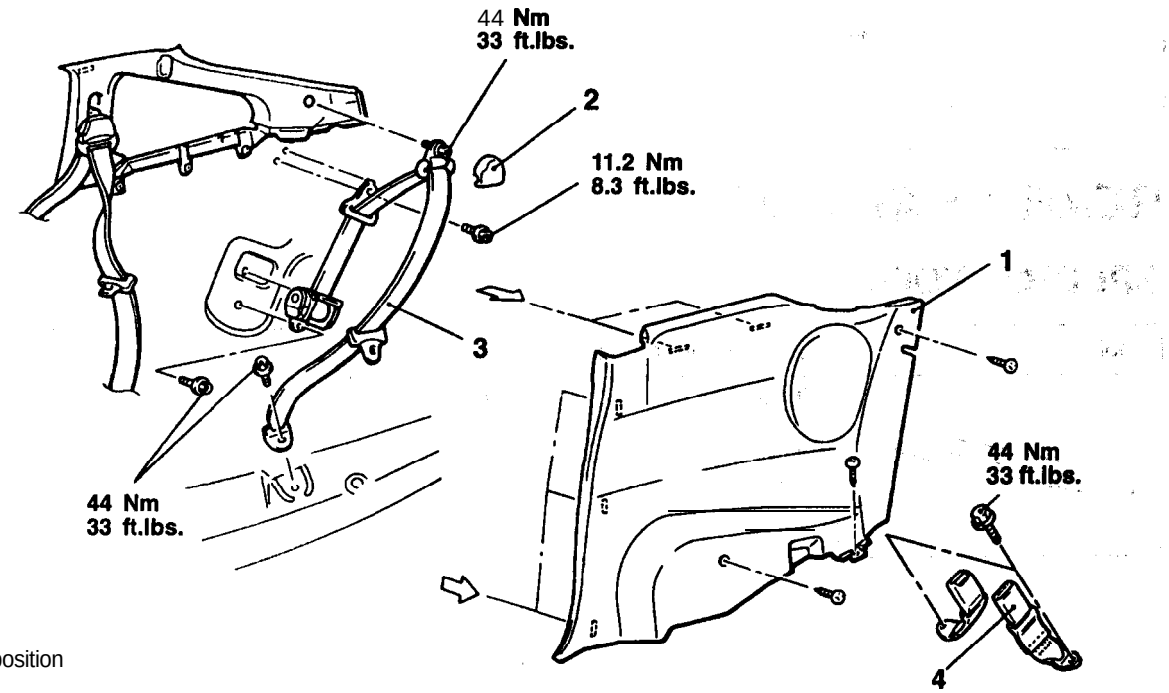

NOTE
⇦: Metal clip position

Rear outer seat belt removal steps

- Rear seat cushion
  (Refer to P.52A-22.)
- Quarter trim, lower
  (Refer to P.52A-9.)

2. Rear seat belt sash guide cover
3. ▶B◀ Rear outer seat belt

Rear inner seat belt removal steps

- Rear seat cushion
  (Refer to P.52A-22.)

4. Rear inner seat belt

TSB Revision

<ECLIPSE SPYDER>
REMOVAL AND INSTALLATION

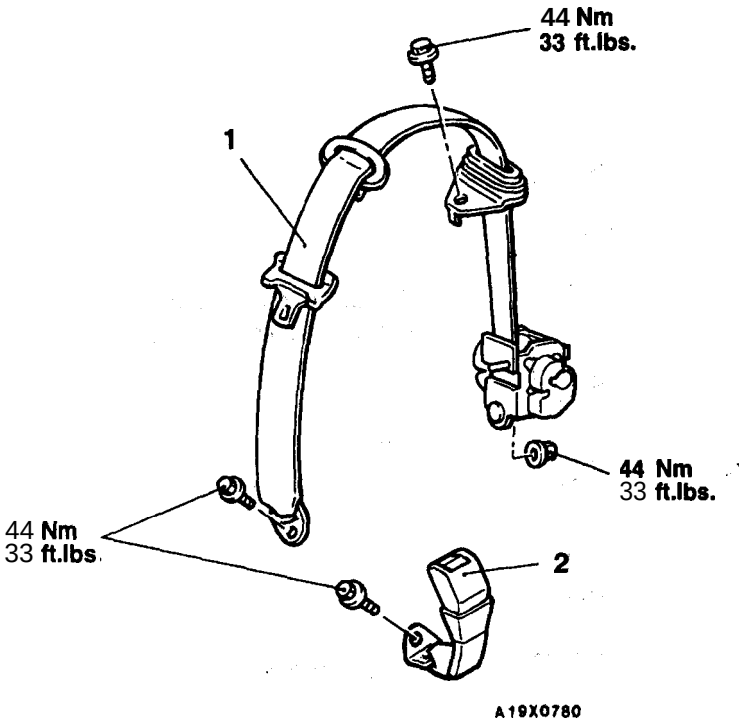

Rear outer seat belt removal steps

- Quarter trim, side (Refer to P.52A-9.)

▶B◀ 1. Rear outer seat belt

Rear inner seat belt removal steps

- Rear seat cushion (Refer to P.52A-22.)

▶A◀ 2. Rear inner seat belt

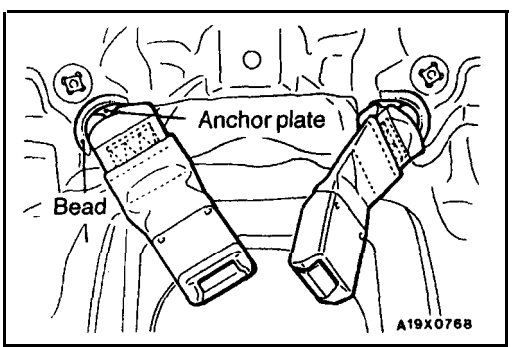

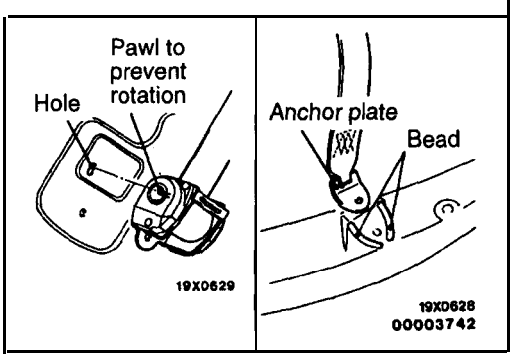

INSTALLATION SERVICE POINTS

▶A◀ REAR INNER SEAT BELT INSTALLATION <ECLIPSE SPYDER>

Install the anchor plate along the bead of the body.

▶B◀ REAR OUTER SEAT BELT INSTALLATION <ECLIPSE>

(1) Insert the pawl to prevent the retractor from rotating in the hole on the body.
(2) Install the anchor plate along the bead of the body.

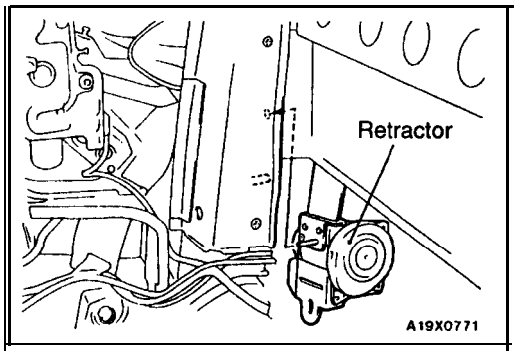

<ECLIPSE SPYDER>

(1) Accurately insert the, retractor pins into the holes on the body.

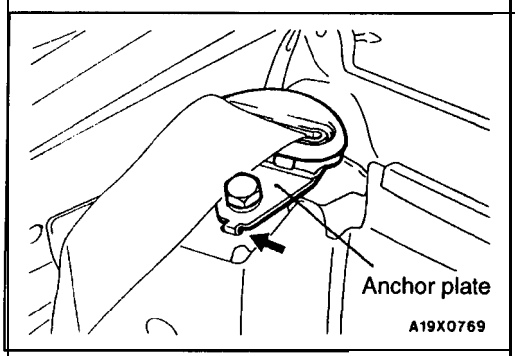

(2) Accurately insert the anchor plate claws into the holes on the body.

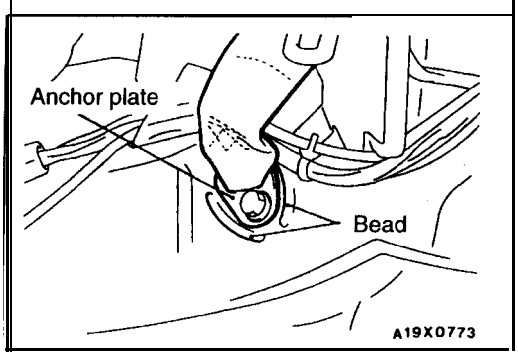

(3) Install the anchor plate along the bead of the body.

SUPPLEMENTAL, RESTRAINT SYSTEM (SRS)

CONTENTS

52409000063

CAUTION

- Carefully read and observe the information in the SERVICE PRECAUTIONS (P.52B-11.) Prior to any service.
- For information concerning troubleshooting or maintenance, always observe the procedures in the Troubleshooting (P.52B-14.) or the Maintenance (P.52B-28.) sections respectively.
- If any SRS components are removed or replaced in connection with any service procedures, be sure to follow the procedures in the COMPONENT SERVICE section (P.52B-32.) for the components involved.
- If you have any questions about the SRS, please contact the MMSA Tech. Line.

GENERAL INFORMATION

52400010096

INTRODUCTION

The Supplemental Restraint System (SRS) is designed to supplement the driver's and front passenger's seat belts to help reduce the risk or severity of injury to the driver and front passenger by activating and deploying both air bags in certain frontal collisions.

The SRS consists of: two air bag modules; one located in the center of the steering wheel and another one located above the glove box, which contains. the folded air bag and an inflator unit; the SRS air bag control unit (SRS-ECU) located under the floor console assembly, which monitors the system, and which contains a safing G sensor and analog G sensor; an SRS warning light located on the instrument panel, which indicates the operational status of the SRS; a clock spring-interconnection located within the the steering column.

It is not until the SRS-ECU in response to the output signal from the analog G sensor, finds it necessary to ignite the air bag, and the safing G sensor is caused to be ON that the SRS deploys the air bag.

Only authorized service personnel should do work on or around SRS components. Those service personnel should read this manual carefully before starting any such work. Extreme care must be used when servicing the SRS, to avoid injury to the service personnel (by inadvertent deployment of the air bag) or to driver (by rendering the SRS inoperative).

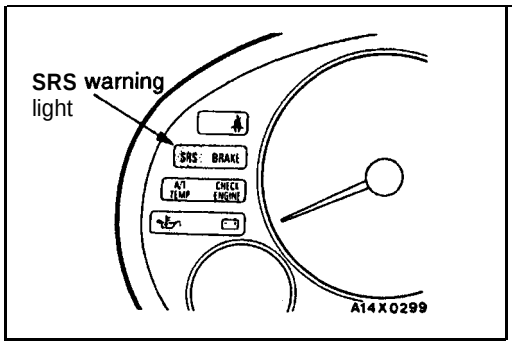

ON-BOARD DIAGNOSTICS/SRS WARNING LIGHT FUNCTION

The diagnostic unit monitors the SRS system and stores data concerning any detected faults in the system. When the ignition key is in "ON" or "START' position, the SRS warning light should illuminate for about 7 seconds and then turn off. That indicates that the SRS system is in operational order. If the SRS warning light does any of the following, immediate inspection by an authorized dealer is needed.

(1) The SRS warning light does not illuminate as described above.
(2) The SRS warning light stays on for more than 7 seconds.
(3) The SRS warning light illuminates while driving.

If a vehicle's SRS warning light is in any of these three conditions when brought in for inspection, the SRS system must be inspected, diagnosed and serviced in accordance with this manual.

CONSTRUCTION DIAGRAM

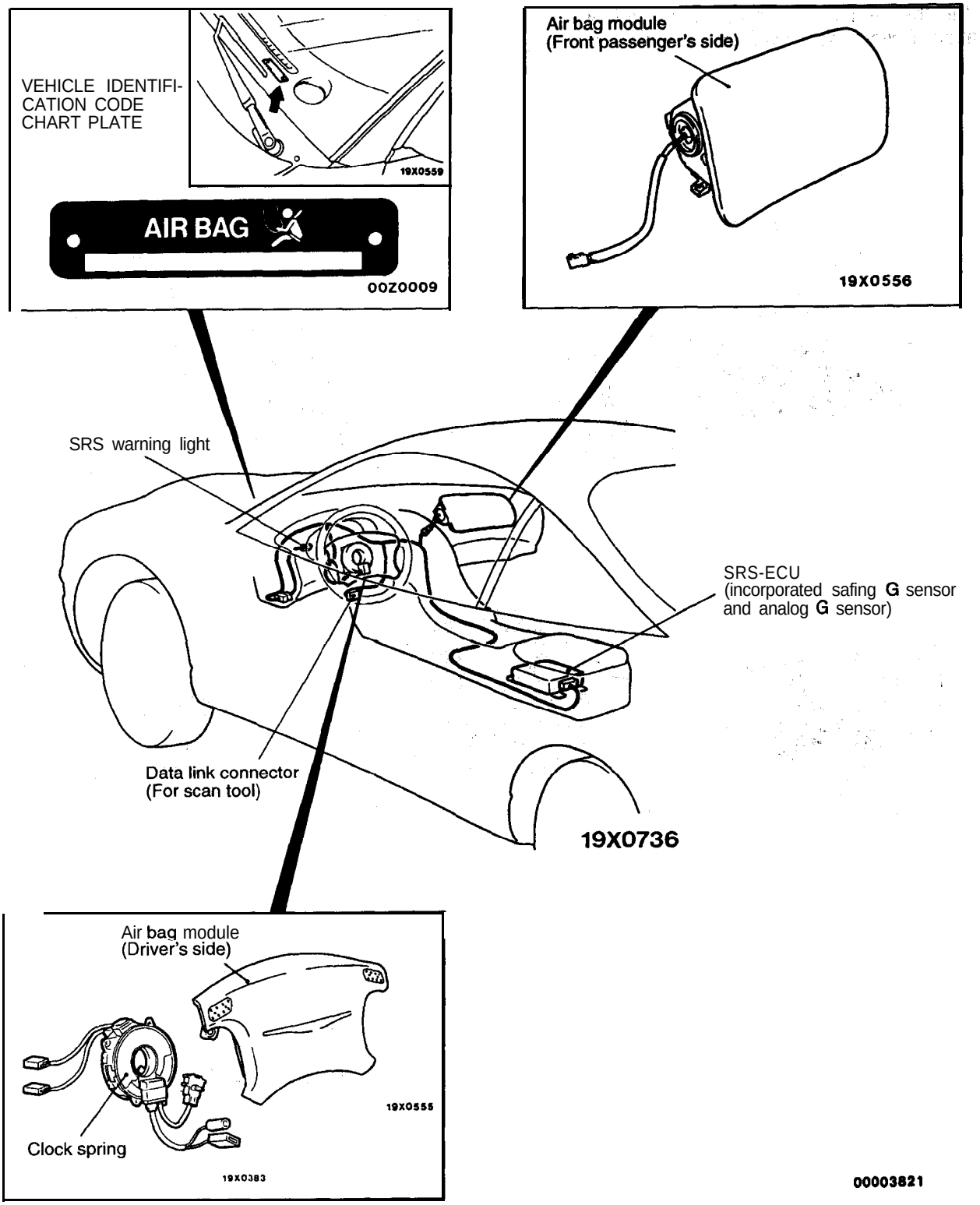

NOTE
This construction diagram displays the general view of the SRS components. For details, refer to "Schematic" (P.52B-6), "Configuration Diagrams" (P.52B-7) and "Circuit Diagram" (P.52B-8).

WARNING/CAUTION LABELS

A number of caution labels related to the SRS are found in the vehicle, as shown in the following illustration. Follow label instructions when servicing SRS.

If labels are dirty or damaged, replace them with new ones.

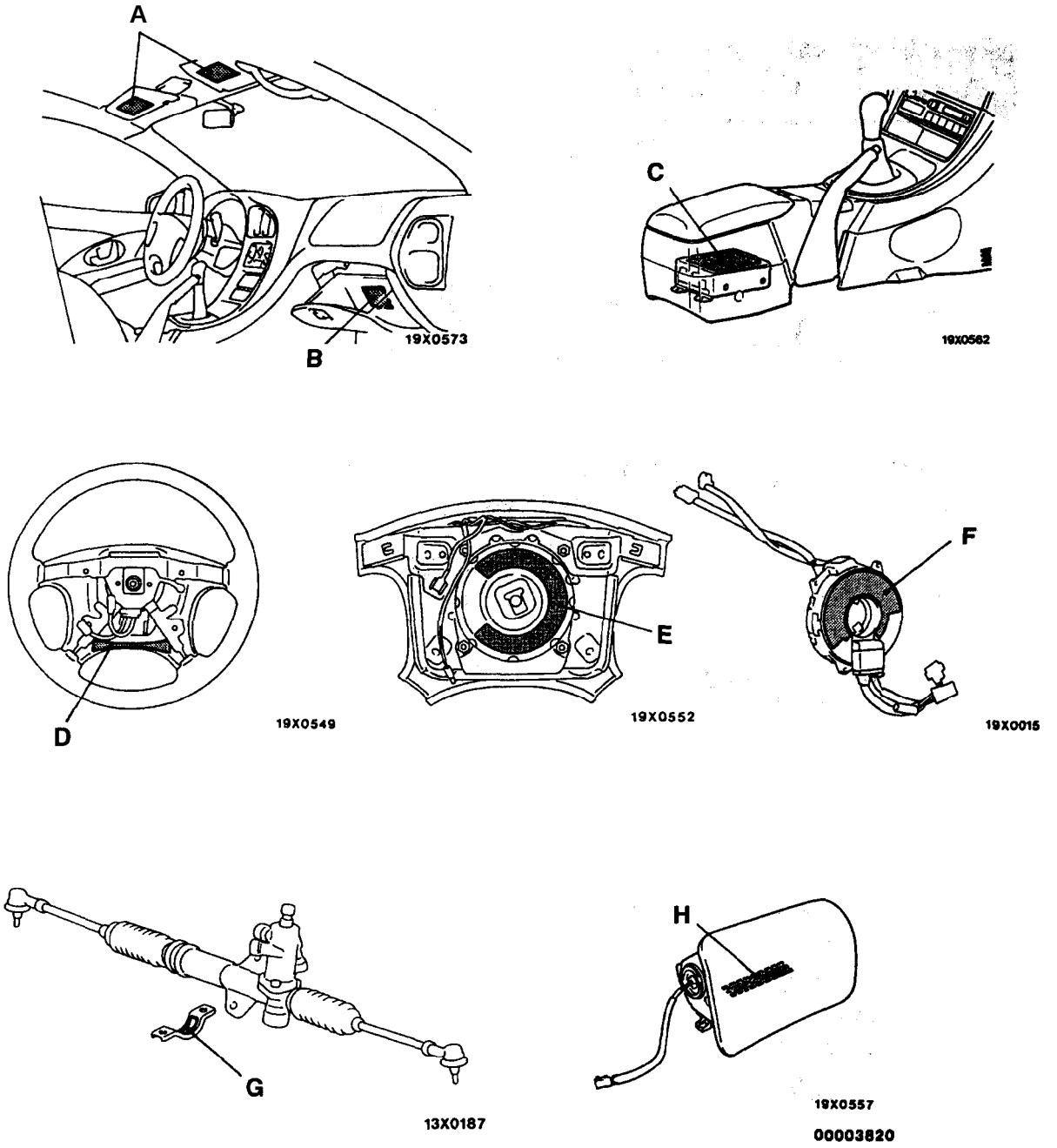

Label comtents			
A	WARNING TO AVOID SERIOUS INJURY: For maximum safety protection in all types of crashes, you must always wear your safety belt. Do not install rearward-facing child seats in any front passenger seat position. Do not sit or lean unnecessarily **close to the air bag.** Do not place any objects over the air bag or between the air bag and yourself. See the owner's manual for further information and explanations.	E	DANGER POISON Keep out of the reach of children. Contains sodium azide and potassium nitrate contents are poisonous and extremely flammable. Contact with acid, water, or heavy metals may produce harmful and irritating **gases** or explosive compounds. Do not dismantle, incinerate, bring into contact with electricity or store at temperatures exceeding **93°C (200°F).** FIRST AID: If contents are swallowed induce vomiting. For eye contact flush eye **with water** for **1**5 minutes. If gases from acid **or water contact are** inhaled, seek fresh air. In every case, get prompt medical attention. For additional information, see material safety data sheet (MSDS) for this product.
		F	CAUTION: SRS clock spring This is not a repairable part. Do not disassemble or tamper. If defective, replace entire unit per service manual instructions. To re-center: Rotate **clockwise** until tight. Then rotate in opposite direction approximately 3 **1/8** turns and align ▶◀.
3	Driver's air bag information This vehicle has an air bag which will supplement the **seatbelt** in certain frontal collisions. The air bag is not a substitute for the **seatbelt** in any type of collision. The driver, and all other occupants, should wear **seatbelts** at all times. WARNING! If the **"SRS"** warning light does not illuminate for several seconds when ignition key is turned to **"ON"** or the engine is started, or if the warning light stays on while driving, take the vehicle to your nearest authorized dealer immediately. Also if the vehicle's front end is damaged or if the air bag has deployed. Take the vehicle for service immediately. The air bag system must be inspected by an authorized dealer ten years after the vehicle manufacture date shown on the certification label located on the left front door-latch post or door frame. Read the **"SRS"** section of your owner's manual before driving, for important information, about operation, and service of the air bag system. When you are going to discard your gas generator or vehicle, please see your MITSUBISHI dealer.	G	CAUTION: SRS Before removal of steering gear box, read service manual, center front wheels and remove ignition key. Failure to do so may damage SRS clock spring and render SRS system inoperative, risking serious driver injury.
		H	WARNING: SRS This air bag module cannot be repaired. 'Do not disassemble or tamper. Do not perform diagnosis. Do not touch with electrical test equipment or probes. Refer to service manual for further instructions, and for special handling. Storage and disposal procedures. Tampering or mishandling can result in **injury.** DANGER POISON Keep out of the reach of children. Contains sodium azide and potassium nitrate contents are poisonous and extremely flammable. Contact with acid, water or heavy metals may produce harmful and irritating gases or explosive compounds. Do not dismantle. Incinerate, bring into contact with electricity or store at temperatures exceeding **93°C (200°F).** **FIRST AID:** If contents are swallowed induce vomiting. For eye contact flush eye with water for 15 minutes. If gases from acid or water contact are inhaled, seek fresh air. In every case, get prompt medical attention.
)	CAUTION: Do not disassemble or drop. If defective, refer to service manual.		
)	CAUTION: SRS Before replacing steering wheel, read service manual, center front wheels and align SRS clock spring neutral marks. Failure to do so may render SRS system inoperative, risking serious driver injury.		

SCHEMATIC

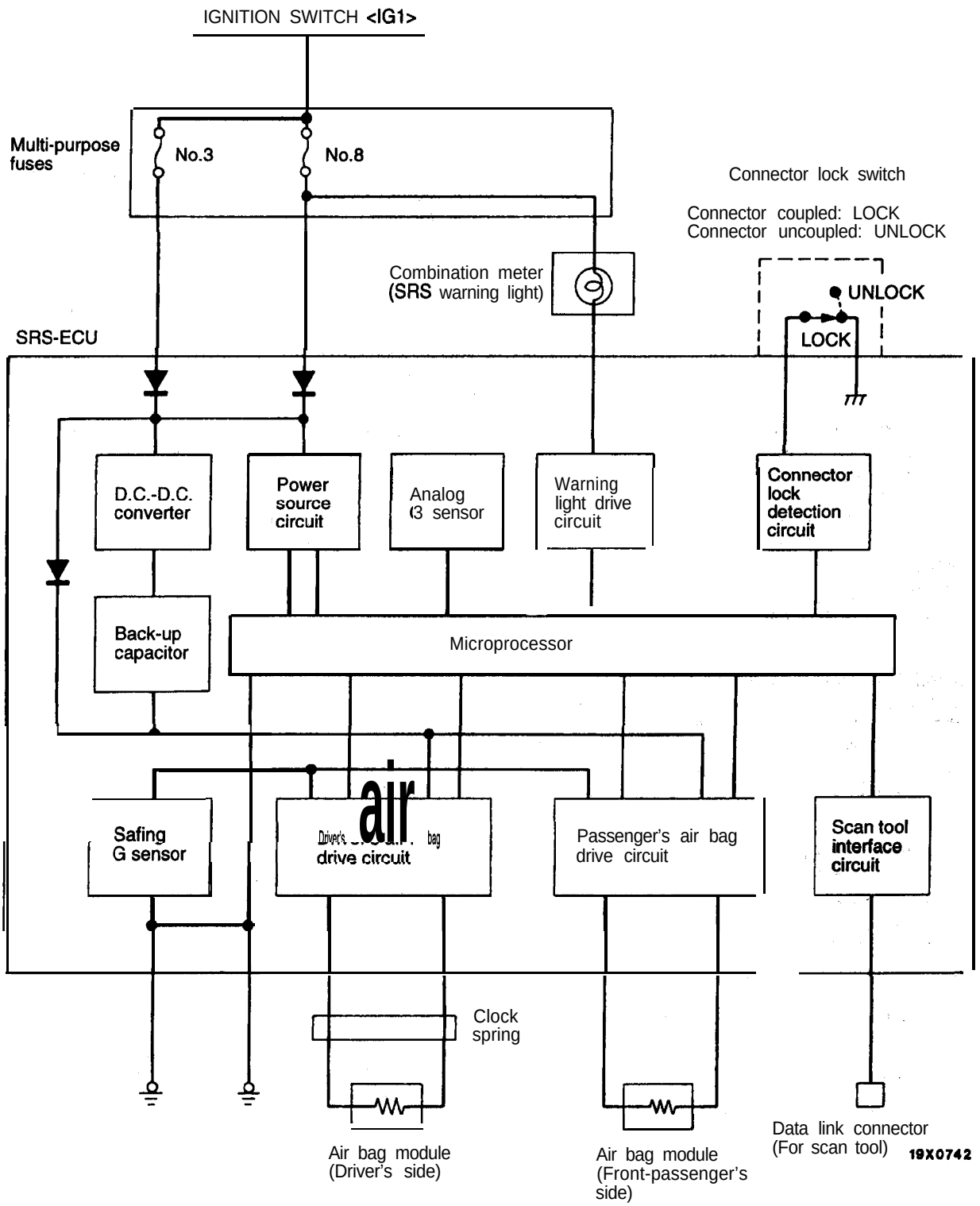

TSB Revision

CONFIGURATION DIAGRAMS

B Dash panel

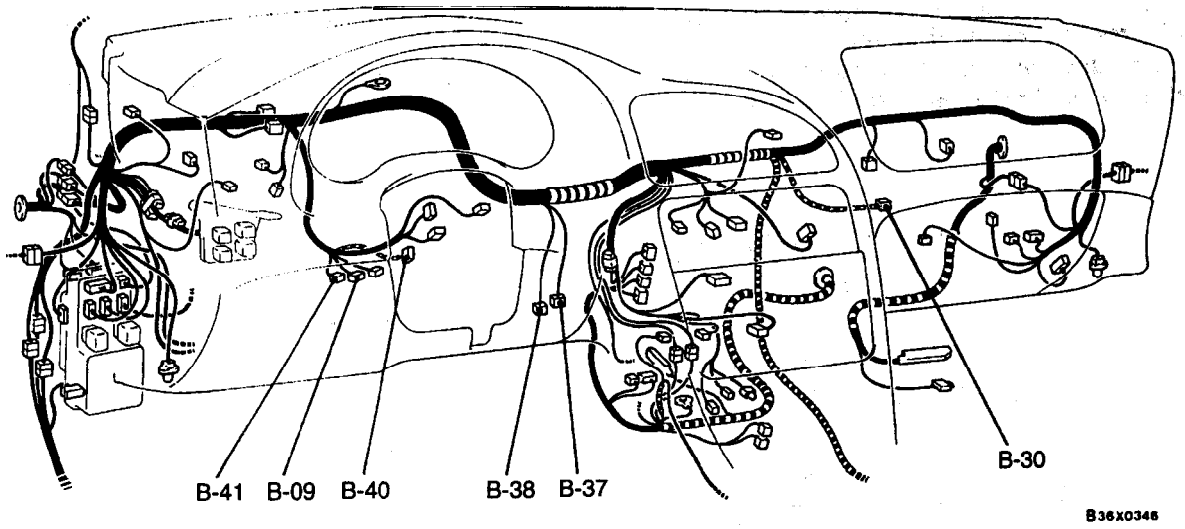

B-09 Ignition switch
B-30 Air bag module (front passenger's side)
B-37 Data link connector (For scan tool)
B-38 Data link connector (For scan tool)
B-40 Clock spring
B-41 Air bag module (driver's side)

C Instrument panel

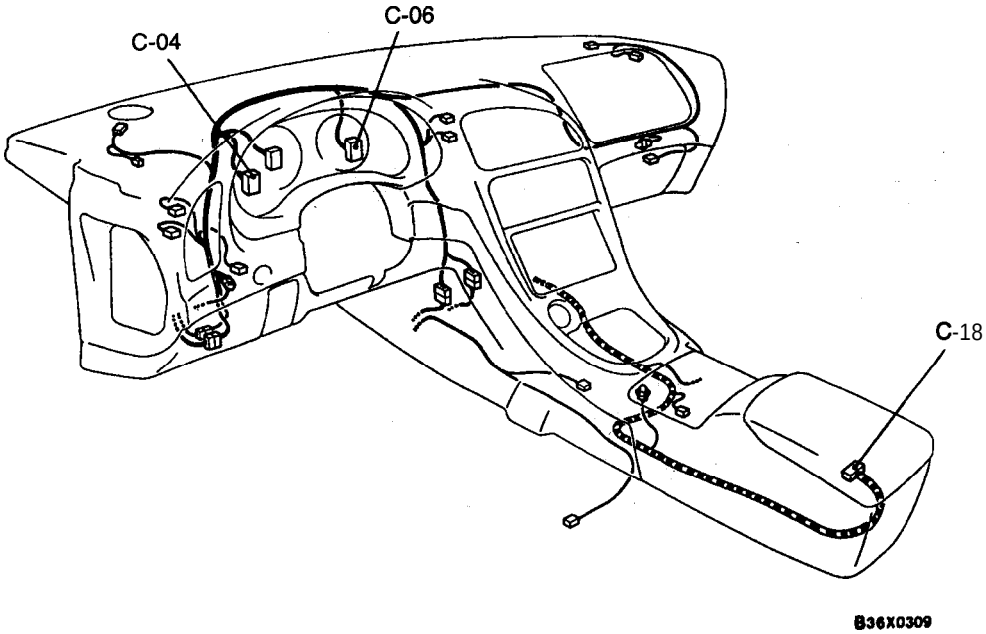

C-04 Combination meter (For SRS warning light)
C-06 Combination meter (For SRS warning light)
C-i 8 SRS air bag control unit

CIRCUIT DIAGRAM

CAUTION

1. **Do not repair, splice or modify SRS wiring (except for specific repairs to the body wiring harness shown on page 52B-11); replace wiring if necessary, after reading and following all precautions and procedures in this manual.**
2. **Do not use an analog ohmmeter to check SRS wiring or components; use only special tools (refer to P.52B-13) and digital multi-meter (refer to P.52B-13).**

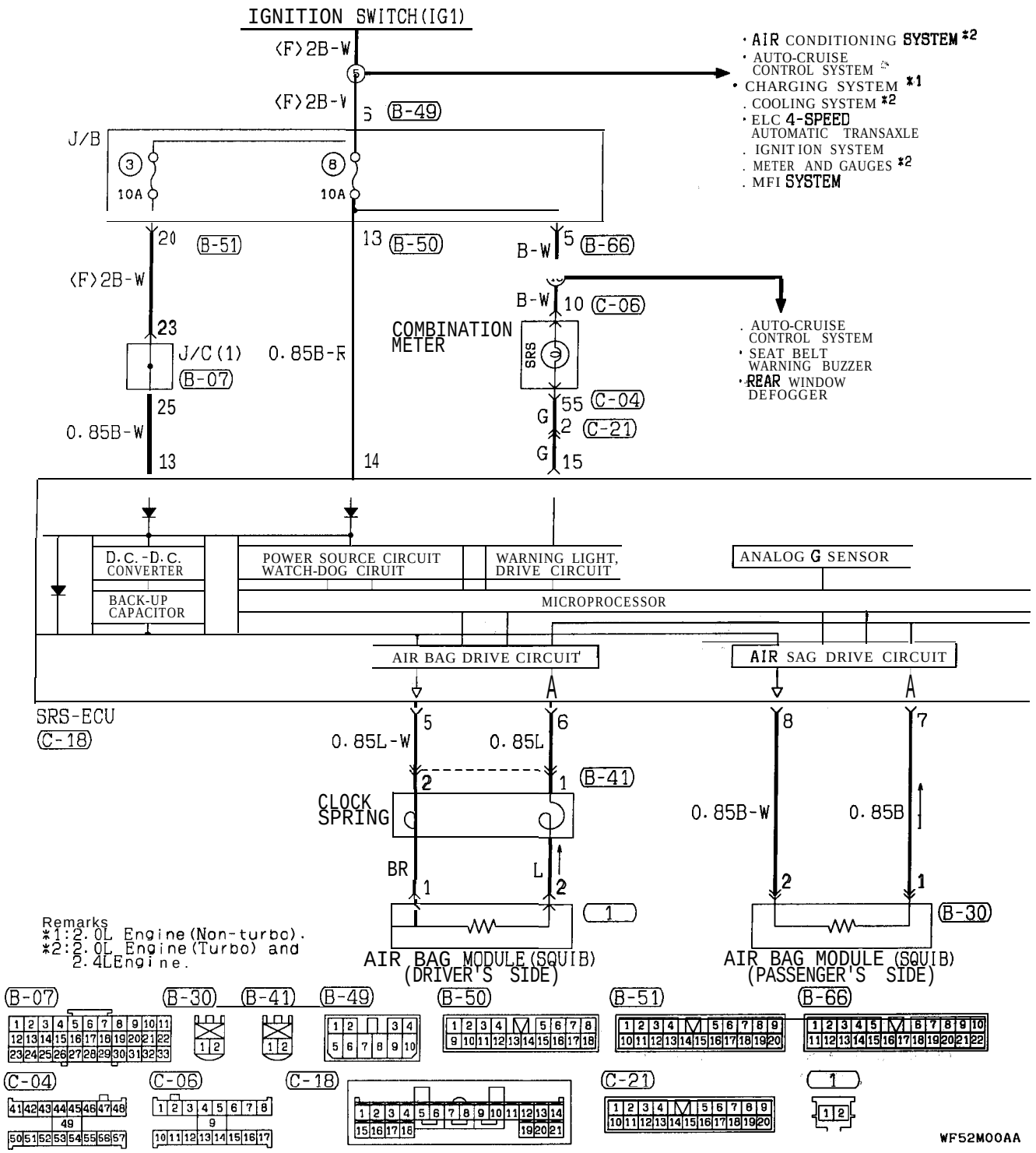

TSB Revision

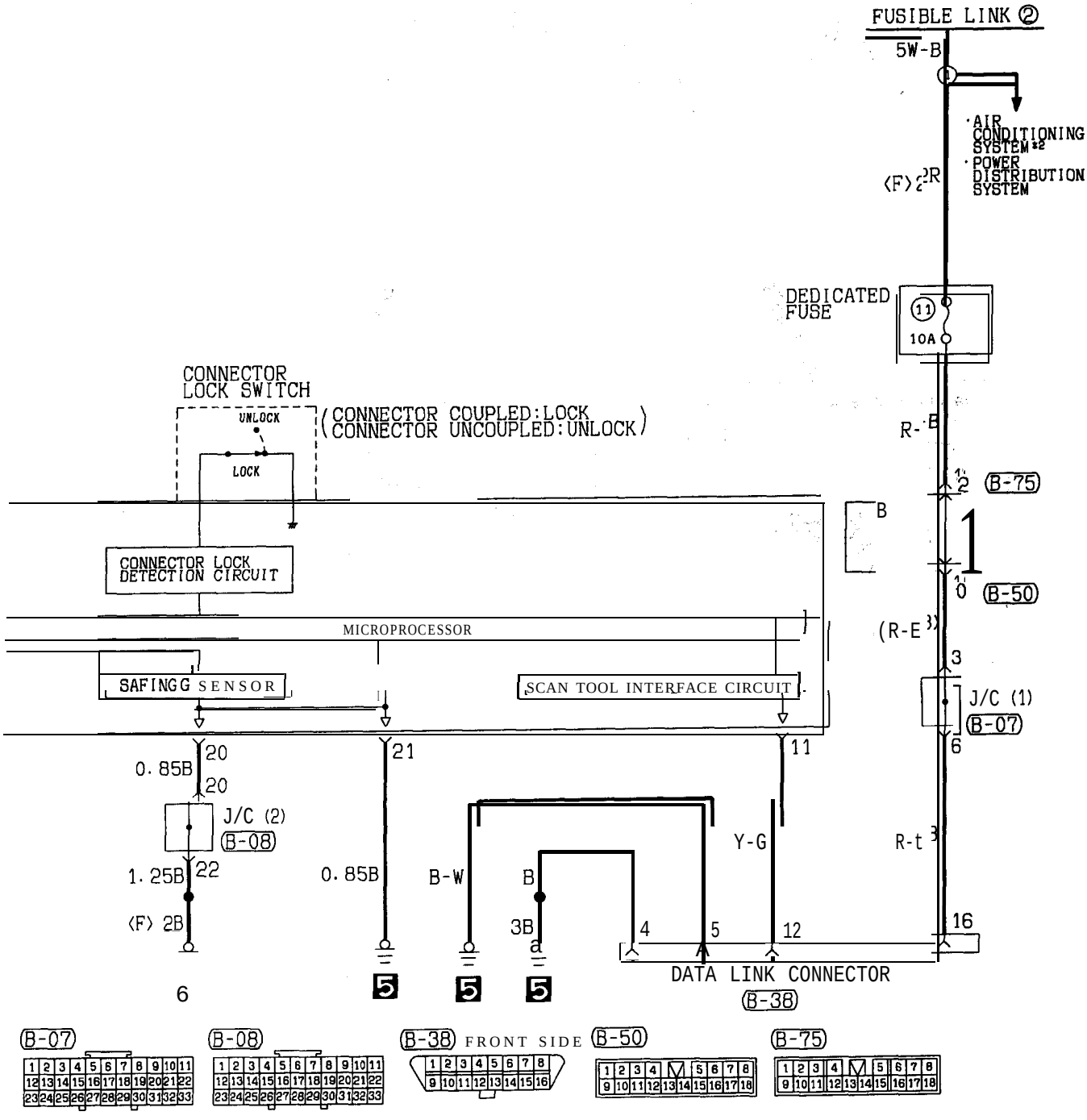

WF52M00AB

TSB Revision

COMPONENT LOCATION

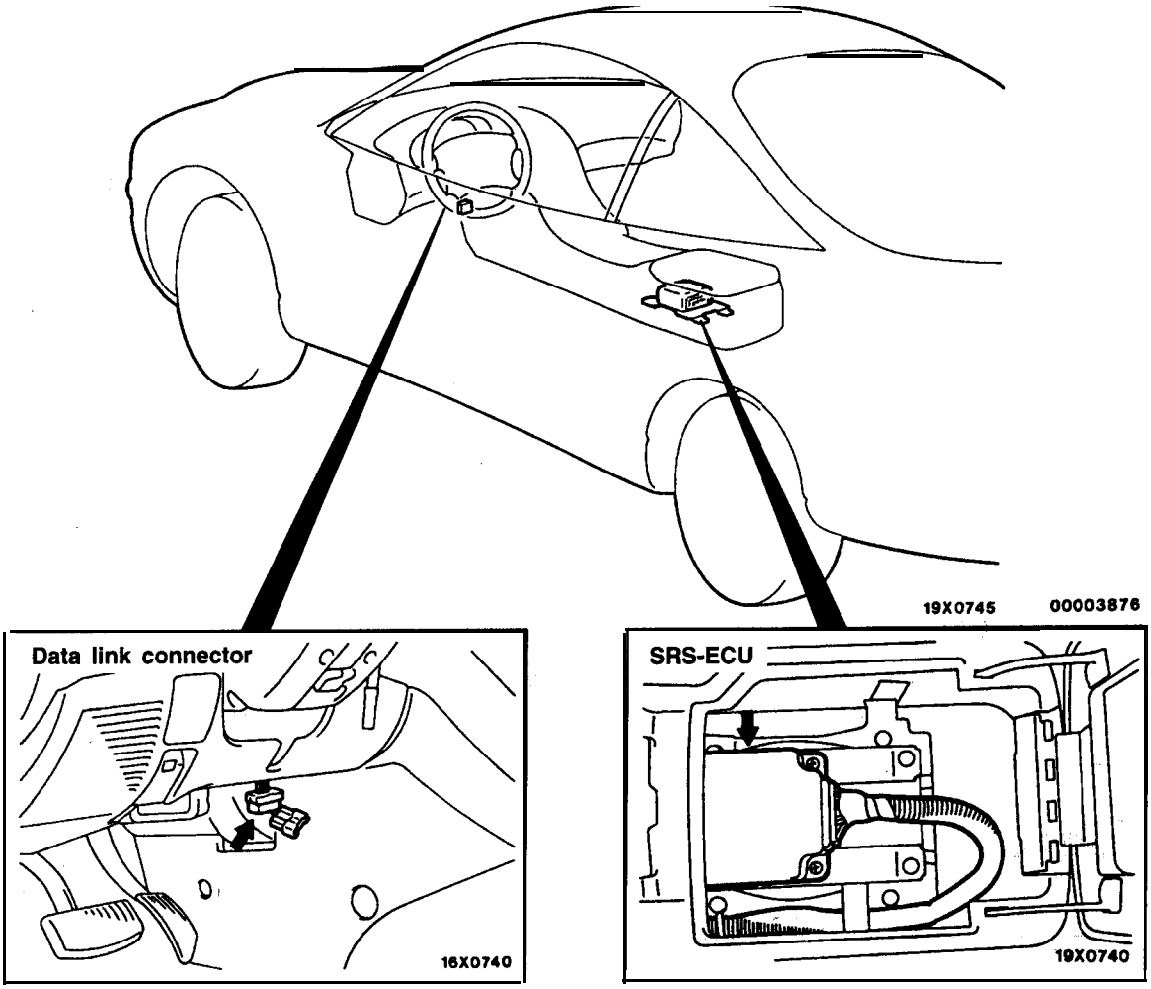

SERVICE PRECAUTIONS

52400020092

1. In order to avoid injury to yourself or others from accidental deployment of the air bag during servicing, read and carefully follow all the precautions and procedures described in this manual.
2. Do not use any electrical test equipment on or near SRS components, except those specified on P.52B-13 and P.52B-13.
   Never use an analog ohmmeter.
3. **Never Attempt to Repair the Following Components:**
   - SRS Air Bag Control Unit (SRS-ECU)
   - Clock Spring
   - Air Bag Module

   If any of these components are diagnosed as faulty, they should only be replaced, in accordance with the COMPONENT SERVICE procedures in this manual, starting at page 52B-31.
4. Do not attempt to repair the wiring harness connectors of the SRS. If any of the connectors are diagnosed as faulty, replace the wiring harness. If the wires are diagnosed as faulty, replace or repair the wiring harness according to the following table.

SRS-ECU Terminal No.	Harness Connector (No. of Terminals, Color)	Destination of Harness	Corrective Action
1 to 4	21 pins, yellows	–	
5		Body wiring harness → Clock spling → Air bag module (Driver's side)	Correct or replace body wiring harness Replace clock spring
6			
7		Body wiring harness → Air bag module (Front passenger's side)	Correct or replace body wiring harness
8			
9, 10			
11		Body wiring harness → Data link connector	Correct or replace body wiring harness
12			
13		Body wiring harness → Junction block (fuse No.3)	Correct or replace body wiring harness
14		Body wiring harness → Junction block (fuse No.8)	
15		Body wiring harness → Instrument panel wiring harness → SRS warning light	
16 to 19			
20		Body wiring harness → Ground	Correct or replace body wiring harness
21			

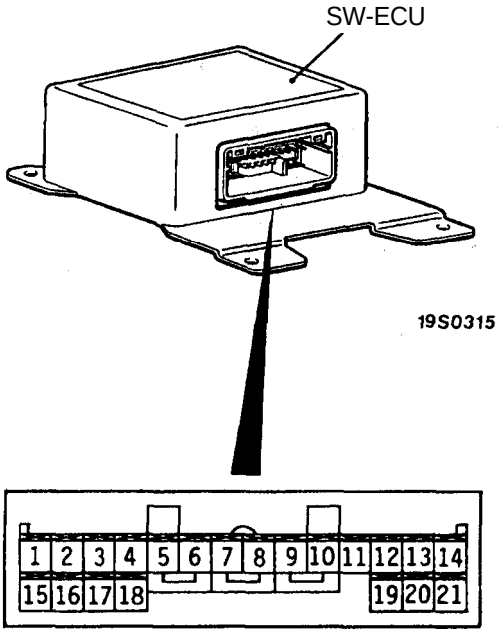

19X0739

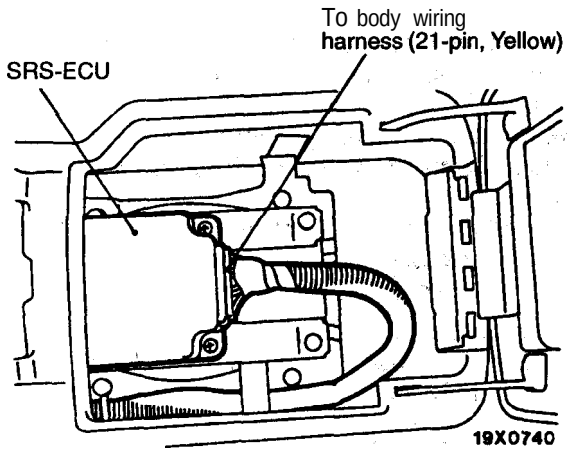

00003875

5. **After disconnecting the battery cable, wait 60 seconds or more before proceeding with the following work. The SRS system is designed to retain enough voltage to deploy the air bags for a short time even after the battery has been disconnected, so serious injury may result from unintended air bag deployment if work is done on the SRS system immediately after the battery cables are disconnected.**
6. SRS components should not be subjected to heat over 93°C (200°F), so remove the SRS-ECU, air bag module and clock spring before drying or baking the vehicle after painting.
7. Whenever you finish servicing the SRS, check the SRS warning light operation to make sure that the system functions properly. (Refer to P.52B-2.)

a. Make certain that the ignition switch is OFF when the scan tool is connected or disconnected.

9. If you have any questions about the SRS, please contact the MMSA Tech. Line.

NOTE
SERIOUS INJURY CAN RESULT FROM UNINTENDED AIR BAG DEPLOYMENT, SO USE ONLY THE PROCEDURES AND EQUIPMENT SPECIFIED IN THIS MANUAL.

SERVICE SPECIFICATIONS

52400040057

Items	Standard value
Clock spring resistance Ω	less than 0.4

TSB Revision

SPECIAL TOOLS

52400070087

Tool	Tool number and name	Supersession	Application
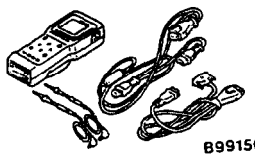 B991502	MB991502 Scan tool (MUT-II)	MB991502	• Reading diagnostic trouble codes • Erasing diagnostic trouble code • Reading fault duration • Reading erase times [Refer to MUT-II OPERATING INSTRUCTIONS]
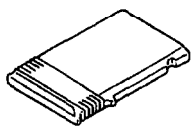 B991325	ROM pack		
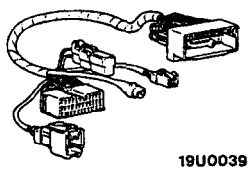 19U0039	MB991613 SRS Check Harness		Checking the SRS electrical circuitry with a digital multi-meter
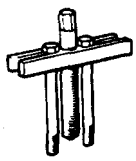	MB990803 Steering wheel puller	General service tool	Steering wheel removal
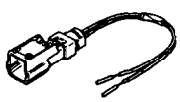 13R0732	MB686560 SRS AIR BAG ADAPTER HARNESS A	General service tool	• Air bag module deployment inside the vehicle • Air bag module (front passenger's side) deployment outside the vehicles
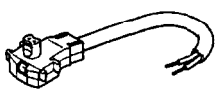 13R0751	MR203491 or MB628919 SRS AIR BAG ADAPTER HARNESS B	General service tool	Air bag module (driver's side) deployment outside the vehicles

TEST EQUIPMENT

52400080028

Tool	Tool name	Use
 13R0748	Digital multi-meter Use a multi-meter for which the maximum test current is 2 mA or less at the minimum range of resistance measurement	Checking the SRS electrical circuitry with SRS Check Harness

TROUBLESHOOTING

52400310073

DIAGNOSTIC TROUBLESHOOTING FLOW

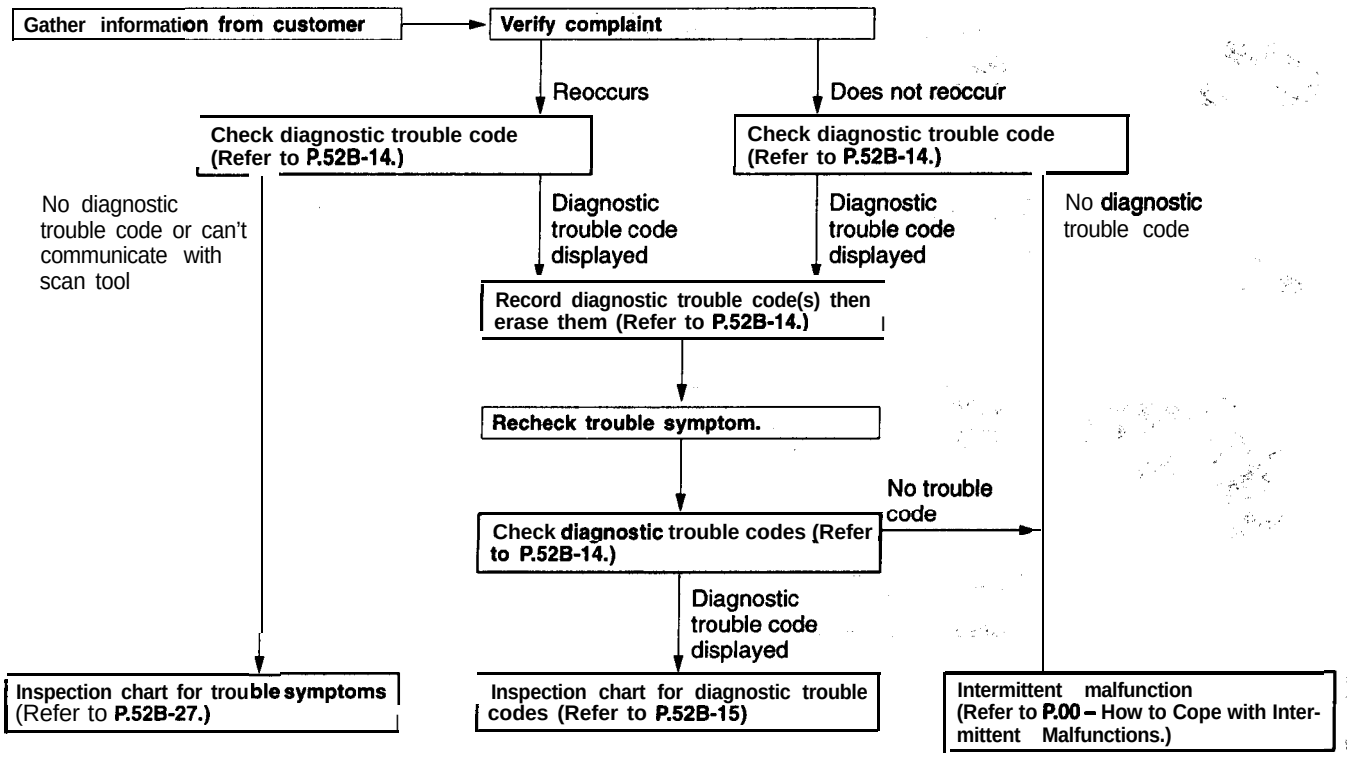

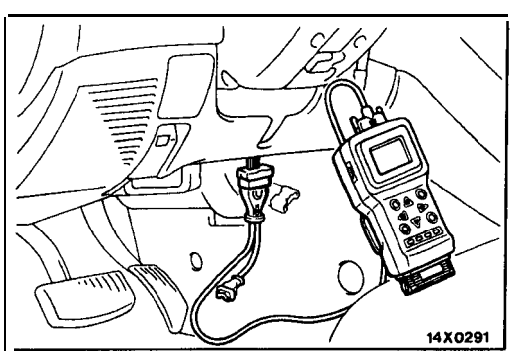

DIAGNOSTIC FUNCTION .

52400320069

DIAGNOSTIC TROUBLE CODES CHECK

Connect the scan tool to the data link connector and then check diagnostic trouble codes.

Cation

Always turn the ignition switch OFF before connecting or disconnecting the scan tool.

ERASING DIAGNOSTIC TROUBLE CODES

Connect the scan tool to the data link connector, then erase the diagnostic trouble codes.

INSPECTION CHART FOR DIAGNOSTIC TROUBLE CODES

52400330062

Code No.	Diagnostic item		Reference page
14	Analog G sensor system		52B-16
15, 16	Safing G sensor system		52B-16
21, 22, 61, 62	Driver's air bag module (squib) system		52B-17
24, 25, 64, 65	Front passenger's air bag module (squib) system		52B-18
31, 32	SRS-ECU capacitor system		52B-19
34*1	Connector lock system		52B-19
35	SRS-ECU (after deployment of the air bag) system		52B-20
41*1,*2	IG_1 (A) power circuit system		52B-21
42*1,*2	IG_1 (B) power circuit system		52B-22
43	SRS warning light circuit system	Light does not illuminate *1	52B-23
		Light does not switch off	52B-24
44	SRS warning light drive circuit system		52B-24
45	SRS-ECU non-volatile memory (EEPROM) and A/D converter system'		52B-25
51, 52	Driver's air bag module (squib ignition drive circuit) system		52B-25
54, 55	Front passenger's air bag module (squib ignition drive circuit) system		52B-26

NOTE

*1: For diagnostic trouble codes marked with *1, if the vehicle condition returns to normal,, the diagnostic trouble code will be automatically erased, and the SRS warning light will return to normal.

*2: If the vehicle has a discharged battery it will store the diagnostic trouble codes 41 or 42. When these diagnostic trouble codes are displayed, check the battery.

INSPECTION PROCEDURE FOR DIAGNOSTIC' TROUBLE CODES

Code No. 14 Analog G sensor system	Probable cause,
[Comment] The SRS-ECU monitors the analog G sensor output and outputs this code when it detects a sensor failure, abnormal sensor characteristics or abnormal sensor output.	• Malfunction of SRS-ECU

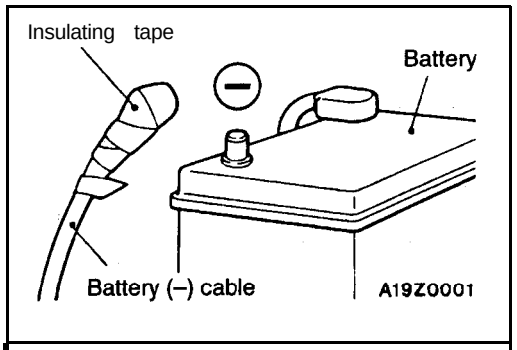

Caution
Turn the ignition key to the "LOCK" position, disconnect the negative battery cable and tape the terminal.
Wait at least 60 seconds after disconnecting the battery cable before doing any further work. (Refer to P. 52B-11)

Replace the SRS-ECU.

Code No. 15 or 16 Safing G sensor system	Probable cause
[Comment] These codes are output when the resistance value between the safing G sensor terminals in the SW-ECU is out of the normal range. Refer to the following table 1 for the trouble causes of each code No."	• Malfunction of SRS-ECU

Table 1

Code No.	Trouble Symptom
15	Safing G sensor short-circuited
16	Safing G sensor open-circuited

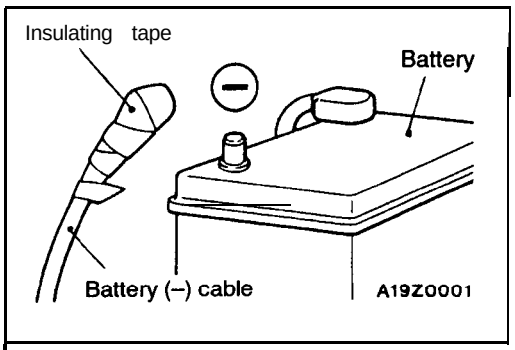

Caution
Turn the ignition key to the "LOCK" position, disconnect the negative battery cable and tape the terminal.
Wait at least 60 seconds after disconnecting the battery cable before doing any further work. (Refer to P. 52B-11)

Replace the SRS-ECU.

Code No. 21, 22, 61 or 62 Driver's air bag module (squib) system	Probable cause
[Comment] These diagnostic trouble codes are output if there is abnormal resistance between the input terminals of the driver's air bag module (squib). Refer to the following table 1 for the trouble causes of each code No.	• Malfunction of clock spring • Malfunction of harnesses or connectors • Malfunction of driver's air bag module (squib) • Malfunction of SRS-ECU

Table 1

Code No.	Trouble Symptom
21	• Short in driver's air bag module (squib) or harness short • Short in clock spring
22	• Open circuit in driver's air bag module (squib) or open harness • Open circuit in clock spring • Malfunction of connector contact
61	The harness wire of the driver's air bag module (squib) is grounded to the power supply.
62	The harness wire of the driver's air bag module (squib) is grounded.

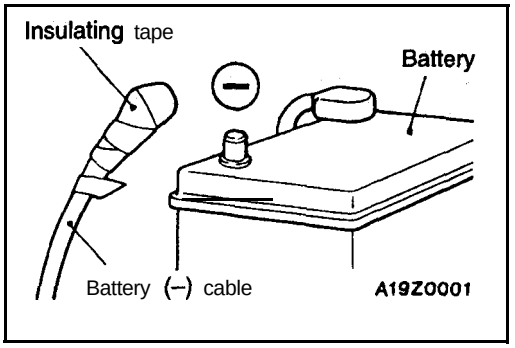

Caution
Turn the ignition key to the "LOCK" position, disconnect the negative battery cable and tape the terminal. Wait at least 60 seconds after disconnecting the battery cable before doing any further work. (Refer to P.52B-11)

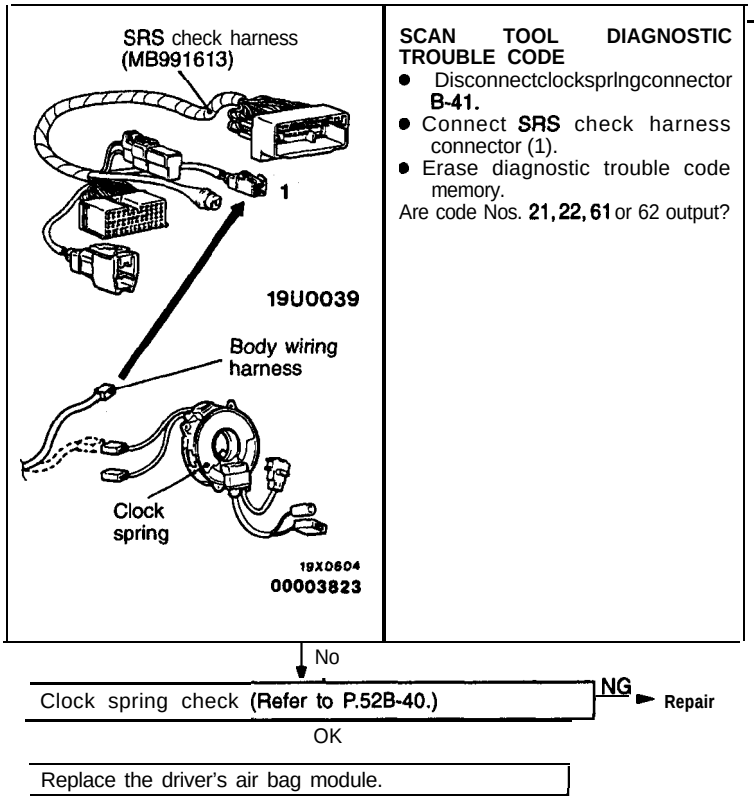

Code No. 24, 25, 64 or 65 Front passenger's air bag module (squib) system	Probable cause
[Comment] These diagnostic trouble codes are output if there is abnormal resistance between the input terminals of the front passenger's air bag module (squib). Refer to the following table 1 for the trouble causes of each code No.	• Malfunction of harnesses or connectors • Malfunction of front passenger's air bag module (squib) • Malfunction of SRS-ECU

Table 1

Code No.	Trouble Symptom
24	Short in front passenger's air bag module (squib) or harness short
25	• Open circuit in front passenger's air bag module (squib) or open harness • Malfunction of connector contact
64	The harness wire of the front passenger's air bag module (squib) is grounded to the power supply.
65	The harness wire of the front passenger's air bag module (squib) is grounded.

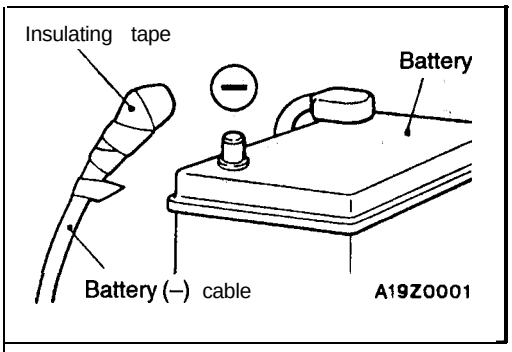

Caution
Turn the ignition key to the "LOCK" position, disconnect the negative battery cable and tape the terminal.
Wait at least 60 seconds after disconnecting the battery cable before doing any further work. (Refer to P. 52B-11)

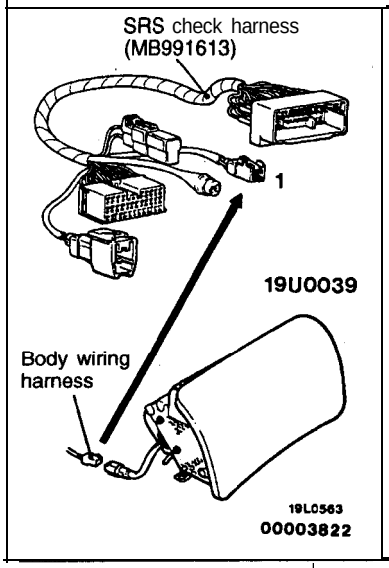

SCAN TOOL DIAGNOSTIC TROUBLE CODE
- Disconnect front passenger's air bag module connector **B-30.**
- Connect SRS check harness connector (1).
- Erase diagnostic trouble code memory.

Are code Nos. **24, 25, 64** or 65 output?

Yes → **Check the following connectors: B-30 and C-18** → NG → **Repair**
↓ OK
Check **trouble symptom.**
↓ NG
Check the harness between the front passenger's air bag module (squib) and SRS-ECU. → NG → **Repair**
↓ OK
Replace the SRS-ECU.

No ↓
Replace the front passenger's air bag module.

TSB Revision

Code No. 31 or 32 SRS-ECU capacitor system	Probable cause
[Comment] These diagnostic trouble codes are output if the voltage at the SRS-ECU capacitor terminals is higher (No. 31) or lower (No. 32) than the specified value for 5 seconds or more. However, if diagnostic trouble code Nos. 41 and 42 are being output due to a drop in battery voltage, code No. 32 will not be detected.	• Malfunction of SRS-ECU

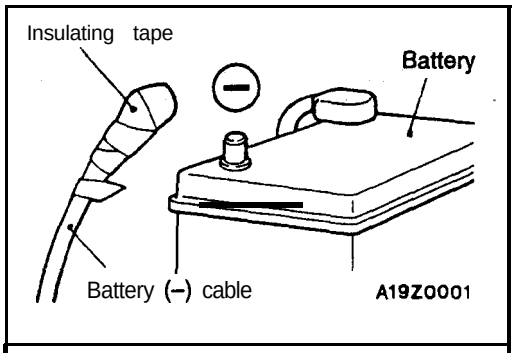

Caution
Turn the ignition key to the "LOCK" position, disconnect the negative battery cable and tape the terminal.
Wait at least 60 seconds after disconnecting the battery cable before doing any further work. (Refer to P. 52B-11)

Replace the SRS-ECU.

Code No. 34 Connector lock system	Probable cause
[Comment] This diagnostic trouble code is output when the SRS-ECU connector is connected improperly. However, if the vehicle condition returns to normal, diagnostic trouble code No. 34 will be automatically erased, and the SRS warning light will switch off.	• Malfunction of connectors • Malfunction of SRS-ECU

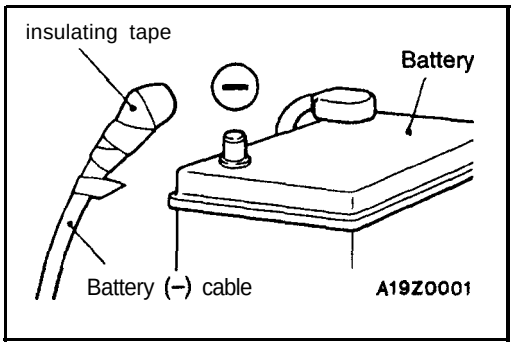

Caution
Turn the ignition key to the "LOCK" position, disconnect the negative battery cable and tape the terminal.
Wait at least 60 seconds after disconnecting the battery cable before doing any further work. (Refer to P. 52B-11)

Check the following connector: C-18. —NG→ **Repair**
↓ OK
Check trouble symptom.
↓ NG
Replace the SRS-ECU.

TSB Revision

Code No. 35 SRS-ECU (after deployment of the air bag) system	Probable cause
[Comment] After deployment of the air bag, this code is output. If this code is output before deployment of the air bag, a trouble in the SRS-ECU is suspected.	• Malfunction of SRS-ECU

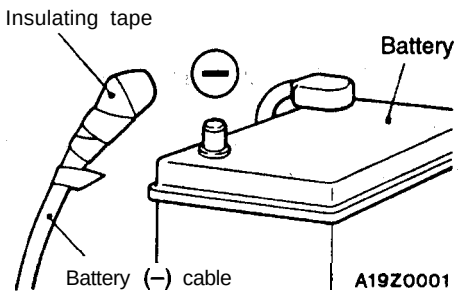

Caution
Turn the ignition key to the "LOCK" position, disconnect the negative battery cable and tape the terminal.
Wait at least 60 seconds after disconnecting the battery cable before doing any further work. (Refer to P. 52B-11)

Replace the SRS-ECU.

TSB Revision

Code No. 41 IG_1 (A) power circuit system	Probable cause
[Comment] This diagnostic trouble code is output if the voltage between the IG_1 (A) terminal and the ground is lower than the specified value for a continuous period of 5 seconds or more. However, if the vehicle condition returns to normal, diagnostic trouble code No. 41 will be automatically erased, and the SRS warning light will switch off.	• Malfunction of harnesses or connectors • Malfunction of SRS-ECU

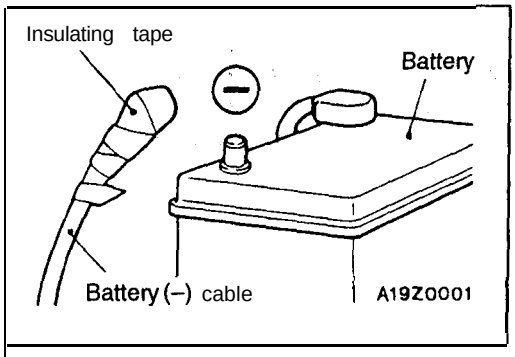

Caution

Turn the ignition key to the "LOCK" position, disconnect the negative battery cable and tape the terminal.
Wait at least 60 seconds after disconnecting the battery cable before doing any further work. (Refer to P. 52B-11)

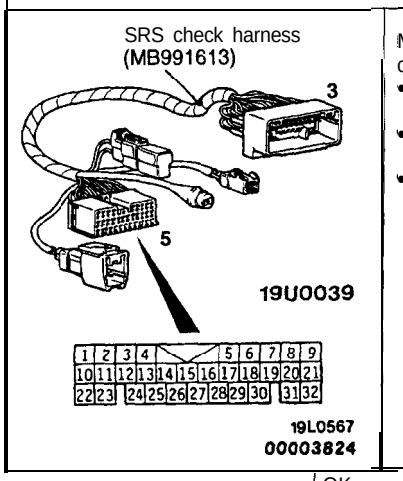

Measure at SRS check harness connector (5).
- Disconnect SRS-ECU connector C-18.
- Connect SRS check harness connector (3).
- Continuity between terminals (20) – (21)

OK: Continuity

NG → Check the following connector: C-18 → NG → Repair

OK → Check trouble symptom.

NG → Check the harness between the SRS-ECU and ground. Repair, if necessary.

OK ↓

Measure at SRS check harness connector (5).
- Disconnect SRS-ECU connector C-18.
- Connect SRS check harness connector (3)
- Ignition switch: ON
- Voltage between terminal (14) and ground

OK: 9 V or more

NG → Check the following connectors: B-50 and B-49 → NG → Repair

OK → Check trouble symptom.

NG → Check the harness between the SRS-ECU and ignition switch IG_1 (A). Repair, if necessary.

OK ↓

Replace the SRS-ECU.

Code No. 42 IG_1 (B) power circuit system	Probable cause
[Comment] This diagnostic trouble code is output if the voltage between the IG_1(B) terminal and the ground is lower than the specified value for a continuous period of 5 seconds or more. However, if the vehicle condition returns to normal, diagnostic trouble code No. 42 will be automatically erased, and the SRS warning light will switch off.	• Malfunction of harnesses or connectors

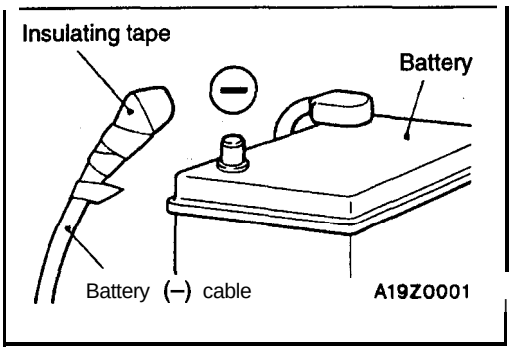

Caution
Turn the ignition key to the "LOCK" position, disconnect the negative battery cable and tape the terminal.
Wait at least 60 seconds after disconnecting the battery cable before doing any further work. (Refer to P. 52B-11)

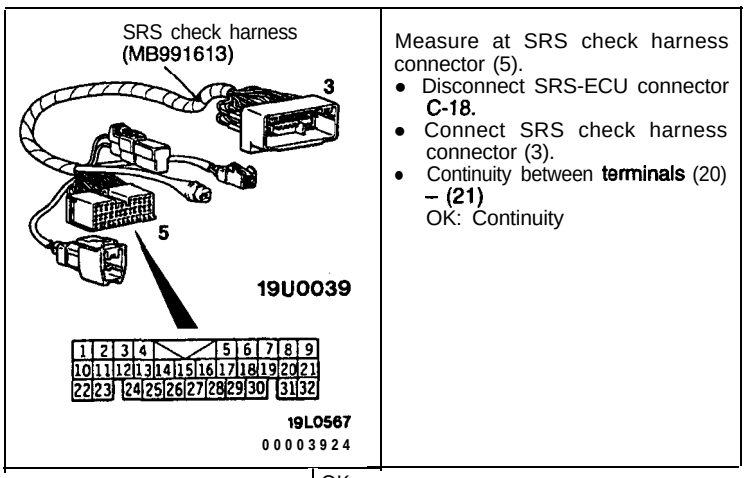

Measure at SRS check harness connector (5).
- Disconnect SRS-ECU connector C-18.
- Connect SRS check harness connector (3).
- Continuity between terminals (20) – (21)
  OK: Continuity

NG → **Check the following connector: C-18** → NG → **Repair**

OK → **Check** trouble symptom.

NG → **Check the harness between the SRS-ECU and ground. Repair, if necessary.**

OK ↓

Measure at SRS check harness connector (5).
- Disconnect SRS-ECU connector C-18.
- Connect SRS check harness connector (3)
- Ignition switch: ON
- Voltage between terminal (13) and ground
  OK: 9 V or more

NG → **Check the following connectors: B-07, B-51 and B-49** → NG → **Repair**

OK → Check trouble symptom.

NG → **Check the harness between the SRS-ECU and ignition switch IG_1 (A). Repair, if necessary.**

OK → **Replace the SRS-ECU.**

TSB Revision

Code No. 43 SRS warning light drive circuit system (Light does not illuminate.)	Probable cause
[Comment] This diagnostic trouble code is output when an open circuit occurs for a continuous period of 5 seconds while the SRS-ECU is monitoring the SRS warning light and the light is OFF (transistor OFF). However, if this code is output due to an open circuit, if the vehicle condition returns to normal, this diagnostic trouble code will be automatically erased, and the SRS warning light will switch off.	• Malfunction of harnesses or connectors • Burned out bulb • Malfunction of SRS-ECU • Malfunction of combination meter

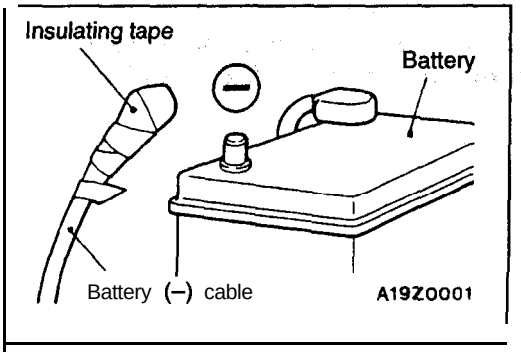

Caution
Turn the ignition key to the "LOCK" position, disconnect the negative battery cable and tape the terminal.
Wait at least 60 seconds after disconnecting the battery cable before doing any further work. (Refer to P. 52B-11)

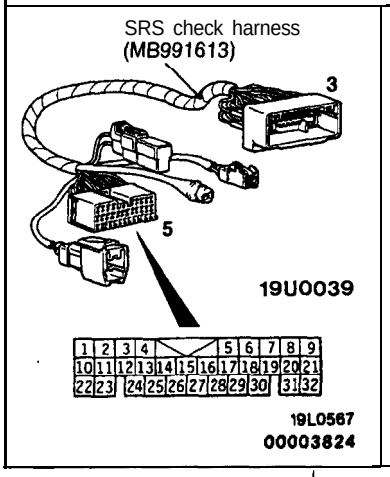

Measure at SRS check harness connector (5).
- Disconnect SRS-ECU connector C-18.
- Connect SRS check harness connector (3).
- Continuity between terminals (20) – (21)
  OK: Continuity

NG → **Check the following connector: C-18** → NG → **Repair**
OK → [Check trouble symptom.
NG → Check the harness between the SRS-ECU and ground. Repair, if necessary.

OK ↓

Measure at SRS check harness connector (5).
- Disconnect SRS-ECU connector C-18.
- Connect SRS check harness connector (3).
- Ignition switch: ON
- Connect terminal (15) to the body ground.
  OK: Light illuminates

NG → Burned out bulb inspection → NG → **Repair**
OK → **Check the following connectors: C-21, C-04, C-06, B-66 and B-49** → NG → **Repair**
OK → Check trouble symptom.
NG → Check the harness between the SRS-ECU and ignition switch (IG_1). → NG → **Repair**
OK → Replace the combination meter.

OK → Replace the SRS-ECU.

TSB Revision

Code No. 43 SRS warning light drive circuit system (Light does not switch off.)	Probable cause
[Comment] This diagnostic trouble code is output when a short to ground occurs in the harness between the light and the SRS-ECU while the SRS-ECU is monitoring the SRS warning light and the light is ON.	• Malfunction of harnesses or connectors • Malfunction of SRS-ECU

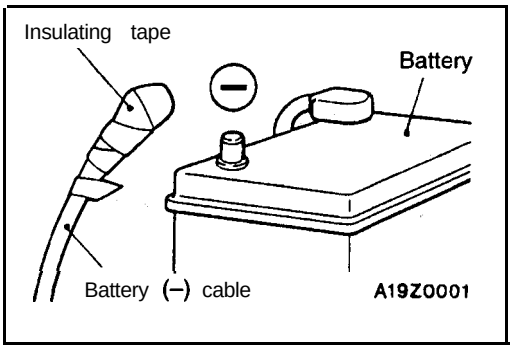

Caution
Turn the ignition key to the "LOCK" position, disconnect the negative battery cable and tape the terminal.
Wait at least 60 seconds, after disconnecting the battery cable before doing any further work. (Refer to P. 52B-11)

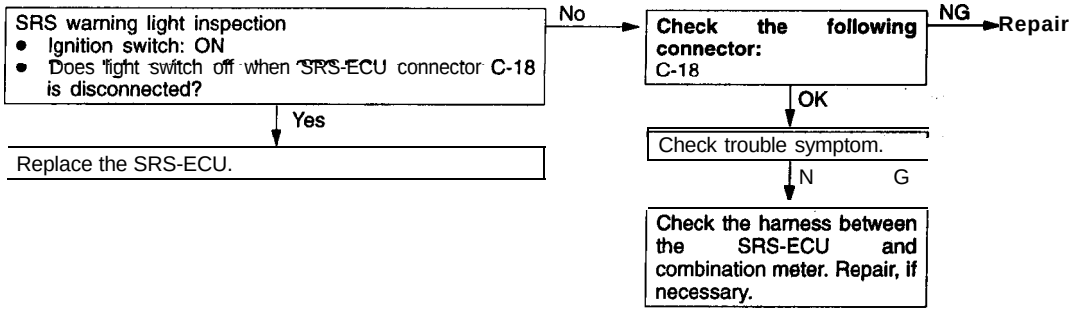

Code No. 44 SRS warning light drive circuit system	Probable cause
[Comment] This diagnostic trouble code is output when a short occurs in the light drive circuit or a malfunction of the output transistor inside the SRS-ECU is detected while the SRS-ECU is monitoring the SRS warning liaht drive circuit.	• Malfunction of SRS-ECU

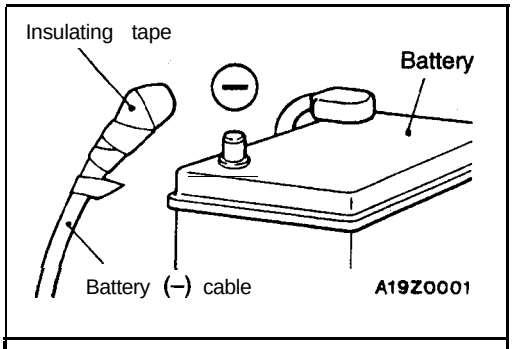

Caution
Turn the ignition key to the "LOCK" position, disconnect the negative battery cable and tape the terminal.
Wait at least 60 seconds after disconnecting the battery cable before doing any further work. (Refer to P. 52B-11)

Replace the SRS-ECU.

TSB Revision

Code No. 45 SRS-ECU non-volatile memory (EEPROM) and A/D converter system	Probable cause
[Comment] This diagnostic trouble code is output if there is a malfunction in the SRS-ECU non-volatile memory (EEPROM) or A/D converter.	• Malfunction of SRS-ECU

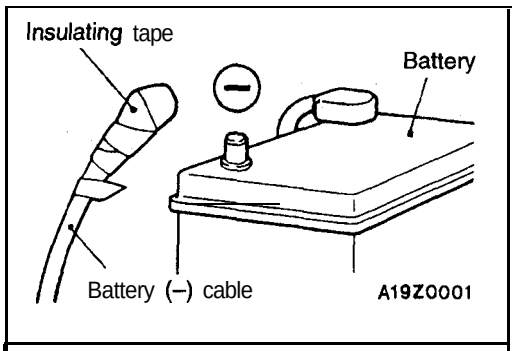

Caution
Turn the ignition key to the "LOCK" position, disconnect the negative 'battery cable and tape the terminal.
Wait at least 60 seconds after disconnecting the battery cable before doing any further work. (Refer to P. 52B-11)

Replace the SRS-ECU.

Code No.51 or 52 Drivers's air bag module (Squib ianition drive circuit) system	Probable cause
[Comment] These diagnostic trouble codes are output when a short-circuit (No.51) or open circuit (No.52) occurs in the squib ignition drive circuit inside the SRS-ECU.	• Malfunction of SRS-ECU

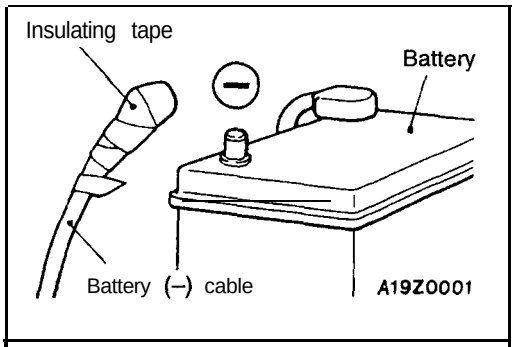

Caution
Turn the ignition key to the "LOCK" position, disconnect the negative battery cable and tape the terminal.
Wait at least 60 seconds after disconnecting the battery cable before doing any further work. (Refer to P. 52B-11)

Replace the SRS-ECU.

TSB Revision

Code No.54 or 55 Front passenger's air bag module (Squib ignition drive circuit) system	Probable cause
[Comment] These diagnostic trouble codes are output when a short-circuit (No.54) or open circuit (No.55) occurs in the squib ignition drive circuit inside the SRS-ECU.	• Malfunction of SRS-ECU

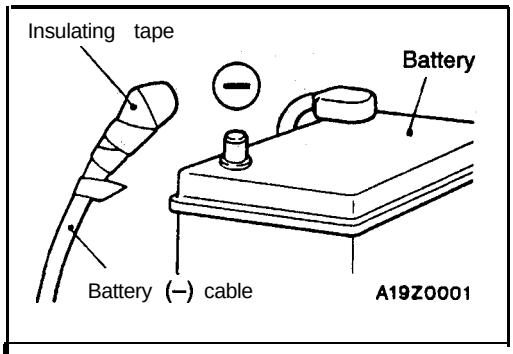

Caution
Turn the ignition key to the "LOCK" position, disconnect the negative battery cable and tape the terminal.
Wait at least 60 seconds after disconnecting the battery cable before doing any further work. (Refer to P. 52B-11)

Replace the SRS-ECU.

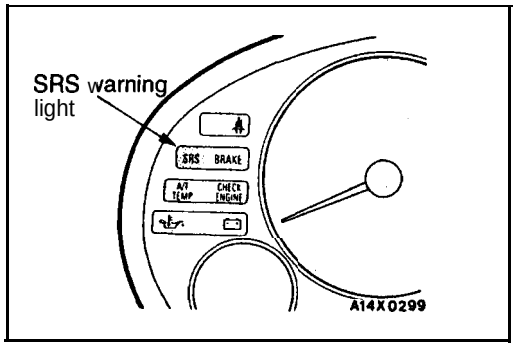

SRS WARNING LIGHT INSPECTION

1. Check that the SRS warning 'light illuminates when the ignition switch is in the ON position.
2. Check that it illuminates for approximately 7 seconds and then switches off.
3. If the above is not the case, check the diagnostic trouble codes.

TSB Revision

INSPECTION CHART FOR TROUBLE SYMPTOMS

52400340065

Trouble symptom		Inspection Procedure No.	Reference page
Communication with scan tool is not possible.	Communication with all systems is not possible.	1	52B-27
	Communication is not possible with SRS only.	2	52B-27
When the ignition key is turned to "ON" (engine stopped), the SRS warning light does not illuminate.		Refer to diagnostic trouble code No. 43.	52523
After the ignition switch is turned to ON, the SRS warning light is still on after approximately 7 seconds have passed.		Refer to diagnostic trouble code No. 43.	52B-24

INSPECTION PROCEDURE FOR TROUBLE SYMPTOMS

INSPECTION PROCEDURE 1

Communication with scan tool is not possible. (Communication with all systems is not possible)	Probable cause
[Comment] The cause is probably in the power supply system (including ground circuit) of the diagnostic line.	• Malfunction of connectors • Malfunction of harness

Refer to GROUP 13A – Troubleshooting <2.0L Engine (Non-turbo)>.
Refer to GROUP 13A – Troubleshooting <2.0L Engine (Turbo) and 2.4 Engine>.

INSPECTION PROCEDURE 2

Communication with scan tool is not possible. (Communication is not possible with SRS only)	Probable cause
[Comment] If communication is not possible with the SRS only, the cause is probably an open circuit in the on-board diagnostic output circuit of the SRS or in the power circuit (including ground circuit).	• Malfunction of harnesses or connectors • Malfunction of SRS-ECU

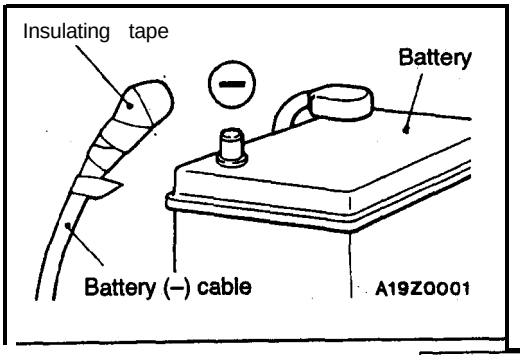

Caution
Turn the ignition key to the "LOCK" position, disconnect the negative battery cable and tape the terminal.
Wait at least 60 seconds after disconnecting the battery cable before doing any further work. (Refer to P. 52B-11)

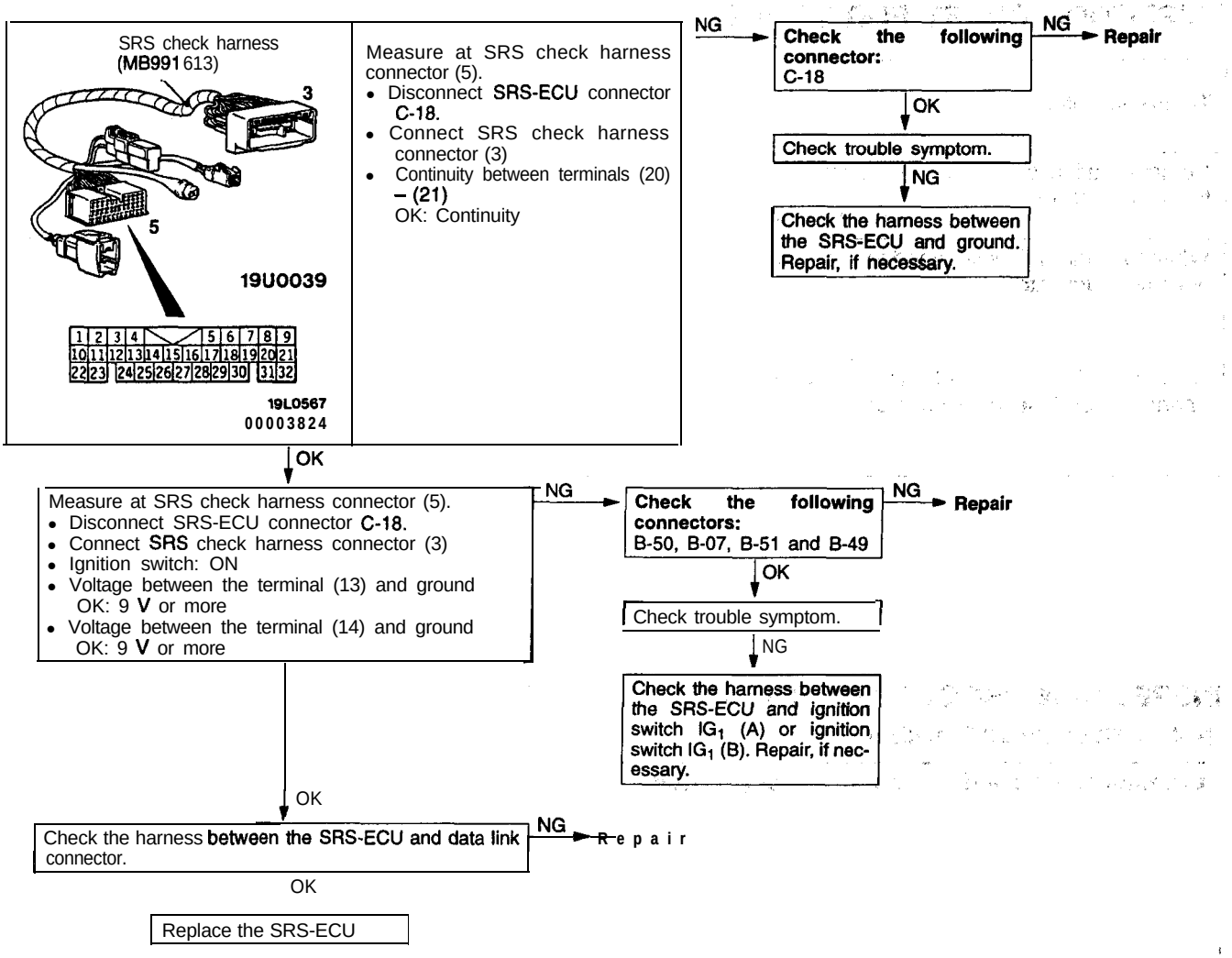

MAINTENANCE

52400390060

The SRS must be inspected by an Authorized dealer 10 years after the car manufacture date. (Refer to GROUP 00 – Maintenace Service.)

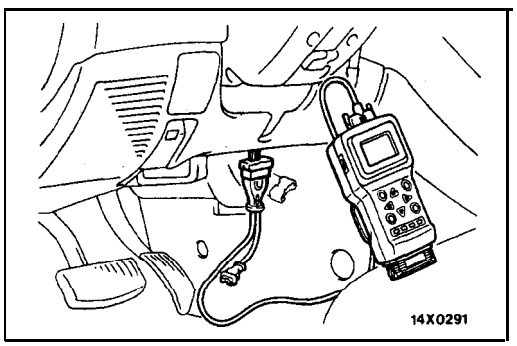

POST-COLLISION DIAGNOSIS

52400110086

To inspect and service the SRS after a collision (whether or not the air bags has deployed), perform the following steps.

SRS AIR BAG CONTROL UNIT (SRS-ECU) MEMORY CHECK

1. Connect the scan tool to the data link connector.

Caution
Turn the ignition switch off before disconnecting or connecting the scan tool.

TSB Revision

2. Read (and write down) all displayed diagnostic trouble codes. (Refer to P.52B-15.)

NOTE
If the battery power supply has' been disconnected or disrupted by the collision, the scan tool cannot communicate with the SRS-ECU. Inspect and, 'if necessary, repair the body wiring harness before proceeding further.

3. Read the service data (fault duration and how many times the memory was erased) using the Scan tool.

NOTE
- Maximum stored period: 9999 minutes (approximately 7 days)
- Maximum number of times to be stored: 250

4. Erase the diagnostic trouble codes, then wait 5 seconds or more, read and write down all displayed diagnostic trouble codes. (Refer to P.52B-15.)

REPAIR PROCEDURE

WHEN AIR BAG DEPLOYS IN A COLLISION.

1. Replace the following parts with new ones.
   - SRS air bag control unit (SRS-ECU) (Refer to P.52B-32.)
   - Air bag modules (Refer to P.52B-34.)
2. Check the following parts, and replace if any malfunctions are present.
   - Clock spring (Refer to P.52B-34.)
   - Steering wheel, steering column and intermediate joint
     (1) Check wiring harness (built, into' steering wheel) and connectors for damage, and terminals for deformation.
     (2) install air bag module to check fit or alignment with steering wheel,.
     (3) Check steering wheel for noise, binds or difficult operation and excessive free play.
3. Check harnesses for binding, connectors for damage, poor connections, and terminals for deformation. (Refer to P.52B-11.)

WHEN AIR BAG DOES NOT DEPLOY IN LOW-SPEED COLLISION.

Check the SRS components.
If the SRS components are showing any visible damage such as dents, cracks, or deformation, replace them with new ones. Concerning parts removed for inspection, replacement with new parts and cautionary points for working, refer to appropriate COMPONENT SERVICE, P.52B-32.

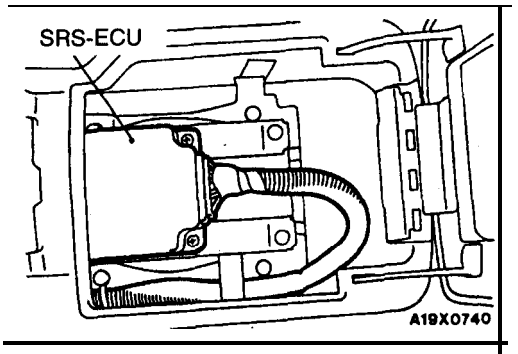

SRS Air Bag Control Unit (SRS-ECU)

1. Check SRS-ECU case and brackets for dents, cracks or deformation.
2. Check connector for damage, and terminals for deformation.

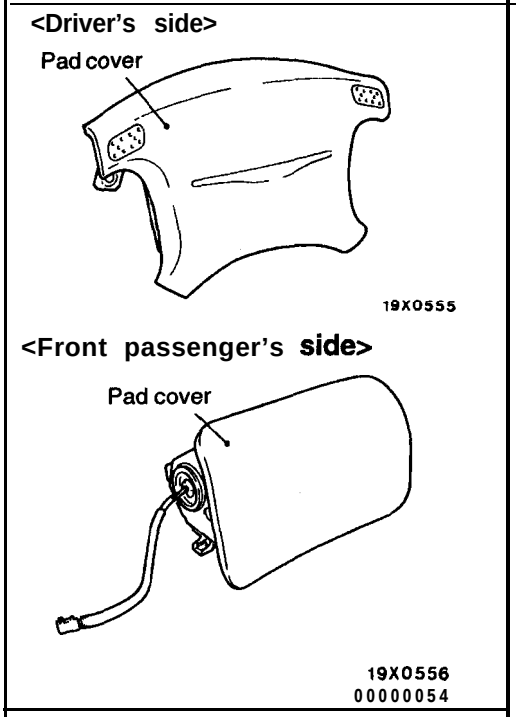

Air Bag Module

1. Check pad cover for dents, cracks or deformation.

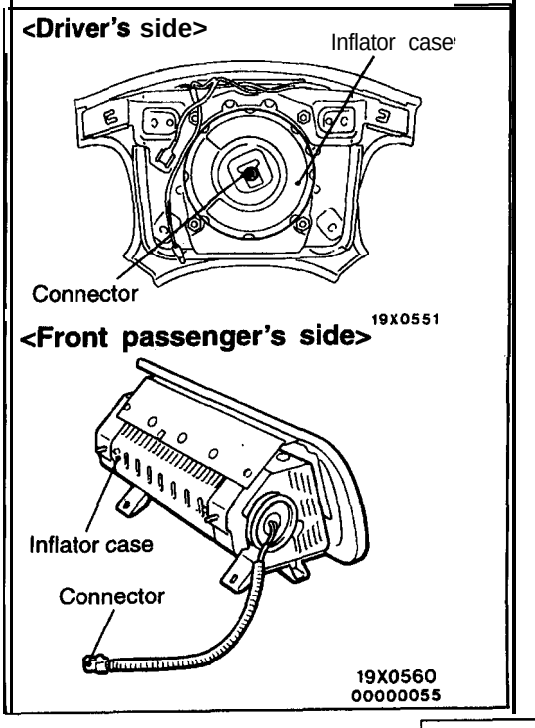

2. Check for connector damage, deformed terminal, and binding harness.
3. Check air bag inflator case for dents, cracks or deformation.
4. Install air bag module to steering wheel to check fit or alignment with the wheel.

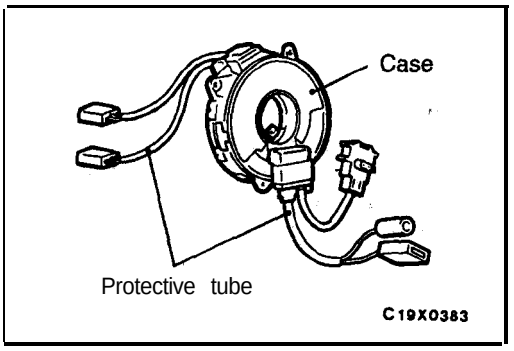

Clock Spring

1. Check clock spring connectors and protective tube for damage, and terminals for deformation.
2. Visually check the case for damage.

Steering Wheel, Steering Column and Intermediate Joint

1. Check wiring harness (built into steering wheel) and connectors for damage, and terminals for deformation.
2. Install air bag module to check fit or alignment with steering wheel.
3. Check steering wheel for noise, binding, difficult operation, or excessive free play.

Harness Connector (Body and Front Wiring Harness)

Check for binding harness, connector damage, poor connections, and deformed terminals. (Refer to P.52B-11.)

COMPONENT SERVICE

52400290070

If the SRS components are to be removed or replaced as a result of maintenance, troubleshooting, etc., follow each procedure. (SRS Air Bag Control Unit: refer to P.52B-32, Air Bag Modules and Clock Spring: refer to P.52B-34)

Caution

1. **SRS components should not be subjected to heat over 93°C (200°F), so remove SRS air bag control unit, air bag modules and clock spring before drying or baking the vehicle after painting. Recheck SRS system operability after re-installing them.**
2. **If the SRS components are removed for the purpose of inspection, sheet metal repair, painting, etc., they should be stored in a clean, dry place until they are reinstalled.**

SRS AIR BAG CONTROL UNIT (SRS-ECU)

52400210076

Caution

1. **Never attempt to disassemble or repair the SRS-ECU. If. faulty, replace it.**
2. **Do not drop or subject the SRS-ECU to impact or vibration. If dents, cracking, deformation, or rust are discovered on the SRS-ECU, replace it with a new SRS-ECU. Discard the old one.**
3. **After deployment of the air, bags, replace the SRS-ECU with, a new one.**
4. **Never use an ohmmeter on or near the SRS-ECU, and use only the special test equipment described on P.52B-13.**

REMOVAL AND INSTALLATION

Pre-removal Operation
- Turn the ignition key to the "LOCK" position

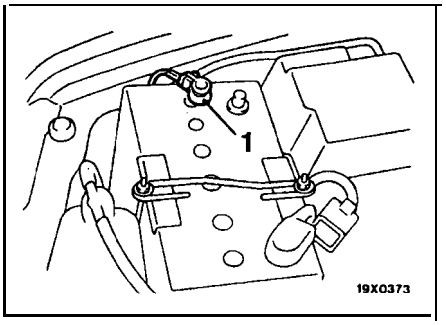

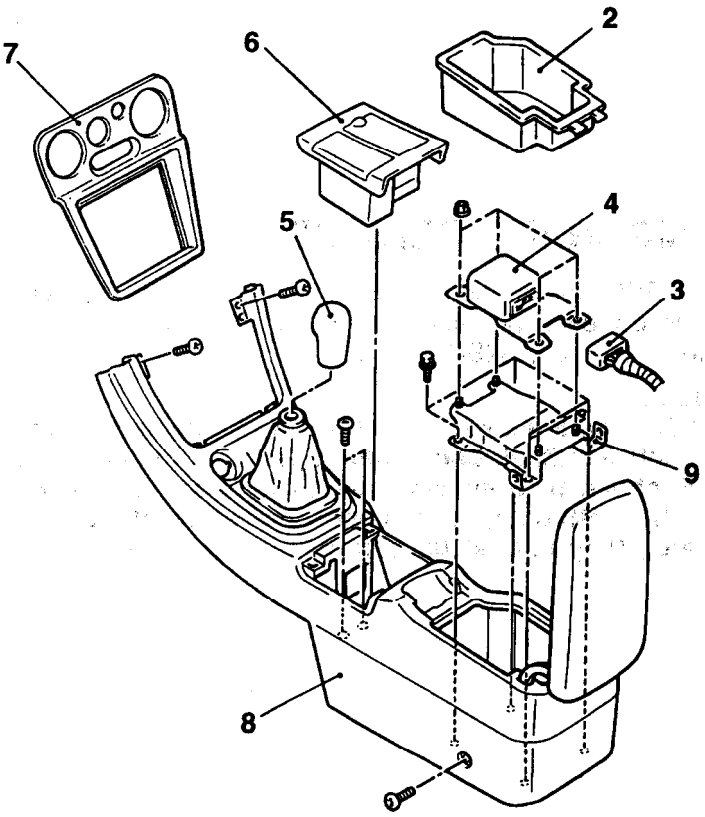

Removal steps

◀A▶ ▶B◀ • Post-installation inspection
1. Negative (–) battery cable connection
2. Inner box
3. SRS-ECU and harness connector connection

▶A◀ 4. SRS-ECU
5. Shift lever knob <M/T>
6. Ashtray
7. Center console panel
8. Floor console assembly
9. Bracket

TSB Revision

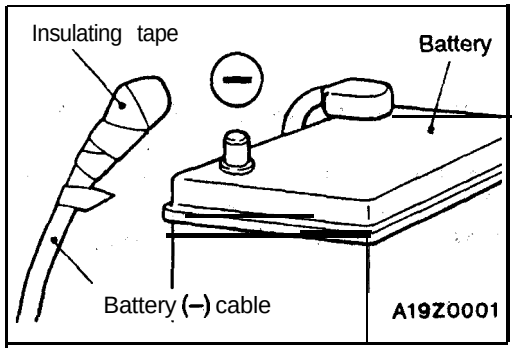

REMOVAL SERVICE POINT

◀A▶ NEGATIVE (–) BATTERY CABLE DISCONNECTION

Disconnect the negative battery cable from the battery and tape the terminal.

Caution
Wait at least 60 seconds after disconnecting the battery cable before doing any further work. (Refer to P.52B-11.)

INSTALLATION SERVICE POINTS

▶A◀ SRS-ECU INSTALLATION

Caution
The SRS may not activate if SRS-ECU 'is not installed properly, which could result in the SRS system not operating properly in a collision.

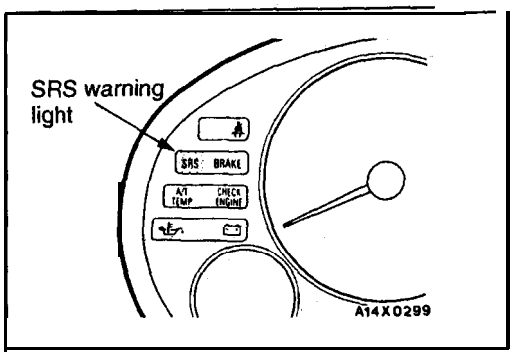

▶B◀ POST-INSTALLATION INSPECTION

Reconnect the negative battery terminal. Turn the ignition key to the "ON" position. Does the "SRS" warning light illuminate for about 7 seconds, turn OFF and then remain OFF? If yes, SRS system is functioning properly. If no, consult page 52B-14.)

INSPECTION

52400220045

- Check the SRS-ECU case and brackets for dents, cracks or deformation.
- Check connector for damage, and terminals for deformation.

Caution
If a dent, cracks, deformation or rust is discovered, replace the SRS-ECU with a new one.

NOTE
For checking of the SRS-ECU other than described above, refer to the section concerning troubleshooting. (Refer to P.52B-14.)

AIR BAG MODULES AND CLOCK SPRING

52400240022

Caution

1. Never attempt to disassemble or repair the air bag module or clock spring. If faulty, replace it.
2. Do not drop the air bag module or clock spring or allow contact with water, grease or oil. Replace it if a dent, cracks, deformation or rust are detected.
3. The air bag modules should be stored on a flat surface and placed so that the pad surface is facing upward. Do not place anything on top of the air bag modules.
4. Do not expose the air bag module to temperature over 93°C (200°F).
5. After deployment of an air bag, replace the clock spring.
6. Wear gloves and safety goggles when handling an air bag that has deployed.
7. An undeployed air bag module should only be disposed of in accordance with the specified procedures. (Refer to P.52B-40)

REMOVAL AND INSTALLATION

<Air bag module (Driver's side), Clock spring>

Pre-removal Operation
- Set the steering wheel and the front wheels to the straight ahead position, and then remove the ignition key.

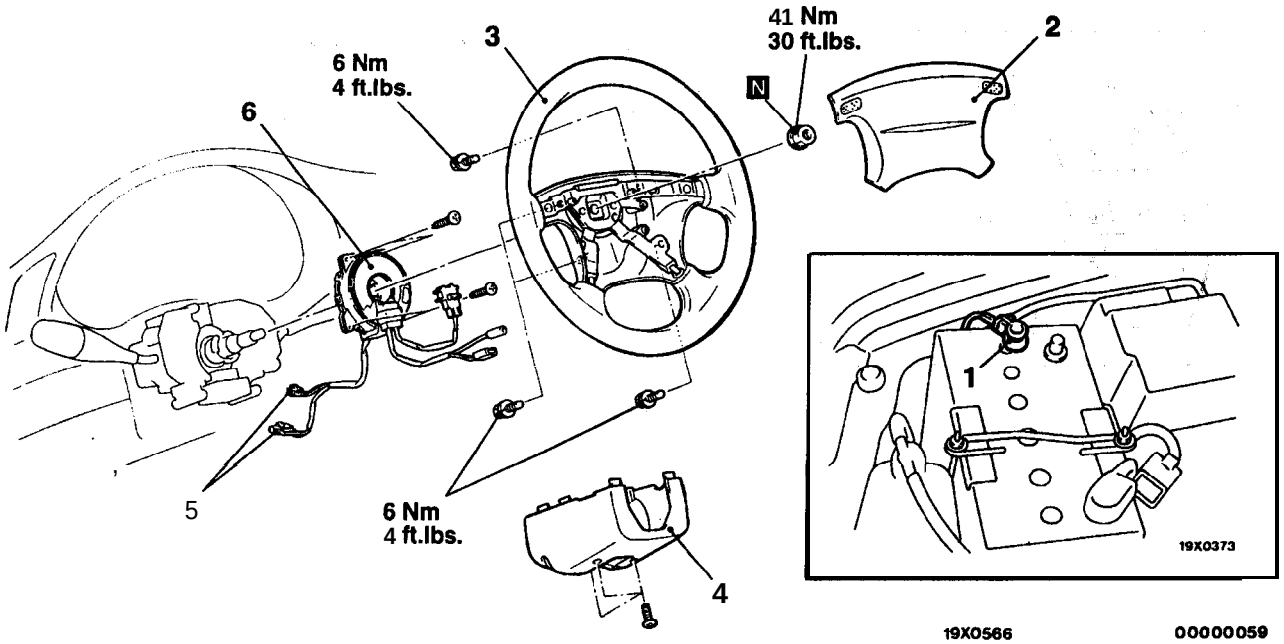

Clock **spring removal steps**

- ▶E◀ • Post-installation inspection
- ◀A▶ 1. Negative (–) battery cable connection
- ◀B▶ ▶D◀ 2. Air bag module (Driver's side)
- ◀C▶ ▶C◀ 3. Steering wheel
- 4. Column cover lower
- 5. Clock spring and body wiring harness connection
- ▶B◀ 6. Clock spring
- ▶A◀ • Pre-installation inspection

Air bag module (Driver's side) removal steps

- ▶E◀ • Post-installation inspection
- ◀A▶ 1. Negative (–) battery cable connection
- ▶D◀ 2. Air bag module (Driver's side)
- ▶A◀ • Pre-installation inspection

TSB Revision

<Air bag module (Front passenger's side)>

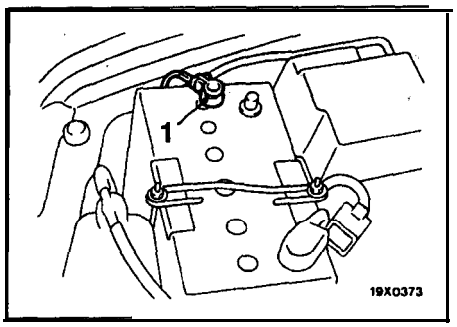

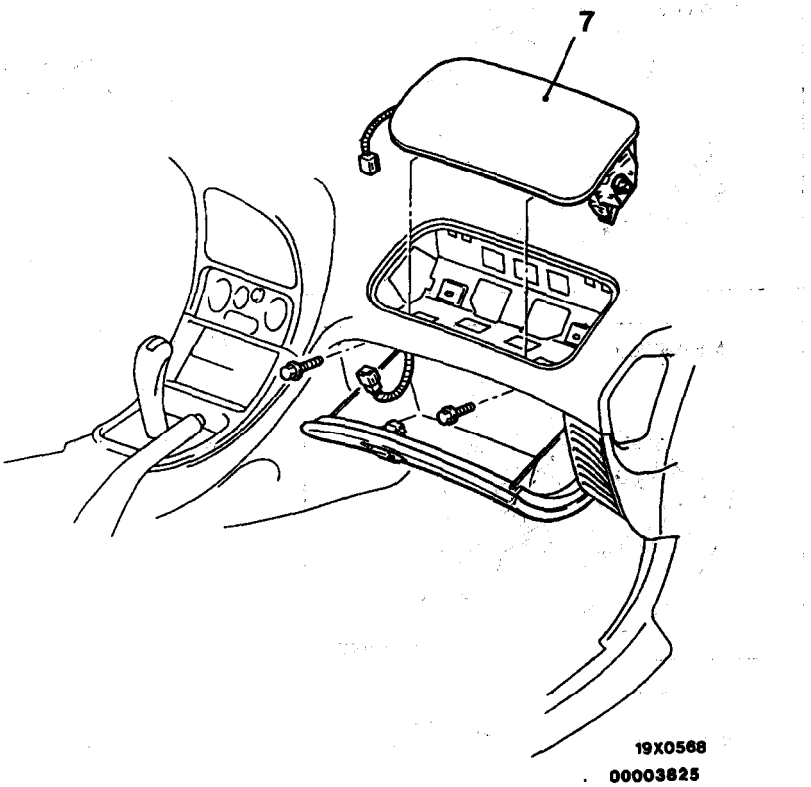

Air bag module (Front passenger's side) removal steps

▶E◀ ● Post-installation inspection
◀A▶ 1. Negative (–) battery cable connection
◀D▶ 7. Air bag module (Front passenger's side)
▶A◀ ● Pre-installation inspection

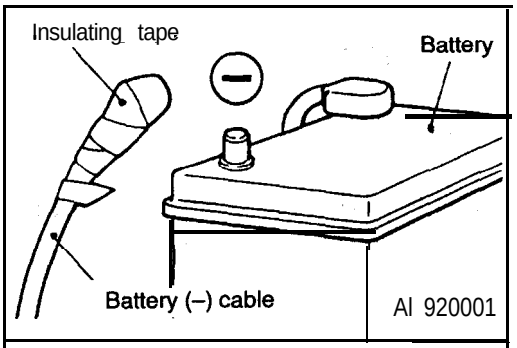

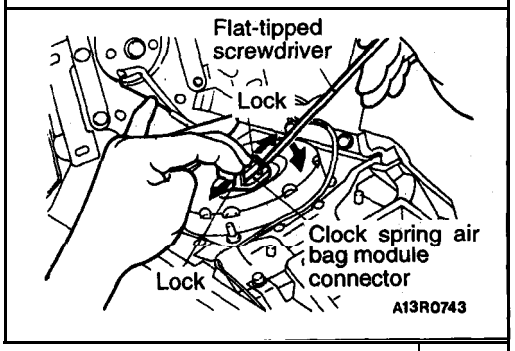

REMOVAL SERVICE POINTS

◀A▶ NEGATIVE (–) BATTERY CABLE DISCONNECTION

Disconnect the negative battery cable from the battery and tape the terminal.

Caution
Wait at least 60 seconds after disconnecting the battery cable before doing any further work. (Refer to P.52B-11.)

◀B▶ AIR BAG MODULE (DRIVER'S SIDE) REMOVAL

(1) Remove the air bag module mounting nut using a socket wrench from the back side.
(2) When disconnecting the connector of the clock spring from the air bag module, press the air bag's look toward the outer side to spread it open. Use a flat-tipped screwdriver, as shown in the figure at the left; to pry so as to remove the connector gently.

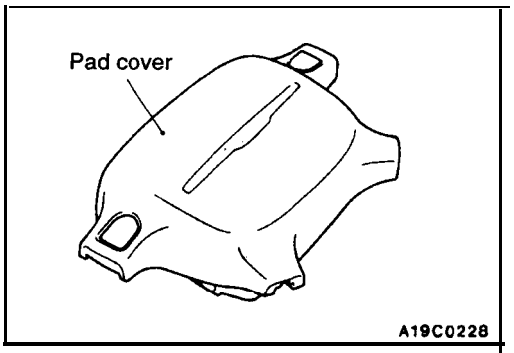

Caution

1. **When disconnecting the air bag module-clock spring connector, take care not to apply excessive force to it.**
2. **The removed air bag module should be stored in a clean, dry place with the pad cover facing up.**

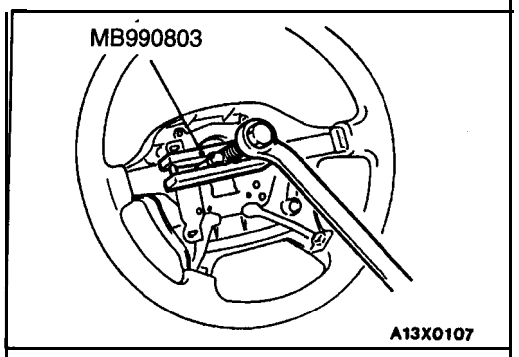

◀C▶ STEERING WHEEL REMOVAL

Caution

Do not hammer on the steering wheel. Doing so may damage the collapsible column mechanism.

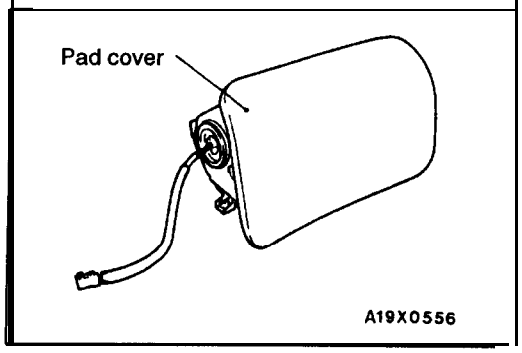

◀D▶ AIR BAG MODULE (FRONT PASSENGER'S SIDE) REMOVAL

Caution

The removed air bag module should be stored in a clean, dry place with the pad cover facing up.

INSTALLATION SERVICE POINTS

▶A◀ PRE-INSTALLATION INSPECTION

(1) When installing the new air bag module and clock spring, refer to "INSPECTION" (P.52B-38).

Caution

Dispose of an air bag module only according to the specified procedure. (Refer to P.52B-40.)

(2) Connect the battery (–) terminal.

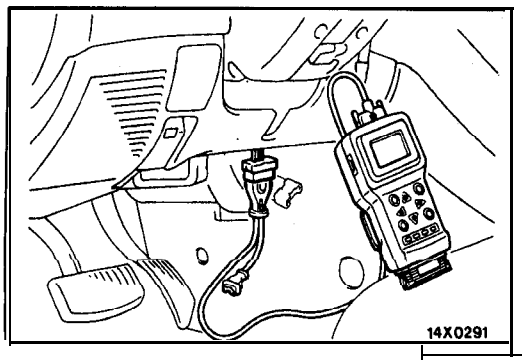

(3) Connect the scan tool to the data link connector, then check diagnostic codes.

Caution

Turn the ignition switch off before disconnecting or connecting the scan tool.

(4) Turn the ignition key to the "ON" position.

(5) Conduct diagnostic test mode using the scan tool to, ensure entire SRS operates properly, except open circuit of air bag module (diagnostic trouble code No.22, 25). (Refer to P.52B-17 and P.52B-18.)

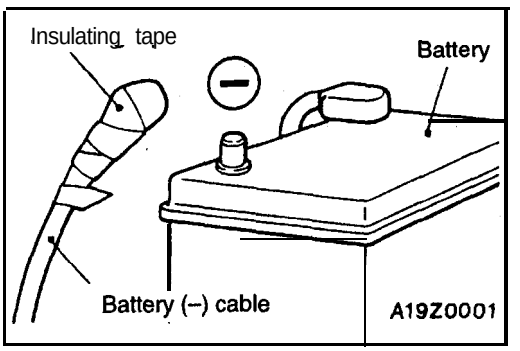

(6) Turn the ignition key to the "LOCK" position, disconnect the negative battery cable and tape the terminal.

Caution
Wait at least 60 seconds after disconnecting the battery cable before doing any further work.
(Refer to P.52B-12.)

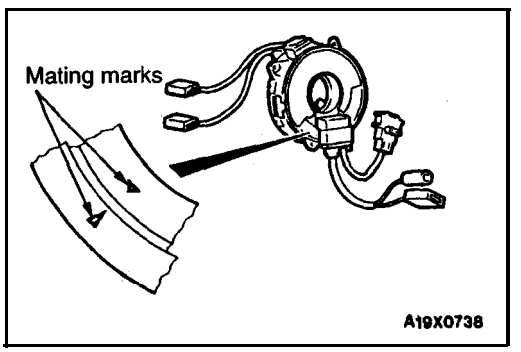

▶B◀ CLOCK SPRING INSTALLATION

Align the mating marks of the clock spring, and, after turning the front wheels to the straight-ahead position, install the clock spring to the column switch.

Mating Marks Alignment

Turn the clock spring clockwise fully, and then turn back it approx. 3 1/8 turns counterclockwise to align the mating marks.

Caution
If the clock spring's mating marks are not properly aligned. the steering wheel may not be completely rotational during a turn, or the flat cable within the clock spring may be severed, obstructing normal operation of the SRS.

▶C◀ STEERING WHEEL INSTALLATION

(1) Before installing the steering wheel, be sure to first turn the vehicle's front wheels to the straight-ahead position and align the mating marks of the clock spring.

Caution
Be sure when installing the steering wheel, that the harness of the clock spring does not become caught or tangled.

(2) After installing, turn the steering wheel' all 'the way in both directions to confirm that steering is normal.

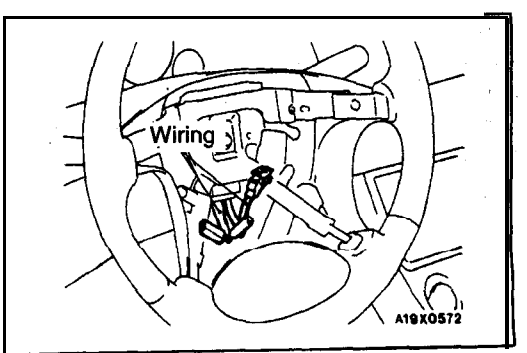

▶D◀ AIR BAG MODULE (DRIVER'S SIDE) INSTALLATION

Install the air bag module, taking care that the wiring is not pinched.

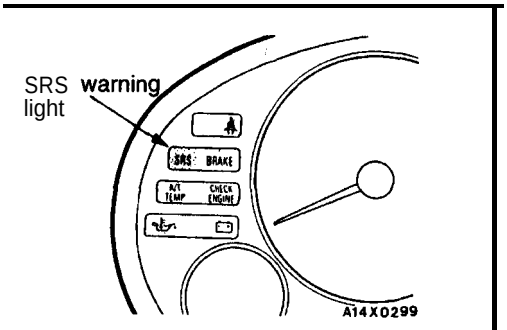

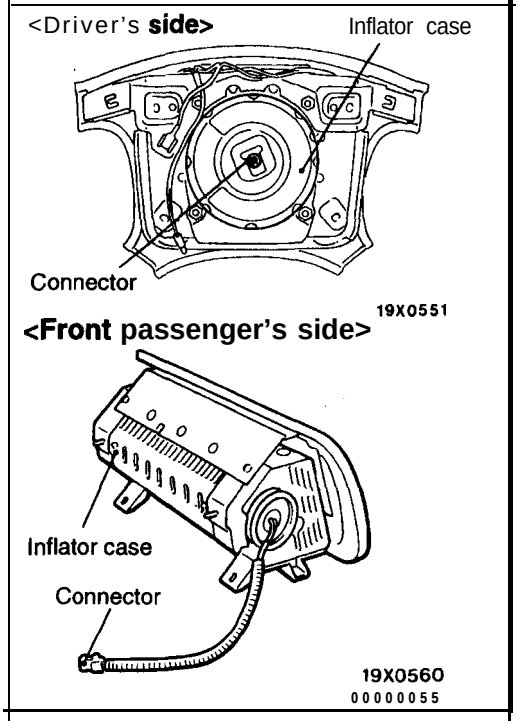

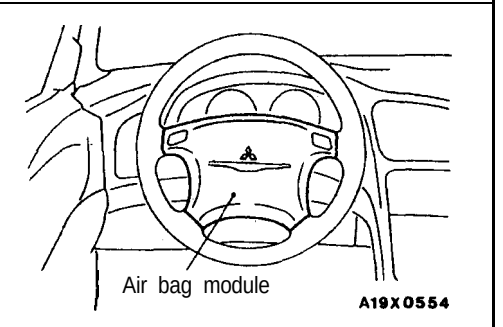

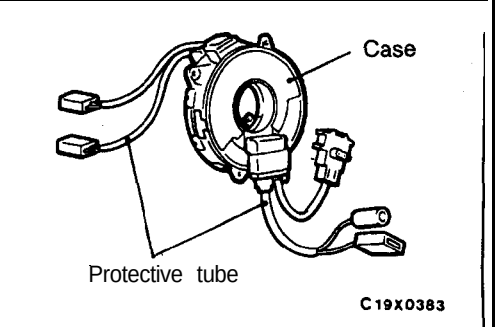

▶E◀ POST-INSTALLATION INSPECTION

(1) After installing the clock spring, the steering wheel, the column covers and the air bag module, check steering wheel for noise, binds or difficult operation.
(2) Reconnect the negative battery terminal. Turn the ignition key to the "ON" position. Does the "SRS" warning light illuminate for about 7 seconds, turn OFF and then remain OFF? If yes, SRS system is functioning properly. If no, consult page 52B-14.

INSPECTION

52400250085

AIR BAG MODULE CHECK

If any improper part is found during the following inspection, replace the air bag module with a new one.
Dispose of the old one according to the specified procedure. (Refer to P.52B-40.)

Caution
Never attempt to measure the circuit resistance of the air bag module (squib) even if you are using the specified tester. If the circuit resistance is measured with a tester, accidental air bag deployment will result in serious personal injury.

(1) Check pad cover for dents, cracks or deformation.
(2) Check the air bag module for dents, cracks or deformation.
(3) Check hooks and connectors for damage, terminals for deformation, and harness for binds.
(4) Check air bag inflator case for dents, cracks or deformation.

(5) Install the air bag module on the steering wheel to check alignment with the wheel.

CLOCK SPRING CHECK

If, as result of the following checks, even one abnormal point is discovered, replace the clock spring with a new one.
(1) Check connectors and protective tube for. damage, and terminals for deformation.
(2) Visually check the case for damage"

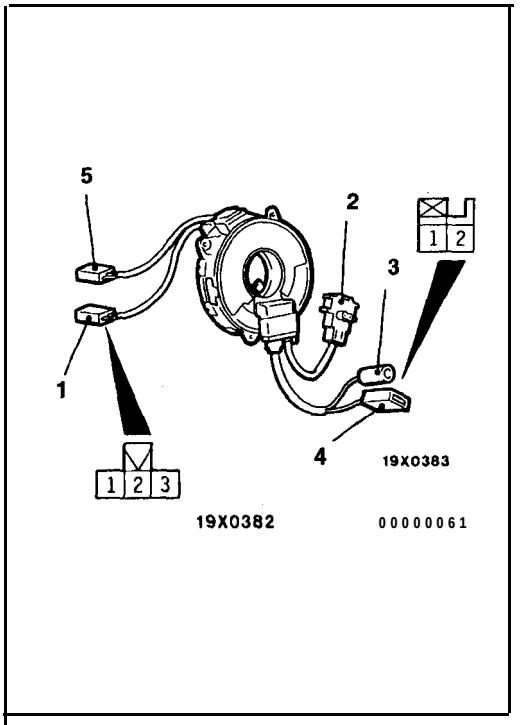

(3) Check for continuity between the No.1 connector of the clock spring and connectors No.3 and 4.

No. 1 connector			No.3 connector	No.4 connector	
Terminal 1	Terminal 2	Terminal 3		Terminal 1	Terminal 2
0					0
	0			0	
		0	0		
To auto-cruise control unit	To ACC power	To horn relay	To horn switch	To auto-cruise control switch	

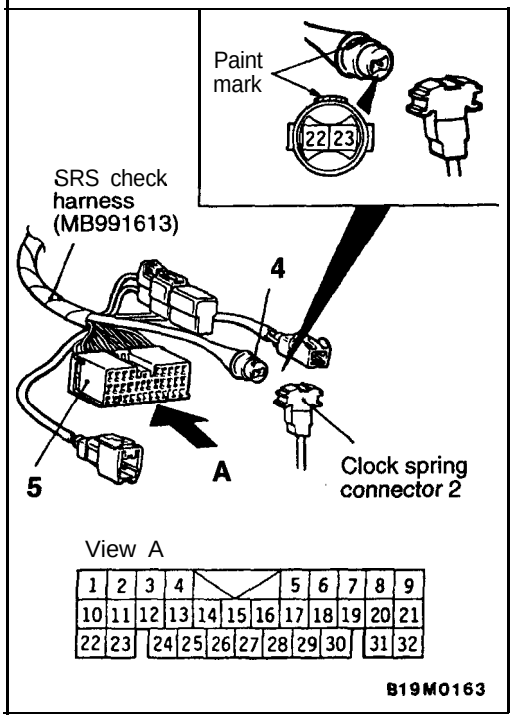

(4) Check resistance between the terminals.

a. Align the paint mark of the SRS check harness connector No. 4 with the clock spring connector No. 2 (arrow in the illustration) to connect the connectors Nos. 2 and 4.

b. Check continuity between the terminals 22 and 23 of the SRS check harness connector No. 5.

Standard value: less than 0.4 Ω

AIR BAG MODULE DISPOSAL PROCEDURES

52499120999

Before either disposing of a vehicle equipped with an air bag, or prior to disposing of the air bag module, be sure to first follow the procedures described below to deploy the air bag.

UNDEPLOYED AIR BAG MODULE DISPOSAL

Caution

1. **If the vehicle is to be scrapped, or otherwise disposed of, deploy the air bag inside the vehicle. If the vehicle will continue to be operated and only the air bag module is to be disposed of, deploy the air bag outside the vehicle.**
2. **Since a large amount of smoke is produced when the air bag is deployed, select a well-ventilated site. Moreover, never attempt the test near a smoke sensor.**
3. **Since there is a loud noise when the air bag is deployed, avoid residental areas whenever possible. If anyone is nearby, give warning of the impending noise.**
4. **Suitable ear protection should be worn by personnel performing these procedures or by people in the immediate area.**

DEPLOYMENT INSIDE THE VEHICLE

(when disposing of a vehicle)

(1) Open all windows and doors of. the vehicle. Move the vehicle to an isolated spot.

(2) Disconnect the negative (–) and positive (+) battery cables from the battery terminals, and then remove the battery from the vehicle.

Caution

Wait at least 60 seconds after disconnecting the battery cables before doing any further work.
(Refer to P.52B-11.)

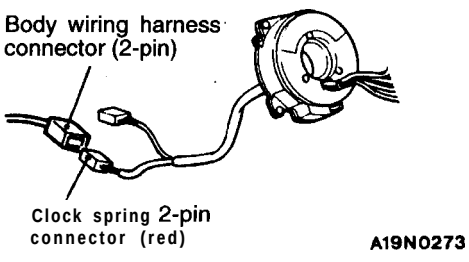

(3) Remove the steering column cover lower.

(4) Remove the connection between the clock spring 2-pin connector (red) and the body wiring harness connector.

NOTE

If the clock spring connector is disconnected from the body wiring harness, both electrodes of the clock spring connector will be automatically shorted to prevent unintended deployment of the air bag due to static electricity, etc.

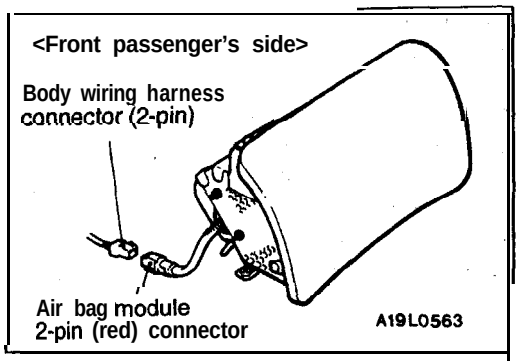

(5). Open the glove compartment.

(6) Disconnect the **2-pin** (red) connector of the air bag module (front passenger's side) from the body wiring harness connector.

NOTE
If the air bag module (front passenger's side) connector is disconnected from the body wiring harness, both electrodes of the air bag module (front passenger's side) connector will be automatically shorted to prevent unintended deployment of the air bag due to static electricity, etc.

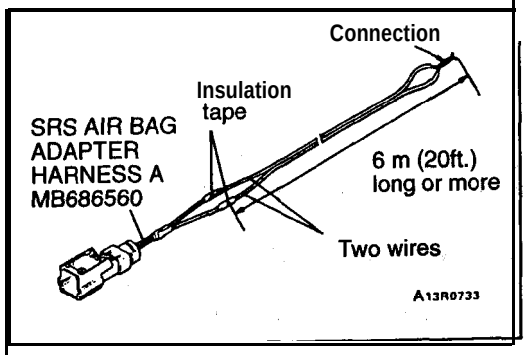

(7) Connect two wires, each six meters (20 feet) long or more, to the two leads of SRS AIR BAG ADAPTER HARNESS A and cover the connections with insulation tape. The other ends of the two wires should be connected to each other (short-circuited), to prevent sudden unexpected deployment of the air bag.

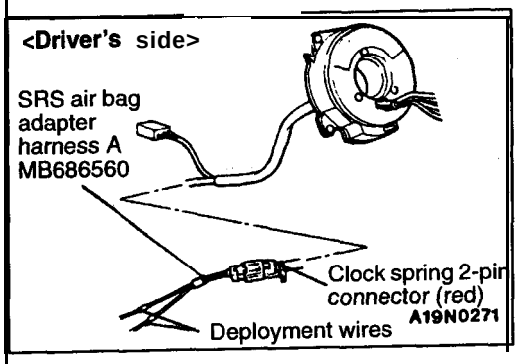

(8) Connect the clock spring **2-pin** connector (red) to SRS air bag adapter harness A and pass the deployment wires out of the vehicle.

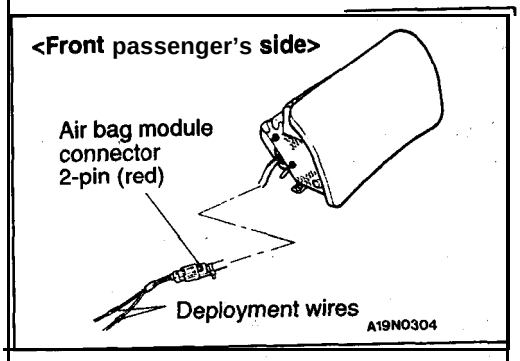

(9) Connect the SRS air bag adapter harness A to the **2-pin** connector (red) of the air bag module (front passenger's side) and pass the deployment wire out of the vehicle.

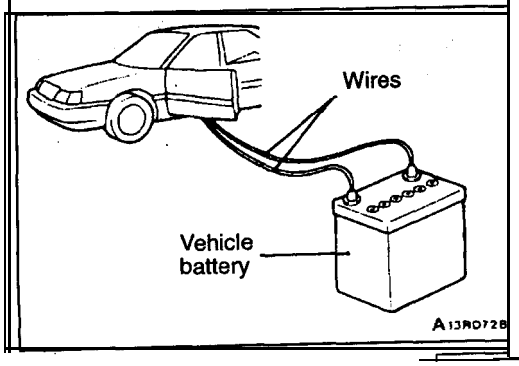

(10) At a location as far away from the vehicle as possible, disconnect the two connected wires from each other, and connect them to the two terminals of the battery (removed from the vehicle) to deploy the air bag.

Caution

1. **Before deploying the air bag in this manner, first check to be sure that there is no one in or near the vehicle. Wear safety goggles, suitable ear protection.**

2. The inflator will be quite hot immediately following the deployment, so' wait at least 30 minutes to, allow it to cool before attempting to handle it. Although not poisonous, do not inhale gas from air bag deployment. See Deployed Air Bag Module Disposal Procedures (P.52B-45.) for post-deployment handling instructions.
3. if the air bag module fails to deploy when the procedures above are followed, do not go near the module. Contact the MMSA Tech. Line.

(11) Dispose of the air bag module after deployment according to the Deployed Air Bag Module Disposal Procedures. (Refer to P.52B-44.)

DEPLOYMENT OUTSIDE THE VEHICLE

Caution

1. Should be carried out in a wide, fiat area at least six meters (20 feet) away from obstacles and other people.
2. Do not perform deployment outside, if a strong wind is blowing, and if there is even a slight breeze, the air bag module should be placed and deployed downwind from the battery.

(1) Disconnect the negative (–) and positive (+) battery cables from the battery terminals, and then remove the battery from the vehicle

Caution

Wait at least 60 seconds after disconnecting the battery cables before doing any further work. (Refer to P.52B-11.)

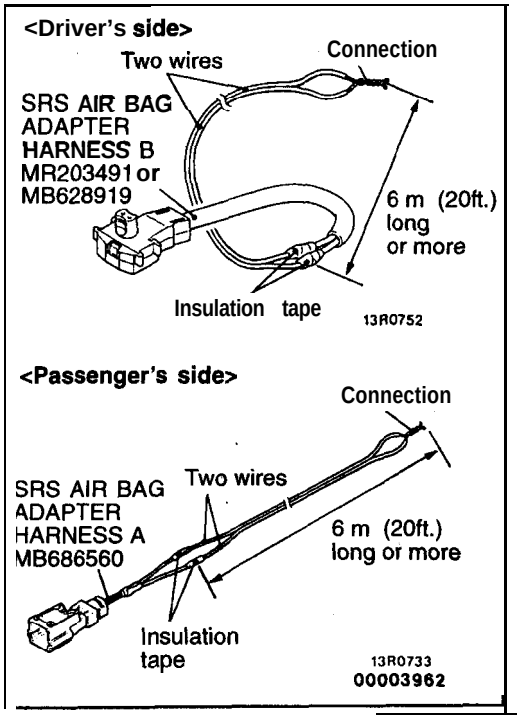

(2) Remove the air bag module from the vehicle. (Refer to P.52B-34.)

Caution

The air bag module should be stored on a fiat surface and placed so that the pad cover face up. Do not place anything on top of it.

(3) Connect two wires, each six meters (20 feet) long or more, to the two leads of SRS AIR BAG ADAPTER HARNESS B <driver's side> or SRS AIR BAG ADAPTER HARNESS <front passenger's side>, and cover the connections with insulation tape. The other ends of the two wires should be connected to each other (short-circuited), to prevent sudden unexpected deployment of the air bag.

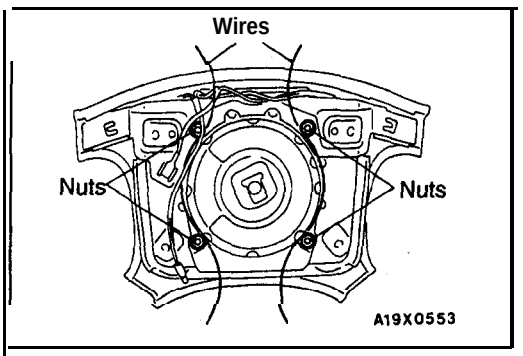

<Driver's side>

1. Install nuts that are no longer needed to the four bolts on the rear side of the air bag module, and tie on some thick wire to secure to the wheel.
2. Take the SRS air bag adaptor harness B that is connected to the wires, pass it beneath the old tire and wheel assembly, and connect it to the air bag module.

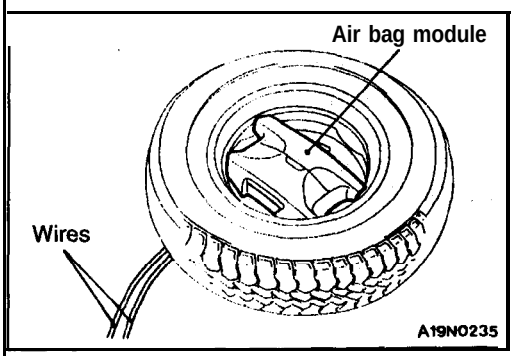

3. Insert the air bag module into the wheel, and secure it with wires that are tied to the bolt holes, the air bag should face upward.

   Caution
   Leave some space below the wheel for the adaptor harness. If there is no space, the reaction when the air bag deploys could damage the adaptor harness.

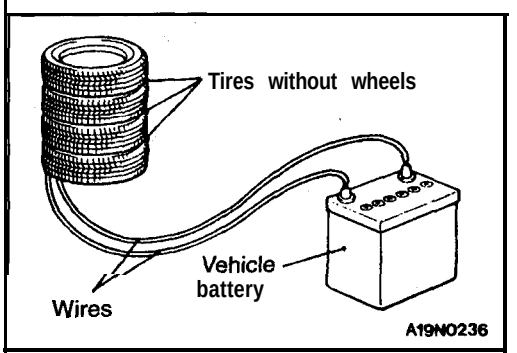

4. Place three old tires, without wheels, on top of the tire secured to the air bag module.

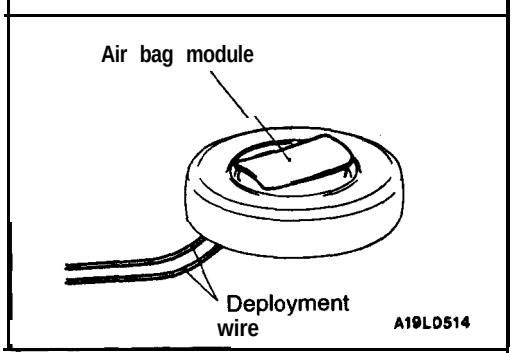

<Front passenger's side>

1. Connect the deployment wires to the SRS air bag adaptor harness A, pass it beneath the tire and wheel asssembly, and connect it to the air bag module.
2. Pass the thick wires into the hole of the air bag module bracket, and secure it to the wheel of the old tire with wheel (4 locations), with the air bag facing upwards.

   Caution
   1. **Leave some space below the wheel for the deployment wires.**
      If there is no space, the reaction of the air bag deployment could result in damage of the adaptor harness.
   2. **While deployment takes place, do not have the connector of the SRS air bag adaptor harness A inserted between the tires.**

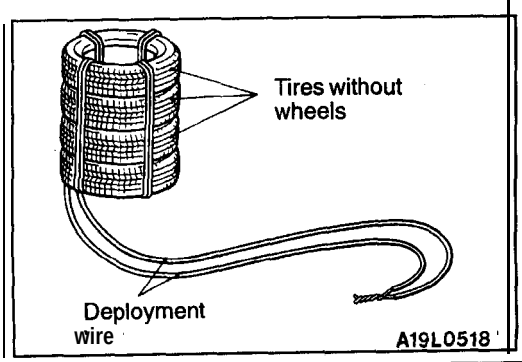

3. Place three old tires, without wheels, on top of the tire secured to the air bag module, and secure all tires with ropes (4 locations).

4. At a location as far away from the air bag module as possible, and from a shielded position, if possible, disconnect the two connected wires from each other and connect them to the two terminals of- the battery (removed from the vehicle) to deploy the air bag.

Caution

1. Before deployment, check carefully to be sure that no one is nearby.

2. The inflator will be quite hot immediately following' deployment, so wait at least 30 minutes to allow it to cool before attempting. to handle it. Although not poisonous, do not inhale gas from air bag deployment. See Deployed Air Bag Module Disposal Procedures (P.52B-44) for post-deployment handling instructions.

3. If the air bag module fails to deploy when the procedures above are followed, do not go near the module. Contact the MMSA Tech. Line.

5. Dispose of the air bag module after deployment according to the Deployed Air Bag Module Disposal Procedures (Refer to P.52B-44).

DEPLOYED AIR BAG MODULE DISPOSAL

After deployment, the air bag module should be disposed of in the same manner as any other scrap parts, except that the following points should be carefully noted during disposal.

(1) The inflator will be quite hot immediately following deployment, so wait at least 30 minutes to allow it to cool before attempting to handle it.

(2) Do not put water or oil on the air bag after deployment.

(3) There may be, adhered to the deployed air bag module, material that could irritate the eyes and/or skin, so wear gloves and safety goggles when handling a deployed air bag module. IF DESPITE THESE PRECAUTIONS, THE MATERIAL DOES, GET INTO THE EYES OR ON THE SKIN, IMMEDIATELY RINSE THE AFFECTED AREA WITH A LARGE AMOUNT OF CLEAN WATER. IF ANY IRRITATION DEVELOPS, SEEK MEDICAL ATTENTION.

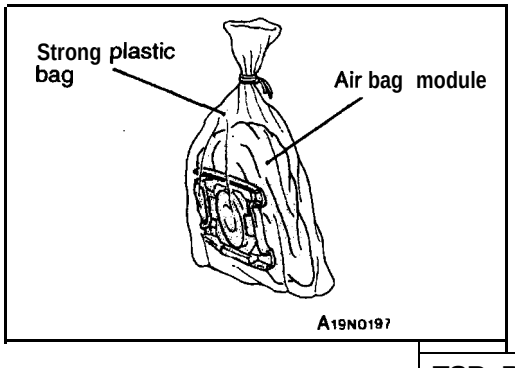

(4) Tightly seal the air bag module in a strong plastic bag for disposal.

(5) Be sure to always wash your hands after completing this operation.

HEATER, AIR CONDITIONING AND VENTILATION

CONTENTS

55209000037

CONTINUED ON NEXT PAGE

WARNINGS REGARDING SERVICING OF SUPPLEMENTAL RESTRAINT SYSTEM (SRS) EQUIPPED VEHICLES

WARNING!

(1) improper **service or maintenance of any component of the SRS, or any SRS-related component, can lead to personal injury or death to service personnel (from inadvertent firing of the air bag) or to the driver and passenger (from rendering the SRS inoperative).**

(2) Service or maintenance of any SRS component or SRS-related component must be performed only at an authorized MITSUBISHI dealer.

(3) MITSUBISHI dealer personnel must thoroughly review this manual, and especially its GROUP 52B - Supplemental Restraint System (SRS) and GROUP 00 - Maintenance Service before beginning any service or maintenance of any component of the SRS or any SRS-related component.

N O T E

The SRS includes the following components: SRS - ECU, SRS warning light, air bag module, clockspring **and interconnecting wiring.** Other SRS-related components (that may have to be removed/installed in connection with SRS service or maintenance) are indicated in the table of contents by an asterisk(*).

GENERAL INFORMATION

55200010138

The heater system uses a two-way-flow full-air-mix system that features high performance and low operating noise, and includes an independent face air blowing function and a cool air bypass function.

The A/C system is basically the same as the conventional system, but a new refrigerant system has been adopted as a response to restrictions on the use of chlorofluorocarbons.

Items		Specifications
Heater unit type		Two-way-flow full-air-mix system
Heater control assembly		Dial and lever type
Compressor model	<2.0L Engine (Turbo) and 2.4L Engine>	Scroll type <MSC105CVS>
	<2.0L Engine (Non-turbo)>	Inclined-plate type <10PA17C>
Dual pressure switch kPa (psi)	High-pressure switch	OFF: 3,140 (456), ON: 2,550 (370)
	Low-pressure switch	OFF: 200 (29), ON: 220 (32)
Refrigerant and quantity g (oz.)		R-134a (HFC-134a), Approx. 700 – 740 (24.69–26.10)

OPERATION

Condenser fan and radiator fan control

- For the operation of each fan, refer to COOLING SYSTEM TROUBLESHOOTING.

Compressor control

- When the air conditioning switch is pushed in (A/C switch: ON) or the air outlet changeover control knob is moved to the DEF or DEF/FOOT position (defroster switch: ON), the air conditioning system operates and compressor control starts.
- The fin thermo sensor, which senses the temperature. of the air flowing out of the evaporator, is deactivated with. temperature 3.2% (38°F) or below.
  Here, the engine coolant 'temperature sensor senses the temperature of engine coolant, and it is turned off at 115°C (239°F) or higher temperatures.
- The dual pressure switch turns OFF when the refrigerant pressure becomes excessively high or low, thus protecting the compressor circuit. (See Table below.)

A/C Compressor Relay ON Conditions

			Remarks
Ignition switch (IG2)		ON	(1) A/C compressor relay is deenergized when any one switch, sensor or control unit shown on the left turns OFF (HI).
Blower switch		ON	
Air conditioning switch or defroster switch		ON	
Fin thermo sensor		*	(2) The • marked device measures the temperature of the intake air, and according to the control characteristics of the magnetic clutch for the compressor, the auto compressor-ECU outputs the "HI" signal (12V).
Engine coolant temperature sensor		ON [108°C (226°F) or lower]	
Dual pressure switch	Low-pressure side	ON [220 kPa (32 psi) or higher]	
	High-pressure side	ON [2,550 kPa (370 psi) or lower]	
A/C compressor relay driving transistor (within auto compressor-ECU)		ON	

SAFETY PRECAUTIONS

Because R-l 34a refrigerant is a, hydrofluorocarbon (HFC) which contains hydrogen atoms in place of chlorine atoms, it will not cause damage to the ozone layer.

Ozone filters out harmful radiation from the sun. To assist in protecting the ozone layer, Chrysler Corporation recommends an R-l 34a refrigerant recycling device.

Refrigerant R-l 34a is transparent and colorless in both the liquid and vapor state. Since it has a boiling point of –29.8°C (–21.7°F), at atmospheric pressure, it will be a vapor at all normal temperatures and pressures. The vapor is heavier than air, non-flammable, and nonexplosive. The following precautions must be observed when handling R-l 34a.

Caution
Wear safety goggles when servicing the refrigeration system.

R-l 34a evaporates so rapidly at normal atmospheric pressures and temperatures that it tends to freeze anything it contacts. For this reason, extreme care must be taken to prevent any liquid refrigerant from contacting the skin and especially the eyes. Always wear safety goggles when servicing the refrigeration part of the A/C system. Keep a bottle of sterile mineral oil handy when working on the refrigeration system. Should any liquid refrigerant get into the eyes, use a few drops of mineral oil to wash them out. R-134a is rapidly absorbed by the oil. Next splash the eyes with plenty of cool water. Call your doctor immediately even though irritation has ceased after treatment.

Caution
Do not heat R-134a above 40°C (104°F)

In most instances, moderate heat is required to bring the pressure of the refrigerant in its container above the pressure of the system when charging or adding refrigerant.

A bucket or large pan of hot water not over 40°C (104°F) is all the heat required for this purpose. Do not heat the refrigerant container with a blow torch or any other means that would raise temperature and pressure above this temperature. Do not weld or steam clean on or near the system components or refrigerant lines.

Caution
Keep R-134a containers upright when charging the system.

When adding R-134a into the refrigeration system keep the supply tank or cans in an upright position. If the refrigerant container is on its side or upside down, liquid refrigerant will enter the system and damage the compressor.

Caution
1. **A leak detector designed for R-134a should be used to check for refrigerant gas leaks.**
2. **Do not allow liquid refrigerant to touch bright metal.**

Refrigerant will tarnish bright metal and chrome surfaces, and in combination with moisture can severely corrode all metal surfaces.

SERVICE SPECIFICATIONS

55200030073

Items		Standard value
Idle speed r/min	2.0L Engine (Turbo) and 2.4L Engine	750±100
	2.0L Engine (Non-turbo)	800±100
Idle up speed r/min		850± 100 in Neutral
Resistor (for blower motor) Ω	LO	1.83
	ML	0.87
	MH	0.31
Revolution pick up sensor standard resistance <2.0L Engine (Non-turbo)> Ω [when ambient temperature is 20°C (68°F)]		185
Refrigerant temperature switch <2.0L Engine (Turbo) and 2.4L Engine>	ON (continuity) temperature	Approx. 160°C (320°F) or less
	OFF (no continuity) temperature	Approx. 160°C (320°F) or more (until the temperature drops to approx. 130°C (266°F) when OFF)
Air gap (Magnetic clutch) mm (in.)	2.0L Engine (Turbo) and 2.4L Engine	0.4–0.65 (.016–.0256)
	2.0L Engine (Non-turbo)	0.35–0.65 (.0138–.0256)

LUBRICANTS

55200040076

Items	Specified lubricants	Quantity
Each connection of refrigerant line	ND-OIL 8 <2.0L Engine (Non-turbo)>, SUN PAG 56 <2.0L Engine (Turbo) and 2.4L Engine>	As required
Lip seal of the compressor	ND-OIL 8 <2.0L Engine (Non-turbo)>	As required
Compressor refrigerant unit lubricant lubricant cm^3 (fl.oz.)	SUN PAG 56 <2.0L Engine (Turbo) and 2.4L Engine>	170–190 (5.7–6.4)
	ND-OIL 8 <2.0L Engine (Non-turbo)>	80–120 (2.7–4.1)

SPECIAL TOOLS

55200060065

Tool	Tool number and name	Supersession	Application
e Special spanner	MB991 367	MB991367-01	Armature mounting nut of compressor removal and installation <2.0L Engine (Turbo) and 2.4L Engine>
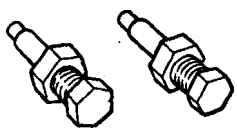	MB991 386 Pin	MIT217213	

TROUBLESHOOTING

55200070181

TROUBLESHOOTING PROCEDURES

Trouble symptom	Problem cause	Remedy	Reference page 2.0L Engine (Non-turbo)	Reference page 2.0L Engine (Turbo) and 2.4L Engine
When the ignition switch is "ON", the A/C does not operate.	A/C compressor clutch relay is defective	Replace A/C compressor clutch relay	55-18	55-18
	Magnetic clutch is defective	Replace the armature plate, rotor or clutch coil	55-40	55-34
	Refrigerant leak or overfilling of refrigerant	Replenish the refrigerant, repair the leak or take out some of the refrigerant	55-10	55-10
	Dual pressure switch is defective	Replace the dual pressure switch	55-45	55-44
	A/C switch is defective	Replace the A/C switch	55-23	55-23
	Blower switch is defective	Replace the blower switch	55-22	55-22
	Fin thermo sensor is defective	Replace the fin thermo sensor	55-30	55-30
	Refrigerant temperature switch is defective <2.0L Engine (Turbo) and 2.4L Engine>	Replace the refrigerant temperature switch	–	55-34
	Automatic compressor-ECM is defective	Replace the automatic compressor-ECM	55-26	55-30
	Revolution pick up sensor is defective <2.0L Engine (Non-turbo)>	Replace the revolution pick up sensor	55-40	–
Air conditioning system does not operate when the air outlet changeover control knob is moved to the DEF or DEF/FOOT position.	A/C compressor relay is defective	Replace A/C compressor clutch relay	55-18	55-18
	Magnetic clutch is defective	Replace the armature plate, rotor or clutch coil	55-40	55-34
	Refrigerant leak or overfilling of refrigerant	Replenish the refrigerant, repair the leak or take out some of the refrigerant	55-10	55-10
	Dual pressure switch is defective	Replace the dual pressure switch	55-45	55-44
	Defroster switch is defective	Replace the defroster switch	55-22	55-22
	Blower switch is defective	Replace the blower switch	55-22	55-22
	Refrigerant temperature switch is defective	Replace the refrigerant temperature switch	–	55-34
	Automatic compressor-ECU is defective	Replace the automatic compressor-ECU	55-26	55-30
	Revolution pick up sensor is defective <2.0L Engine (Non-turbo)>	Replace the revolution pick up sensor	55-40	–

Trouble symptom	Problem cause	Remedy	Reference page 2.0L Engine (Non-turbo)	Reference page 2.0L Engine' (Turbo) and 2.4L Engine
When the A/C is operating, temperature inside the passenger compartment doesn't decrease (no cool air).	Refrigerant leak	Replenish the refrigerant and repair the leak	55-10	55-10
	Dual pressure switch is defective	Replace the dual pressure switch	55-45	55-44
	Fin thermo sensor is defective	Replace the fin thermo sensor	55-30	55-30
	Refrigerant temperature switch is defective <2.0L Engine (Turbo) and 2.4L Engine>	Replace the refrigerant temperature switch	–	55-34
	Automatic compressor-ECM is defective	Replace the automatic compressor-ECM	55-26	55-30
Blower-motor/fan inoperative	Blower moter relay is defective	Replace the blower moter relay	55-17	55-17
	Blower fan and motor is defective	Replace the blower fan and motor	55-26	55-26
	Resistor (for blower motor) is defective	Replace the resistor	55-26	55-26
	Blower switch is defective	Replace the blower switch	55-22	55-22
Blower fan and motor keeps running	Short circuit of the harness between the blower fan and motor and the blower switch	Repair the harness		
	Blower switch is defective	Replace the blower switch	55-22	55-22
	Blower relay is defective	Replace the blower moter relay	55-17	55-17
When the A/C is operating, condenser fan operates.	Condenser fan motor is defective	Replace the condenser fan motor	55-47	55-46
	Condenser fan relay (LO) is defective	Replace the condenser fan relay (LO)	55-18	55-18
	Condenser fan relay (HI) is defective	Replace the condenser fan relay (HI)	55-18	55-18

INSPECTION AT THE AUTOMATIC COMPRESSOR-ECM TERMINAL

<2.0L Engine (Turbo) and 2.4L Engine>

Terminal No.	Name of Signal	Check requirements	Terminal voltage
1	Automatic compressor-ECM power supply (output side)	The ignition switch, blower switch and A/C switch are all ON	Battery positive voltage
2	Automatic compressor-ECM power supply (input side)	The ignition switch, blower switch and A/C switch are all ON	Battery positive voltage
3	Automatic compressor-ECM ground	–	0 V

<2.0L Engine (Non-turbo)>

Terminal No.	Name of Signal	Check requirements	Terminal voltage
1	A/C compressor clutch relay	When the compressor ON conditions are satisfied	Battery positive voltage
2	Automatic compressor-ECM ground	–	ov
4	Automatic compressor-ECM power supply (input side)	The ignition switch, blower switch and A/C switch are all ON	Battery positive voltage
5	Automatic compressor-ECM power supply	The ignition switch is ON	Battery positive voltage
8	Sensor ground		ov
9	Automatic compressor-ECM power supply (output side)	The ignition switch, blower switch and A/C switch are all ON	Battery positive voltage
12	Fin thermo sensor power supply	The ignition switch, blower switch and A/C switch are all ON	5V

TROUBLESHOOTING HINTS

<Condenser fan and radiator fan control>

- Refer to COOLING SYSTEM TROUBLE-SHOOTING.

<Compressor control>

- Refer to P.55-3.

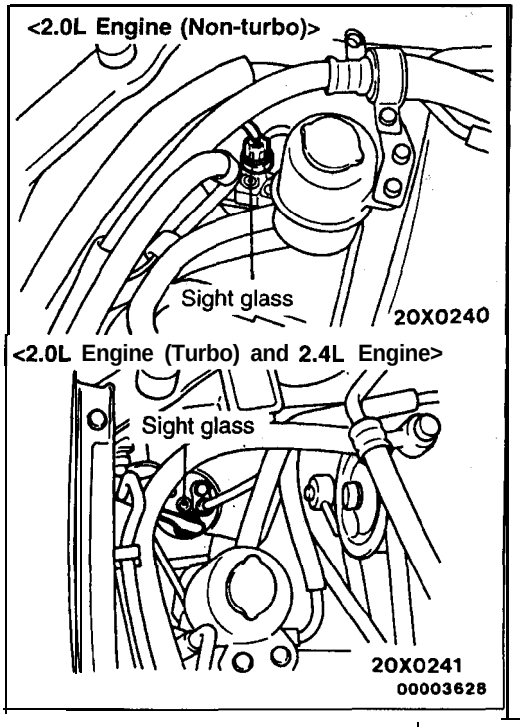

ON-VEHICLE SERVICE 55200840058

SIGHT GLASS REFRIGERANT LEVEL TEST

The sight glass is a refrigerant level indicator. To check the refrigerant level, clean the sight glass and start the vehicle, engine. Push the A/C button to operate the compressor, place the blower switch to high and move the temperature control dial to max cool. After operating for a few minutes in this manner, check the sight glass.

1. If the sight glass is clear, the magnetic clutch is engaged, the compressor discharge line is warm and the compressor suction line is cool; the system has a full charge.
2. If the sight glass is clear, the magnetic clutch is engaged and there is no significant temperature difference between compressor suction and discharge lines; the system has most of its refrigerant charge.
3. If the sight glass shows foam or bubbles, the system could be low on refrigerant or the receiver drier is restricted. The system has to be tested, leak checked then recharged with refrigerant.

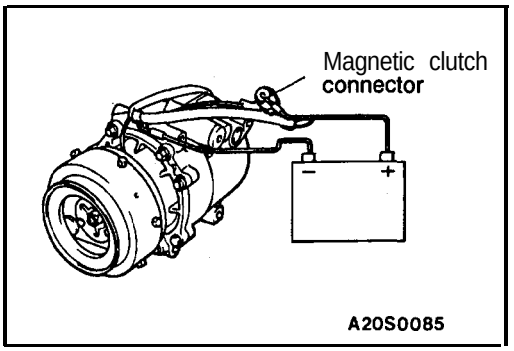

MAGNETIC CLUTCH TEST

55200850051

1. Disconnect the connector (1 P) to the magnetic clutch.
2. Connect battery (–) to compressor body.
3. Connect battery (+) voltage directly to the connector for the magnetic clutch.
4. If the magnetic clutch is normal, there will be a "click". If the pulley and armature do not make contact ('click'), there is a malfunction.

RECEIVER DRIER TEST

55200860054

Operate the unit and check the piping temperature by touching the receiver drier outlet and inlet.
If there is a difference in the temperatures, the receiver drier is restricted.
Replace the receiver drier.

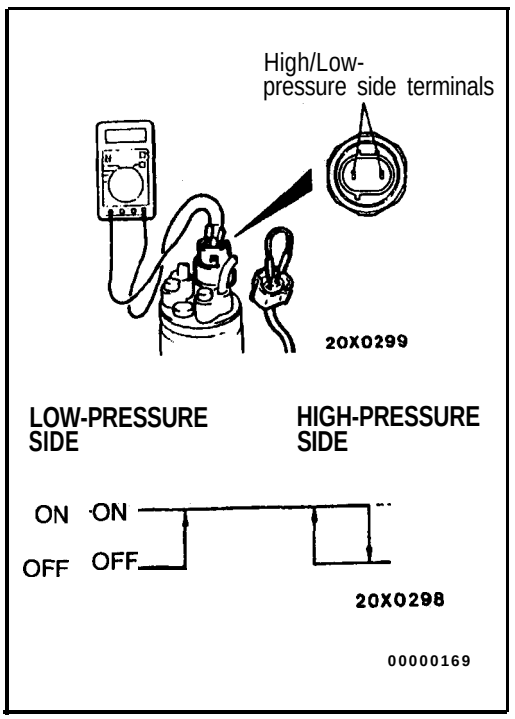

DUAL PRESSURE SWITCH CHECK

55201040082

1. Remove the dual pressure switch connector and connect the high/low-pressure side terminals located on the harness side as shown in the illustration.
2. install *a* gauge manifold to the high-pressure side service valve of the refrigerant line. (Refer to Performance Test.)
3. When the high/low-pressure sides of the dual pressure switch are at operating pressure (ON) and there is continuity between the respective terminals, then the condition is normal. If there is no continuity, replace the switch.

Unit: kPa (psi)

Items	Switch position	
	OFF → ON	ON → OFF
Low-pressure side	2 2 0 (3 2)	200 (29)
High-pressure side	2,550 (370)	3,140 (456)

COMPRESSOR DRIVE BELT ADJUSTMENT

55200100064

Refer to GROUP 11A - On-vehicle Service.
Refer to GROUP 11C - On-vehicle Service.
Refer to GROUP 11 E - On-vehicle Service.

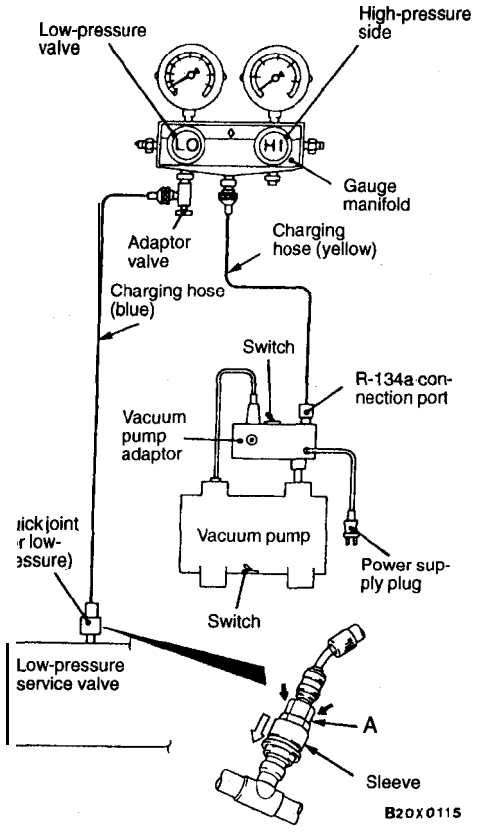

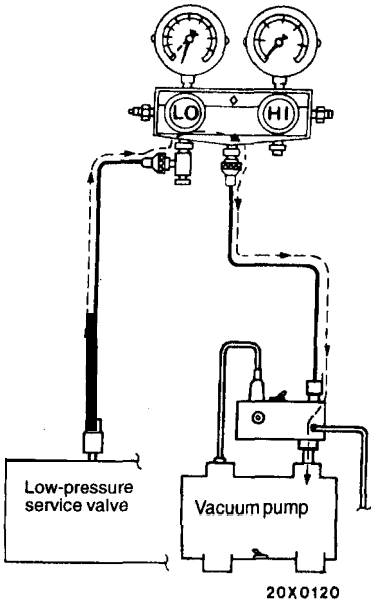

CHARGING

55200120060

1. With the handles turned in all the way (valve closed), install the adaptor valve to the low-pressure side of the gauge manifold.
2. Connect the charging hose (blue) to the adaptor valve.
3. Connect the quick joint (for low-pressure) to the charging hose (blue).
4. Connect the quick joint (for low-pressure) to the low-pressure service valve.

   NOTE
   The low-pressure service valve should be connected to the suction hose.

   Caution
   1. Use tools that are designed for R-134a.
   2. To install the quick joint, press section A firmly against the service valve until a click is heard. When connecting, run your hand along the hose while pressing to ensure that there are no bends in the hose.

5. Close the high and low-pressure valves of the gauge manifold.
6. Install the vacuum pump adaptor to the vacuum pump.
7. Connect the vacuum pump plug to the vacuum pump adaptor.
8. Connect the charging hose (yellow) to the R-134a connection port of the vacuum pump adaptor.
9. Tighten the adaptor valve handle (valve open).
10. Open the low-pressure valve of the gauge manifold.
11. Turn the power switch of the vacuum pump to the ON position.

    NOTE
    Even if the vacuum pump power switch is, turned ON, the vacuum pump will not operate because of the power supply connection in step (7).

12. Turn the vacuum pump adaptor switch to the R-134a side to start the vacuum pump.

    Caution
    Do not operate the A/C compressor during evacuation.

13. Evacuate to a vacuum reading of 100 kPa (29.5 in.Hg) or higher (takes approx. 10 minutes).
14. Turn the vacuum pump adaptor switch OFF and allow to stand it for 5 minutes.

    Caution
    Do not operate the compressor in the vacuum condition; damage may occur.

15. Carry out a leak test. (Good if the negative pressure does not drop.)

    Caution
    If the negative pressure (vacuum) is lost, check for loose connections. Then, repeat the evacuation procedure from step 12. If negative pressure (vacuum) is still lost, add 1 lb of refrigerant and check system using an R-134a compatible leak detector.

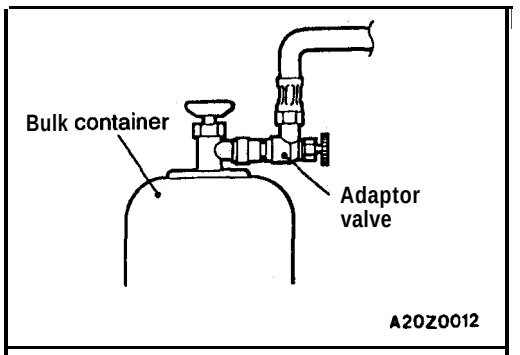

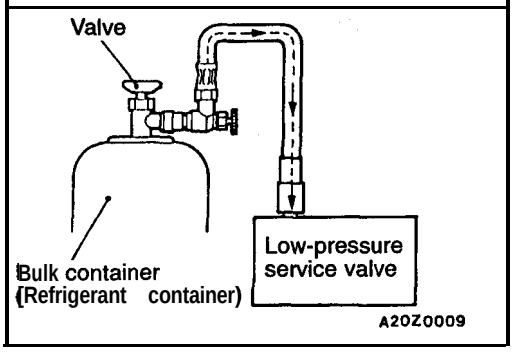

16. **Turn** the handle of the adaptor valve back **all** the way (valve closed), remove it from the gauge manifold and install the bulk container.

17.. Open the valve of the bulk container.
18. Tighten the handle of the adaptor valve (valve open) to charge the system with refrigerant.

Caution
If the bulk container is inverted, liquid refrigerant may be drawn into the compressor damaging it by hydraulic lock. Keep the bulk container upright to ensure that refrigerant is charged in gas state.

19. If the refrigerant is not drawn in, turn the handle of the adaptor valve back all the. way (valve closed).
20. Check for gas leaks using a leak detector.
If a gas leak is detected, re-tighten the connections, and then repeat the charging procedure from evacuation in step (12).

Caution
A leak detector designed for R-134a should be used.

21. Start the engine.
22. Operate the A/C and set to the lowest temperature (MAX. COOL).
23. Fix the engine speed at 1,500 r/min.
24. Tighten the handle of the adaptor valve (valve open) to charge the required volume of refrigerant.

Caution
If the bulk container is inverted, liquid refrigerant may be drawn into the compressor damaging it by hydraulic lock. Keep the bulk container upright to ensure that refrigerant is charged in gas state.

25. After charging with refrigerant, turn the handle of the adaptor valve back all the way (valve closed).
26. Tighten the charging valve handle (valve closed).
Remove the quick joint (for low pressure) from the low-pressure service valve.

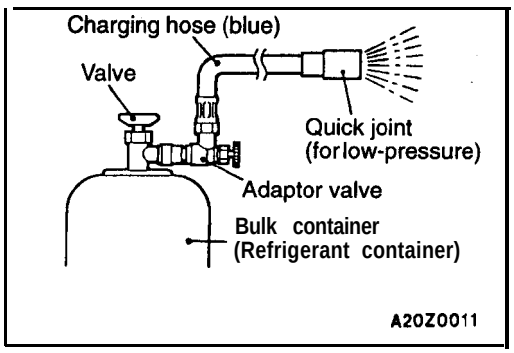

CORRECTING LOW REFRIGERANT LEVEL IN CASE THE BULK CONTAINER IS USED

1. Install the adaptor value with the handle turned all the way in (valve close) to the bulk container.
2. Connect the charging hose (blue) to the adaptor valve.
3. Connect the charging hose (blue) to the quick joint (for low-pressure).
4. Open the valve of the bulk container.
5. Turn the handle of the adaptor valve to bleed the air.

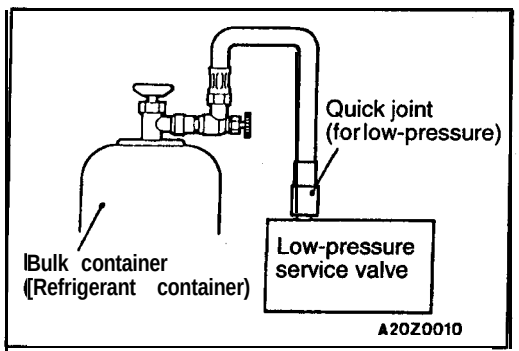

6. Install the quick joint (for low-pressure) to the low-pressure service valve.

   NOTE
   The low-pressure service valve should be connected to the suction hose.

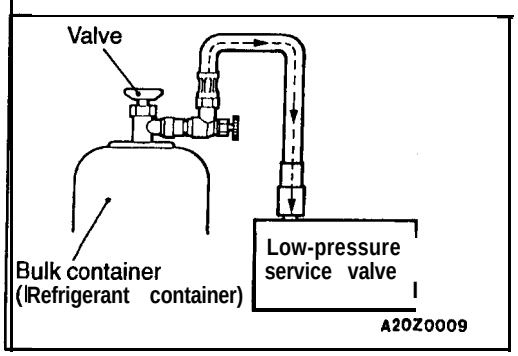

7. Start the engine.

a. Operate the air conditioner and set at the lowest temperature (MAX. COOL).

9. Fix the engine speed at 1,500 r/min.
10. Tighten the handle of the adaptor valve (valve open), and replenish refrigerant checking the quantity through the sight glass.

    Caution
    If the bulk container is inverted, liquid refrigerant may be draw into the compressor damaging it by hydraulic lock. Keep the bulk container upright to ensure that refrigerant is charged in gas state.

11. After replenishing is completed, turn the handle of the adaptor valve all the way in (valve close), and remove the quick joint.

METHOD BY USING REFRIGERANT RECOVERY AND RECYCLING UNIT

Using the refrigerant recovery and recycling unit, refill the refrigerant.

NOTE
Refer to that Refrigerant Recovery and Recycling Unit Instruction Manual for operation of the unit.

DISCHARGING SYSTEM

Use the refrigerant recovery unit to discharge refrigerant gas from the system.

NOTE
Refer to that Refrigerant Recovery and Recycling Unit Instruction Manual for operation of the unit.

REFILLING OF OIL IN THE A/C SYSTEM

Too little oil will provide inadequate compressor lubrication and cause a compressor failure. Too much oil will increase discharge air temperature.
When a compressor is installed at the factory, it contains 170 cm^3 (5.7 fl.oz.) <2.0L Engine (Turbo) and 2.4L Engine> 100 cm^3 (3.4 fl.oz.) <2.0L Engine (Non-turbo)> of refrigerant oil. While the A/C system is in operation, the oil is carried through the entire system by the refrigerant. Some of this oil will be trapped and retained in various parts of the system. When the following system components are changed, it is necessary to add oil to the system to replace the oil being removed with the component.

<2.0L Engine (Turbo) and 2.4L Engine>
Compressor oil: SUN PAG 56
- **Quantity**
  - **Evaporator: 60 cm^3 (2.03 fl.oz.)**
  - **Condenser: 15 cm^3 (.51 fl.oz.)**
  - **Suction hose: 10 cm^3 (.34 fl.oz.)**
  - **Receiver: 10 cm^3 (.34 fl.oz.)**

<2.0L Engine (Non-turbo)>
Compressor oil: ND-OIL 8
- **Quantity**
  - **Evaporator: 40 cm^3 (1.35 fl.oz.)**
  - **Condenser: 40 cm^3 (1.35 fl.oz.)**
  - **Suction hose: 10 cm^3 (.34 fl.oz.)**
  - **Receiver: 16 cm^3 (.34 fl.oz.)**

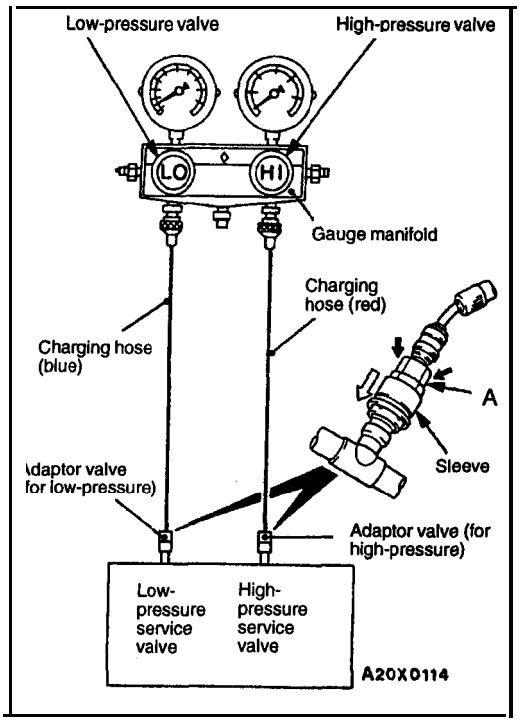

PERFORMANCE TEST

55200140066

1. The vehicles to be tested should be in a place that is not in direct sunlight.
2. Close the high and low-pressure valve of the gauge manifold.
3. Connect the charging hose (blue) to the low-pressure valve and connect the charging hose (red) to the high-pressure valve of the gauge manifold.
4. Install the quick joint (for low-pressure) to the charging hose (blue), and connect the quick joint (for high-pressure) to the charging hose (red).
5. Connect the quick joint (for low-pressure) to the low-pressure service valve and connect the quick joint (for high-pressure) to the high-pressure service valve.

   NOTE
   The high-pressure service valve is on discharge pipe **B,** and the low-pressure service valve is on the suction hose.

   Caution
   To connect the quick joint, press section A firmly against the service valve until a click is heard. When connecting, run your hand along the hose while pressing to ensure that there are no bends in the hose.

6. Start the engine.
7. Set the A/C controls as follows:
   A/C switch: A/C – ON position
   Mode selection: Face position
   Temperature control: Max. cooling position
   Air selection: Recirculation position
   Blower switch: HI (Fast) position
8. Adjust engine speed to 1,000 **r/min** with A/C clutch engaged.
9. Engine should be warmed up with doors and windows closed.

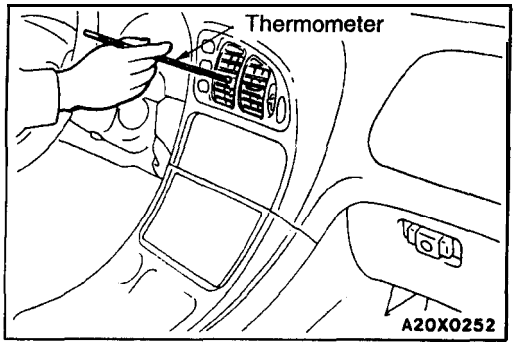

10. **Insert** a thermometer in the left center A/C outlet and operate the engine for 20 minutes.
11. Note the discharge air temperature.

    NOTE
    If the clutch cycles, take the reading before the clutch disengages.

Performance Temperature Chart

Garage ambient temperature °C (°F)	20 (68)	25 (77)	35 (95)	40 (104)
Discharge air temperature °C (°F)	**2.5–5.0** (37-41)	**3.0–6.0** (37-43)	3.5-7.5 (38-46)	**4.0–8.0** (39-46)
Compressor high pressure kPa (psi)	**700–900** (101.6– 130.6)	**740–1,100** (107.4–159.6)	750– 1,350 (108.8–195.4)	960– 1,570 (139.3-227.8)
Compressor low pressure kPa (psi)	**140** (20.3)	**140–210** (20.3–30.5)	140–220 (20.3–31.9)	150–230 (21.8–33.4)

REFRIGERANT LEAK REPAIR

55200150069

LOST CHARGE

If the system has lost all charge due to a leak:

1. Evacuate the system. (See procedure.)
2. Charge the system with approximately one pound of refrigerant.
3. Check for leaks.
4. Discharge the system.
5. Repair leaks.
6. Replace receiver drier.

Caution
Replacement filter-drier units must be sealed while in storage. The drier used in these units will absorb water/water vapor quickly upon exposure to the atmosphere. When installing a drier, have all tools and supplies ready for quick reassembly to avoid keeping the system open *any* longer than necessary.

7. Evacuate and charge system.

LOW CHARGE

If the system has not lost all of its refrigerant charge; locate and repair all leaks. If it is necessary to increase the system pressure to find the leak (because of an especially **low charge) add refrigerant.** If it is possible to repair the leak without discharging the refrigerant system, use the procedure **for correcting** low refrigerant level.

HANDLING TUBING AND FITTINGS

Kinks in the refrigerant tubing or sharp bends in the refrigerant hose lines will greatly reduce the capacity of the entire system. High pressures are produced in the system when it is operating. Extreme care must be exercised to make sure that all connections are pressure tight. Dirt and moisture can enter the system when it is opened for repair or replacement of lines or components. The following precautions must be observed. The system must be completely discharged before opening any fitting or connection in the refrigeration system. Open fittings with caution even after the system has been discharged. If any pressure is noticed as a fitting is loosened, allow trapped pressure to bleed off very slowly.
Never attempt to rebend formed lines to fit. Use the correct line for the installation you are servicing.
A good rule for the flexible hose lines is keep the radius of all bends at least 10 times the diameter of the hose.
Sharper bends will reduce the flow of refrigerant.
The flexible hose lines should be routed so that they are at least 80 mm (3 in.) from the exhaust manifold.
It is good practice to inspect all flexible hose lines at least once a year to make sure they are in good condition and properly routed.
O-rings used on connections are not reusable.

COMPRESSOR NOISE CHECK

55200870057

You must first know the conditions when the noise occurs. These conditions are: weather, vehicle speed, in gear or neutral, engine temperature or any other special conditions.

Noises that develop during A/C operation can often be misleading. For example: what sounds like a failed front bearing or connecting rod, may be caused by loose bolts, nuts, mounting brackets, or a loose clutch assembly. Verify accessory drive belt tension (power steering or generator).

Improper accessory drive belt tension can cause a misleading noise when the compressor is engaged and little or no noise when the compressor is disengaged.

Drive belts are speed-sensitive. That is, at different engine speeds, and depending upon belt tension, belts can develop unusual noises that are often mistaken for mechanical problems within the compressor.

ADJUSTMENT

1. Select a quiet area for testing. Duplicate conditions as much as possible. Switch compressor on and off several times to clearly identify compressor noise. To duplicate high ambient conditions (high head pressure), restrict air flow through condenser. Install manifold gauge set to make sure discharge pressure doesn't exceed 2,070 kPa (300 psi).
2. Tighten all compressor mounting bolts, clutch mounting bolt, and compressor drive belt. Check to assure clutch coil is tight (no rotation or wobble).
3. Check refrigerant hoses for rubbing or interference that can cause unusual noises.
4. Check refrigerant charge. (Refer to P.55-10.)
5. Recheck compressor noise as in Step 1.
6. If noise still exists, loosen compressor mounting bolts and retorque. Repeat Step 1.
7. If noise continues, replace compressor and repeat Step 1.

IDLE-UP OPERATION CHECK

55200160086

1, Before inspection and adjustment, set vehicle in the f&w-ing condition:
- Engine coolant temperature: 80–90°C (176–194°F)
- Lights, electric cooling fan and accessories: Set to OFF
- Transmission: Neutral (N or P for vehicles with A/T)
- Steering wheel: Straightforward

2. Check whether or not the idling speed is the standard value.

Standard value:
750± 100 r/min
<2.0L Engine (Turbo) and 2.4L Engine>
800± 100 r/min <2.0L Engine (Non-turbo)>

3. When the A/C is running after turning the A/C switch to ON, and the blower switch to the MH or HI position, check to be sure that the idle speed is at the standard value.

Standard value: 850±100 r/min (in Neutral)

NOTE
Idle speed is controlled by the ISC system and is not adjustable. If, idle speed is not within specifications, check the ISC system.
(<2.0L Engine (Non-turbo)>: Refer to GROUP 13A - On-vehicle Service.)
(<2.0L Engine (Turbo)>: Refer to GROUP 13A - On-vehicle Service.)
(<2.4L Engine>: Refer to GROUP 13A - On-vehicle Service.)

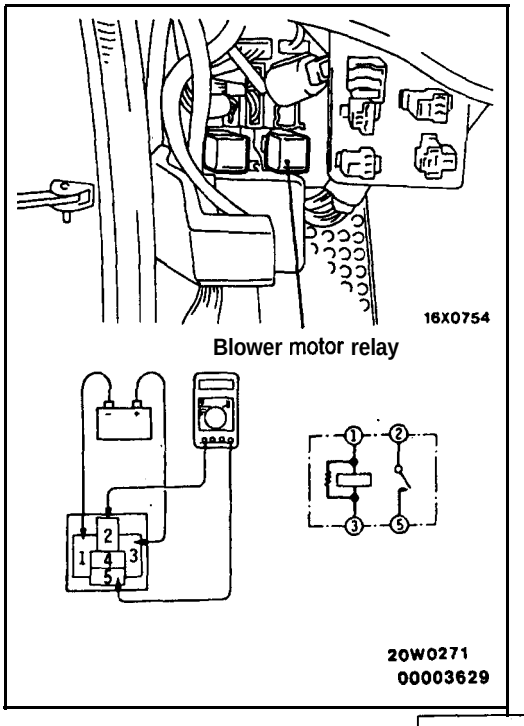

POWER RELAY CHECK

55200880081

BLOWER MOTOR RELAY CONTINUITY CHECK

Battery voltage	Terminal No.			
	1	2	3	5
Power is not supplied	0		0	
Power is supplied	–		⊕	
		0		0

TSB Revision

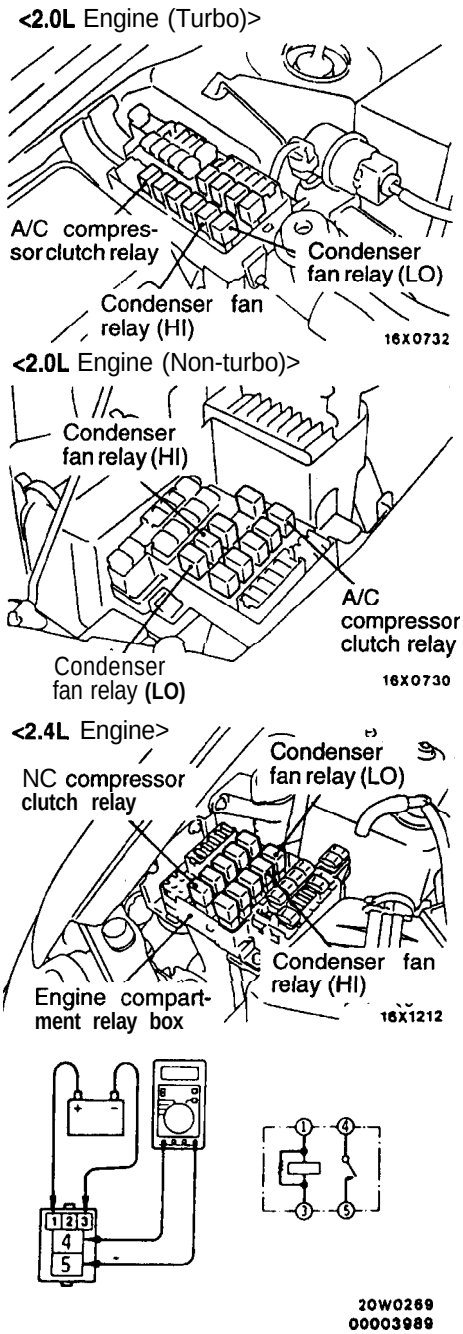

A/C COMPRESSOR CLUTCH RELAY, CONDENSER FAN RELAY (LO) AND (HI) CONTINUITY CHECK

Battery voltage	Terminal No.			
	1	3	4	5
Power is not supplied	0	○		
Power is supplied	⊕	⊖	0	○

TSB Revision

HEATER CONTROL ASSEMBLY

55100110064

REMOVAL AND INSTALLATION

CAUTION: SRS
When removing and installing the floor console assembly from vehicles equipped with SRS, do not let it bump against the SRS - ECU or the components.

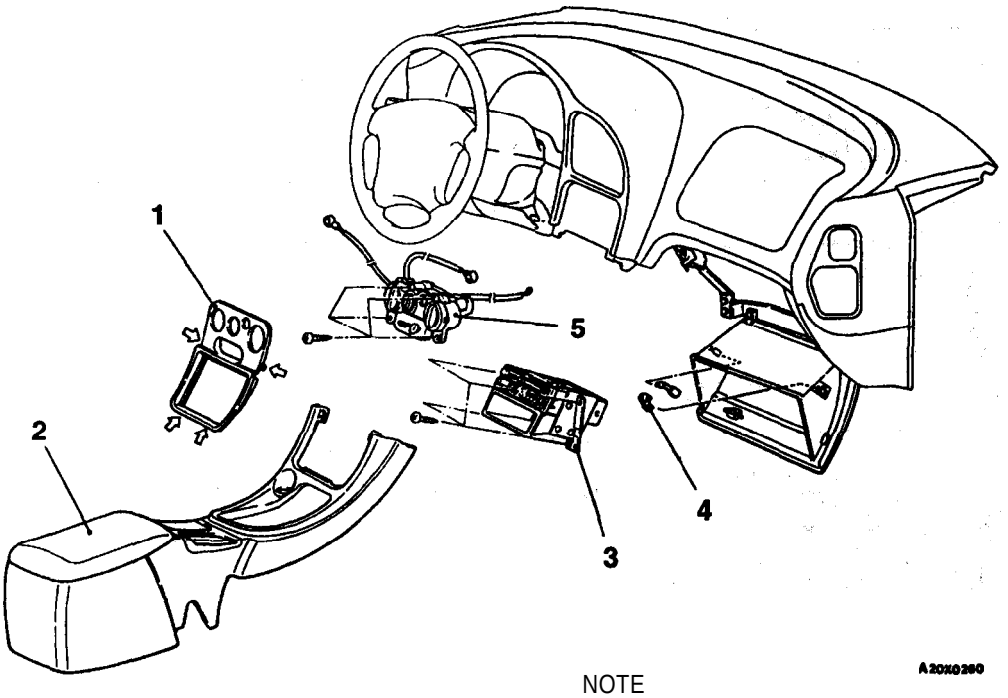

NOTE
⇦ indicates sheet metal clip positions.

Removal steps

1. Center panel
2. Floor console (Refer to GROUP 52A - Floor Console.)
3. Radio, tape player and CD player (Refer to GROUP 54 - Radio, Tape Player, CD player, Amplifer, Speaker and Antenna.)
4. Stopper
◀A▶ ▶A◀ 5. Heater control assembly

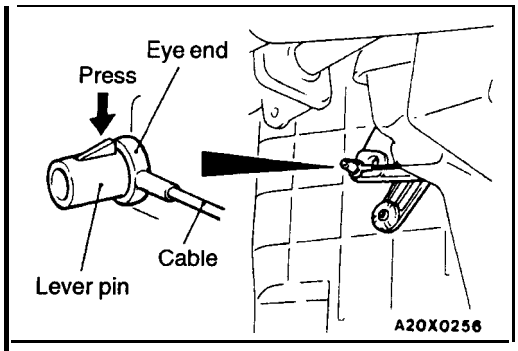

REMOVAL SERVICE POINT

◀A▶ HEATER CONTROL ASSEMBLY REMOVAL

(1) Press the lever pin to disconnect the air outlet changeover damper cable.

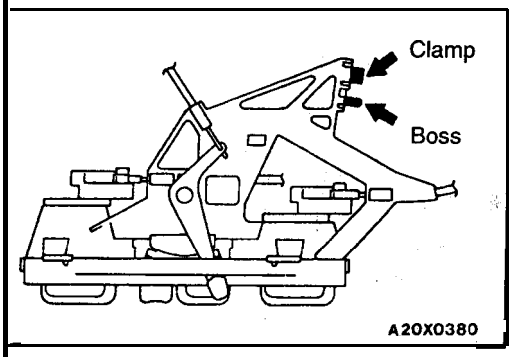

(2) Snap the boss and clamp with nippers or a flat-tipped screwdriver, etc to remove the heater control assembly.

NOTE
The boss and clamp are needed for assembly line at the factory, but not needed for service work.

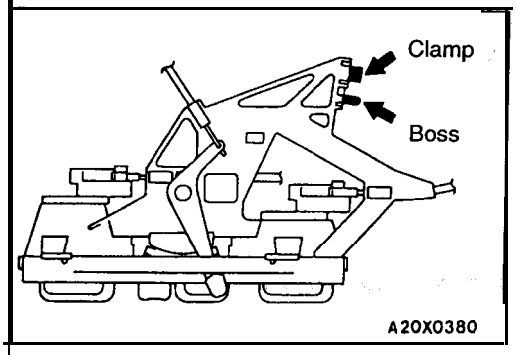

INSTALLATION SERVICE POINTS

▶A◀ HEATER CONTROL ASSEMBLY INSTALLATION

(1) Always snap the boss and clamp before installing a new heater control assembly to the instrument panel.

NOTE
The boss and clamp are 'needed for assembly line at the factory, but not needed for service work.

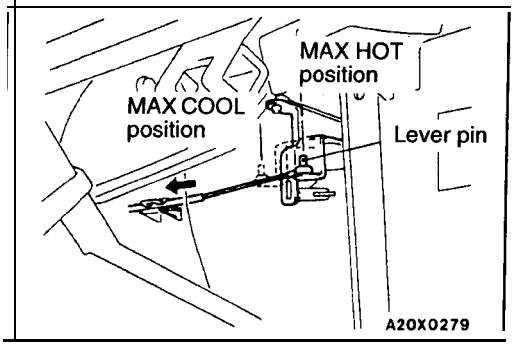

(2) Set the temperature control knob on the heater control assembly to MAX HOT.
(3) Set the air mix damper lever. at, the upper part of the heater unit to the MAX HOT position, and install the cable to the lever pin.
(4) Push the outer cable in the direction of the arrow so that there is no looseness, and then 'secure it with the clip.

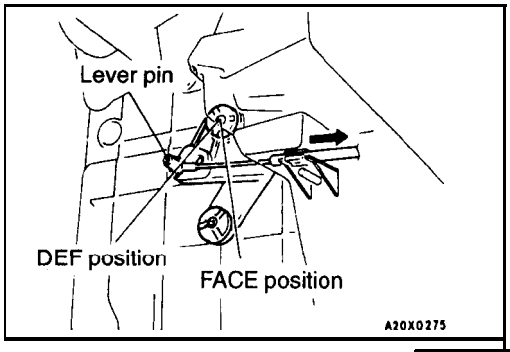

(5) Set the knob for the air outlet changeover on the heater control assembly to the DEF position.
(6) Set the air outlet changeover damper lever of the heater unit to DEF position and install the cable to the lever pin.
(7) Push the outer cable in the direction of the arrow so that there is no looseness, and then secure it with the clip.

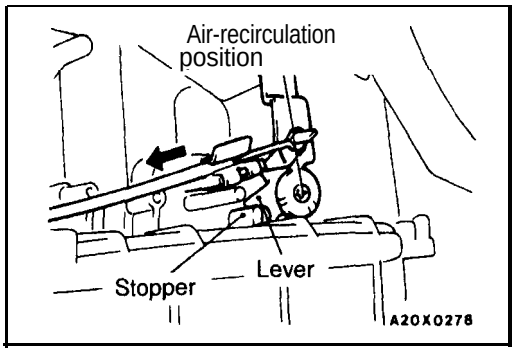

(8) Set the lever for the **inside/outside air changeover on** the heater control assembly to the air-recirculation position.
(9) Set the inside/outside air changeover damper lever of the blower unit to air-recirculation, position (with the inside/outside air changeover damper lever touched to the stopper of the blower case) and install the cable to the lever pin.
(10) Push the outer cable in the direction of the arrow so that there is no looseness, and then secure it with the clip.

INSPECTION

55100120029

- Check each knob and lever for proper operation and possible damage.
- Check the connection between the lever and cable.
- Check that the cable sides properly.
- Check the illumination light for a possible broken filament.

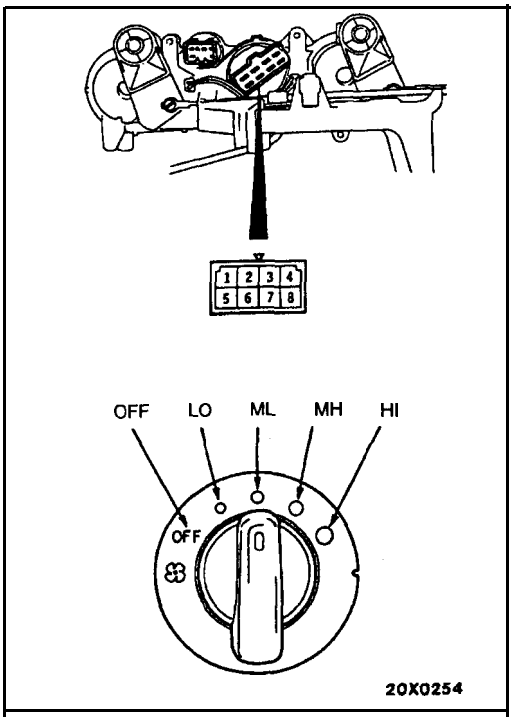

BLOWER SWITCH CONTINUITY CHECK

55200250042

Switch position	Terminal No. 1	2	3	4	5	6	7	8
OFF								
• (LO)	○		○	○	○			○
• (ML)	○				○	○		○
(MH)	○	○		○	○			○
● (HI)	○			○	○		○	○

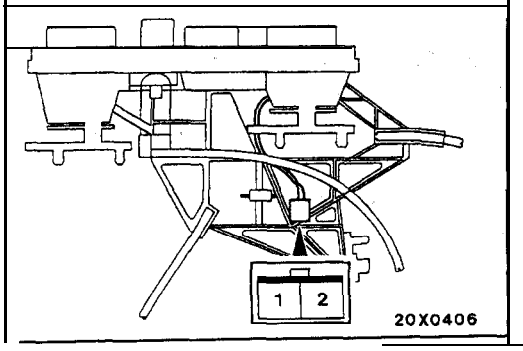

DEFROSTER SWITCH CONTINUITY CHECK

Air outlet changeover control knob position	Terminal No. 1	2
DEF, DEF/FOOT	○	○
Other than the above		

DISASSEMBLY AND REASSEMBLY

55100130053

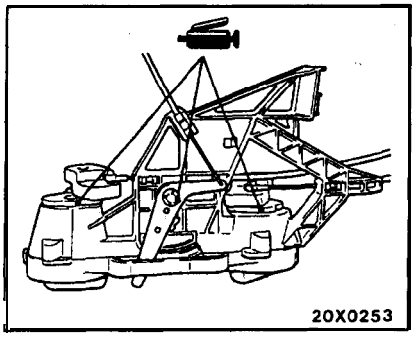

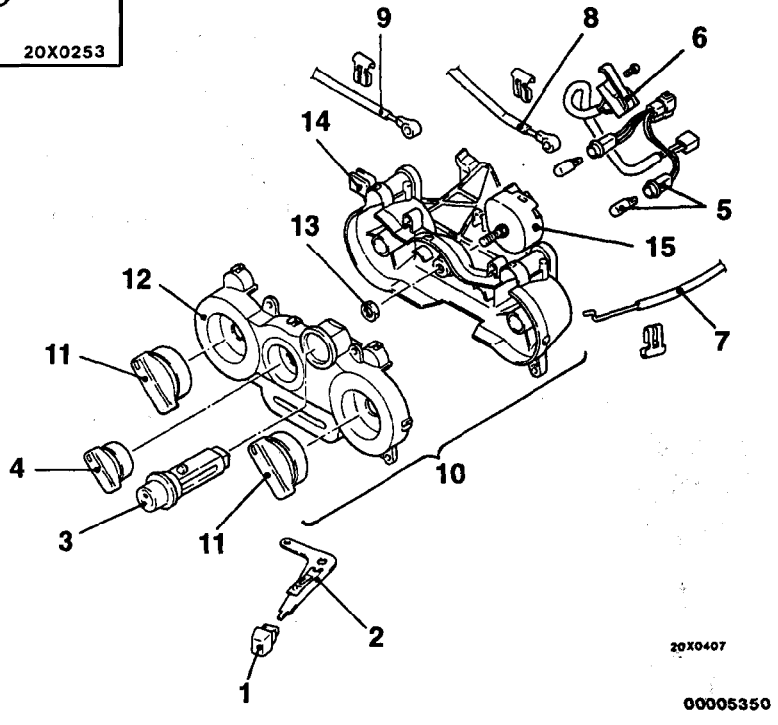

Disassembly steps

1. Knob
2. Lever assembly
3. Air conditioning switch
4. Knob assembly B
5. Bulb and socket assembly
6. Defroster switch
7. ◀A▶ Air outlet changeover damper cable
8. ◀A▶ Air mix damper cable
9. ◀A▶ Inside/outside air changeover damper cable
10. Control base assembly
11. Knob assembly A
12. Panel case
13. Nut
14. Control base
15. Blower switch

NOTE
Parts from No. 11 to No. 14 are not supplied as single parts.

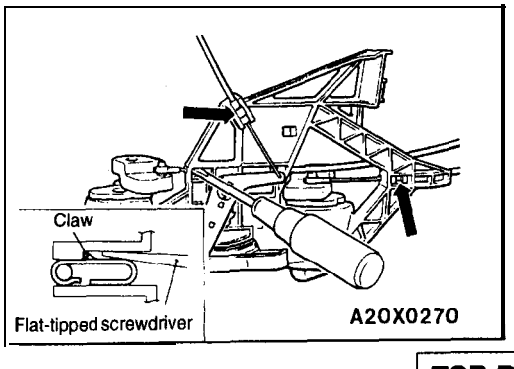

DISASSEMBLY SERVICE POINT

◀A▶ AIR OUTLET CHANGEOVER DAMPER CABLE/AIR MIXING DAMPER CABLE/ INSIDE/OUTSIDE AIR CHANGEOVER DAMPER CABLE REMOVAL

Insert a flat-tipped screwdriver to disengage the claws, and then remove the cables.

TSB Revision

AIR CONDITIONING SWITCH

55200210033

REMOVAL AND INSTALLATION

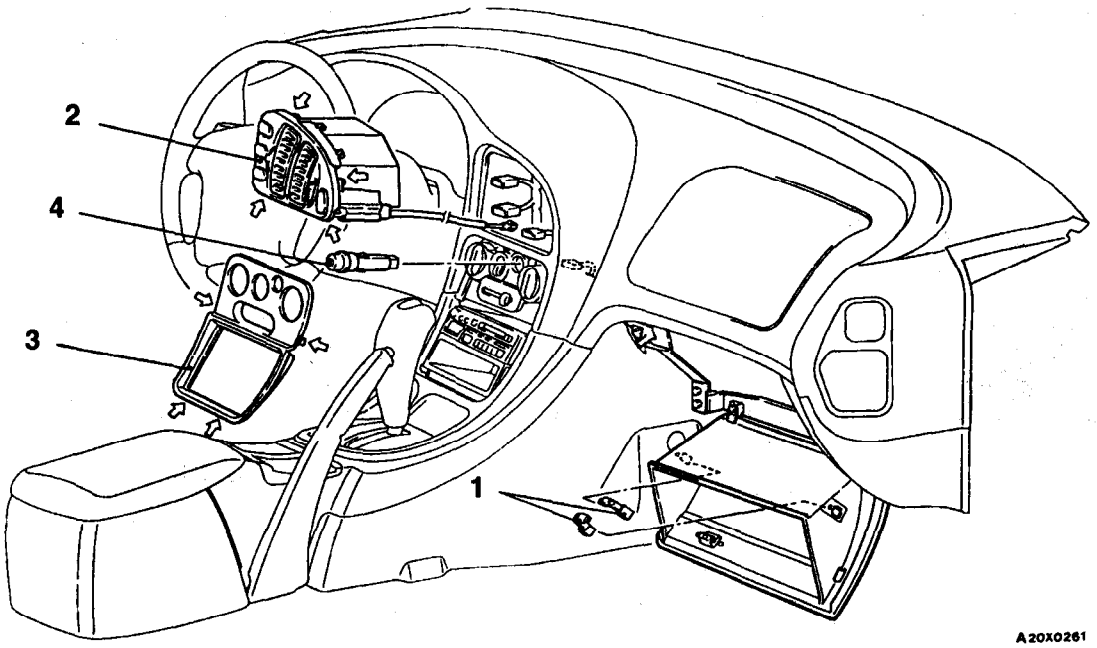

NOTE
⇦ indicates sheet metal clip positions.

Removal steps

1. Stopper
▶A◀ 2. Center air outlet
3. Center panel
4. Air conditioning switch

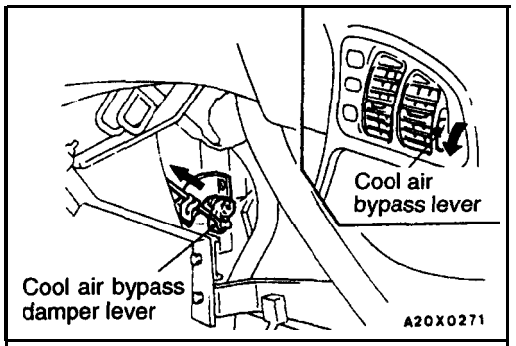

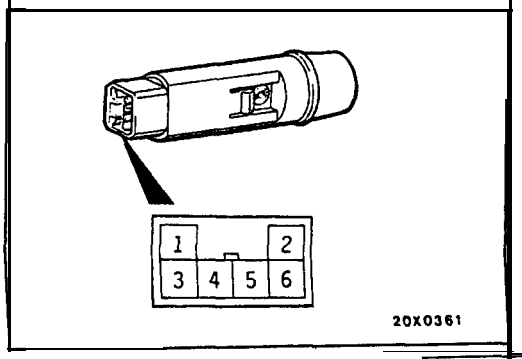

INSTALLATION SERVICE POINT

▶A◀ CENTER AIR OUTLET INSTALLATION

(1) Turn the cool air bypass lever of the center air outlet fully downward.
(2) Pull the cool air bypass damper lever on the heater unit side all the way toward you, and then connect the cable to the lever pin.
(3) Push the outer cable in the direction of the arrow so that there is no looseness, and then secure it with the clip.

INSPECTION

55200220043

AIR CONDITIONING SWITCH CONTINUITY CHECK

Switch position	Terminal No.						
	1	4	IND	5	3	ILL	6
OFF	○		▶	○	○	◎	○
ON	○	○	▶	○	○	◎	○

HEATER UNIT AND HEATER CORE

55100190075

REMOVAL AND INSTALLATION

Post-installation Operation
Refilling Coolant

CAUTION: SRS
When removing and installing the floor console assembly from vehicles equipped with SRS, do not let it bump against the SRS- ECU or the components.

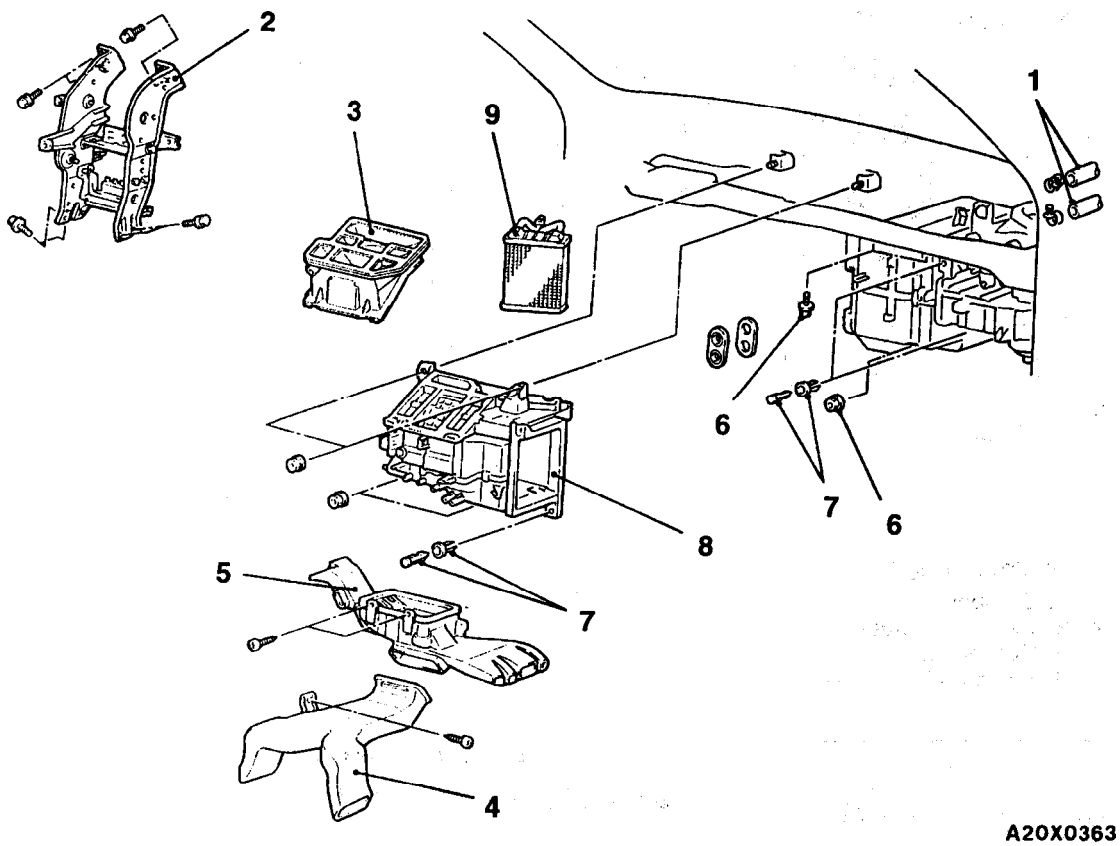

Removal steps

- Instrument panel (Refer to GROUP 52A - Instrument Panel.)

◀A▶ 1. Heater hose connection
2. Center stay
3. Center duct
4. Semi rear heater duct
5. Foot distribution duct
6. Cooling unit installation bolt and nut <Vehicles with A/C>

◀B▶ ◀C▶ ▶A◀ 7. Clip
8. Heater unit
9. Heater core

TSB Revision

REMOVAL SERVICE POINTS

◀A▶ HEATER HOSE DISCONNECTION"

Caution
The vehicle speed sensor for non-turbo (M/T) is below the heater, hoses, so cover the vehicle speed sensor with a shop towel before removing any of the hoses.

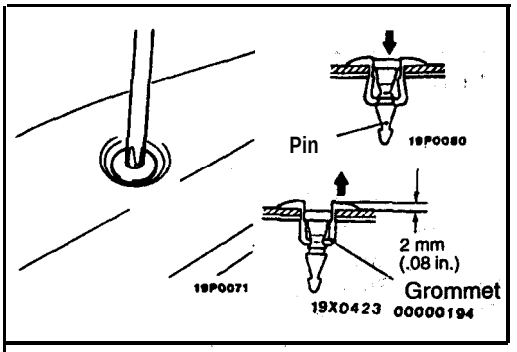

◀B▶ CLIP REMOVAL

(1) Use a Philips-head screwdriver to push inward the pin (at the center of the clip) to a depth of about 2 mm (.08 in.).
(2) Pull the clip outward to remove. it.

Caution
Do not push the pin inward more than necessary because it may damage the grommet, or the pin may fall in, if pushed too far.

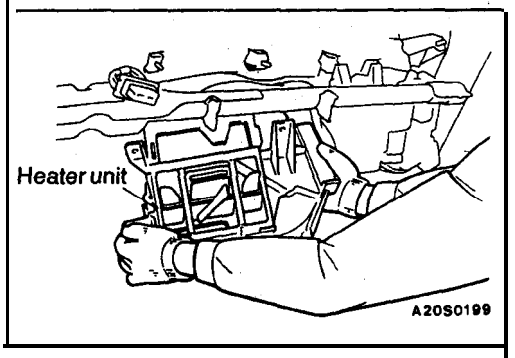

◀C▶ HEATER UNIT REMOVAL

After sliding the cooling unit towards you slightly, remove the heater unit.

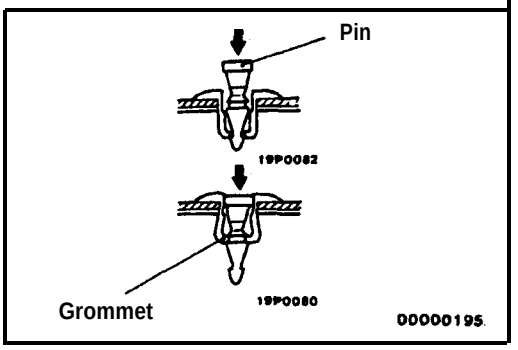

INSTALLATION SERVICE POINT

▶A◀ CLIP INSTALLATION

(1) With the pin pulled out, insert the clip into the hole.
(2) Push the pin inward until the pin's head is flush with the grommet.

BLOWER ASSEMBLY AND RESISTOR

55100280079

REMOVAL AND INSTALLATION

CAUTION: SRS
When removing and installing the floor console assembly from vehicles equipped with SRS, do not let it bump against the SRS - ECU or other components.

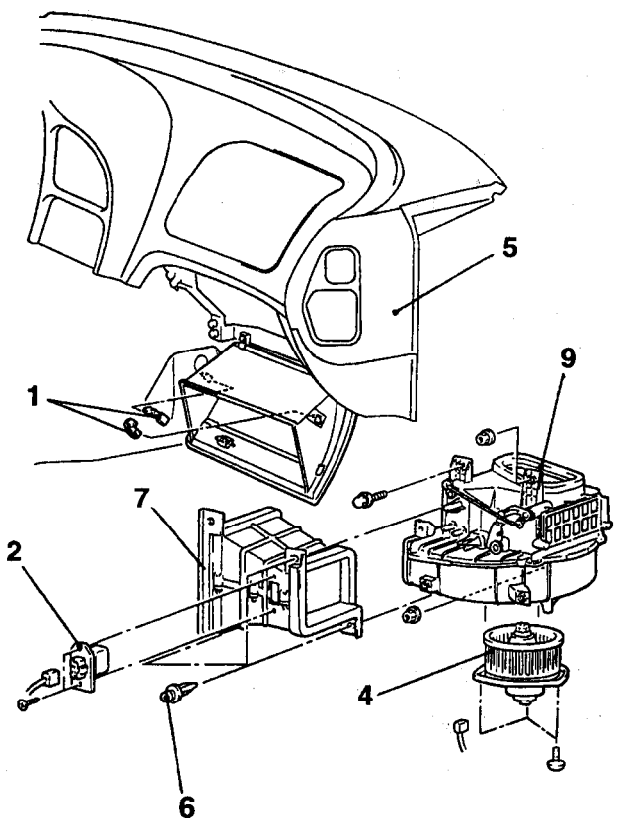

20X0263

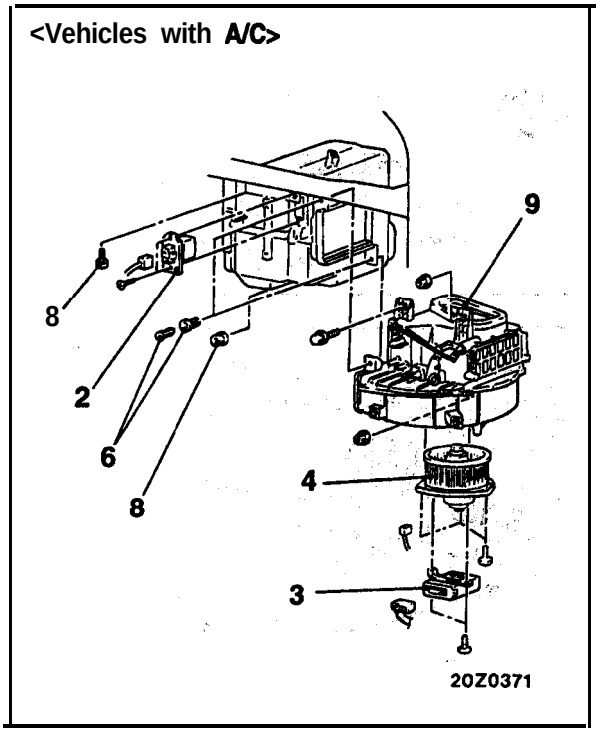

00003633

Resistor removal steps

1. Stopper
2. Resistor

Blower fan and motor removal steps

3. Automatic compressor-ECM <Vehicles with A/C for non-turbo>
4. Blower fan and motor

Blower unit removal steps

5. Instrument panel (Refer to GROUP 52A - Instrument Panel)
◀A▶ ▶A◀ 6. Clip
7. Joint duct <Vehicles without A/C>
8. Cooling unit installation bolts and nuts <Vehicles with A/C>
9. Blower unit assembly

TSB Revision

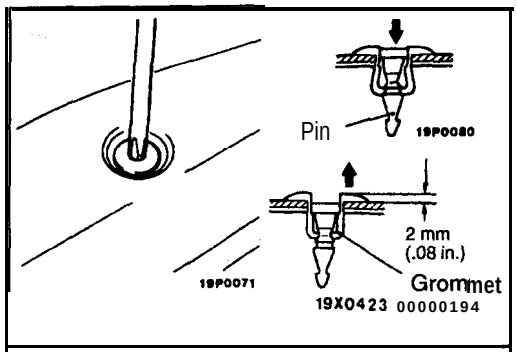

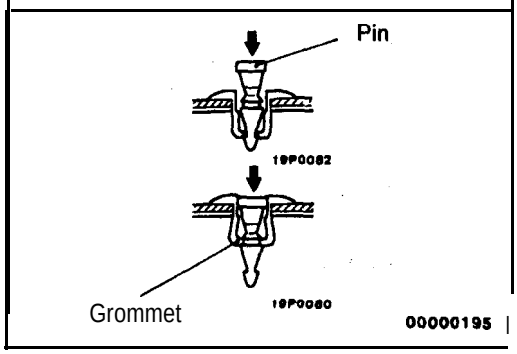

REMOVAL SERVICE POINT

◀A▶ CLIP REMOVAL

(1) Use a Philips-head screwdriver to.. push inward the pin (at the center of the clip), to a depth of about 2 mm (.08 in.).
(2) Pull the clip outward to remove it.-

Caution
Do not push the pin inward more than necessary because it may damage the grommet, or the pin may fall in, if pushed too far.

INSTALLATION SERVICE POINT

▶A◀ CLIP INSTALLATION

(1) With the pin pulled out, insert the clip into the hole.
(2) Push the pin inward until the pin's head is flush with the grommet.

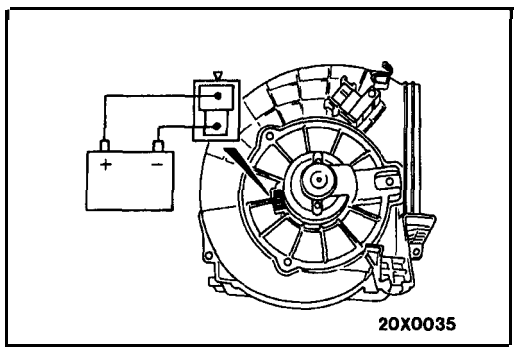

INSPECTION

55100320016

BLOWER FAN AND MOTOR CHECK

When battery voltage is applied between the terminals, check to be sure that the motor operates. Also, check that there is no abnormal noise.

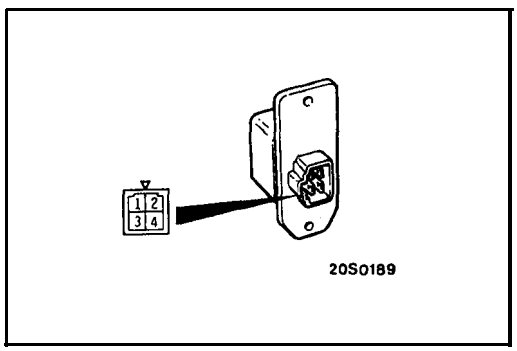

RESISTOR RESISTANCE CHECK

55200530016

Use an ohmmeter to measure the resistance between the terminals as indicated below. Check that the measured value is at the standard value.

Standard value:

Measurement terminal	Standard, value Ω
Between terminals 3-2 (LO)	**1.83'**
Between terminals 3-4 (ML)	0.87
Between terminals 3–1 (MH)	0.31

COOLING UNIT

55200490024

REMOVAL AND INSTALLATION

Pre-removal and Post-installation Operation
Refrigerant Discharging and Charging
(Refer to P.55-10.)

CAUTION
Plug refrigerant lines to prevent air from mixing when disconnecting them.

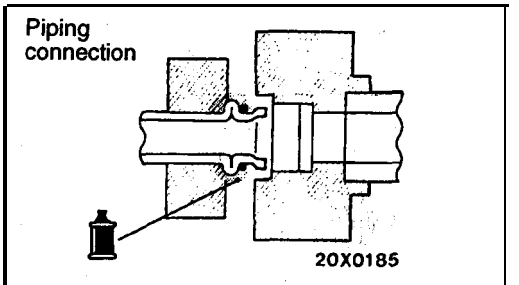

Compressor oil:
SUN PAG 56 <Turbo>
ND-OIL 6 <Non-turbo>

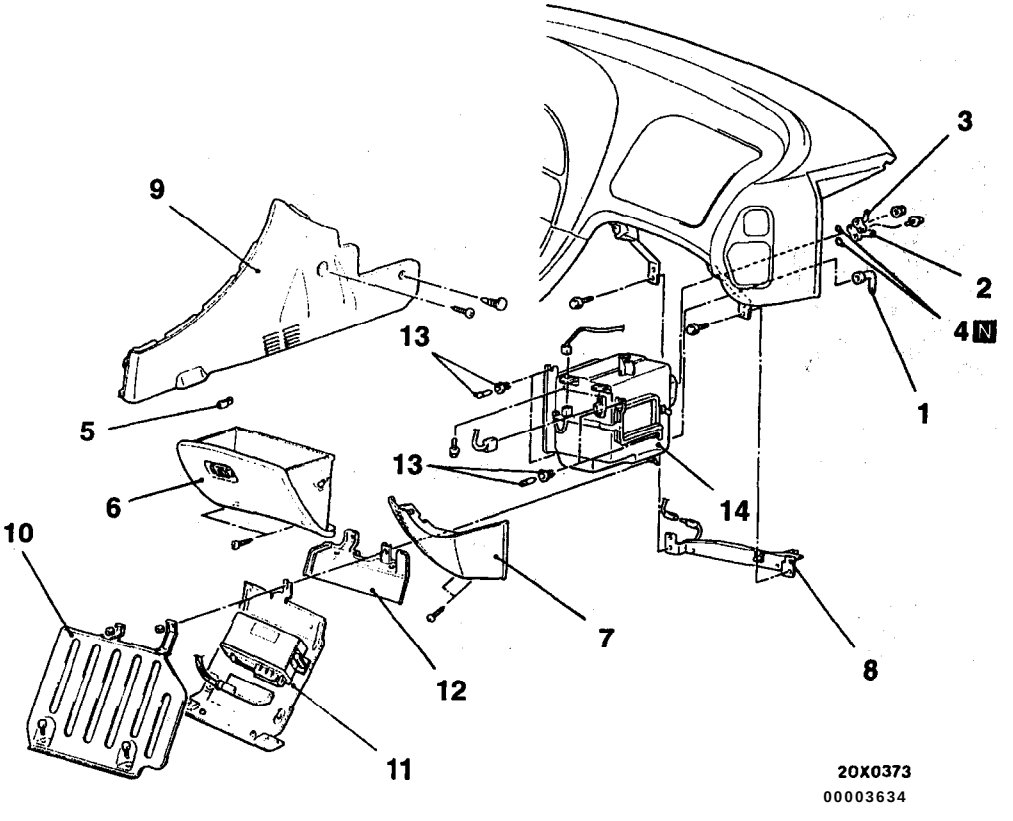

Removal steps

1. Drain hose
2. Suction pipe <2.0L Engine (Non-turbo)> or suction hose <2.0L Engine (Turbo) and 2.4L Engine> connection
3. Liquid pipe connection
4. O-ring
5. **Stopper**
6. Glove box
7. Corner panel
8. Glove box under frame
9. Console side cover <R.H.>
10. Control unit cover
11. ABS-ECU bracket
12. Harness protector <2.0L Engine (Turbo) and 2.4L Engine>
13. ◀A▶ ▶B◀ Clip
14. ▶A◀ Cooling unit

TSB Revision

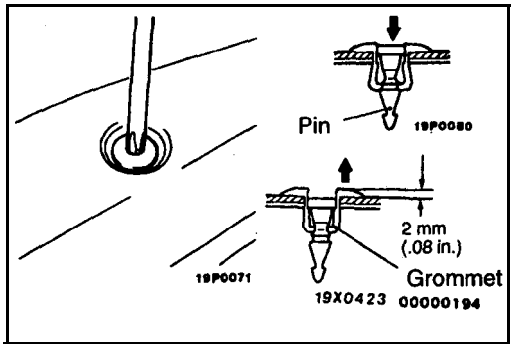

REMOVAL SERVICE POINT

◀A▶ CLIP REMOVAL

(1) Use a Philips-head screwdriver to push inward the pin (at the center of the clip) to a depth of about 2 mm (.08 in.).
(2) Pull the clip outward to remove it.

Caution
Do not push the pin inward more than necessary because it may damage 'the grommet, or the pin may fall in, if pushed too far.

INSTALLATION SERVICE POINTS

▶A◀ COOLING UNIT INSTALLATION

When replacing the cooling unit with new one, refill the evaporator with a specified amount of compressor oil.

<2.0L Engine -(Turbo) and 2.4L Engine>
Compressor oil: SUN PAG 56
Quantity: 60 cm^3 (2.03 fl.oz.)

<2.0L Engine (Non-turbo)>
Compressor oil: ND-OIL 8
Quantity: 40 cm^3 (1.35 fl.oz.)

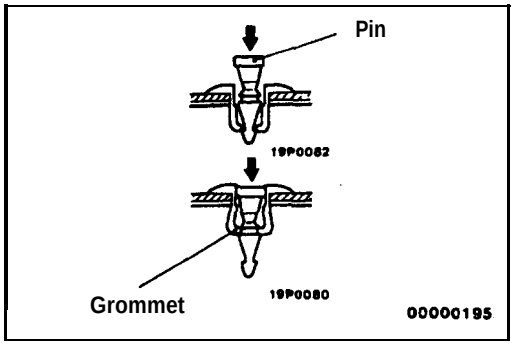

▶B◀ CLIP INSTALLATION

(1) With the pin pulled out, insert the clip into the hole.
(2) Push the pin inward until the pin's head is flush with the grommet.

DISASSEMBLY AND REASSEMBLY

55201060026

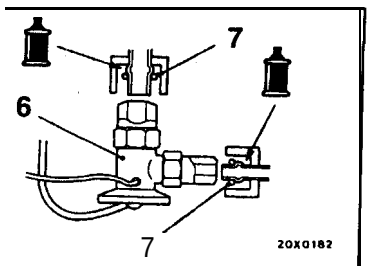

Compressor oil:
SUN PAG 56 <2.0L Engine (Turbo) and 2.4L Engine>
ND-OIL 6 <2.0L Engine (Non-turbo)>

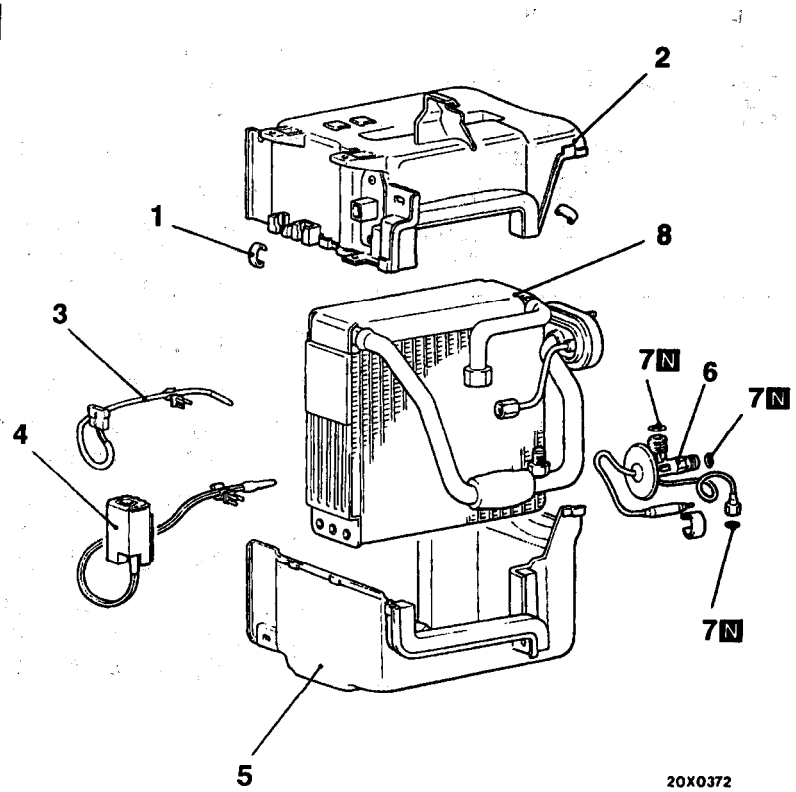

00003635

Disassembly steps

◀A▶ 1. Clip
2. Evaporator case (upper)
3. Fin thermo sensor <2.0L Engine (Non-turbo)>
4. Automatic compressor-ECM and fin thermo sensor assembly <2.0L Engine (Turbo) and 2.4L Engine>
5. Evaporator case (lower)
6. Expansion valve
7. O-ring
8. Evaporator

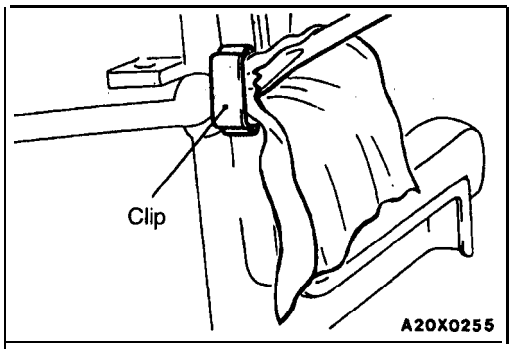

DISASSEMBLY SERVICE POINT

◀A▶ CLIP REMOVAL

Remove the clips with a flat-tipped screwdriver covered with a shop towel to prevent damage to case surfaces.

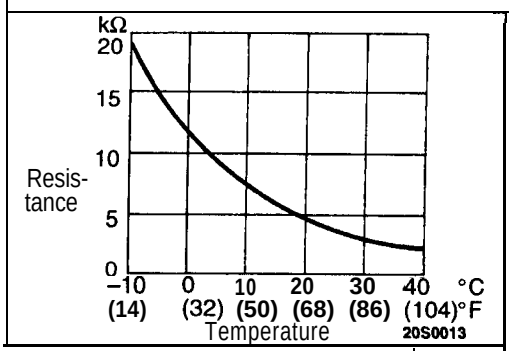

INSPECTION

55200920059

FIN THERMO SENSOR RESISTANCE CHECK

When the resistance value between the sensor terminals is measured under two or more temperature conditions, the resistance value should be close to the values shown in the graph.

NOTE
The temperature conditions when testing should not exceed the range of the characteristic curve in the graph.

COMPRESSOR AND TENSION PULLEY <2.0L ENGINE (TURBO) AND 2.4L ENGINE>

55200410099

REMOVAL AND INSTALLATION

Pre-removal and Post-installation Operation
Refrigerant Discharging and Charging
(Refer to P.55-10.)
For compressor drive belt adjustment, refer to the followings:
GROUP 11A - On-vehicle Service.
GROUP 11E - On-vehicle Service.

CAUTION
Plug refrigerant lines to prevent air from mixing when disconnecting them.

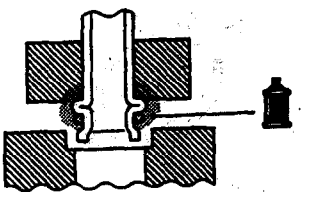

Compressor oil: SUN FAG 56

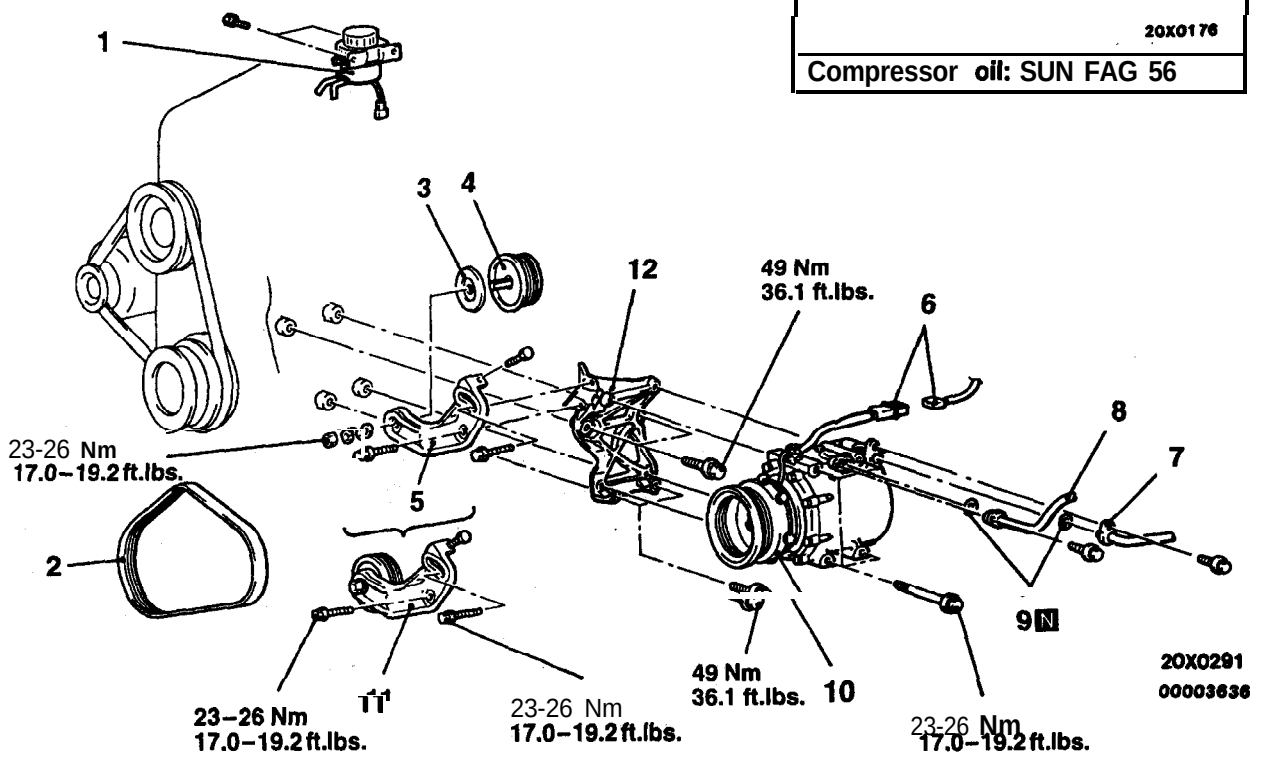

Tension pulley and tension pulley bracket removal steps

◀A▶ ◀B▶
1. Brake fluid reservoir
2. Compressor drive belt
3. Cover
4. Tension pulley
5. Tension pulley bracket

Compressor and compressor bracket removal steps

◀A▶ ◀B▶
1. Brake fluid reservoir
2. Compressor drive belt
6. Compressor connector
7. Discharge hose connection
8. Suction hose connection
9. O-ring

◀C▶ ▶A◀ 10. Compressor
11. Tension pulley and tension pulley bracket assembly
12. Comoressor bracket

TSB Revision

REMOVAL SERVICE POINTS

◀A▶ BRAKE FLUID RESERVOIR REMOVAL

Disconnect the brake fluid level sensor connector and, remove the brake fluid reservoir from the compressor bracket with the hose still attached.

NOTE
Place the removed brake fluid reservoir in a place where it will not be a hindrance when removing and installing the A/C compressor, and tie it with a cord.

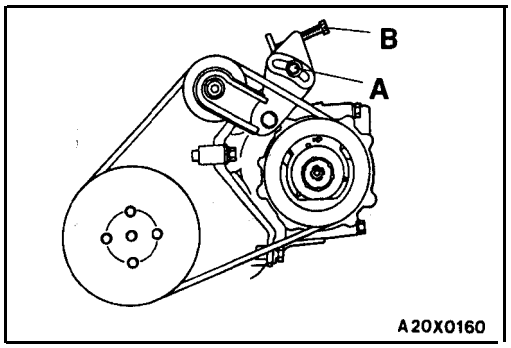

◀B▶ COMPRESSOR DRIVE BELT REMOVAL

(1) Loosen bolt "A" for holding the tension pulley.
(2) Loosen bolt "B" for adjustment.
(3) Remove the compressor drive belt.

◀C▶ COMPRESSOR REMOVAL

When doing this work, be careful not to spill the compressor oil.

INSTALLATION SERVICE POINT

▶A◀ COMPRESSOR INSTALLATION

If a new compressor is installed, first adjust the amount of oil according to the procedures described below, and then install the compressor.

(1) Measure the amount {X cm^3 (x fl.oz.)} of oil within the removed compressor.
(2) Drain (from the new compressor) the amount of oil calculated according to the following formula, and then install then new compressor.
New compressor oil amount
170 cm^3 – X cm^3 = Y cm^3
(5.7 fl.oz. – x fl.oz. = y fl.oz.)
NOTE
(1) Y cm^3 (y fl.oz.) indicates the amount of oil in the refrigerant line, the condenser, the evaporator etc.

(2) When replacing the following' parts as well as the compressor, subtract the rated oil amount of the each part from Ycm^3 (Yfl.oz.)and discharge from the new compressor.

Quantity

Evaporator: 60 cm^3 (2.03 fl.oz.)
Condenser: 15 cm^3 (.51 fl.oz.)
Suction hose: 10 cm^3 (.34 fl.oz.)
Receiver: 10 cm^3 (.34 fl.oz.)

INSPECTION

55200420047

- Checking for heat damage of the tension pulley.
- Check for excessive play or deflection of the tension pulley.
- Check for unusual wear of the tension pulley.
- Check for hardening of the compressor drive belt.
- Check for unusual wear or abrasion of the compressor drive belt.

DISASSEMBLY AND REASSEMBLY

55200460070

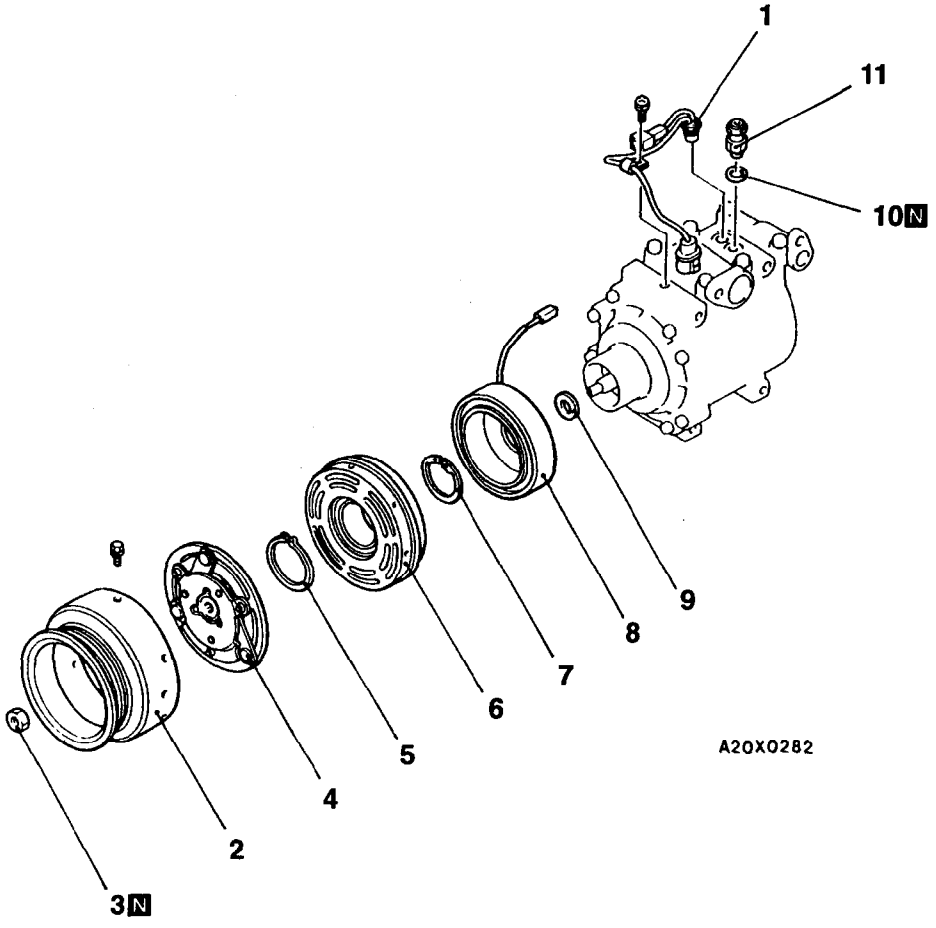

Disassembly steps

◀A▶ 1. Refrigerant-temperature switch
2. Pulley
▶E◀ • Air gap adjustment
◀B▶ ▶D◀ 3. Nut
▶C◀ 4. Armature plate
5. Snap ring
6. Rotor
▶B◀ 7. Snap ring.
▶A◀ 8. Clutch coil
9. Shims
10. O-ring
11. High-pressure relief valve

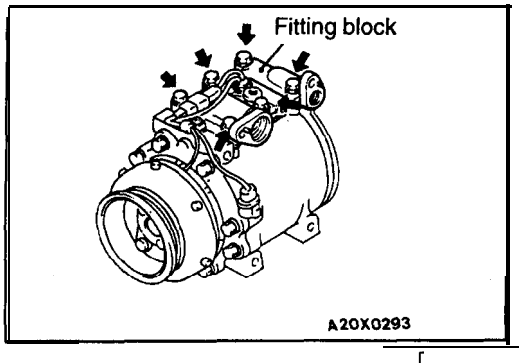

DISASSEMBLY SERVICE POINTS

◀A▶ REFRIGERANT-TEMPERATURE SWITCH REMOVAL

(1) Remove the compressor fitting block.
(2) Disconnect the snap ring from the inside of the fitting block to remove the refrigerant-temperature switch.

TSB Revision

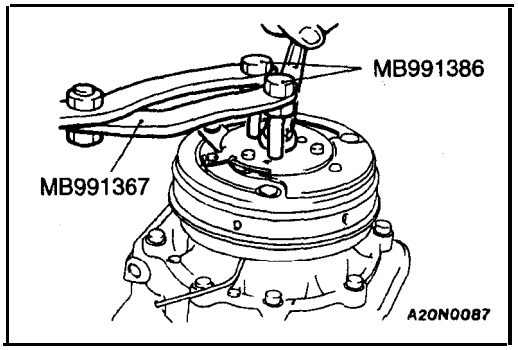

◀B▶ NUT REMOVAL

Use the special tools to remove the nut.

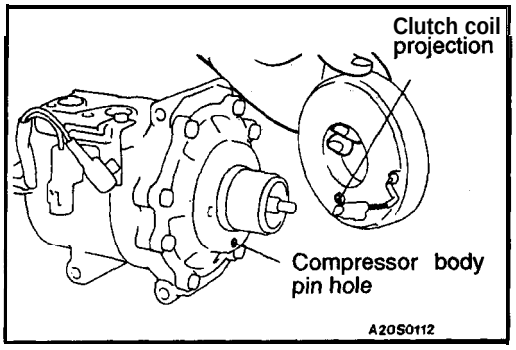

REASSEMBLY SERVICE POINTS

▶A◀ CLUTCH COIL INSTALLATION

When installing the clutch coil to the A/C compressor body, install so that the pin hole of the A/C compressor body and the clutch coil projection are aligned.

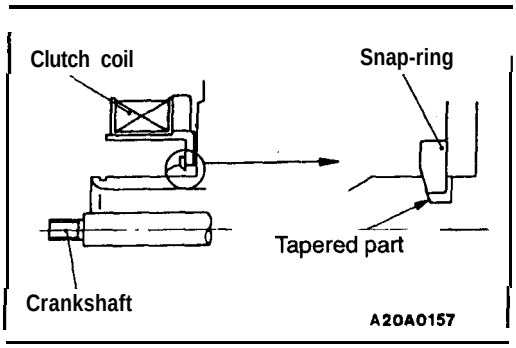

▶B◀ SNAP RING INSTALLATION

Install the snap ring so that the tapered surface is at the outer side.

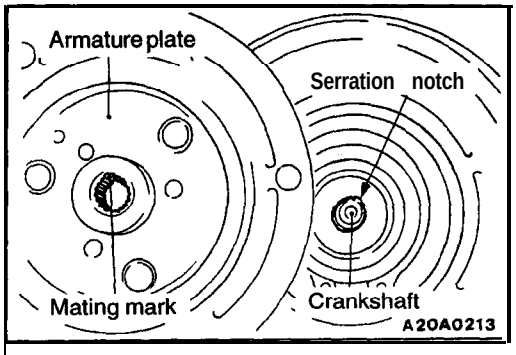

▶C◀ ARMATURE PLATE INSTALLATION

Align the mating mark of the crankshaft spline and the mating mark of the armature plate, and then' fit them together.

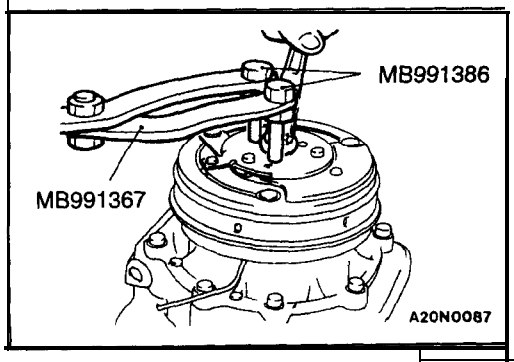

▶D◀ NUT INSTALLATION

Use the special tools to remove the nut.

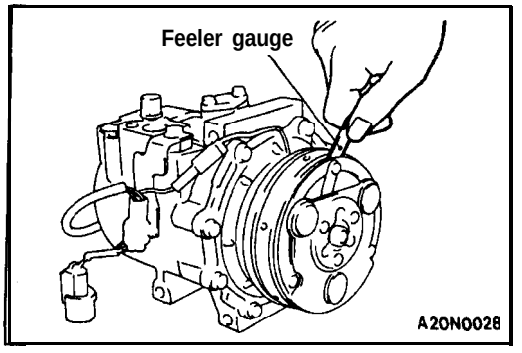

▶E◀ AIR GAP ADJUSTMENT

Check whether or not the air gap of the clutch is within the standard value.

Standard value: 0.4–0.65 mm (.016–.0256 in.)

NOTE
If there is a deviation of the air gap from the standard value, make the necessary adjustment by adjusting the number of shims.

INSPECTION

55200470059

- Check the surface of the armature for scoring or bluing.
- Check the surface of the rotor for scoring or bluing.
- Check the sealing surfaces for cracks, scratches and deformation.
- Check the front housing for cracks or scoring on the sealing surfaces.
- Check the compressor shaft for scoring.

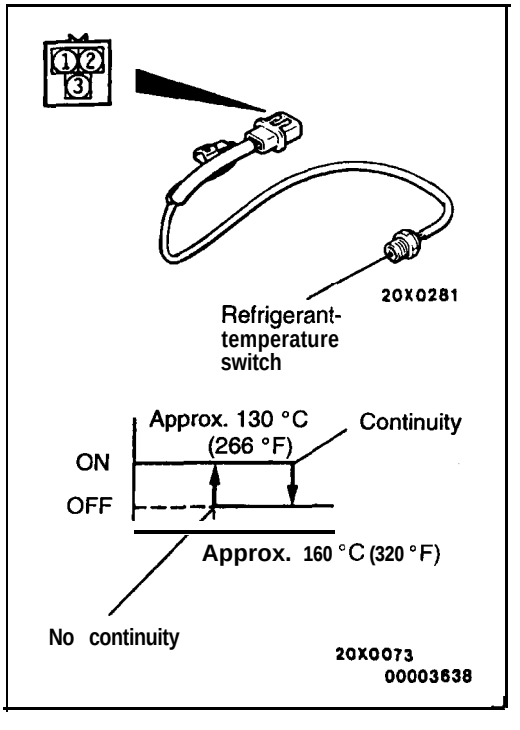

REFRIGERANT-TEMPERATURE SWITCH CONTINUITY CHECK

55200930045

(1) Immerse the refrigerant-temperature switch in engine oil.
(2) Use an ohmmeter to check the continuity between the terminals (1) or (2) when the engine oil has become heated.

Standard value:

Item	Temperature
Continuity (ON)	Less than approx. 160°C (320°F)
No continuity (OFF)	Approx. 160°C (320°F) or more [until the temperature drops to approx. 130°C (266°F) when OFF]

Caution
Do not heat the oil more than necessary.

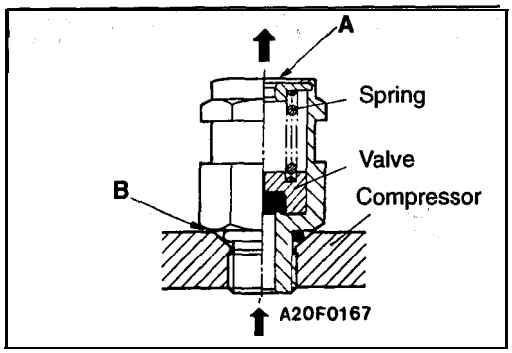

HIGH-PRESSURE RELIEF VALVE CHECK 55201090018

The high-pressure relief valve is a safety feature which releases part of the refrigerant inside the system into the atmosphere when the high-pressure level exceeds 3,740 kPa (532 psi) during air conditioning operation.

Once the pressure inside the system has bean reduced to 2,940 kPa(418 psi) or *lower,* the high-pressure relief 'valve closes, thus allowing, continued operation.

(1) If a leak is detected at section A, replace the high-pressure relief valve. The valve can be used unless there is a leak from that section.

(2) If a leak is detected at section B, retighten the valve. If the leak persists after retightening the valve, replace the packing.

COMPRESSOR AND TENSION PULLEY <2.0L ENGINE (NON-TURBO)>

55200410105

REMOVAL AND INSTALLATION

Pm-removal and Post-installation Operation
(1) Refrigerant Discharging and Charging
(Refer to P.55-10.)
(2) Under Cover Removal and Installation
(Refer to GROUP 42 - Under Cover.)
(3) Compressor Drive Belt Adjustment
(Refer to GROUP 11C - On-vehicle Service.)

CAUTION
Plug refrigerant lines **to prevent air from mixing** when disconnecting them.

Hose connection

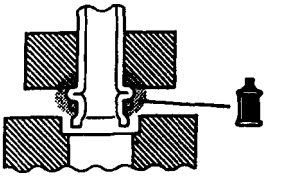

20X0176

Compressor oil: ND-OIL 8

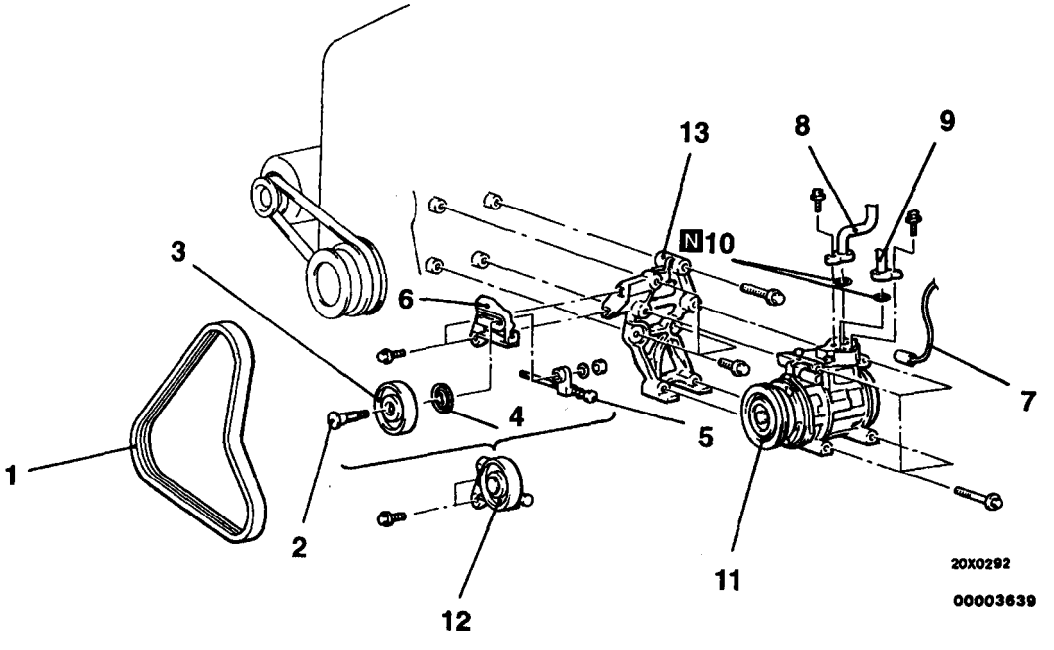

Tension pulley and tension pulley bracket removal steps

◀A▶
1. Compressor drive belt
2. Shaft
3. Tension pulley
4, Cover
5. Adjust plate
6. Tension pulley bracket

Compressor and compressor bracket removal steps

◀A▶
1. Compressor drive belt
7. Compressor connector
8. Discharge hose connection
9. Suction hose connection
10. O-ring

◀B▶ ▶A◀ 11. Compressor
12. Tension pulley and tension pulley bracket assembly
13. Compressor bracket

TSB Revision

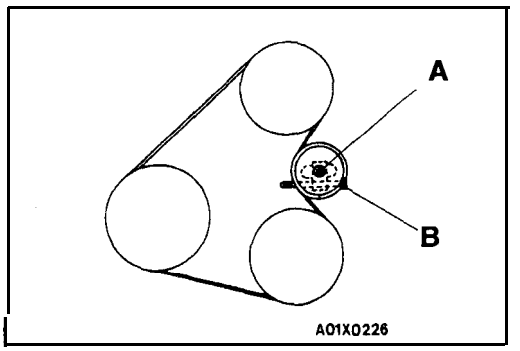

REMOVAL SERVICE POINTS

◀A▶ COMPRESSOR DRIVE BELT REMOVAL

(1) Loosen nut "A" for holding the tension pulley.
(2) Loosen bolt "B" for adjustment.
(3) Loosen the power steering oil pump fixing bolt. (Refer to GROUP 37A - Power Steering Oil Pump <2.0L Engine (Non-turbo)>)
(4) Remove the 'compressor drive belt,

◀B▶ COMPRESSOR REMOVAL

When doing this work, be careful not to spill the compressor oil.

INSTALLATION SERVICE POINTS

▶A◀ COMPRESSOR INSTALLATION

If a new compressor is installed, first adjust the amount of oil according to the procedures' described below, and then install the compressor.

(1) Measure the amount {X cm^3 (x fl.oz.)} of oil within the removed compressor.
(2) Drain (from the new compressor) the amount of oil calculated according to the following formula, and then install then new compressor.
New compressor oil amount
100 cm^3 – X cm^3 = Y cm^3
(3.4 fl.oz. – x fl.oz. = y fl.oz.)
NOTE
(1) Y cm^3 (y fl.oz.) indicates the amount of oil in the refrigerant line, the condenser, the evaporator etc.
(2) When replacing the following parts as well as the compressor, subtract the rated oil amount of the each part from Y cm^3 (Y fl.oz.) and discharge from the new compressor.

Quantity
Evaporator: 40 cm^3 (1.35 fl.oz.)
Condenser: 40 cm^3 (1.35 fl.oz.)
Suction hose: 10 cm^3 (.34 fl.oz.)
Receiver: 10 cm^3 (.34 fl.oz.)

INSPECTION

55200420047

- Checking for heat damage of the tension pulley.
- Check for excessive play or deflection of the tension pulley.
- Check for unusual wear of the tension pulley.
- Check for hardening of the compressor drive belt.
- **Check for unusual wear or abrasion of the compressor** drive belt.

DISASSEMBLY AND REASSEMBLY

55200460087

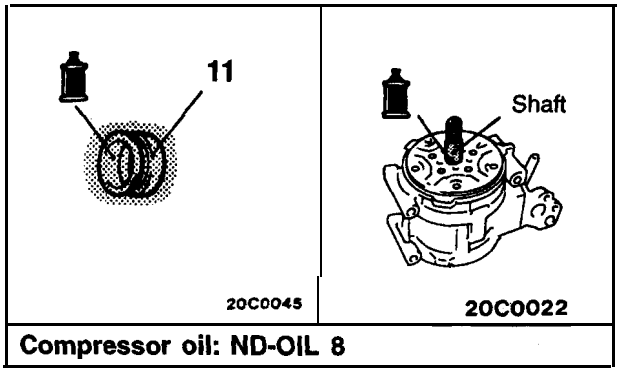

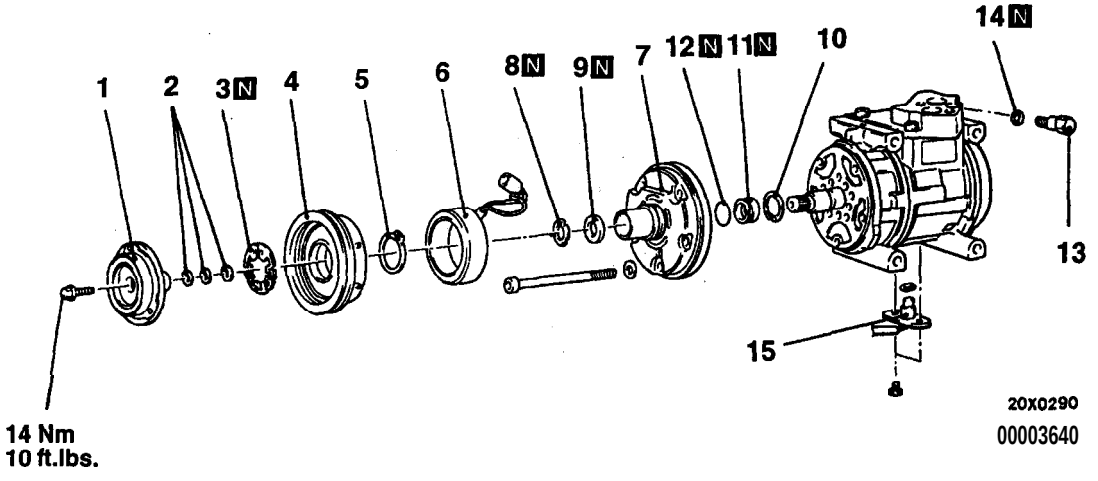

Disassembly steps

- ▶E◀ • Air gap adjustment
- ◀A▶ 1. Clutch hub
- 2. Shim
- 3. Snap ring
- 4. Rotor assembly
- 5. Snap ring
- ▶D◀ 6. Clutch coil
- ▶C◀ 7. Front housing
- ▶B◀ 8. Felt holder
- ▶B◀ 9. Felt
- 10. Snap ring
- ▶A◀ 11. Shaft seal
- 12. O-ring
- 13. High-pressure relief valve
- 14. O-ring
- 15. Revolution pickup sensor

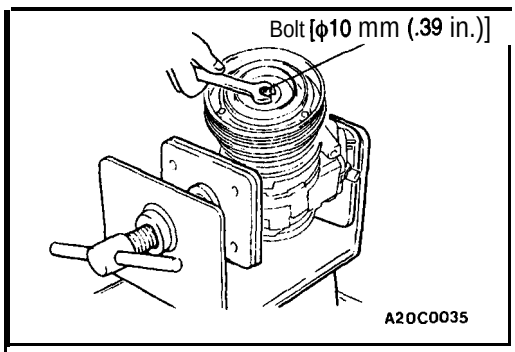

DISASSEMBLY SERVICE POINT

◀A▶ **CLUTCH** HUB REMOVAL

(1) Remove the clutch hub mounting bolt.
(2) Tighten a ϕ10 mm (.39 in.) bolt into the bolt hole of the clutch hub to remove the serration assembly of the shaft and the clutch hub.

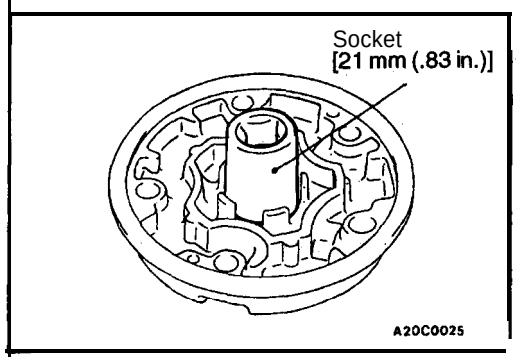

REASSEMBLY SERVICE POINTS

▶A◀ **SHAFT** SEAL INSTALLATION

Use a 21 mm (.83 in.) socket to install the shaft seal so that the O-ring assembly side is facing the front housing.

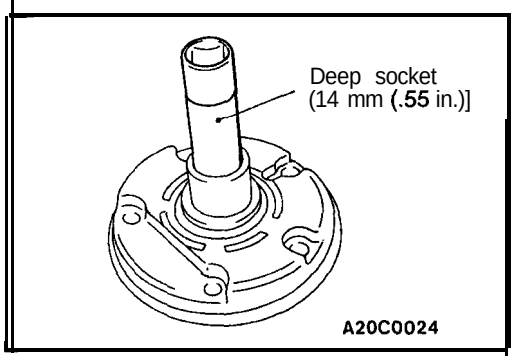

▶B◀ FELT, FELT HOLDER INSTALLATION

After installing the felt in the felt holder, install them to the front housing using a 14 mm (.55 in.) deep socket.

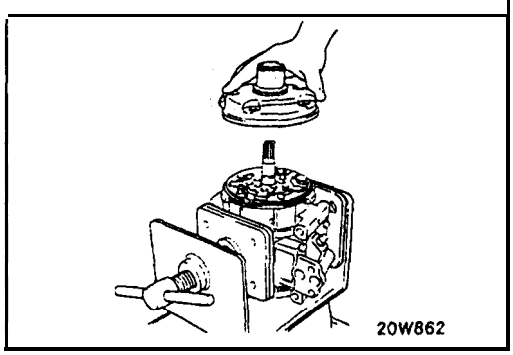

▶C◀ FRONT HOUSING INSTALLATION

(1) Apply compressor oil to the shaft.

Compressor oil: ND-OIL 8

(2) Install the front housing without damaging the shaft seal lip.

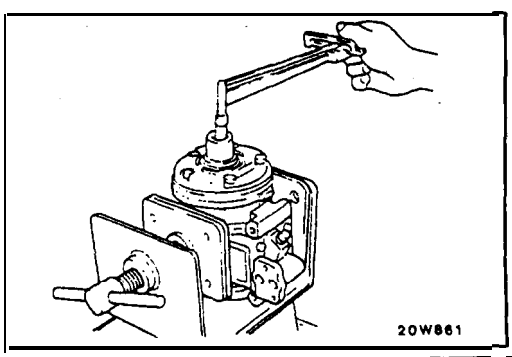

(3) After installing the front housing, install the clutch hub mounting bolt to the shaft, and check that the breakaway torque is within the specified torque value.

Breakaway torque: 5 Nm (4 ft.lbs.) or less

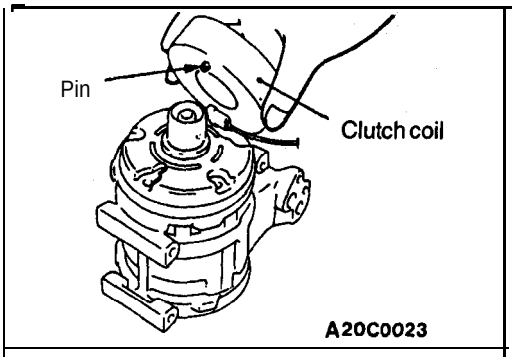

▶D◀ CLUTCH COIL INSTALLATION

Set the clutch coil pin in the compressor housing notch, and install the clutch coil.

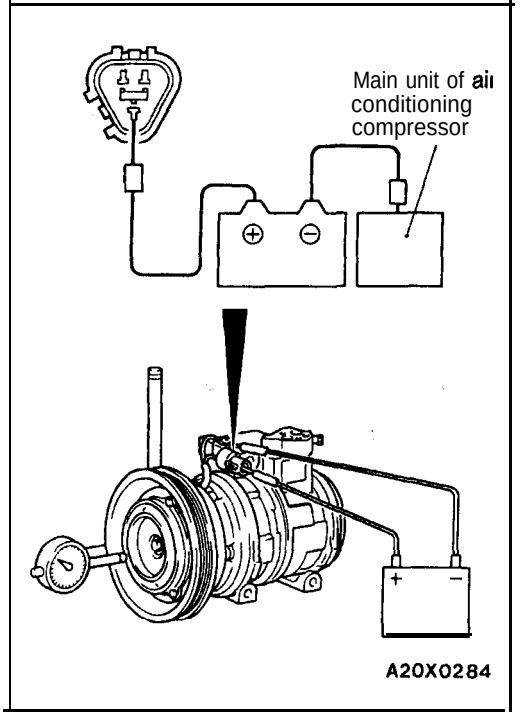

▶E◀ AIR GAP ADJUSTMENT

Apply battery voltage to the magnetic clutch and check that the air gap is within the standard value. If the air gap is outside the standard value, adjust with a shim,

Standard value: 0.35–0.65 mm (.0138–.0256 in.)

NOTE
If there is a deviation of the air gap from the **standard** value, adjust the number of shims.

INSPECTION

55266476659

- Check the surface of the armature for scoring or bluing.
- Check the surface of the rotor for scoring or bluing.
- Check the sealing surfaces for cracks, scratches and' deformation.
- Check the front housing for cracks or scoring on the sealing surfaces.
- Check the compressor shaft for scoring.

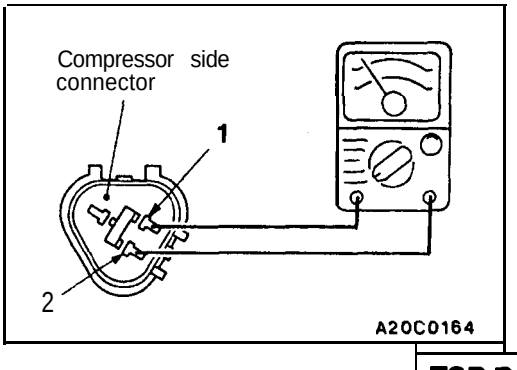

REVOLUTION PICKUP SENSOR CHECK

55201100018

Check the resistance value between terminals (1) and (2).

Standard value: 185 Ω [when at 20°C (68°F)]

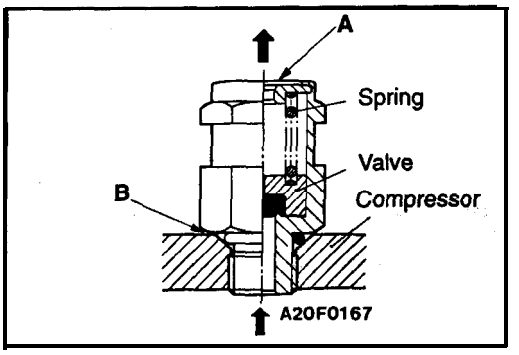

HIGH-PRESSURE RELIEF VALVE CHECK 55201090018

The high-pressure relief valve is a safety feature which releases part of the refrigerant inside the system into the atmosphere when the high-pressure: level exceeds 3,740 kPa (532 psi) during air conditioning operation.

Once the pressure inside the system has been reduced to 2,940 kPa(418 psi) or lower, the high-pressure relief valve closes, thus allowing continued operation.

(1) If a leak is detected at section A, replace the high-pressure relief valve. The valve can be used unless there is a leak from that section.

(2) If a leak is detected at section B, retighten the valve. If the leak persists after retightening the valve, replace the packing.

REFRIGERANT LINE

55200640085

REMOVAL AND INSTALLATION

<2.0L Engine (Turbo) and 2.4L Engine>

Pre-removal and Post-installation Operation
Refrigerant Discharging and Charging
(Refer to P.55-10.)

CAUTION
Plug refrigerant lines to prevent air from mixing when disconnecting them.

Piping or hose connection

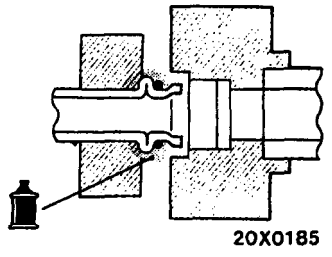

Compressor oil: SUN PAG 56

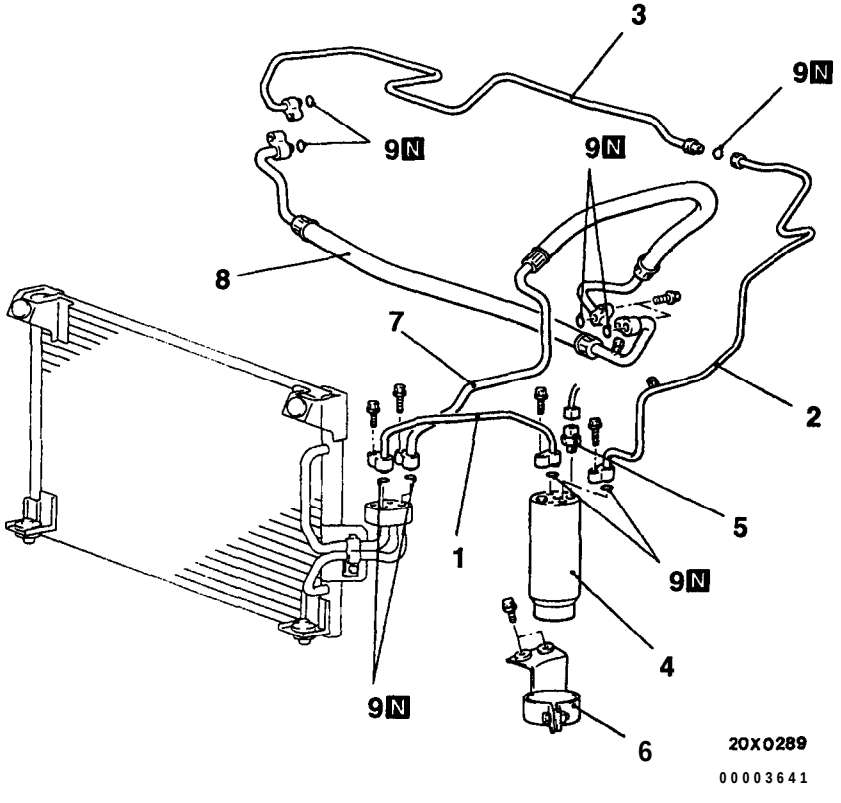

Removal steps

1. Liquid pipe A
2. Liquid pipe B
3. Liquid pipe C
▶A◀ 4. Receiver assembly
5. Dual pressure switch
6. Receiver bracket
7. Discharge hose
▶A◀ 8. Suction hose
9. O-ring

TSB Revision

<2.0L Engine (Non-turbo)>

Pm-removal and Post-installation Operation
Refrigerant Discharging and Charging
(Refer to P.55-10.)

CAUTION
Plug refrigerant lines to prevent air from mixing when disconnecting them.

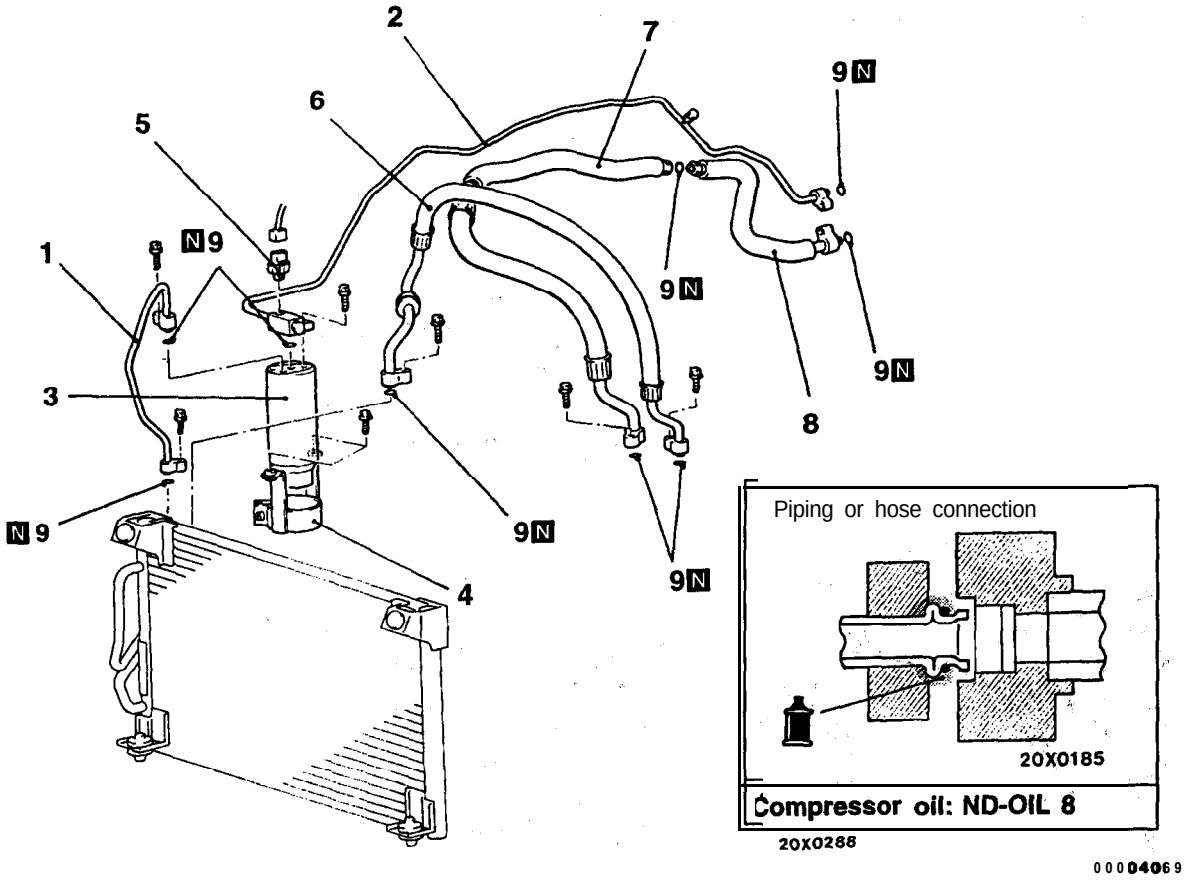

Removal steps

1. Liquid pipe A
2. Liquid pipe B
3. ▶A◀ Receiver assembly
4. Receiver bracket
5. Dual pressure switch
6. Discharge hose
7. ▶A◀ Suction hose
8. Suction pipe
9. O-ring

INSTALLATION SERVICE POINT

▶A◀ SUCTION HOSE, RECEIVER ASSEMBLY INSTALLATION

When replacing the' suction hose or the receiver assembly, refill them with a specified amount of compressor oil.

Compressor oil:
SUN PAG 56 <2.0L Engine (Turbo) and 2.4L Engine>
ND-OIL 8 <2.0L Engine (Non-turbo)>

Quantity:
Suction hose: 10 cm^3 (.34 fl.oz.)
Receiver: 10 cm^3 (.34 fl.oz.)

TSB Revision

CONDENSER AND CONDENSER FAN MOTOR

55200670169

REMOVAL AND INSTALLATION

<2.0L Engine (Turbo) and 2.4L Engine>

Pre-removal and Post-installation Operation
Refrigerant Discharging and Charging
(Refer to P.55-10.)

CAUTION
Plug refrigerant lines to prevent air from mixing when disconnecting them.

Piping or hose connection

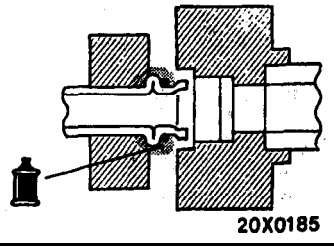

Compressor oil: SUN PAG 56

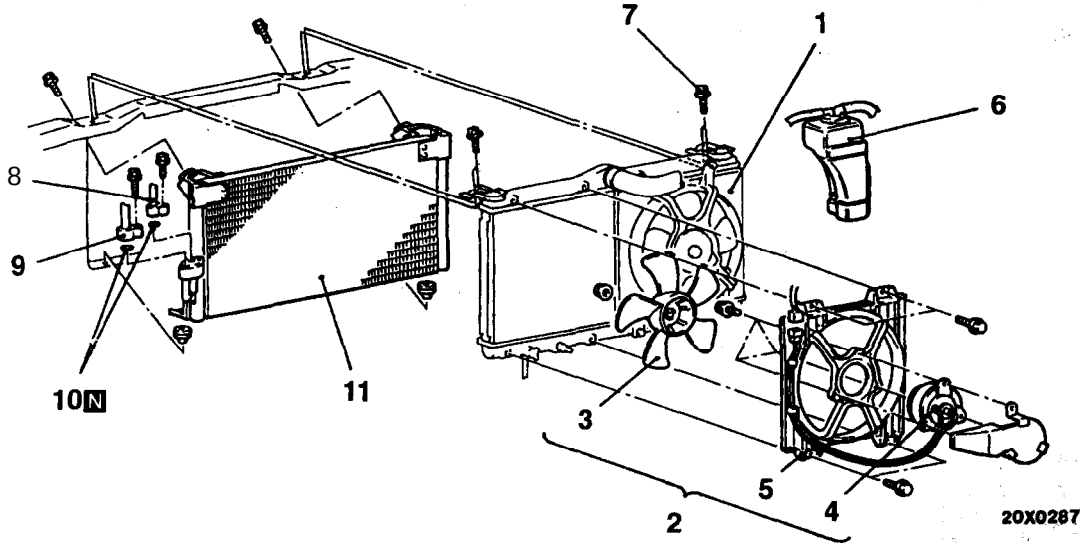

00003643

Condenser removal steps

1. Radiator fan motor assembly
   (Refer to GROUP 14 - Radiator.)
   <2.0L Engine (Turbo)>
   (Refer to GROUP 14 - Radiator.)
   <2.4L Engine>
2. Condenser fan motor and shroud assembly
6. Reserve tank
7. Upper insulator installation bolts
8. Liquid pipe A
9. Discharge hose
10. O-ring
◀A▶ ▶A◀ 11. Condenser

Condenser fan motor removal steps

2. Condenser fan motor and shroud assembly
3. Condenser fan
4. Condenser fan motor
5. Shroud

TSB Revision

<2.0L Engine (Non-turbo)>

Pre-removal and Post-installation Operation
Refrigerant Discharging and Charging
(Refer to P.55-10.)

CAUTION
Plug refrigerant lines to prevent air from mixing when disconnecting them.

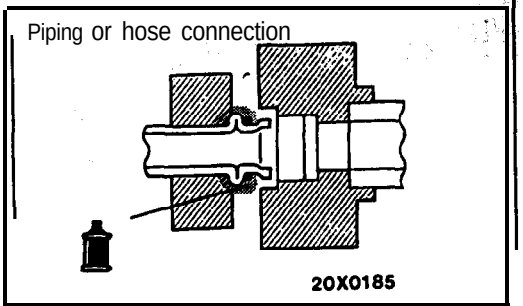

Compressor oil: ND-OIL 8

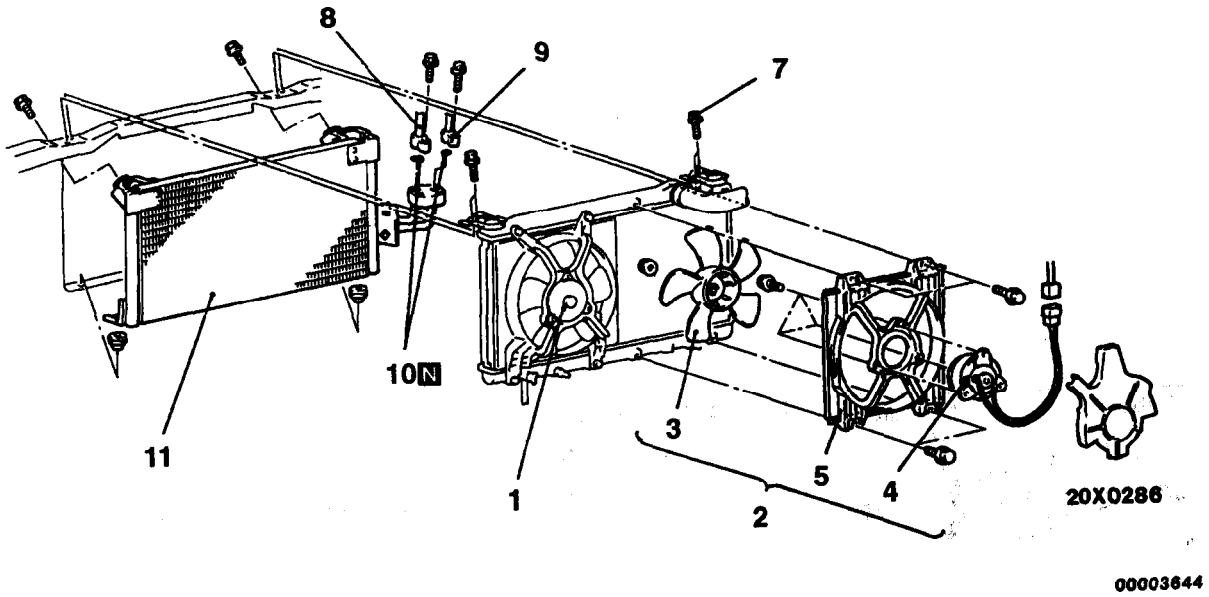

Condenser removal steps

1. Radiator fan motor assembly (Refer to GROUP 14 - Radiator.)
2. Condenser fan motor and shroud assembly
7. Upper insulator installation bolts
8. Liquid pipe A
9. Discharge hose
10. O-ring
◀A▶ ▶A◀ 11. Condenser

Condenser fan motor removal steps

1. Radiator fan motor assembly (Refer to GROUP 14 - Radiator.)
2. Condenser fan motor and shroud assembly
3. Condenser fan
4. Condenser fan motor
5. Shroud

TSB Revision

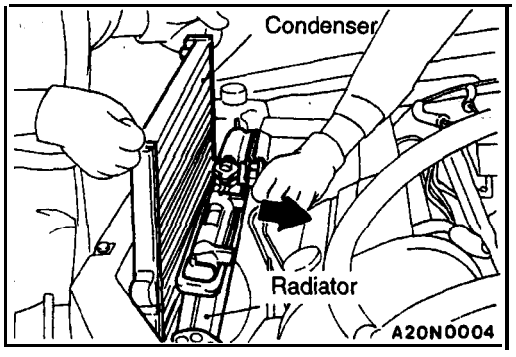

REMOVAL SERVICE POINT

◀A▶ CONDENSER REMOVAL,

Move the radiator to the engine side and then lift up the condenser to remove it.

INSTALLATION SERVICE POINT

▶A◀ CONDENSER INSTALLATION

When replacing the condenser with a new one, refill the condenser with a specified amount of compressor oil.

<2.0L Engine (Turbo) and 2.4L Engine>
Compressor oil: SUN PAG 56
Quantity: 15 cm^3 (.51 fl.oz.)

<2.0L Engine (Non-turbo)>
Compressor oil: ND-OIL 8
Quantity: 40 cm^3 (1.35 fl.oz.)

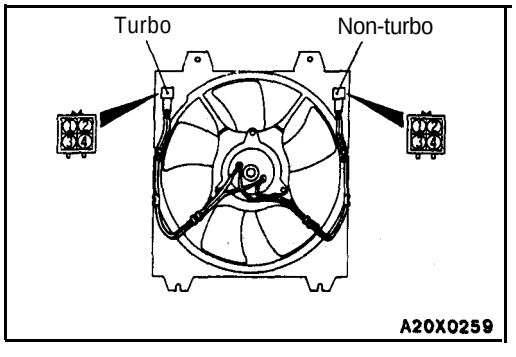

INSPECTION

55200680056

CONDENSER FAN MOTOR CHECK

(1) Check that the condenser fan motor operates when battery voltage (+) is applied to terminal 1 and terminal 4 is grounded (–).
(2) In this same condition, apply battery (+) voltage to terminal 3 and grounded terminal 2. Check that the condenser fan motor operates faster at this time.

VENTILATORS (FLOOR)

55300220046

REMOVAL AND INSTALLATION

CAUTION: SRS
When removing and installing the floor console assembly from vehicles equipped with SRS, do not let it bump against the SRS - ECU or other components.

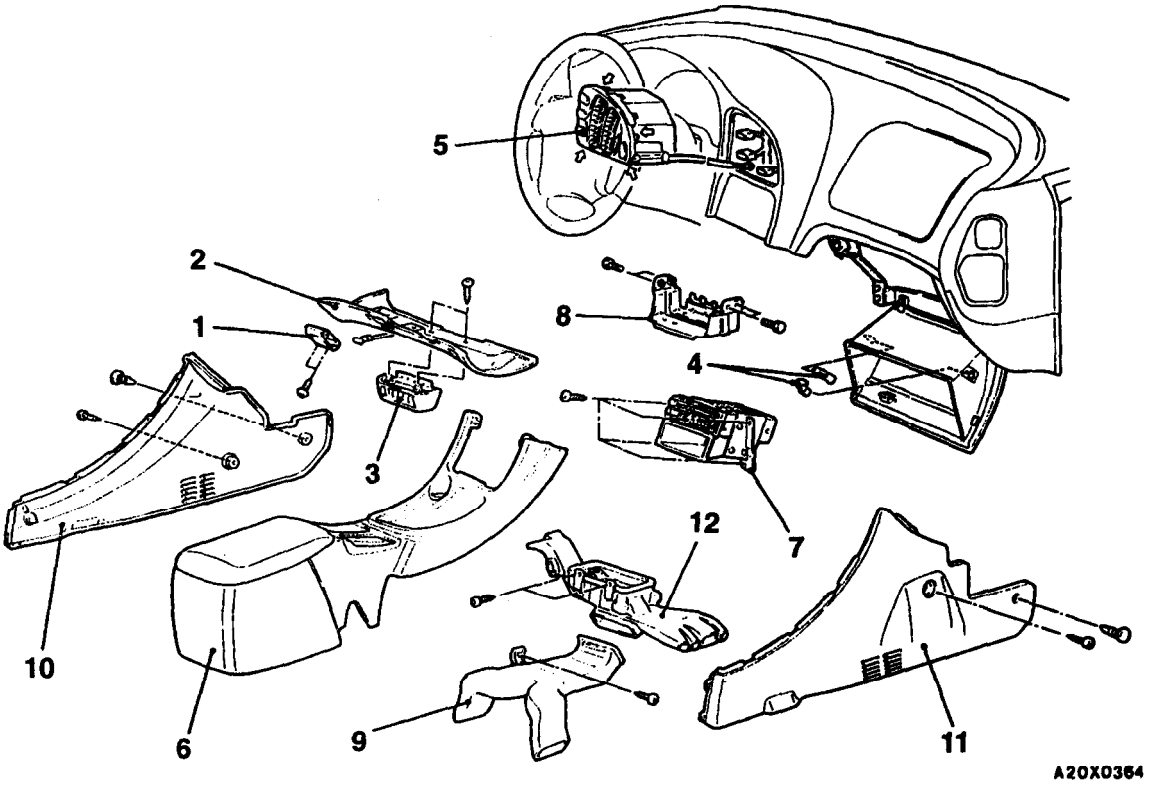

NOTE
⇦ indicates the metal clip position.

Lap cooler duct removal steps

1. Hood lock release handle
2. Driver's side under cover
3. Lap cooler grille
4. Stopper
▶A◀ 5. Center air outlet

Semi rear heater duct removal steps

6. Floor console (Refer to GROUP 52A - Floor Console.)
7. Radio, tape player and CD Player (Refer to GROUP 54 - Radio, Tape Player, CD Player, Amplifer, Speaker and Antenna.)
8. Relay bracket
9. Semi rear heater duct

Foot distribution duct removal steps

1. Hood lock release handle
2. Driver's side under cover
6. Floor console (Refer to GROUP 52A - Floor Console.)
7. Radio, tape player and CD Player (Refer to GROUP 54 - Radio, Tape Player, CD Player, Amplifer, Speaker and Antenna.)
6. Relay bracket
9. Semi rear heater duct
10. Console side cover (L.H.)
11. Console side cover (R.H.)
12. Foot distribution duct

TSB Revision

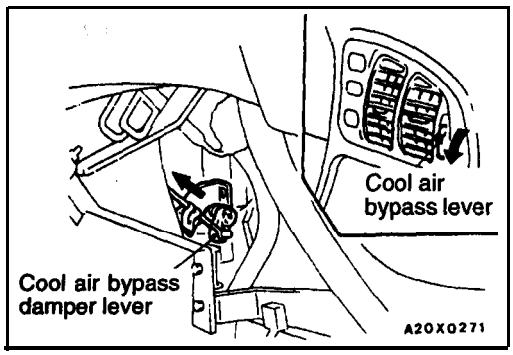

INSTALLATION SERVICE POINT

▶A◀ CENTER AIR OUTLET INSTALLATION

(1) Turn the cool air bypass lever of the center air outlet fully downward.
(2) Pull the cool air bypass damper lever on the heater unit side all the way toward you, and then connect the cable to the lever pin.
(3) Push the outer cable in- the direction of the arrow so that there is no looseness, and then secure it with the clip.

55300130042

VENTILATORS (INSTRUMENT PANEL)

REMOVAL AND INSTALLATION

CAUTION: SRS
When removing and installing the floor console assembly from vehicles equipped with SRS, do not let it bump against the SRS - ECU or other components.

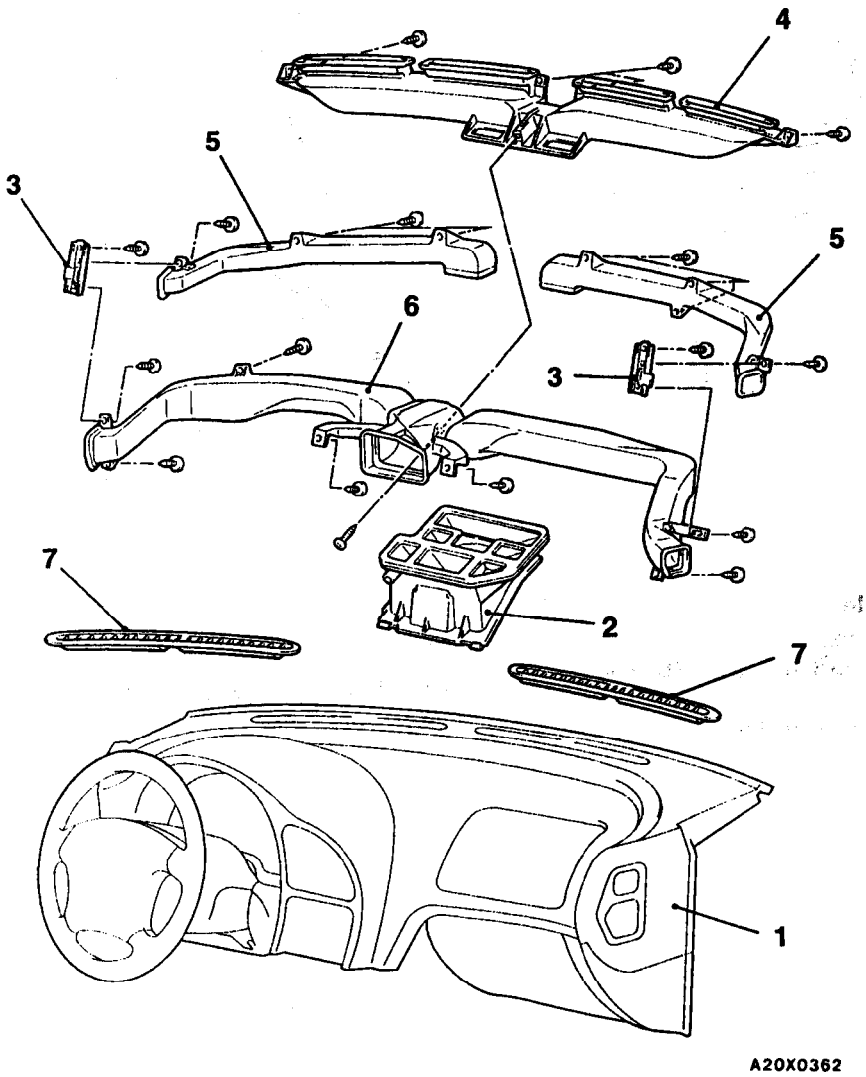

Removal steps

1. Instrument panel (Refer to GROUP 52A - Instrument Panel.)
2. Center duct
3. Duct bracket
4. Defroster nozzle
5. Side defroster hose
6. Air duct
7. Defroster garnish

TSB Revision

VENTILATORS (AIR OUTLET)

55300190088

REMOVAL AND INSTALLATION

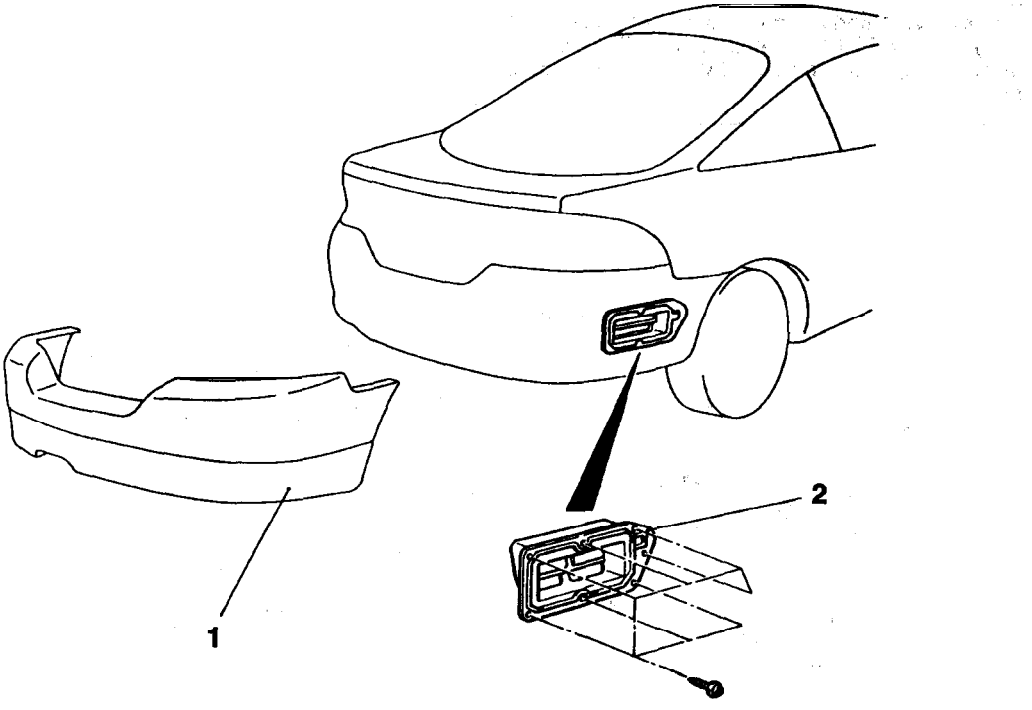

A20X0269

Removal steps

1. Rear bumper
   (Refer to GROUP 51 - Rear Bumper.)
2. Rear ventilation duct

NOTE
For the front deck garnish, refer to GROUP 51 - Garnishes.

A

B

C

D

E

F

G

H

I

P

Q

R

S

T

U

V

W