SYSTEM WIRING DIAGRAMS
2.0L Turbo, Starting Circuit, M/T W/ Anti-Theft
1997 Mitsubishi Eclipse

For DIAKOM-AUTO http://www.diakom.ru Taganrog support@diakom.ru (8634)315187

Copyright © 1998 Mitchell Repair Information Company, LLC
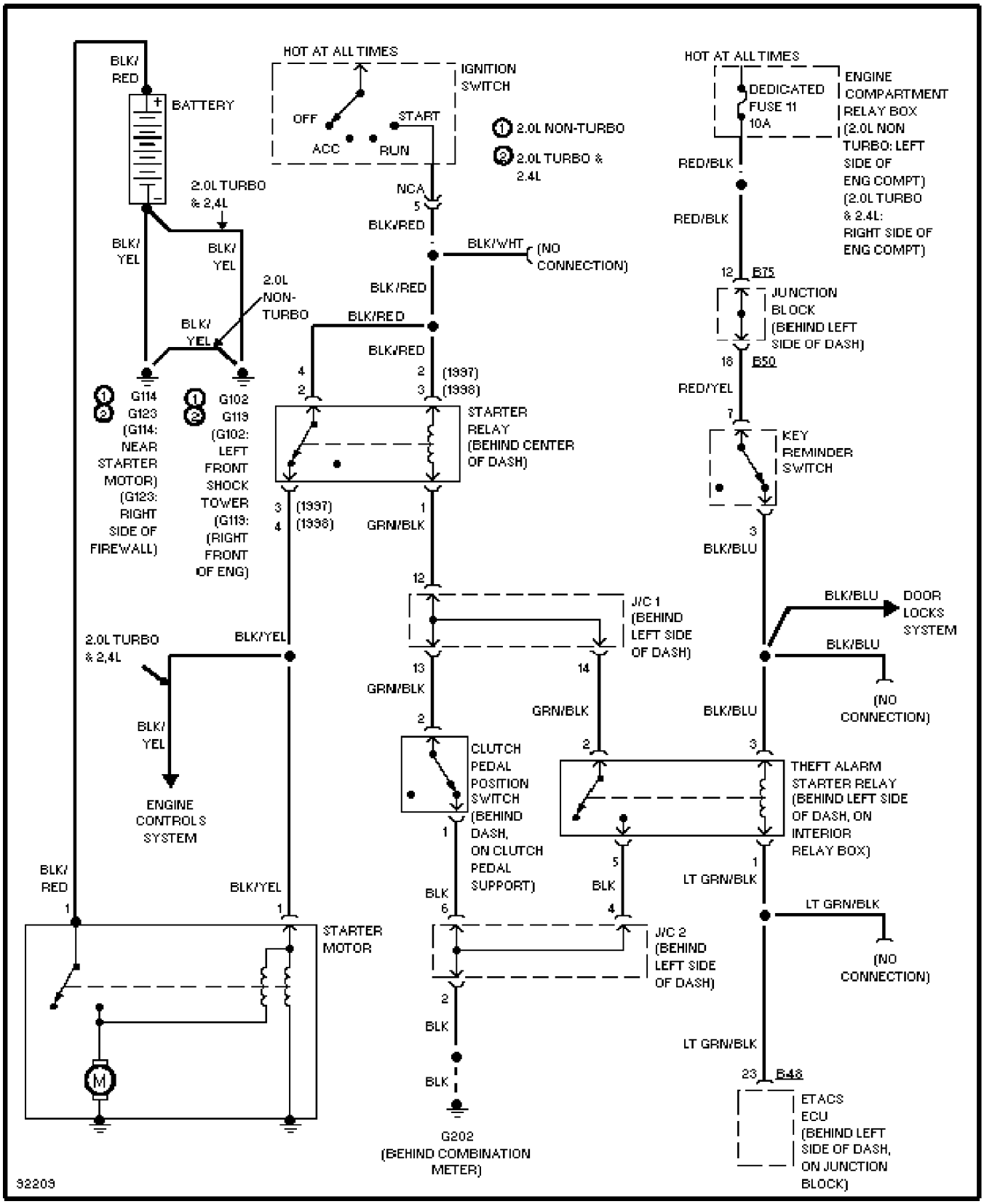
Thursday, December 14, 2000 04:34PM