BACKUP
Service Manual
ECLIPSE/ ECLIPSE SPYDER
1997
Volume 2
Electrical

FOREWORD

This Service Manual has been prepared with the latest service information available at the time of publication. It is subdivided into various group categories and each section contains diagnostics, disassembly, repair, and installation procedures along with complete specifications and tightening references. Use of this manual will aid in properly performing any servicing necessary to maintain or restore the high levels of performance and reliability designed into these outstanding vehicles.

WE SUPPORT VOLUNTARY TECHNICIAN CERTIFICATION THROUGH
National Institute for AUTOMOTIVE SERVICE EXCELLENCE

MITSUBISHI MOTOR SALES OF AMERICA, Inc.

GROUP / SECTION INDEX 00109000591

NOTE:
For information concerning all components other than the electrical system, refer to Volume 1 "Chassis & Body" of this paired Service Manual.

NOTES

GENERAL

CONTENTS

00109000287

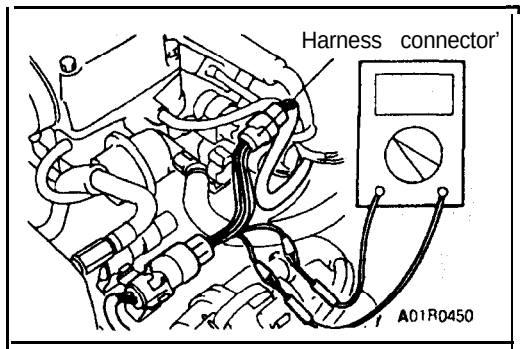

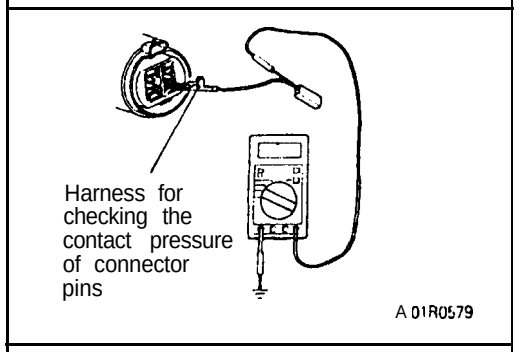

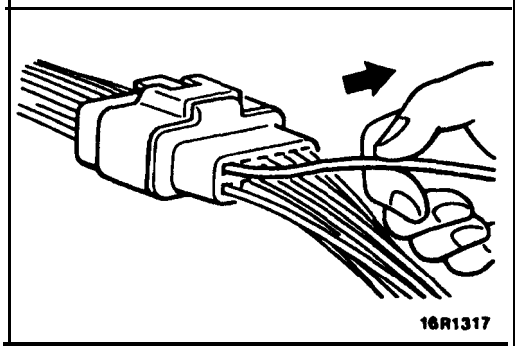

HARNESS CONNECTOR INSPECTION

00100390048

CONNECTOR CONTINUITY AND VOLTAGE TEST

Follow the steps below to avoid causing poor connector contact and/or reduced waterproof performance of connectors when checking continuity and/or voltage at connectors of waterproof connectors..

(1) If checking is performed with the circuit in the state of continuity, be sure to use the special tool (harness connector). Never insert a test bar from the harness side, because to do so will reduce the waterproof performance and result in corrosion.

(2) If the connector is disconnected for checking and the facing part is the female pin side, the harness for checking the contact pressure of connector pins should be used. Never force the insertion of a test bar, because to do so will cause poor or improper contact.

(3) If the facing part is the male pin side, contact the test bar directly to the pins. Care must be taken not to short-circuit the connector pins.

IMPROPER TERMINAL ENGAGEMENT CHECK

When the terminal stopper of the connector is out of order, engagement of the male and female terminals becomes improper even when the connector itself is engaged perfectly and terminal sometimes slips out to rear side of connector. Make sure, that each terminal does not come off the connector by pulling each harness wire.

CONNECTOR TERMINAL ENGAGEMENT AND DISENGAGEMENT

A connector that engages loosely can be repaired by removing the female terminal from the connector housing and raising its lance to establish securer engagement. Removal of the connector terminal used for MFI and ELC-4 A/T control circuit can be done in the following manner.

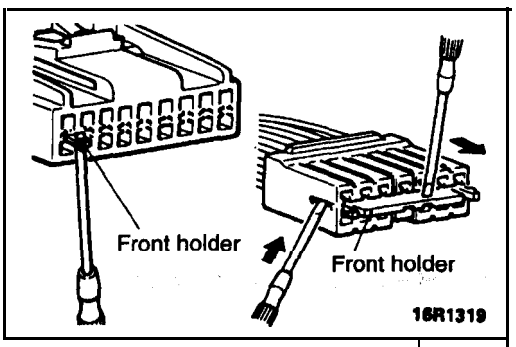

COMPUTER CONNECTOR

(1) Insert a screwdriver [1.4 mm (.06 in.) width] as shown in the figure, disengage front holder, and remove it.

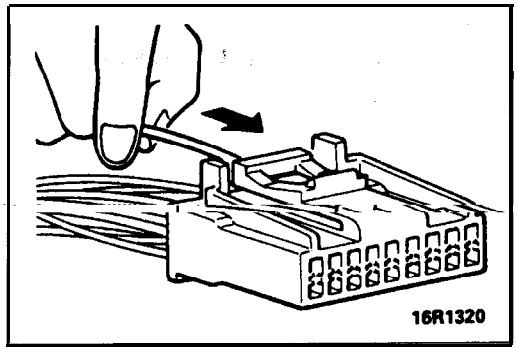

(2) Insert the harness terminal to be repaired deep into the connector from harness side and hold it there.

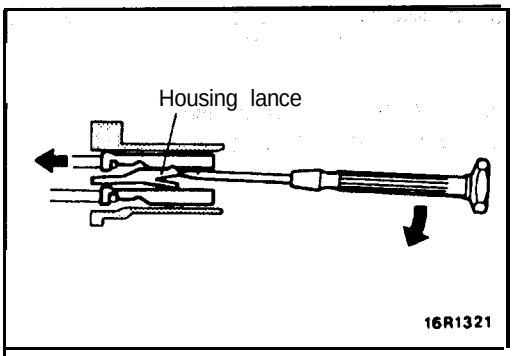

(3) Insert the tip of the screwdriver [1.4 mm (.06 in.) width] into the connector as shown in the figure, raise the housing lance slightly with it, and pull out the harness.

Caution
Tool 'No. 753787-1 supplied by AMP can be used instead of screwdriver.

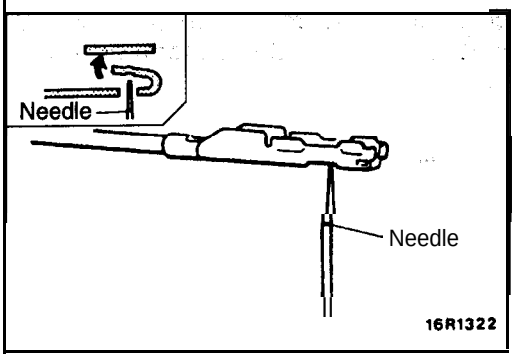

(4) Insert a needle through the hole provided on the terminal and raise the contact point of the male terminal.

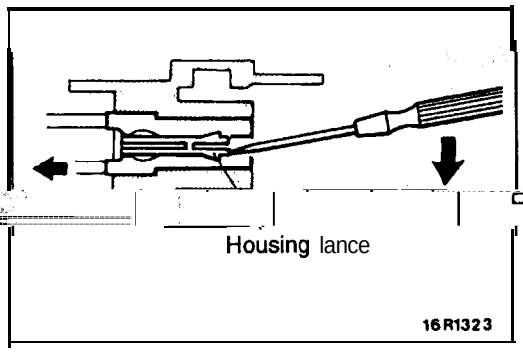

ROUND WATERPROOF CONNECTOR

(1) Remove the waterproof cap by using a screwdriver.
(2) Insert the tip of the screwdriver [1.4 mm (.06 in.) or 2.0 mm (.08 in.) width] into the connector as shown in the figure, raise the housing lance slightly, with it, and pull out harness.

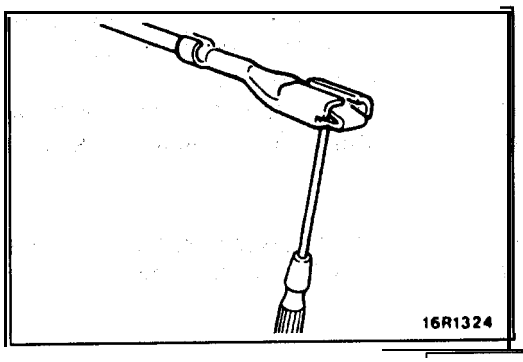

(3) Insert a screwdriver through the hole provided on the terminal and raise the contact point of the male terminal.

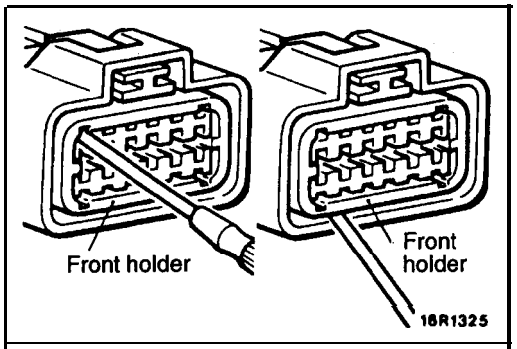

RECTANGULAR WATERPROOF CONNECTOR

(1) Disengage the front holder by using a screwdriver and remove it.

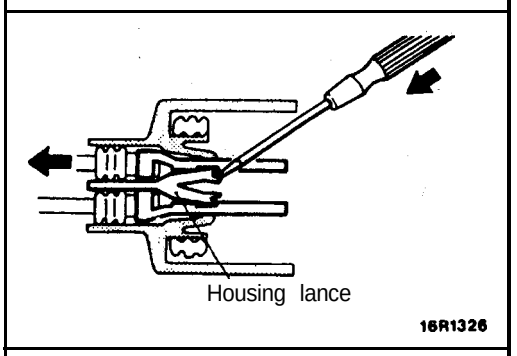

(2) Insert the tip of a screwdriver [*0.8 mm (.03 in.) width] into the connector as shown in the figure, push it lightly to raise the housing lance, and pull out the harness.
*If the right size screwdriver is not available, convert a conventional driver to the proper size.

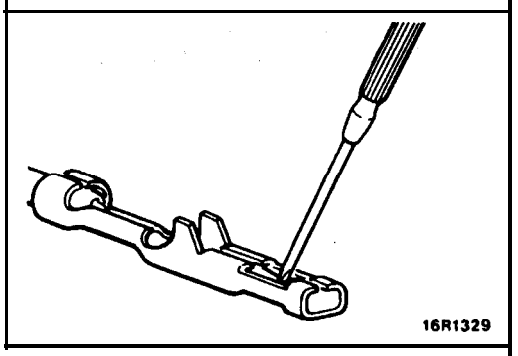

(3) Press the contact point of the male terminal down by holding a screwdriver [1.4 mm (.06 in.) width] as shown in the figure.

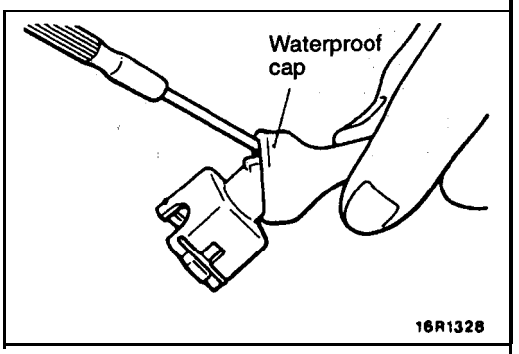

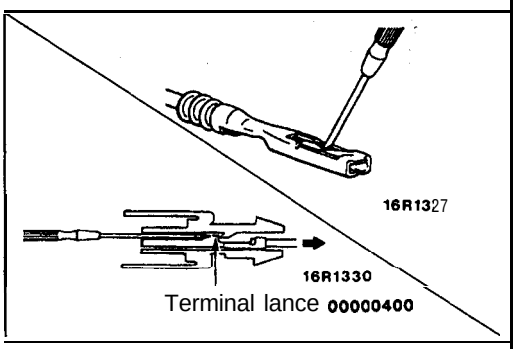

HOW TO DIAGNOSE

00100430016

The most important point in troubleshooting is to deterimine "Probable Causes". Once the probable causes are determined, parts to be checked can be limited to those associated with such 'probable causes. Therefore, unnecessary checks can be 'eliminated. The determination of the probable causes must be based on a theory and be supported by facts and must not be based on intuition only.

TROUBLESHOOTING STEPS

If an attempt is made to solve a problem without going through correct steps, for troubleshooting, the problem symptoms could become more complicated, resulting in failure to determine the-causes correctly and making incorrect repairs. The four steps below should be followed in troubleshooting.

1 Observation of Problem Symptoms

Observe the symptom carefully. Check if there are also other problems.

2 Determination of Probable Causes

In determining the probable causes, it is necessary to check the wiring diagram to understand the circuit as a system. Knowledge of switches, relays and other parts is necessary for accurate determination. The causes of similar problems in the past must be taken into account.

3 Checking of Parts Associated with Probable Causes and Determination of Faulty Parts

Troubleshooting is carried out by making step by step checks until the true cause is found. Always go through the procedures considering what check is to be made where for the best results.

4 Repair and Confirmation

After the problems are corrected, be sure to check that the system operates correctly. Also check that new problems have not been caused by the repair.

INFORMATION FOR DIAGNOSIS

This manual contains the cable diagrams as well as the individual circuit drawings, operational explanations, and troubleshooting hints for each component required to facilitate the task of troubleshooting. The information is complied in the following manner:

(1) Cable diagrams show the connector positions, etc., on the actual vehicle as well as the harness path.
(2) Circuit drawings show the configuration of the circuit with all switches in their normal positions.".
(3) Operational explanations include circuit drawings of voltage flow when the switch is 'operated and how the component operates in reaction.
(4) Troubleshooting hints include numerous examples of problems which might occur, traced backward in a common-sense manner to the origin of the trouble. Problems whose origins may not be found in this manner are pursued through the various system circuits.

NOTE
Components of ECI, ETACS, ECS, etc. with ECU do not include 3 and 4 above. For this information, refer to a manual which includes details of these components.

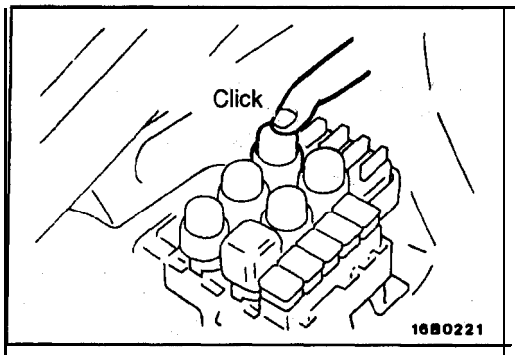

INSPECTION

1. Visual and aural checks

Check relay operation, blower motor rotation, light illumination, etc. visually *or* aurally. The flow of current is invisible but can be checked by the operation of the parts.

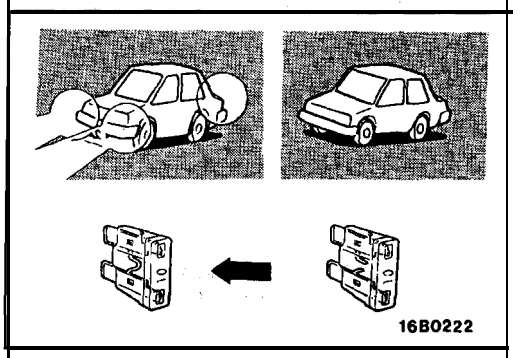

2. Simple checks

For example, if a headlight does not come on and a faulty fuse or poor grounding is suspected, replace the fuse with a new one or ground the light to the body by a jumper wire to determine which part is responsible for the problem.

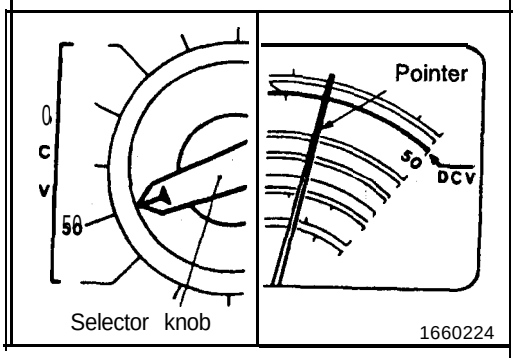

3. Checking with instruments

Use an appropriate instrument in 'an adequate range and read the indication correctly. You, must have sufficient knowledge and experience to handle instruments correctly.

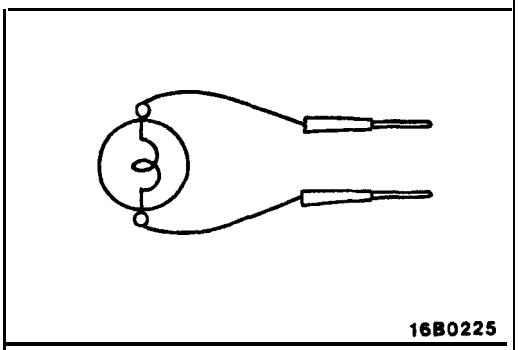

INSPECTION INSTRUMENTS

For inspection, use the following instruments:

1. Test lights

A test light consists of a 12V bulb and lead wires.' . It is used to check voltages or shortcircuits.

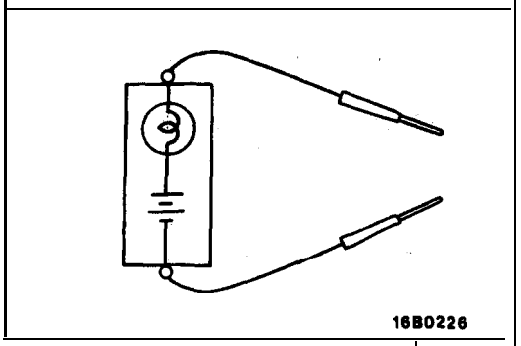

2. Self-power test light

A self-power test light consists of a bulb, battery and lead wires connected in series. It is used to check continuity or grounding.

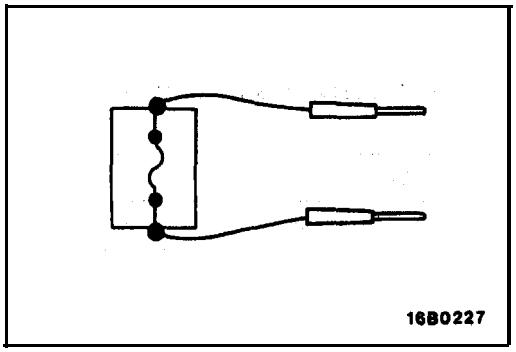

3. Jumper wire

A jumper wire is used to close an open circuit. Never use one to connect a power supply directly to a **bad.**

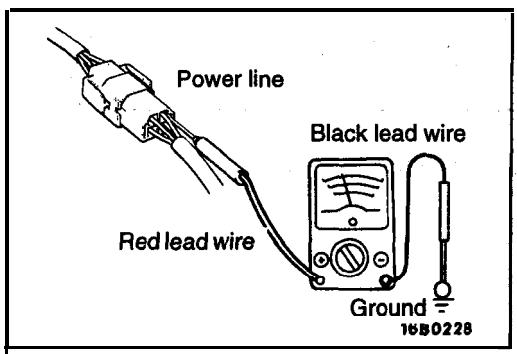

4. Voltmeter

A **voltmeter** is used to measure the circuit voltage. Normal-; **ly,** the positive (red lead) probe is applied to the point of voltage measurement and the negative. (black **lead)** probe to the body ground.

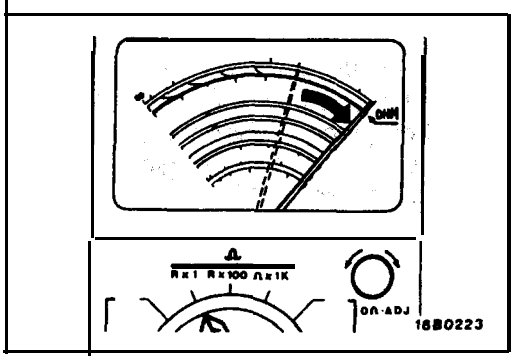

5. Ohmmeter

An ohmmeter is used' to **check continuity** or measure resistance of a switch or coil. If the **measuring** range **has been** changed, the **zero** point must **be adjusted** before measurement.

CHECKING SWITCHES

In a circuit diagram, a switch is represented by a symbol and in the idle state.

1.' Normal open or normal close switch

Switches are classified into those which **make** the circuit' **open and** those which make the circuit **closed** when off.

Normal open (NO) type	
OFF	ON
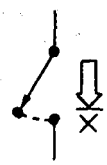 Current does not flow 16X0690	 Current flows 16X0691 00000401
Normal close (NC) type	
OFF	ON
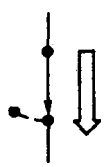 Current flows 16X0691	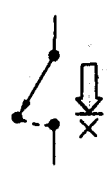 Current does not flow 16X0690 00000402

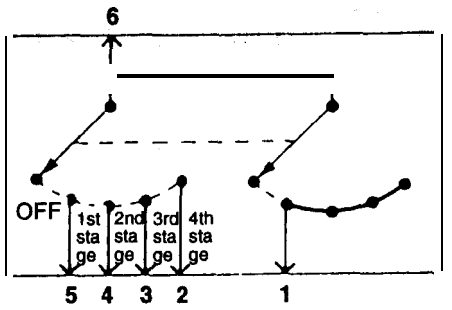

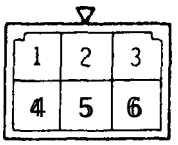

2. Switch connection

This figure illustrates a complex switch. The continuity between terminals at each position is, as indicated in the' table below.

Position	Terminal No.					
	1	2	3	4	5	6
OFF						
1 st stage	O				O	O
2nd stage	O			⌒		O
3rd stage	0		⌒			O
4th stage	0	⌒				O

NOTE
O—O denotes continuity between -terminals.

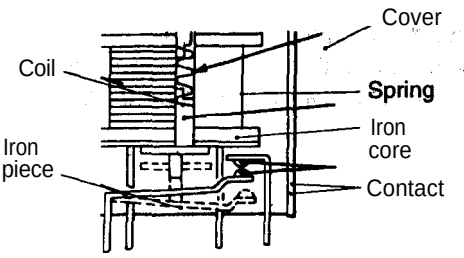

CHECKING RELAYS

1. When current flows through the coil of a relay, its core is magnetized to 'attract the iron piece, closing (ON) the contact at the tip of the iron piece. When the coil current is turned off, the iron piece returns to its original position by a spring, opening the contact (OFF).

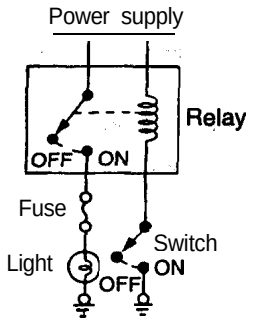

2. By using a relay, a heavy current can be turned on and off by a switch of small capacity. For example,- in the, circuit shown here, when the 'switch is turned on (closed), current flows to the coil of the relay. Then, its contact is turned on (closed) and the light comes on. The current flowing at this time to the switch is the relay coil current only, and is very small.

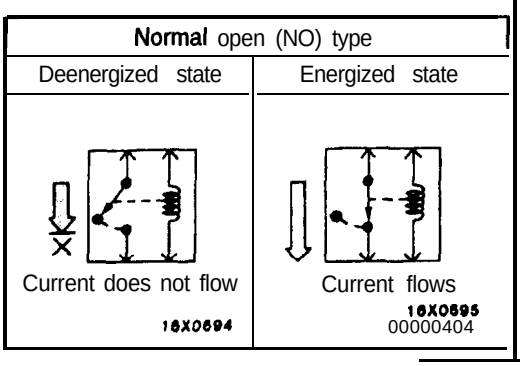

3. The relays may be classified into the normal open-type and the normal close-type by their contact construction.

NOTE
The deenergized state means that no current is flowing' through the coil and the energized state means that current' is flowing through the coil.

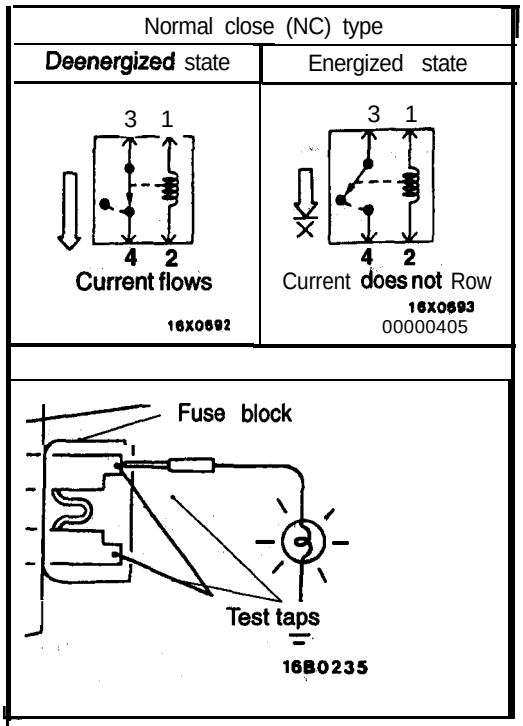

When a normal close-type relay as illustrated here is checked, there should be continuity between terminals 1 and 2 and between terminals 3 and 4 when the relay is deenergized, and the continuity should be lost between terminals 3 and 4 when the battery voltage is applied to the terminals 1 and 2. ,A relay can be checked in this manner. It cannot be determine if a relay is okay or faulty by checking its state only when it is deenergized (or energized).

CHECKING FUSES

A blade type fuse has test taps provided to allow checking of the fuse itself without removing it from the fuse block. The fuse is okay if the test light comes on when its one lead is connected to the test taps (one at a time) and the other lead is grounded. (Change the ignition switch position so that the fuse circuit becomes live.)

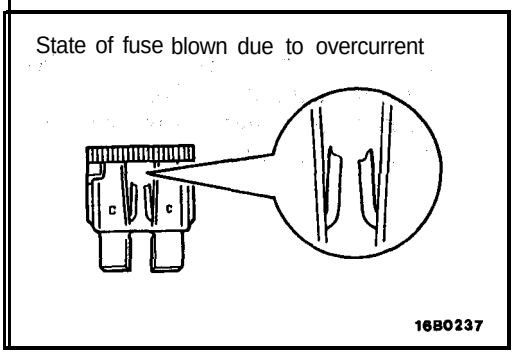

CAUTIONS IN EVENT 'OF BLOWN FUSE

When a fuse is blown, there are two, probable causes as follows: One is that it is blown dire to flow of current 'exceeding its rating. The other is that it is blown due to repeated on/off current flowing through it. Which of the two causes is responsible can be easily determined by visual check as described below.

(1) Fuse blown due to current exceeding' rating
The illustration shows the state of a fuse blown due to this cause. In this case, do not replace the fuse with a new one hastily since a current heavy enough to blow the fuse has flowed through it, First, check the circuit use only a fase of the for shorts and check for abnormal, electric parts. After correcting shorts or replacing parts, use only. a fuse of the same capacity as a replacement. Never use a fuse of lager capacity than the one that has blown;; If such a fuse is used, electric parts or wirings could be damaged before the fuse blows in the event an overcurrent occurs again.

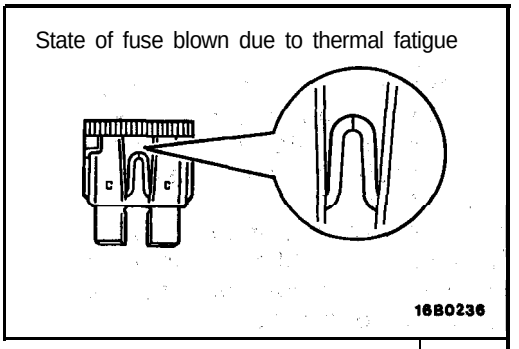

(2) Fuse blown due to repeated current on/off
The illustration shows the state of a fuse blown due to repeated current on/off. Normally, this type of problem occurs after a fairly long period of use and is less frequent than the above type. In this case, simply replace with a new fuse of the same capacity.

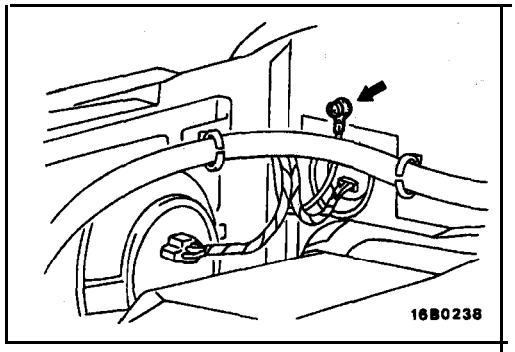

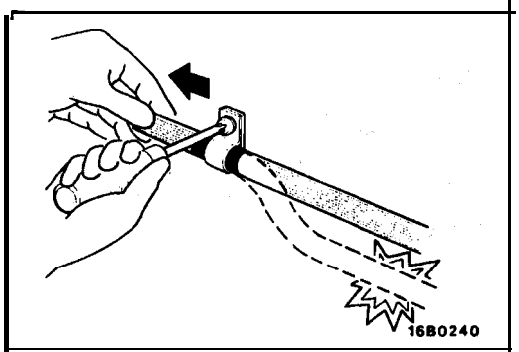

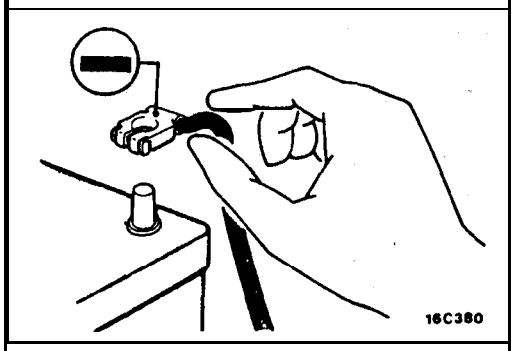

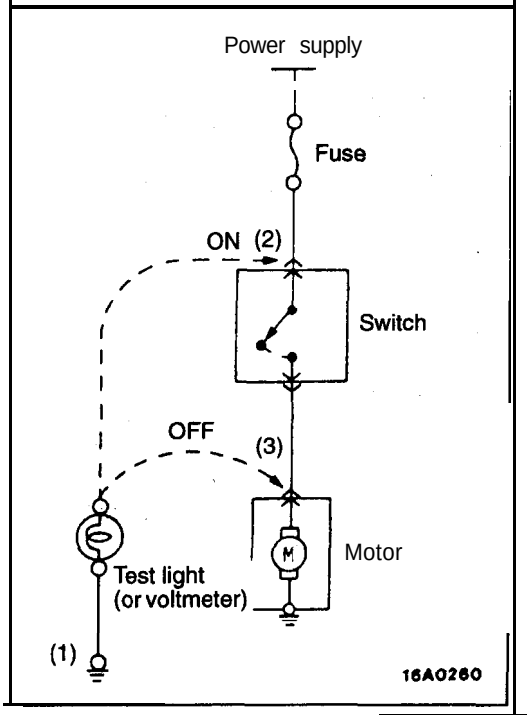

CABLES AND WIRES CHECK

1. Check connections for looseness, rust and stains.
2. Check terminals and wires for corrosion by battery electrolyte, etc.
3. Check terminals and wires for open circuit or impending open circuit.
4. Check wire insulation and coating for damage, cracks and degrading.
5. Check conductive parts of terminals for contact with other metallic parts (vehicle body and other parts).
6. Check grounding parts to verify that there is complete continuity between attaching bolt(s) and vehicle body.
7. Check for incorrect wiring.
8. Check that wirings are clamped to prevent contact with sharp corners of the vehicle body, etc. or hot parts (exhaust manifold, pipe, etc.).
9. Check that wirings are clamped firmly to secure enough clearance from the fan pulley, fan belt, and other rotating or moving parts.
10. Check that the wirings between the fixed parts such as the vehicle body and the vibrating' parts such as the engine are made with adequate allowance for vibrations.

BATTERY HANDLING

When checking or servicing does not require 'power from the on-vehicle battery, be sure to disconnect the cable from the battery (–) terminal. This is to prevent problems that could be caused by a short circuit. Disconnect the (–) terminal first and reconnect it last.

GENERAL ELECTRICAL SYSTEM CHECK

A circuit consists of the power supply, switch, relay, load, ground, etc. There are various methods to check a circuit including an overall check, voltage check, short-circuit check, and continuity check. Each of # these methods is briefly described in the following:

1. VOLTAGE CHECK

(1) Ground one lead wire of the test light. If a voltmeter is used instead of the test light, ground the grounding side lead wire.

(2) Connect the other lead wire of the test light to the power side terminal of the switch connector. The test light should come on or the voltmeter should indicate a voltage.

(3) Then, connect the test light or voltmeter to the motor connector. The test light should not come on, or the voltmeter should indicate no voltage. When the switch is turned on in this state, the test light should come on, or the voltmeter should indicate a voltage, with motor starting to run.

(4) The circuit illustrated here is normal. If there is any problem, such as the motor failing to run, check voltages beginning at the connector nearest to the motor until the faulty' part is identified.

2. SHORT-CIRCUIT CHECK

Because the fuse has blown, it is probable that there is a short circuit. Follow the **procedures** below to narrow down the short-circuit location.

Take out the blown fuse and connect the test light to the disconnected terminal (switch: OFF).

↓

The test light illuminates. — Yes → Short-circuit between the fuse block and the switch **A.**

↓ No

Switch ON the switch. (The test light illuminates but the illumination light does not.)

↓

Disconnect the connector of the illumination light.

↓

The test light remains illuminated. — Yes → Short-circuit between the switch and the illumination light B.

↓ No

Short-circuit **between the** connector and the illumination light C.

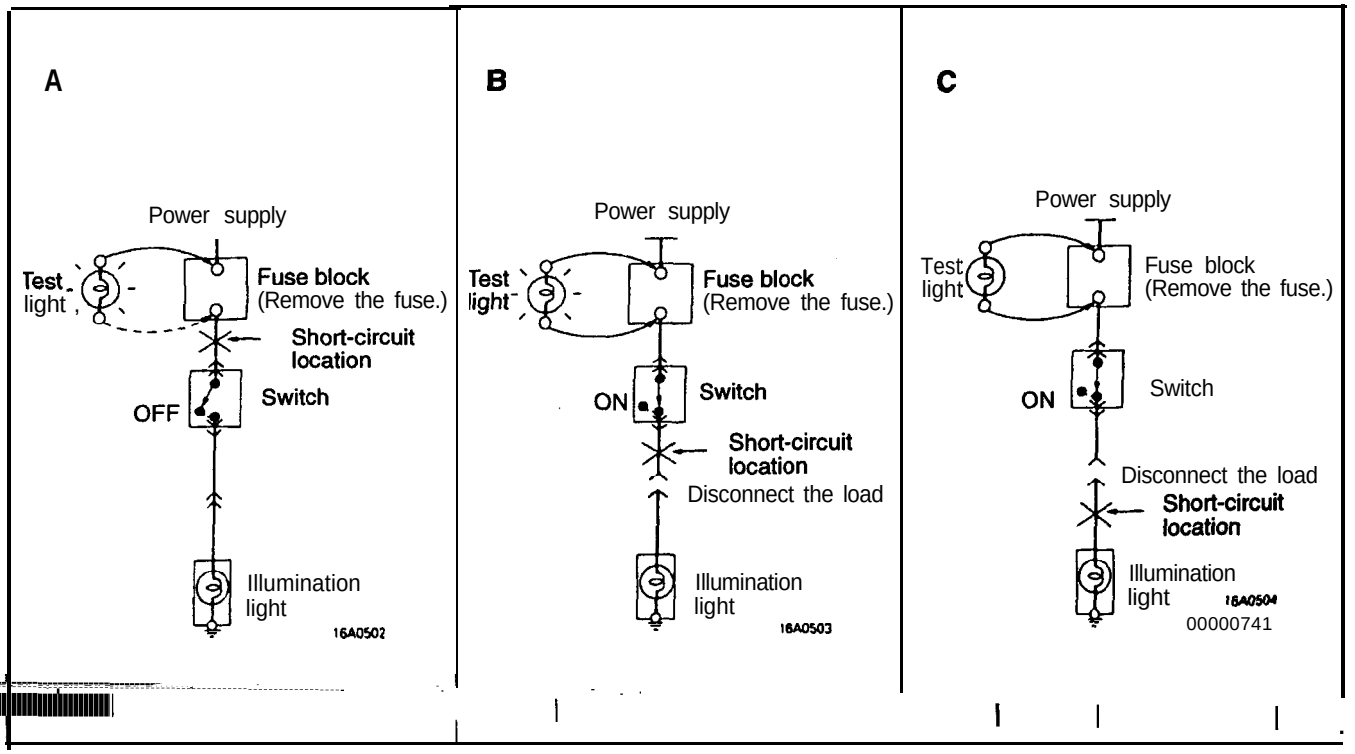

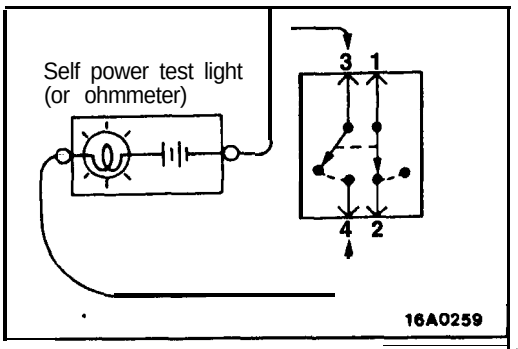

3. CONTINUITY CHECK

(1) When the switch is in the OFF position, the self power test light must illuminate or the ohmmeter should read 0 ohm, only when the terminals 1 and 2 are interconnected.

(2) When the switch is the ON position, the self power test light should come on or the ohmmeter should read 0 ohm, only when the terminals 3 and 4 are interconnected.

NOTES

COMPONENT LOCATIONS

CONTENTS

70109000198

FUSIBLE LINK AND FUSE

70100010176

Name	Symbol	Name	Symbol
Dedicated fuses No. 1 – 12	A*1	Multi-purpose fuses	H
	D*2	Fusible links No. 1–9	B*1
	E*3		C*2
Dedicated fuse No. 13	I		F*3
Dedicated fuse (for auto-cruise control system)	G*2,*3		

NOTE
- I: 2.0L Engine (Non-turbo).
- 2: 2.0L Engine (Turbo).

*3: 2.4L Engine.
For details of fusible link and fuse, refer to CENTRALIZED JUNCTION

<2.0L Engine (Non-turbo)>

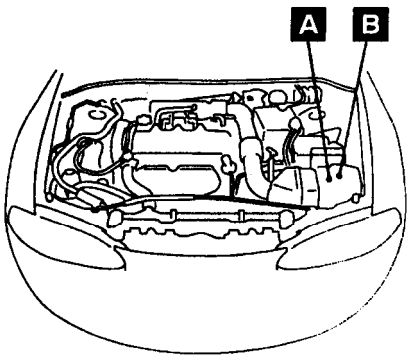

16X0734

<2.0L Engine (Turbo)>

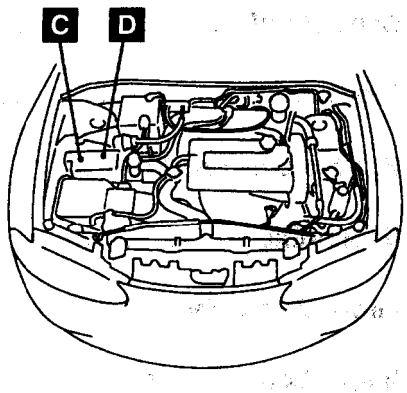

16X0733

<2.4L Engine>

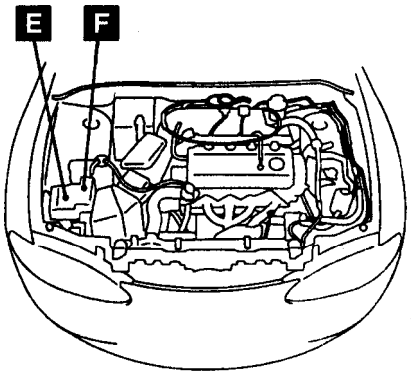

16X1245

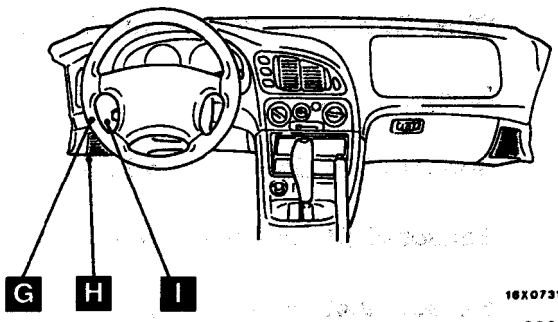

16X0731

00004151

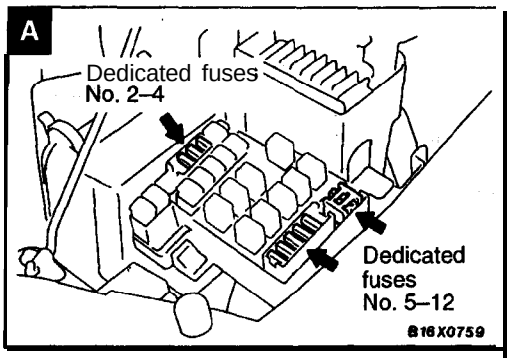
A
Dedicated fuses No. 2–4
Dedicated fuses No. 5–12
B16X0759

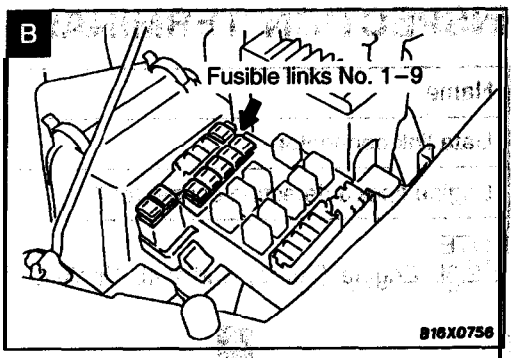
B
Fusible links No. 1–9
B16X0756

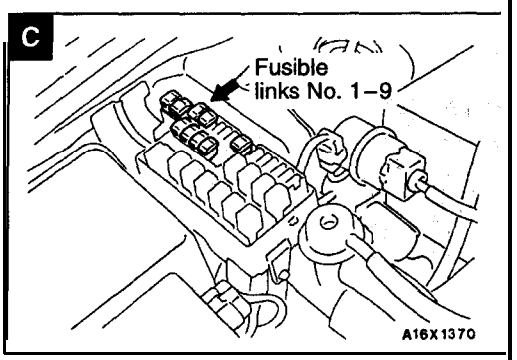
C
Fusible links No. 1–9
A16X1370

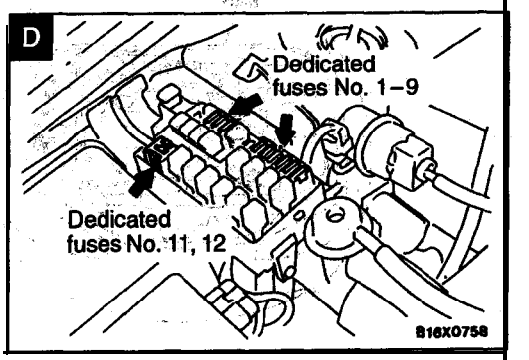
D
Dedicated fuses No. 1–9
Dedicated fuses No. 11, 12
B16X0758

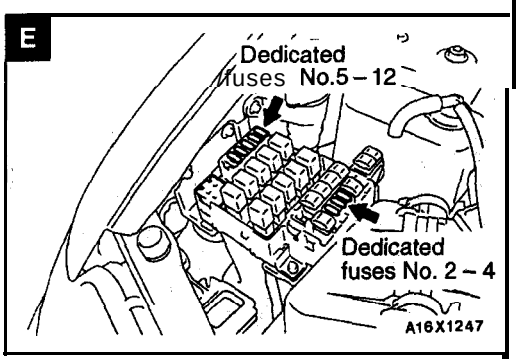
E
Dedicated fuses No.5 – 12
Dedicated fuses No. 2 – 4
A16X1247

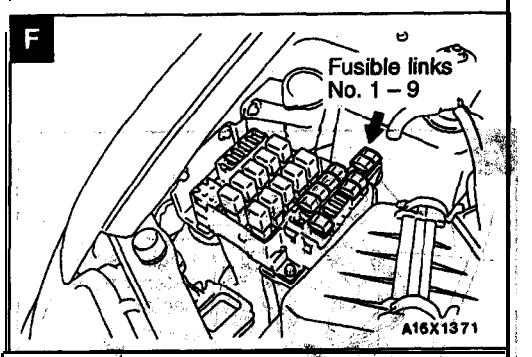
F
Fusible links No. 1 – 9
A16X1371

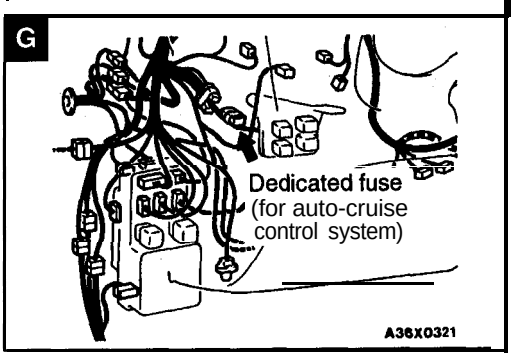
G
Dedicated fuse (for auto-cruise control system)
A36X0321

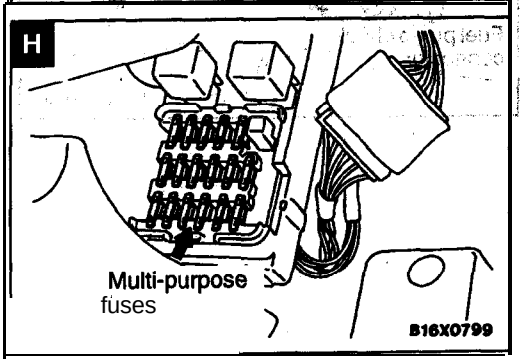
H
Multi-purpose fuses
B16X0799

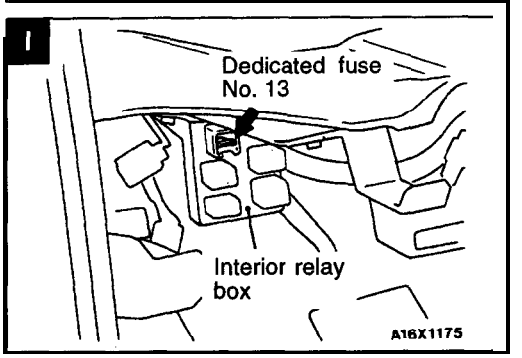
I
Dedicated fuse No. 13
Interior relay box
A16X1175

INSPECTION TERMINAL

70100020179

Name	Symbol	Name	Symbol
Data link connector	B	Fuel pump check connector *	A
Engine speed detection connector .	A		

NOTE
- : 2.0L Engine (Turbo) and 2.4L Engine.

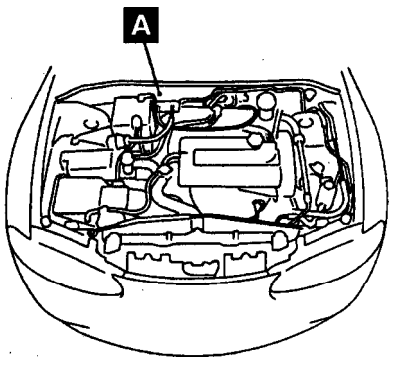

16X0733

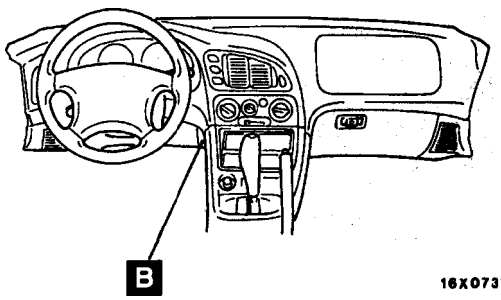

16X0731

00003774

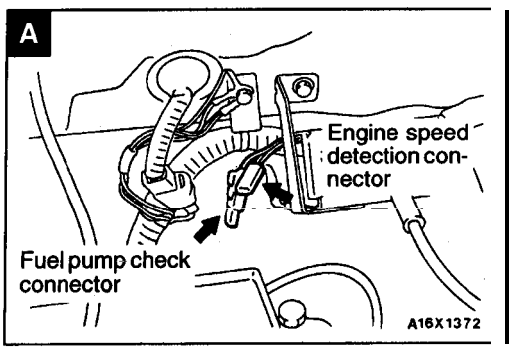

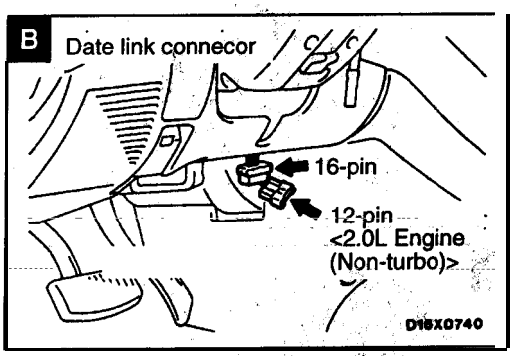

TSB Revision

GROUNDING

70100030110

<2.0L Engine (Non-turbo)>

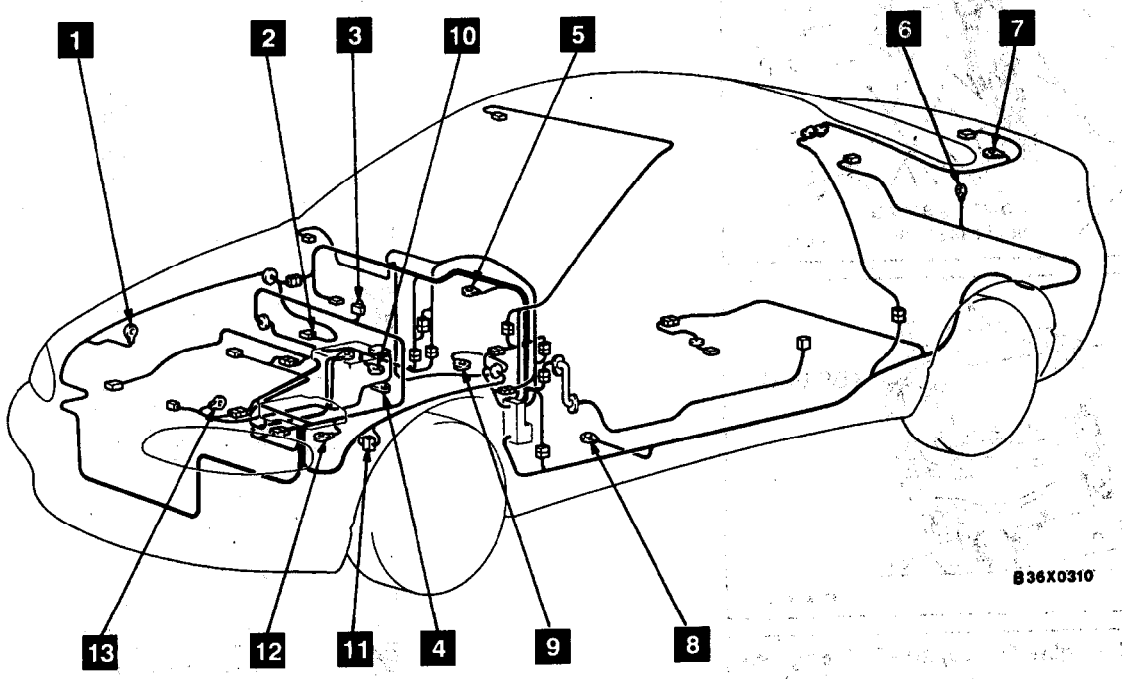

<2.0L Engine (Turbo) and 2.4L Engine>

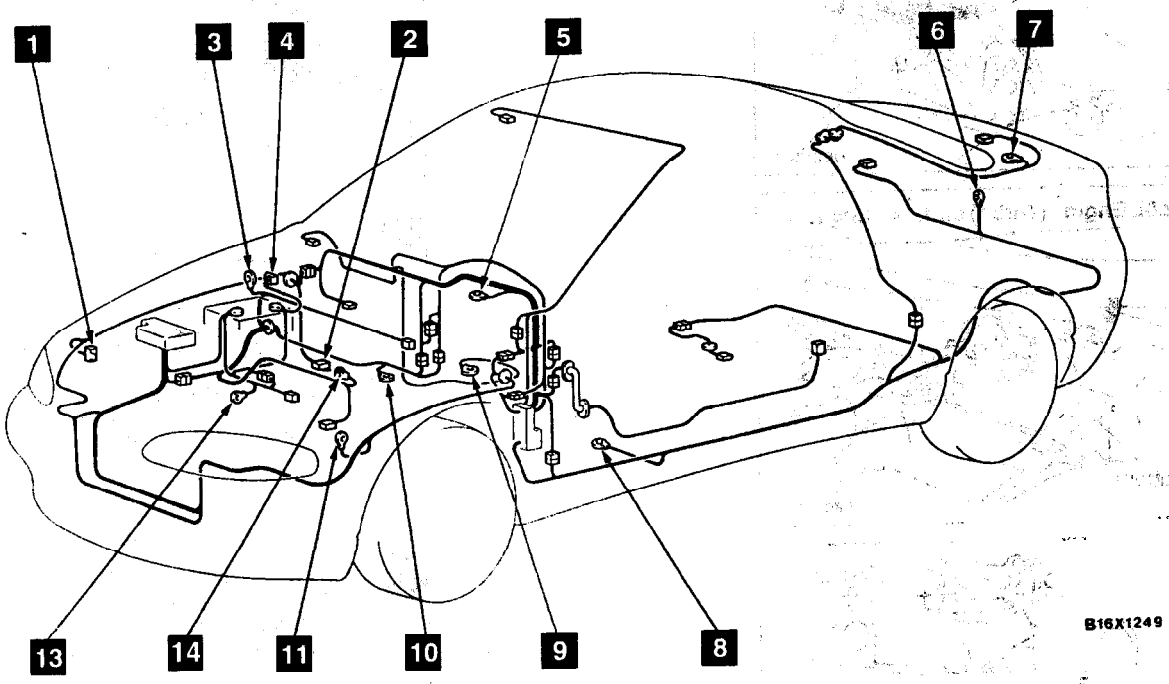

NOTE
1–14 numbers correspond to body ground point No. in CIRCUIT DIAGRAMS.

TSB Revision

1 <2.0L Engine (Non-turbo)>

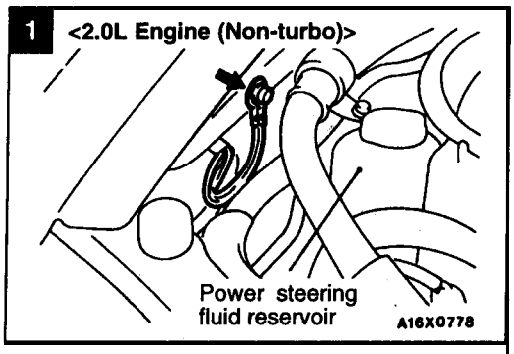

1 <2.0L Engine (Turbo) and 2.4L Engine>

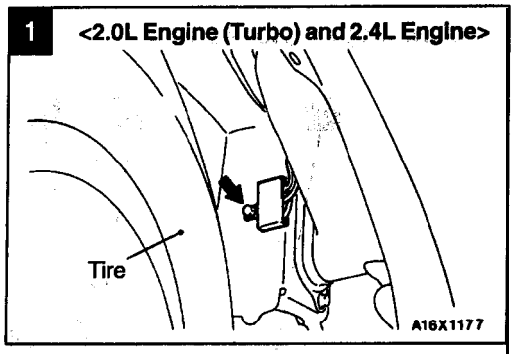

2 <2.0L Engine (Non-turbo)>

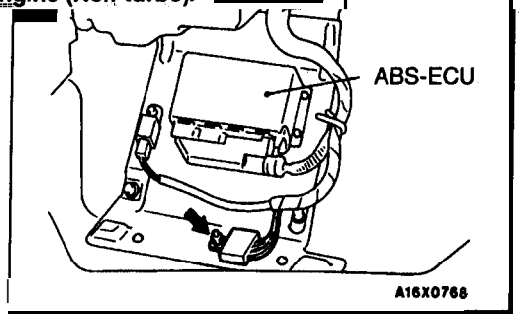

3

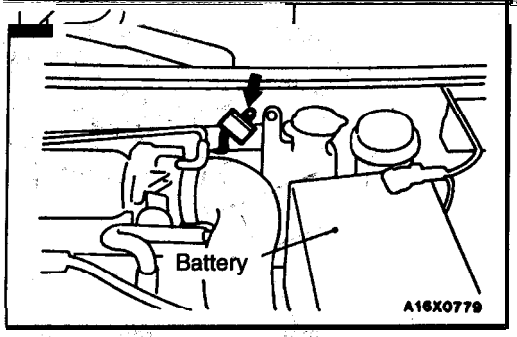

3 <2.0L Engine (Turbo) and 2.4L Engine>

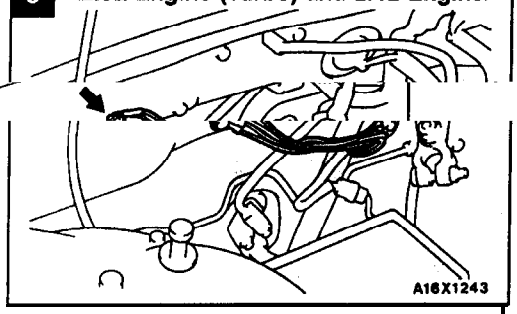

4 <2.0L Engine (Non-turbo)>

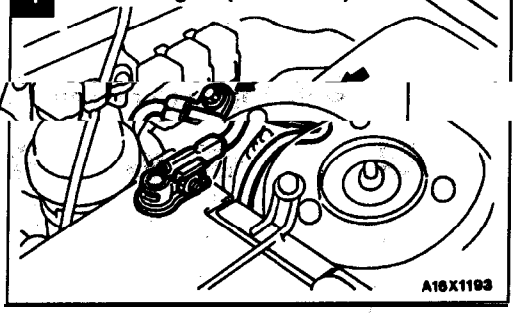

4 <2.0L Engine (Turbo) and 2.4L Engine>

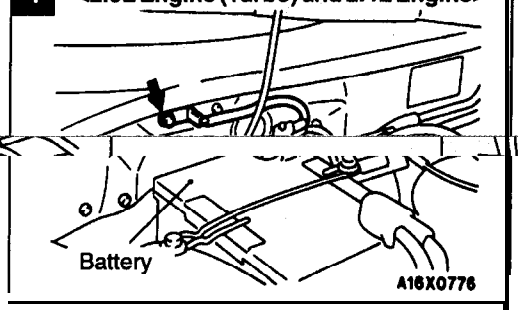

5

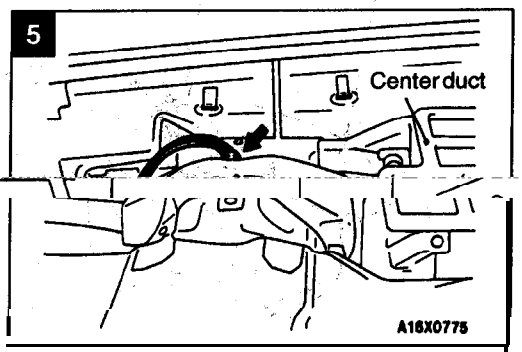

6

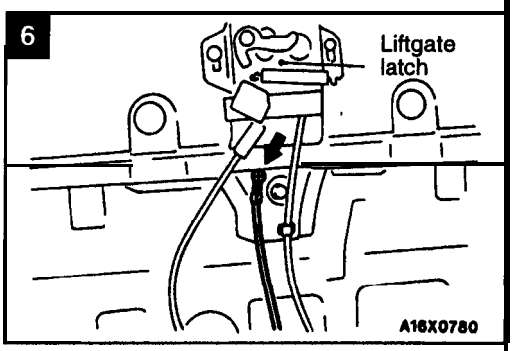

7

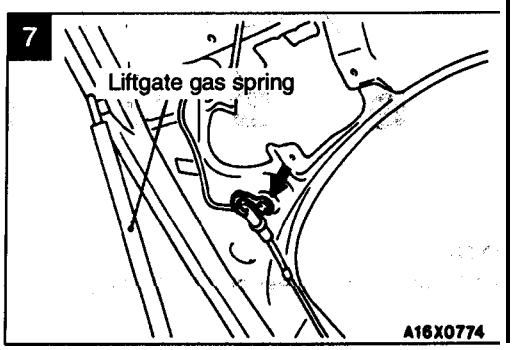

8

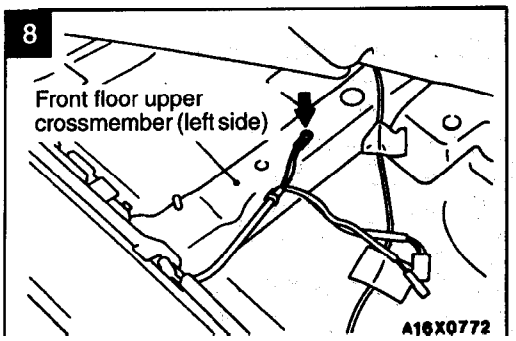

9

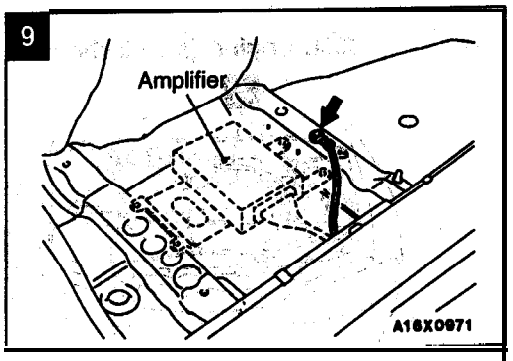

10

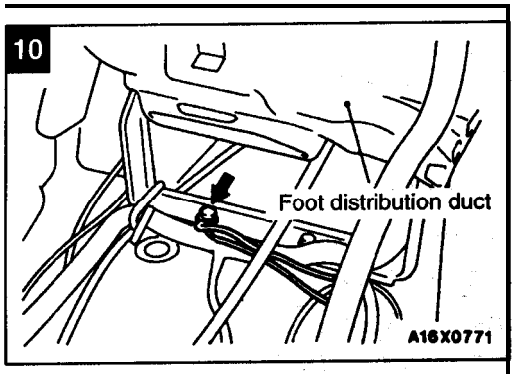

11 <2.0L Engine (Non-turbo)>

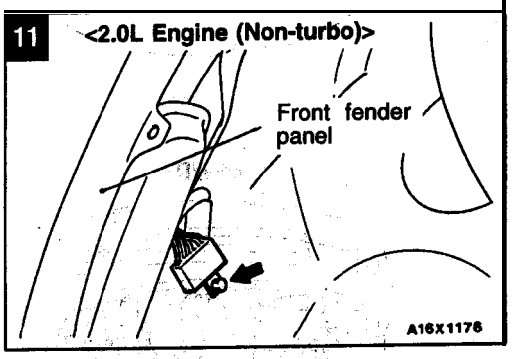

11 <2.0L Engine (Turbo) and 2.4L Engine>

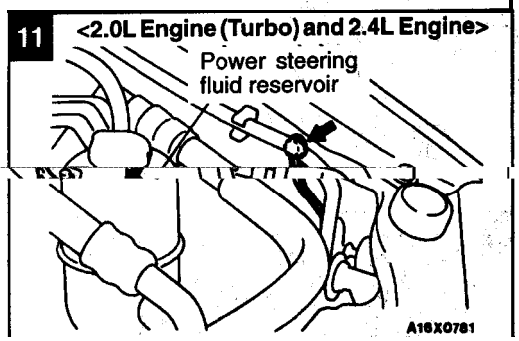

12

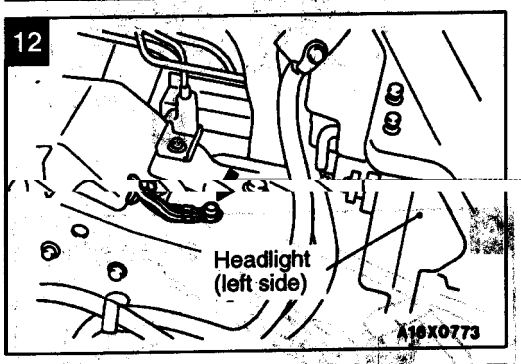

13 <2.0L Engine (Non-turbo)>

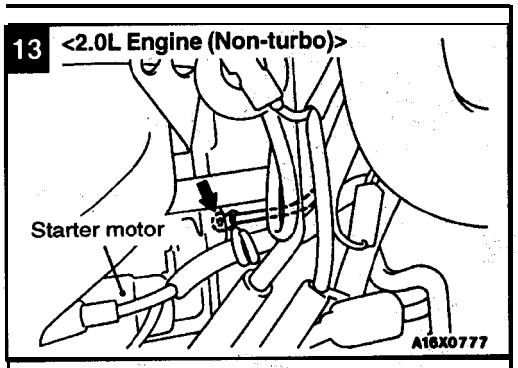

13 <2.0L Engine (Turbo) and 2.4L Engine>

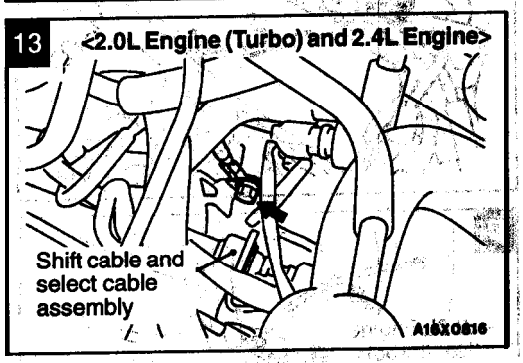

14 <2.4L Engine>

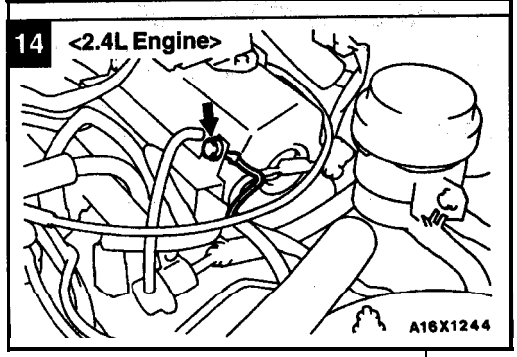

GROUNDING CABLE

70100100125

<2.0L Engine (Non-turbo)>

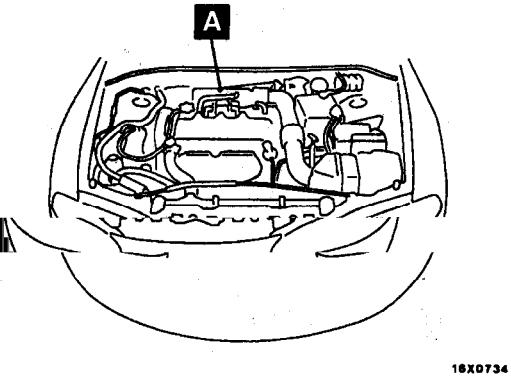

<2.0L Engine (Turbo) and 2.4L Engine>

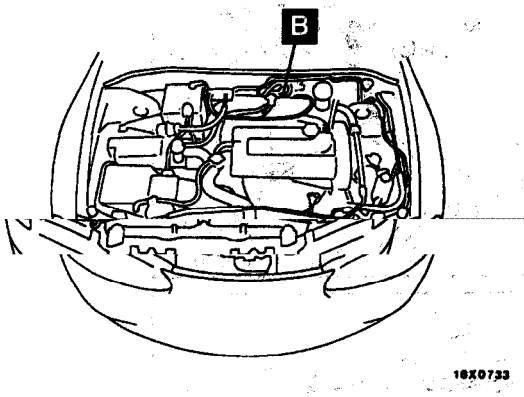

<FWD>

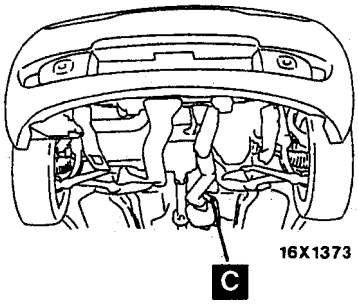

<AWD>

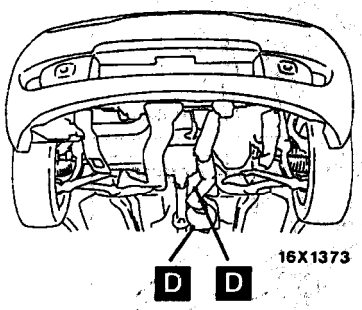

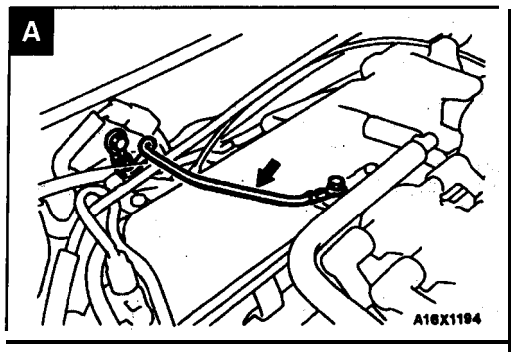

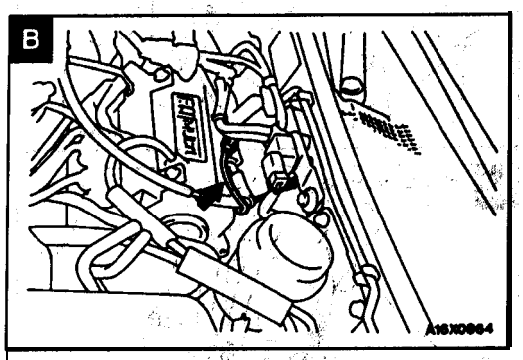

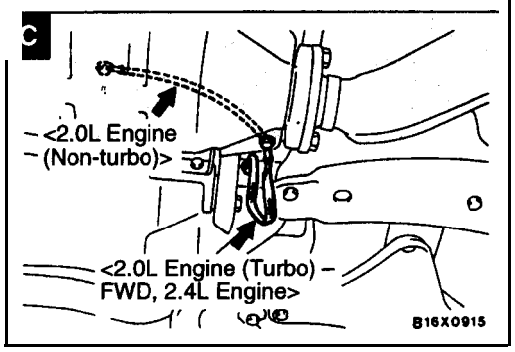

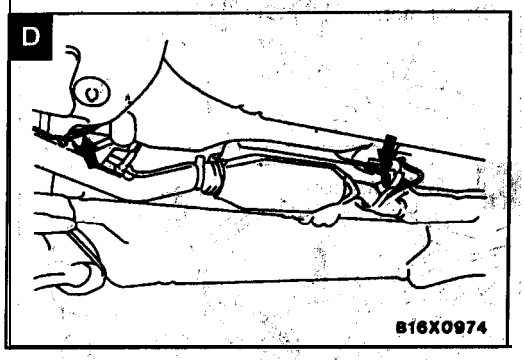

TSB Revision

RELAY

70100040205

Name	Symbol	Name	Symbol
ABS power relay <AWD>	P	Horn relay	C*1
A/C compressor clutch relay	C*1		D*2
	D*2		E*3
	E*3	Hydraulic unit (with built-in inotor relay and valve relay) <ABS>	, G
ASD relay	B*1		
Auto-cruise control relay	A*1	MFI relay	O*2,*3
Blower motor relay	K	Motor antenna control relay	R
Condenser fan relay (HI), (LO)	C*1	Power window relay	L
	D*2	Radiator fan relay (WI), (LO1)	C*1
	E*3	Radiator fan relay (HI), (LO1), (LO2)	D*2
Defogger relay	K		E*3
Door lock power relay 1	N	Rear intermittent wiper relay	I
Door lock power relay 2 (for keyless entry system)	Q*4	Starter reiay	N
	S*5		
EATX relay	B*1	Taillight relay	C*1
Fog light relay	C*1		D*2
	D*2		E*3
	E*3	Theft-alarm horn relay	L
Fuel pump relay	B*1	Theft-alarm starter relay	L
	0 *2,*3	Turn signal and hazard flasher unit	J
Generator relay	F*2	Windshield intermittent wiper relay	M
	H*3		
Headlight relay	C*1		
	D*2		
	E*3		

NOTE
*1: 2.0L Engine (Non-turbo).
*2: 2.0L Engine (Turbo).
*3: 2.4L Engine.
*4: ECLIPSE
*5: ECLIPSE SPYDER

<2.0L Engine (Non-turbo)>

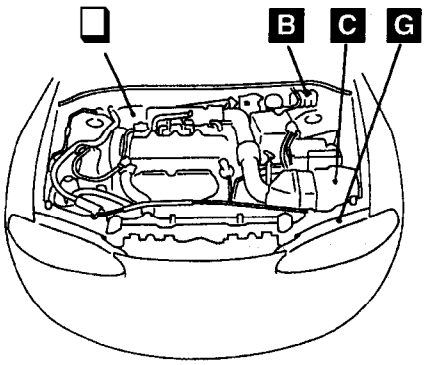

16X0734

<2.0L Engine (Turbo)>

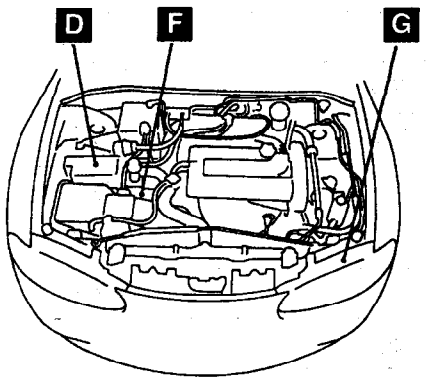

16X0733

<2.4L Engine>

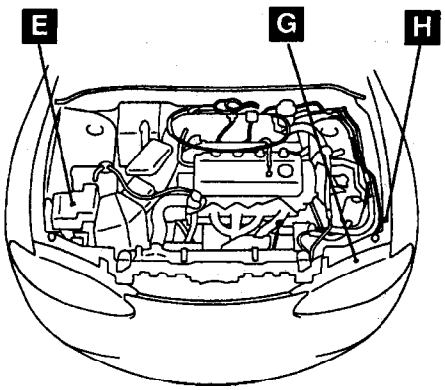

16X1245

00005344

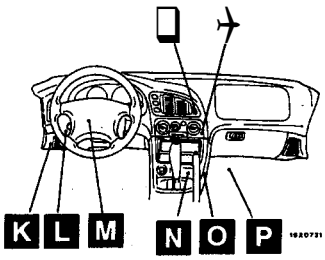

<ECLIPSE>

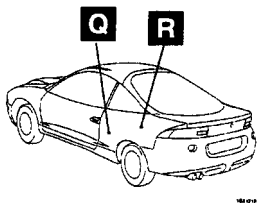

<ECLIPSE SPYDER>

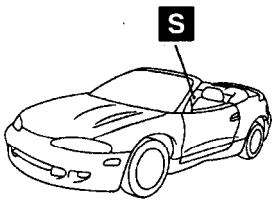

16X1328

00005305

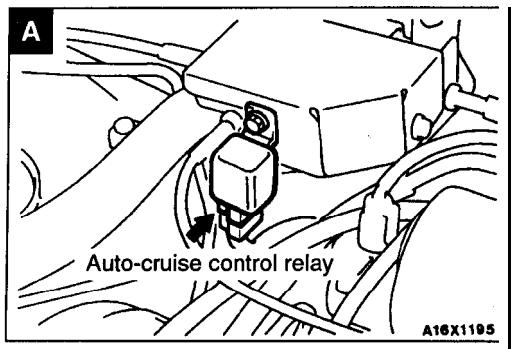

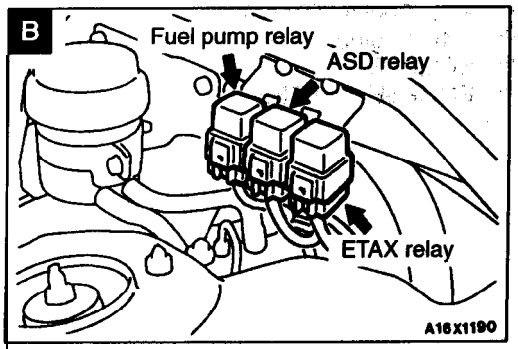

TSB Revision

C

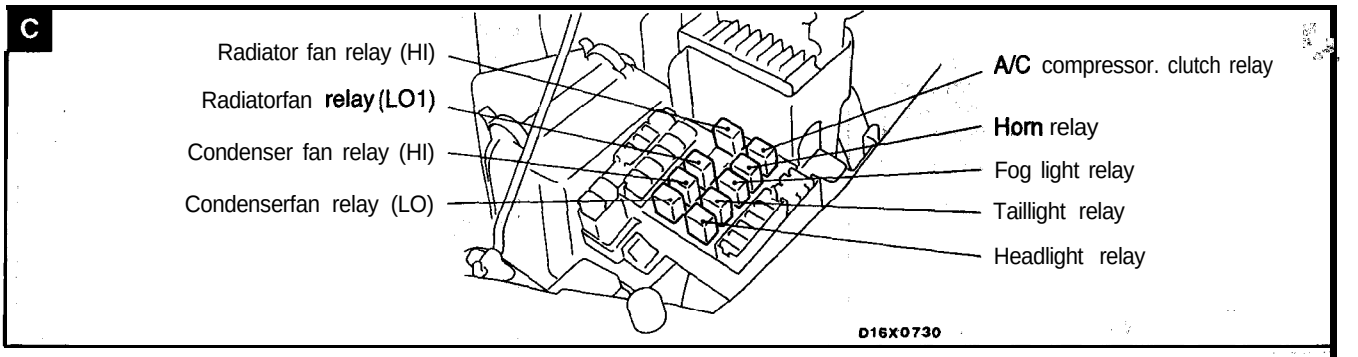
Radiator fan relay (HI)
Radiatorfan relay (LO1)
Condenser fan relay (HI)
Condenserfan relay (LO)
A/C compressor. clutch relay
Horn relay
Fog light relay
Taillight relay
Headlight relay
D16X0730

D

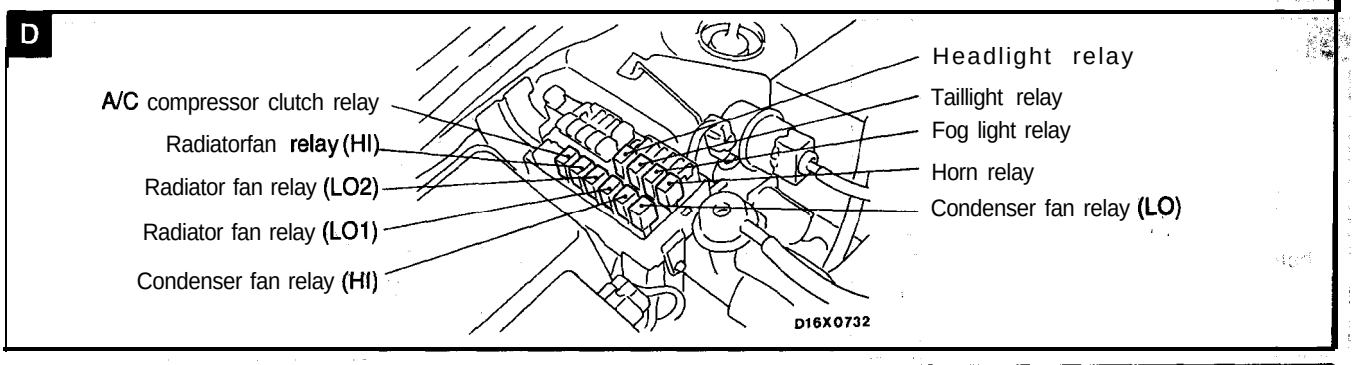
A/C compressor clutch relay
Radiatorfan relay (HI)
Radiator fan relay (LO2)
Radiator fan relay (LO1)
Condenser fan relay (HI)
Headlight relay
Taillight relay
Fog light relay
Horn relay
Condenser fan relay (LO)
D16X0732

E

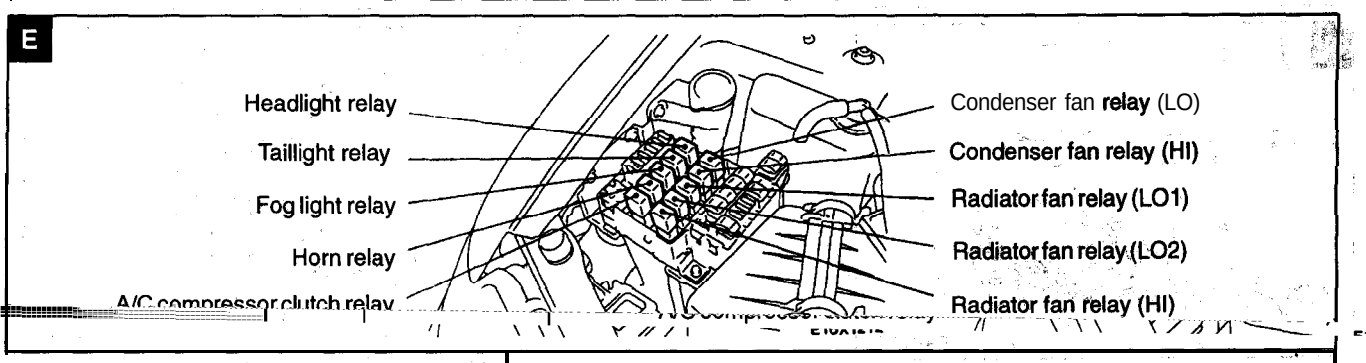
Headlight relay
Taillight relay
Fog light relay
Horn relay
A/C compressor clutch relay
Condenser fan relay (LO)
Condenser fan relay (HI)
Radiator fan relay (LO1)
Radiator fan relay (LO2)
Radiator fan relay (HI)

F

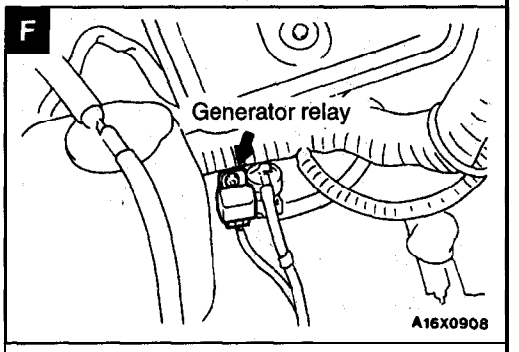
Generator relay
A16X0908

G

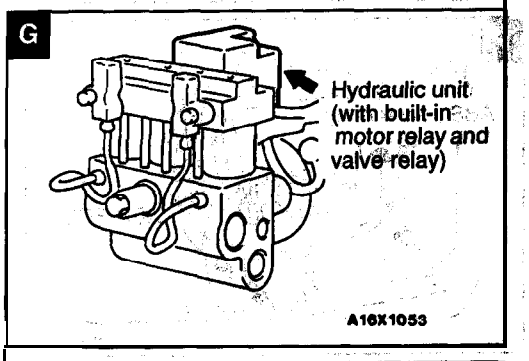
Hydraulic unit (with built-in motor relay and valve relay)
A16X1053

H

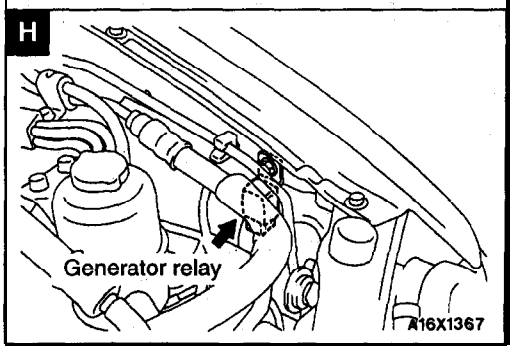
Generator relay
A16X1367

I

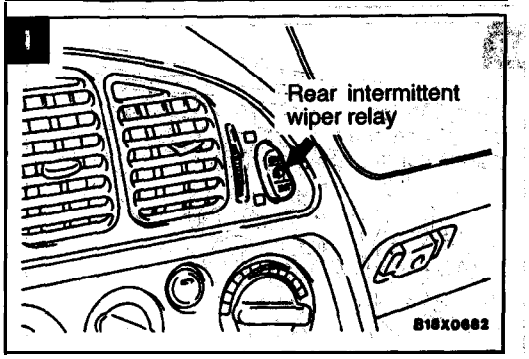
Rear intermittent wiper relay
B16X0682

J

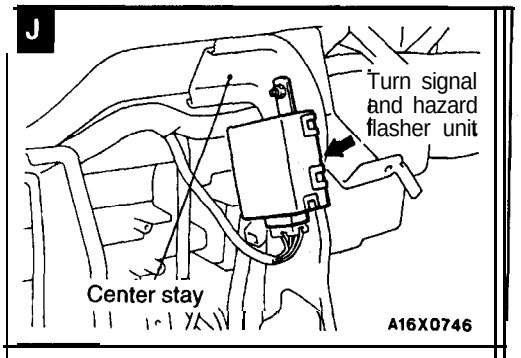
Turn signal and hazard flasher unit
Center stay
A16X0746

K

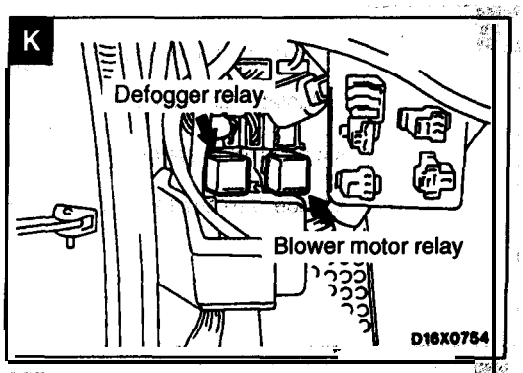
Defogger relay
Blower motor relay
D16X0754

L

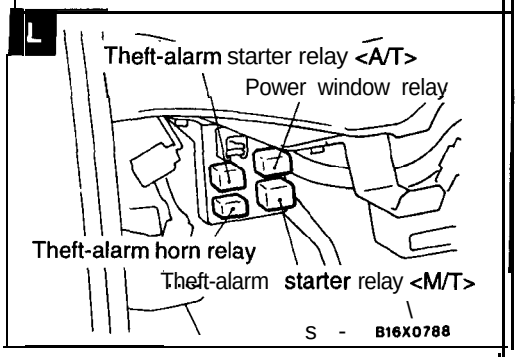
Theft-alarm starter relay <A/T>
Power window relay
Theft-alarm horn relay
Theft-alarm starter relay <M/T>
B16X0788

M

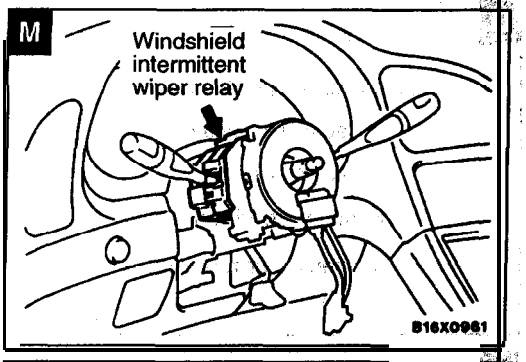
Windshield intermittent wiper relay
B16X0961

N

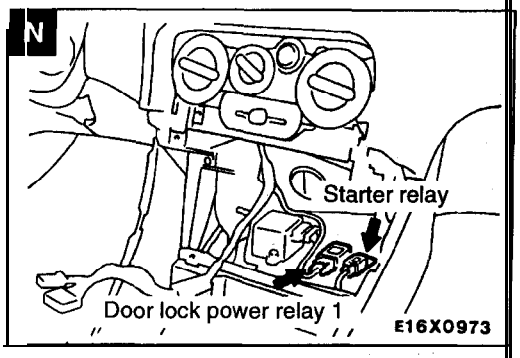
Starter relay
Door lock power relay 1
E16X0973

O

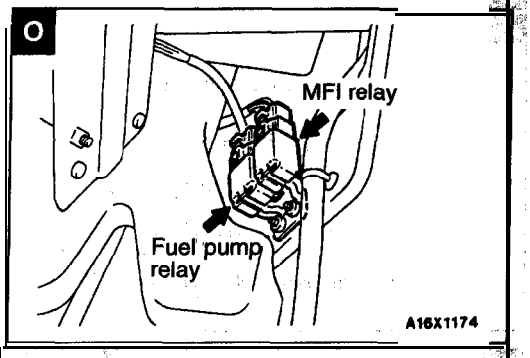
MFI relay
Fuel pump relay
A16X1174

P

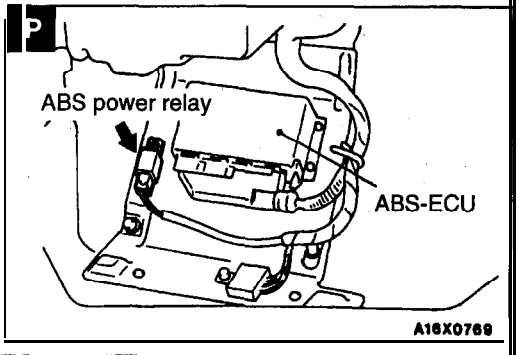
ABS power relay
ABS-ECU
A16X0769

Q

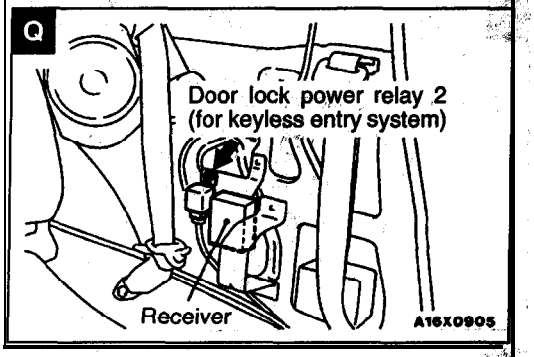
Door lock power relay 2 (for keyless entry system)
Receiver
A16X0905

R

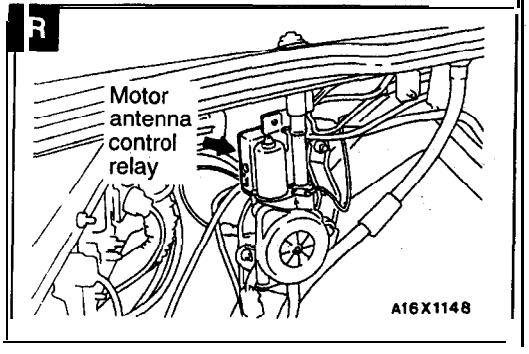
Motor antenna control relay
A16X1148

S

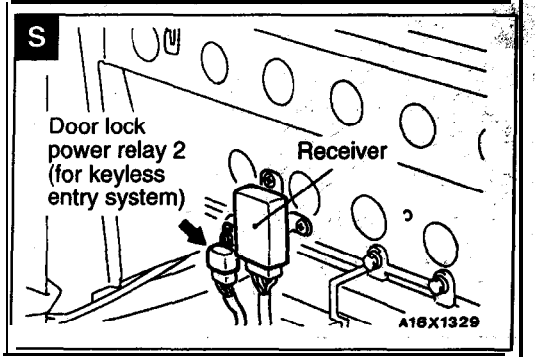
Door lock power relay 2 (for keyless entry system)
Receiver
A16X1329

SENSOR <2.0L Engine' (Non-turbo)>

70100080201

Name	Symbol	Name	Symbol
ABS wheel-speed sensor (front)	M	Intake air temperature sensor	D
ABS wheel-speed sensor (rear)	P	Knock sensor	E
Camshaft position sensor	G	MAP sensor	B
Crankshaft position sensor	C	Output speed sensor <A/T>	J
Engine coolant temperature sensor	A	Revolution pick-up sensor <A/C>	H
Fin thermo sensor <A/C>	L	Throttle position sensor	F
Heated oxygen sensor (front)	N	Transaxle range switch (with built-in transaxle temperature sensor)	K
Heated oxygen sensor (rear)	O		
Input speed sensor <A/T>	J	Vehicle speed sensor <M/T>	T

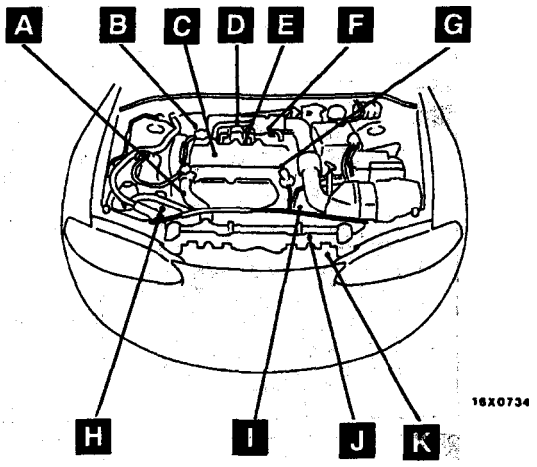

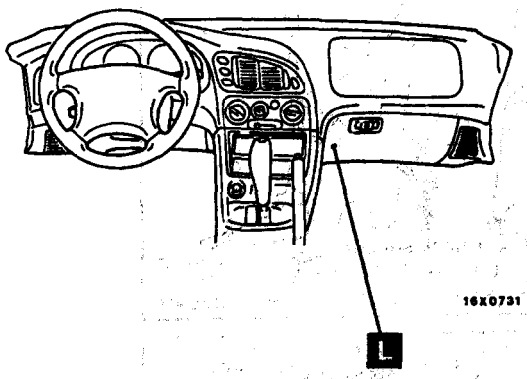

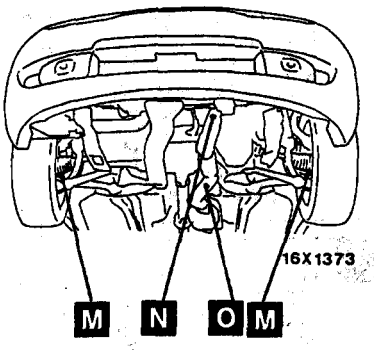

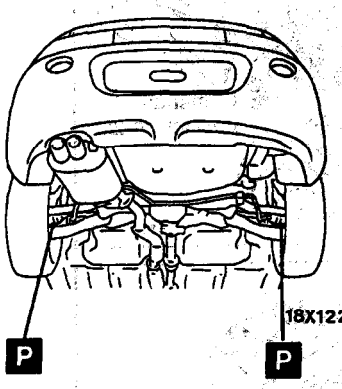

00005306

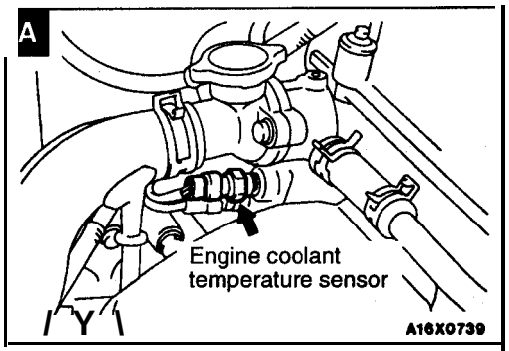
A
Engine coolant temperature sensor
A16X0739

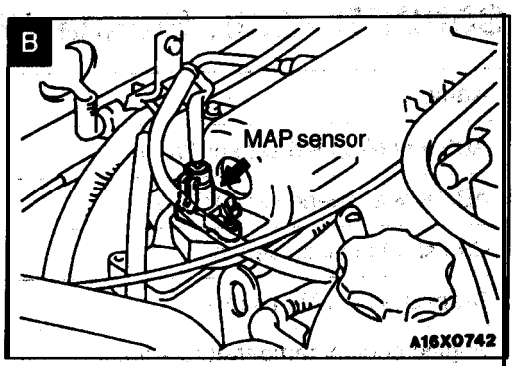
B
MAP sensor
A16X0742

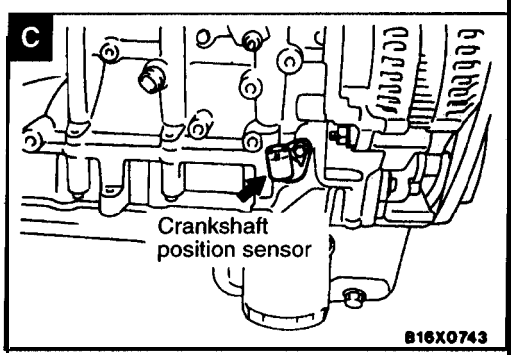
C
Crankshaft position sensor
B16X0743

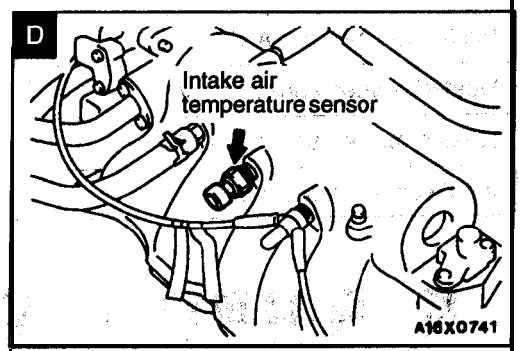
D
Intake air temperature sensor
A16X0741

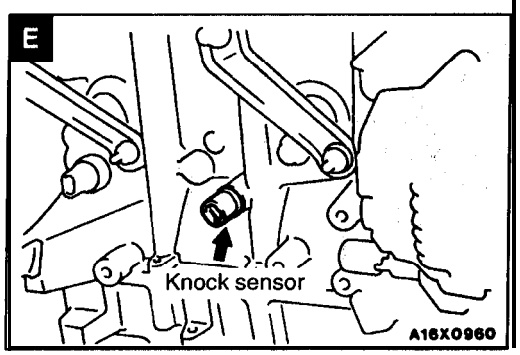
E
Knock sensor
A16X0960

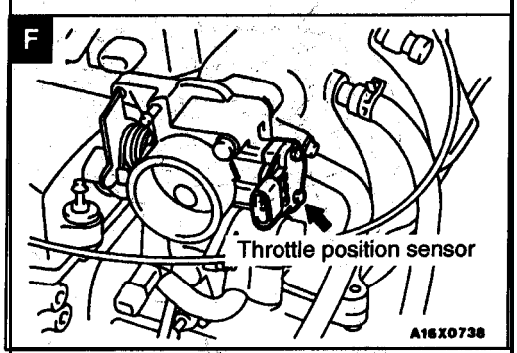
F
Throttle position sensor
A16X0738

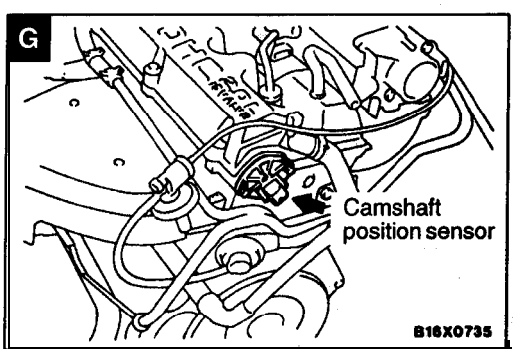
G
Camshaft position sensor
B16X0735

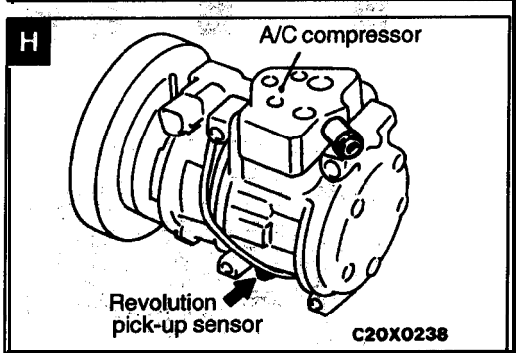
H
A/C compressor
Revolution pick-up sensor
C20X0238

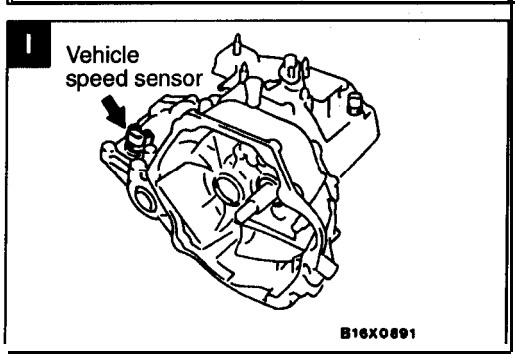
I
Vehicle speed sensor
B16X0891

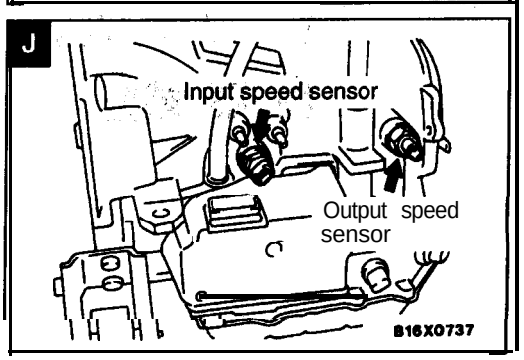
J
Input speed sensor
Output speed sensor
B16X0737

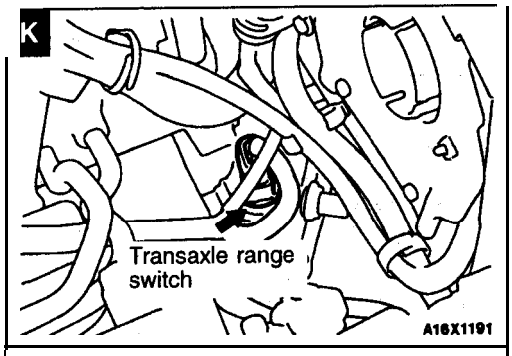
K
Transaxle range switch
A16X1191

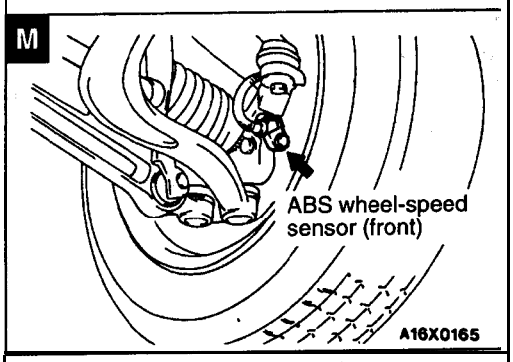
M
ABS wheel-speed sensor (front)
A16X0165

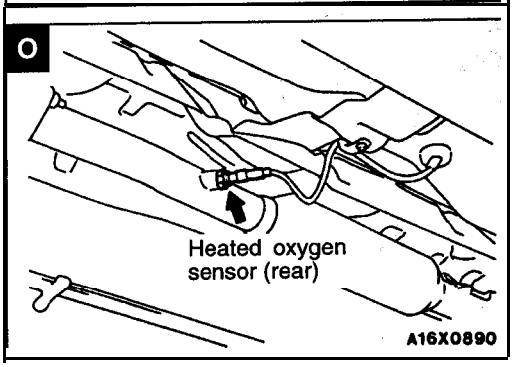
O
Heated oxygen sensor (rear)
A16X0890

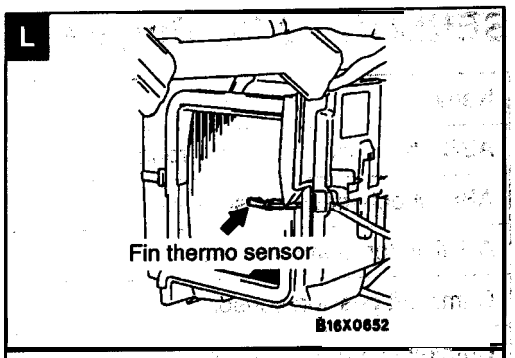
L
Fin thermo sensor
B16X0652

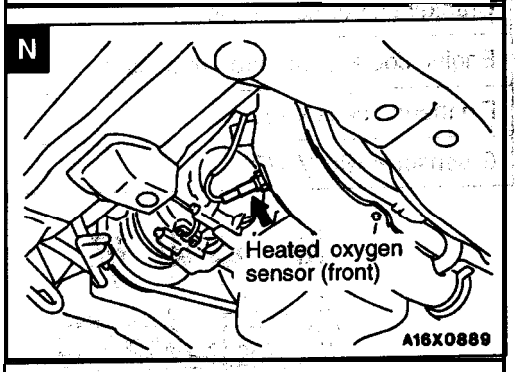
N
Heated oxygen sensor (front)
A16X0889

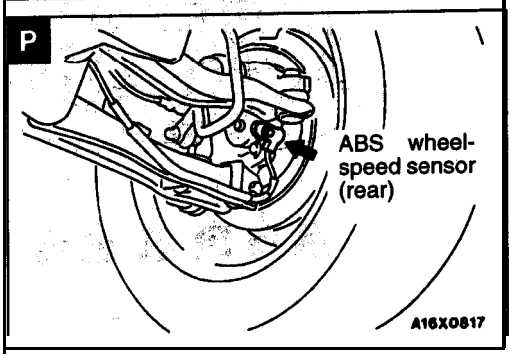
P
ABS wheel-speed sensor (rear)
A16X0817

SENSOR <2.0L Engine (Turbo)>

70100060218

Name	Symbol	Name	Symbol
ABS wheel-speed sensor (front)	M	Heated oxygen sensor (front)	I
ABS wheel-speed sensor (rear)	O	Heated oxygen sensor (rear)	N
A/T fluid temprature sensor	F	Knock sensor	D
Camshaft position sensor	H	Manifold differential pressure sensor	C
Crankshaft position sensor	J	Throttle position sensor	B
Engine coolant temperature sensor	A	Vehicle speed sensor	G
Fin thermo sensor <A/C>	L	Volume air flow sensor	E
G sensor <ABS (AWD)>	K		

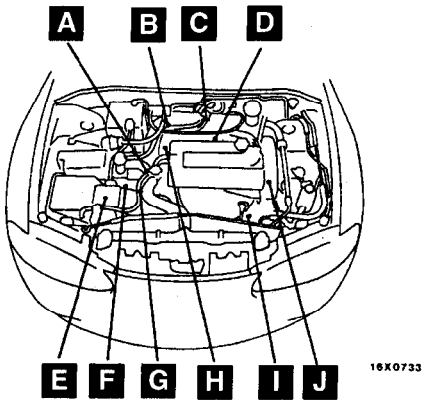

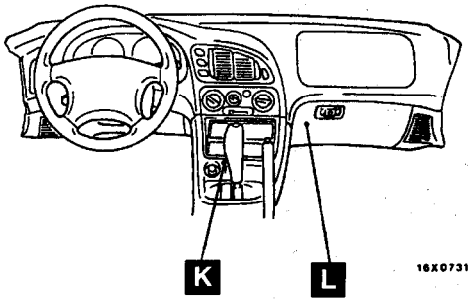

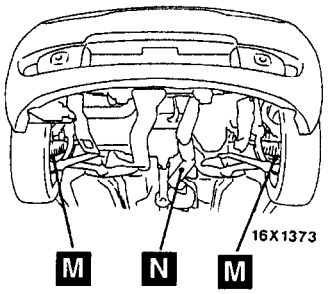

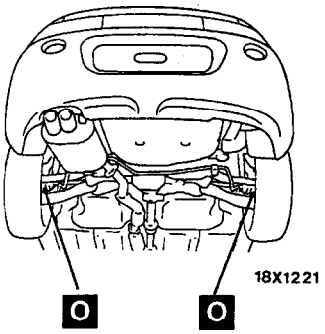

00005307

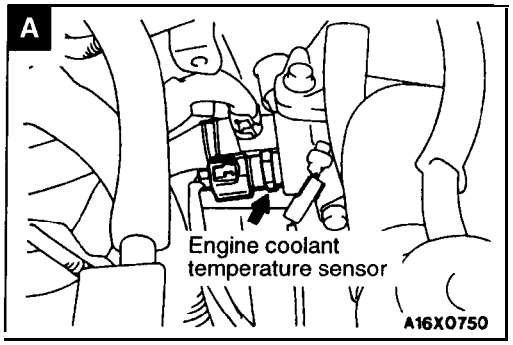

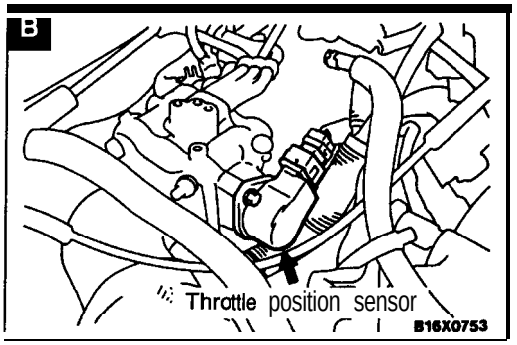

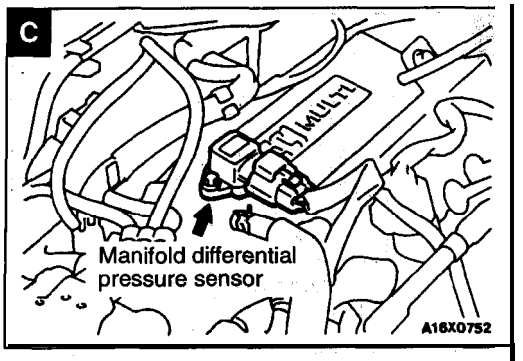
C
Manifold differential pressure sensor
A16X0752

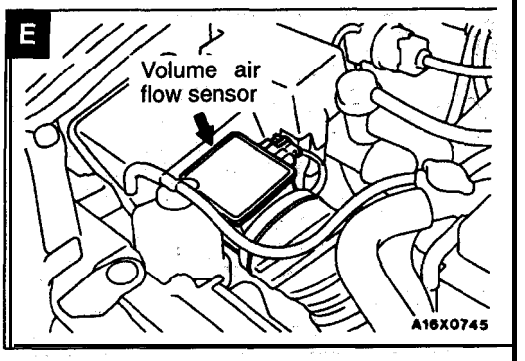
E
Volume air flow sensor
A16X0745

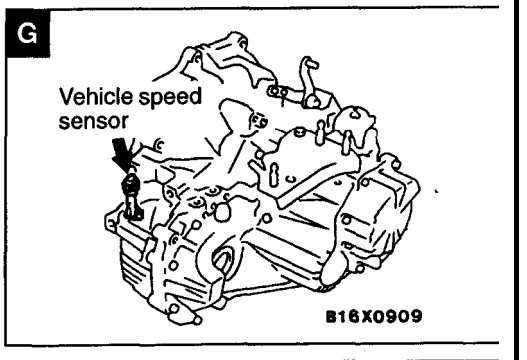
G
Vehicle speed sensor
B16X0909

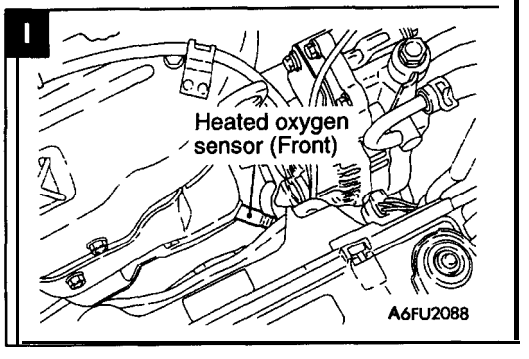
I
Heated oxygen sensor (Front)
A6FU2088

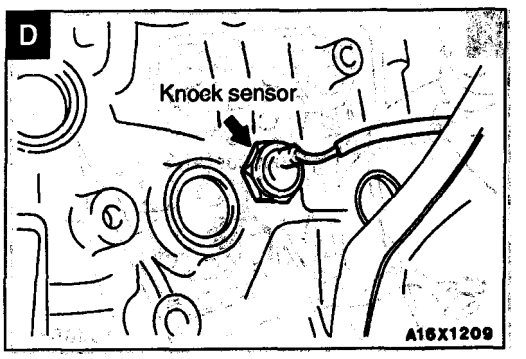
D
Knock sensor
A16X1209

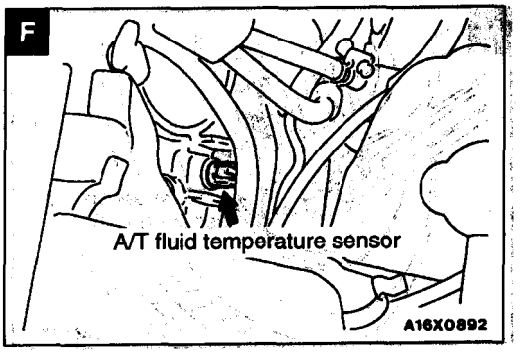
F
A/T fluid temperature sensor
A16X0892

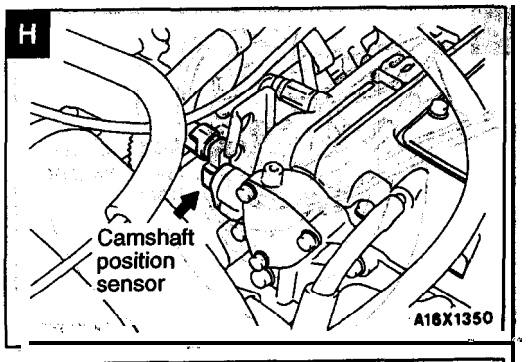
H
Camshaft position sensor
A16X1350

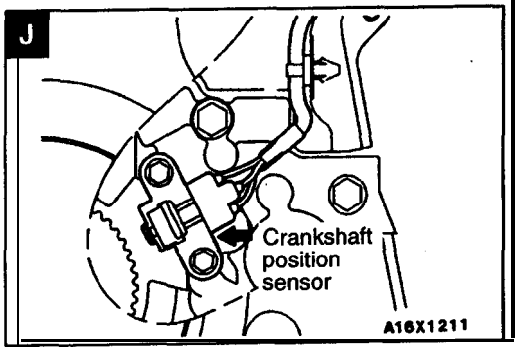
J
Crankshaft position sensor
A16X1211

K

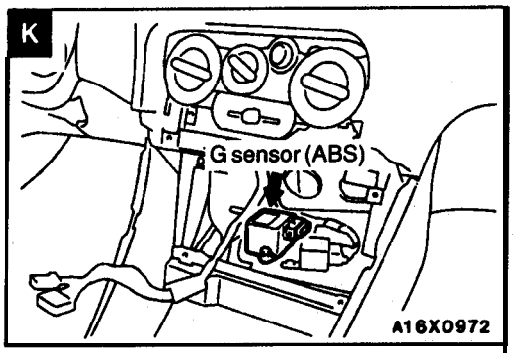
G sensor (ABS)
A16X0972

L

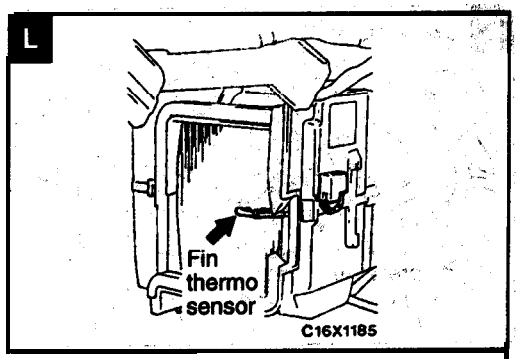
Fin
thermo
sensor
C16X1185

M

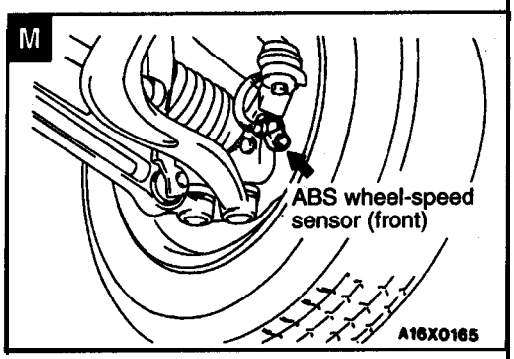
ABS wheel-speed
sensor (front)
A16X0165

N

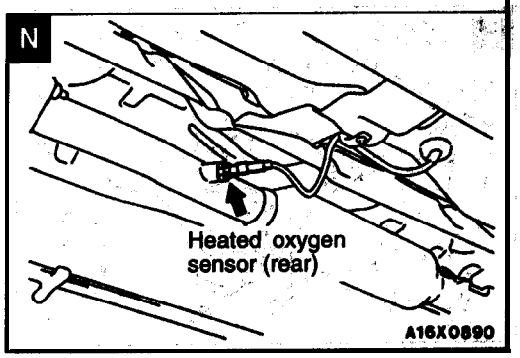
Heated oxygen
sensor (rear)
A16X0890

O

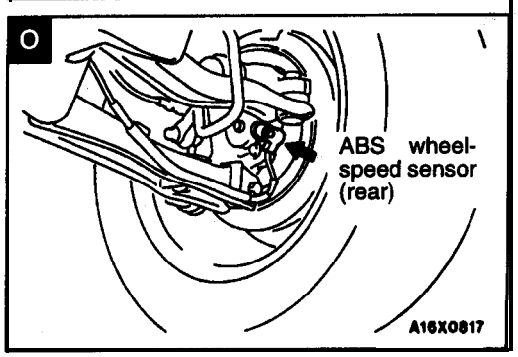
ABS wheel-
speed sensor
(rear)
A16X0817

SENSOR <2.4L Engine>

7010006022E

Name	Symbol	Name	Symbol
ABS wheel-speed sensor (front)	J	Fuel tank differential pressure sensor	N
ABS wheel-speed sensor (rear)	M	Heated oxygen sensor (front)	K
A/T fluid temprature sensor	F	Heated oxygen sensor (rear)	L
Camshaft position sensor	C	Manifold differential pressure sensor	E
Crankshaft position sensor	H	Throttle position sensor	D
Engine coolant temperature sensor	G	Vehicle speed sensor	B
Fin thermo sensor	I	Volume air flow sensor	A

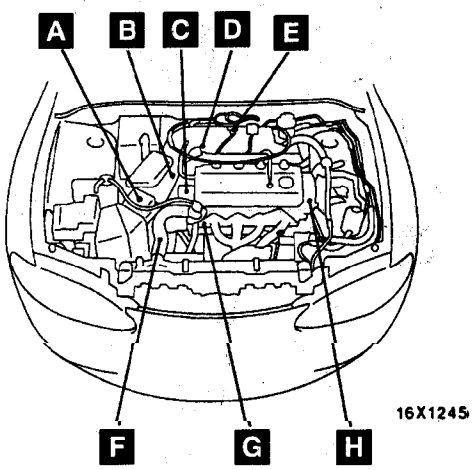

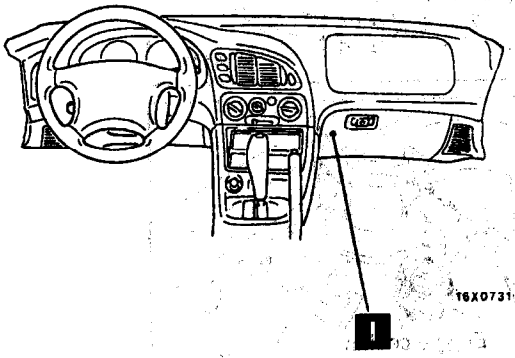

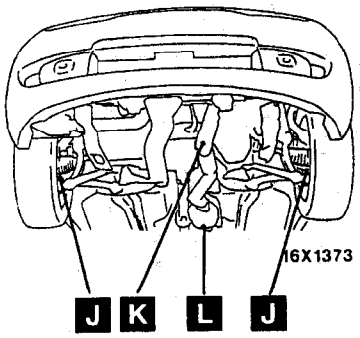

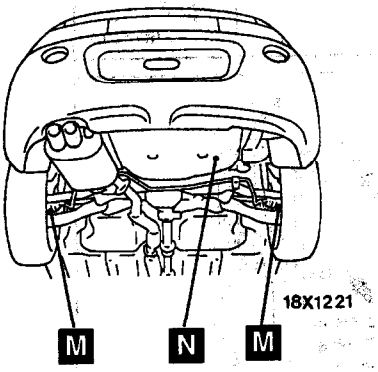

00005366

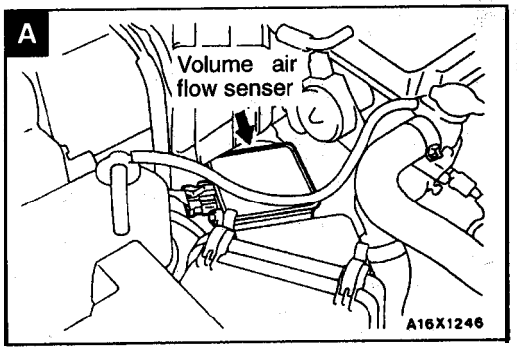

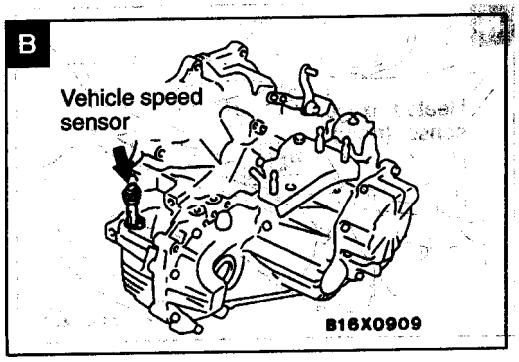

C

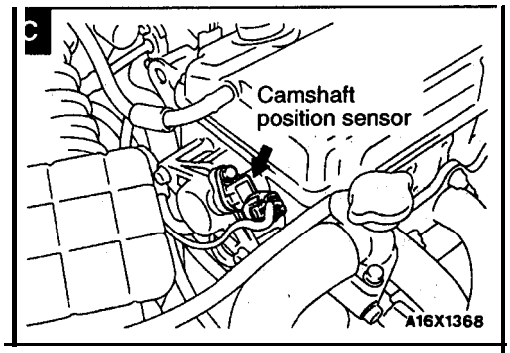
Camshaft
position sensor
A16X1368

D

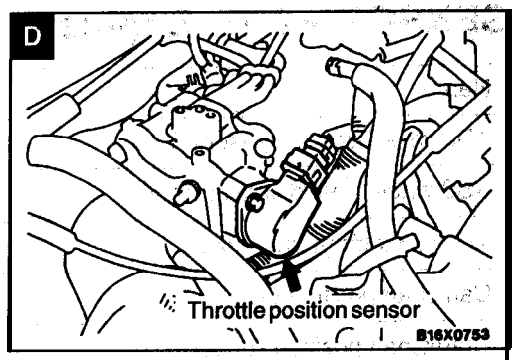
Throttle position sensor
B16X0753

E

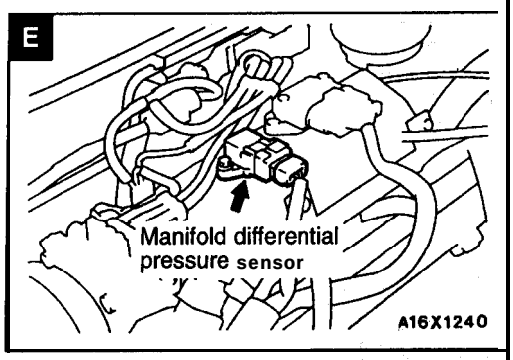
Manifold differential
pressure sensor
A16X1240

F

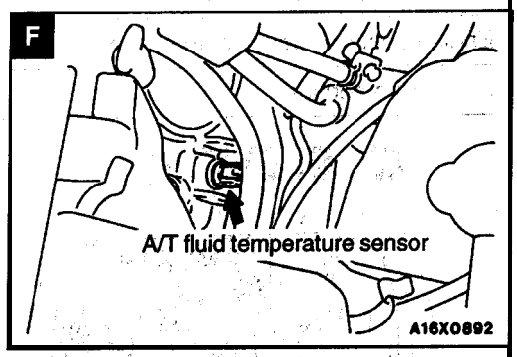
A/T fluid temperature sensor
A16X0892

G

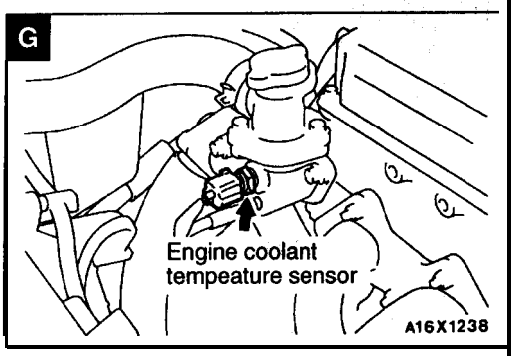
Engine coolant
tempeature sensor
A16X1238

H

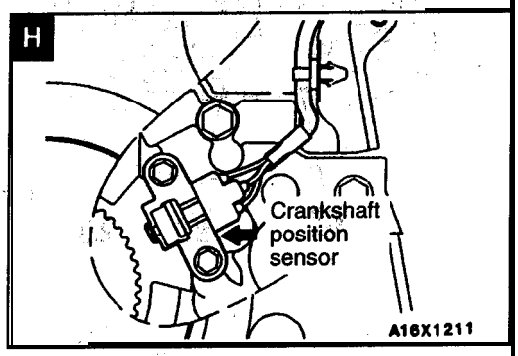
Crankshaft
position
sensor
A16X1211

I

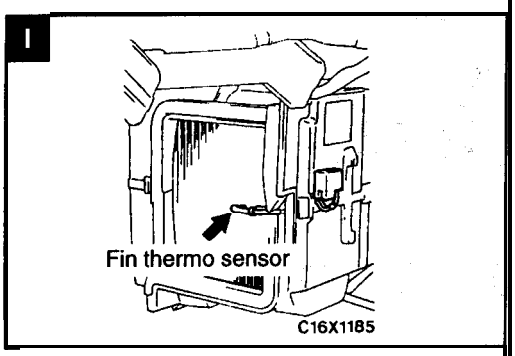
Fin thermo sensor
C16X1185

J

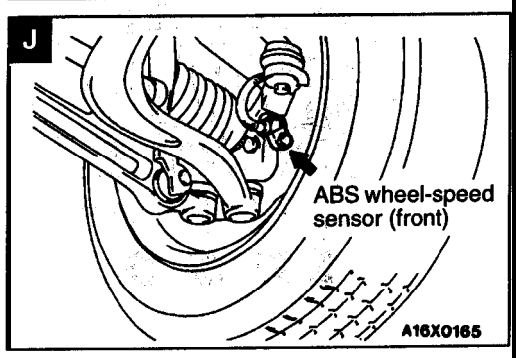
ABS wheel-speed
sensor (front)
A16X0165

K

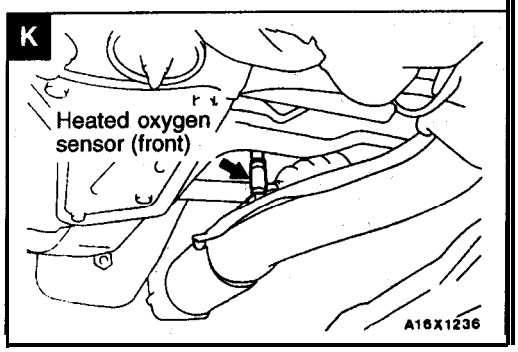
Heated oxygen
sensor (front)
A16X1236

L

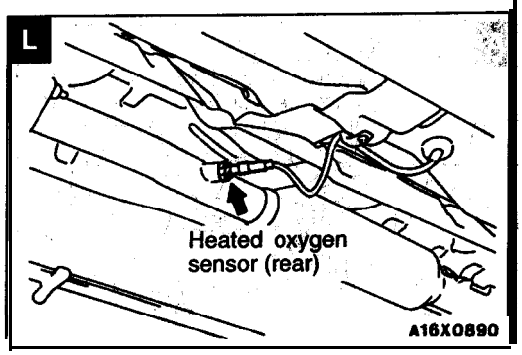
Heated oxygen
sensor (rear)
A16X0890

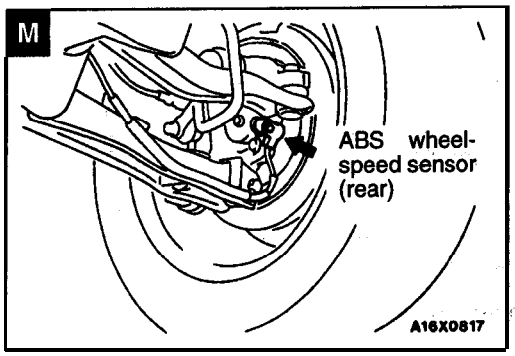
M
ABS wheel-speed sensor (rear)
A16X0817

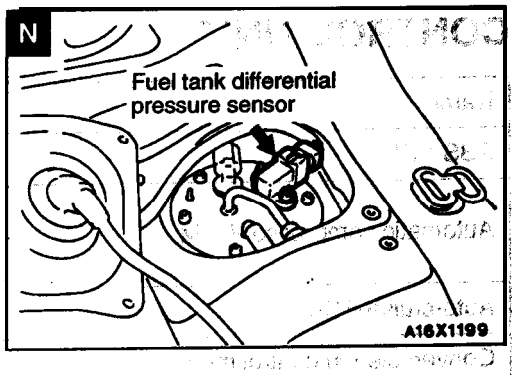
N
Fuel tank differential pressure sensor
A16X1199

CONTROL UNIT

70100070099

Name	Symbol	Name	Symbol
ABS-ECU	H	Engine control module	F*2
Automatic compressor-ECM	I*1	ETACS-ECU	B
	G*2	Fuel pump relay module	C*3
Auto-cruise-ECU	J	Powertrain control module	A*1
Convertible top control module	N	Receiver	L*
EATX-ECM	E*1		M*
ELC 4-speed automatic transaxle control module	E*2	SRS-ECU	D
		Sunroof-ECU	K

NOTE
*1: 2.0L Engine (Non-turbo).
*2: 2.0L Engine (Turbo) and 2.4L Engine.
*3: 2.4L Engine
*4: ECLIPSE
*5: ECLIPSE SPYDER

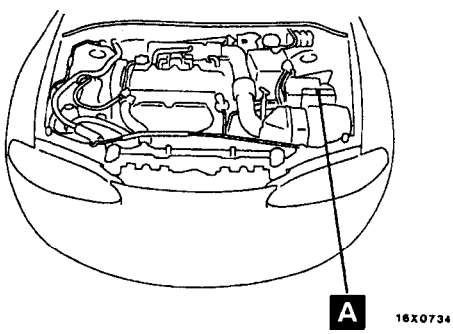

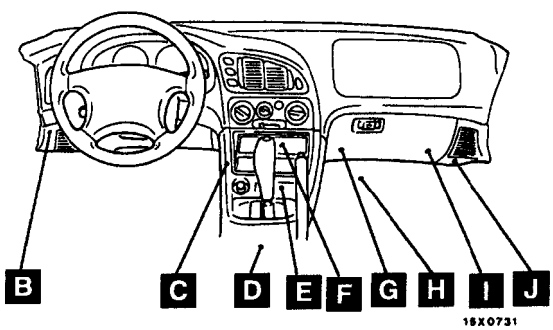

<ECLIPSE>

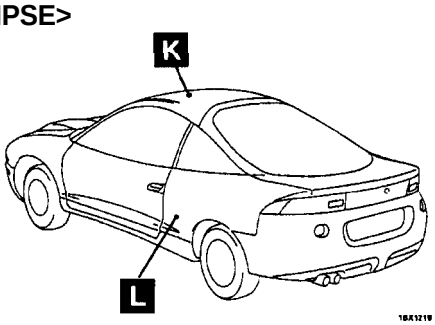

<ECLIPSE SPYDER>

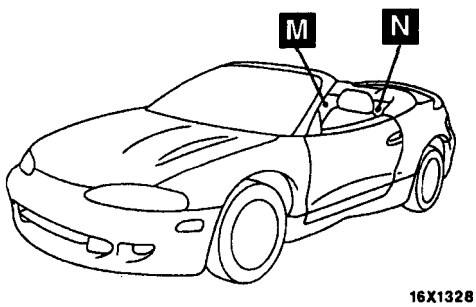

00005309

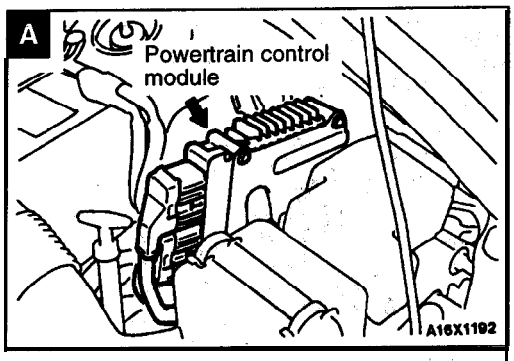
A
Powertrain control module
A16X1192

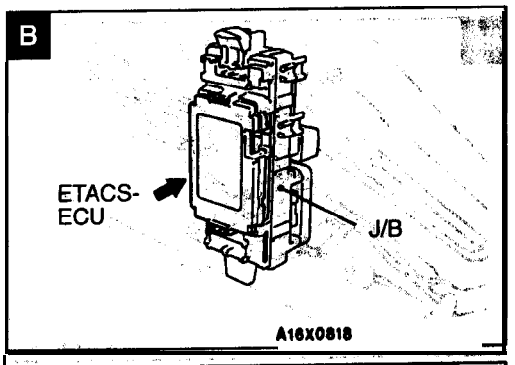
B
ETACS-ECU
J/B
A16X0818

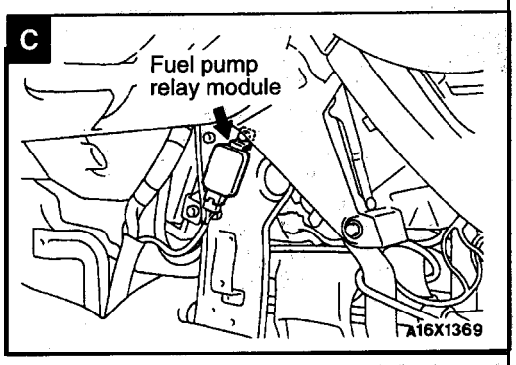
C
Fuel pump relay module
A16X1369

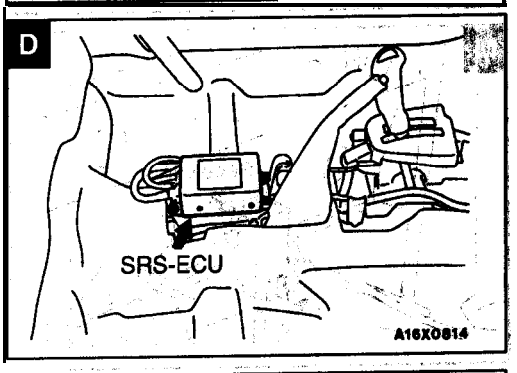
D
SRS-ECU
A16X0814

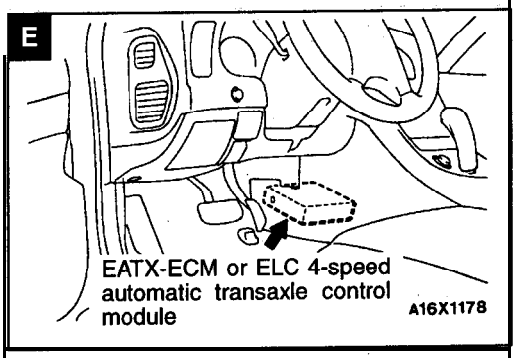
E
EATX-ECM or ELC 4-speed automatic transaxle control module
A16X1178

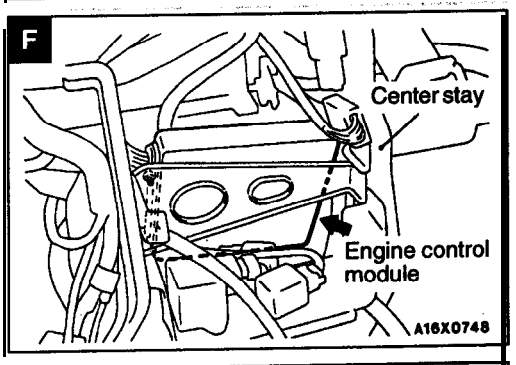
F
Center stay
Engine control module
A16X0748

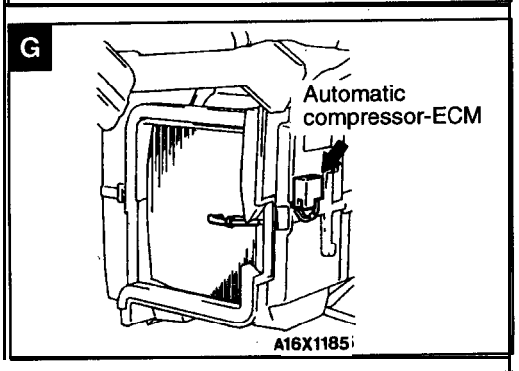
G
Automatic compressor-ECM
A16X1185

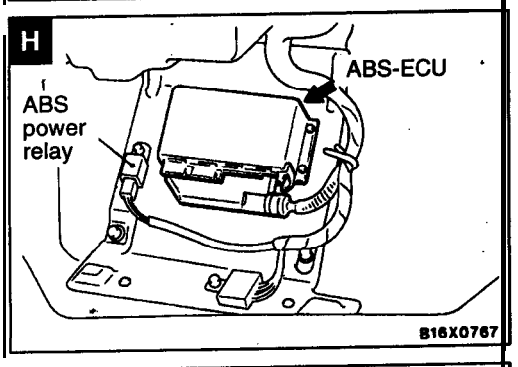
H
ABS-ECU
ABS power relay
B16X0767

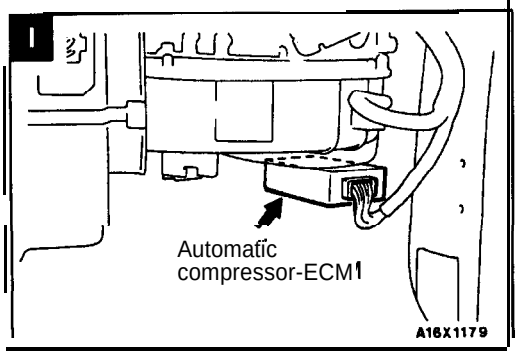
I
Automatic compressor-ECM
A16X1179

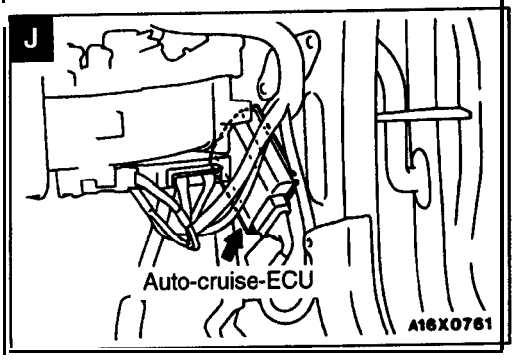
J
Auto-cruise-ECU
A16X0761

K

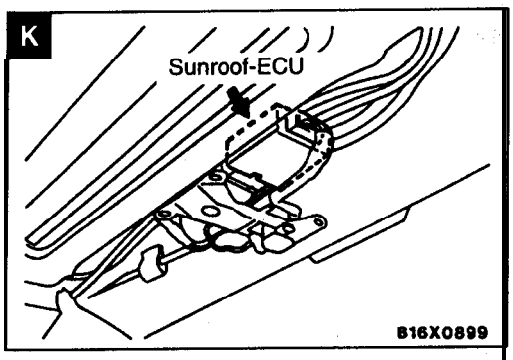
Sunroof-ECU
B16X0899

L

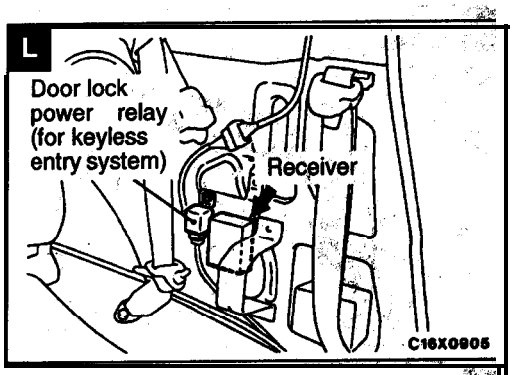
Door lock power relay (for keyless entry system)
Receiver
C16X0905

M

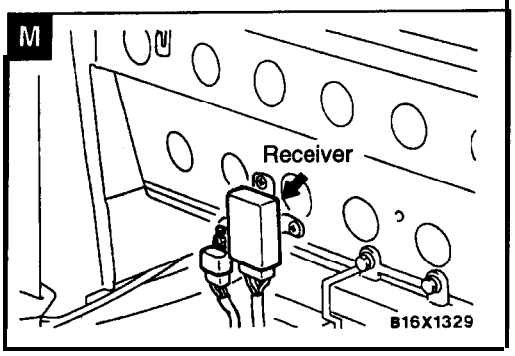
Receiver
B16X1329

N

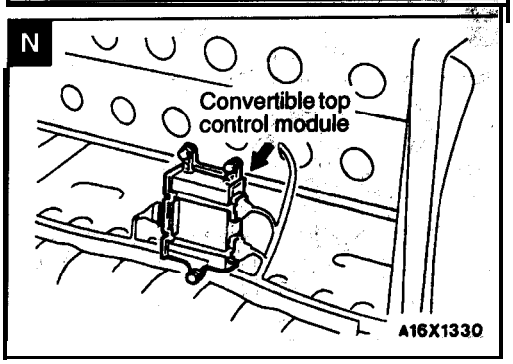
Convertible top control module
A16X1330

SOLENOID AND SOLENOID VALVE

7010000077

Name	Symbol	Name	Symbol
Auto-cruise control vacuum pump (with built-in control valve and release valve)	C*4	Evaporative emission purge solenoid valve	D*3
			F*2
Auto-cruise speed control assembly	A*1	Evaporative emission ventilation solenoid	H*1
			I*3
Duty-cycle purge solenoid valve	H*1	Fuel pressure solenoid valve	G*2
EGR solenoid valve	B*1	Hydraulic unit (with built-in solenoid valve) <ABS>	M
	E*4	Solenoid and pressure switch assembly	J*1
ELC 4-speed automatic transaxle control solenoid valve	L*4	Turbocharger waste gate solenoid valve	K*2

NOTE
*1: 2.0L Engine (Non-turbo).
*2: 2.0L Engine (Turbo).
*3: 2.4L Engine.
*4: 2.0L Engine (Turbo) and 2.4L Engine.

<2.0L Engine (Non-turbo)>

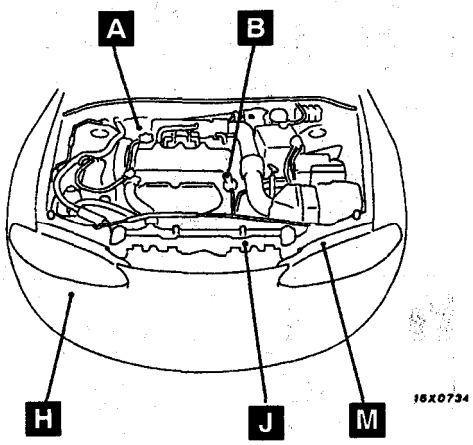

<2.0L Engine (Turbo) and 2.4L Engine>

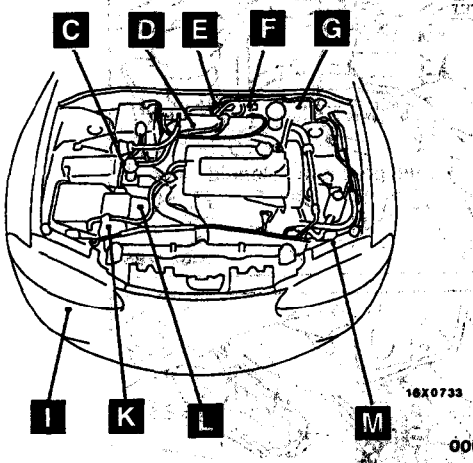

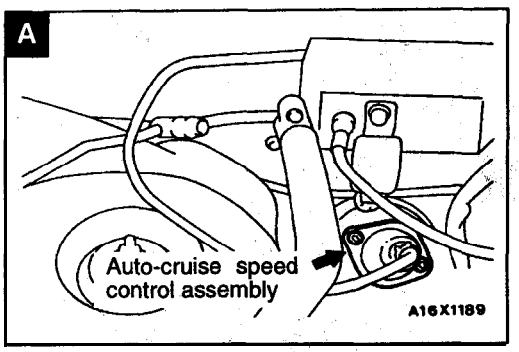

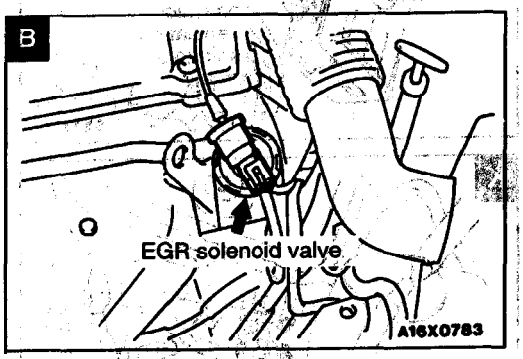

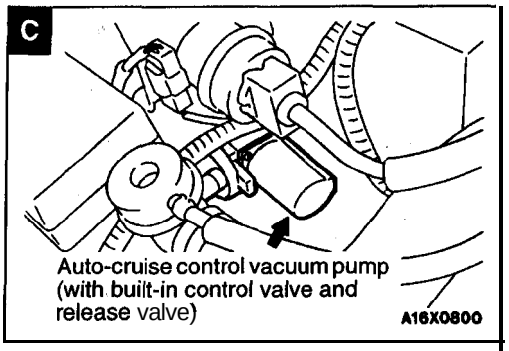
C
Auto-cruise control vacuum pump (with built-in control valve and release valve)
A16X0800

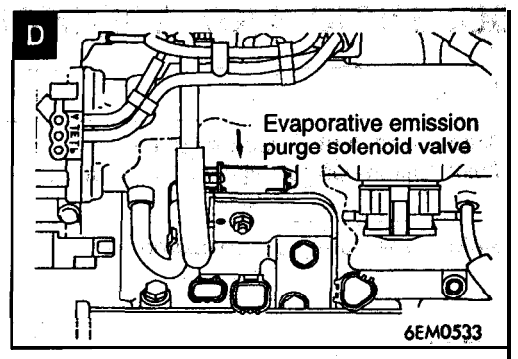
D
Evaporative emission purge solenoid valve
6EM0533

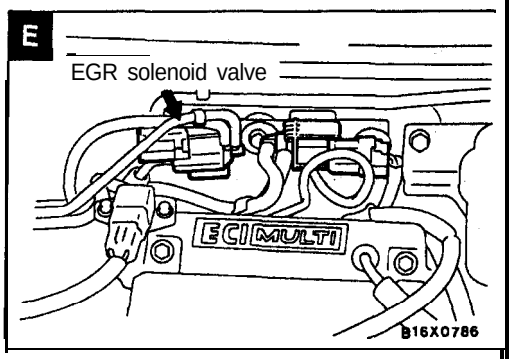
E
EGR solenoid valve
ECI MULTI
B16X0786

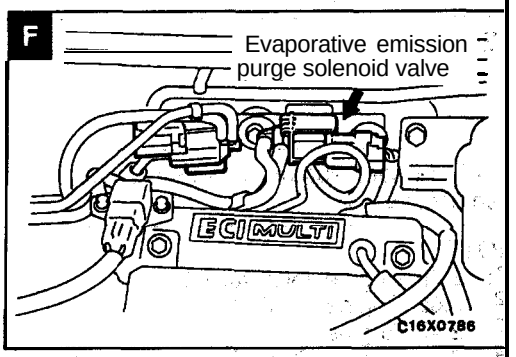
F
Evaporative emission purge solenoid valve
ECI MULTI
C16X0786

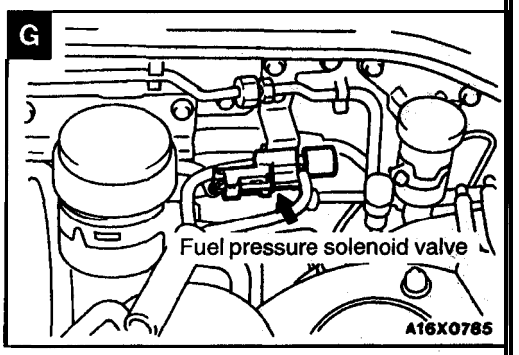
G
Fuel pressure solenoid valve
A16X0785

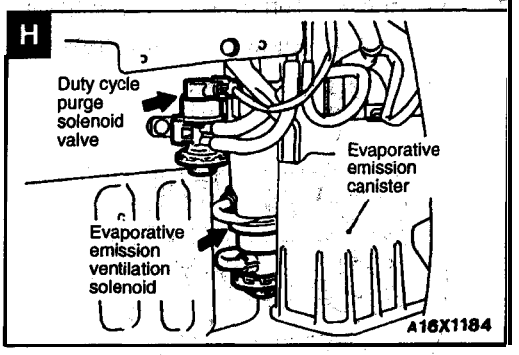
H
Duty cycle purge solenoid valve
Evaporative emission canister
Evaporative emission ventilation solenoid
A16X1184

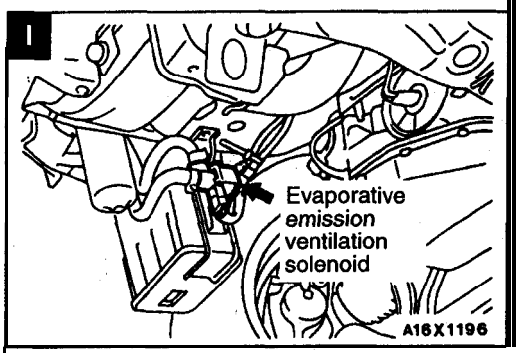
I
Evaporative emission ventilation solenoid
A16X1196

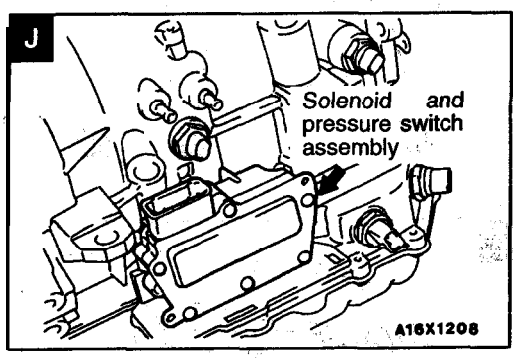
J
Solenoid and pressure switch assembly
A16X1208

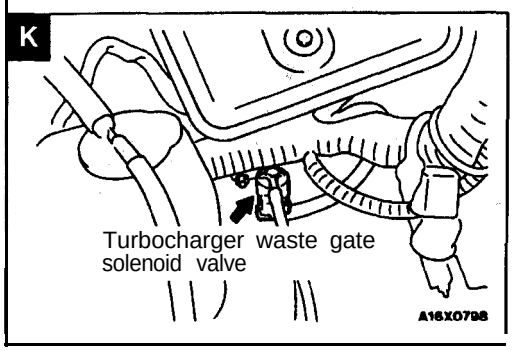
K
Turbocharger waste gate solenoid valve
A16X0798

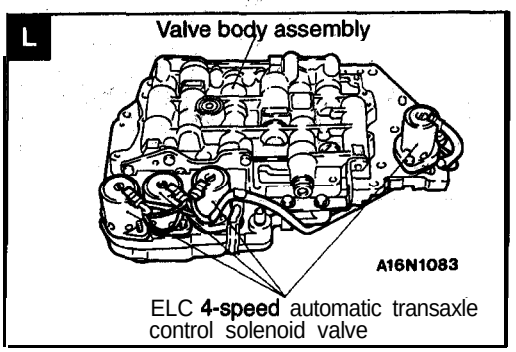
L
Valve body assembly
A16N1083
ELC 4-speed automatic transaxle control solenoid valve

M

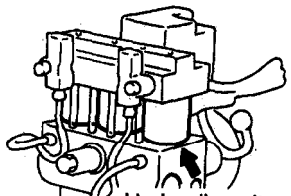

DIODE

70100090095

Name	Symbol	Name	Symbol
Diode (for ABS circuit)	D	Diode (for door-ajar warning light circuit)	A
Diode (for central door locking system)	B	Diode (for theft-alarm circuit)	B
Diode (for convertible top circuit)	C		

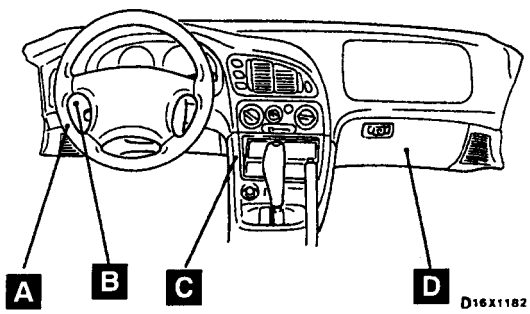

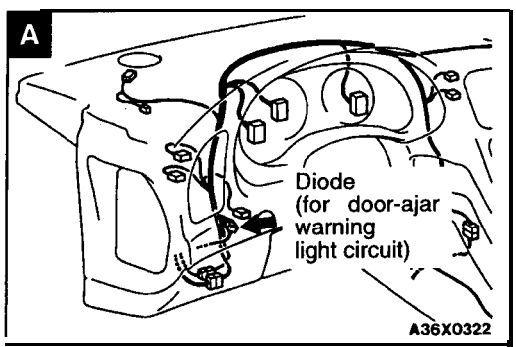

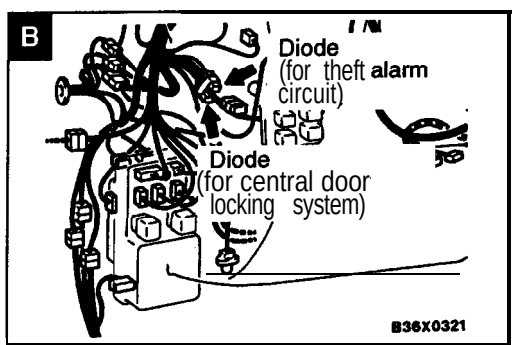

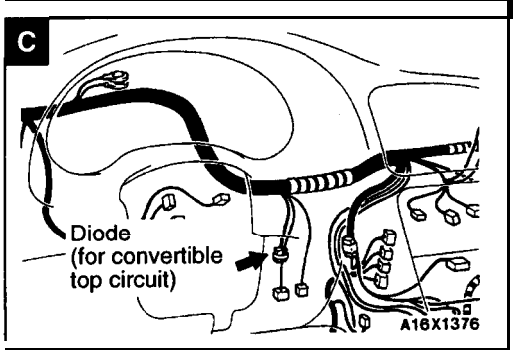

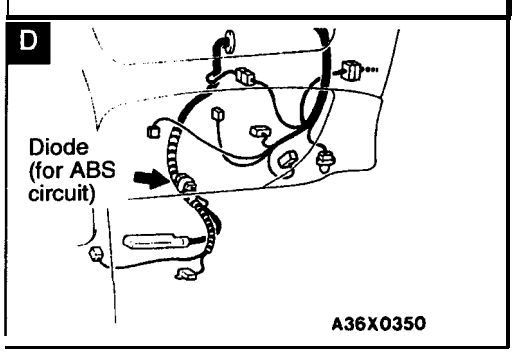

OTHER DEVICES <2.0L Engine (Non-turbo)>

70100560039

Name	Symbol	Name	Symbol':
Auto-cruise speed control assembly	C	Ignition coil	D
Auto idle speed control motor	E	Noise capacitor	F
Dual pressure switch	A	Power steering pressure switch	B

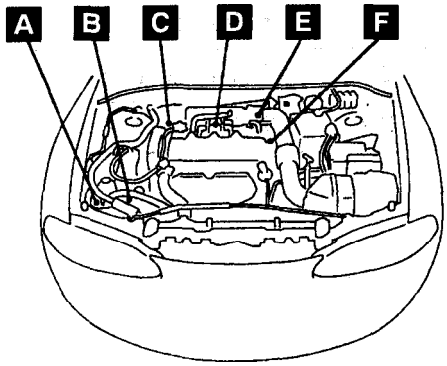

P16X0734

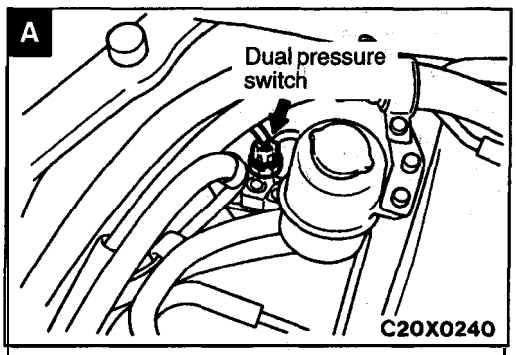

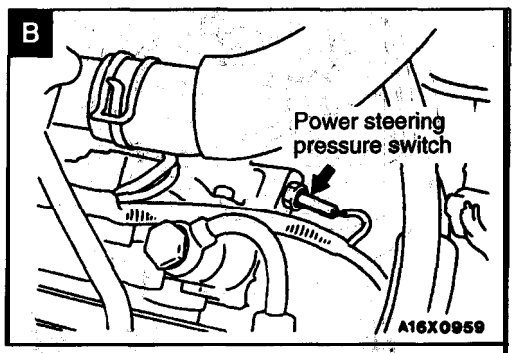

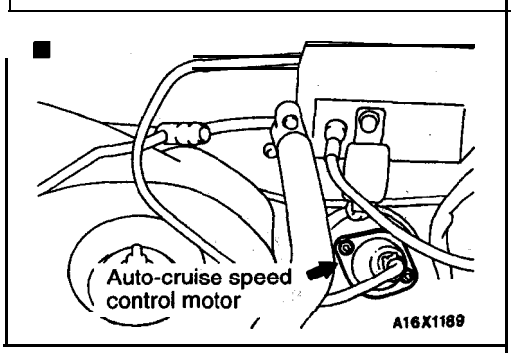

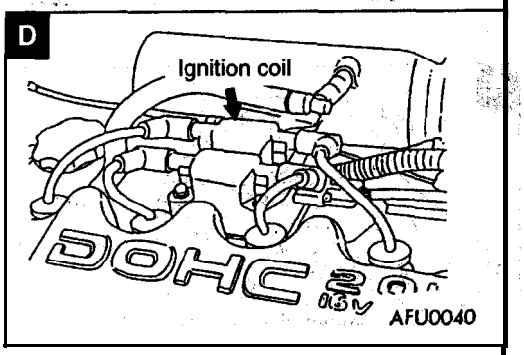

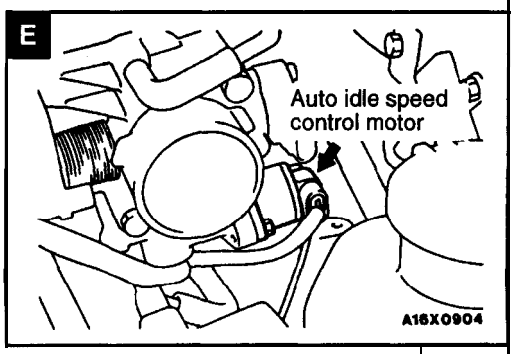

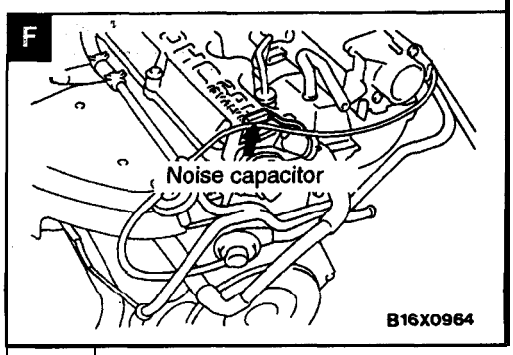

TSB Revision

OTHER DEVICES <2.0L Engine (Turbo) and 2.4L Engine>

70100560046

Name	Symbol	Name	Symbol
A/C refrigerant temperature switch	G	Ignition coil	C*1
			E*2
Auto-cruise control vacuum pump	A	Ignition power transistor	C*1
			E*2
Dual pressure switch	J	Noise capacitor	F
Idle air control motor	B*1	Power steering pressure switch	I
	D*2	Pulse generator A, B	H

NOTE
*1: 2.0L Engine (Turbo).
*2: 2.4L Engine.

<2.0L Engine (Turbo)>

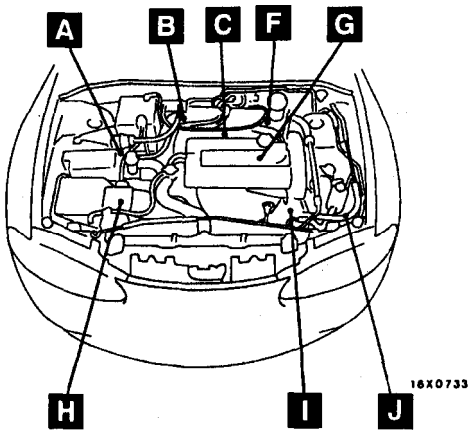

<2.4L Engine>

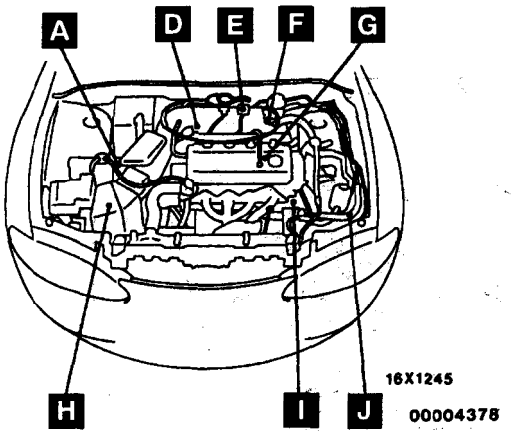

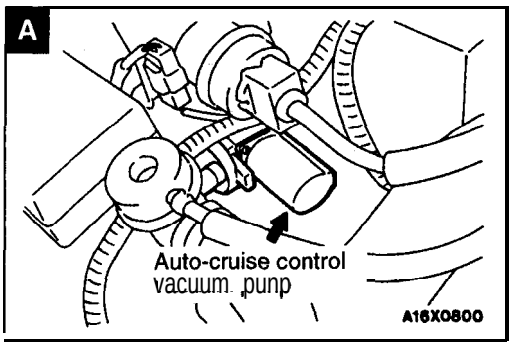

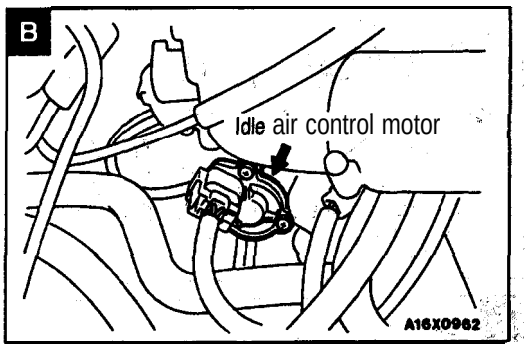

TSB Revision

C

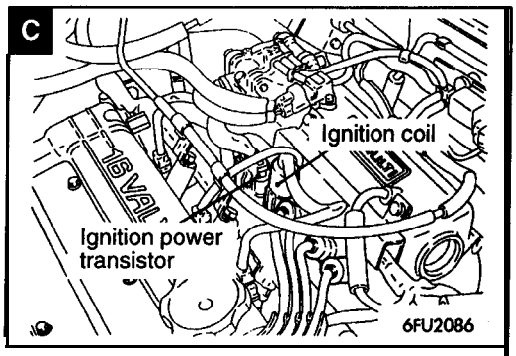
Ignition coil
Ignition power transistor
6FU2086

D

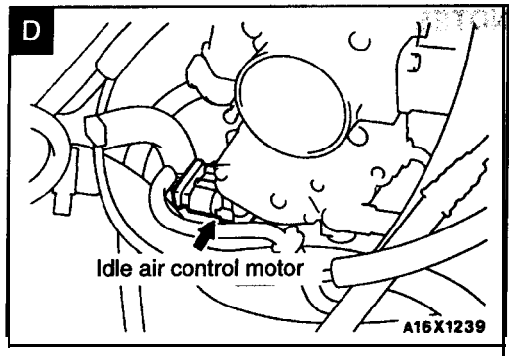
Idle air control motor
A15X1239

E

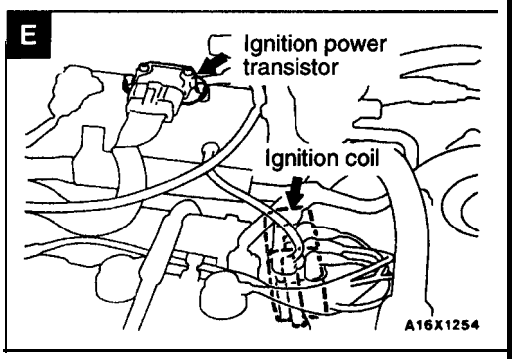
Ignition power transistor
Ignition coil
A16X1254

F

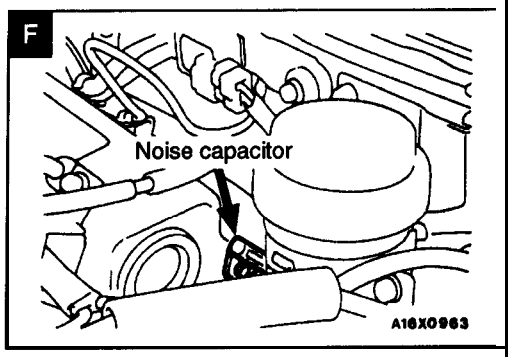
Noise capacitor
A16X0963

G

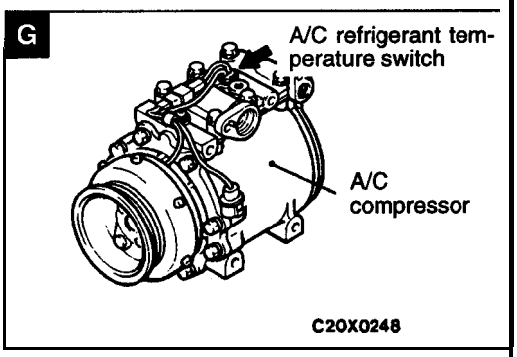
A/C refrigerant temperature switch
A/C compressor
C20X0248

H

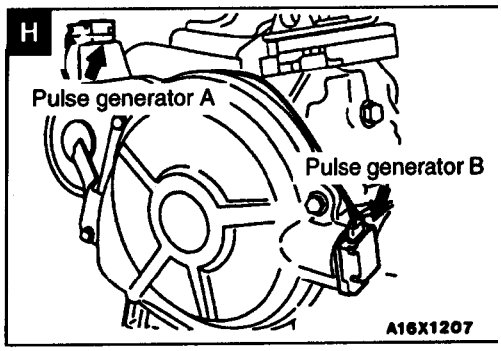
Pulse generator A
Pulse generator B
A16X1207

I

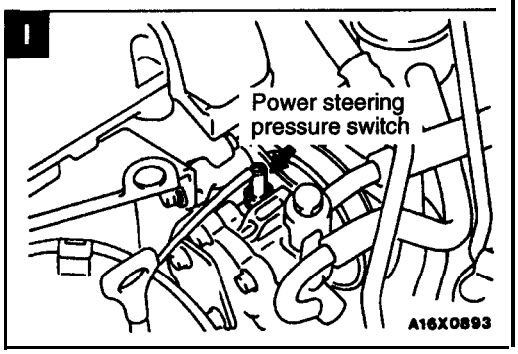
Power steering pressure switch
A16X0893

J

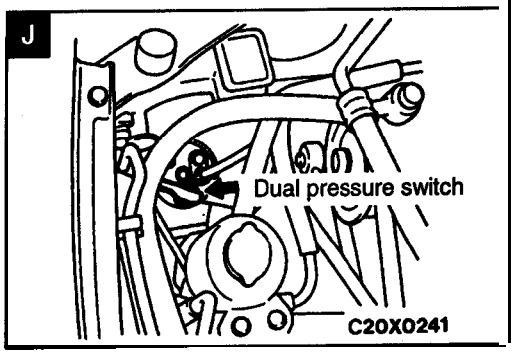
Dual pressure switch
C20X0241

NOTES

CONFIGURATION DIAGRAMS

CONTENTS

80109000173

OVERALL CONFIGURATION DIAGRAM

80100010083

<2.0L Engine (Non-turbo)>

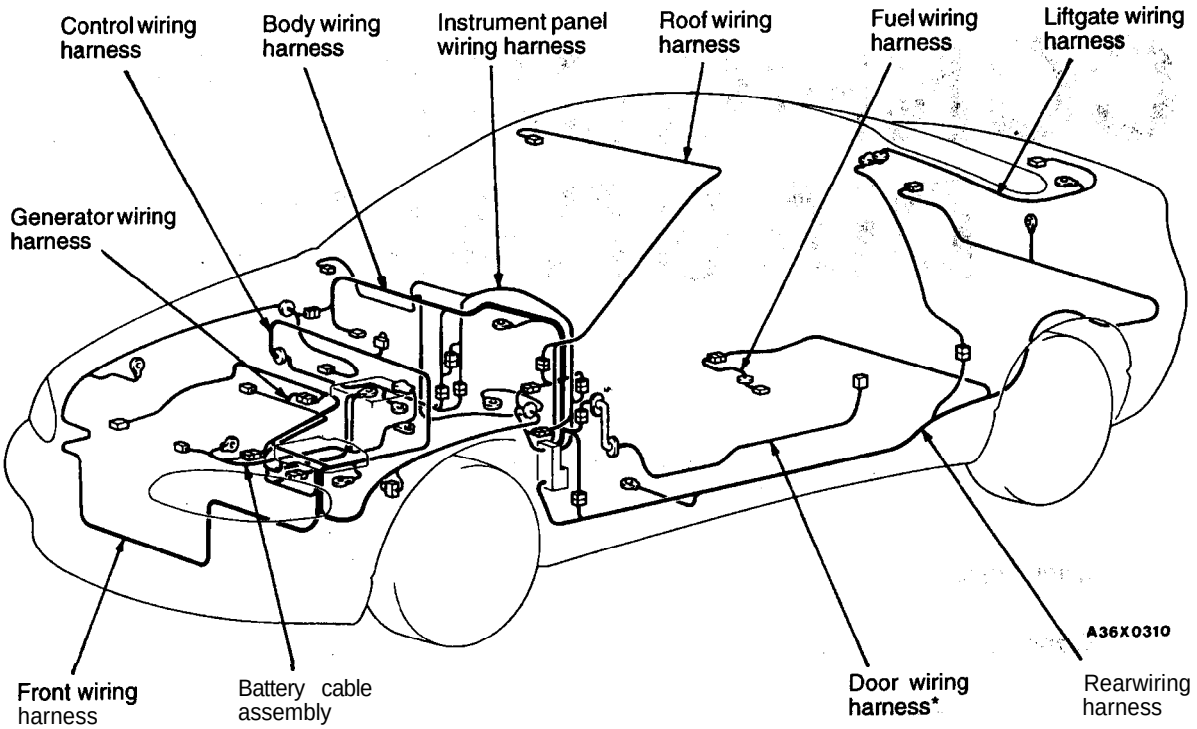

<2.0L Engine (Turbo) and 2.4L Engine>

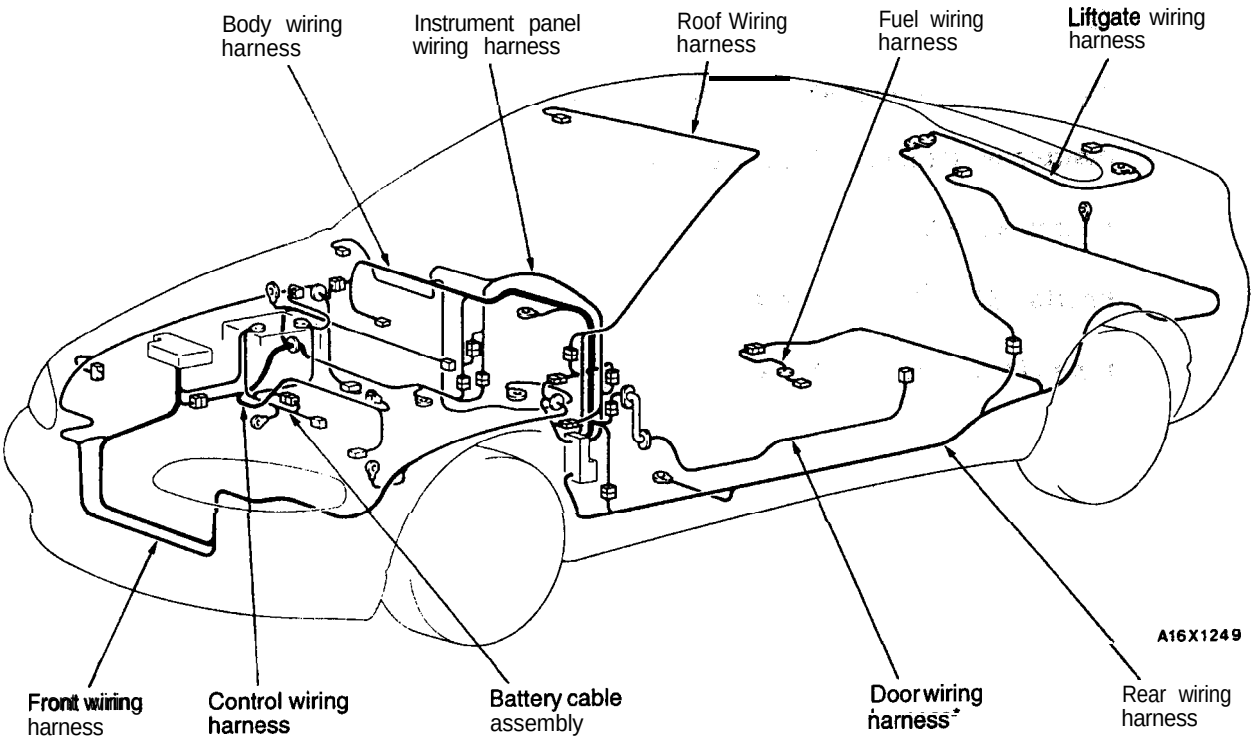

NOTE
(1) This illustration shows only the major wiring harness.
(2) The • symbol indicates also equipped at the right side.

TSB Revision

HOW TO READ CONFIGURATION DIAGRAMS

80100020154

The wiring harness diagrams clearly show the connector locations and harness routings at each site on actual vehicles.

Denotes connector No.
The same connector No. is used throughout the circuit diagrams to facilitate connector location searches.
The first alphabetical symbol indicates the location site of the connector and a number that follows is the unique number.
Numbers are assigned to parts in clockwise order on the diagram.

Example: A-12
- Number specific to connector (serial number)
- Connector location site symbol
  - A: Engine compartment
  - B: Dash panel
  - C: Steering column
  - D: Instrument panel
  - E: Interior
  - F: Luggage compartment
  - G: Door

Denotes ground point.
Same ground number is used throughout circuit diagrams to facilitate search of ground point. Refer to GROUNDING LOCATION.

Denotes a section covered by a corrugated tube.

The mark ★ shows the standard mounting position of wiring harness.

B-27 Indicates the device to which the connector is connected.

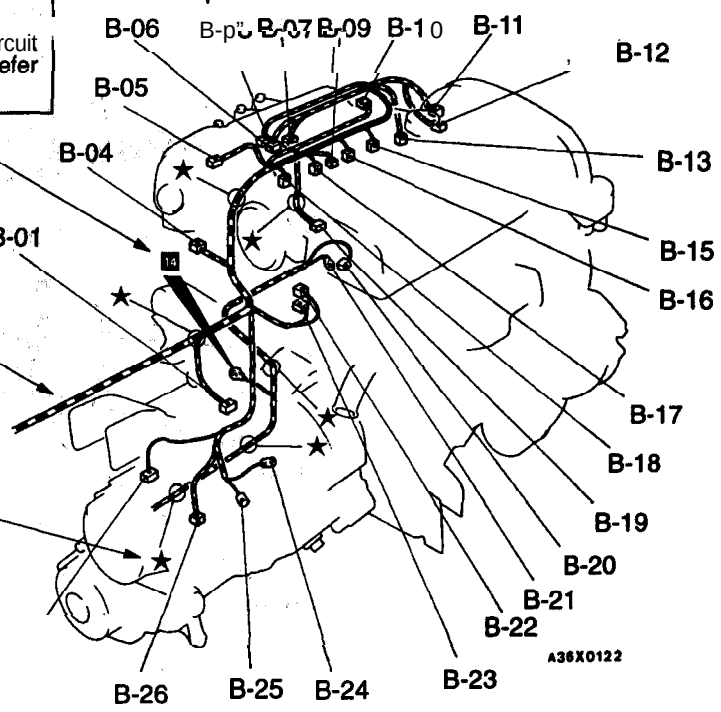

B-01 (3-B)	Vehicle speed sensor	B-I 6 (2-GR)	Injector No. 2
B-02 (6)	Distributor assembly	B-I 7 (2-GR)	Injector No. 3
B-03 (2)	Distributor assembly	B-I 8 (2-GR)	Injector No. 4
B-04 (6-B)	Idle air control motor	B-19 (4)	Heated oxygen sensor (front)
B-05 (4-B)	Throttle position sensor	B-20 (1-BR)	Starter motor

*Denotes connector No. and connector color (except milk white) to facilitate connector identification

Example: (2-B)
- Connector color (milk white if no color is indicated)
- Number of connector pins

● : Typical connector colors
- B : Black
- Y : Yellow
- L : Blue
- G : Green
- R : Red
- BR : Brown
- V : Violet
- O : Orange
- GR : Gray

E COMPARTMENT <2.0L Engine (Non-turbo)>

80100030737

ENGIN

Connector symbol

A

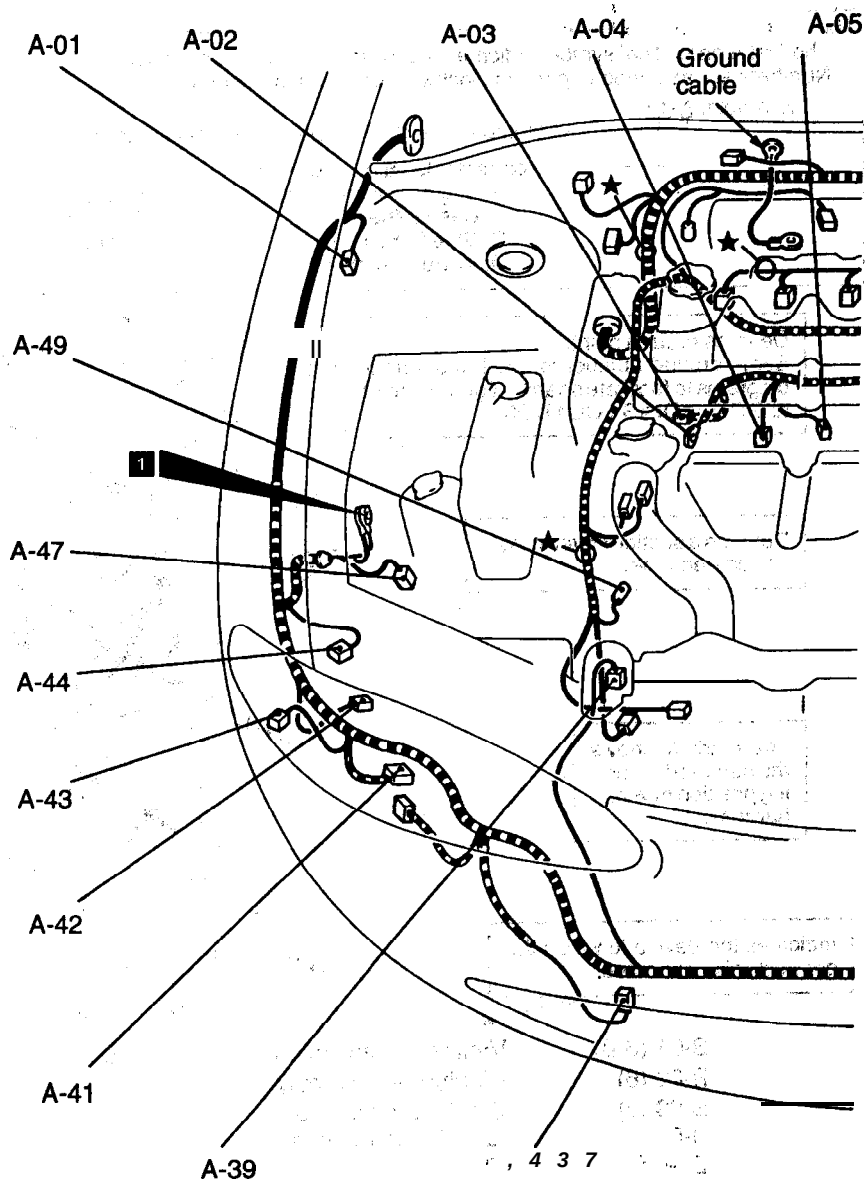

A-01 (2-B)	ABS wheel-speed sensor (right side)	A-11X (5)	Radiator fan relay (LO 1)
A-02 (1)	Generator	A-13X (5)	Radiator fan relay (HI)
A-03 (2-B)	Generator	A-14X (5)	Headlight relay
A-04 (3-B)	Crankshaft position sensor	A-15X (5)	Taillight relay
A-05 (2-B)	Knock sensor	A-16X (5)	Fog light relay
A-06(1 O-B)	Control wiring harness and generator wiring harness combination	A-17X (5)	Horn relay
A-07 (2-B)	Oil pressure switch	A-l 8X (5)	A/C compressor clutch relay
A-08 (2-B)	ABS wheel-speed sensor (left side)	A-20 (3-B)	Front combination light (left side)
A-09X (5)	Condenser tan relay (LO)	A-21 (2-B)	Hood switch <with theft-alarm system>
A-10X (5)	Condenser fan relay (HI)	A-22 (2-GR)	Front side marker light (left side)
		A-23 (2-B)	Hydraulic unit <ABS>

TSB Revision

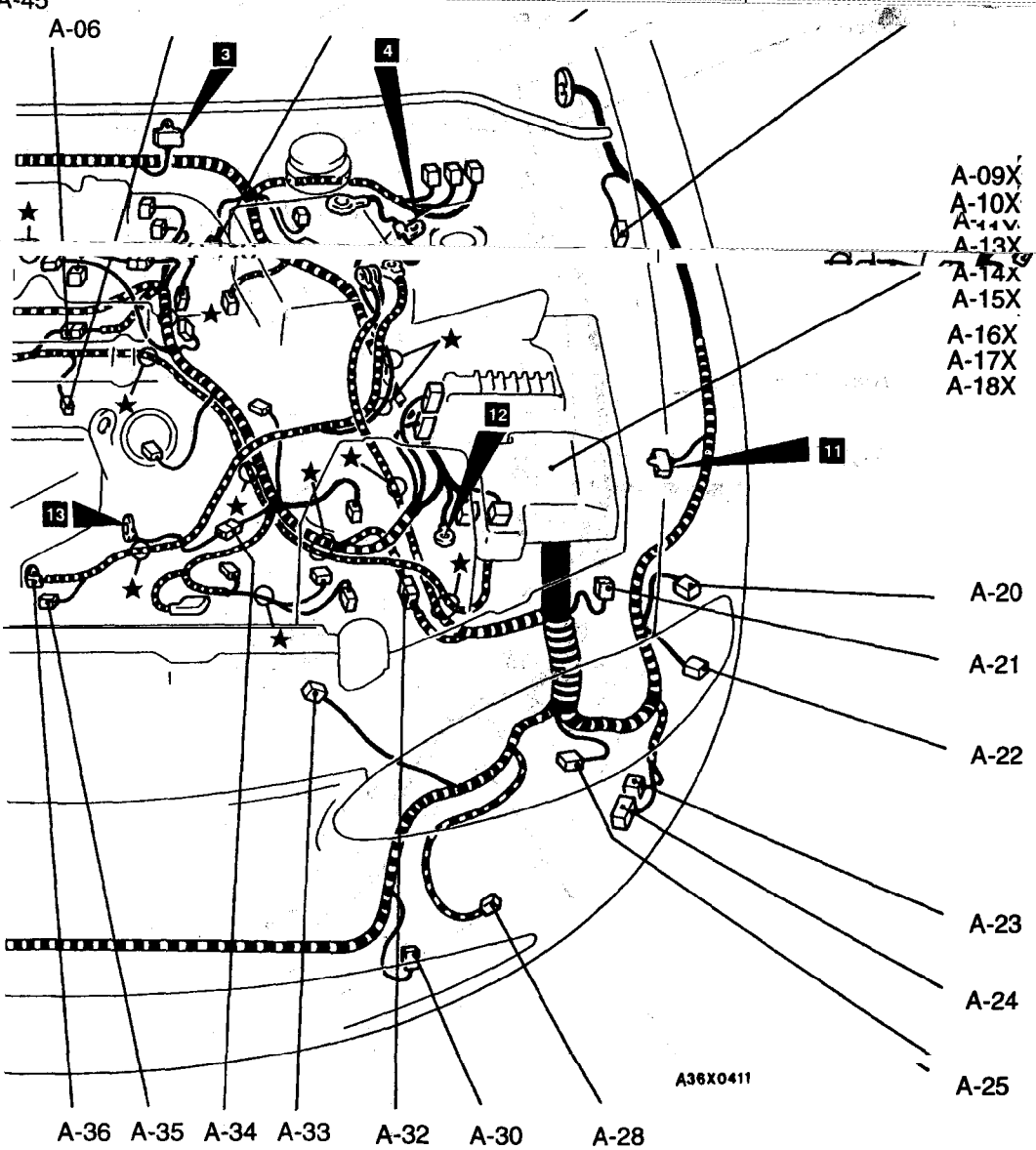

Connector color code
B : Black
Y : Yellow
L : Blue
G : Green
R : Red
BR: Brown
V : Violet
O : Orange
GR: Gray

A-24 (1 O-B) Hydraulic unit <ABS>
A-25 (3-GR) Headlight (left side)
A-28 (2-B) Horn
A-30 (2-B) Fog light (left side)
A-32 (12-B) Front wiring harness and control wiring harness combination
A-33 (4-GR) Radiator fan motor
A-34 (2-B) Control wiring harness and battery cable combination
A-35 (1 -B) Starter motor
A-36 (1) Starter motor
A-37 (2-B) Fog light (right side)
A-39 (4-GR) Condenser fan motor
A-41 (3-GR) Headlight (right side)
A-42 (2-B) Duty cycle purge solenoid value
A-43 (2-GR) Front side marker light (right side)
A-44 (3-B) Front combination light (right side)
A-45 (2-B) Theft-alarm horn
A-47 (2-BR) Dual pressure switch
A-49 (1) Power steering pressure switch

TSB Revision

Connector symbol

A

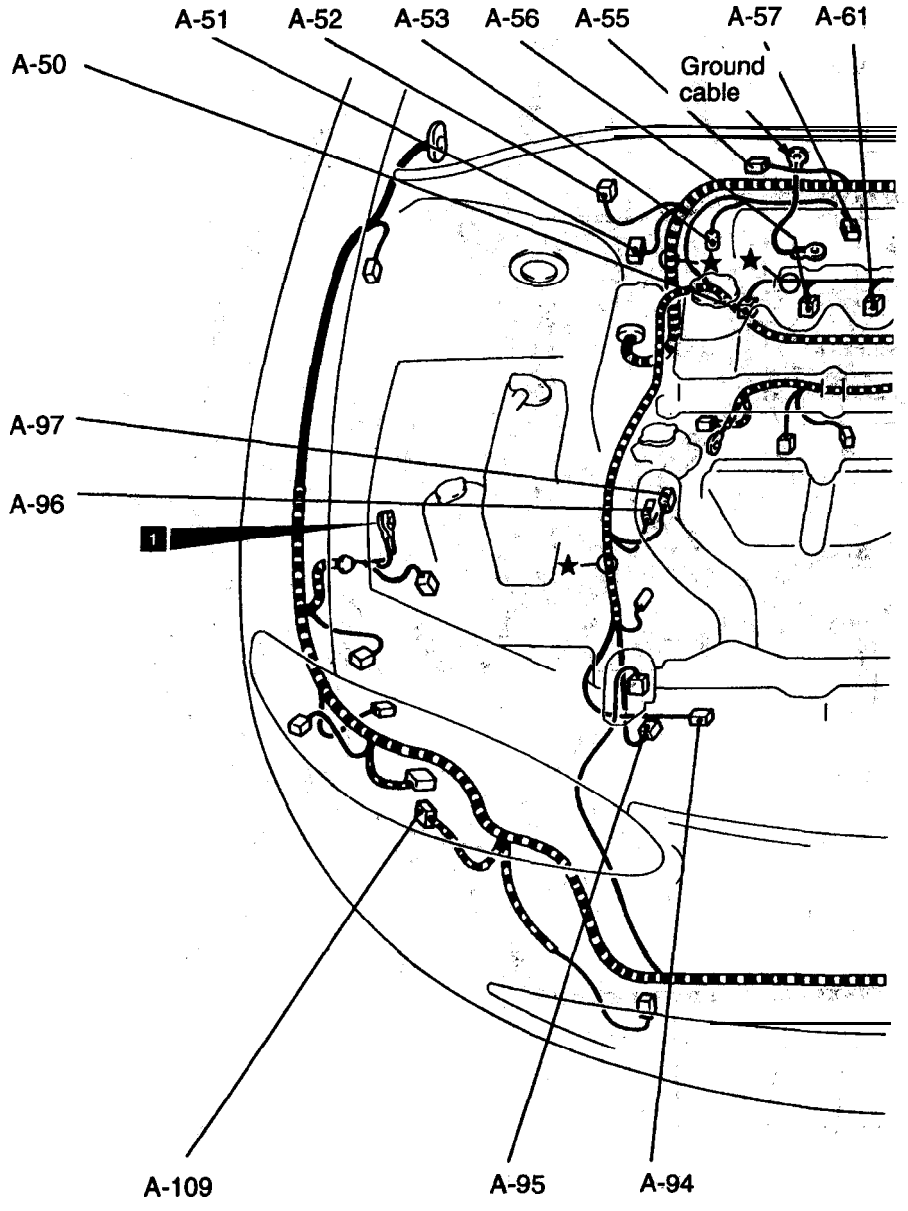

A-50 (2) Injector **No.1**
A-51 (4-B) Auto-cruise speed control assembly
A-52 (4-B) Auto-cruise control relay
A-53 (3-B) MAP sensor
A-55 (6-B) Windshield wiper motor
A-56 (2) Injector **No.2**
A-57 (2-GR) Intake air temperature sensor
A-61 (2) Injector **No.3**
A-62 (3-B) Ignition coil
A-63 (3-B) Throttle position sensor
A-64 (1 -B) Capacitor
A-67 (2-B) Brake fluid level switch
A-68 (9-B) Fuel pump relay
A-69 (9-GR) ASD relay
A-70 (9) EATX relay **<A/T>**
A-72 (4-B) Auto idle speed control motor
A-73 (4) No connection
A-74 (6-B) Control wiring harness and injector wiring harness combination
A-75 (2) Windshield washer motor

TSB Revision

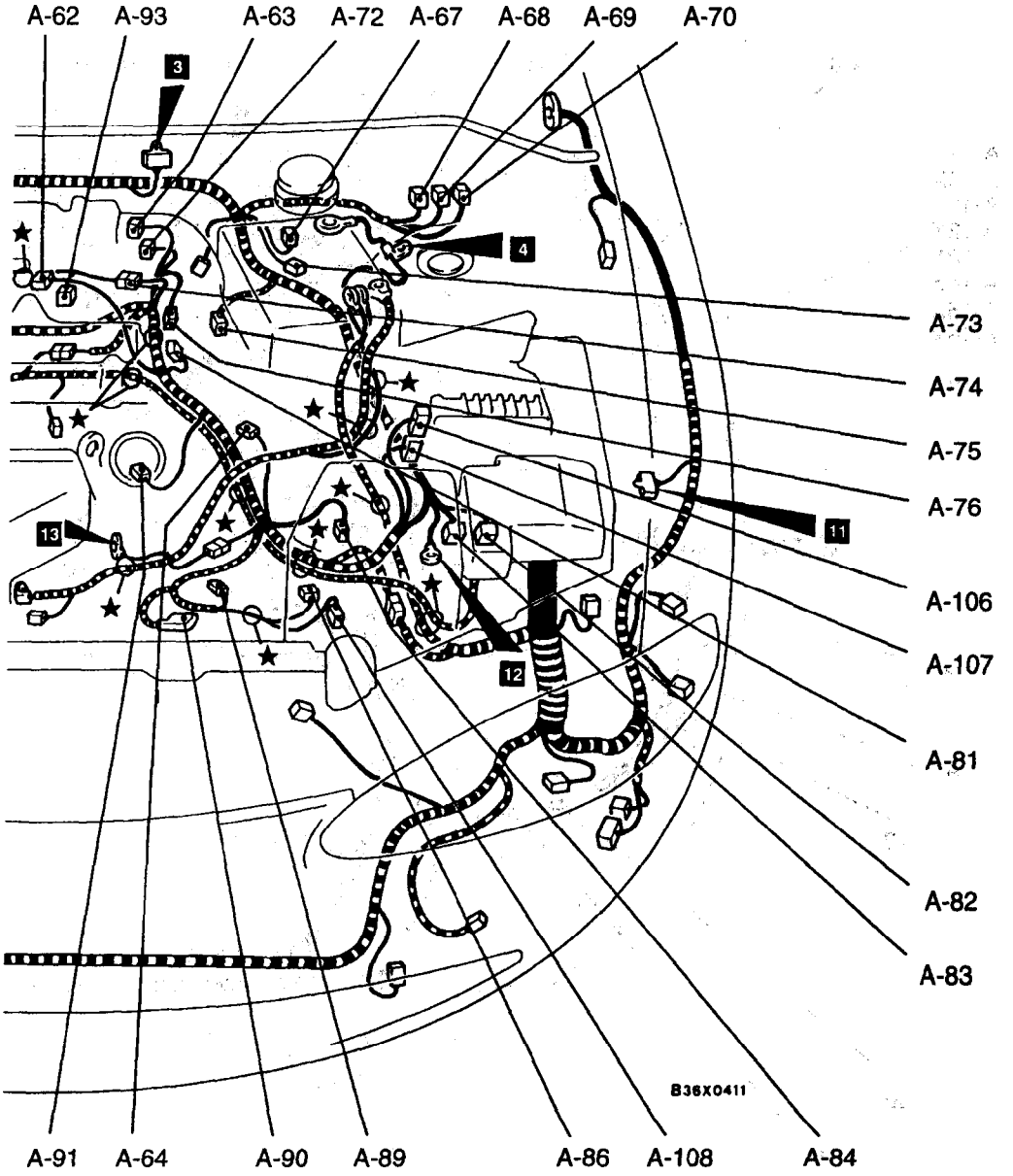

Connector color code
B : Black
Y : Yellow
L : Blue
G : Green
R : Red
BR : Brown
V : Violet
O : Orange
GR: Gray

A-76 (3-B)	Vehicle speed sensor <M/T>	A-93 (2)	Injector No.4
A-8 I (3-B)	Cam shaft position sensor	A-94 (4-B)	Heated oxygen sensor (fro
A-82 (33)	J/C (3)	A-95 (3-B)	A/C compressor
A-83 (33)	J/C (4)	A-96 (1 -B)	Engine coolant temperature gauge unit
A-84 (2-GR)	Back-up light switch <M/T>	A-97 (2-B)	Engine coolant temperature sensor
A-86 (2-B)	Output speed sensor <A/T>	A-I 06 (40-B)	Powertrain control module
A-89 (2-B)	Input speed sensor <A/T>	A-107 (40-B)	Powertrain control module
A-90 (8-B)	Solenoid and pressure switch assembly	A-108 (10-B)	Transaxle range switch <A/T>
A-91 (2-B)	EGR solenoid valve	A-109 (4)	Evaporative emission ventilation solenoid

TSB Revision

ENGINE COMPARTMENT <2.0L Engine (Turbo)>

80100030744

Connector symbol

A

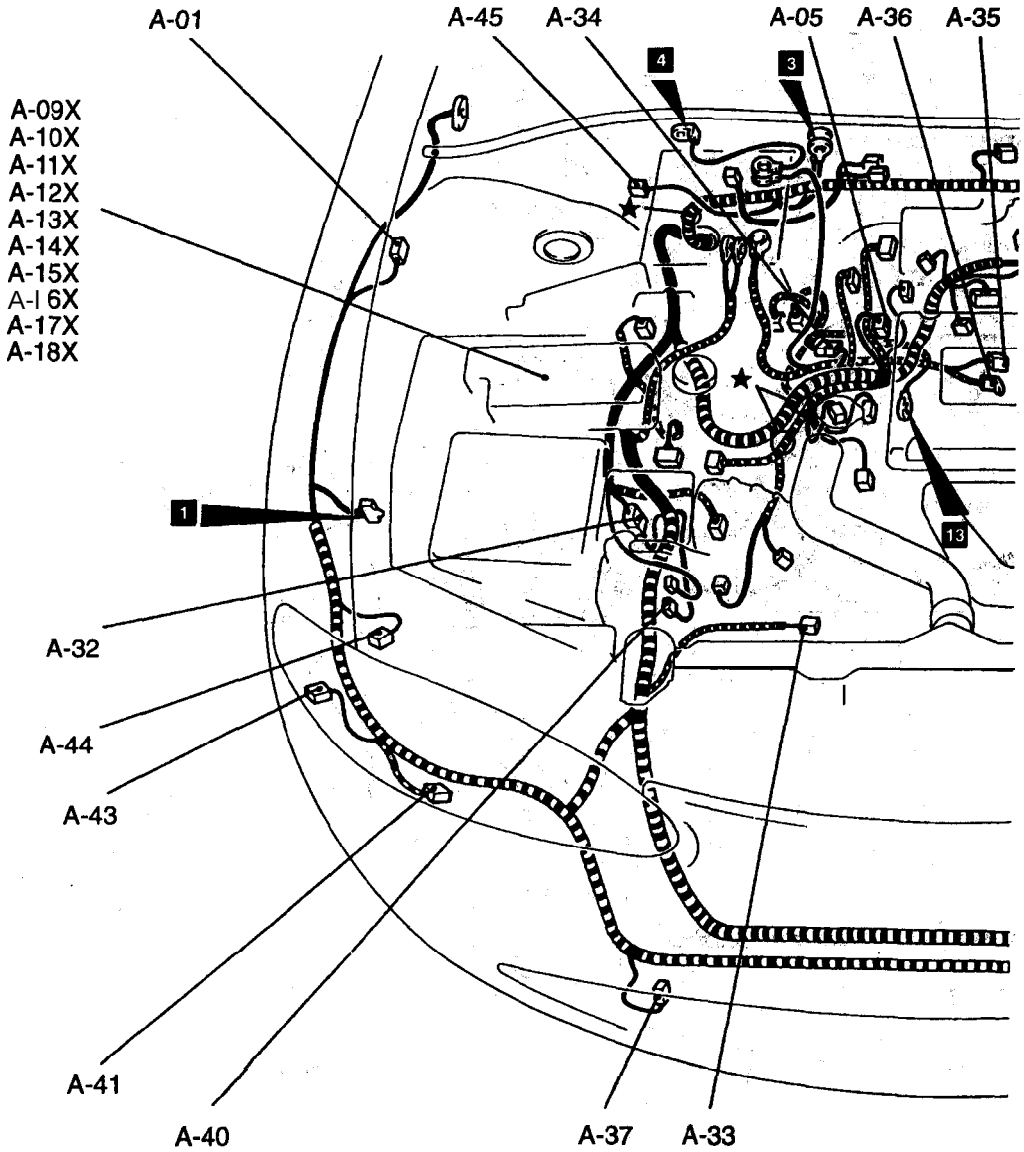

A-01 (2-B)	ABS wheel-speed sensor (right side)	**A-14X** (5)	Headlight relay
A-02 (1)	Generator	A-I **5X** (5)	Taillight relay
A-03 (4-GR)	Generator	**A-16X** (5)	Fog light relay
A-04 (3-B)	Crankshaft position sensor	**A-17X** (5)	Horn relay
A-05 (2-GR)	Knock sensor	A-I **8X** (5)	NC compressor clutch relay
A-08 (2-B)	ABS wheel-speed sensor (left side)	**A-20 (3-B)**	Front combination light (left side)
A-09X (5)	Condenser **fan** relay (LO)	**A-21 (2-B)**	Hood switch **<with** theft-alarm **system>**
A-I OX (5)	Condenser fan relay (HI)	**A-22 (2-GR)**	Front side-marker light (left side)
A-11X (5)	**Radiator fan relay (LO 1)**	**A-23 (2-B)**	**Hydraulic unit <ABS>**
A-I 2X (5)	Radiator fan relay (LO 2)	**A-24 (10-B)**	Hydraulic unit **<ABS>**
A-I **3X** (5)	Radiator fan relay (HI)	**A-25 (3-GR)**	Headlight (left side)

TSB Revision

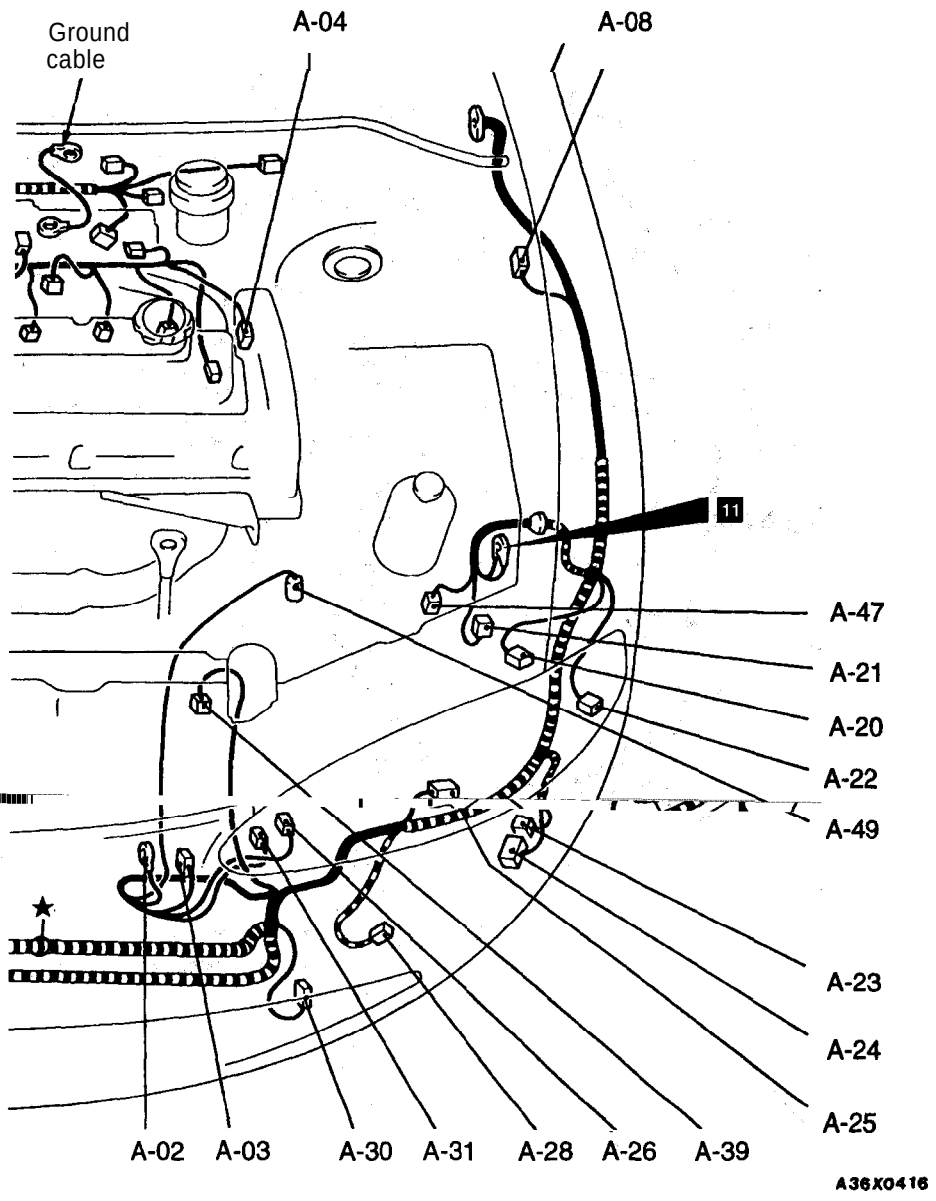

Connector color code
B : Black
Y : Yellow
L : Blue
G : Green
R : Red
BR: Brown
V : Violet
O : Orange
GR: Gray

A-26 (1-B) Oil pressure gauge unit
A-28 (2-B) Horn
A-30 (2-B) Fog light (left side)
A-31 (1) Oil pressure switch
A-32 (12-B) Front wiring harness and control wiring harness combination
A-33 (4-GR) Radiator fan motor
A-34 (2-B) Control wiring harness and battery cable combination
A-35 (1-B) Starter motor
A-36 (1) Starter motor
A-37 (2-B) Fog light (right side)
A-39 (4-GR) Condenser fan motor
A-40 (4-B) Generator relay
A-41 (3-GR) Headlight (right side)
A-43 (2-GR) Front side-marker light. (right side)
A-44 (3-B) Front combination light (right side)
A-45 (2-B) Theft-alarm horn
A-47 (2-BR) Dual pressure switch
A-49 (1) Power steering pressure switch

TSB Revision

Connector symbol

A

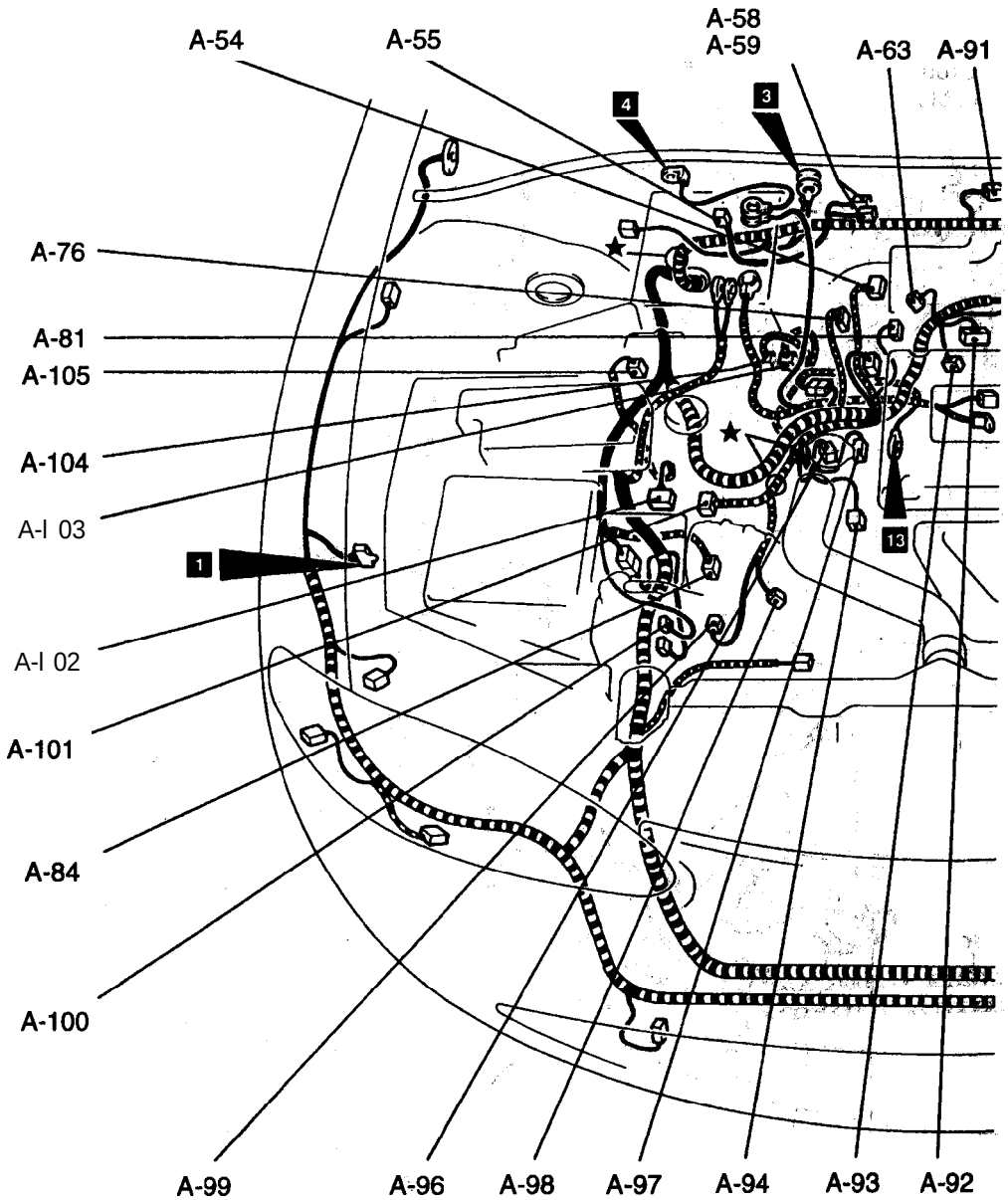

A-50 (2-B) Injector **No.1**
A-54 (6-B) **Idle** air control motor
A-55 (6-B) Windshield wiper motor
A-56 (2-B) Injector **No.2**
A-58 (1 **-B)** Fuel pump check connector
A-59 (1 **-L)** Engine speed detection connector
A-61 (2-B) Injector **No.3**
A-62 (3-B) Ignition coil
A-63 (4-GR) Throttle position sensor
A-64 (1 **-B)** Capacitor
A-65 (3-B) Manifold differential **pressure sensor**
A-66 (2-B) Evaporative emission purge solenoid valve
A-67 (2) Brake fluid level switch
A-76 (3-B) Vehicle speed sensor
A-79 (2-B) Fuel pressure solenoid valve
A-80 (6-B) Resistor
A-81 (3-B) Camshaft position **sensor**
A-84 (2-B) Back-up light switch **<M/T>**

TSB Revision

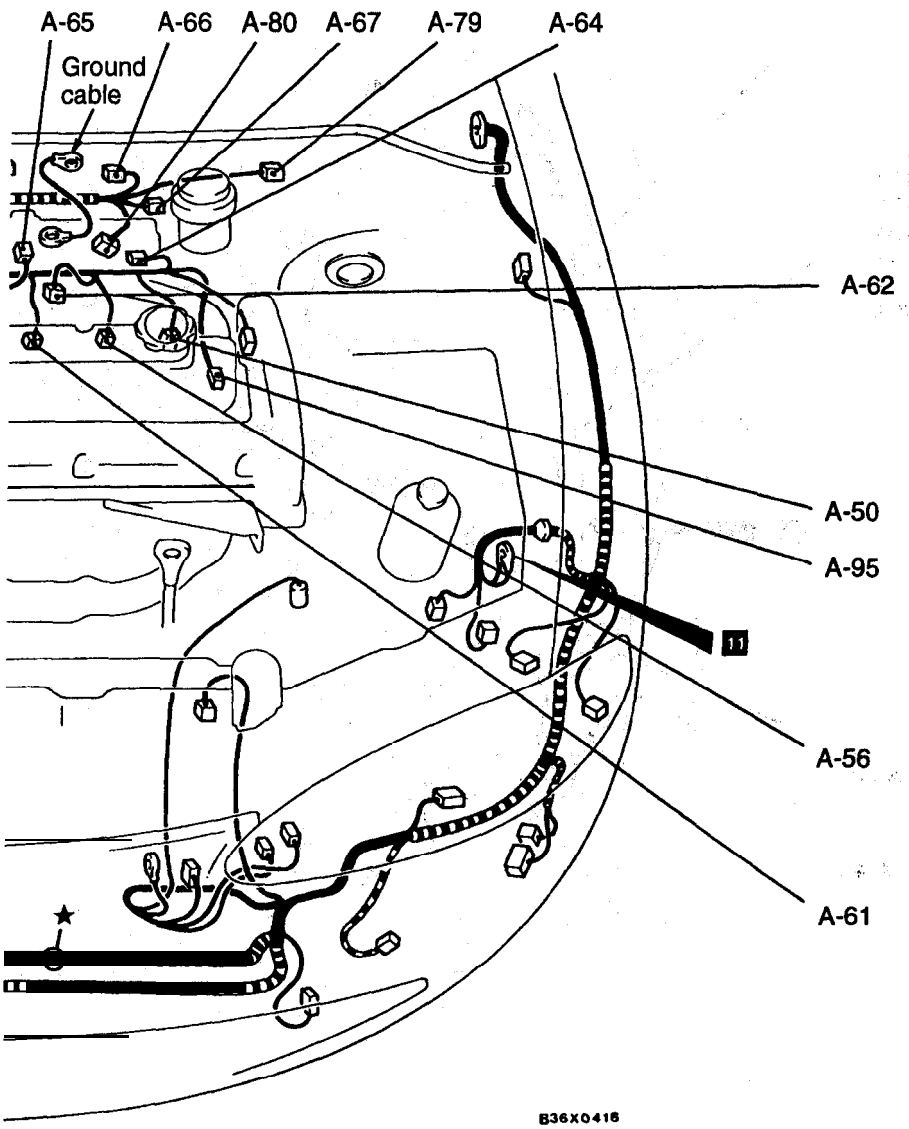

Connector color code
B : Black
Y : Yellow
L : Blue
G : Green
R : Red
BR: Brown
V : Violet
O : Orange
GR: Gray

A-91 (2-B) EGR solenoid valve
A-92 (8-B) ignition power transistor
A-93 (2-B) Injector No.4
A-94 (4-B) Heated oxygen sensor (front)
A-95 (3-B) A/C compressor
A-96 (1) Engine coolant temperature gauge unit
A-97 (2-B) Engine coolant temperature sensor
A-98 (1-B) Kickdown servo switch <A/T>
A-99 (2-B) A/T fluid temperature sensor
A-I 00 (2-B) Turbocharger waste gate solenoid valve
A-101 (12-B) Park/neutral position switch <A/T>
A-I 02 (8-B) Volume airflow sensor
A-I 03 (4-B) ELC 4-speed automatic transaxle control solenoid Valve
A-104 (4-GR) Pulse generator <A/T>
A-I 05 (4-B) Auto-cruise control vacuum pump

ENGINE COMPARTMENT <2.4L Engine>

80100030751

Connector symbol

A

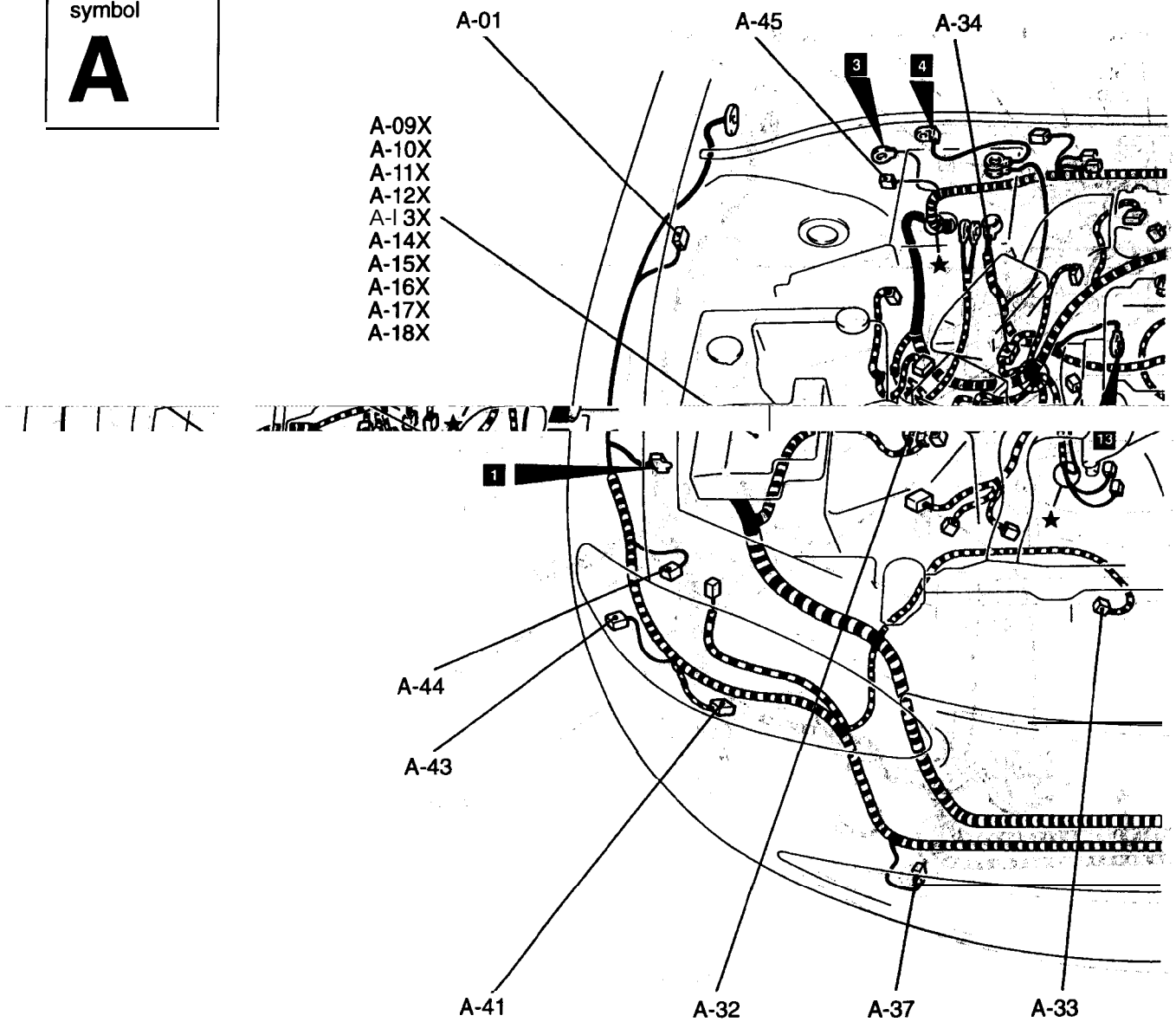

A-01 (2-B) ABS wheel-speed sensor (right side)
A-02 (1) Generator
A-03 (4-GR) Generator
A-04 (3-B) Crankshaft position sensor
A-08 (2-B) ABS wheel-speed sensor (left side)
A-09X (5) Condenser fan relay (LO)
A-10X (5) Condenser fan relay (HI)
A-11X (5) Radiator fan relay (LO 1)
A-I **2X** (5) Radiator fan relay (LO 2)
A-I **3X** (5) Radiator fan relay (HI)
A-14X (5) Headlight relay
A-I **5X** (5) Taillight relay
A-16X (5) Fog light relay
A-17X (5) Horn relay
A-I **8X** (5) A/C compressor clutch relay
A-20 (3-B) Front combination light **(left side)**
A-21 (2-B) Hood switch **<with theft-alarm system>**
A-22 (2-GR) Front side-marker light (left side)
A-23 (2-B) Hydraulic unit **<ABS>**
A-24 (1 O-B) Hydraulic unit **<ABS>**

TSB Revision

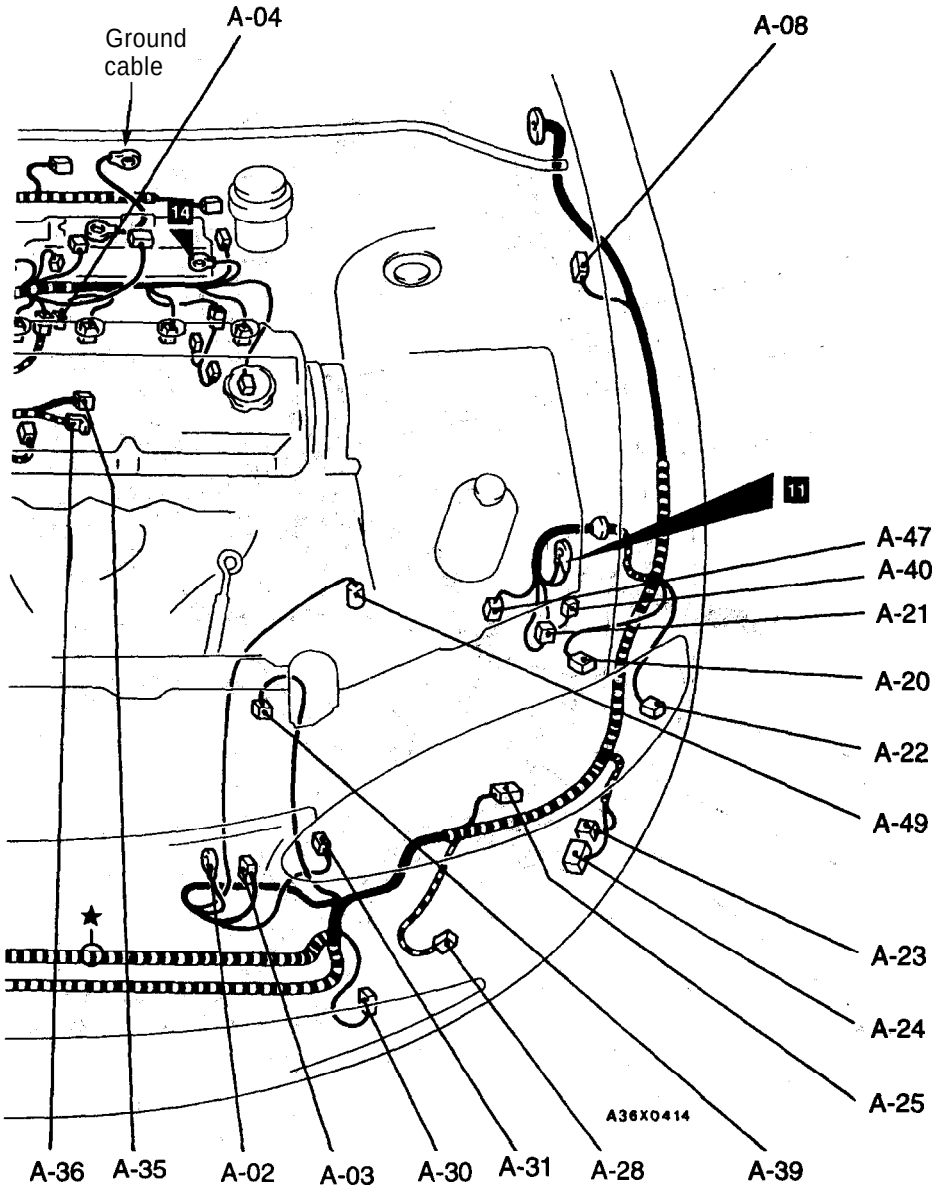

Connector color code
B : Black
Y : Yellow
L : Blue
G : Green
R : Red
BR: Brown
V : Violet
O : Orange
GA: Gray

A-25 (3-GR) Headlight (left side)
A-28 (2-B) Horn
A-30 (2-B) Fog light (left side)
A-31 (1) Oil pressure switch
A-32 (12-B) Front wiring harness and control wiring harness combination
A-33 (4-GR) Radiator fan motor
A-34 (2-B) Control wiring harness and battery cable combination
A-35 (1 -B) Starter motor

A-36 (1) Starter motor
A-37 (2-B) Fog light (right side)
A-39 (4-GR) Condenser fan motor
A-40 (4-B) Generator relay
A-41 (3-GR) Headlight (right side)
A-43 (2-GR) Front side-marker light (right side)
A-44 (3-B) Front combination light (right side)
A-45 (2-B) The theft alarm horn
A-47 (2-BR) Dual pressure switch
A-49 (1) Power steering pressure switch

TSB Revision

Connector symbol

A

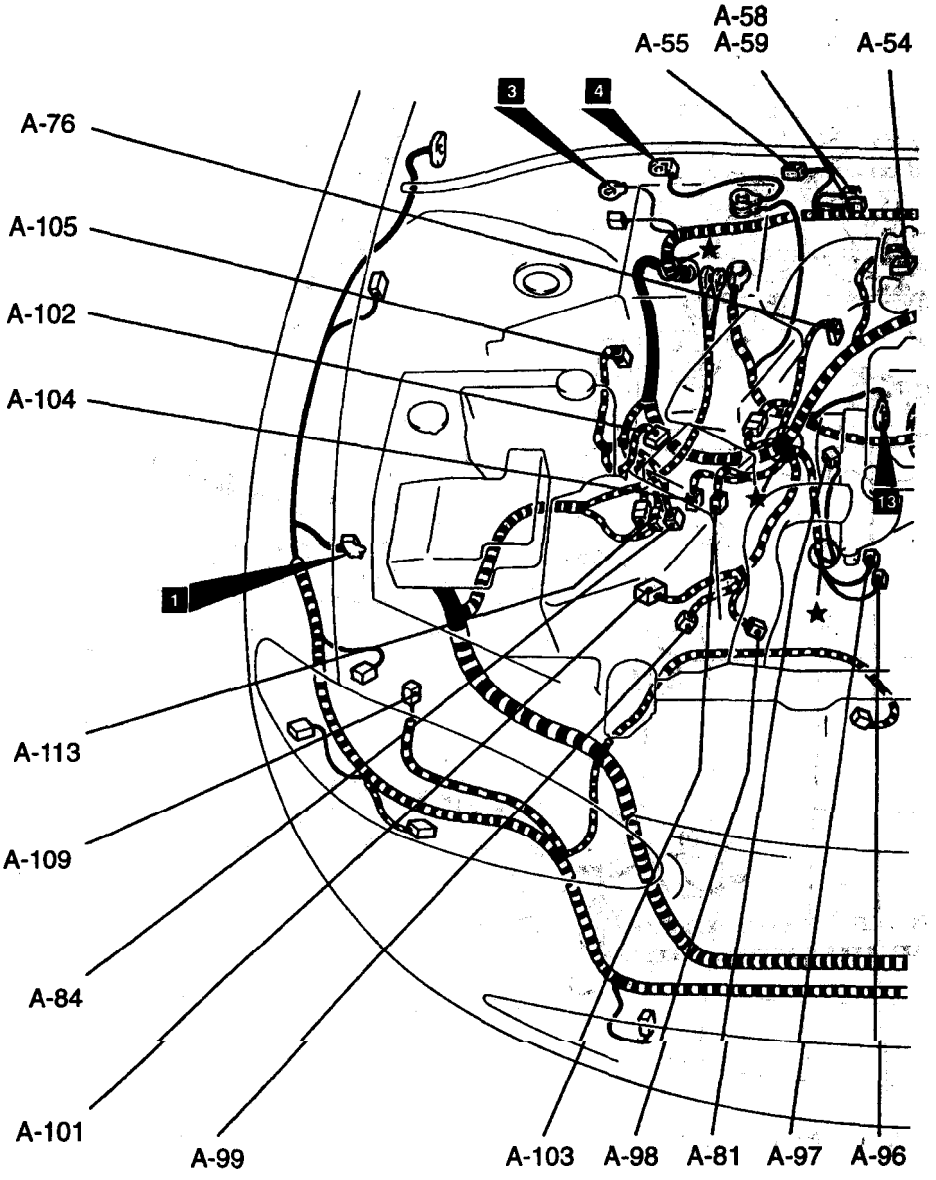

A-50 (2-B) Injector **No.1**
A-54 (6-B) **Idle** air control motor
A-55 (6-B) Windshield wiper motor
A-56 (2-B) Injector **No.2**
A-58 (1 **-B)** Fuel pump check connector
A-59 (1-L) Engine speed detection connector
A-61 (2-B) Injector **No.3**
A-62 (3-B) **Ignition coil wiring harness and control wiring** harness combination
A-63 (4-GR) Throttle position sensor
A-64 (1 **-B)** Capacitor
A-65 (3-B) Manifold differential pressure sensor
A-66 (2-GR) Evaporative emission purge solenoid **valve** assembly
A-67 (2) Brake fluid level switch
A-76 (3-B) Vehicle speed sensor
A-81 (3-B) Camshaft position sensor
A-84 (2-B) Back-up light switch **<M/T>**
A-91 (2-B) **EGR solenoid valve**
A-92 (8-B) Ignition power transistor
A-93 (2-B) Injector **No.4**

TSB Revision

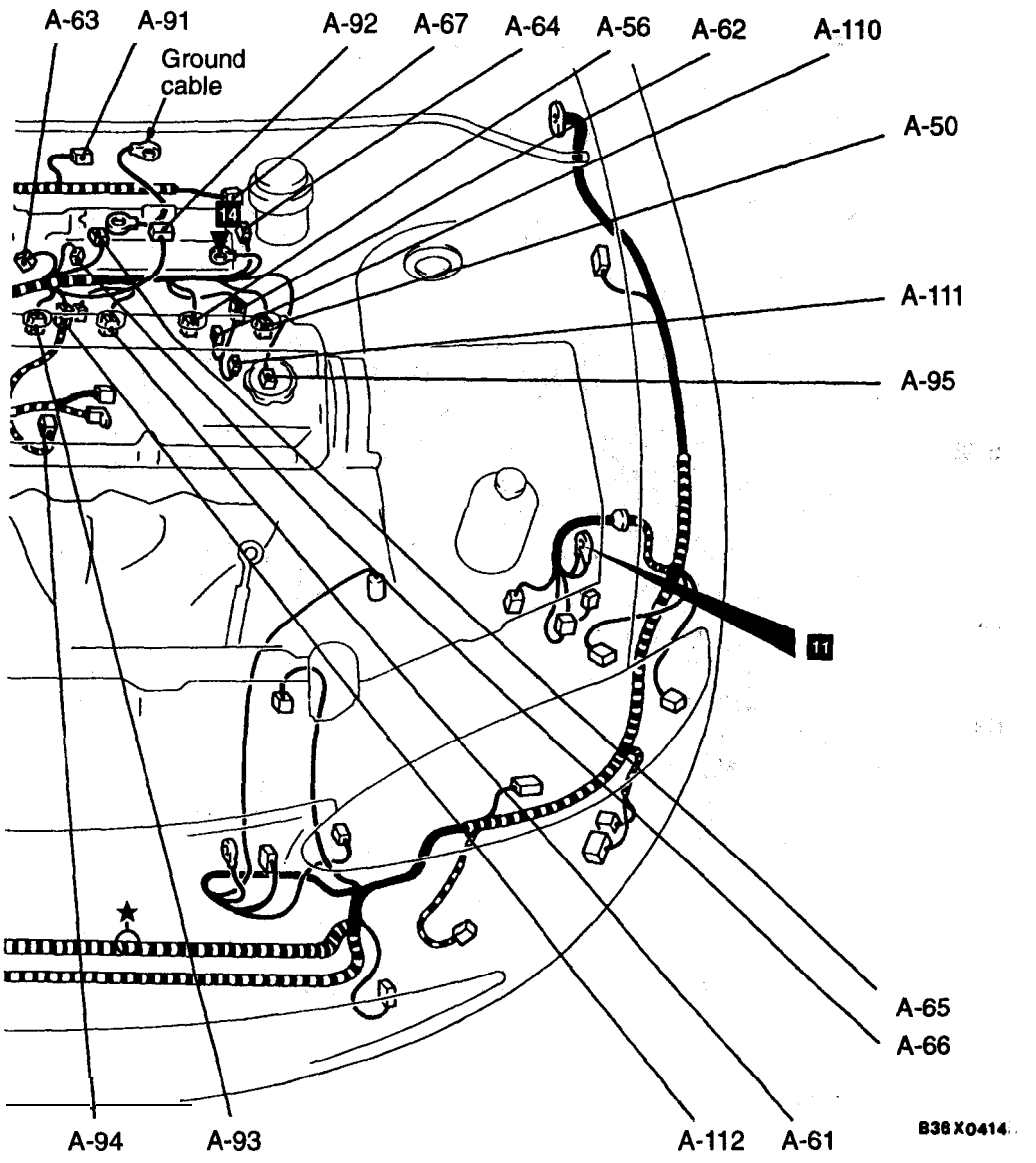

Connector color code
B : Black
Y : Yellow
L : Blue
G : Green
R : Red
BR: Brown
V : Violet
O : Orange
GR: Gray

A-94 (4-B) Heated oxygen sensor (front)
A-95 (3-B) A/C compressor
A-96 (1) Engine coolant temperature gauge unit
A-97 (2-B) Engine coolant temperature sensor
A-98 (1 -B) Kickdown servo switch <A/T>
A-99 (2-B) A/T fluid temperature sensor
A-l 01 (12-B) Park/neutral position switch <A/T>
A-l 02 (8-B) Volume air flow sensor
A-103 (4-B) ELC 4-speed automatic transaxle control solenoid valve
A-l 04(4-GR) Pulse generator <A/T>
A-l 05 (4-B) Auto-cruise control vacuum pump
A-109 (2) Evaporative emission ventilation solenoid
A-l 10 (2-B) Ignition coil 2
A-111(2-B) Ignition coil 1
A-11 2 (4-B) Heated oxygen sensor wiring harness and control wiring harness combination
A-l 13 (2) Front wiring harness and control wiring harness combination

DASH PANEL

80100060330

Connector symbol

B

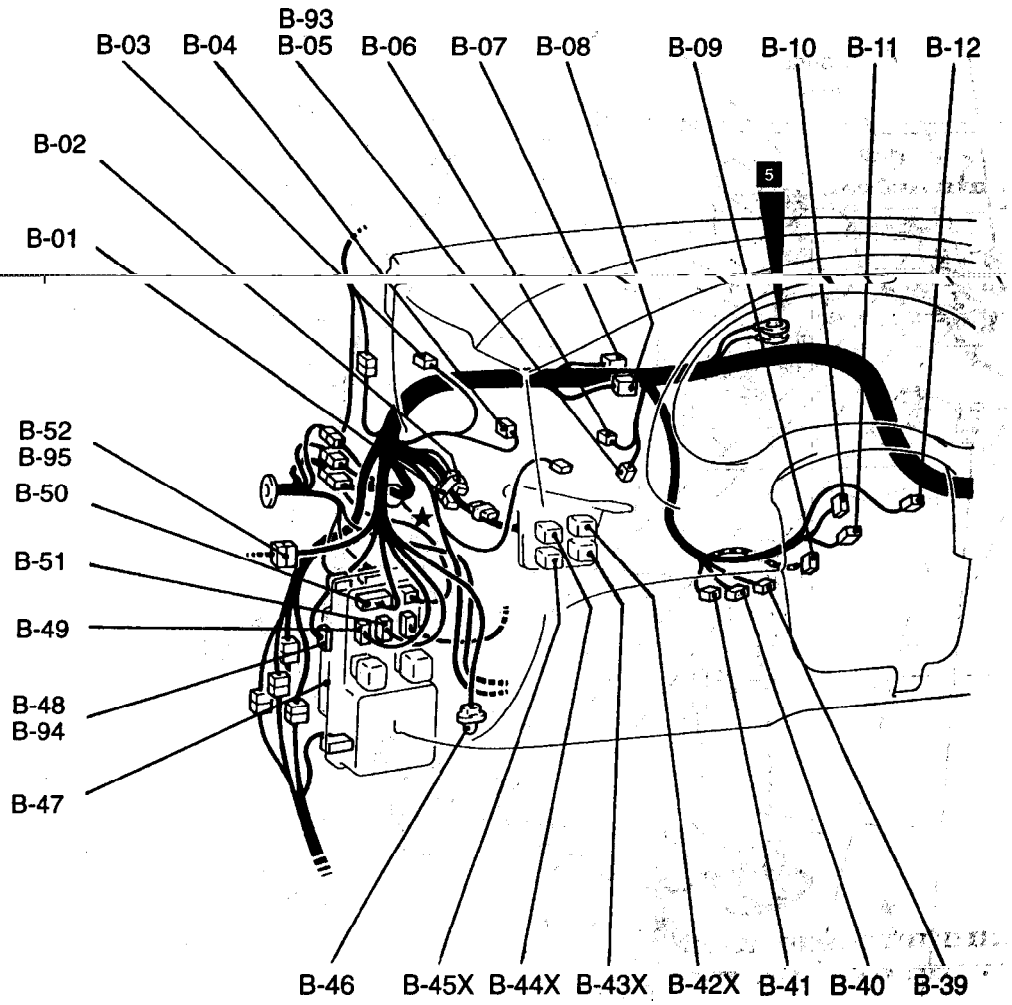

B-01 (4)	Diode (for central door locking system)
B-02 (3)	Diode (for theft-alarm system)
B-03 (2)	Clutch pedal position switch or no connection
B-04 (2)	Clutch pedal position switch or no connection <2.0L Engine (Turbo) and 2.4L Engine>
B-05 (4)	Stop light switch <2.0L Engine (Non-turbo)>
B-93 (2)	Stop light switch <2.0L Engine (Turbo) and 2.4L Engine>
B-06 (4)	Stop light switch <2.0L Engine (Turbo) and 2.4L Engine>
B-07 (33)	J/C (1)
B-08 (33)	J/C (2)
B-09 (6)	Ignition switch
B-l 0 (6-GR)	Column switch
B-11 (10)	Column switch
B-12 (12)	Column switch
B-l 4 (2)	Resistor <with ABS or auto-cruise control system>
B-15 (2)	A/C switch illumination light
B-16 (8)	Blower switch
B-l 7 (6)	A/C switch
B-18 (10)	Turn signal and hazard flasher unit
B-20 (2)	Fin thermo sensor <2.0L Engine (Non-turbo)>
B-22 (4)	Blower resistor
B-24 (2)	Blower motor
B-25 (3)	Automatic compressor-ECM <2.0L Engine (Turbo) and 2.4L Engine>
B-26 (14)	Automatic compressor-ECM <2.0L Engine (Non-turbo)>
B-27 (20)	Body wiring harness and door wiring harness (right side) combination

TSB Revision

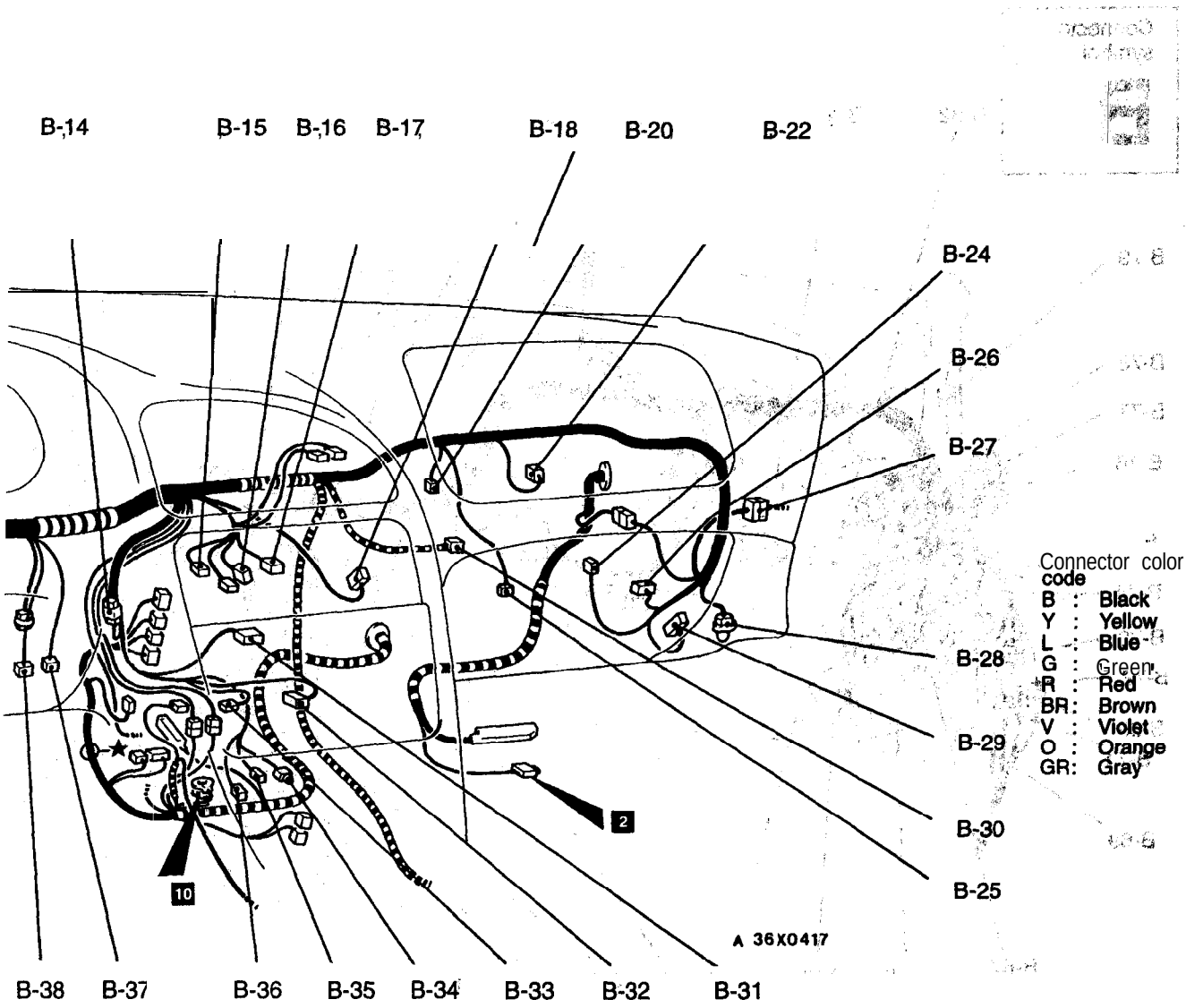

B-28 (2) Foot light (right side)
B-29 (26-Y) Auto-cruise-ECU <2.0L Engine (Turbo) and 2.4L Engine>
B-30 (2-R) Air bag module (passenger's side)
B-31 (14) Radio
B-32 (8) Door lock power relay 1
B-33 (4-B) ABS G sensor <AWD>
B-34 (2) Cigarette lighter illumination light
B-35 (1) Cigarette lighter
B-36 (1-B) Cigarette lighter
B-37 (12) Data link connector <2.0L Engine (Non-turbo)>
B-38 (16-B) Data link connector
B-39 (7) Key reminder switch
B-40 (3) Clock spring
B-41 (2-R) Air bag module (driver's side)
B-42X (5) Power window relay
B-43X (5) Theft-alarm starter relay <M/T>
B-44X (4) Theft-alarm starter relay <A/T>
B-45X (5) Theft-alarm horn relay
B-46 (2) Foot light (left side)
B-47 (20) ETACS-ECU
B-48 (20-B) ETACS-ECU <With theft-alarm system>
B-94 (16-B) ETACS-ECU <Without theft-alarm system>
B-49 (1 O-B) J/B and body wiring harness combination
B-50 (18-B) J/B and body wiring harness combination
B-51 (20-B) J/B and body wiring harness combination
B-52 (20) Body wiring harness and door wiring harness (left side) combination <ECLIPSE>
B-95 (32) Body wiring harness and door wiring harness (left side) combination <ECLIPSE SPYDER>

TSB Revision

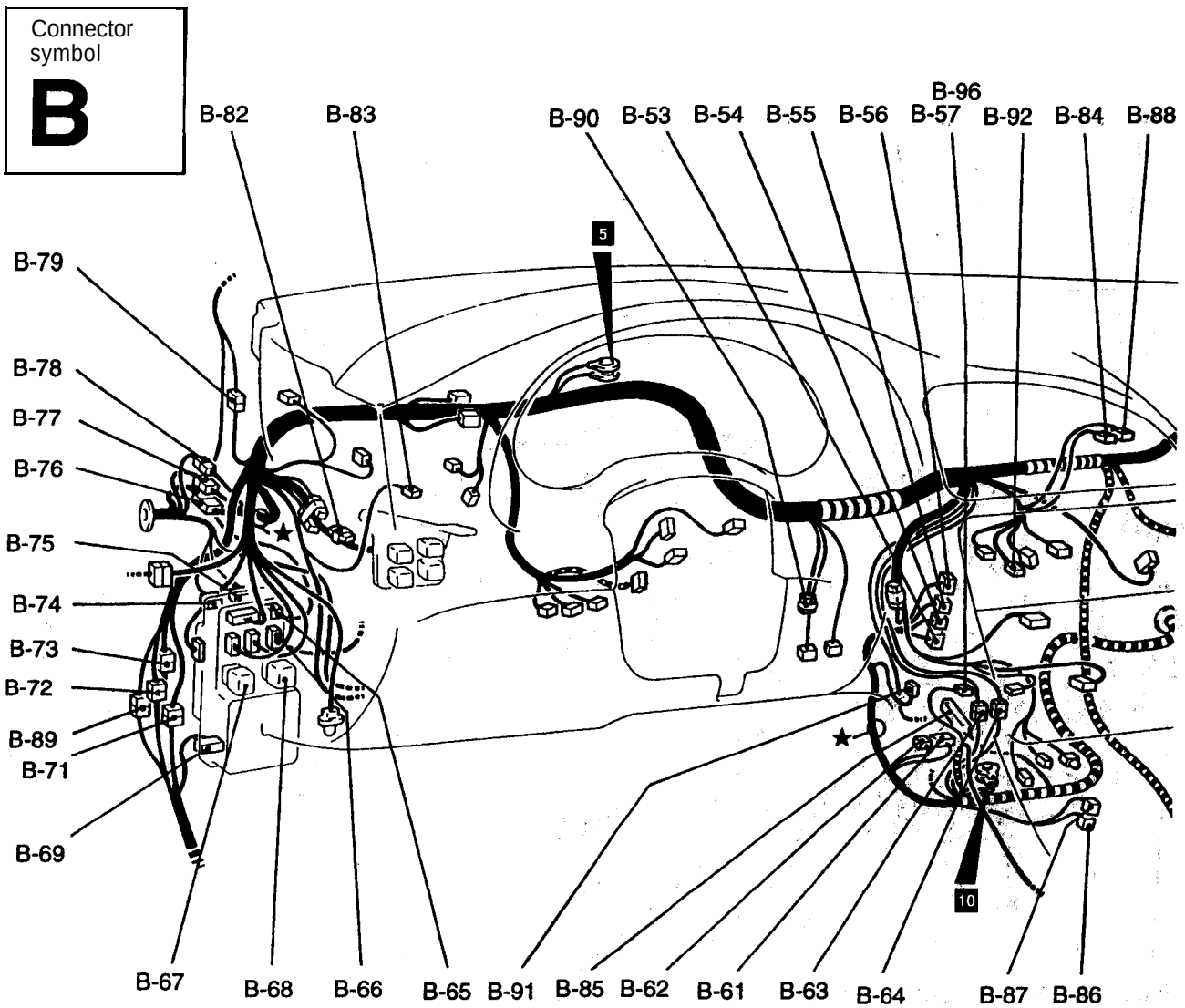

B-53 (26-Y) Engine control module
<2.0L Engine (Turbo) and 2.4L Engine>
B-54 (16-Y) Engine control module
<2.0L Engine (Turbo) and 2.4L Engine>
B-55 (12-Y) Engine control module
<2.0L Engine (Turbo) and 2.4L Engine>
B-56 (22-Y) Engine control module
<2.0L Engine (Turbo) and 2.4L Engine>
B-57 (4) Starter relay <M/T>
B-96 (5) Starter relay <A/T>
B-58 (35-B) ABS-ECU <FWD>
B-97 (35-L) ABS-ECU <AWD>
B-59 (14) Body wiring harness and front wiring harness combination <with ABS>
B-61 (26-Y) ELC 4-speed automatic transaxle control module
<2.0L Engine (Turbo) and 2.4L Engine>
B-62 (16-Y) ELC 4-speed automatic transaxle control module
<2.0L Engine (Turbo) and 2.4L Engine>
B-63 (22-L) Body wiring harness and control wiring harness combination
B-64 (1 O-L) Body wiring harness and control wiring harness combination
B-65 (4-B) J/B and roof wiring harness combination
B-66 (22-B) J/B and instrument panel wiring harness combination
B-67 (5) Defogger relay
B-68 (5) Blower motor relay
B-69 (19-B) J/B and rear wiring harness combination
B-71 (22-L) Rearwiring harness and bodywiring harness combination
B-72 (6-L) Rearwiring harness and body wiring harness combination

TSB Revision

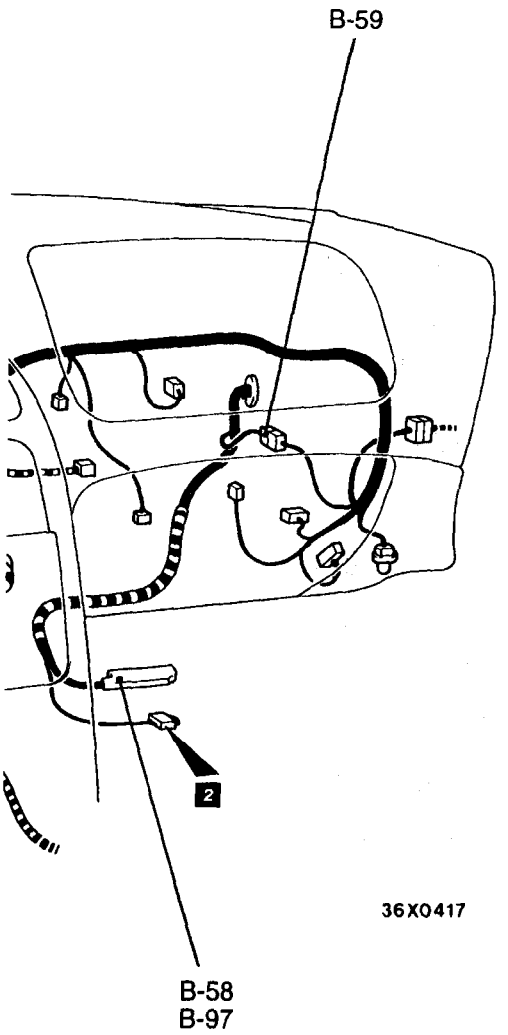

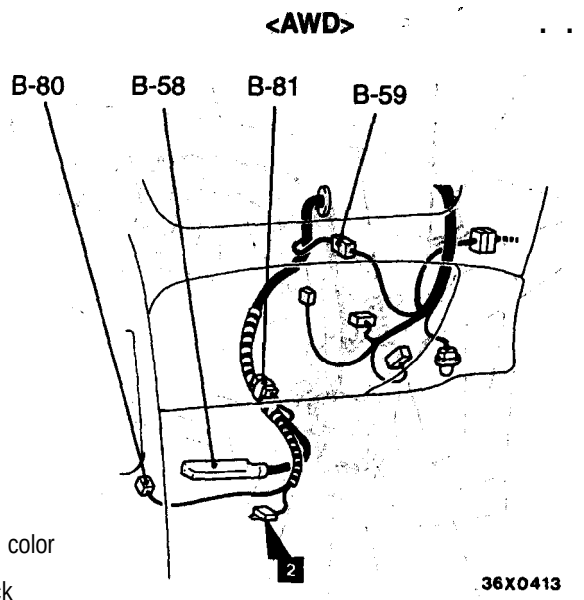

Connector color code
B : Black
Y : Yellow
L : Blue
G : Green
R : Red
BR: Brown
V : Violet
O : Orange
GR: Gray

00005311

B-73 (14-L)	Rear wiring harness and body wiring harness combination <with central door locking system>
B-74 (1 -B)	J/B and front wiring harness combination
B-75 (8-B)	J/B and front wiring harness combination
B-76 (20)	Front wiring harness and body wiring harness combination
B-77 (8)	Front wiring harness and body wiring harness combination
B-78 (1)	Front wiring harness and body wiring harness combination
B-79 (4)	Roof wiring harness and body wiring harness combination
B-80 (4)	ABS power relay <AWD>
B-81 (2)	Diode (for ABS circuit) <AWD>
B-82 (2)	Dedicated fuse <with auto-cruise control system (2.0L Engine (Turbo) and 2.4L Engine>
B-83 (11)	Remote controlled mirror switch
B-84 (8)	Rear wiper and washer switch <ECLIPSE>
B-85 (60-B)	EATX-ECM <2.0L Engine (Non-turbo)-A/T>
B-86 (4)	Fuel pump relay <2.0L Engine (Turbo) and 2.4L Engine>
B-87 (4)	MFI relay <2.0L Engine (Turbo) and 2.4L Engine>
B-88 (8)	Convertible top' switch <ECLIPSE SPYDER>
B-89 (18-L)	Rear wiring harness and body wiring harness combination <ECLIPSE SPYDER>
B-90 (3)	Diode (for convertible top circuit) <ECLIPSE SPYDER>
B-91 (5)	Fuel pump-relay module <2.4L Engine:
B-92 (2)	Defroster switch

INSTRUMENT PANEL AND FLOOR CONSOLE

80100080114

Connector symbol

C

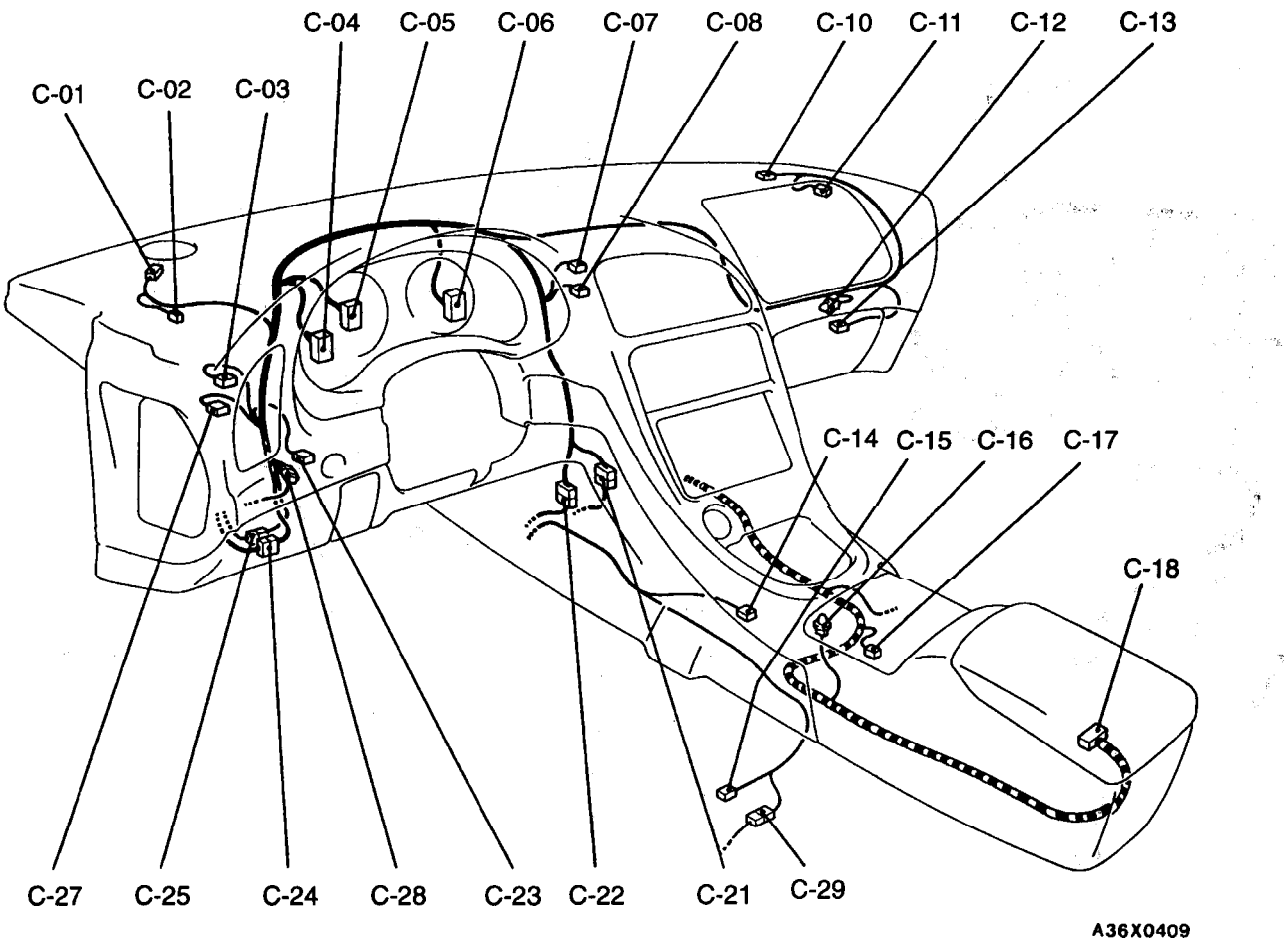

C-01 (2-B) Front speaker (left side) or no connection
C-02 (2) Front speaker (left side) or no connection
C-03 (8) Auto-cruise control main switch
C-04 (17) Combination meter
C-05 (17) Combination meter
C-06 (17) Combination meter
C-07 (10) Hazard warning switch
C-08 (6) Defogger switch
C-10 (2-B) Front speaker (right side) or no connection
C-11 (2) Front speaker (right side) or no connection
C-12 (2) Glove compartment light
C-13 (1) Glove compartment light switch
C-14 (6) Overdrive switch **<A/T>**
C-l 5 **(4-B)** Heated oxygen sensor (rear)
C-16 (2) Ashtray illumination light
C-17 (1) Parking brake switch
C-18 (21 **-Y)** SRS-ECU
C-21(20-B) Instrument panel wiring harness and **body** wiring harness combination
C-22 (18) **Instrument** panel wiring **harness and** control wiring harness combination
C-23 (4) Rheostat
C-24 (22) Instrument panel wining harness and body wiring harness combination
C-25 (8) Instrument panel wiring' harness and front wiring harness combination
C-27 (6) Fog light switch
C-28 (3) **Diode** (for **door-ajar warning light circuit)**
C-29 (3) Control wiring harness and rear wiring harness combination **<2.4L** Engine>

TSB Revision

DOOR

80100140256

Connector symbol

D

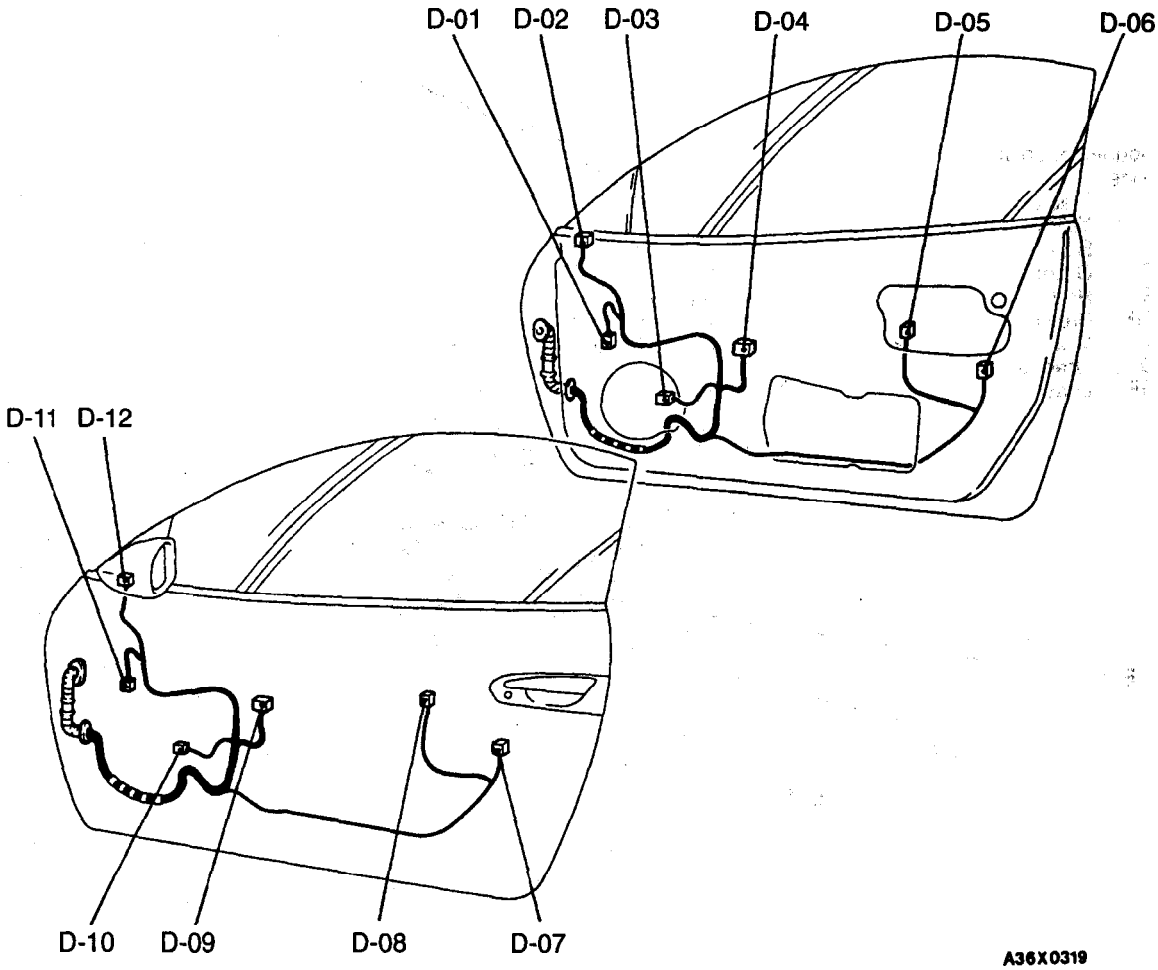

Connector color code

B : Black
Y : Yellow
L : Blue
G : Green
R : Red
BR : Brown
V : Violet
O : Orange
GR : Gray

D-01 (2)	Power window motor (right side)	D-07 (4)	Door lock actuator (left side)
D-02 (7)	Door mirror (right side)	D-08 (3)	Door lock key cylinder switch (left side)
D-03 (2)	Door speaker (right side)	D-09 (9)	Power window main switch
D-04 (9)	Power window sub switch	D-10 (2)	Door speaker (left side)
D-05 (3)	Door lock key cylinder switch (right side)	D-11 (2)	Power window motor (left side)
D-06 (4)	Door lock actuator (right side)	D-12 (7)	Door mirror (left side)

TSB Revision

INTERIOR <ECLIPSE>

80100200060

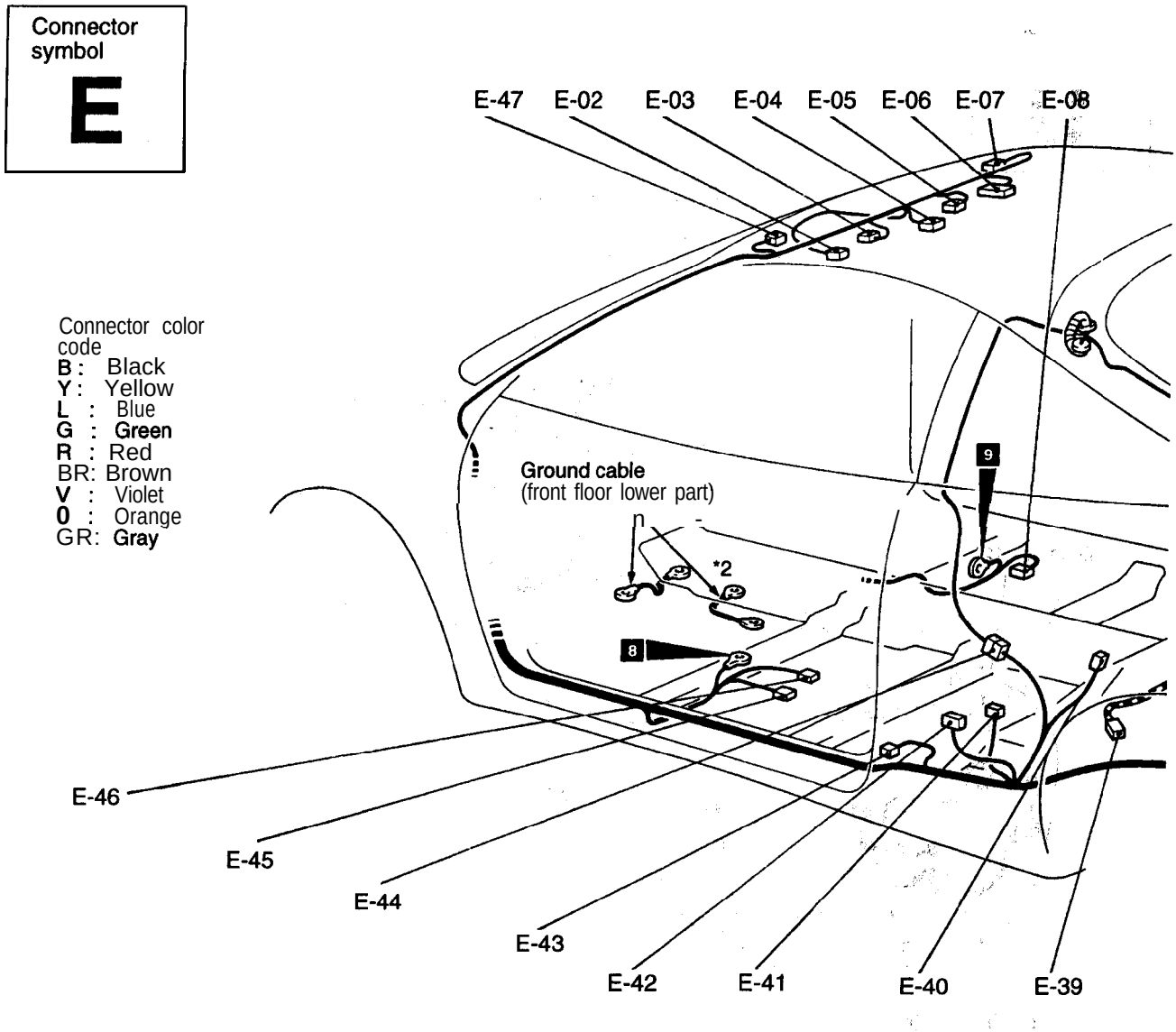

E-02 (4-B)	Dome light <with sunroof>
E-03 (2)	Sunroof motor
E-04 (3)	Dome light <without sunroof>
E-05 (3)	Sunroof switch
E-06 (10)	Sunroof-ECU
E-07 (1)	Vanity mirror light (right side)
E-08 (18)	Amplifier
E-09 (8-B)	Rear wiring harness and fuel wiring harness combination
E-10 (1-B)	Defogger (+)
E-11 (2)	Door switch (right side)
E-12 (4-B)	Fuel wiring harness and ABS wheel-speed sensor wiring harness combination <AWD>
E-l 3 (2-B)	Rear speaker (right side)
E-14 (1 -B)	Defogger (–)
E-l 5 (3-B)	Rear wiper motor
E-16 (2)	High mounted stop light
E-17 (3-O)	Rear combination light (right side)
E-l 8 (7)	Rear combination light (right side)
E-l 9 (1 -B)	Luggage compartment light switch <without theft-alarm system> or no connection <with theft-alarm system>
E-20 (2-B)	Liftgate switch <with theft-alarm system>
E-21 (2)	Liftgate key cylinder switch <with theft-alarm system>
E-22 (2)	Back-up light (right side)
E-23 (2-GR)	License plate light (right side)
E-24 (2-GR)	License plate light (left side)
E-25 (3-B)	Rear wiring harness and license plate light wiring harness combination

TSB Revision

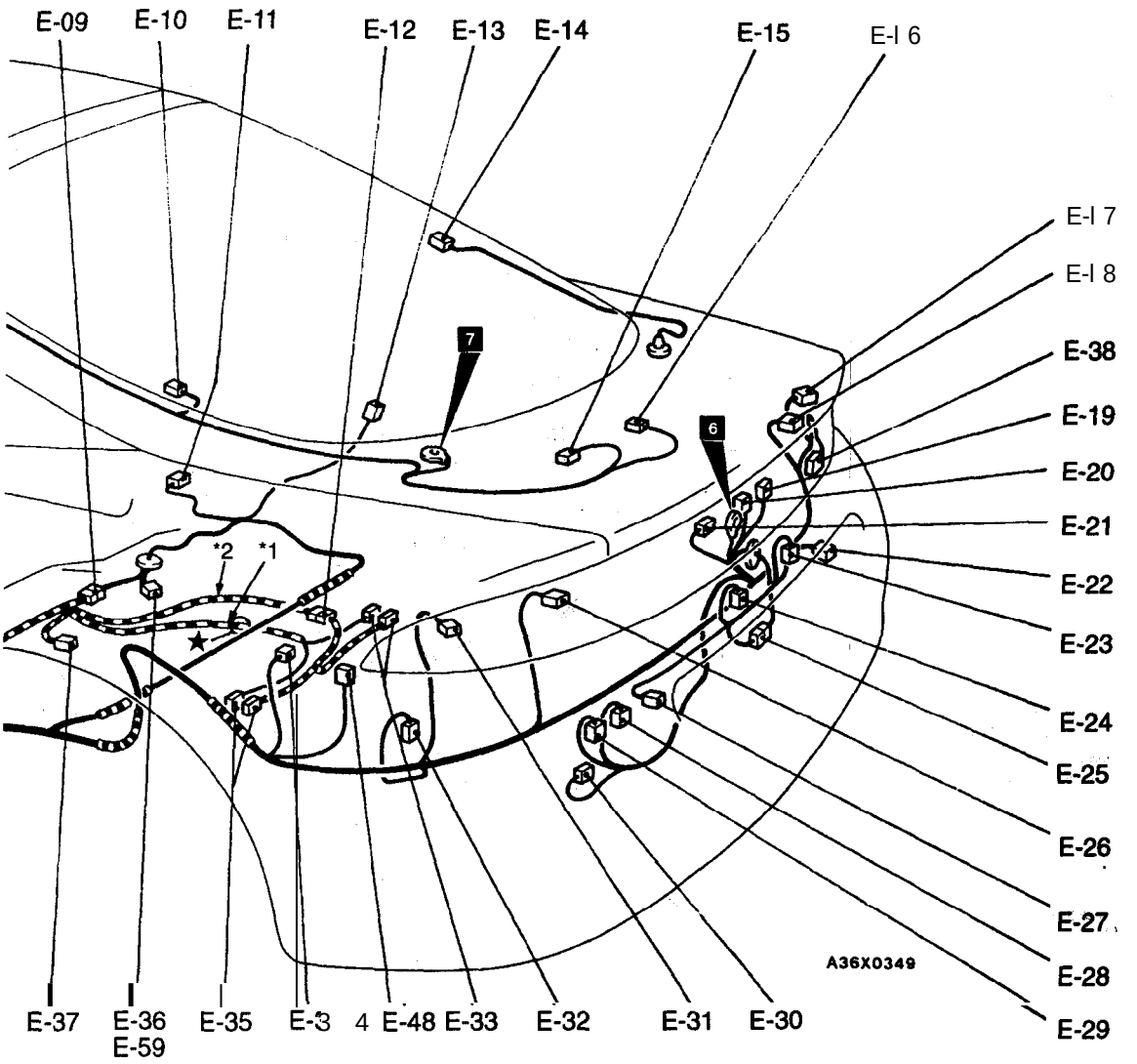

E-26 (7) Rear combination light (left side)
E-27 (2) Back-up light (left side)
E-28 (2-B) Windshield washer motor <2.0L Engine (Turbo)>
E-29 (2) Rear washer motor <2.0L Engine (Turbo)>
E-30 (2) Windshield and rearwasherfluid level switch <2.0L Engine (Turbo)>
E-31 (3-O) Rear combination light (left side)
E-32 (2) Rear washer motor <2.0L Engine (Non-turbo)>
E-33 (2-GR) ABS wheel-speed sensor (rear: right side)
E-34 (2) Luggage compartment light
E-35 (2-B) ABS wheel-speed sensor (rear: left side)
E-36 (2) Fuel pump <FWD>
E-59 (6) Fuel pump and fuel gauge unit <AWD>
E-37 (3) Fuel gauge unit <FWD>
E-38 (6) Reserve connector for CD auto changer
E-39 (4) Sub fuel gauge unit <AWD>
E-40 (2-B) Rear speaker (left side)
E-41 (8) Door lock power relay '2 (for keyless entry system)
E-42 (20-B) Receiver
E-43 (2) Door switch (left side)
E-44 (6) Rear wiring harness and liftgate wiring harness combination
E-45 (2) Power Seat assembly
E-46 (2) Seat belt buckle switch
E-47 (1) Universal garage door opener or no connection
E-48 (6) Motor antenna assembly

TSB Revision

INTERIOR <ECLIPSE SPYDER>

80100200077

Connector symbol

E

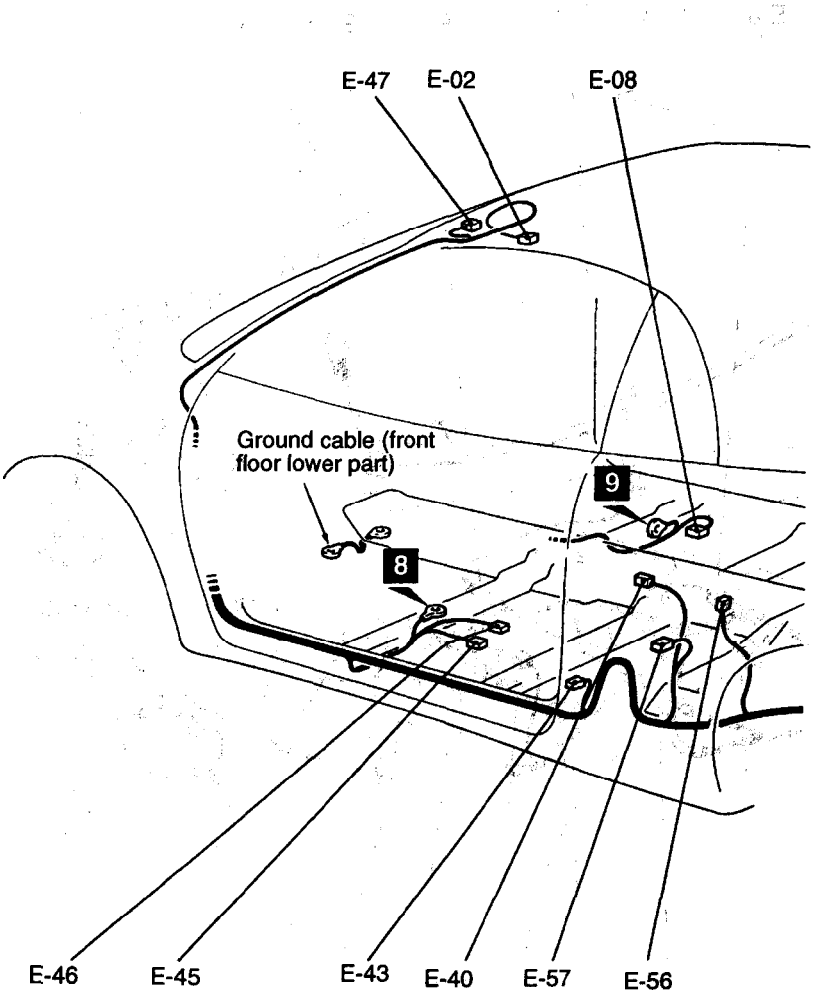

Connector color code
B : Black
Y : Yellow
L : Blue
G : Green
R : Red
BR: Brown
V : Violet
O : Orange
GR: Gray

E-02 (4-B)	Dome light
E-08 (18)	Amplifier
E-09 (8-B)	Rear wiring harness and fuel wiring harness combination
E-l 0 (1 -B)	Defogger (+)
E-11 (2)	Door switch (right side)
E-l 3 (2)	Rear speaker (right side)
E-14 (1-B)	Defogger (–)
E-l 6 (2)	High mounted stop light
E-l 7 (3-B)	Rear combination light (right side)
E-18 (7)	Rear combination light (right side)
E-19 (1-B)	Luggage compartment light switch <without theft-alarm system> or no connection <with theft-alarm system>
E-20 (2-B)	Lift gate switch <with theft-alarm system>
E-21 (2)	Liftgate key cylinder switch <with theft-alarm system>
E-22 (2)	Back-up light (right side)
E-23 (2-GR)	License plate light (right side)
E-24 (2-GR)	License plate light (left side)
E-25 (3-B)	Rear wiring harness and license plate light wiring harness combination
E-26 (7)	Rear combination light (left side)
E-27 (2)	Back-up light (left side)
E-28 (2-B)	Windshield washer motor
E-30 (2)	Windshield and rear washer fluid level switch
E-31 (3-B)	Rear combination light (left side)

TSB Revision

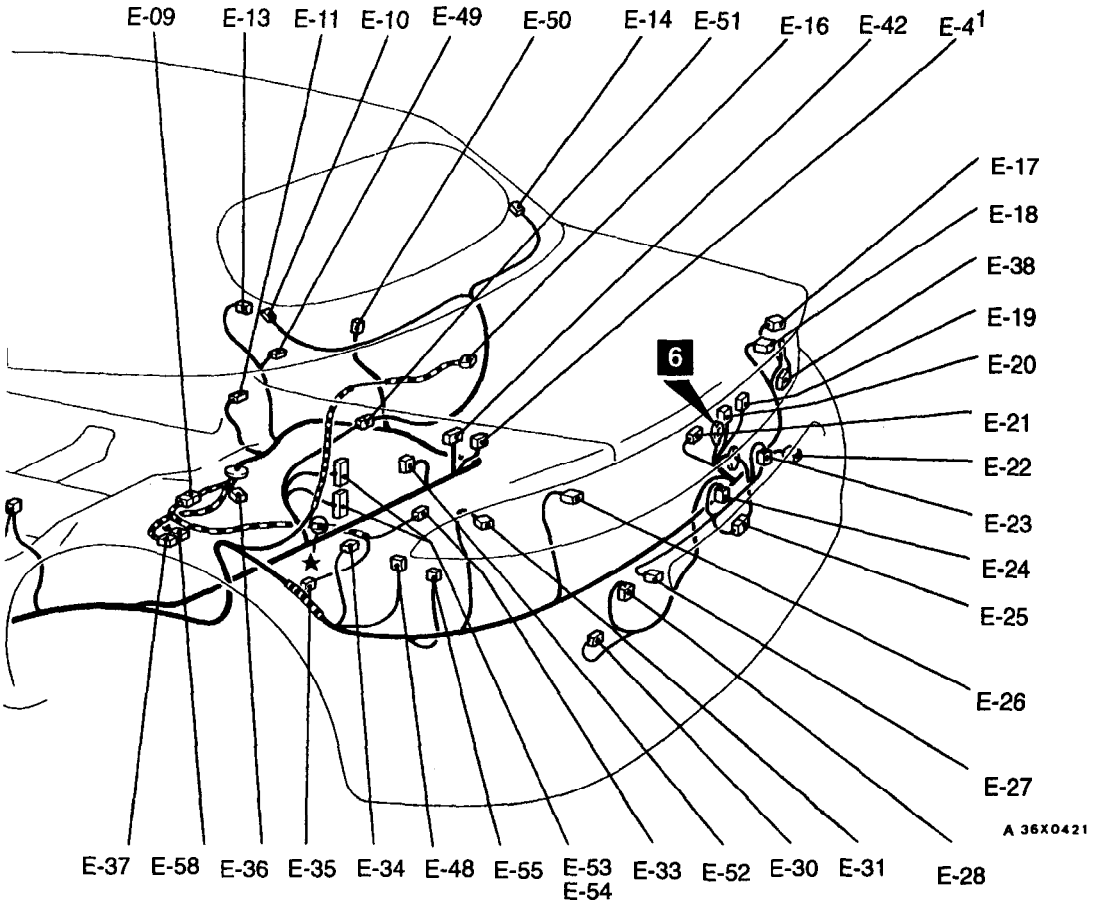

E-33 (2-GR) ABS wheel-speed sensor (rear: right side)
E-34 (2) Luggage compartment light
E-35 (2-B) ABS wheel-speed sensor (rear: left side)
E-36 (2) Fuel pump
E-37 (3) Fuel gauge unit
E-38 (6) Reserve connector for CD auto changer
E-40 (2-B) Rear speaker (left side)
E-41 (8) Door lock power relay 2 (for keyless entry system)
E-42 (20) Receiver
E-43 (2) Door switch (left side)
E-45 (2) Power seat assembly
E-46 (2) Seat belt buckle switch
E-47 (1) Universal garage door opener
E-48 (6) Motor antenna assembly
E-49 (2) Power window motor (quarter: right side)
E-50 (2) Topstack drive motor (right side)
E-51 (2-B) Rear wiring harness and defogger wiring harness combination
E-52 (10) Convertible top control module
E-53 (8-B) Convertible top control module
E-54 (8-L) Convertible top control module
E-55 (3) Convertible top bypass switch
E-56 (2) Topstack drive motor (left side)
E-57 (2) Power window motor (quarter: left side)
E-58 (3-B) Fuel tank differential pressure sensor <2.4L Engine>

TSB Revision

NOTES

CIRCUIT DIAGRAMS

CONTENTS

90109000172

NOTES

HOW TO READ CIRCUIT DIAGRAMS

90100010082

The circuit of each system from the fuse (or fusible link) to ground is shown. The power supply is shown at the top and the ground at the bottom to facilitate understanding of how the current flows.

Indicates connector No. The same No. as in the wiring harness diagram is used.
Connector numbers enclosed by frame are indicated with the connector symbols at the lower part of the page.
Connector numbers not enclosed by frame indicate the device incorporated into wiring harness.

Indicates power take out.

Indicates the circuit name to be connected. The arrow indicates the current flow direction.

Indicates harness junction point No. for another system. It corresponds to the junction point No. indicated on the destination system circuit diagram.

Indicates the circuit name to be connected. The arrow indicates the current flow direction.

Indicates the power supply in the control unit. If no voltage is displayed, this indicates battery positive voltage.

An "X" at the end of a connector No. indicates that the connector is connected to a centralized junction that is shown in the section "Centralized Junction".

Indicates the operating conditions of the engine coolant switch, etc.

Indicates that the diagram continues at A in the same circuit.

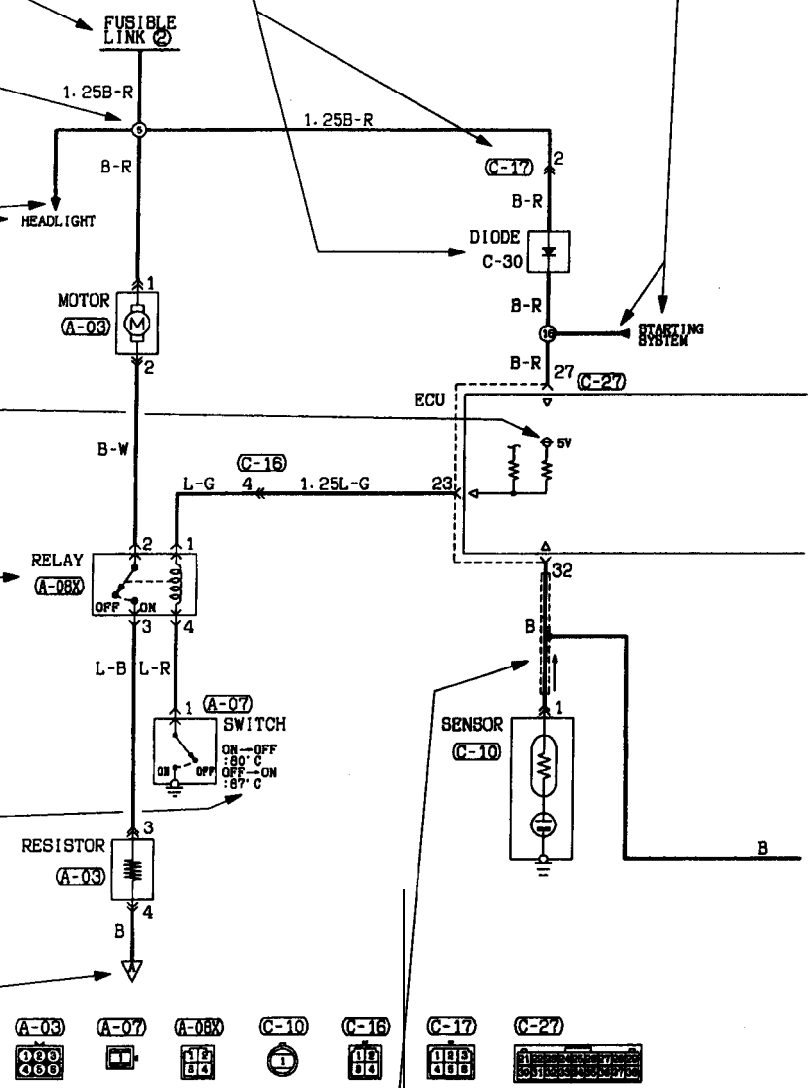

Indicates the connector symbol. Connectors in the circuit diagram are indicated in numerical order.

Indicates shield wire.

TSB Revision

Indicates input/output to/from control unit (current flow direction).

Input Output Input/output

A broken line indicates that these connectors are the same intermediate connectors.

Indicates that the diagram comes from A in the same circuit.

Indicates terminal No.

in case two or more connectors are connected to the same device, markings indicating the same connector are connected by a broken line.

Indicates current flow downward or upward as controlled by the control unit.

Indicates harness junction where wire diameter or color changes.

Indicates intersections at which the lead wires are not connected.

Indicates intersections at which the lead wires are connected.

Indicates vehicle body ground point. (Same No. as that of ground point in GROUNDING LOCATION).

Indicates that the terminal is a spare one if the device (sensor in this case) is not provided.

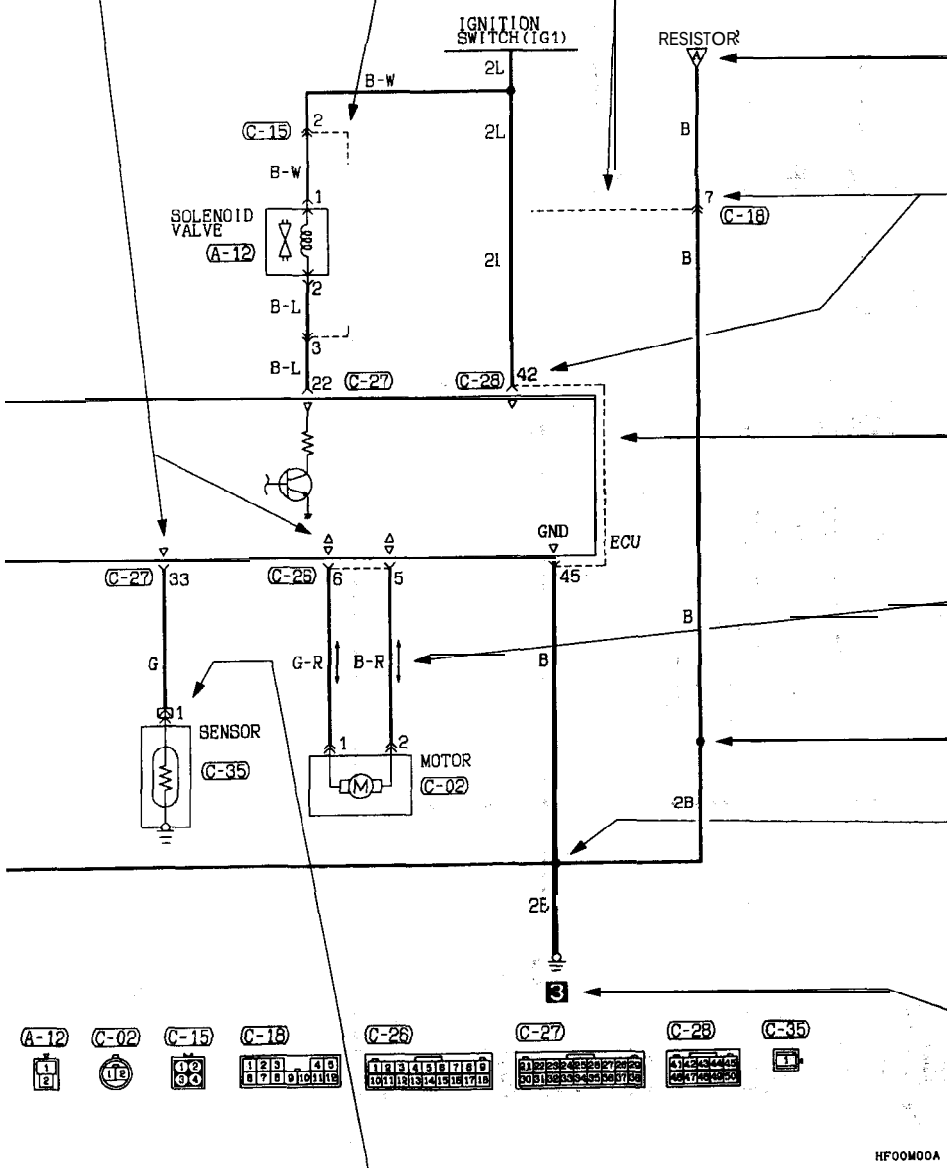

TSB Revision

CONNECTOR/GROUNDING INDICATIONS

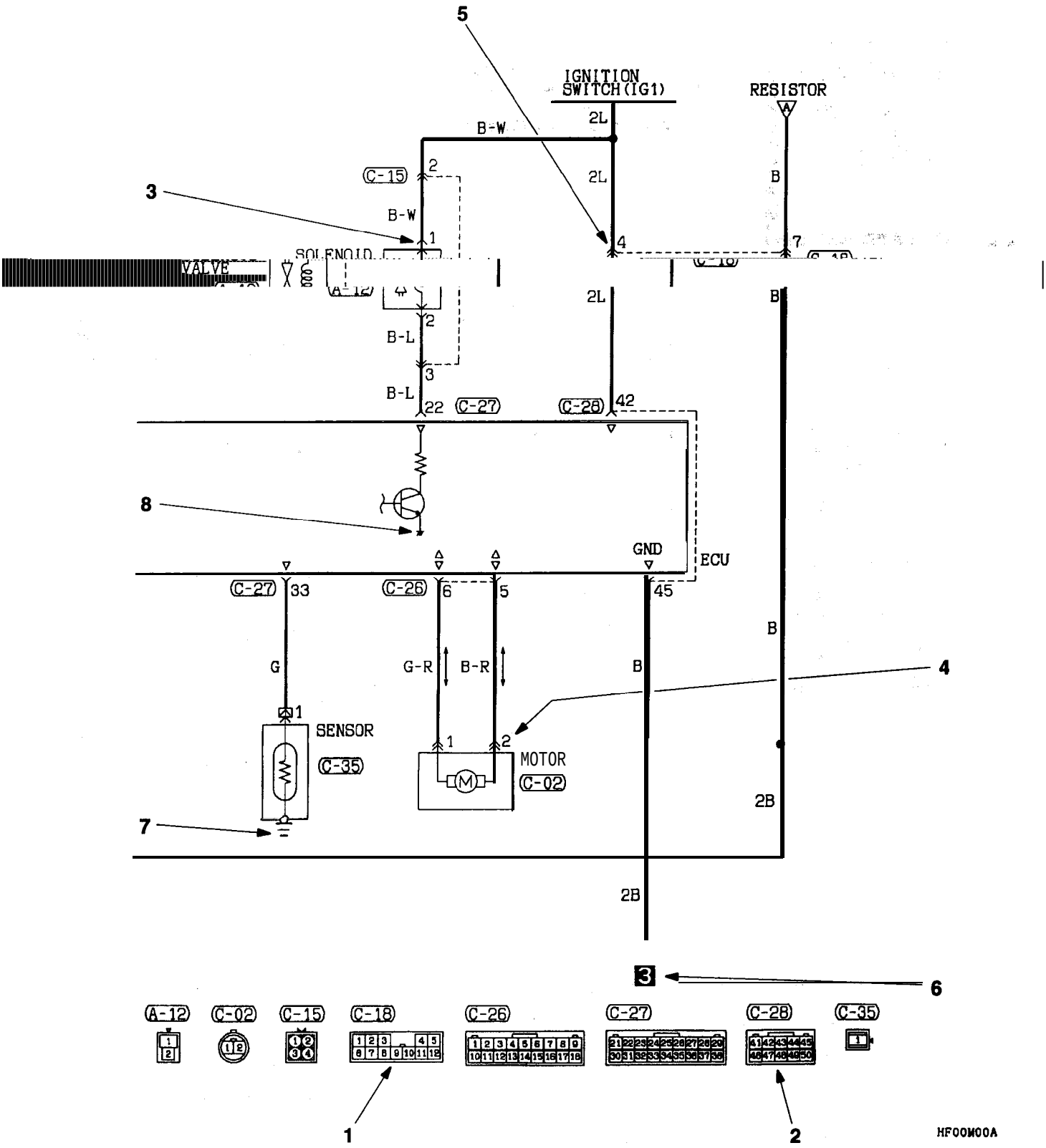

Item	NO.	Connector/Grounding	Symbol	Contents
Connector and terminal marking	1	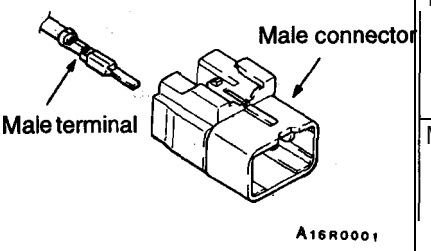	Male terminal  WH-3 Male connector 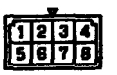 WH-1	The male and female terminals are indicated as shown. The connector with male terminal(s) is called as male connector and indicated by double connector contour lines. The connector with female terminal(s) is called as female connector and indicated by single connector contour line.
		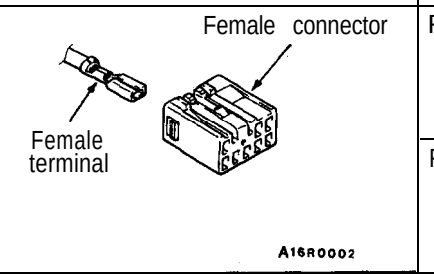	Female terminal  WH-4 Female connector  WH-2	
Connector symbol marking	2	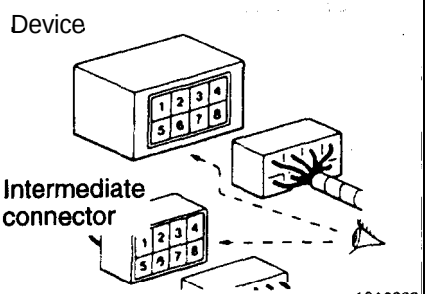	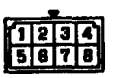 WH-1	The symbol indicates the connector as viewed from the illustrated direction. At the connection with a device, the connector symbol on the device side is shown, and for an intermediate connector, the male connector symbol is shown. For the data link connector, its contents differ from the previous description. Refer to "scan tool operation instruction" in detail.
Connector connection marking	3	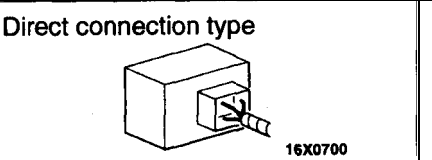	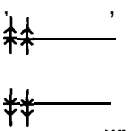 WH-5	A connection between a device and connector on the harness side is either by direct insertion in the device (direct connection type) or by connection with a harness connector furnished on the device side (harness connection type). The two types are indicated as illustrated.
	4	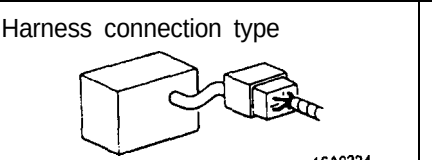	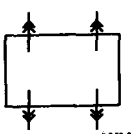 WH-6	
	5	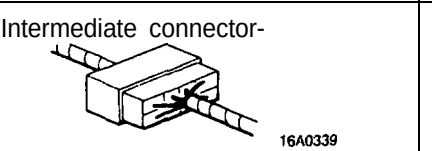	 WH-7	

Item	NO.	Connector/Grounding	Symbol	Contents
Grounding markings	6	Body ground 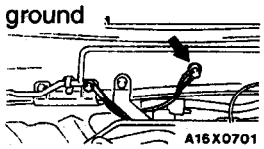	 WH-8	Grounding is either by body ground, device ground or control unit interior ground. These are indicated as illustrated.
	7	Device ground 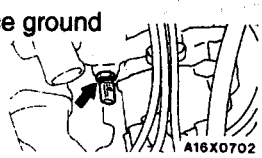	 WH-9	
	8	Ground in control unit 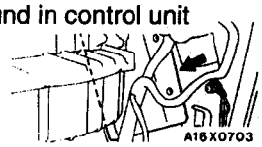	 WH-10	

WIRE COLOR CODES

Wire colors are identified by the following color codes.

Code	Wire color	Code	Wire color
B	Black	P	Pink
BR	Brown	R	Red
G	Green	SB	Sky blue
GR	Gray	V	Violet
L	Blue	W	White
LG	Light green	Y	Yellow
O	Orange		

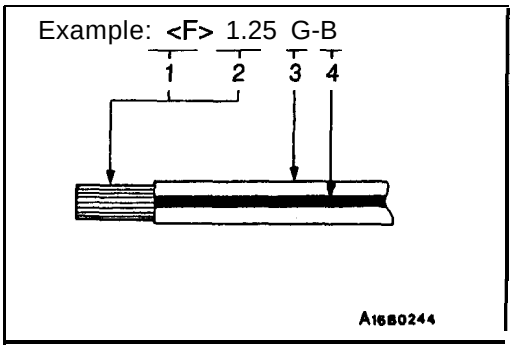

if a cable has two colors, the first of the two color code characters indicates the basic color (color of the cable coating) and the second indicates the marking color.

No.	Meaning
1	<F>: Flexible wire
	<T>: Twisted wire
2	Wire size (mm^2)
3	Basic color (color of the cable cating)
4	Marking color

NOTE
*: No code indicates 0.5 mm^2 (.0008 $in.^2$).
Cable color code in parentheses indicates 0.3 mm^2 (.0005 $in.^2$).

JUNCTION BLOCK (J/B)

90100020214

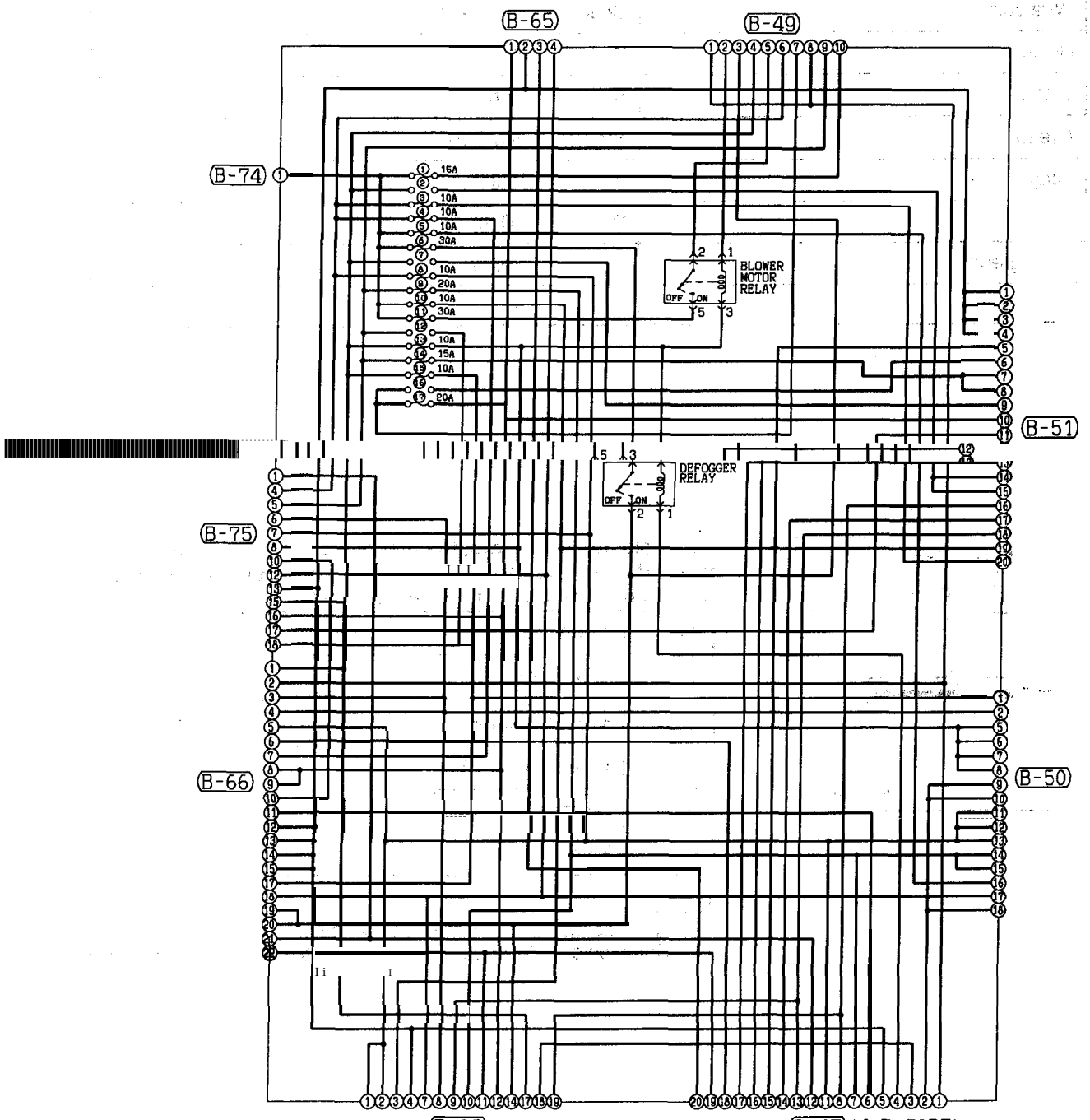

Remark
Connector numbers are keyed to the configuration diagram (dash panel) and each circuit diagram.

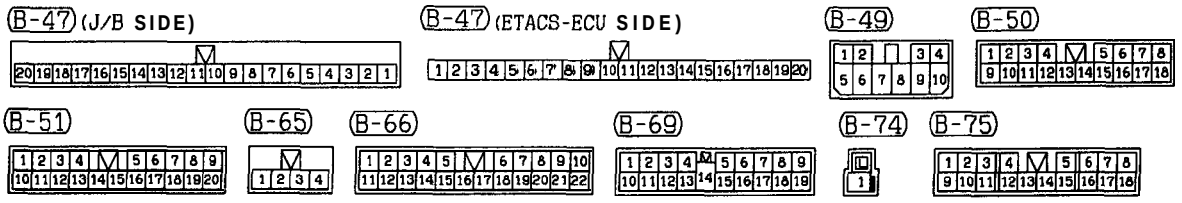

HF00M00AA

TSB Revision

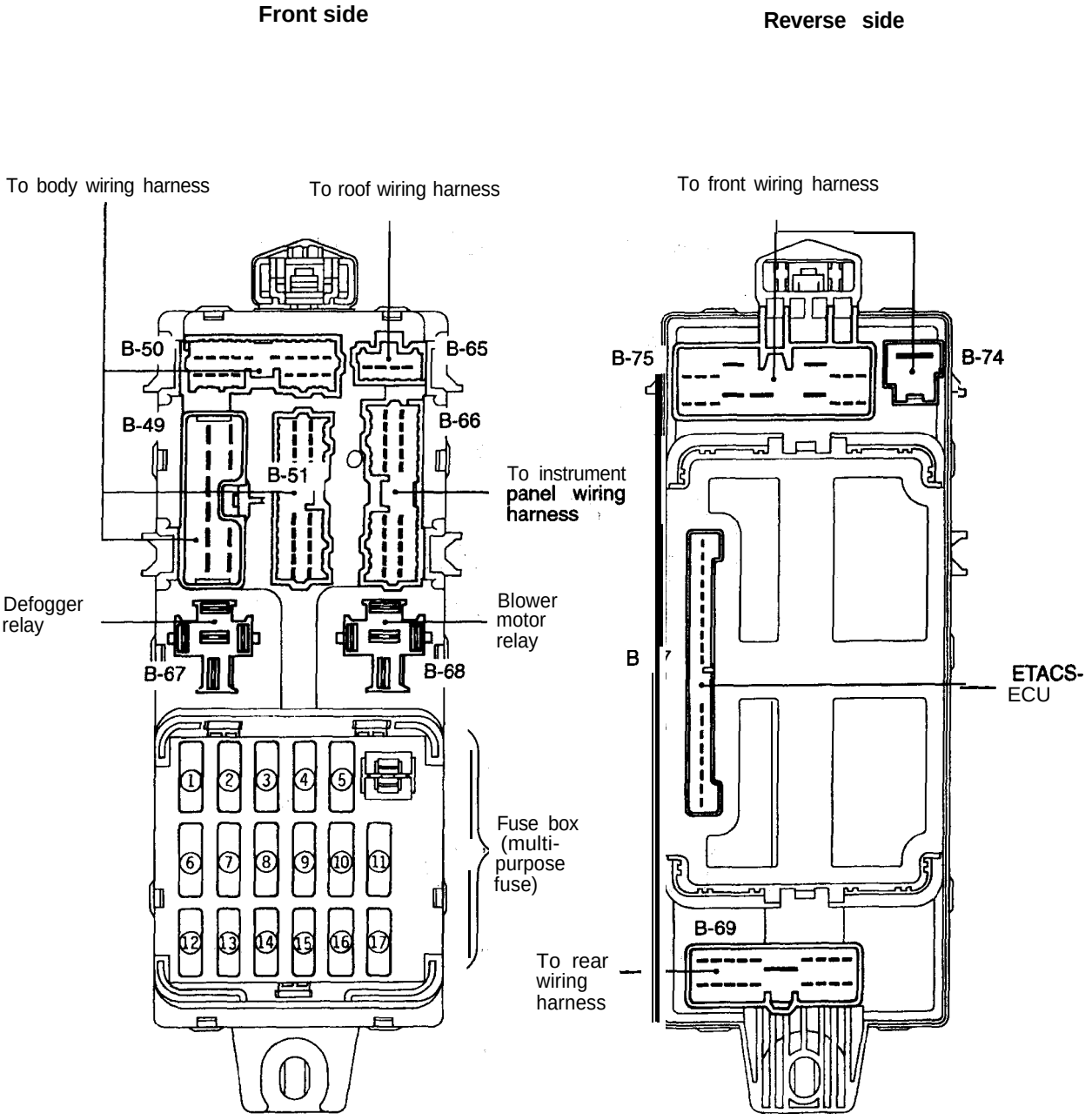
Front side
Reverse side
To body wiring harness
To roof wiring harness
To front wiring harness
B-50
B-65
B-49
B-66
B-51
To instrument panel wiring harness
Defogger relay
Blower motor relay
B-67
B-68
Fuse box (multi-purpose fuse)
B-75
B-74
B
ETACS-ECU
B-69
To rear wiring harness
16X0078
16X0079

00000411

JUMPER CONNECTOR (J/C)

90101410027

Jumper connector (1)

B-07

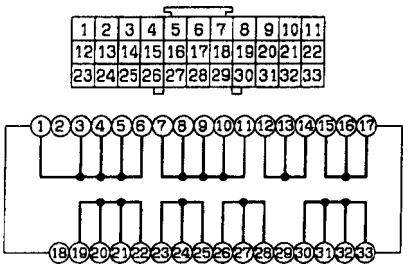

KX35-AC-FB0002-N

Jumper connector (2)

B-08

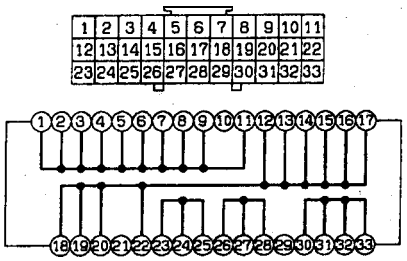

KX35-AC-FB0003-N

Jumper connector (3)

A-82

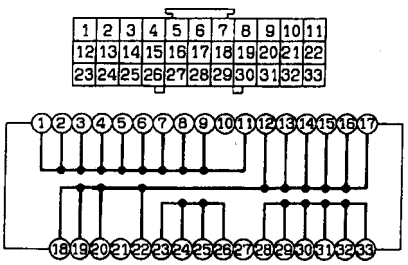

KX35-AC-FB0004-N

Jumper connector (4)

A-83

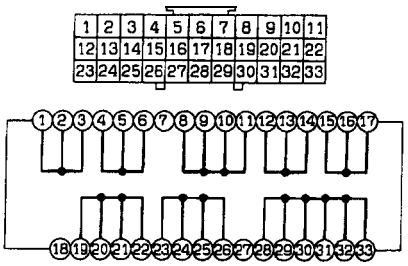

KX35-AC-FB0005-N

00001755

TSB Revision

CENTRALIZED JUNCTION

90100030286

FUSIBLE LINK (Relay box in engine compartment) <2.0L Engine (Non-turbo)>

No.	Circuit	Housing color	Rated capacity (A)
1	Generator	Wine red	120
2	Dedicated fuses No. 8, 11 and multi-purpose fuses No. 1, 5, 6, 10, 11	Yellow	60
3			–
4	MFI system and ELC 4-speed automatic transaxle	Pink	30
5	Headlight, fog light and taillight	Green	40
6	Multi-purpose fuse No. 17 and ignition switch	Pink	30
7	Radiator fan	Pink	30
8	ABS system	Red	50
9	Power seat and power windows	Pink	30
10			

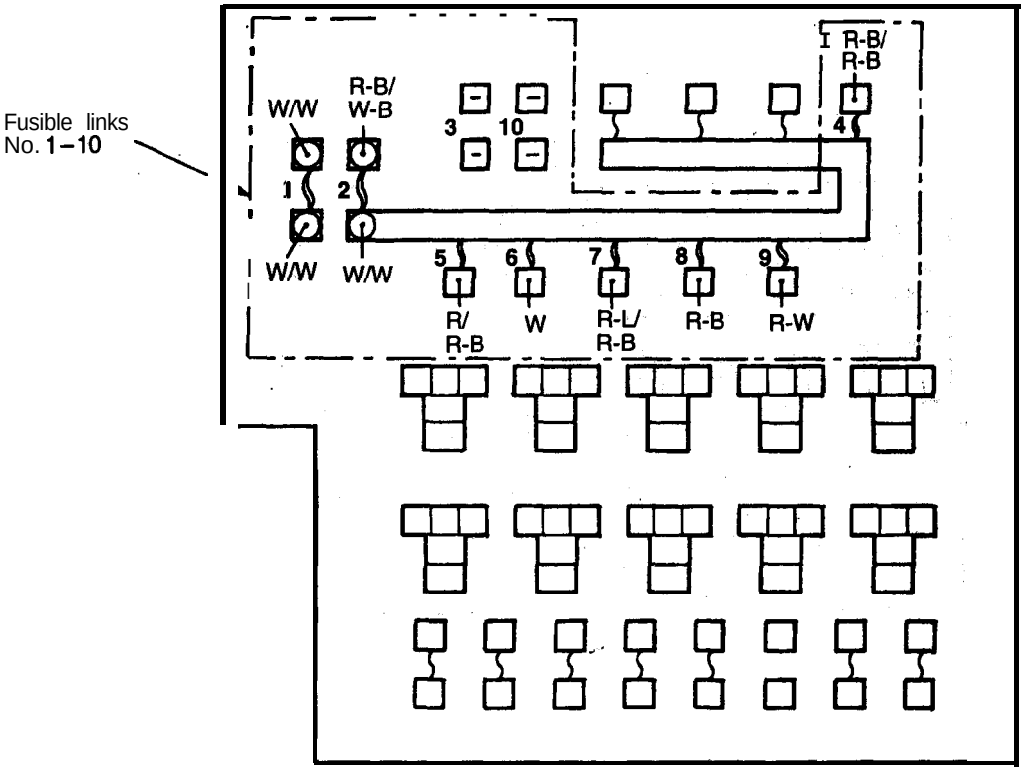

C15X0902

FUSIBLE LINK (Relay box in engine compartment) <2.0L Engine (Turbo)>:

No.	Circuit	Housing color	Rated capacity (A)
1	Fusible links No. 2, 9 and generator	Blue	100
2	Dedicated fuses No. 8, 11 and multi-purpose fuses No. 1, 5, 6, 10, 11	Yellow	60
3	Convertible top	Pink	30
4	MFI system	Blue	20
5	Headlight, fog light, taillight and generator	Green	40
6	Multi-purpose fuse No. 17 and ignition switch	Pink	30.
7	Radiator fan	Pink	30
8	ABS system	Red	50
9	Power seat and power windows	Pink	30*1
		Green	40*2
10			

Remarks
- 1: ECLIPSE
*2: ECLIPSE SPYDER

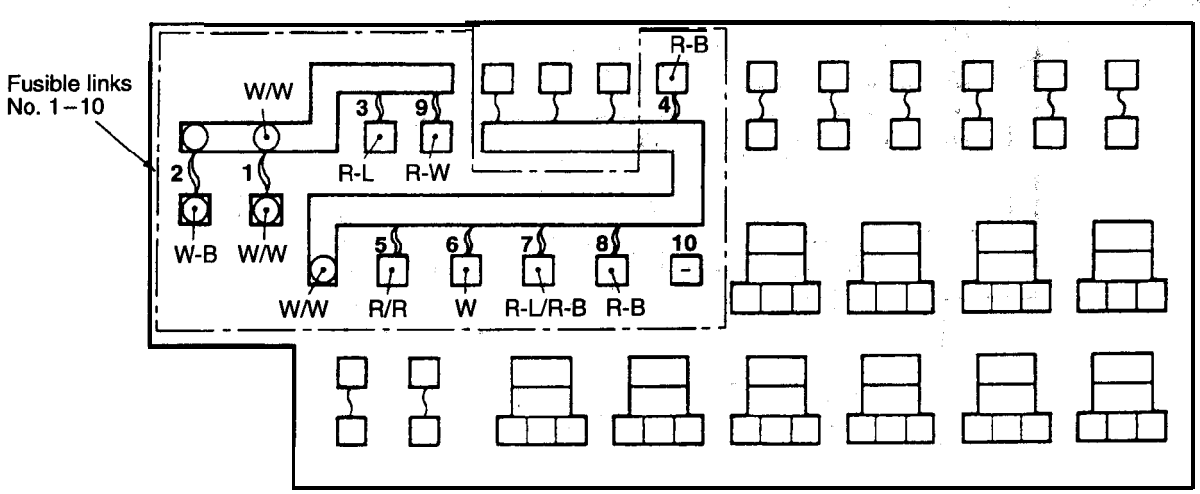

D16X1181

FUSIBLE LINK (Relay box in engine compartment) <2.4L Engine>

No.	Circuit	Housing color	Rated capacity (A)
1	Fusible links No. 2, 9 and generator	Blue	100
2	Dedicated fuses No. 8, 11 and multi-purpose fuses No. 1, 5, 6, 10, 11	Yellow	60
3	Convertible top	Pink	30
4	MFI system	Blue	20
5	Headlight, fog light, taillight and generator	Green	40
6	Multi-purpose fuse No. 17 and ignition switch	Pink	30
7	Radiator fan	Pink	30
8	ABS system	Red	50
9	Power seat and power windows	Pink	30*1
		Green	40*2
10	–	–	–

Remarks
*1: ECLIPSE
*2: ECLIPSE SPYDER

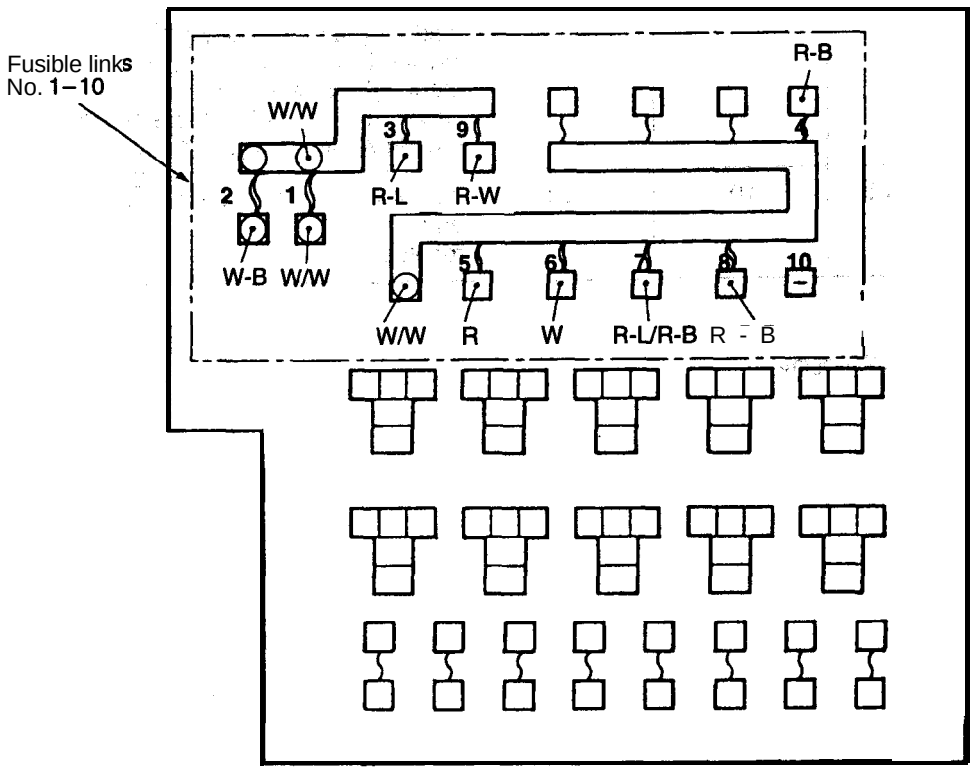

C16X1221

DEDICATED FUSE (Relay box in engine compartment)

Power supply circuit	No.	Rated capacity (A)	Housing color	Circuit
Fusible link No. 8	1	10	Red	ABS system <AWD>
Battery	2	20*1	Yellow	ABS system, auto-cruise control system and stop light
		15*2	Blue	
	3	15	Blue	Horn
	4	15	Blue	Turn signal light and hazard light
Taillight relay	5	15	Blue	Glove compartment light, license plate fight, lighting monitor buzzer, rheostat, side marker light,' taillight and illumination light
Headlight relay	6	15	Blue	Fog light
	7	10	Red	High-beam indicator light
Fusible link No. 2	6	10	Red	A/C compressor
Battery	9	20	Yellow	Condenser fan
–	10	–	–	–
Fusible link No. 2	11	10	Red	Auto-cruise-ECU (battery back up)*2, dome "light, door-ajar warning light, ELC 4-speed automatic trans-axle control module (battery backup)", engine control module (battery backup) *2, ETACS-ECU, foot light, ignition key hole illumination fight, luggage compart-ment light, motor antenna, radio, receiver, scan tool power source, theft-alarm system, vanity mirror light and universal garage door opener
gnition switch (ACC)	12	10	Red	Auto-cruise control system*2, motor antenna, radio and receiver

Remarks
- l: 2.0L Engine (Non-turbo)
- 2: 2.0L Engine (Turbo) and 2.4L Engine.

<2.0L Engine (Non-turbo)>

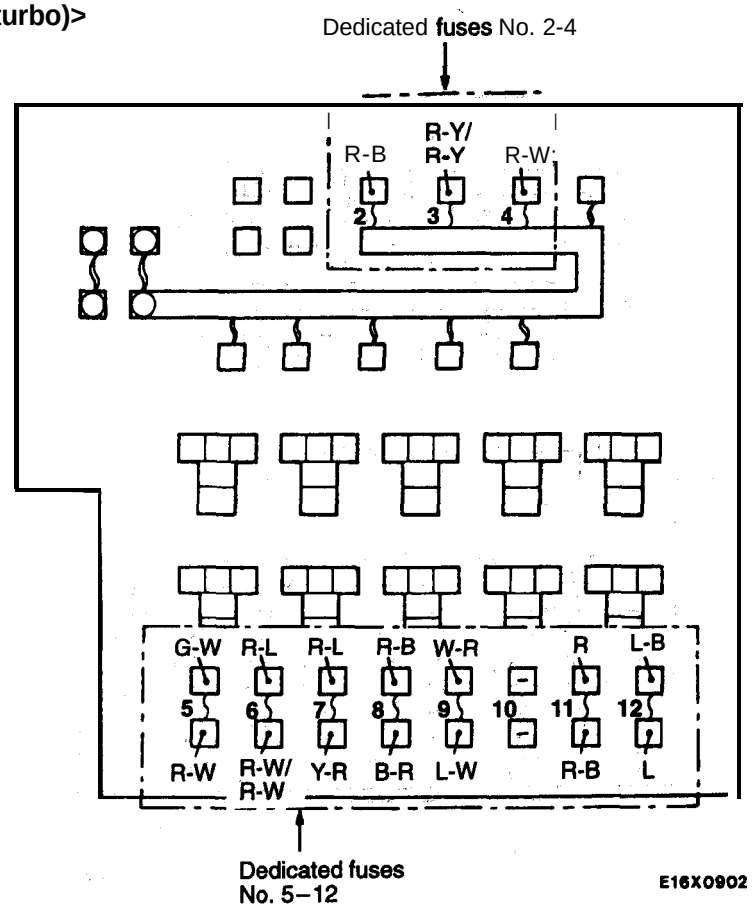

<2.0L Engine (Turbo)>

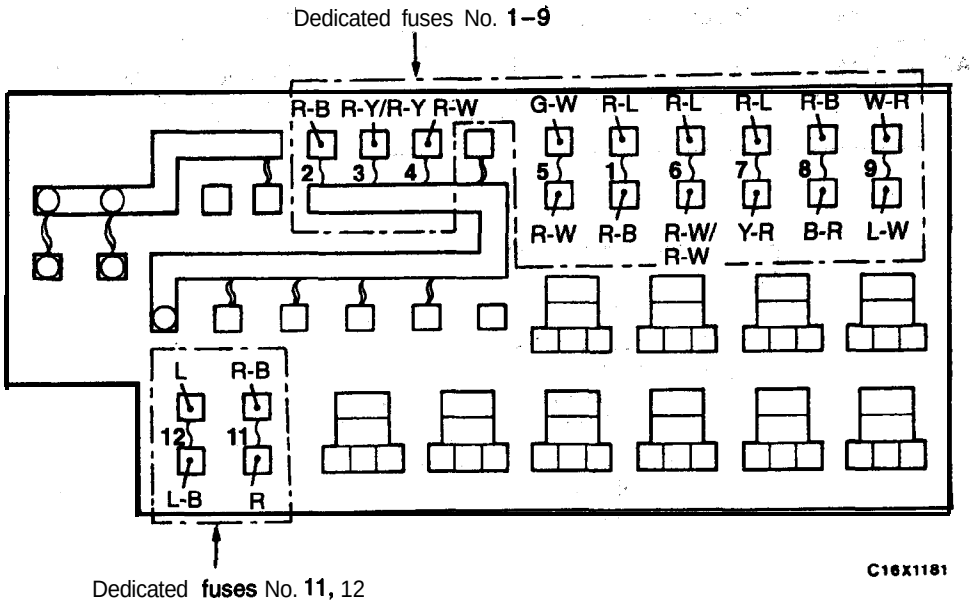

<2.4L Engine>

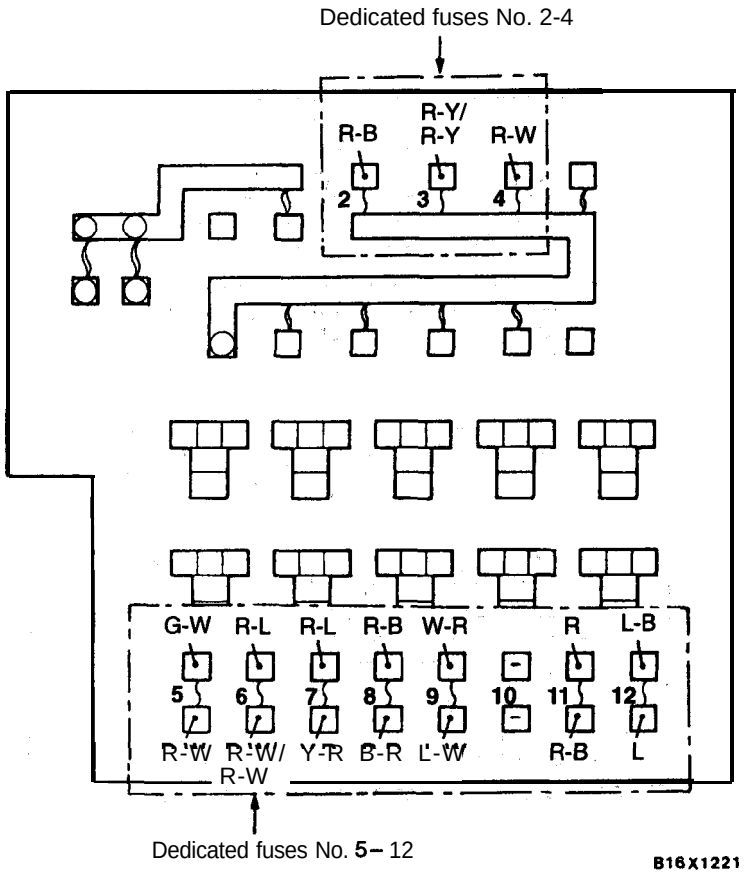

DEDICATED FUSE (Interior relay box)

Power supply	No.	Rated capacity (A)	Housing color	Circuit
Ignition switch (ACC)	13	10	Red	Remote controlled mirrors
Defogger relay	14	–		

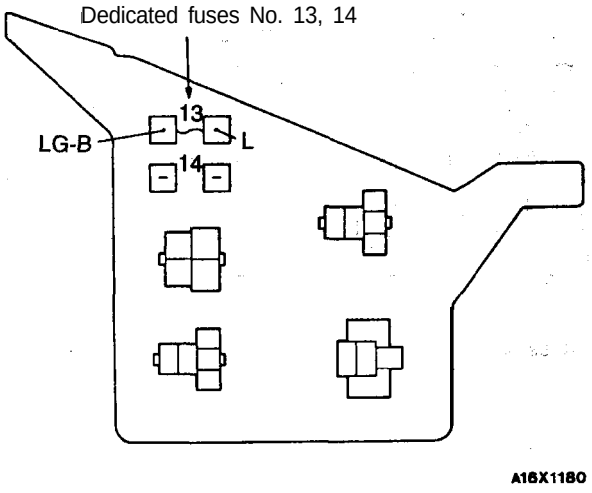

TSB Revision

MULTI-PURPOSE FUSE (In Junction block)

Power supply circuit		No.	Rated capacity (A)	Housing color	Load circuit
Battery		1	15	Blue	Amplifier
Ignition switch	IG2	2			
	IG1	3	10	Red	Back-up light, combination meter*1, EATX-ECM <A/T>*1 and SRS-ECU
		4	10	Red	Turn signal and hazard flasher unit
Battery		5	10	Red	Theft-alarm horn and theft-alarm horn relay
		6	30	Pink	Defogger and defogger switch
Ignition switch	IG2	7		–	–
	IG1	8	10	Red	Auto-cruise control main switch, auto-cruise control vacuum pump*2, auto-cruise-ECU*2, auto-cruise speed control assembly*1, combination meter, ETACS-ECU, motor antenna assembly, SRS-ECU and sunroof-ECU
	ACC	9	20	Yellow	ETACS-ECU, intermittent wiper relay, wiper and washer motor
Battery		10	10	Red	Door lock actuator and door lock power relay
		11	30	Pink	Blower motor
Ignition switch	ACC	12			
	IG2	13	10	Red	ABS-ECU <FWD>, ABS power relay <AWD>, A/C switch, automatic compressor-ECM, blower motor relay, convertible top control module and defogger relay
	ACC	14	15	Blue	Cigarette lighter
	IG2	15	10	Red	Auto-cruise-ECU*2, combination meter*2 and ELC 4-speed automatic transaxle control module*2
Battery		16			
		17	20	Yellow	Sunroof-ECU

Remarks
*1: 2.0L Engine (Non-turbo).
● 2: 2.0L Engine (Turbo) and 2.4L Engine.

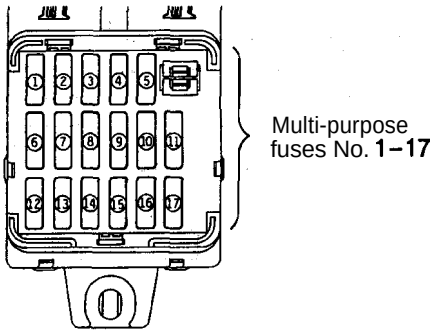

TSB Revision

CENTRALIZED RELAY (Relay box in engine compartment)

Connector No.	Name	Connector No.	Name
A-09X	Condenser fan relay (LO)	A-I 4X	Headlight relay
A-10X	Condenser fan relay (HI)	A-I 5X	Taillight relay
A-11X	Radiator fan relay (LO1)	A-16X	Fog light relay
A-12X	Radiator fan relay (LO2)*	A-I 7X	Horn relay
A-13X	Radiator fan relay (HI)	A-18X	A/C compressor clutch relay

Remark
*: 2.0L Engine (Turbo) and 2.4L Engine.

<2.0L Engine (Non-turbo)>

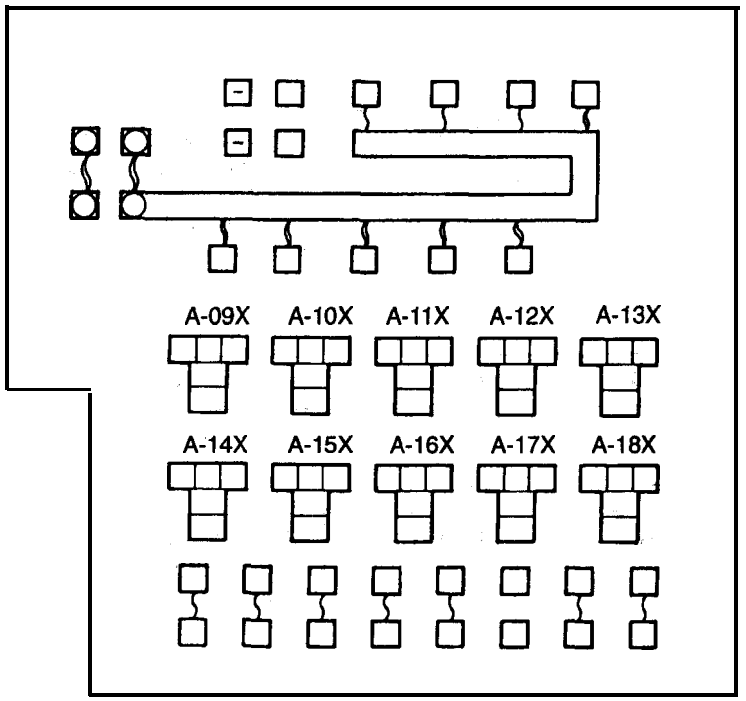

16X0902

<2.0L Engine (Turbo)>

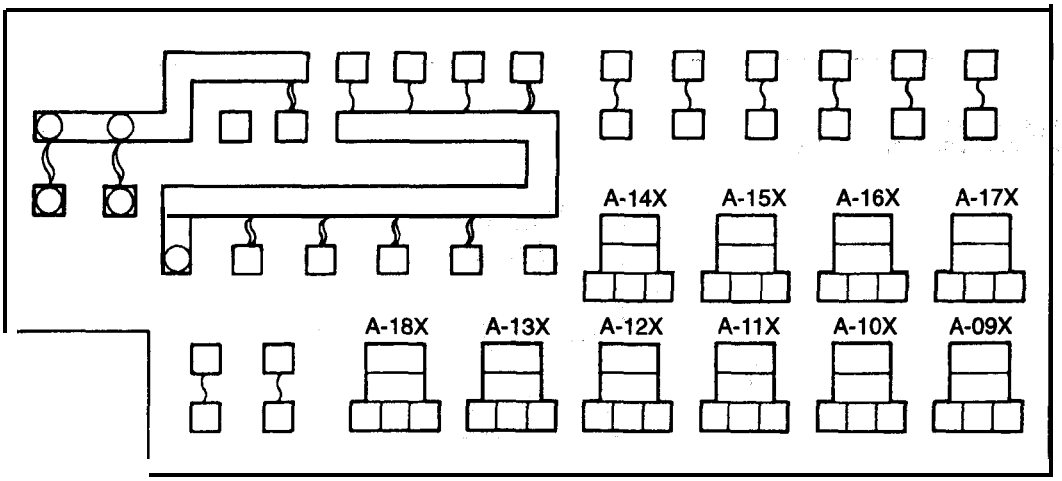

16X1181

TSB Revision

<2.4L Engine>

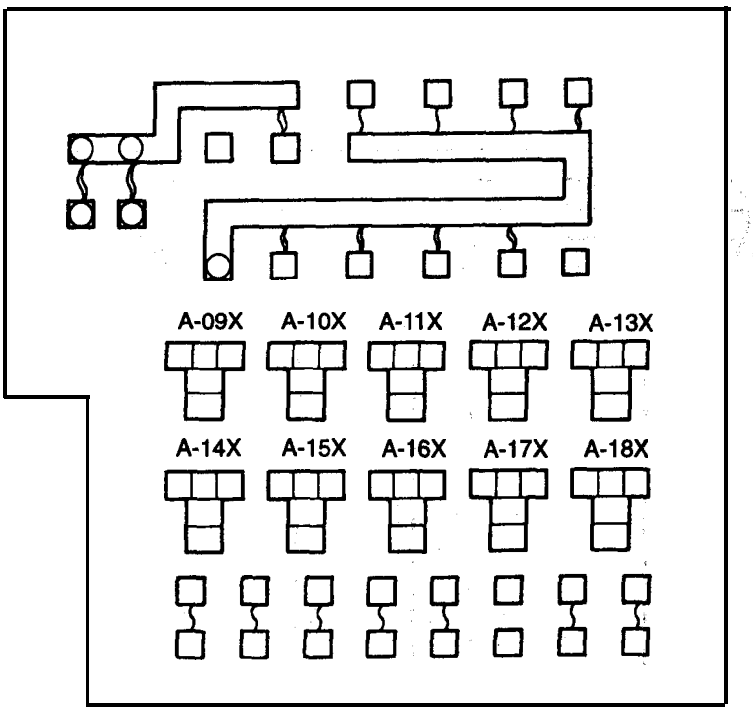

16X1221

(Interior relay box)

Connector No.	Name	Connector No.	Name
B-42X	Power window relay	B-44X	Theft-alarm starter relay <A/T>
B-43X	Theft-alarm starter relay <M/T>	B-45X	Theft-alarm horn relay

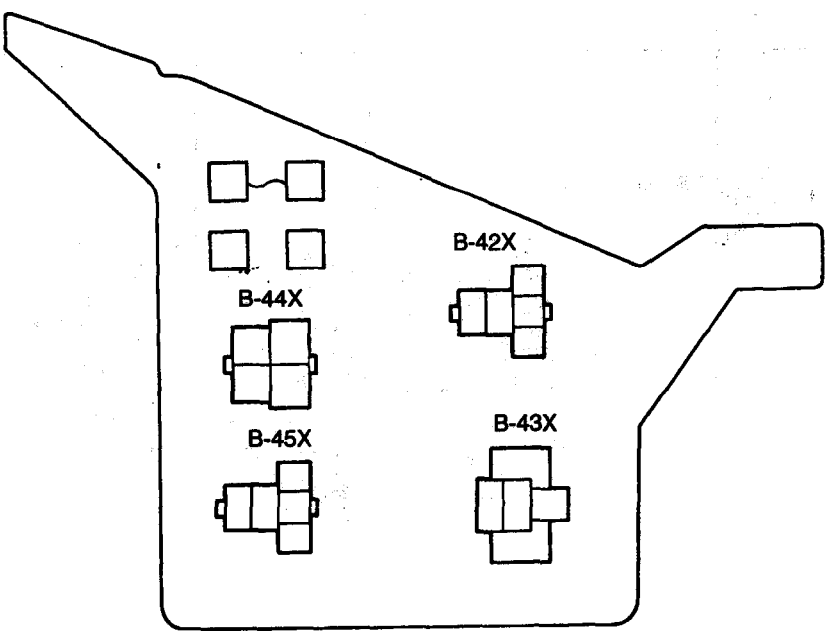

16X1180

TSB Revision

POWER DISTRIBUTION SYSTEM <2.0L Engine (Non-turbo)> 90100040319

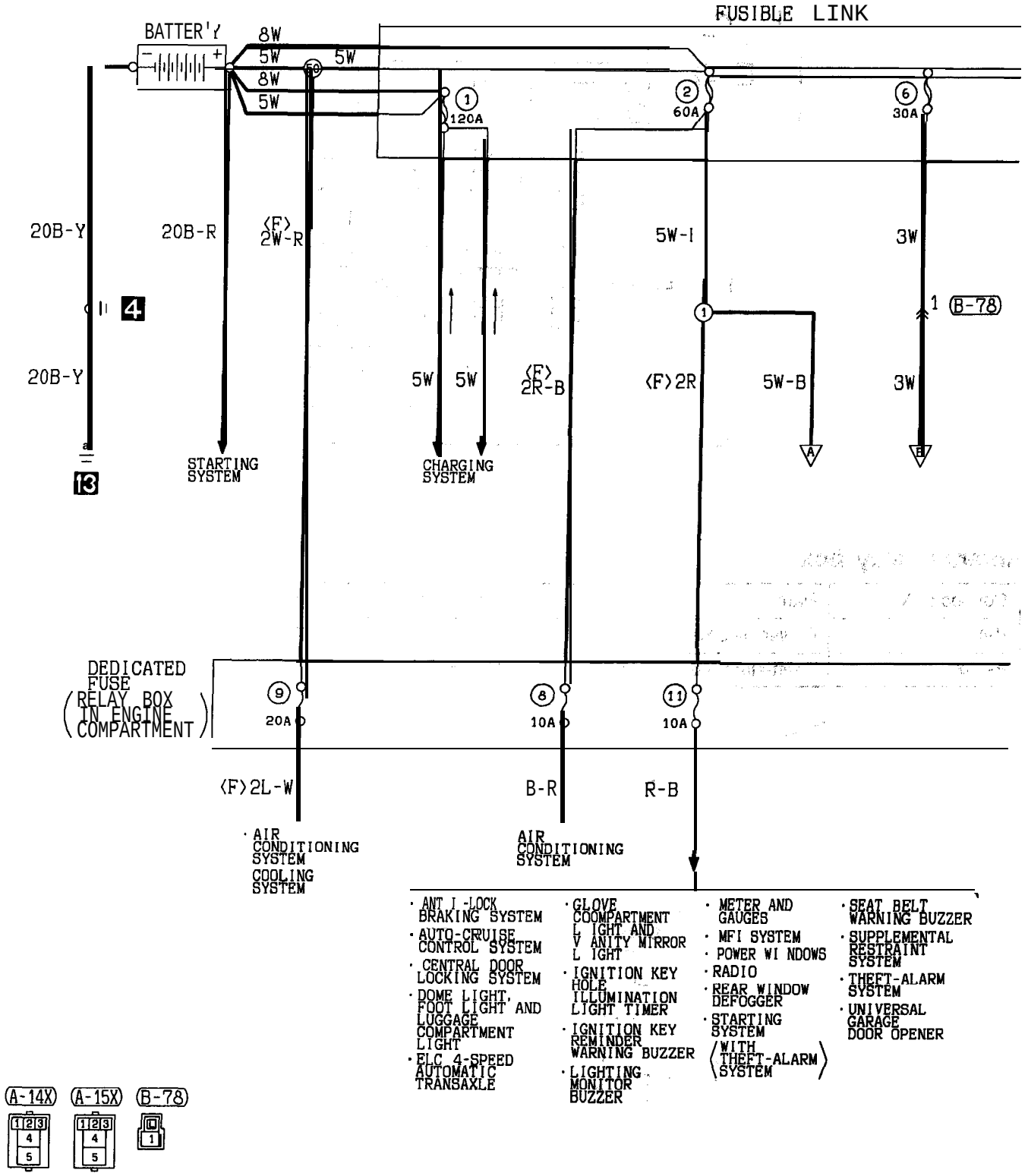

HF01M00AA

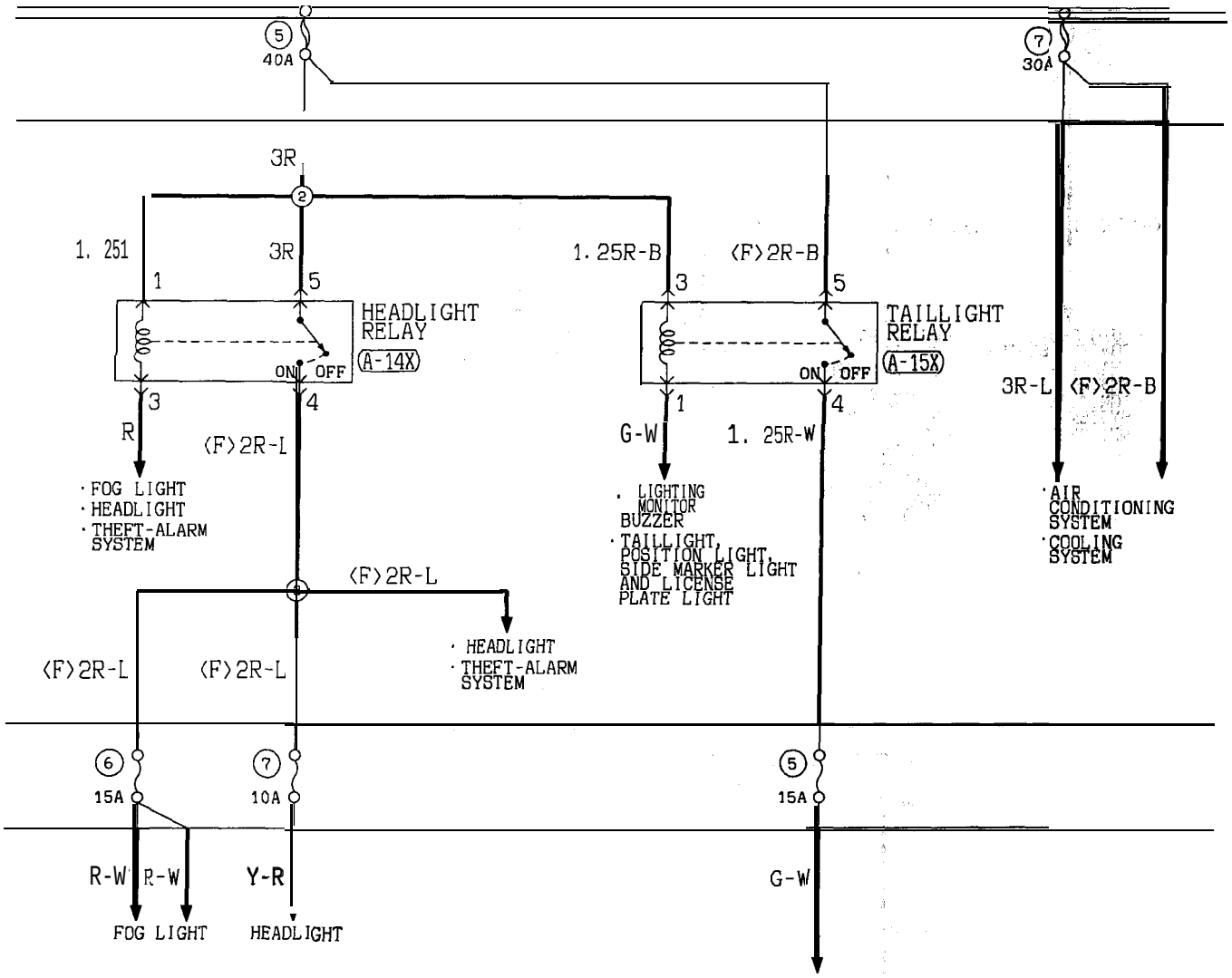

- AIR CONDITIONING SYSTEM
- AUTO-CRUISE CONTROL SYSTEM
- CIGARETTE LIGHTER
- ELC 4-SPEED AUTOMATIC TRANSAXLE
- FOG LIGHT
- GLOVE COMPARTMENT LIGHT AND VANITY MIRROR LIGHT
- LIGHTING MONITOR BUZZER
- METER AND GAUGES
- RADIO
- REAR WINDOW DEFOGGER
- REAR WIPER AND WASHER
- REMOTE CONTROLLED MIRROR
- TAILLIGHT, POSITION LIGHT, SIDE MARKER LIGHT AND LICENSE PLATE LIGHT
- TURN-SIGNAL LIGHT AND HAZARD LIGHT

Wire color code

B :Black	LG:Light green	G :Green	L :Blue	W :White	Y :Yellow	SB:Sky blue
BR:Brown	O :Orange	GR:Gray	R :Red	P :Pink	V :Violet	

HF01M00AB

TSB Revision

POWER DISTRIBUTION SYSTEM <2.0L Engine (Non-turbo)> (CONTINUED)

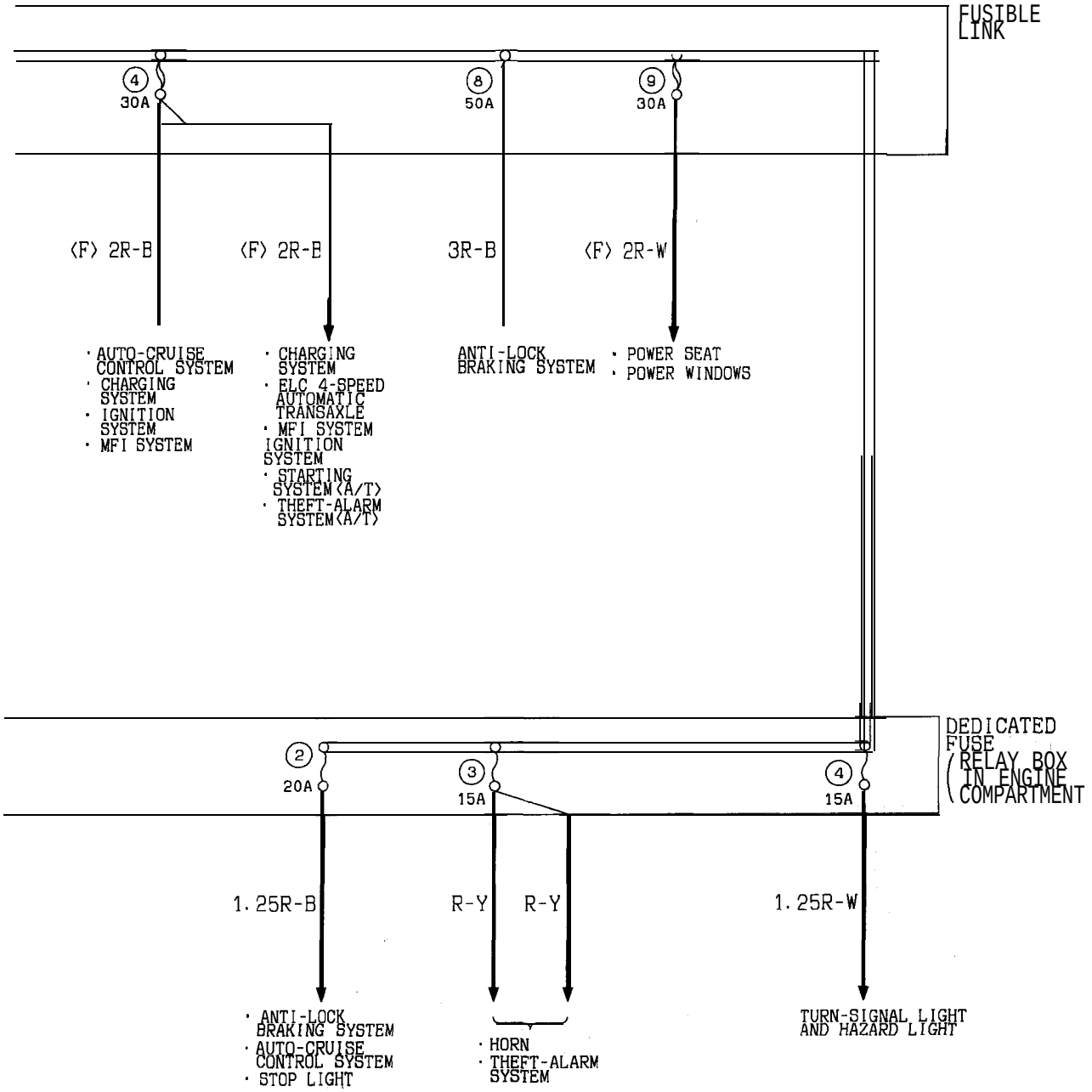

B-74

HF01M00BA

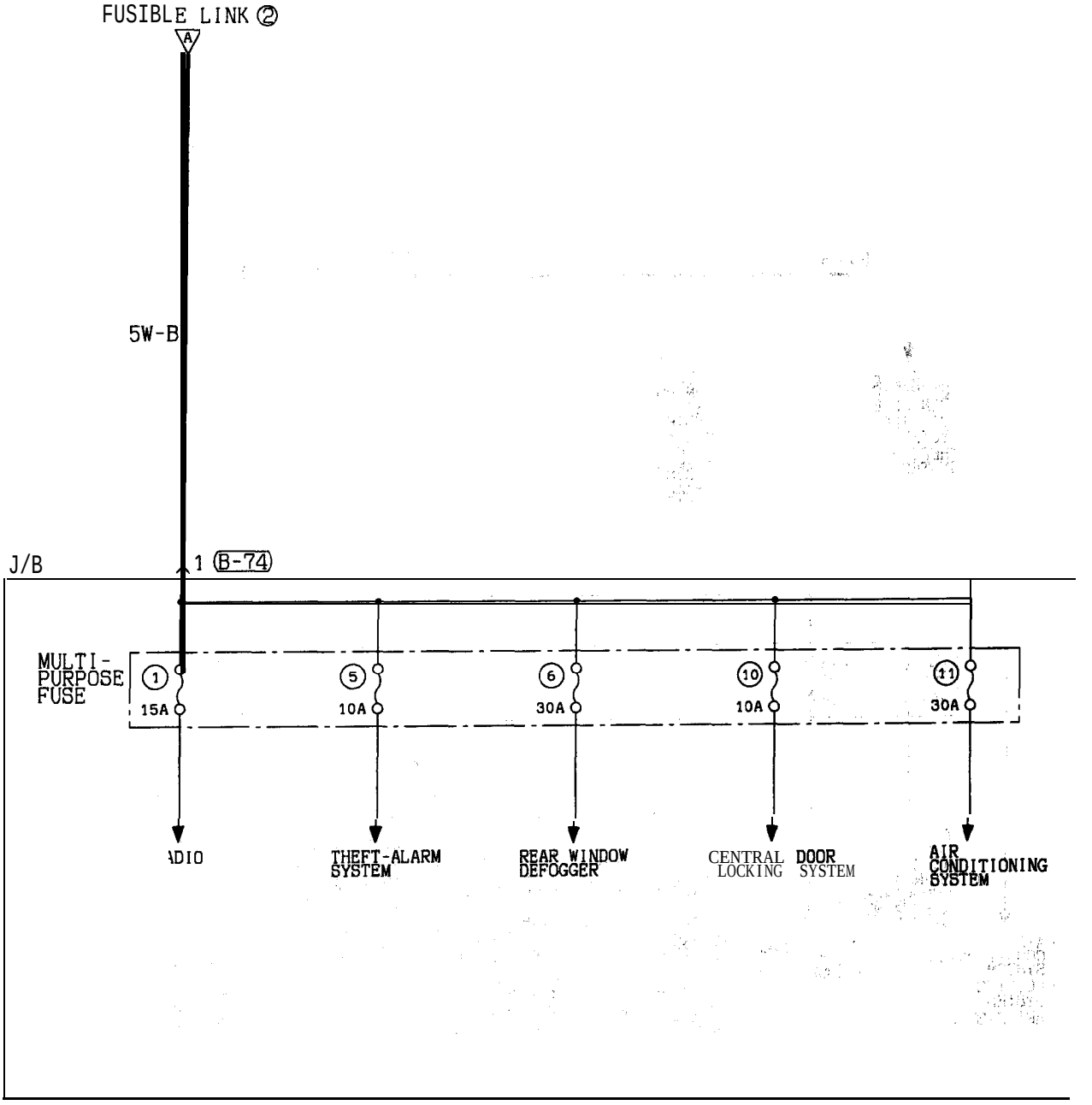

Wire color code.

B :Black	LG:Light green	G :Green	L :Blue	W :White	Y :Yellow	SB:Sky blue
BR:Brown	O :Orange	GR:Gray	R :Red	P :Pink	V :Violet	

HF01M00BB

TSB Revision

POWER DISTRIBUTION SYSTEM <2.0L Engine (Non-turbo)> (CONTINUED)

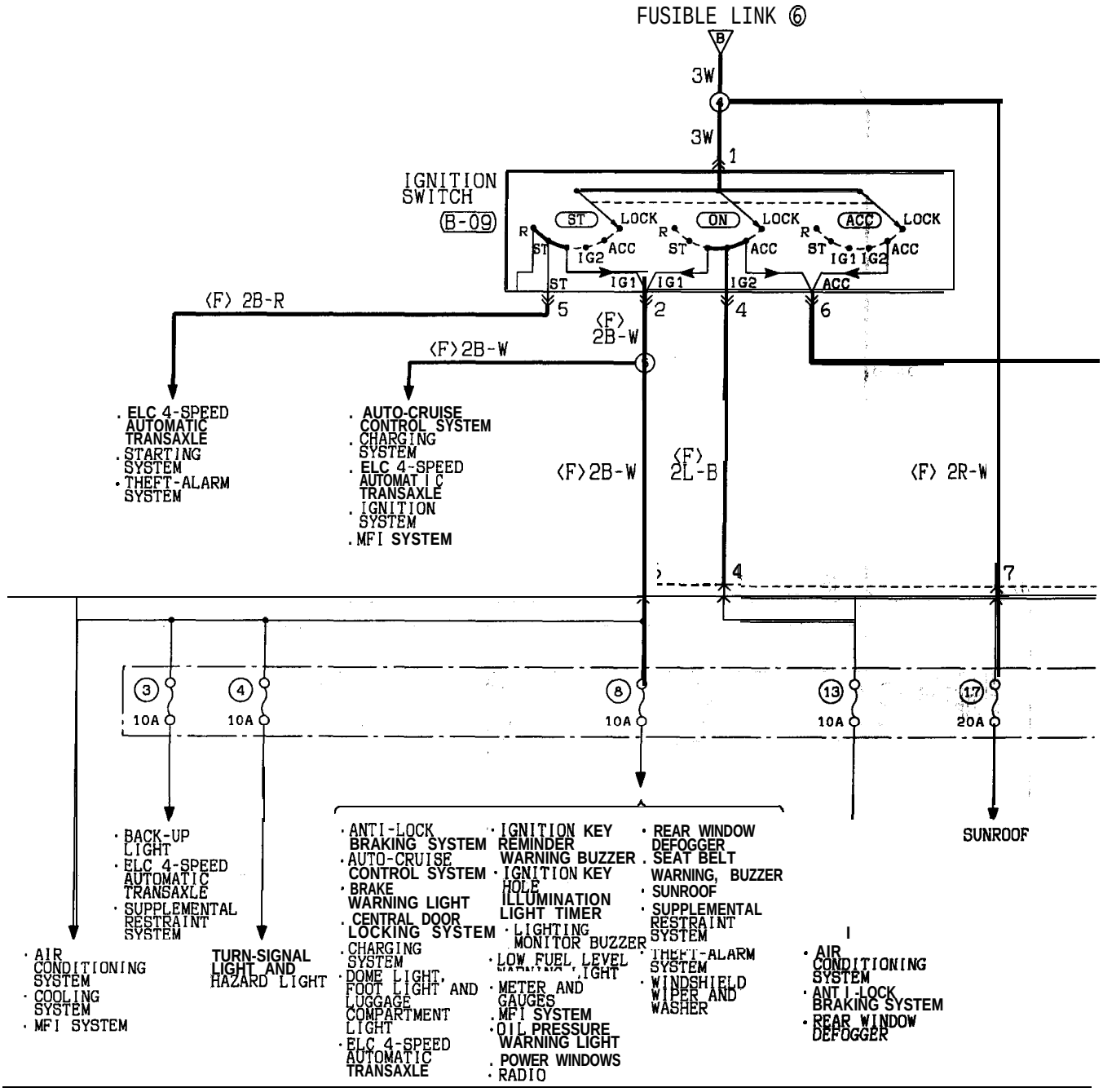

Remark
The above circuit diagram shows the current flow at the ignition key position "ACC", "ON" and "ST" combined.
Be sure trace the appropriate circuit depending on the ignition key position.

B-09

B-49

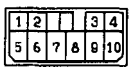

B-75

HF01M00CA

TSB Revision

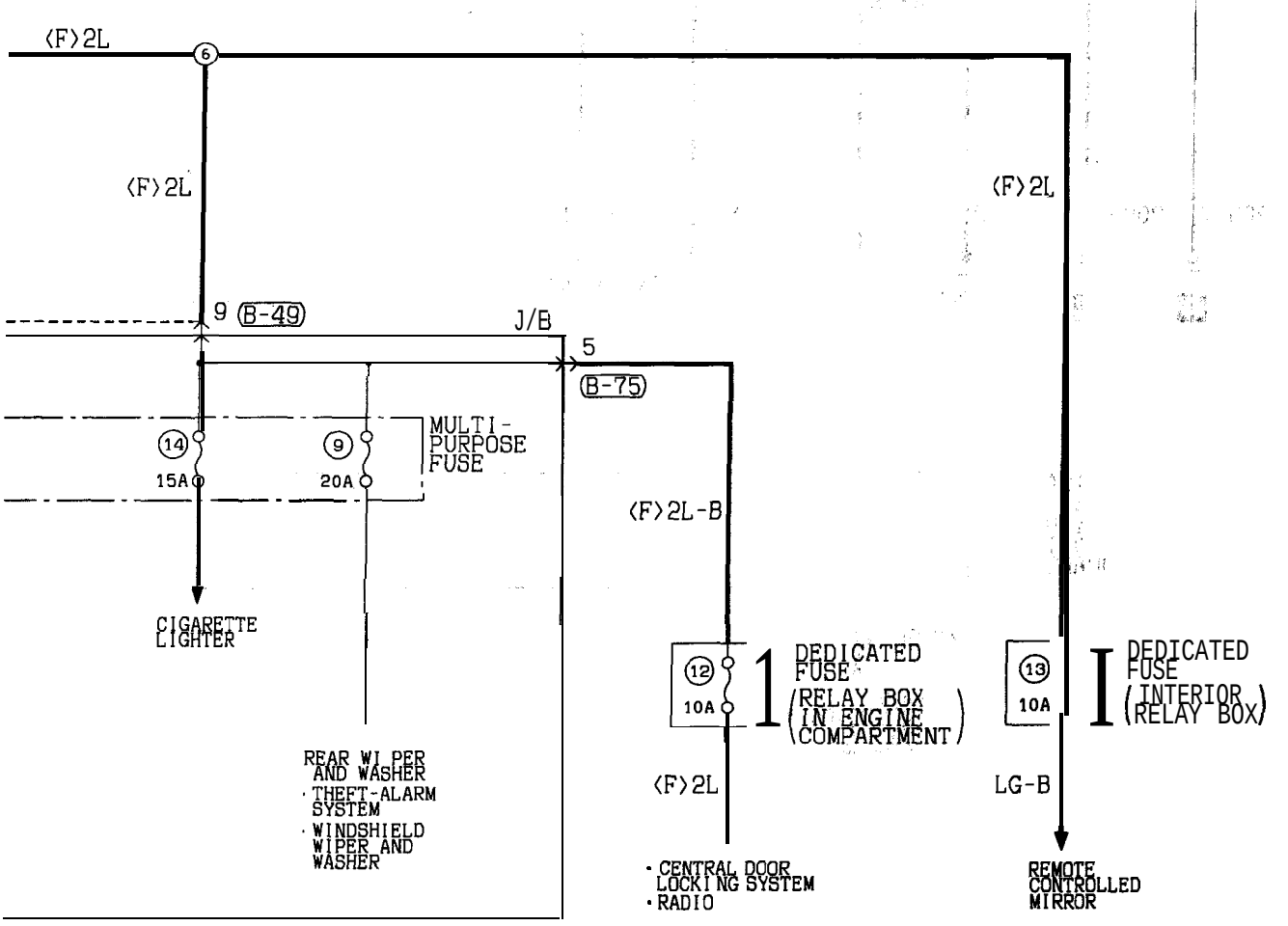

Wire color code
B :Black LG:Light green G :Green L :Blue W :White Y :Yellow SB:Sky blue
BR:Brown O :Orange GR:Gray R :Red P :Pink V :Violet

HF01M00CB

POWER DISTRIBUTION SYSTEM <2.0L Engine (Turbo) and 2.4L Engine>

80100040326

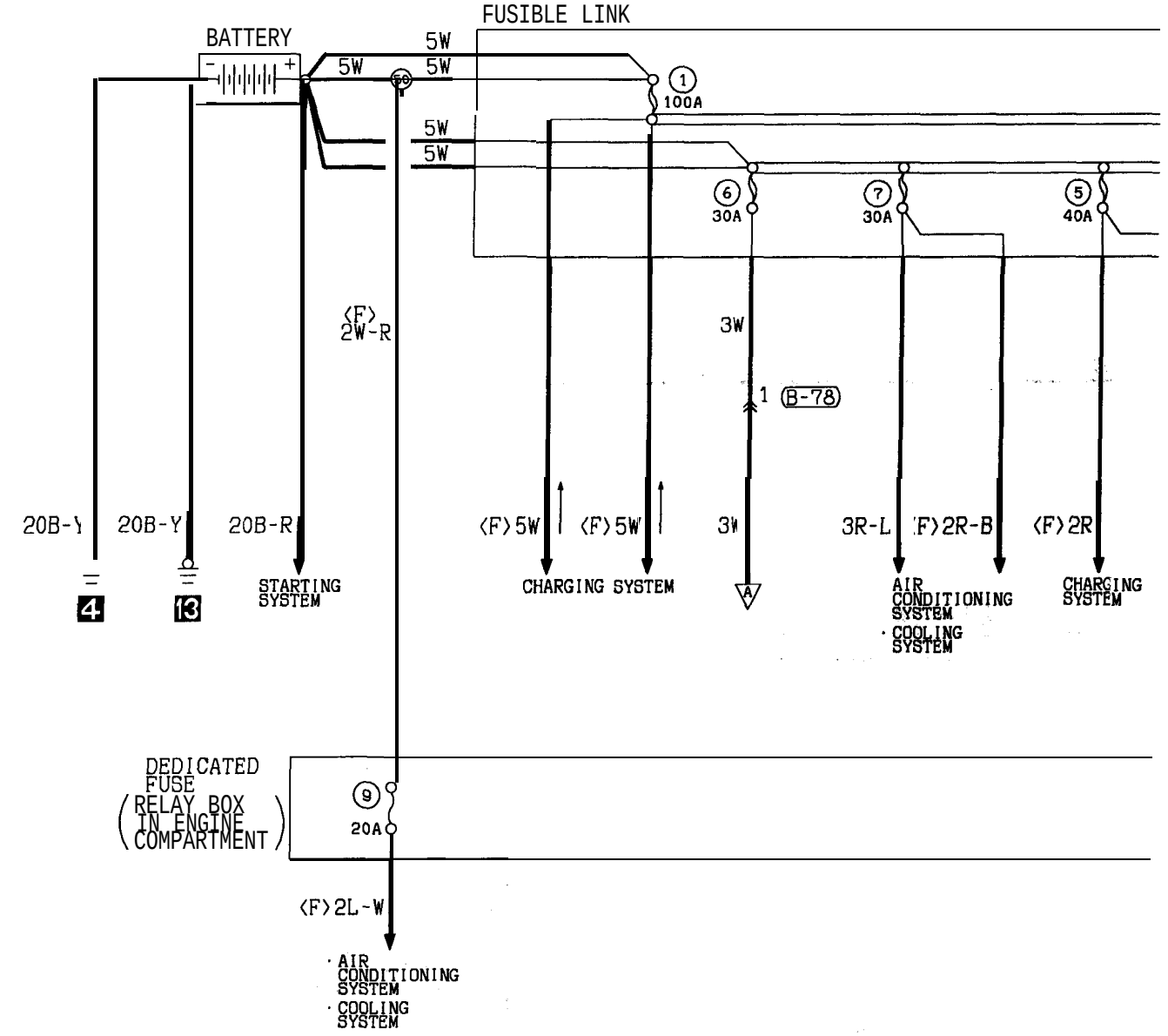

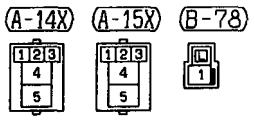

HF01M01AA

TSB Revision

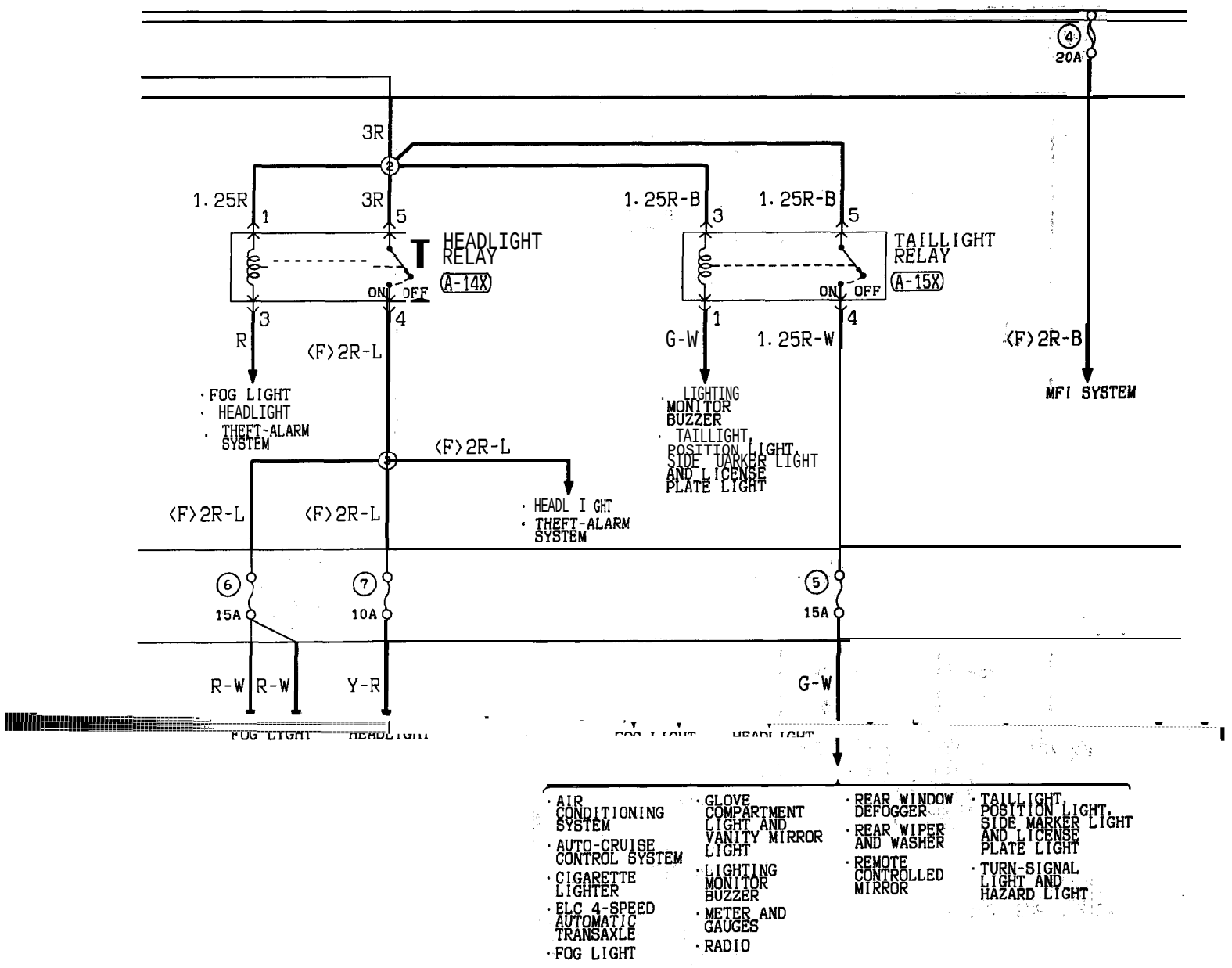

· AIR CONDITIONING SYSTEM
· AUTO-CRUISE CONTROL SYSTEM
· CIGARETTE LIGHTER
· ELC 4-SPEED AUTOMATIC TRANSAXLE
· FOG LIGHT
· GLOVE COMPARTMENT LIGHT AND VANITY MIRROR LIGHT
· LIGHTING MONITOR BUZZER
· METER AND GAUGES
· RADIO
· REAR WINDOW DEFOGGER
· REAR WIPER AND WASHER
· REMOTE CONTROLLED MIRROR
· TAILLIGHT, POSITION LIGHT, SIDE MARKER LIGHT AND LICENSE PLATE LIGHT
· TURN-SIGNAL LIGHT AND HAZARD LIGHT

Wire color code.
B :Black LG:Light green G :Green L :Blue W :White Y :Yellow SB:Sky blue
BR:Brown O :Orange GR:Gray R :Red P :Pink V :Violet

HF01M01AB

POWER DISTRIBUTION SYSTEM <2.0L Engine (Turbo) and 2.4L Engine> (CONTINUED)

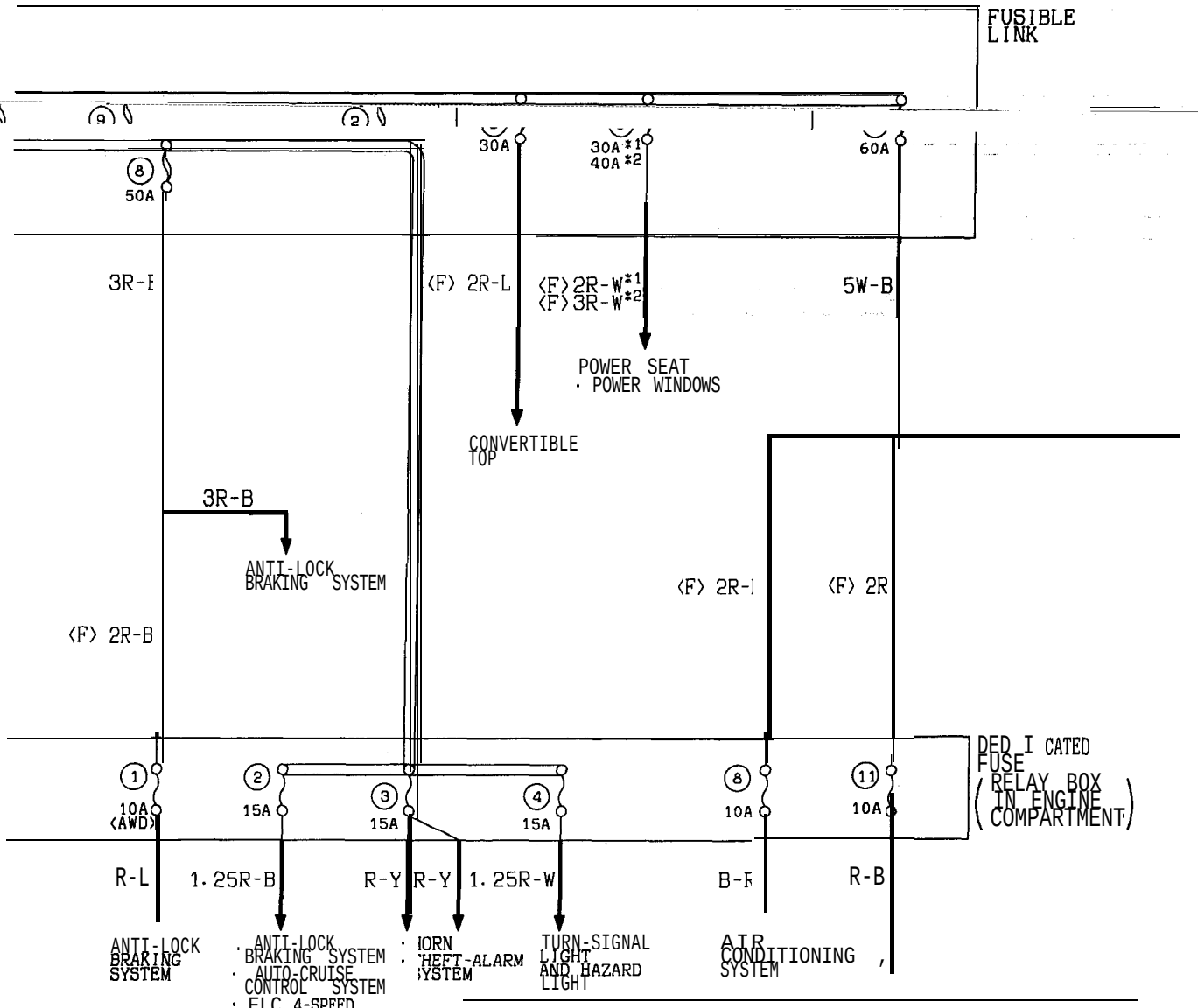

Remarks
*1:ECLIPSE
*2:ECLIPSE SPYDER

· ANTI-LOCK BRAKING SYSTEM
*AUTO-CRUISE CONTROL SYSTEM
· CENTRAL DOOR LOCKING SYSTEM
· CONVERTIBLE TOP
· DOME LIGHT, FOOT LIGHT AND LUGGAGE COMPARTMENT LIGHT
· ELC 4-SPEED AUTOMATIC TRANSAXLE

· GLOVE COMPARTMENT LIGHT AND VANITY MIRROR LIGHT
· IGNITION KEY HOLE ILLUMINATION LIGHT TIMER
*IGNITION KEY REMINDER WARNING BUZZER

· LIGHTING MONITOR BUZZER
· METER AND GAUGES
· MFI SYSTEM
· POWER WINDOWS
· RADIO
· REAR WINDOW DEFOGGER

· STARTING SYSTEM (WITH THEFT-ALARM SYSTEM)
· SEAT BELT WARNING BUZZER
· SUPPLEMENTAL RESTRAINT SYSTEM
· THEFT-ALARM SYSTEM
· UNIVERSAL GARGE DOOR OPENER

B-74

HF01M01BA

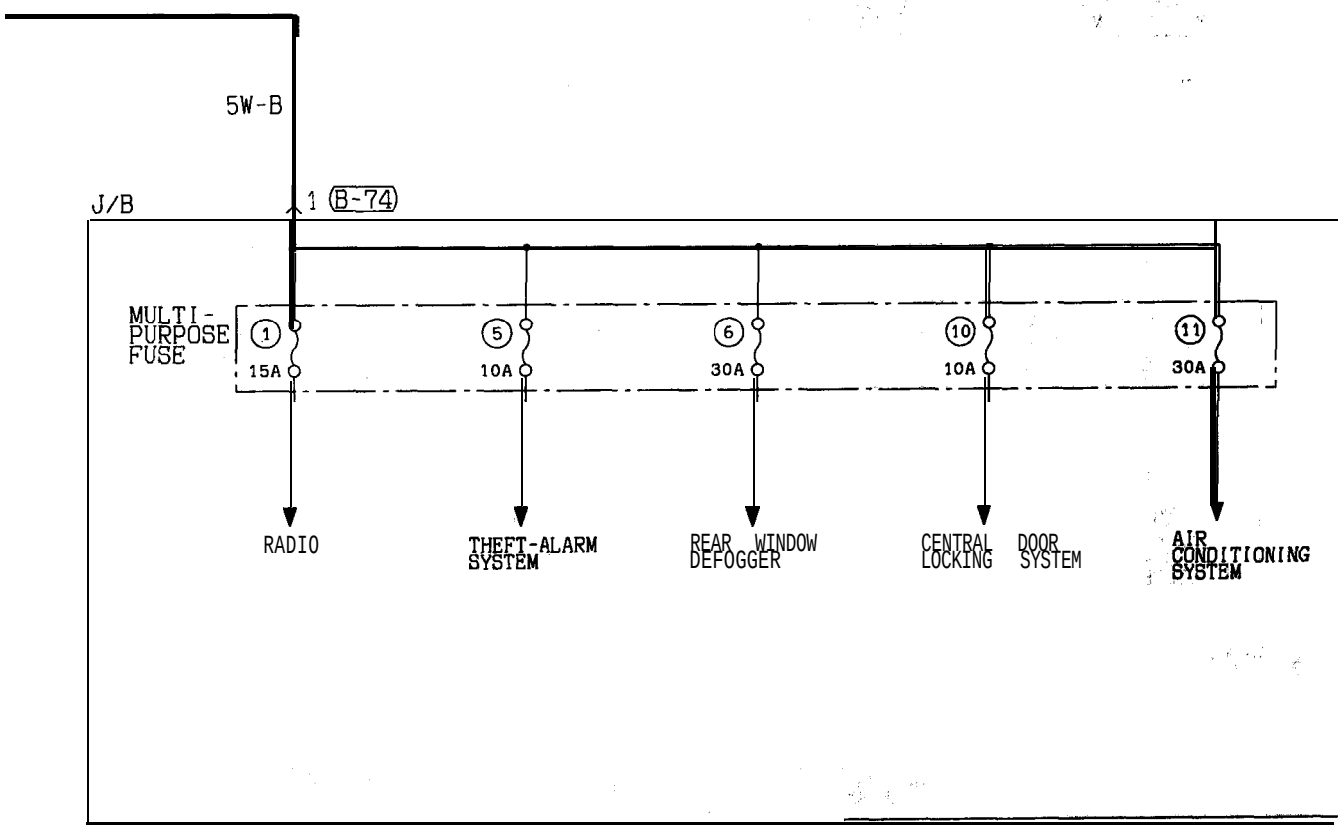

Wire color code

B :Black	LG:Light green	G :Green	L :Blue	W :White	Y :Yellow	SB:Sky blue
BR:Brown	O :Orange	GR:Gray	R :Red	P :Pink	V :Violet	

HF01M01BB

TSB Revision

POWER DISTRIBUTION SYSTEM <2.0L Engine (Turbo) and 2.4L Engine> (CONTINUED)

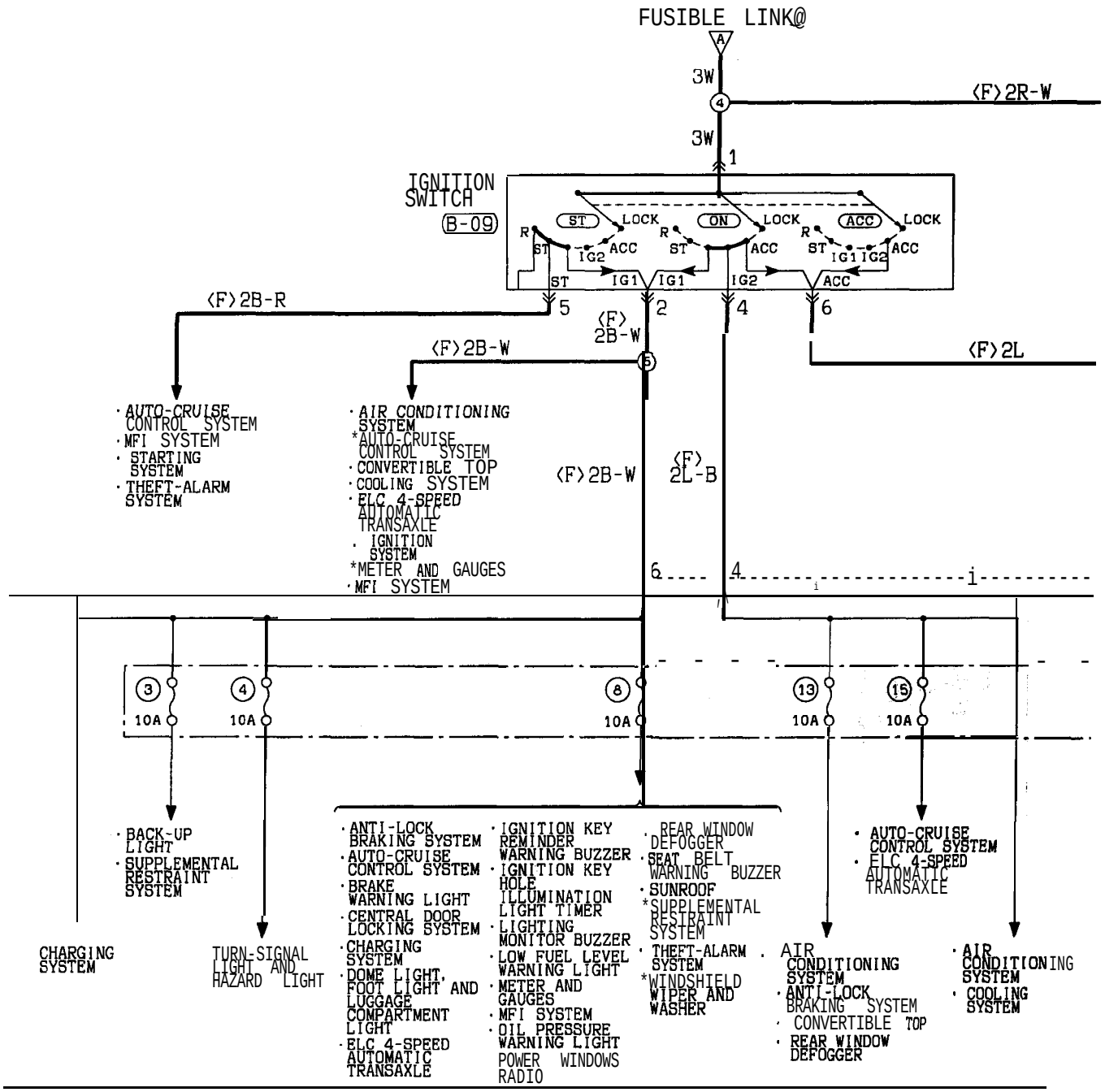

Remark
The above circuit diagram shows the current flow at the ignition key position "ACC", "ON" and "ST" combined.
Be sure trace the appropriate circuit depending on the ignition key position.

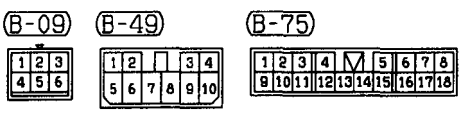

HF01M01CA

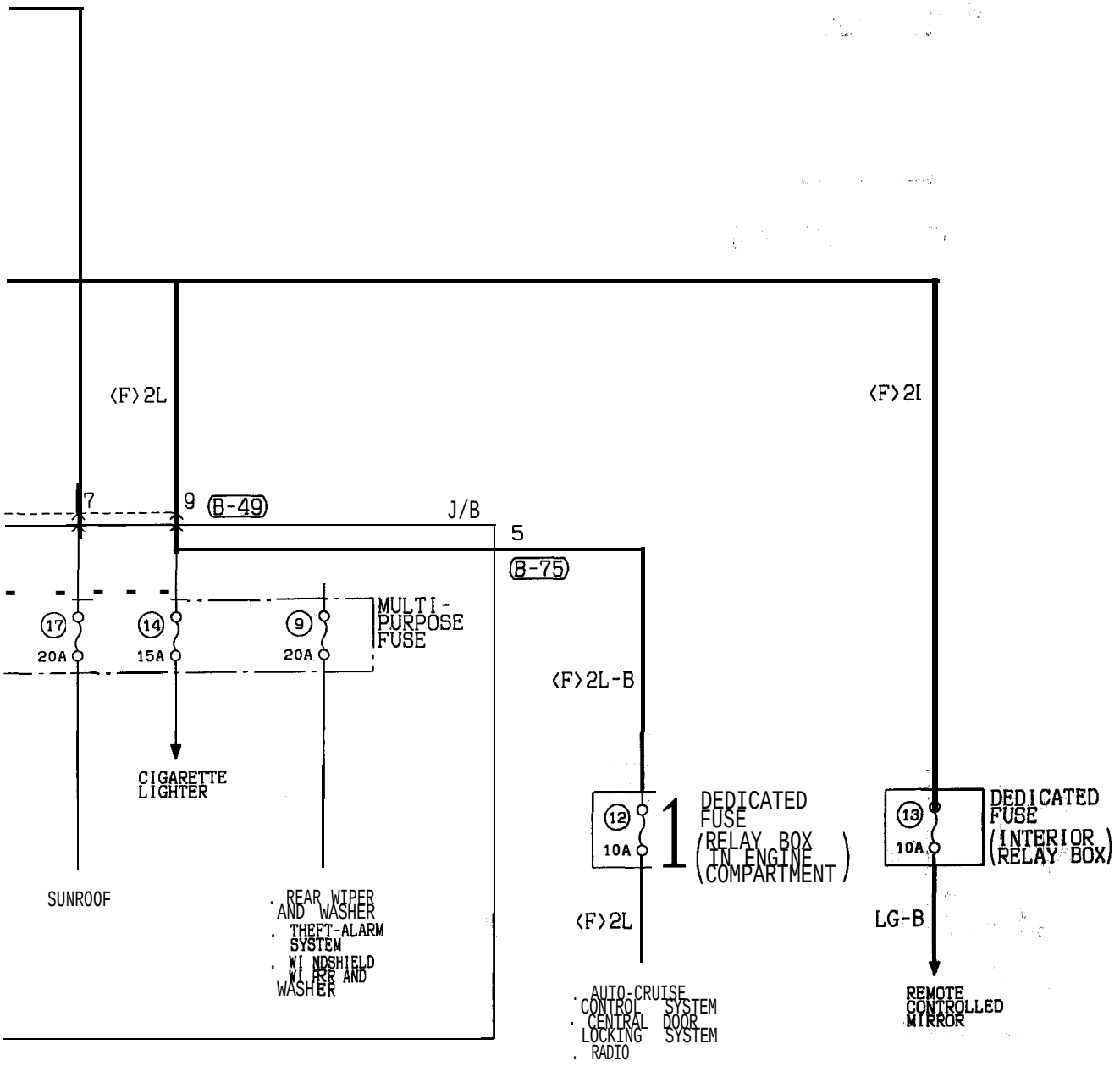

Wire color code
B :Black LG:Light green G :Green L :Blue W :White Y :Yellow SB:Sky blue
BR:Brown O :Orange GR:Gray R :Red P :Pink V :Violet

HF01M01CB

TSB Revision

STARTING SYSTEM <2.0L Engine (Non-turbo)>

90100050404

<Vehicles without theft-alarm system>

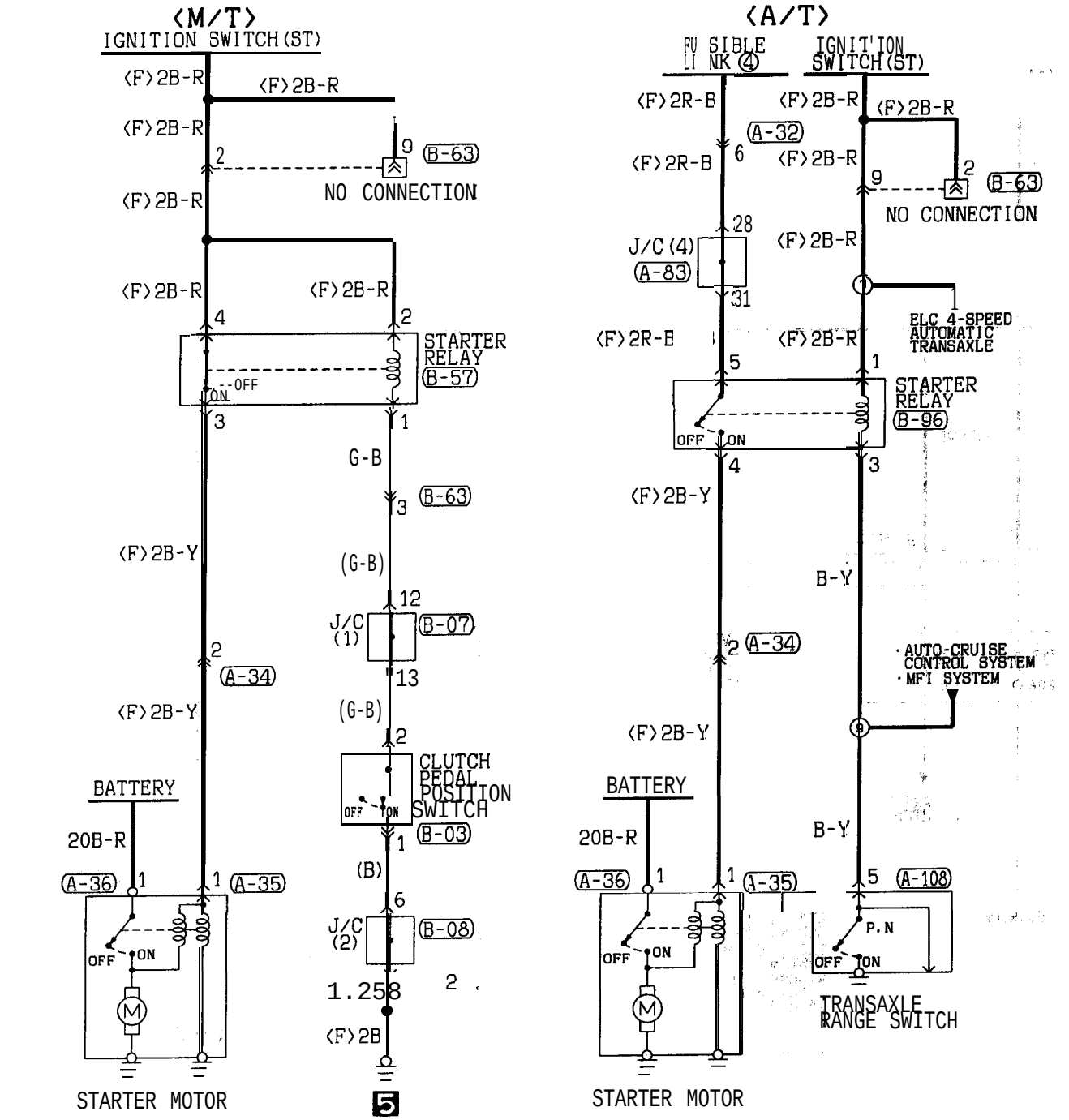

STARTING SYSTEM <2.0L Engine (Non-turbo)>

90100050411

<M/T (Vehicles with theft-alarm, system)>

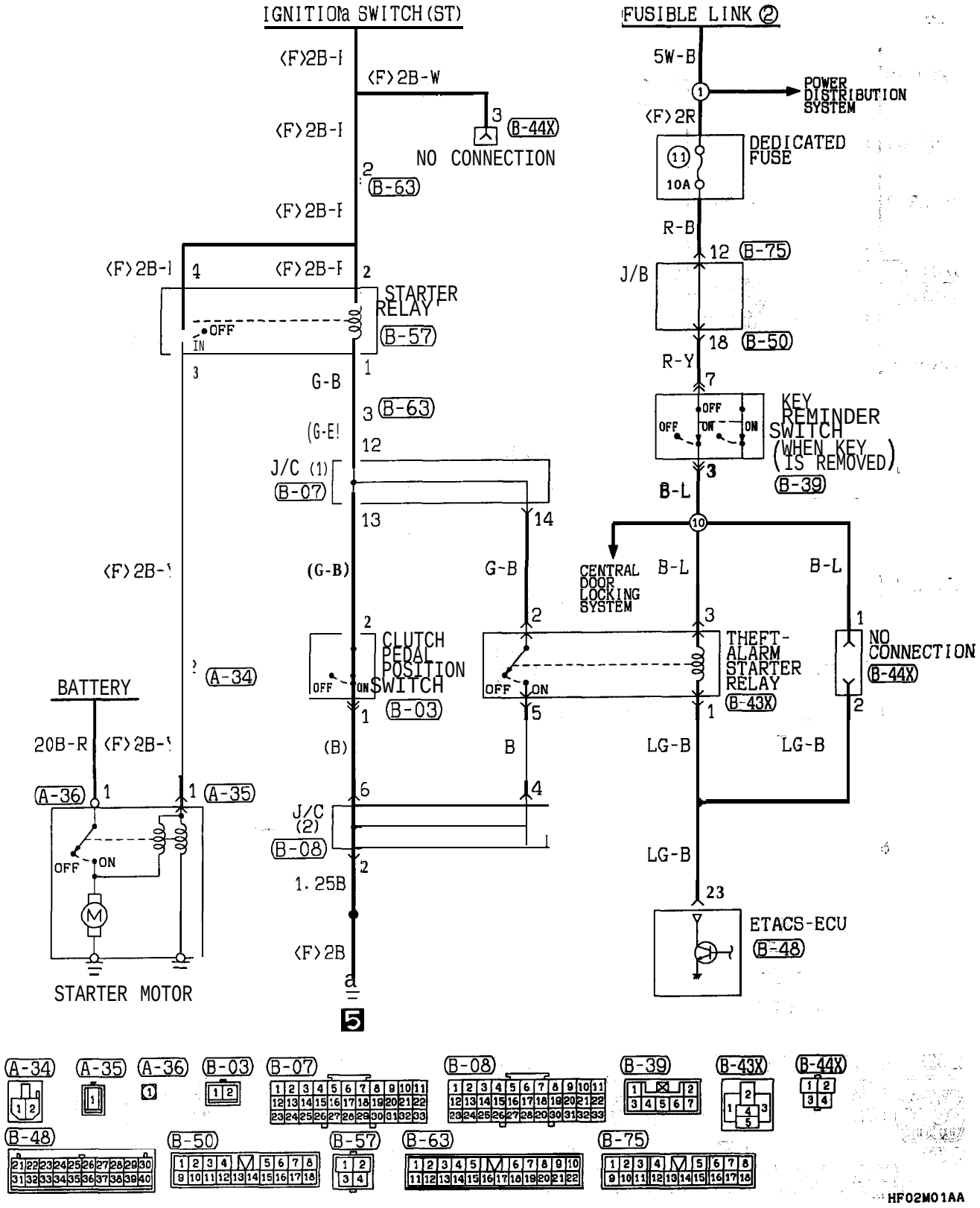

TSB Revision

STARTING SYSTEM <2.0L Engine (Non-turbo)>

90100050428

<A/T (Vehicles with theft-alarm system)>

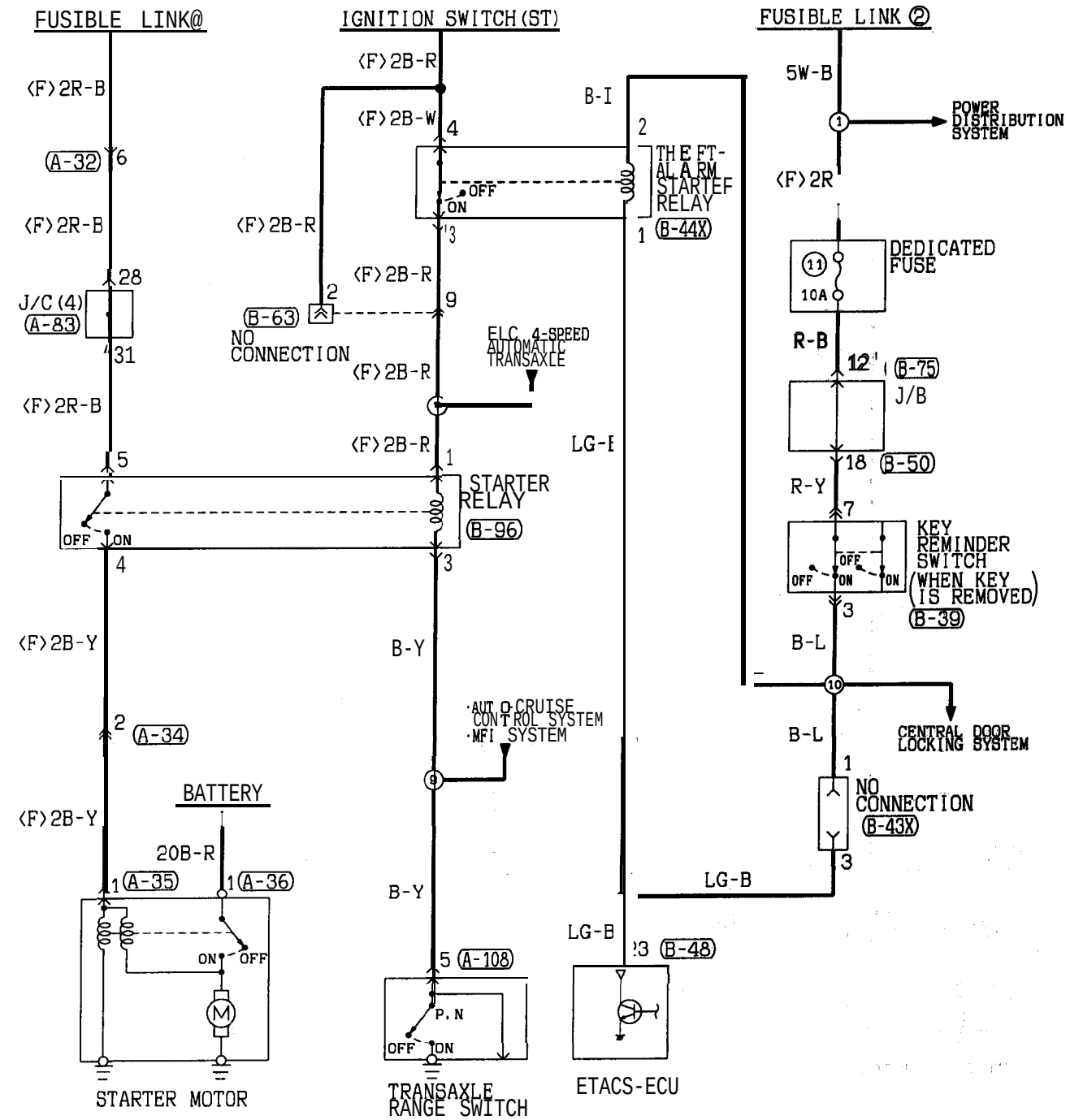

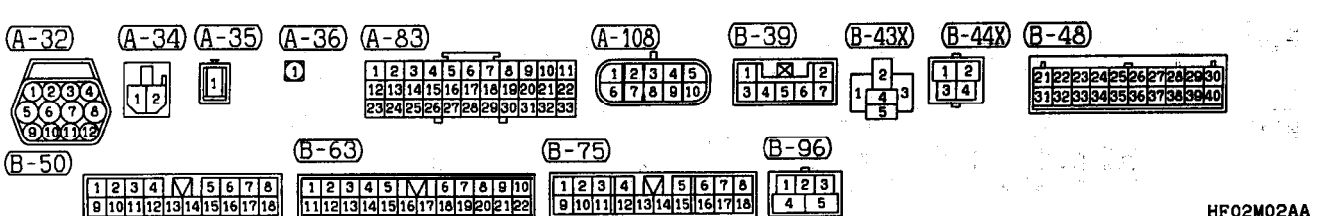

HF02M02AA

TSB Revision

STARTING SYSTEM <2.0L Engine (Turbo) and 2.4L Engine>

90100050435

<Vehicles without theft-alarm system>

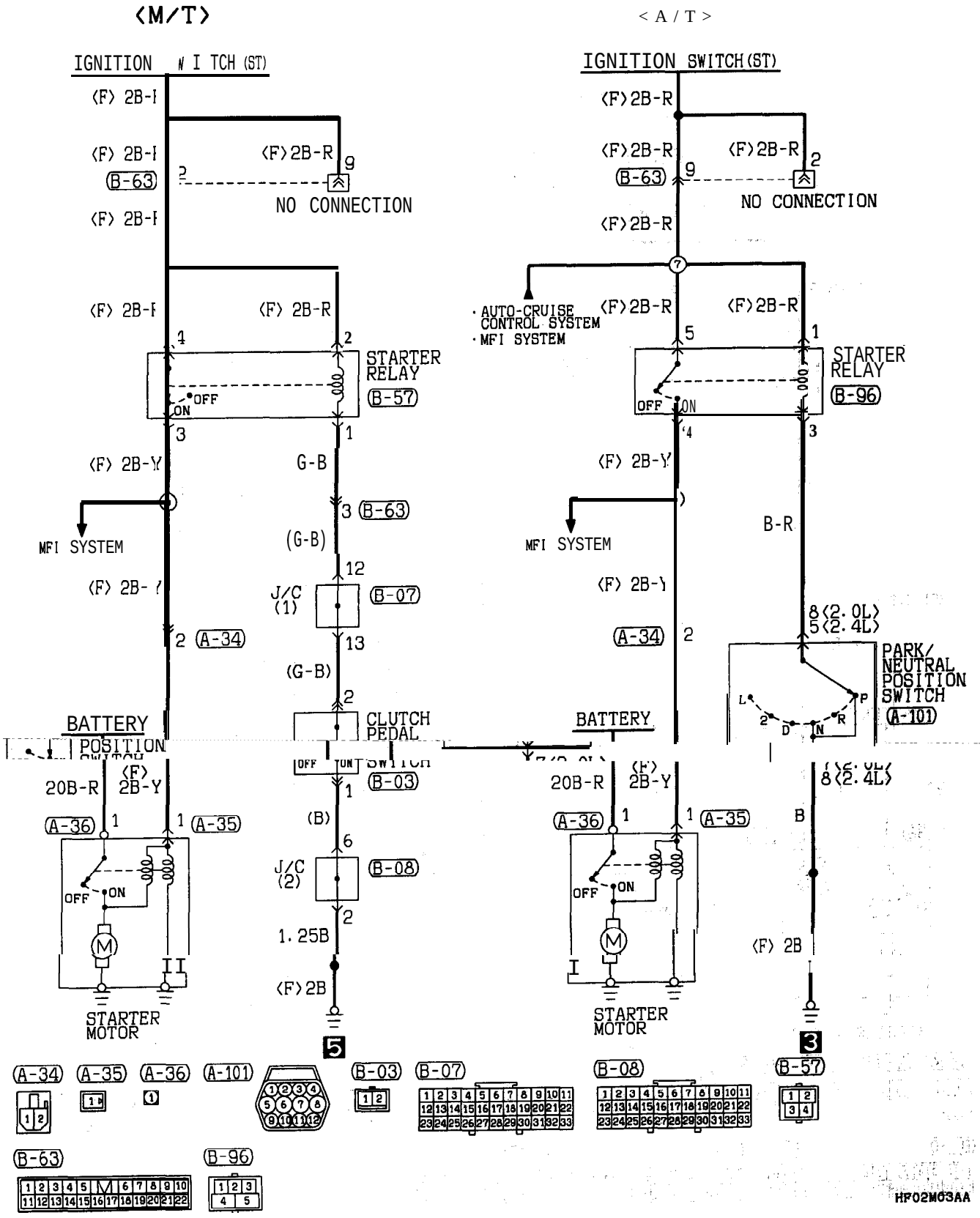

STARTING SYSTEM <2.0L Engine (Turbo) and 2.4L Engine> 90100050442

<M/T (Vehicles with theft-alarm system)>

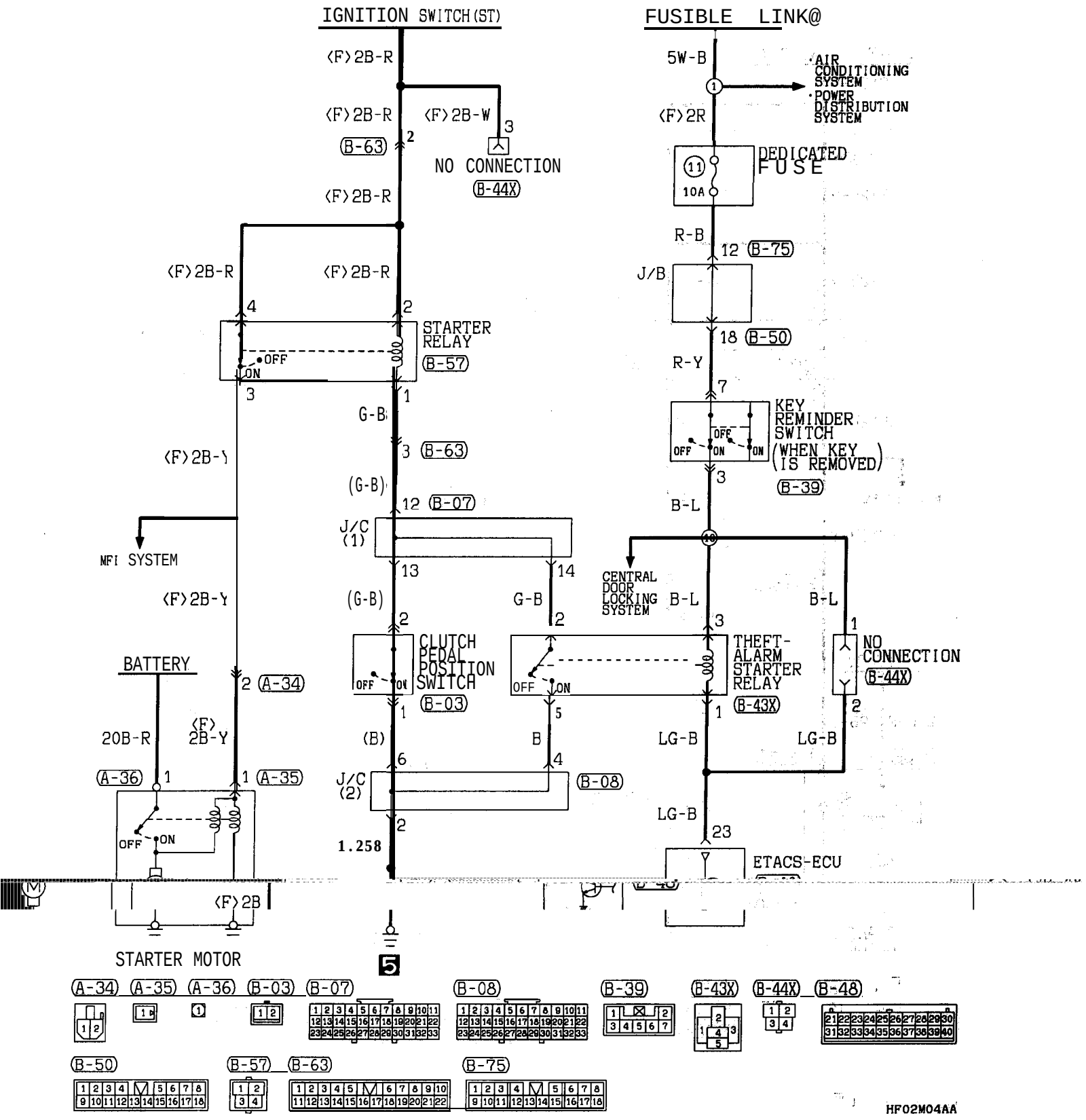

TSB Revision

STARTING SYSTEM <2.0L Engine (Turbo) and 2.4L Engine> 90100050459

<A/T (Vehicles with theft-alarm system)>

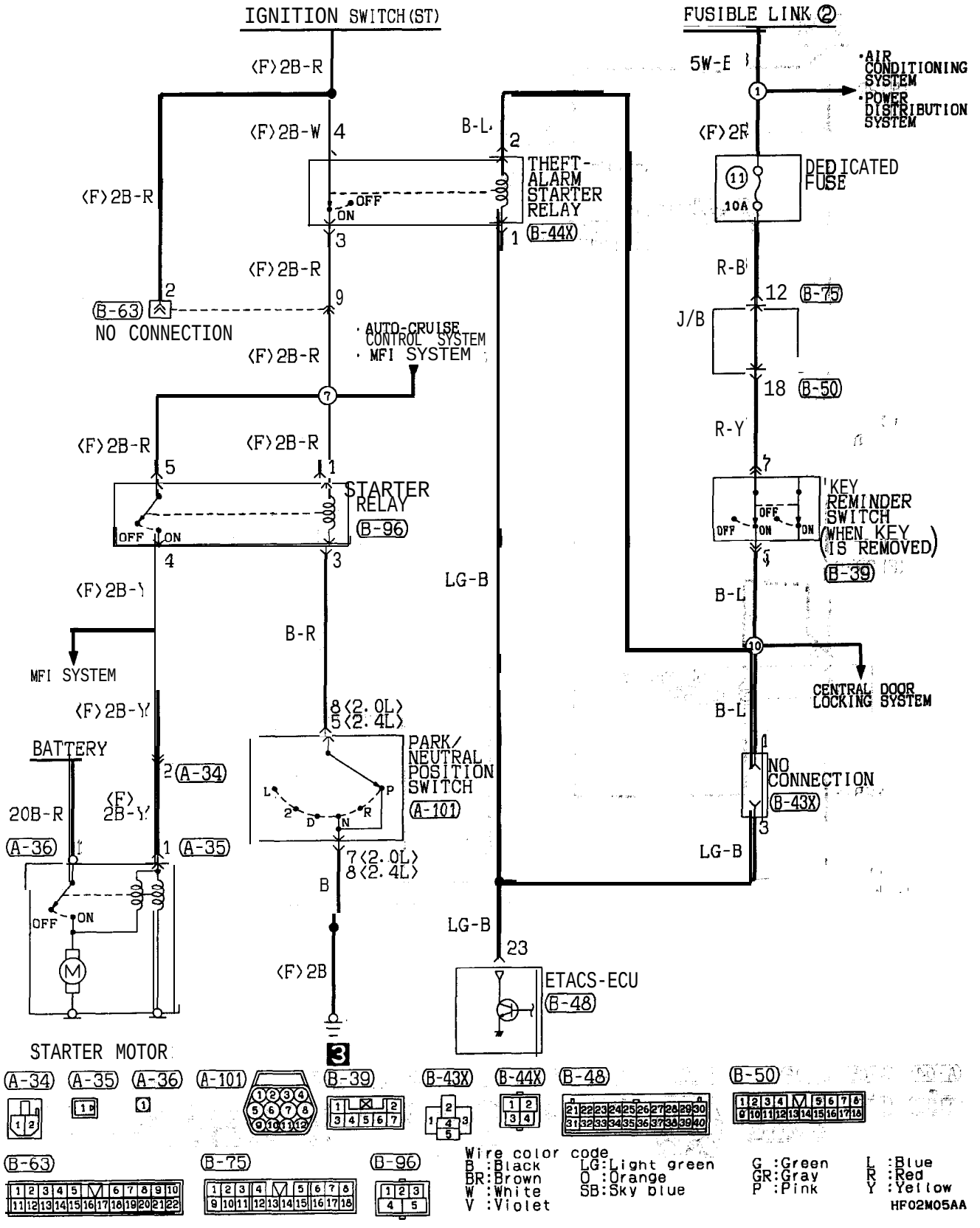

TSB Revision

IGNITION SYSTEM <2.0L Engine (Non-turbo)>

90100060407

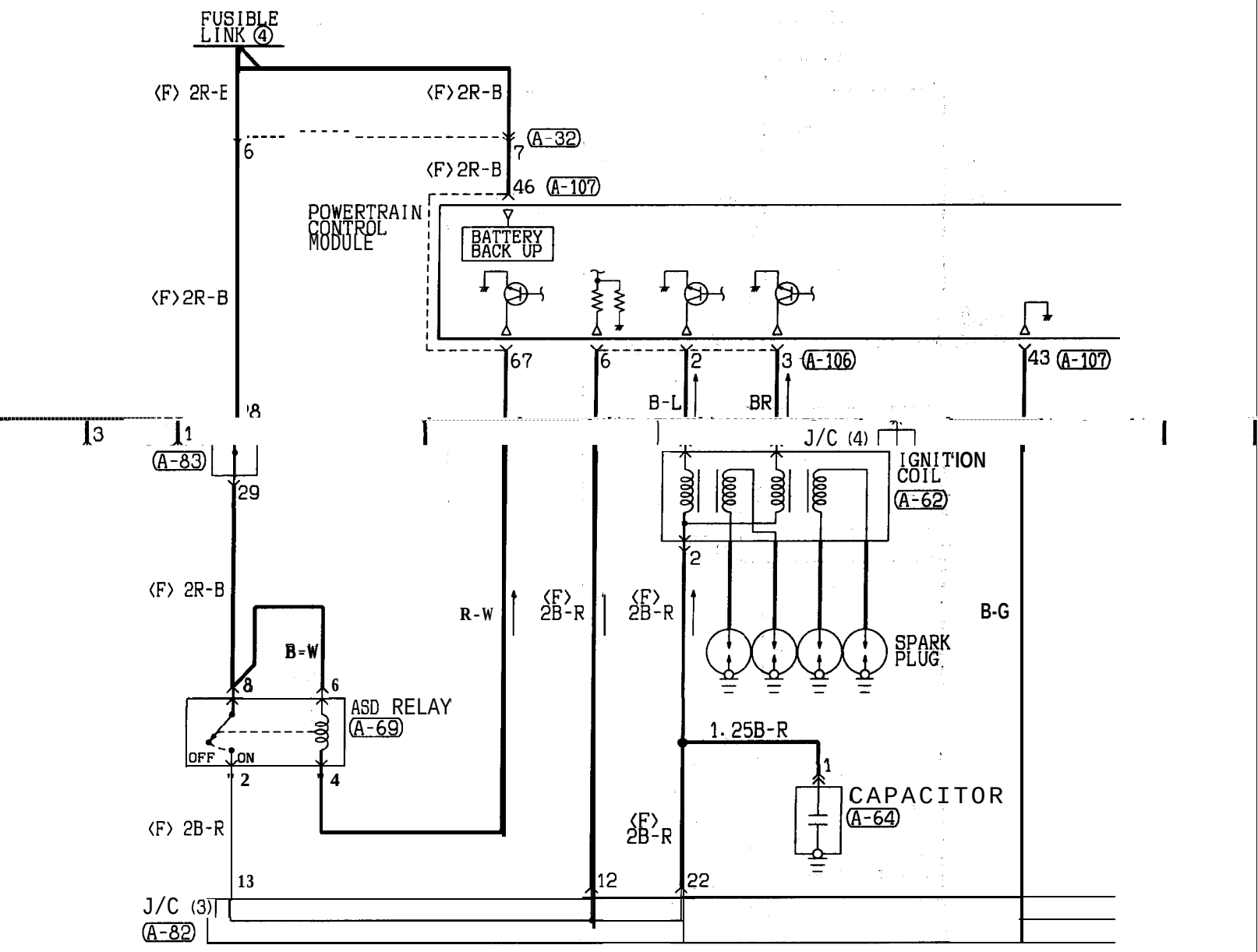

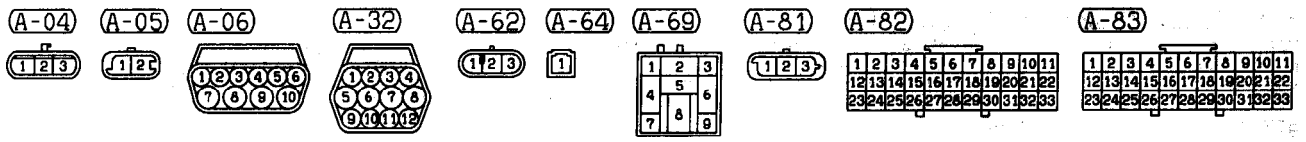

HF03M00AA

TSB Revision

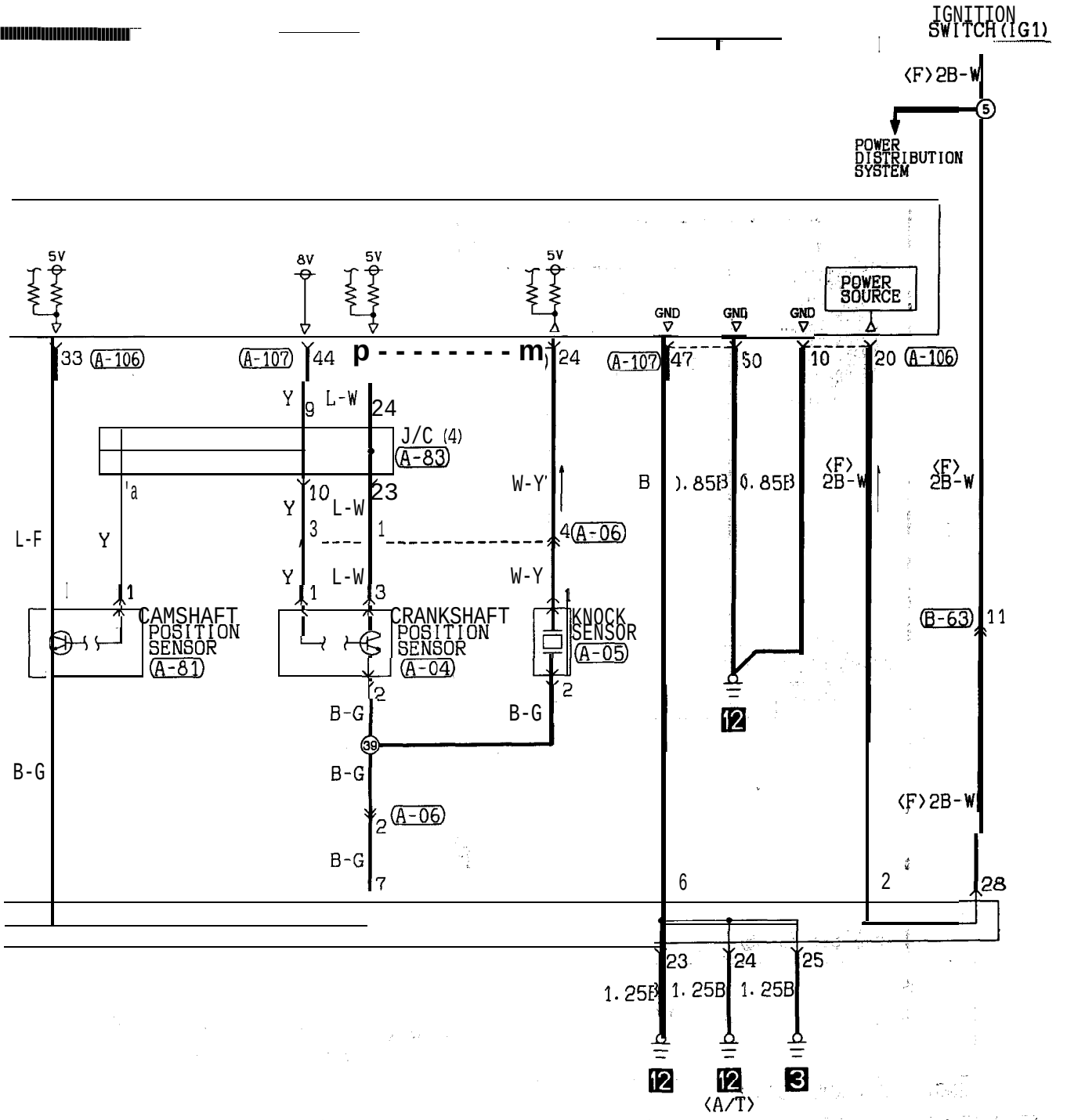

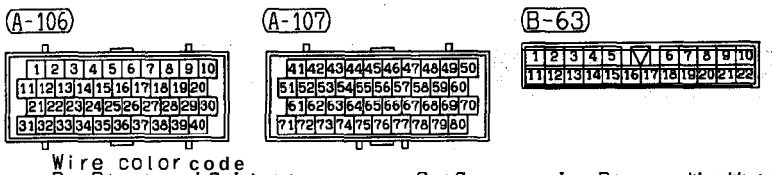

Wire color code
B :Black LG:Light green G :Green L :Blue W :White Y :Yellow SB:Sky blue
BR:Brown O :Orange GR:Gray R :Red P :Pink V :Violet

HF03M00AB

TSB Revision

IGNITION SYSTEM <2.0L Engine (Turbo)>

90100060414

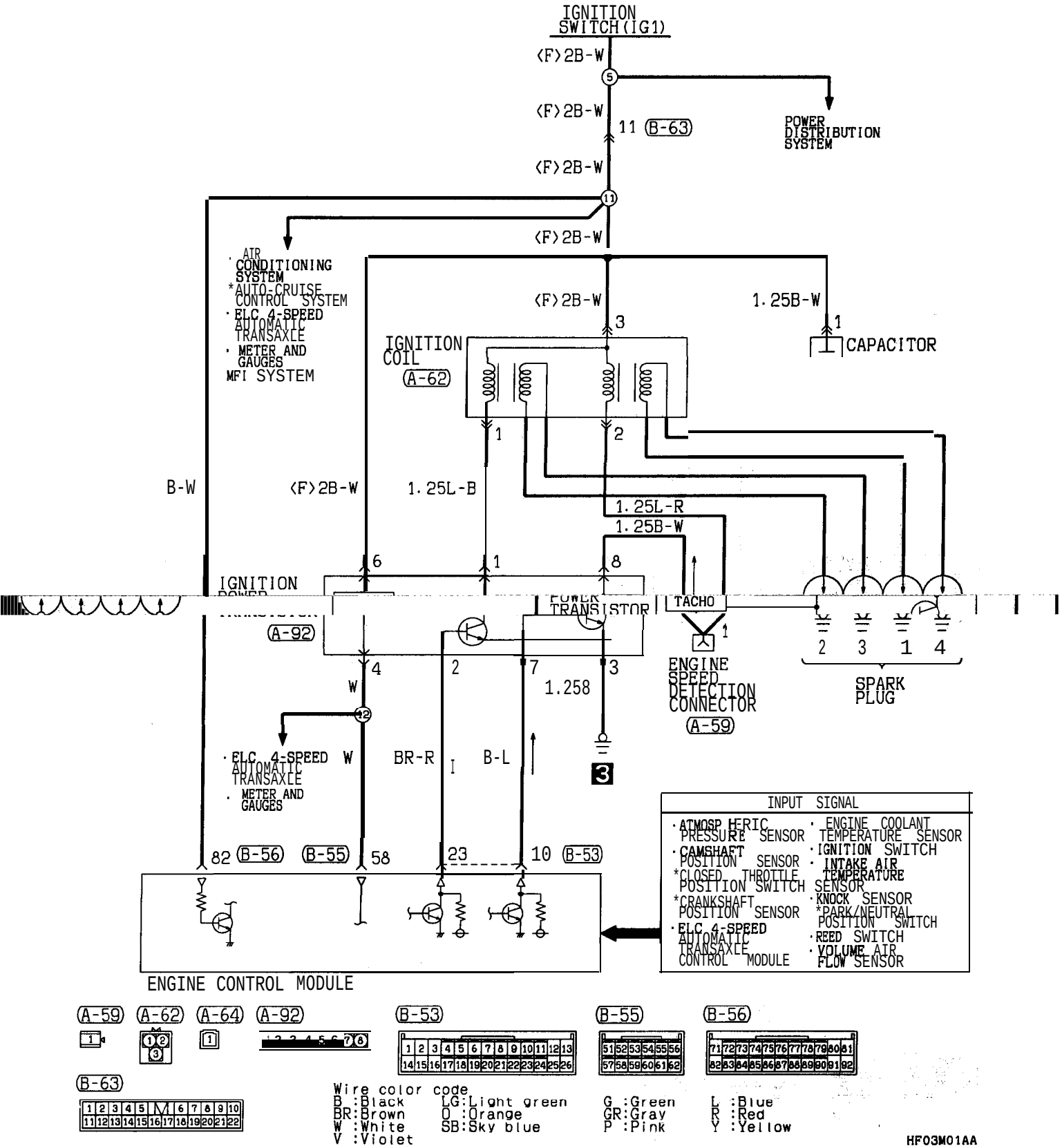

TSB Revision

IGNITION SYSTEM <2.4L Engine>;

90100060421

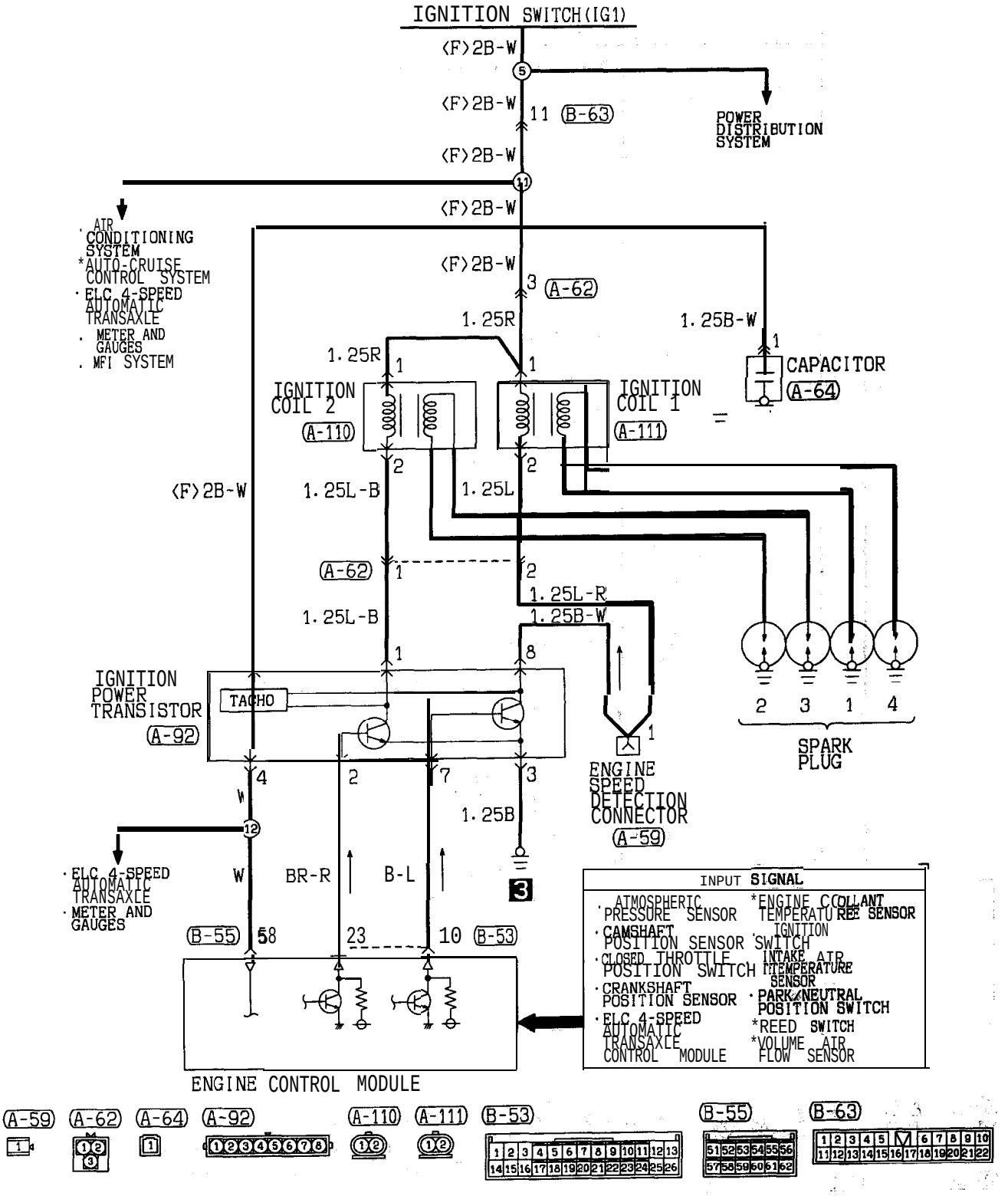

Wire color code
B :Black LG:Light green G :Green L :Blue W :White Y :Yellow SB:Sky blue
BR:Brown O :Orange GR:Gray R :Red P :Pink V :Violet

HF03M02AA

TSB Revision

CHARGING SYSTEM <2.0L Engine (Non-turbo)>

90100070387

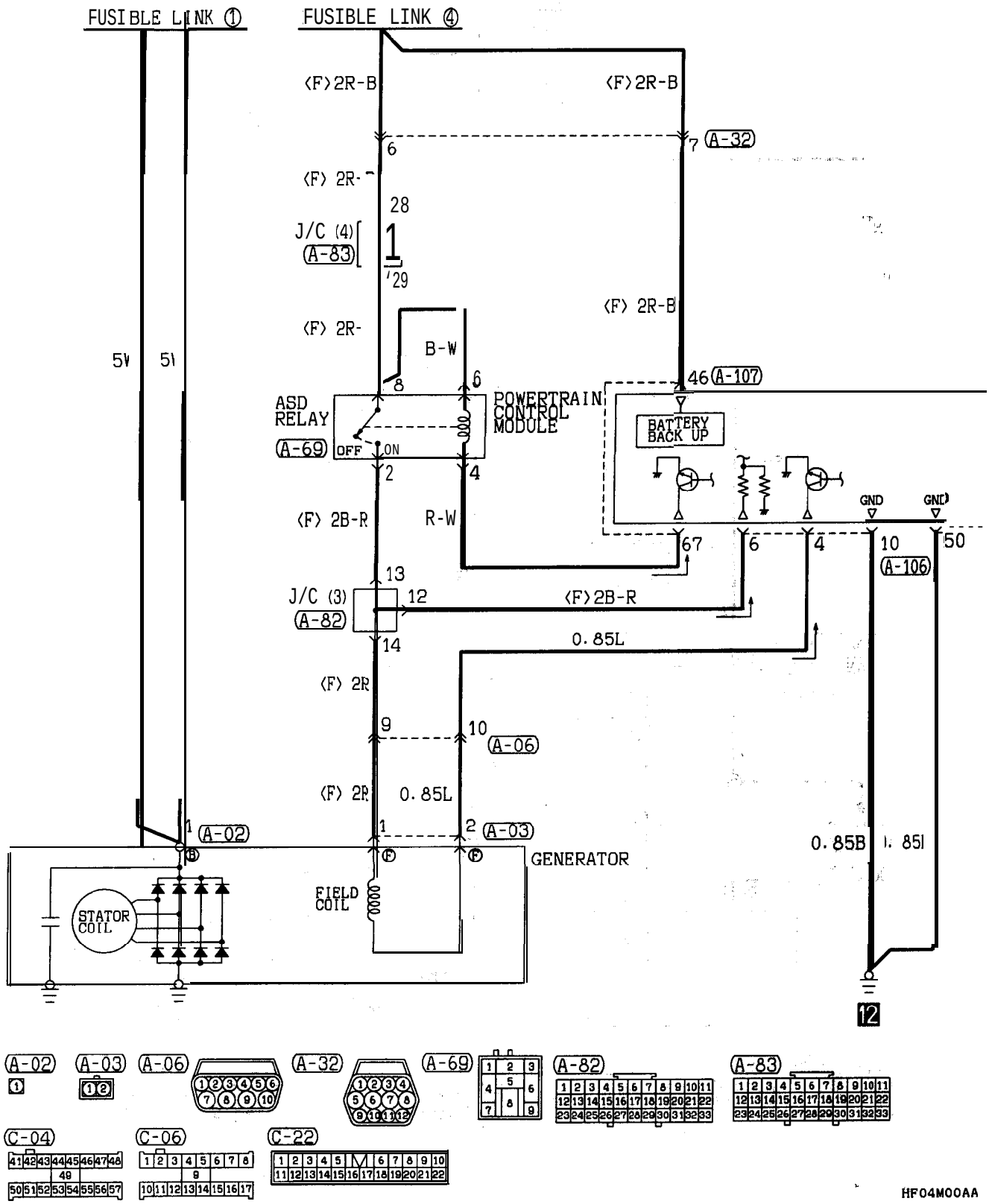

TSB Revision

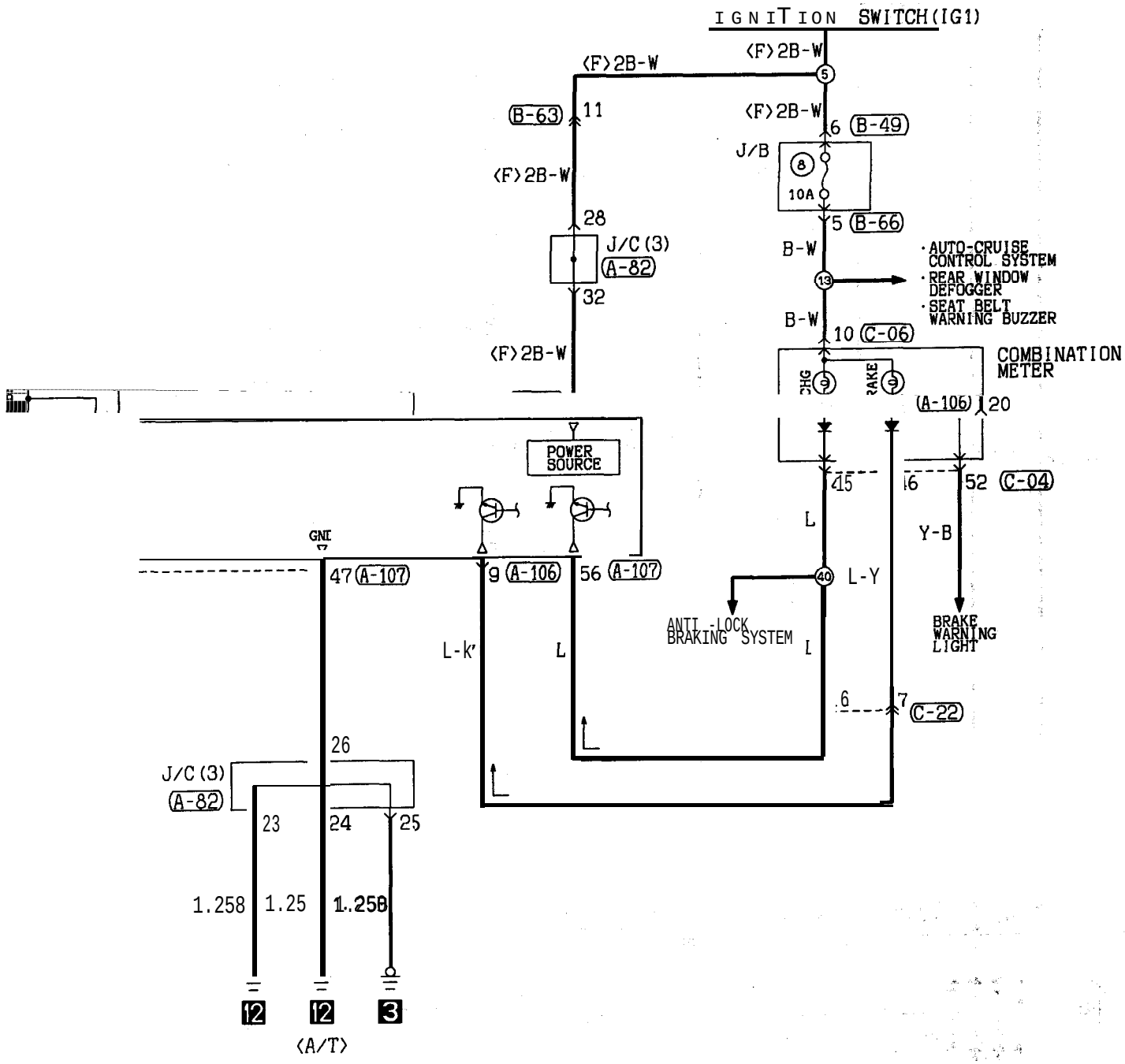

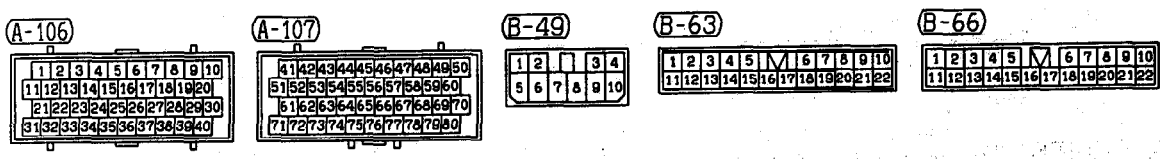

Wire color code
B :Black LG:Light green G :Green L :Blue W :White Y :Yellow SB:Sky blue
BR:Brown O :Orange GR:Gray R :Red P :Pink V :Violet

HF04M00AB

TSB Revision

CHARGING SYSTEM <2.0L Engine (Turbo) and 2.4L Engine>

90100070394

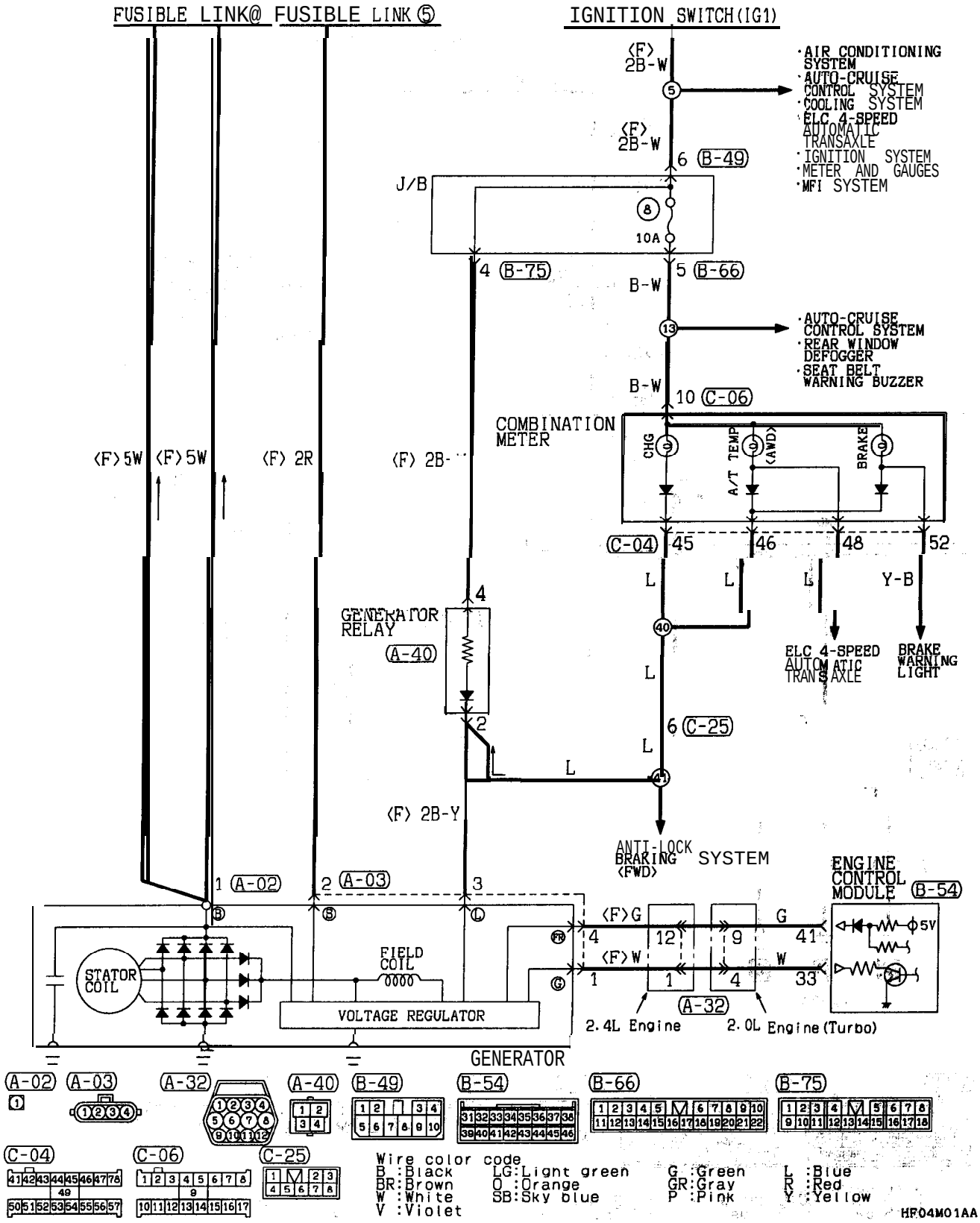

NOTES

MFI SYSTEM <2.0L Engine (Non-turbo)>

90100080700

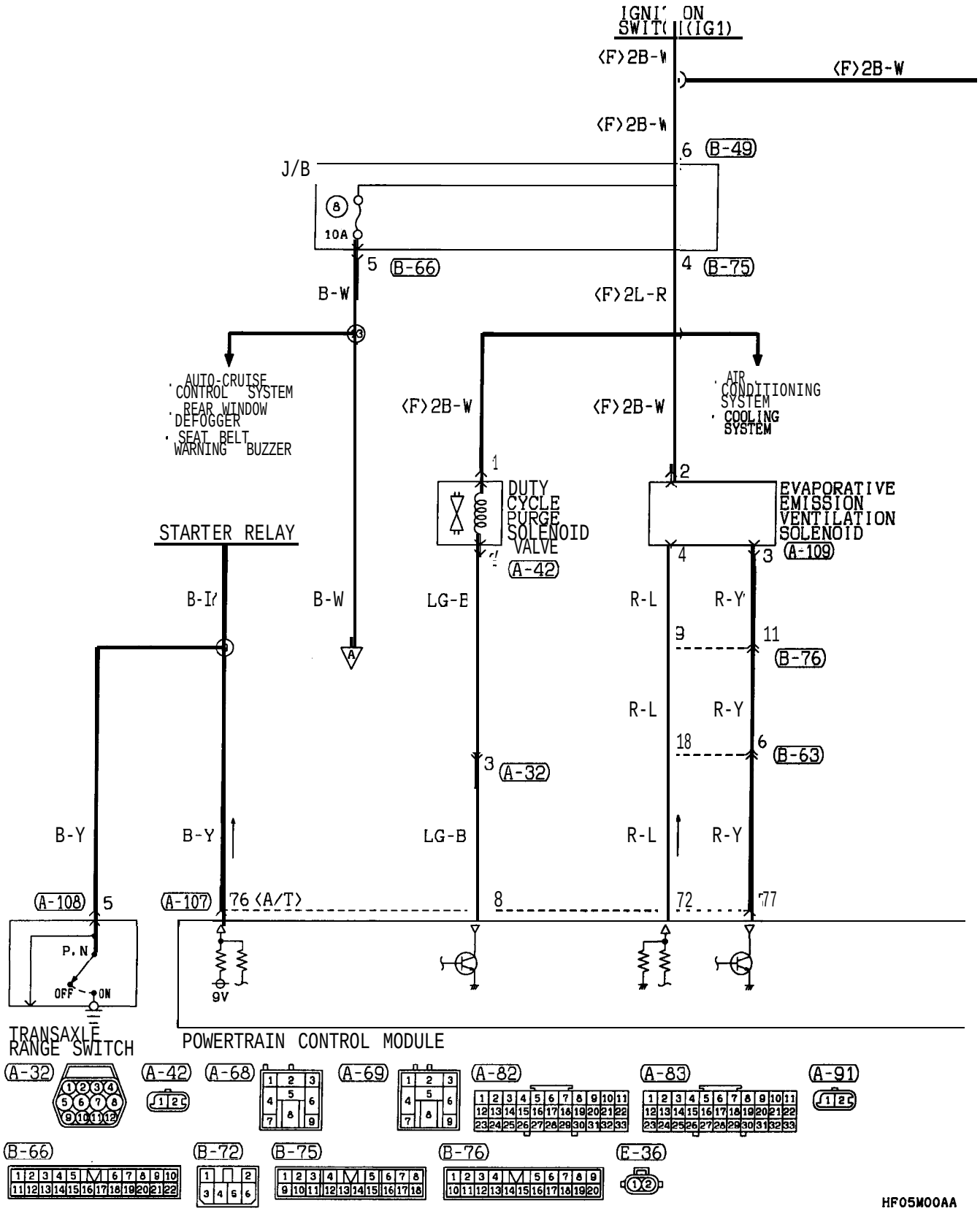

TSB Revision

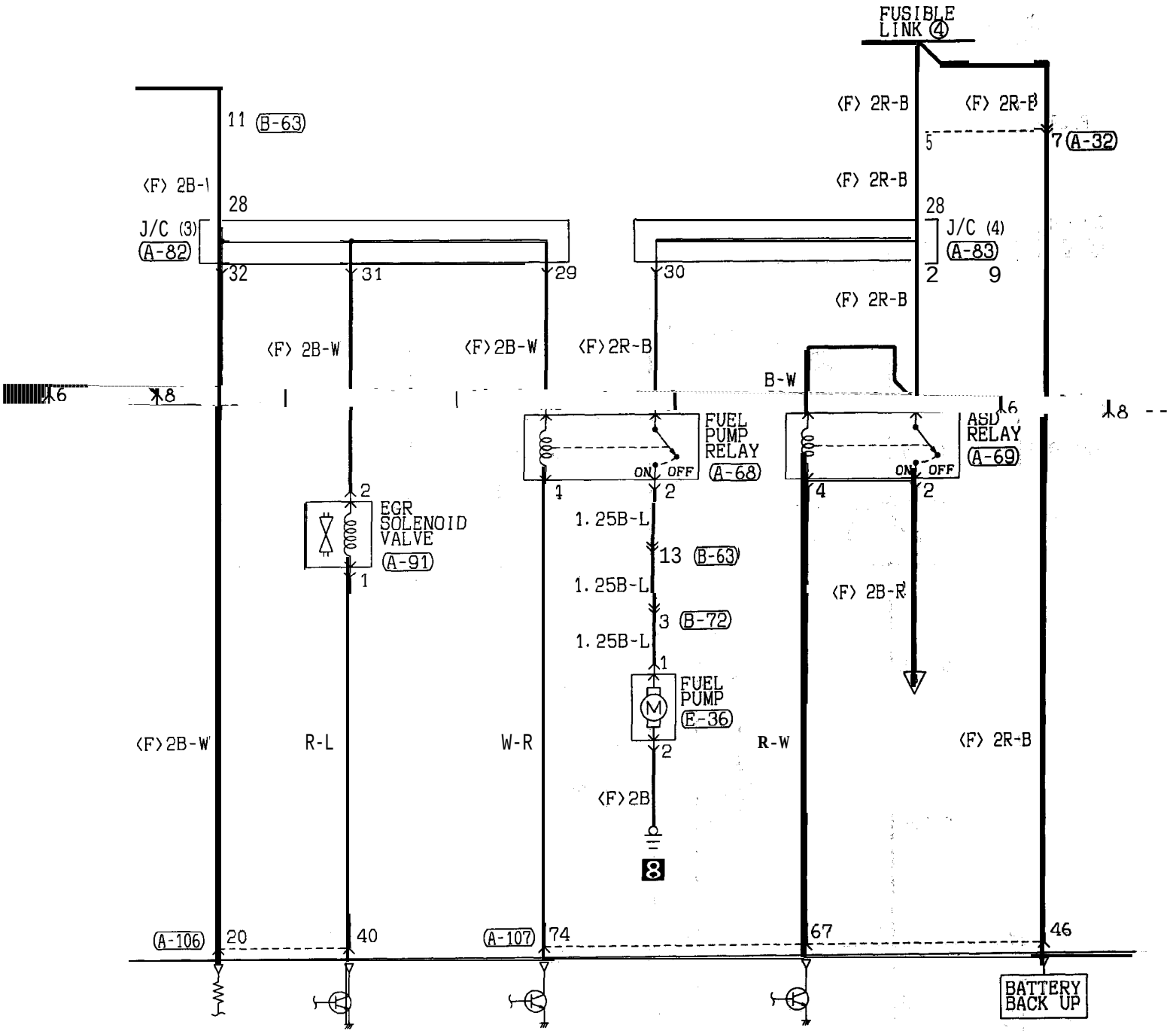

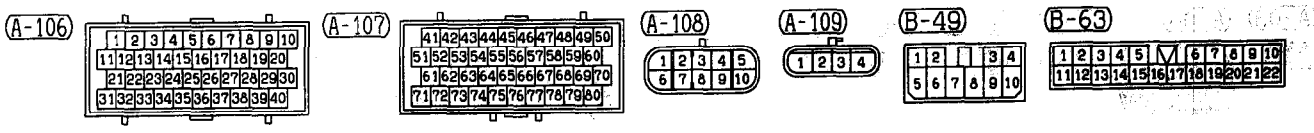

Wire color code
B :Black LG:Light green G :Green L :Blue W :White Y :Yel low SB:Sky blue
BR:Brown O :Orange GR:Gray R :Red P :Pink V :Violet

HF05M00AB

MFI SYSTEM <2.0L Engine (Non-turbo)> (CONTINUED)

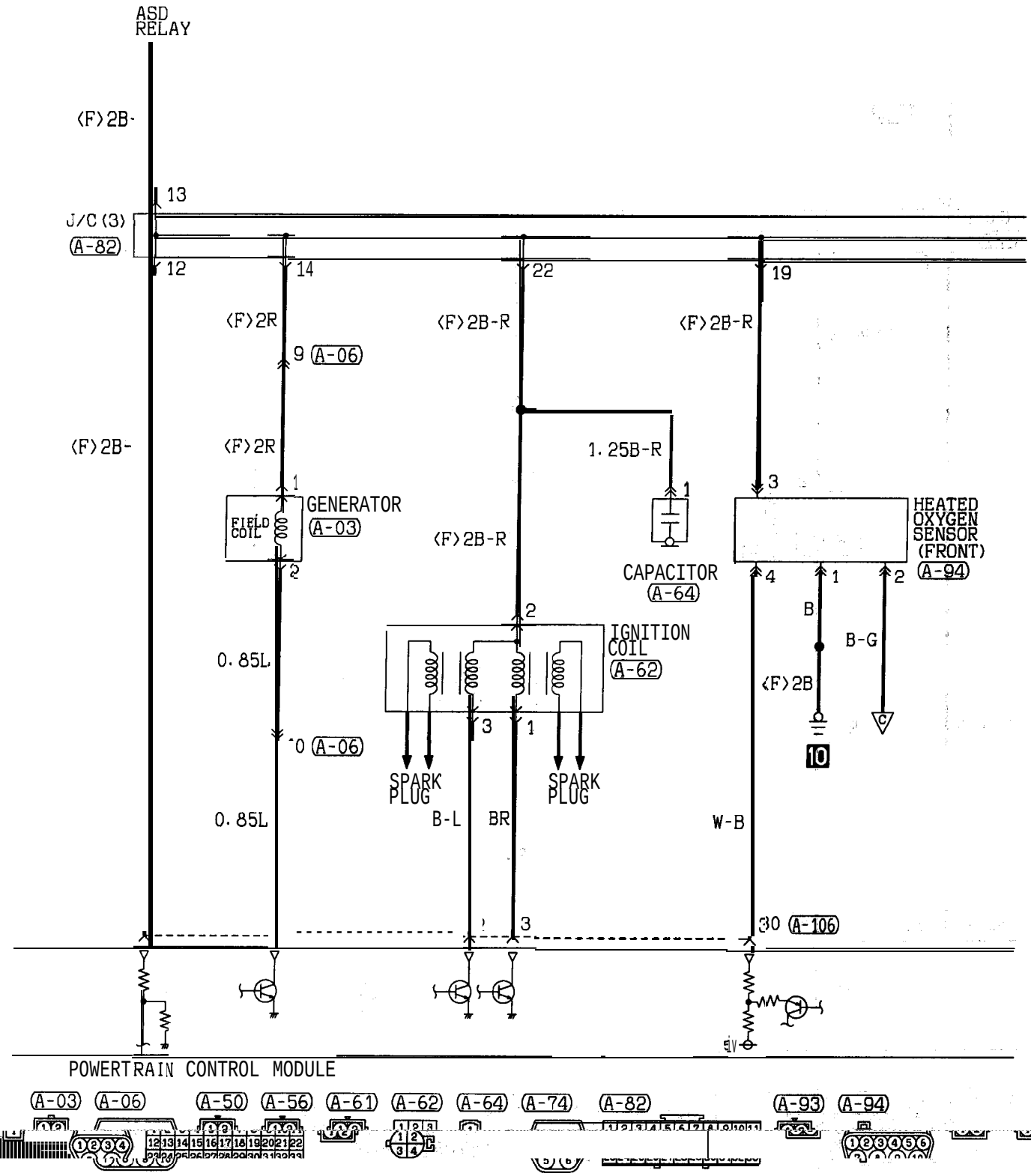

HF05M00BA

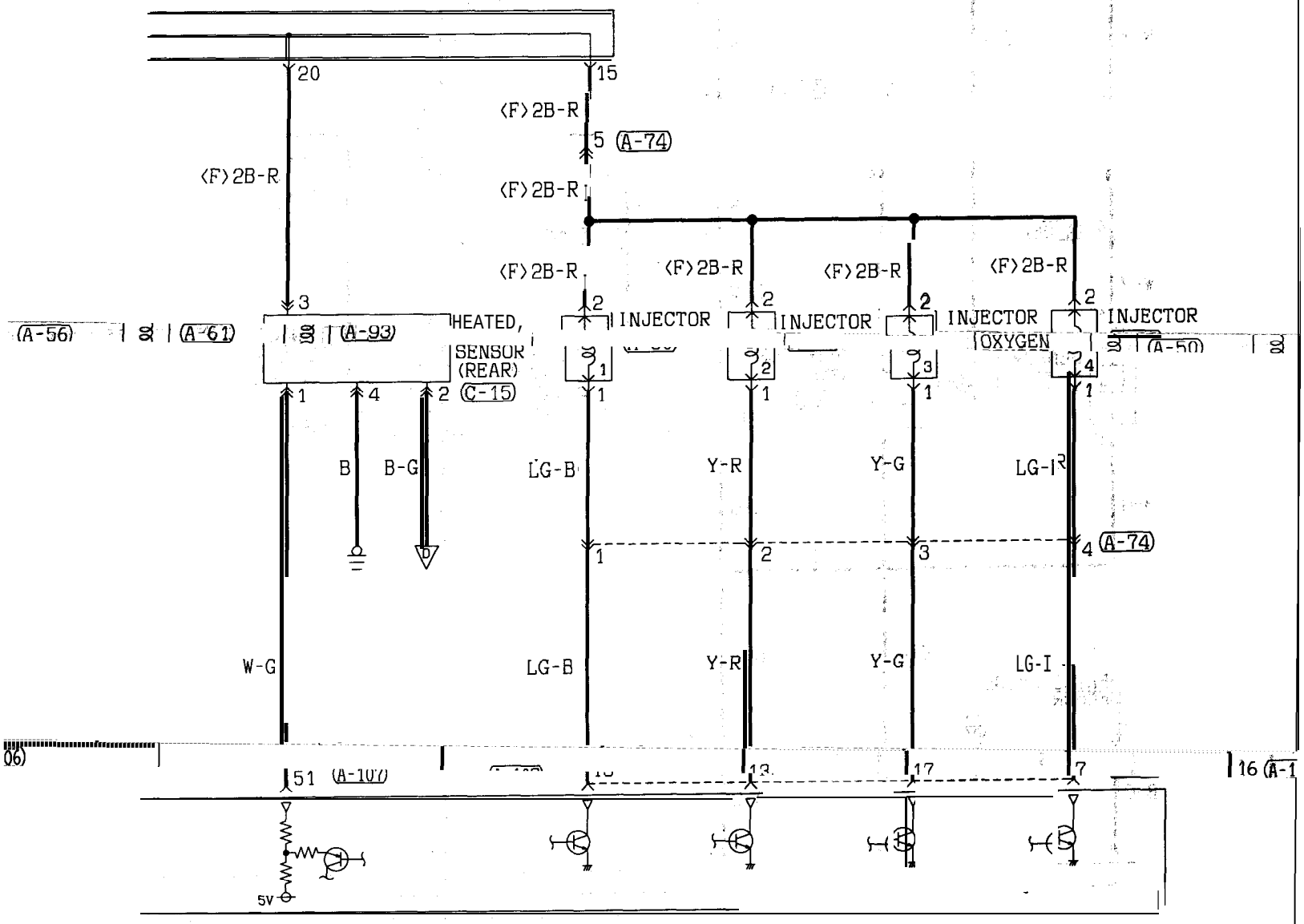

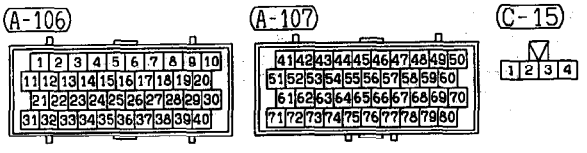

Wire color code
B :Black LG:Light green G :Green L :Blue W :White Y :Yellow SB:Sky blue
BR:Brown O :Orange GR:Gray R :Red P :Pink V :Violet

HF05M00BB

TSB	Revision

MFI SYSTEM <2.0L Engine (Non-turbo)> (CONTINUED)

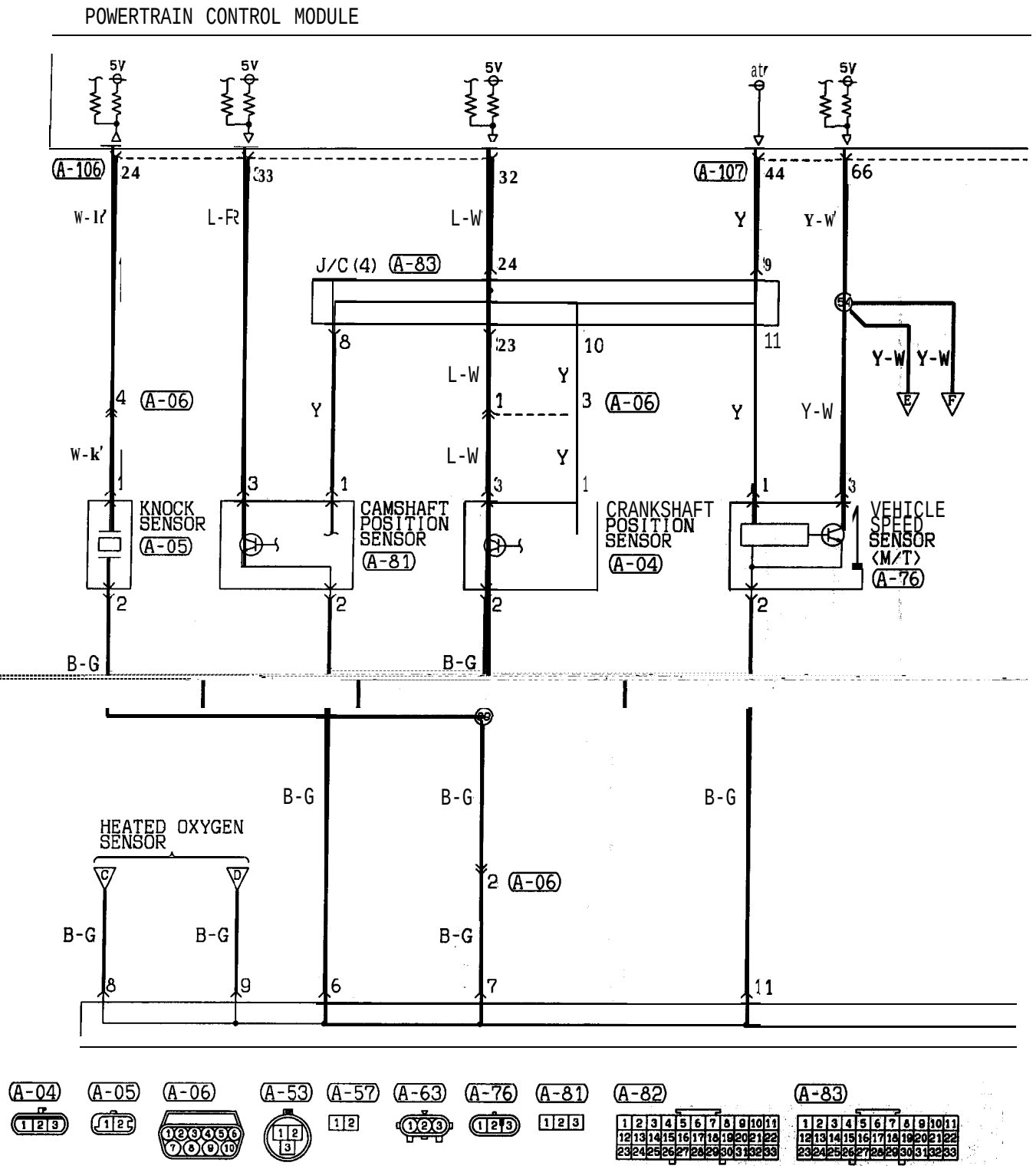

TSB Revision

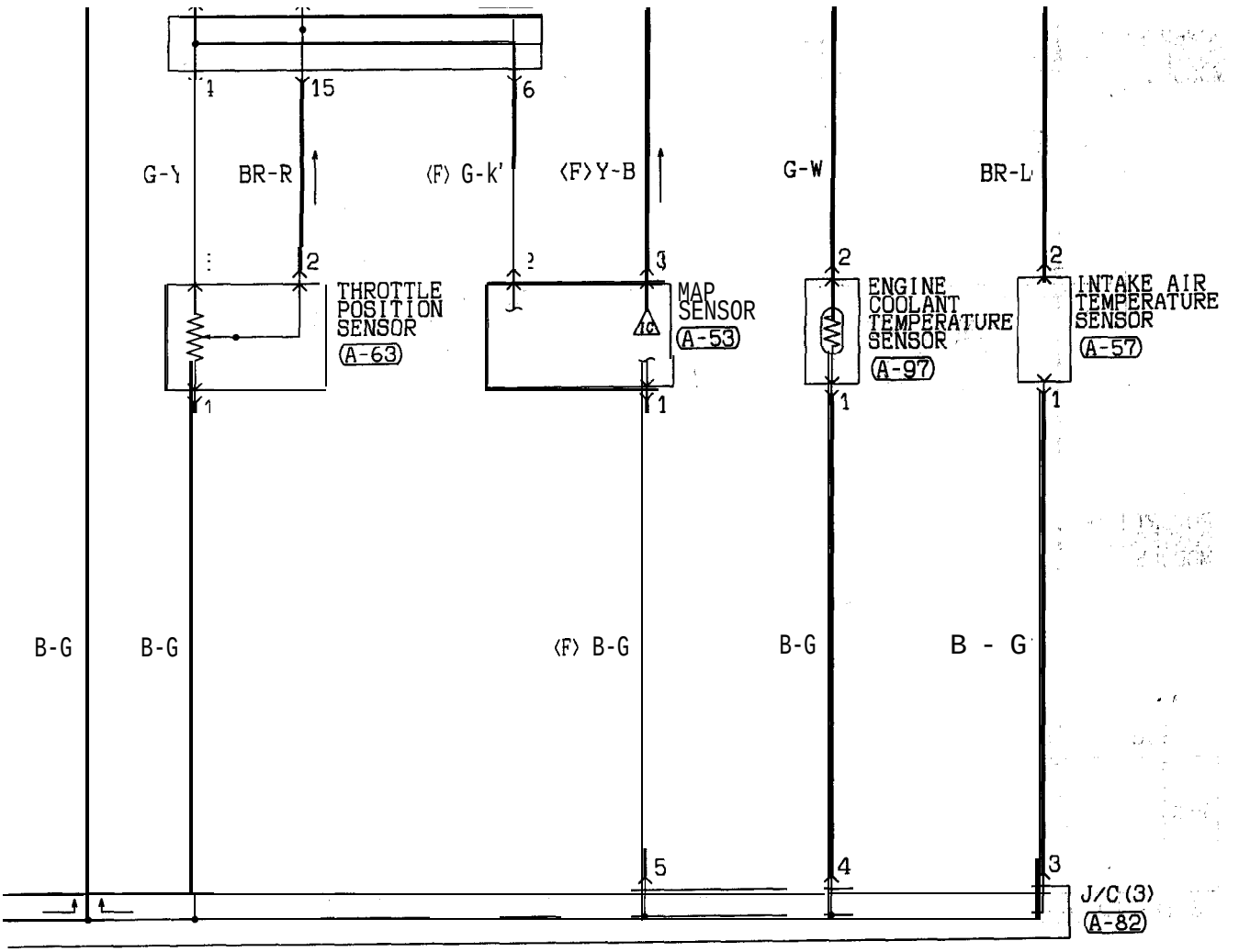

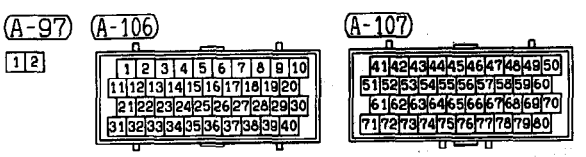

Wire color code
B :Black LG:Light green G :Green L :Blue W :White Y :Yellow SB:Sky blue
BR:Brown O :Orange GR:Gray R :Red P :Pink V :Violet

HF05M00CB

TSB Revision

MFI SYSTEM <2.0L Engine (Non-turbo)> (CONTINUED)

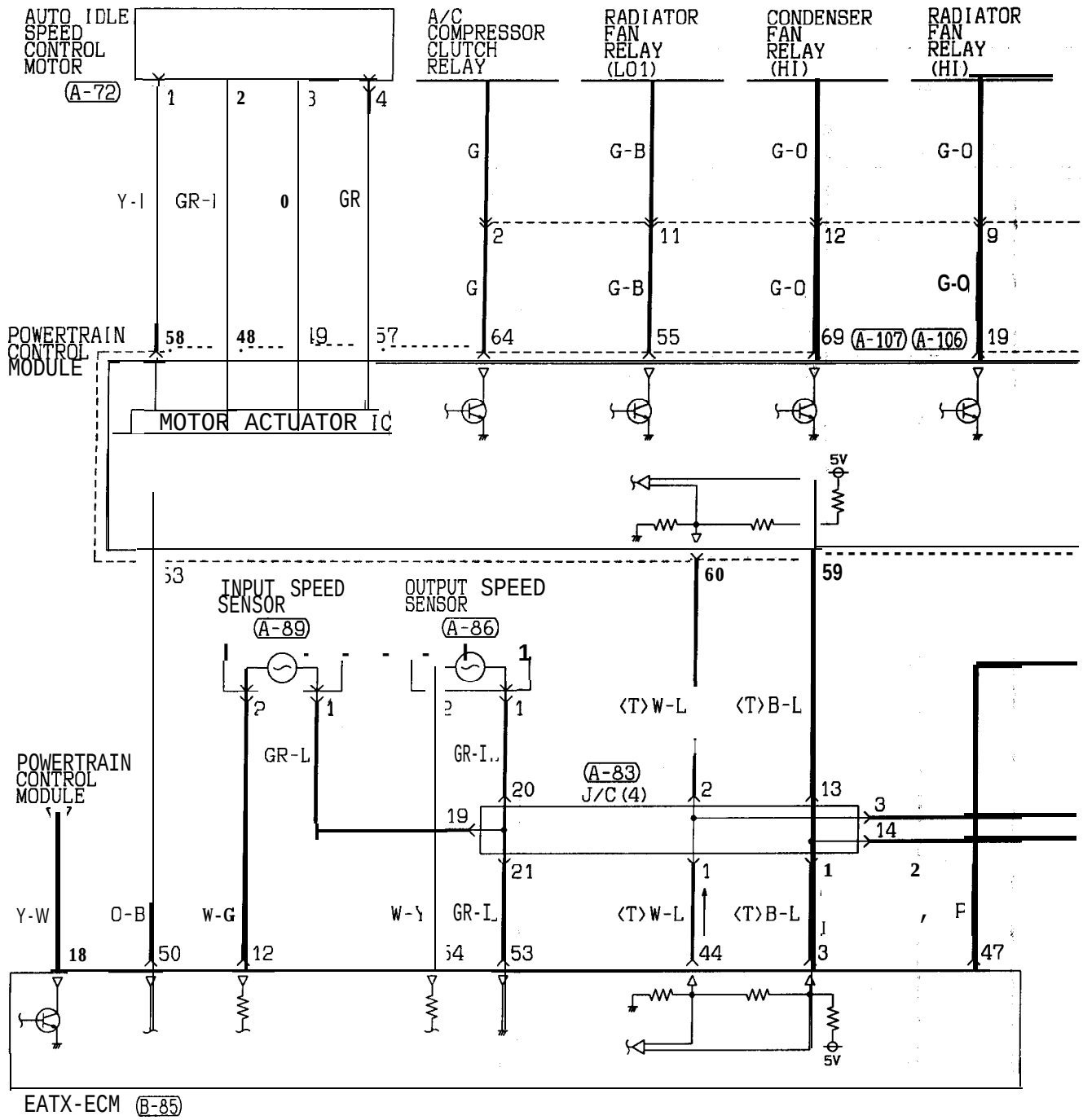

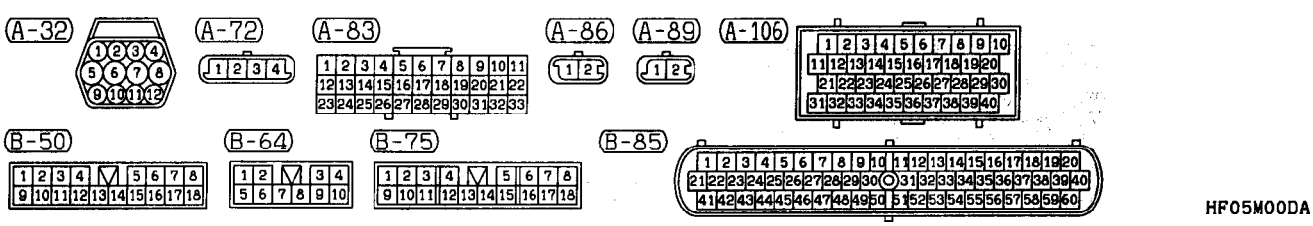

HF05M00DA

TSB Revision

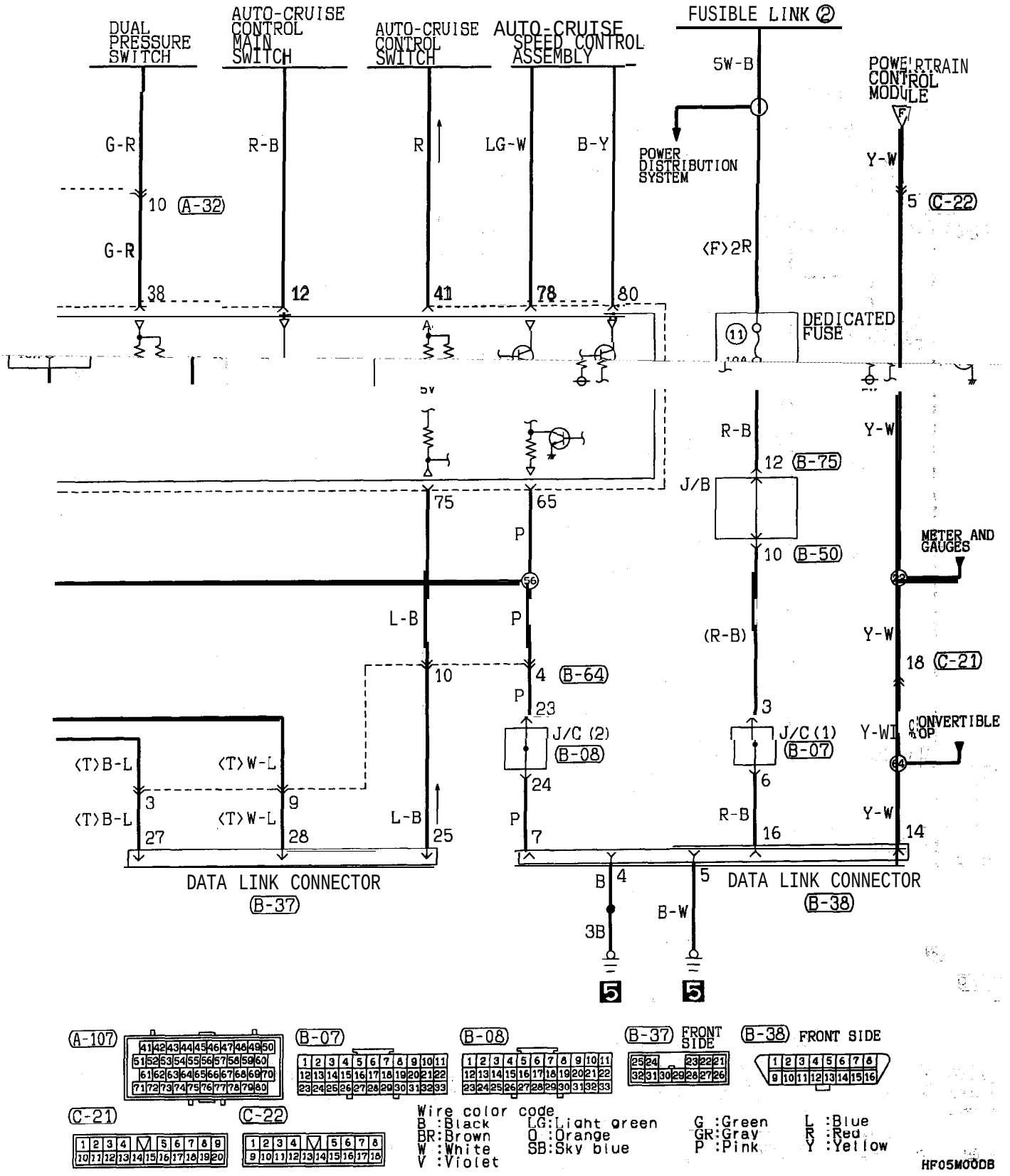

TSB Revision

MFI SYSTEM <2.0L Engine (Non-turbo)> (CONTINUED)

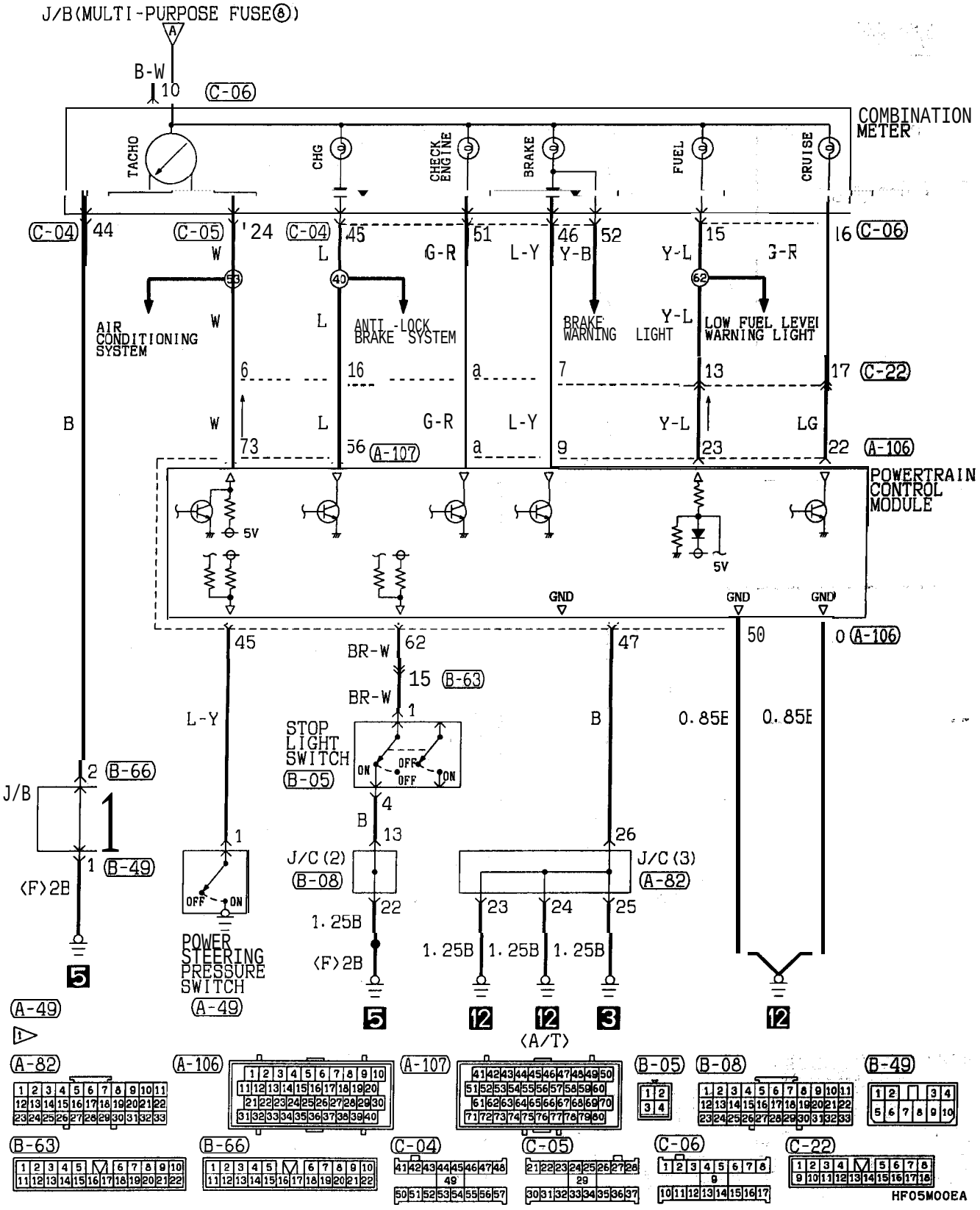

TSB Revision

NOTES

MFI SYSTEM <2.0L Engine (Turbo)>

90100080717

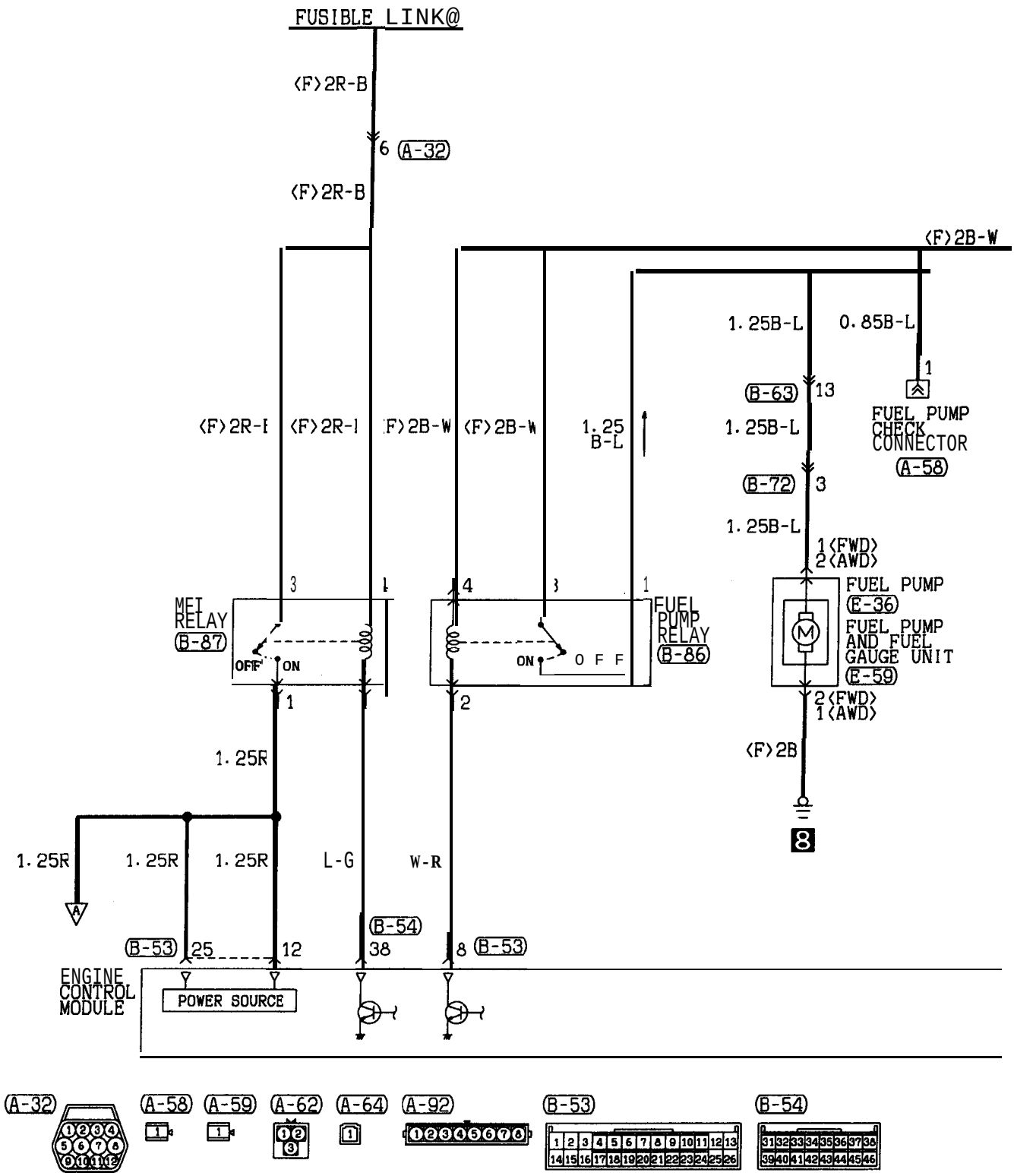

HF05M01AA

TSB Revision

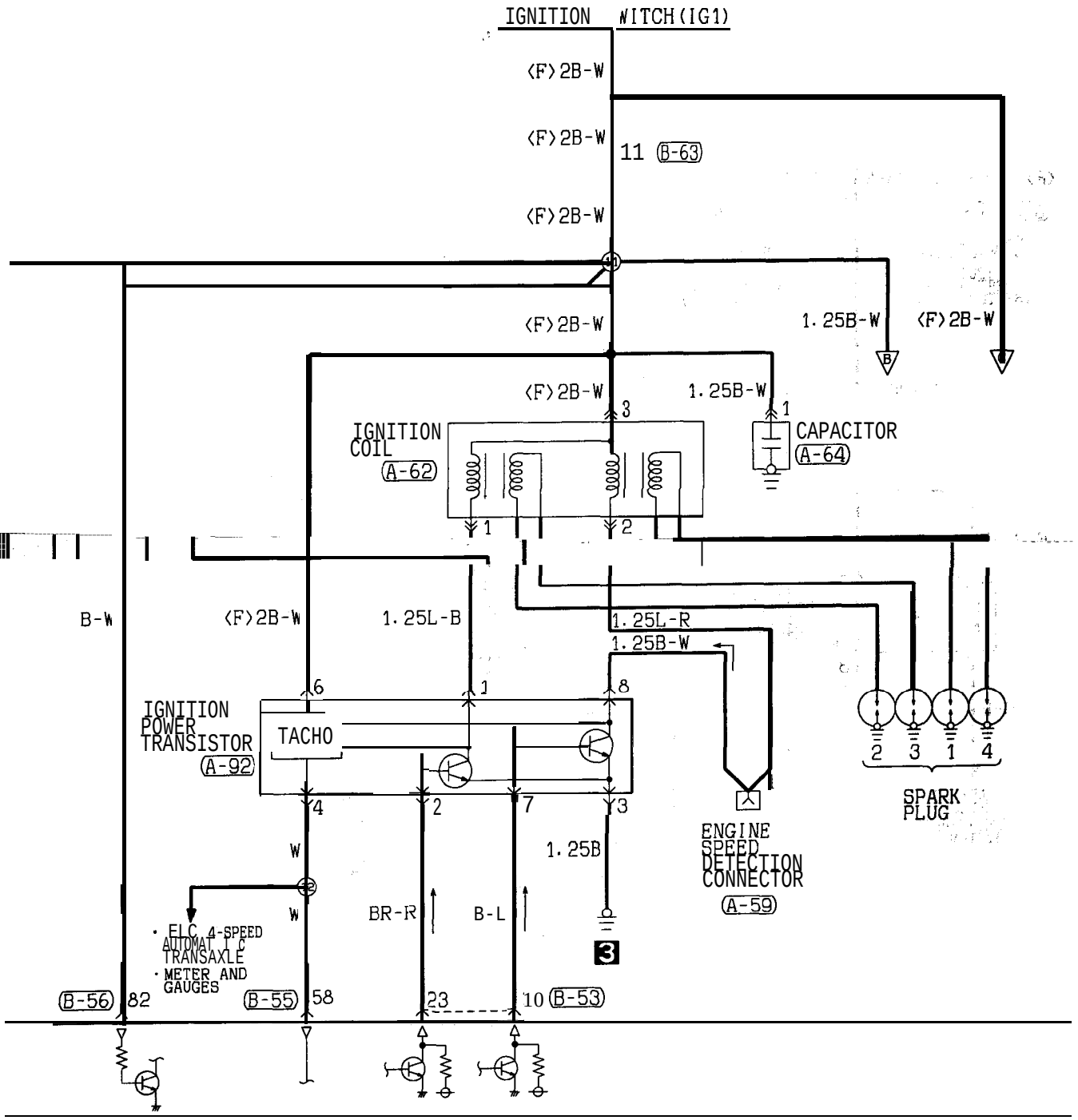

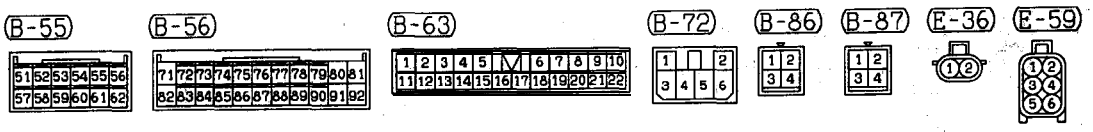

Wire color code
B :Black LG:Light green G :Green L :Blue W :White Y :Yellow SB:Sky blue
BR:Brown O :Orange GR:Gray R :Red P :Pink V :Violet

HF05M01AB

TSB Revision

MFI SYSTEM <2.0L Engine (Turbo)> (CONTINUED)

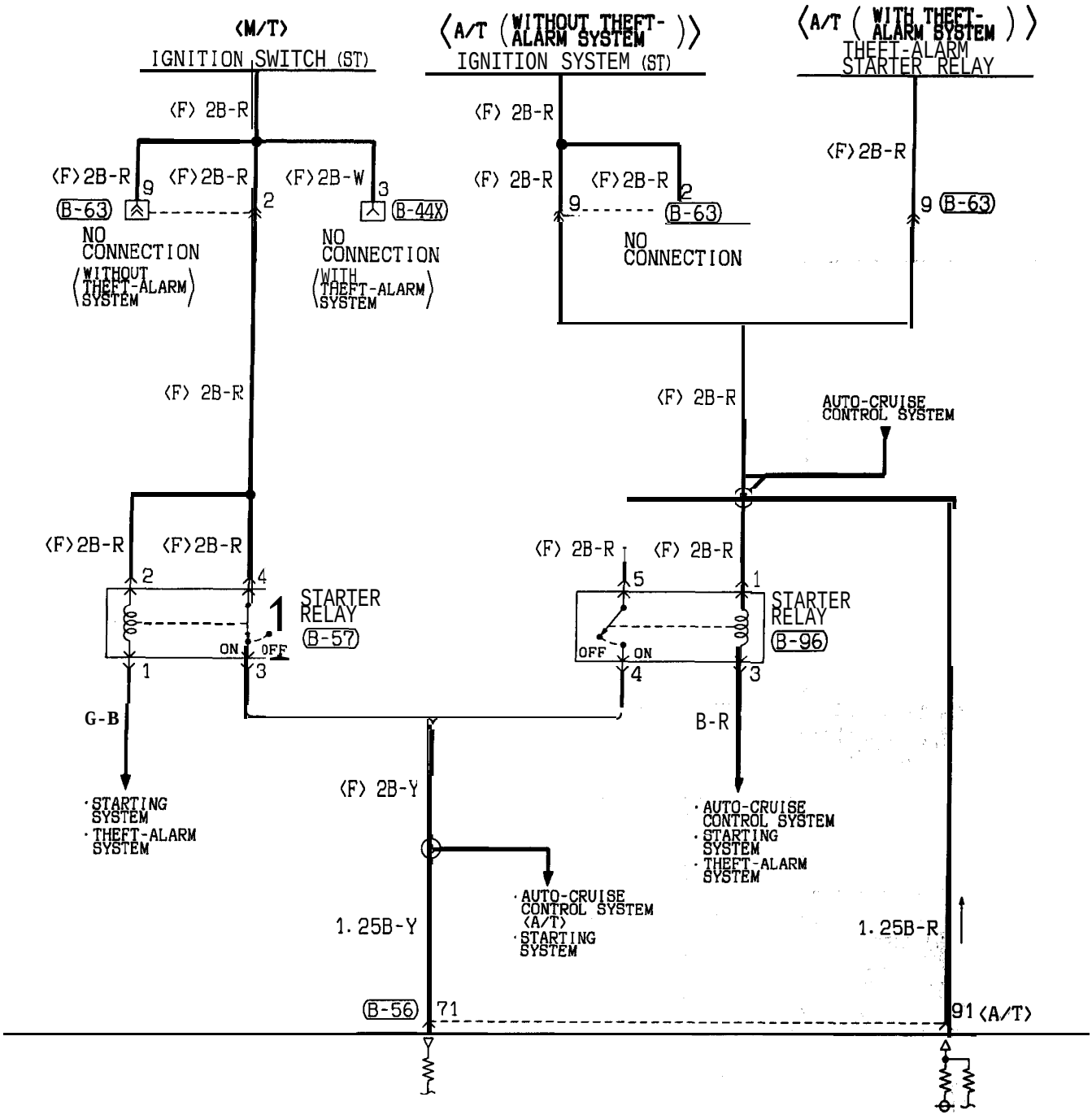

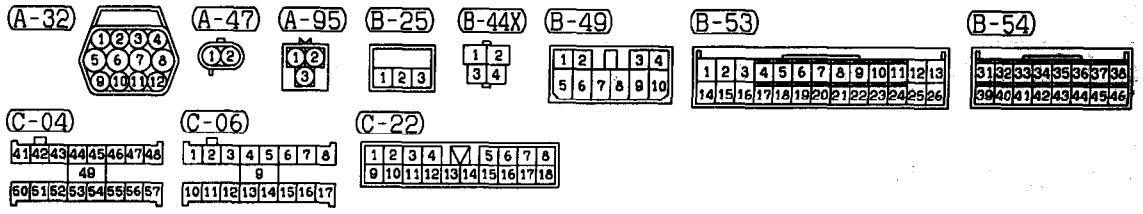

HF05M01BA

TSB Revision

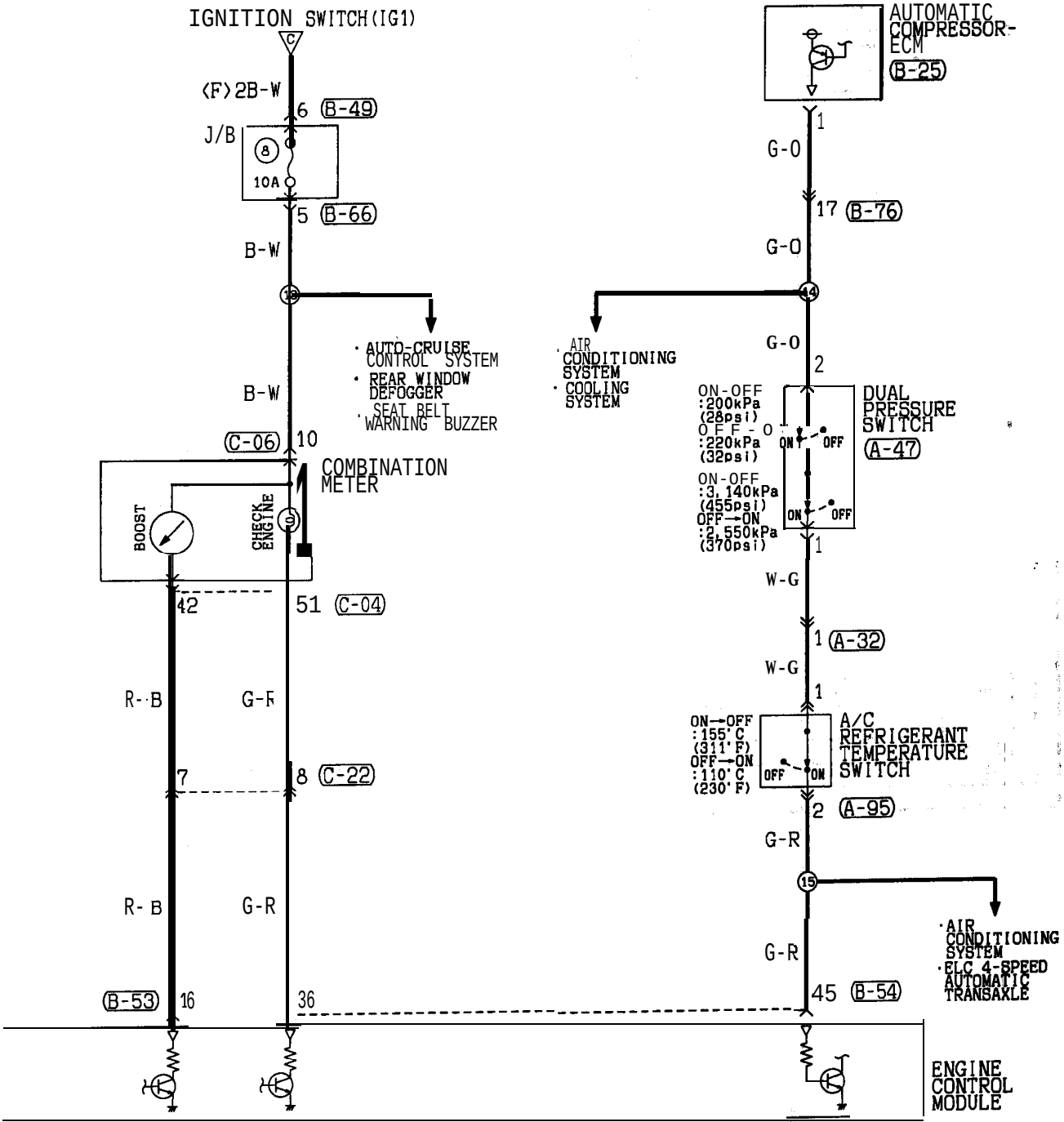

Wire color code
B :Black LG:Light green G :Green L :Blue W :White Y :Yellow SB:Sky blue
BR:Brown O :Orange GR:Gray R :Red P :Pink V :Violet

HF05M01BB

MFI SYSTEM <2.0L Engine (Turbo)> (CONTINUED)

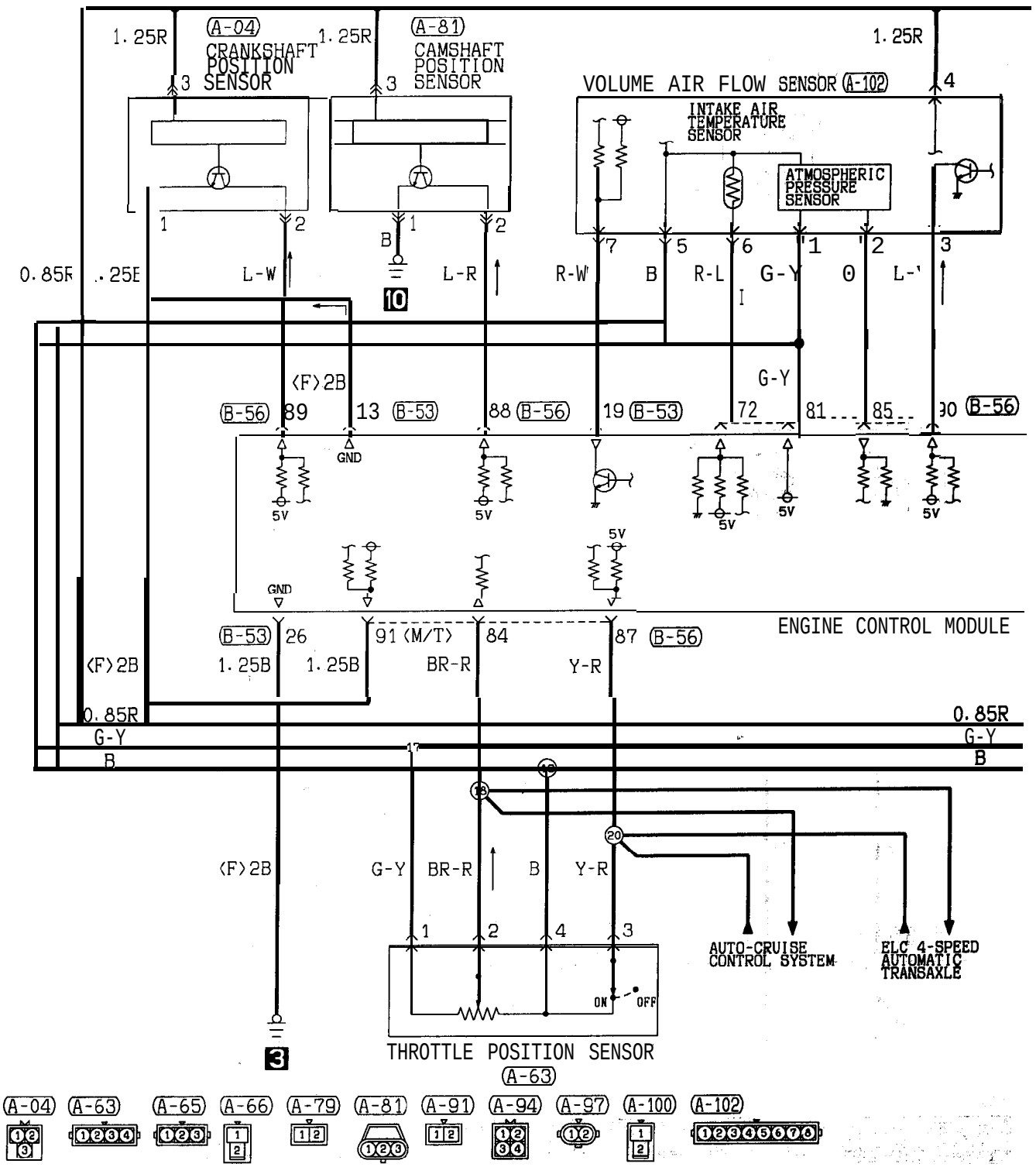

HF05M0 1CA

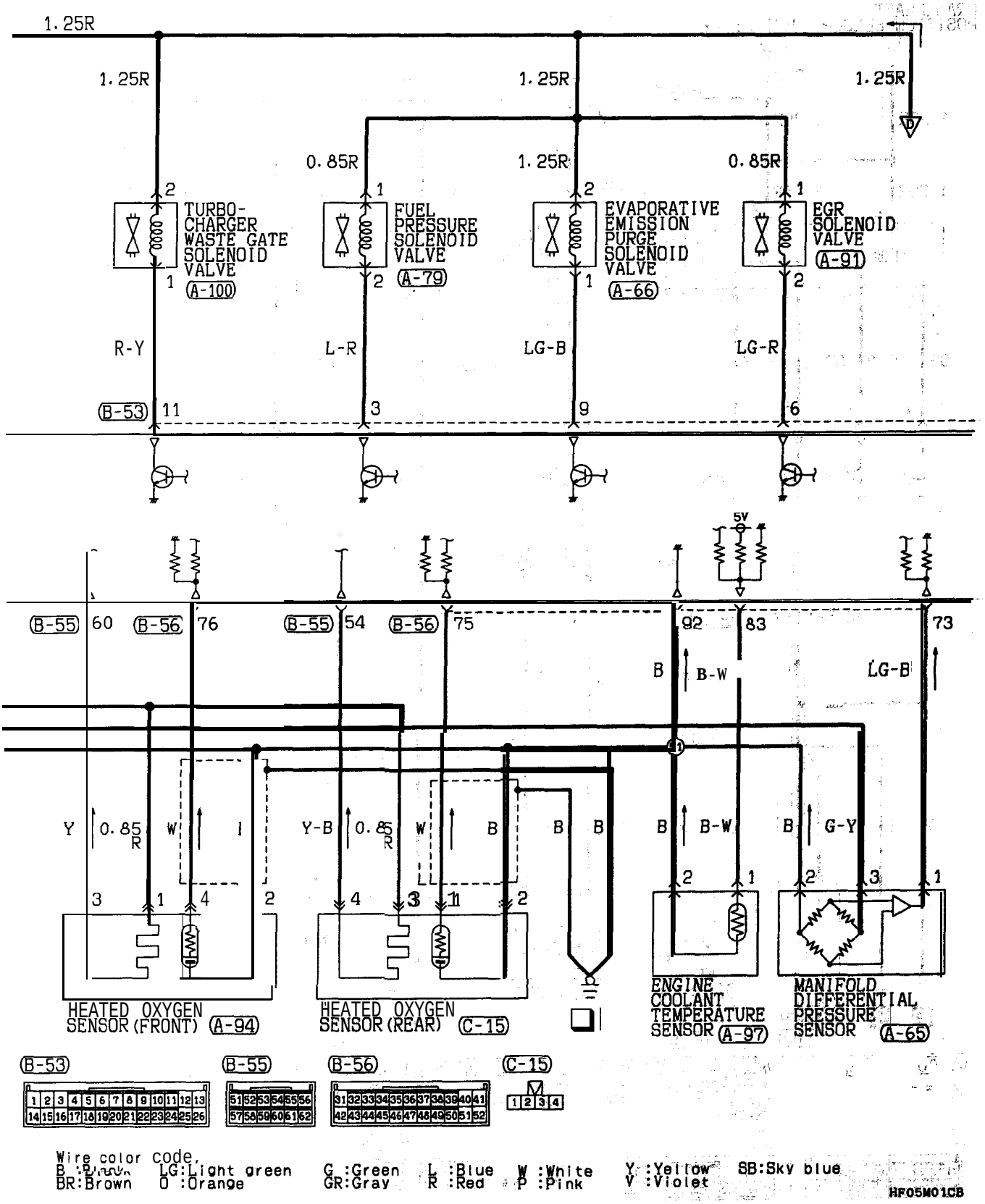

TSB Revision

MFI SYSTEM <2.0L Engine (Turbo)> (CONTINUED)

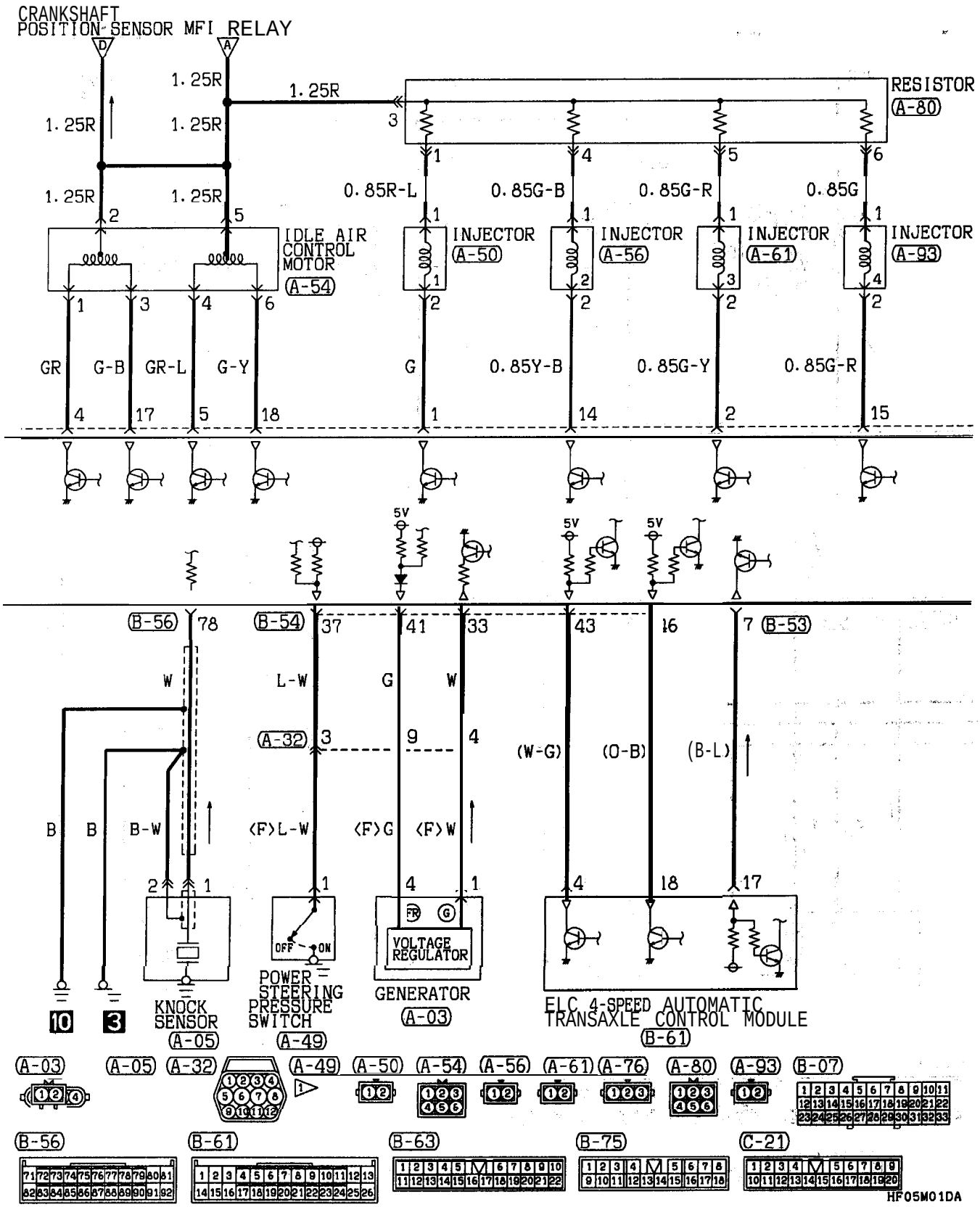

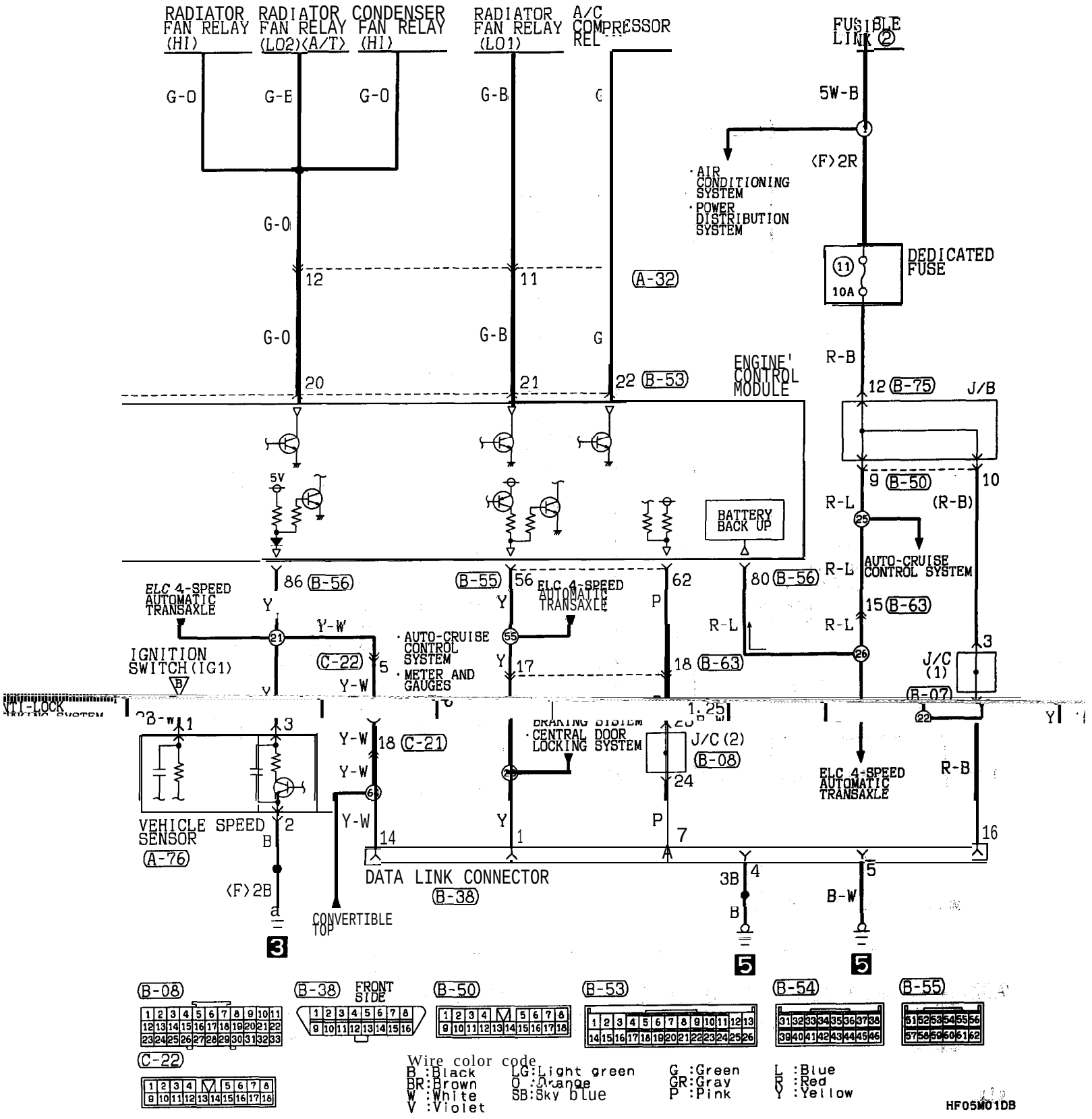

TSB Revision

MFI SYSTEM <2.4L Engine>

90100080724

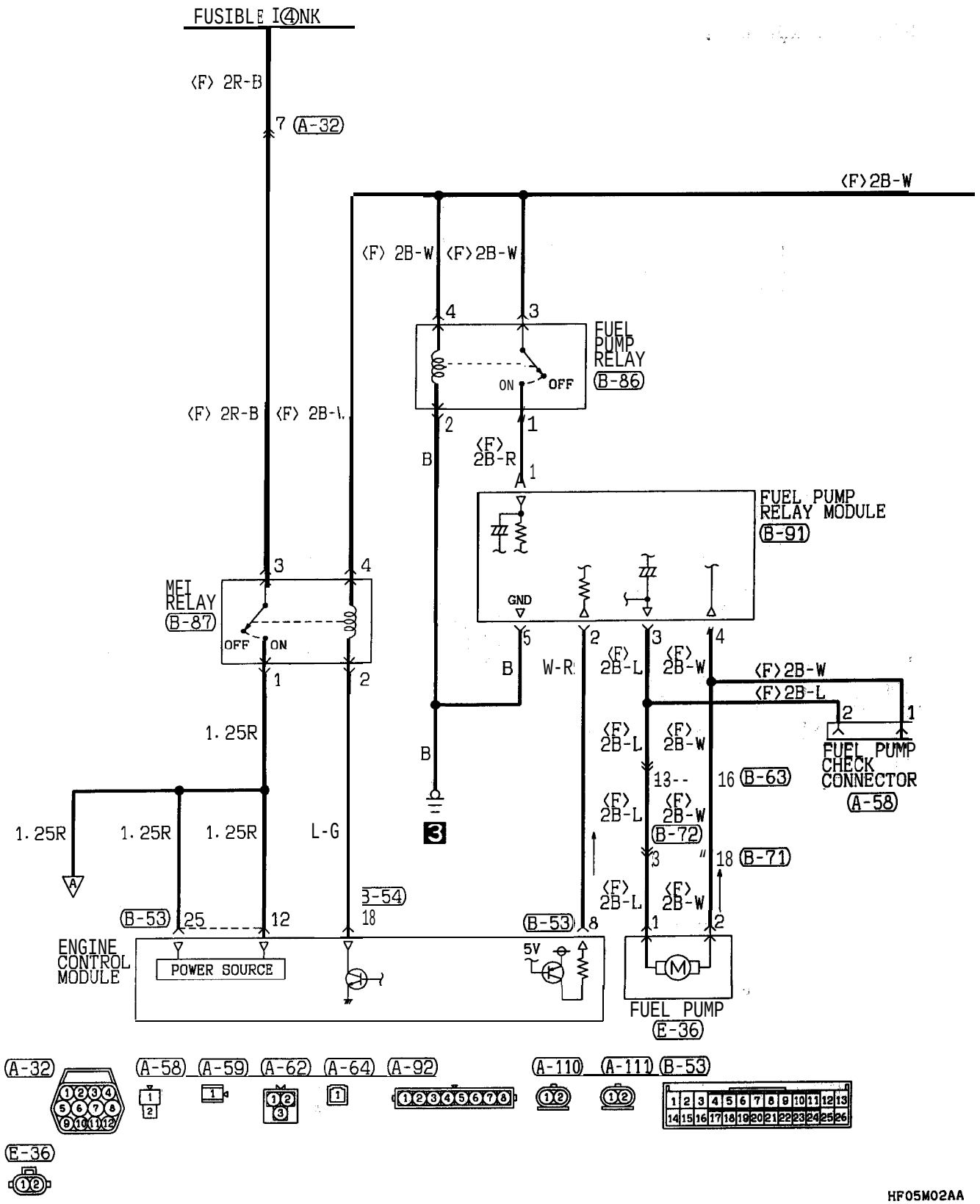

TSB Revision

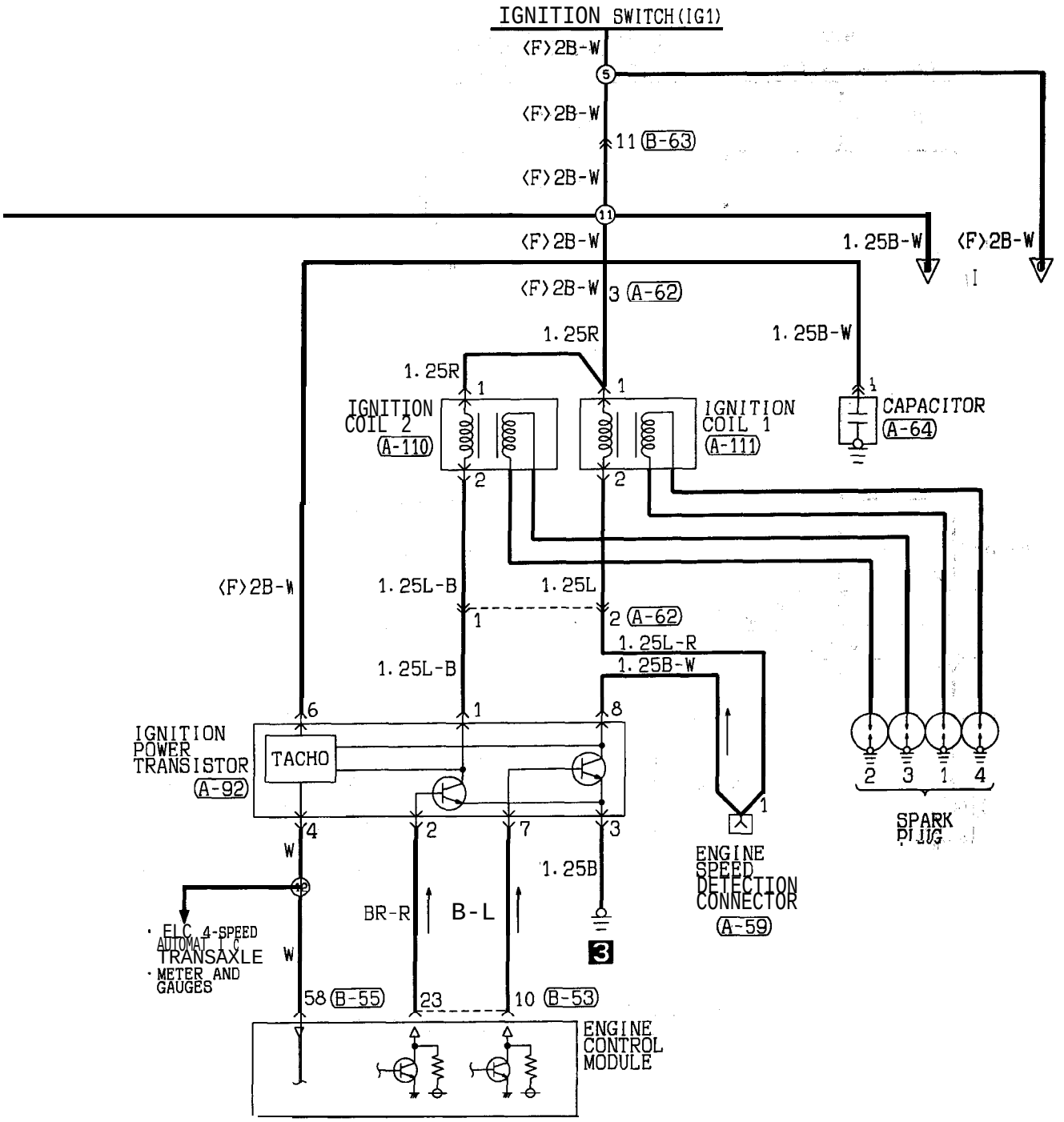

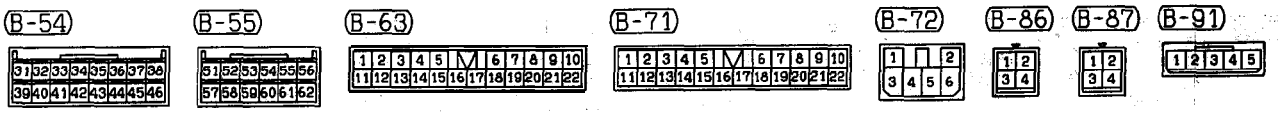

Wire color code
B :Black LG:Light green G :Green L :Blue W :White Y :Yellow SB:Sky blue
BR:Brown O :Orange GR:Gray R :Red P :Pink V :Violet

HF05M02AB

TSB Revision

MFI SYSTEM <2.4L Engine> (CONTINUED)

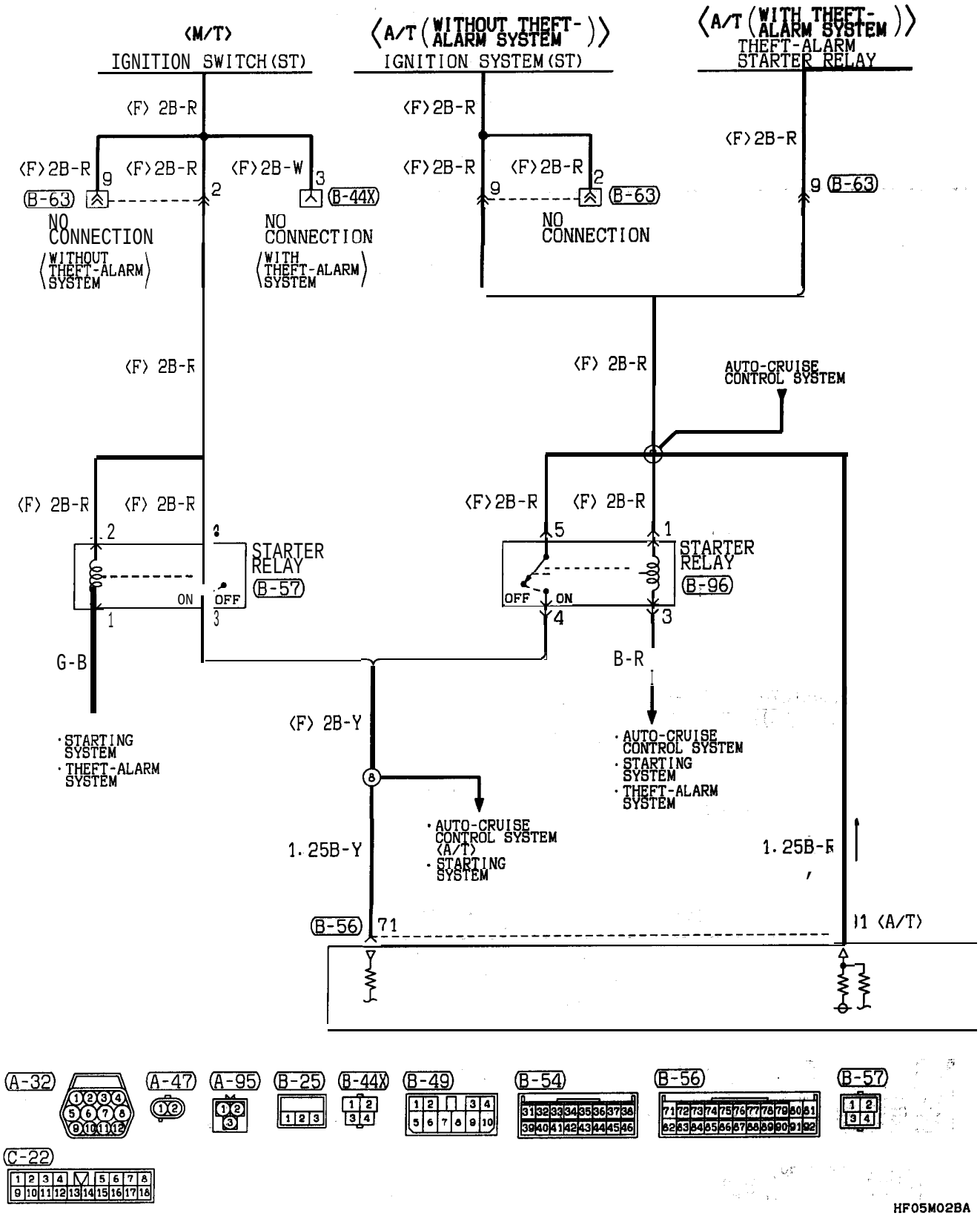

TSB Revision

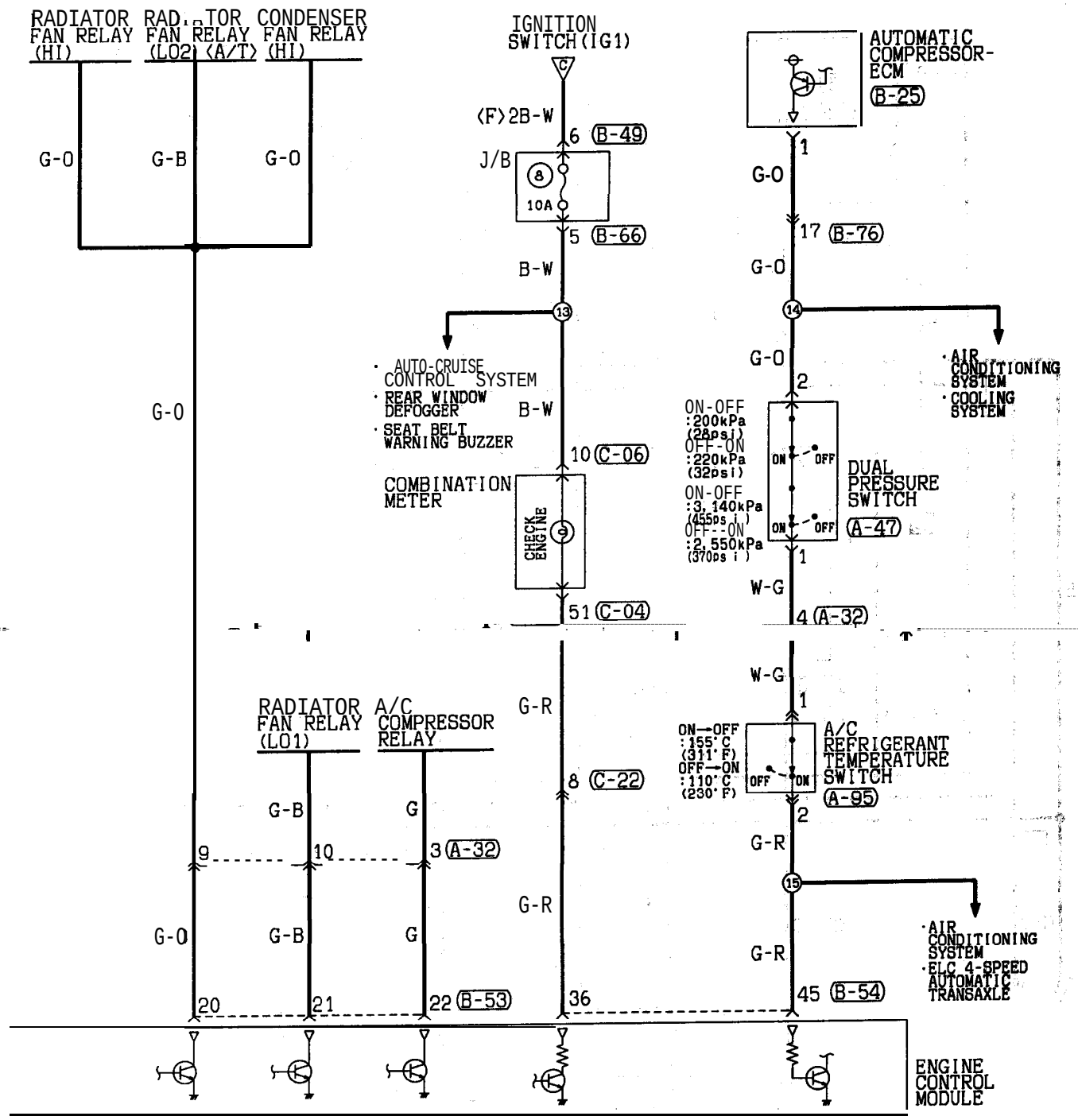

Wire color code
B :Black LG:Light green G :Green L :Blue W :White Y :Yellow SB:Sky blue
BR:Brown O :Orange GR:Gray R :Red P :Pink V :Violet

HF05M02BB

TSB Revision

MFI SYSTEM <2.4L Engine> (CONTINUED)

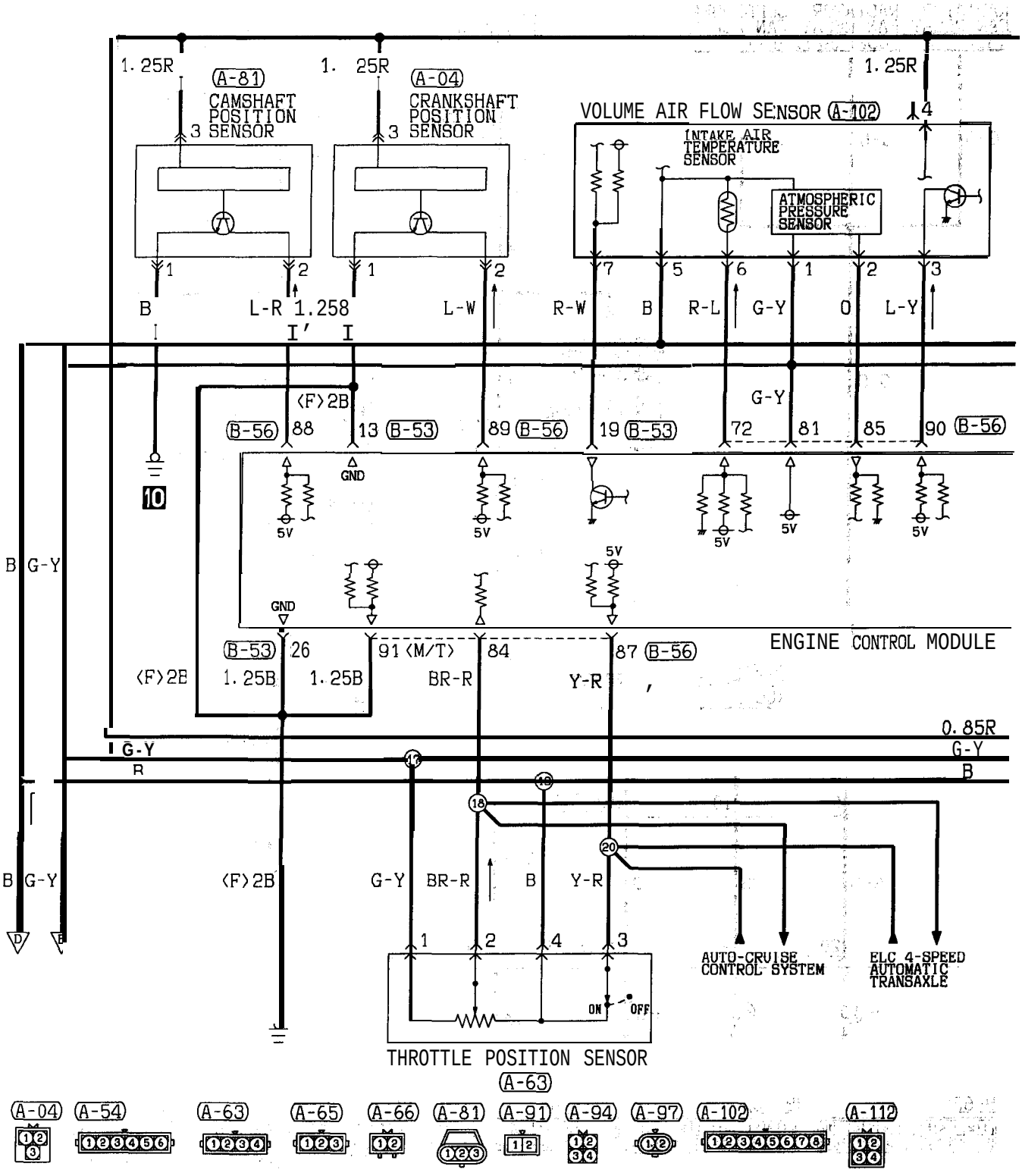

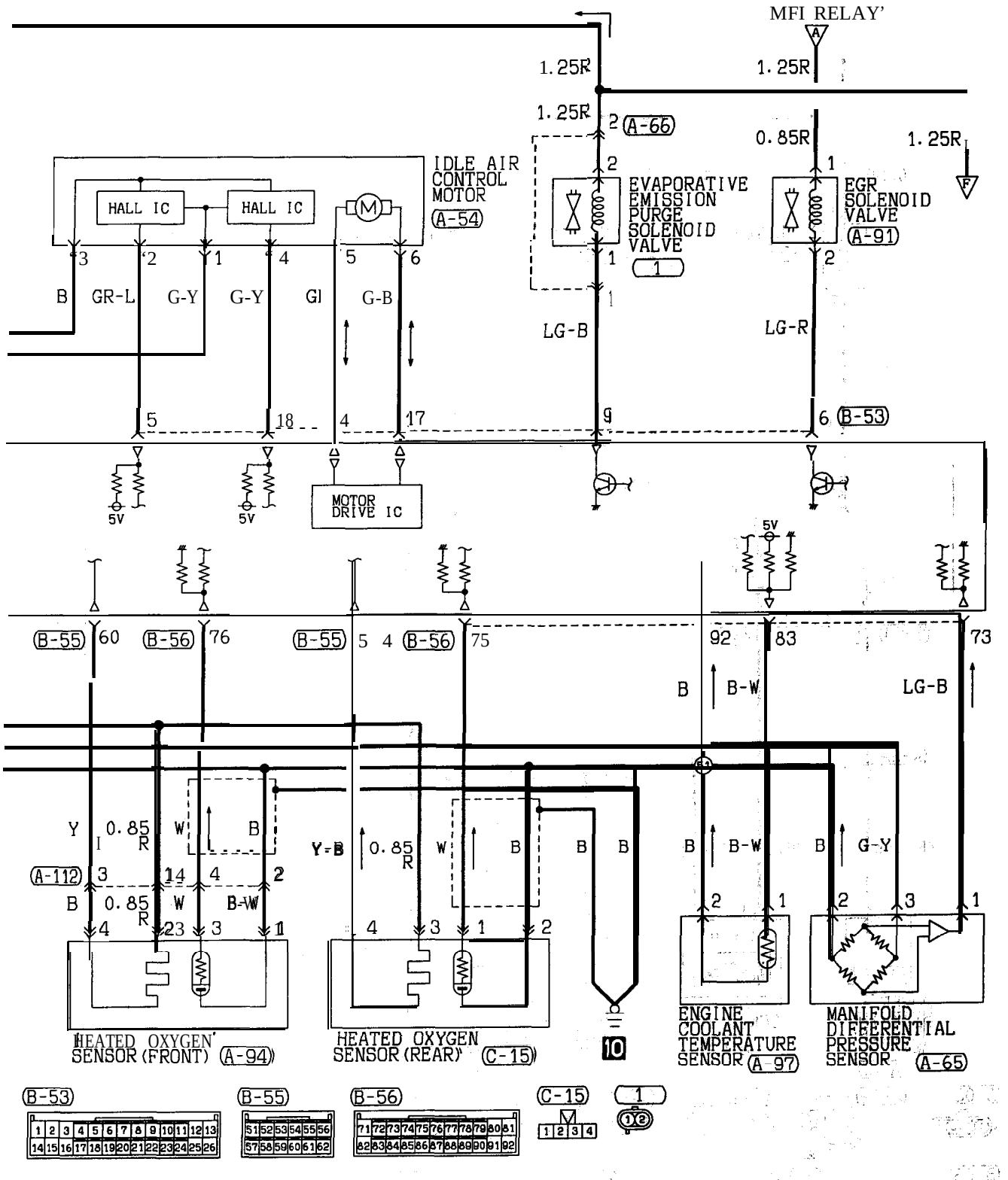

Wire color code
B :Black LG:Light green G :Green L :Blue W :White Y :Yellow SB:Sky blue
BR:Brown O :Orange GR:Gray R :Red P :Pink V :Violet

HE05M02CB

TSB Revision

MFI SYSTEM <2.4L Engine> (CONTINUED)

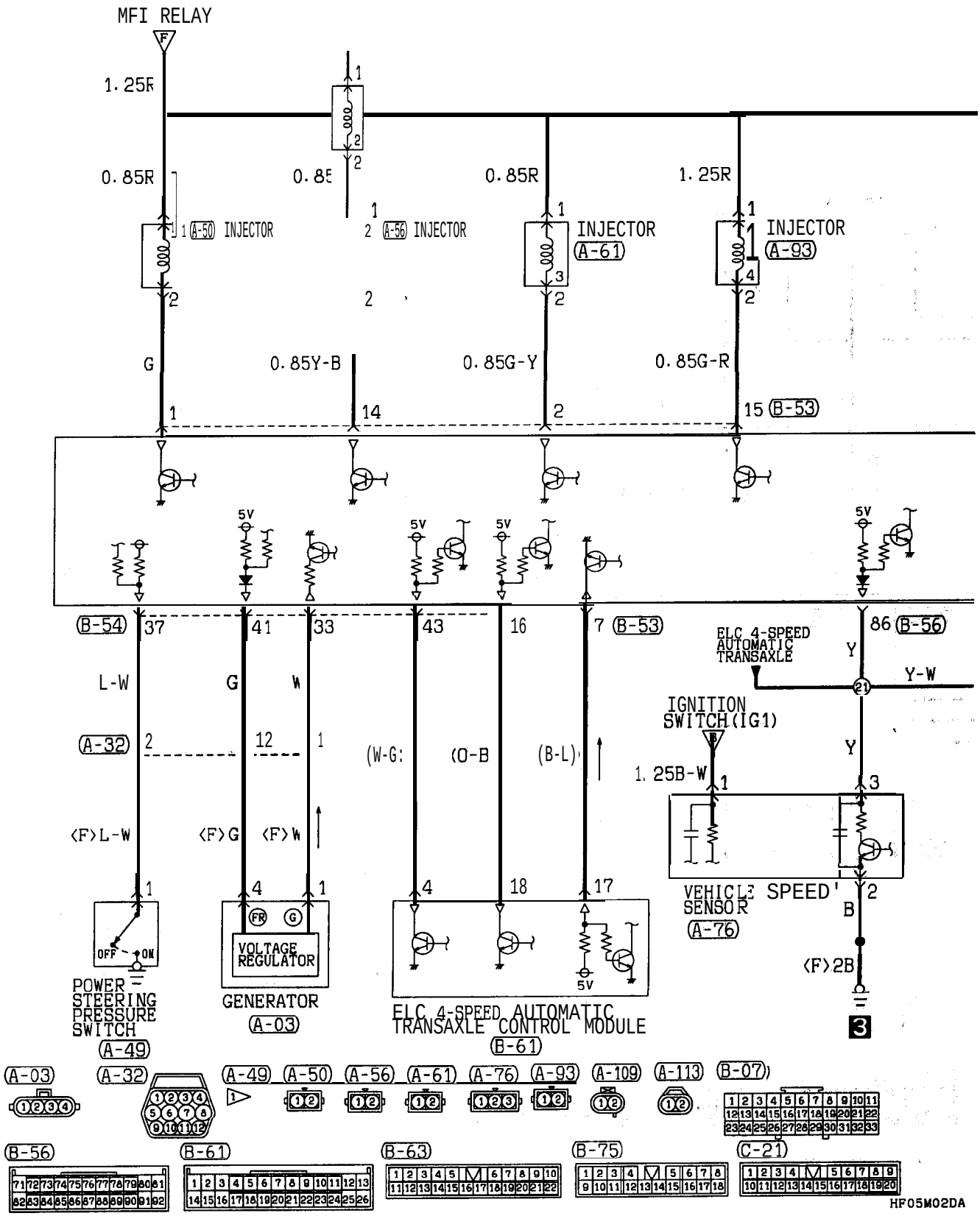

TSB Revision

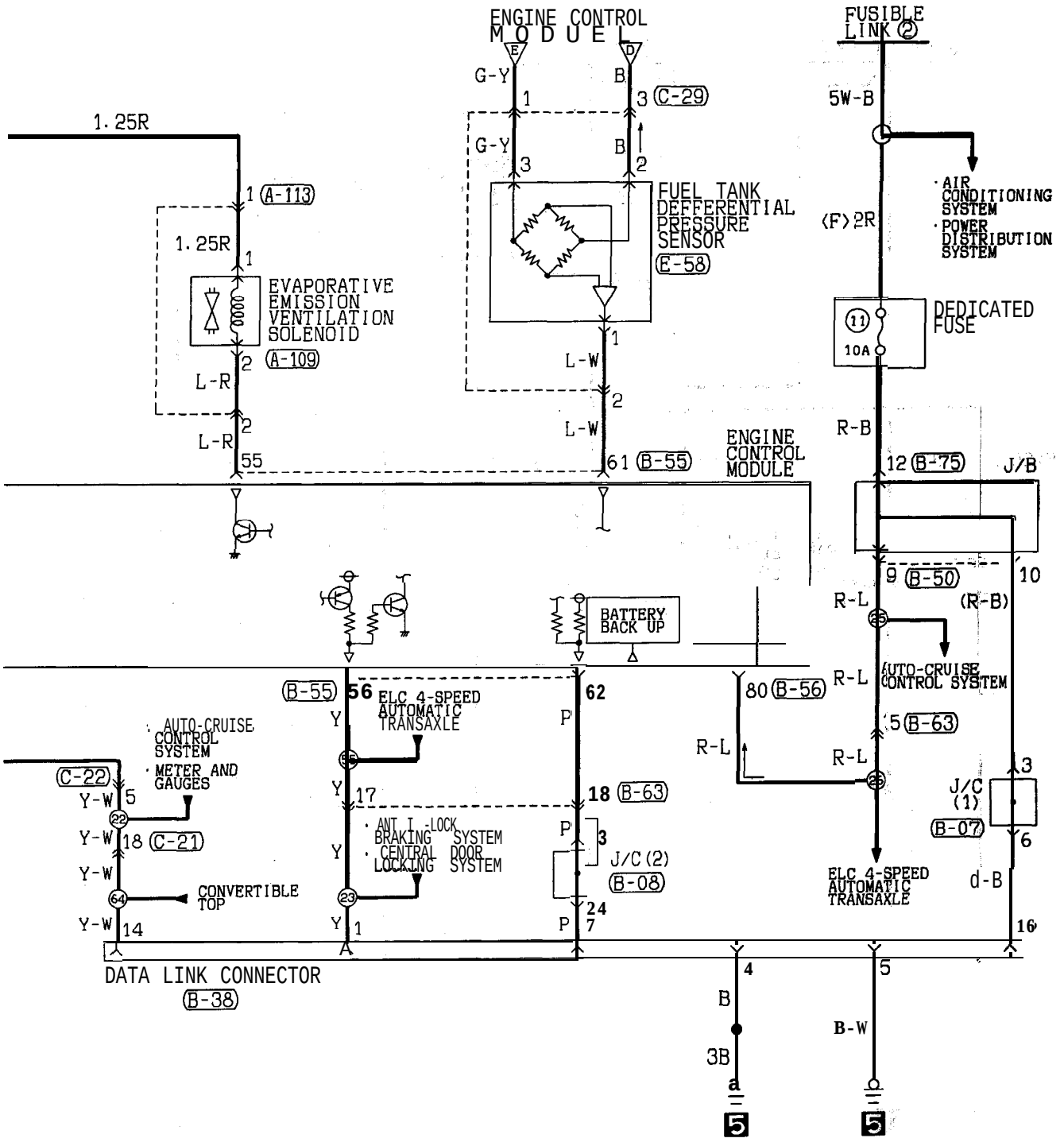

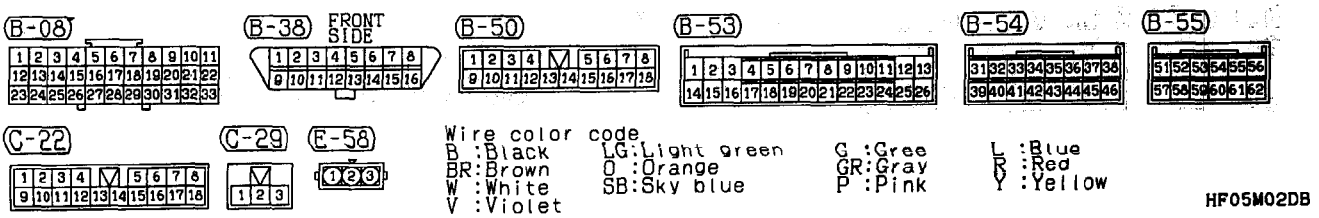

Wire color code
B :Black
BR:Brown
W :White
V :Violet
LG:Light green
O :Orange
SB:Sky blue
G :Gree
GR:Gray
P :Pink
L :Blue
R :Red
Y :Yellow

HF05M02DB

COOLING SYSTEM <2.0L Engine (Non-turbo)-M/T>

90100100345

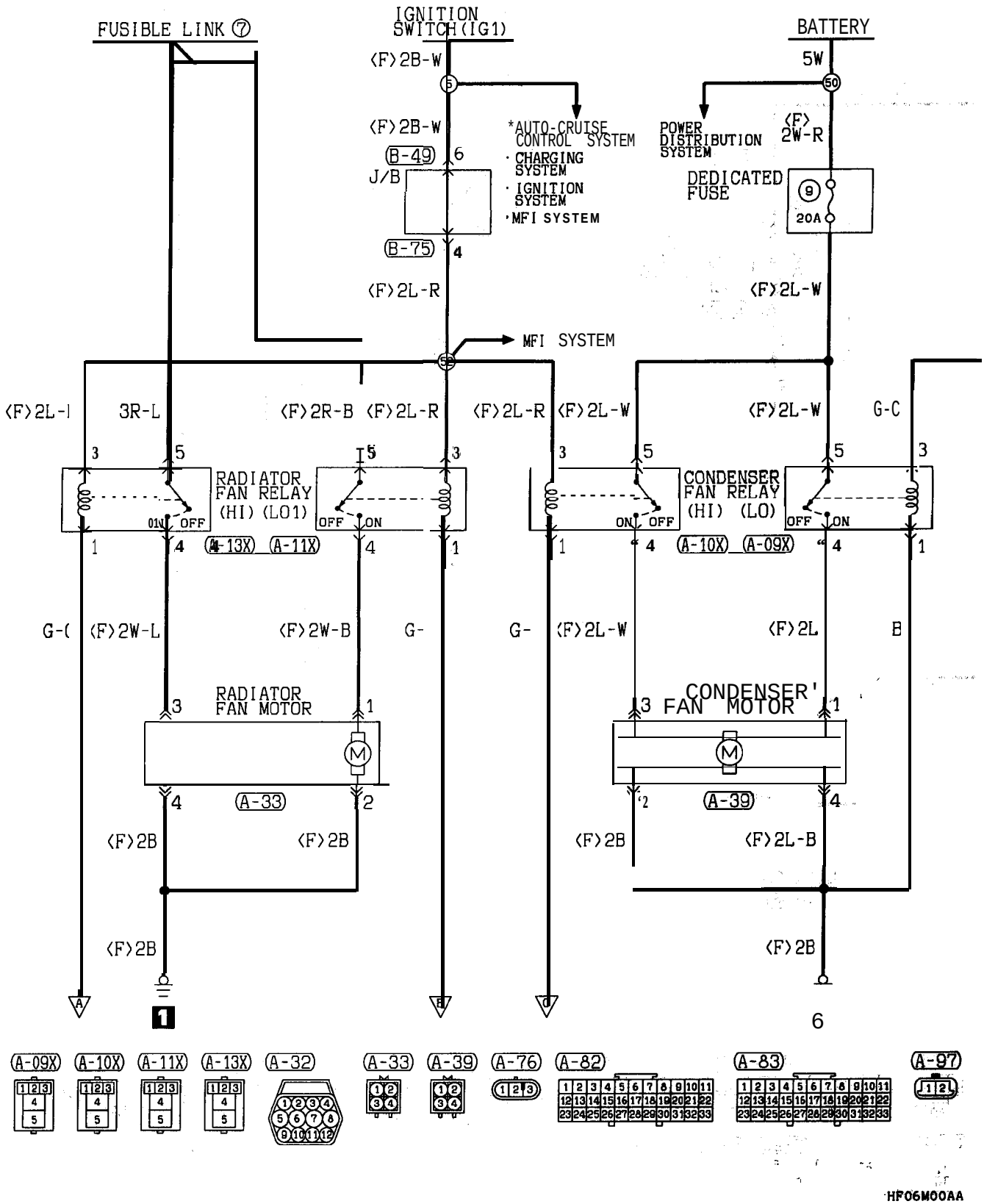

TSB Revision

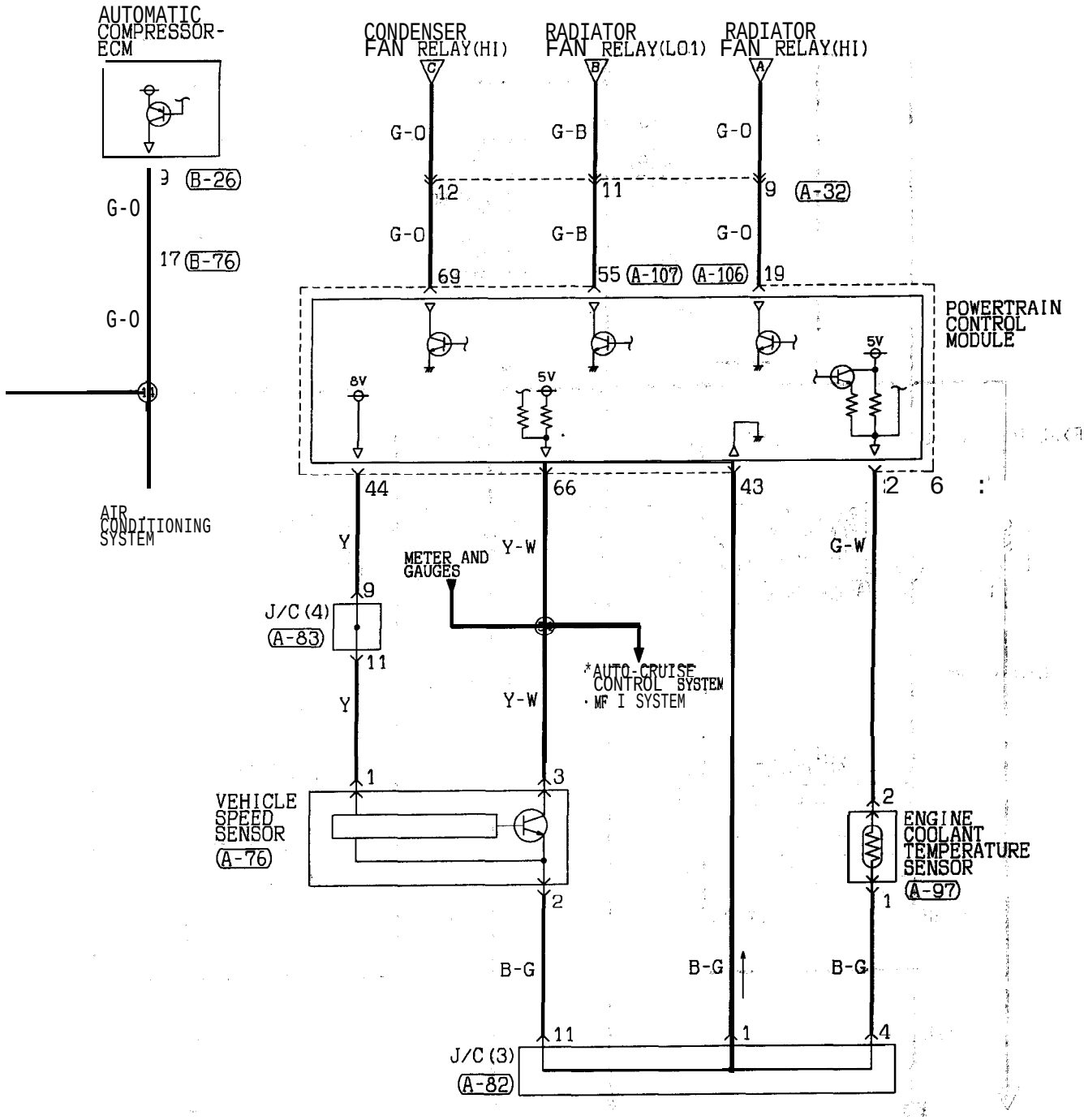

Wire color code
B :Black LG:Light green G :Green L :Blue W :White Y :Yellow SB:Sky blue
BR:Brown O :Orange GR:Gray R :Red P :Pink V :Violet

HF06M00AB

COOLING SYSTEM <2.0L Engine (Non-turbo)-A/T>

90100100252

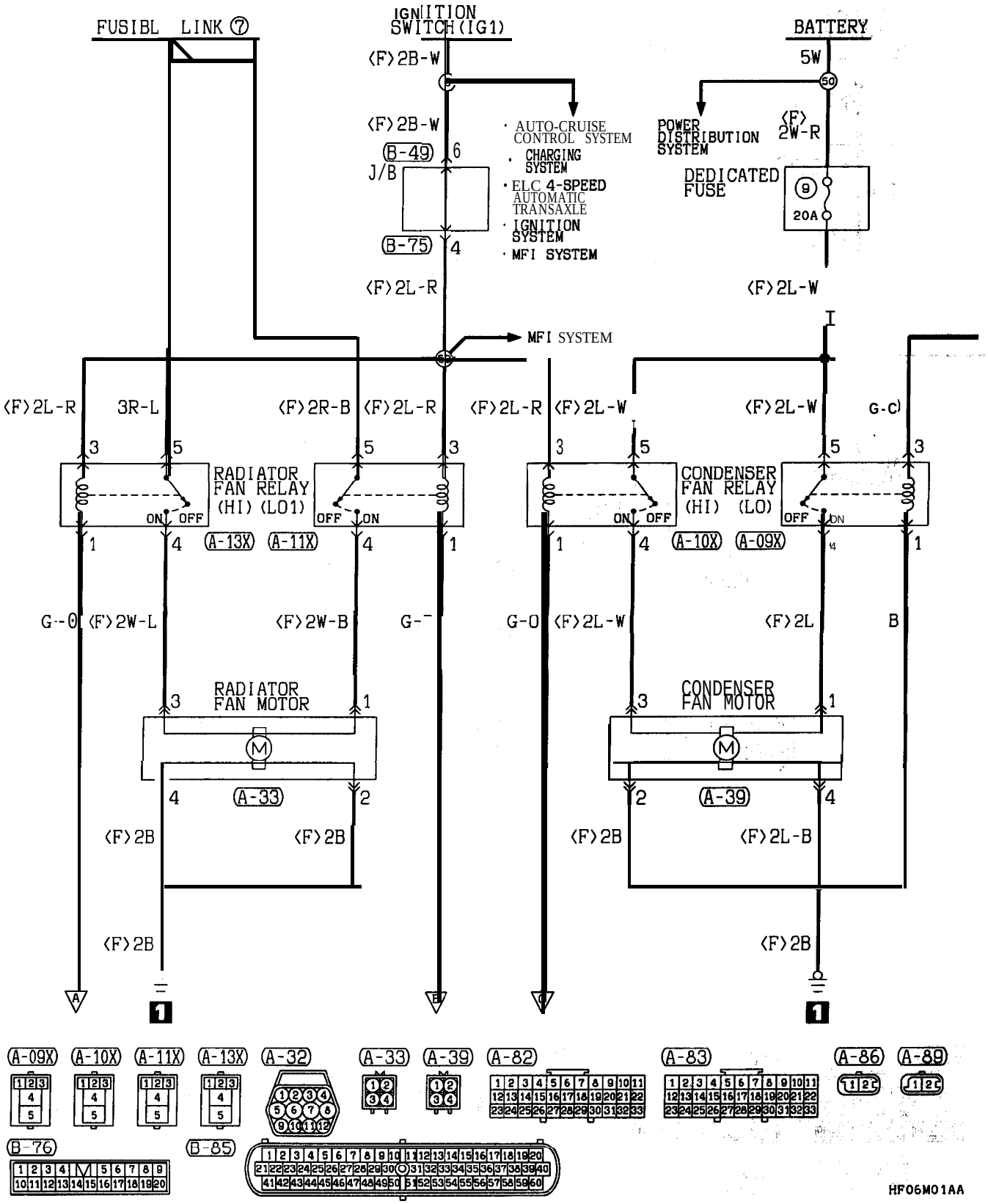

TSB Revision

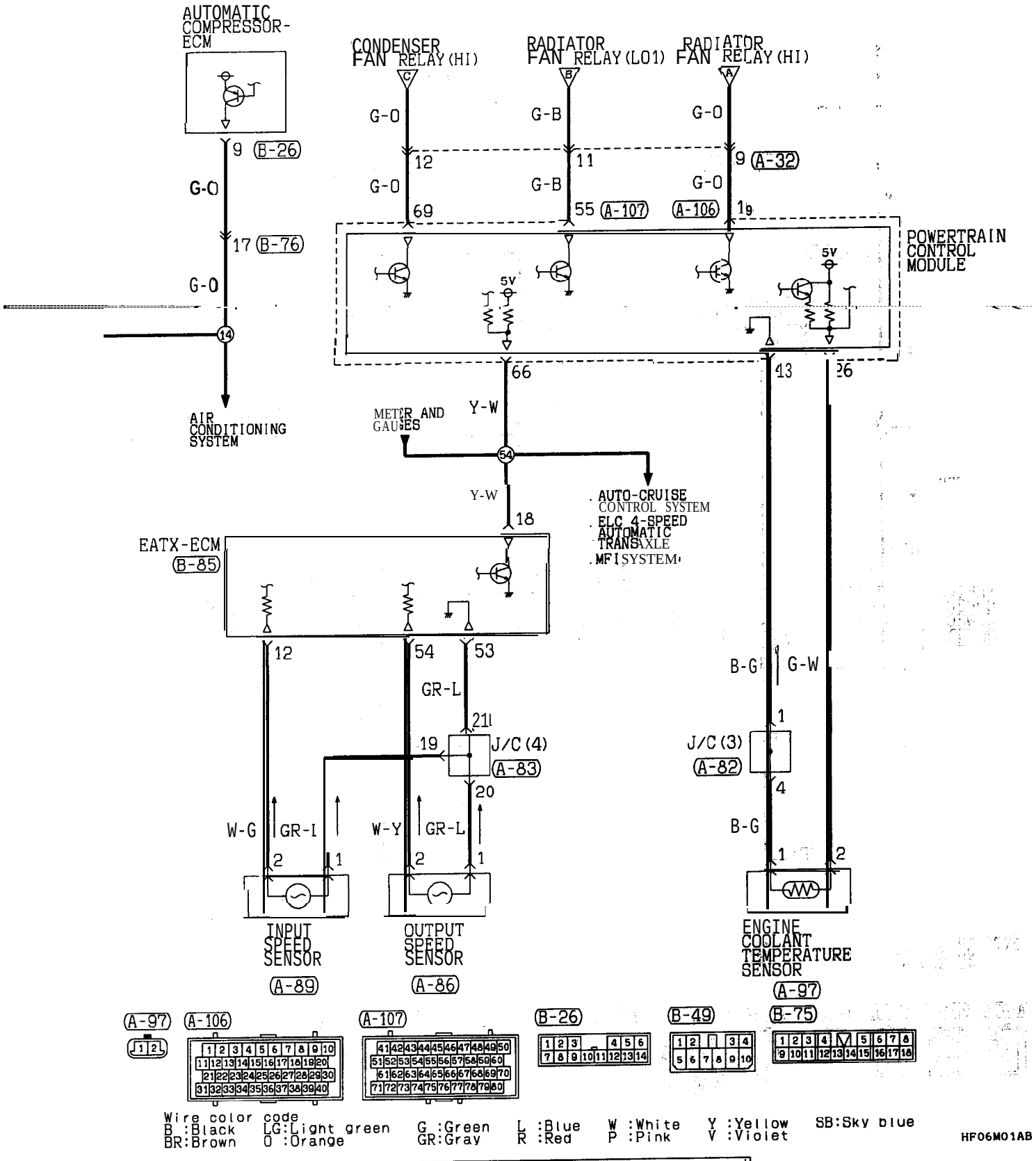

TSB Revision

COOLING SYSTEM
<2.0L Engine (Turbo)-M/T and 2.4L Engine-M/T>

90100100369

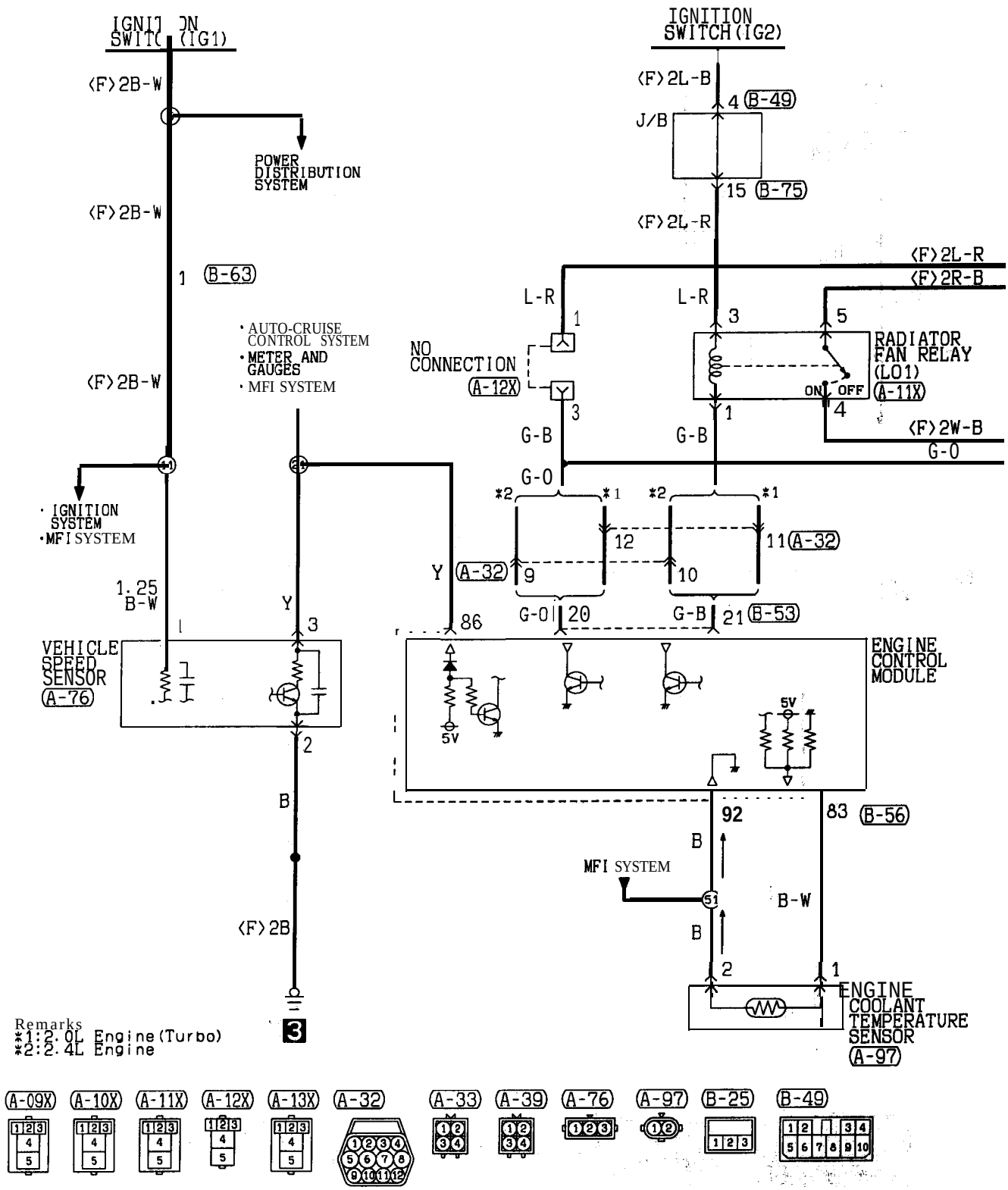

HF06M02AA

TSB Revision

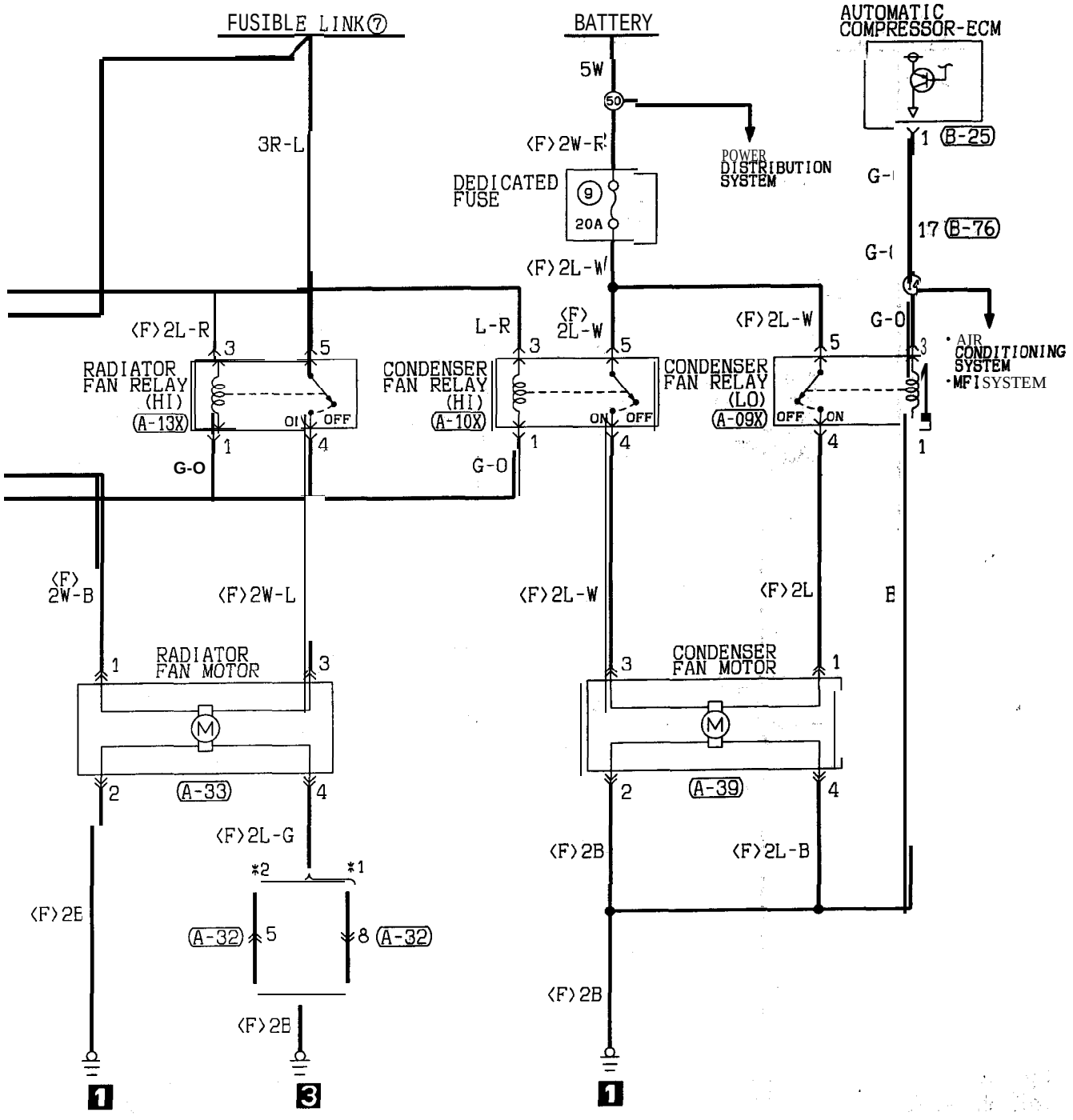

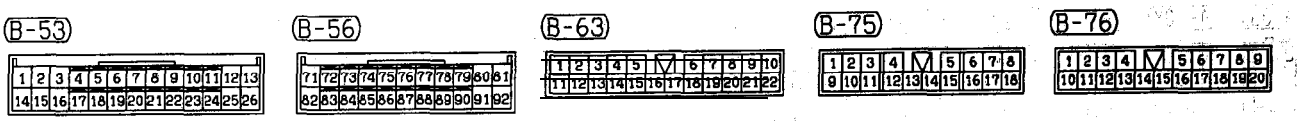

Wire color code

B :Black	LG:Light green	G :Green	L :Blue	W :White	Y :Yellow	SB:Sky blue
BR:Brown	O :Orange	GR:Gray	R :Red	P :Pink	V :Violet	

HF06M02AB

TSB Revision

COOLING SYSTEM
<2.0L Engine (Turbo)-A/T and 2.4L Engine-A/T>

90100100376

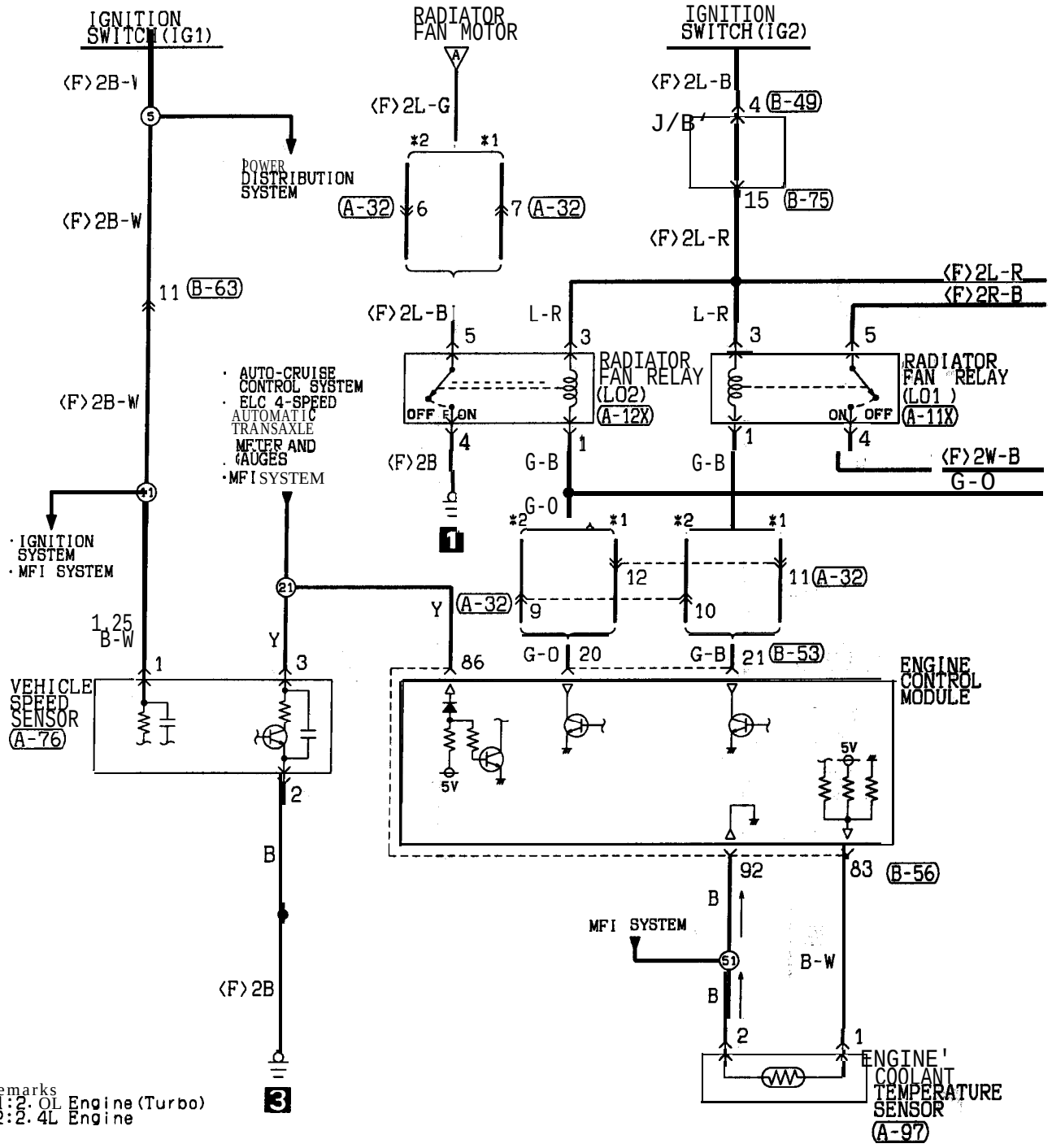

HF06M03AA

TSB Revision

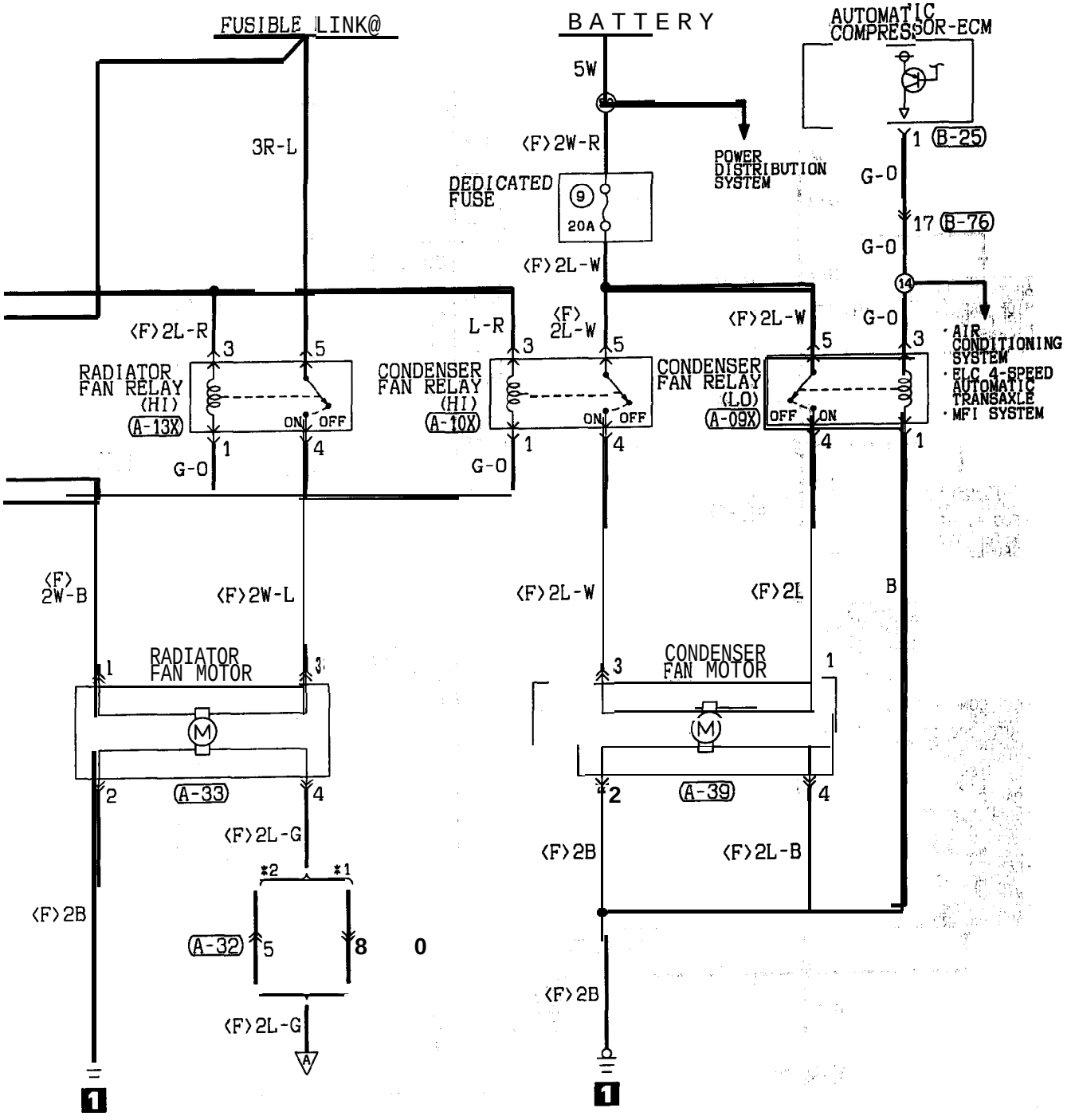

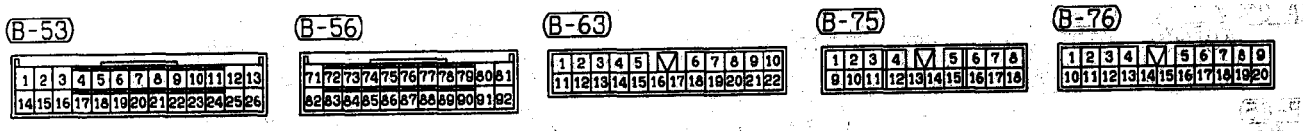

Wire color code
B :Black LG:Light green G :Green L :Blue W :White Y :Yellow SB:Sky blue
BR:Brown O :Orange GR:Gray R :Red P :Pink V :Violet

HF06M03AB

ELC 4-SPEED AUTOMATIC TRANSAXLE <2.0L Engine (Non-turbo)>

90100120303

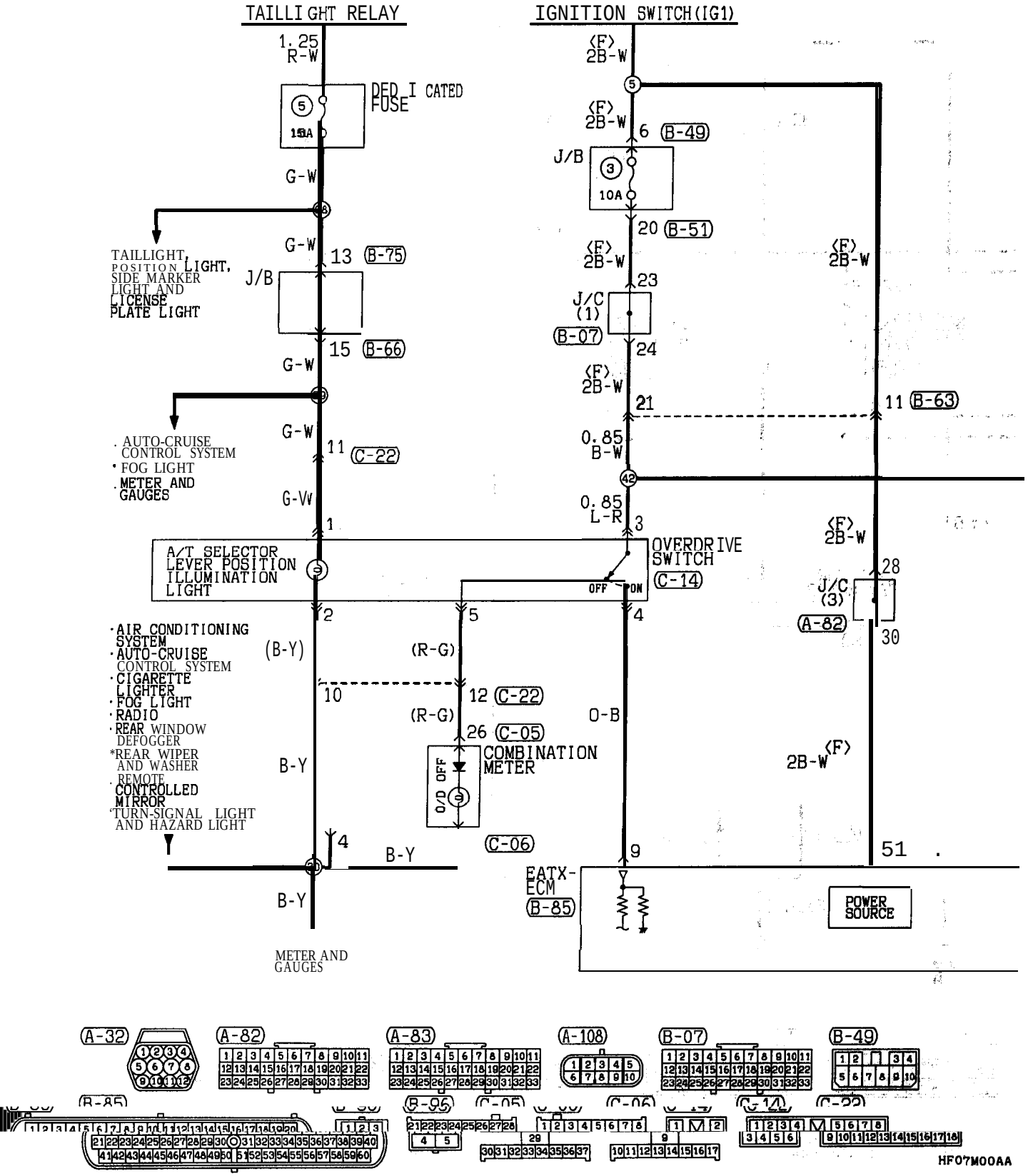

TSB Revision

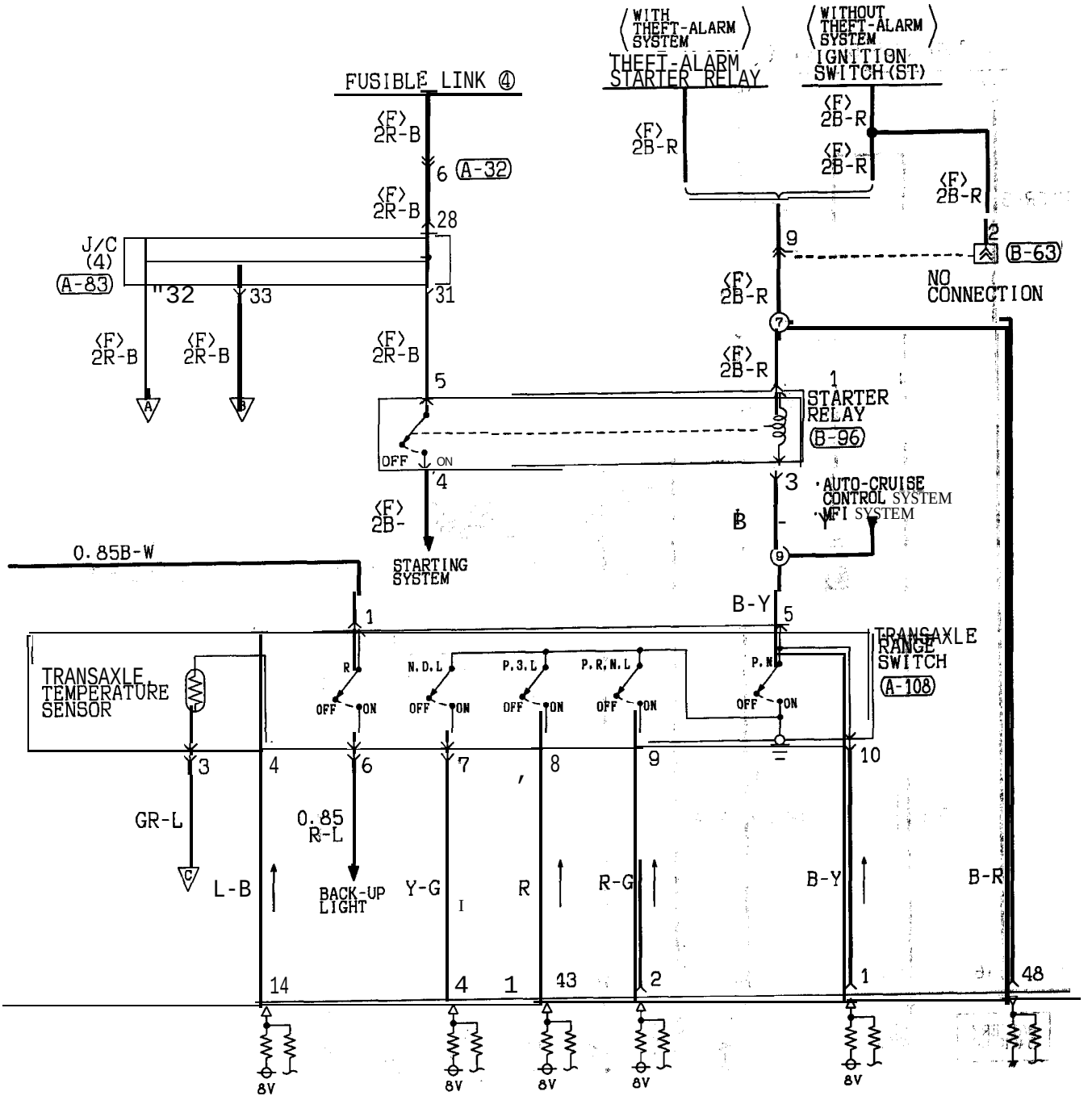

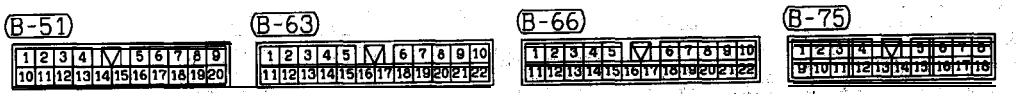

Wire color code
B :Black LG:Light green G :Green L :Blue W :White Y :Yellow SB:Sky blue
BR:Brown O :Orange GR:Gray R :Red P :Pink V :Violet

HF07M00AB

TSB Revision

ELC 4-SPEED AUTOMATIC TRANSAXLE <2.0L Engine (Non-turbo)> (CONTINUED)

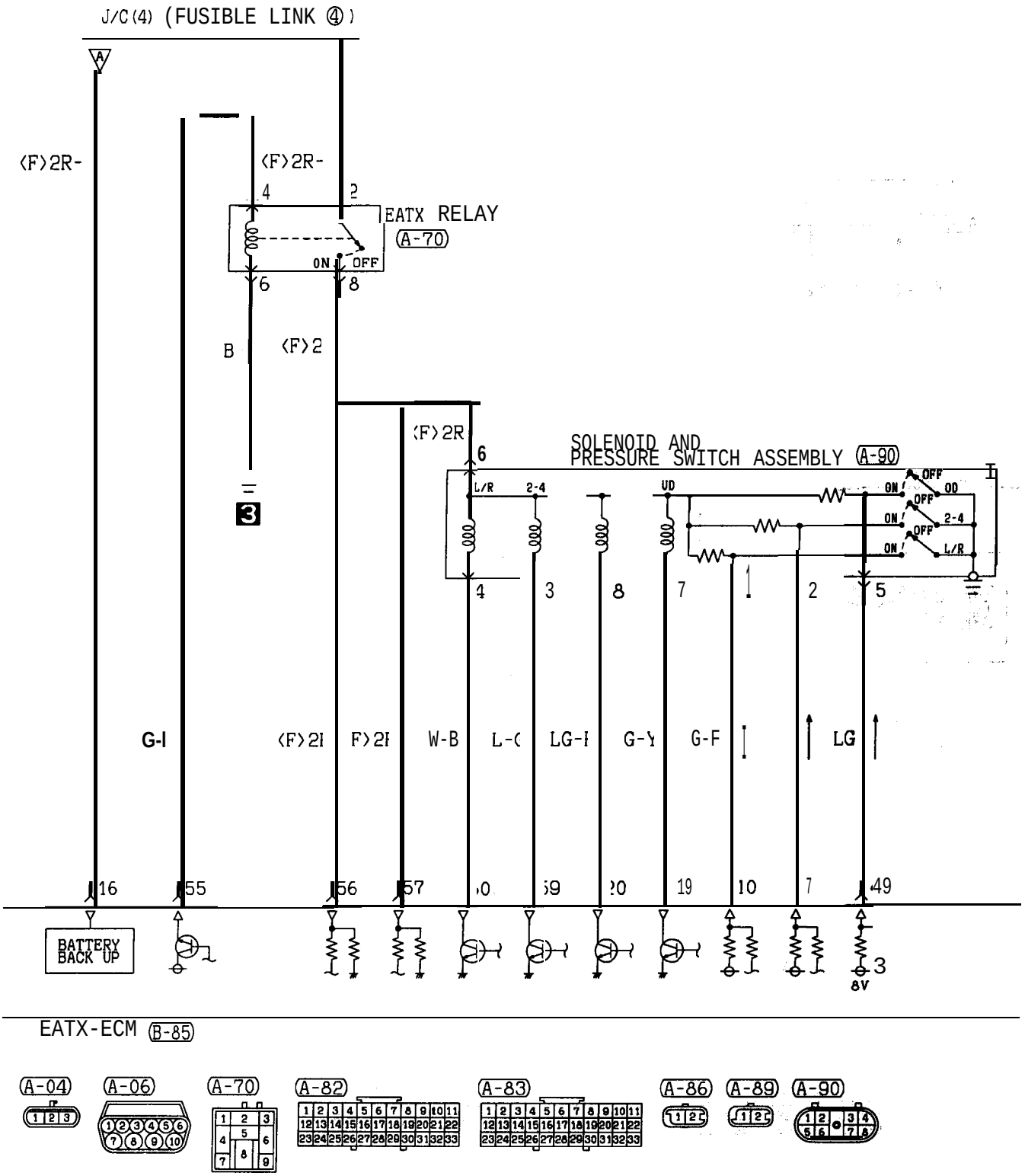

HF07M00BA

TSB Revision

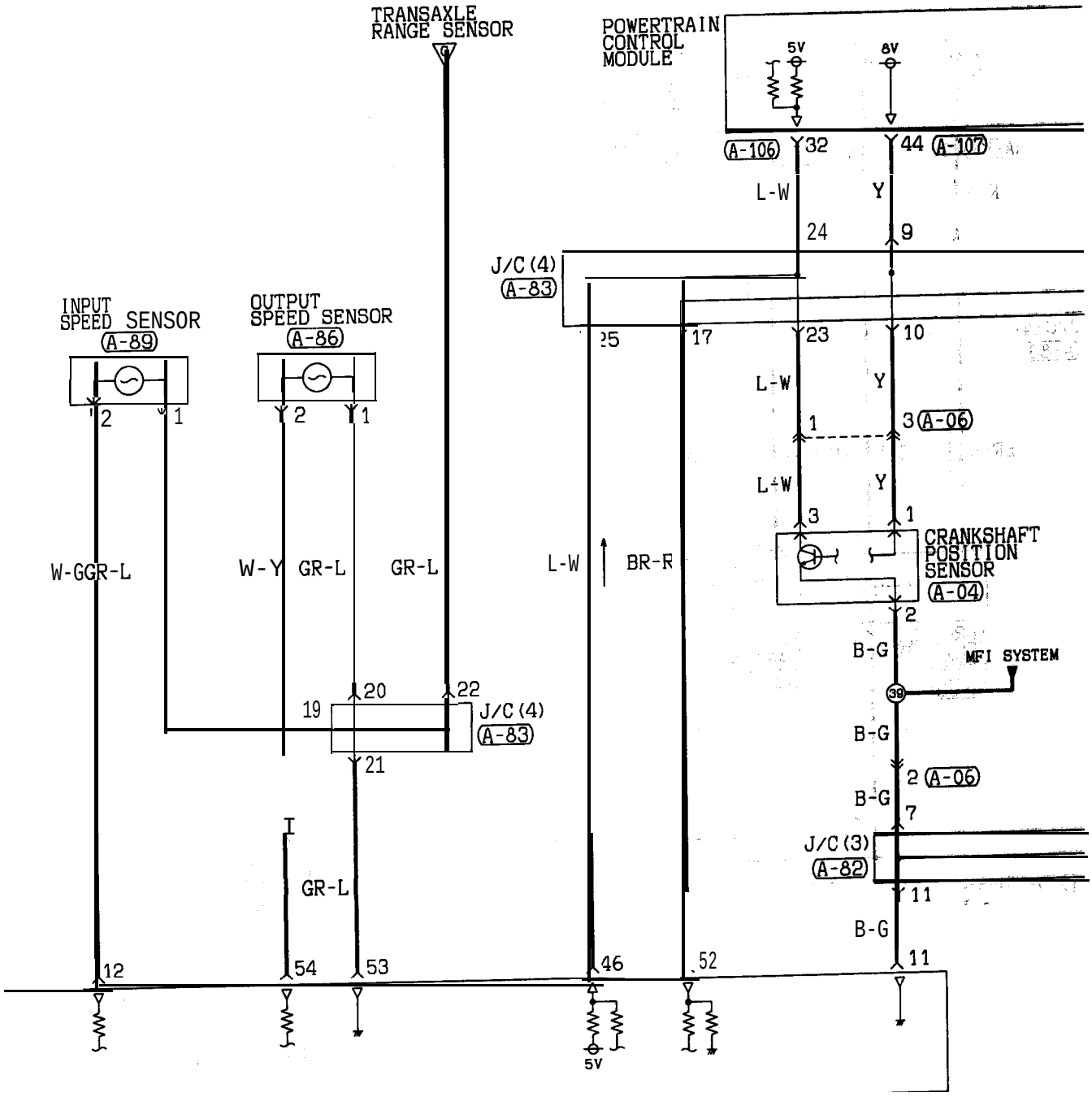

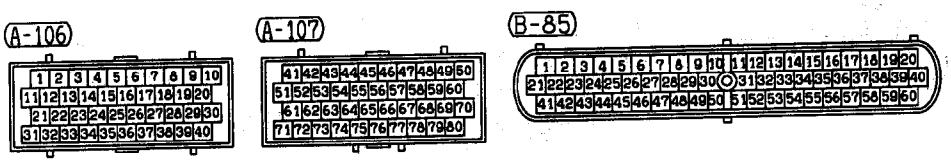

Wire color code
B :Black LG:Light green G :Green L :Blue W :White Y :Yellow SB:Sky blue
BR:Brown O :Orange GR:Gray R :Red P :Pink V :Violet

HF07M00BB

TSB Revision

ELC 4-SPEED AUTOMATIC TRANSAXLE <2.0L Engine (Non-turbo)> (CONTINUED)

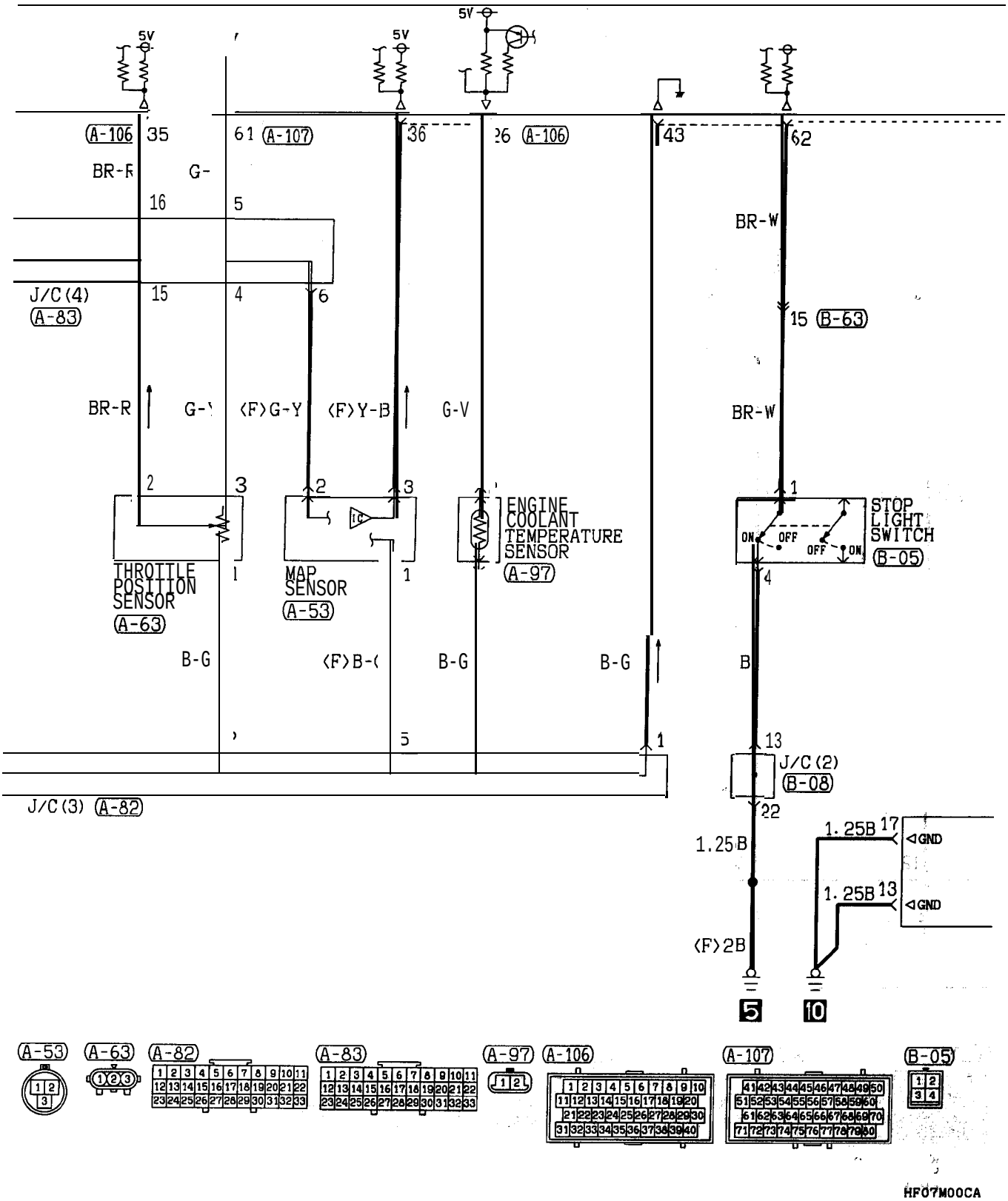

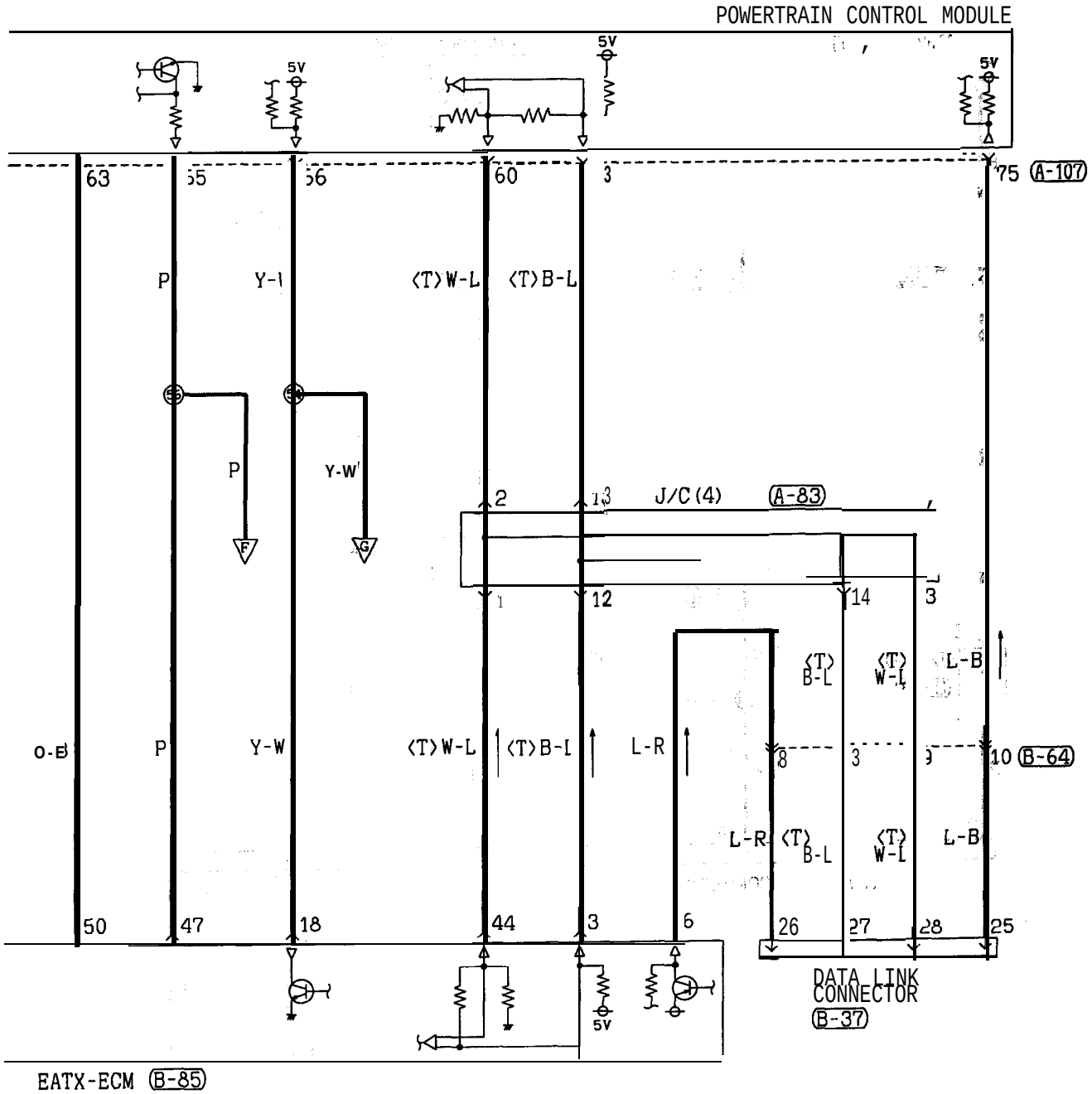

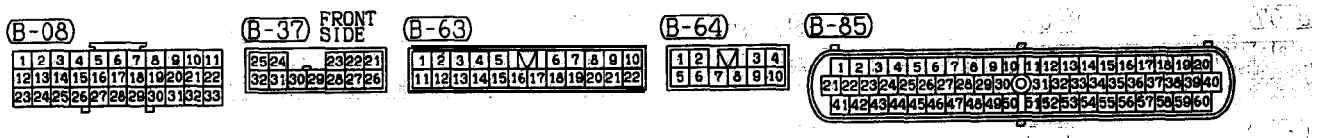

Wire color code
B :Black LG:Light Green G :Green L :Blue W :White Y :Yellow SB:Sky blue
BR:Brown O :Orange GR:Gray R :Red P :Pink V :Violet

HF07M00CB

TSB Revision

ELC 4-SPEED AUTOMATIC TRANSAXLE <2.0L Engine (Non-turbo)> (CONTINUED)

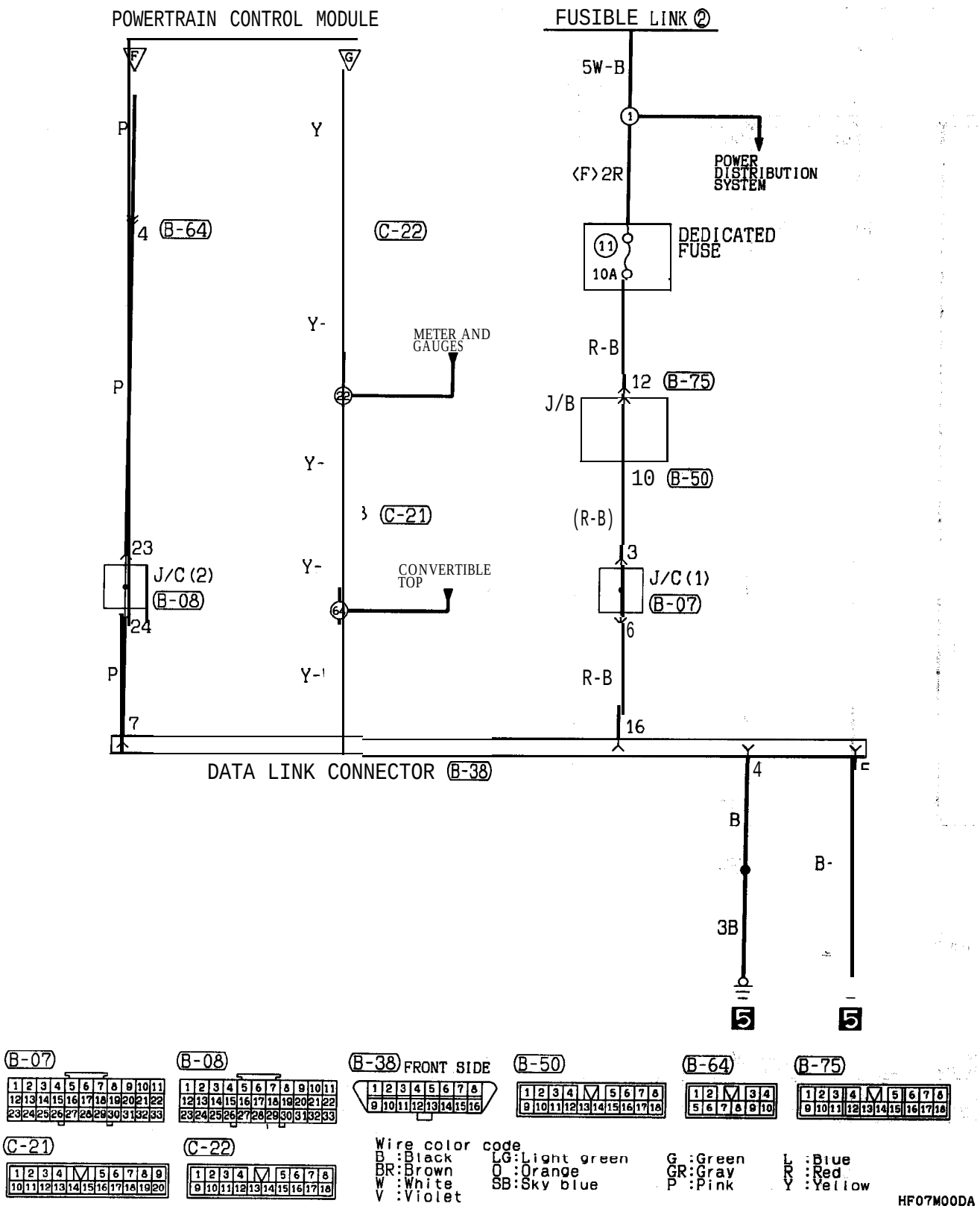

NOTES

ELC 4-SPEED AUTOMATIC TRANSAXLE <2.0L Engine (Turbo) and 2.4L Engine>

90100120310

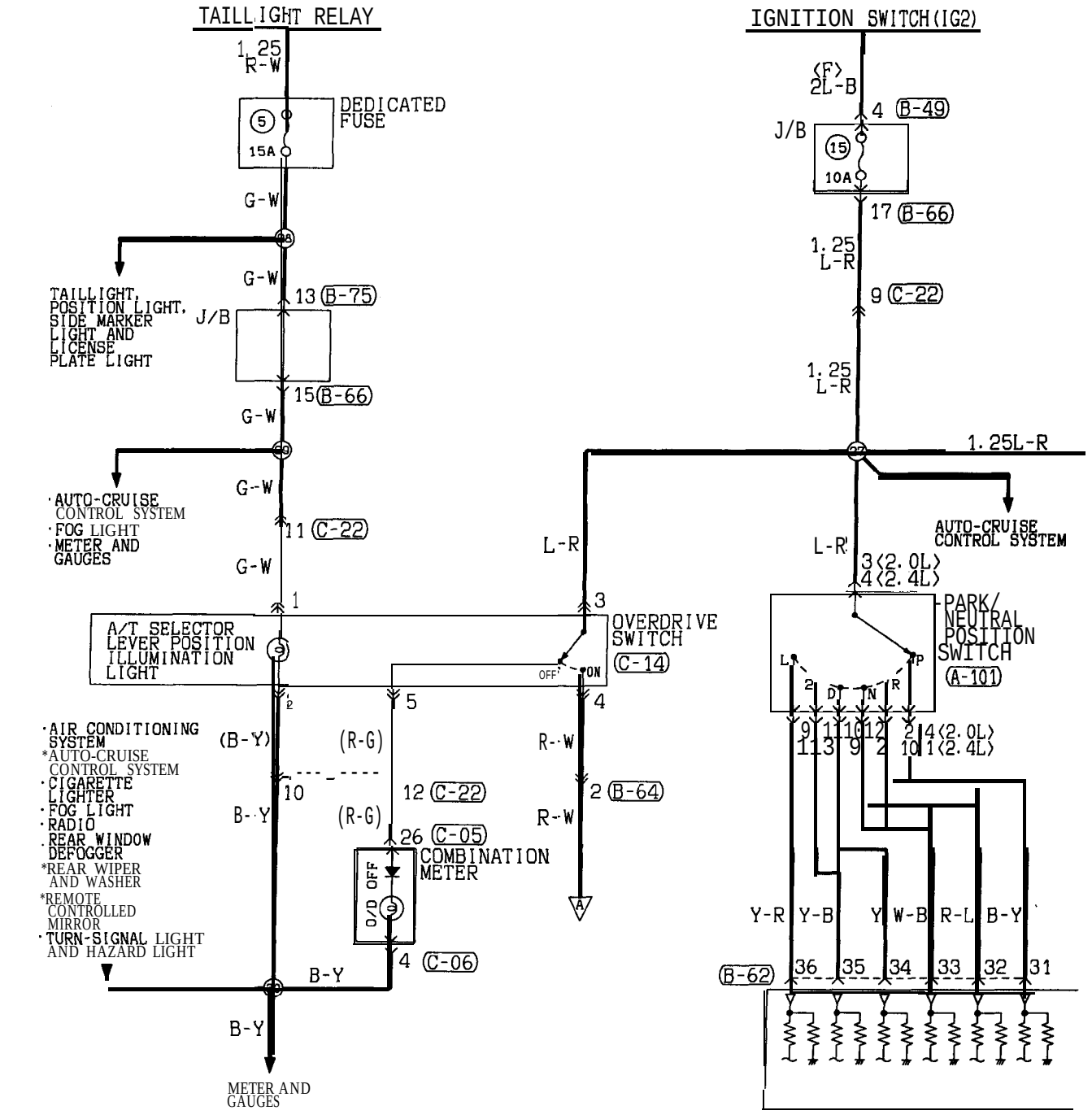

TSB Revision

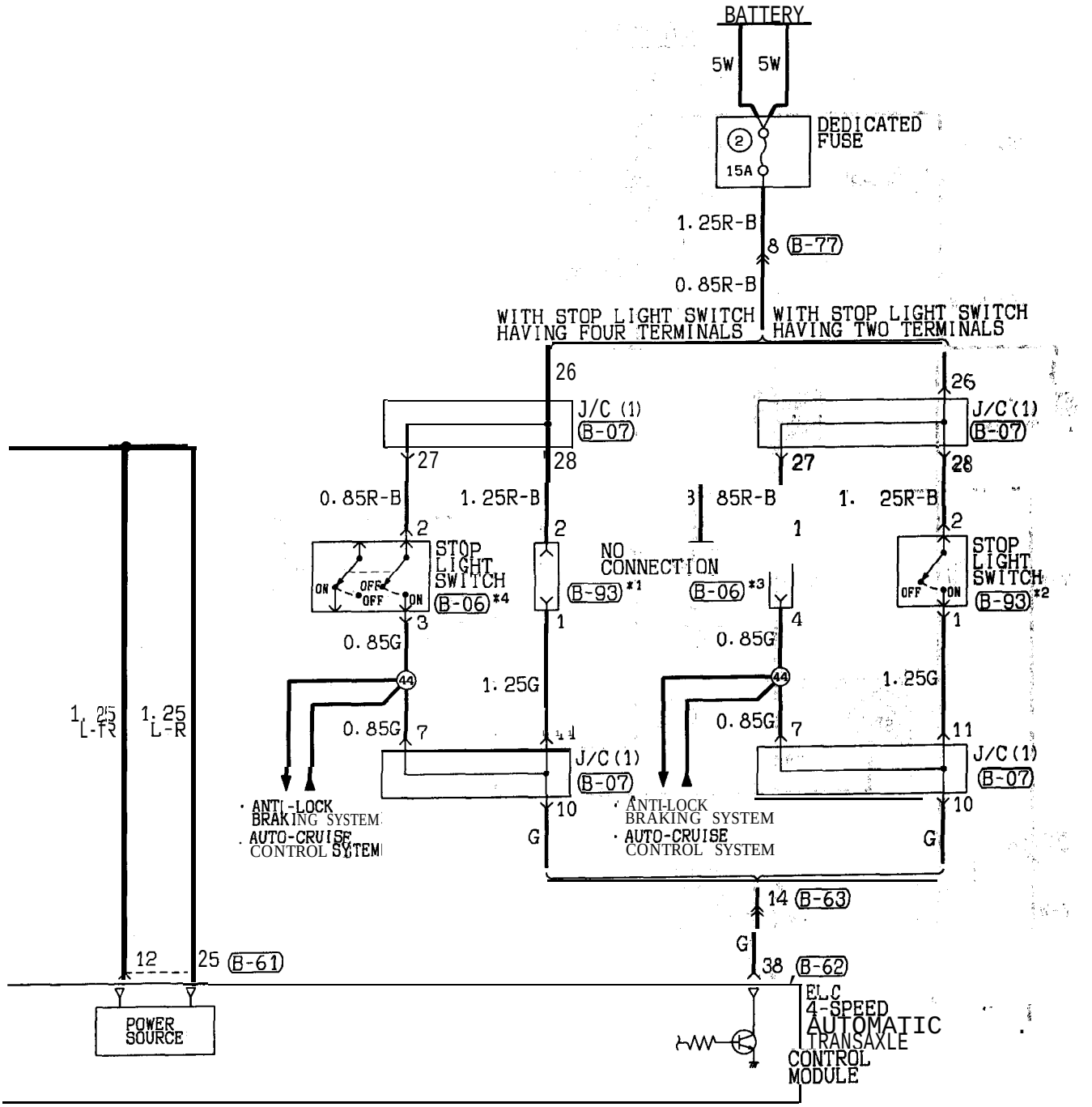

Wire color code
B :Black LG:Light green G :Green L :Blue W :White Y :Yellow SB:Sky blue
BR:Brown O :Orange GR:Gray R :Red P :Pink V :Violet

HF07M01AB

TSB Revision

ELC 4-SPEED AUTOMATIC TRANSAXLE <2.0L Engine (Turbo) and 2.4L Engine> (CONTINUED)

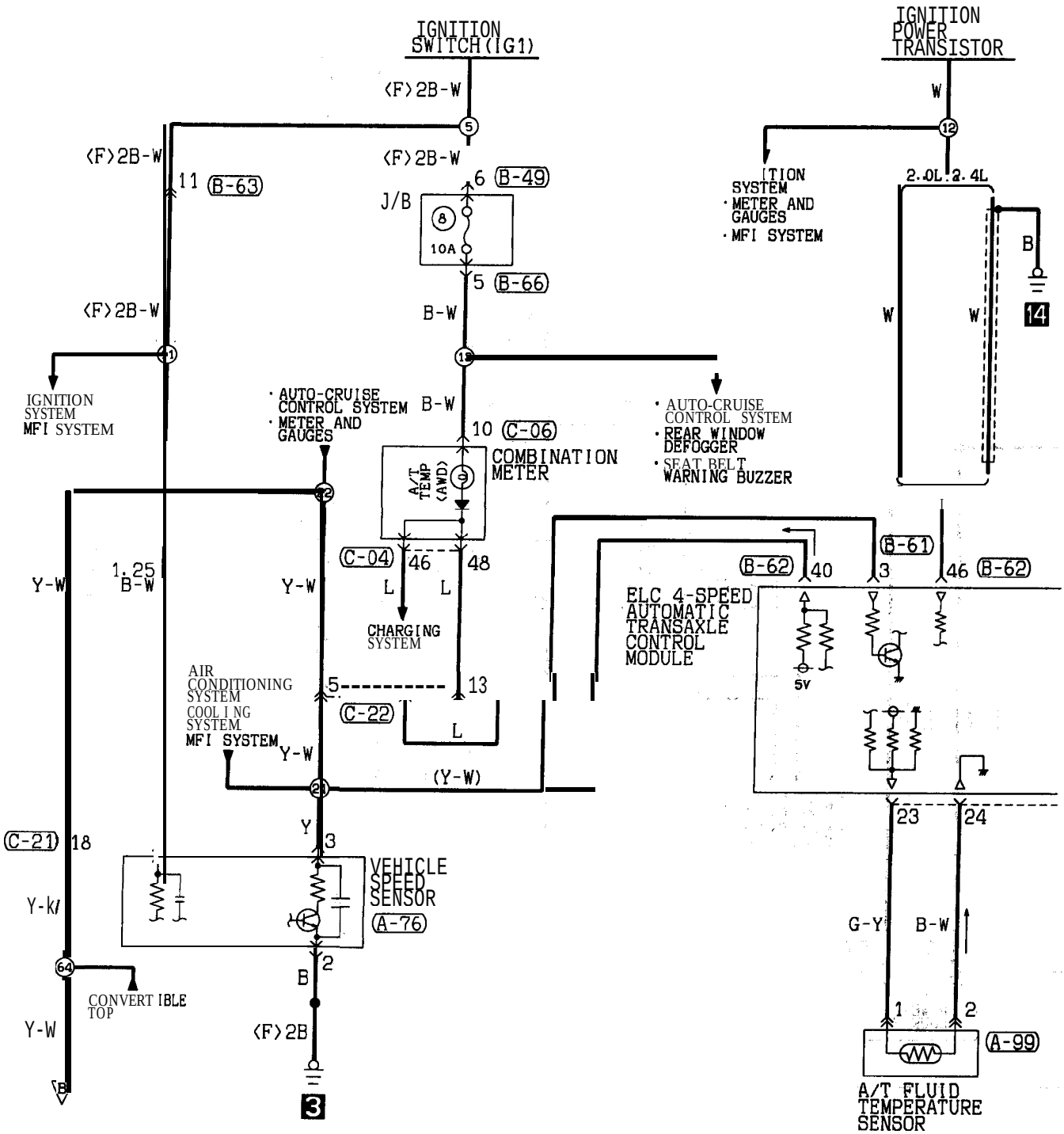

TSB Revision

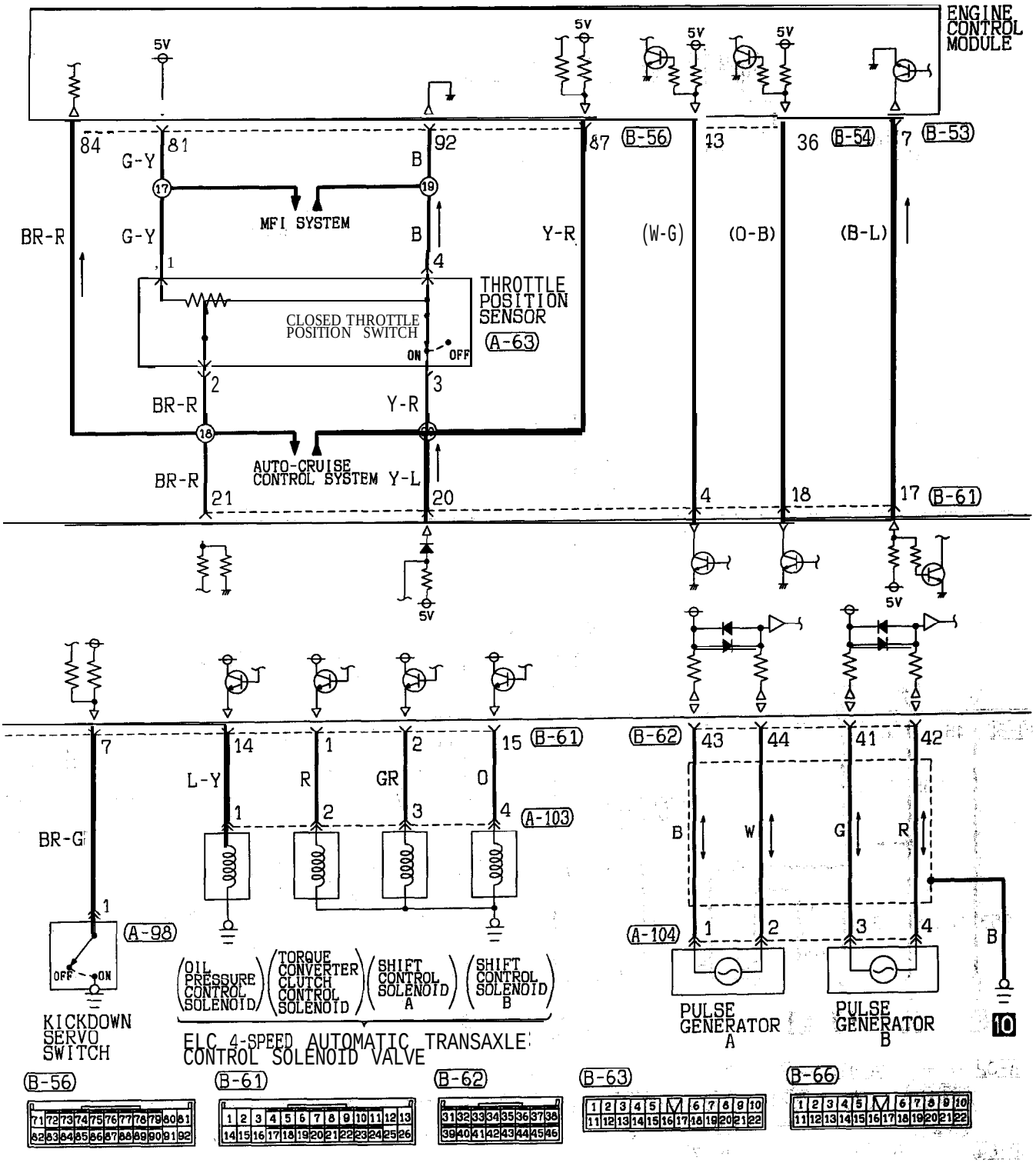

Wire color code

B :Black	LG:Light green	G :Green	L :Blue	W :White	Y :Yellow SB:Sky blue
BR:Brown	O :Orange	GR:Gray	R :Red	P :Pink	V :Violet

HF07M01BB

TSB Revision

ELC 4-SPEED AUTOMATIC TRANSAXLE <2.0L Engine (Turbo) and 2.4L Engine> (CONTINUED)

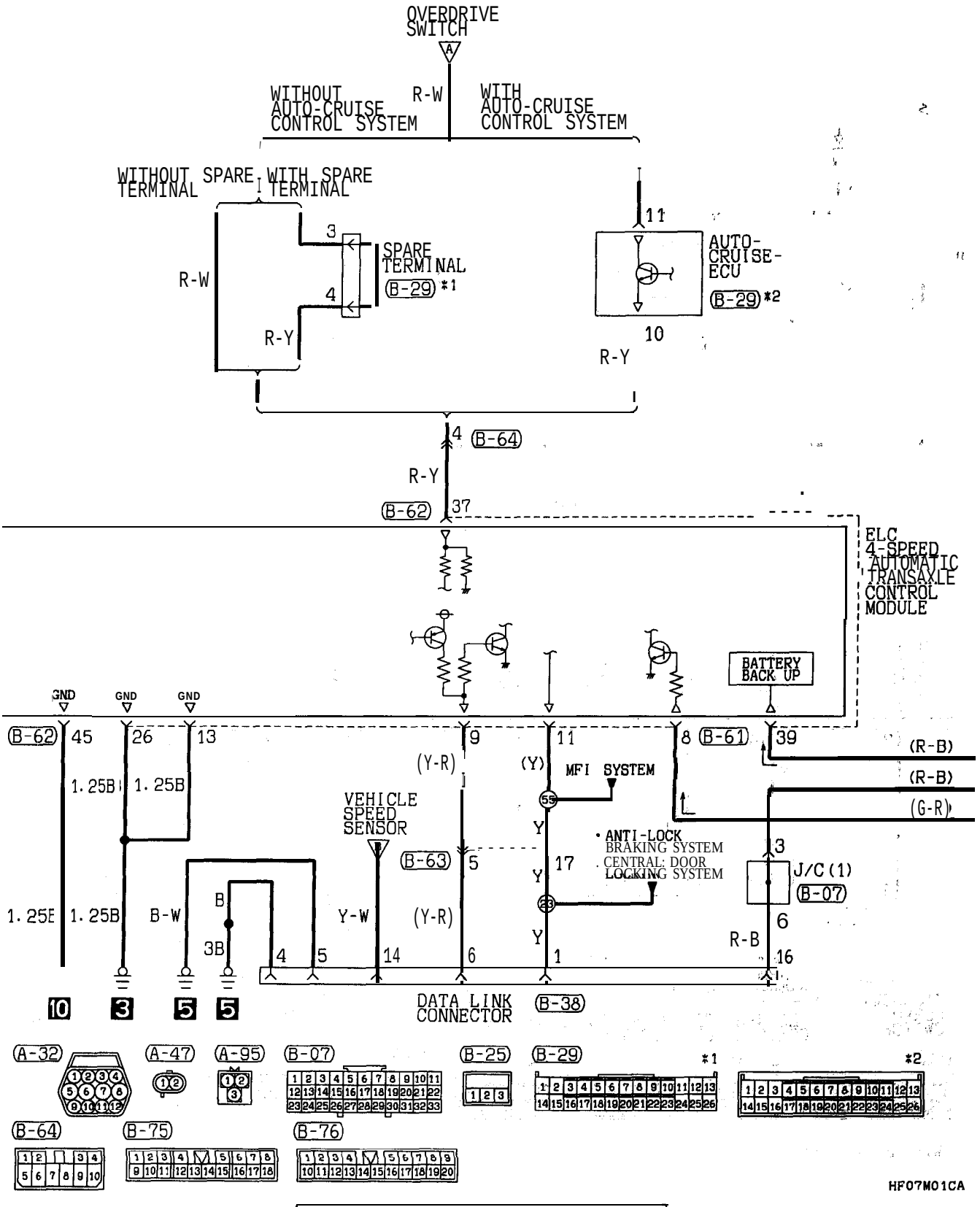

TSB Revision

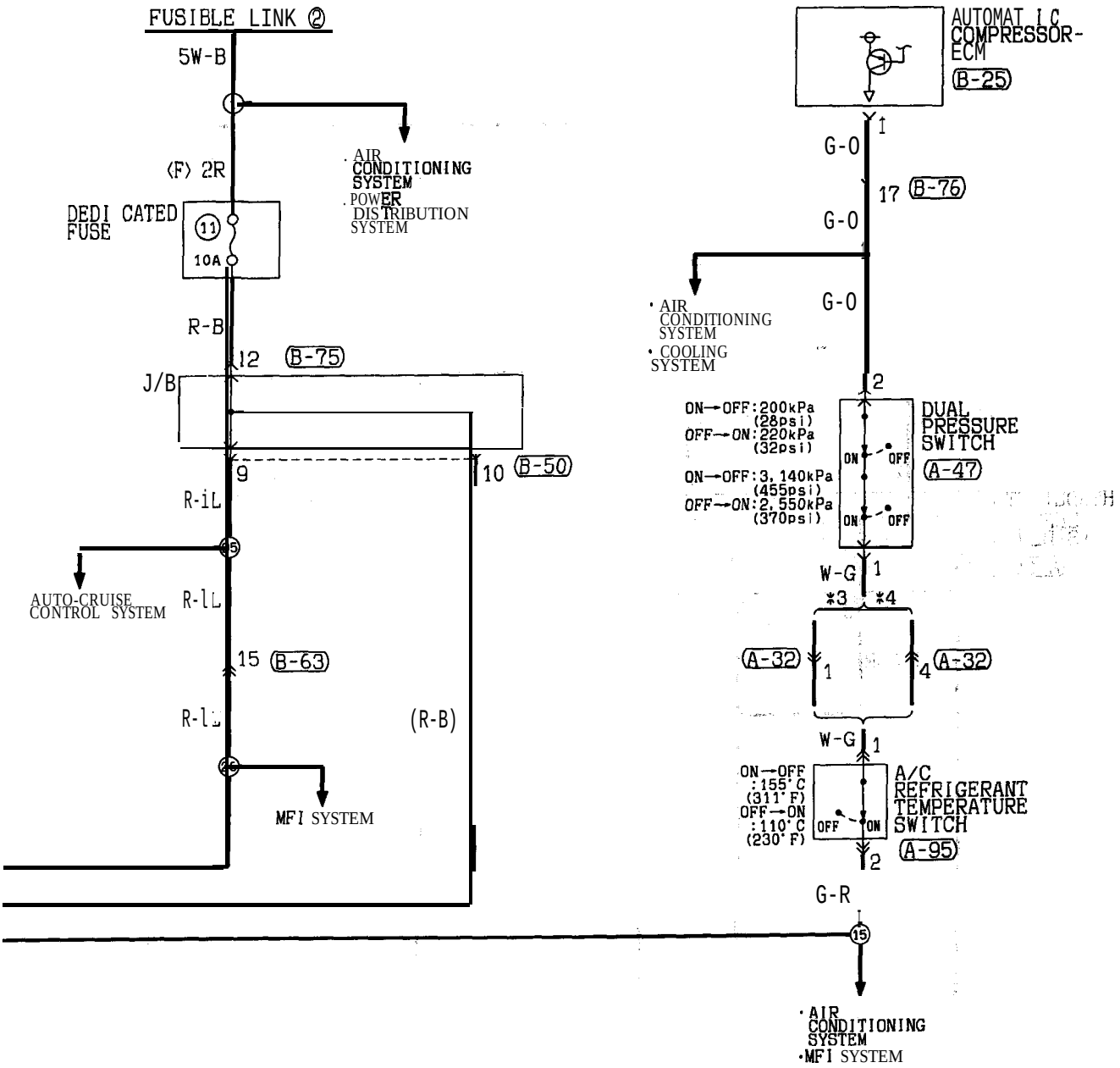

Remarks
*3:2.0L Engine (Turbo)
*4:2.4L Engine

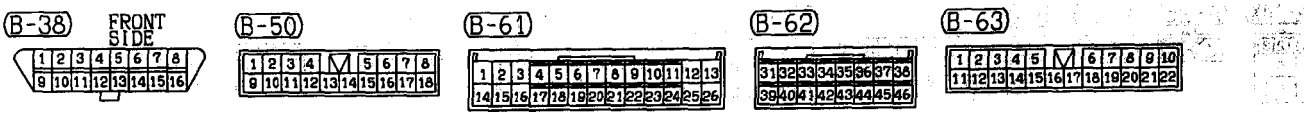

Wire color code
B :Black LG:Light green G :Green L :Blue W :White Y :Yellow SB:Sky blue
BR:Brown O :Orange GR:Gray R :Red P :Pink V :Violet

HF07M01CB

TSB Revision

HEADLIGHT

90100150388

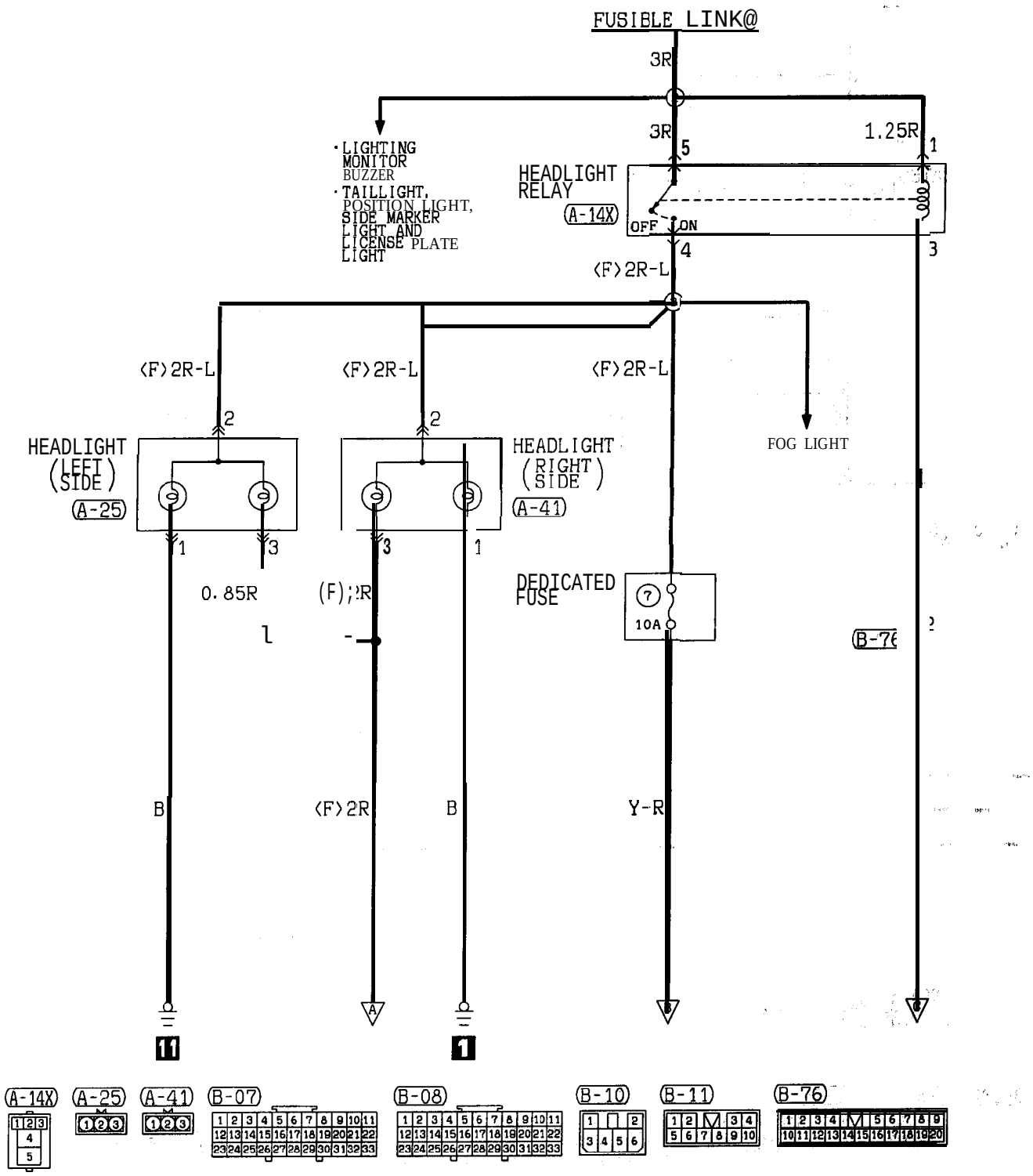

HF08M00AA

TSB Revision

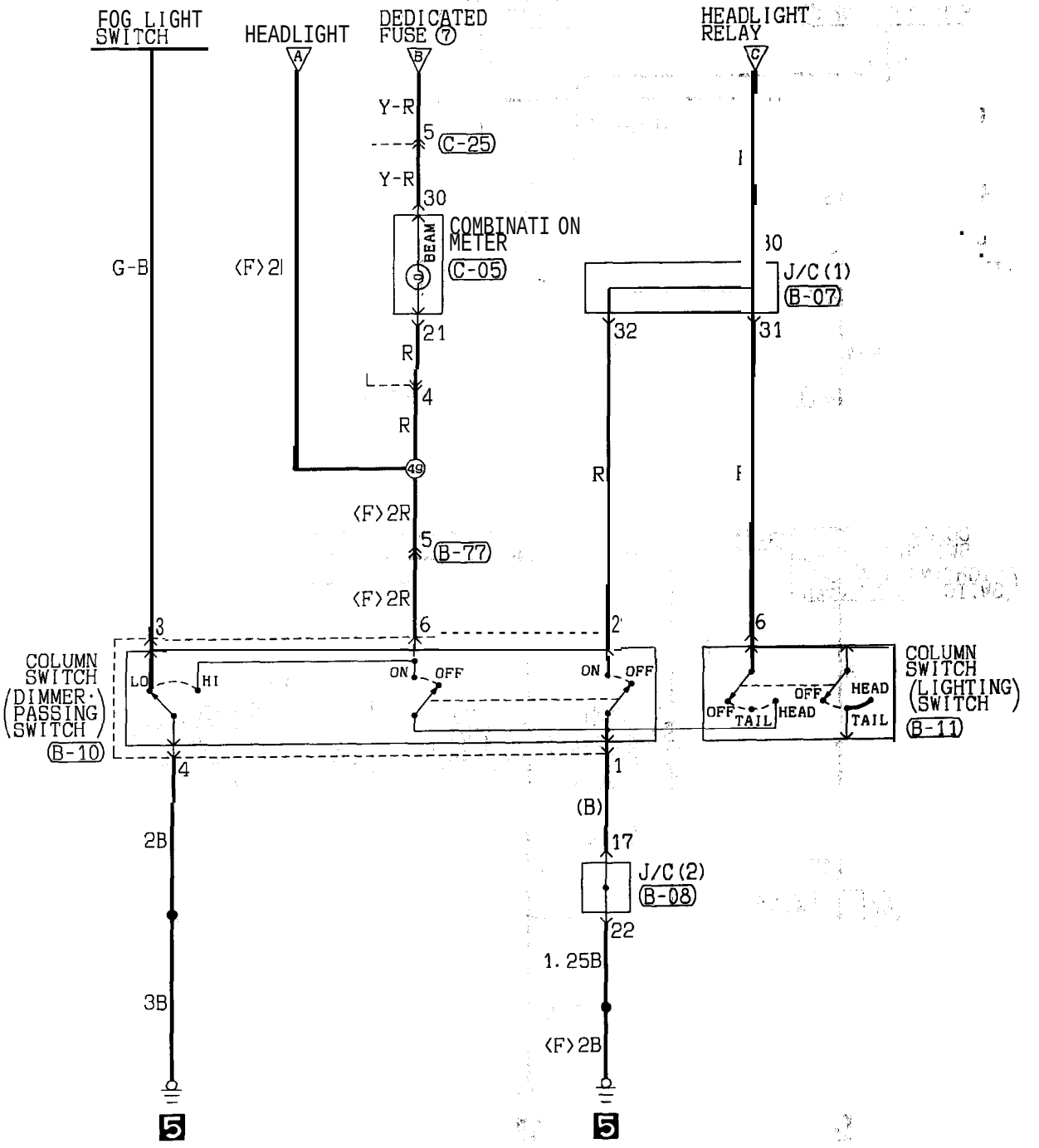

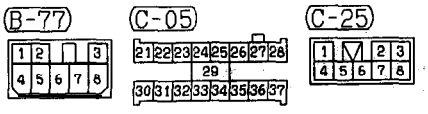

Wire color code
B :Black LG:Light green G :Green L :Blue W :White Y :Yellow SB:Sky blue
BR:Brown O :Orange GR:Gray R :Red P :Pink V :Violet

HF08M00AB

TSB Revision

TAILLIGHT, POSITION LIGHT, SIDE-MARKER LIGHT AND LICENSE PLATE LIGHT

90101260189

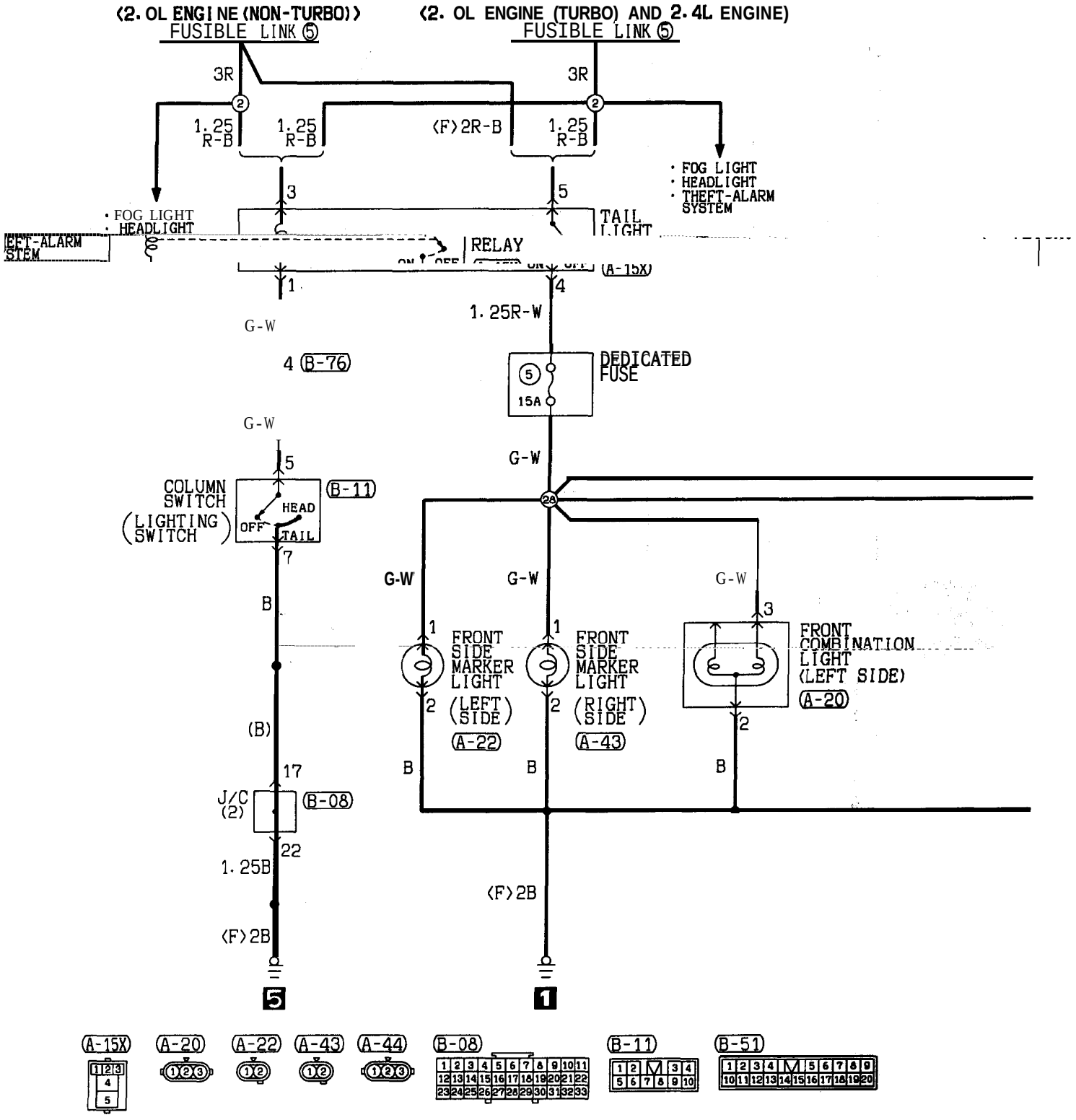

HF08M01AA

TSB Revision

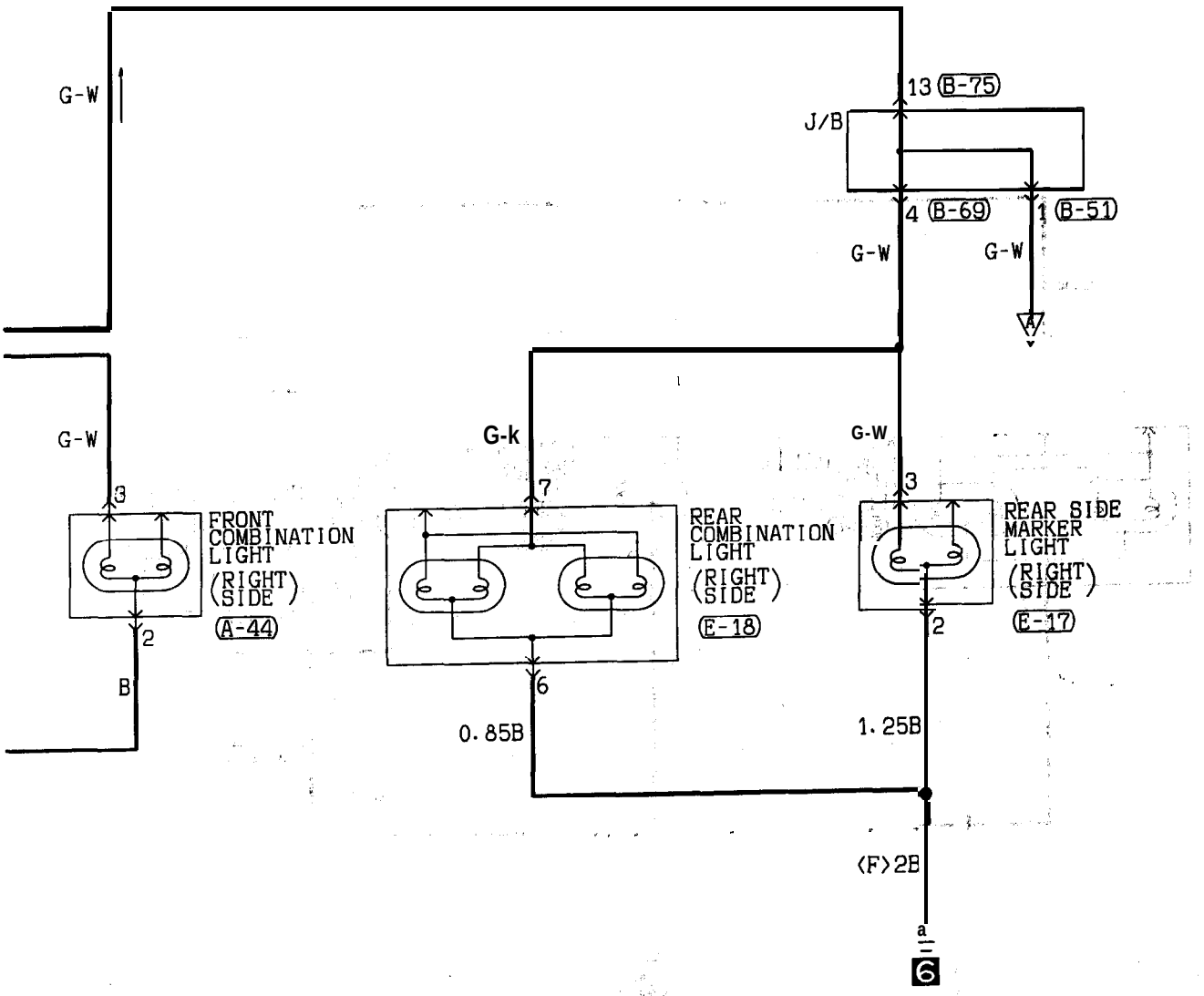

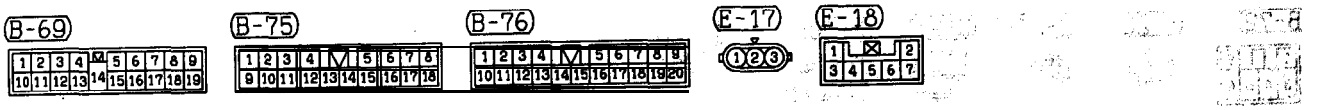

Wire color code
B :Black LG:Light green G :Green L :Blue W :White Y :Yellow SB:Sky blue
BR:Brown O :Orange GR:Gray R :Red P :Pink V :Violet

HF08M01AB

TAILLIGHT, POSITION LIGHT, SIDE-MARKER LIGHT AND LICENSE PLATE LIGHT (CONTINUED)

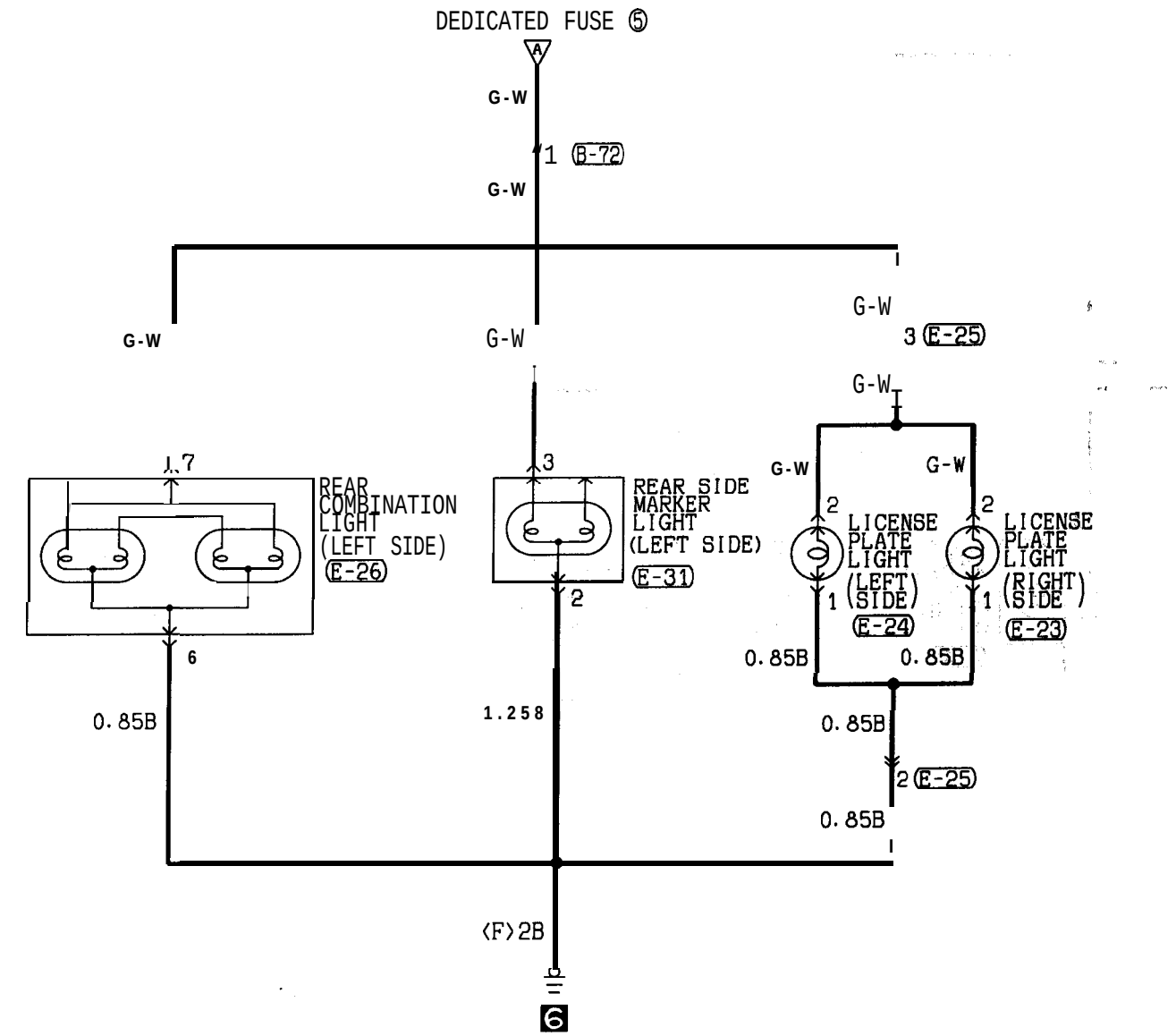

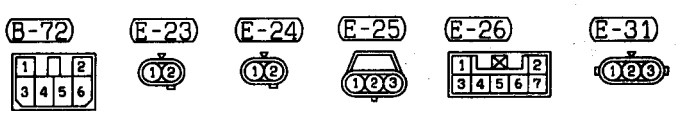

Wire color code
B :Black LG:Light green G :Green L :Blue W :White Y :Yellow SB:Sky blue
BR:Brown O :Orange GR:Gray R :Red P :Pink V :Violet

HF08M01BA

TSB Revision

NOTES

FOG LIGHT

90101190143

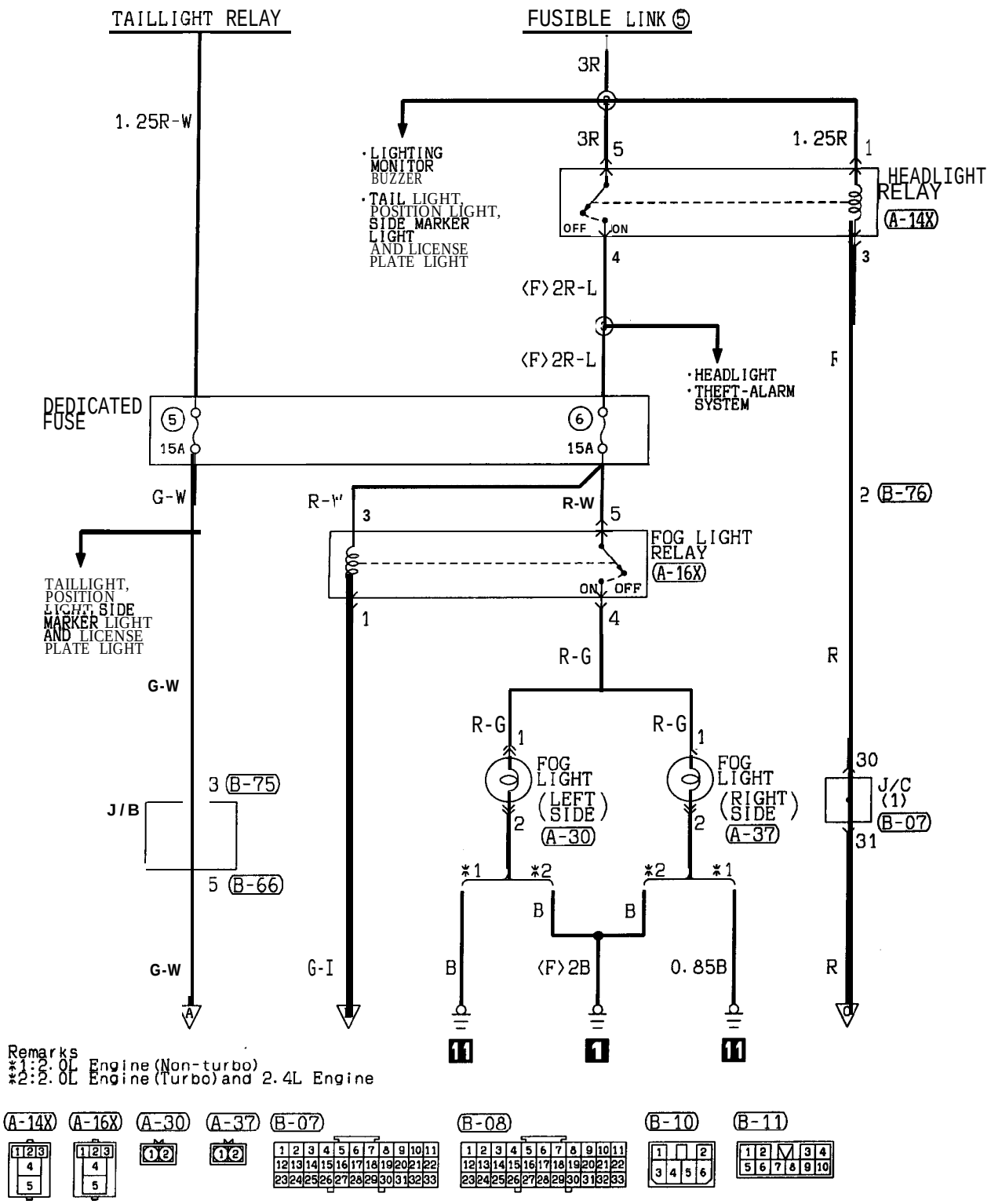

HF08M02AA

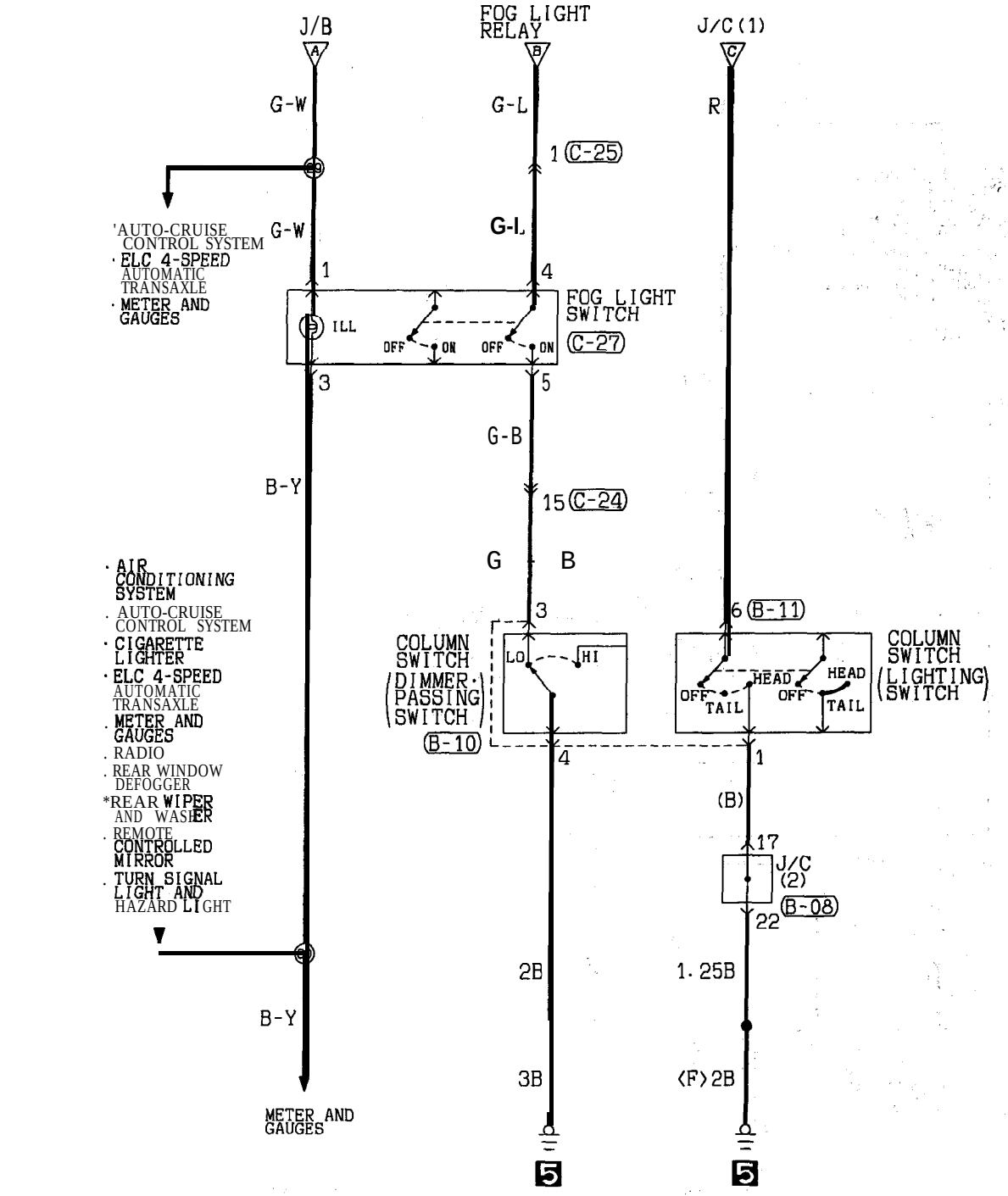

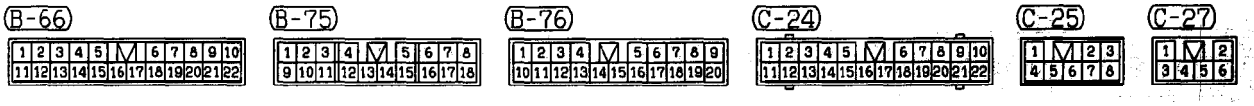

Wire color code

B :Black	LG:Light green	G :Green	L :Blue	W :White	Y :Yellow	SB:Sky blue
BR:Brown	O :Orange	GR:Gray	R :Red	P :Pink	V :Violet	

HF08M02AB

TSB Revision

DOME LIGHT, FOOT LIGHT AND LUGGAGE COMPARTMENT LIGHT <ECLIPSE>

90101460077

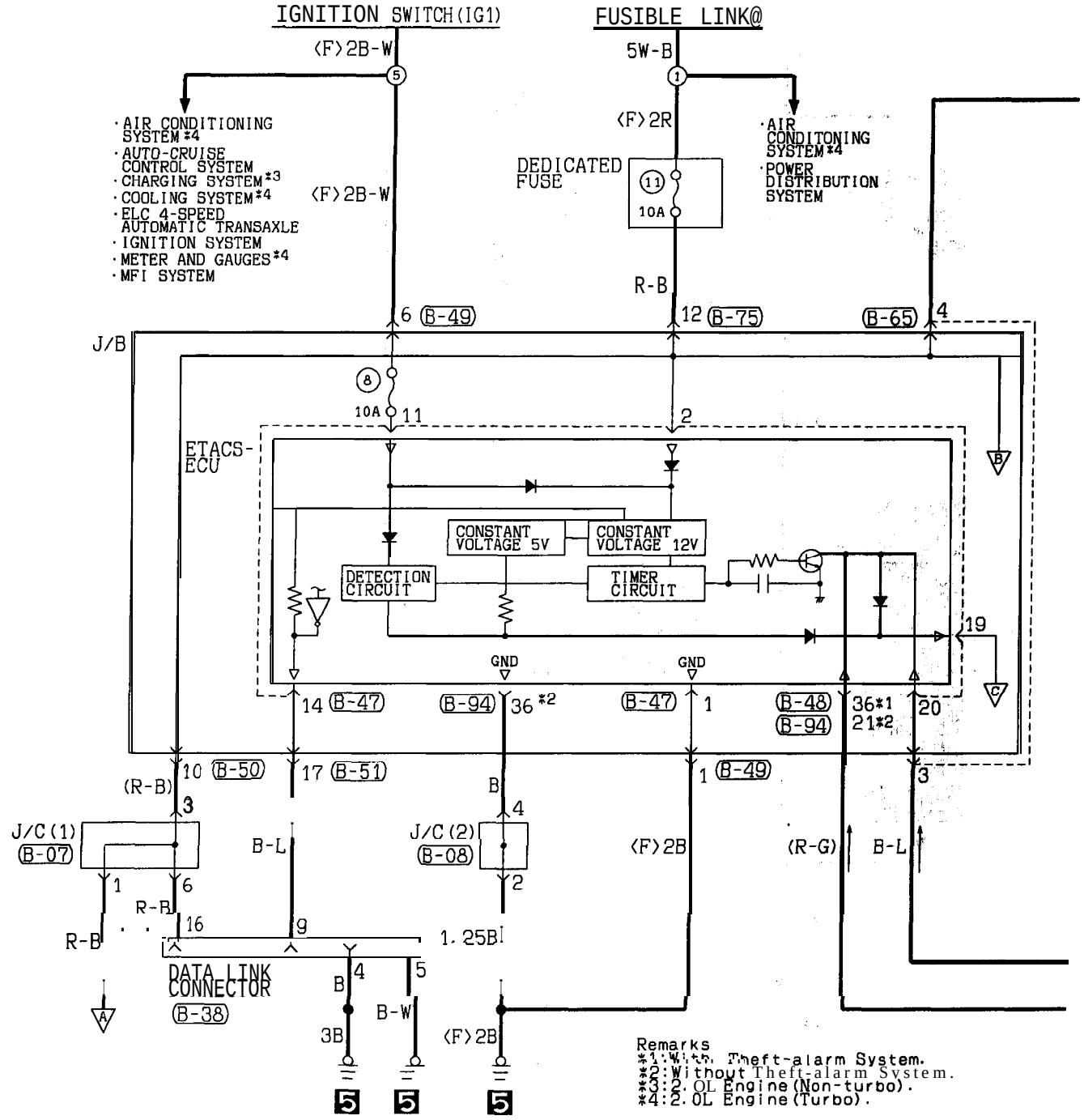

HF08M03AA

TSB Revision

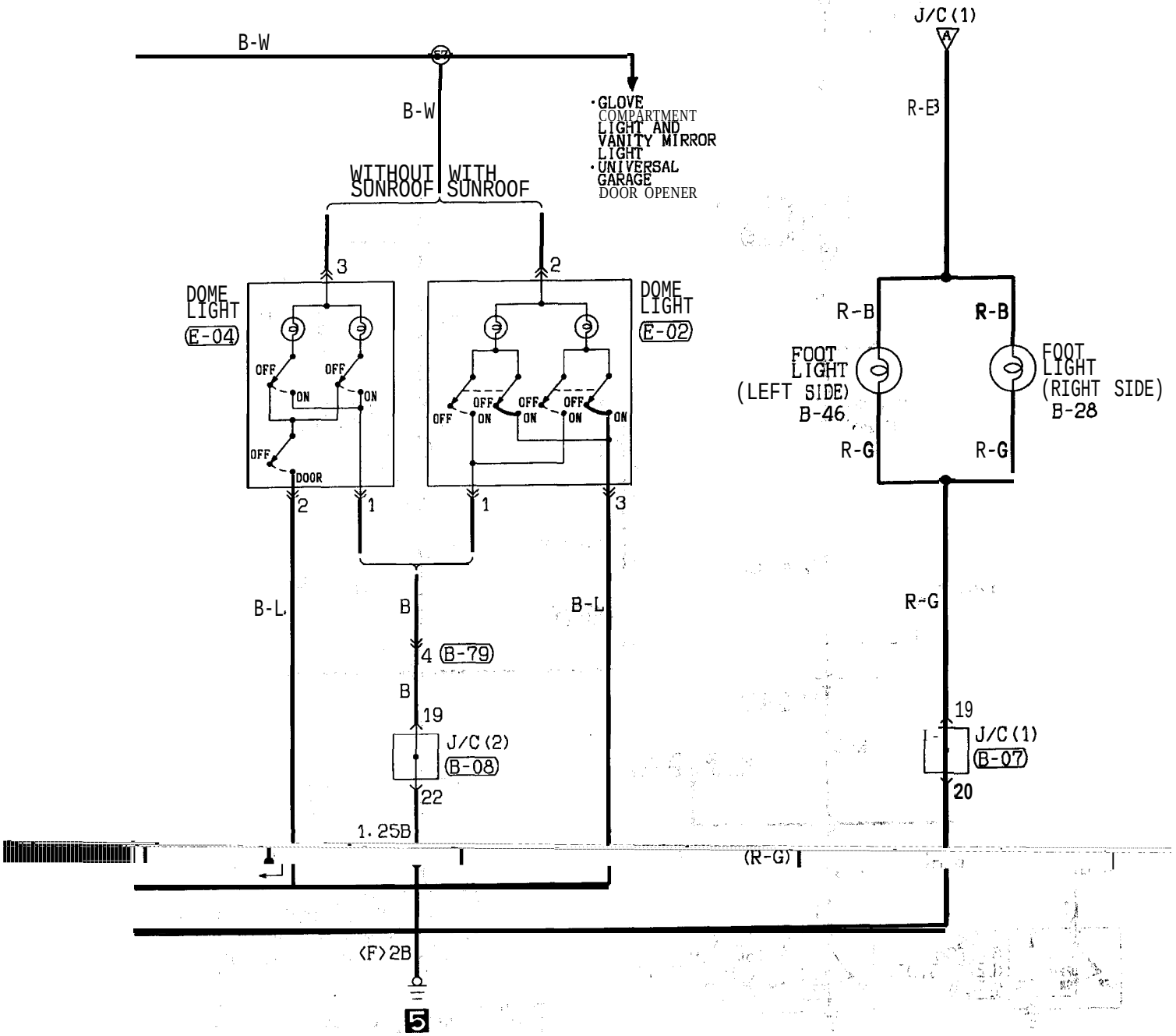

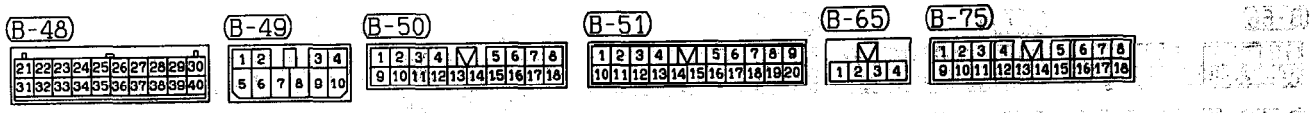

Wire color code
B :Black LG:Light green G :Green L :Blue W :White Y :Yellow SB:Sky blue
BR:Brown O :Orange GR:Gray R :Red P :Pink V :Violet

HF08M03AB

TSB Revision

DOME LIGHT, FOOT LIGHT AND LUGGAGE COMPARTMENT LIGHT <ECLIPSE> (CONTINUED)

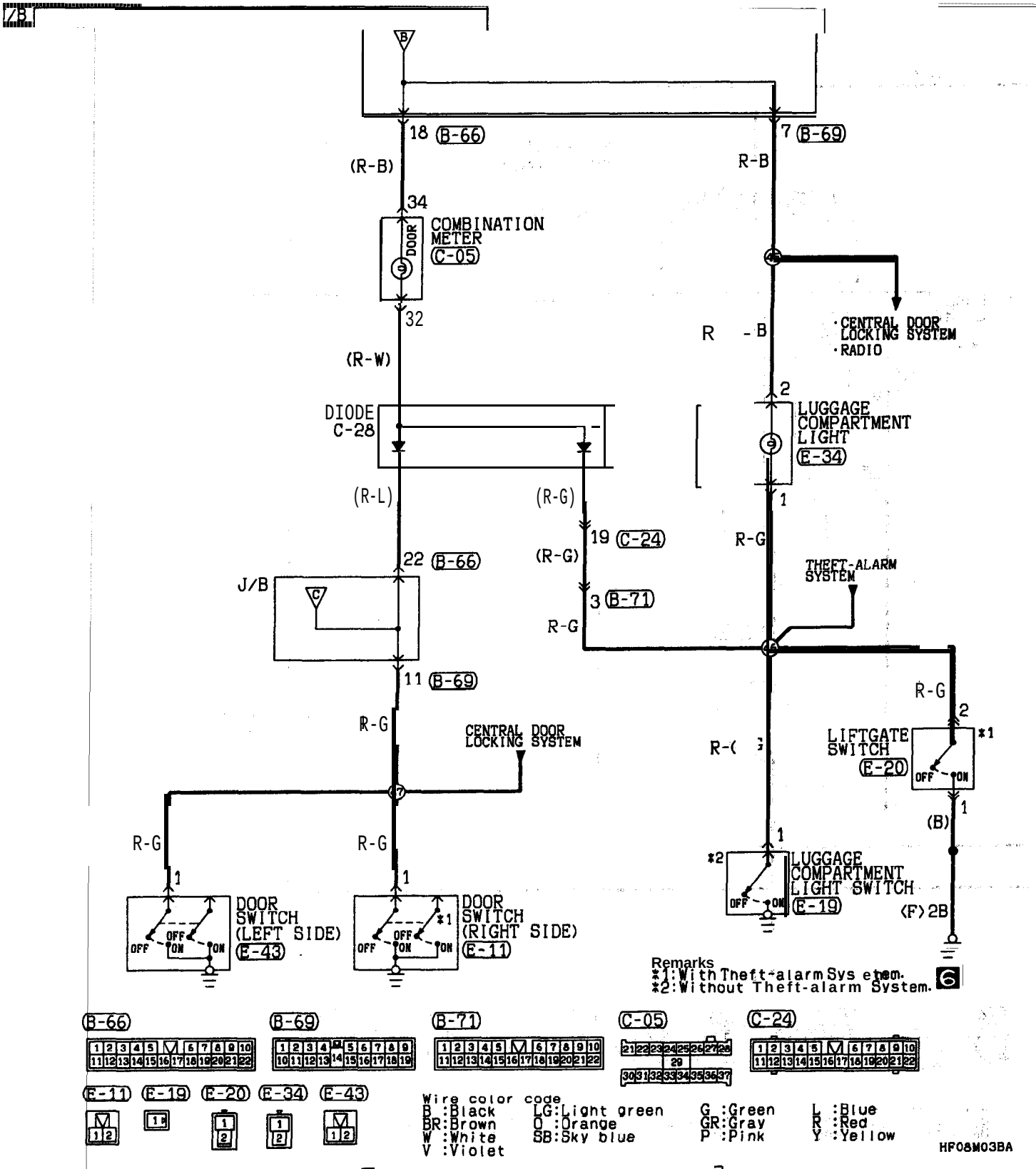

TSB Revision

NOTES

DOME LIGHT, FOOT LIGHT AND LUGGAGE COMPARTMENT LIGHT <ECLIPSE SPYDER>

90101460084

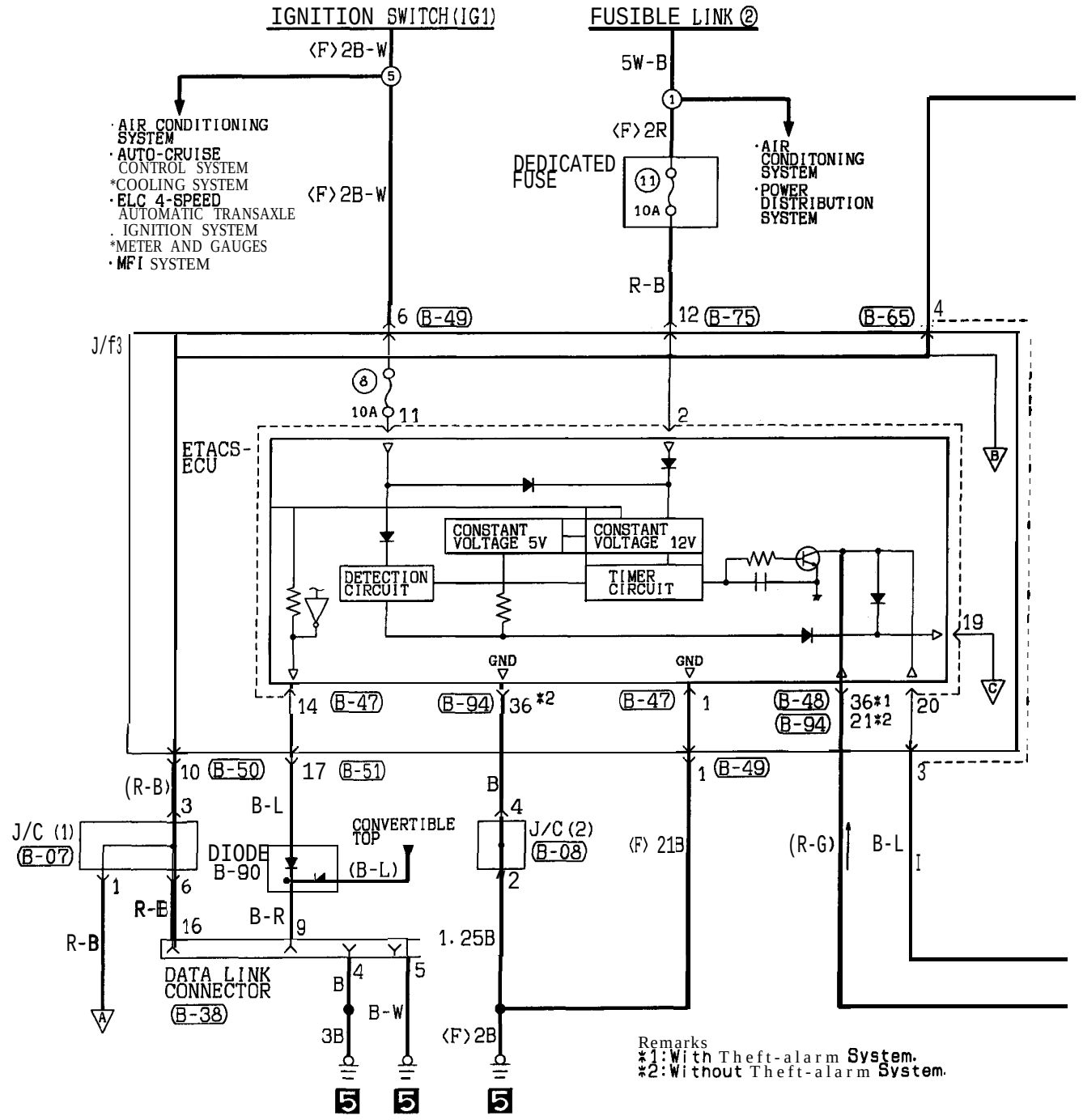

HF08M04AA

TSB Revision

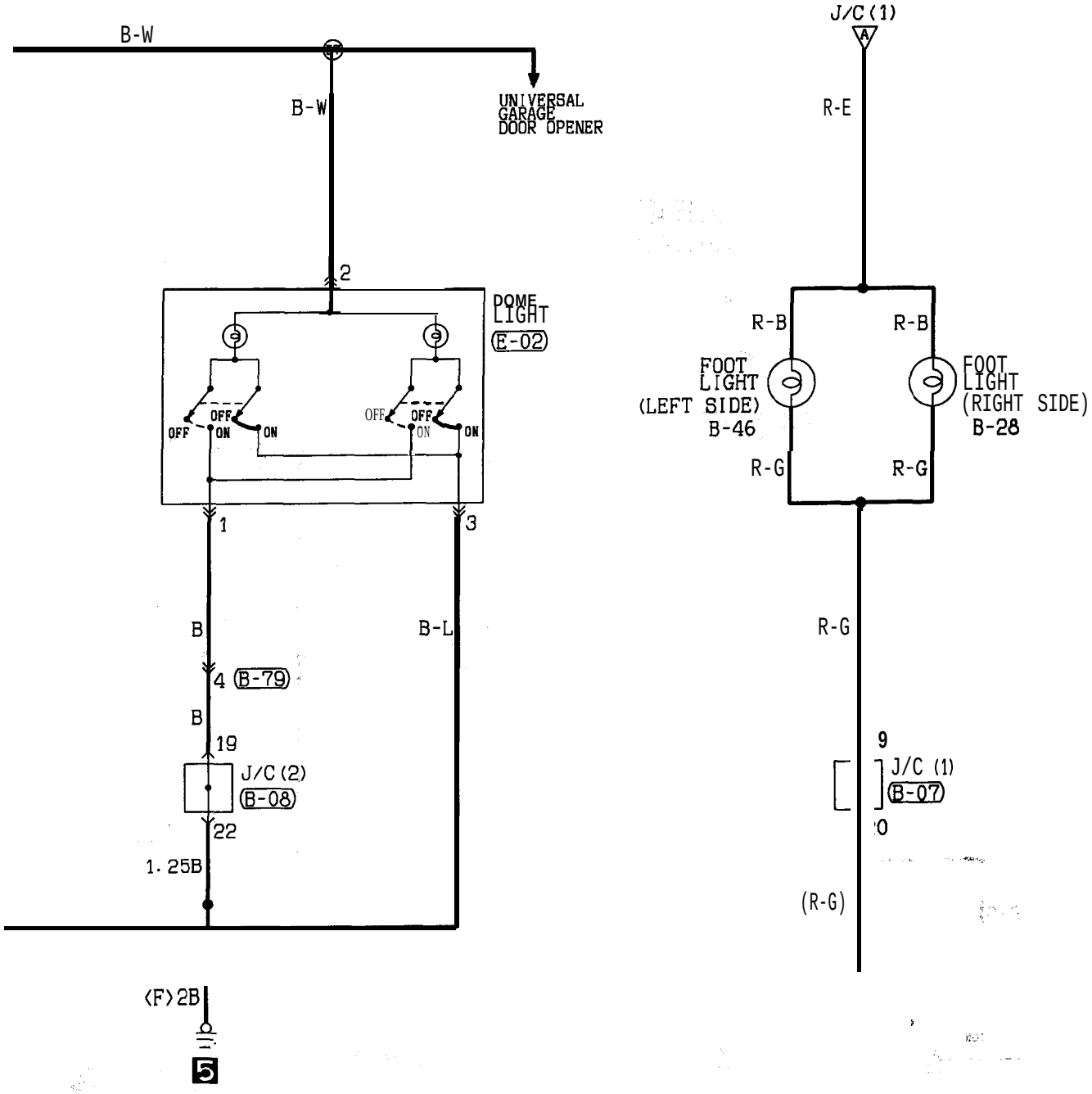

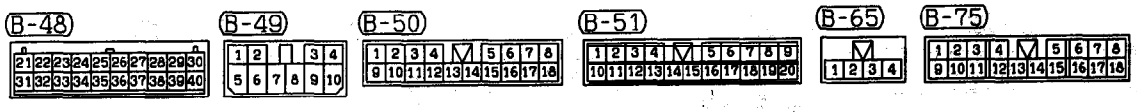

Wire color code
B :Black LG:Light green G :Green L :Blue W :White Y :Yellow SB:Sky blue
BR:Brown O :Orange GR:Gray R :Red P :Pink V :Violet

HF08M04AB

TSB Revision

DOME LIGHT, FOOT LIGHT AND LUGGAGE COMPARTMENT LIGHT <ECLIPSE SPYDER> (CONTINUED)

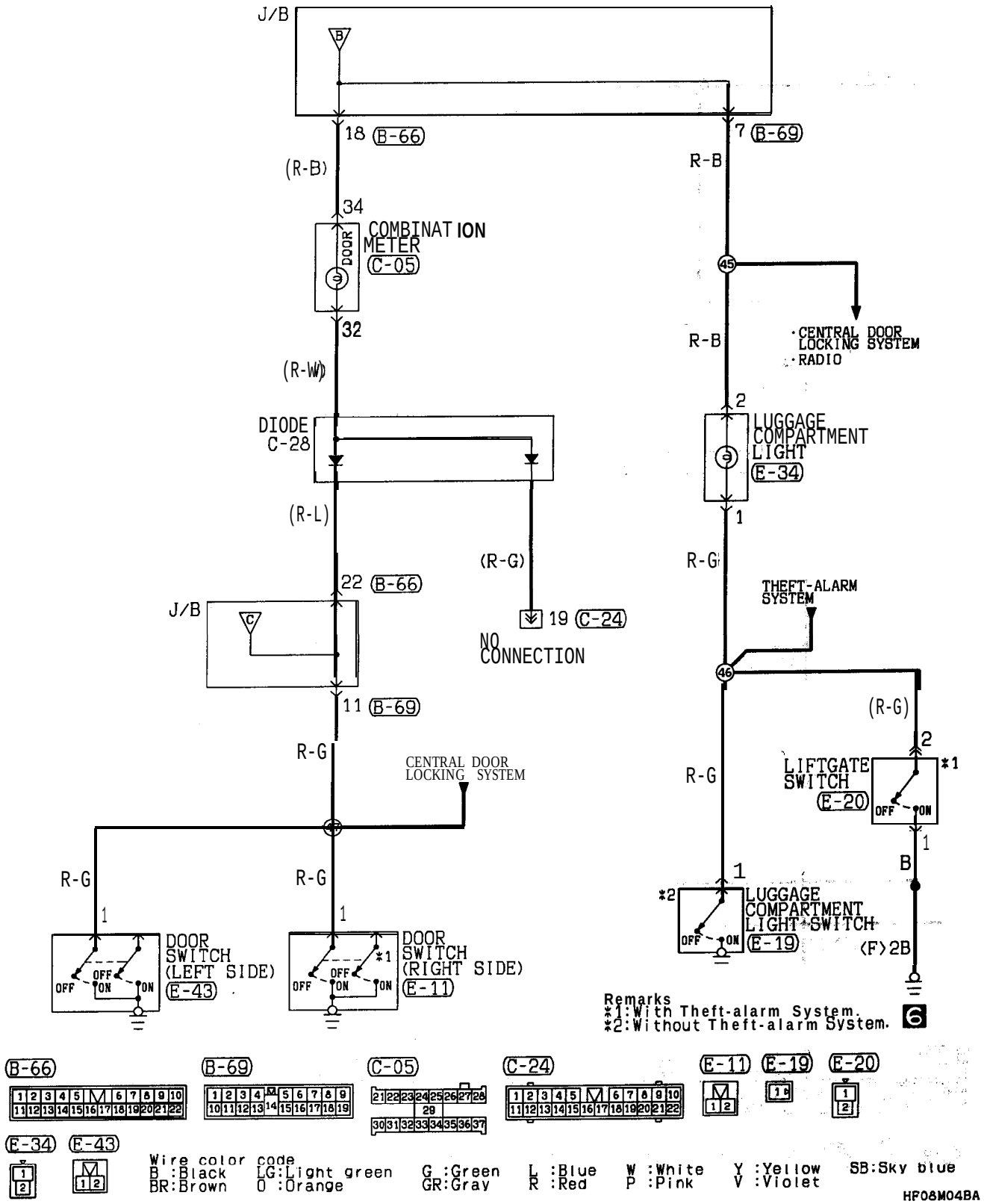

TSB Revision

NOTES

IGNITION KEY HOLE ILLUMINATION LIGHT TIMER <ECLIPSE>

90100260142

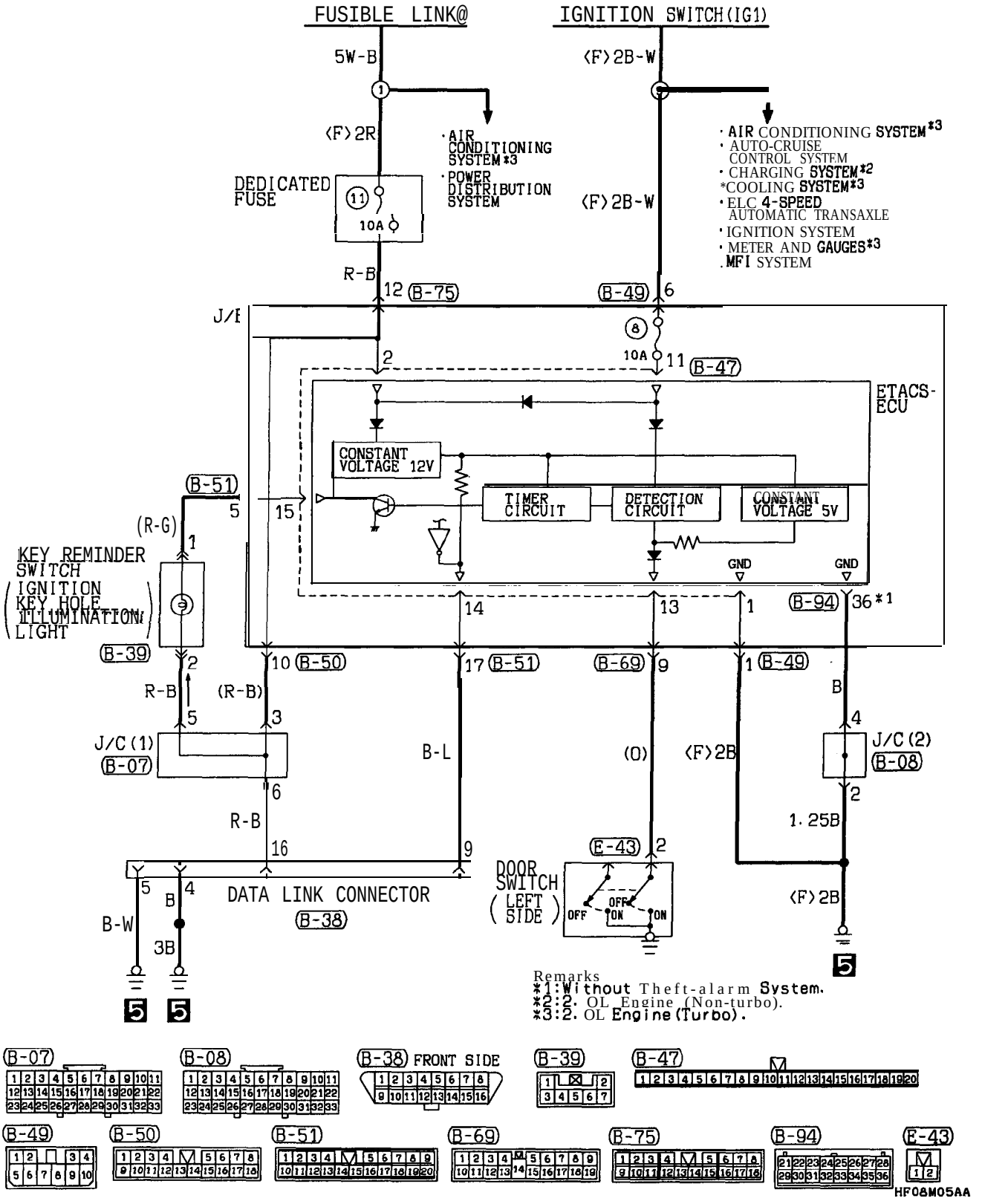

IGNITION KEY HOLE ILLUMINATION LIGHT TIMER <ECLIPSE SPYDER>

90100260159

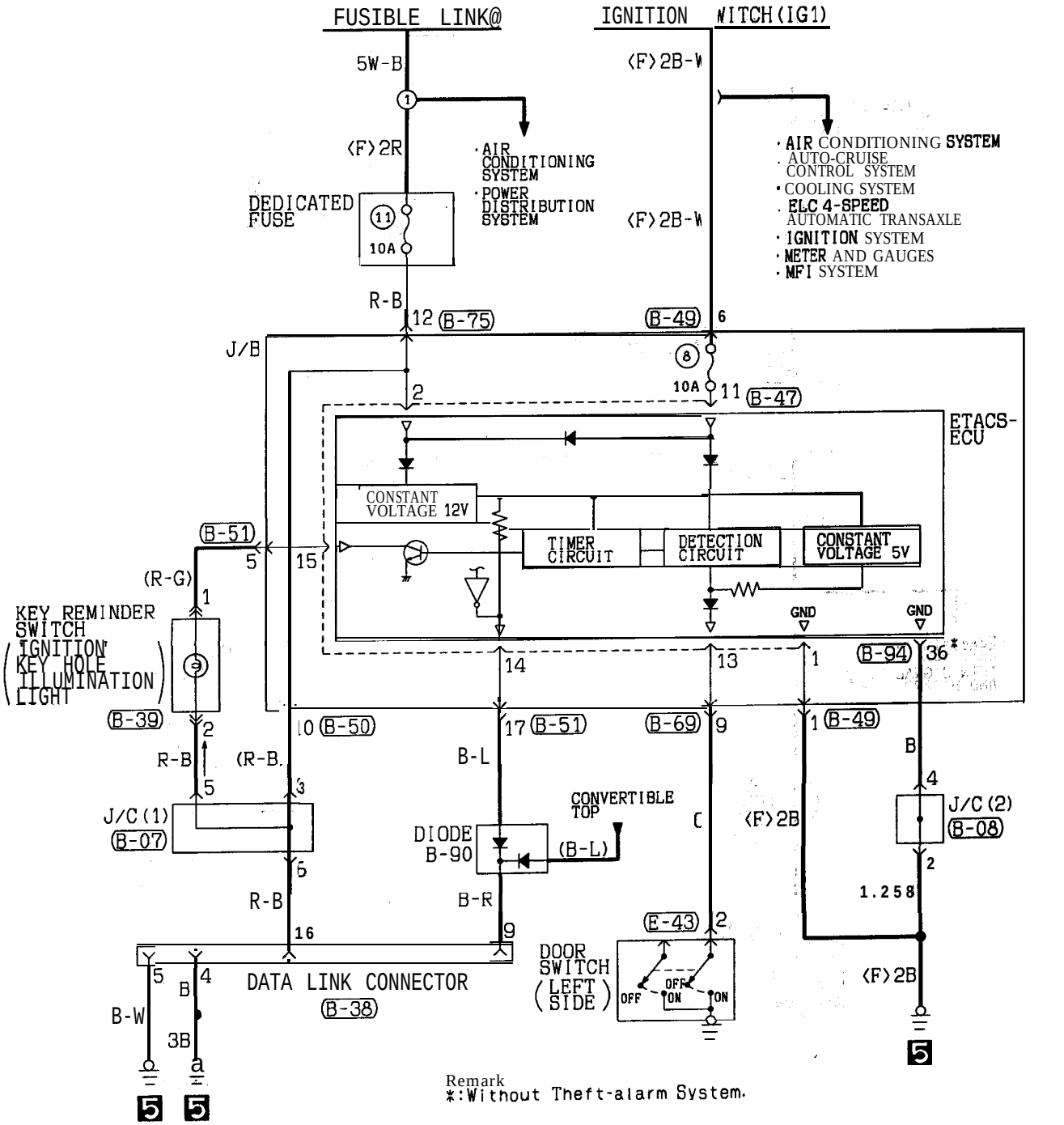

Remark
*:Without Theft-alarm System.

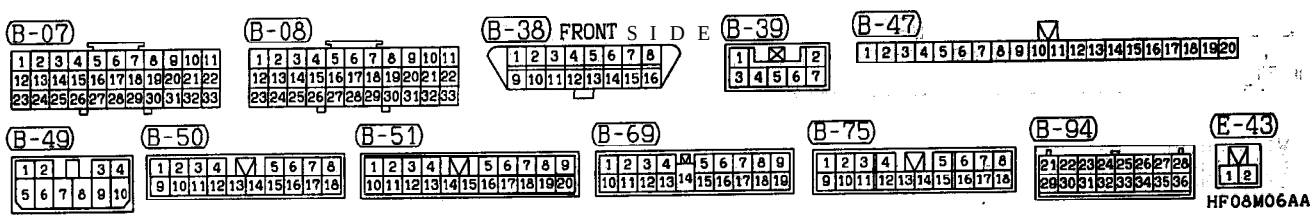

TSB Revision

GLOVE COMPARTMENT LIGHT AND VANITY MIRROR LIGHT

<Vehicles without universal garage door opener>

90100220058

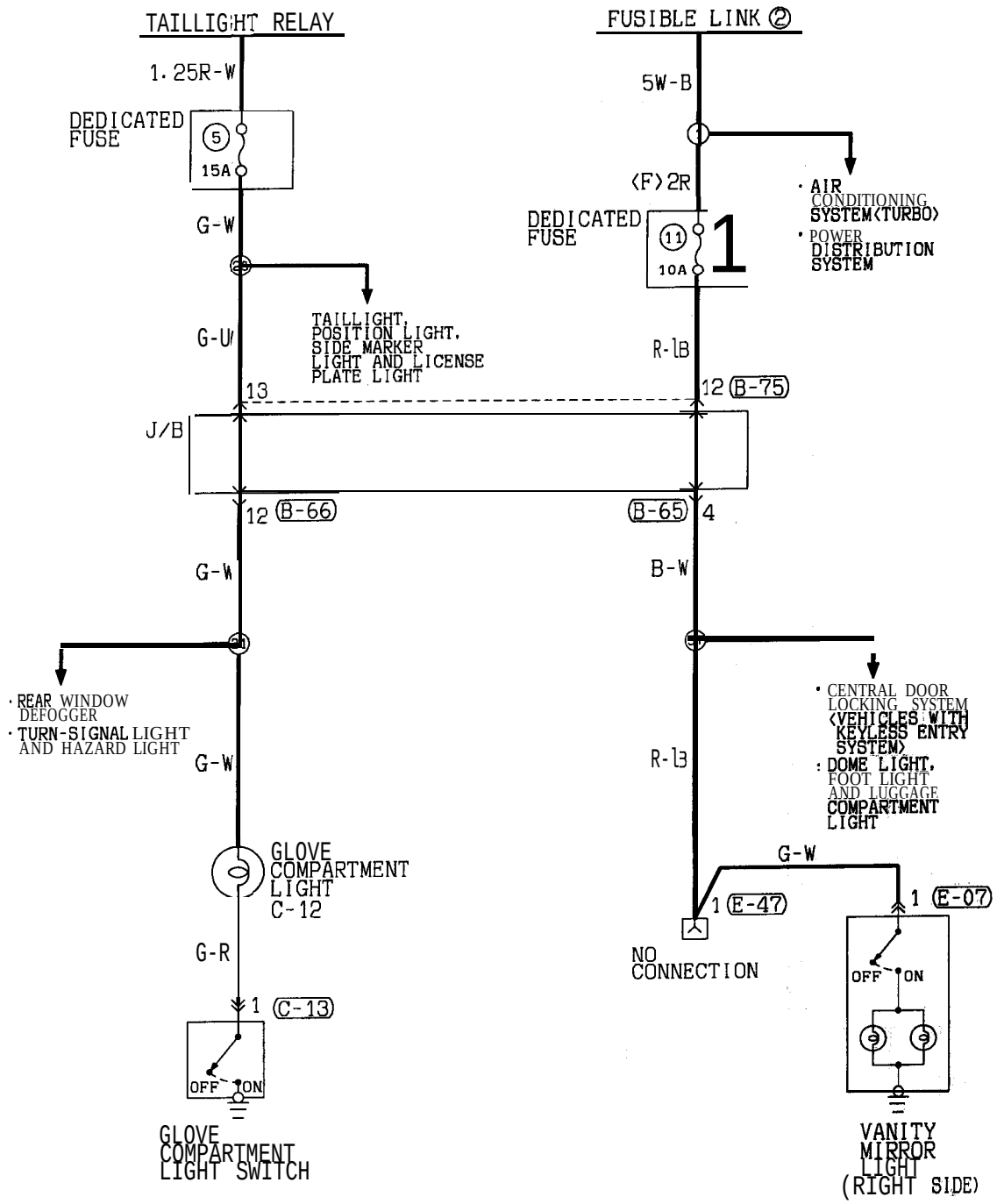

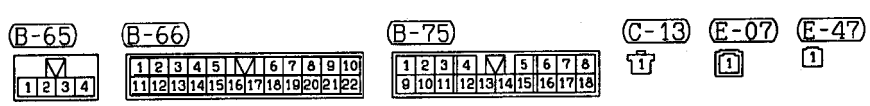

Wire color code
B :Black LG:Light green G :Green L :Blue W :White Y :Yellow SB:Sky blue
BR:Brown O :Orange GR:Gray R :Red P :Pink V :Violet

HF08M07AA

TSB Revision

GLOVE COMPARTMENT LIGHT AND VANITY MIRROR LIGHT

<Vehicles with universal garage door opener>

90100220065

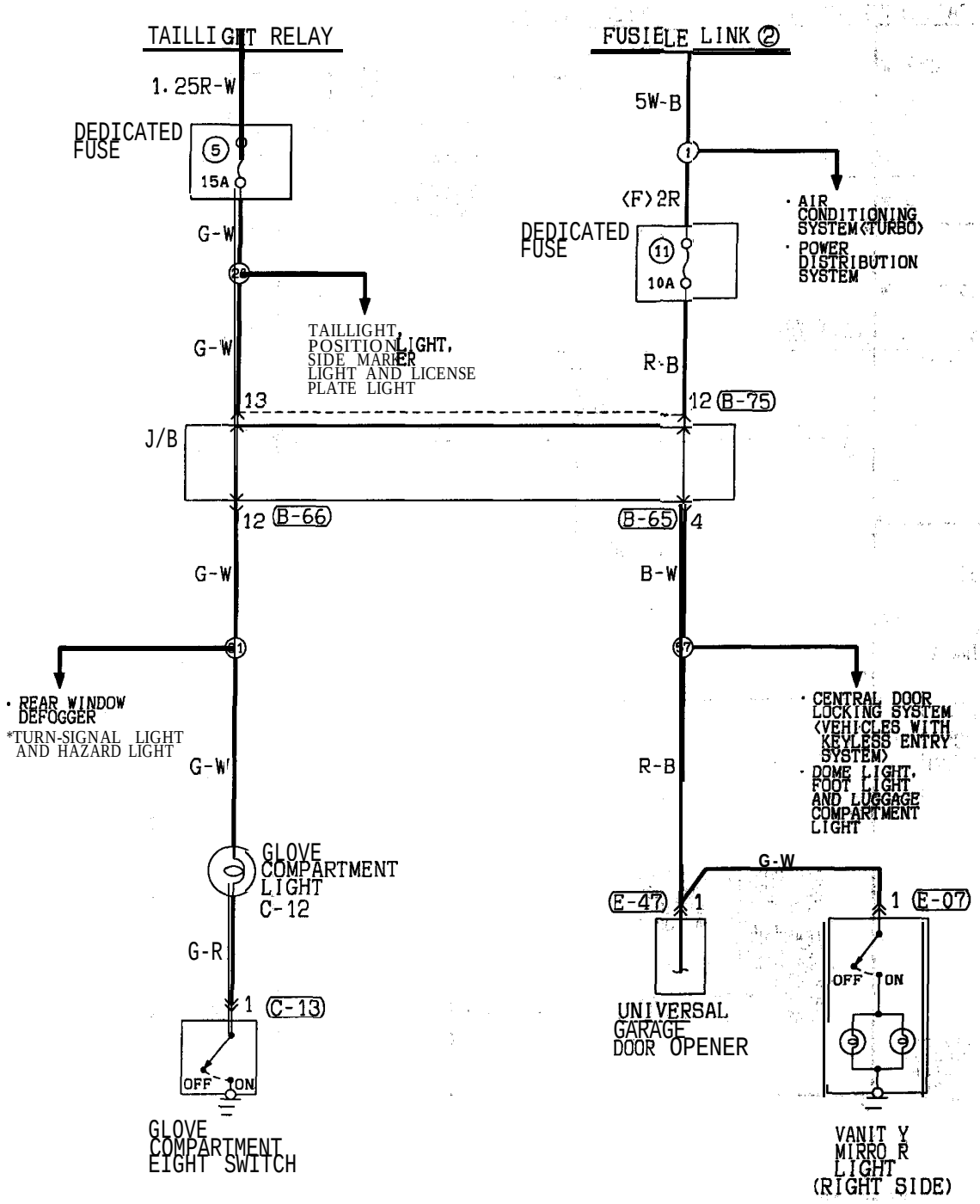

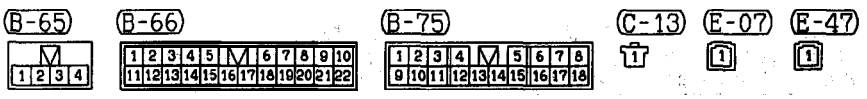

Wire color code

B :Black	LG:Light green	G :Green	L :Blue	W :White	Y :Yellow	SB:Sky blue
BR:Brown	O :Orange	GR:Gray	R :Red	P :Pink	V :Violet	

HF08M08AA

TSB Revision

TURN-SIGNAL LIGHT AND HAZARD WARNING LIGHT

90100290240

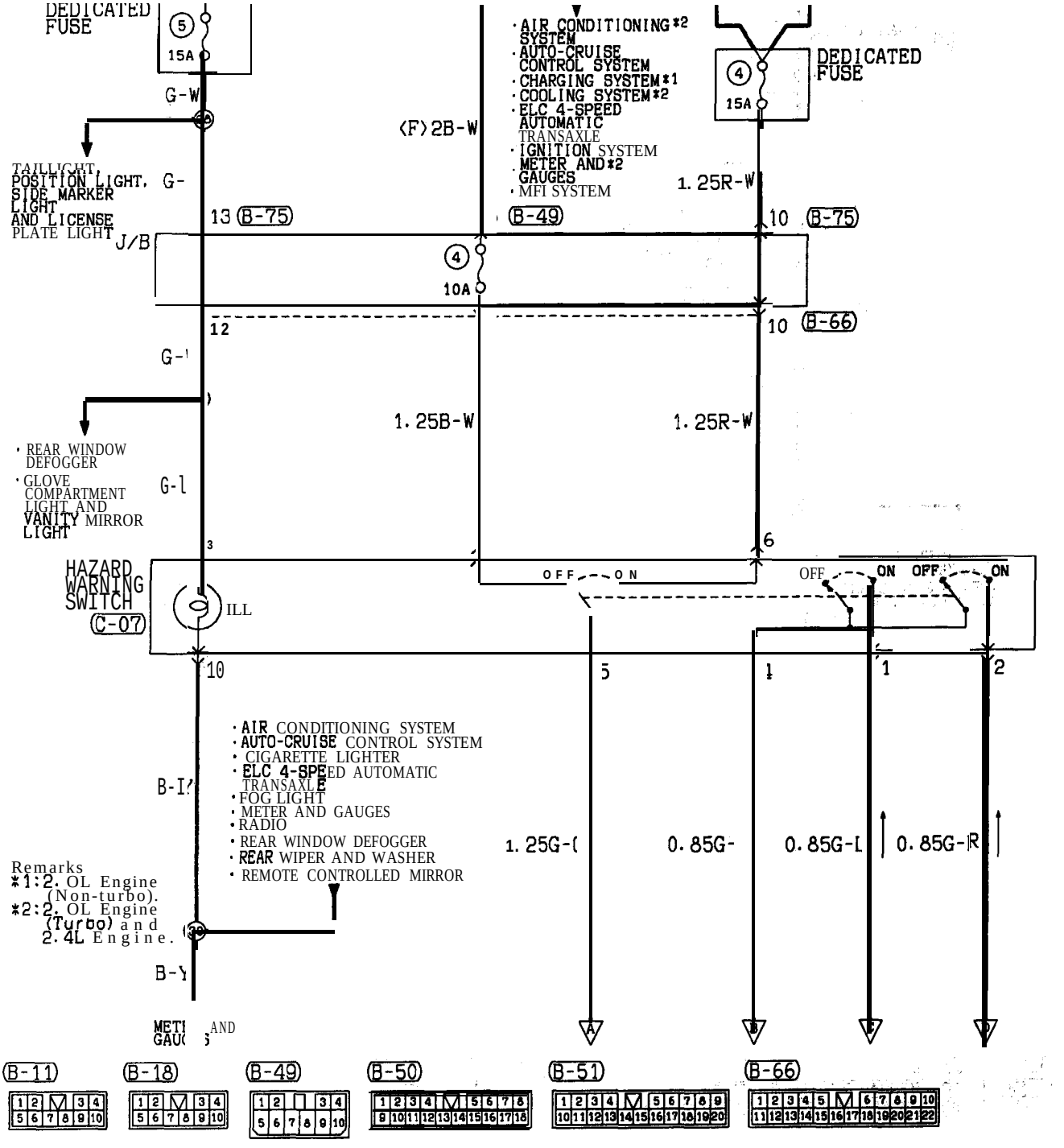

HF09M00AA

TSB Revision

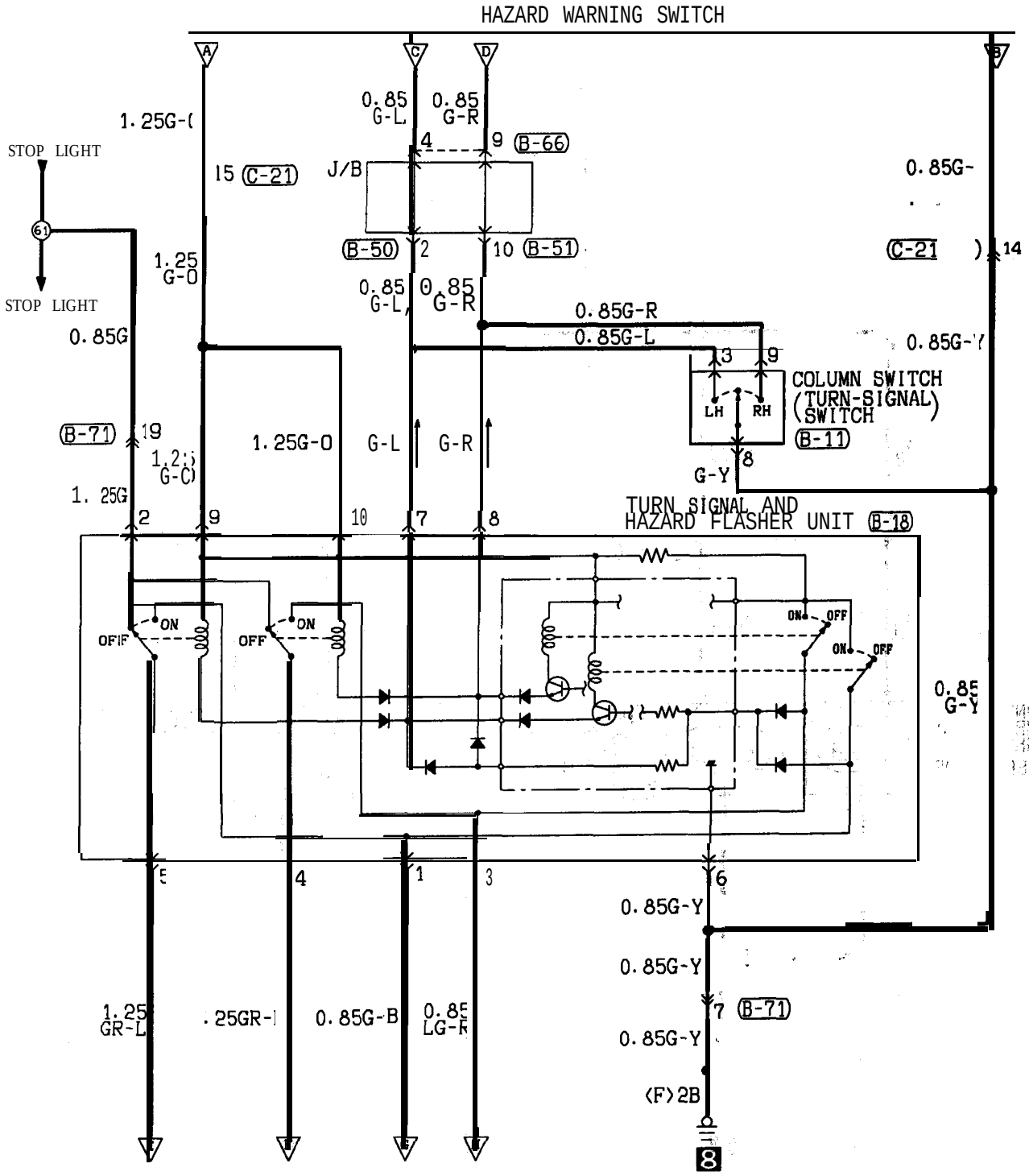

Wire color code
B :Black LG:Light green G :Green L :Blue W :White Y :Yellow SB:Sky blue
BR:Brown O :Orange GR:Gray R :Red P :Pink V :Violet

HF09M00AB

TSB Revision

TURN-SIGNAL LIGHT AND HAZARD WARNING LIGHT (CONTINUED)

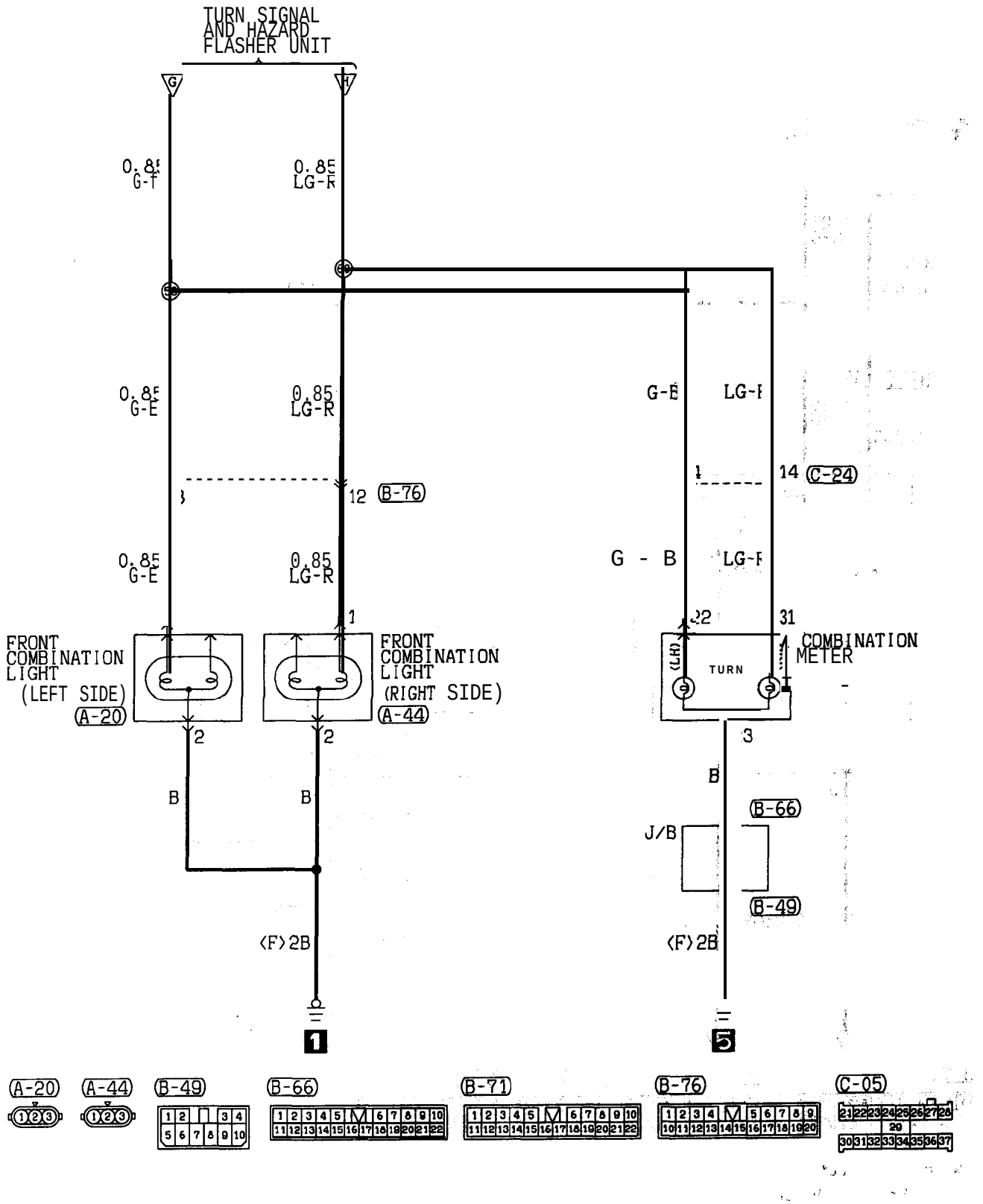

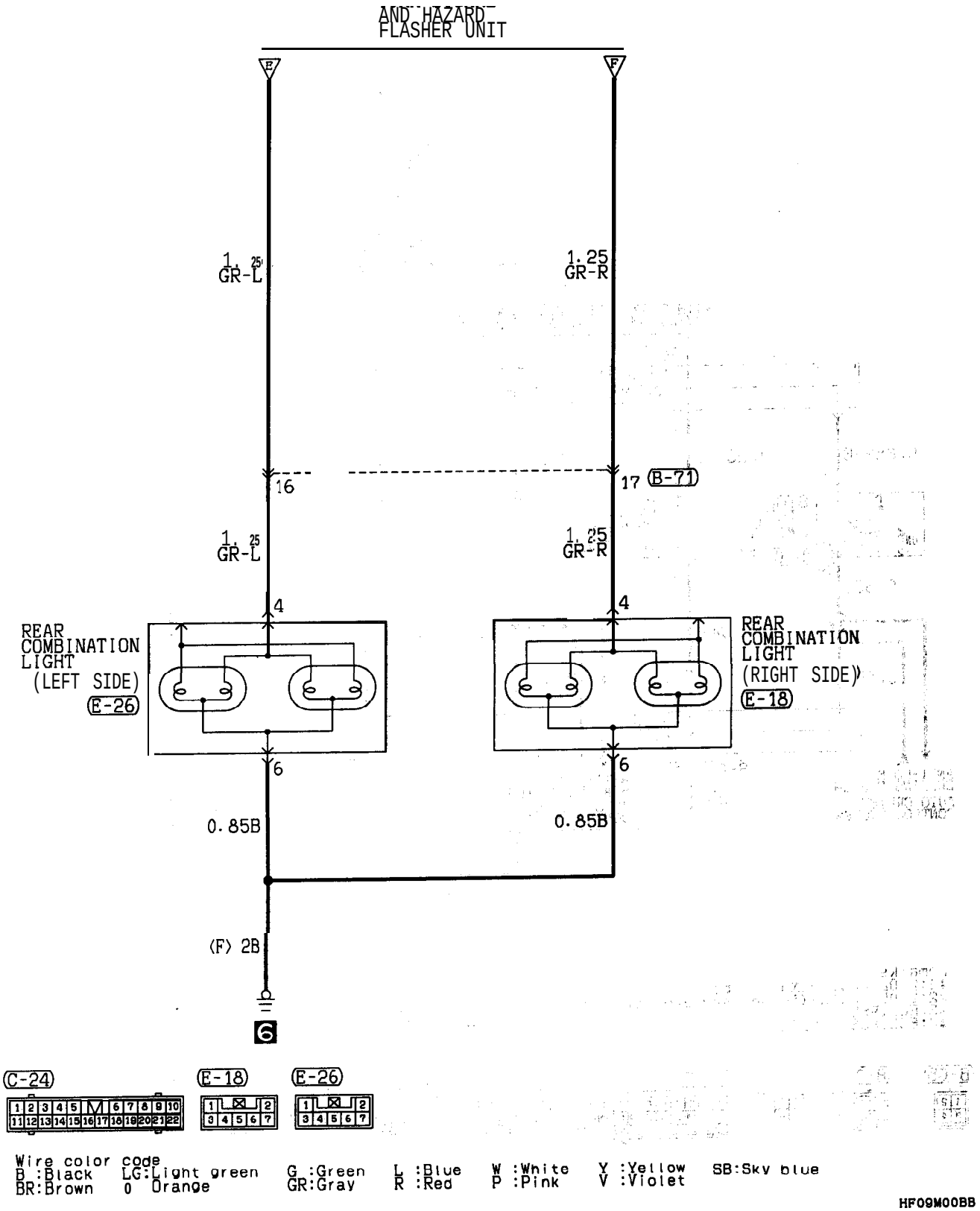

TSB Revision

STOP LIGHT

90100300226

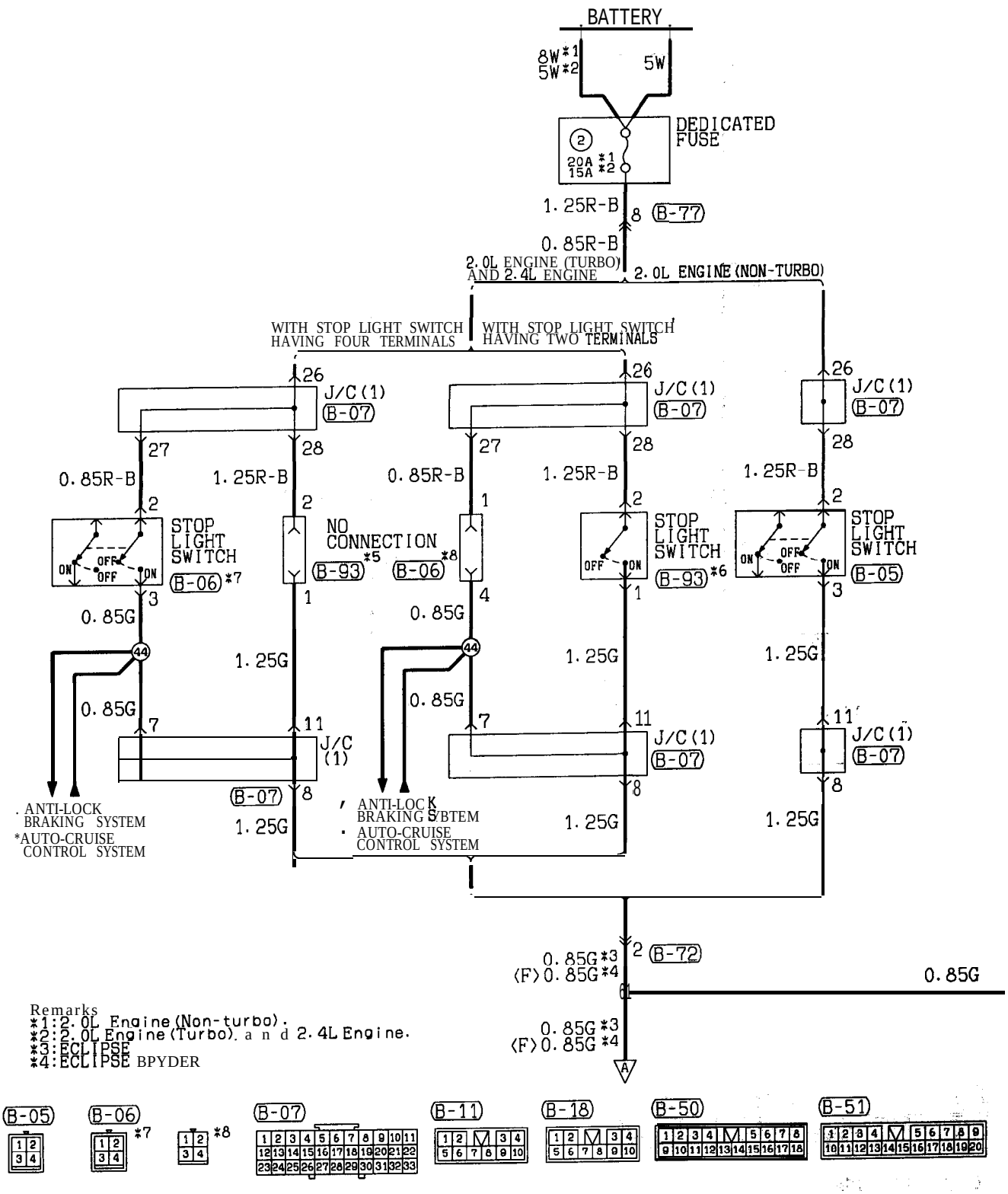

HFOQMO 1AA

TSB Revision

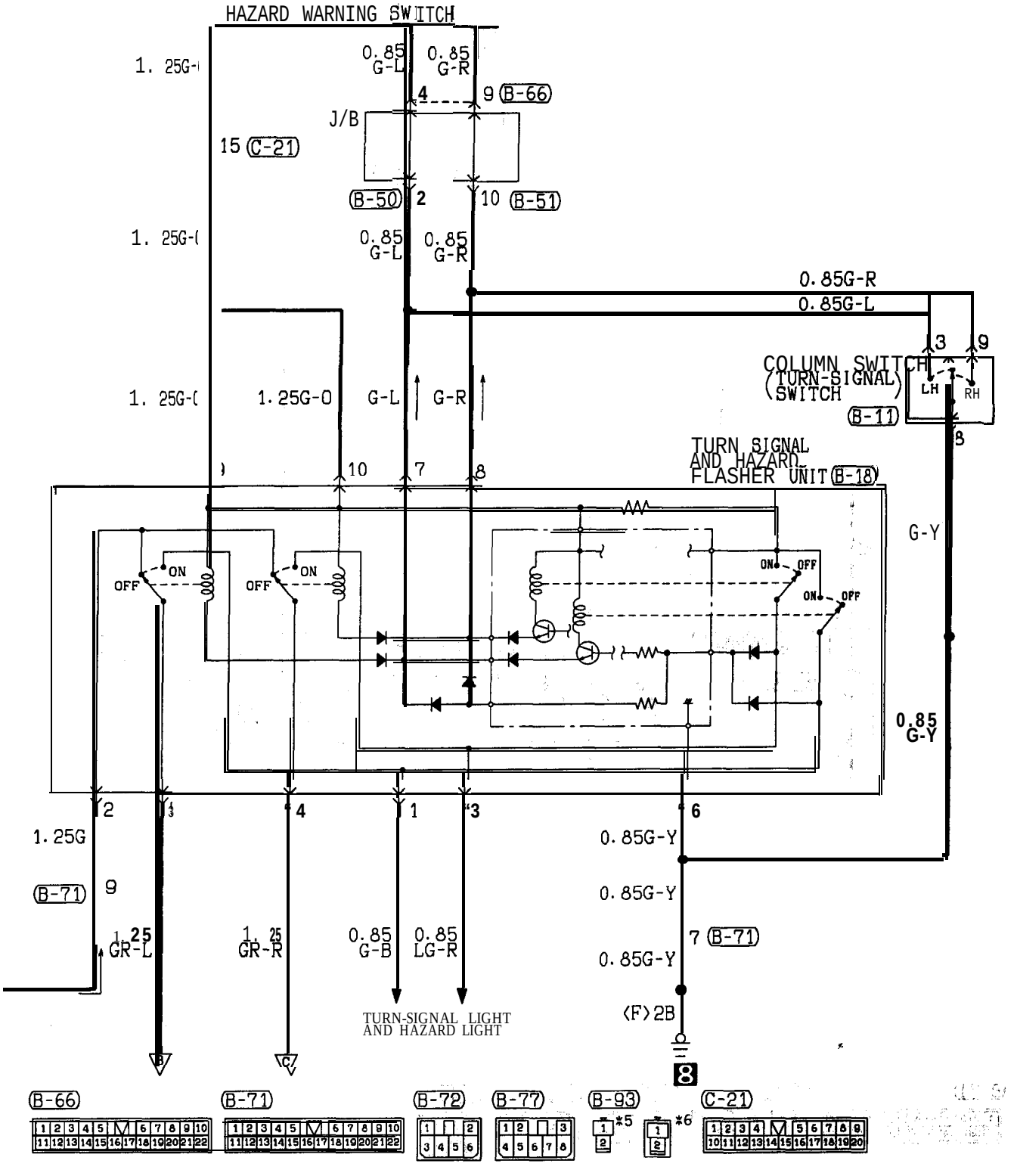

Wire color code
B :Black LG:Light green G :Green L :Blue W :White Y :Yellow SB:Sky blue
BR:Brown O :Orange GR:Gray R :Red P :Pink V :Violet

HF09M01AB

STOP LIGHT (CONTINUED)

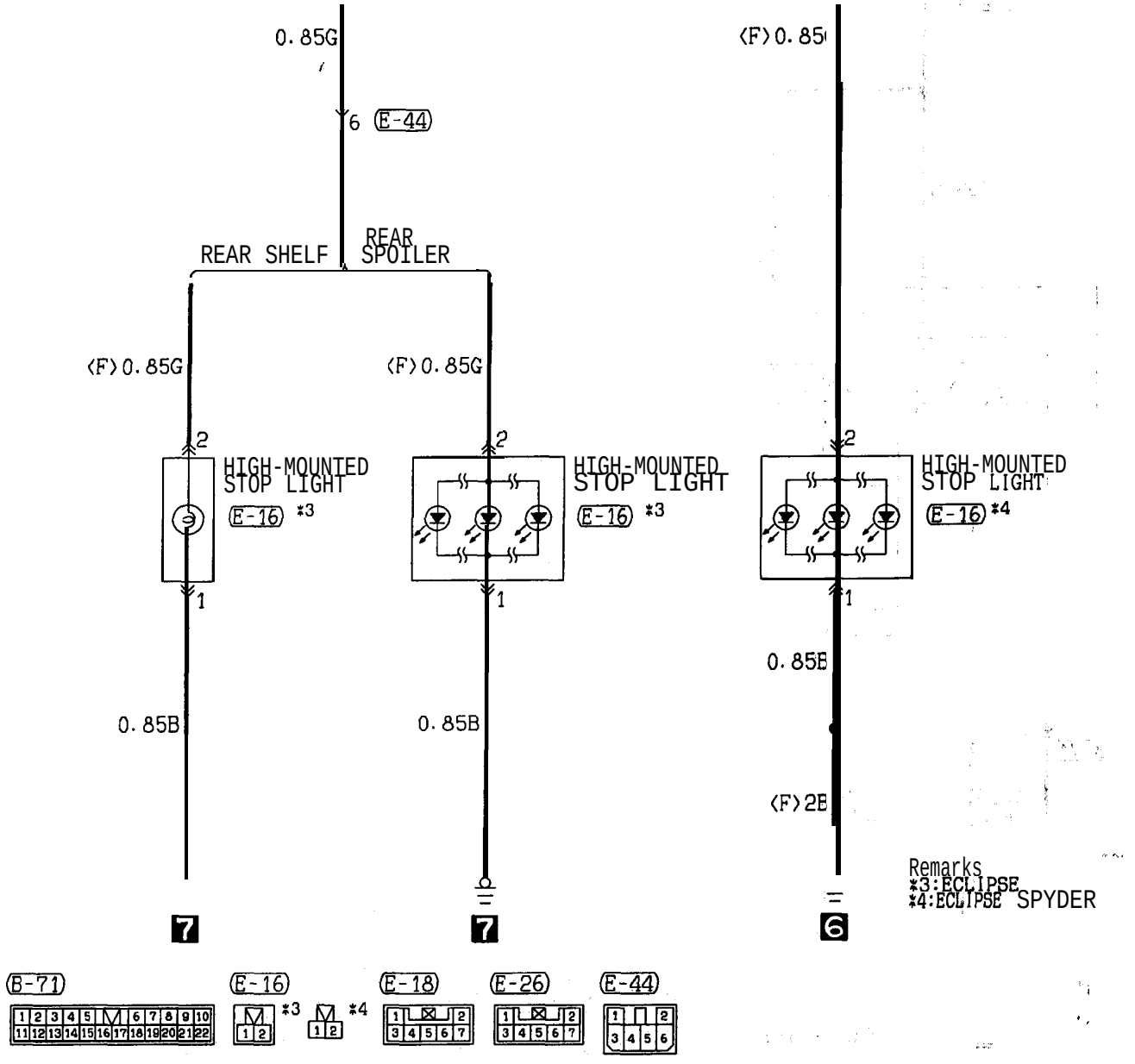

HF09M01 BA

TSB Revision

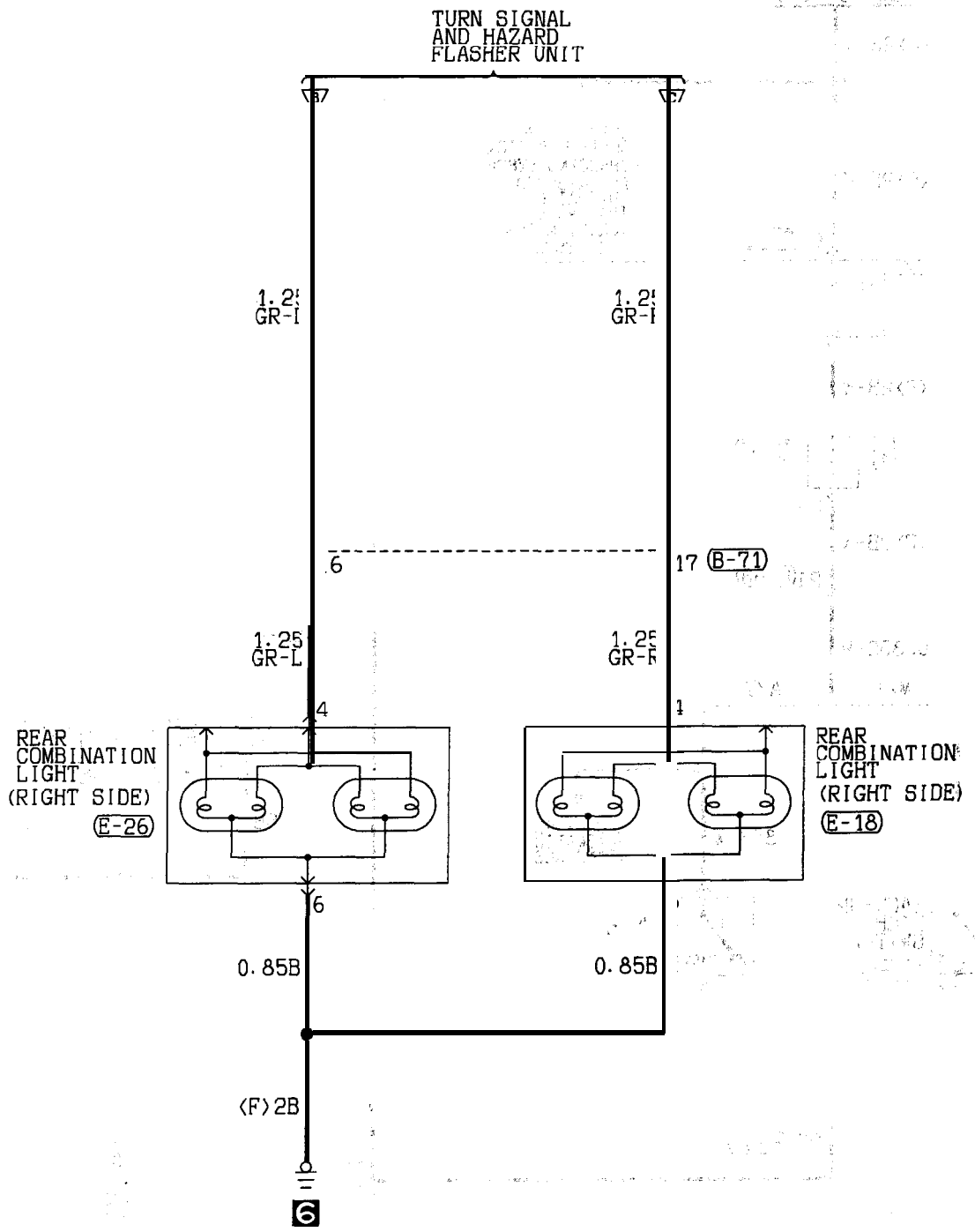

Wire color code
B :Black LG:Light green G :Green L :Blue W :White Y :Yellow SB:Sky blue
BR:Brown O :Orange GR:Gray R :Red P :Pink V :Violet

HF09M01BB

BACK-UP LIGHT <2.0L Engine (Non-turbo)>

90100310243

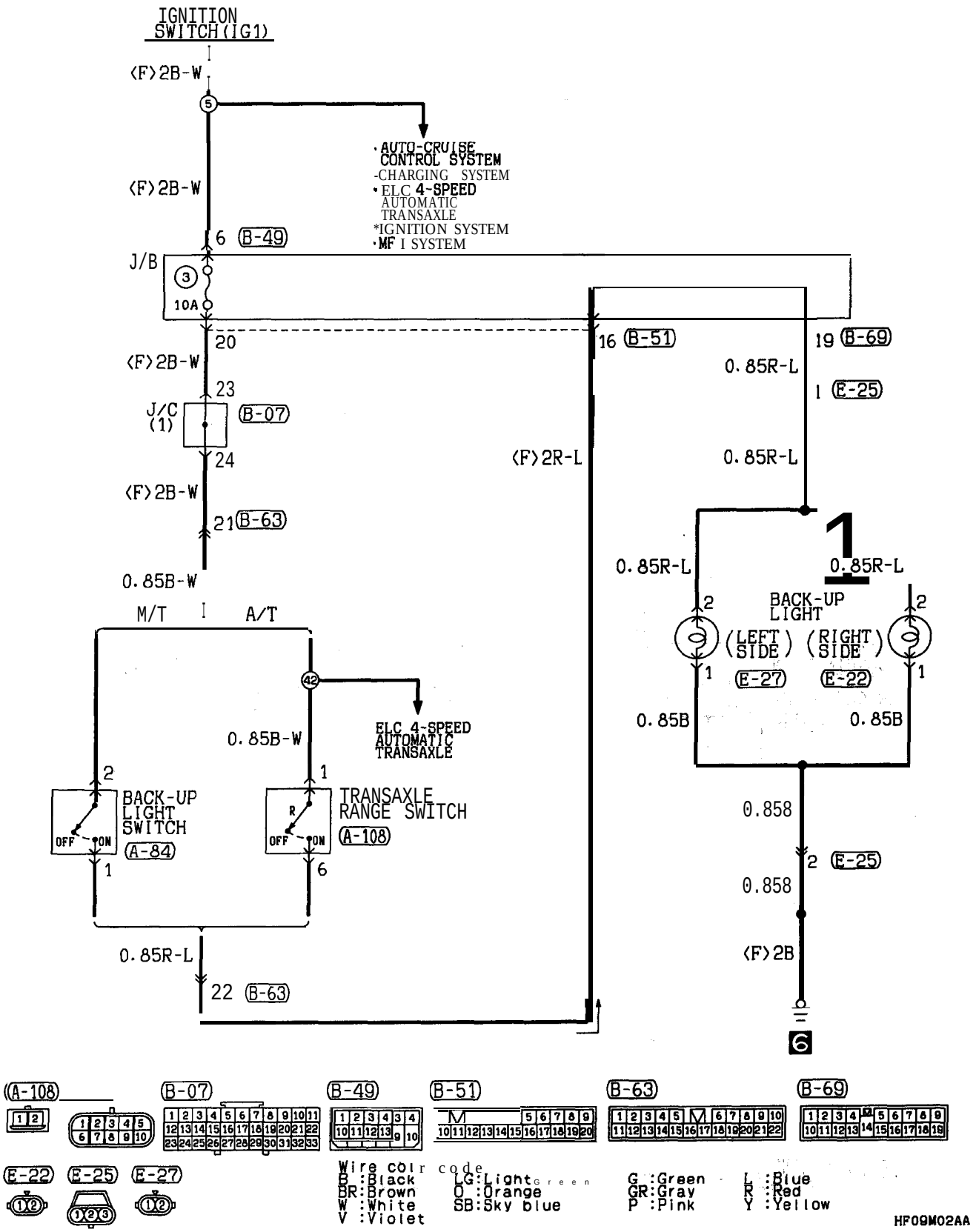

TSB Revision

BACK-UP LIGHT <2.0L Engine (Turbo) and 2.4L Engine>

90100310250

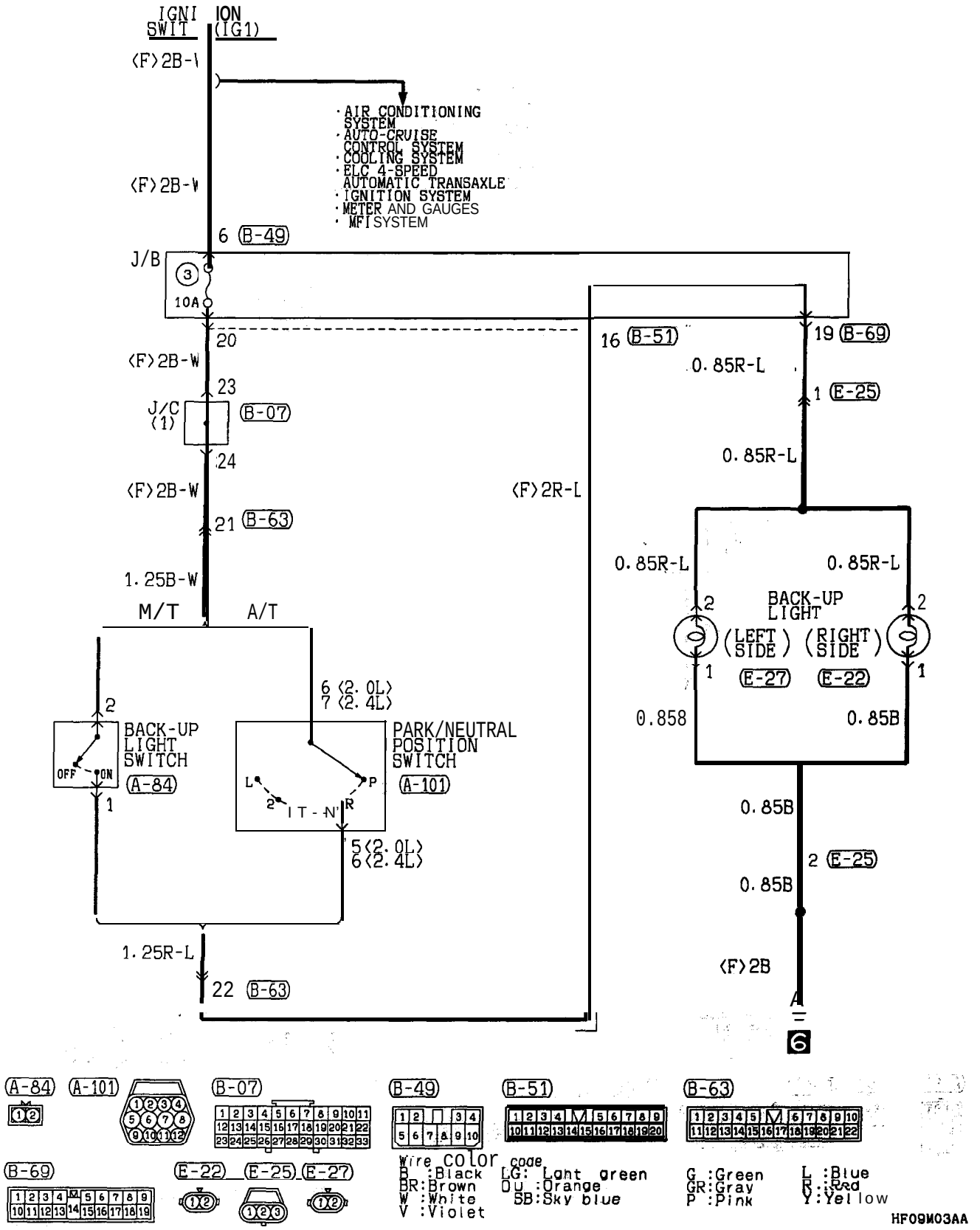

TSB Revision

HORN

90100330232

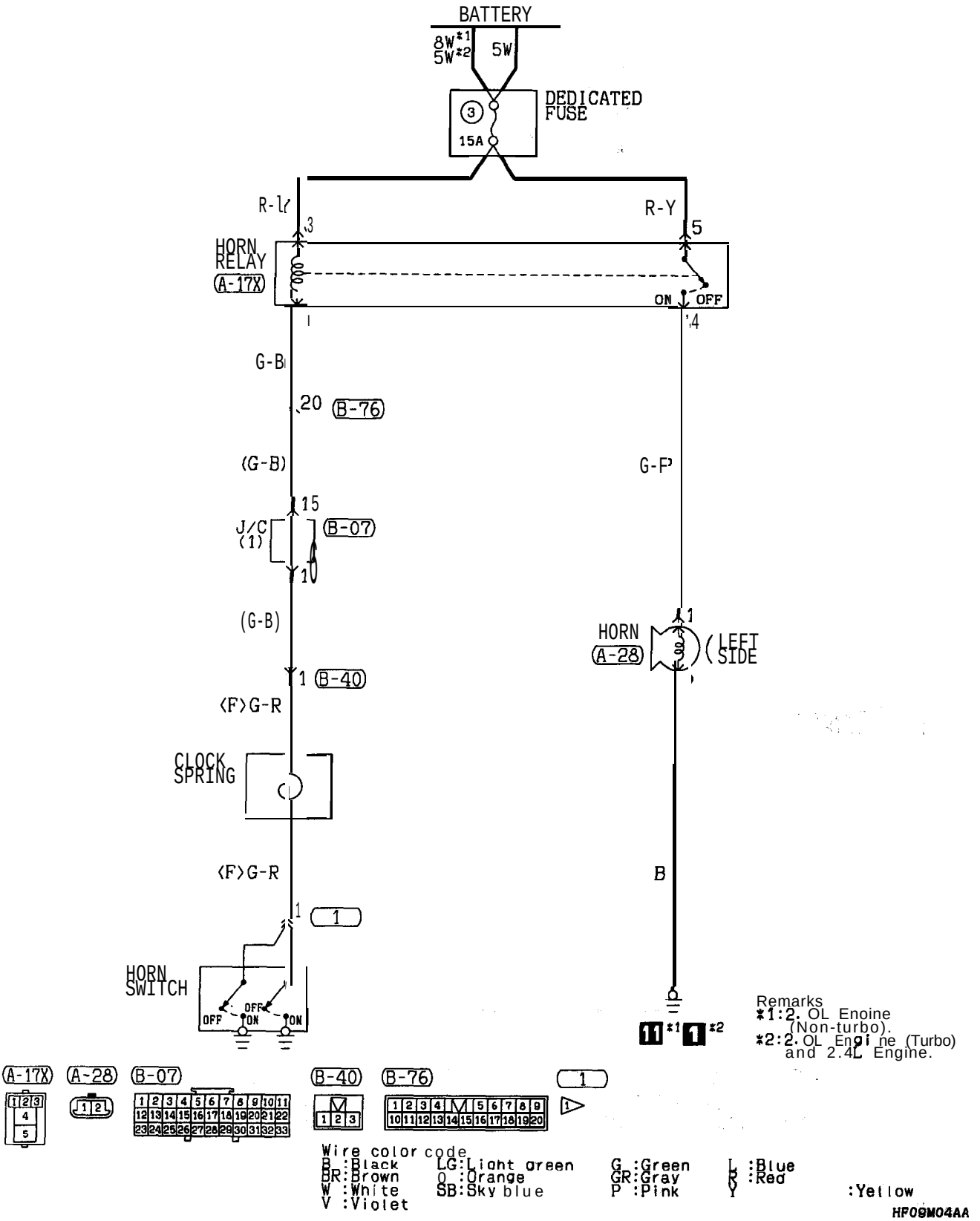

TSB Revision

NOTES

METER AND GAUGES <2.0L Engine (Non-turbo)>

90100350283

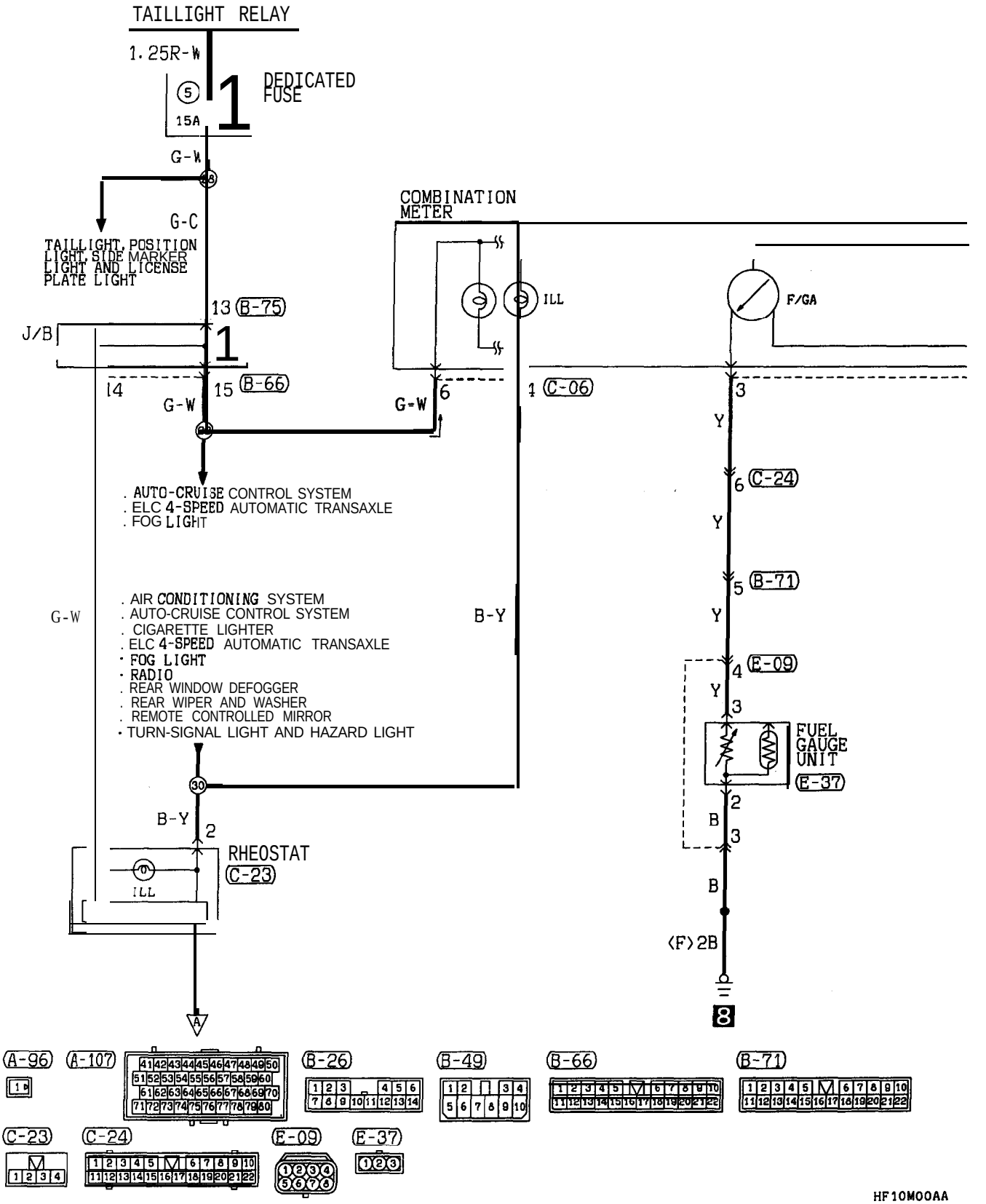

TSB Revision

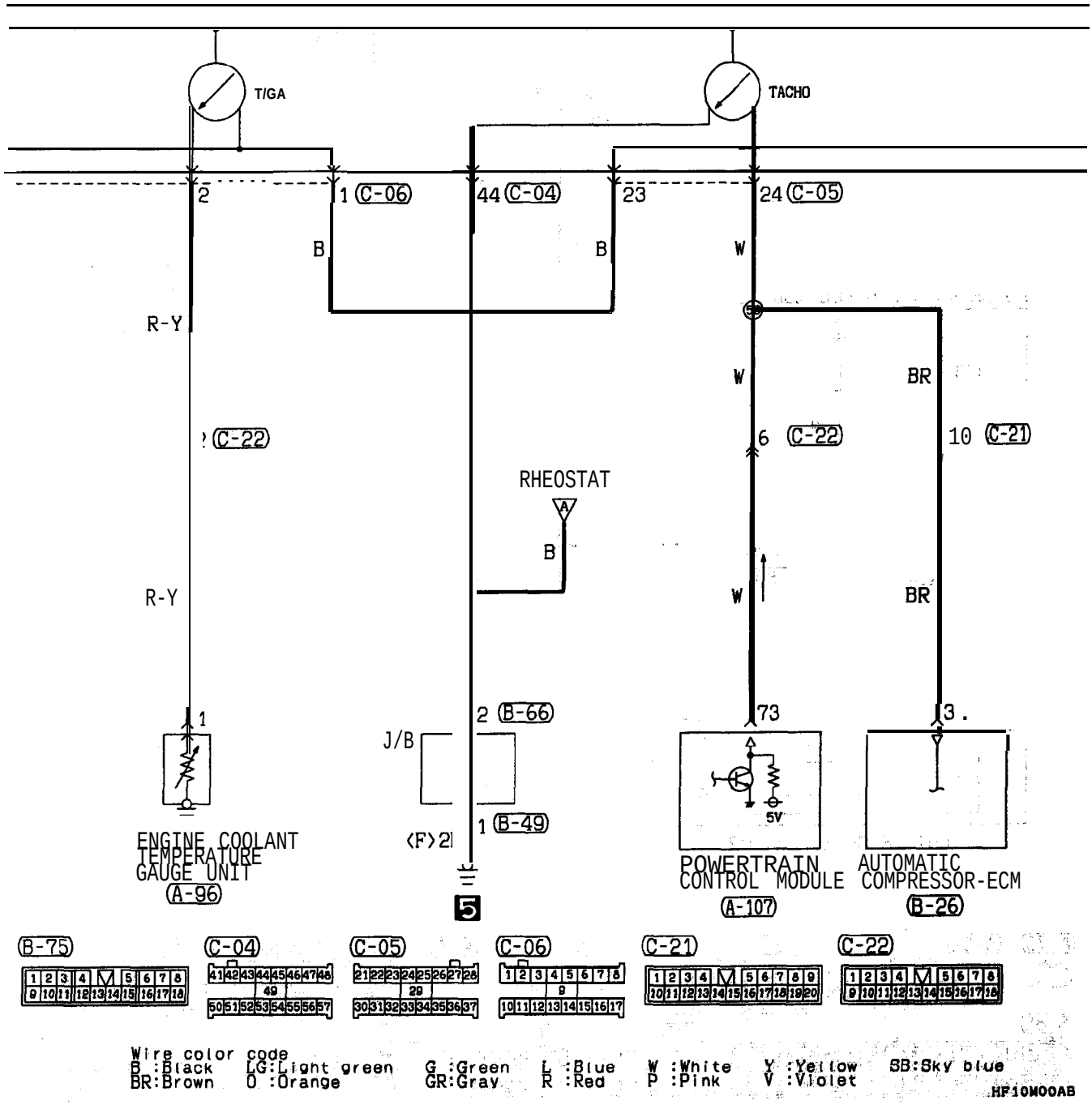

Wire color code
B :Black LG:Light green G :Green L :Blue W :White Y :Yellow SB:Sky blue
BR:Brown O :Orange GR:Gray R :Red P :Pink V :Violet

HF10M00AB

TSB Revision

METER AND GAUGES <2.0L Engine (Non-turbo)> (CONTINUED)

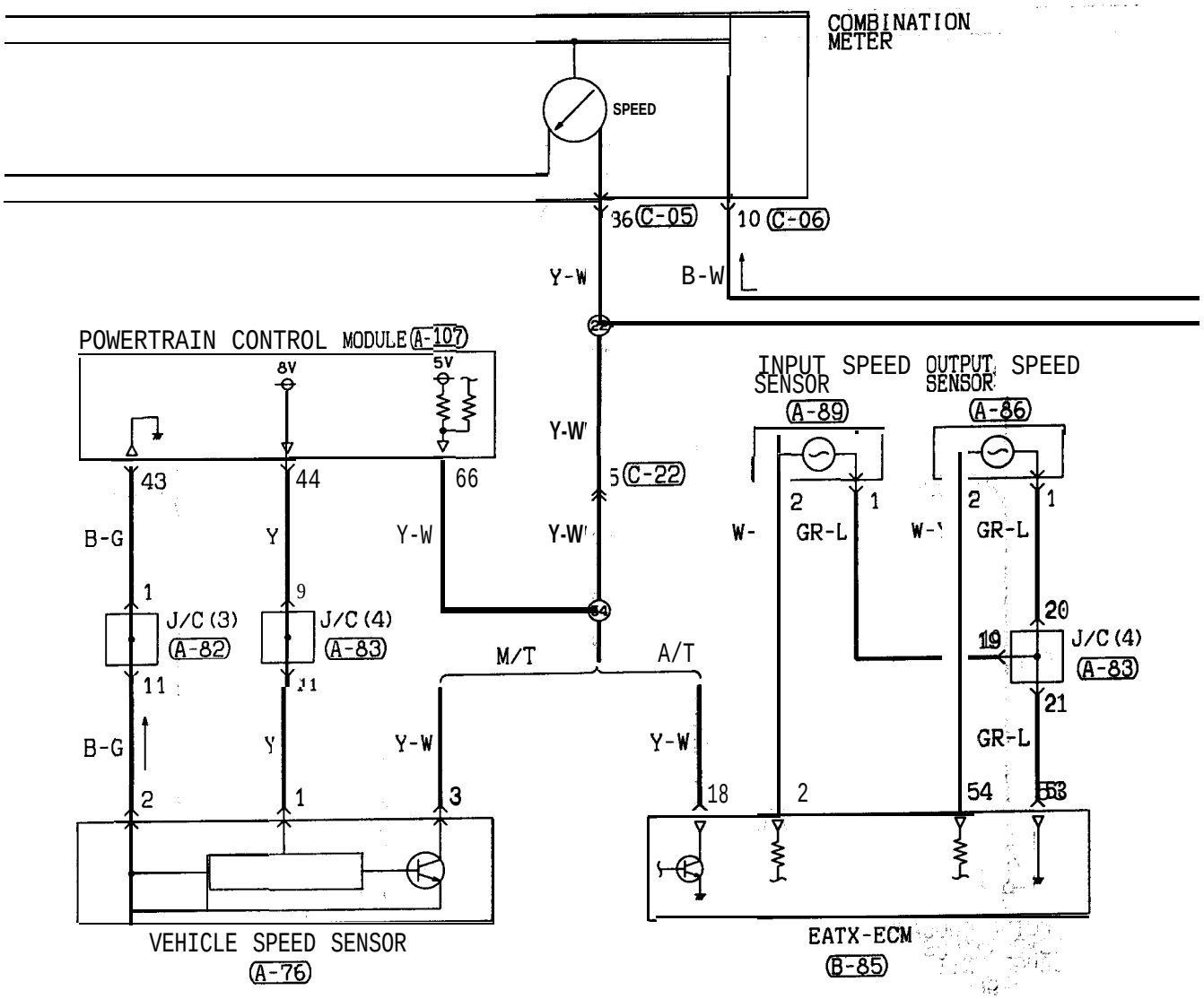

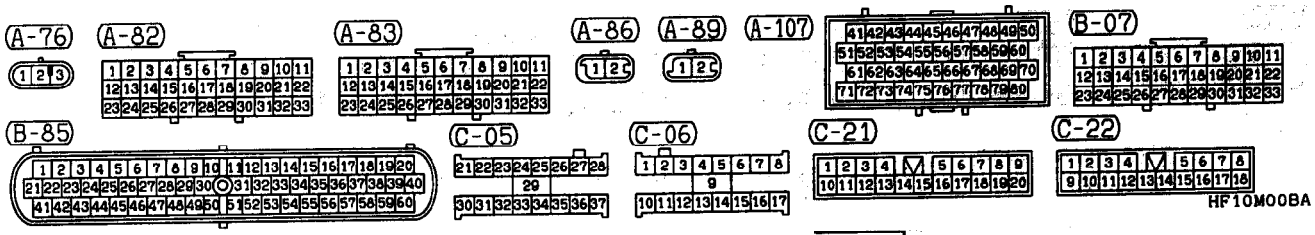

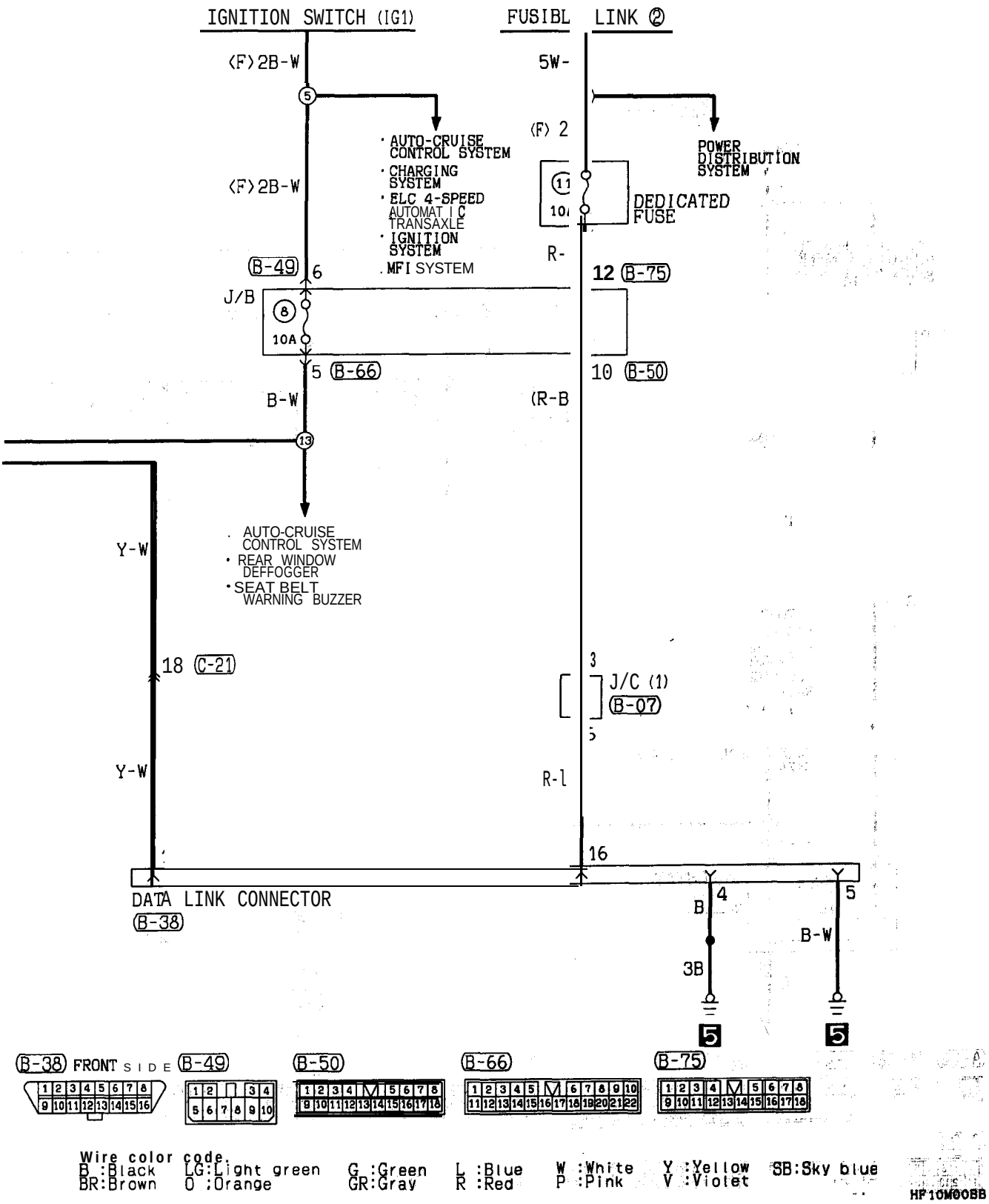

Wire color code:
B :Black LG:Light green G :Green L :Blue W :White Y :Yellow SB:Sky blue
BR:Brown O :Orange GR:Gray R :Red P :Pink V :Violet

HF10M00BB

TSB Revision

METER AND GAUGES <2.0L Engine (Turbo) and 2.4L Engine>

90100350290

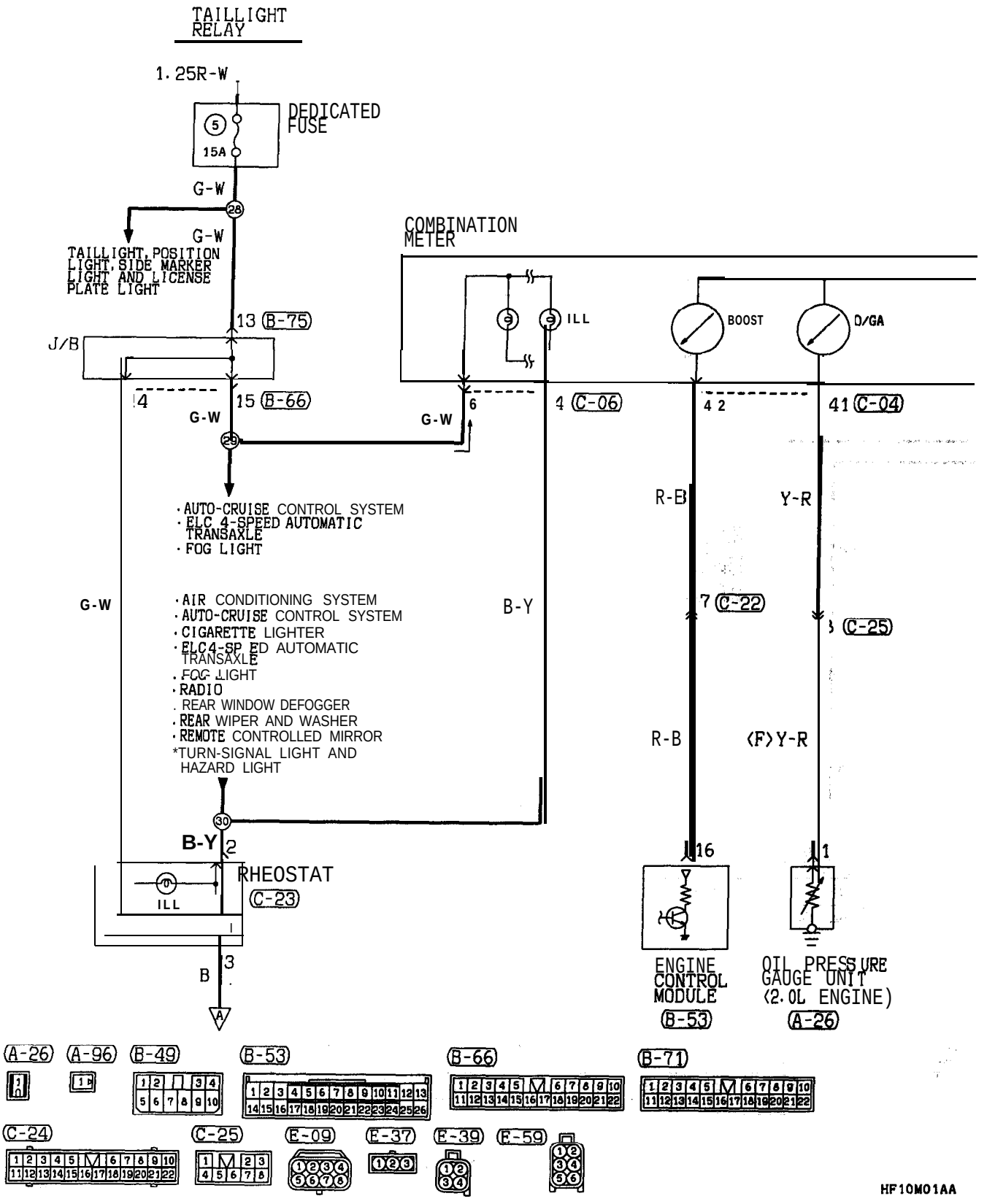

TSB Revision

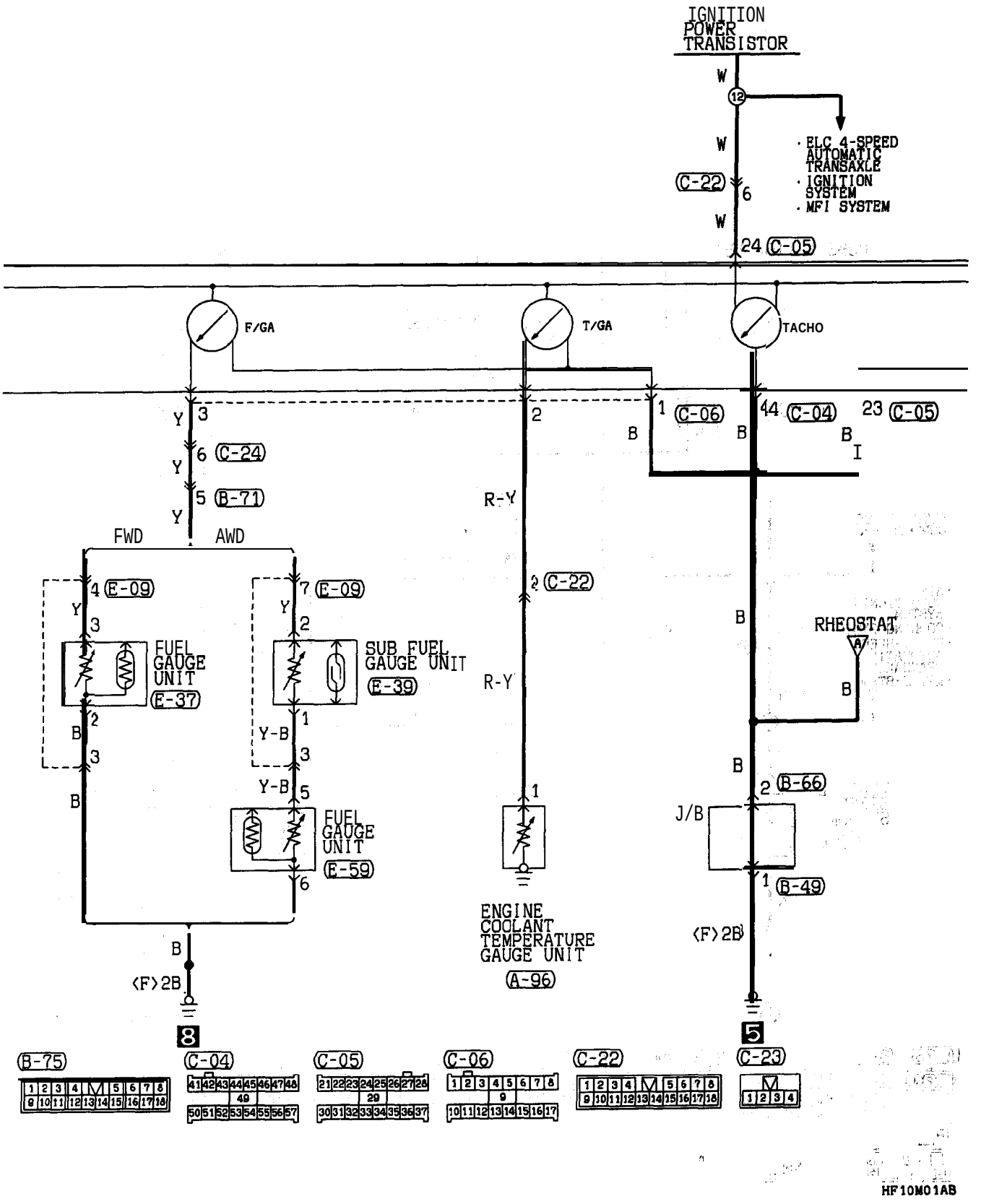
IGNITION POWER TRANSISTOR
W
12
W
C-22
6
W
24 C-05
· ELC 4-SPEED AUTOMATIC TRANSAXLE
· IGNITION SYSTEM
· MFI SYSTEM
F/GA
T/GA
TACHO
Y 3
6 C-24
Y
5 B-71
Y
FWD
AWD
4 E-09
Y
3
FUEL GAUGE UNIT
E-37
2
B
3
B
7 E-09
Y
2
SUB FUEL GAUGE UNIT
E-39
1
Y-B
3
Y-B
5
FUEL GAUGE UNIT
E-59
6
B
(F) 2B
2
C-22
R-Y
R-Y
1
ENGINE COOLANT TEMPERATURE GAUGE UNIT
A-96
2
C-22
1
B
2 C-06
B
44 C-04
23 C-05
B
I
B
RHEOSTAT
A
B
B
2 B-66
J/B
1 B-49
(F) 2B
8
5
B-75
C-04
C-05
C-06
C-22
C-23
HF10M01AB

METER AND GAUGES <2.0L Engine (Turbo) and 2.4L Engine> (CONTINUED)

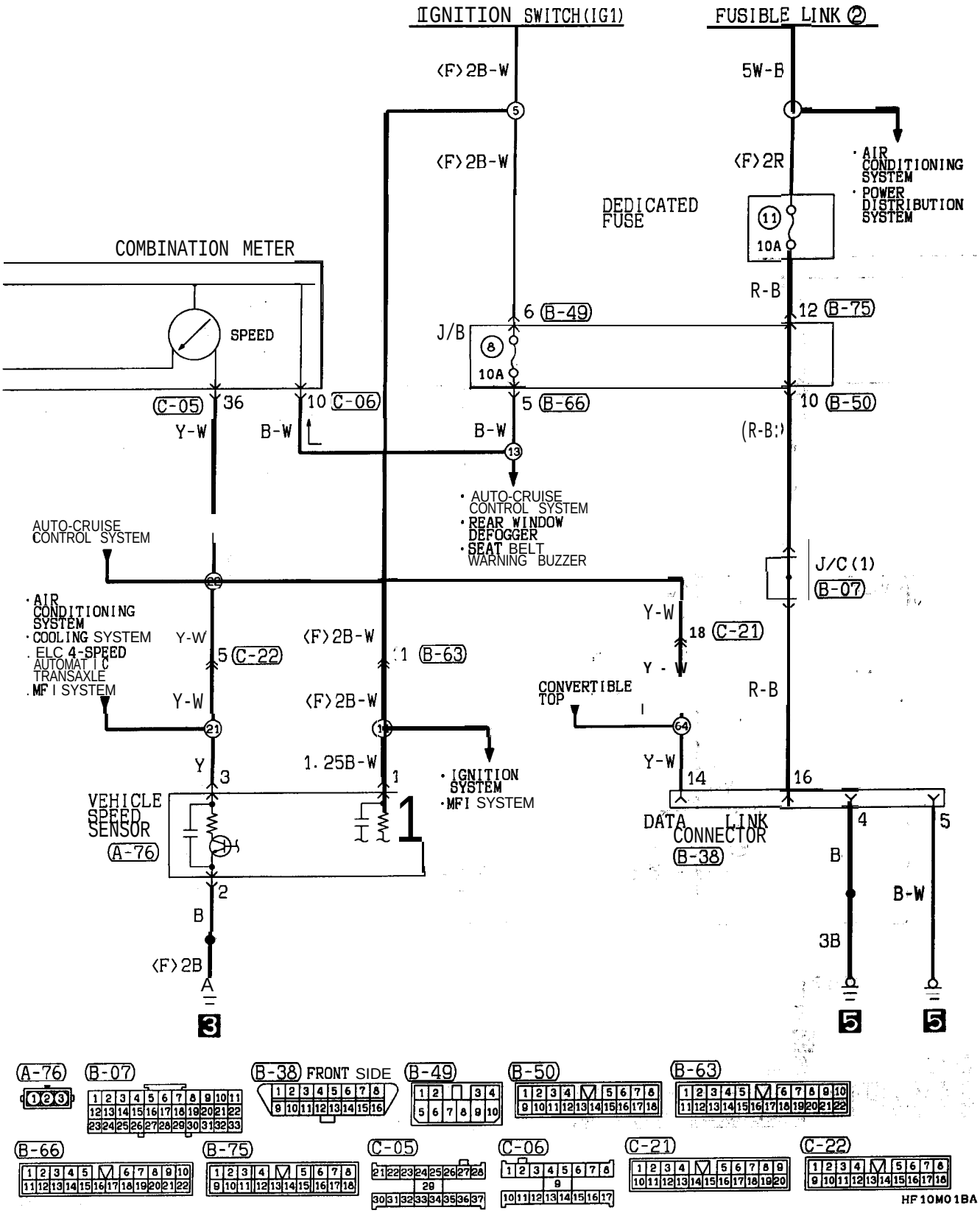

TSB Revision

NOTES

BRAKE WARNING LIGHT, OIL PRESSURE WARNING LIGHT AND LOW FUEL LEVEL WARNING LIGHT

90101180201

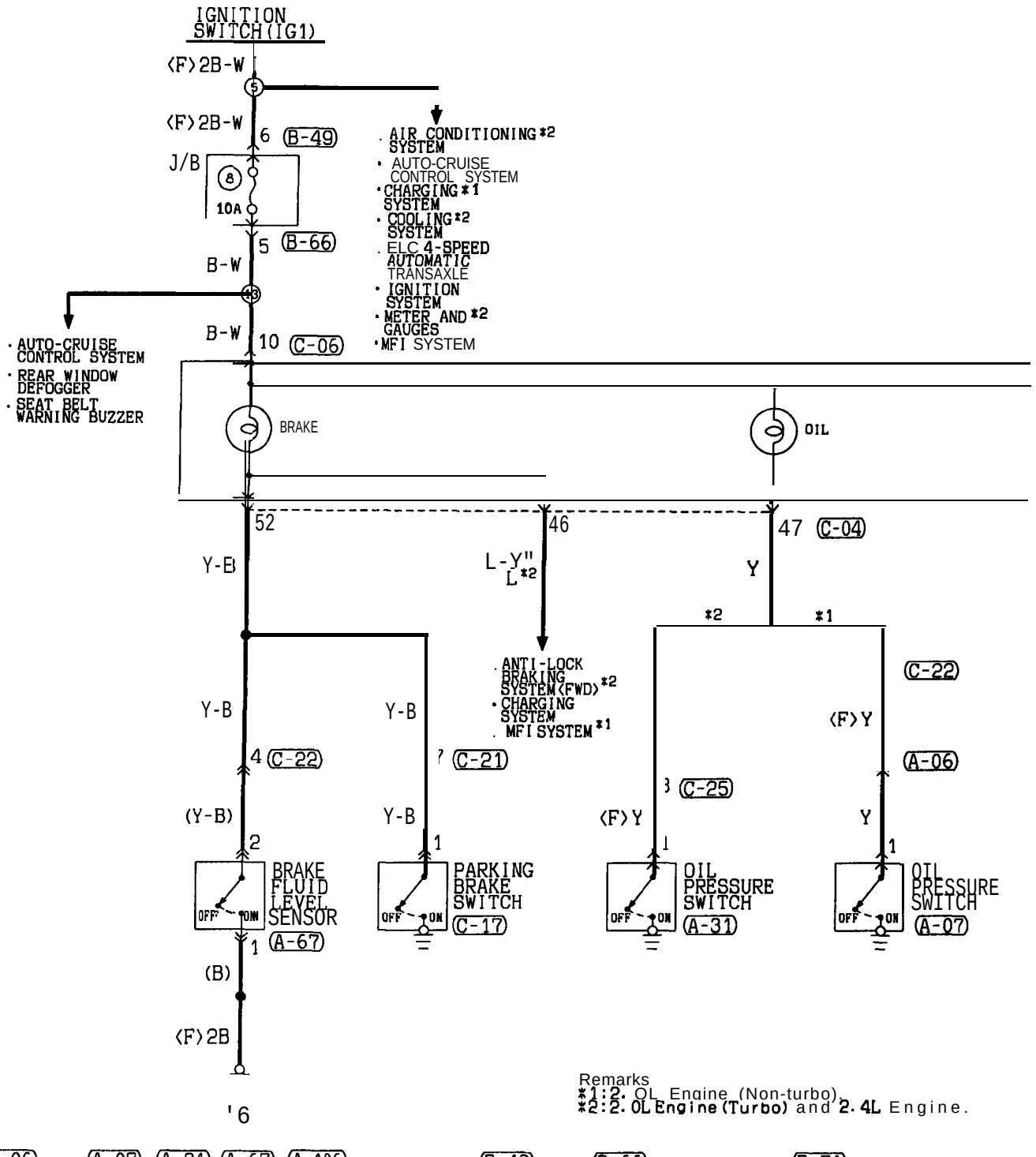

TSB Revision

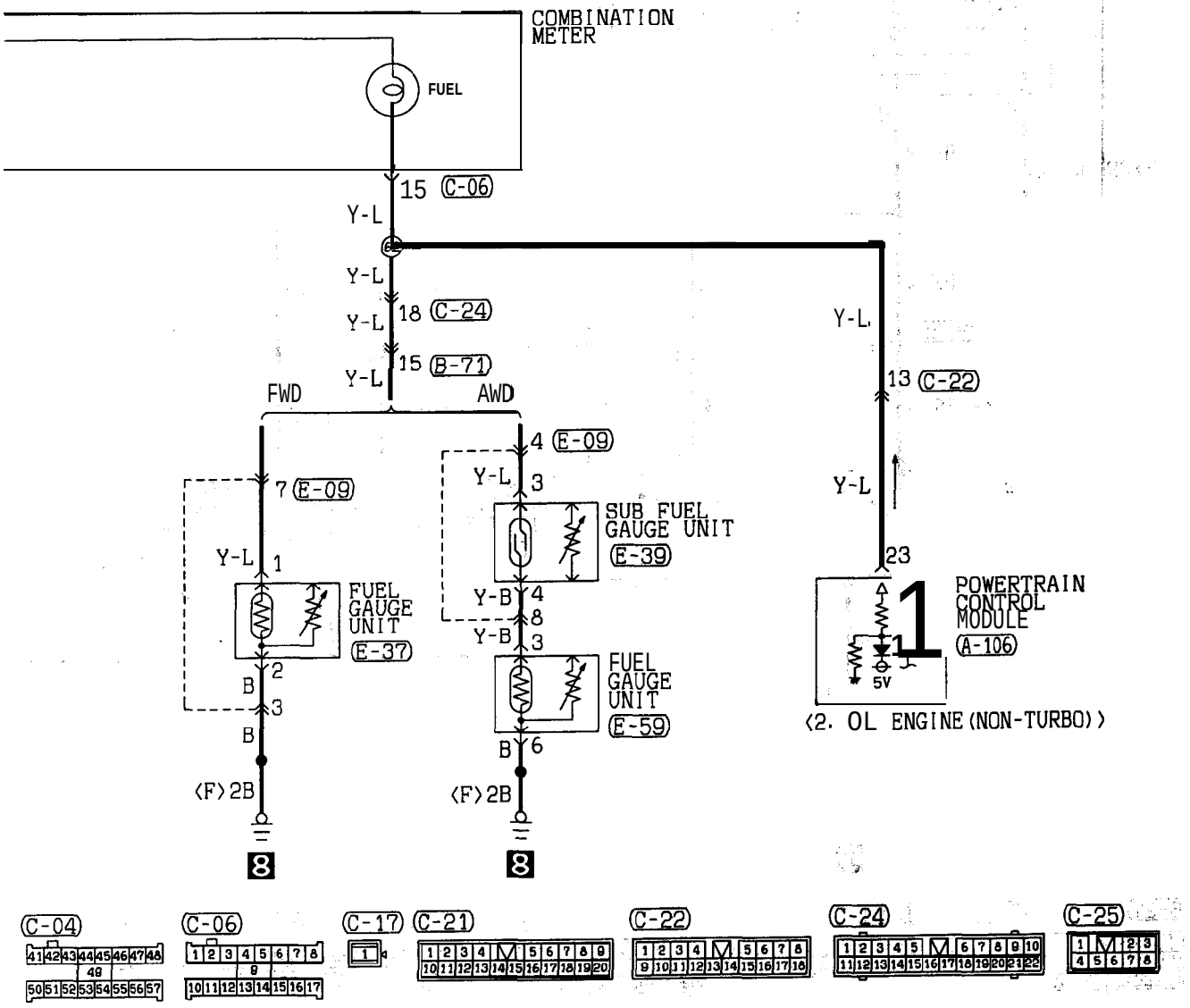
COMBINATION METER
FUEL
15 (C-06)
Y-L
Y-L
18 (C-24)
Y-L
15 (B-71)
Y-L
FWD
AWD
7 (E-09)
Y-L
1
FUEL GAUGE UNIT
(E-37)
2
B
3
B
(F) 2B
8
4 (E-09)
Y-L
3
SUB FUEL GAUGE UNIT
(E-39)
Y-B
4
8
Y-B
3
FUEL GAUGE UNIT
(E-59)
B
6
(F) 2B
8
Y-L
13 (C-22)
Y-L
23
POWERTRAIN CONTROL MODULE
(A-106)
5V
(2. OL ENGINE (NON-TURBO))
(C-04)
(C-06)
(C-17)
(C-21)
(C-22)
(C-24)
(C-25)

HF10M02AB

CENTRAL DOOR LOCKING SYSTEM
<Vehicles without keyless entry system (ECLIPSE)>

90100470439

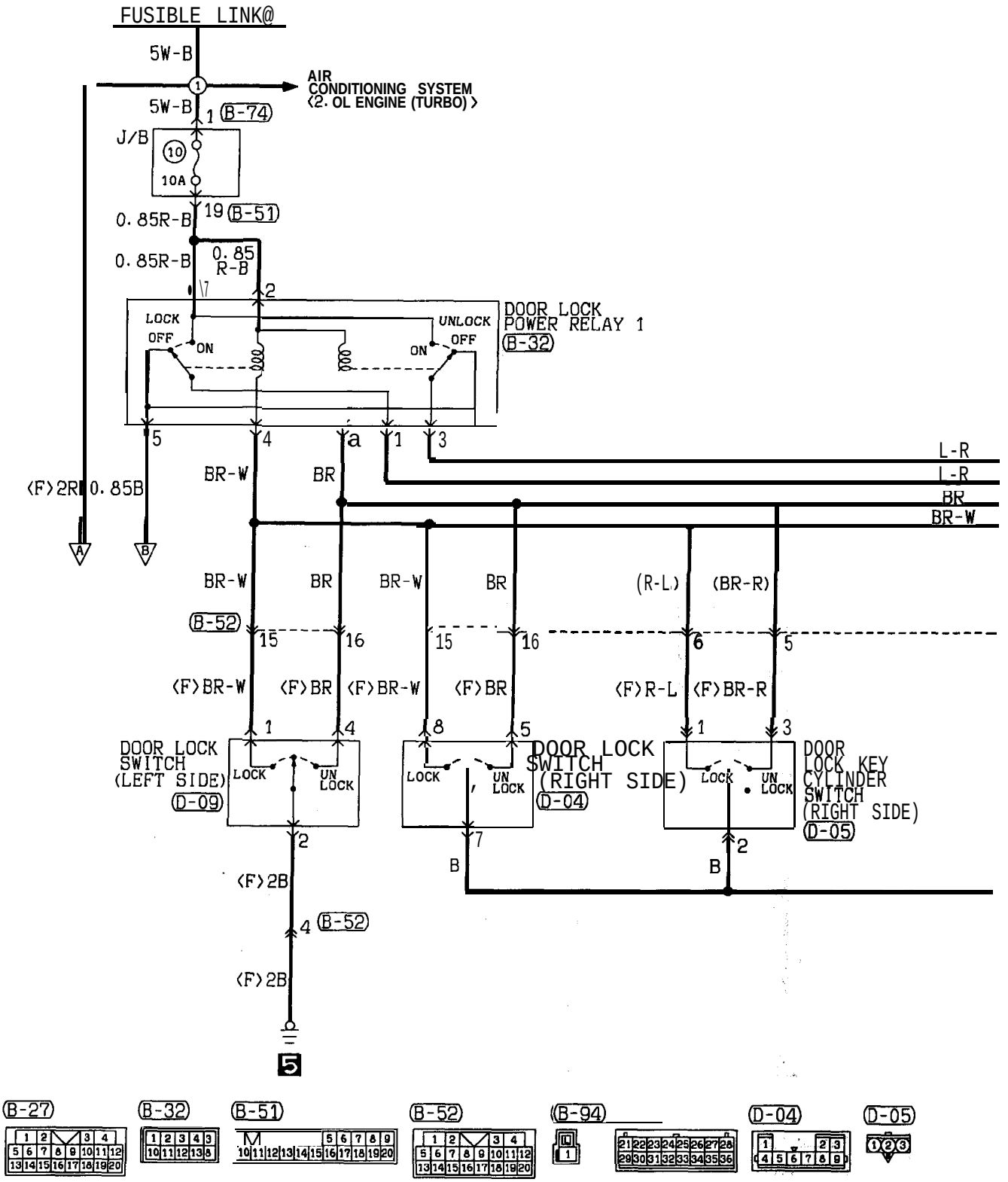

HF11M00AA

TSB Revision

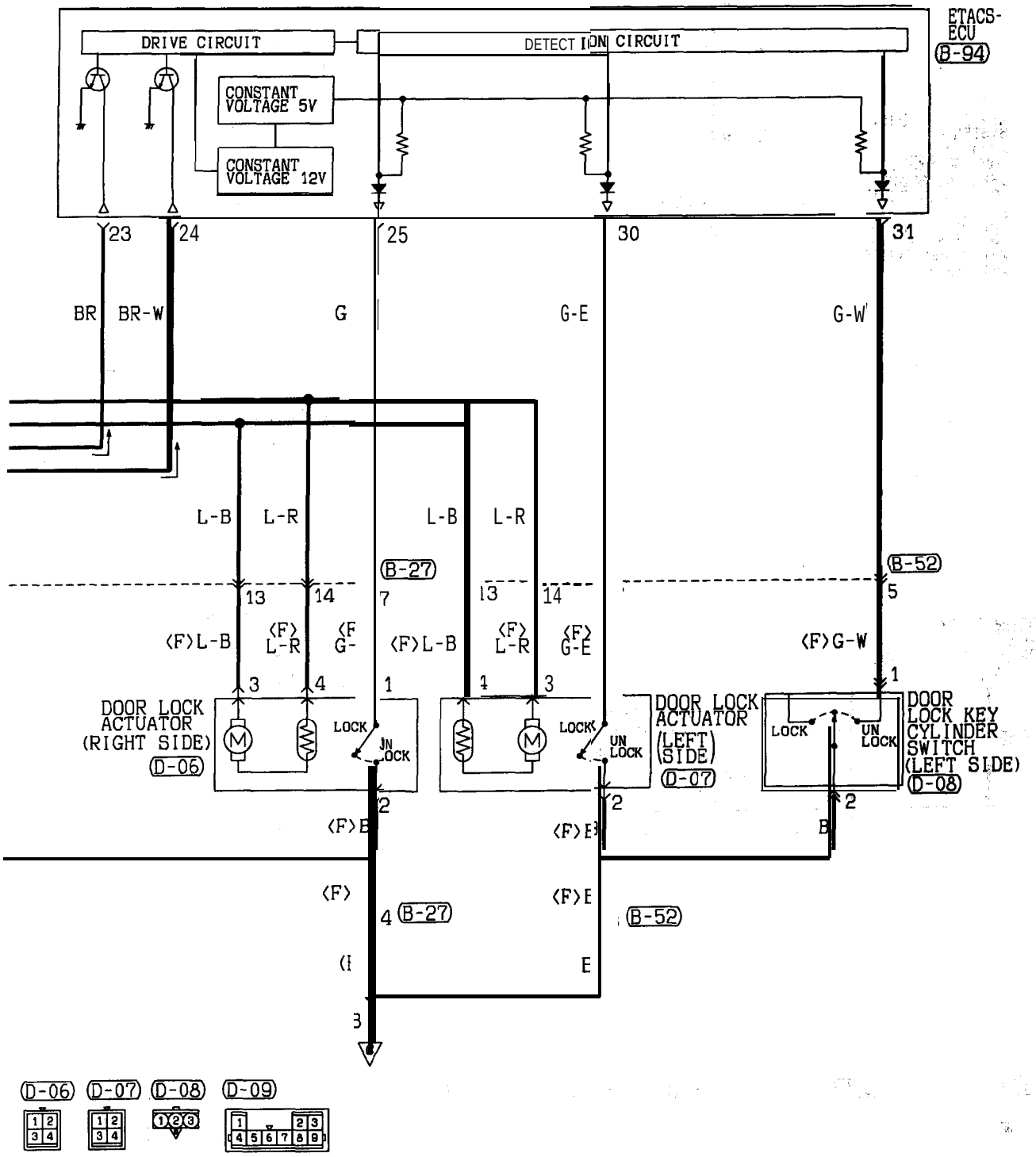

Wire color code
B :Black LG:Light green G :Green L :Blue W :White Y :Yellow SB:Sky blue
BR:Brown O :Orange GR:Gray R :Red P :Pink V :Violet

HF11M00AB

TSB Revision

CENTRAL DOOR LOCKING SYSTEM
<Vehicles without keyless entry system (ECLIPSE)> (CONTINUED)

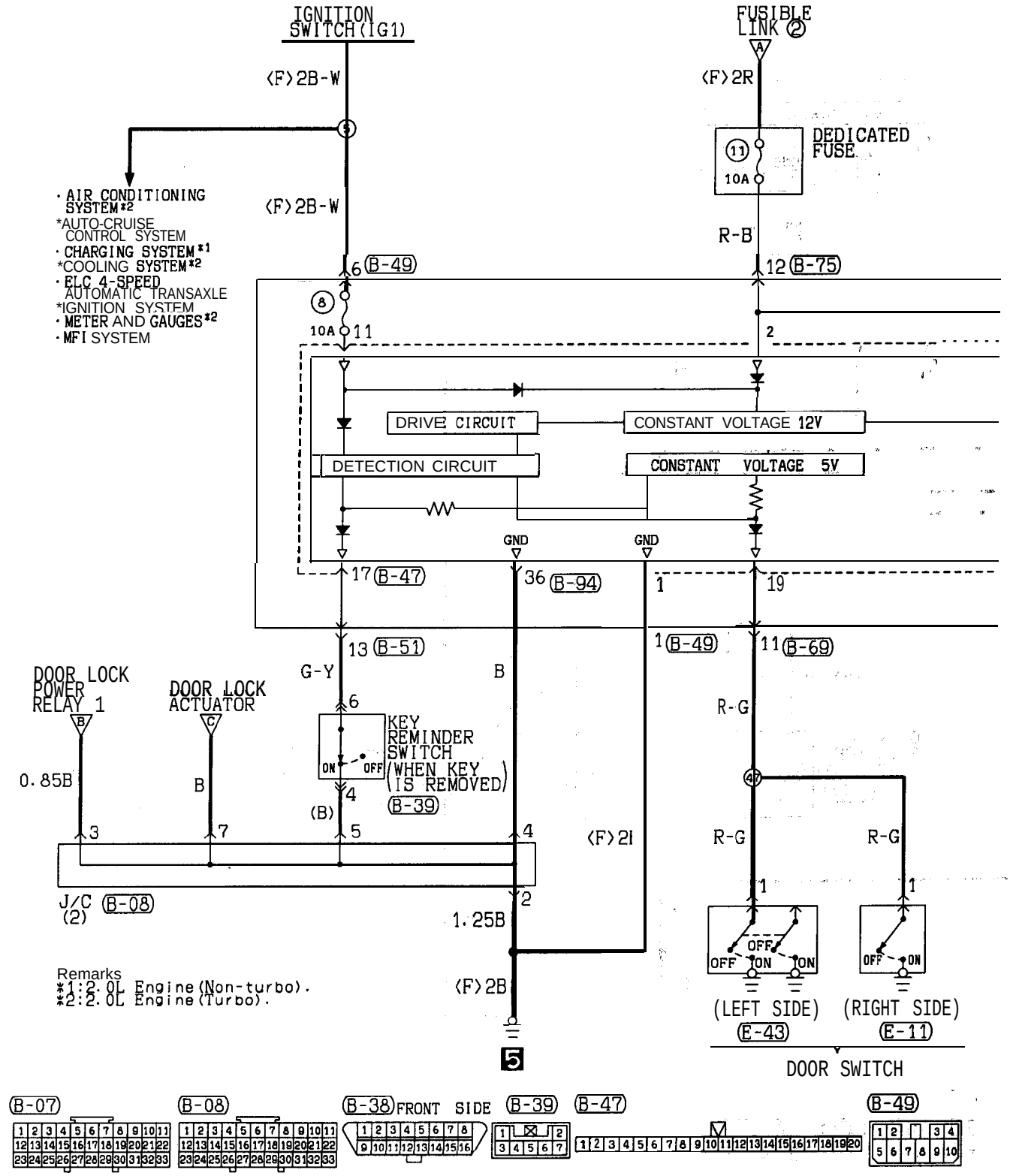

HF11M00BA

TSB Revision

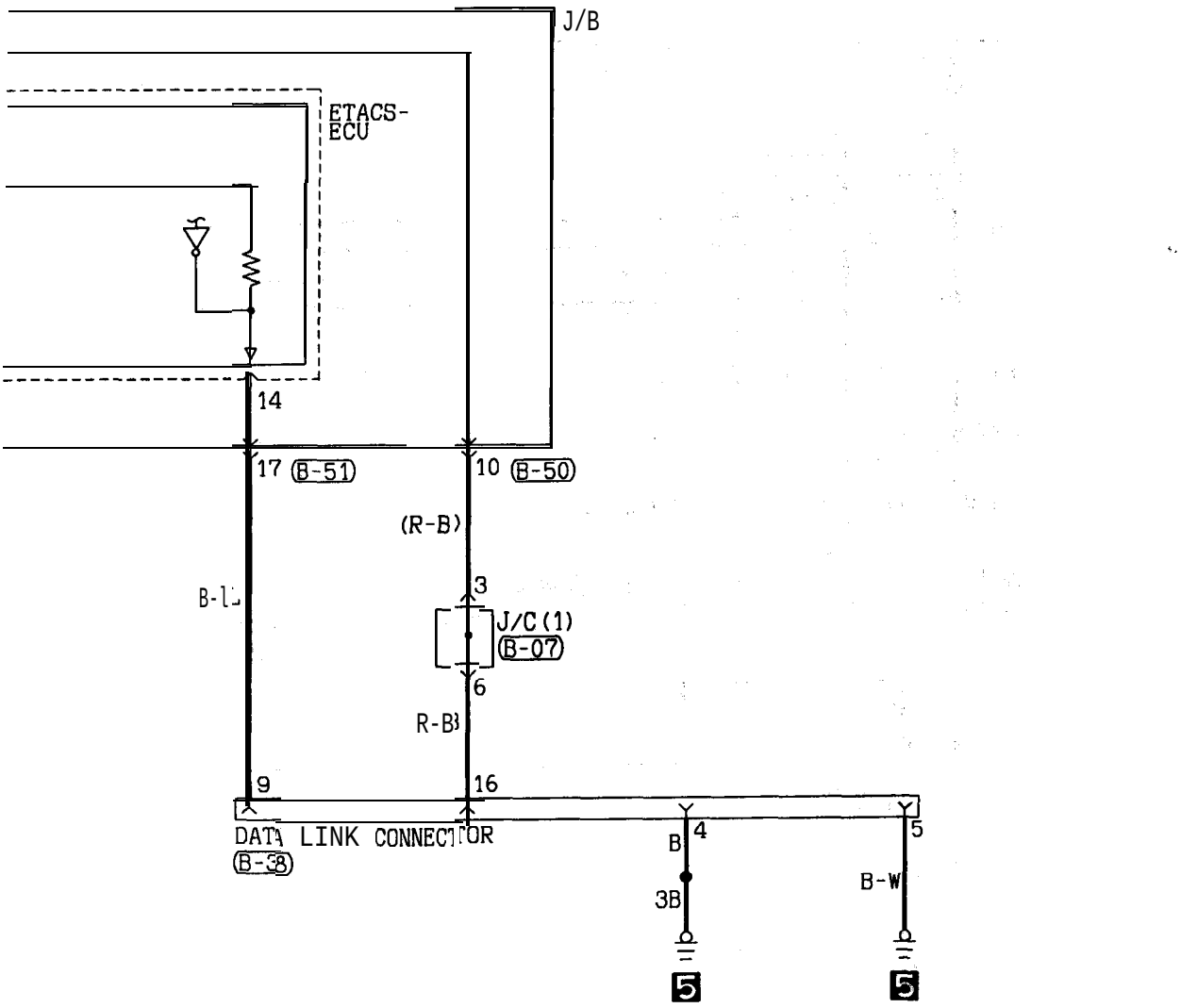

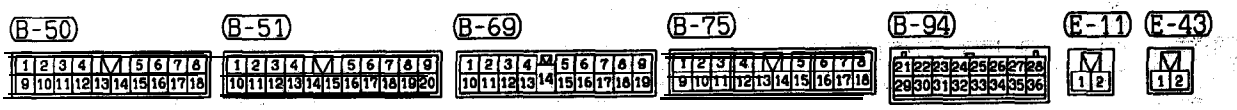

Wire color code

B :Black	LG:Light green	G :Green	L :Blue	W :White	Y :Yellow	SB:Sky blue
BR:Brown	O :Orange	GR:Gray	R :Red	P :Pink	V :Violet	

HF11M00BB

TSB Revision

CENTRAL DOOR LOCKING SYSTEM
<Vehicles without keyless entry system (ECLIPSE SPYDER)>

90100170446

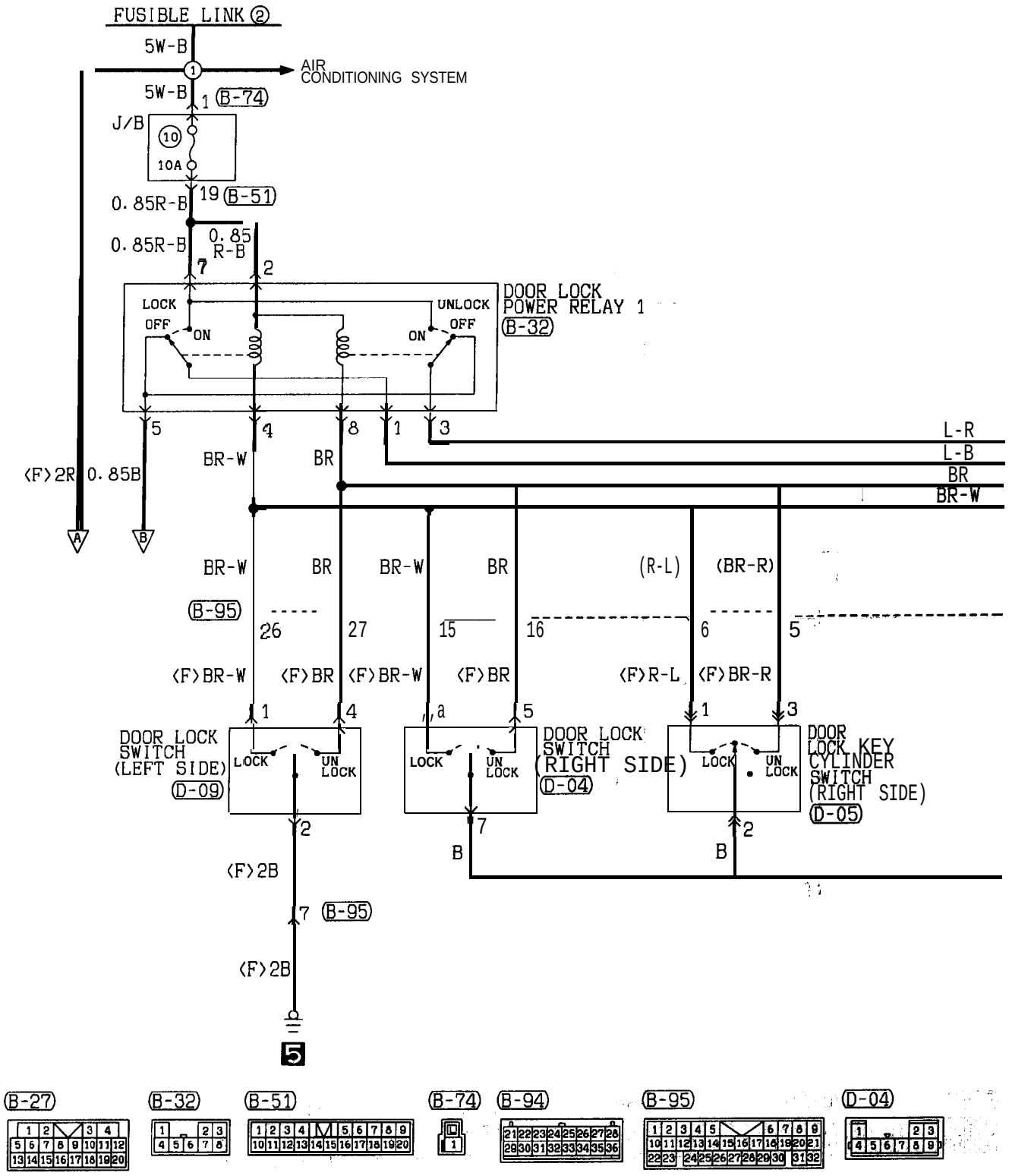

TSB Revision

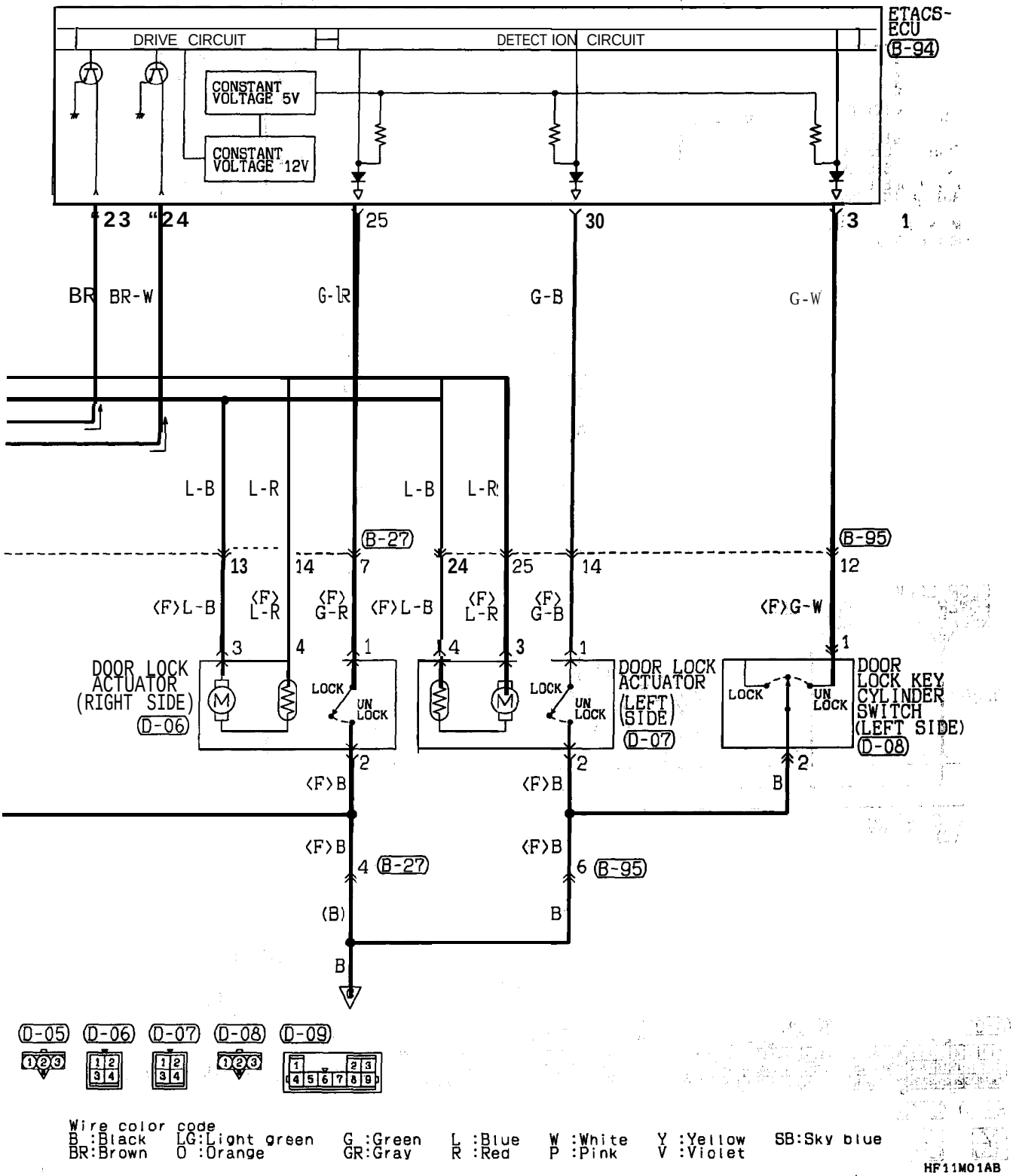

Wire color code
B :Black LG:Light green G :Green L :Blue W :White Y :Yellow SB:Sky blue
BR:Brown O :Orange GR:Gray R :Red P :Pink V :Violet

HF11M01AB

TSB Revision

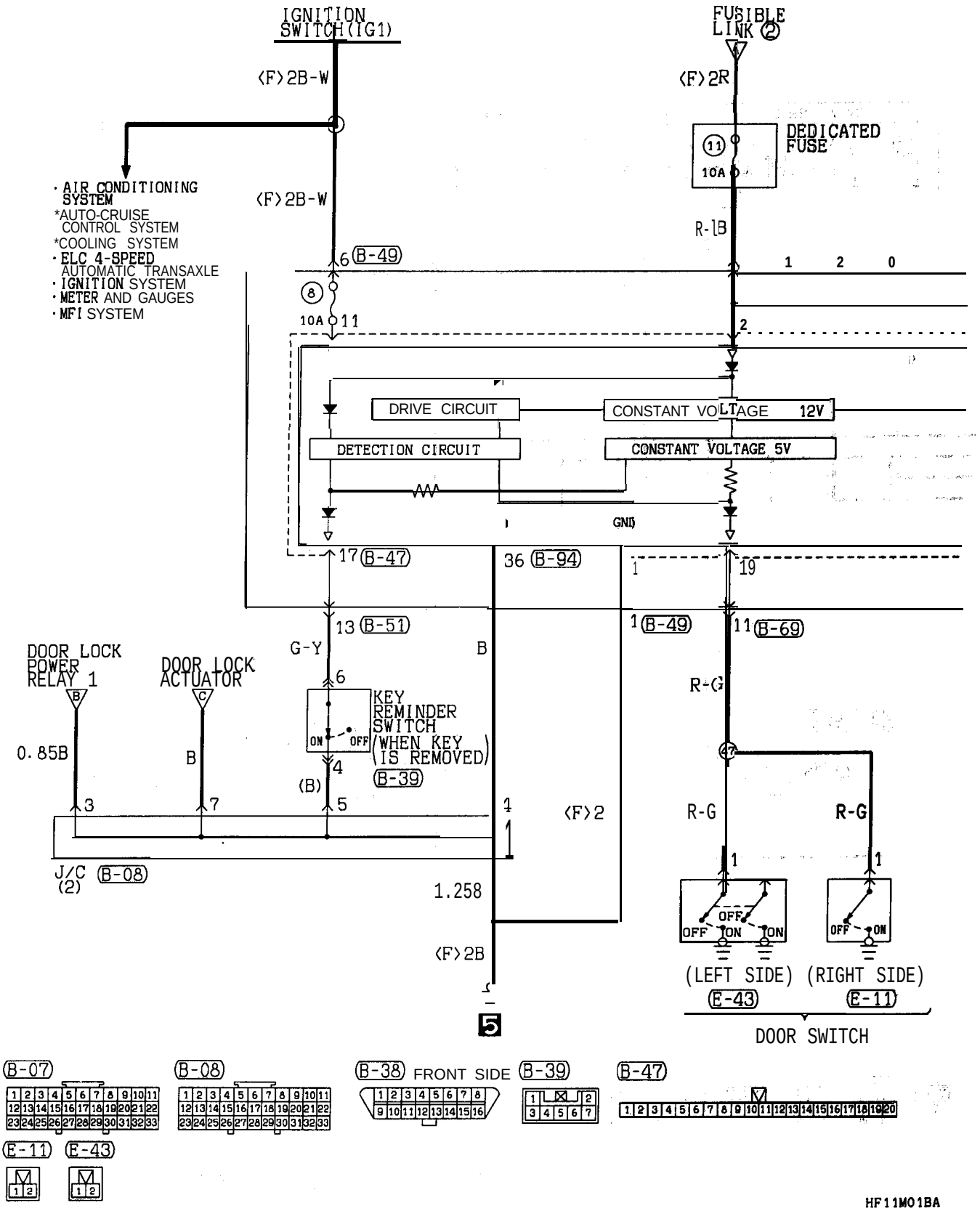

TSB Revision

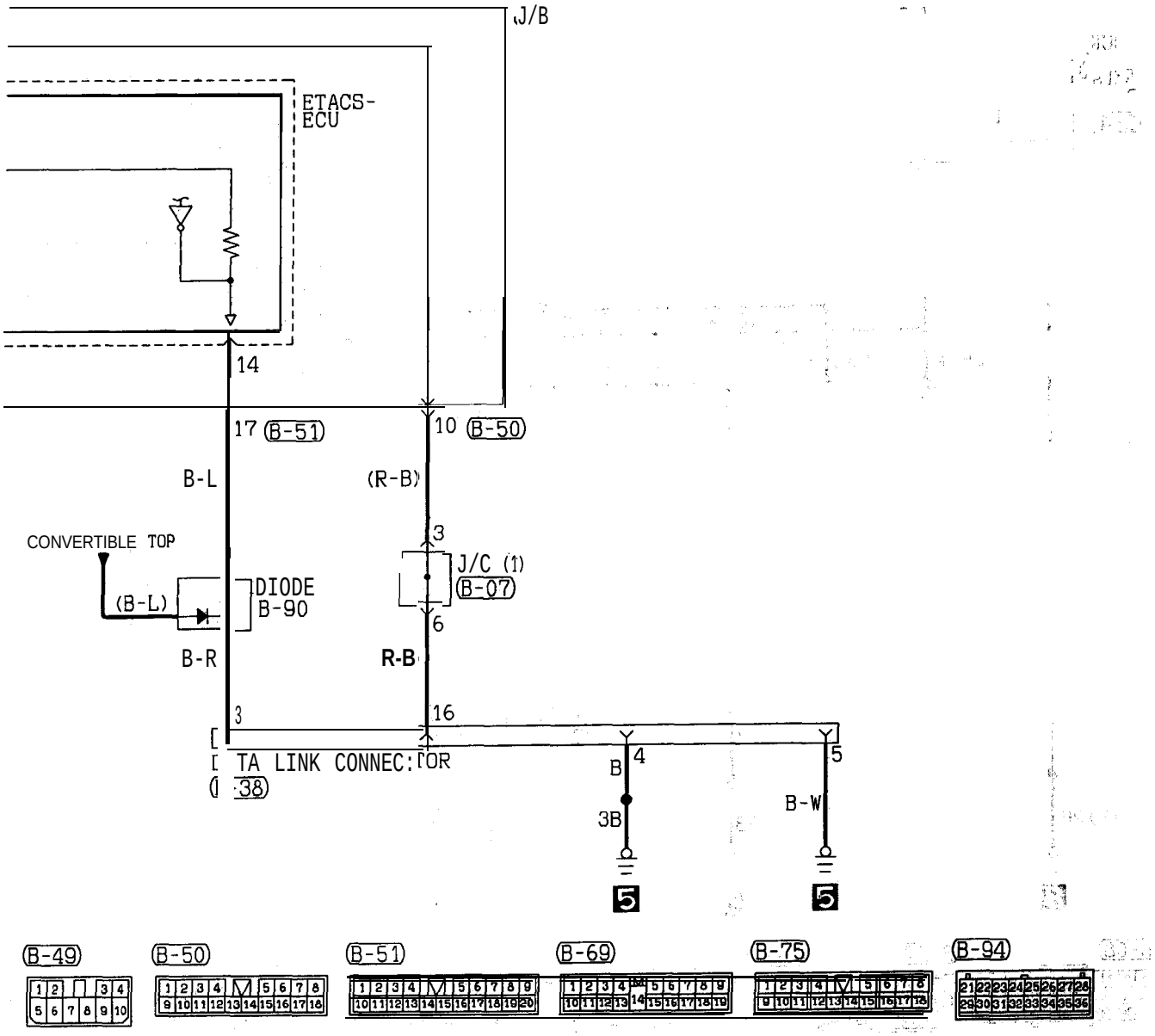

Wire color code
B :Black LG:Light green G :Green L :Blue W :White Y :Yellow SB:Sky blue
BR:Brown O :Orange GR:Gray R :Red P :Pink V :Violet

HF11M01BB

TSB Revision

CENTRAL DOOR LOCKING SYSTEM
<Vehicles with keyless entry system (ECLIPSE)>

90100470453

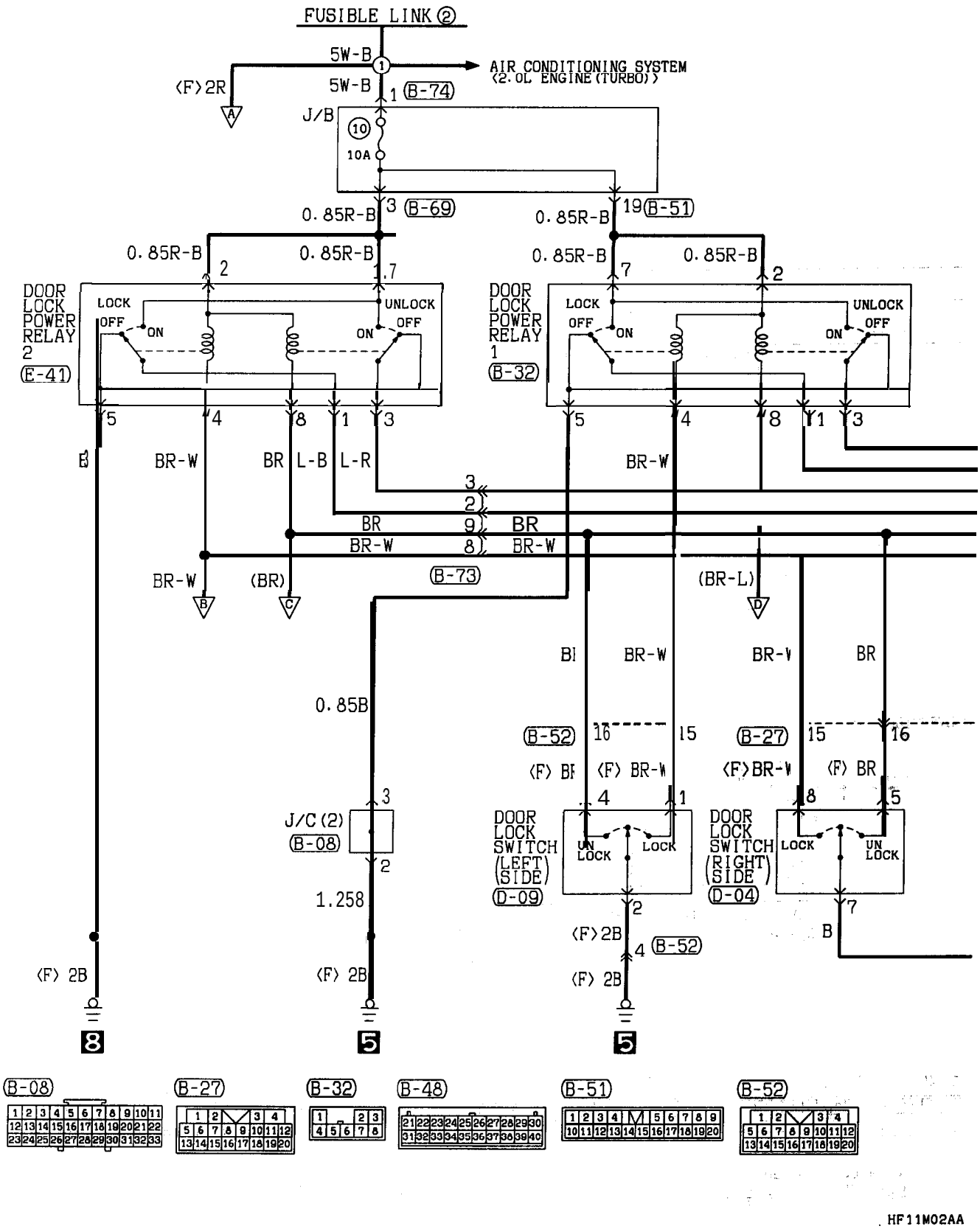

TSB Revision

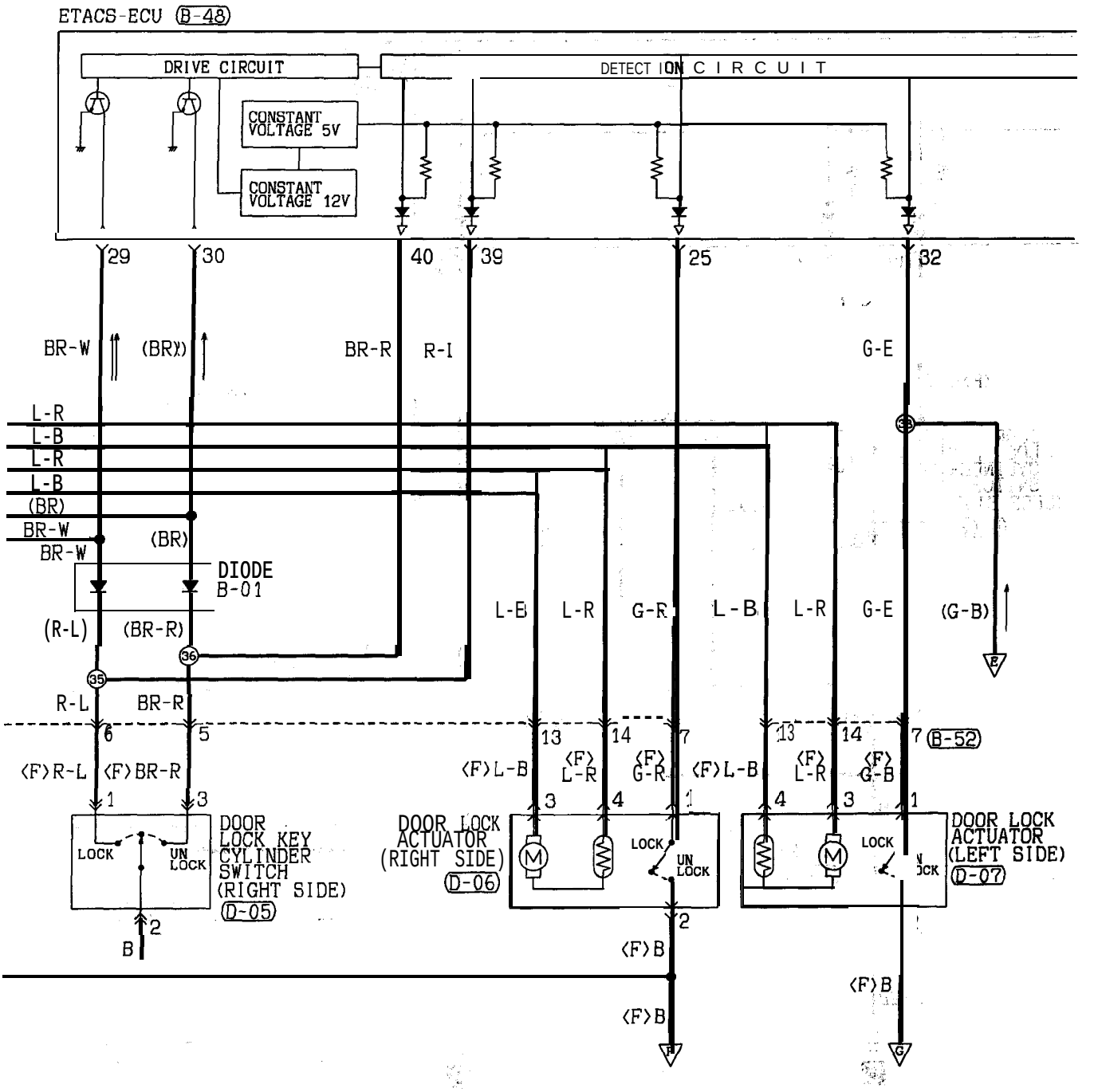

Wire color code
B :Black LG:Light green G :Green L :Blue W :White Y :Yellow SB:Sky blue
BR:Brown O :Orange GR:Gray R :Red P :Pink V :Violet

HF11M02AB

TSB Revision

CENTRAL DOOR LOCKING SYSTEM
<Vehicles with keyless entry system (ECLIPSE)> (CONTINUED)

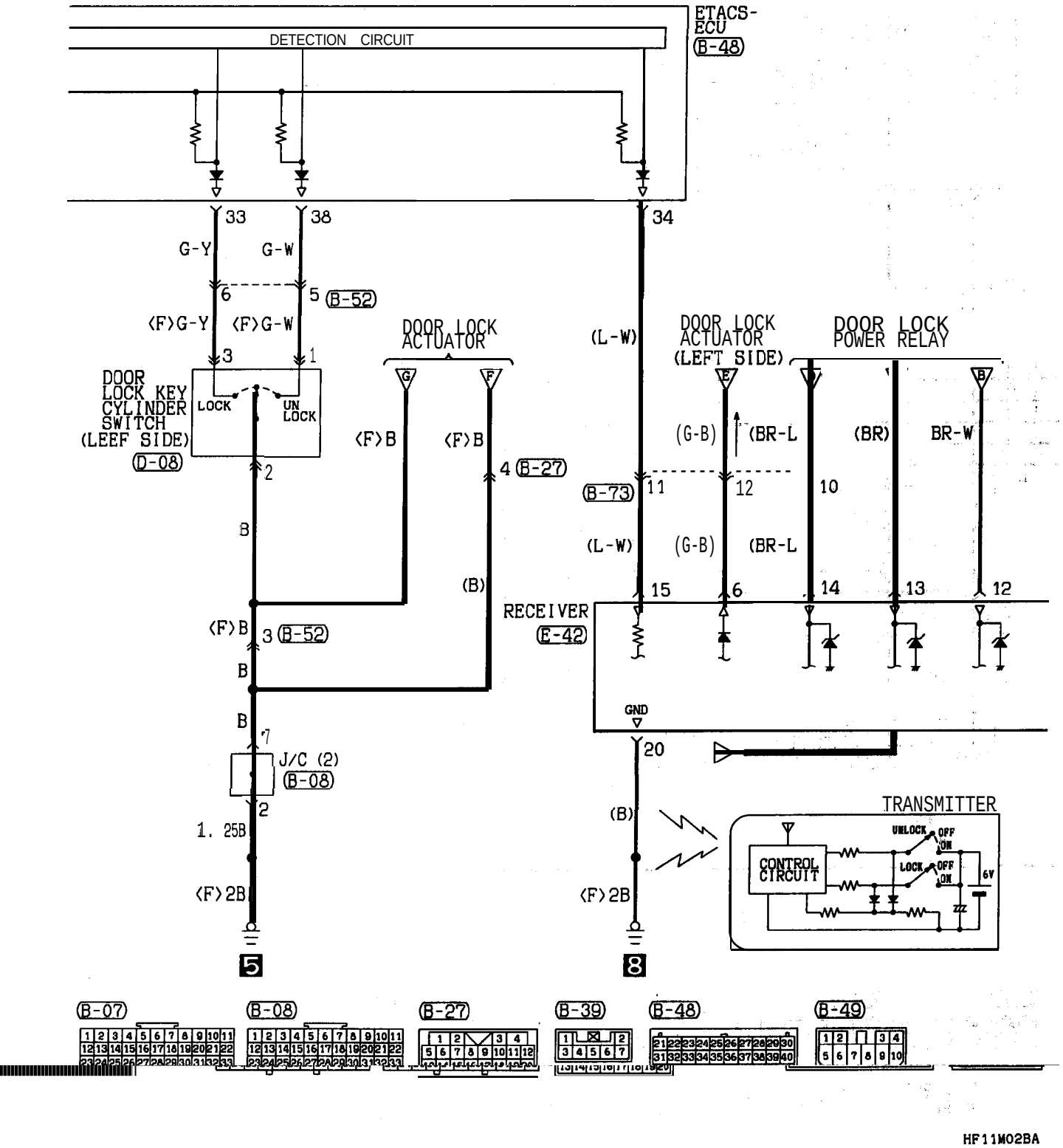

HF11M02BA

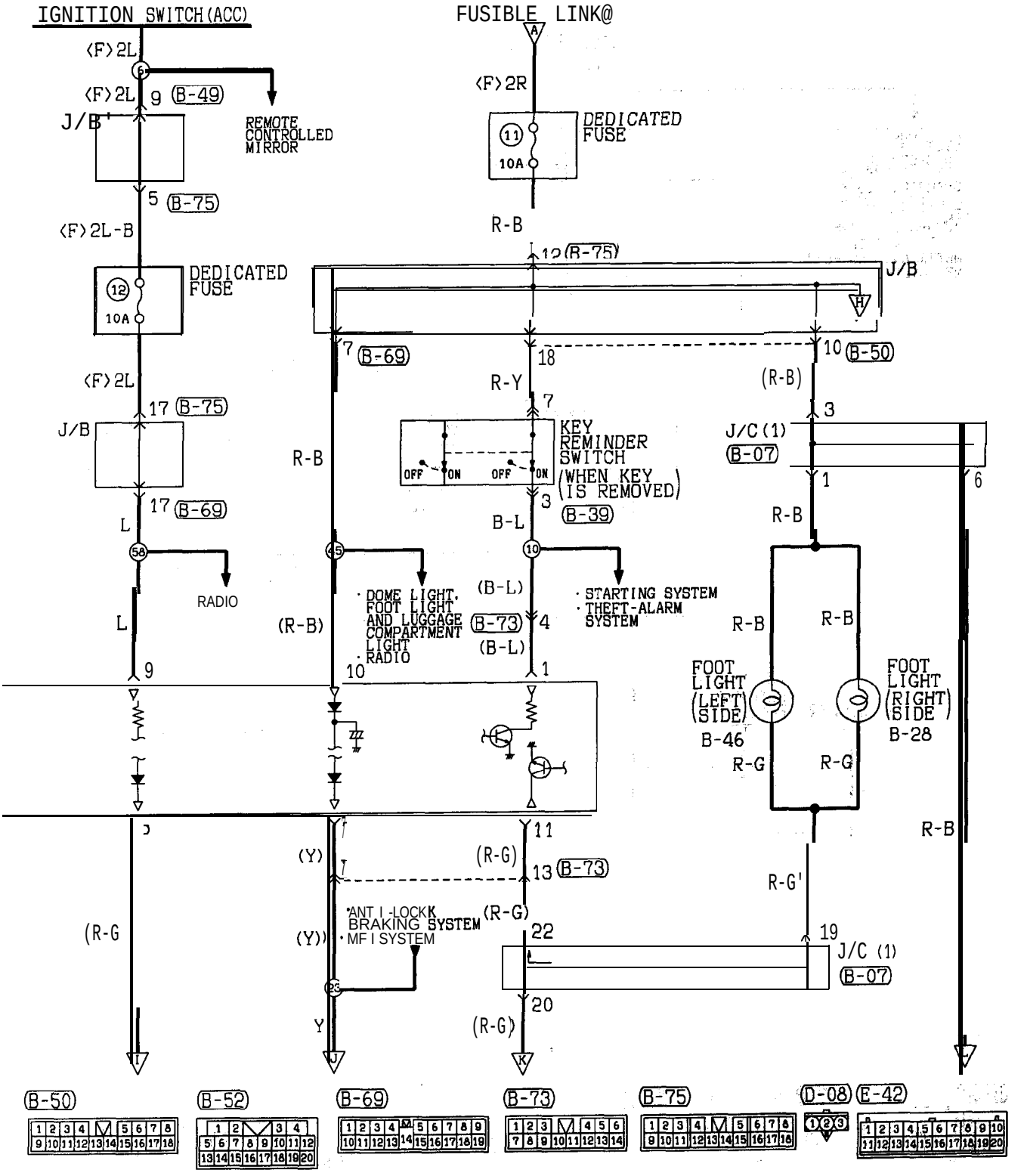

Wire color code
B :Black LG:Light green G :Green L :Blue W :White Y :Yellow SB:Sky blue
BR:Brown O :Orange GR:Gray R :Red P :Pink V :Violet

HF11M02BB

TSB Revision

CENTRAL DOOR LOCKING SYSTEM
<Vehicles with keyless entry system (ECLIPSE)> (CONTINUED)

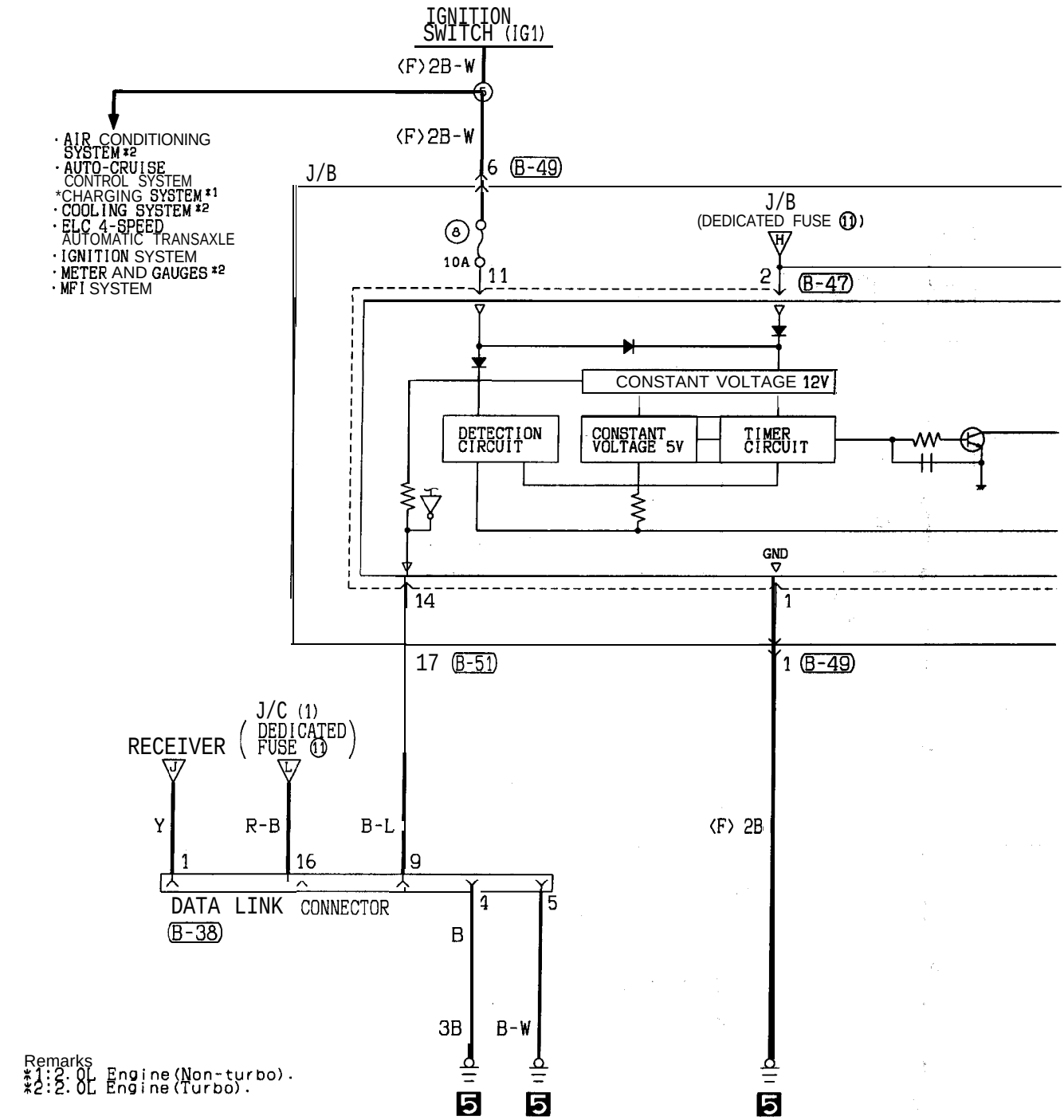

TSB Revision

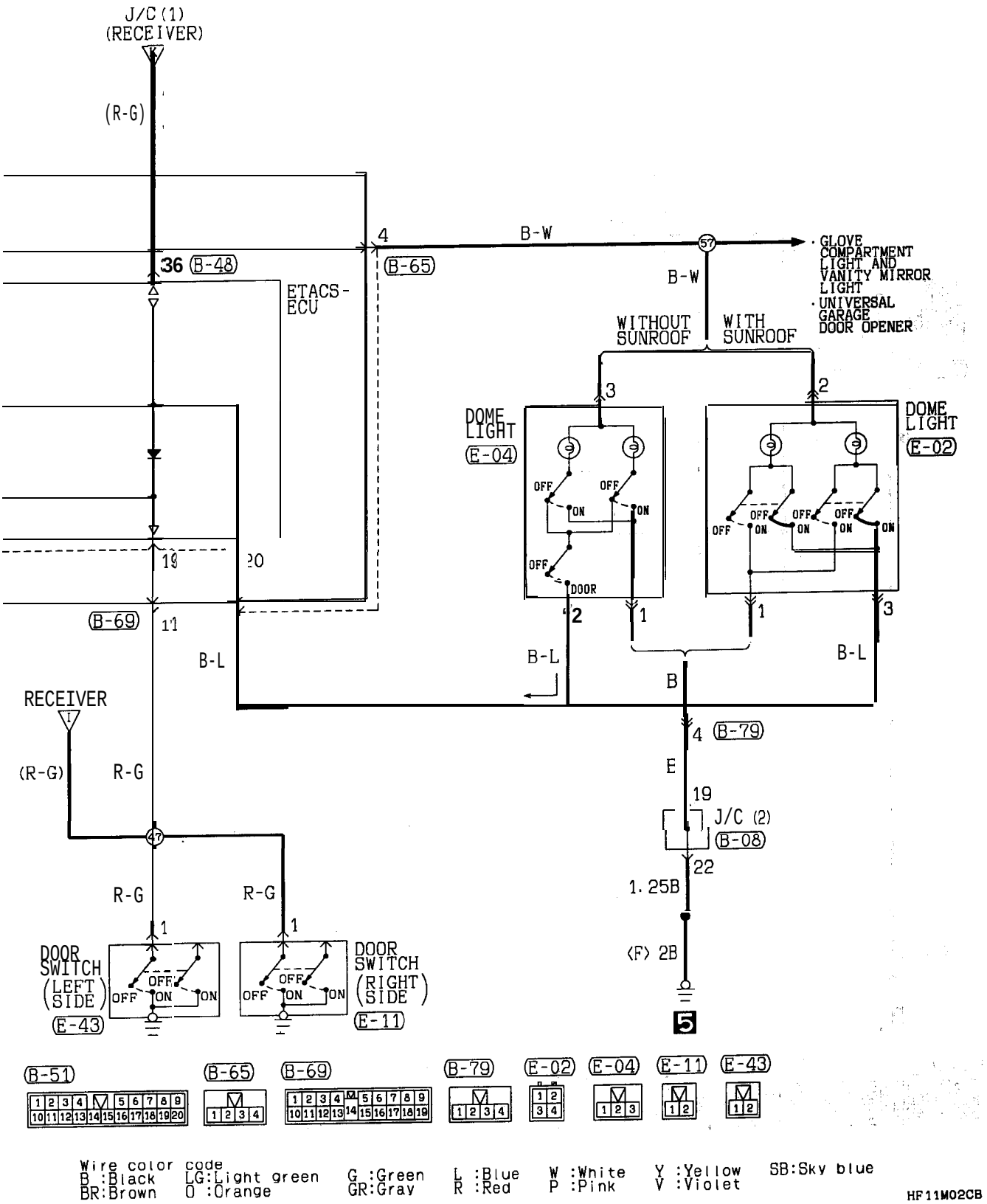

Wire color code
B :Black LG:Light green G :Green L :Blue W :White Y :Yellow SB:Sky blue
BR:Brown O :Orange GR:Gray R :Red P :Pink V :Violet

HF11M02CB

TSB Revision

CENTRAL DOOR LOCKING SYSTEM
<Vehicles with keyless entry system (ECLIPSE SPYDER)>

90199470490

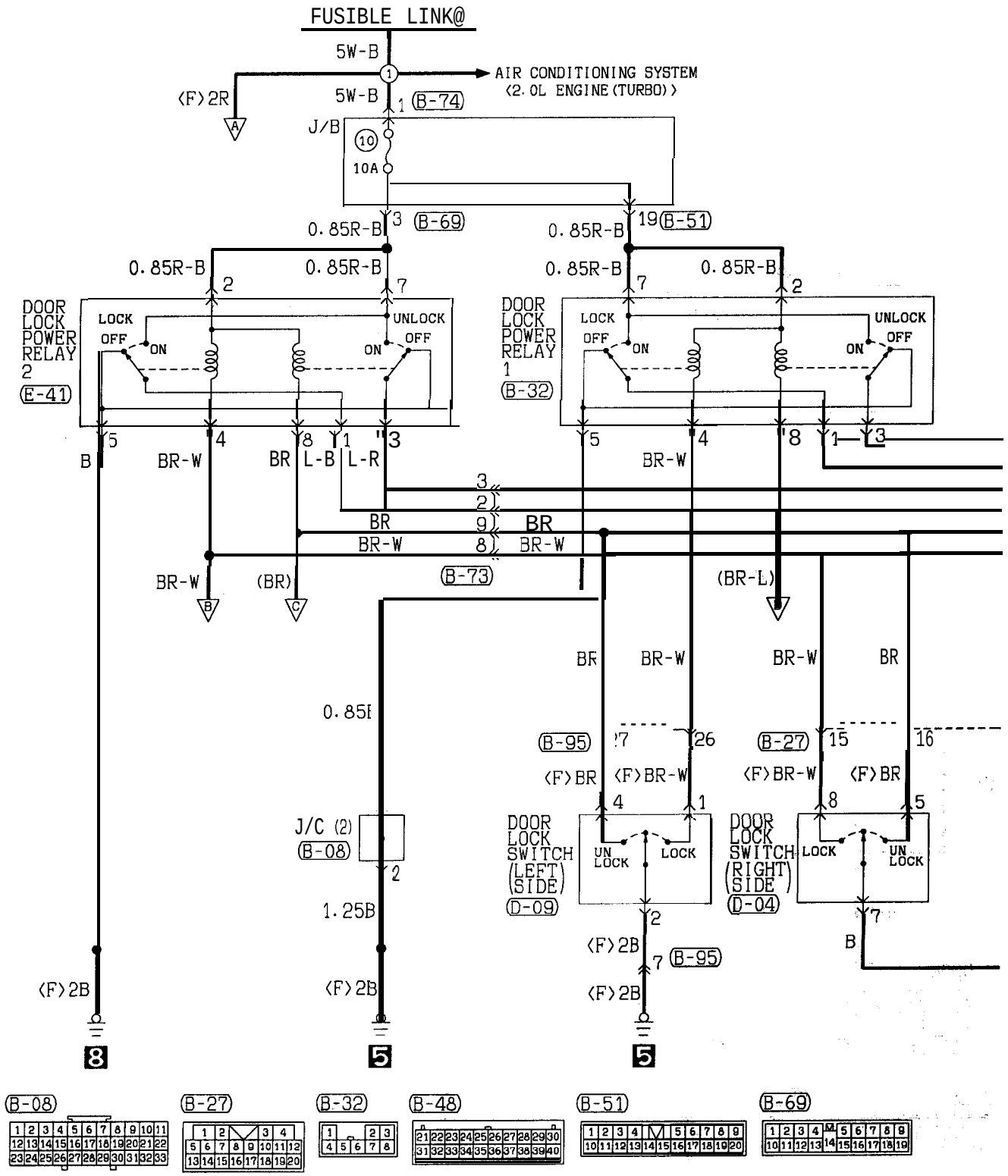

HF11M03AA

TSB Revision

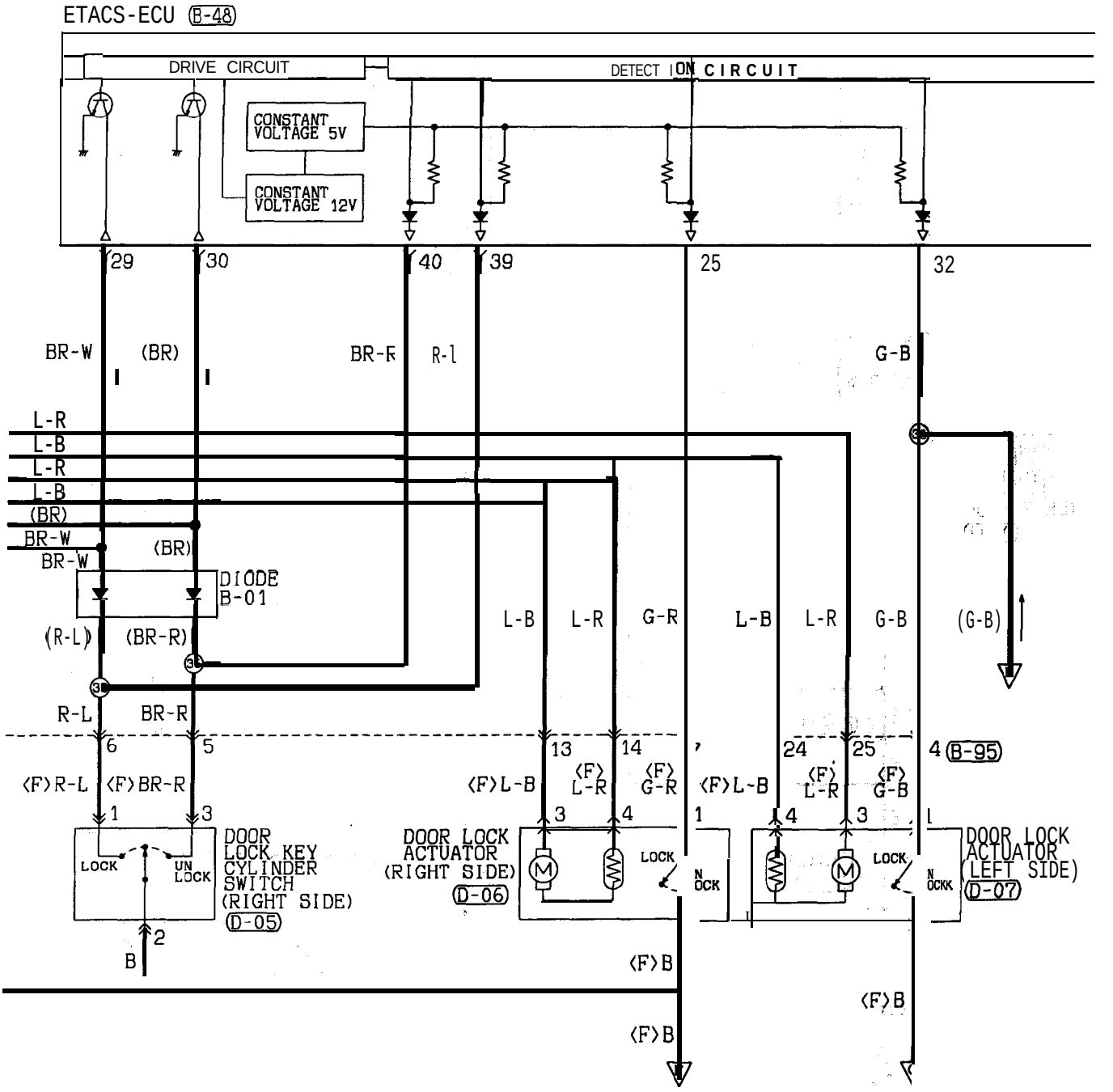

Wire color code

B :Black	LG:Light green	G :Green	L :Blue	W :White	Y :Yellow	SB: Skyblue
BR:Brown	O :Orange	GR:Gray	R :Red	P :Pink	V :Violet	

HP11M03AB

TSB Revision

CENTRAL DOOR LOCKING SYSTEM <Vehicles with keyless entry system (ECLIPSE SPYDER)> (CONTINUED)

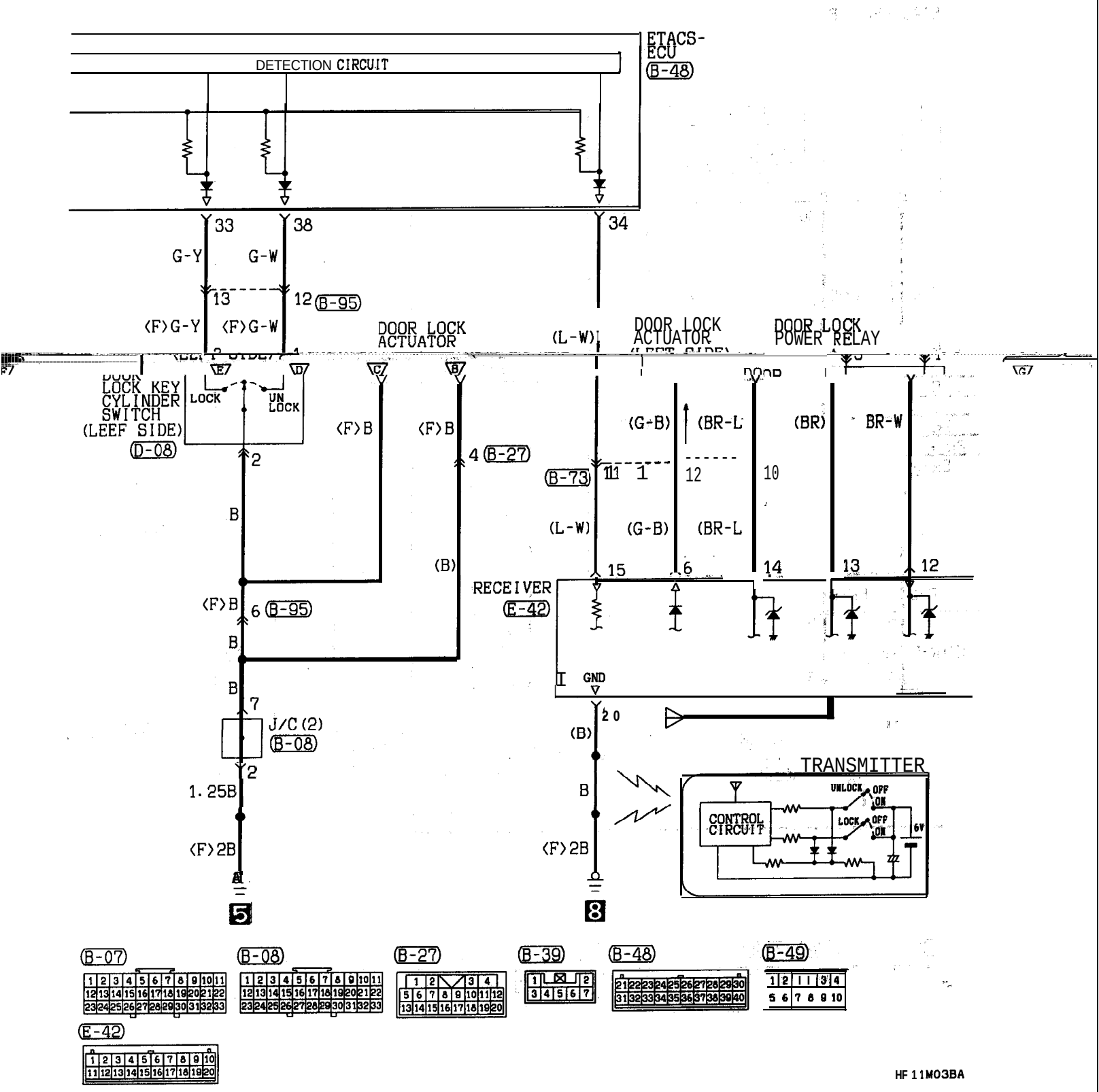

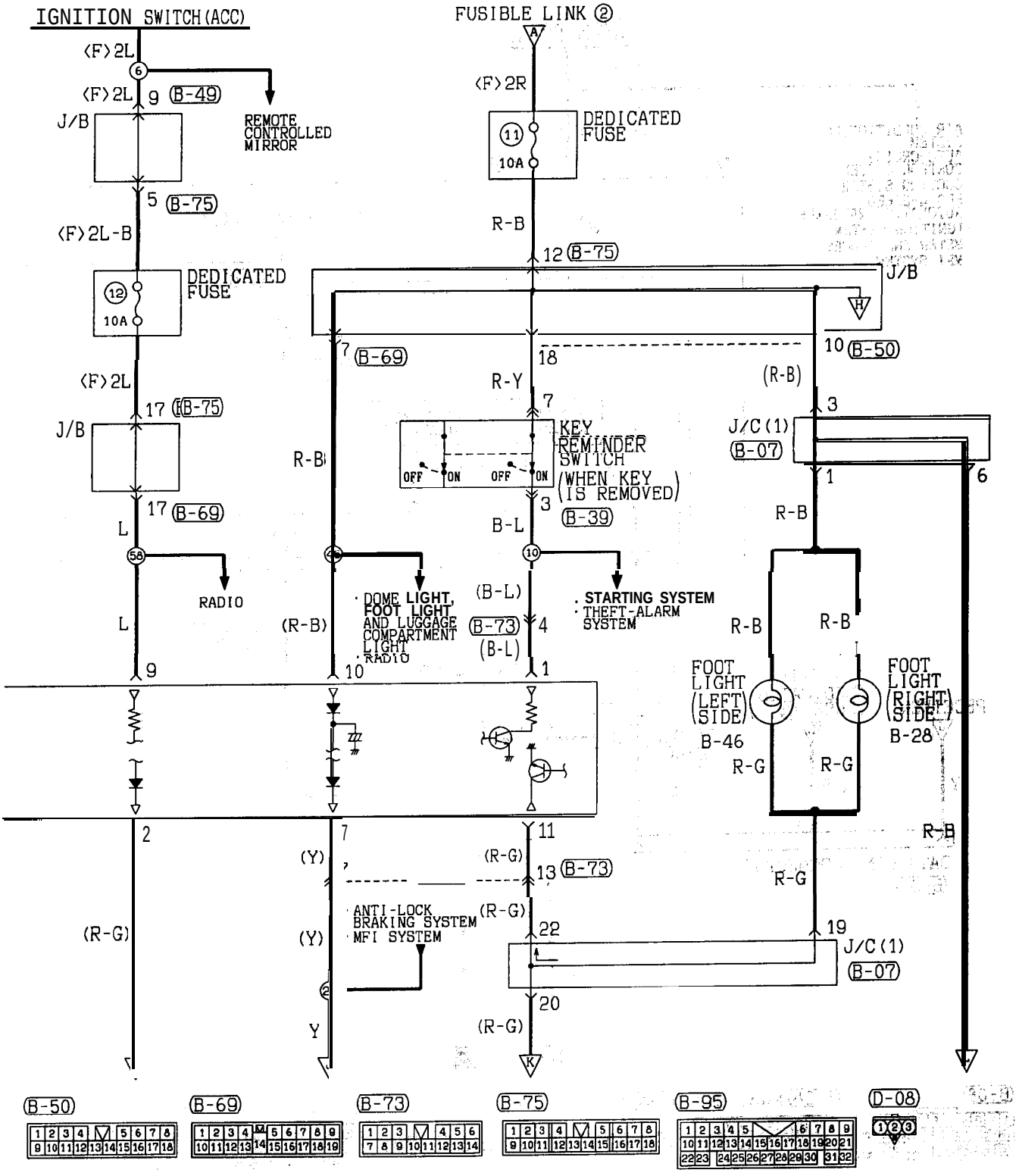

Wire color code
B :Black LG:Light green G :Green L :Blue W :White Y :Yellow SB:Sky blue
BR:Brown O :Orange GR:Gray R :Red P :Pink V :Violet

HF11M03BB

CENTRAL DOOR LOCKING SYSTEM <Vehicles with keyless entry system (ECLIPSE SPYDER)> (CONTINUED)

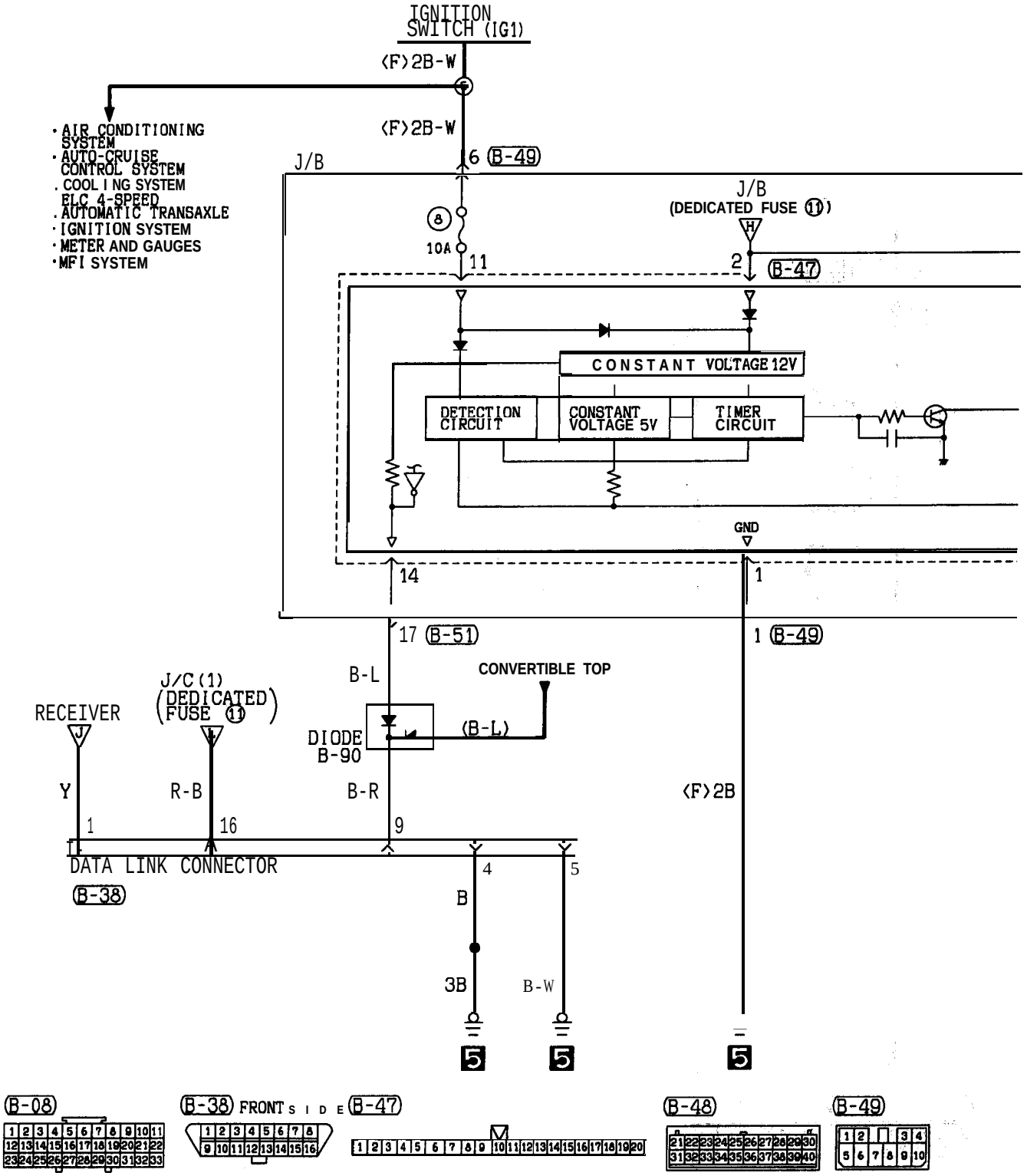

HF11M03CA

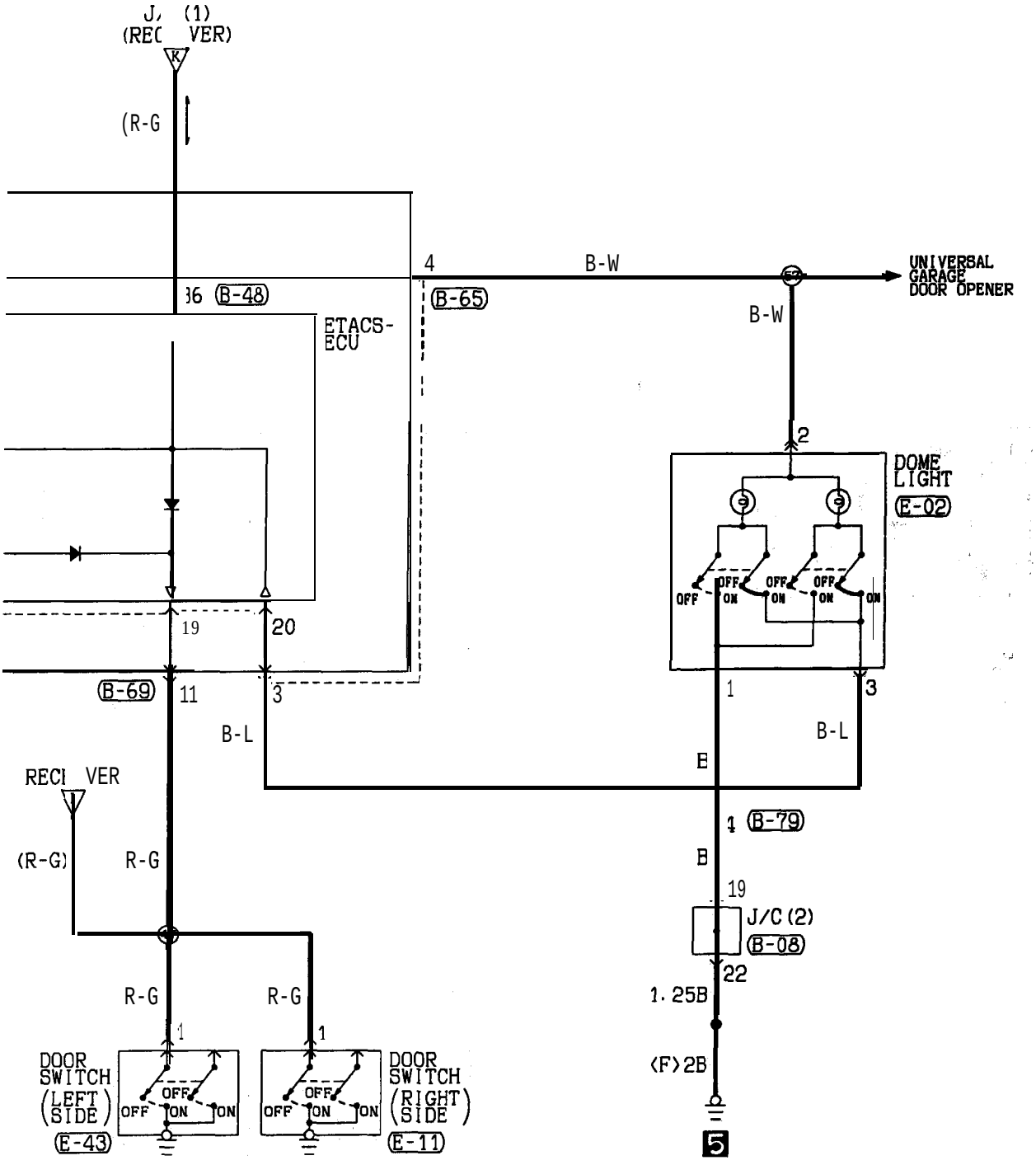

Wire color code
B :Black LG:Light green G :Green L :Blue W :White Y :Yellow SB:Sky blue
BR:Brown O :Orange GR:Gray R :Red P :Pink V :Violet

HF11M03CB

TSB Revision

POWER WINDOWS <ECLIPSE>

90100460276

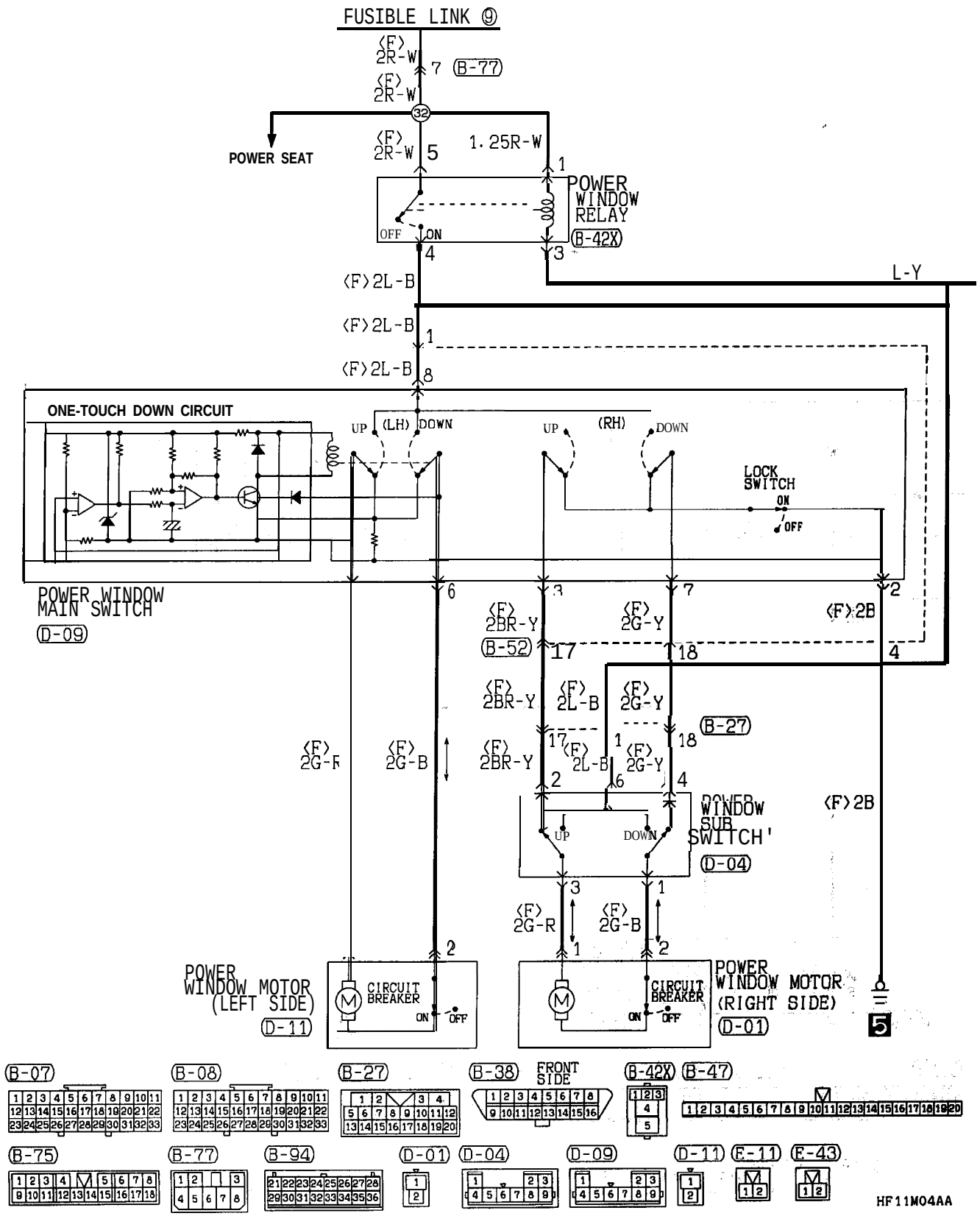

TSB Revision

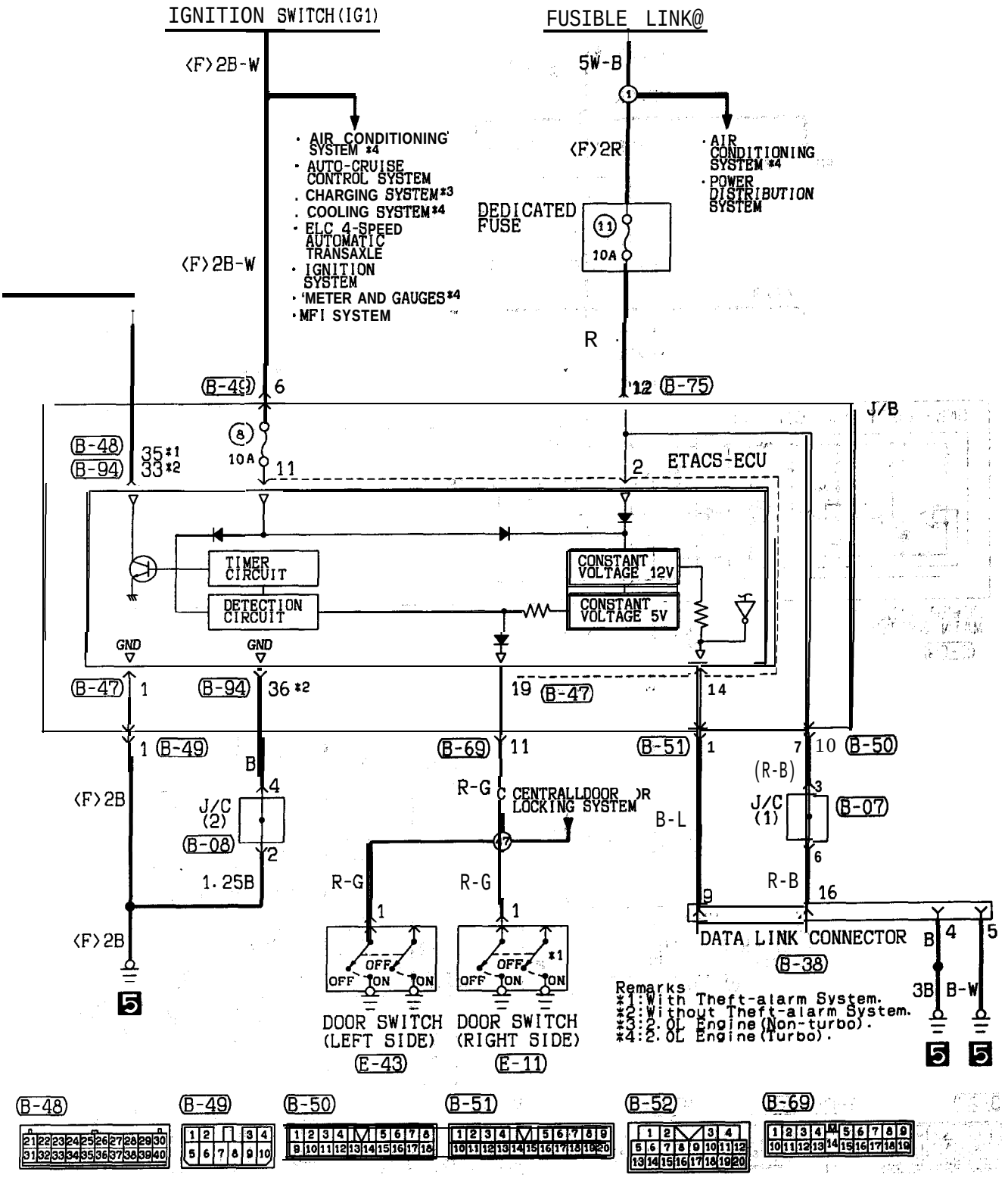

Wire color code
B :Black LG:Light green G :Green L :Blue W :White Y :Yellow SB:Sky blue
BR:Brown O :Orange GR:Gray R :Red P :Pink V :Violet

HF11M04AB

POWER WINDOWS <ECLIPSE SPYDER>

90100460283

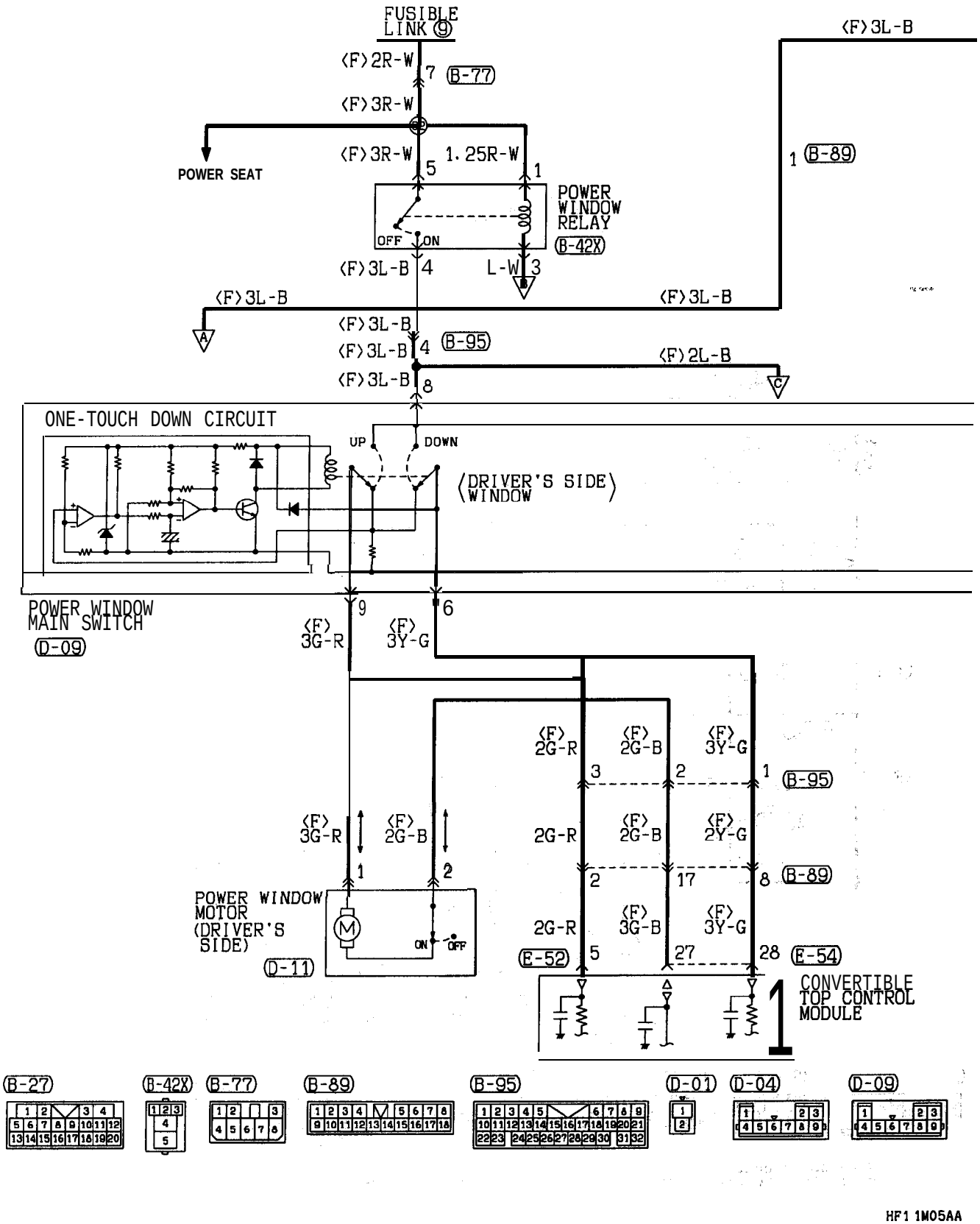

HF1 1M05AA

TSB Revision

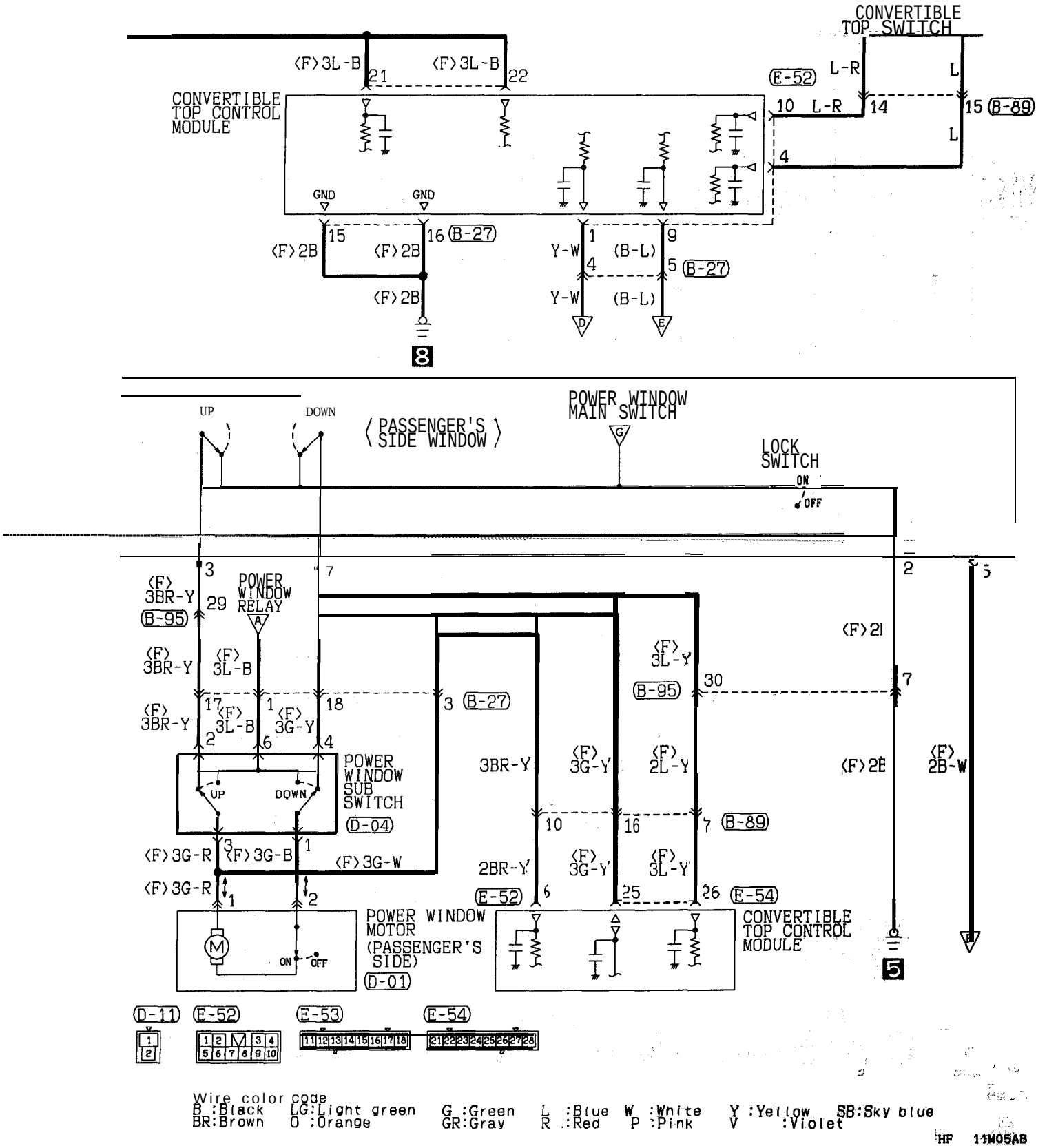

TSB Revision

POWER WINDOWS <ECLIPSE SPYDER> (CONTINUED)

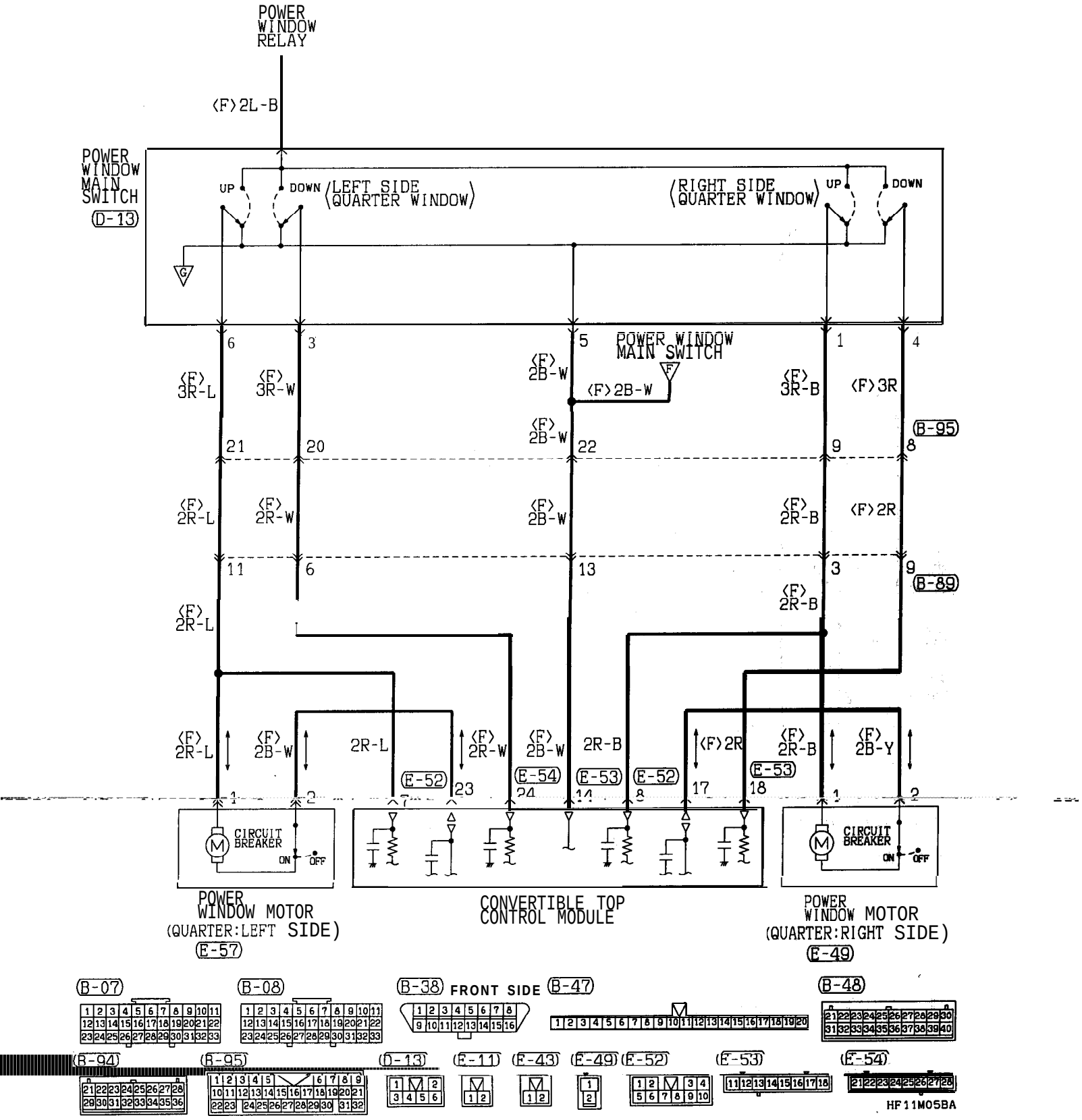

TSB Revision

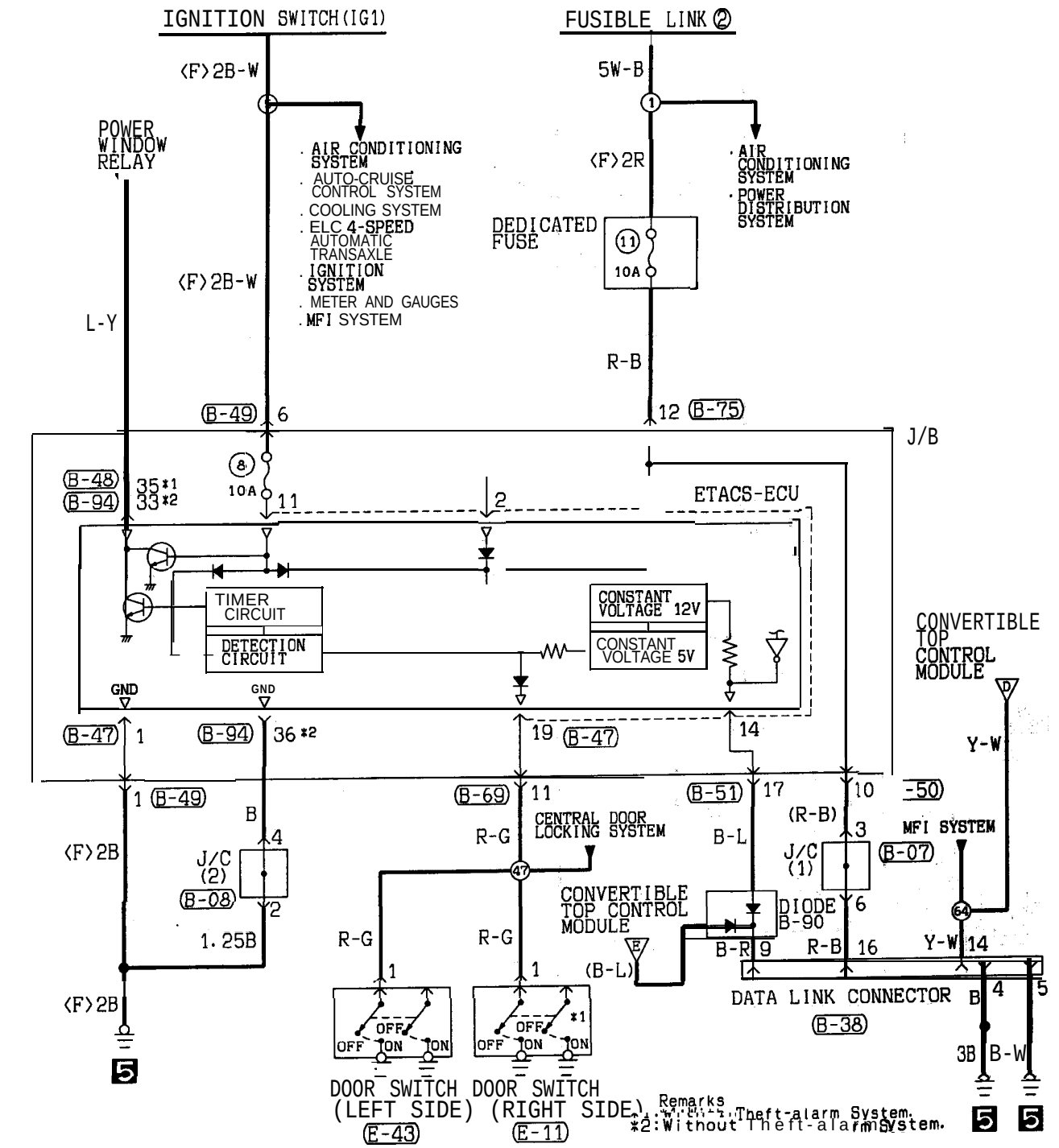

TSB Revision

AIR CONDITIONING SYSTEM <2.0L Engine (Non-turbo)-M/T> 90101280239

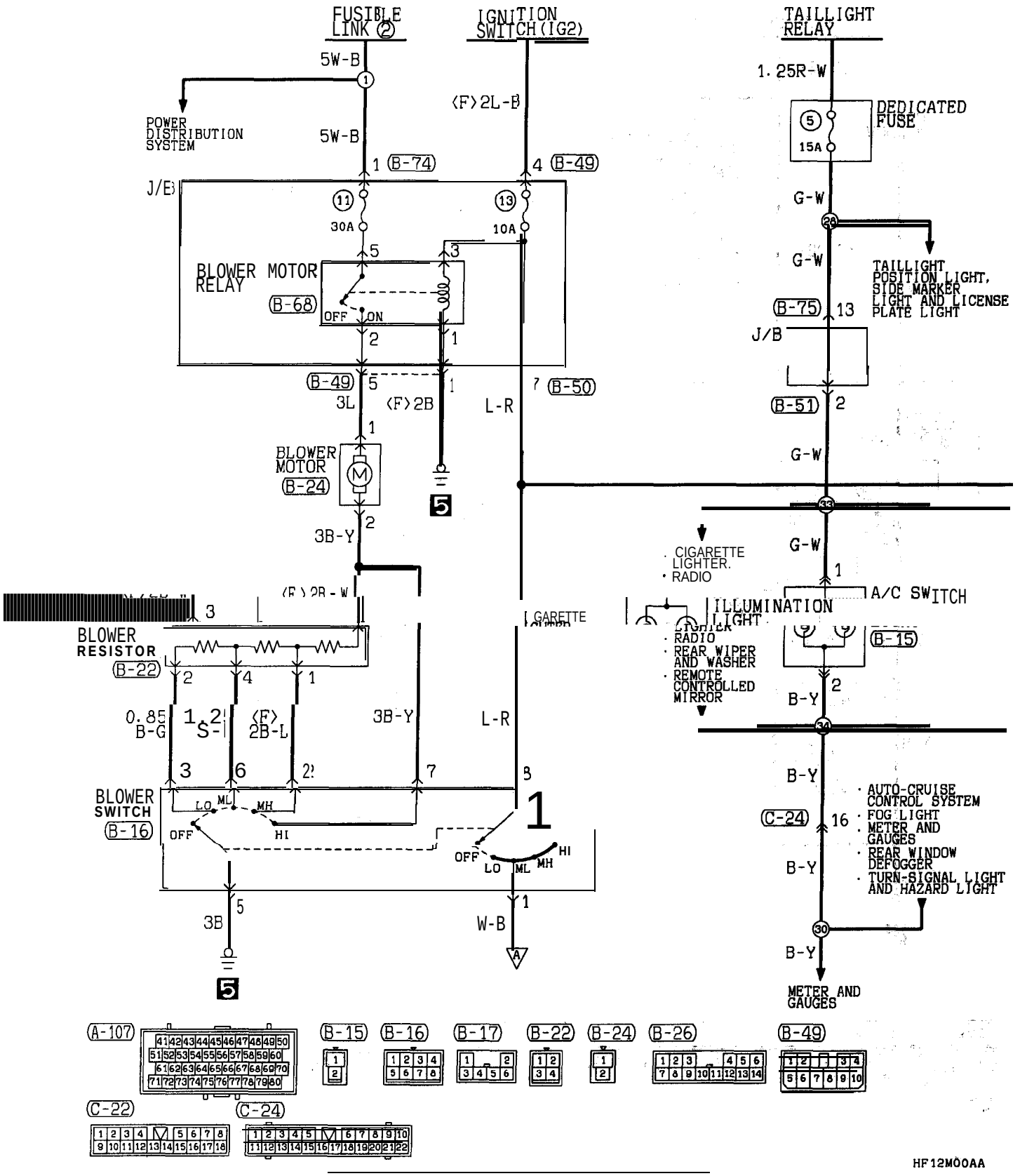

TSB Revision

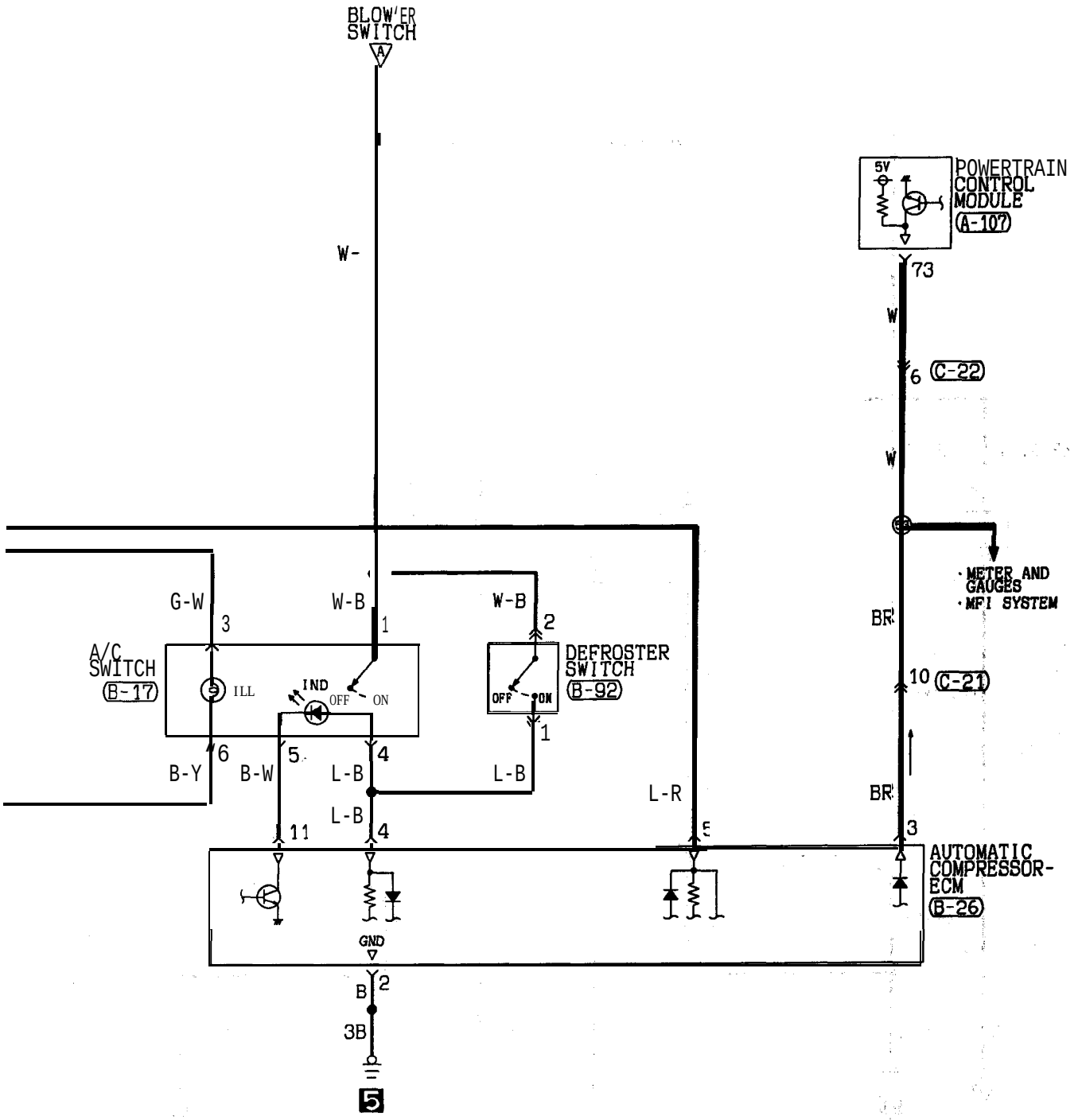

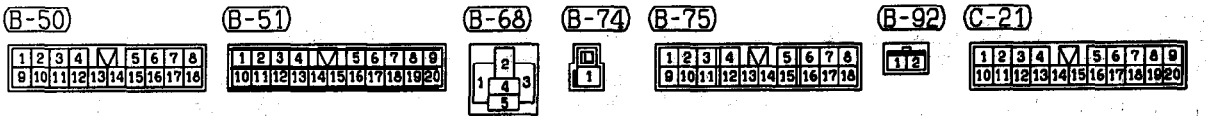

Wire color code
B :Black LG:Light green G :Green L :Blue W :White Y :Yellow SB:Sky blue
BR:Brown O :Orange GR:Gray R :Red P :Pink V :Violet

HF12M00AB

TSB Revision

AIR CONDITIONING SYSTEM <2.0L Engine (Non-turbo)-M/T> (CONTINUED)

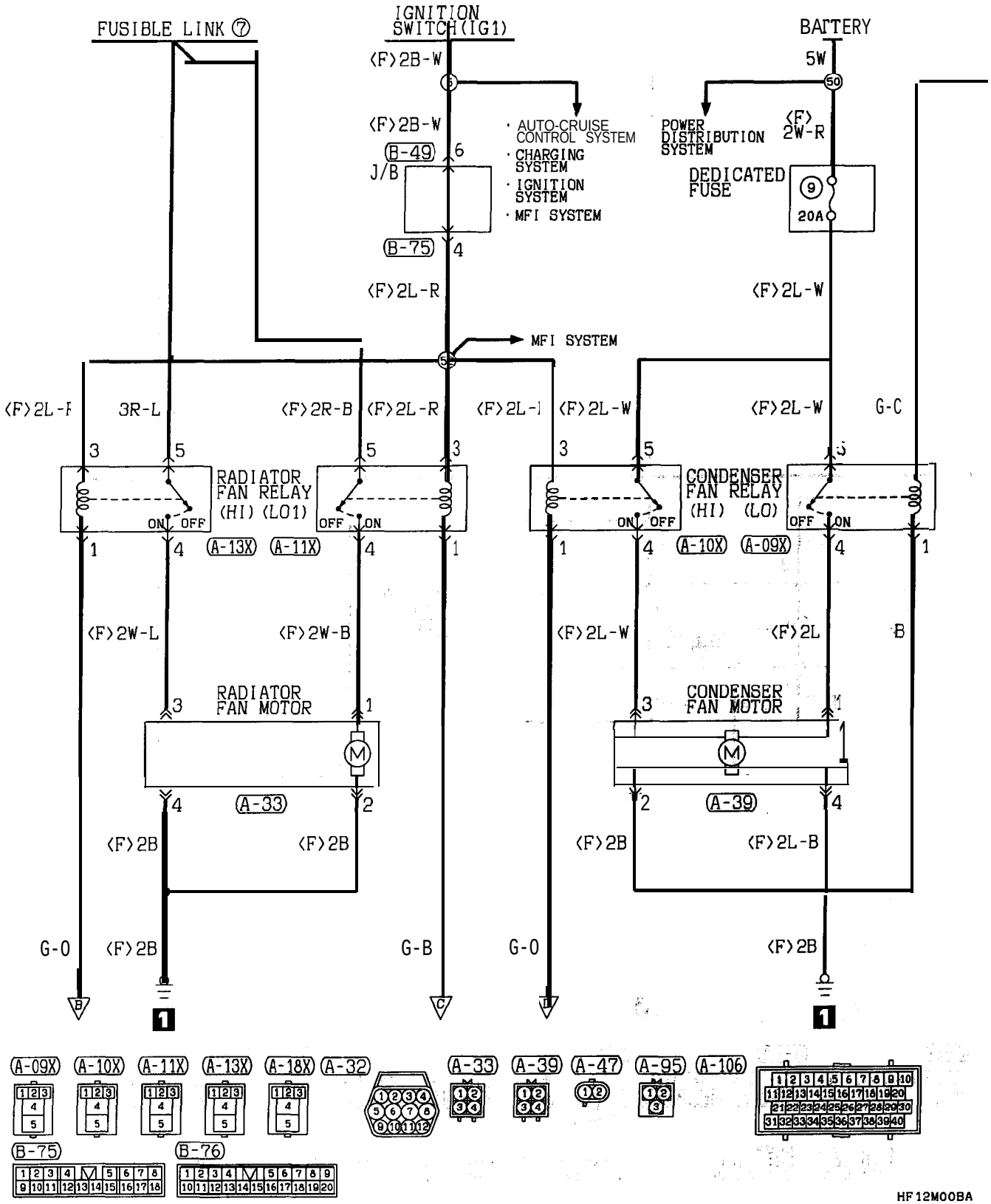

TSB Revision

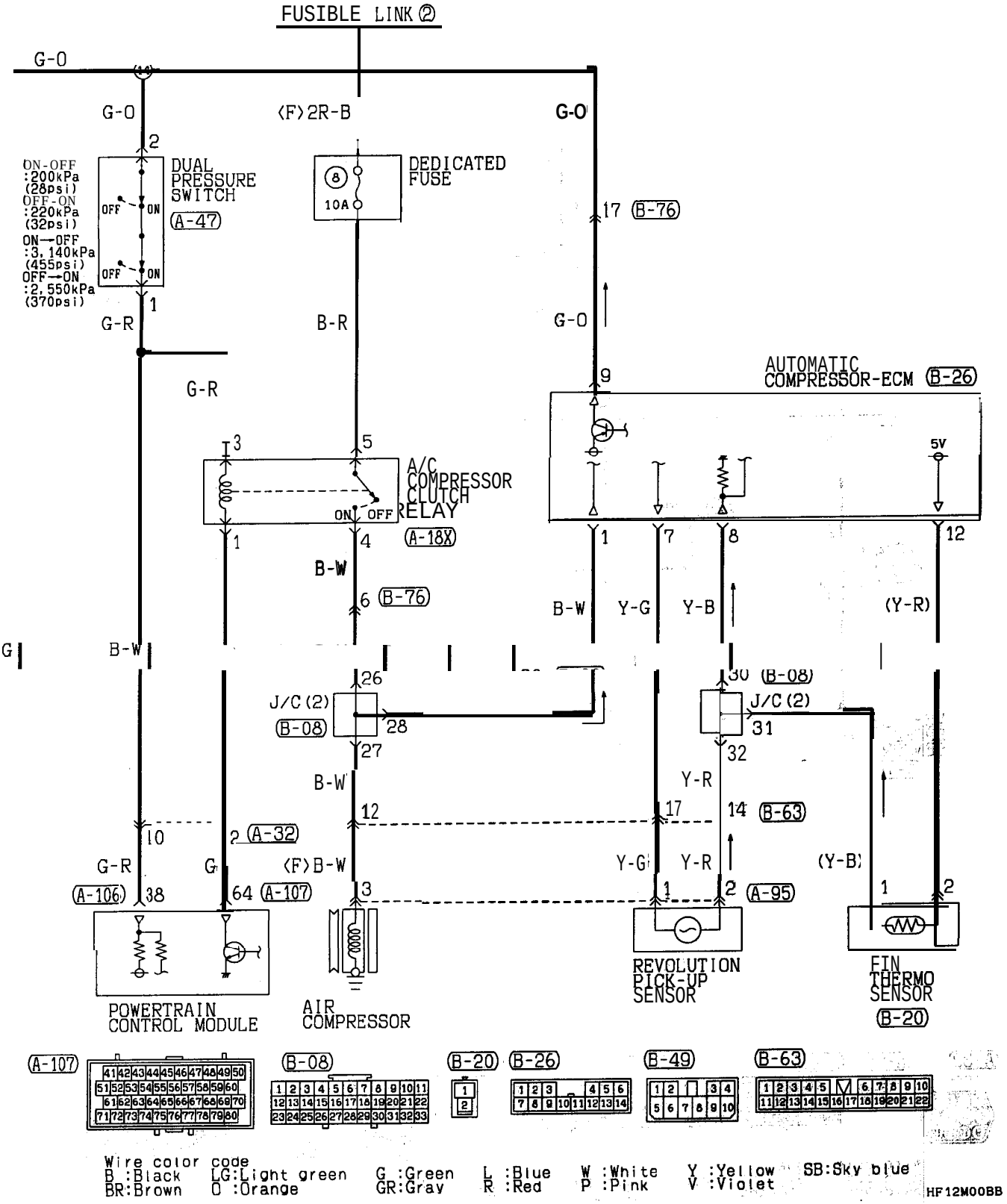

TSB Revision

AIR CONDITIONING SYSTEM <2.0L Engine (Non-turbo)-M/T> (CONTINUED)

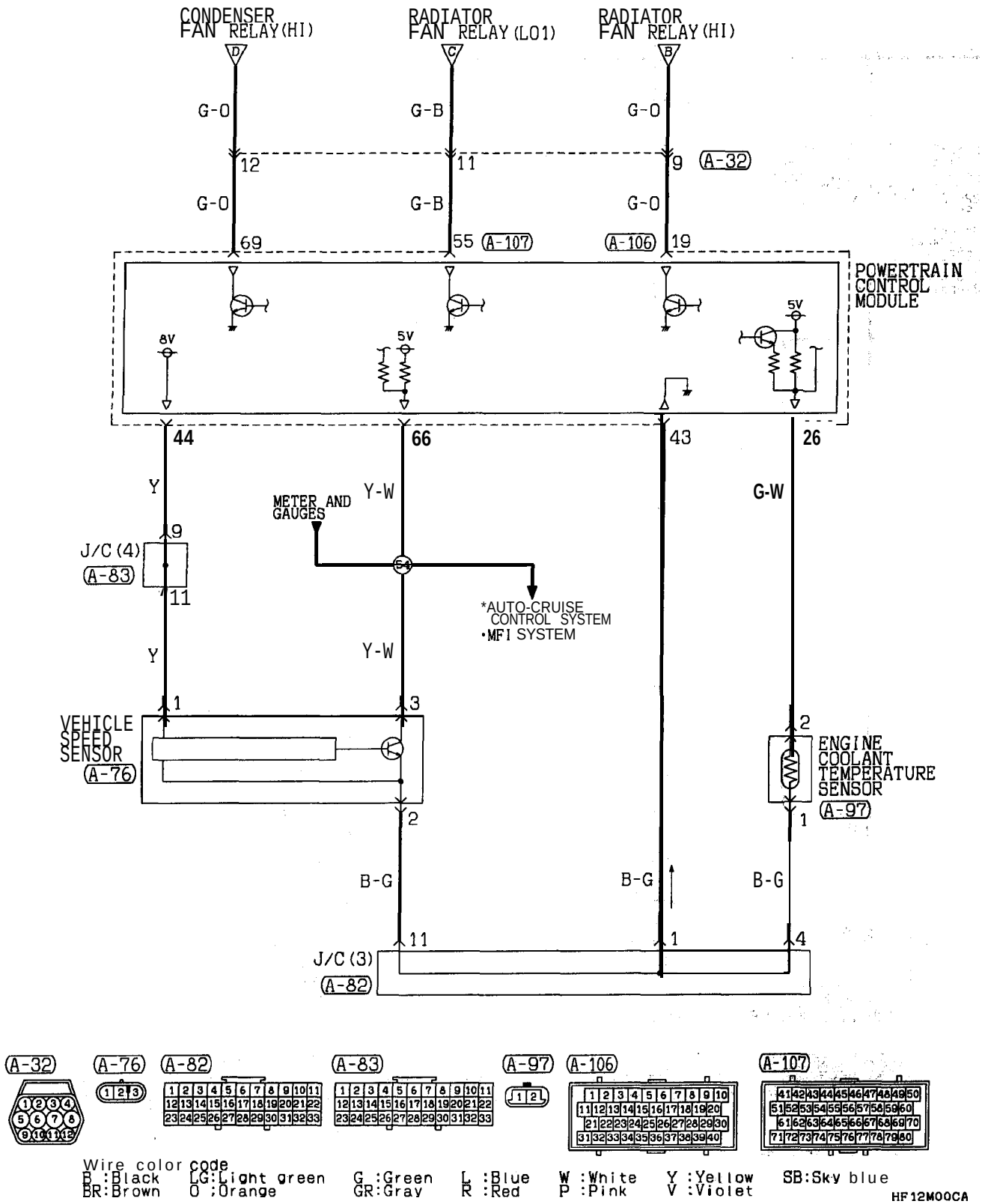

TSB Revision

NOTES

AIR CONDITIONING SYSTEM <2.0L Engine (Non-turbo)-A/T> 90101280246

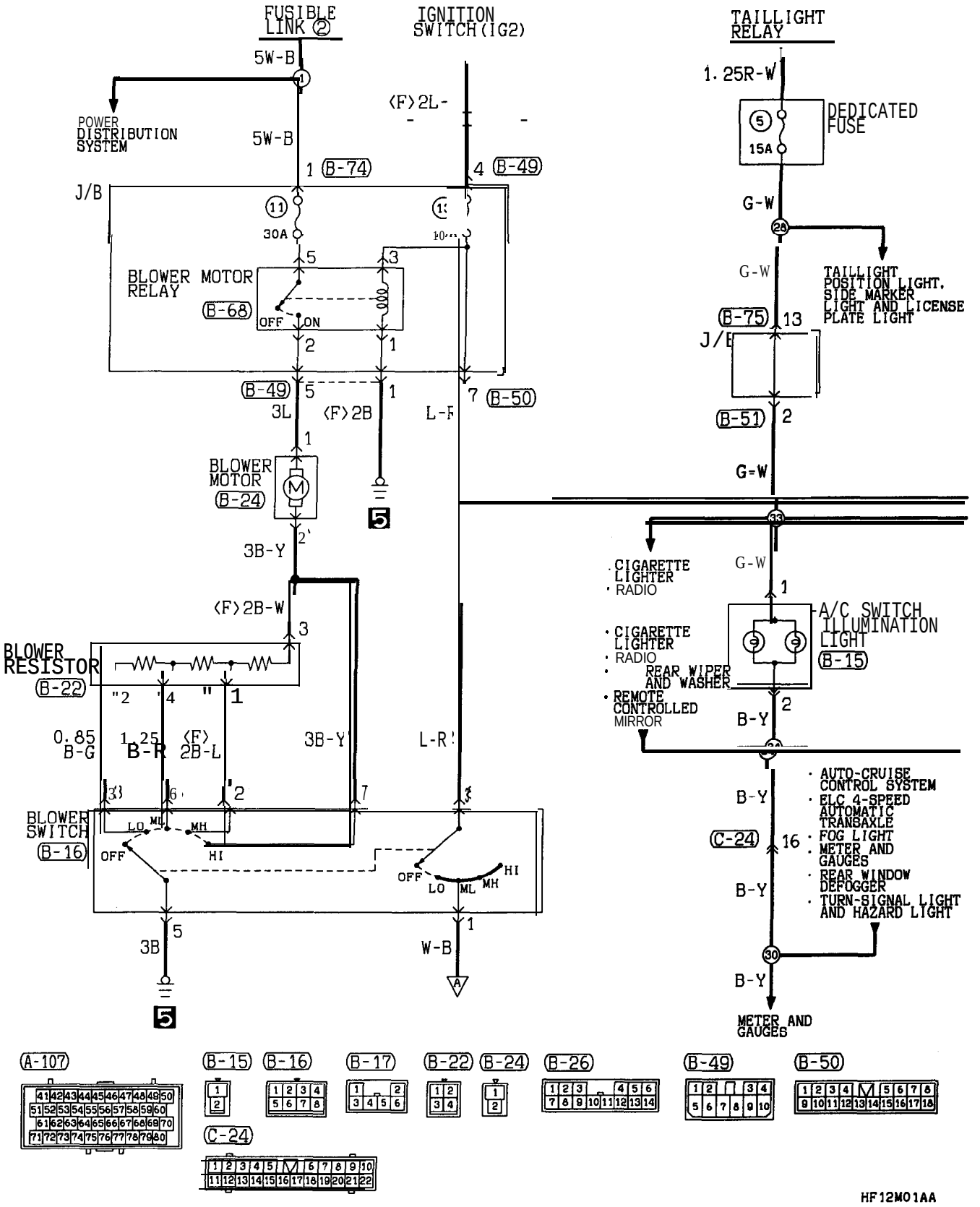

TSB Revision

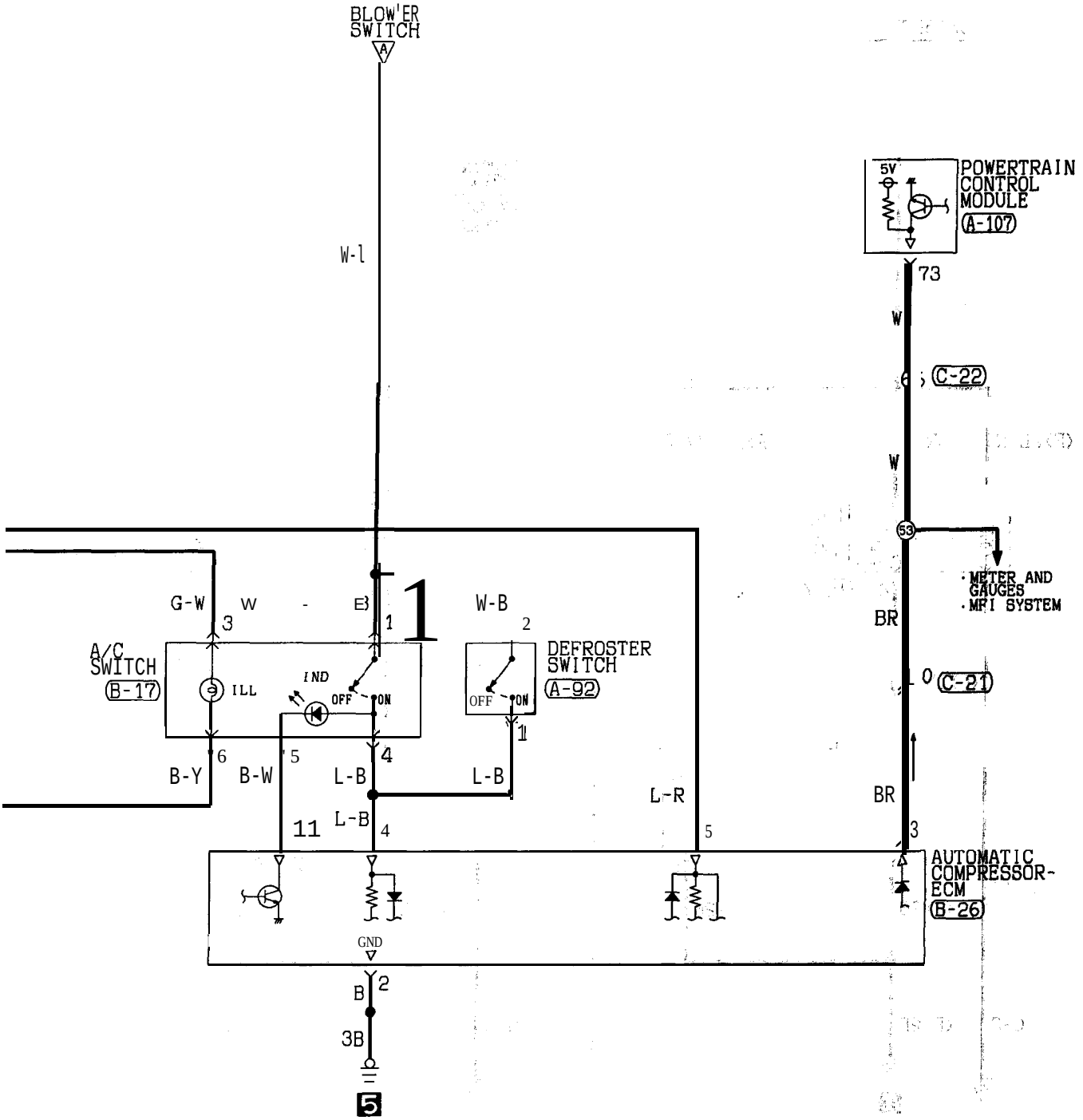

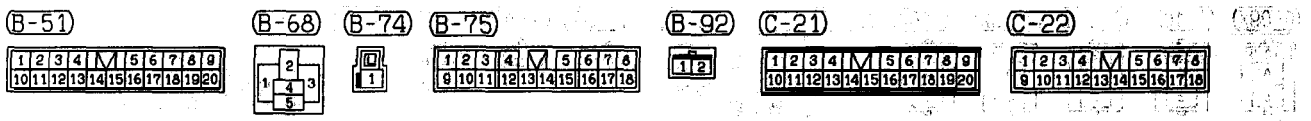

Wire color code
B :Black LG:Light green G :Green L :Blue W :White Y :Yellow SB:Sky blue
BR:Brown O :Orange GR:Gray R :Red P :Pink V :Violet

HF12M01AB

TSB Revision

AIR CONDITIONING SYSTEM <2.0L Engine (Non-turbo)-A/T> (CONTINUED)

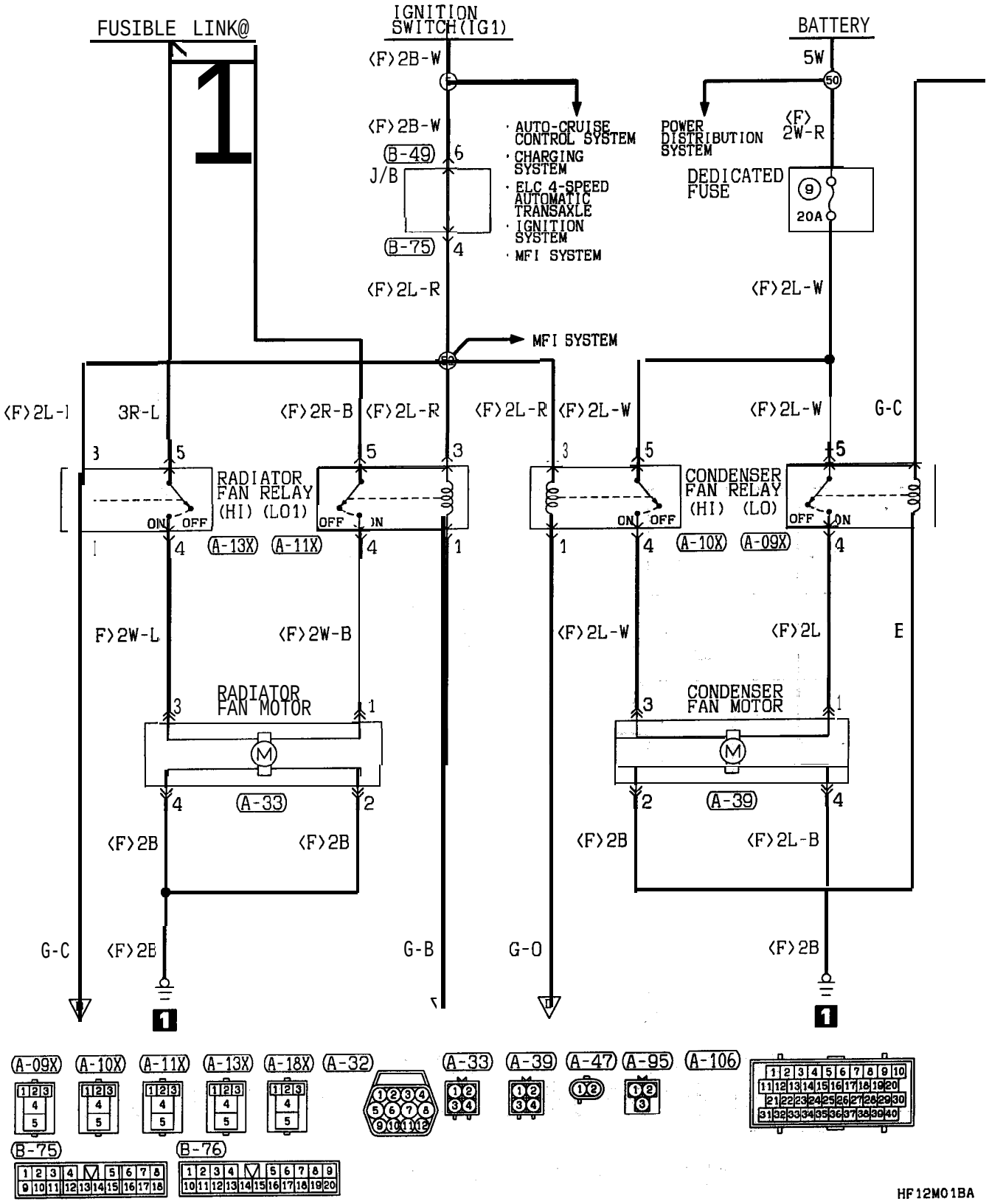

TSB Revision

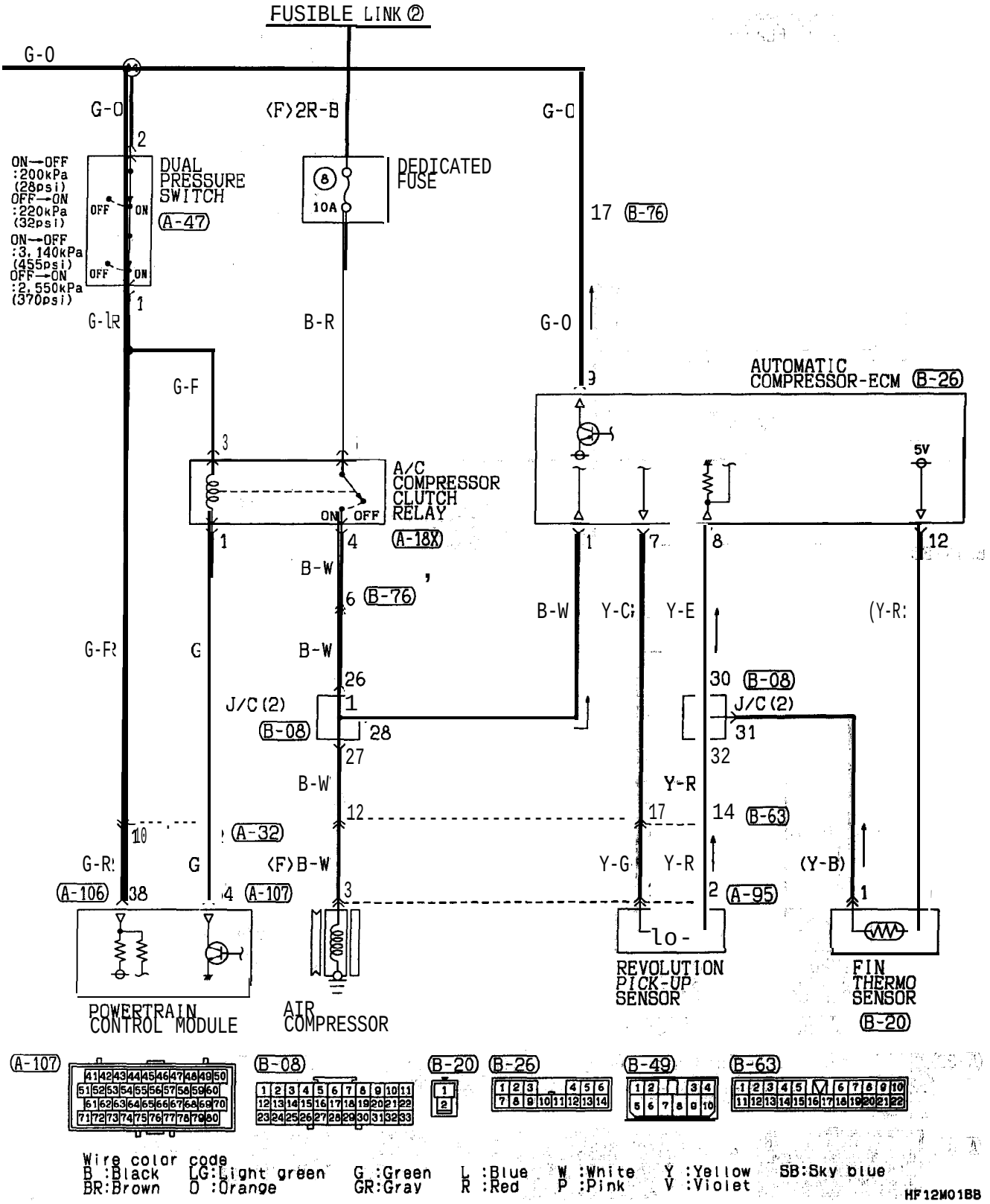
FUSIBLE LINK ②
G-O
G-O
(F)2R-B
G-O
ON→OFF :200kPa (28psi)
OFF→ON :220kPa (32psi)
ON→OFF :3,140kPa (455psi)
OFF→ON :2,550kPa (370psi)
DUAL PRESSURE SWITCH
(A-47)
DEDICATED FUSE
10A
17 (B-76)
G-LR
B-R
G-O
G-F
AUTOMATIC COMPRESSOR-ECM (B-26)
5V
A/C COMPRESSOR CLUTCH RELAY
ON OFF
(A-18X)
B-W
(B-76)
B-W
Y-G
Y-E
(Y-R)
G-F
G
B-W
J/C (2)
(B-08)
30 (B-08)
J/C (2)
B-W
Y-R
(A-32)
14 (B-63)
G-R
G
(F)B-W
Y-G
Y-R
(Y-B)
(A-106)
(A-107)
(A-95)
POWERTRAIN CONTROL MODULE
AIR COMPRESSOR
REVOLUTION PICK-UP SENSOR
FIN THERMO SENSOR
(B-20)
(A-107)
(B-08)
(B-20)
(B-26)
(B-49)
(B-63)
Wire color code
B :Black LG:Light green G :Green L :Blue W :White Y :Yellow SB:Sky blue
BR:Brown O :Orange GR:Gray R :Red P :Pink V :Violet
HF12W01BB

AIR CONDITIONING SYSTEM <2.0L Engine (Non-turbo)-A/T> (CONTINUED)

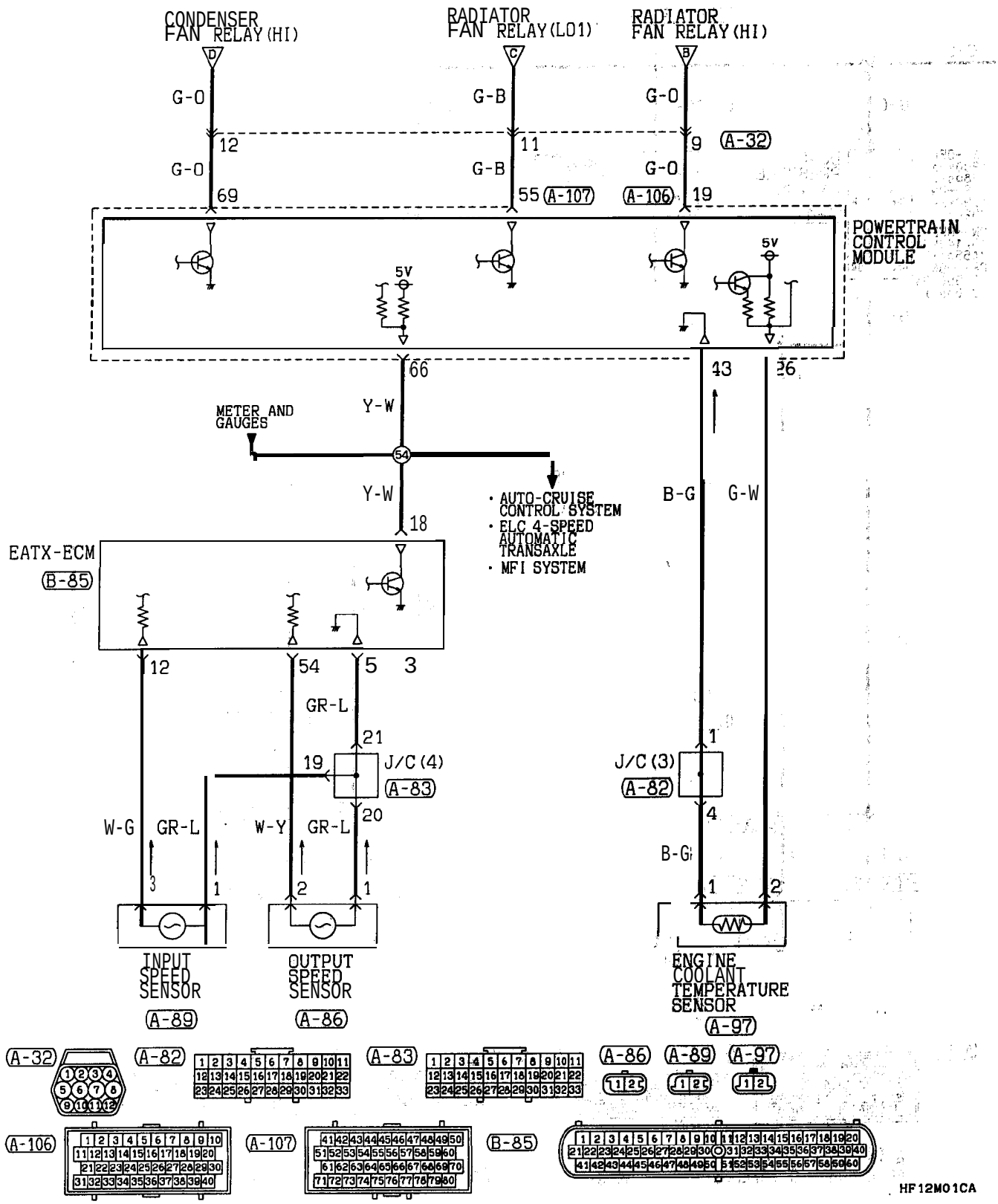

NOTES

AIR CONDITIONING SYSTEM <2.0L Engine (Turbo)-M/T and 2.4L Engine-M/T>

90101280253

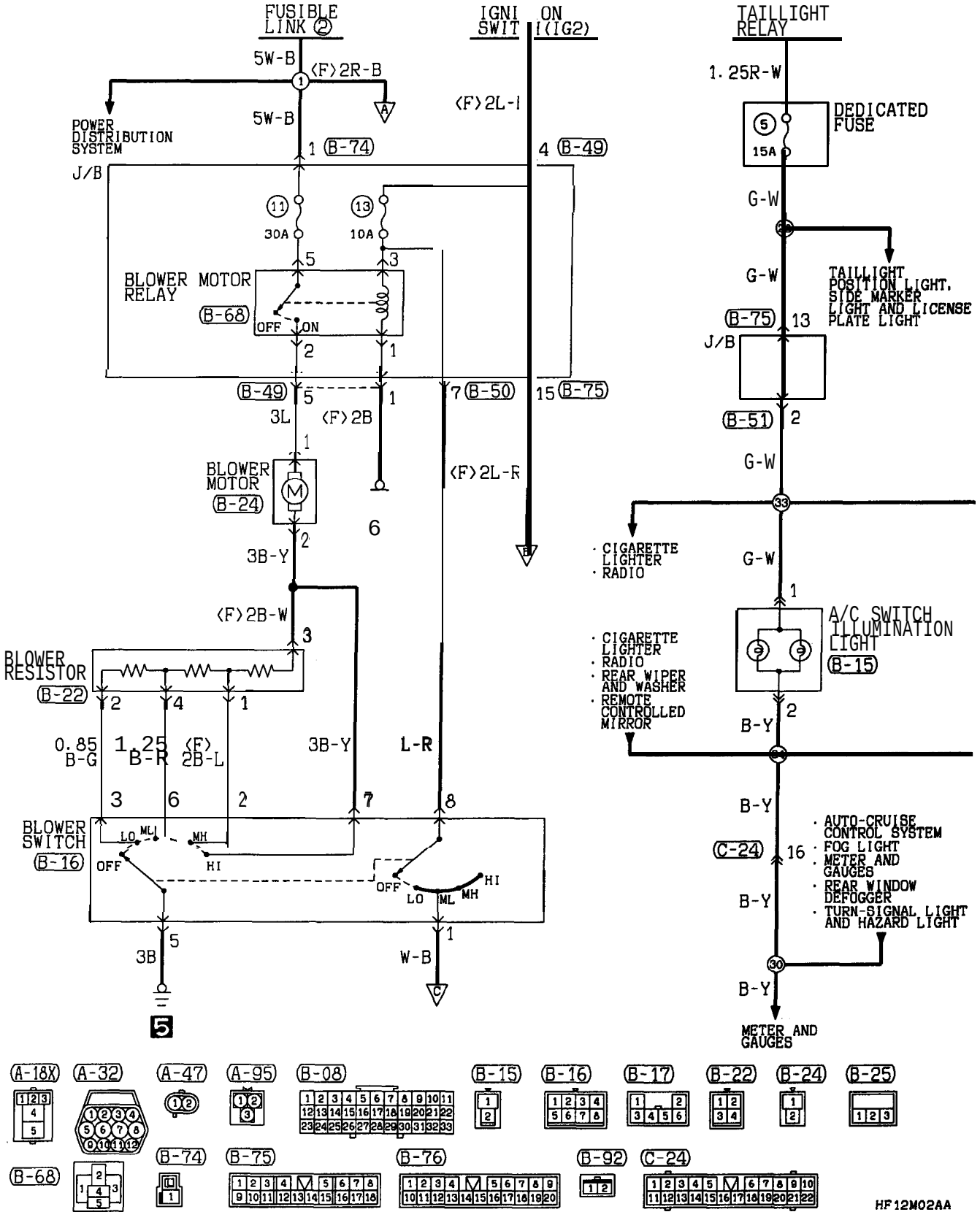

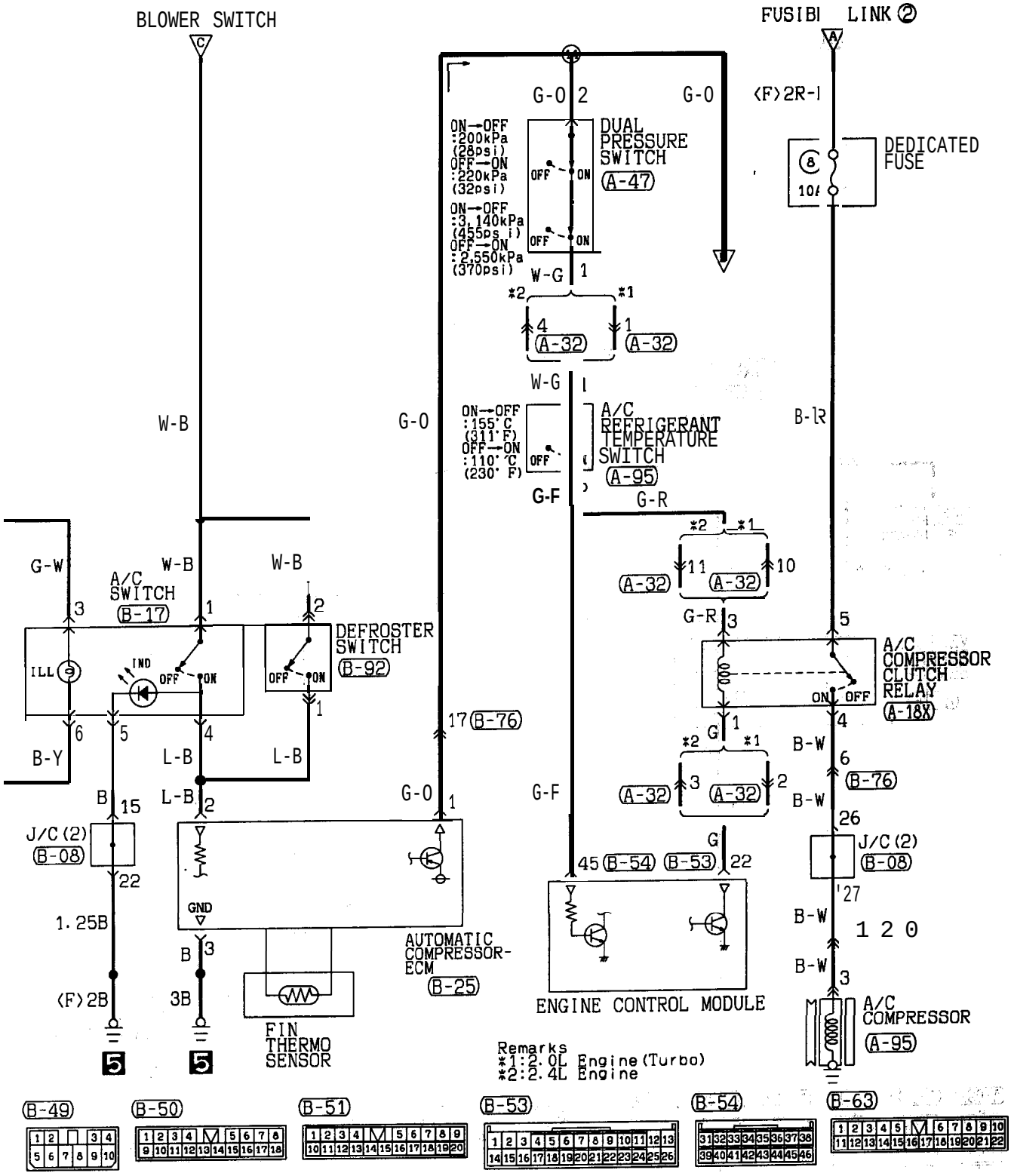

Wire color code
B :Black LG:Light green G :Green L :Blue W :White Y :Yellow SB:Sky blue
BR:Brown O :Orange GR:Gray R :Red P :Pink V :Violet

HF12M02AB

AIR CONDITIONING SYSTEM <2.0L Engine (Turbo)-M/T and 2.4L Engine-M/T> (CONTINUED)

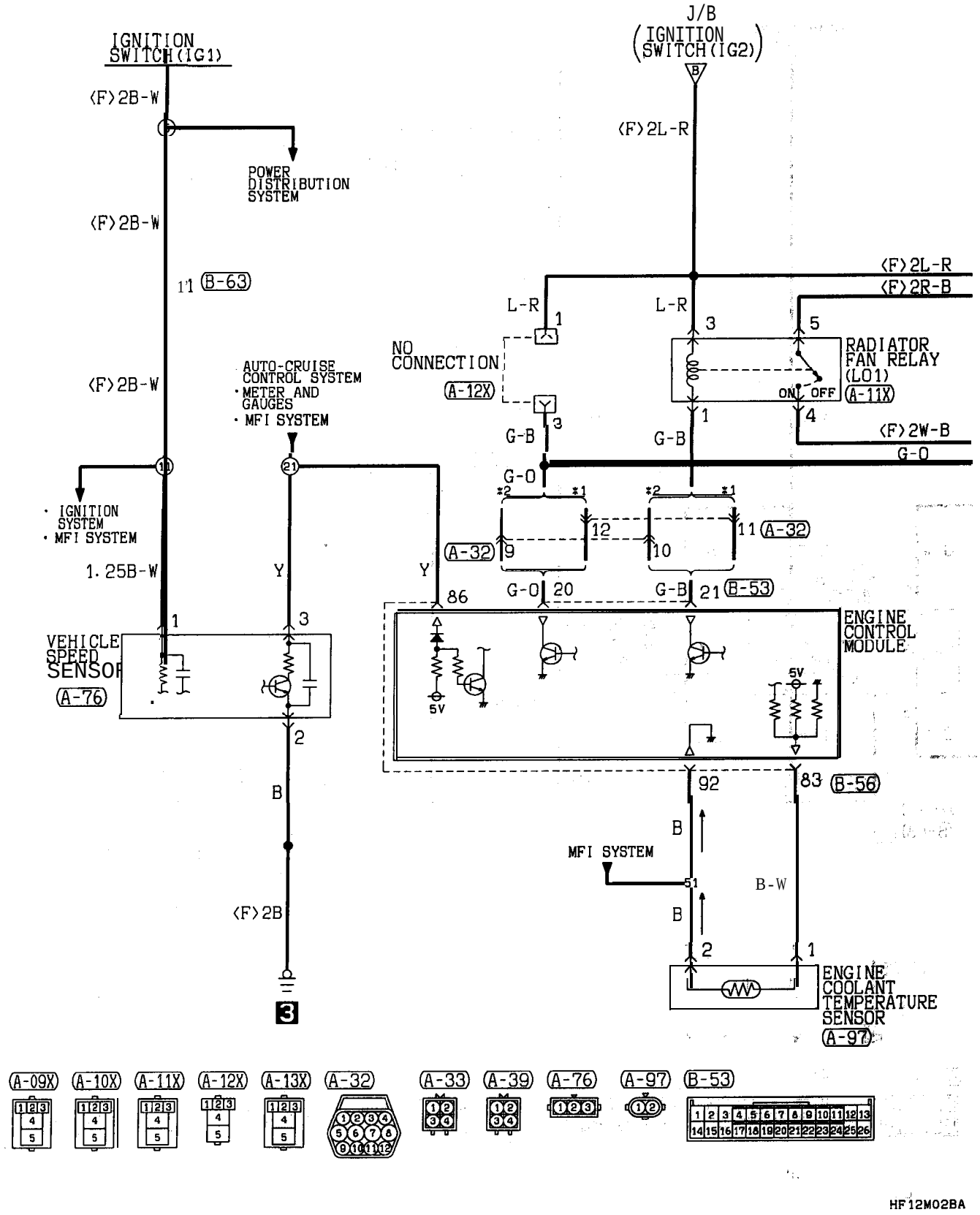

TSB Revision

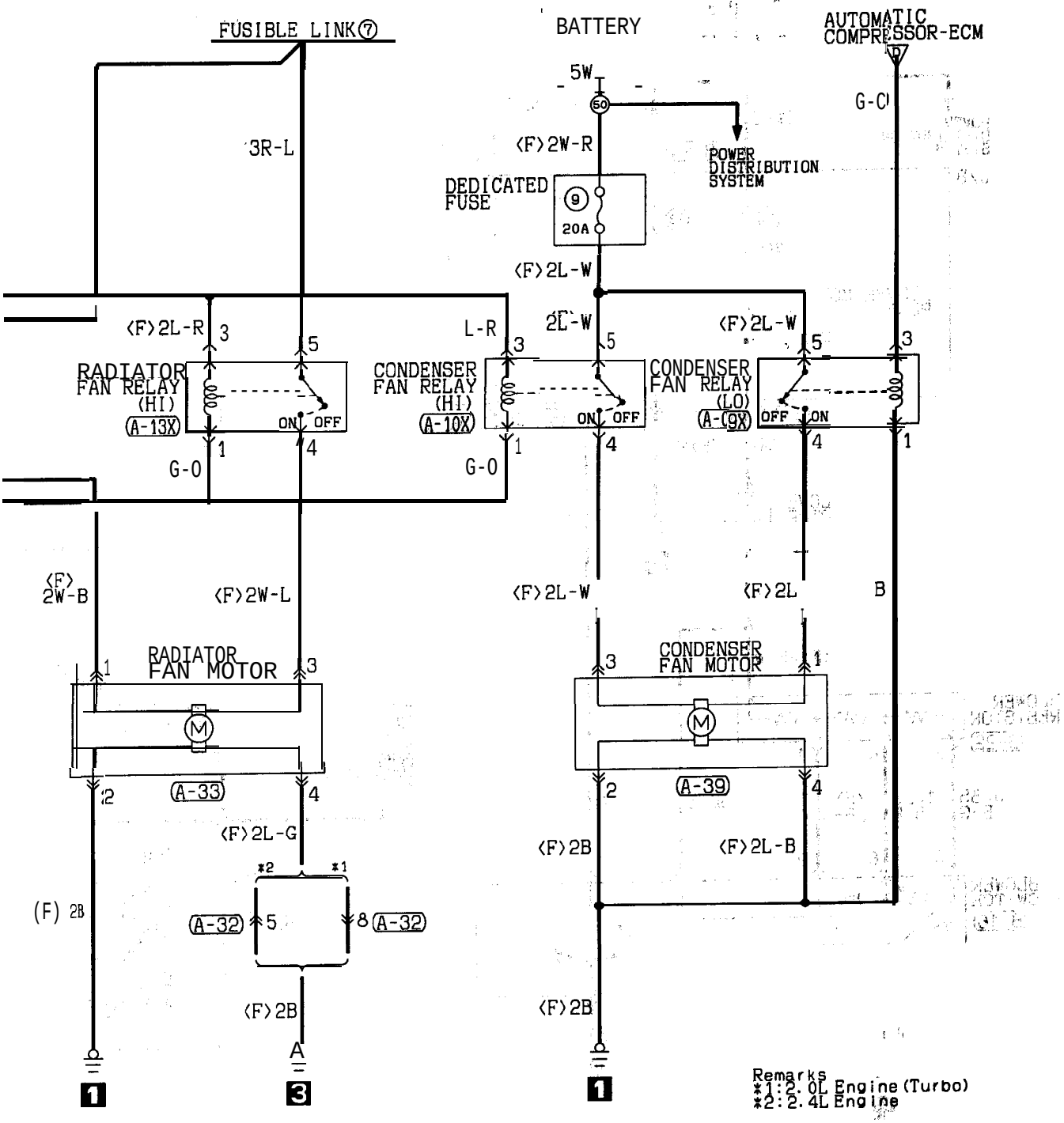

Wire color code
B :Black LG:Light green G :Green L :Blue W :White Y :Yellow SB:Sky blue
BR:Brown O :Orange GR:Gray R :Red P :Pink V :Violet

HF12M02BB

AIR CONDITIONING SYSTEM <2.0L Engine (Turbo)-A/T and 2.4L Engine-A/T>

90101280260

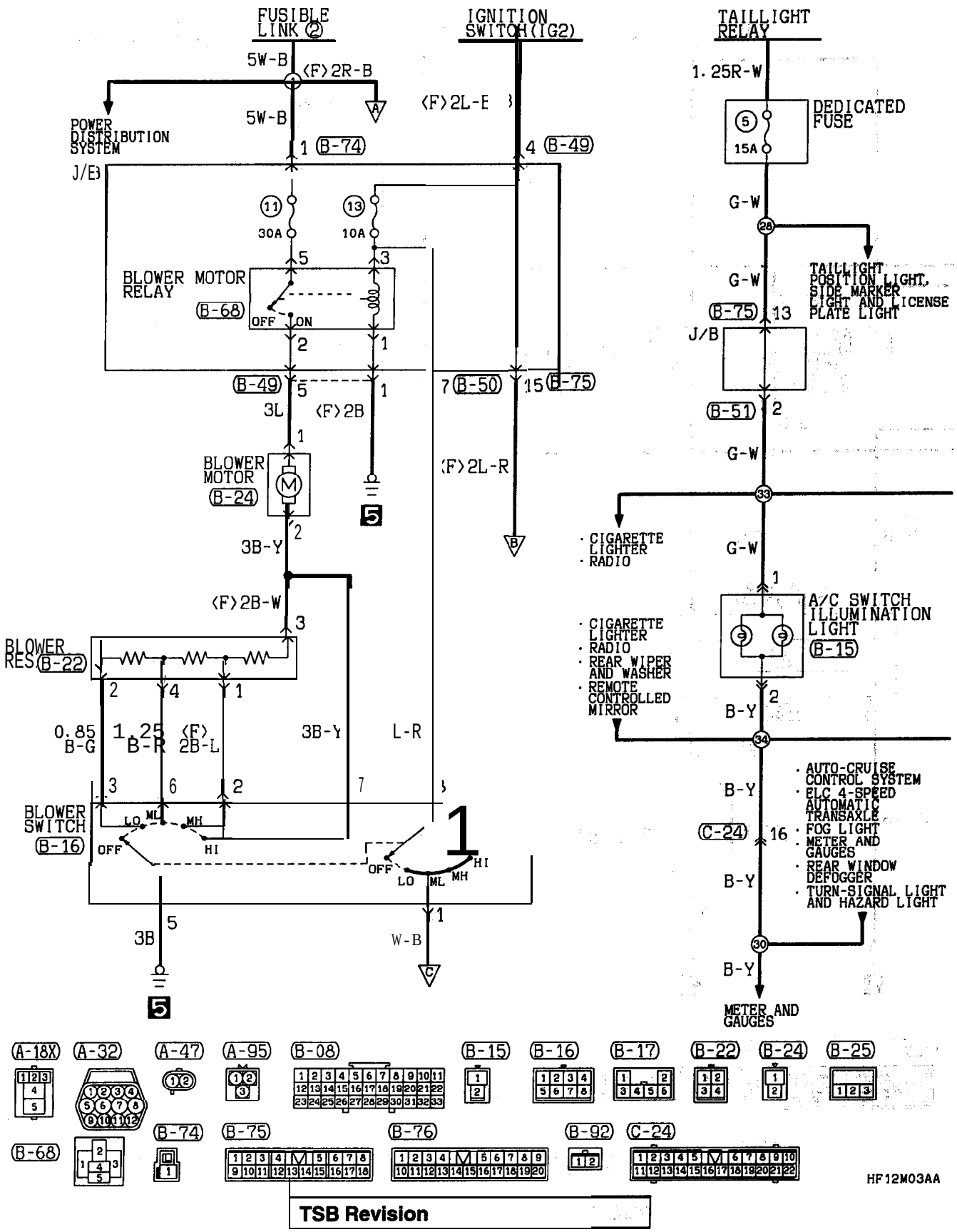

TSB Revision

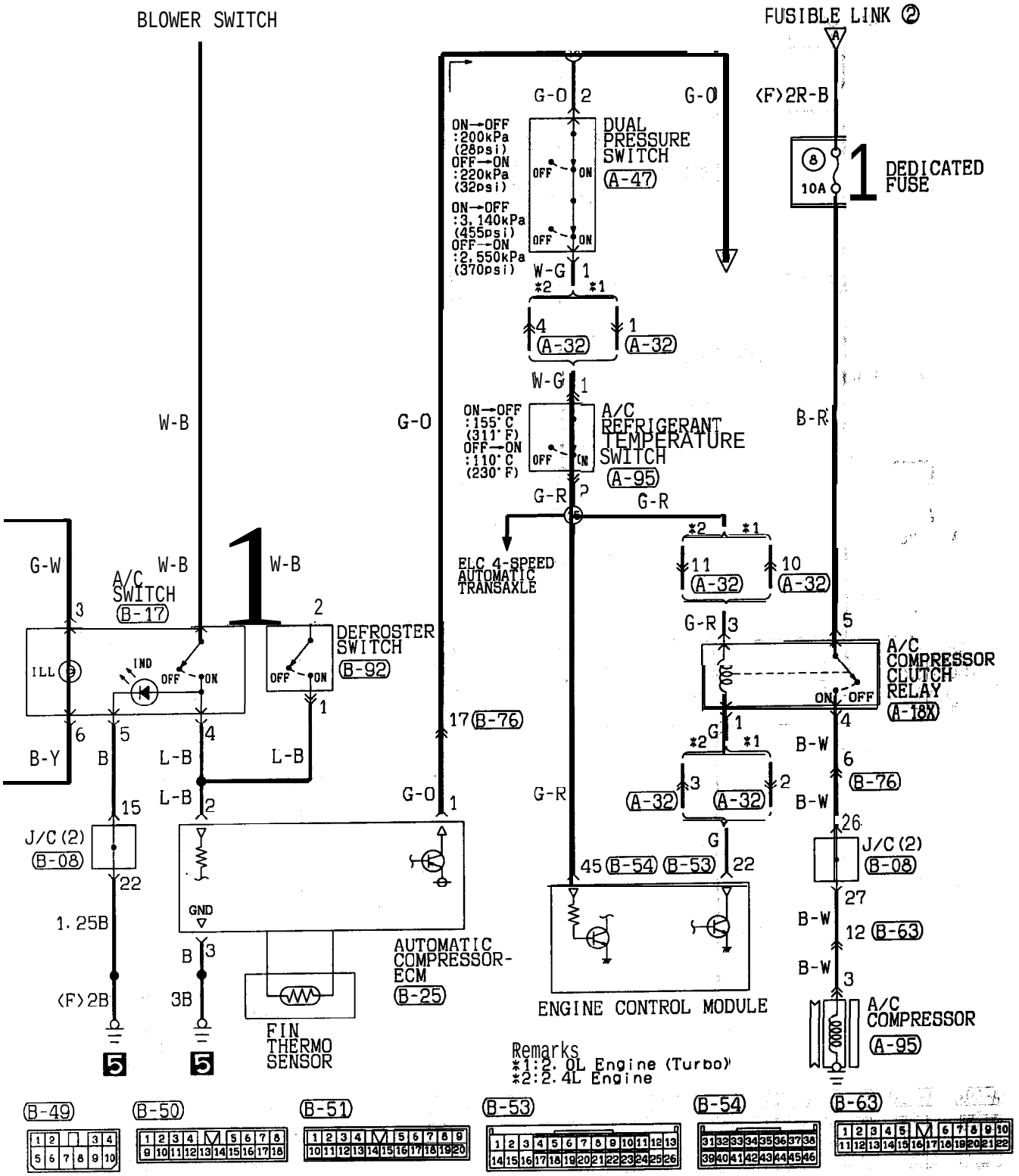

Wire color code
B :Black LG:Light green G :Green L :Blue W :White Y :Yellow SB:Sky blue
BR:Brown O :Orange GR:Gray R :Red P :Pink V :Violet

HF12M03AB

TSB Revision

AIR CONDITIONING SYSTEM <2.0L Engine (Turbo)-A/T and 2.4L Engine-A/T> (CONTINUED)

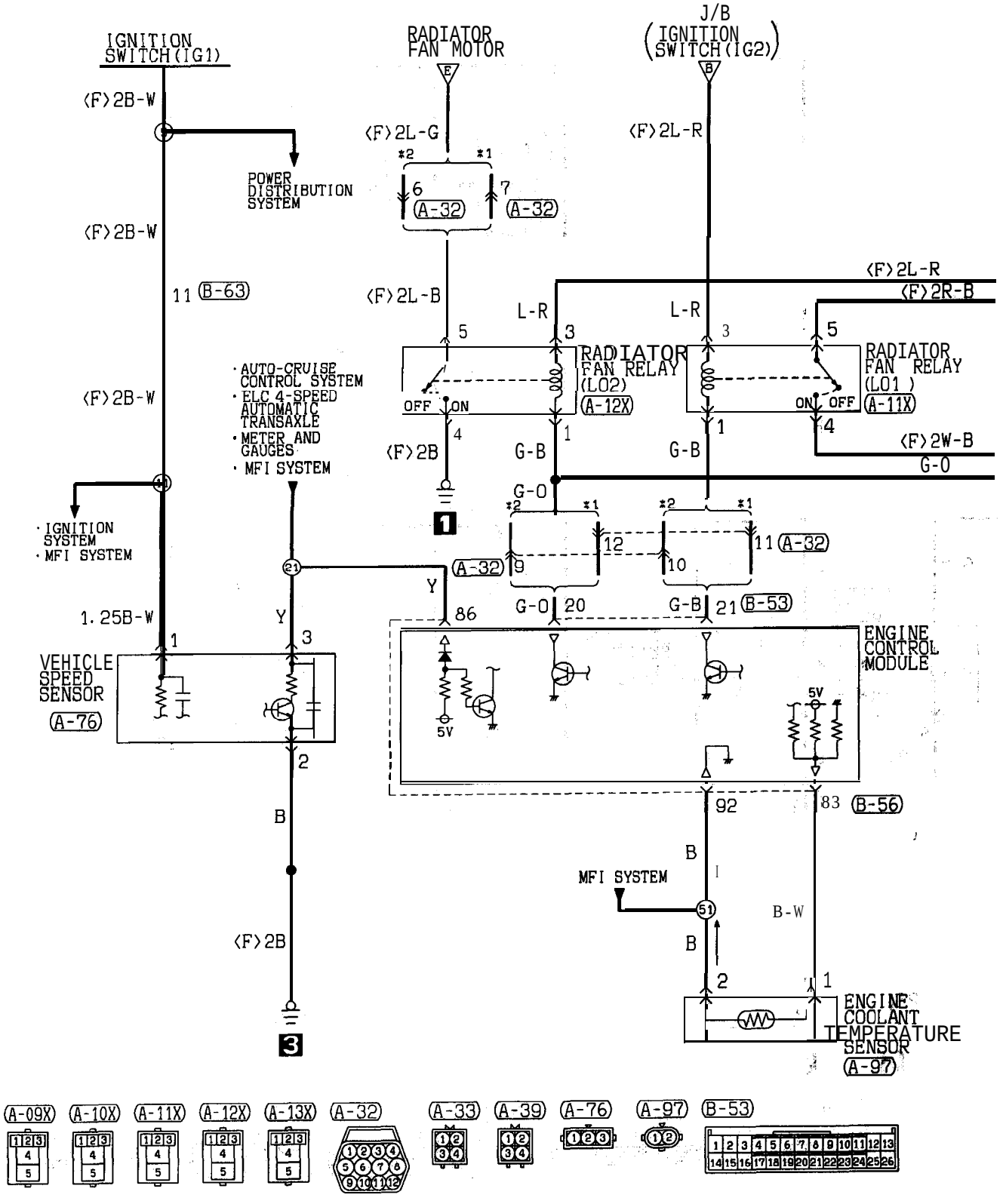

HF12M03BA

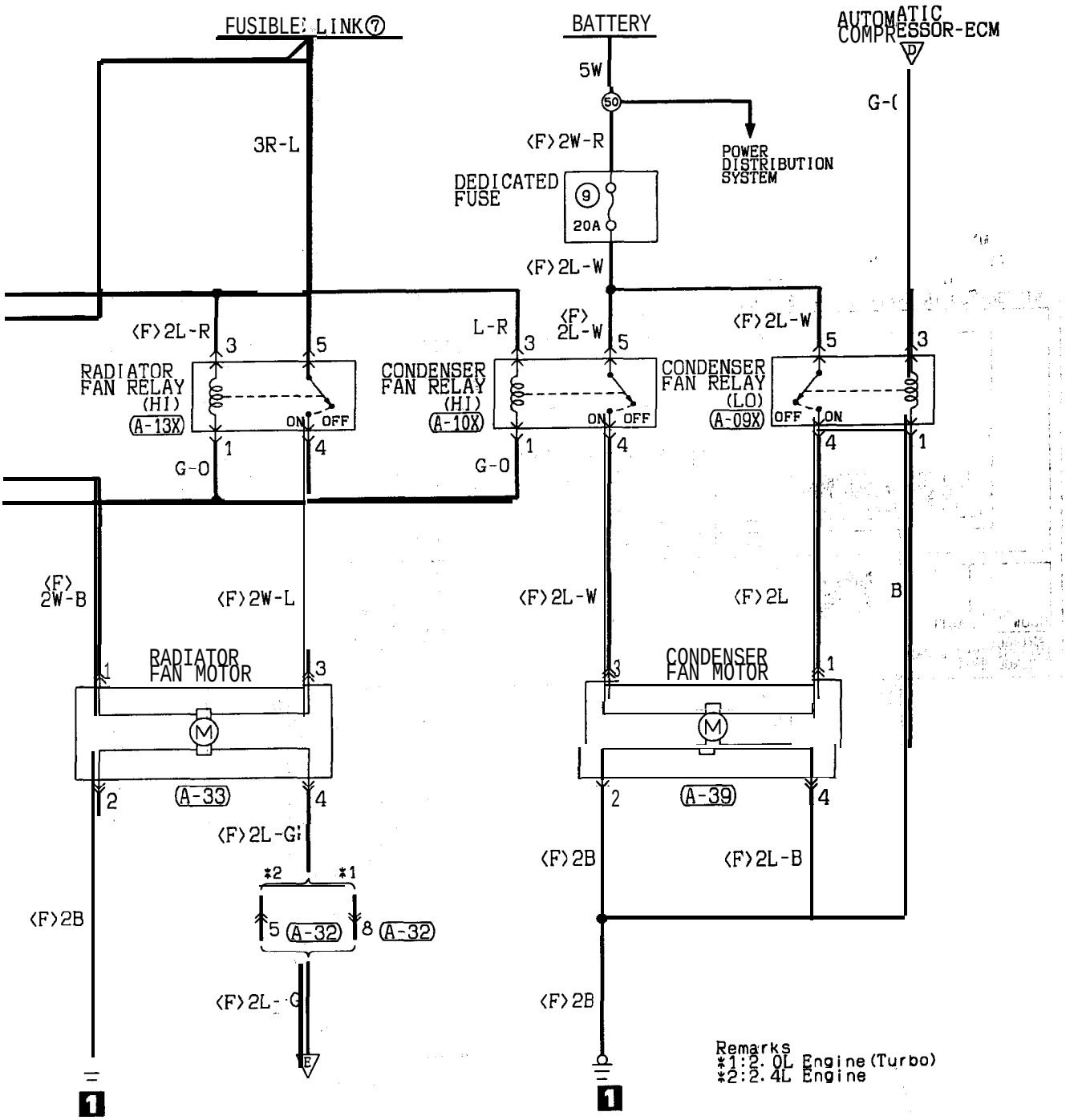

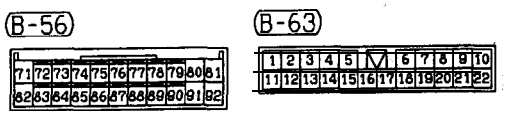

Wire color code
B :Black LG:Light green G :Green L :Blue W :White Y :Yellow SB:Sky blue
BR:Brown O :Orange GR:Gray R :Red P :Pink V :Violet

HF12M03BB

TSB Revision ____

WINDSHIELD WIPER AND WASHER <2.0L Engine (Non-turbo)>

90100610275

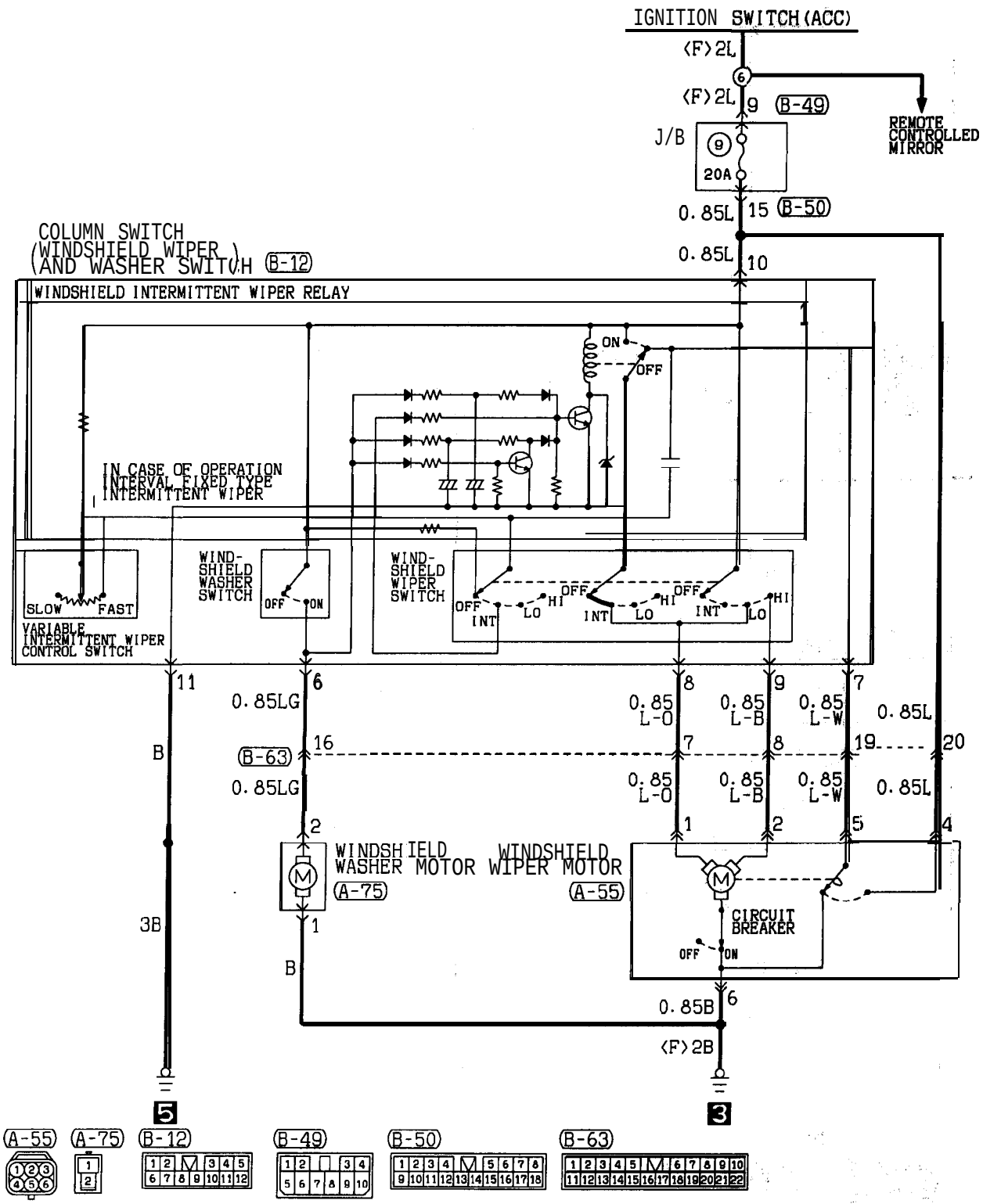

Wire color code
B :Black LG:Light green G :Green L :Blue W :White Y :Yellow SB:Sky blue
BR:Brown O :Orange GR:Gray R :Red P :Pink V :Violet

HF13M00AA

TSB Revision

NOTES

WINDSHIELD WIPER AND WASHER <2.0L Engine (Turbo) and 2.4L Engine>

90100610282

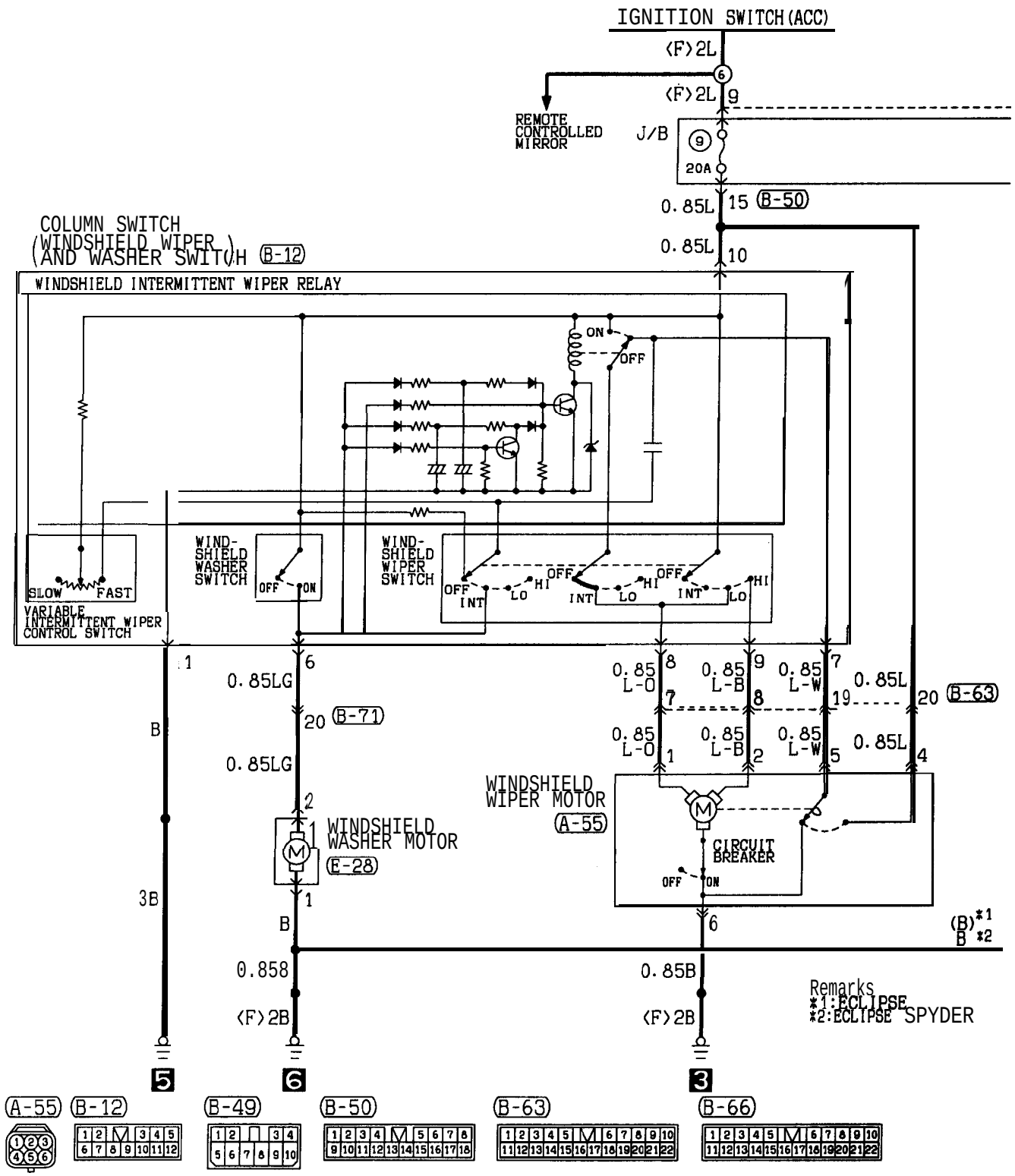

HF13M01AA

TSB Revision

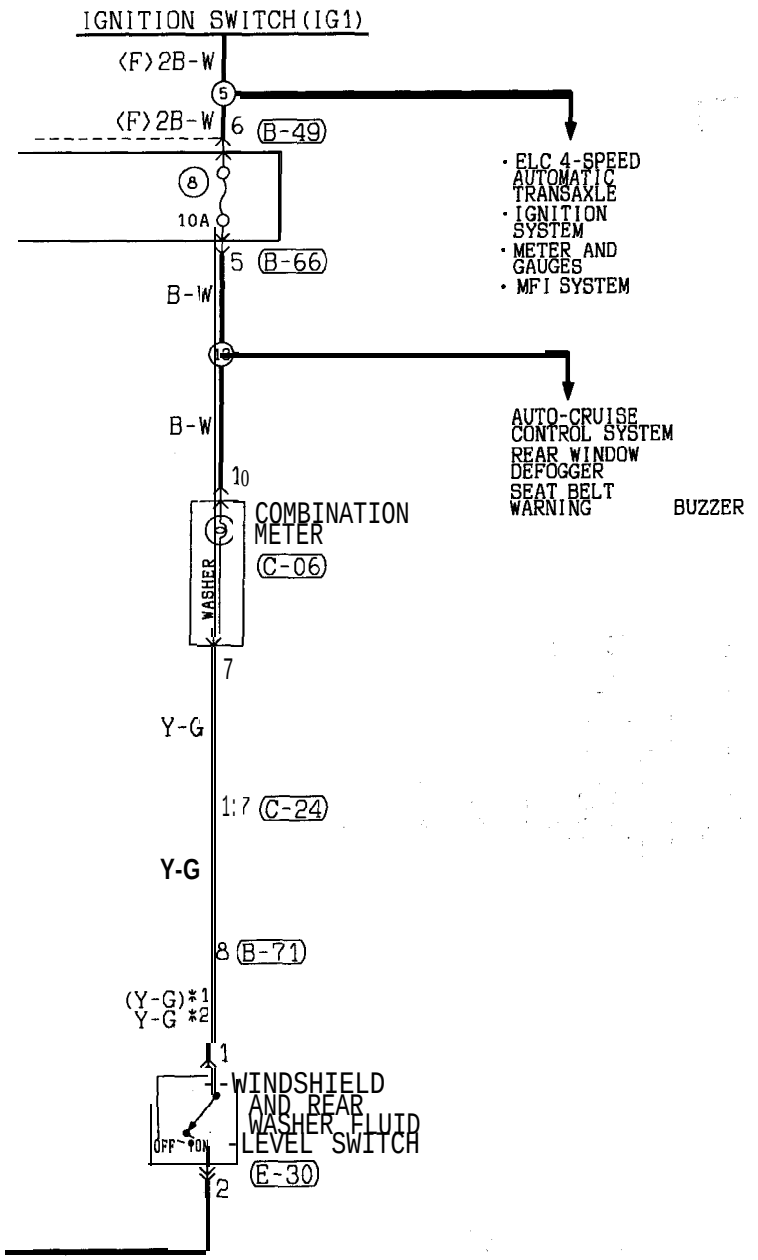

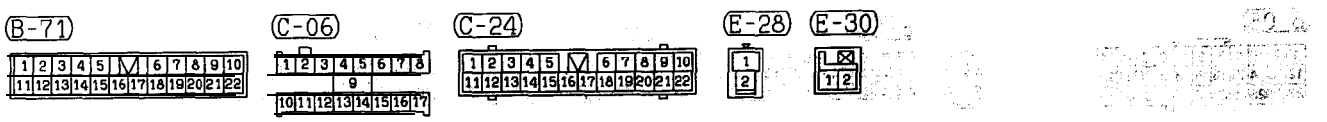

Wire color code

B :Black	LG:Light green	G :Green	L :Blue	W :White	Y :Yellow	SB:Sky blue
BR:Brown	O :Orange	GR:Gray	R :Red	P :Pink	V :Violet	

HF13M01AB

TSB Revision

REAR WIPER AND WASHER

90100620216

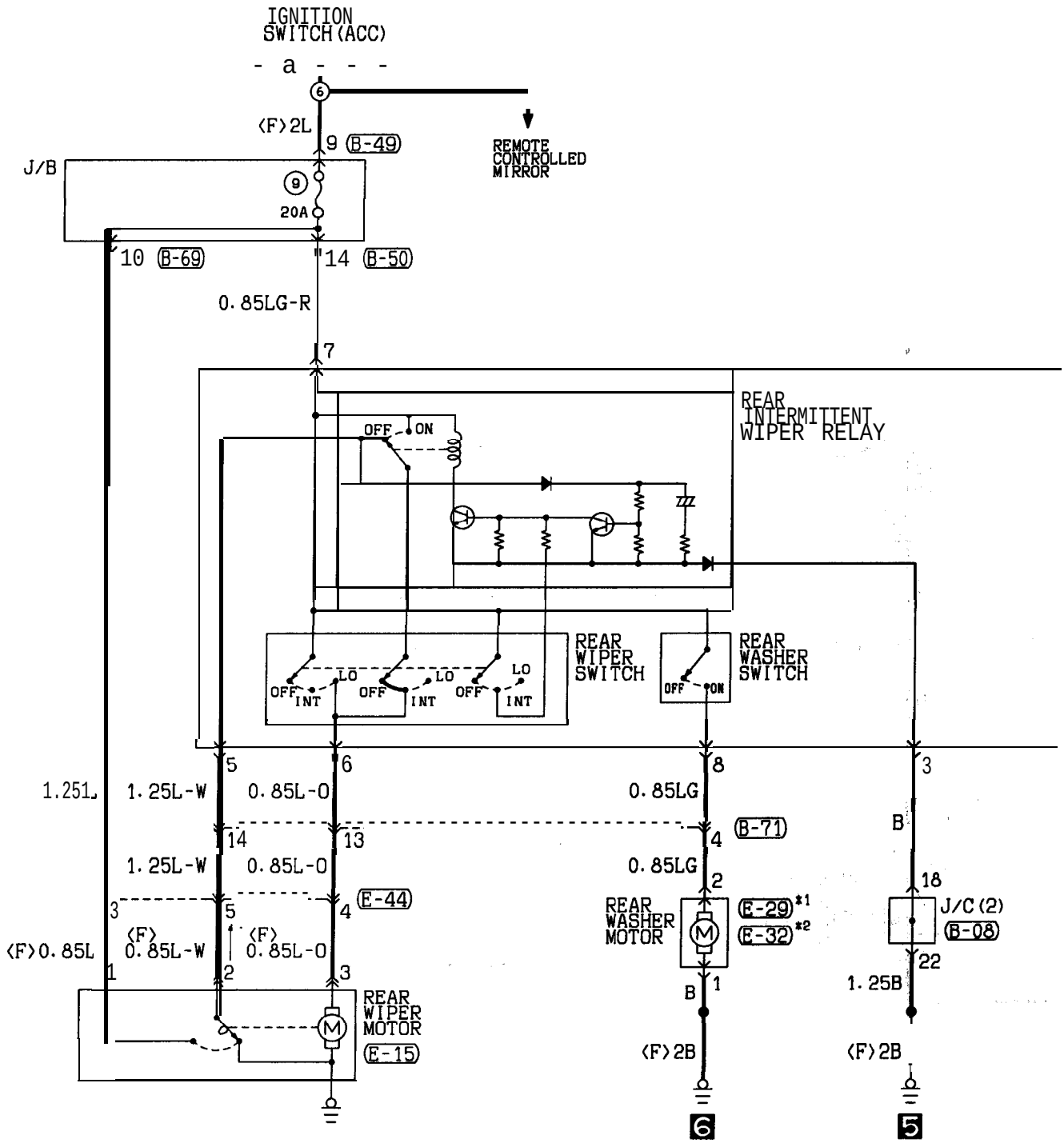

HF13M02AA

TSB Revision

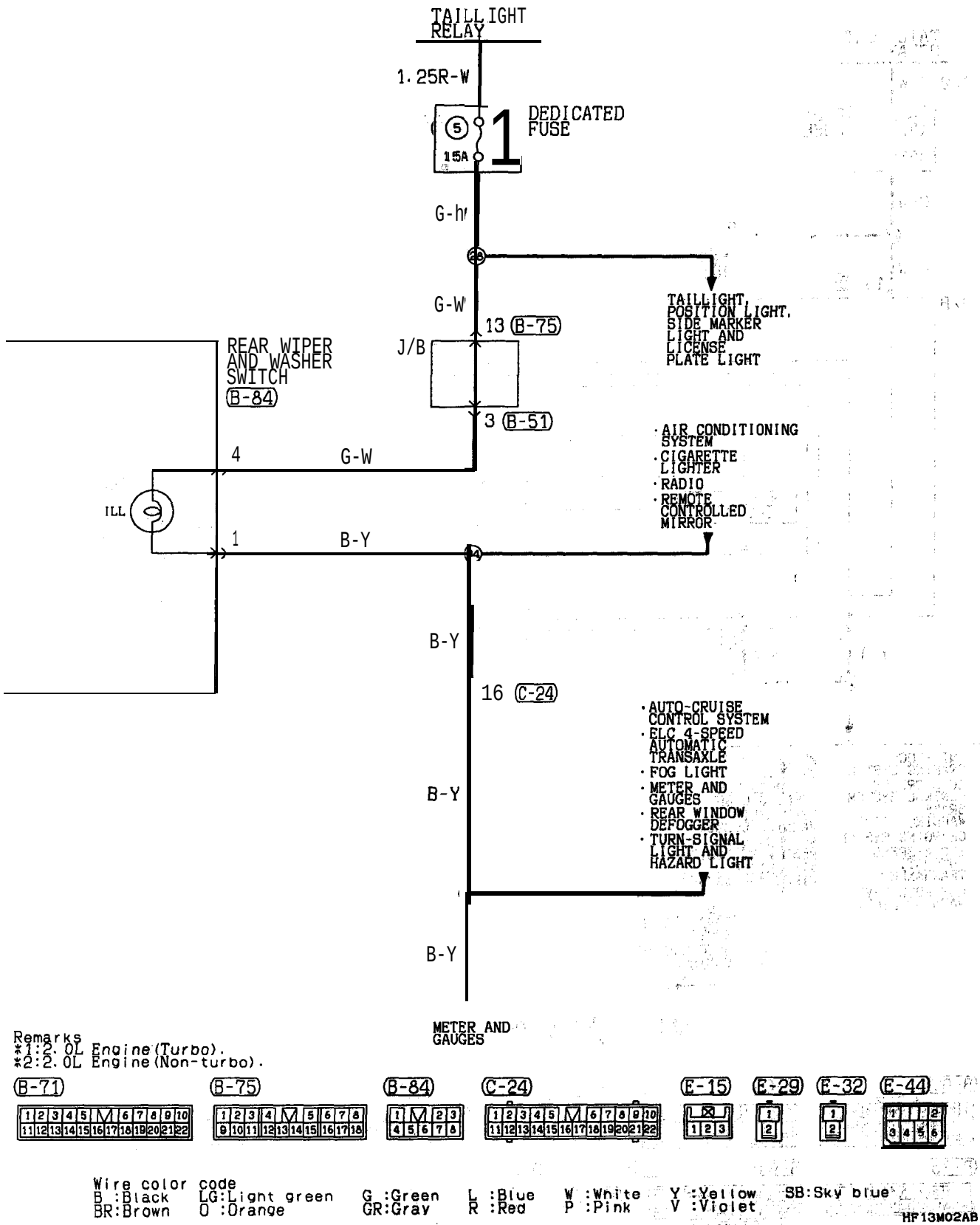

Remarks
*1:2.0L Engine(Turbo).
*2:2.0L Engine(Non-turbo).

Wire color code
B :Black LG:Light green G :Green L :Blue W :White Y :Yellow SB:Sky blue
BR:Brown O :Orange GR:Gray R :Red P :Pink V :Violet

HF13M02AB

TSB Revision

REAR WINDOW DEFOGGER <ECLIPSE>

90100640205

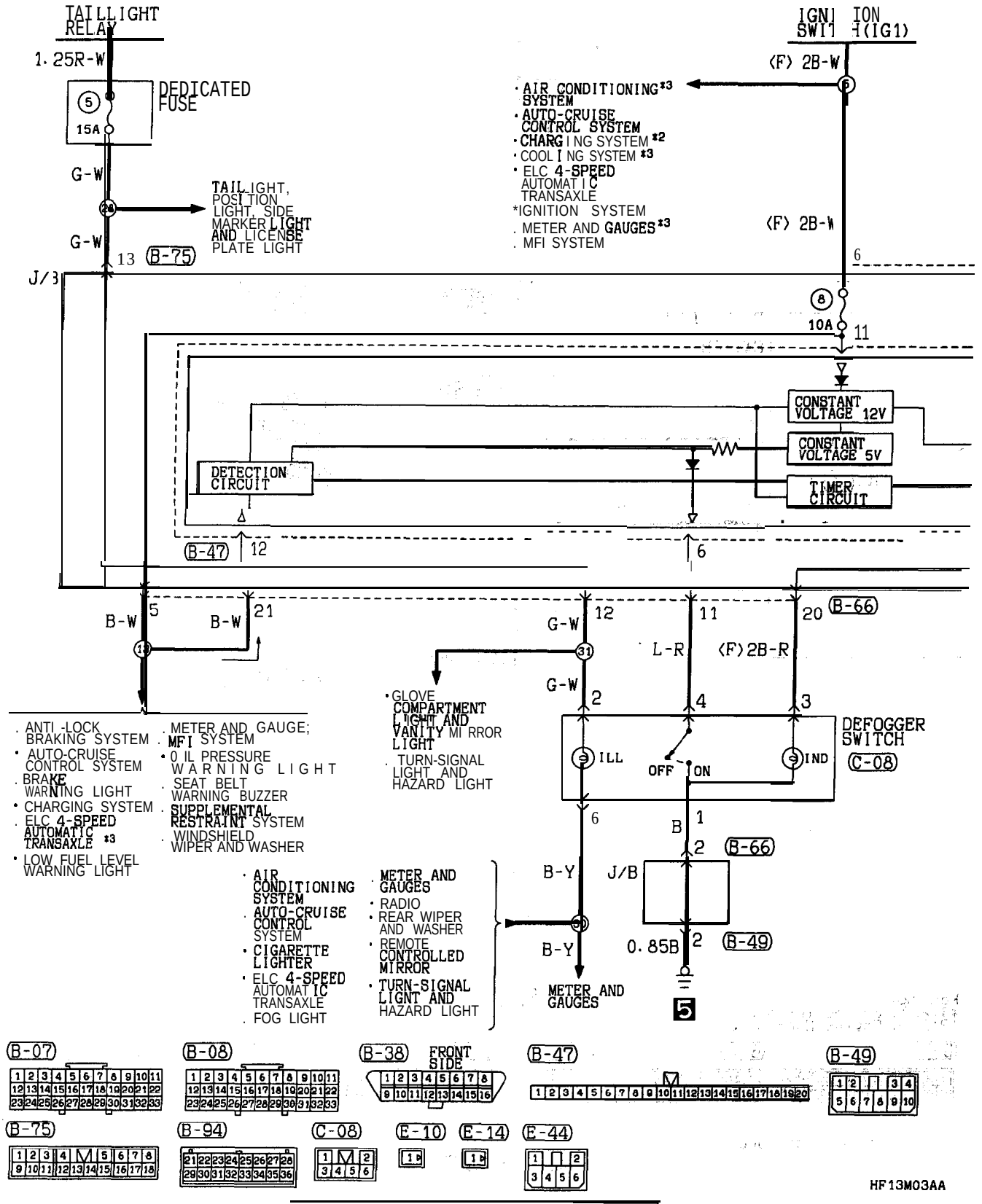

TSB Revision

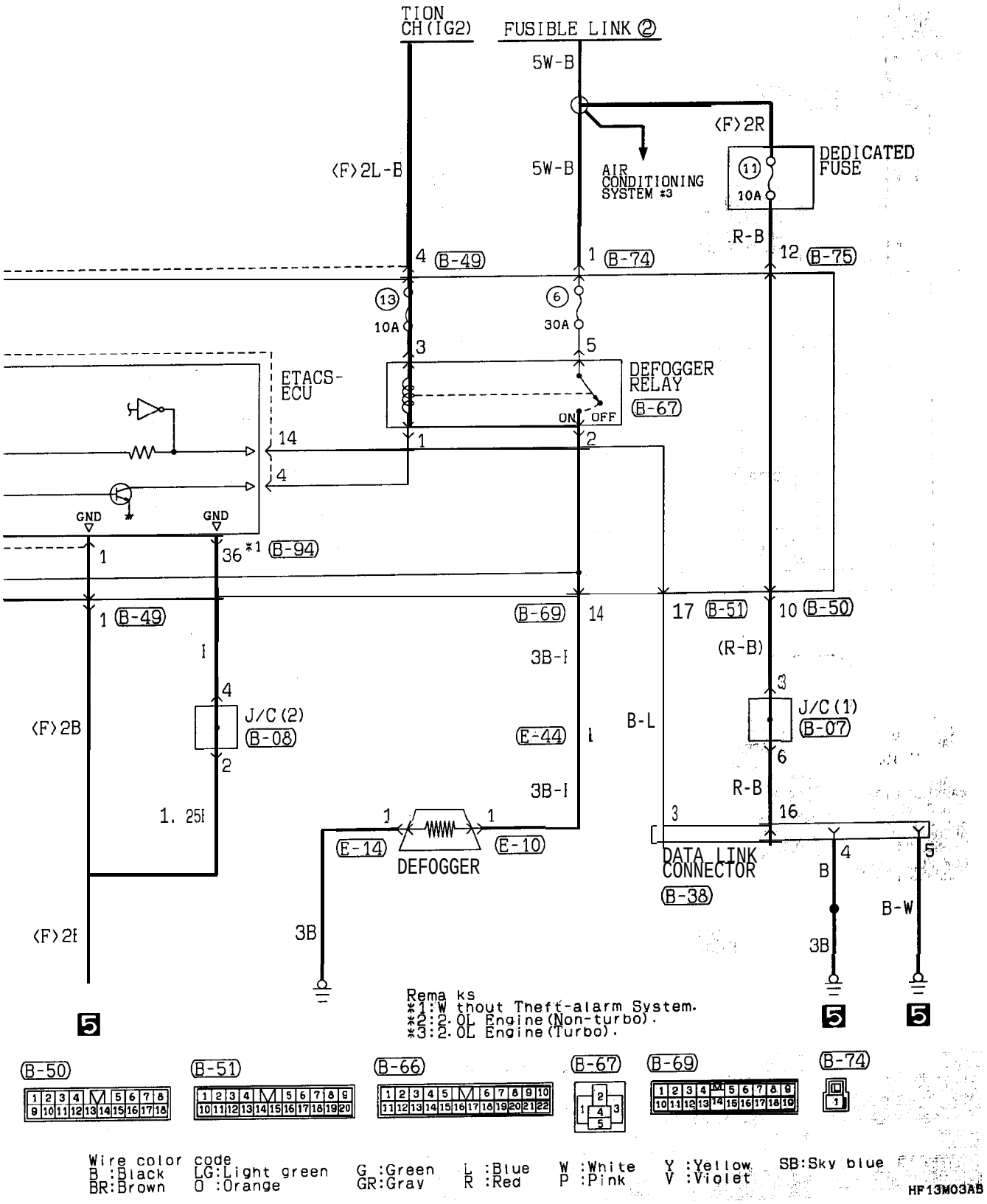

TSB Revision

REAR WINDOW DEFOGGER <ECLIPSE SPYDER>

90100640212

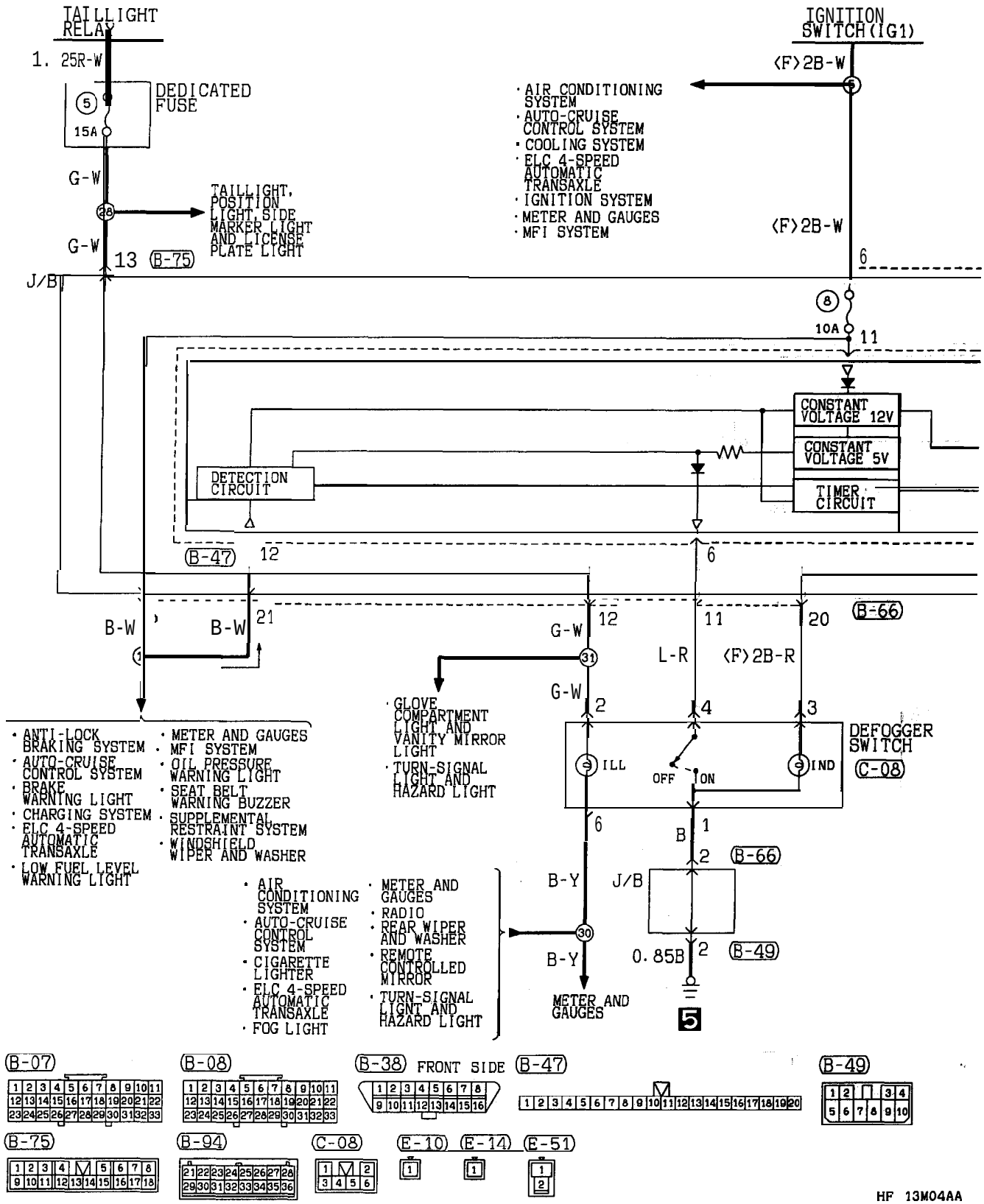

TSB Revision

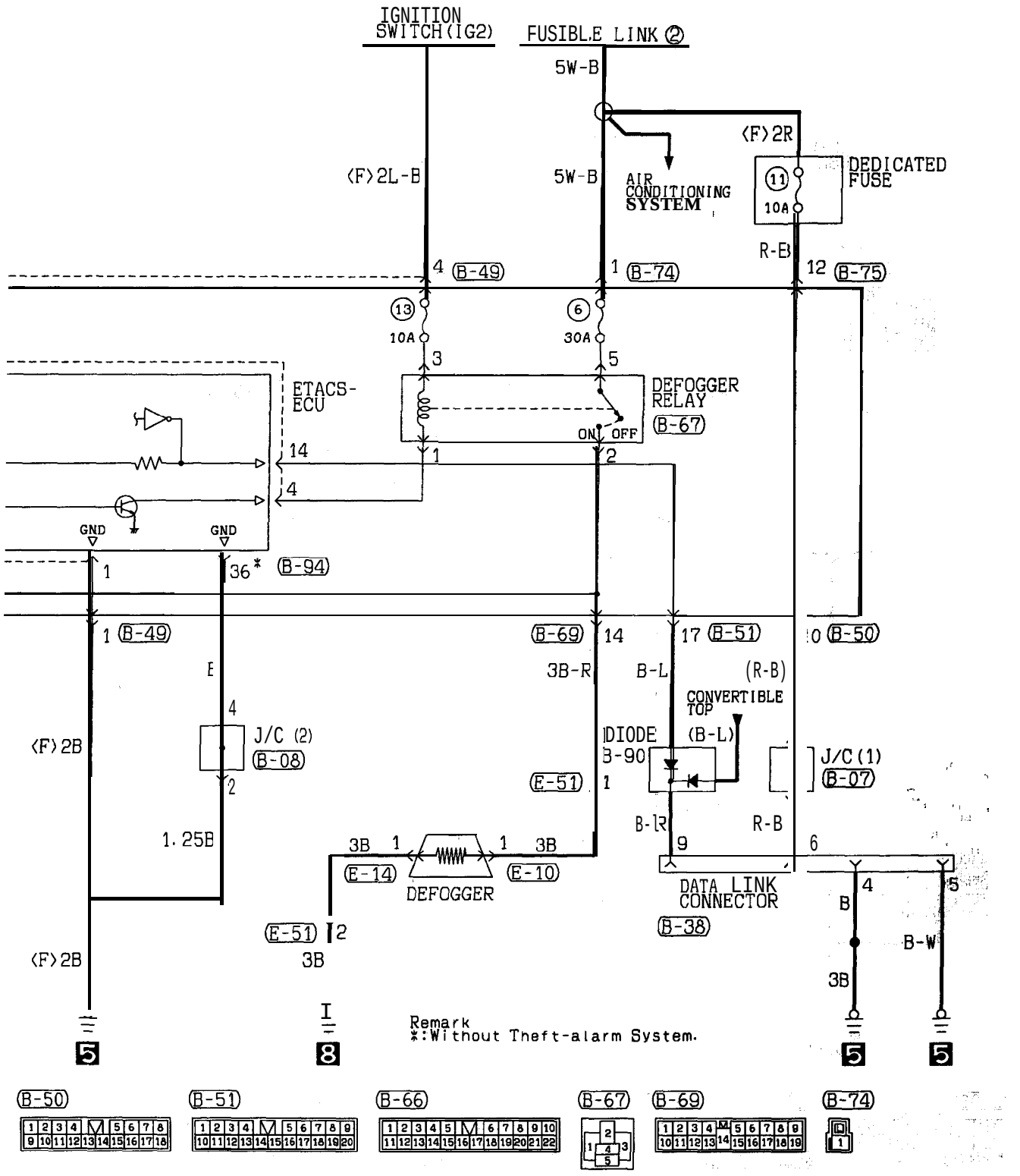

Wire color code
B :Black LG:Light green G :Green L :Blue W :White Y :Yellow SB:Sky blue
BR:Brown O :Orange GR:Gray R :Red P :Pink V :Violet

HF13M04AB

TSB Revision

REMOTE CONTROLLED MIRROR <ECLIPSE>

90100650222

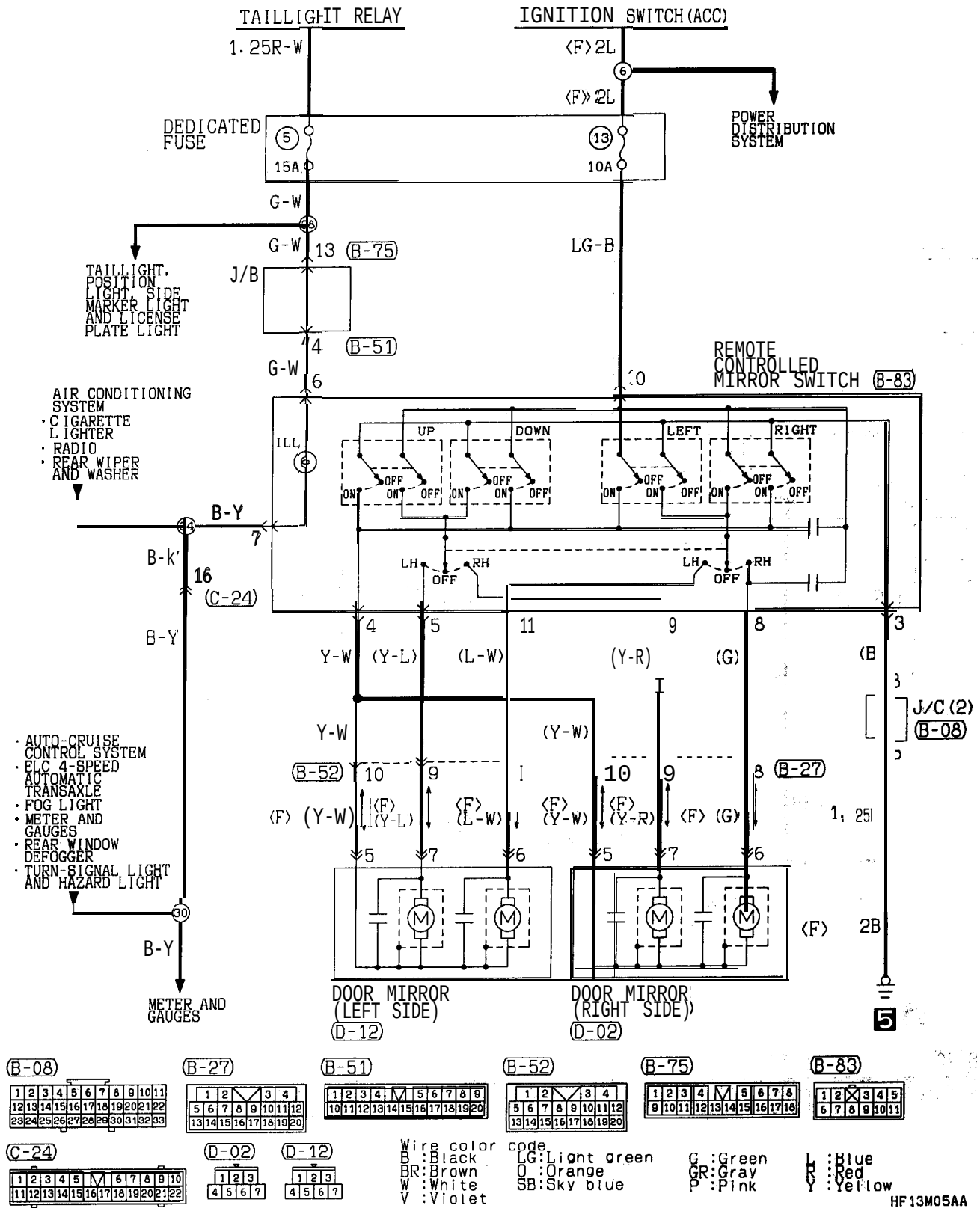

TSB Revision

REMOTE CONTROLLED MIRROR <ECLIPSE SPYDER>

90100650239

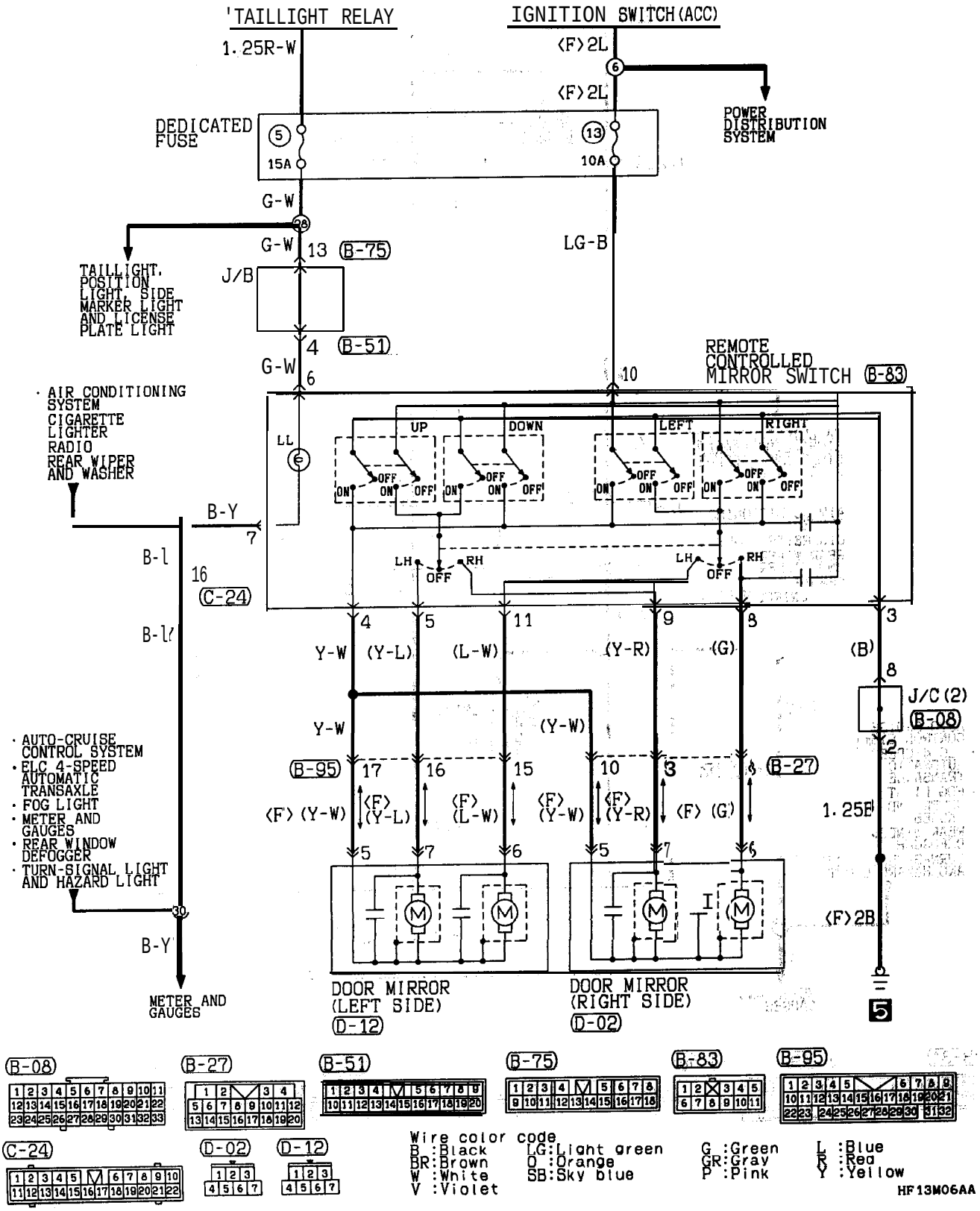

Wire color code

B :Black	LG:Light green	G :Green	L :Blue
BR:Brown	O :Orange	GR:Gray	R :Red
W :White	SB:Sky blue	P :Pink	Y :Yellow
V :Violet			

HF13M06AA

TSB Revision

RADIO <ECLIPSE>

90100710036

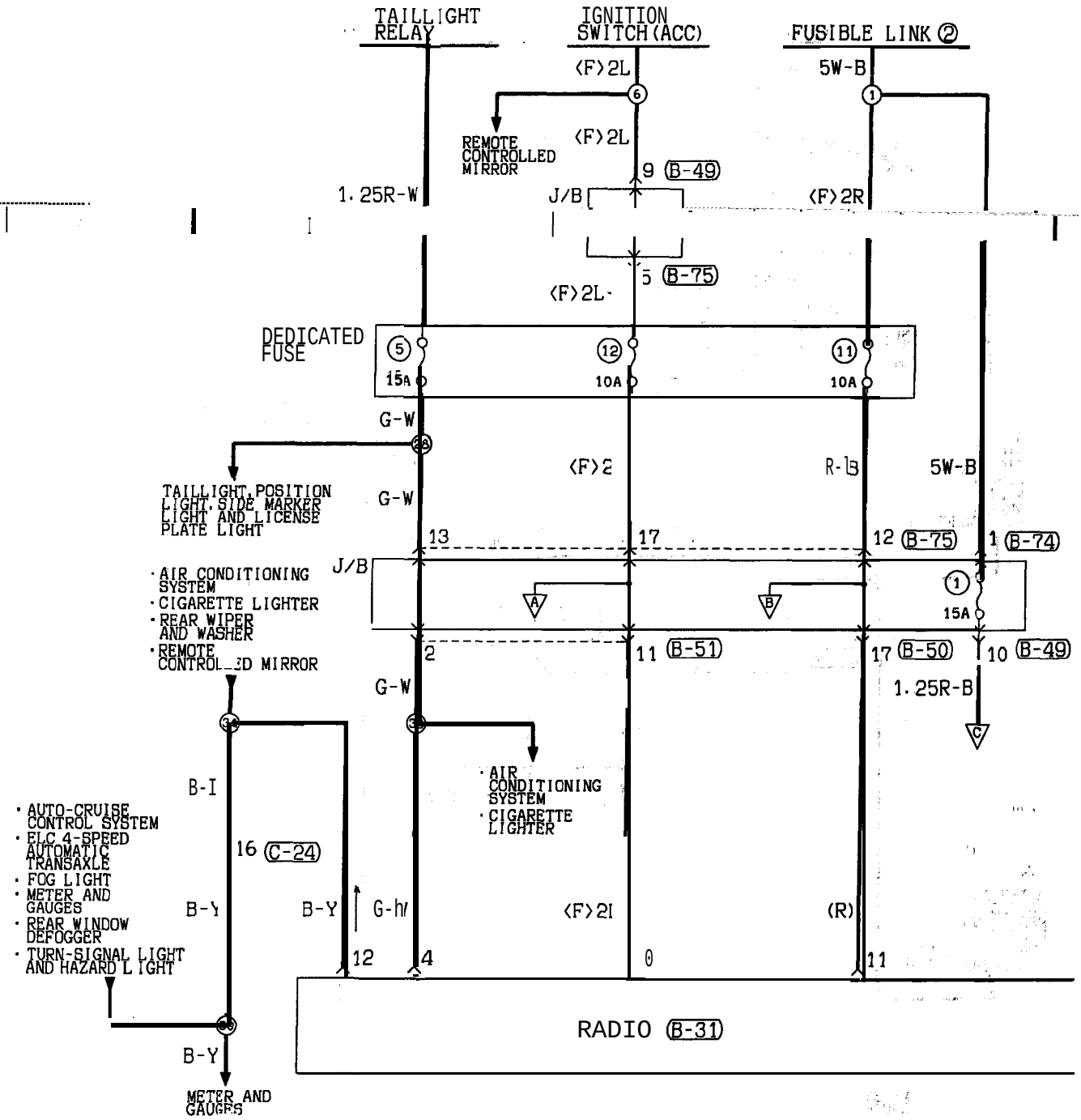

HF 14M00AA

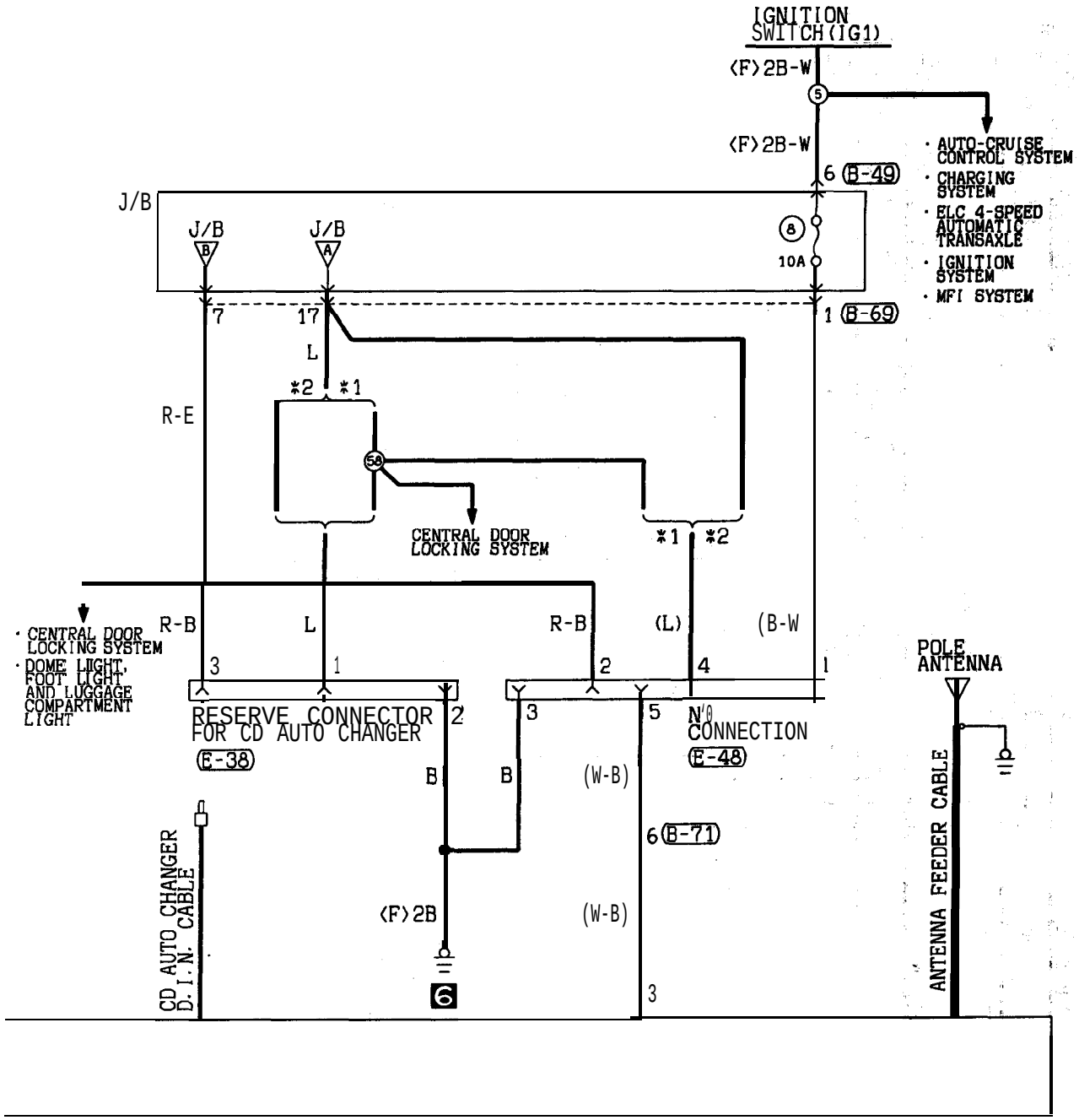

Remarks
·*1:Vehicles with keyless entry system.
·*2:Vehicles without keyless entry system.
·The broken line depends on models.

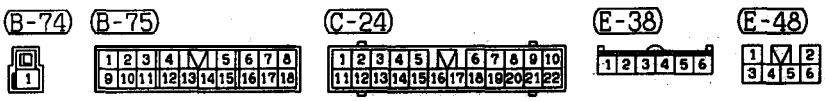

Wire color code
B :Black LG:Light green G :Green L :Blue W :White Y :Yellow SB:Sky blue
BR:Brown O :Orange GR:Gray R :Red P :Pink V :Violet

HF14M00AB

TSB Revision

RADIO <ECLIPSE> (CONTINUED)

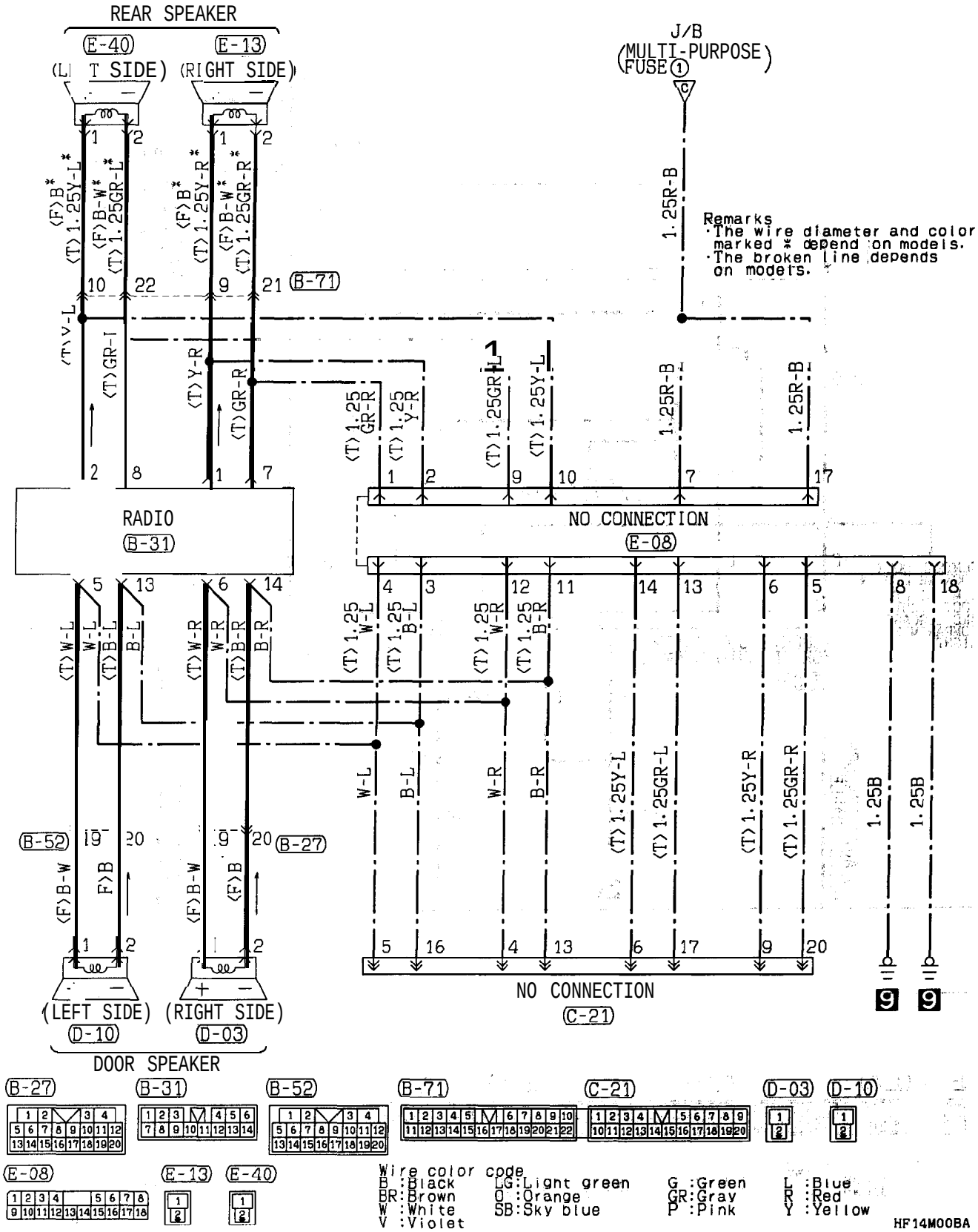

TSB Revision

NOTES

RADIO WITH TAPE PLAYER <ECLIPSE (Vehicles without Amplifier)>

90100720480

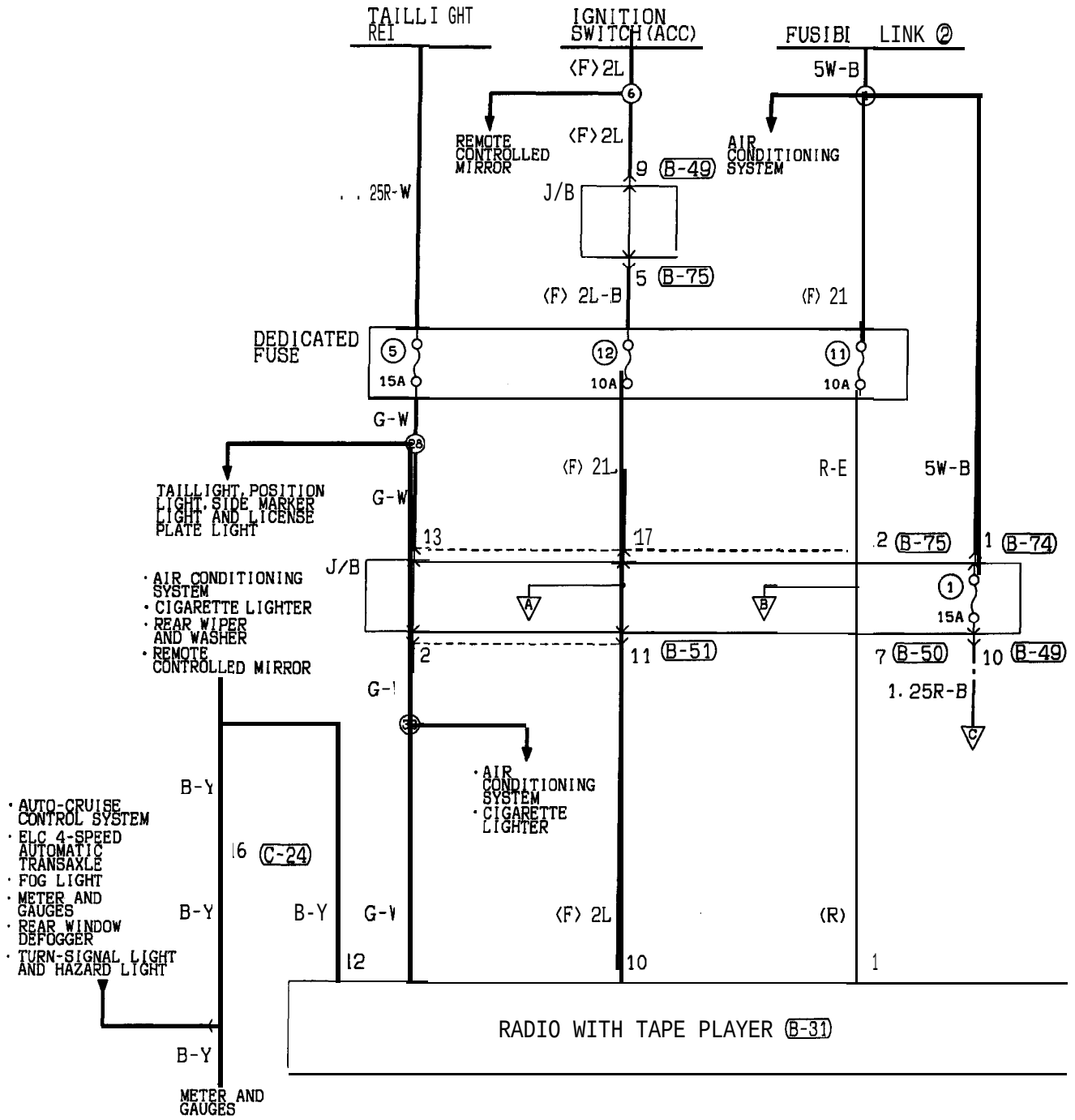

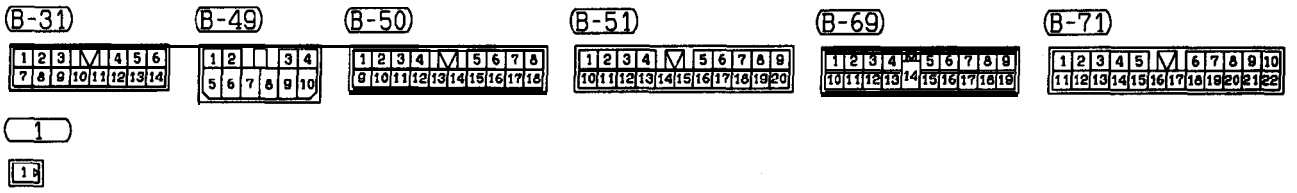

HF14M01AA

TSB Revision

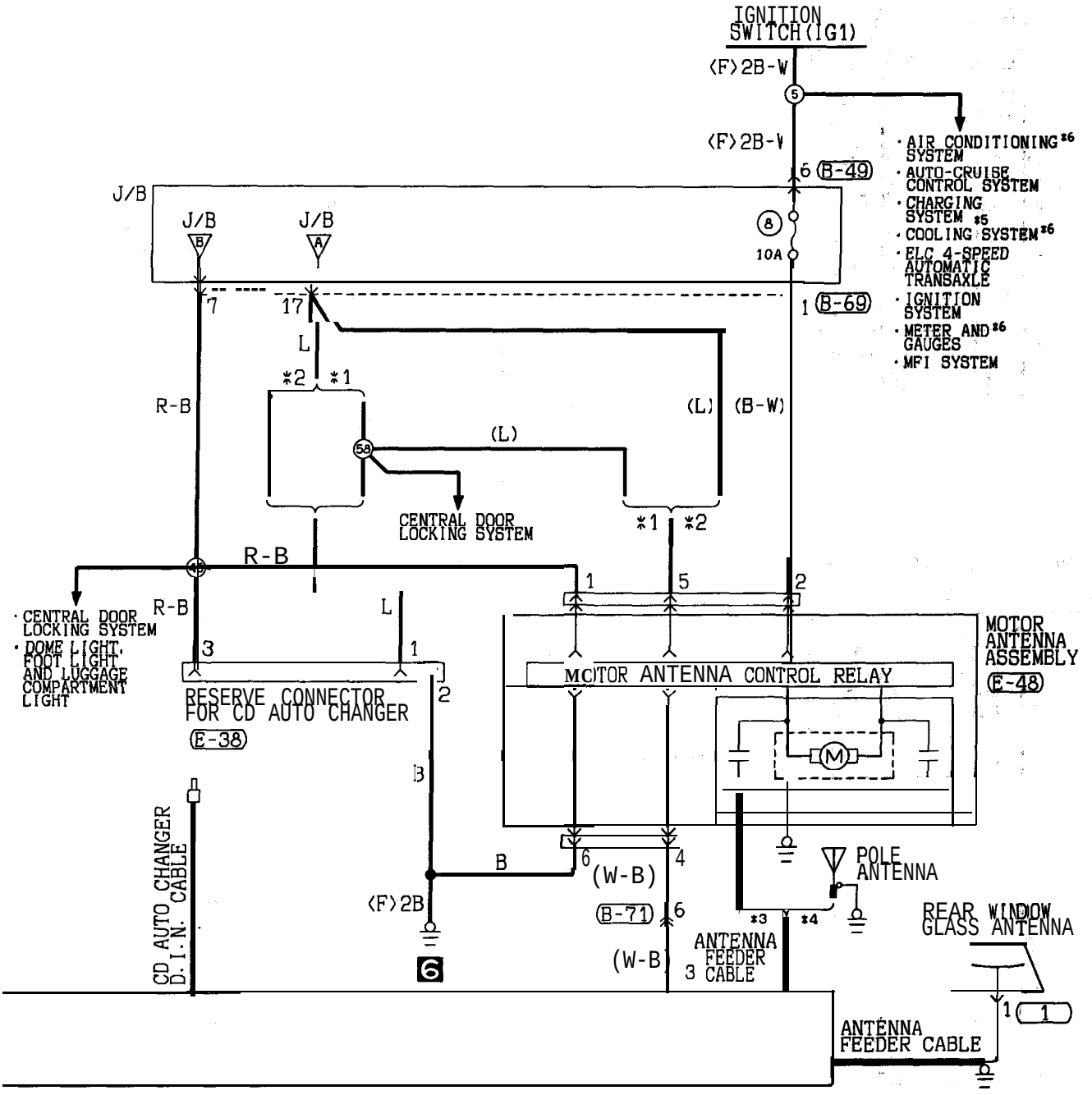

Remarks
- *1:Vehicles with keyless entry system.
- *2:Vehicles without keyless entry system.
- *3:Vehicles with motor antenna.
- *4:Vehicles with pole antenna.
- *5:2.0L Engine(Non-turbo).
- *6:2.0L Engine(Turbo).
- The broken line depends on models.

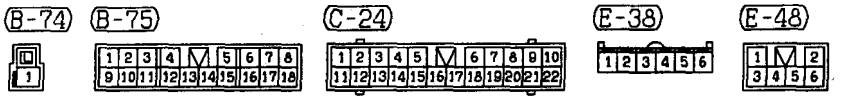

Wire color code
B :Black LG:Light green G :Green L :Blue W :White Y :Yellow SB:Sky blue
BR:Brown O :Orange GR:Gray R :Red P :Pink V :Violet

HF14M01AB

RADIO WITH TAPE PLAYER <ECLIPSE (Vehicles without Amplifier)> (CONTINUED)

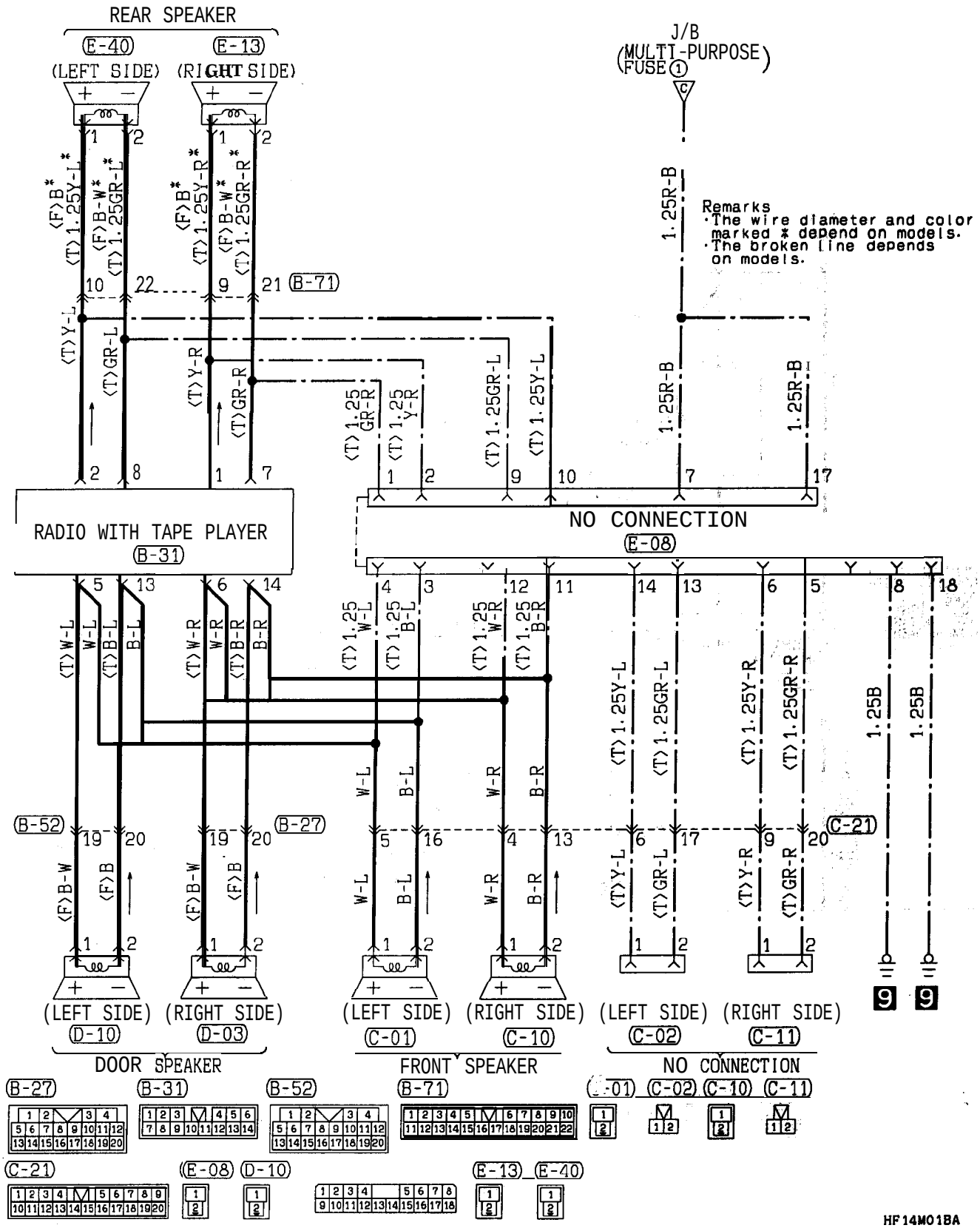

TSB Revision

RADIO OR RADIO WITH TAPE PLAYER <ECLIPSE SPYDER (Vehicles without Amplifier)>

90100720497

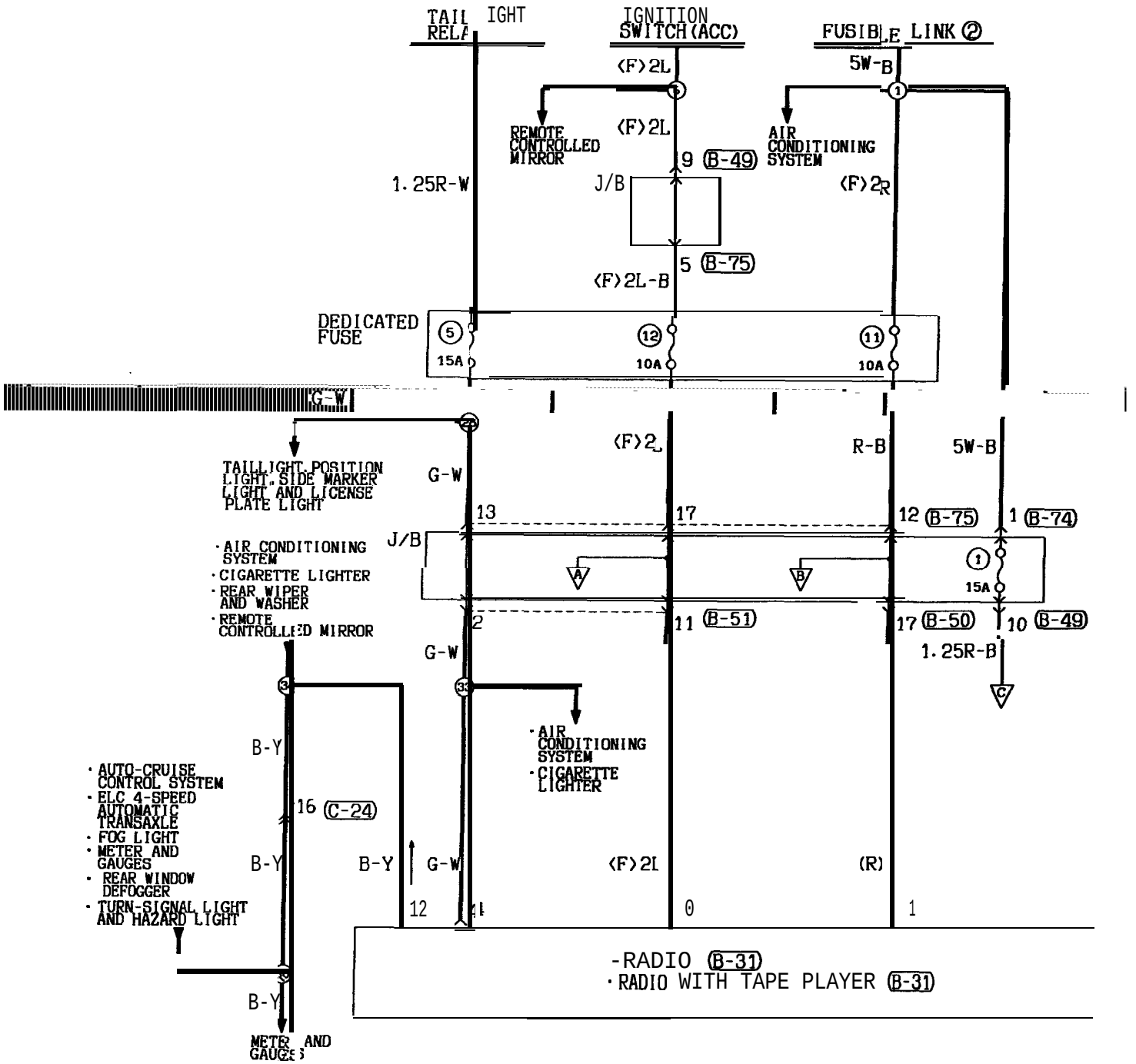

HF14M04AA

TSB Revision

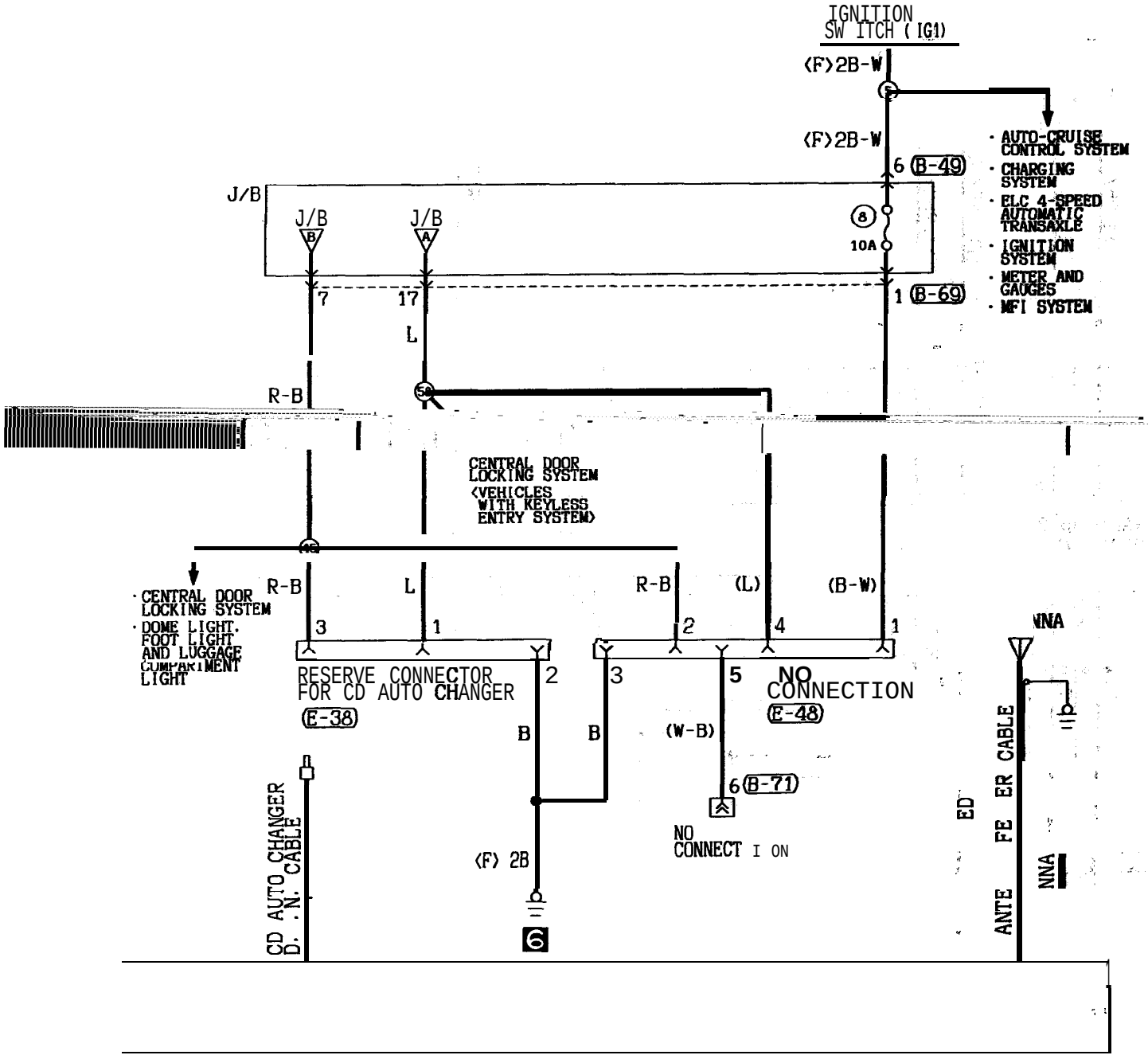

Remark
The broken line depends on models.

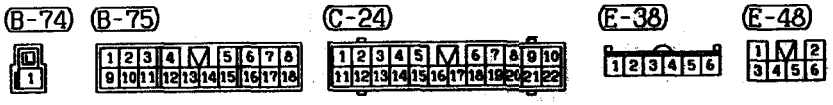

Wire color code
B :Black LG:Light green G :Green L :Blue W :White Y :Yellow SB:Sky blue
BR:Brown O :Orange GR:Gray R :Red P :Pink V :Violet

HF14M04AB

RADIO OR RADIO WITH TAPE PLAYER <ECLIPSE SPYDER (Vehicles without Amplifier)> (CONTINUED)

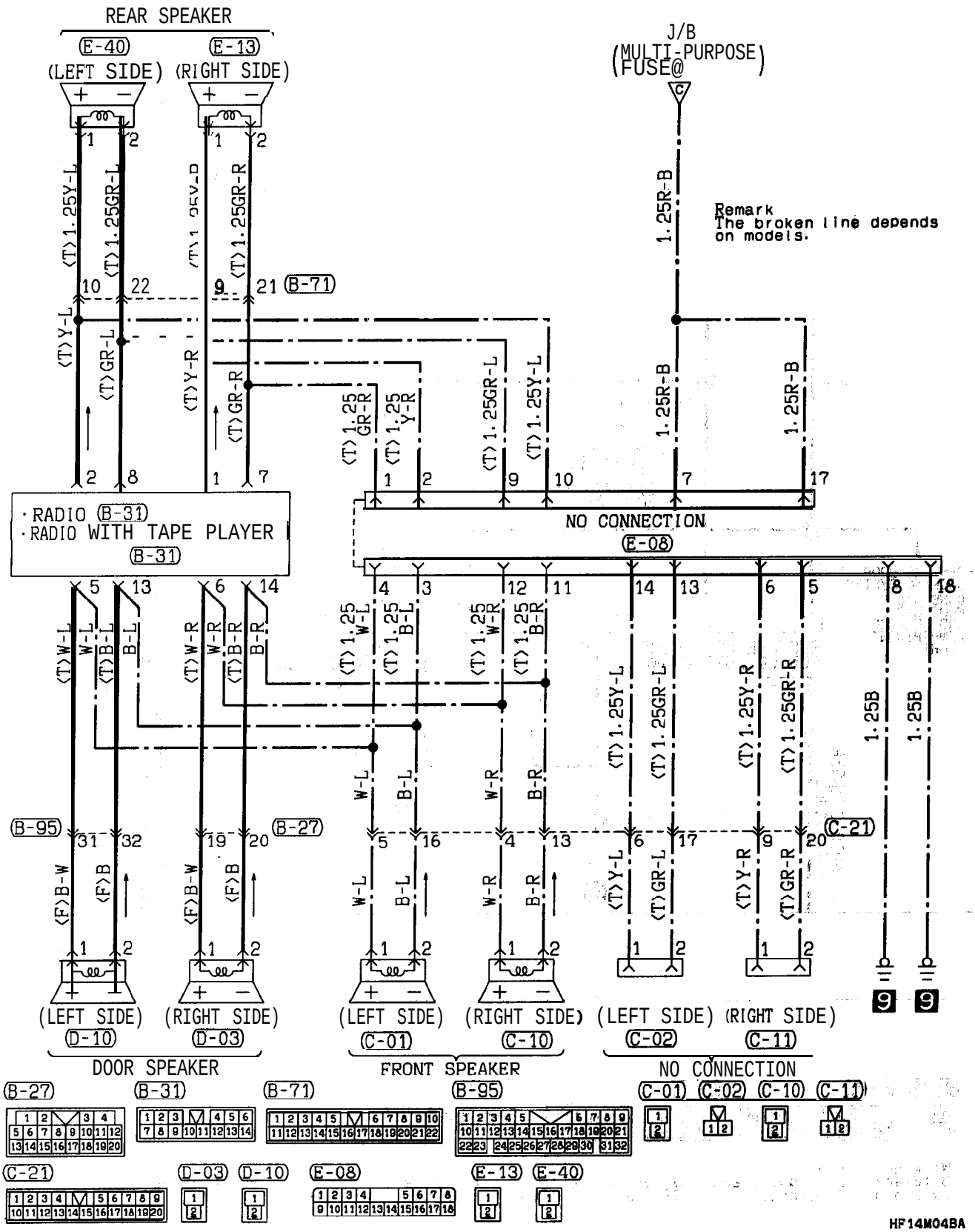

TSB Revision

NOTES

RADIO WITH TAPE PLAYER <ECLIPSE (Vehicles with Amplifier)>

90100720503

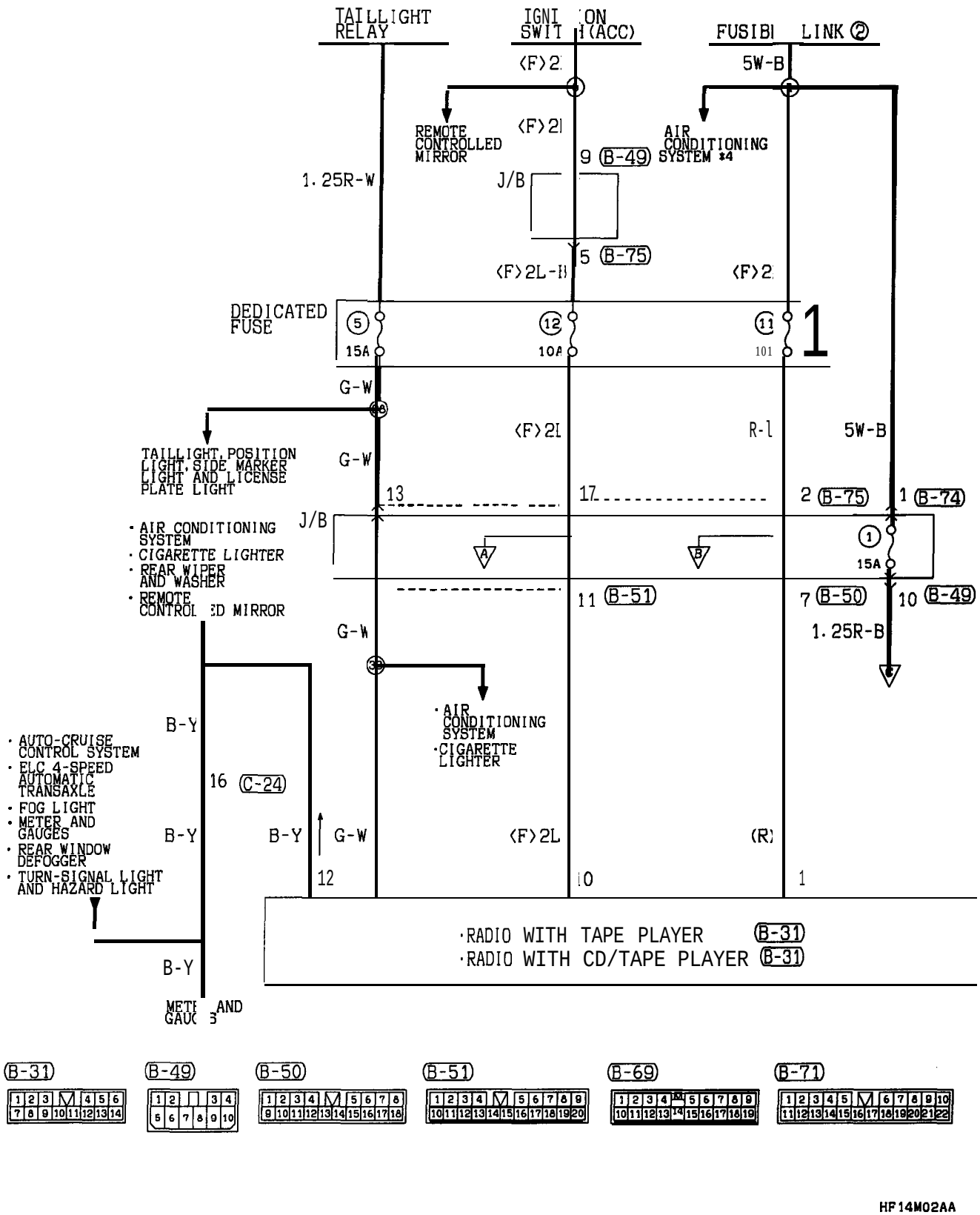

HF14M02AA

TSB Revision

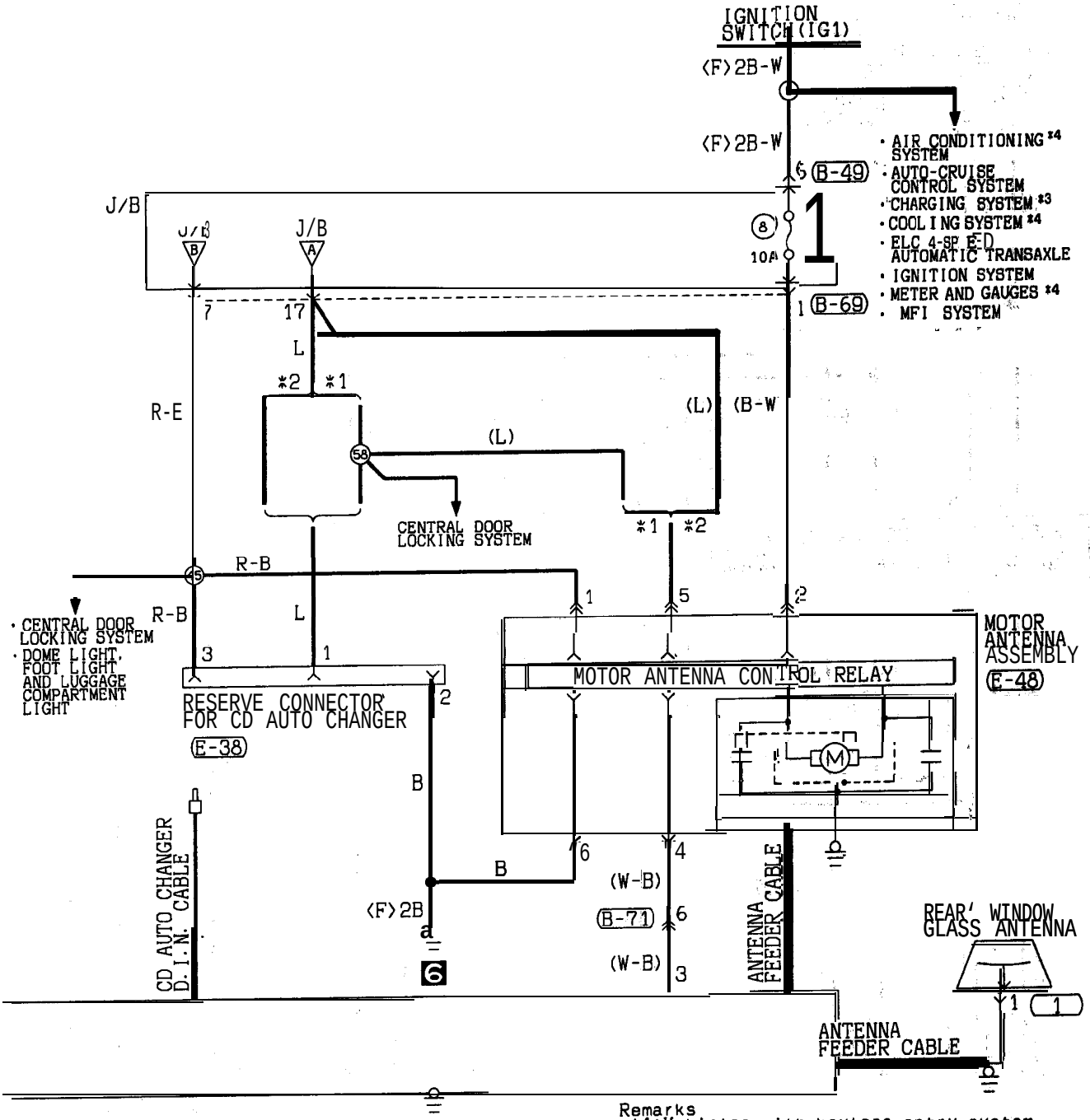

Remarks
- *1: Vehicles with keyless entry system.
- *2: Vehicles without keyless entry system.
- *3: 2.0L Engine (Non-turbo).
- *4: 2.0L Engine (Turbo).

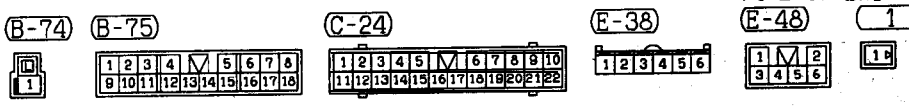

Wire color code
B :Black LG:Light green G :Green L :Blue W :White Y :Yellow SB:Sky blue
BR:Brown O :Orange GR:Gray R :Red P :Pink V :Violet

HF14M02AB

RADIO WITH TAPE PLAYER (ECLIPSE (Vehicles with Amplifier)) (CONTINUED)

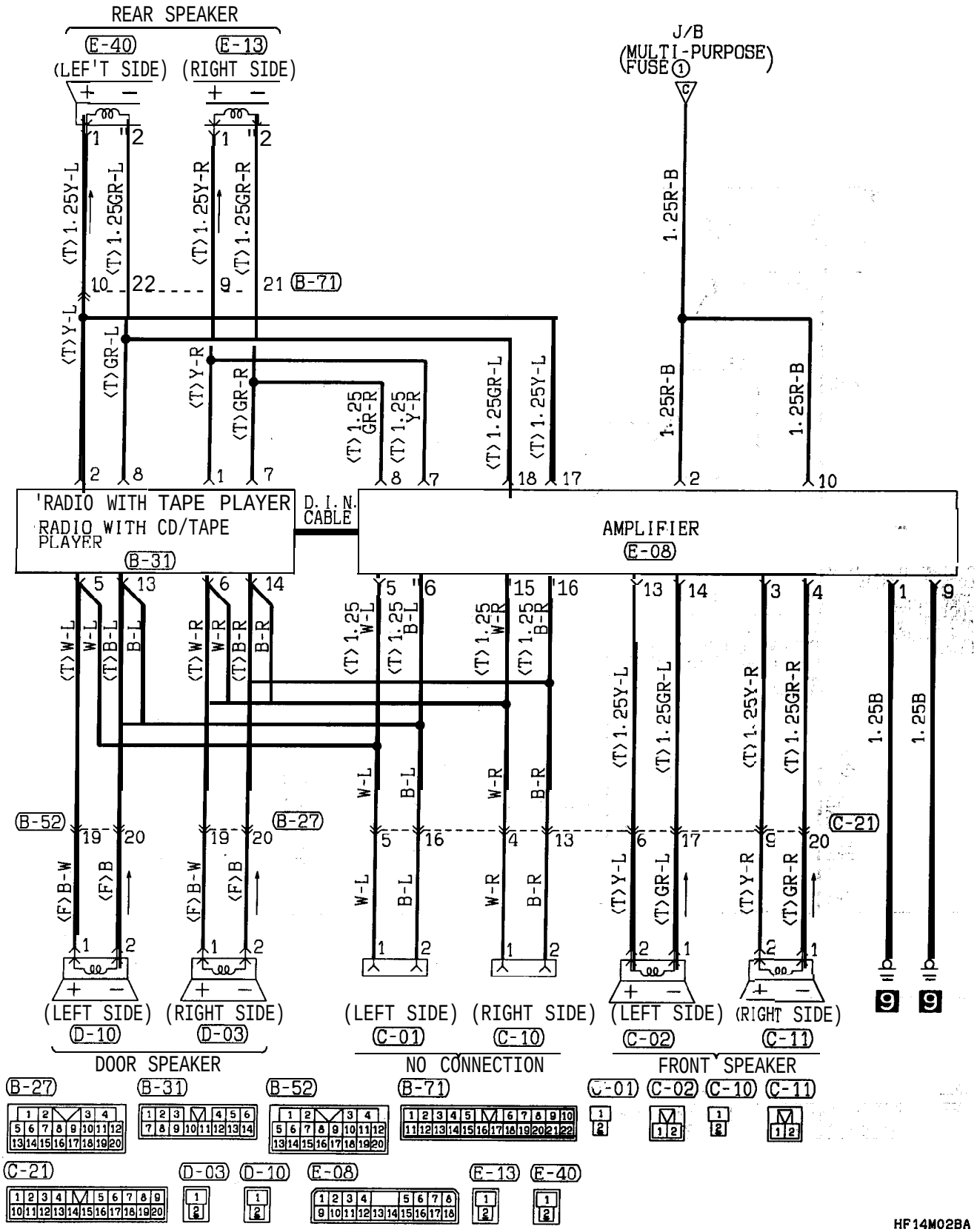

TSB Revision

NOTES

RADIO WITH TAPE PLAYER <ECLIPSE SPYDER (Vehicles with Amplifier)>

90100720510

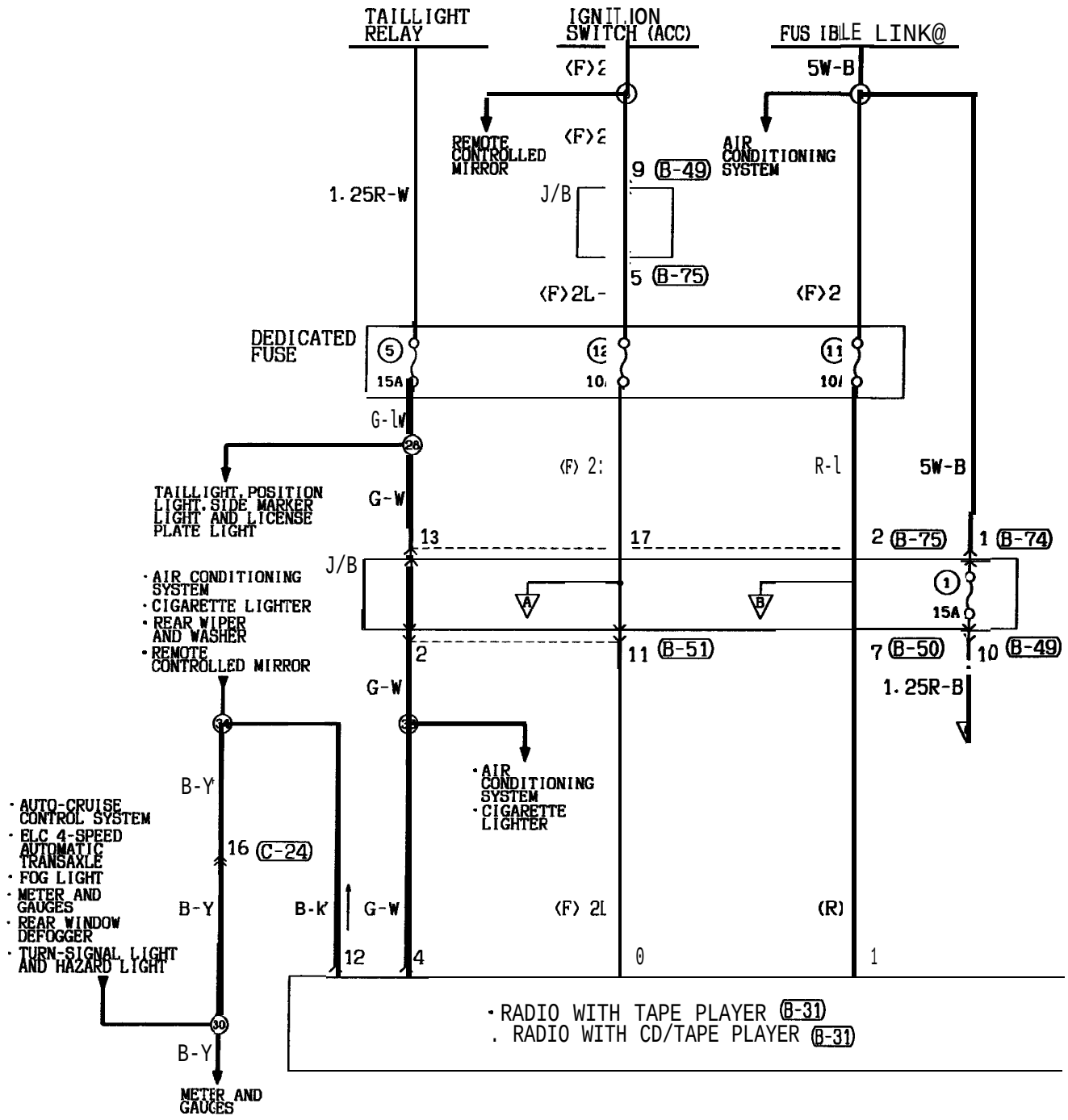

14M05AA

TSB Revision

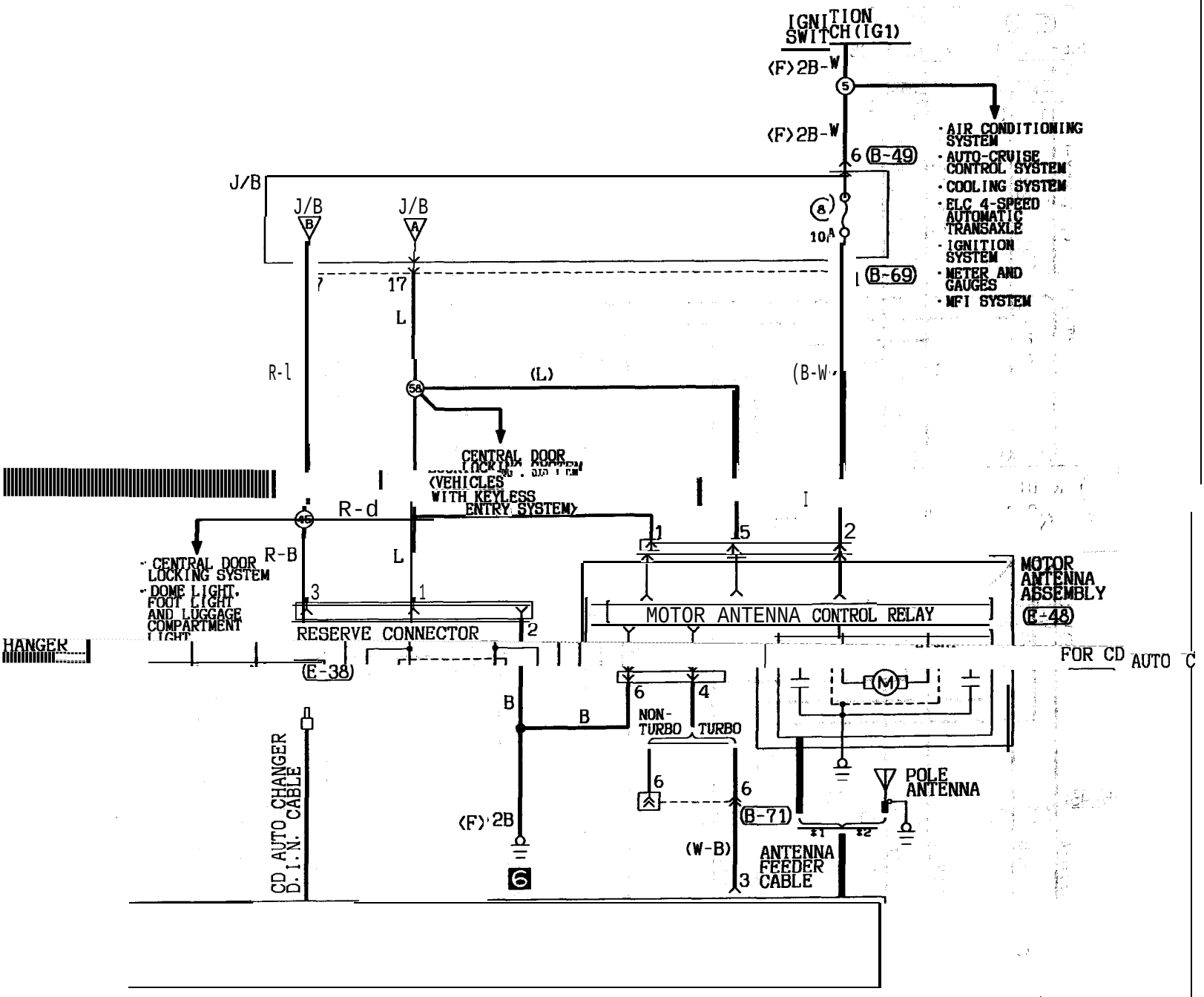

Remarks
*1:Vehicles with motor antenna.
*2:Vehicles with pole antenna.
The broken line depends on models.

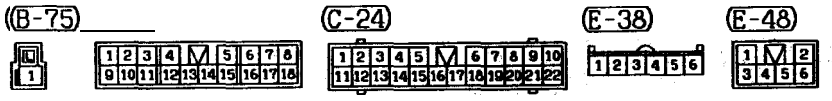

Wire color code
B :Black LG:Light green G :Green L :Blue W :White Y :Yellow SB:Sky blue
BR:Brown O :Orange GR:Gray R :Red P :Pink V :Violet

HF14M05AB

TSB Revision

RADIO WITH TAPE PLAYER <ECLIPSE SPYDER (Vehicles with Amplifier)> (CONTINUED)

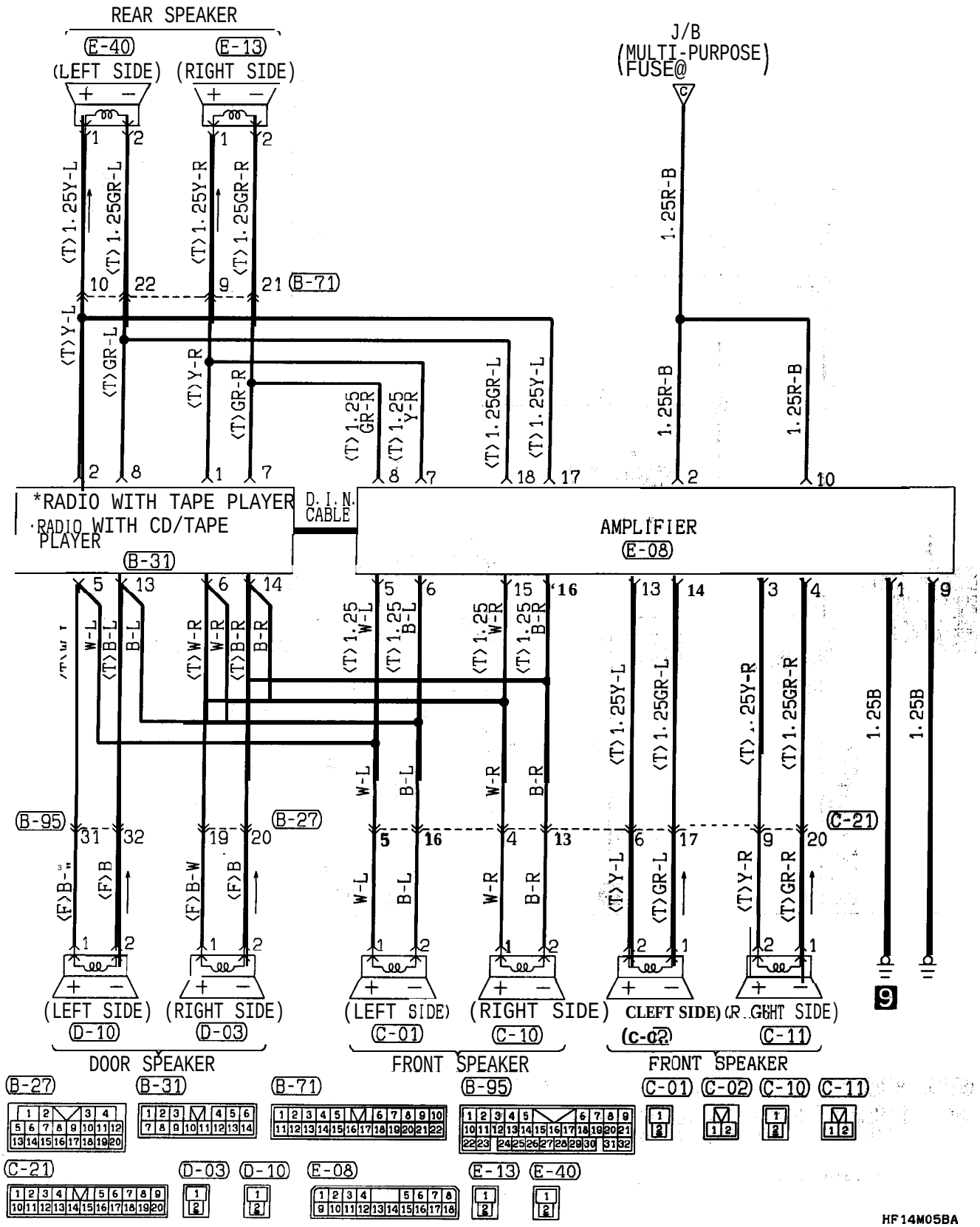

TSB Revision

CIGARETTE L I G H T E R

90100780198

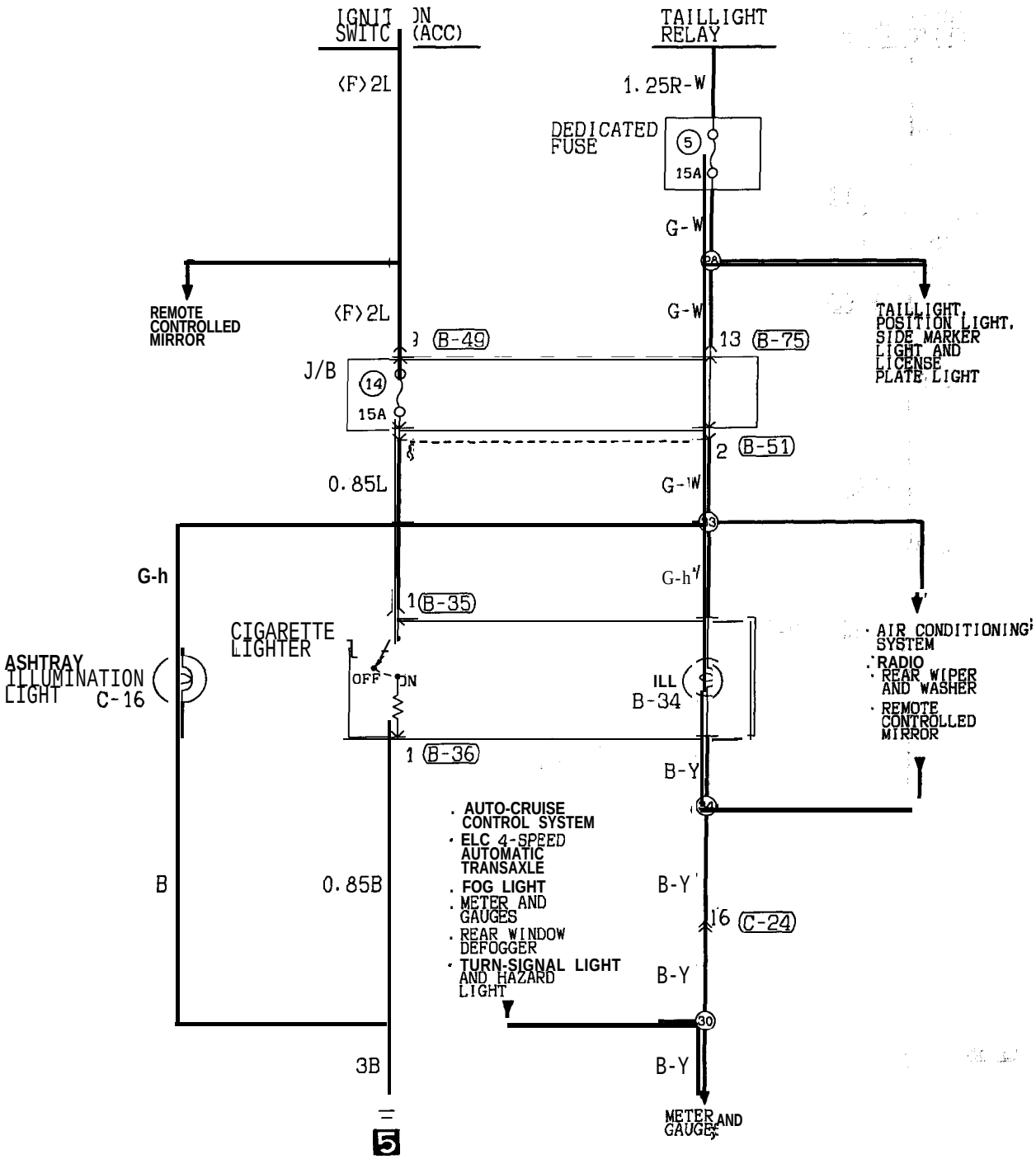

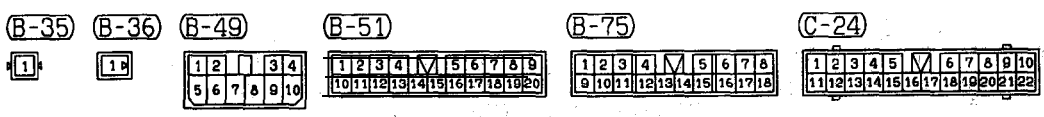

Wire color code
B :Black LG:Light green G :Green L :Blue W :White Y :Yellow SB:Sky blue
BR:Brown O :Orange GR:Gray R :Red P :Pink V :Violet

HF14M03AA

TSB Revision

ANTI-LOCK BRAKING SYSTEM (ABS) <2.0L Engine (Non-turbo)>

90100840421

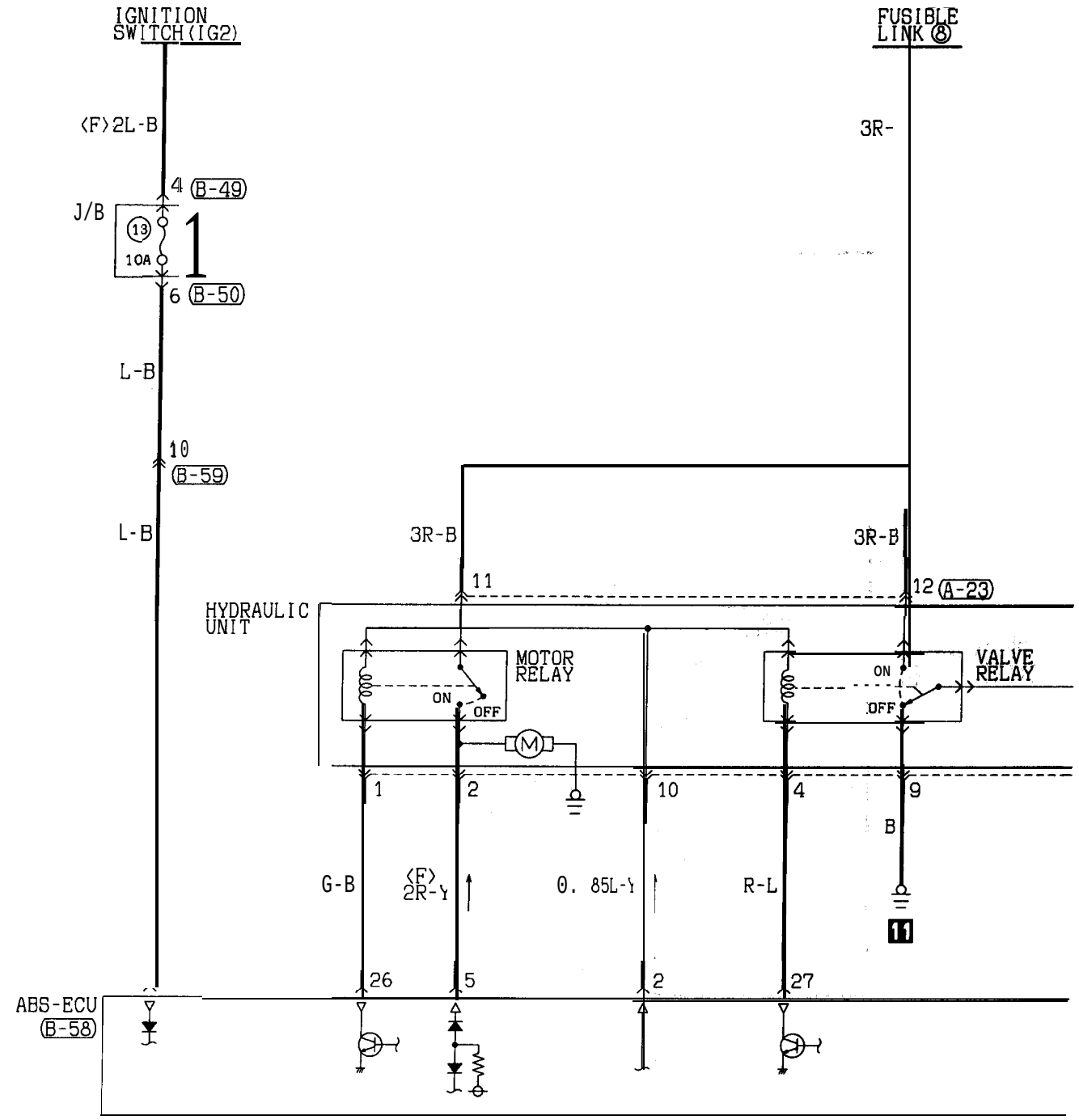

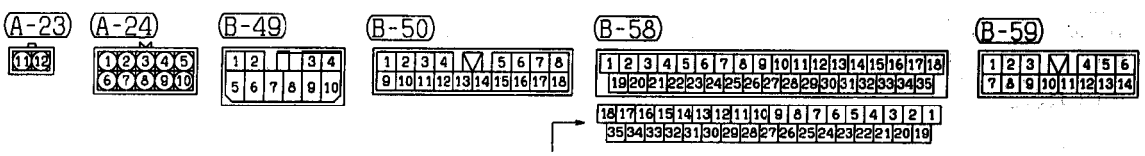

Special tool connector for ABS inspection different from terminal No. inside circuit diagram.

HF15M00AA

TSB Revision

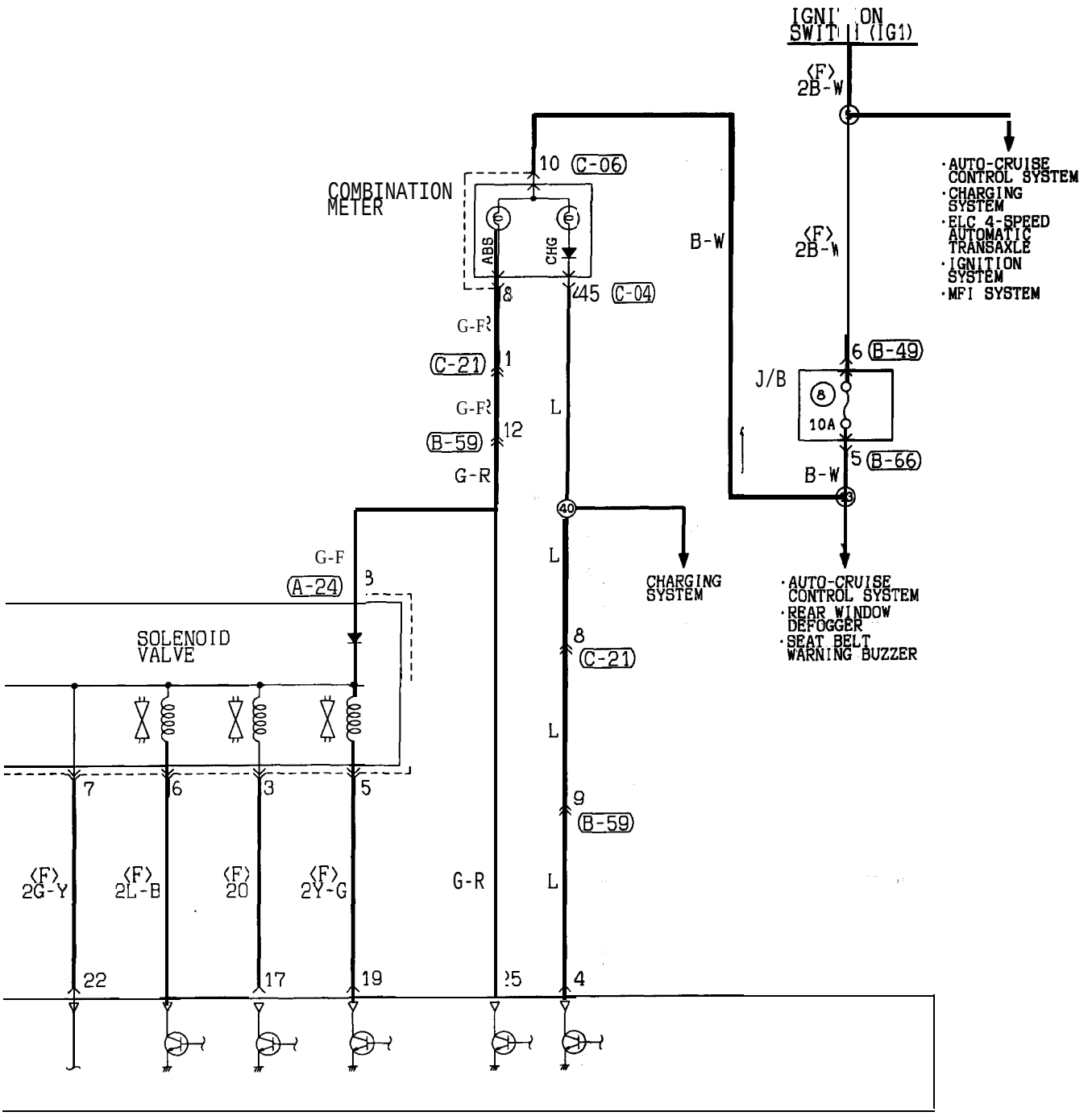

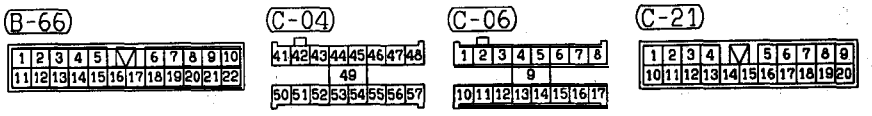

Wire color code
B :Black LG:Light green G :Green L :Blue W :White Y :Yellow SB:Sky blue
BR:Brown O :Orange GR:Gray R :Red P :Pink V :Violet

HF15M00AB

ANTI-LOCK BRAKING SYSTEM (ABS) <2.0L Engine (Non-turbo)> (CONTINUED)

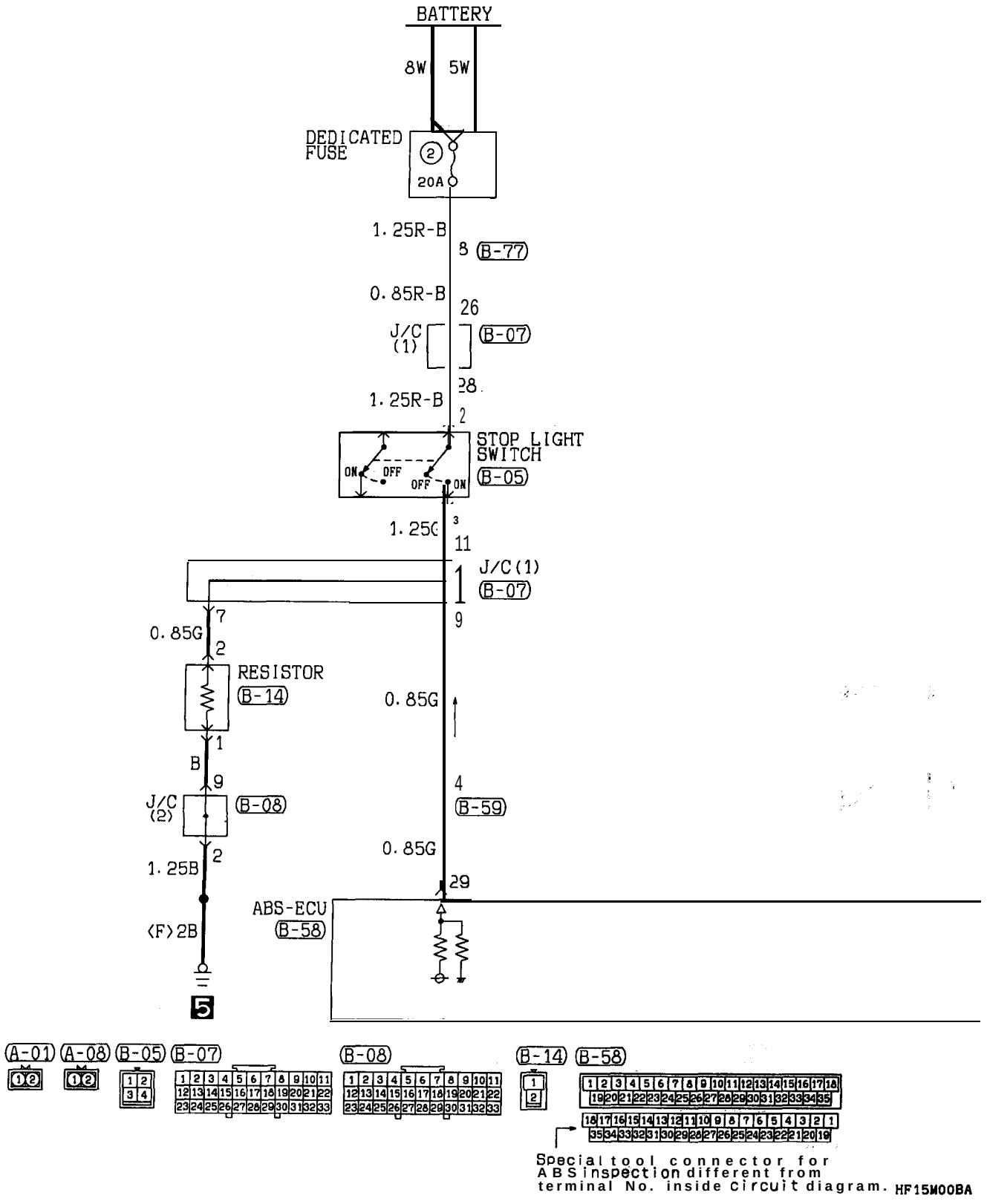

TSB Revision

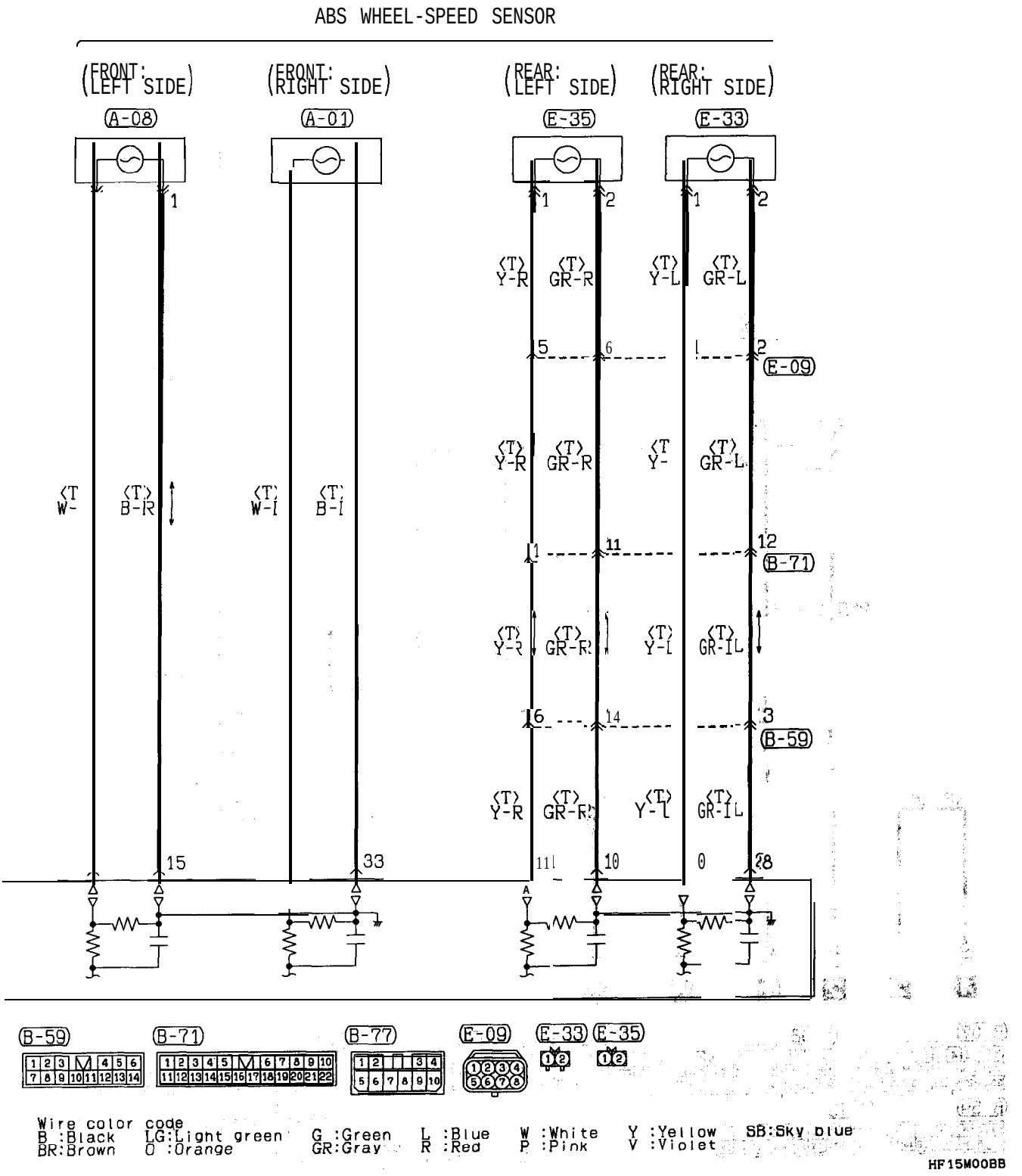
ABS WHEEL-SPEED SENSOR
(FRONT: LEFT SIDE)
(FRONT: RIGHT SIDE)
(REAR: LEFT SIDE)
(REAR: RIGHT SIDE)
A-08
A-01
E-35
E-33
E-09
B-71
B-59
B-77
Wire color code
B :Black
BR:Brown
LG:Light green
O :Orange
G :Green
GR:Gray
L :Blue
R :Red
W :White
P :Pink
Y :Yellow
V :Violet
SB:Sky blue
HF15M00BB

ANTI-LOCK BRAKING SYSTEM (ABS) <2.0L Engine (Non-turbo)> (CONTINUED)

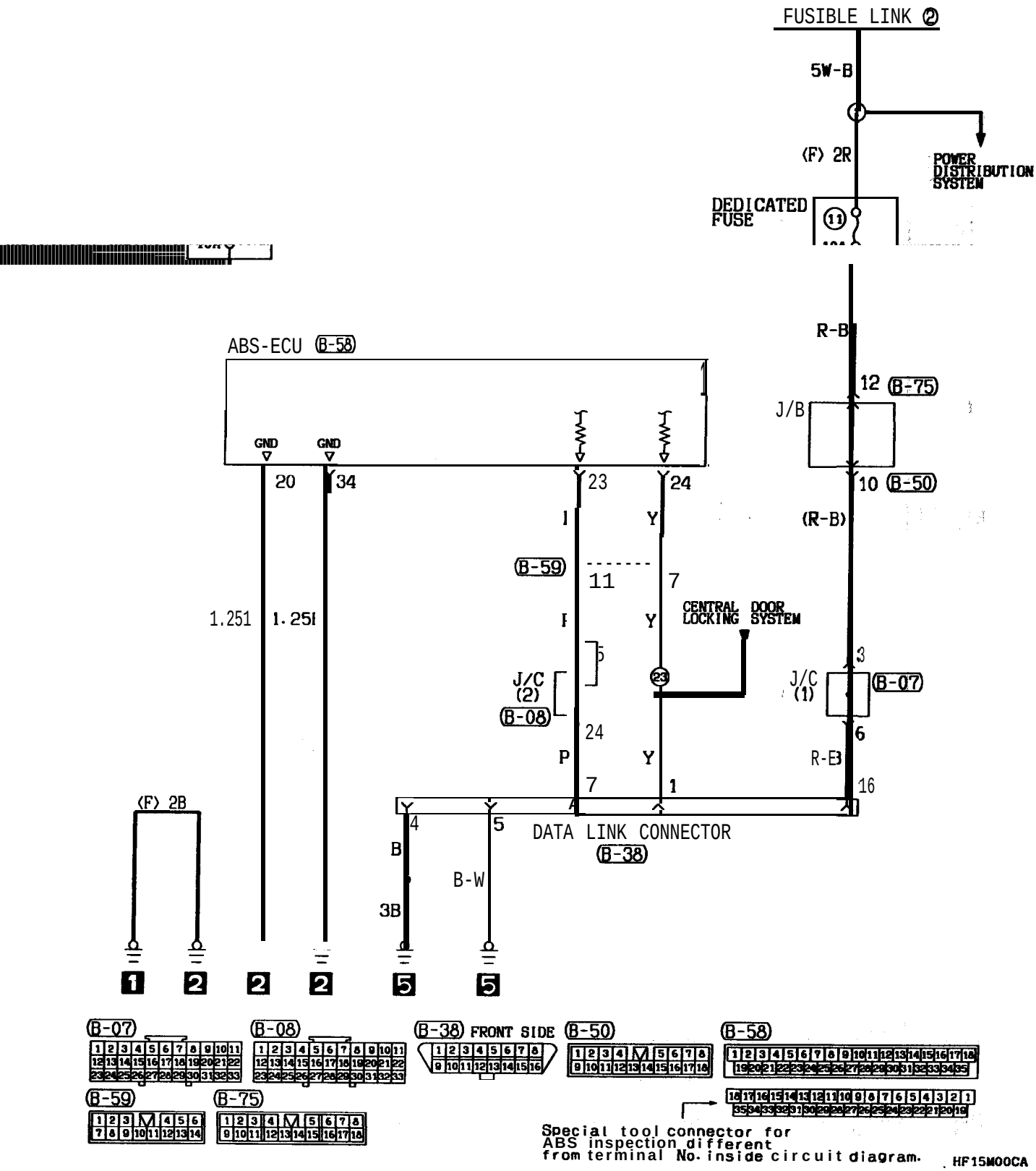

TSB Revision

NOTES

ANTI-LOCK BRAKING SYSTEM (ABS) <2.0L Engine (Turbo)-FWD and 2.4L Engine>

90100840438

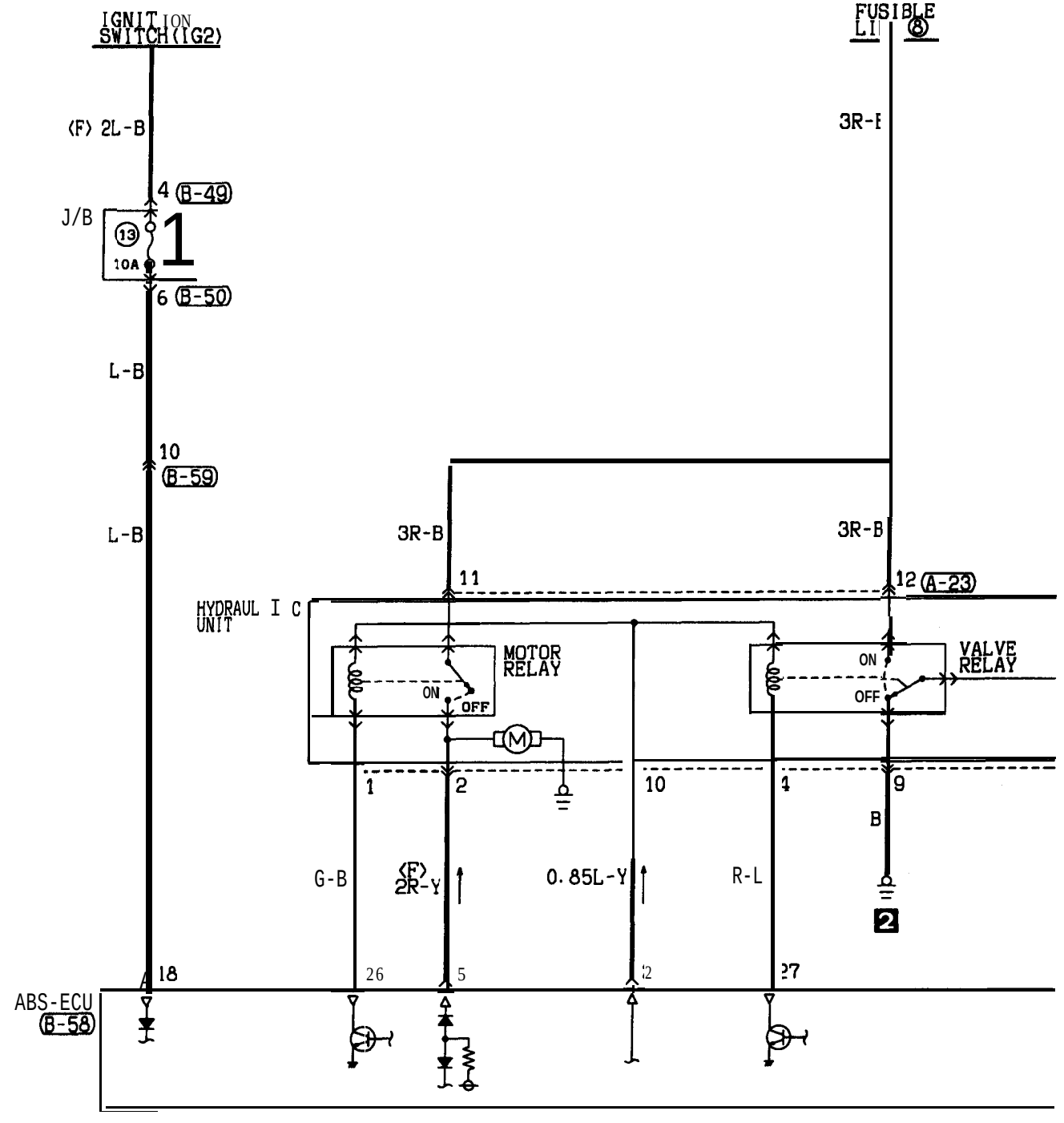

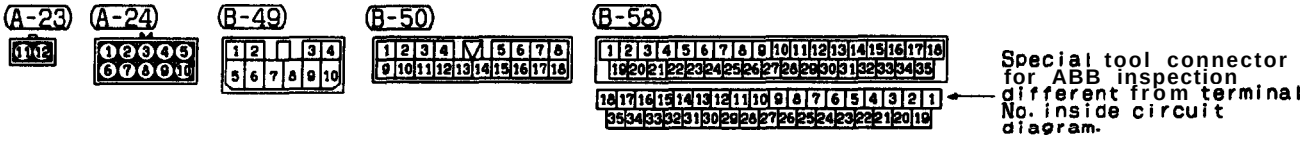

HF15M01AA

TSB Revision

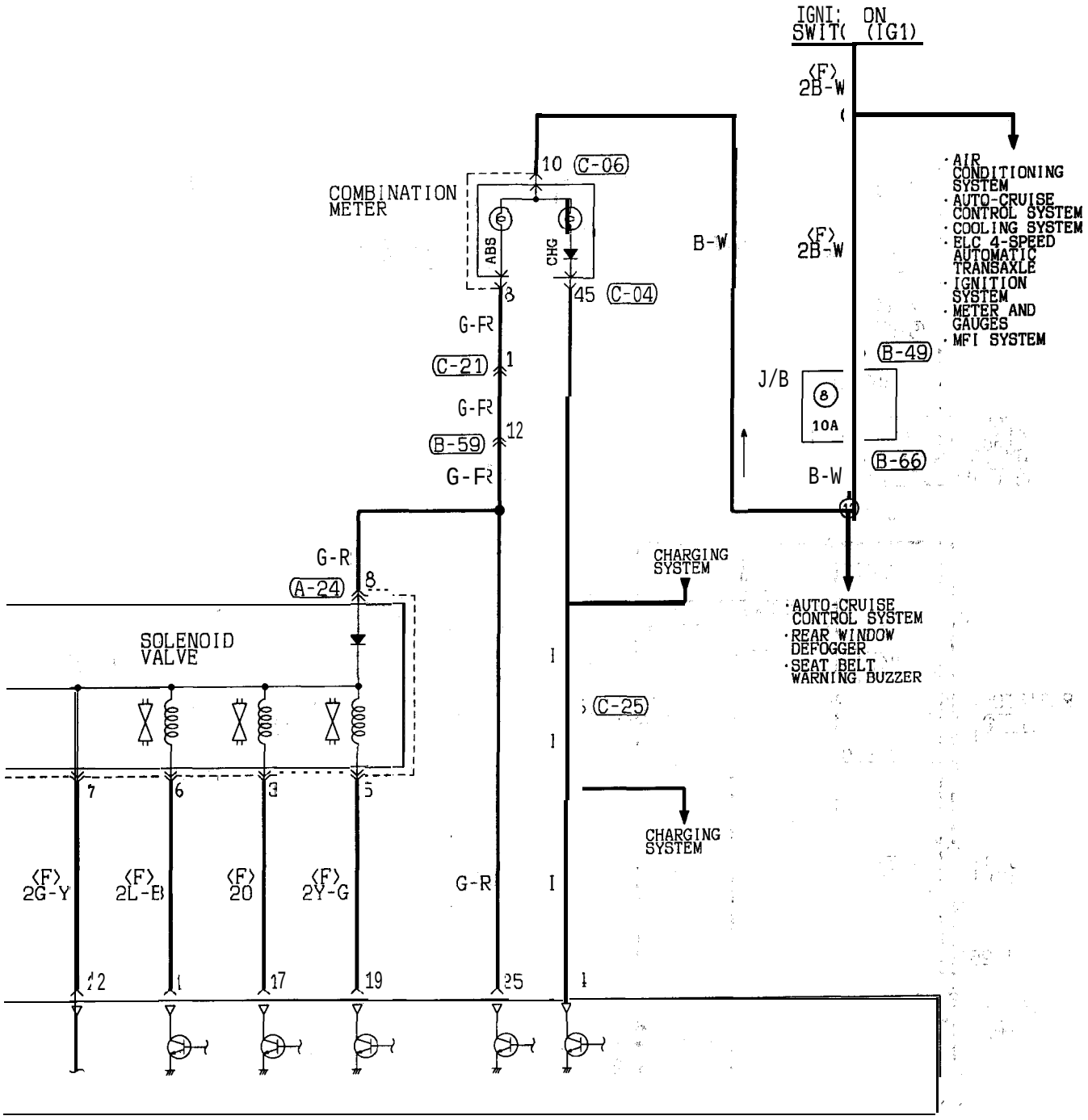

Wire color code
B :Black LG:Light green G :Green L :Blue W :White Y :Yellow SB:Sky blue
BR:Brown O :Orange GR:Gray R :Red P :Pink V :Violet

HF15M01AB

TSB Revision

ANTI-LOCK BRAKING SYSTEM (ABS) <2.0L Engine (Turbo)-FWD and 2.4L Engine> (CONTINUED)

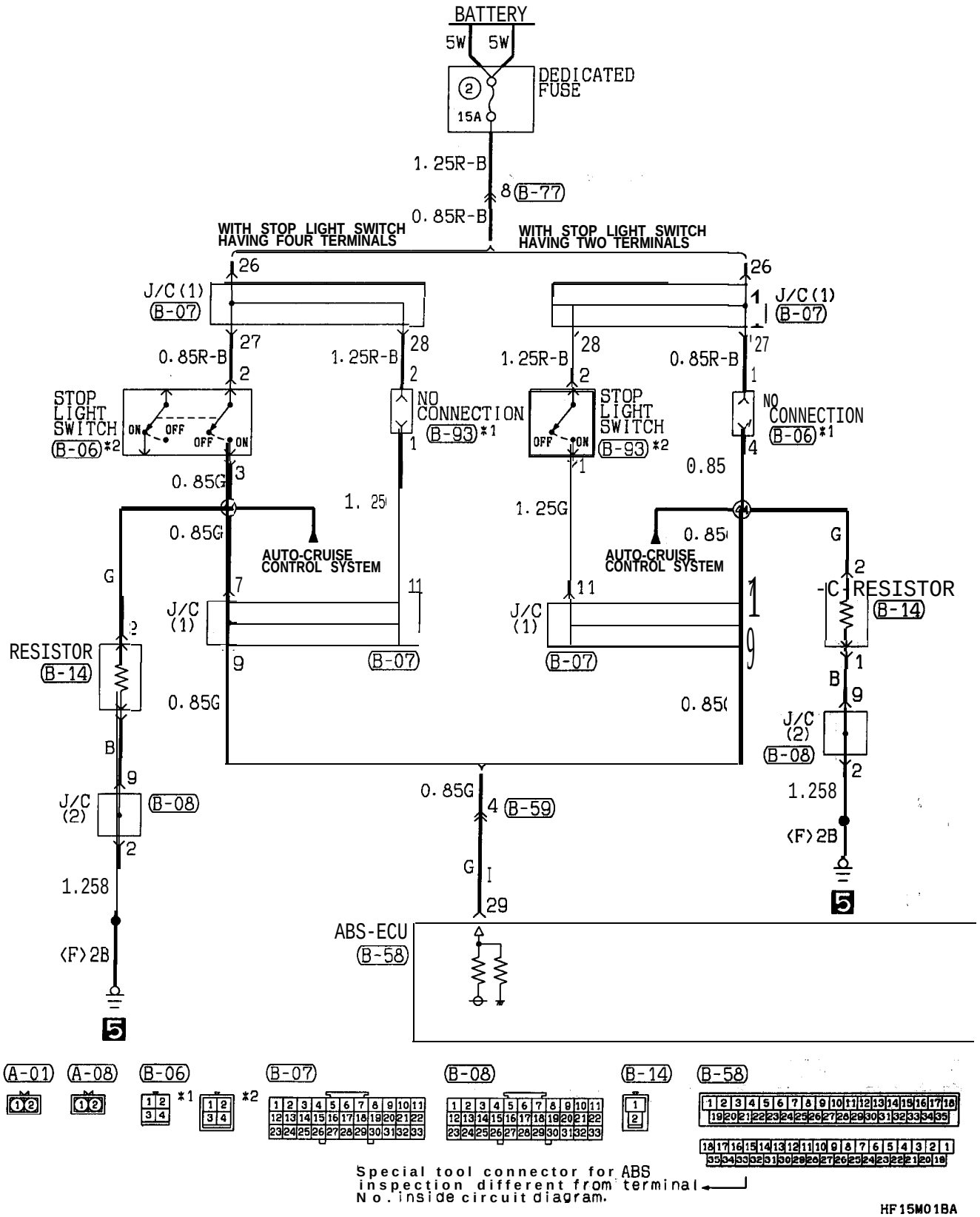

TSB Revision

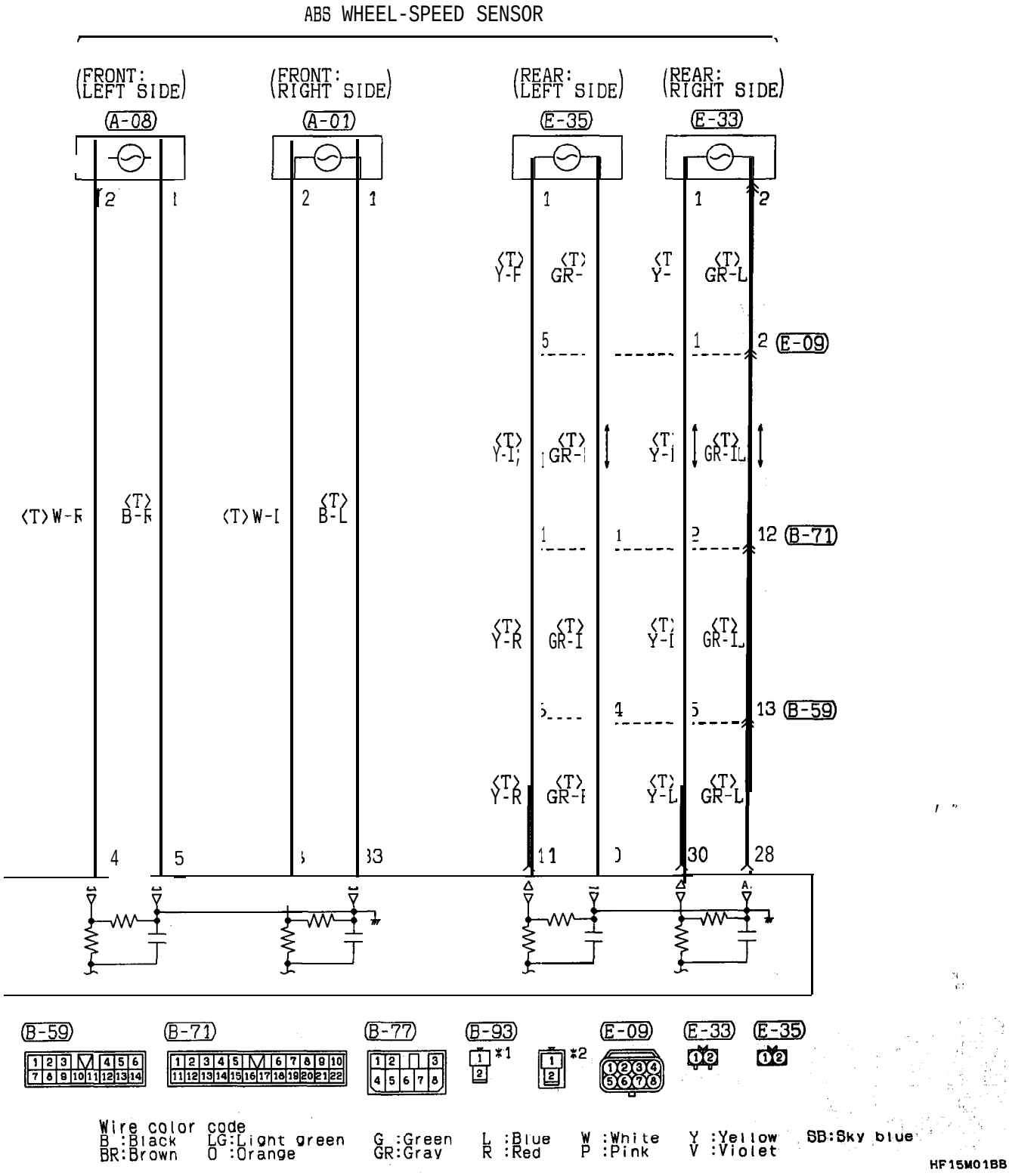

TSB Revision

ANTI-LOCK BRAKING SYSTEM (ABS) <2.0L Engine (Turbo)-FWD and 2.4L Engine> (CONTINUED)

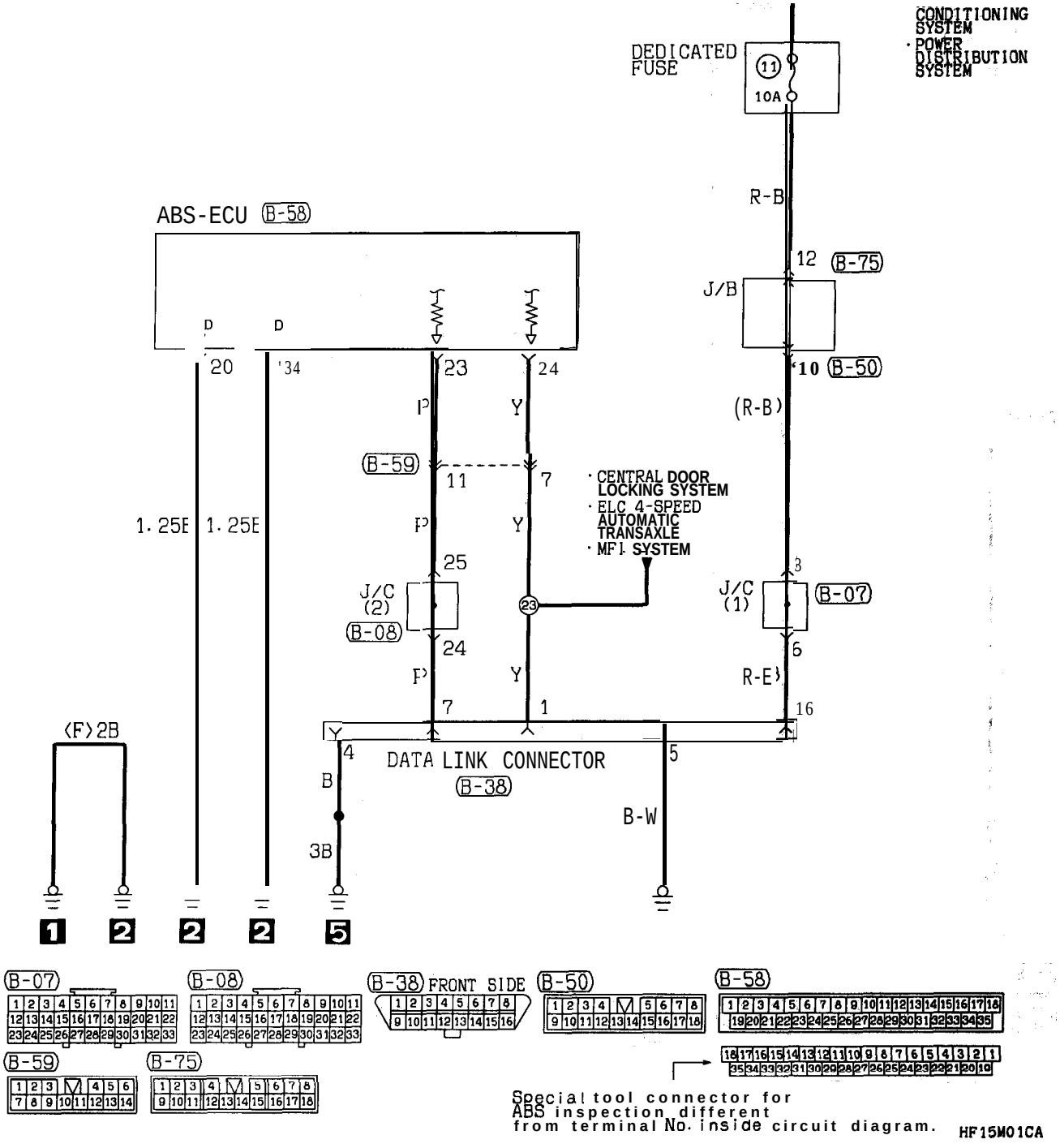

TSB Revision

NOTES

ANTI-LOCK BRAKING SYSTEM (ABS) <2.0L Engine (Turbo)-AWD>

90100840445

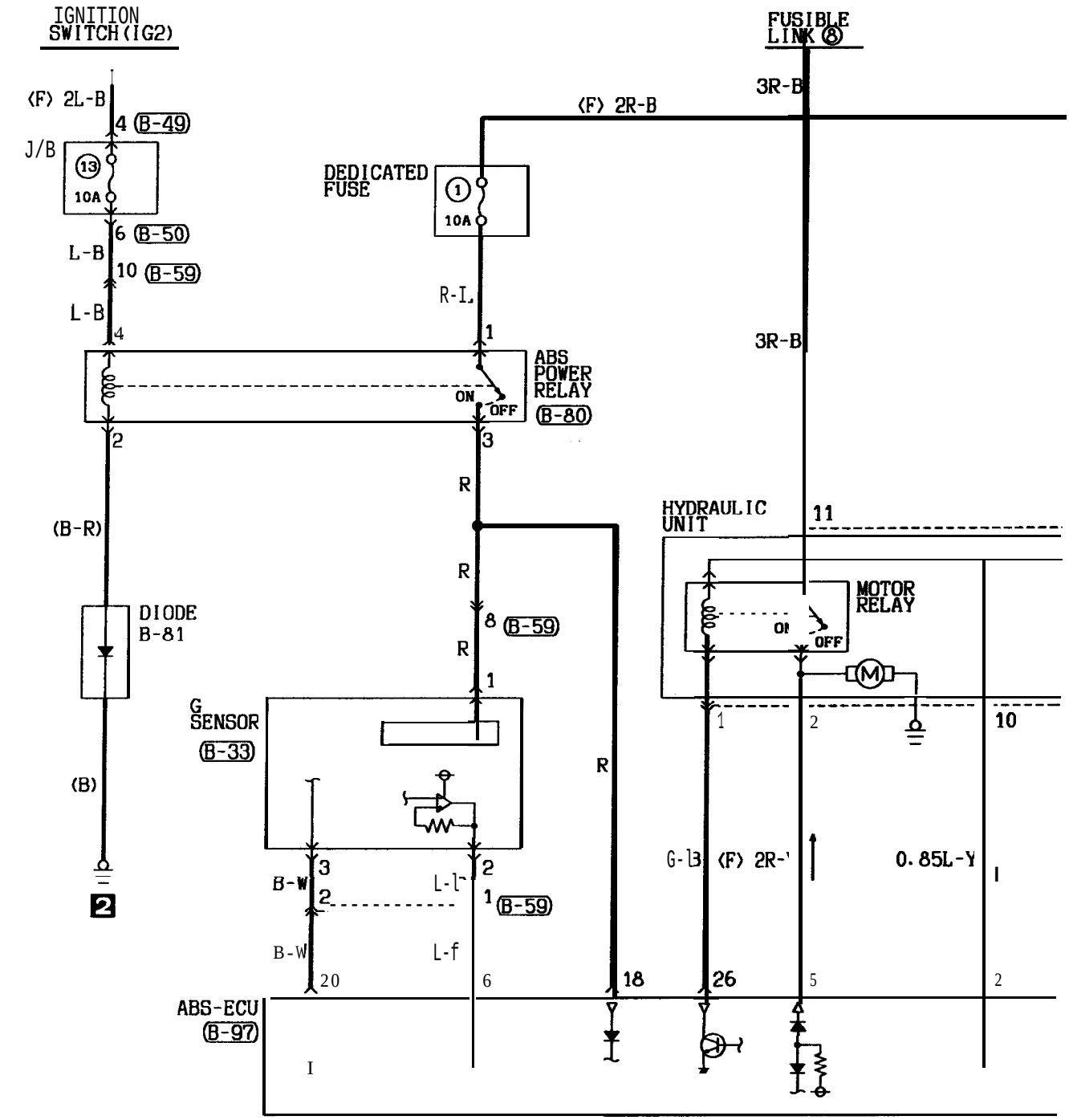

HF15M02AA

TSB Revision

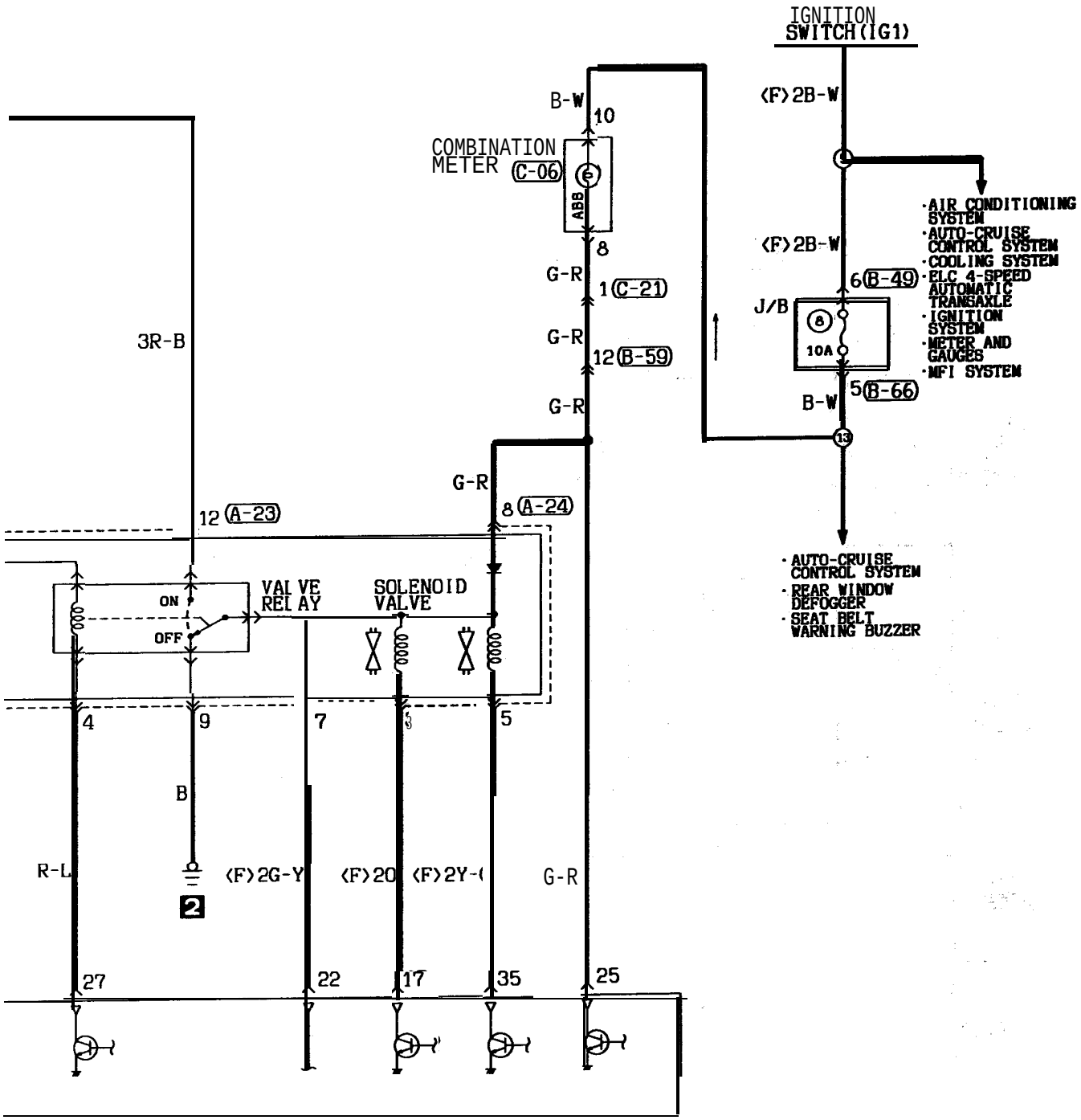

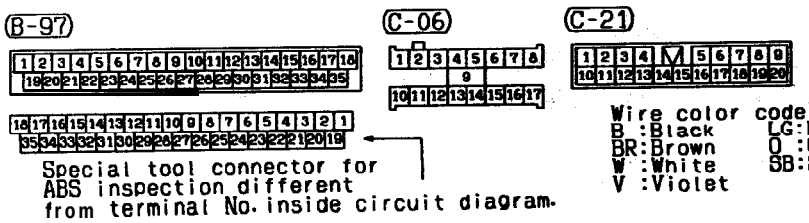

Wire color code

B :Black	LG:Light green	G :Green	L :Blue
BR:Brown	O :Orange	GR:Gray	R :Red
W :White	SB:Sky blue	P :Pink	Y :Yellow
V :Violet			

HF15M02AB

TSB Revision

ANTI-LOCK BRAKING SYSTEM (ABS) <2.0L Engine (Turbo)-AWD> (CONTINUED)

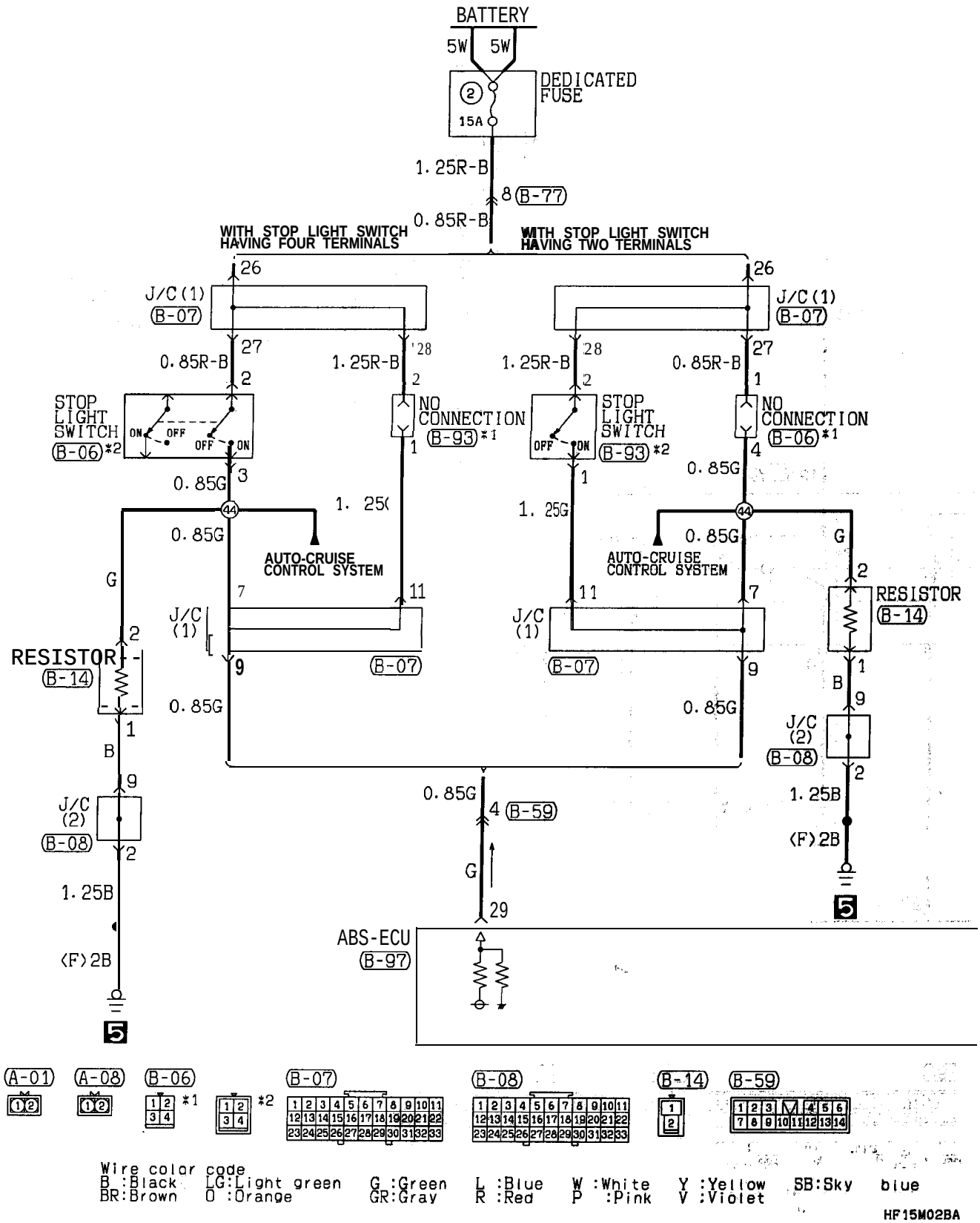

Wire color code
B :Black LG:Light green G :Green L :Blue W :White Y :Yellow SB:Sky blue
BR:Brown O :Orange GR:Gray R :Red P :Pink V :Violet

HF15M02BA

TSB Revision

ABS WHEEL-SPEED SENSOR

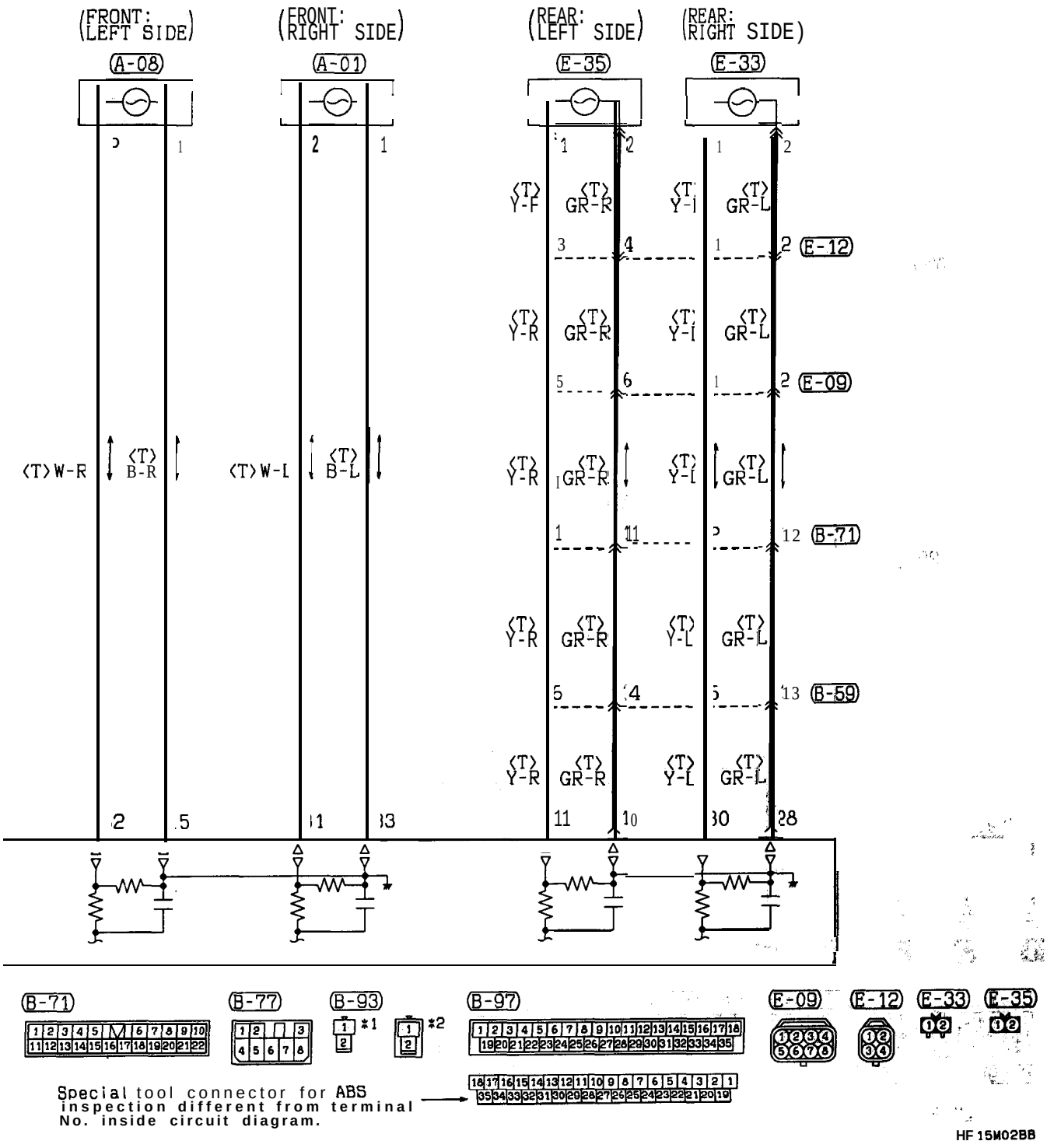

ANTI-LOCK BRAKING SYSTEM (ABS) <2.0L Engine (Turbo)-AWD> (CONTINUED)

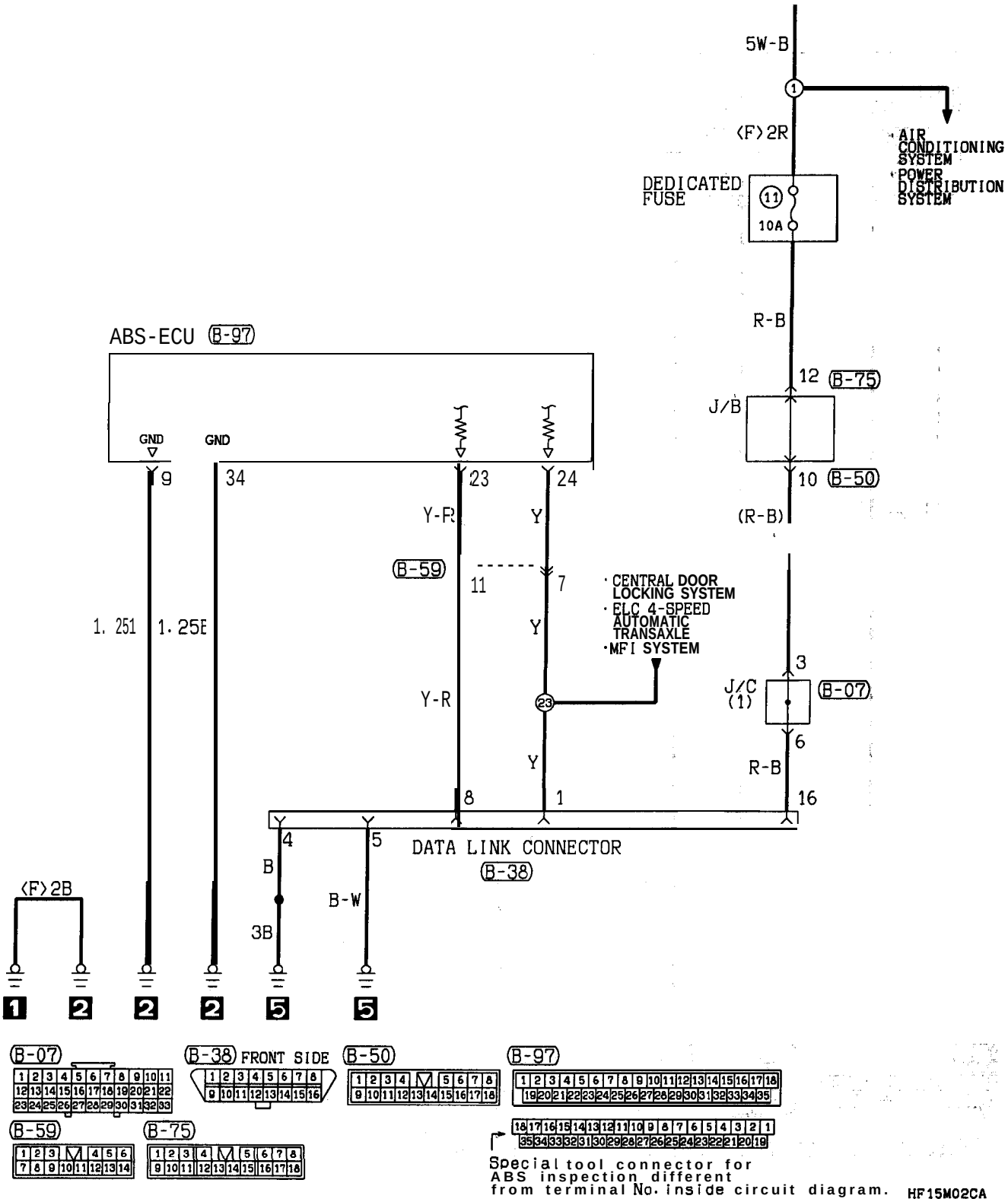

TSB Revision

NOTES

AUTO-CRUISE CONTROL SYSTEM <2.0L Engine (Non-turbo)>

90100930302

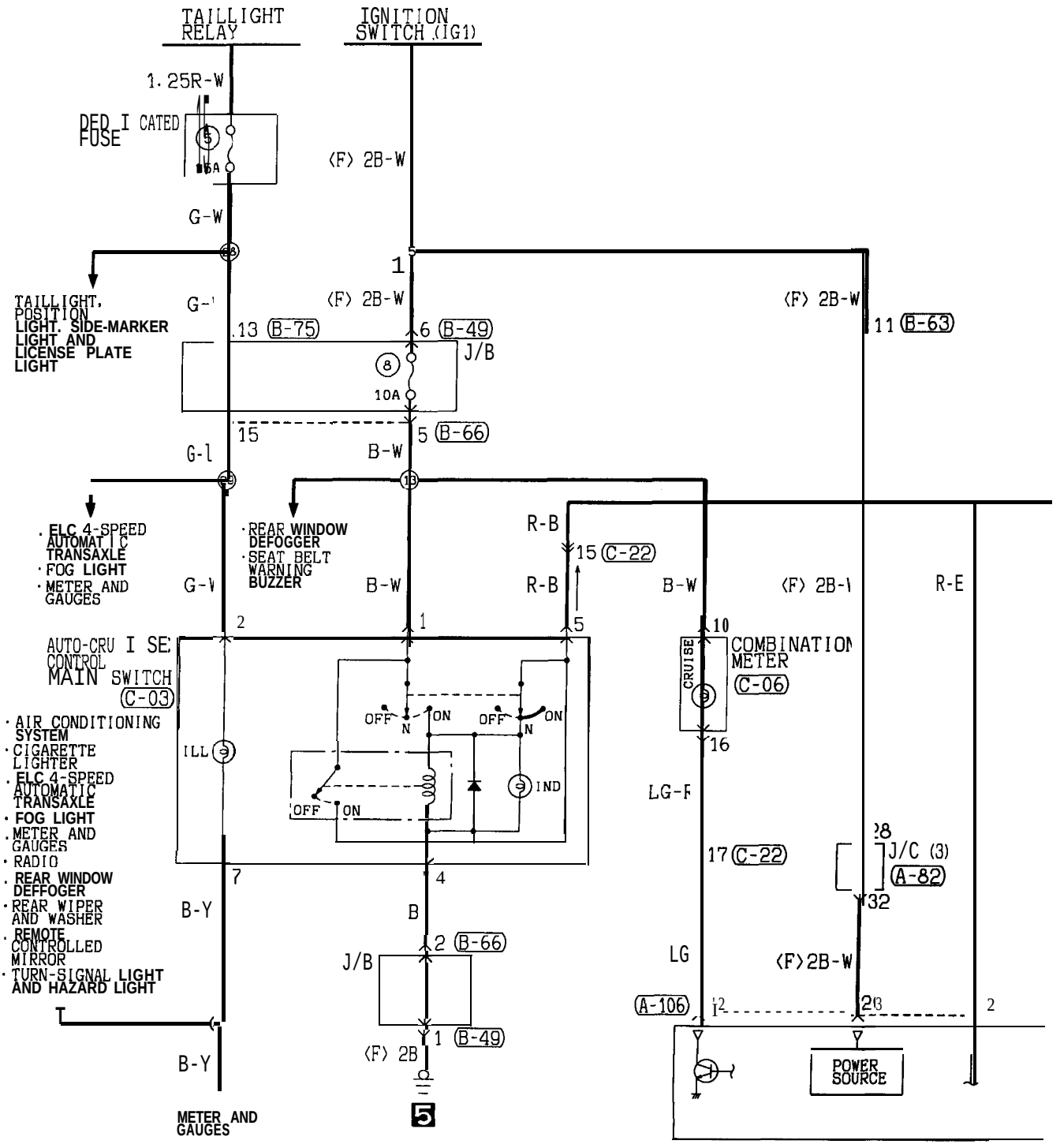

TSB Revision

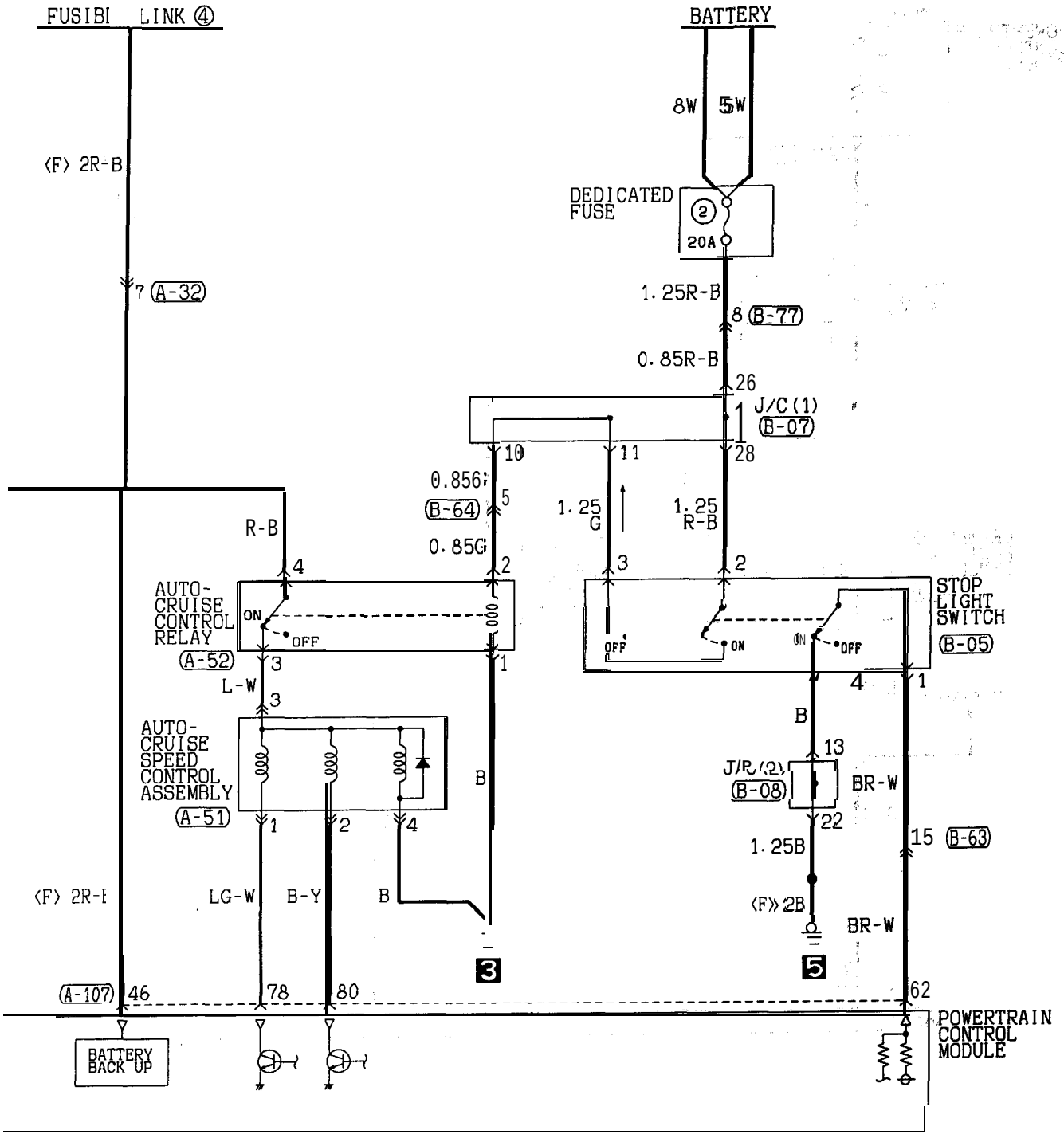

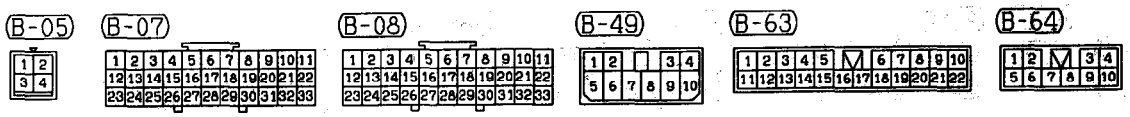

Wire color code
B :Black LG:Light green G :Green L :Blue W :White Y :Yellow SB:Sky blue
BR:Brown O :Orange GR:Gray R :Red P :Pink V :Violet

HF15M03AB

AUTO-CRUISE CONTROL SYSTEM <2.0L Engine (Non-turbo)> (CONTINUED)

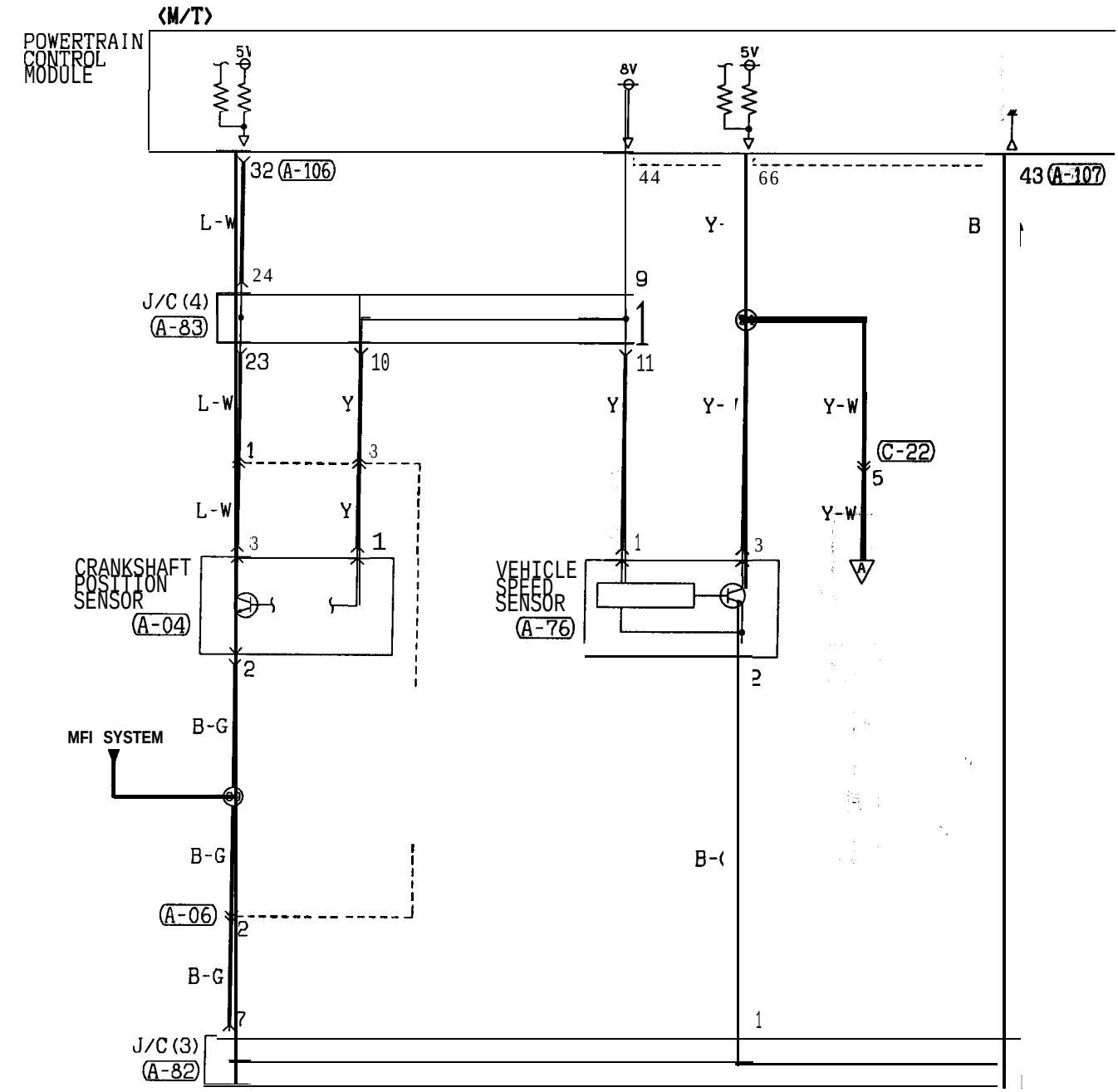

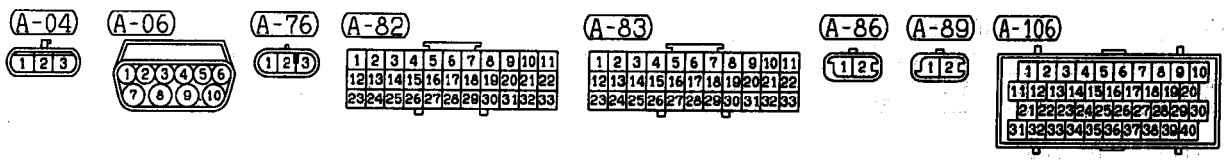

HF 15M03BA

TSB Revision

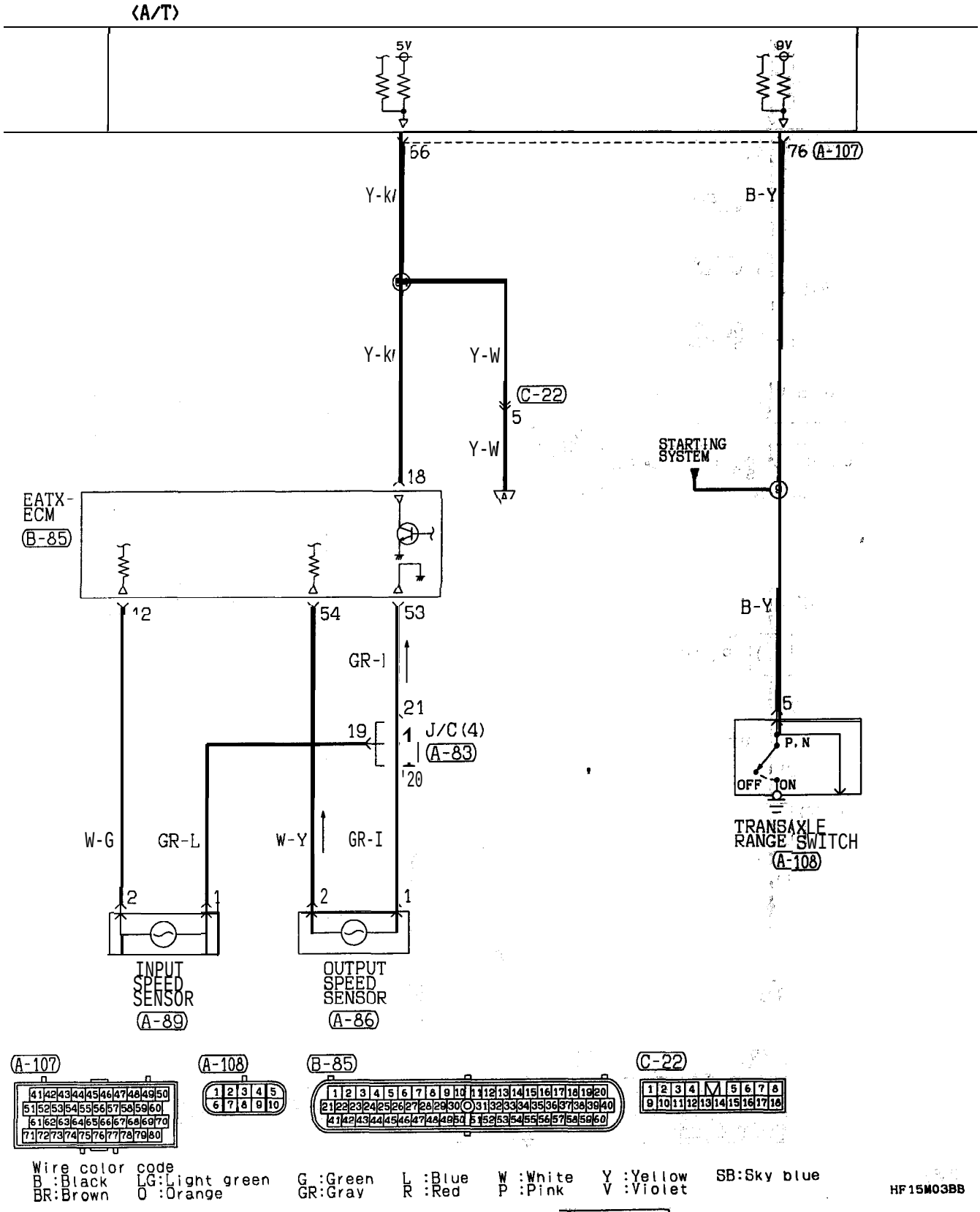

TSB Revision

AUTO-CRUISE CONTROL SYSTEM <2.0L Engine (Non-turbo)> (CONTINUED)

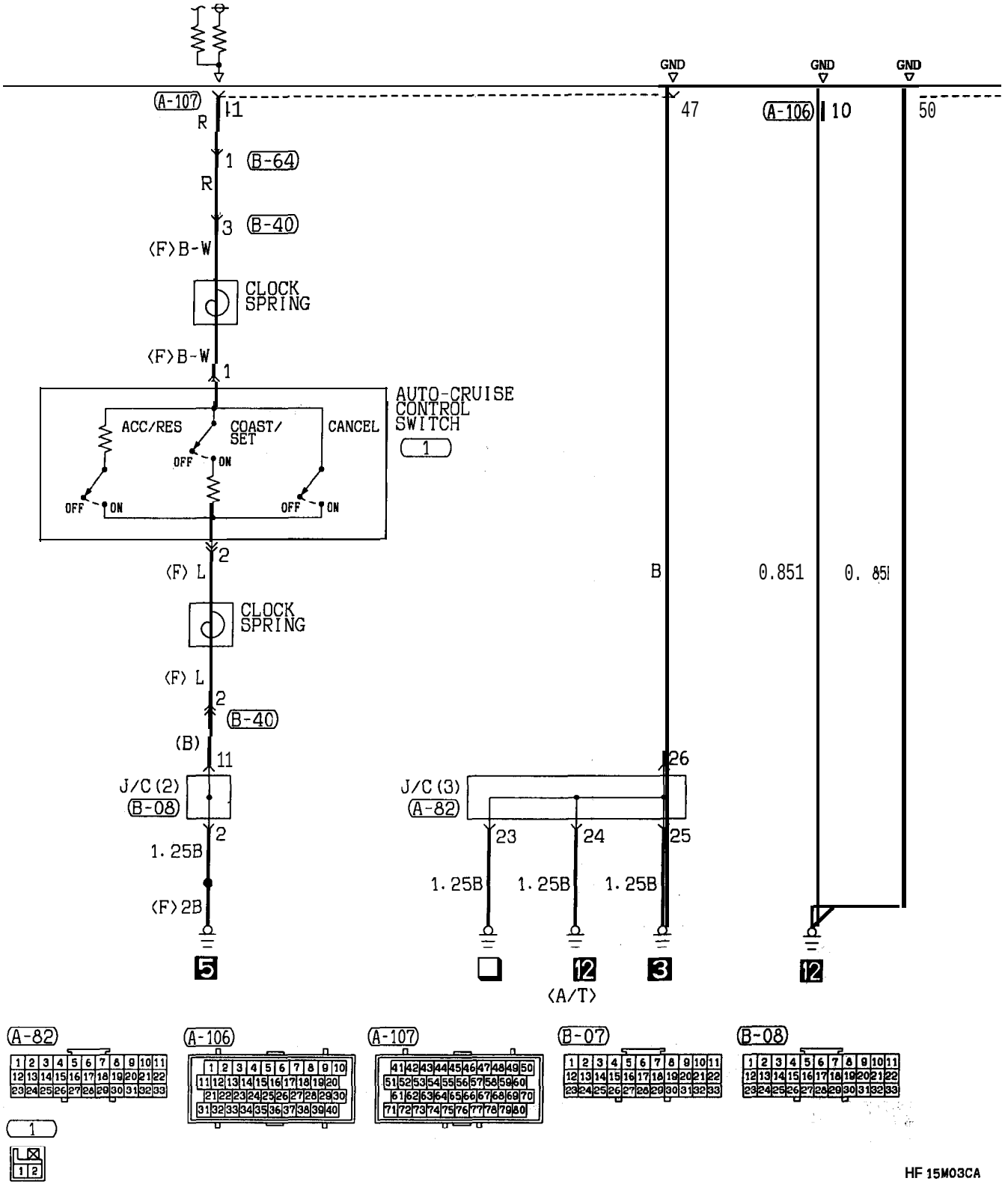

HF 15M03CA

TSB Revision

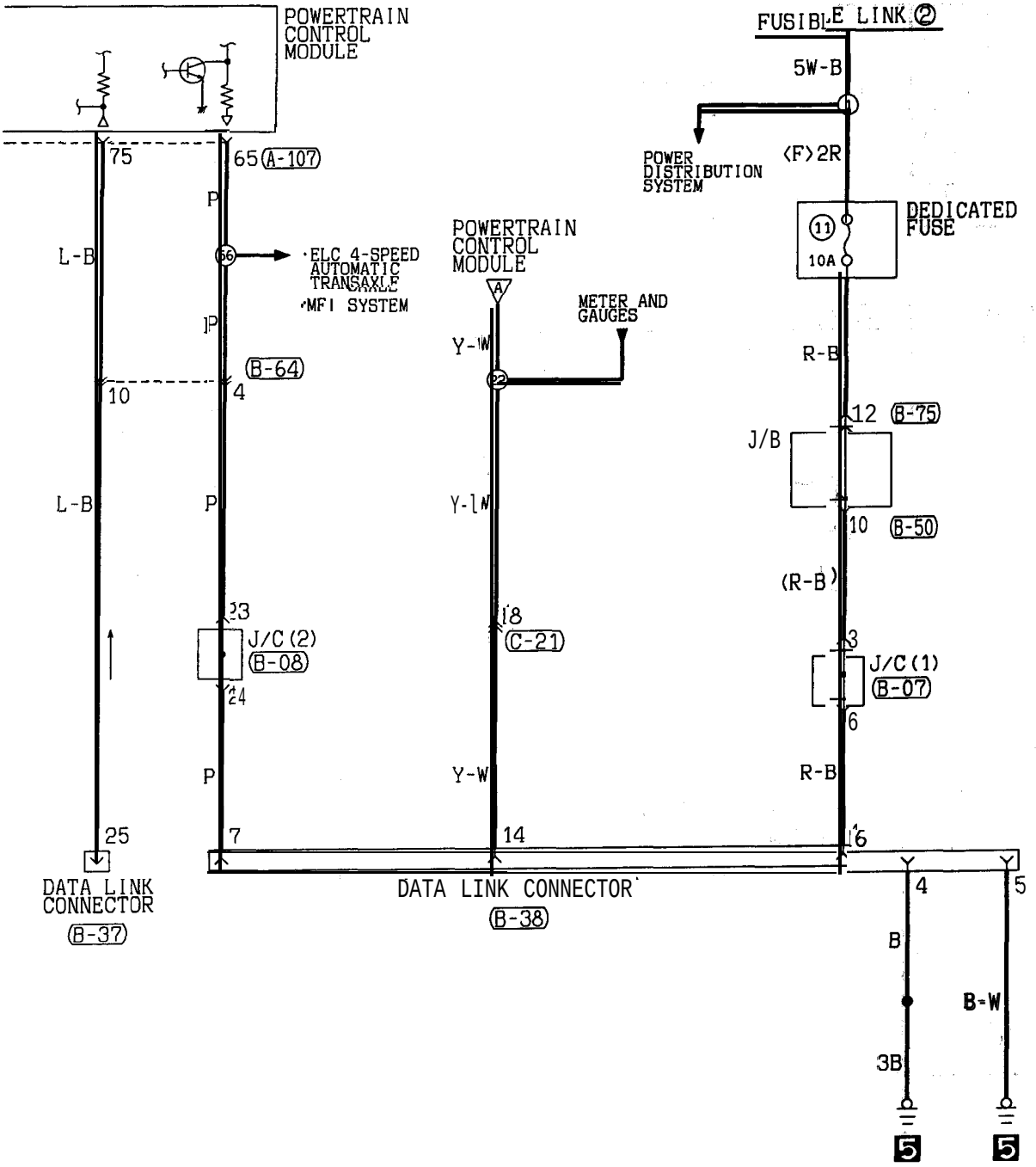

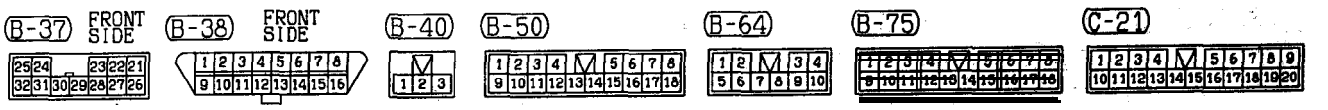

Wire color code
B :Black LG:Light green G :Green L :Blue W :White Y :Yellow SB:Sky blue
BR:Brown O :Orange GR:Gray R :Red P :Pink V :Violet

HF15M03CB

TSB Revision

AUTO-CRUISE CONTROL SYSTEM <2.0L Engine (Turbo) and 2.4L Engine>

90100930319

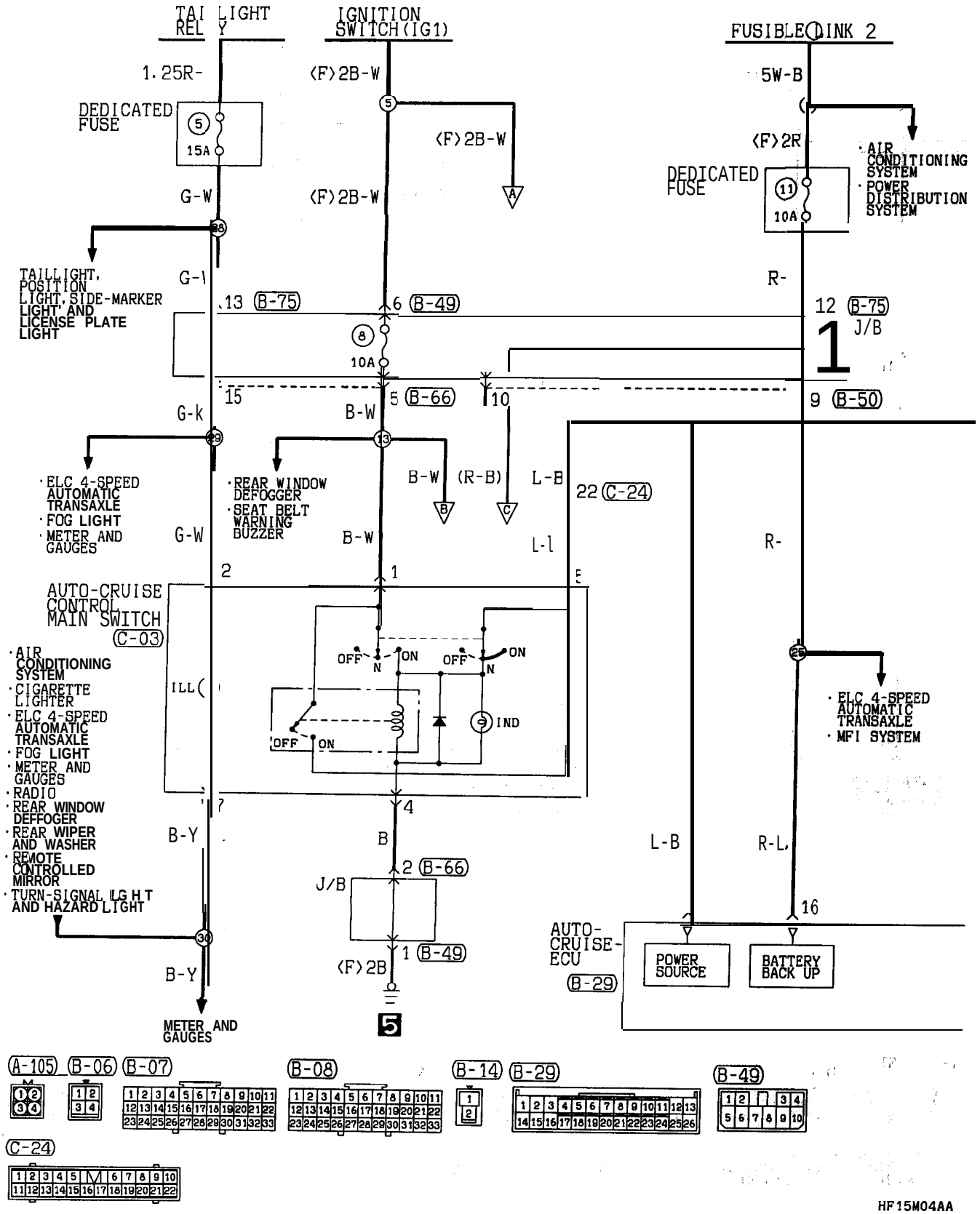

TSB Revision

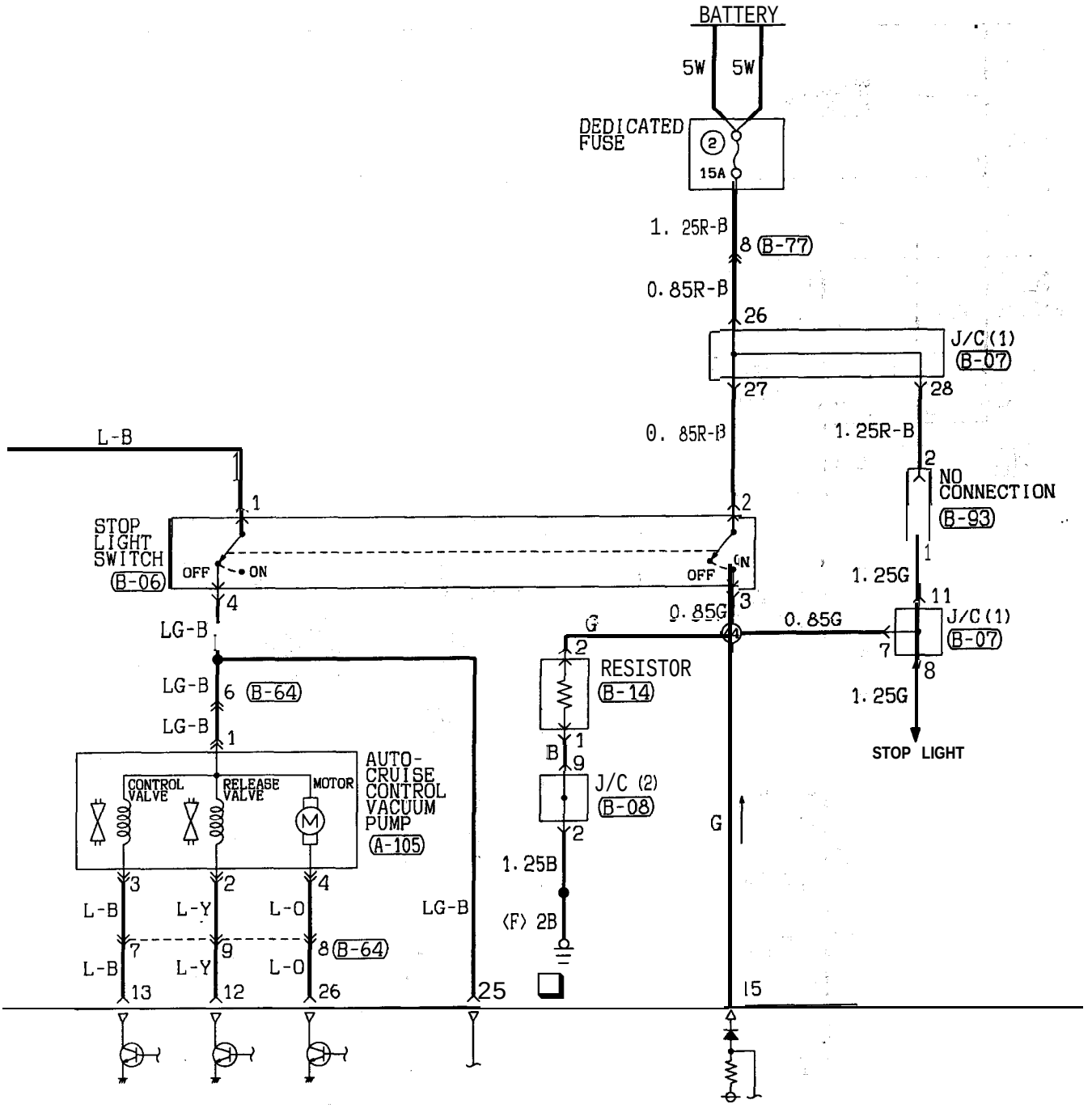

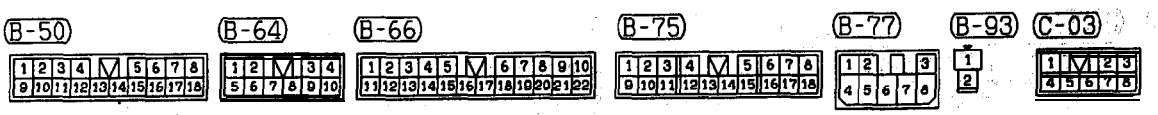

Wire color code
B :Black LG:Light green G :Green L :Blue W :White Y :Yellow SB:Sky blue
BR:Brown O :Orange GR:Gray R :Red P :Pink V :Violet

HF15M04AB

TSB Revision

AUTO-CRUISE CONTROL SYSTEM <2.0L Engine (Turbo) and 2.4L Engine> (CONTINUED)

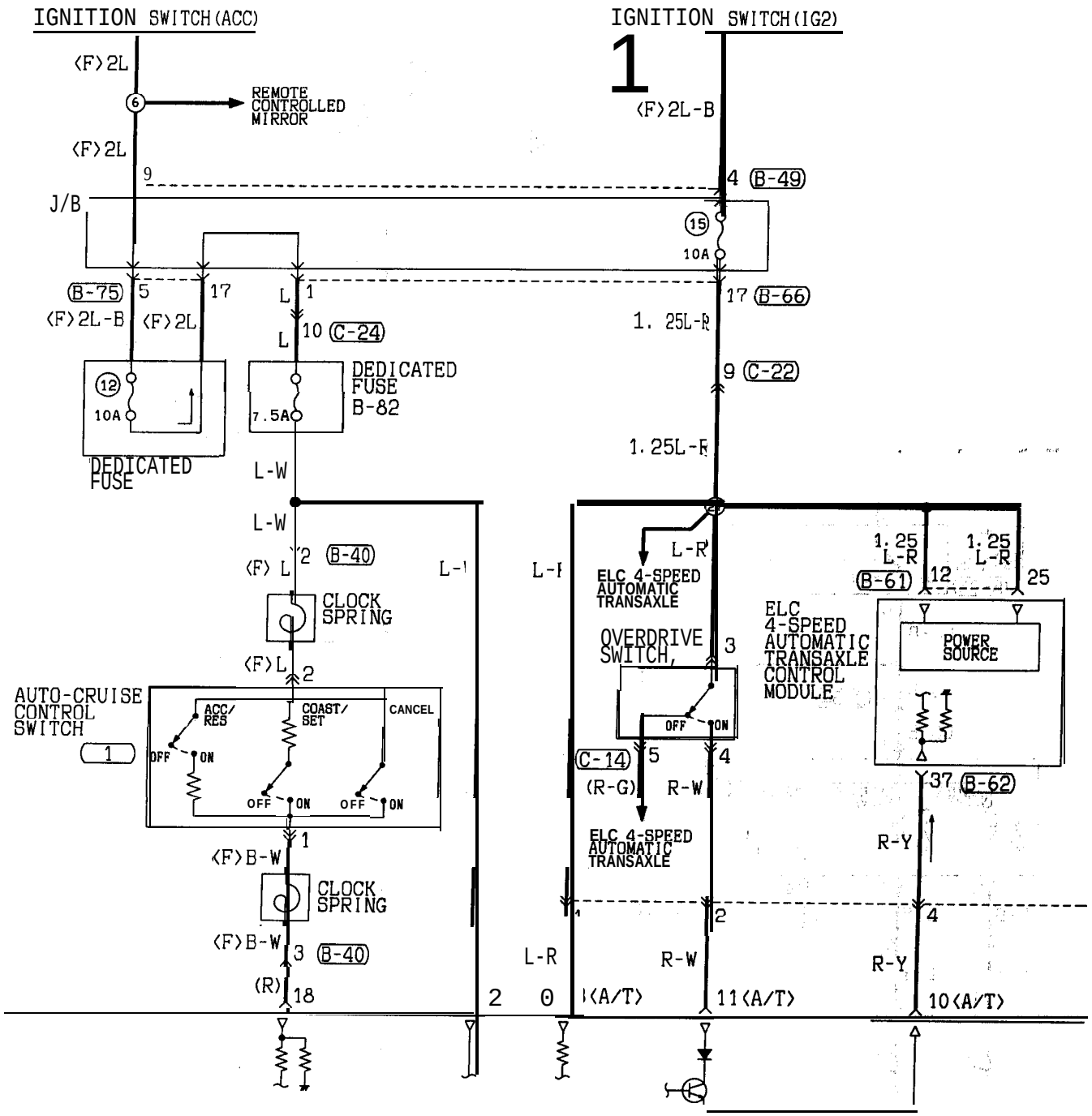

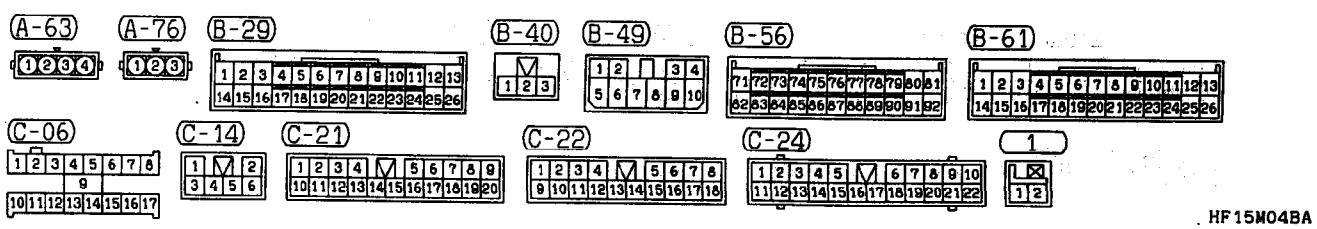

HF15M04BA

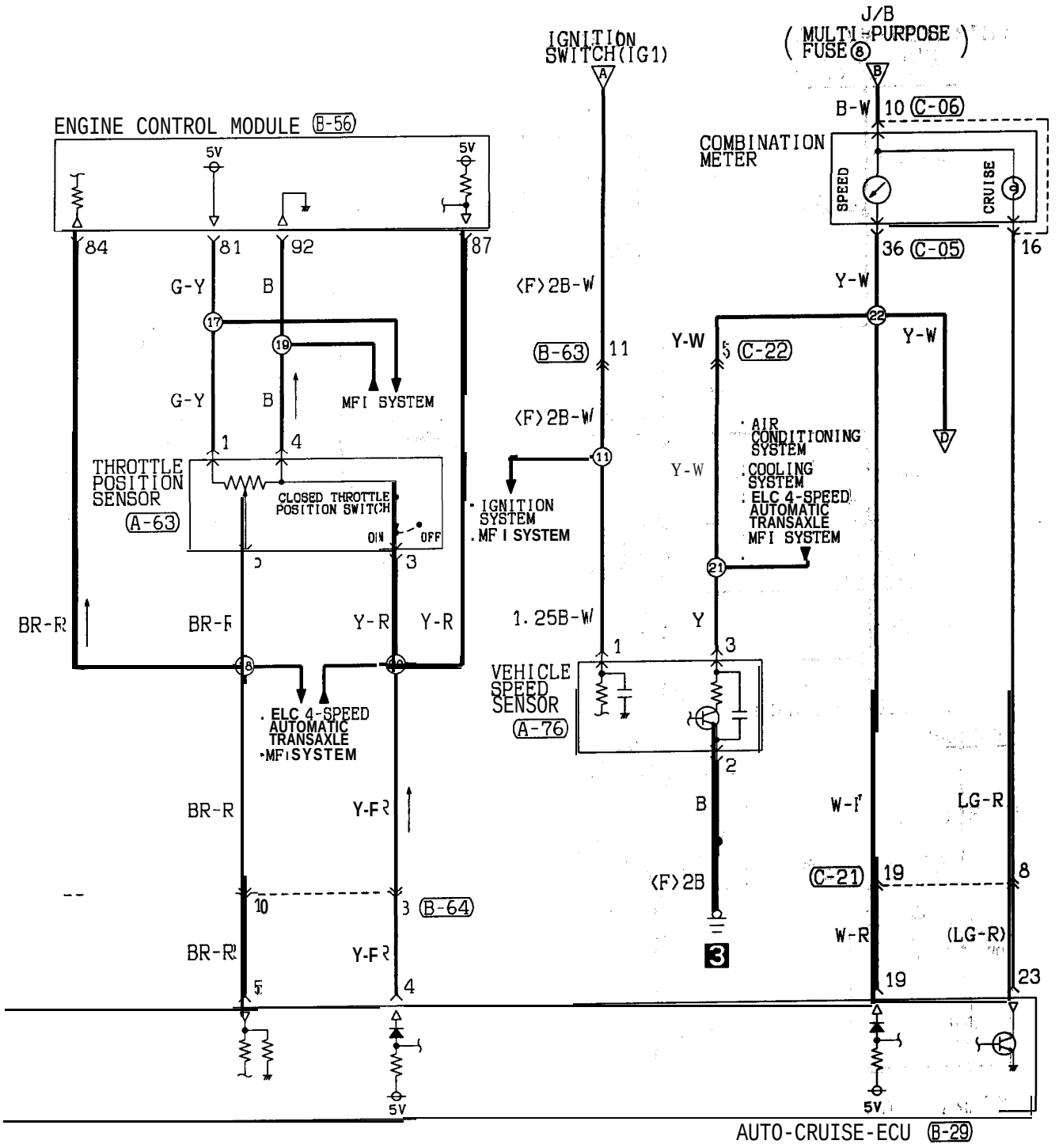

Wire color code
B :Black LG:Light green G :Green L :Blue W :White Y :Yellow SB:Sky blue
BR:Brown O :Orange GR:Gray R :Red P :Pink V :Violet

HF15M04BB

TSB Revision

AUTO-CRUISE CONTROL SYSTEM <2.0L Engine (Turbo) and 2.4L Engine> (CONTINUED)

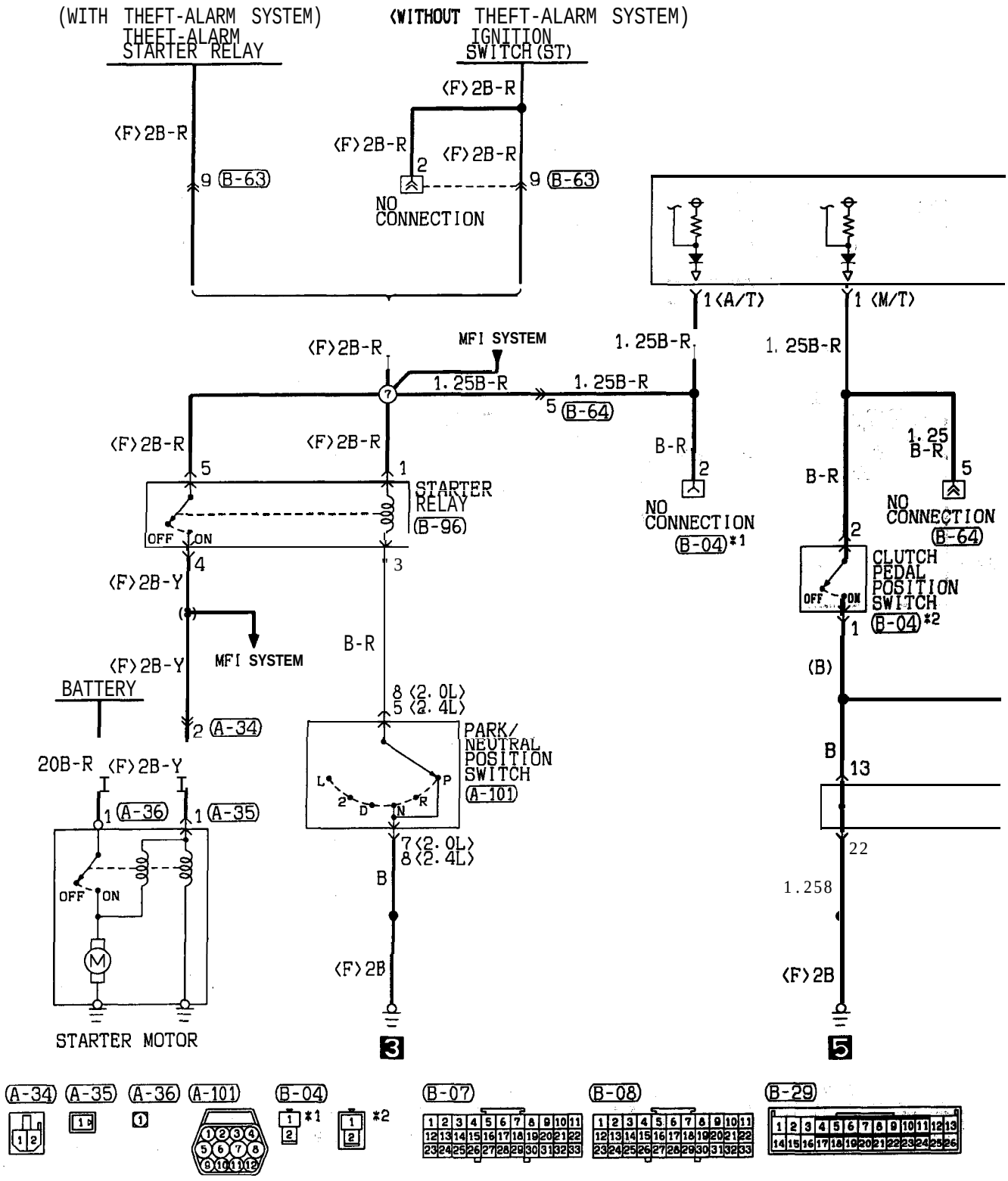

TSB Revision

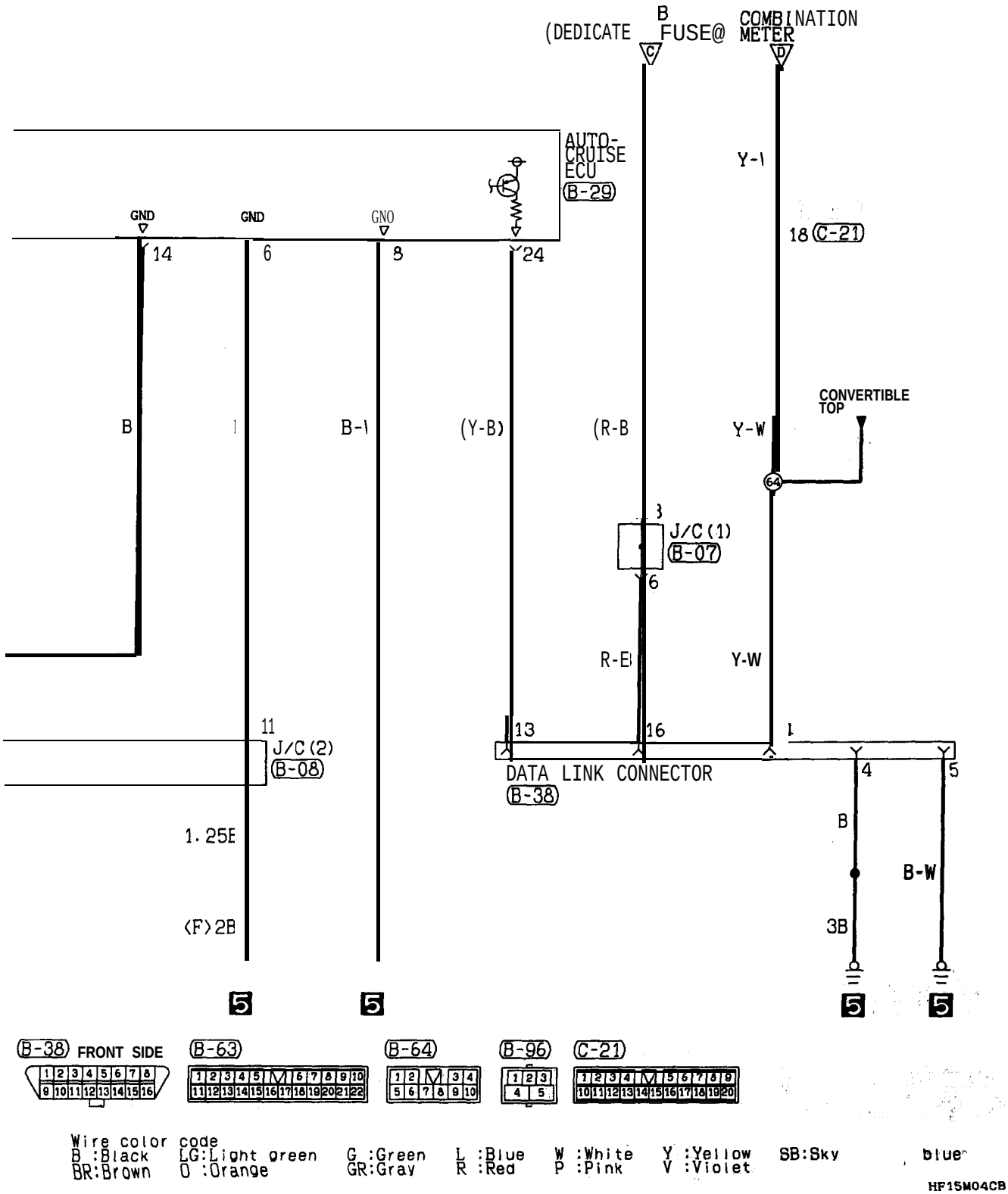

Wire color code
B :Black LG:Light green G :Green L :Blue W :White Y :Yellow SB:Sky blue
BR:Brown O :Orange GR:Gray R :Red P :Pink V :Violet

HF15M04CB

TSB Revision

SUPPLEMENTAL RESTRAINT SYSTEM (SRS)

90100970274

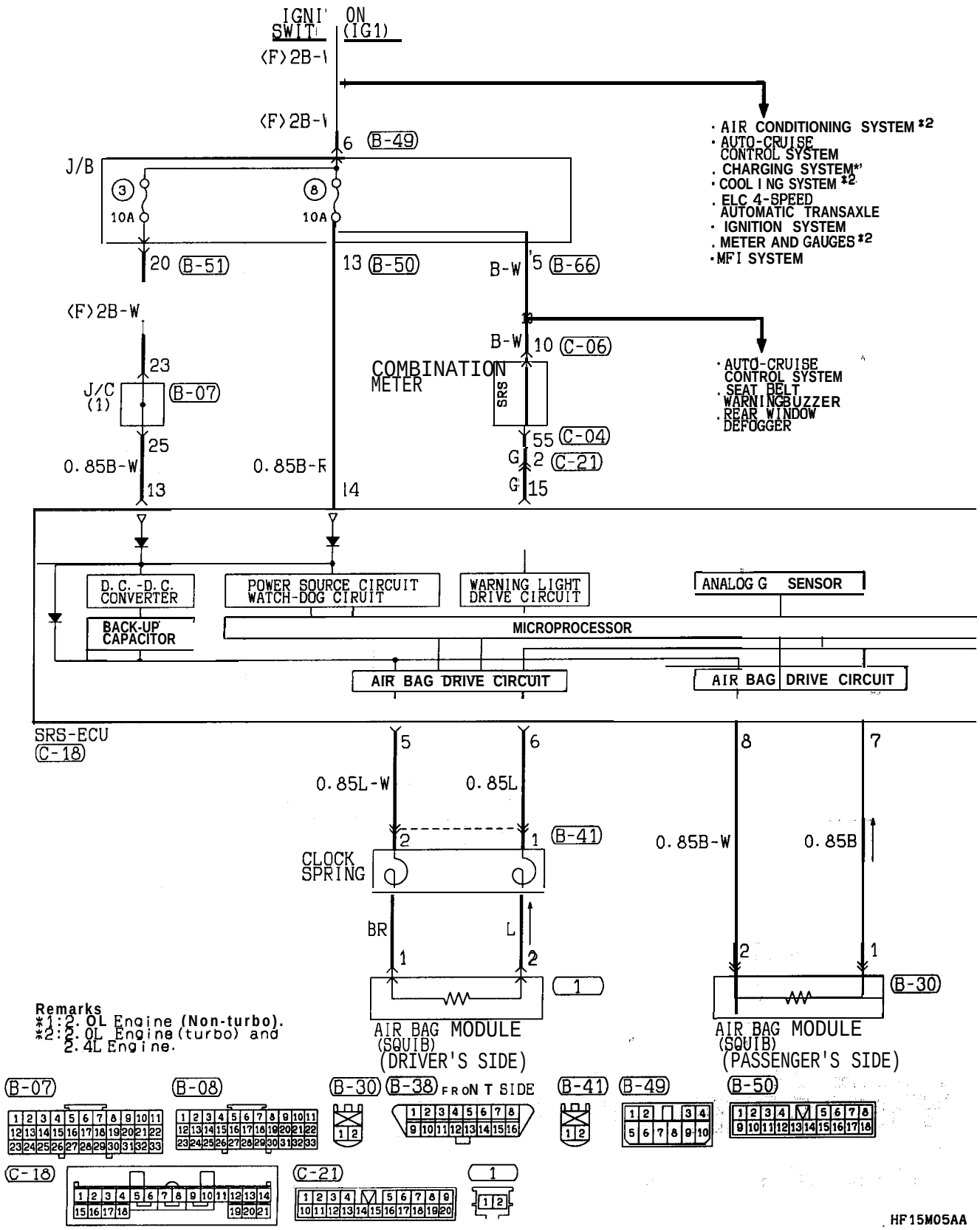

TSB Revision

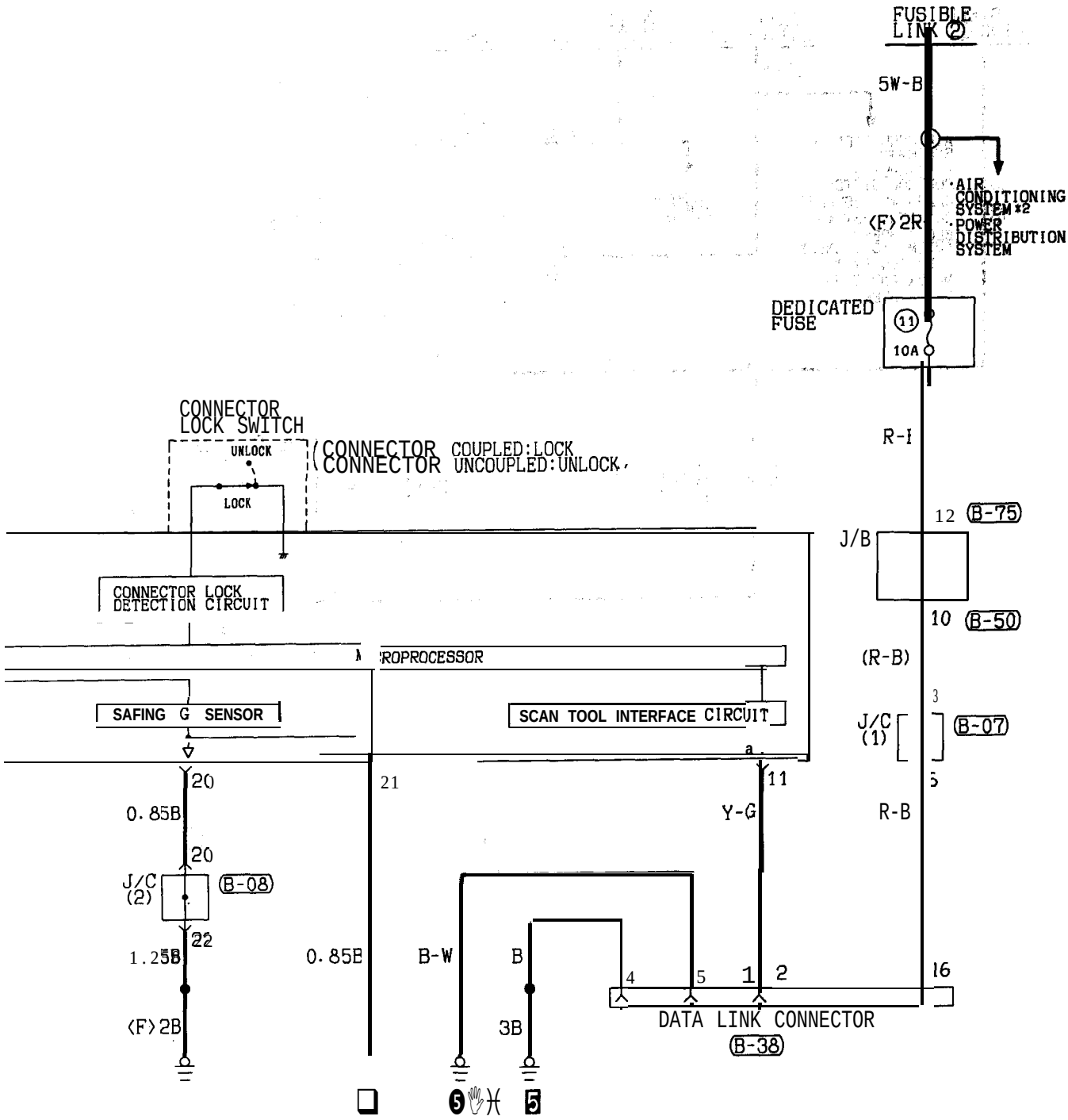

Wire color code
B :Black LG:Light green G :Green L :Blue W :White Y :Yellow SB:Sky blue
BR:Brown O :Orange GR:Gray R :Red P :Pink V :Violet

HF15M05AB

THEFT-ALARM SYSTEM <ECLIPSE>

90101240145

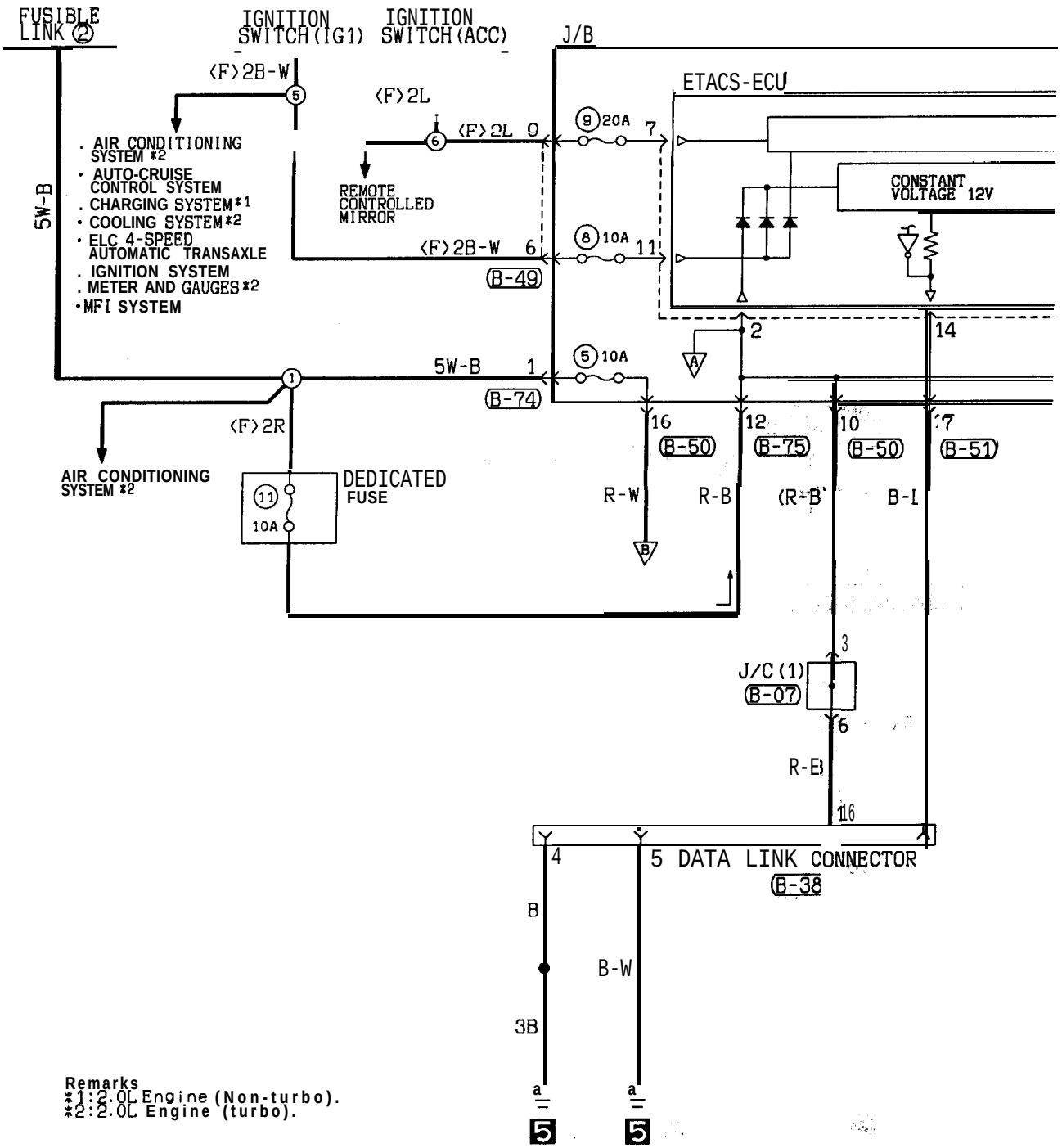

Remarks
*1: 2.0L Engine (Non-turbo).
*2: 2.0L Engine (turbo).

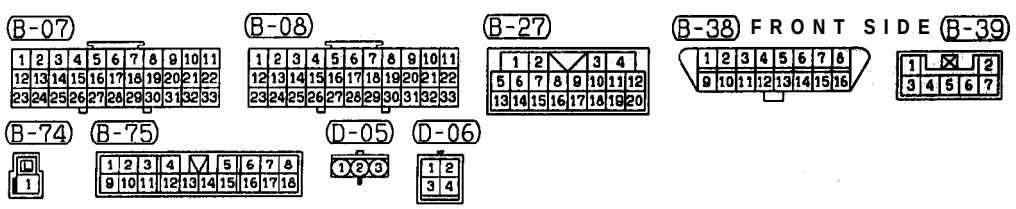

HF15M06AA

TSB Revision

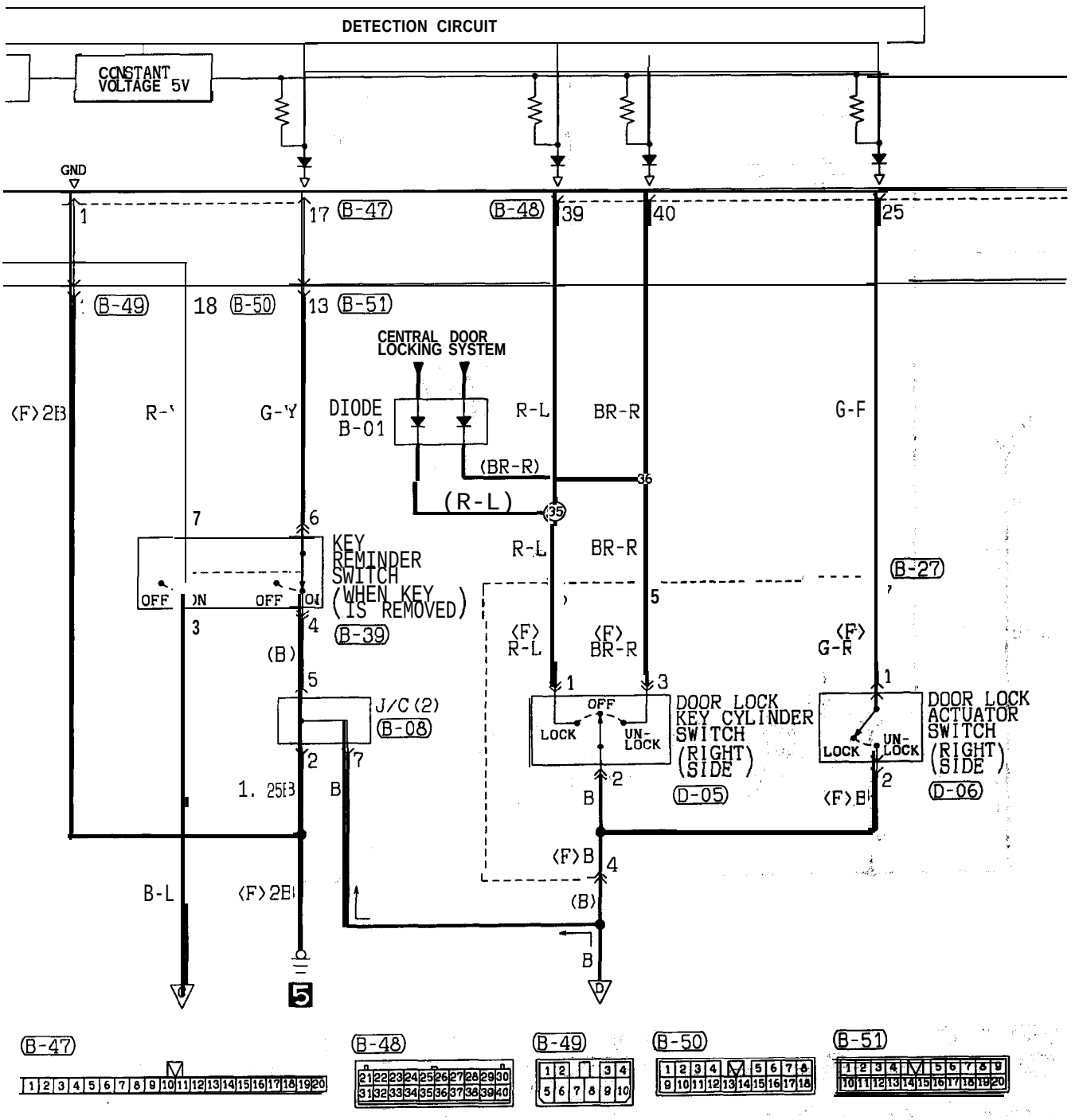

Wire color code
B :Black LG:Light green G :Green L :Blue W :White Y:Yellow SB:Sky b l u e
BR:Brown O :Orange GR:Gray R :Red P :Pink V :Violet

HF15M06AB

THEFT-ALARM SYSTEM <ECLIPSE> (CONTINUED)

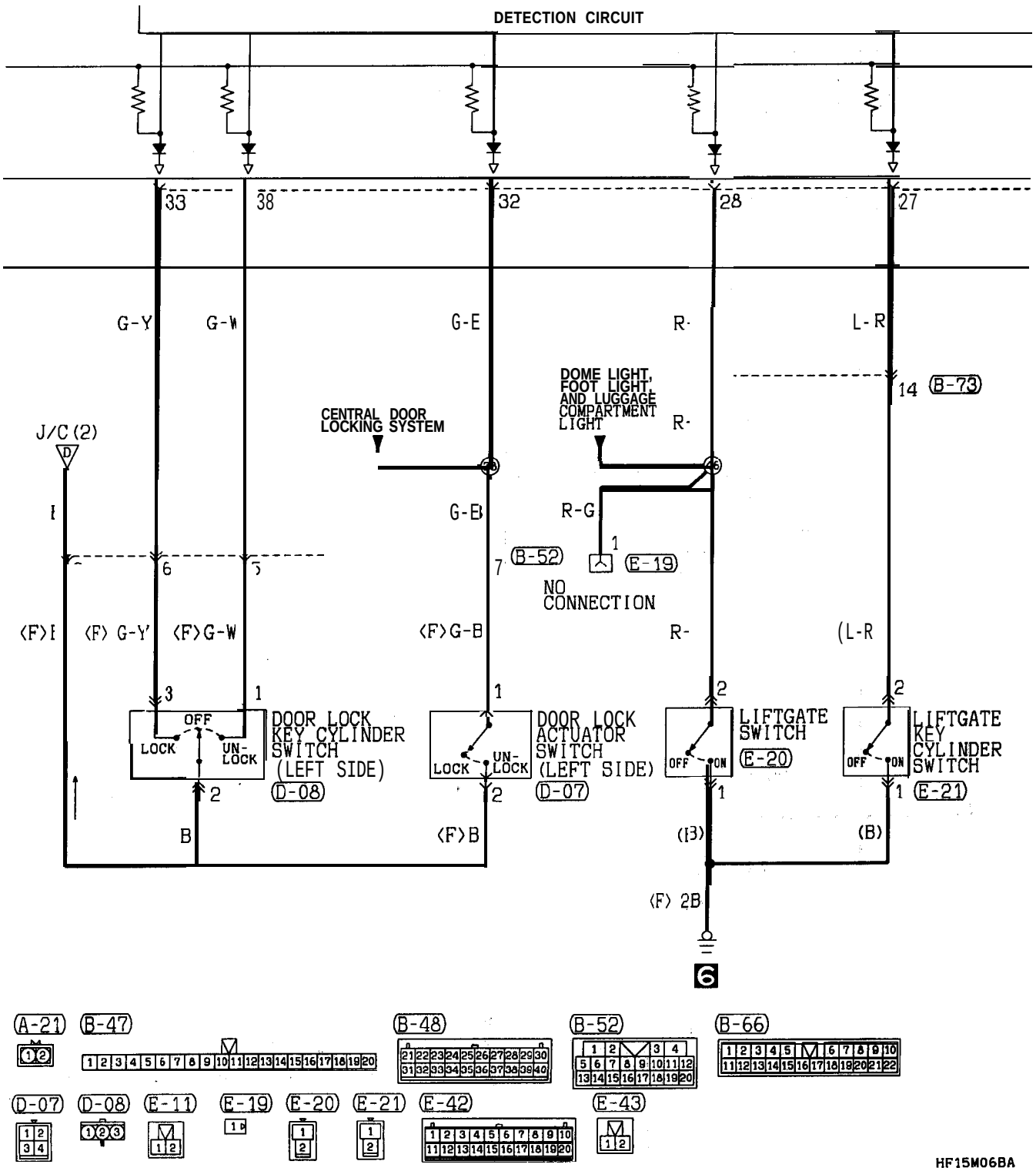

TSB Revision

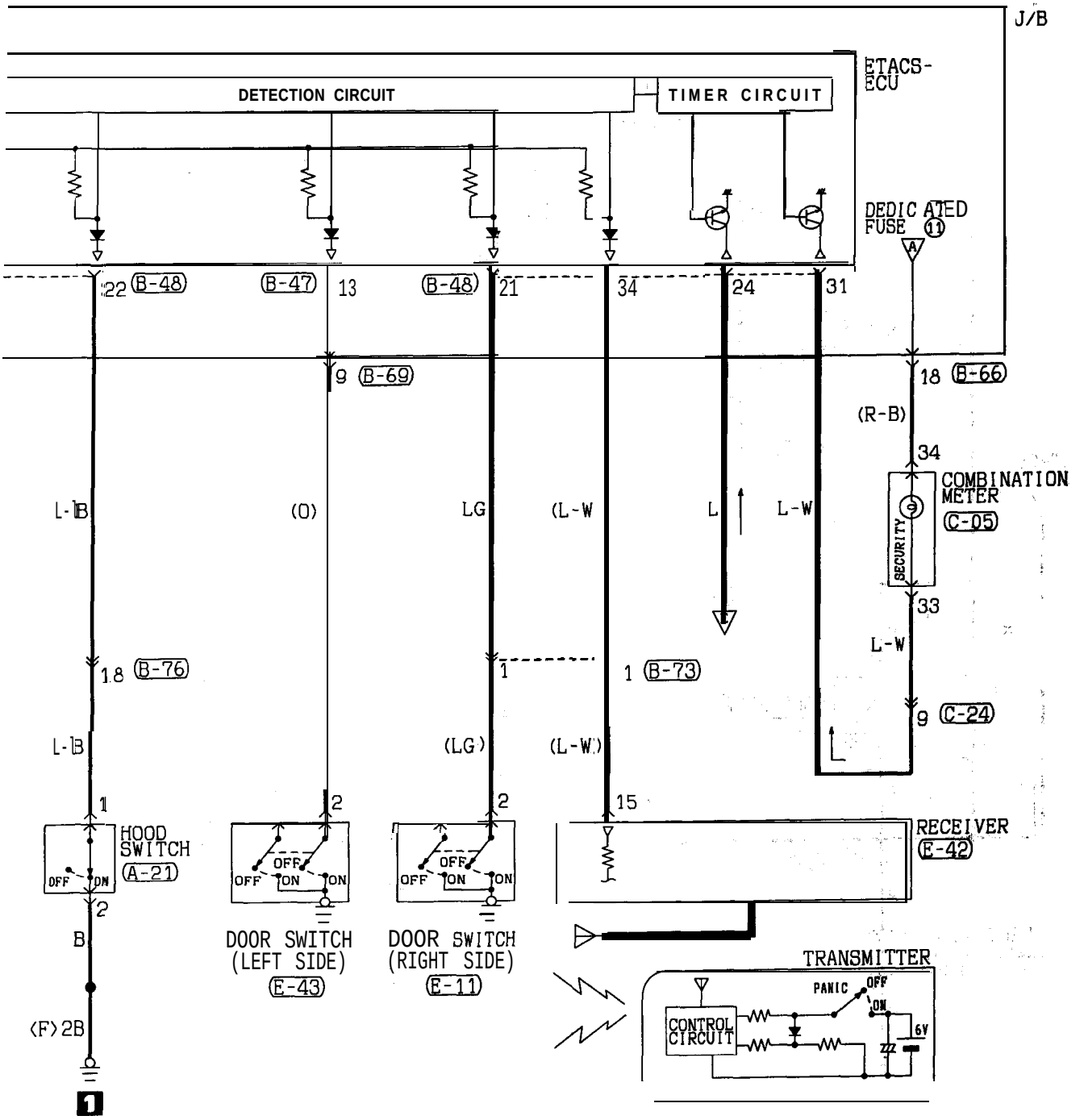

Wire color code
B :Black LG:Light green G :Green L :Blue W :White Y :Yellow SB:Sky blue
BR:Brown O :Orange GR:Gray R :Red P :Pink V :Violet

HF15M06BB

TSB Revision

THEFT-ALARM SYSTEM <ECLIPSE> (CONTINUED)

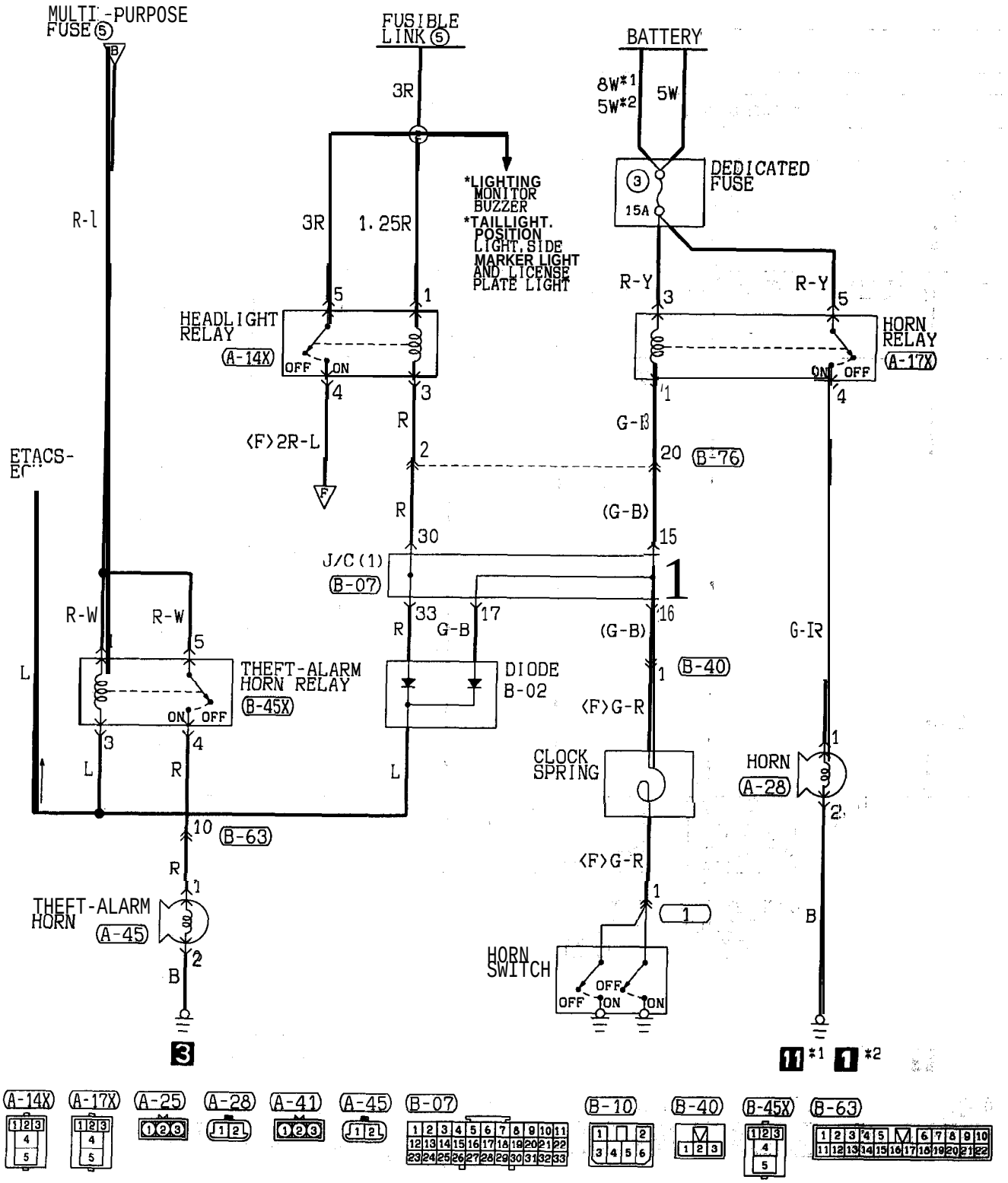

HF 15M06CA

TSB Revision

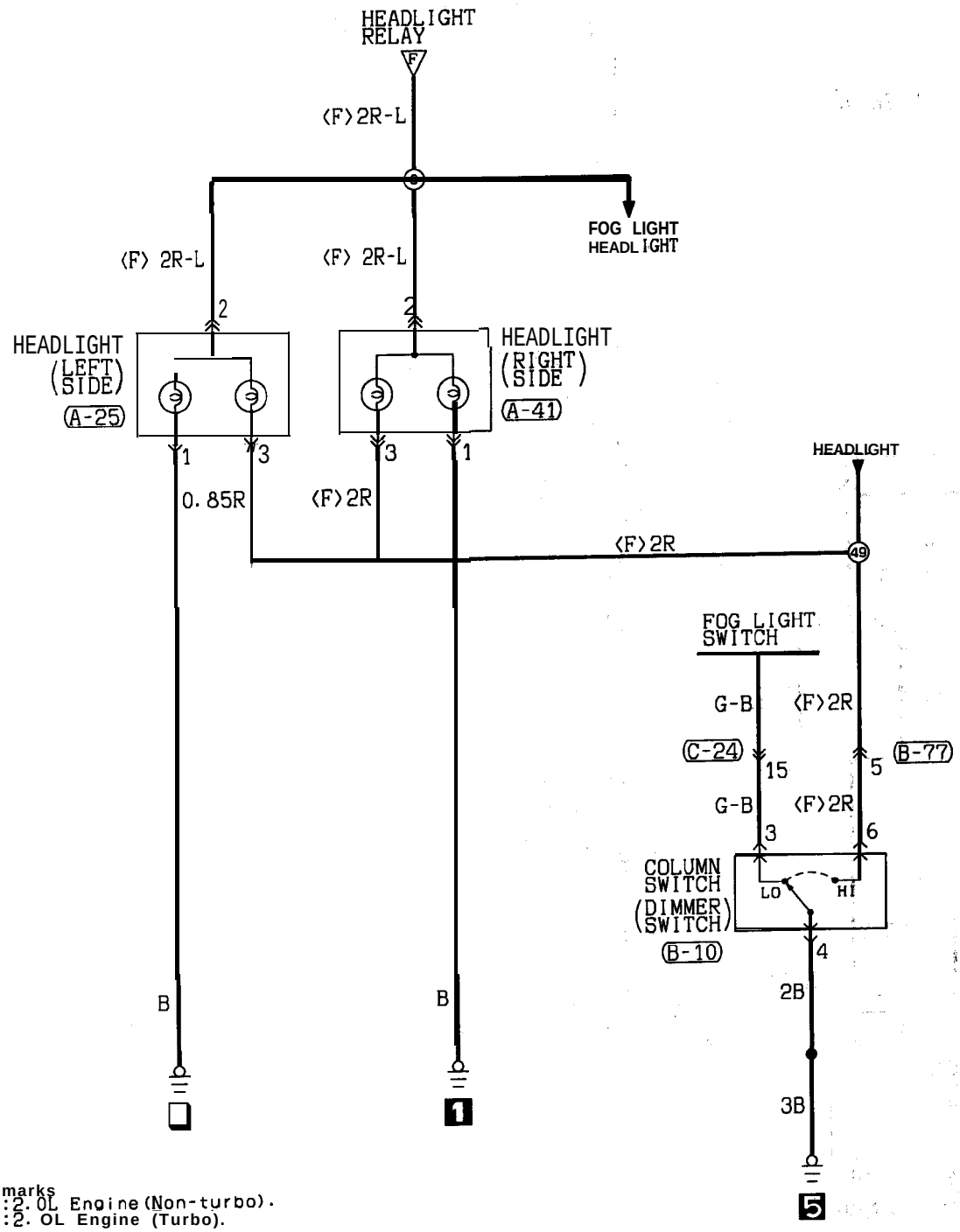

Remarks
*1:2.0L Engine (Non-turbo).
*2:2.0L Engine (Turbo).

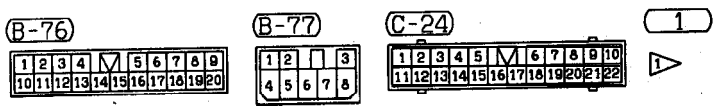

Wire color code
B :Black LG:Light green G :Green L :Blue W :White Y :Yellow SB:Sky blue
BR:Brown O :Orange GR:Gray R :Red P :Pink V :Violet

HF15M06CB

TSB Revision

THEFT-ALARM SYSTEM <ECLIPSE> (CONTINUED)

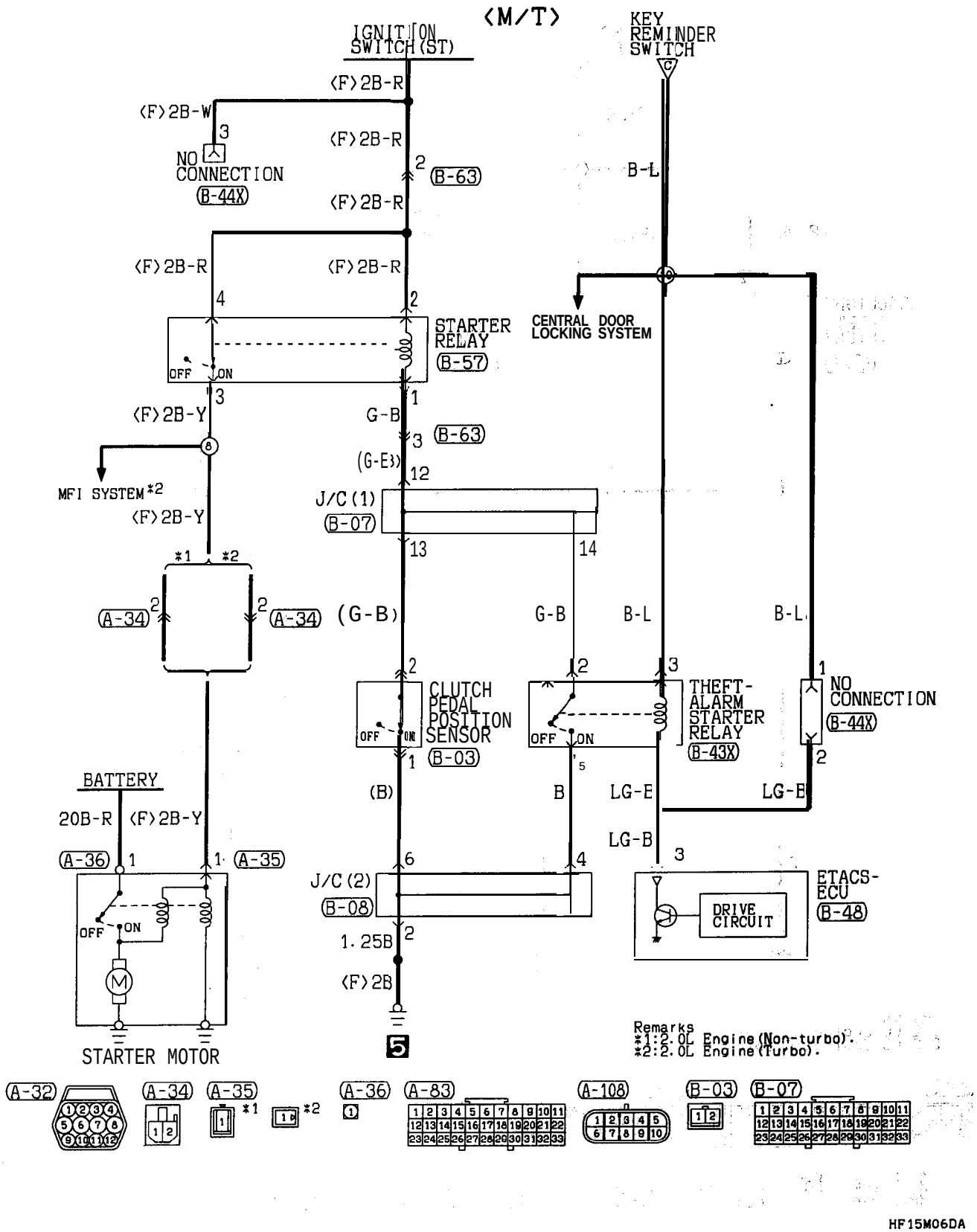

TSB Revision

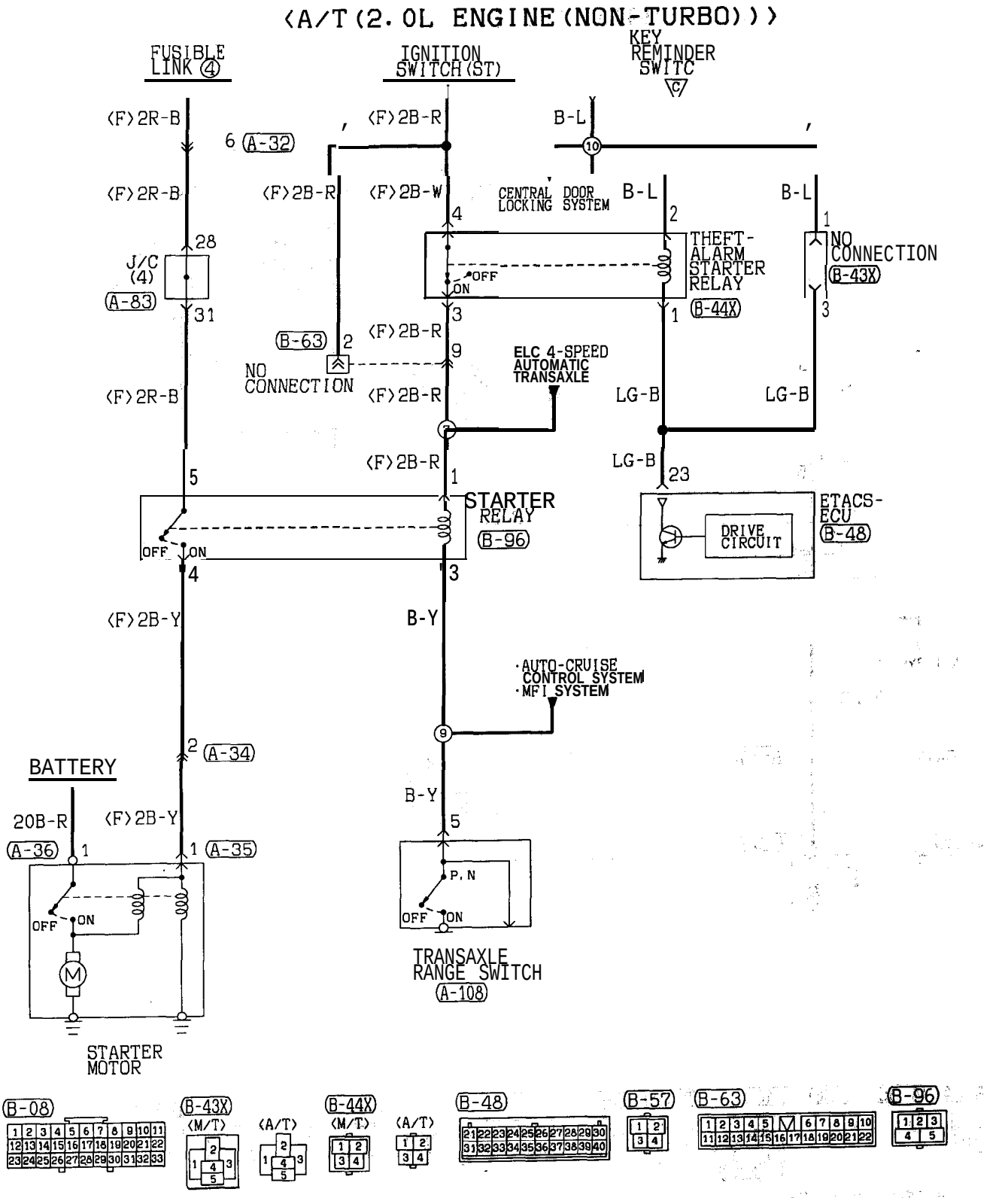

TSB Revision

THEFT-ALARM SYSTEM <ECLIPSE> (CONTINUED)

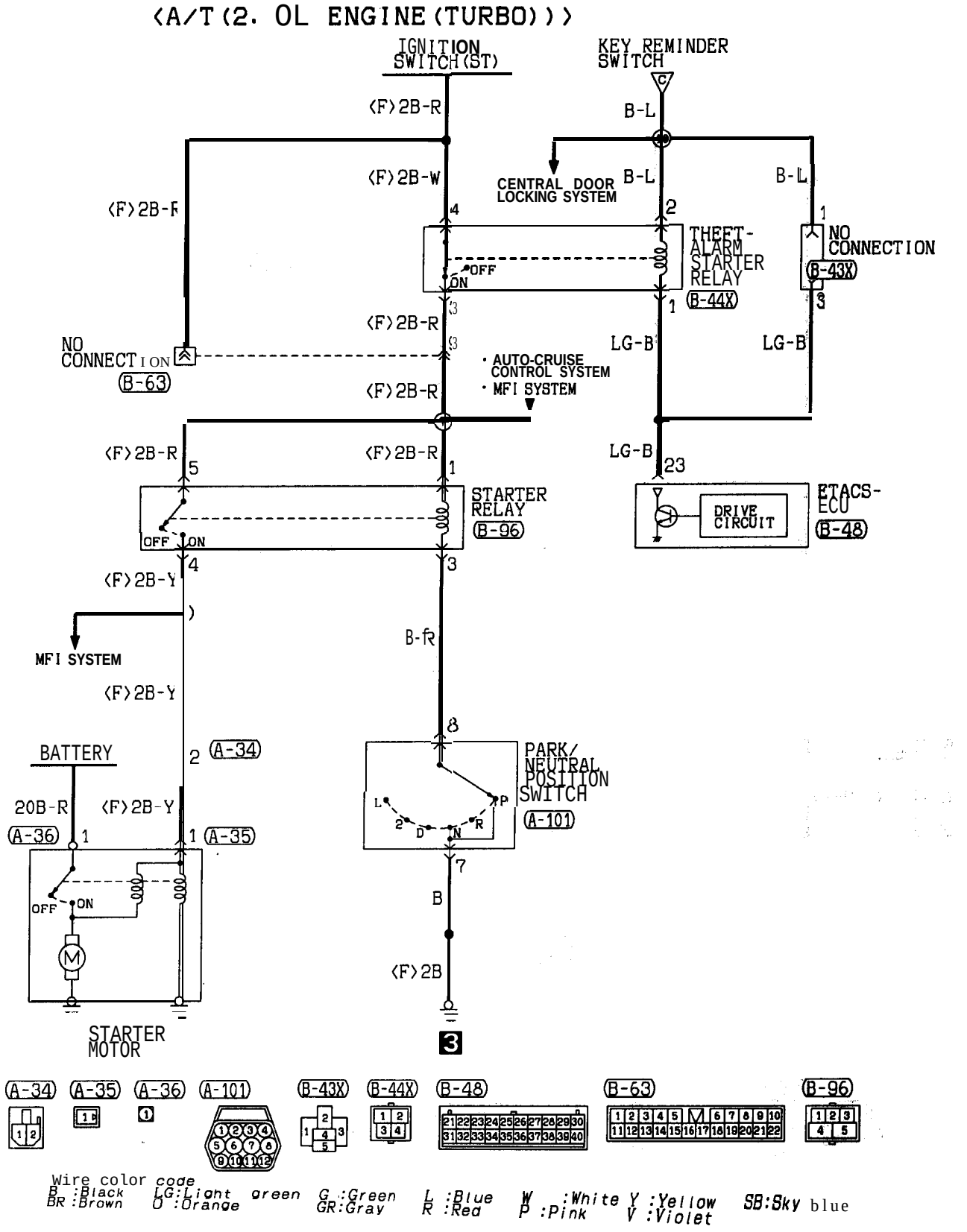

NOTES

THEFT-ALARM SYSTEM <ECLIPSE SPYDER>

90101240152

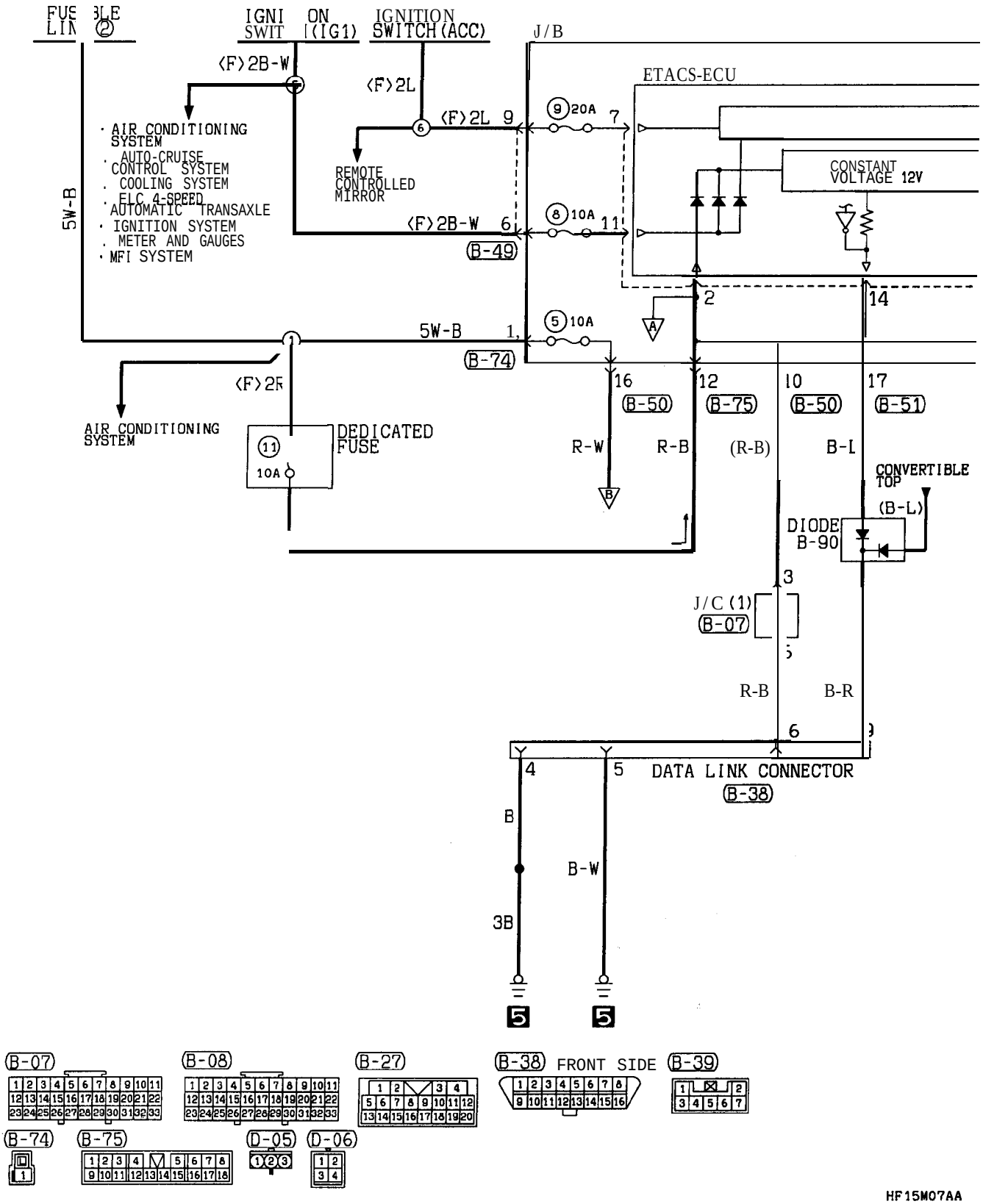

HF15M07AA

TSB Revision

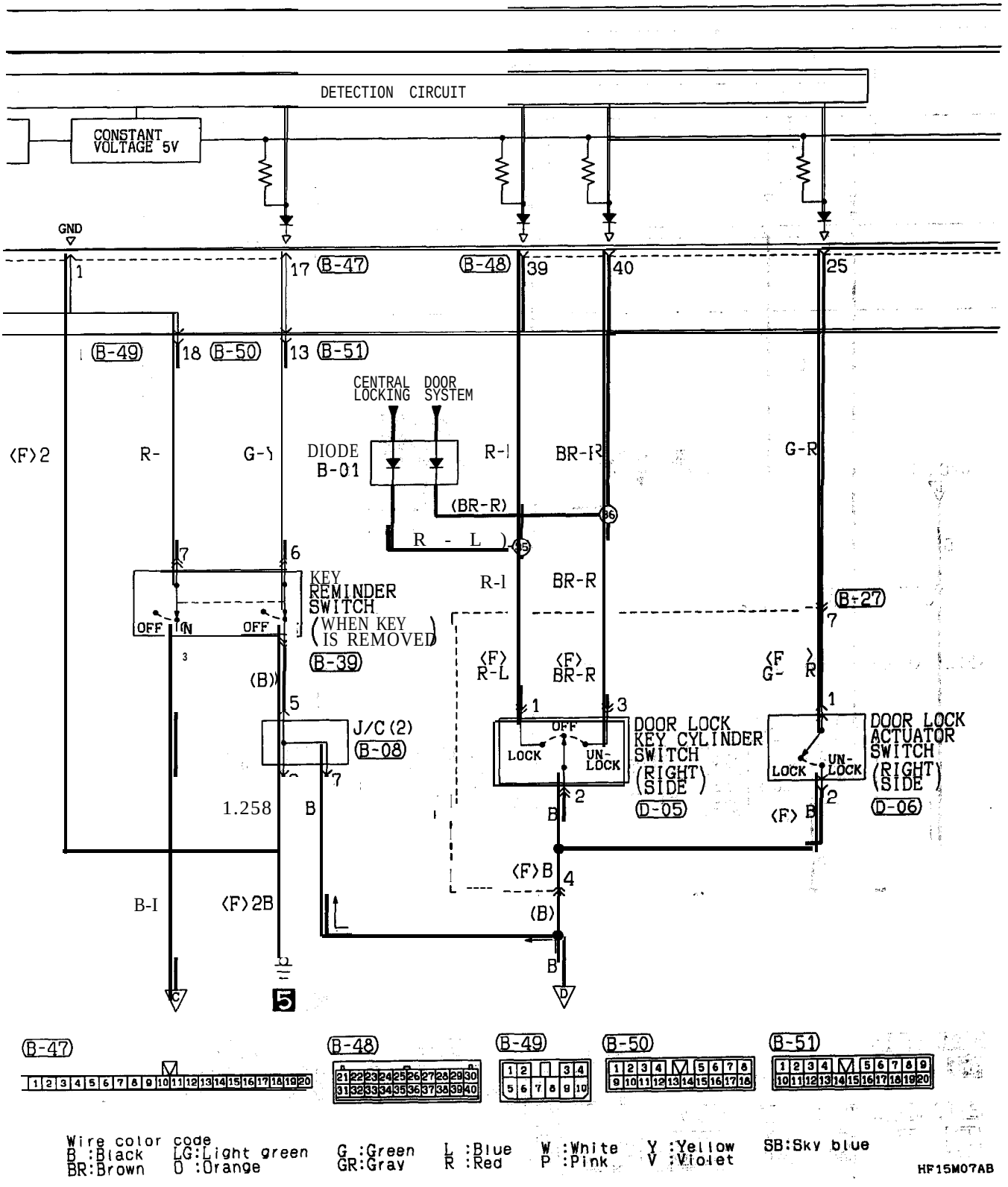

Wire color code
B :Black LG:Light green G :Green L :Blue W :White Y :Yellow SB:Sky blue
BR:Brown O :Orange GR:Gray R :Red P :Pink V :Violet

HF15M07AB

THEFT-ALARM SYSTEM <ECLIPSE SPYDER> (CONTINUED)

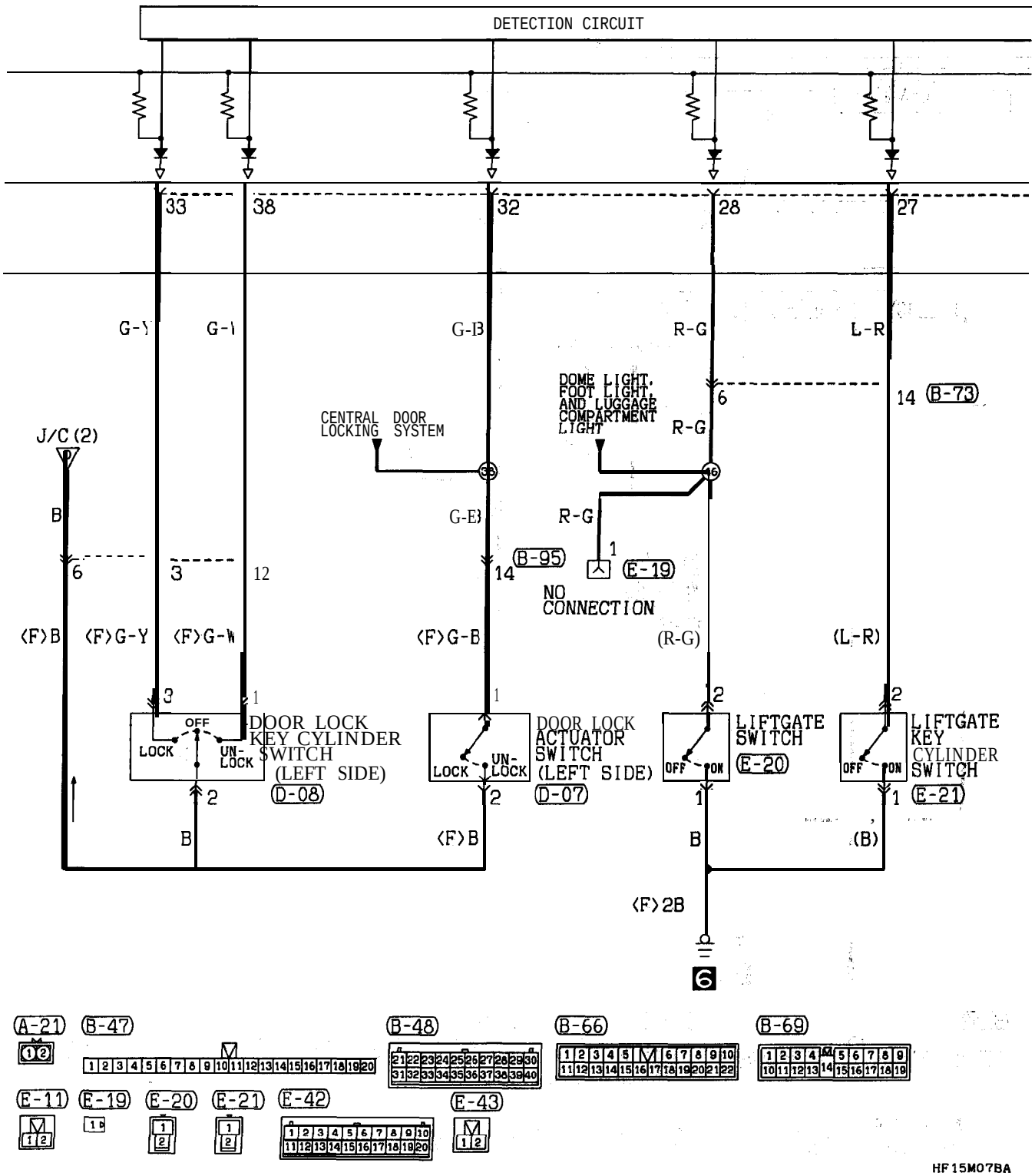

TSB Revision

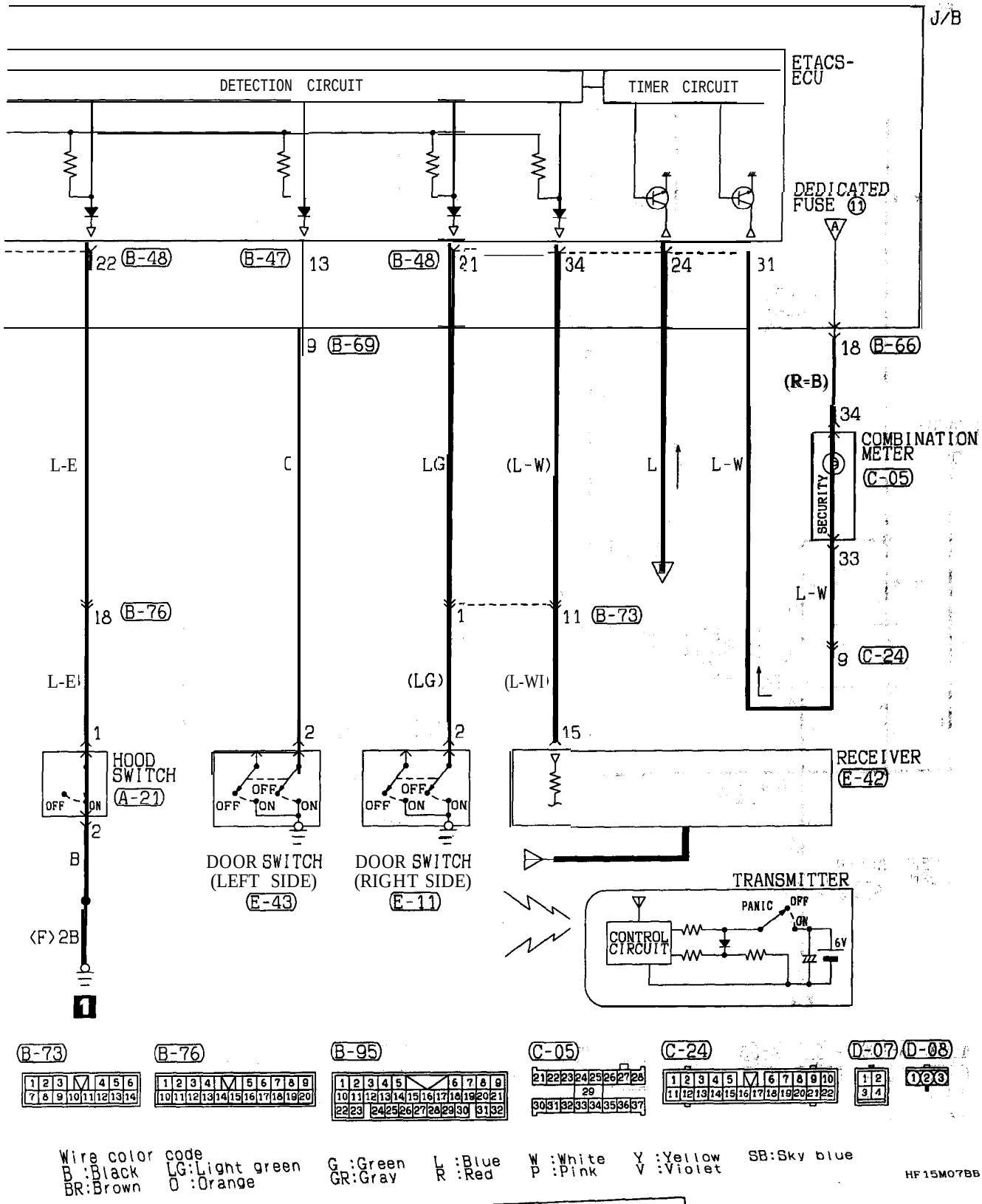

Wire color code
B :Black LG:Light green G :Green L :Blue W :White Y :Yellow SB:Sky blue
BR:Brown O :Orange GR:Gray R :Red P :Pink V :Violet

HF15M07BB

TSB Revision

THEFT-ALARM SYSTEM <ECLIPSE SPYDER> (CONTINUED)

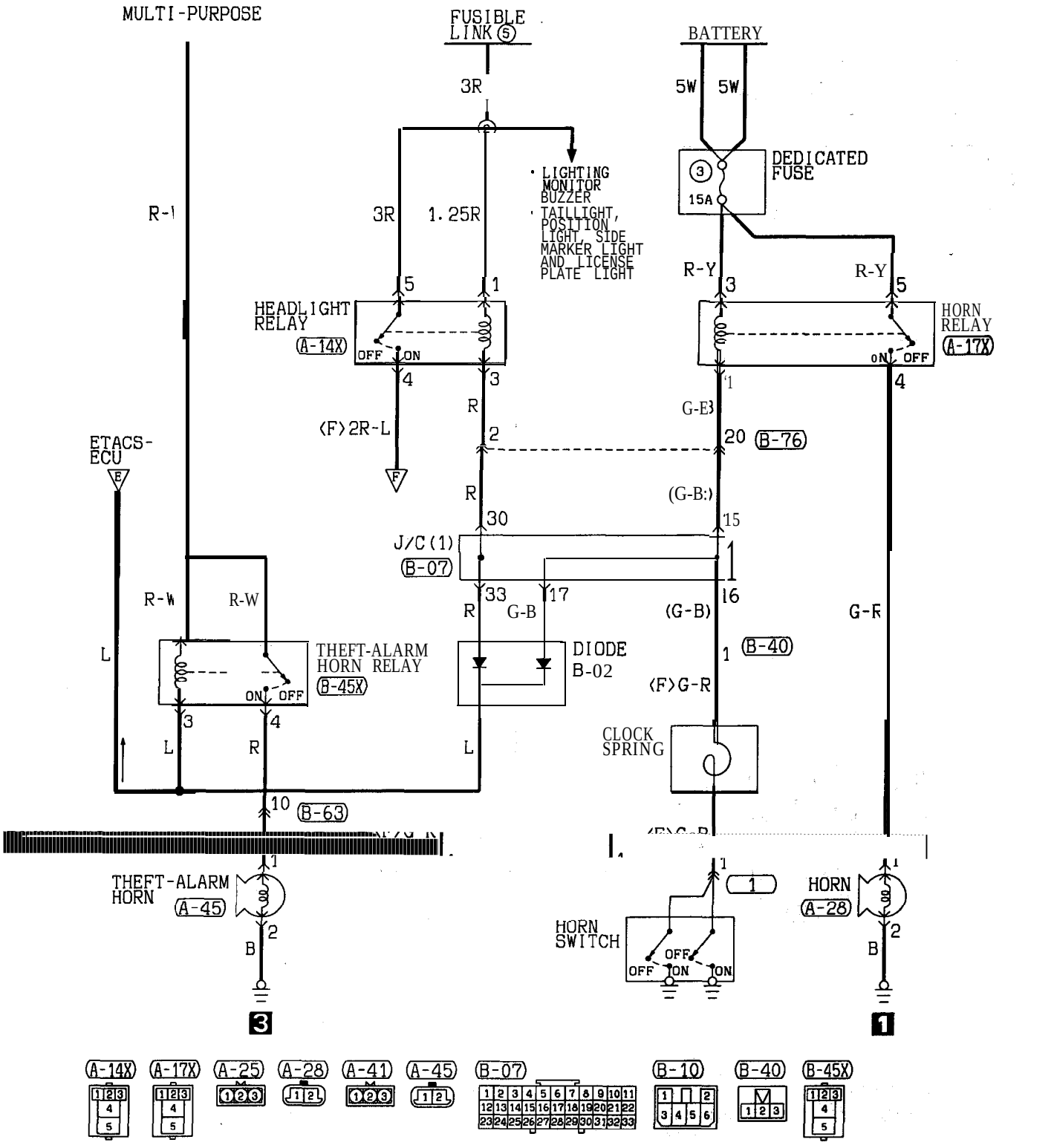

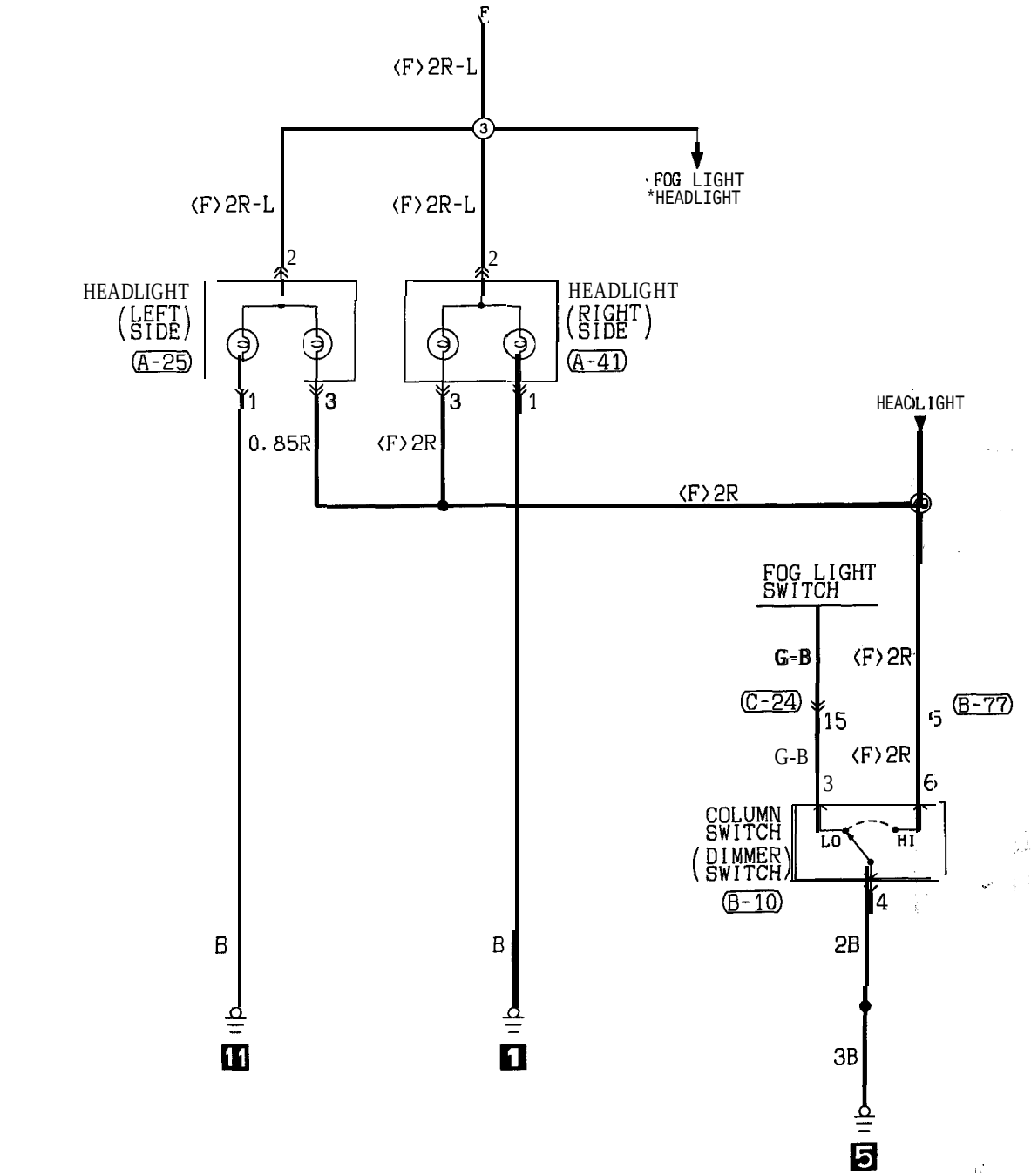

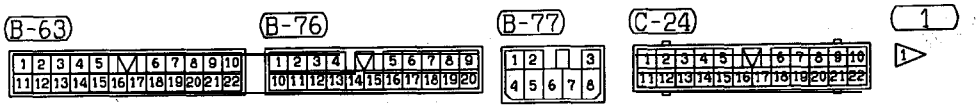

Wire color code
B :Black LG:Light green G :Green L :Blue W :White Y :Yellow SB:Sky blue
BR:Brown O :Orange GR:Gray R :Red P :Pink V :Violet

HF15M07CB

TSB **Revision**

THEFT-ALARM SYSTEM <ECLIPSE SPYDER> (CONTINUED)

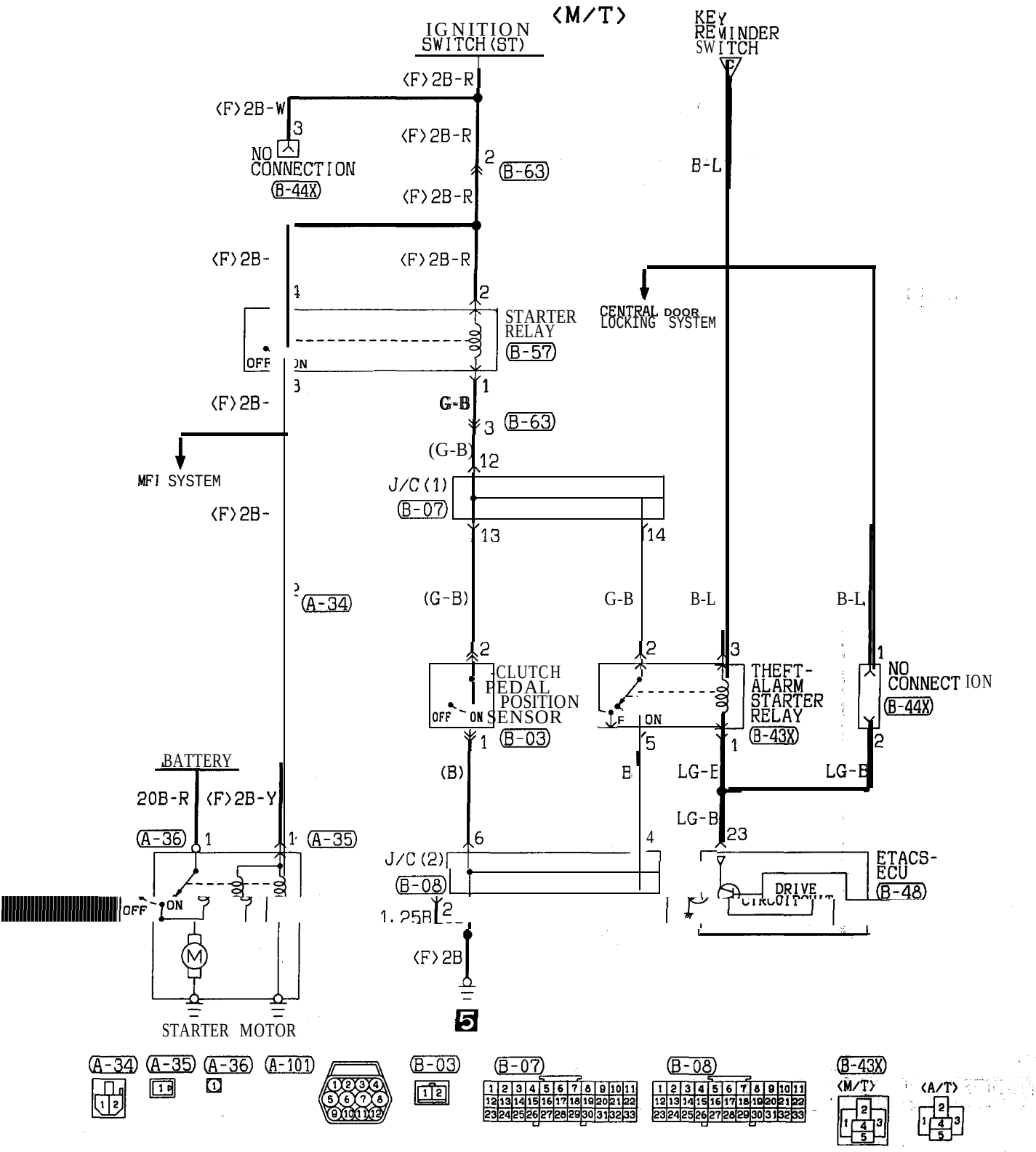

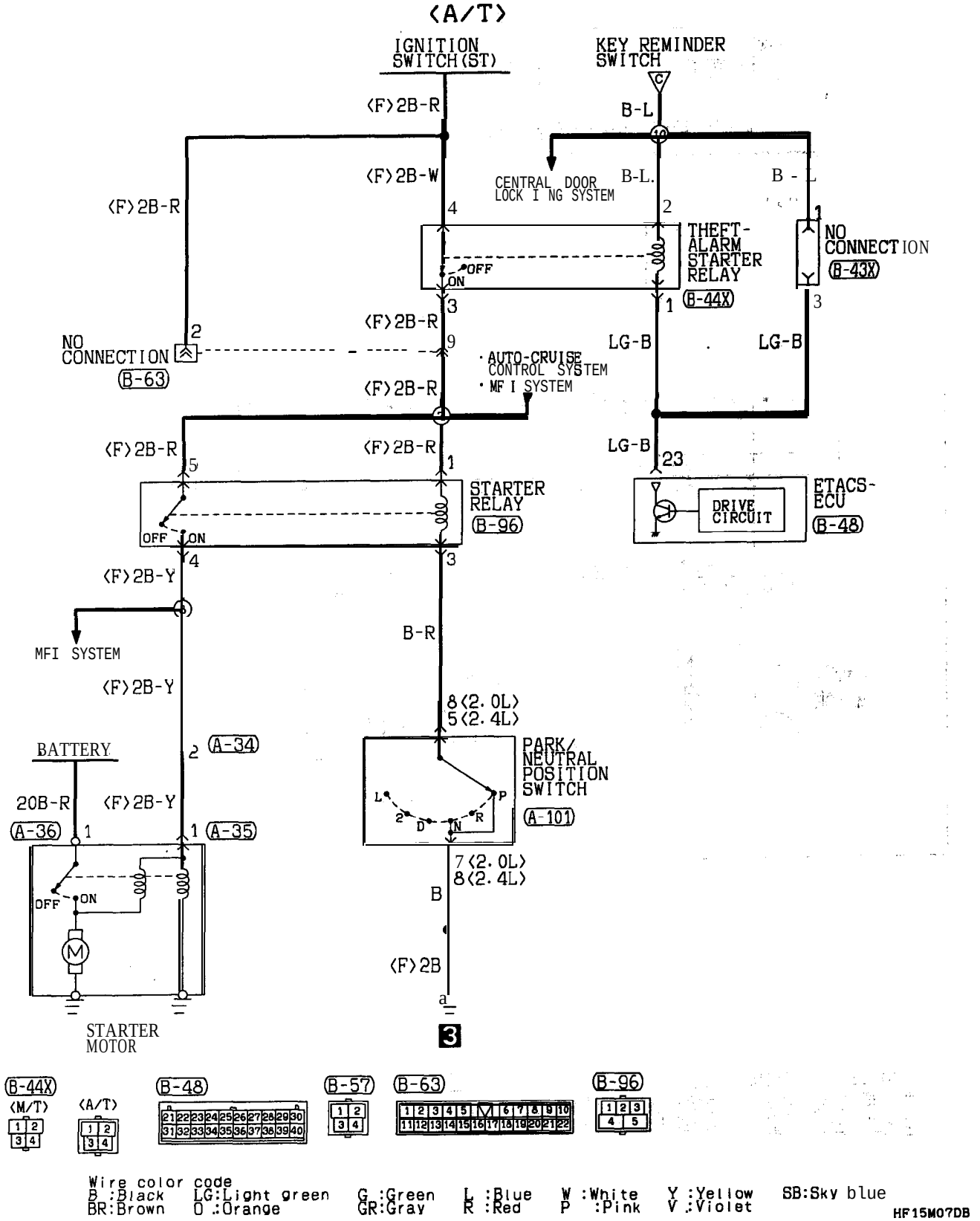

Wire color code
B :Black LG:Light green G :Green L :Blue W :White Y :Yellow SB:Sky blue
BR:Brown O :Orange GR:Gray R :Red P :Pink V :Violet

HF15M07DB

TSB Revision

POWER SEAT

90101040127

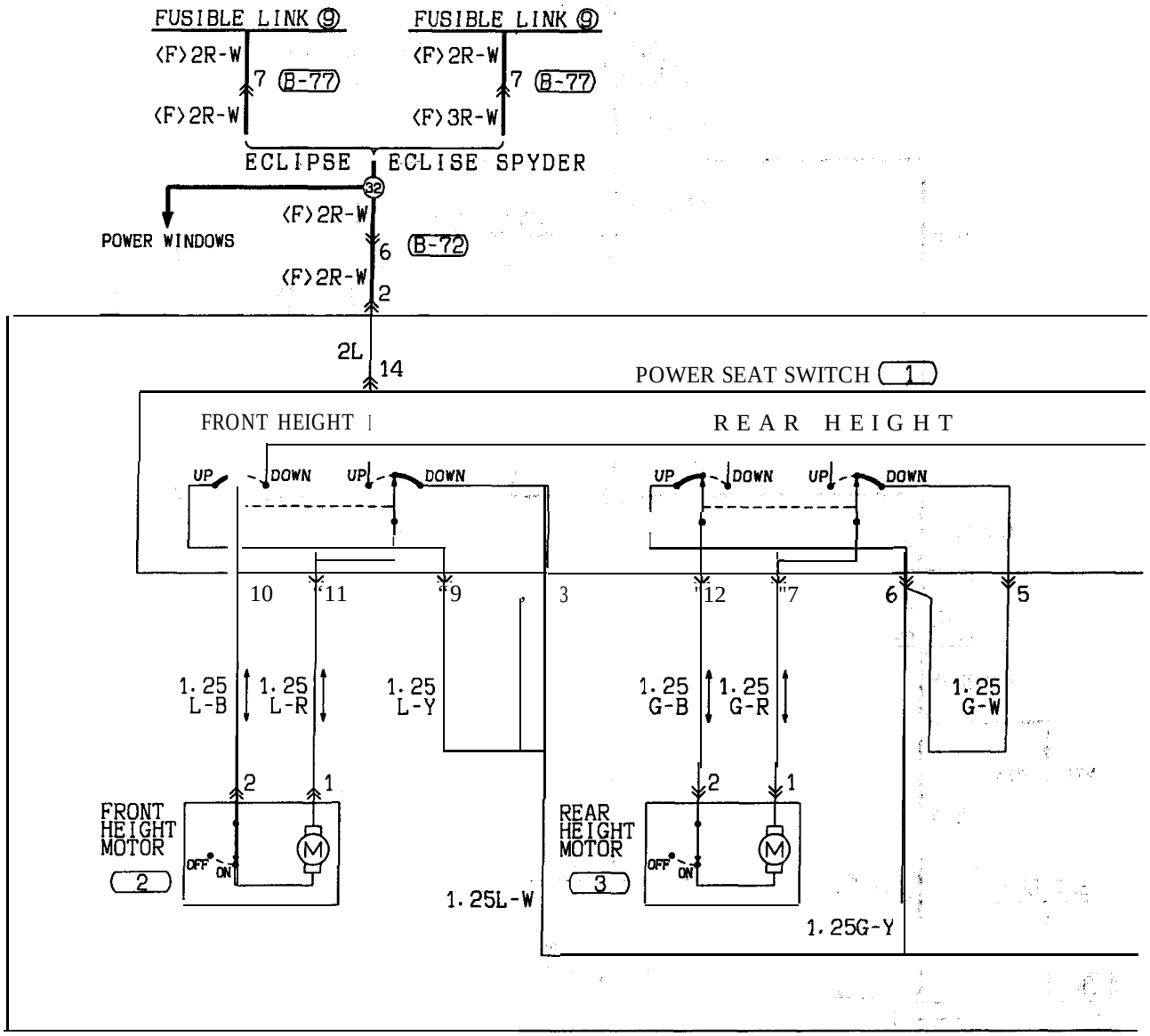

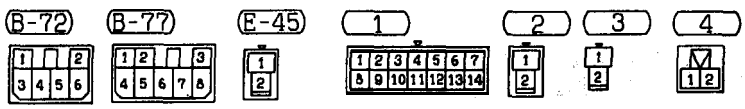

HF15M08AA

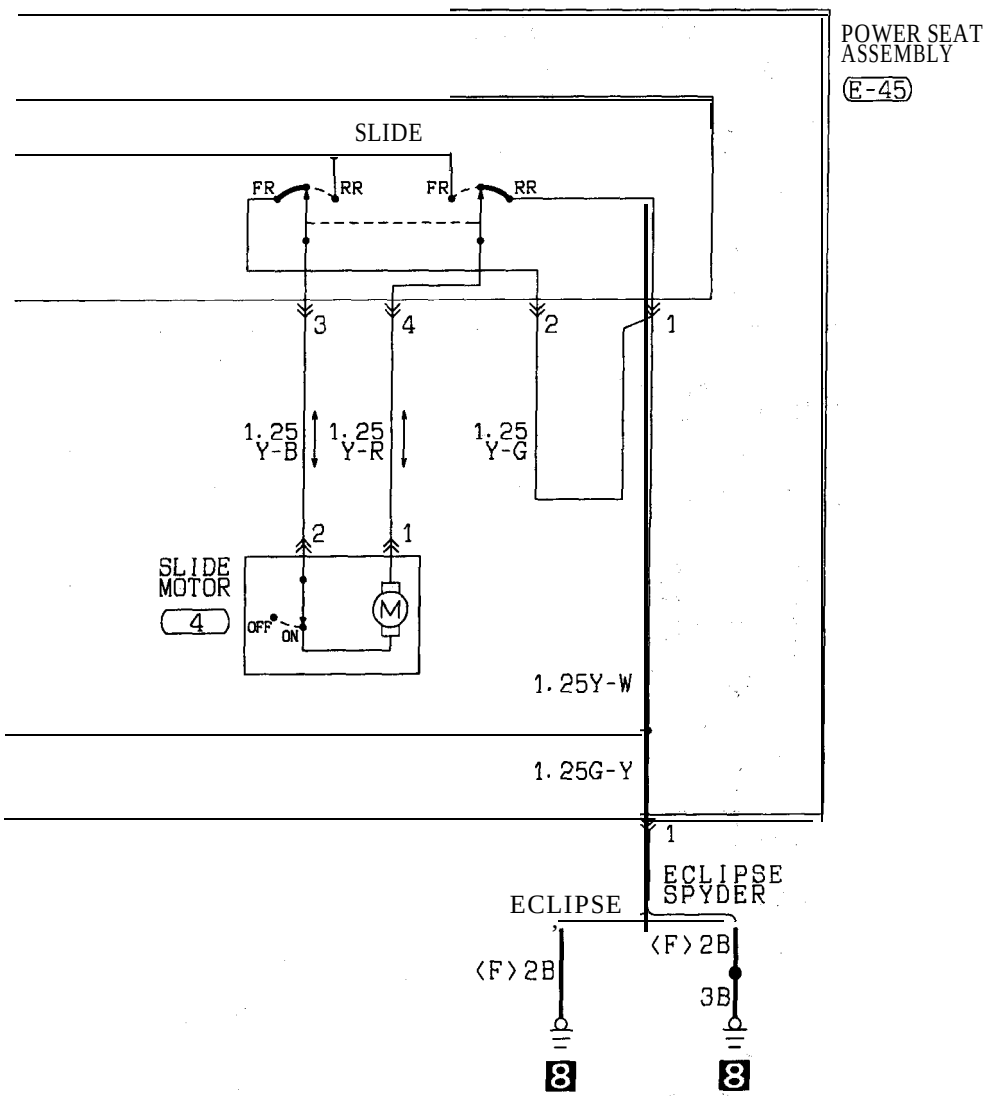

Wire color code
B :Black LG:Light green G :Green L :Blue W :White Y :Yellow SB:Sky blue
BR:Brown O :Orange GR:Gray R :Red P :Pink V :Violet

HF15M06AB

SUNROOF

90100990157

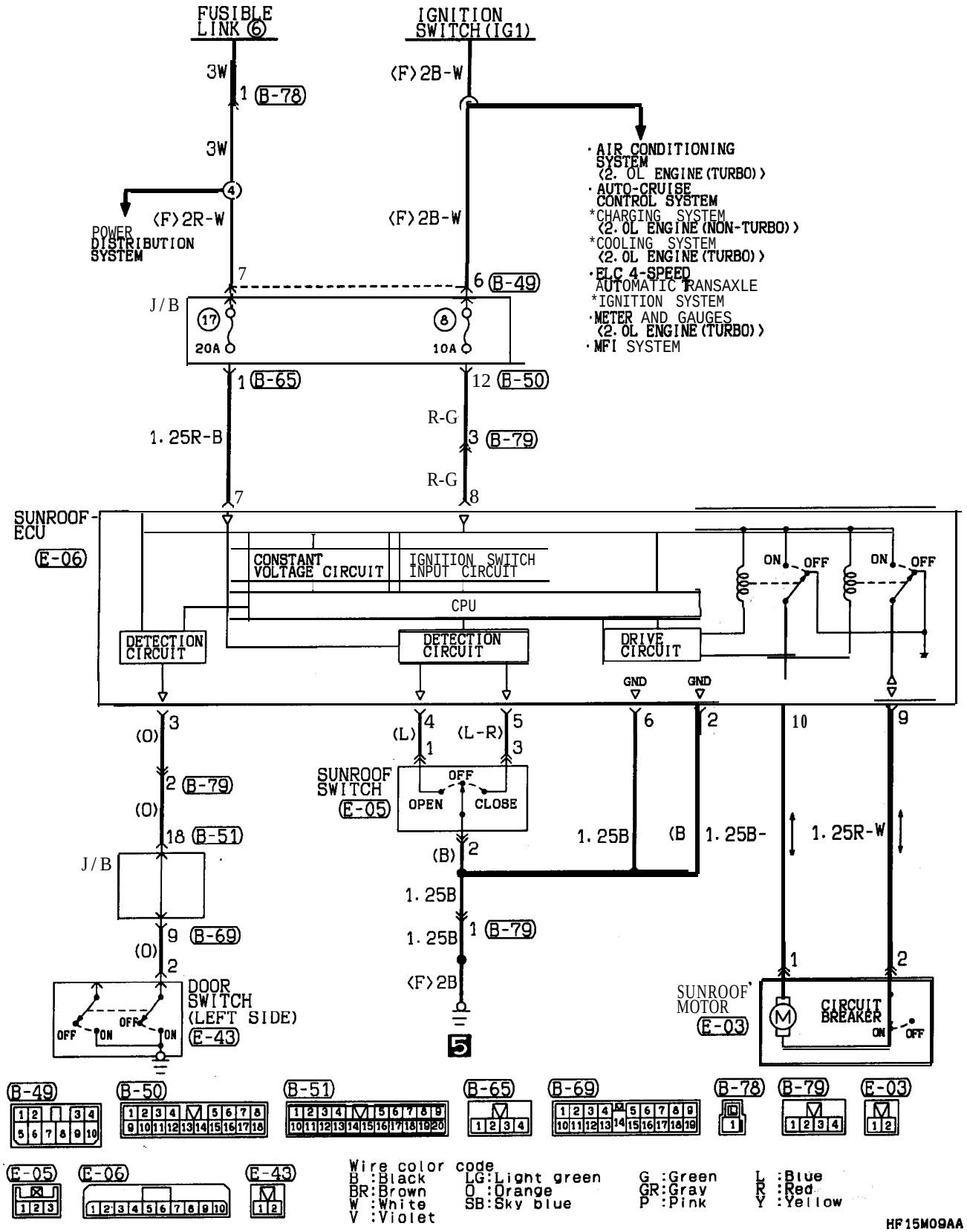

TSB Revision

UNIVERSAL GARAGE DOOR OPENER

90101400048

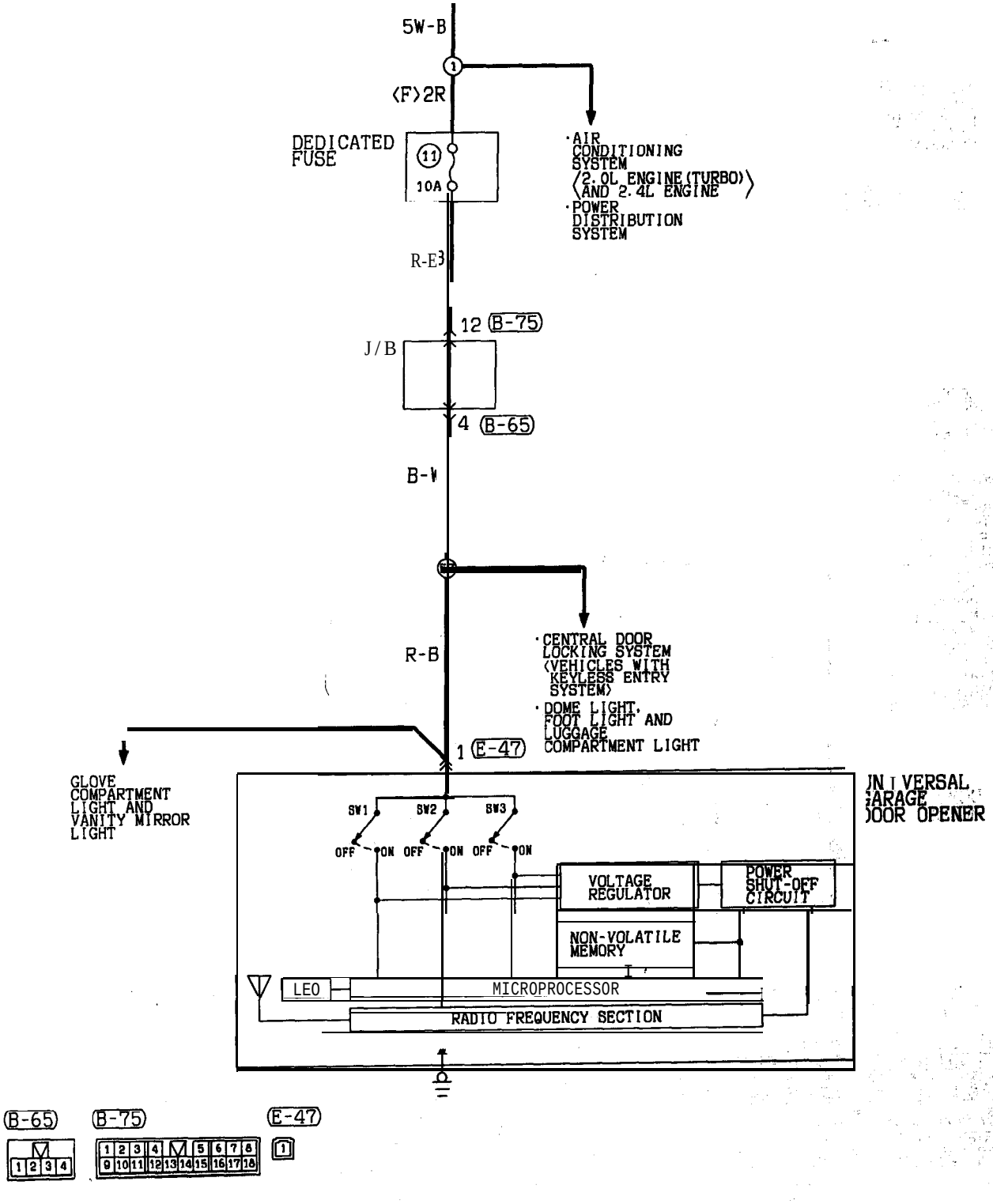

Wire color code
B :Black
BR:Brown
LG:Light green
O :Orange
G :Green
GR:Gray
L :Blue
R :Red
W :White
P :Pink
Y :Yellow
V :Violet
SB:Sky blue

HF15M10AA

TSB Revision

SEAT BELT WARNING BUZZER <ECLIPSE>

90101120074

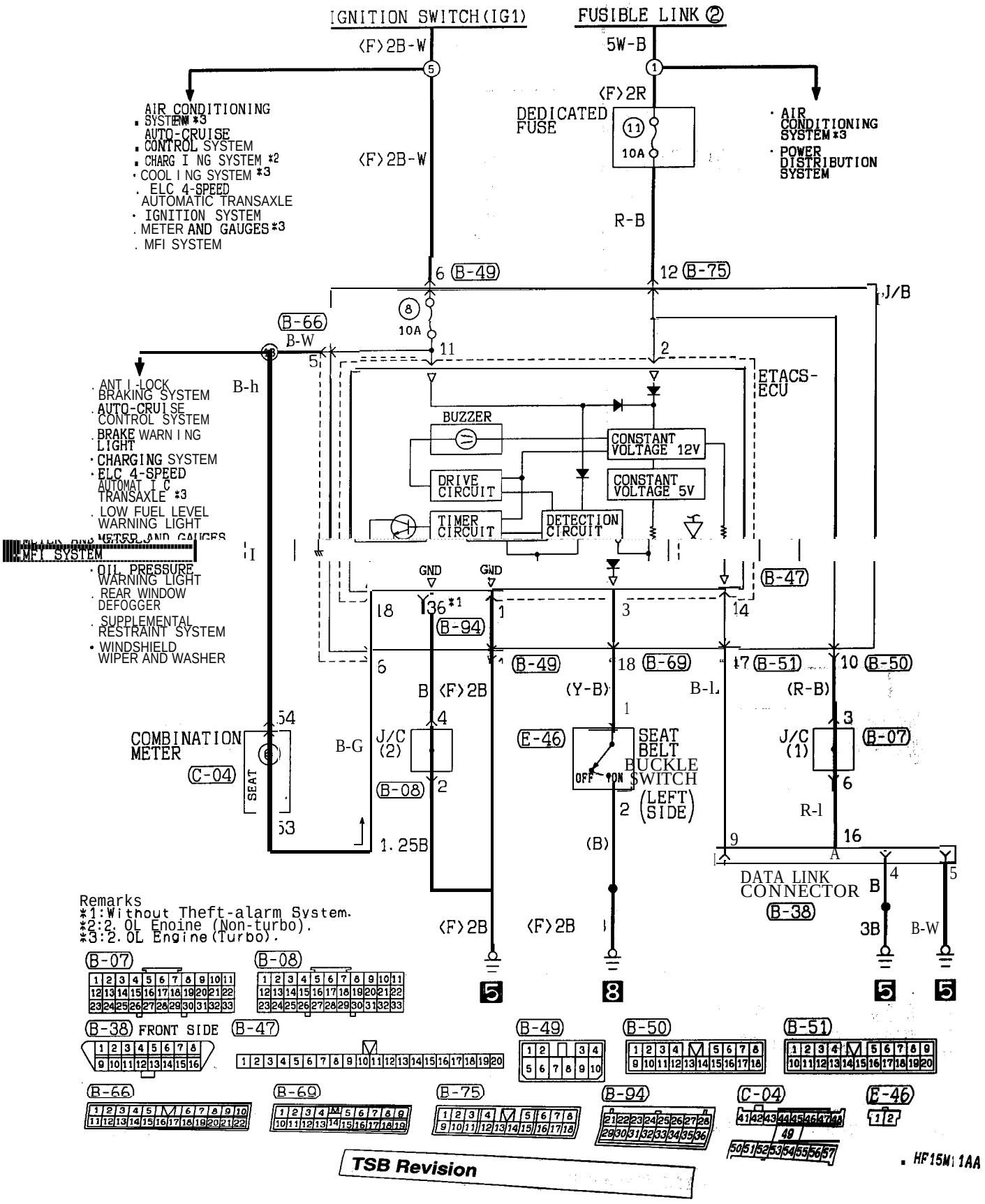

TSB Revision

SEAT BELT WARNING BUZZER <ECLIPSE SPYDER>

90101120081

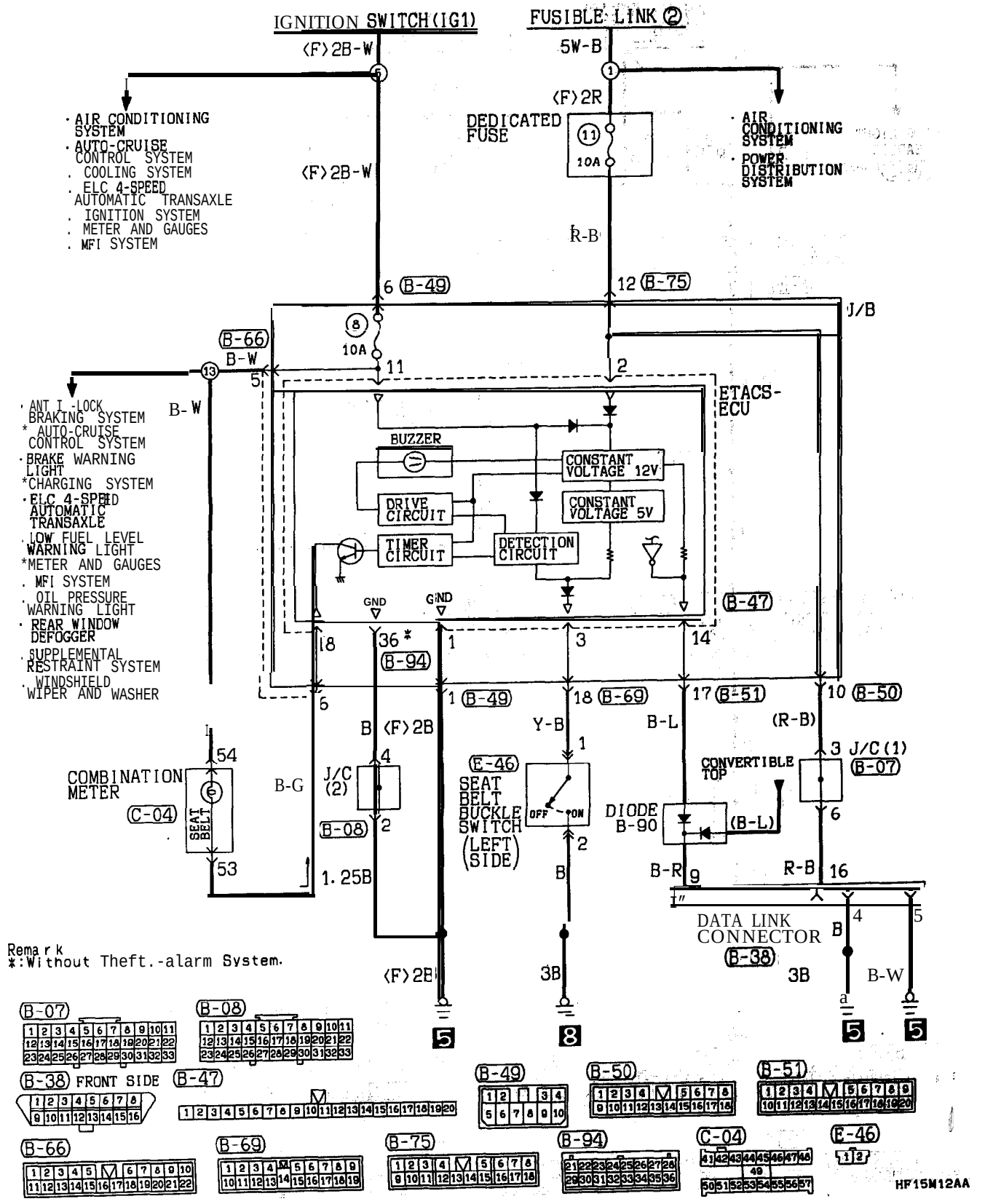

TSB Revision

LIGHTING MONITOR BUZZER <ECLIPSE>

90101140162

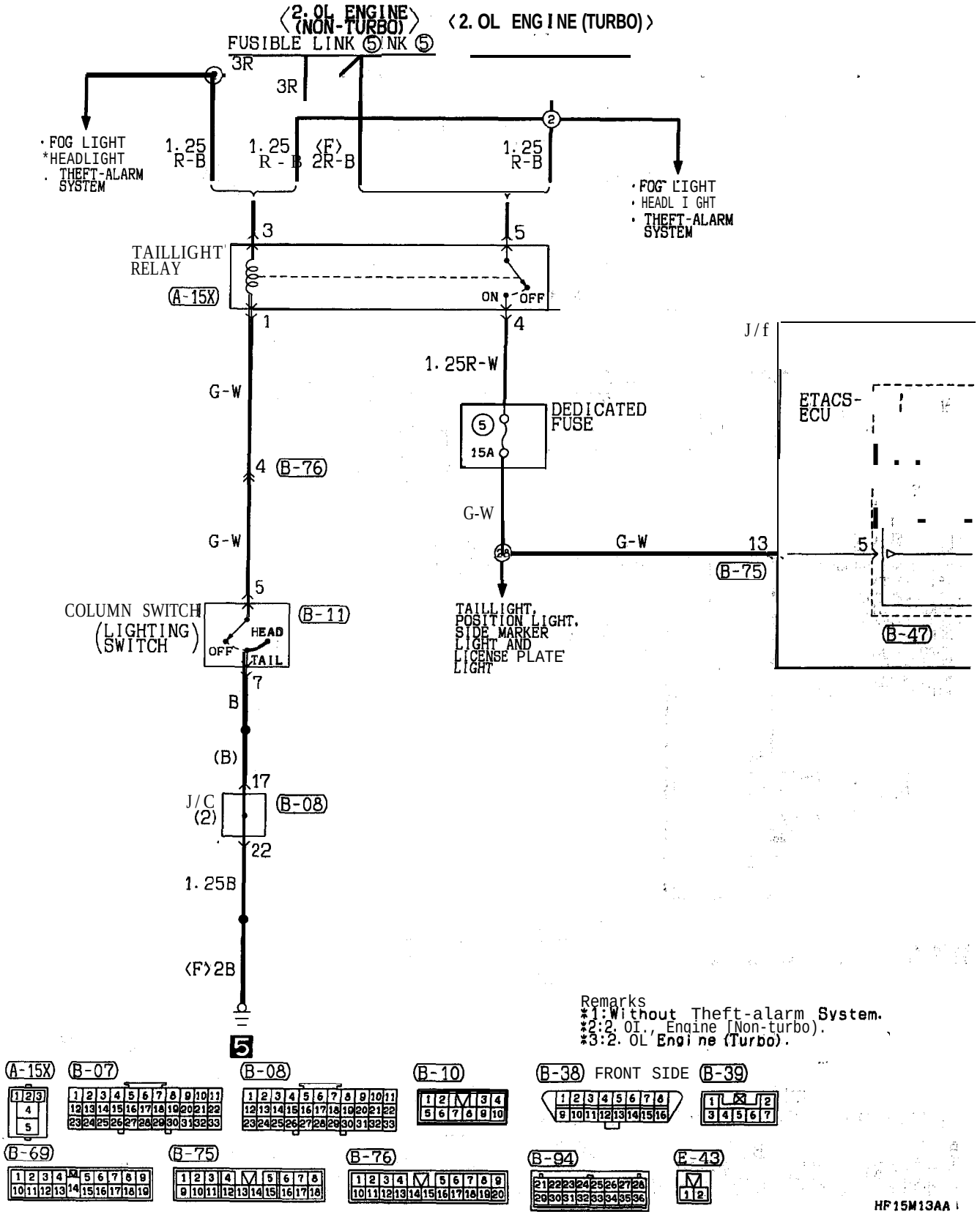

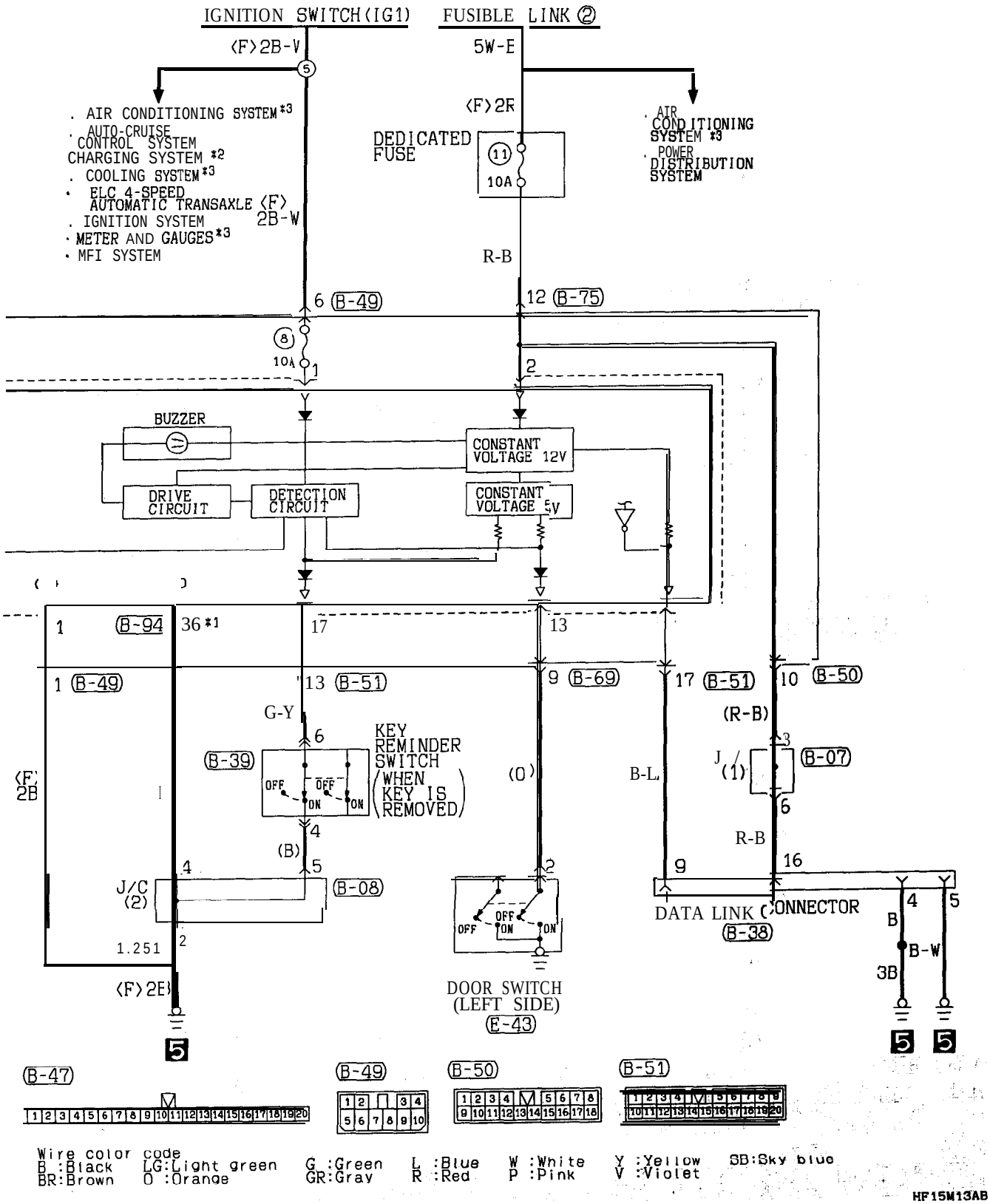

TSB Revision

LIGHTING MONITOR BUZZER <ECLIPSE SPYDER>

99101149179

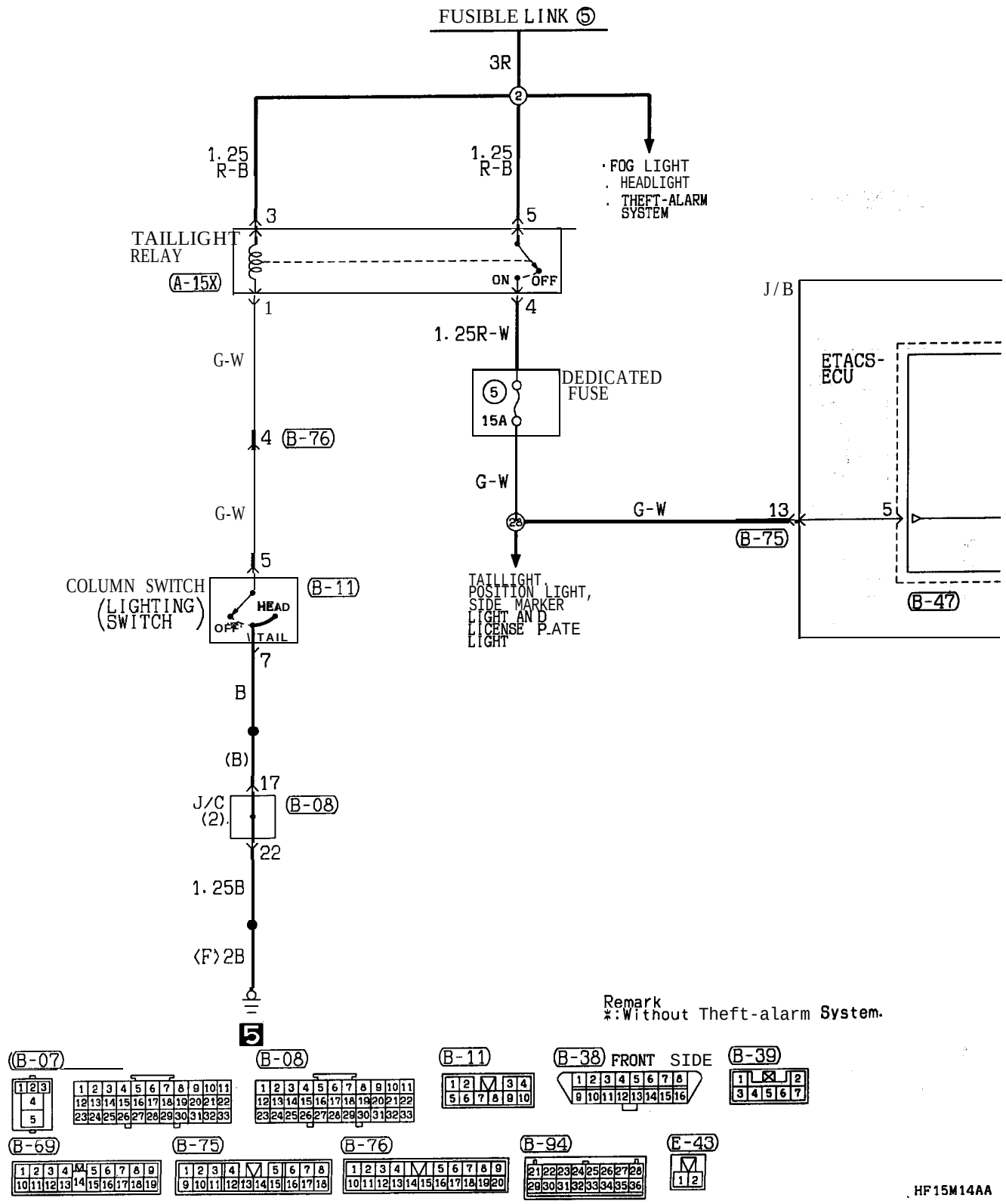

TSB Revision

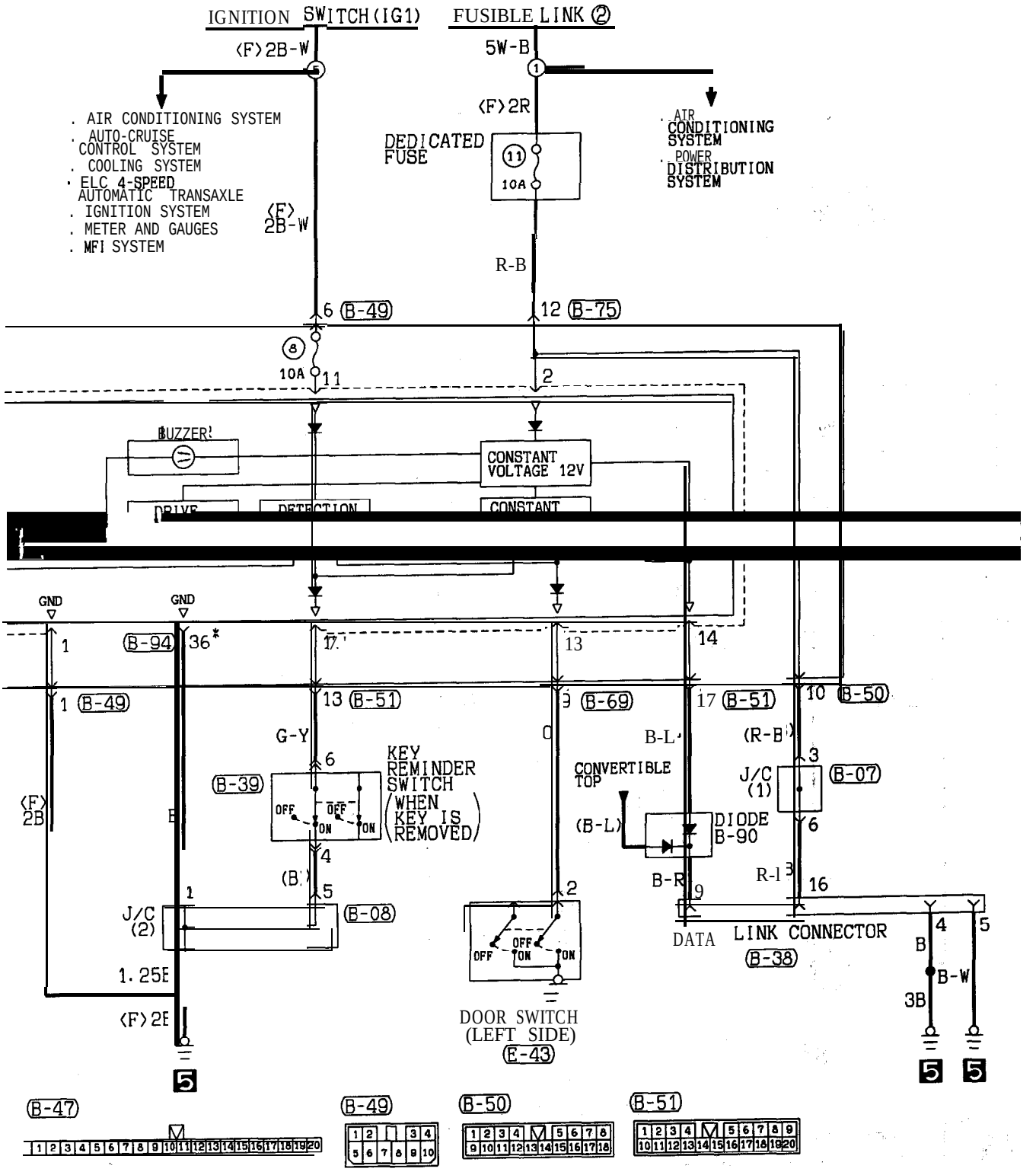
IGNITION SWITCH (IG1)
FUSIBLE LINK ②
(F) 2B-W
5W-B
. AIR CONDITIONING SYSTEM
. AUTO-CRUISE CONTROL SYSTEM
. COOLING SYSTEM
. ELC 4-SPEED AUTOMATIC TRANSAXLE
. IGNITION SYSTEM
. METER AND GAUGES
. MFI SYSTEM
(F) 2B-W
(F) 2R
DEDICATED FUSE
10A
. AIR CONDITIONING SYSTEM
. POWER DISTRIBUTION SYSTEM
R-B
6 (B-49)
12 (B-75)
10A
BUZZER
CONSTANT VOLTAGE 12V
GND
GND
(B-94)
1 (B-49)
13 (B-51)
(B-69)
17 (B-51)
10 (B-50)
G-Y
B-L
(R-B)
KEY REMINDER SWITCH (WHEN KEY IS REMOVED)
(B-39)
OFF
ON
CONVERTIBLE TOP
J/C (1)
(B-07)
(F) 2B
(B-L)
DIODE B-90
B-R
R-L
J/C (2)
(B-08)
1.25E
(F) 2E
DOOR SWITCH (LEFT SIDE)
(E-43)
DATA LINK CONNECTOR
(B-38)
B
B-W
3B
(B-47)
(B-49)
(B-50)
(B-51)
Wire color code
B :Black
BR:Brown
LG:Light green
O :Orange
G :Green
GR:Gray
L :Blue
R :Red
W :White
P :Pink
Y :Yellow
V :Violet
SB:Sky blue
HF15M14AB

IGNITION KEY REMINDER WARNING BUZZER <ECLIPSE>

90101130084

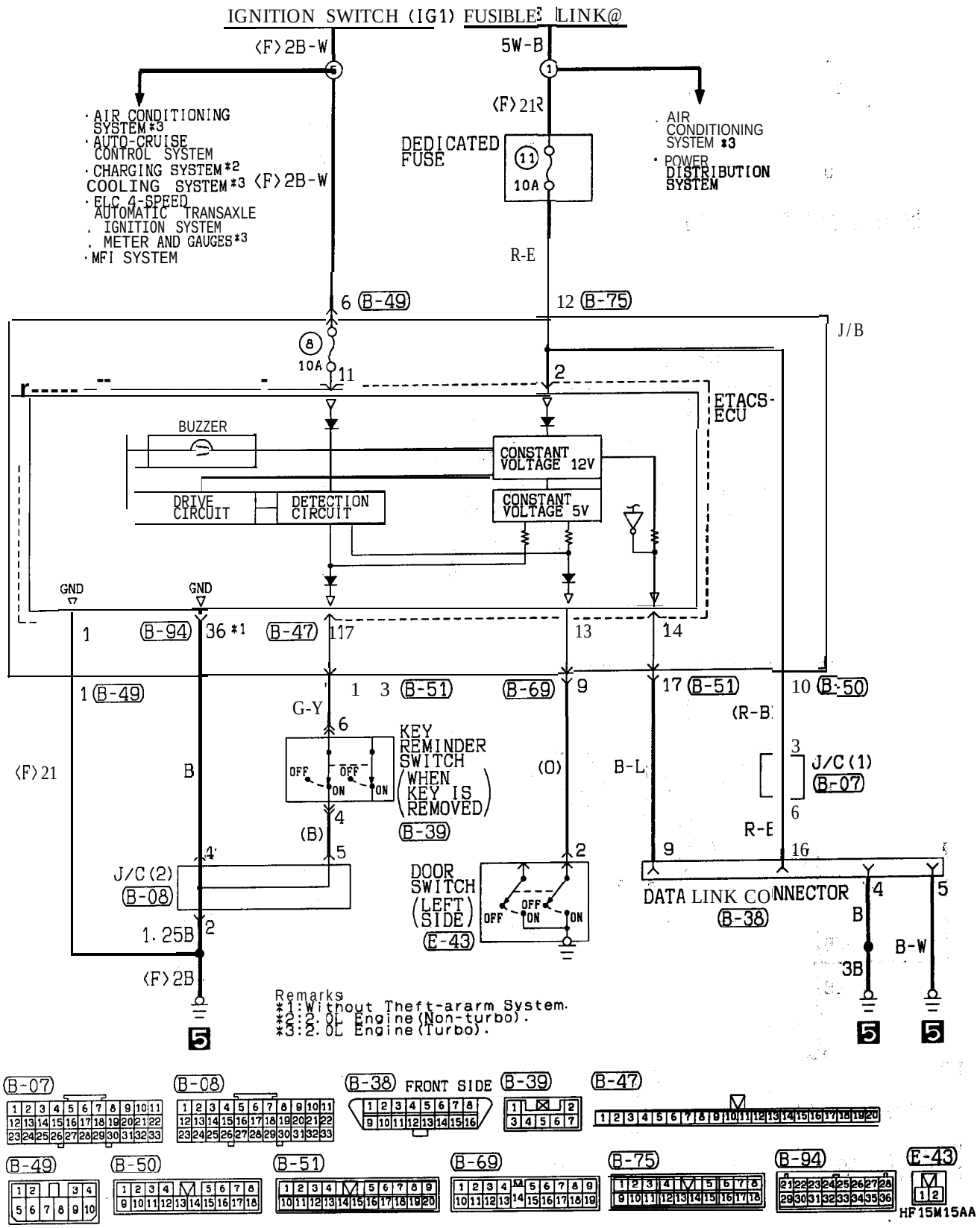

TSB Revision

IGNITION KEY REMINDER WARNING BUZZER <ECLIPSE SPYDER>

90101130091

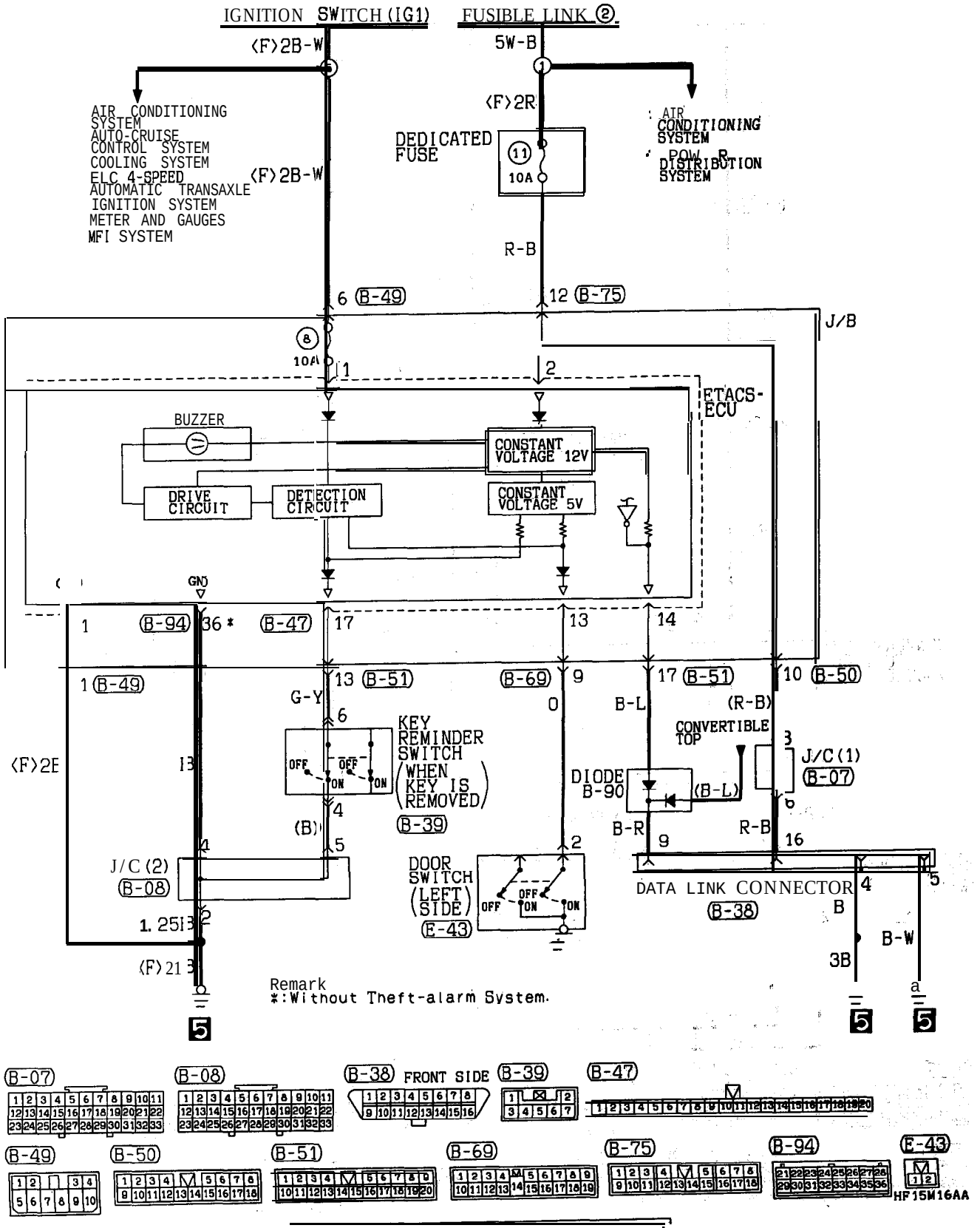

CONVERTIBLE TOP

90101500038

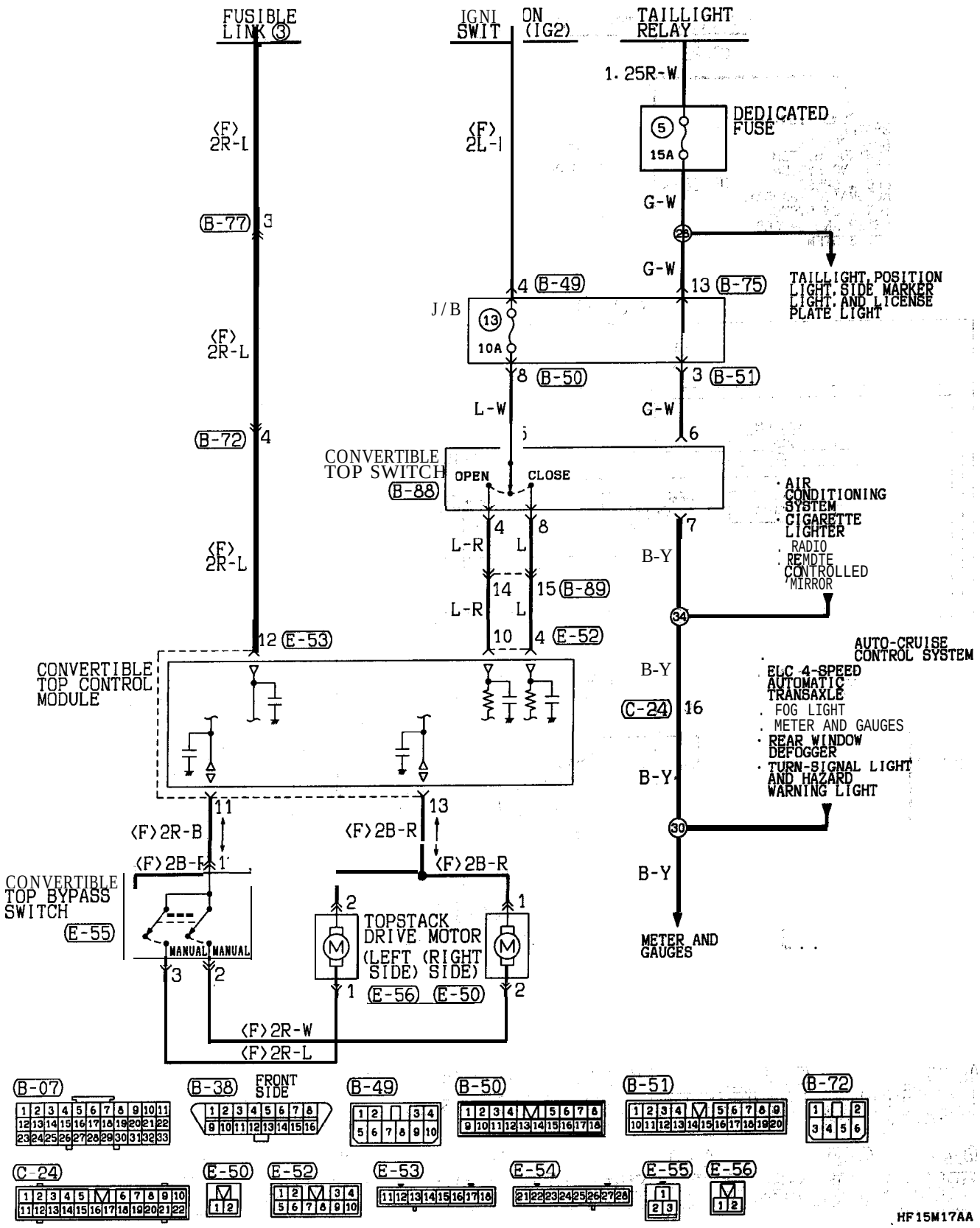

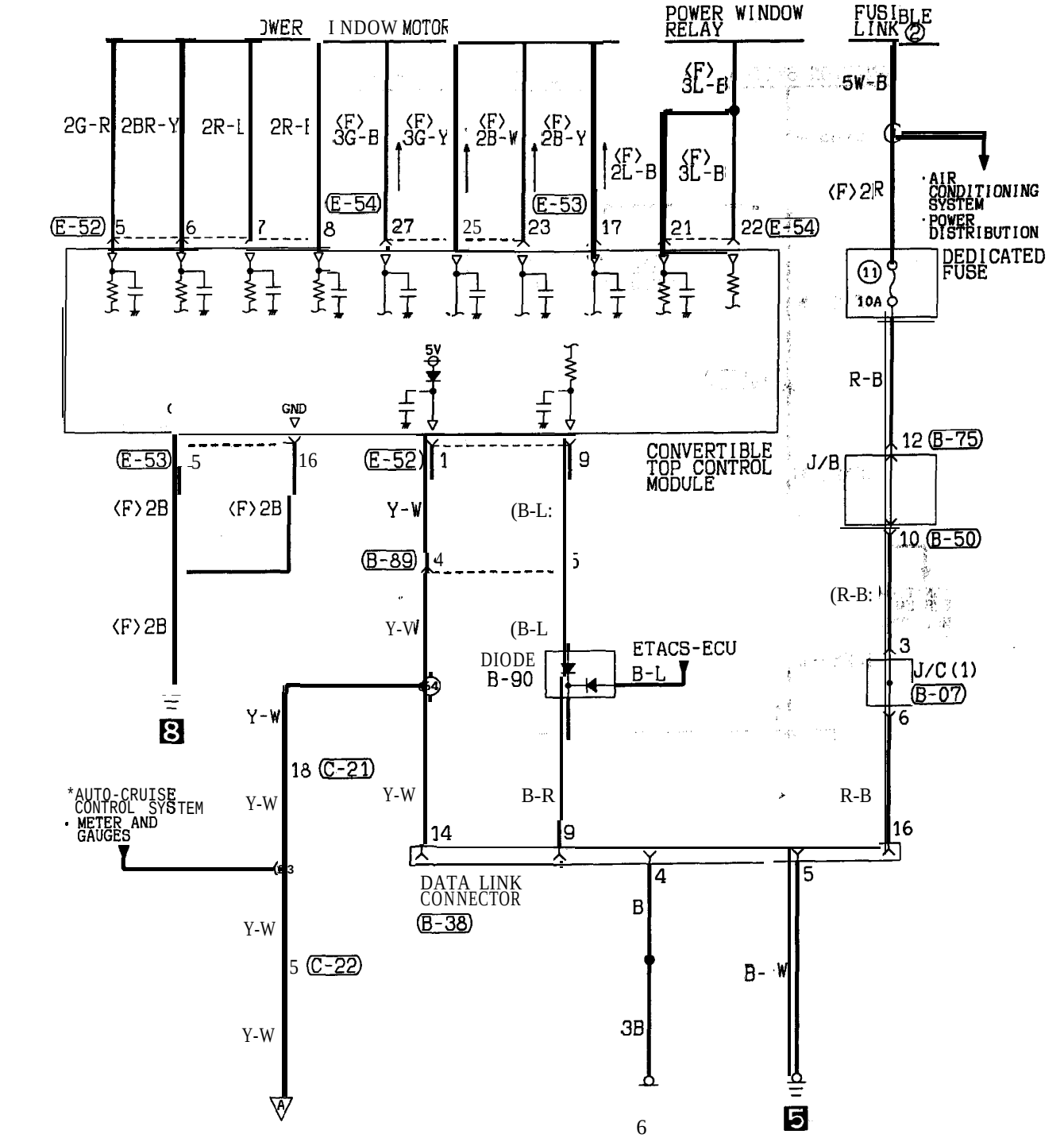

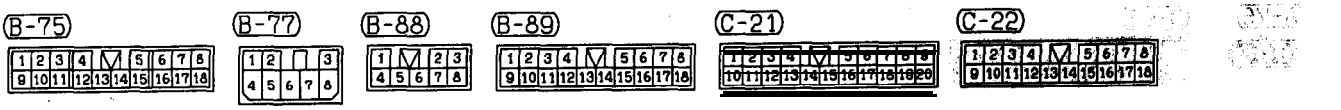

Wire color code
B :Black LG:Light green G :Green L :Blue W :White Y :Yellow SB:Sky blue
BR:Brown O :Orange GR:Gray R :Red P :Pink V :Violet

HF15M17AB

CONVERTIBLE TOP (CONTINUED)

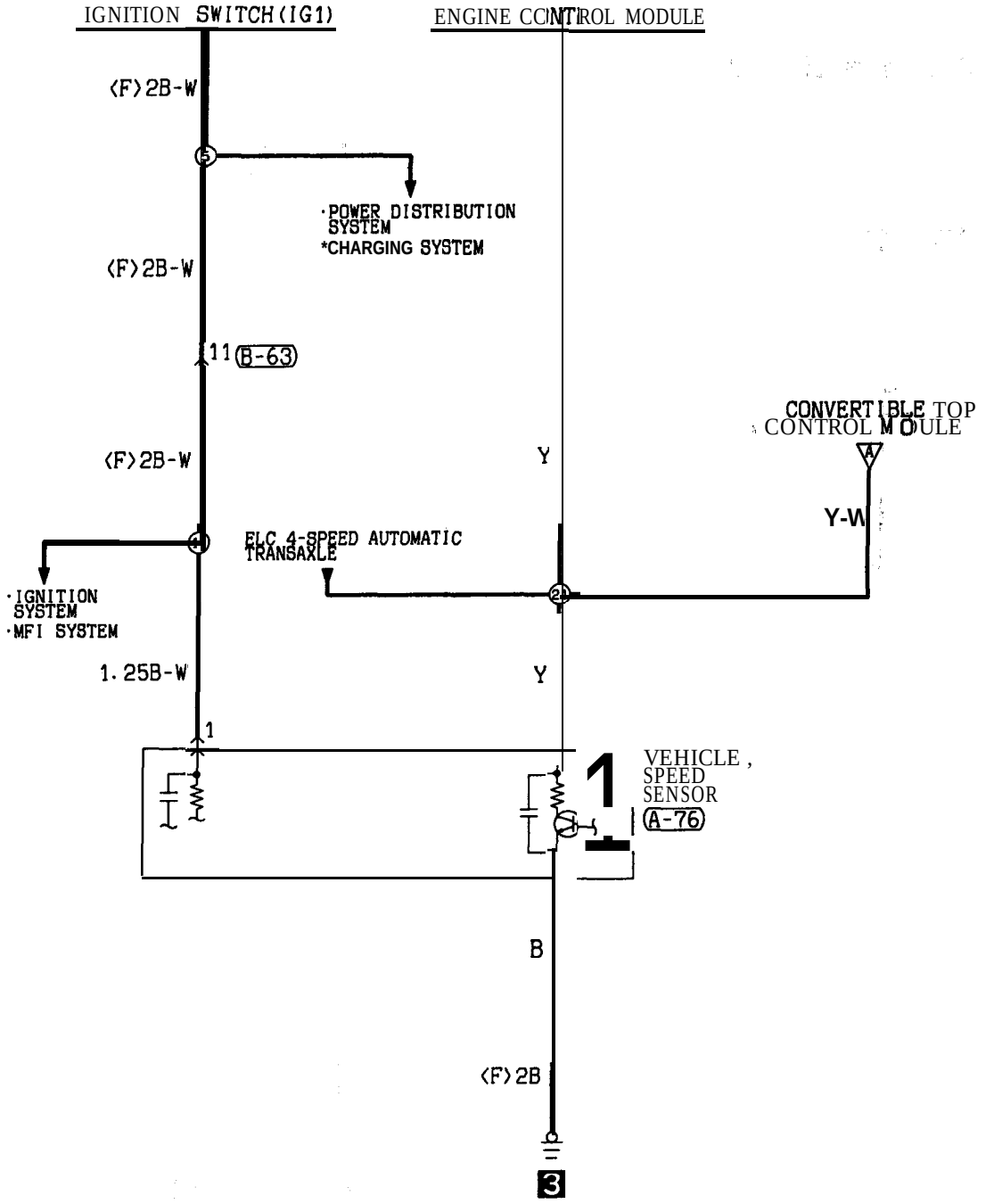

(A-76) (B-63)

Wire color code
B :Black LG:Light green G :Green L :Blue W :White Y :Yellow SB:Sky blue
BR:Brown O :Orange GR:Gray R :Red P :Pink V :Violet

HF15M17BA

TSB Revision

ENGINE ELECTRICAL

CONTENTS

16109000066

CONTINUED ON NEXT PAGE

CHARGING SYSTEM <2.0L ENGINE (NON-TURBO)>

16100010075

GENERAL INFORMATION

The charging system uses generator output to keep the battery charged at a constant level under various electrical loads.

GENERATOR SPECIFICATIONS

Items	Specifications
Identification No.	A002T81292
Part No.	M04661 998
Rated output	90 A

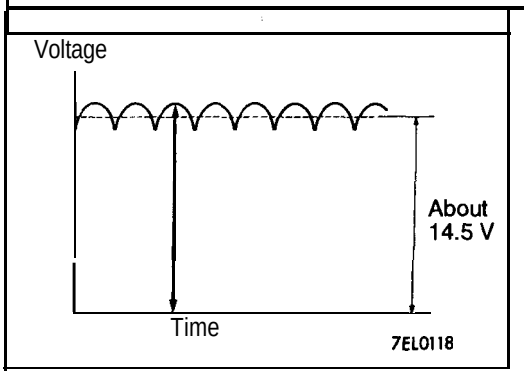

OPERATION

Rotation of the excited field coil generates AC voltage in the stator.
This alternating current is then rectified through diodes to produce DC voltage. Refer to the waveform shown in the illustration at left.
The average output voltage fluctuates slightly with the generator load condition.

When the MFI relay (ASD relay) is on and the control circuit is grounded by the powertrain control module (PCM), current flows to the field coil, initial energization of the field coil. The stator coil starts to generate power after the engine is started.
The generator output voltage rises as field current increases and falls as field current decreases.
Accordingly, when the battery positive voltage reaches target voltage value, the PCM turns the field current off. When the battery positive voltage is below target value*, the PCM turns the field current on to maintenance generator voltage at a constant level. If the field current is constant, the generator output voltage will increase along with increases in engine speed.
*: The target voltage is programmed in the PCM according to battery temperature.

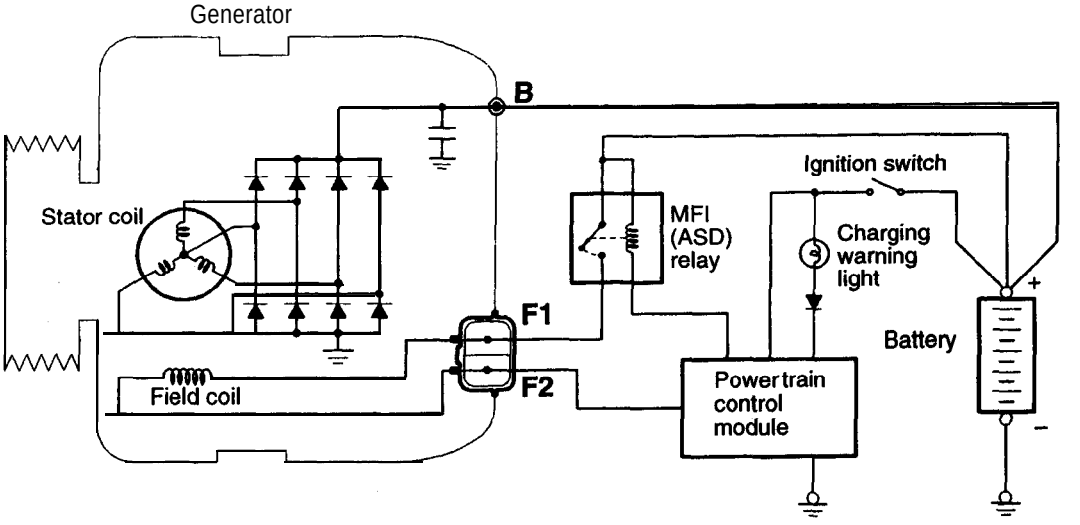

CEN0107

SERVICE SPECIFICATIONS

16100030064

Items		Standard value	Limit
Regulated voltage at each temperature near the battery V	– 20°C (– 4°F)	14.07– 15.07	
	0°C (32°F)	13.89 – 14.89	
	20°C (68°F)	13.58 – 14.58	
	40°C (104°F)	13.15 – 14.15	
	62°C (143.6°F)	12.84 – 13.84	
Output current			70 % of nominal output current
Generator output line voltage drop (at 30A) V		–	max. 0.5

TROUBLESHOOTING

16100070103

TROUBLESHOOTING GUIDE

The charging system troubleshooting guide is shown in the following chart.

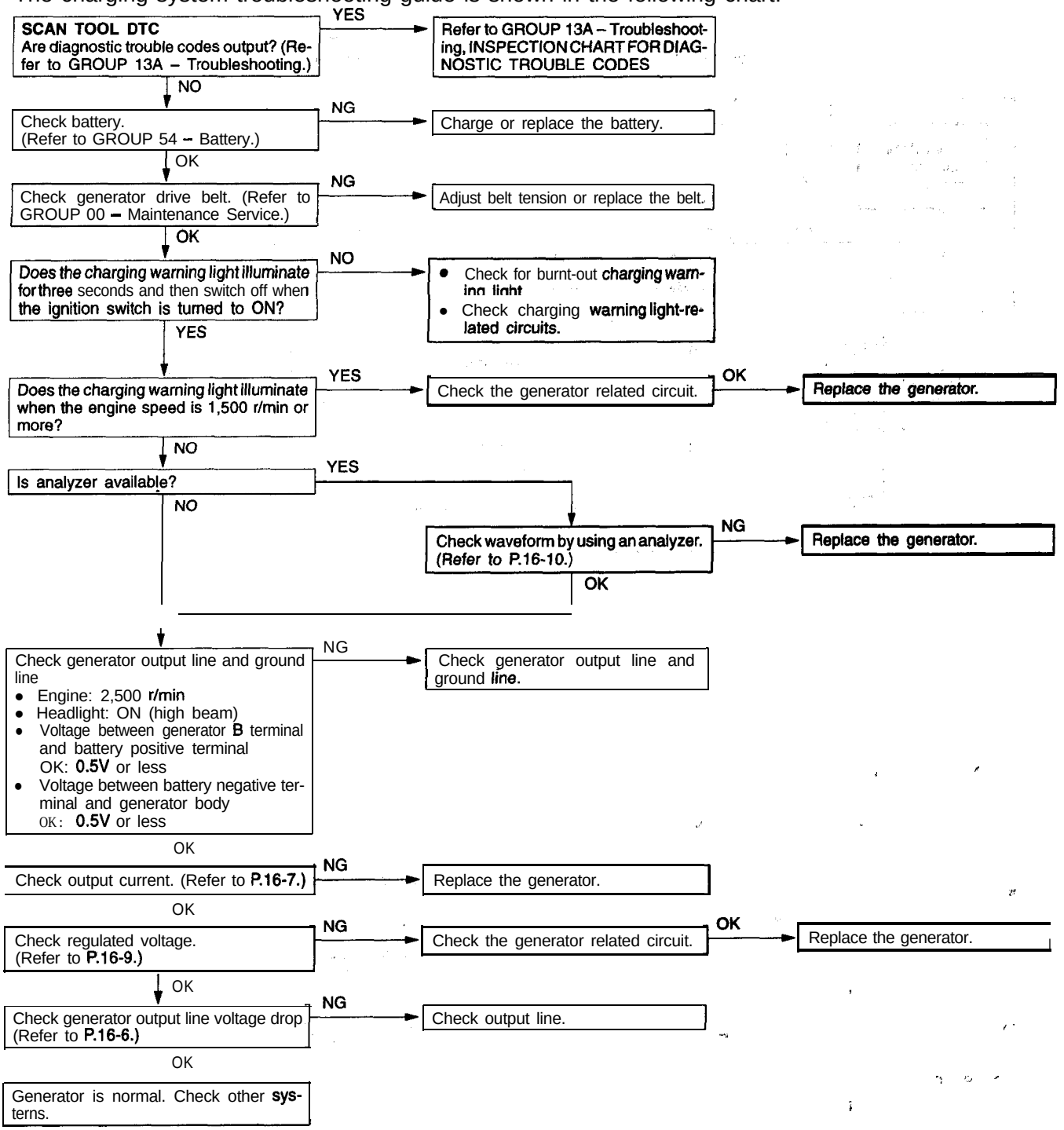

ON-VEHICLE SERVICE

16100090079

GENERATOR OUTPUT LINE VOLTAGE DROP TEST

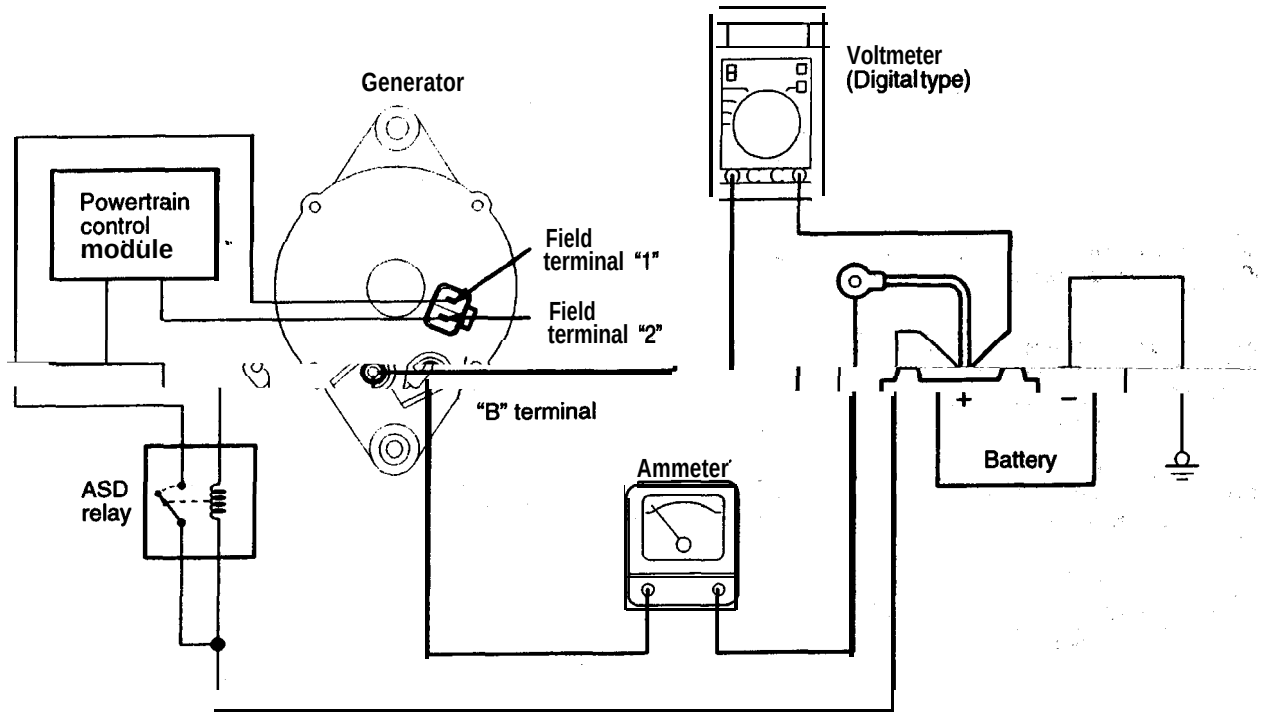

This test determines the condition of the wiring from the generator "B" terminal to the battery (+) terminal (including the fusible link).

(1) Be sure to check the following before testing:
- Generator installation and wiring connections
- Generator drive belt tension (Refer to GROUP 00 – Maintenance Service.)
- Fusible link
- Abnormal noise from the generator while the engine is running

(2) Turn the ignition switch to the OFF position.

(3) Disconnect the negative battery cable.

(4) Disconnect the generator output wire from the generator "B" terminal. Connect a DC test ammeter with a range of 0 – 100 A in series between the "B" terminal and the disconnected output wire. (Connect the (+) lead of the ammeter to the "B" terminal. Connect the (–) lead of the ammeter to the disconnected output wire.)

NOTE
An inductive-type ammeter which enables measurements to be taken without disconnecting the generator output wire is recommended. Using this equipment will lessen the possibility of a voltage drop caused by a loose "B" terminal connection.

(5) Connect a digital-type voltmeter between the generator "B" terminal and the battery (+) terminal. (Connect the (+) lead of the voltmeter to the "B" terminal. Connect the (–) lead of the voltmeter to the battery (+) cable.)

(6) Reconnect the negative battery cable.
(7) Leave the hood open.
(8) With the engine running at approx. 2500 r/min, turn the headlights and other lights on and off to adjust the generator load on the ammeter slightly above 30 A.
Decrease the engine speed gradually until the value displayed on the ammeter is 30 A. Take a reading of the value displayed on the voltmeter at this time.

Limit: max. 0.5 V

NOTE
If the generator output is high and the value displayed on the ammeter does not decrease to 30 A, set the value to 40 A and read the value displayed on the voltmeter. In this case, limit is max. 0.7 V.

(9) If the value displayed on the voltmeter is still above the limit, a malfunction in the generator output wire may exist. Check the wiring between the generator "B" terminal and the battery (+) terminal (including fusible link).
If a terminal is not sufficiently tight or if the harness has become discolored due to overheating, repair, then test again.
(10) After the test, run the engine at idle.
(11) Turn off all lights and turn the ignition switch to the OFF position.
(12) Disconnect the negative battery cable.
(13) Disconnect the ammeter and voltmeter.
(14) Connect the generator output wire to the generator "B" terminal.
(15) Connect the negative battery cable:

OUTPUT CURRENT TEST

16100100079

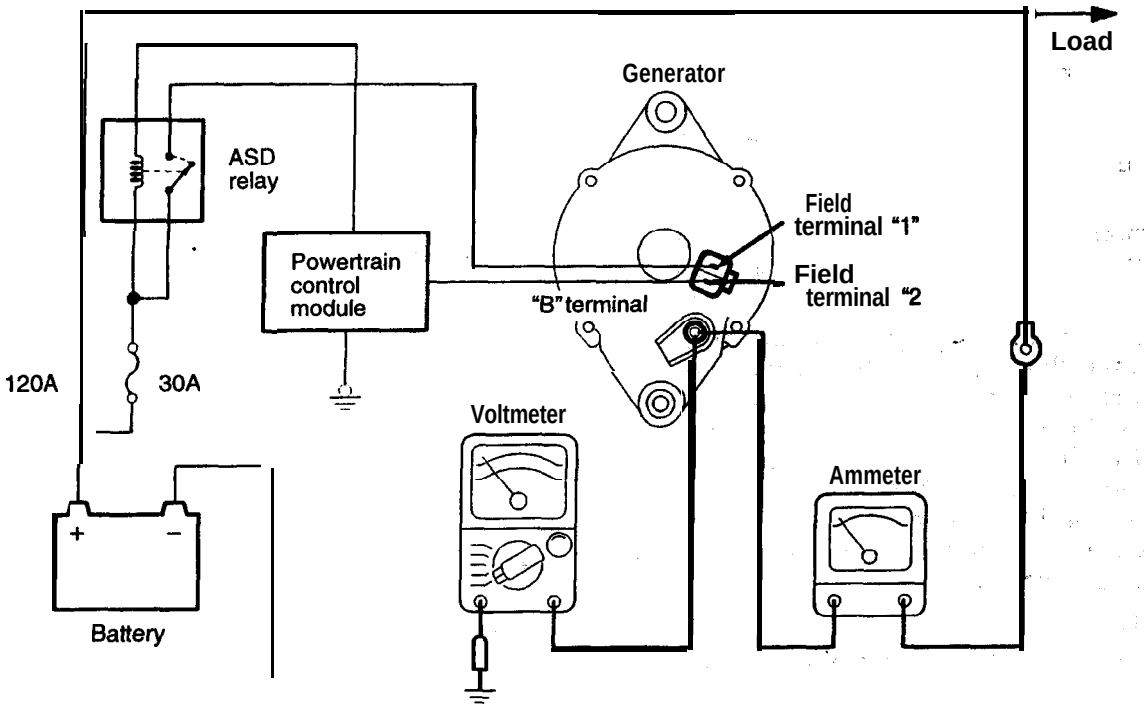

CEN0109

This test determines if the generator output current is normal.

(1) Before testing, be sure to check the following:
- Generator installation and wiring connections
- Battery (Refer to GROUP 54 – Battery.)

NOTE
The battery used should be slightly discharged. The load needed by a fully-charged battery is insufficient for an accurate test.

- Generator drive belt tension (Refer to GROUP 00 – Maintenance Service.)
- Fusible link
- Abnormal noise from the generator while the engine is running

(2) Turn the ignition switch to the OFF position.
(3) Disconnect the negative battery cable.
(4) Disconnect the generator output wire from the generator "B" terminal. Connect a DC test ammeter with a range of 0–100 A in series between the "B" terminal and the disconnected output wire. (Connect the (+) lead of the ammeter to the "B" terminal. Connect the (–) lead of the ammeter to the disconnected output wire.)

Caution
Never use clips but tighten bolts and nuts to connect the line. Otherwise loose connections (e.g. using clips) will lead to a serious accident because of high current.

NOTE
An inductive-type ammeter which enables measurements to be taken without disconnecting the generator output wire is recommended.

(5) Connect a voltmeter with a range of 0–20 V between the generator "B" terminal and the ground. (Connect the (+) lead of the voltmeter to the "B" terminal, and then connect the (–) lead of the voltmeter to the ground.)
(6) Connect the negative battery cable.
(7) Leave the hood open.
(8) Check that the reading on the voltmeter is equal to battery voltage.

NOTE
If the voltage is 0 V, the cause is probably an open circuit in the wire or fusible link between the generator "B" terminal and the battery (+) terminal.

(9) Start the engine, and turn the headlights on.
(10) Switch the headlights to high beam, turn the heater blower switch to High, increase the engine speed to approx. 2,500 r/min, and read the maximum. current output displayed on the ammeter.

Limit: 70% of nominal output current

NOTE
- For the nominal current output, refer to the Generator Specifications.
- Because the current from the battery will soon drop after the engine is started, Step (9), (10) should be carried out as quickly as possible in order to obtain the maximum current output" value,
- The current output' value will depend on the electrical load and the temperature of the generator body.
- If insufficient electrical load is used while testing, the specified level of current may not be output even though the generator is normal. In such cases, increase the electrical load by leaving the headlights on with the engine off to discharge the battery before testing.
- The specified level of current also may not be output if the temperature of the generator body and/or ambient temperature is too high. In such cases, allow the generator to cool before testing.

(11) The reading on the ammeter should be above the limit value. If the reading 'is below the limit value 'and the generator output wire is normal, replace the generator.
(12) Run the engine at idle speed after the test.
(13) Turn the ignition switch to the OFF position.
(14) Disconnect the negative battery cable.
(15) Disconnect the ammeter and voltmeter.
(16) Connect the generator output wire to the generator "B" terminal.
(17) Connect the negative battery cable.

REGULATED VOLTAGE TEST

16100110072

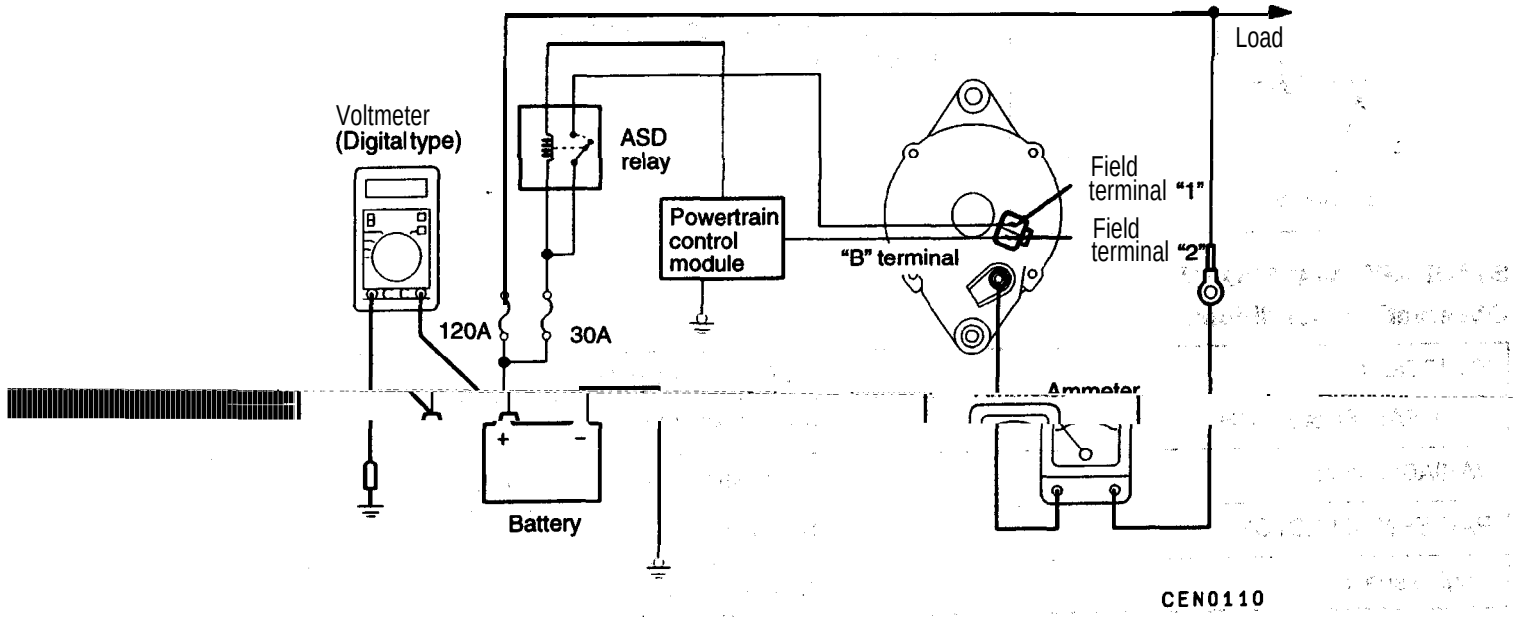

This test determines if the powertrain control module is correctly controlling the generator output voltage.

(1) Before tesing, be sure to check the following:
- Generator installation and wiring connections
- Battery fully charged. (Refer to GROUP 54 – Battery.)
- Generator drive belt tension (Refer to GROUP 00 – Maintenance Service.)
- Fusible link
- Abnormal noise from the generator while the engine is running

(2) Turn the ignition switch to the OFF position.
(3) Disconnect the negative battery cable.
(4) Connect a digital-type voltmeter between the battery (+) terminal and the ground. (Connect the (+) lead of the voltmeter to the battery (+) terminal. Connect the (–) lead of the voltmeter to a secure ground or to the battery (–) terminal.)
(5) Disconnect the generator output wire from the generator "B" terminal.
(6) Connect a DC test ammeter with a range of O-l OOA in series between the "B" terminal and the disconnected output wire. (Connect the (+) lead of the ammeter to the "B" terminal. Connect the (–) lead of the ammeter to the disconnected output wire.)
(7) Reconnect the negative battery cable.
(8) Make sure all lights and accessories are off.
(9) Connect a tachometer and start the engine.
(10) Increase the engine speed to approx. 2,500 r/min.
(11) Read the voltmeter when the current output by the generator becomes 10 A or less.
(12) If the voltage reading conforms to the value in the voltage regulation table, the voltage regulator is operating normally.
If the voltage is not within the standard value, a malfunction of the voltage regulator or generator exists.
(13) After the test, lower the engine speed to idle speed.
(14) Turn the ignition switch to the "OFF" position.
(15) Disconnect the negative battery cable.
(16) Disconnect the ammeter, voltmeter, and tachometer.
(17) Connect the generator output wire to the generator "B" terminal.
(18) Connect the negative battery cable.

Voltage Regulation Table

Battery ambient temperature °C (°F)	Standard value V
-20 (-4)	14.07– 15.07
0 (32)	13.89–1 4.89
20 (68)	13.58–14.58
40 (104)	13.15-14.15
62 (143.6)	12.84–13.84

TSB Revision

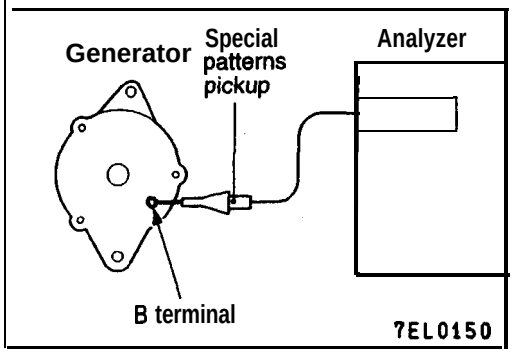

WAVEFORM CHECK USING AN ANALYZER

16100120136

MEASUREMENT METHOD

Connect the analyzer special patterns pick-up to the generator B terminal.

STANDARD WAVEFORM

Observation Conditions

FUNCTION	SPECIAL PATTERNS
PATTERN HEIGHT	VARIABLE
VARIABLE knob	Adjust while viewing the waveform
PATTERN SELECTOR	RASTER
Engine speed	Curb idle speed

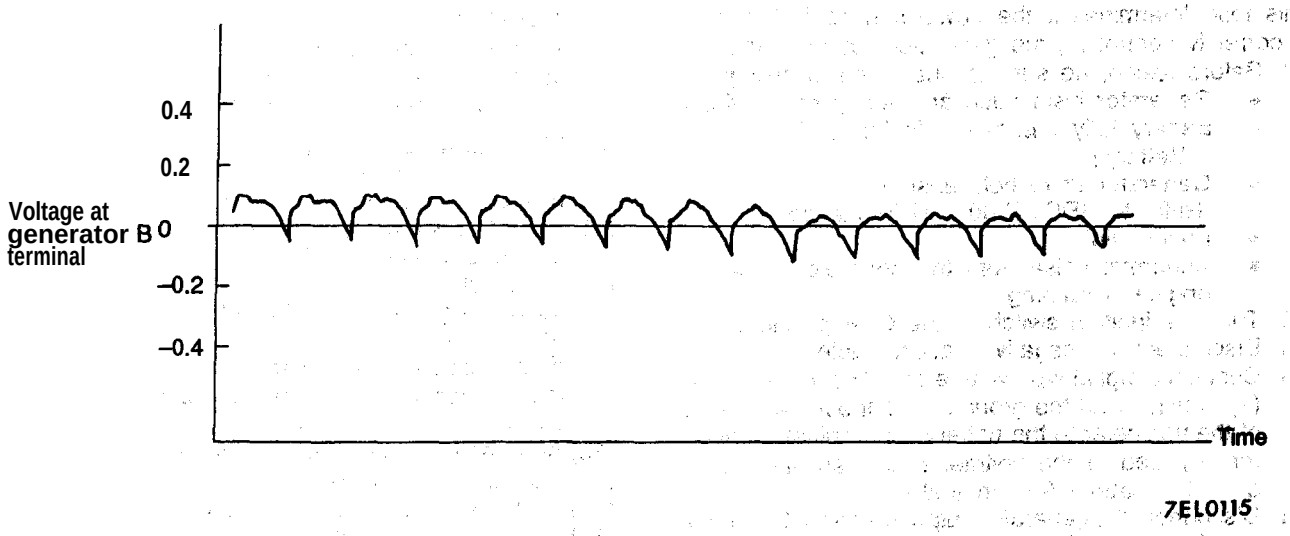

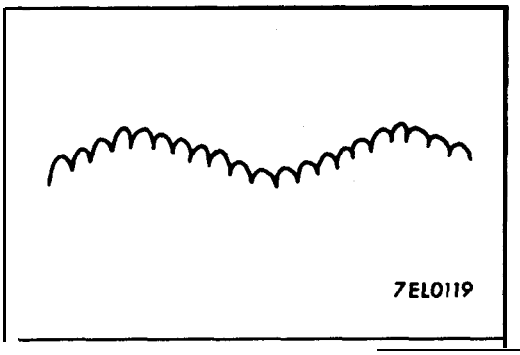

NOTE

The voltage waveform of the generator B terminal can undulate as shown at left. This waveform is produced when the regulator operates according to fluctuations in the generator load (current), and is normal for the generator.

In addition, if the ripples are abnormally high (more than approximately 2 V when the engine is idling), the cause is probably an open circuit between the generator B terminal and the battery due to a blown fuse, and the generator itself is usually okay.

ABNORMAL WAVEFORMS EXAMPLES

NOTE

1. The size of the waveform patterns differs largely, depending on the 'adjustment of the analyzer's variable knob.
2. Identification of abnormal waveforms is easiest with a large output current (regulator not operating). These waveforms can be observed when the headlights are on.
3. Check the condition of the charging warning light (illuminated/riot illuminated). Also, and check the charging system totally.

Abnormal waveforms	Problem cause
Example 1  7EL0120	Open diode
Example 2 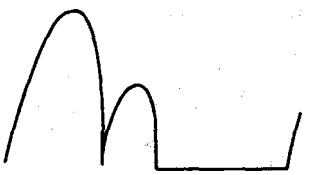 7EL0121	Short in diode
Example 3  7EL0122	Broken wire in stator coil
Example 4  7EL0123	Short in stator coil
:xample 5  Charging warning light is illuminated. 7EL0124	Open supplementary diode

GENERATOR

16100140118

REMOVAL AND INSTALLATION

Pre-removal Operation
- Under Cover Side Panel Removal
  (Refer to GROUP 42 – Under Cover.)
- Speed Control Assembly Removal
  <Vehicles with Auto-cruise Control>
  (Refer to GROUP 17 -Auto-cruise Control System.)

Post-installation Operation
- Speed Control Assembly Installation
  <Vehicles with Auto-cruise Control>
  (Refer to GROUP 17 – Auto-cruise Control System.)
- Drive Belt Tension Adjustment
  (Refer to GROUP 00 – Maintenance Service.)
- Under Cover Side Panel Installation
  (Refer to GROUP 42 – Under Cover.)

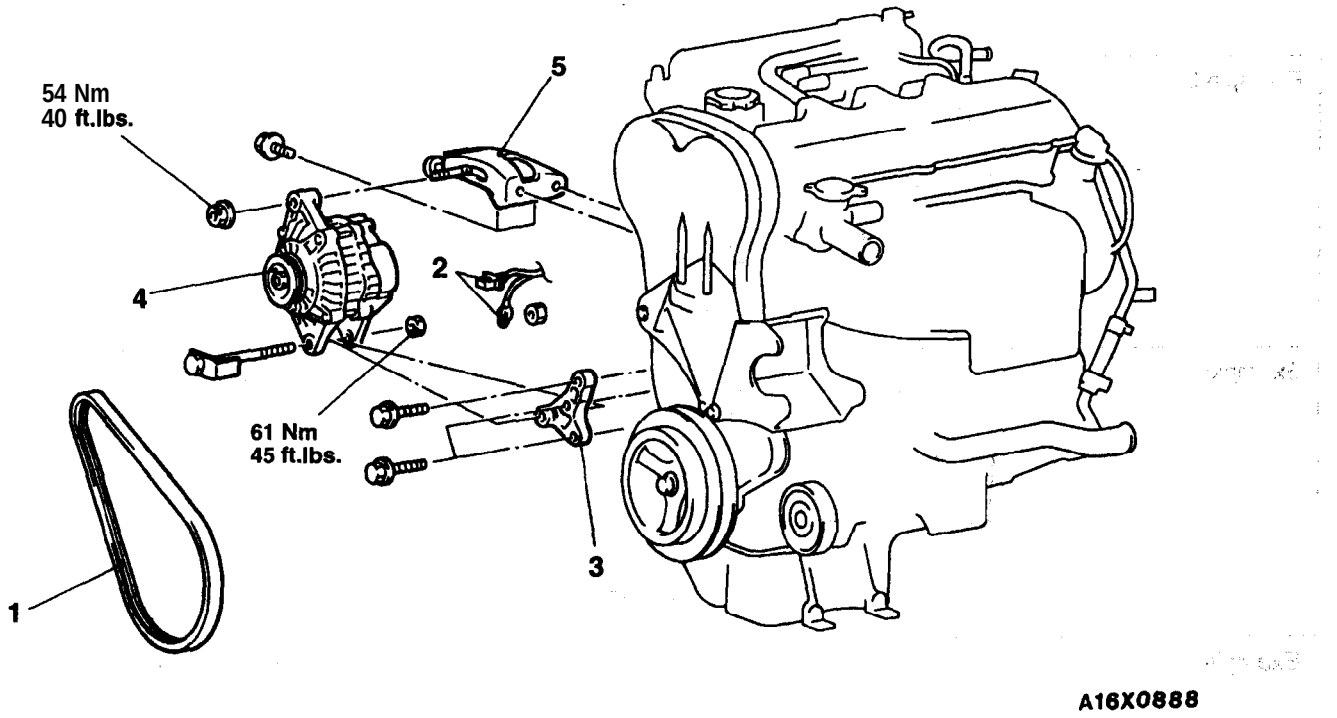

Removal 'steps

1. Drive belt (Generator)
2. Generator harness connector
3. Generator bracket
4. Generator
5. Generator brace

TSB Revision

CHARGING SYSTEM <2.0L ENGINE (TURBO) AND 2.4L ENGINE>

16100010259

GENERAL INFORMATION

The charging system uses generator output to keep the battery charged at a constant level under various electrical loads.

GENERATOR SPECIFICATIONS

Items	M/T	2.0L Engine (A/T)	2.4L Engine (A/T)
Type	Battery voltage sensing	Battery voltage sensing	Battery voltage sensing
Identification No.	A2TA0891	A2TA0892	A2T82791
Part No.	MD31 3392	MD32751 3	MD31 0997
Rated output V/A	12/75	12/75	12190
Voltage regulator	Electronic built-in type	Electronic built-in type	Electronic built-in type

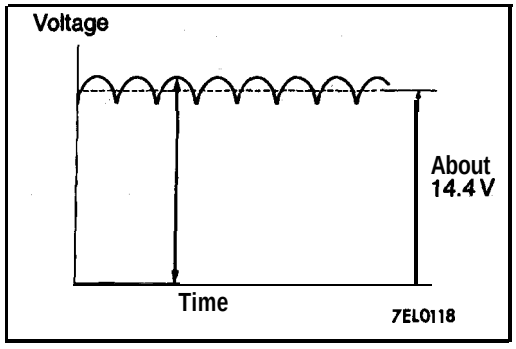

Operation

Rotation of the excited field coil generates AC voltage in the stator.

This alternating current. is then rectified through diodes, to procedure DC voltage. Refer to the waveform shown in the illustration at left.

The average output voltage fluctuates, slightly with the generator load condition..

When the ignition switch is turned on, current flows in the field coil, causing initial excitation of the field coil.

When the stator coil begins to generate power after the engine is started, the field coil is excited by the output current of the stator coil.

The generator output voltage rises as field current increases and falls as field current decreases. When the battery voltage (generator S terminal voltage) reaches a regulated voltage of approx. 14.4V, the field current is cut off. When the battery voltage drops below the, regulated voltage, the voltage regulator regulates the output voltage to a constant level by controlling the field current.

In addition, when the field current is constant, the. generator output voltage rises as the engine speed increases.

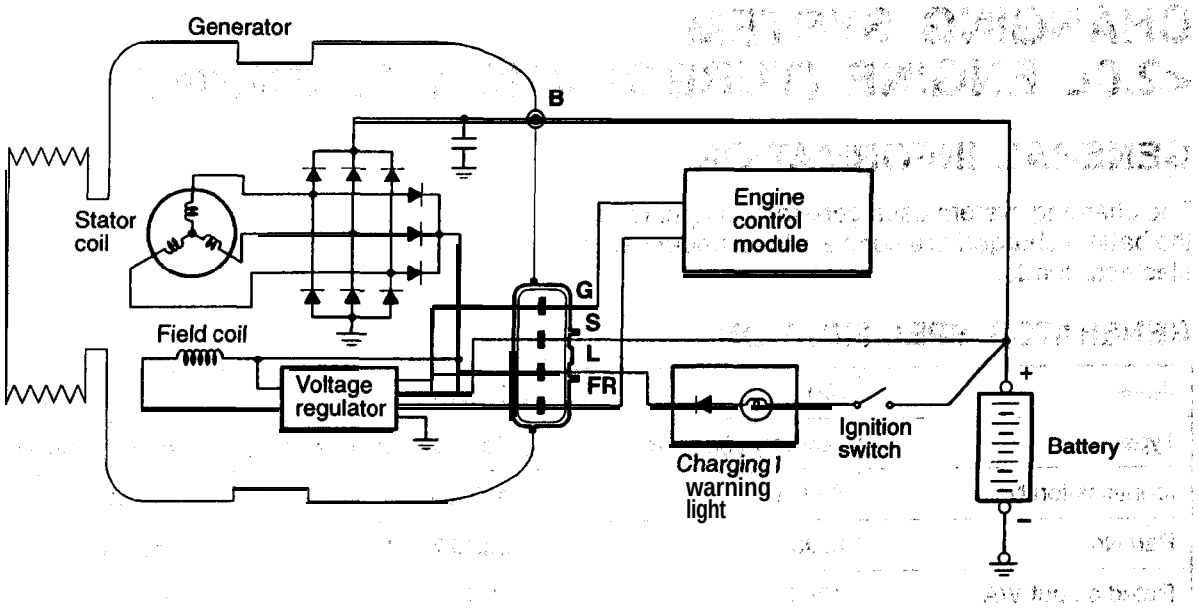

6EN0934

When engine is stopped

When the ignition switch is switched to the "ON" position, electricity flows from the **"L"** terminal of the generator to the rotor coil (field coil), and at the same time the charging warning light illuminates.

When engine is being started/has started

When the engine is started, charging voltage is applied to the **"L"** terminal of the generator, with the result that the charging warning light is extinguished.

In addition, because battery voltage is applied to the **"S"** terminal of the generator, this battery voltage is monitored at the IC voltage regulator, thus switching ON and OFF the current to the rotor coil (field coil) and thereby controlling the output voltage of the generator.

Power is supplied to each load from the **"B"** terminal of the generator.

NOTE

The generator relay functions as a back-up for the flow of electricity to the rotor coil (field coil) if there is a disconnection or damaged wiring of the charging warning light.

<Charging system warning light>

This warning light illuminates when the ignition key is in "ON" position, and goes off after the engine has started. This indicator comes on when the drive belt breaks or the trouble occurs in the charging system.

SERVICE SPECIFICATIONS

16100030071

Items		Standard value	Limit
Regulated voltage V (Ambient temp. at voltage regulator)	–20°C (–4°F)	14.2–15.4	–
	20°C (68°F)	13.9-14.9	
	60°C (140°F)	13.4-14.6	–
	80°C (176°F)	13.1-14.5	–
Field coil resistance Ω		Approx. 3-5	
Generator output line voltage drop (at 30A) V		–	max. 0.3"
Output current			70% of nominal output current

TSB Revision

TROUBLESHOOTING

16100070110

TROUBLESHOOTING GUIDE

The charging system troubleshooting guide is shown in the following chart.

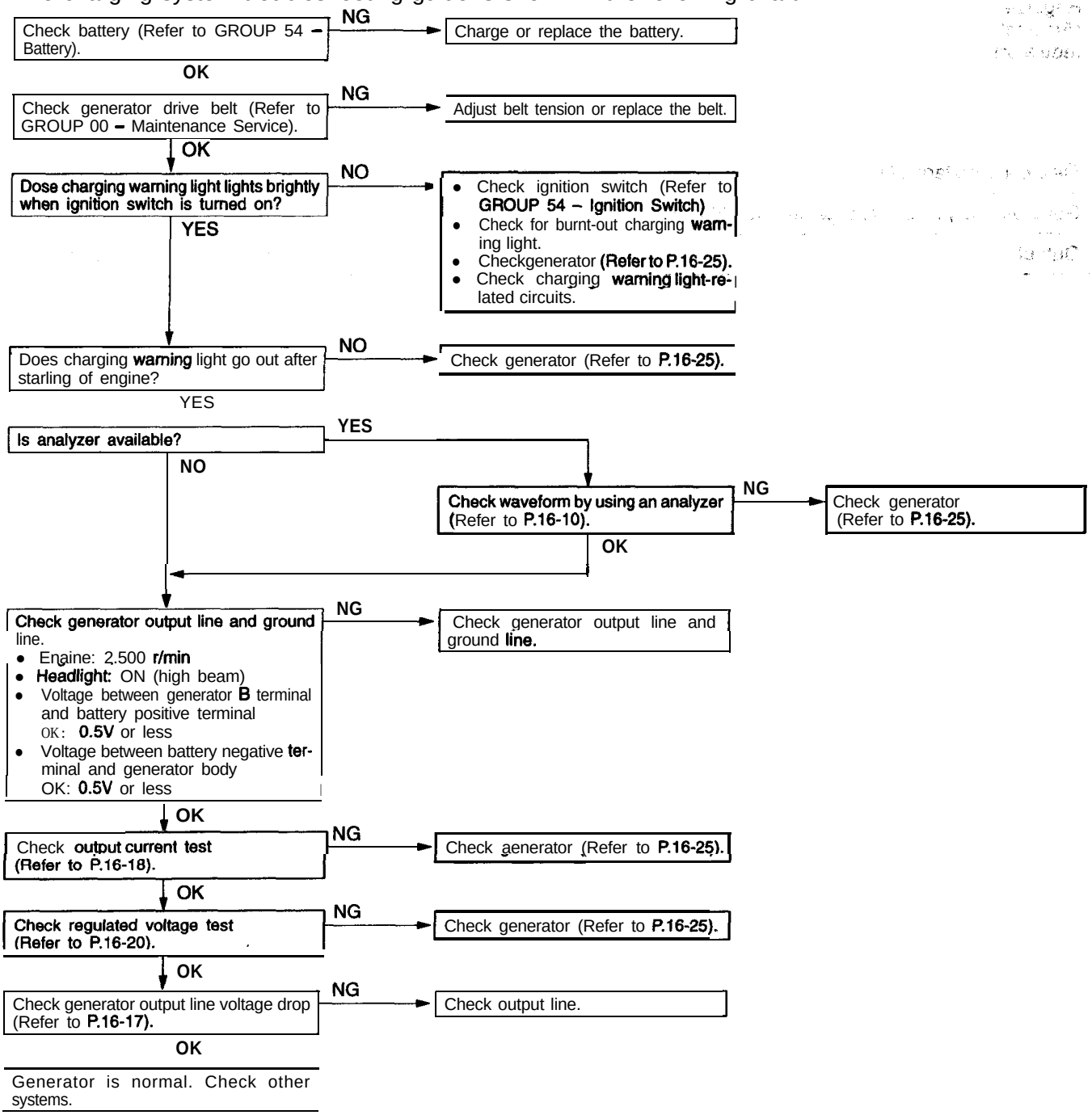

TROUBLESHOOTING HINTS

1. Charging warning light does not go on when the ignition switch is turned to "ON", before the engine starts.
   - Check the bulb.
2. Charging warning light fails to go off once the engine starts.
   - Check the IC voltage regulator (located within the generator).
3. Discharged or overcharged battery.
   - Check the IC voltage regulator (located within the generator).
4. The charging warning light illuminates dimly.
   - Check the diode (within the combination meter) for a short-circuit.

TSB Revision

ON-VEHICLE SERVICE

16100090215

GENERATOR OUTPUT LINE VOLTAGE DROP TEST

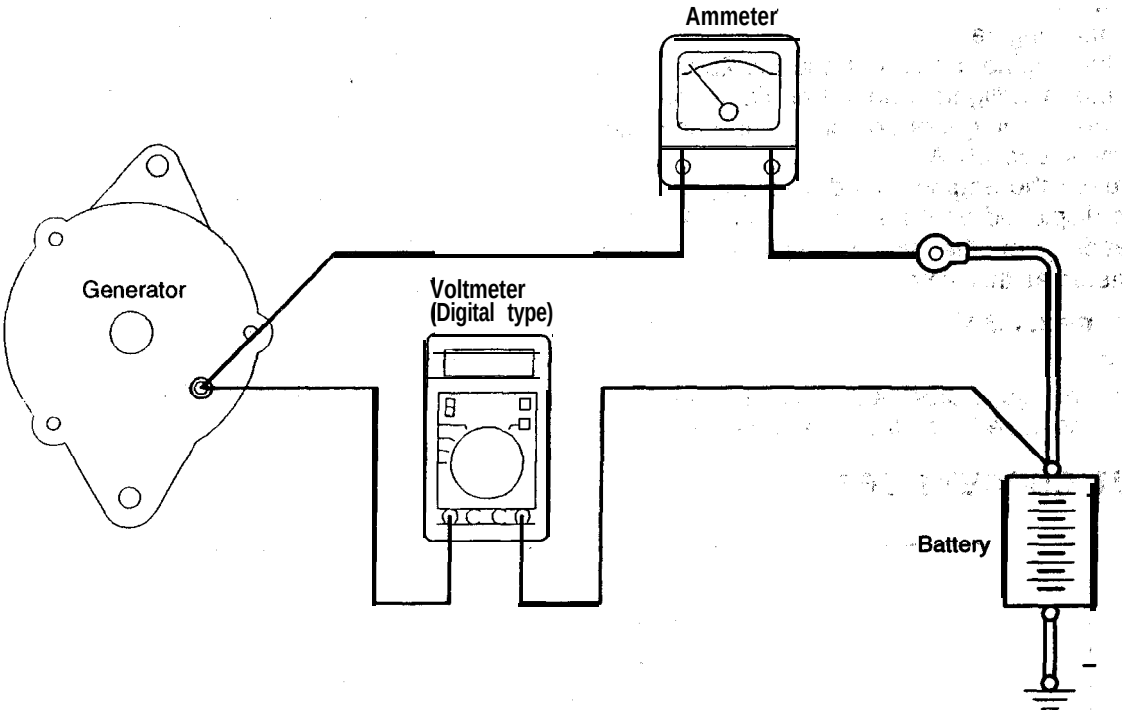

This test determines the condition of the wiring from the generator "B" terminal to the battery (+) terminal (including the fusible link).

(1) Be sure to check the following before testing:
- Generator installation and wiring connections
- Generator drive belt tension (Refer to GROUP 00 – Maintenance Service.)
- Fusible link
- Abnormal noise from the generator while the engine is running

(2) Turn the ignition switch to the OFF position.

(3) Disconnect the negative battery cable.

(4) Disconnect the generator output wire from the generator "B" terminal. Connect a DC test ammeter with a range of 0 – 100 A in series between the "B" terminal and the disconnected output wire. (Connect the (+) lead of the ammeter to the "B" terminal. Connect the (–) lead of the ammeter to the disconnected output wire.)

NOTE
An inductive-type ammeter which enables measurements to be taken without disconnecting the generator output wire is recommended.
Using this equipment will lessen the possibility of a voltage drop caused by a loose "B" terminal connection.

(5) Connect a digital-type voltmeter between the generator "B" terminal and the battery (+) terminal. (Connect the (+) lead of the voltmeter to the "B" terminal. Connect the (–) lead of the voltmeter to the battery (+) cable.)

(6) Connect a tachometer. (For the procedure for connecting the tachometer, refer to GROUP 11A <2.0L Engine> – On-vehicle Service. refer to GROUP 11 E <2.4L Engine> – On-vehicle Service).
(7) Reconnect the negative battery cable.
(8) Leave the hood open and connect a tachometer.
(9) Start the engine.
(IO)With the engine running at approx. 2500 r/min, turn the headlights and other lights on and off to adjust the generator load on the ammeter slightly above 30 A.
Decrease the engine speed gradually until the value displayed on the ammeter is 30 A. Take a reading of the value displayed on the voltmeter at this time.

Limit: max. 0.3 V

NOTE
When the generator output is high and the value displayed on the ammeter does not decrease until 30A, set the value to 40A. Read the value displayed on the voltmeter.
In this case the limit becomes max. 0.4V.

(11) If the value displayed on the voltmeter is still above the limit, a malfunction in the generator output wire may exist. Check the wiring between the generator "B" terminal and the battery (+) terminal (including fusible link).
If a terminal is not sufficiently tight or if the harness has become discolored due to overheating, repair, then test again.
(12)After the test, run the engine at idle.
(13)Turn off all lights and turn the ignition switch to the OFF position.
(14)Disconnect the negative battery cable.
(15)Disconnect the ammeter, voltmeter and tachometer.
(16)Connect the generator output wire to the generator "B" terminal.
(17)Connect the negative battery cable.

OUTPUT CURRENT TEST

16100100215

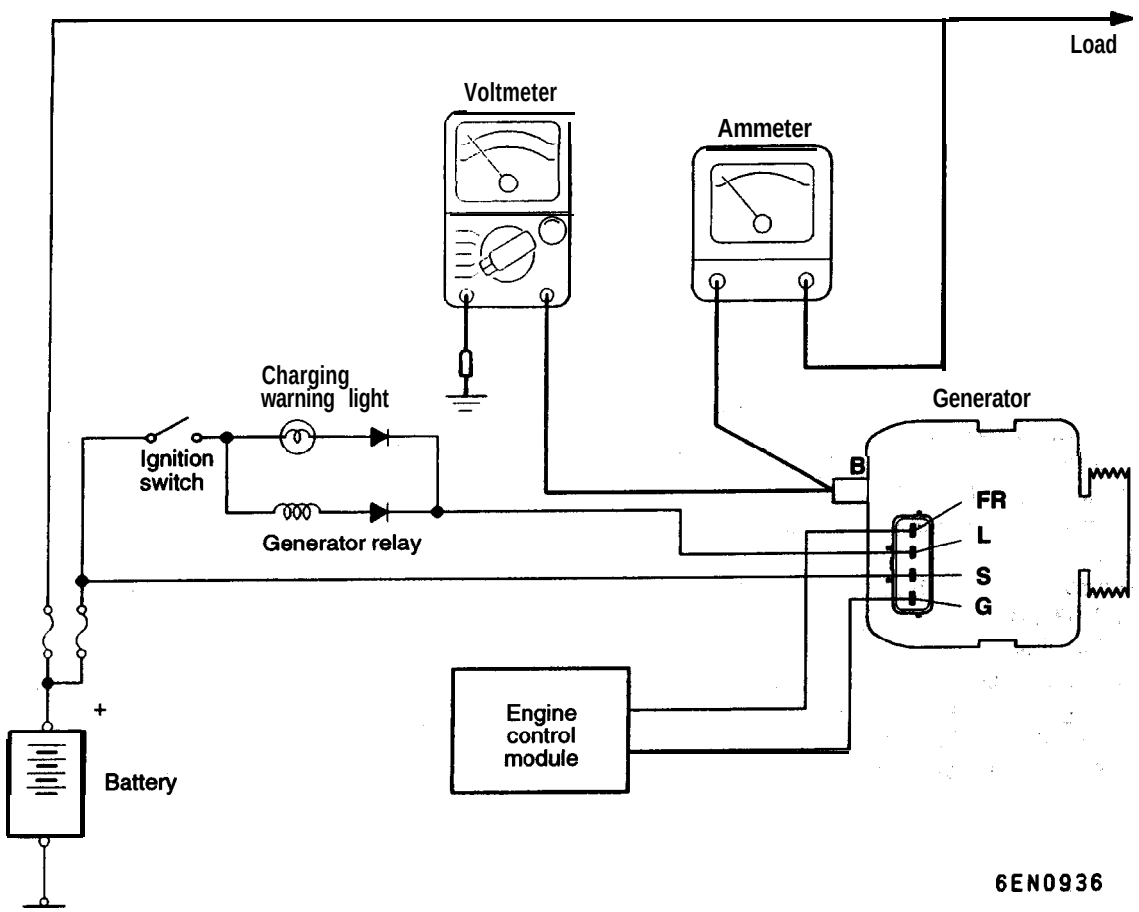

This test determines if the generator output current is normal.

(1) Before testing, be sure to check the following:
- Generator installation and wiring connections
- Battery (Refer to GROUP 54 – Battery.)

NOTE
The battery used should be slightly discharged. The load needed by a fully-charged battery is insufficient for an accurate test.

- Generator drive belt tension (Refer to GROUP 00 – Maintenance Service.)
- Fusible link
- Abnormal noise from the generator while the engine is running

(2) Turn the ignition switch to the OFF position.
(3) Disconnect the negative battery cable.
(4) Disconnect the generator output wire from the generator "B" terminal. Connect a DC test ammeter with a range of 0–100 A in series between the "B" terminal and the disconnected output wire. (Connect the (+) lead of the ammeter to the "B" terminal. Connect the (–) lead of the ammeter to the disconnected output wire.)

Caution
Never use clips 'but tighten bolts and nuts to connect the line. Otherwise loose connections (e.g. using clips) will lead to a serious accident because of high current.

NOTE
An inductive-type ammeter which enables measurements to be taken without disconnecting the generator output wire is recommended.

(5) Connect a voltmeter with a range of 0–20 V between the generator "B" terminal and the ground. (Connect the (+) lead of the voltmeter to the "B" terminal, and then connect the (–) lead of the voltmeter to the ground.)
(6) Connect a tachometer. (For the procedure for connecting the tachometer, refer to GROUP 11A <2.0L Engine> – On-vehicle Service. refer to GROUP 11E <2.4L Engine> – On-vehicle Service).
(7) Connect the negative battery cable.
(8) Leave the hood open.
(9) Check that the reading on the voltmeter is equal to battery voltage.

NOTE
If the voltage is 0 V, the cause is probably an open circuit in the wire or fusible link between the generator "B" terminal and the battery (+) terminal.

(10) Start the engine, and turn the headlights on.
(11) Switch the headlights to high beam, turn the heater blower switch to High, increase the engine speed to approx. 2,500 r/min, and read the maximum current output displayed on the ammeter.

Limit: 70% of nominal output current

NOTE
- For the nominal current output, refer to the Generator Specifications.
- Because the current from the battery will soon drop after the engine is started, Step #10 should be carried out as quickly as possible in order to obtain the maximum current output value.
- The current output 'value will depend on the electrical load and the temperature of the generator body.
- If insufficient electrical load is used while testing, the specified level of current may not be output even though the generator, is normal. In such cases, increase- the electrical load by leaving the headlights on with the engine off to discharge the battery before testing.
- The specified level of current also may not be output if the temperature of the generator body and/or ambient temperature is too high. In such cases, allow the generator to cool before testing.

(12) The reading on the ammeter should be above the limit value. If the reading is below the limit value and 'the generator output wire is normal, remove the generator from the engine and check the generator.
(13) Run the engine at idle speed after the test.
(14) Turn the ignition switch to the OFF position.
(15) Disconnect the negative battery cable.
(16) Disconnect the ammeter, voltmeter and tachometer.
(17) Connect the generator output wire to the generator "B" terminal.
(18) Connect the negative battery cable.

REGULATED VOLTAGE TEST

16100110218

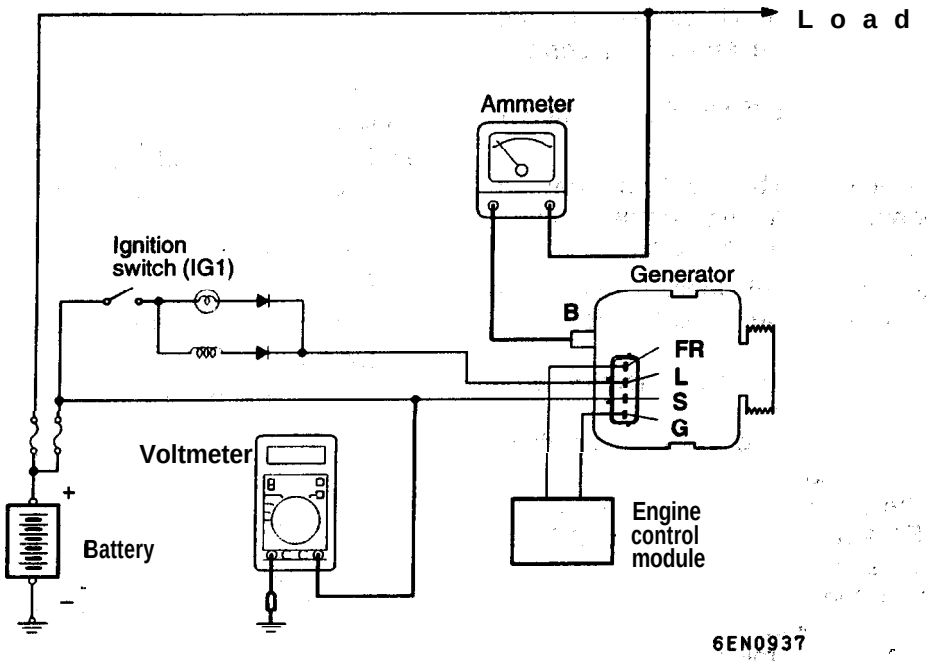

This test determines if the voltage regulator is correctly controlling the generator output voltage.

(1) Be sure to check the following:
- Generator installation and wiring connections
- Battery fully charged. (Refer to GROUP 54 – Battery.)
- Generator drive belt tension (Refer to GROUP 00 – Maintenance Service.)
- Fusible link
- Abnormal noise from the generator while the engine is running

(2) Turn the ignition switch to the OFF position.

(3) Disconnect the negative battery cable.

(4) Connect a digital-type voltmeter between the generator "S" terminal and the ground. (Connect the (+) lead of the voltmeter to the "S" terminal. Connect the (–) lead of the voltmeter to a secure ground or to the battery (–) terminal.)

(5) Disconnect the generator output wire from the generator "B" terminal.

(6) Connect a DC test ammeter with a range of 0–100A in series between the "B" terminal and the disconnected output wire. (Connect the (+) lead of the ammeter to the "B" terminal. Connect the (–) lead of the ammeter to the disconnected output wire.)

(7) Connect a tachometer. (Refer to GROUP 11 A <2.0L Engine> – On-vehicle Service. Refer to GROUP 11 E <2.4L Engine? – On-vehicle Service:)

(8) Reconnect the negative battery cable.

(9) Turn the ignition switch to the ON position and check that the reading on the voltmeter is equal to the battery voltage.

NOTE
If the voltage is' 0 V, the cause is probably an open circuit in the wire or fusible link between the generator "S" terminal and the battery (+) terminal.

(IO) Make sure all lights and accessories are off.

(11) Start the engine.

(12) Increase 'the engine 'speed to approx. 2,500 r/min.

(13) Read the voltmeter when the current output by the' generator becomes 10 A or less,

(14) If the voltage" reading conforms to the value in the voltage regulation table, 'the voltage regulator is operating normally.
If the voltage is hot within the standard value, a malfunction of the' voltage regulator or of the 'generator exists.

NOTE
If the output current is 12.3 V, the terminal G may be grounded. Refer to GROUP 13A – Troubleshooting to check the generator "G" terminal related circuit.

(15) After the test, lower the engine speed to the idle speed.

(16) Turn the ignition switch to the OFF position.

(17) Disconnect the negative battery cable.

(18) Disconnect the ammeter, voltmeter and tachometer.

(19) Connect the generator output wire to the generator "B" terminal.

(20) Connect the negative battery cable.

Voltage Regulation Table

Battery ambient temperature °C (°F)	Standard value V
–20 (–4)	14.2–15.4
20 (68)	13.9–14.9
60 (140)	13.4-14.6
80 (176)	13.1-14.5

WAVEFORM CHECK USING AN ANALYZER

16100120167

Refer to P.16-10.

GENERATOR

16100140125

REMOVAL AND INSTALLATION

Pre-removal Operation
Under Cover Side Panel Removal
(Refer to GROUP 42 – Under Cover.)

Post-installation Operation
- Drive Belt Tension Adjustment
  (Refer to GROUP 00 – Maintenance Service.)
- Under Cover Side Panel Installation
  (Refer to GROUP 42 – Under Cover.)

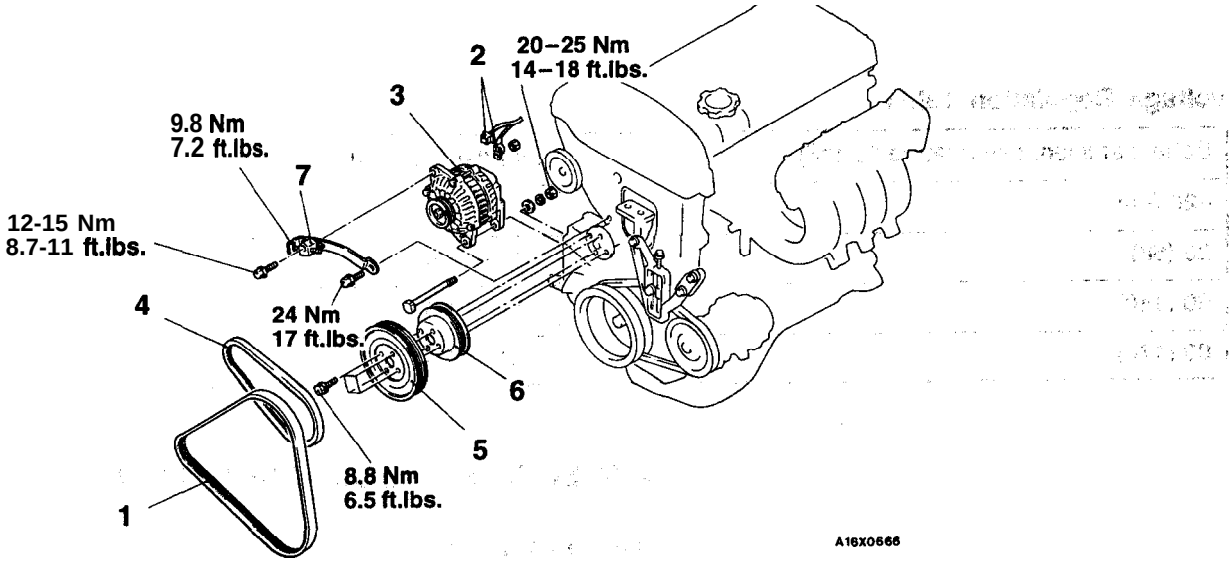

Removal steps

1. Drive belt (Generator)
2. Generator harness connector
3. Generator
4. Drive belt (power steering)

◀A▶

5. Water pump pulley
6. Power steering pulley
7. Generator brace

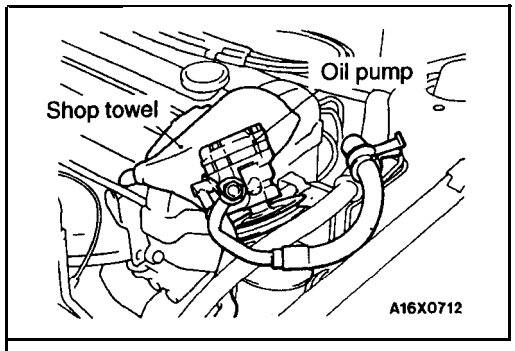

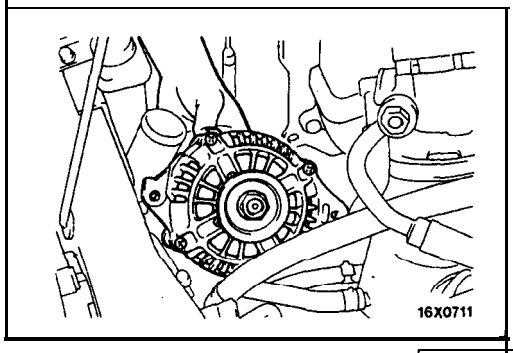

REMOVAL SERVICE POINT

◀A▶ GENERATOR REMOVAL

<2.0L Engine (Turbo)>

(1) Remove the mounting bolt of the power steering oil pump, and hold the oil pump above the engine mount bracket. Use shop towel, etc. to prevent scarring or scratching of the rocker cover

NOTE
Do not disconnect the oil pump hose.

(2) With the generator facing as shown in the figure, remove upward.

TSB Revision

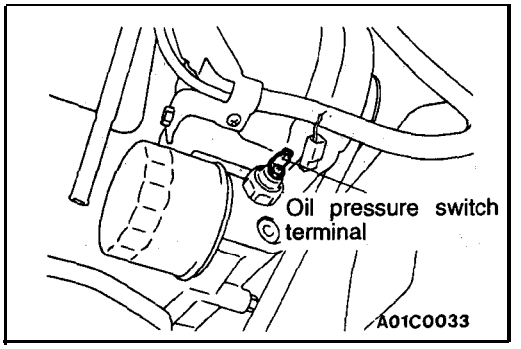

<2.4L Engine>

(1) Remove the oil pressure switch terminal.
(2) Take out the generator from the underside of the vehicle.

DISASSEMBLY AND REASSEMBLY

16100160183

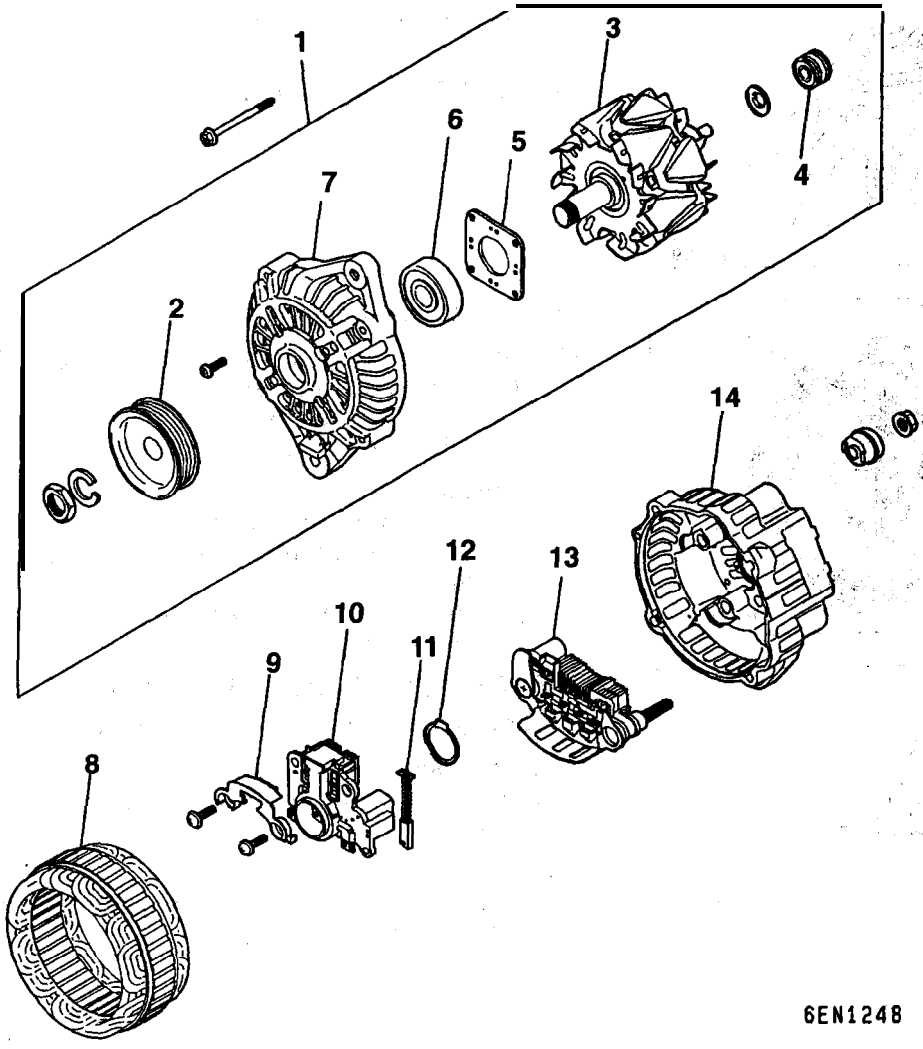

Disassembly steps

◀A▶ 1. Front bracket assembly
◀B▶ 2. Generator pulley
▶B◀ 3. Rotor assembly
4. Rear bearing
5. Bearing retainer
6. Front bearing
7. Front bracket
◀C▶ 8. Stator
9. Plate
◀C▶ ▶A◀ 10. Regulator assembly
11. Brush
12. Slinger
13. Rectifier
14. Rear bracket

TSB Revision

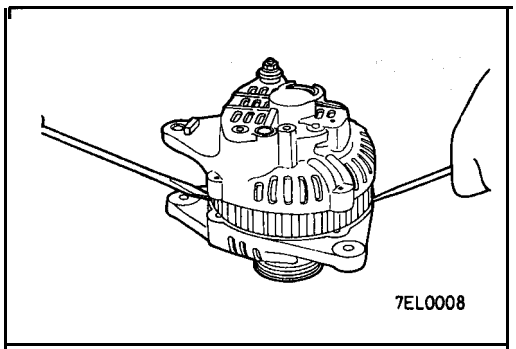

DISASSEMBLY SERVICE POINTS

◀A▶ FRONT BRACKET ASSEMBLY REMOVAL

Insert a flat-tipped screwdriver into the gap between the front bracket assembly and the stator core, and twist the screwdriver to separate the stator and the front bracket assembly.

Caution
Do not insert screwdriver too deep, or stator coil will be damaged.

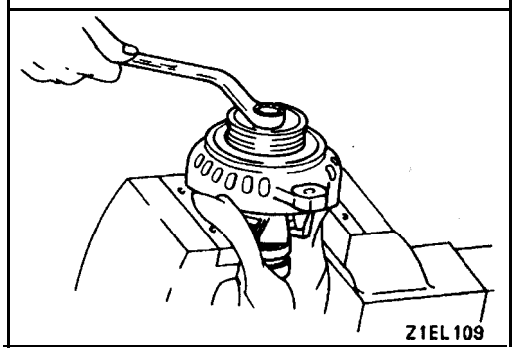

◀B▶ PULLEY REMOVAL

Secure the rotor in a vise with the pulley side facing upward, and then remove the pulley.

Caution
Be careful not to damage the rotor.

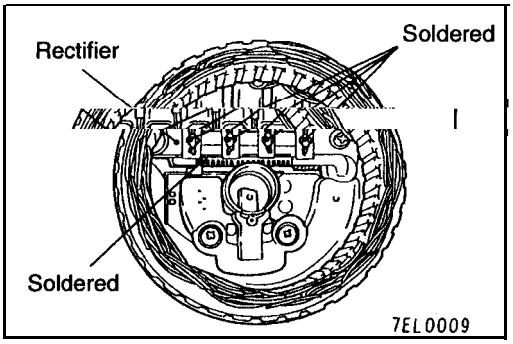

◀C▶ STATOR REMOVAL

(1) When removing stator, unsolder stator leads soldered to main diodes on rectifier.

(2) Separate the soldered points of the rectifier when removing the rectifier from the regulator assembly.

Caution
(1) Be careful not to let the heat from the soldering iron be transmitted to the diodes for a long period of time.
(2) Use care that no undue force is exerted to leads of diodes.

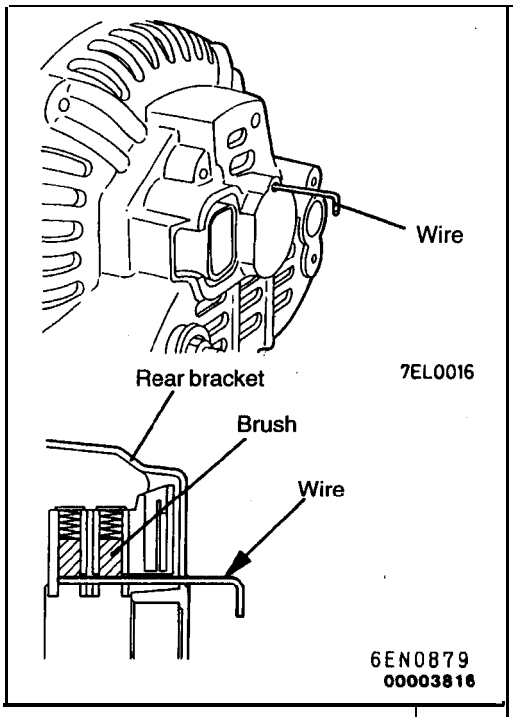

REASSEMBLY SERVICE POINT

▶A◀ REGULATOR ASSEMBLY INSTALLATION

After installing the regulator assembly, insert a wire into the hole in the rear bracket while inserting the brush to secure the brush.

NOTE
Inserting wire in this way will secure the brush and make it easier to install the rotor.

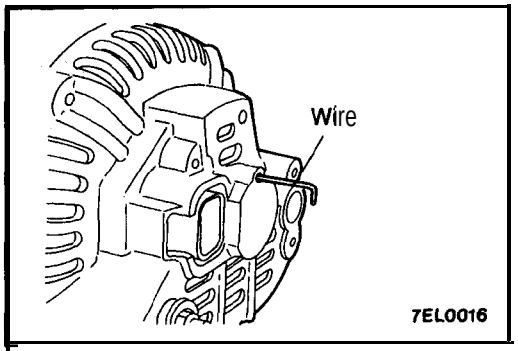

▶B◀ ROTOR ASSEMBLY INSTALLATION

After installing the rotor, remove the wire which was inserted in order to secure the brush.

INSPECTION

16100170186

ROTOR CHECK

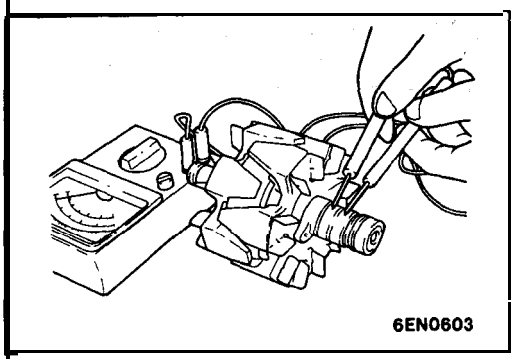

(1) Check the continuity between the' rotor coil slip rings. If the resistance value is outside the standard value range, replace the rotor.

Standard value: Approx. 3–5 Ω

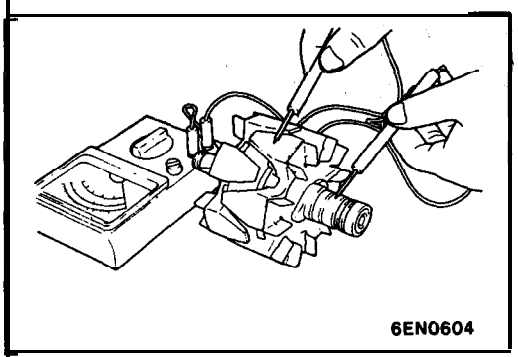

(2) Check the continuity between the slip ring and the core. If there is continuity, replace the rotor.

STATOR CHECK

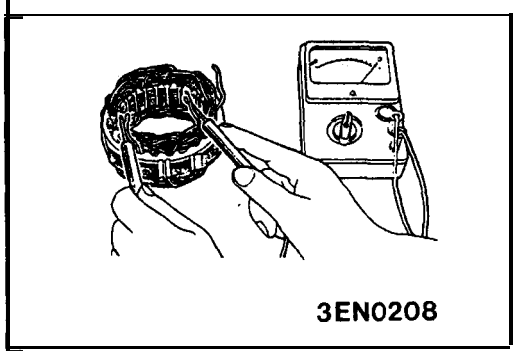

(1) Check the continuity between the coil 'leads,. If there is no continuity, replace the stator.

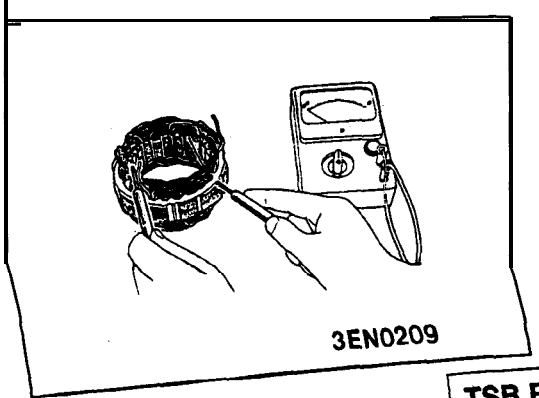

(2) Check the continuity between the coil and the core. if there is continuity, replace the stator.

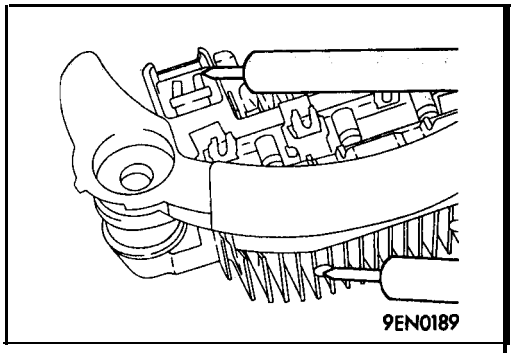

RECTIFIERS CHECK

(1) Check the continuity between the **(+) heat sink** and the, **stator** coil lead wire connection terminal with an ohmmeter. If there is continuity in both directions, the diode is shorted, so replace the rectifier.

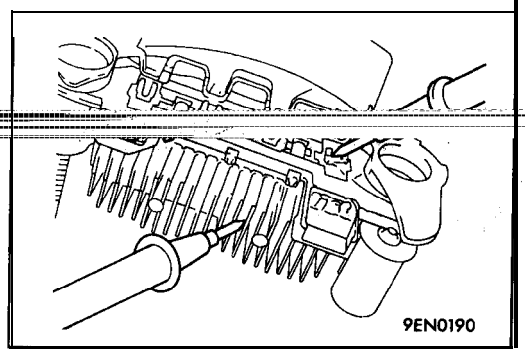

(2) Check the continuity between the **(-)** heat sink and the **stator** coil lead wire connection terminal. If there is continuity in both directions, the diode is shorted, so replace the rectifier.

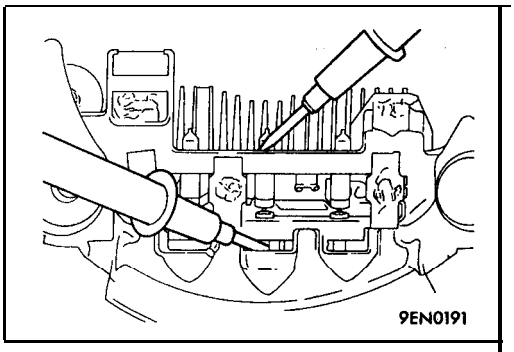

(3) Connect a multimeter to both, sides of each diode, and check each of the three diodes for continuity.
If there is continuity in both directions, **or** if there is no continuity, that particular diode-is damaged and the rectifier must be replaced.

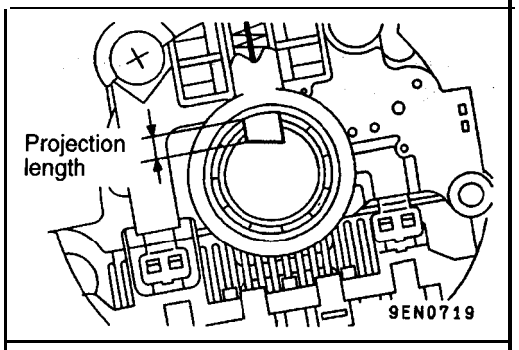

BRUSH CHECK

(1) Measure the projection length of the brush shown in the illustration. If it is worn to the limit **line, replace the brush.**

Limit value: 2 mm (.8 in.) or less

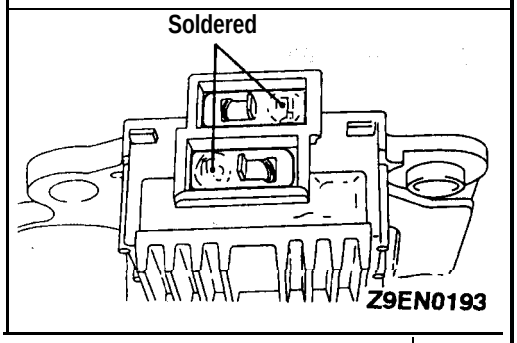

(2) The brush will come out if the solder on the brush lead wire is 'separated.

(3) When installing a new brush, push the brush in the brush holder as shown in the illustration, and **solder** the lead wire.

STARTING SYSTEM <2.0L ENGINE (NON-TURBO)>

16200010061

GENERAL INFORMATION

When the ignition switch is turned to the "START position, current flows in the Pull-in and Holding coils inside the magnetic switch (starter solenoid), attracting the plunger. When the plunger is attracted, the lever connected to the plunger engages the starter clutch and completes the circuit between the "B" and "M" terminals, providing current to the starter motor.

When the ignition switch is returned to the "ON" position after starting the engine; the starter clutch is disengaged from the ring gear.
An overrunning clutch is provided between the pinion and the armature shaft, to prevent damage to ttie starter.

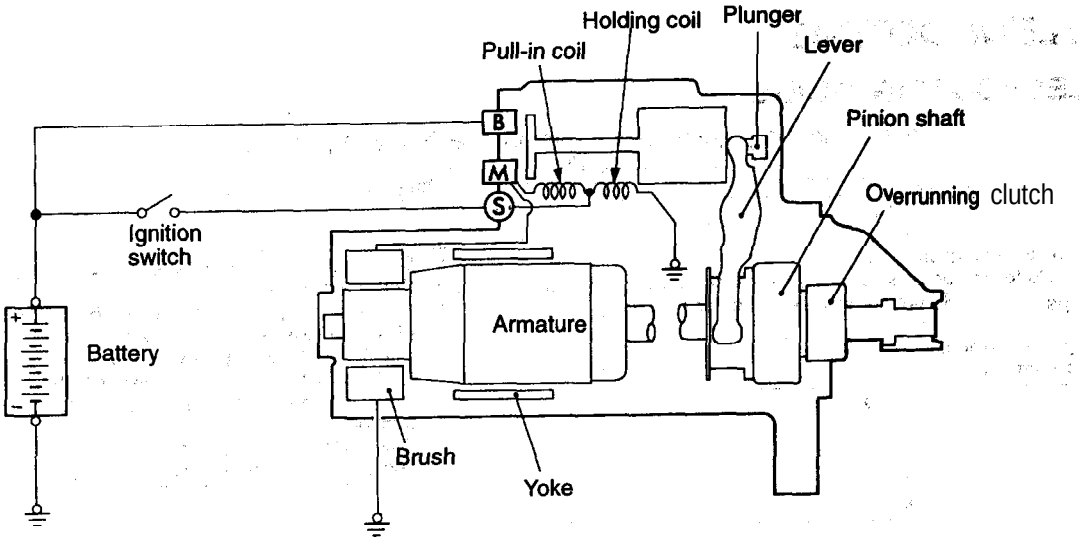

6EN0939

STARTER MOTOR SPECIFICATIONS

Items	Specification
Type	Direct drive type
Identification No.	0 001 107 032
Part No.	M04672108
Rated output kW/V	0.95/12
No. of pinion teeth 8	

OPERATION

- For models equipped with M/T, the clutch pedal position switch contact is switched OFF when the clutch pedal is depressed. When the ignition switch is then switched to the "START" position, electricity flows to the starter relay and the starter motor, the solenoid (magnetic switch) of the starter is switched ON, and the starter motor is activated.

  NOTE
  If the ignition switch is turned to the "START" position when the clutch pedal is not depressed, electricity flows to the starter relay (coil), the clutch pedal position switch, and to ground. This causes the starter relay contacts to remain open, preventing starter motor operation.

- For models equipped with A/T, when the ignition switch is turned to the "START" position with the selector lever in "P" or "N, the solenoid (magnetic switch) of the starter is switched ON and the starter motor is activated.

TROUBLEDHOOTING

16200070106

TROUBLESHOOTING GUIDE

The starting system troubleshooting guide is shown in the following chart.

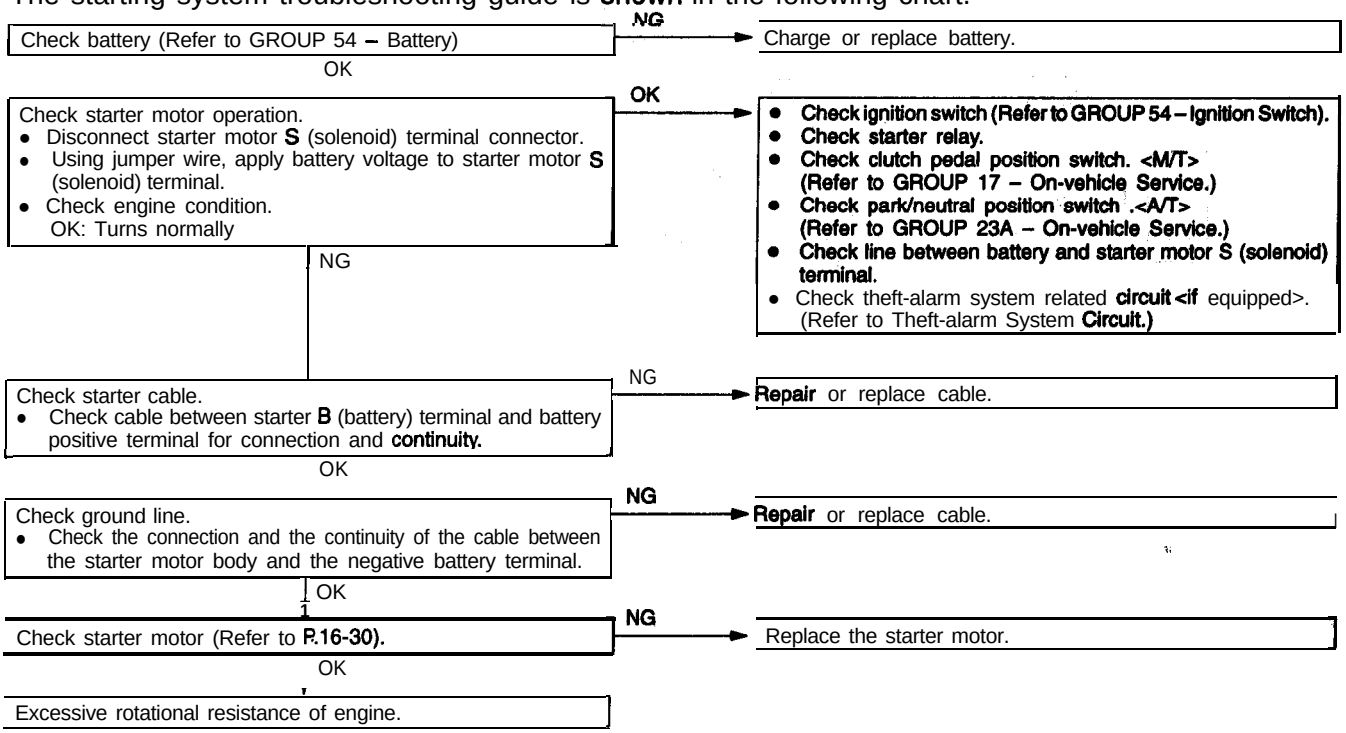

TROUBLESHOOTING HINTS

The starter motor does not operate.

- Check fusible link No.4. <A/T>
- Check the starter (coil).
- Check for poor contact at the battery terminals and starter.
- Check transaxle range switch. <A/T>
- Check starter relay.
- Check clutch pedal position switch. <M/T>
- Check theft-alarm starter relay.
- Check key reminder switch.

STARTER MOTOR

16200100041

REMOVAL AND INSTALLATION

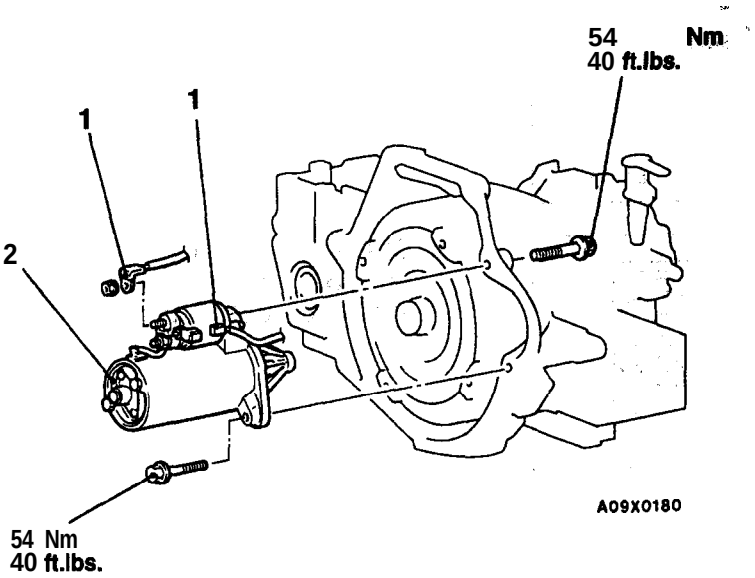

Removal steps

1. Starter terminal and connector
2. Starter motor

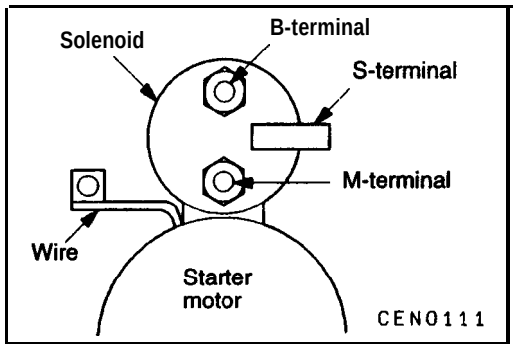

INSPECTION

16200110051

STARTER SOLENOID CONTINUITY CHECK

(1) Disconnect wire from **M** (motor) terminal.

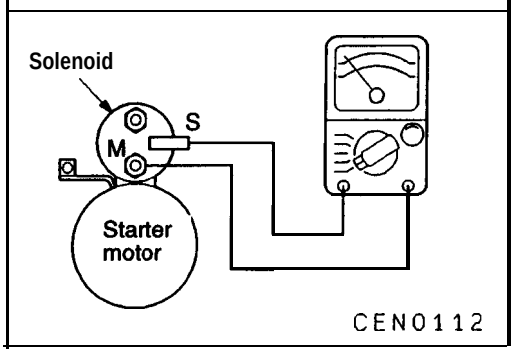

(2) Check for continuity between **S** (solenoid) terminal and **M** (motor) terminal with a continuity tester. Continuity should be detected.

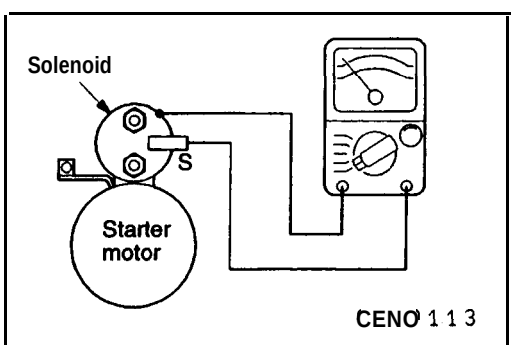

(3) Check for continuity between **S** terminal and solenoid housing.
Continuity should be detected. If continuity is detected, solenoid is good.

(4) If continuity is not detected in either (2) and (3) test, the solenoid has an open circuit and is defective. Replace the starter assembly.

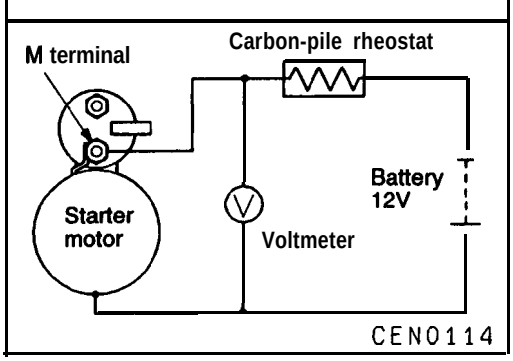

FREE RUNNING TEST

(1) Place the starter motor in a vise equipped with soft jaws and connect a fully-charged **12-volt** battery as follows:
(2) Connect a carbon pile rheostat in series between the battery positive post and starter motor terminal.
(3) Connect a voltmeter **(15-volt** scale) across the starter motor.
(4) Rotate carbon pile to full-resistance position.
(5) Connect battery cable from battery negative post to starter motor body.
(6) Adjust the rheostat so that a voltmeter indicates approx. 11 V. If the starter motor turns smoothly, it is OK.

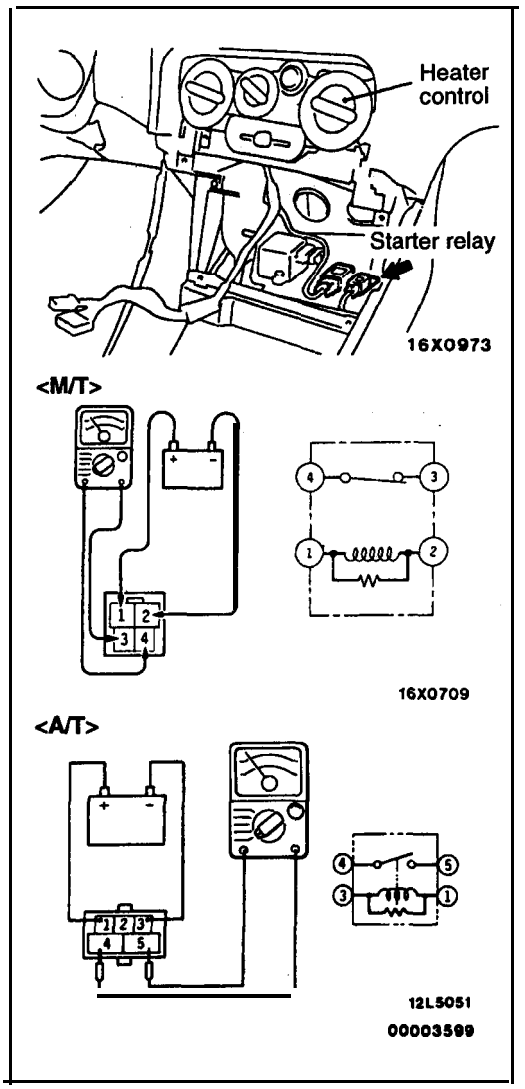

STARTER RELAY CONTINUITY CHECK

16200140036

<M/T>

Battery voltage	Terminal No.			
	1	2	3	4
Power is not supplied	0	0	O	O
Power is supplied	⊕	⊖		

<A/T>

Battery voltage	Terminal No.				
	12	3		4	5
Power is not supplied	0		0		
Power is supplied	⊕		⊖	O	O

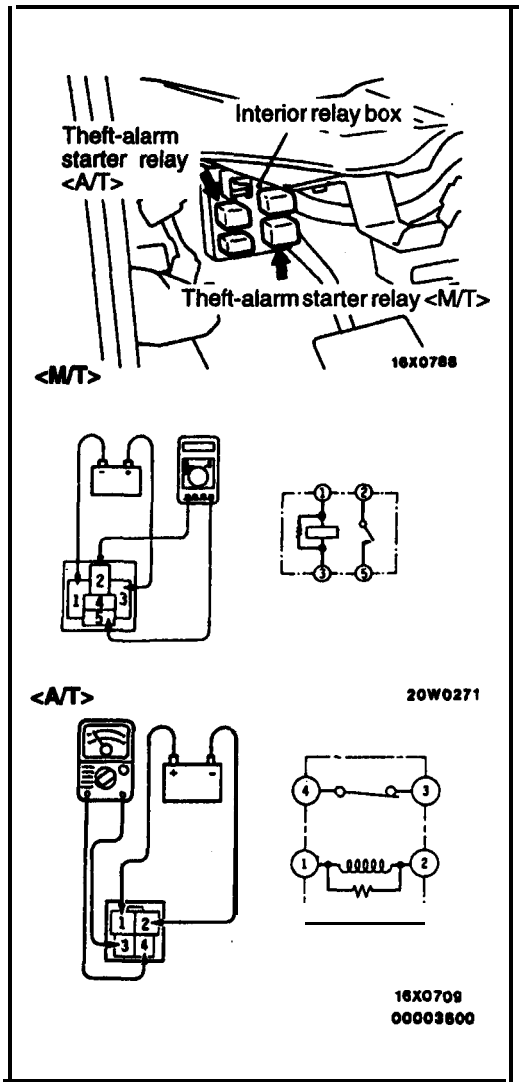

THEFT-ALARM STARTER RELAY CONTINUITY CHECK

16200160018

<M/T>

Battery voltage	Terminal No.			
	1	2	3	5
Power is not supplied	○		○	
Power is supplied	⊖	0	⊕	○

<A/T>

Battery voltage	Terminal No.			
	1	2	3	4
Power is not supplied	○	○	○	○
Power is supplied	⊕	⊖		

STARTING SYSTEM <2.0L ENGINE (TURBO) AND 2.4L ENGINE>

16200010078

GENERAL INFORMATION

When the ignition switch is turned to the "START" position, current flows in the Pull-in and Holding coils inside the magnetic switch (starter solenoid), attracting the plunger. When the plunger is attracted, the lever connected to the plunger engages the starter clutch and completes the circuit between the "B" and "M" terminals, providing current to the starter motor.

When the ignition switch is returned to the "ON" position after starting the engine, the starter clutch is disengaged from the ring gear.
An overrunning clutch is provided between the pinion and the armature shaft, to prevent damage to the, starter.

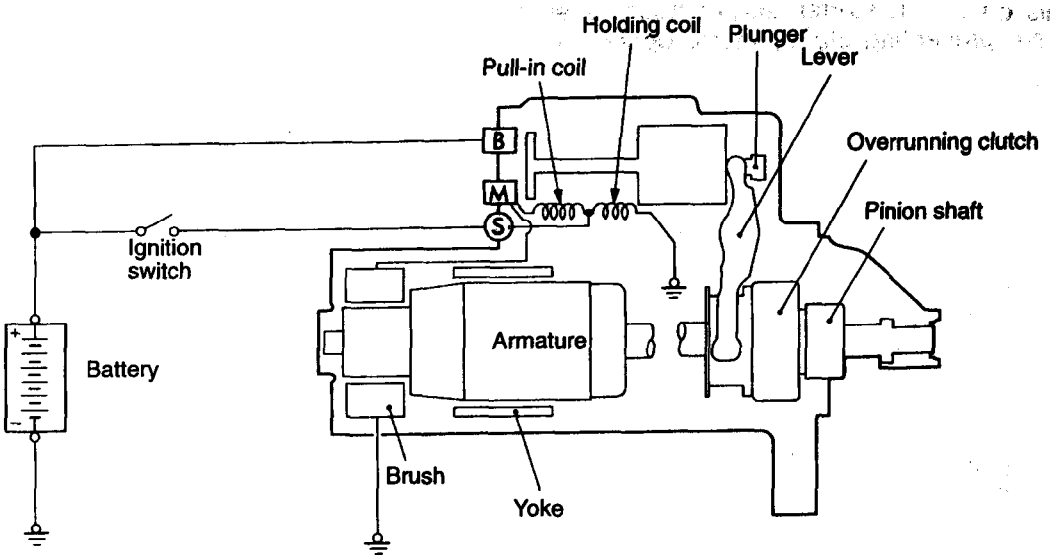

6EN0939

STARTER MOTOR SPECIFICATIONS

Items	M/T	A/T
Type	Reduction drive with planetary gear	Reduction drive with planetary gear
Identification No.	M 1 T70483	M1T73383
Part No.	MD1 72860	MD1 72861
Rated output kW/V	1.2/12	1.2/12
No. of pinion teeth	8	8

OPERATION

- For models equipped with M/T, the clutch pedal position switch contact is switched OFF when the clutch pedal is depressed. When the ignition switch is then switched to the "START" position, electricity flows to the starter relay and the starter motor, the solenoid (magnetic switch) of the starter is switched ON, and the starter motor is activated.

  NOTE
  If the ignition switch is turned to the "START" position when the clutch pedal is not depressed, electricity flows to the starter relay (coil), the clutch pedal position switch, and to ground. This causes the starter relay contacts to remain open, preventing starter motor operation.

- For models equipped with A/T, when the ignition switch is turned to the "START" position with the selector lever in "P" or "N, the solenoid (magnetic switch) of the starter is switched ON and the starter motor is activated.

SERVICE SPECIFICATIONS

16200030050

Items		Standard value	Limit
Free running characteristics	Terminal voltage V	11	–
	Current A	90 or less	
	Speed r/min	3,000 or more	–
Pinion gap mm (in.)		0.5–2.0 (.020–.079)	-
Commutator runout mm (in.)		0.05 (.0002)	0.1 (.004)
Commutator diameter mm (in.)		29.4 (1.158)	28.4 (1.118)
Undercut depth mm (in.)		0.5 (.020)	

TROUBLESHOOTING

16200070113

TROUBLESHOOTING GUIDE

The starting system troubleshooting guide is shown in the following chart.

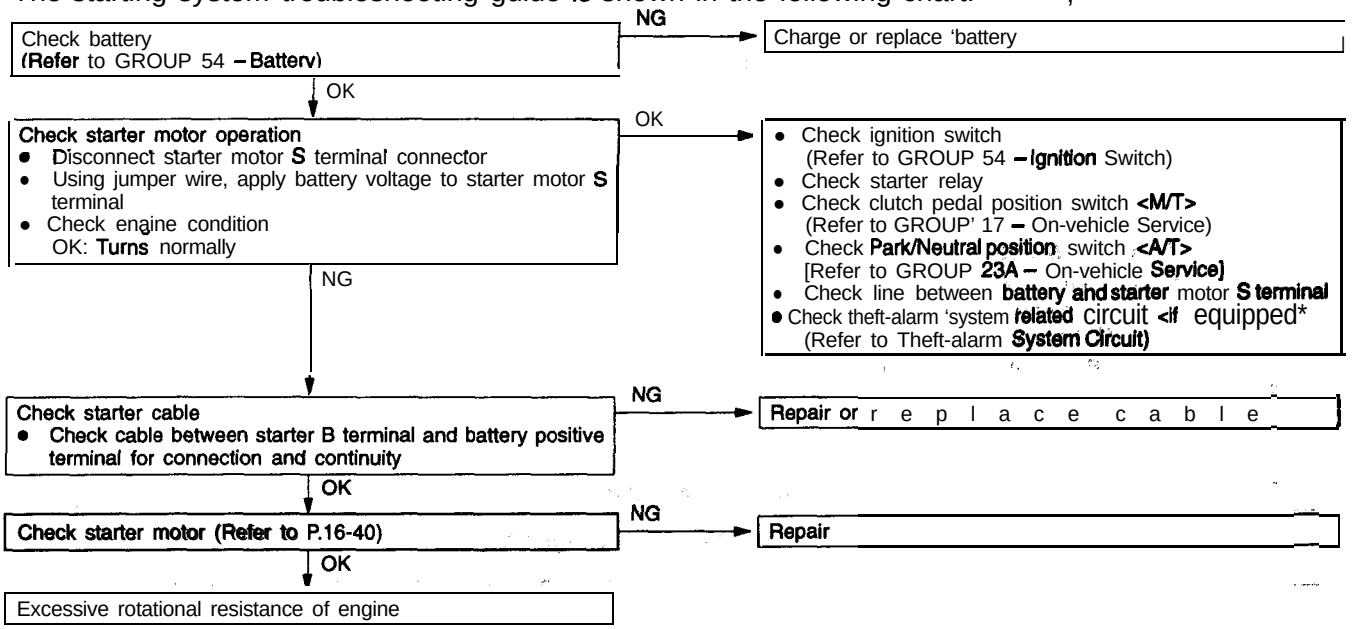

TROUBLESHOOTING HINTS

The starter motor does not operate.

- Check the starter (coil).
- Check for poor contact at the battery terminals and starter.
- Check park/neutral position switch. <A/T>
- Check starter relay.
- Check clutch pedal position switch. <M/T>
- Check theft-alarm starter relay.
- Check key reminder switch.

STARTER MOTOR

16200100058

REMOVAL AND INSTALLATION

Pre-removal and Post-installation Operation
Battery Removal and Installation

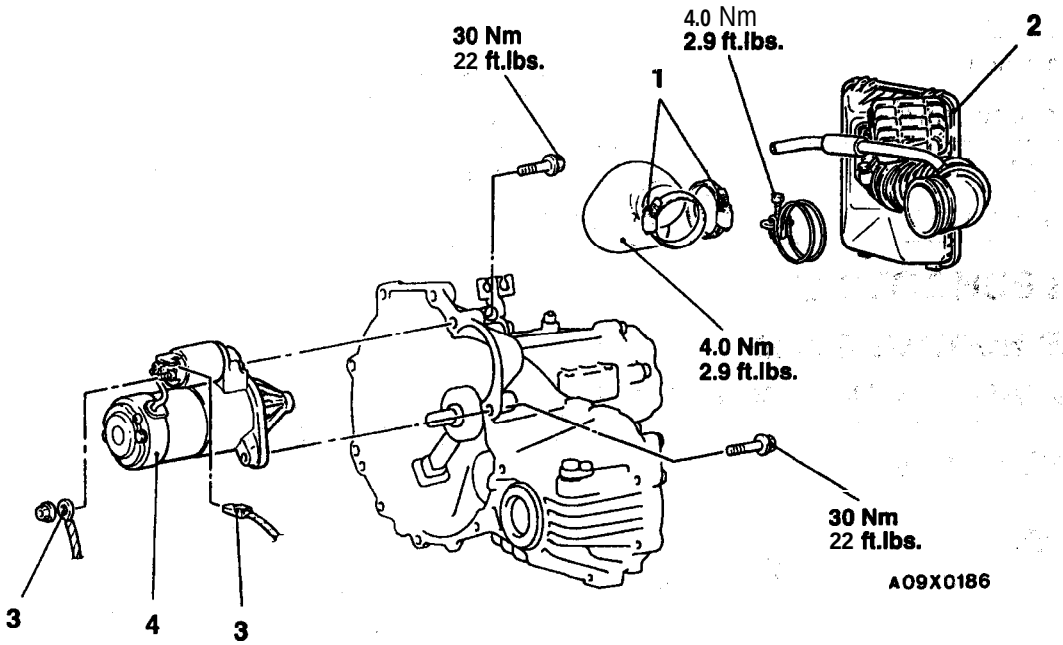

Removal steps

1. Air hose C <2.0L Engine (Turbo)>
2. Air cleaner and air intake hose <2.4L Engine>
3. Starter terminal and connector
4. Starter motor

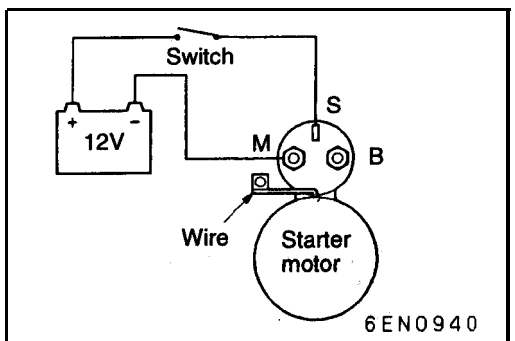

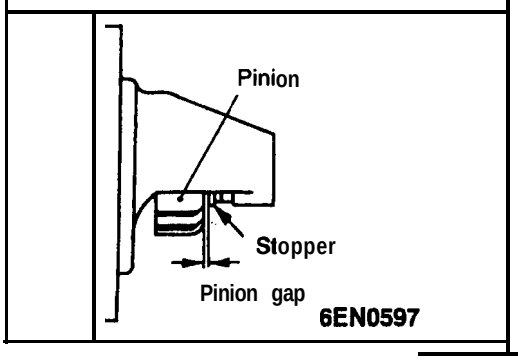

INSPECTION

16200110068

PINION GAP ADJUSTMENT

(1) Disconnect wire from M-terminal of magnetic switch..
(2) Connect a 12V battery between 'S-terminal and M-terminal.
(3) Set the switch to "ON", and pinion will move out.

Caution
This test must be performed quickly (in less than 10 seconds)' to prevent coil from burning.

(4) Check pinion to stopper clearance (pinion gap) with a feeler gauge.

Standard value: 0.5–2.0 mm (.020–.079 in.)

TSB Revision

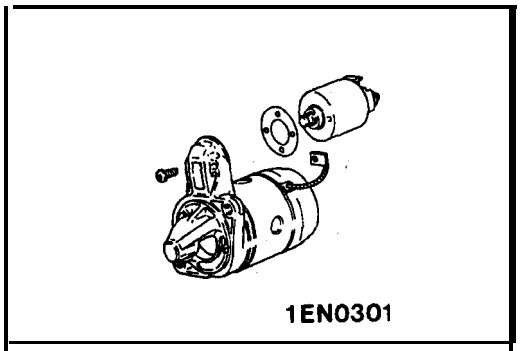

(5) If pinion gap is out of specification, adjust by adding or removing gaskets between magnetic switch and front bracket.

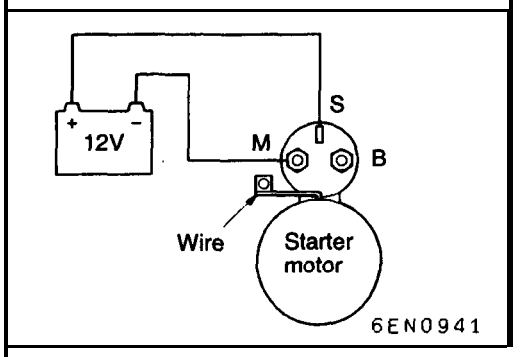

MAGNETIC SWITCH PULL-IN TEST

(1) Disconnect wire from M-terminal of magnetic switch.
(2) Connect a 12V battery between S-terminal and M-terminal.

Caution
This test must be performed quickly (in less than 10 seconds) to prevent coil from burning.

(3) If pinion moves out, then pull-in coil is good. If it doesn't, replace magnetic switch.

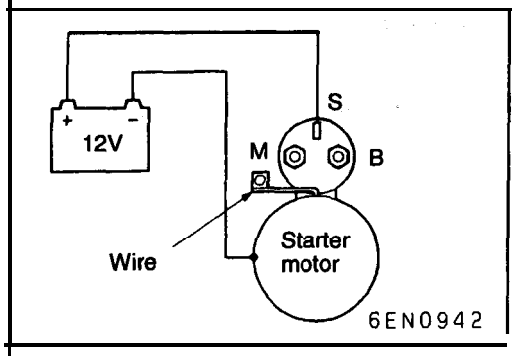

MAGNETIC SWITCH HOLD-IN TEST

(1) Disconnect wire from M-terminal of magnetic switch.
(2) Connect a 12V battery between S-terminal and body.

Caution
This test must be performed quickly (in less than 10 seconds) to prevent coil from burning.

(3) Draw out the pinion to the pinion stopper by hand.
(4) If pinion remains out, everything is in order. If pinion moves in, hold-in circuit is open. Replace the magnetic switch.

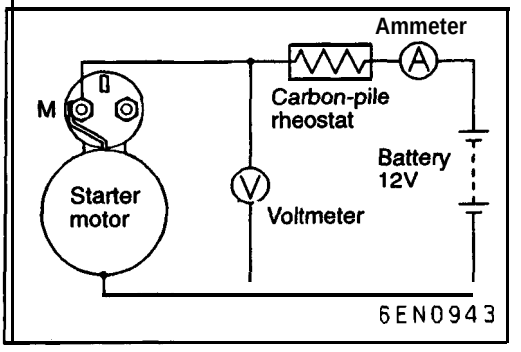

FREE RUNNING TEST

(1) Place the starter motor in a vise equipped with soft jaws and connect a fully-charged 12-volt battery to starter motor as follows:
(2) Connect a test ammeter (100-ampere scale) and carbon pile rheostat in series between the battery positive post and starter motor terminal.
(3) Connect a voltmeter (l&volt scale) across the starter motor.
(4) Rotate carbon pile to full-resistance position.
(5) Connect battery cable from battery negative post to starter motor body.
(6) Adjust the rheostat until the battery voltage shown by the voltmeter is 11V.
(7) Confirm that the maximum amperage is within the specifications and that the starter motor turns smoothly and freely.

Standard value: 90 A or less

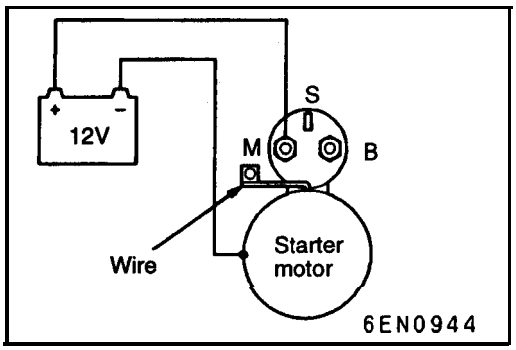

MAGNETIC SWITCH RETURN TEST

(1) Disconnect wire from M-terminal of magnetic switch.
(2) Connect a 12V 'battery between M-terminal and body.'

Caution
This test must be performed quickly (in less than 10 seconds) to prevent coil from burning.

(3) Pull pinion out and release. If pinion quickly returns to its original position, everything is in -order. If it doesn't, replace magnetic switch.

Caution
Be careful not to pinch your finger when drawing out the pinion.

STARTER RELAY CONTINUITY CHECK

Refer to P.16-31.

THEFT-ALARM STARTER RELAY CONTINUITY CHECK

Refer to P.16-32.

DISASSEMBLY AND REASSEMBLY

16200120122

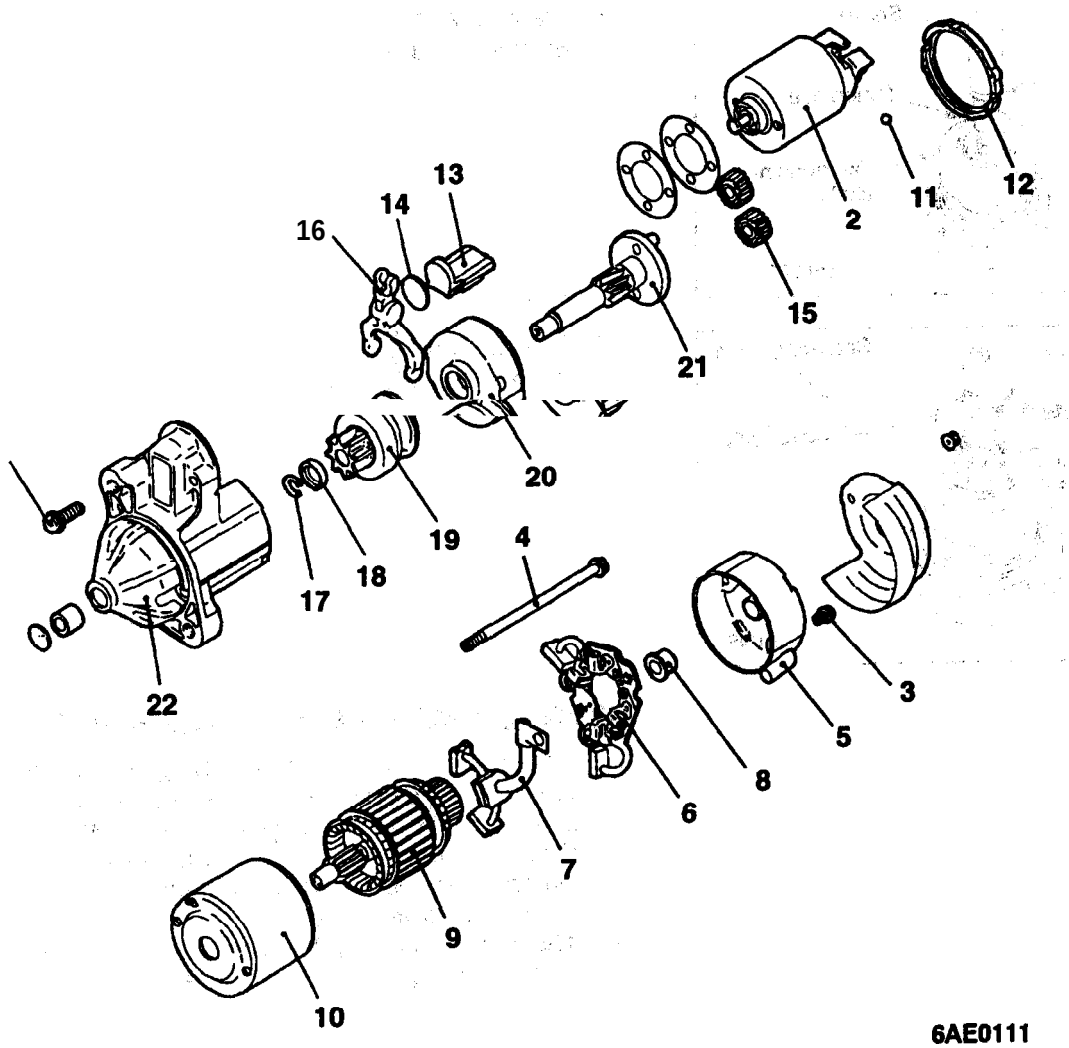

6AE0111

Disassembly steps

1. Screw
2. Magnetic switch
3. Screw
4. Screw
5. Rear bracket
6. Brush holder
7. Brush
8. Rear bearing
◀A▶ 9. Armature
10. Yoke assembly
◀A▶ 11. Ball
12. Packing A
13. Packing B
14. Plate
15. Planetary gear
16. Lever
◀B▶ ▶A◀ 17. Snap ring
◀B▶ ▶A◀ 18. Stop ring
19. Overrunning clutch
20. Internal gear
21. Planetary gear holder
22. Front bracket

DISASSEMBLY SERVICE POINTS

◀A▶ ARMATURE/BALL REMOVAL

Caution

When removing the armature, take care not to lose the ball (which is used as a bearing) in' the. armature end.

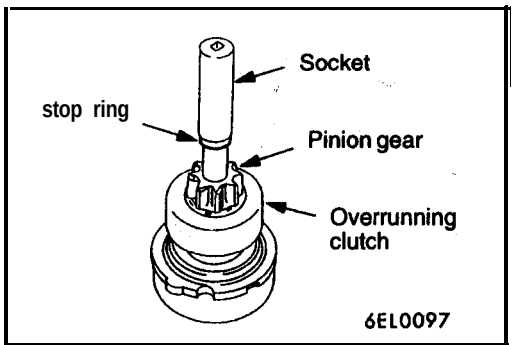

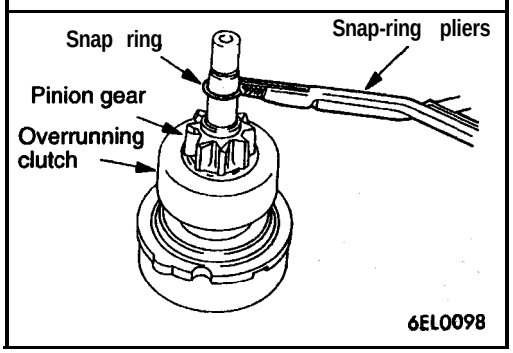

◀B▶ SNAP RING/STOP RING REMOVAL

(1) Press the stop ring, by using an appropriate socket wrench, to the snap ring side.

(2) After removing the snap ring (by using snap-ring pliers), remove the stop ring and the overrunning clutch.

STARTER MOTOR PART CLEANING

1. Do not immerse parts in cleaning solvent. immersing the yoke and field coil assembly and/or armature will damage insulation. Wipe these parts with a cloth only.
2. Do not immerse drive unit in cleaning solvent. Overrunning clutch is pre-lubricated at the factory and solvent will wash lubrication from clutch.
3. The drive unit may be cleaned with a brush moistened with cleaning solvent and wiped dry with a cloth.

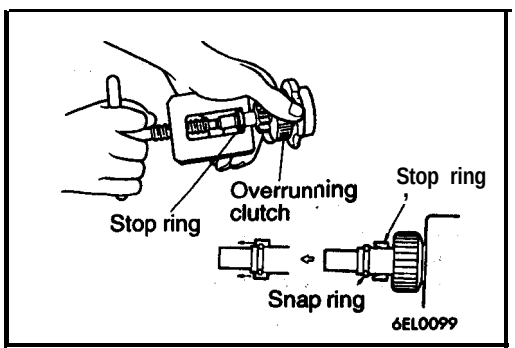

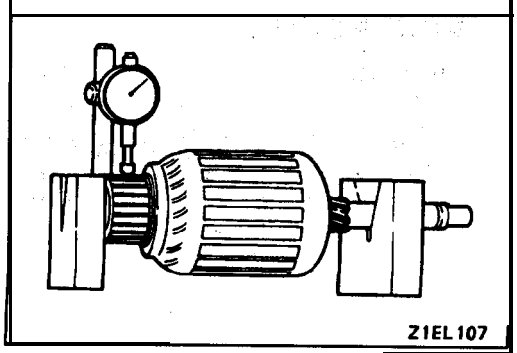

REASSEMBLY SERVICE 'POINT

▶A◀ STOP RING/SNAP RING INSTALLATION

Using a suitable pulling tool, pull overrunning clutch stop ring over snap ring.

INSPECTION

16200130217

COMMUTATOR CHECK

(1) Place the armature on a pair of V-blocks, and check the deflection by using a dial gauge.

Standard value: 0.05 mm (.0020 in.)
Limit: 0.1 mm (.004 in.)

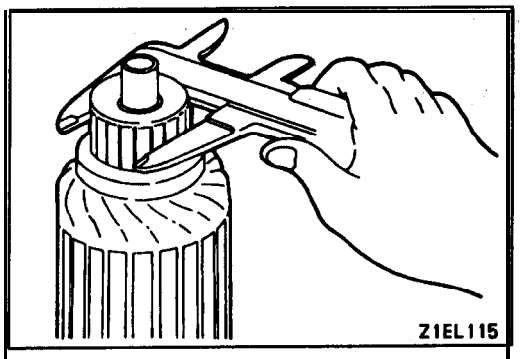

(2) Check the outer diameter of the commutator.

Standard value: 29.4 mm (1.158 in.)
Limit: 28.4 mm (1.118 in.)

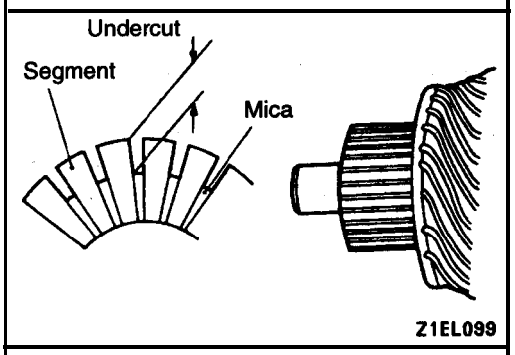

(3) Check the depth of the undercut between **segments.**

Standard value: 0.5 mm (.020 in.)

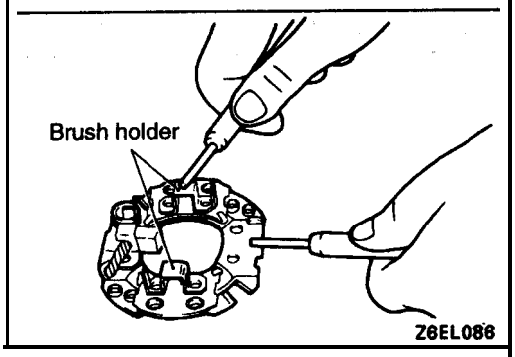

BRUSH HOLDER CHECK

Check for continuity between the brush holder **plate and** the brush holder.
The normal condition is **non-continuity.**

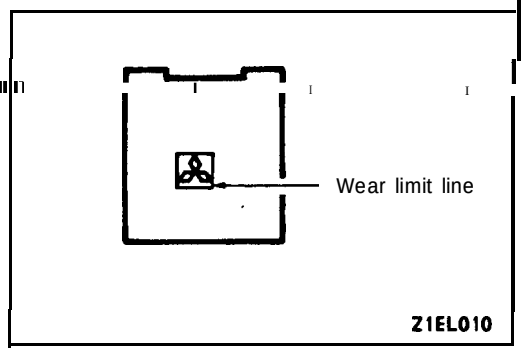

BRUSH CHECK

(1) Brushes that are worn beyond wear limit line, or oil-s&d, should be replaced.
(2) **When replacing ground** brush, slide **the** brush **from** brush holder by **prying** retaining **spring back.**

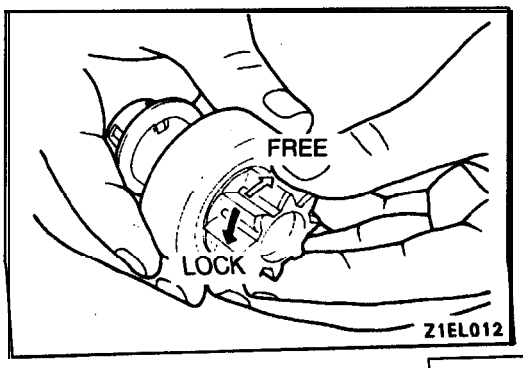

OVERRUNNING CLUTCH CHECK

(1) While holding clutch housing, rotate the pinion. **Drive** pinion should rotate smoothly in one direction, but should not rotate in opposite direction. If clutch does not **function** properly, replace overrunning clutch assembly.
(2) Inspect pinion for wear or burrs. If pinion is **worn** or burred, replace overrunning clutch assembly. If pinion is damaged, also inspect ring gear for wear or burrs.

FRONT AND REAR BRACKET BUSHING CHECK

Inspect bushing for wear or burrs. If bushing is worn or burred, replace front bracket assembly or rear bracket assembly.

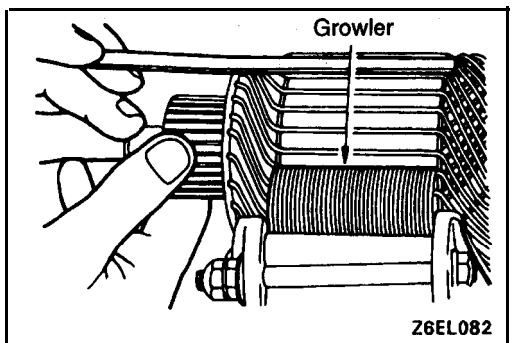

ARMATURE CHECK

(1) Check that the armature coil is not shorted.
(2) Place armature in a growler.
(3) Hold a thin steel blade parallel and just above while rotating armature slowly in growler. A shorted armature will cause blade to vibrate and be attracted to the core. Replace shorted armature.

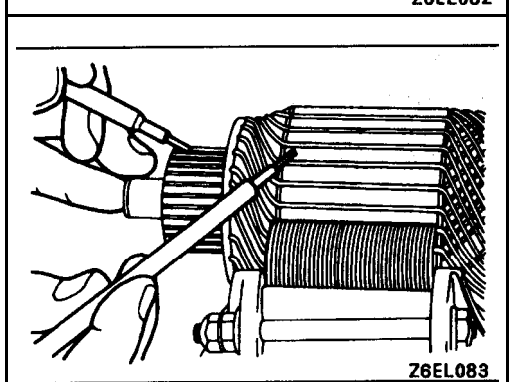

(4) Check the insulation between the armature coil cores and the commutator segments. They are normal if there is no continuity.

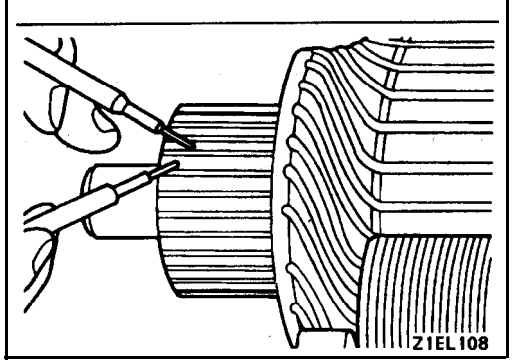

(5) Check for continuity between segments. The condition is normal if there is continuity.

IGNITION SYSTEM <2.0L ENGINE (NON-TURBO)>

16300010057

GENERAL INFORMATION

This engine uses an electronic ignition system. Basic ignition timing is not adjustable.
The powertrain control module (PCM) judges spark advance. The ignition system's three main components are the coil pack, crankshaft position sensor, and camshaft position sensor.
Both the crankshaft position sensor and camshaft position sensor are "Hail-effect" devices. The camshaft position sensor and crankshaft position sensor generate pulses that are input to the PCM.
The PCM determines crankshaft position from these sensors.
The PCM calculates injector sequence and ignition timing from crankshaft position.
The engine's firing order is 1-3-4-2.

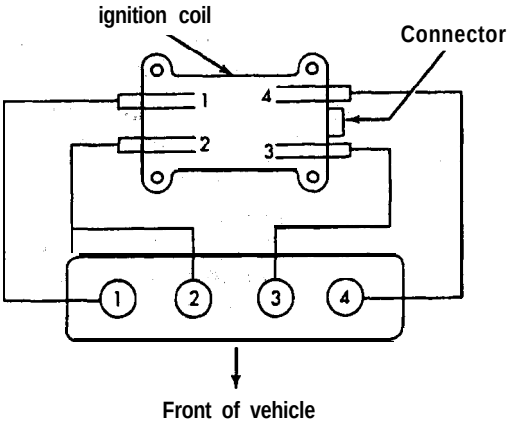

CEN0115

IGNITION COIL SPECIFICATION

Items	Specifications
Type	Molded 2 coil

SPARK PLUG SPECIFICATION

Items	Specifications
Type	RC9YC5 (CHAMPION)

TSB Revision

SERVICE SPECIFICATIONS

16300030077

Items		Standard value	Limit
Ignition coil	Primary coil resistance Ω	0.51 – 0.61	–
	Secondary coil resistance kΩ	11.5 – 13.5	
Spark plug gap mm (in.)		1.22 – 1.35 (.048 – .053)	–
Spark plug cable resistance kΩ		–	max. 8

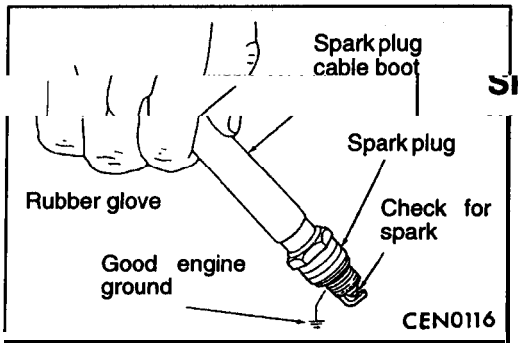

ON-VEHICLE SERVICE

16300090105

SPARK COIL TEST

WARNING

The direct ignition system generates approximately 40,000 volts. Personnel injury could result from contact with this system. Wear rubber gloves and rubber-soled shoes while working on the ignition system.

(1) Remove the cable from No. 2 spark plug. Insert a clean spark plug into the spark plug boot, and ground the plug to the engine.

Caution

Spark plug wire damage may occur if the spark plug is moved more than 6mm (1/4 inch) away from the engine ground.

(2) Crank the engine and look for spark across the electrodes of the spark plug.
Repeat the above test for the three remaining spark plug cables.
If there is no spark during any of the tests, check the camshaft position sensor and crankshaft position sensor. (Refer to GROUP 13A – Troubleshooting.)

(3) If one or more tests show irregular, weak, or no spark, go to the Ignition Coil Inspection and Spark Plug Cable Inspection.

SPARK PLUG TEST

16300150094

(1) Remove the spark plug from the engine and connect it to the spark plug cable boot.
(2) Ground the spark plug outer electrode (body), and crank the engine. Check for spark across the electrodes.
(3) Remove the spark plug from the boot and usually inspect it for cracks in its insulation.
(4) Replace the spark plug if it has a weak spark and/or detective insulation.

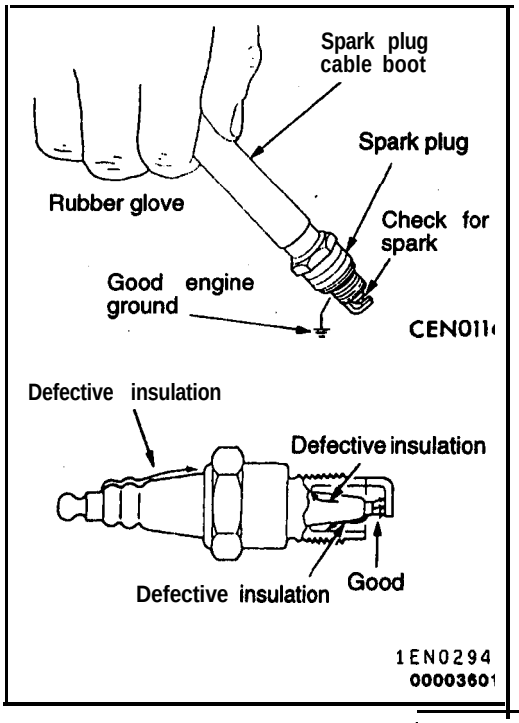

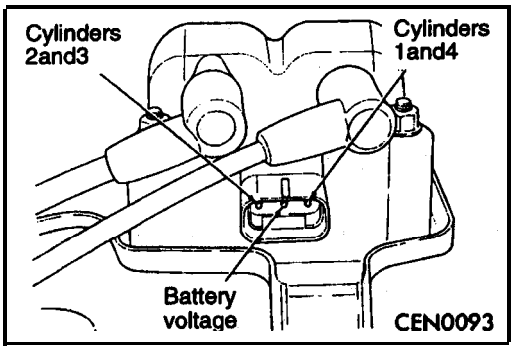

IGNITION COIL PACK CHECK

16300120101

Coil one fires cylinders 1 and 4. Coil two fires cylinders 2 and 3. Each coil tower is labeled with the number of the corresponding cylinder.

Primary Coil Resistance

(1) Disconnect the electrical connector from the coil pack.
(2) Measure the primary resistance of each coil. At the coil, connect an ohmmeter between the **B+** pin and the pin corresponding to the cylinders in question.

Standard value: 0.51–0.61 Ω

(3) Replace the coil pack if resistance is not **within** the standard value.

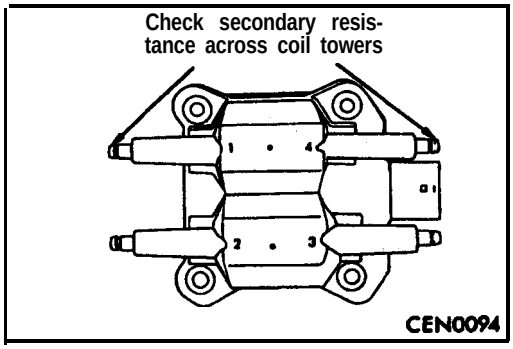

Secondary Coil Resistance

(1) Remove spark plug cables from the secondary **towers** of the coil.
(2) Measure the secondary resistance of the coil **between** the towers of each individual coil.

Standard value: 11.5–13.5 kΩ

(3) Replace the coil pack if resistance is not within the standard value.

SPARK PLUG CABLE RESISTANCE CHECK

16300140060

(1) Remove the spark plug cable, attach an ohmmeter lead to each end, and measure the resistance of the cable.

Limit: max. 8 kΩ

(2) Replace any cable not within tolerance.

SPARK PLUG CHECK AND CLEANING 16300150100

(1) Remove. the spark plug cables.

Caution
When-pulling the spark plug cable boot from the plug, always hold the boot, not the cable.

(2) Remove the spark plugs.
(3) Check for a burned-out electrode. or damaged insulator. Check for even burning.
(4) Remove carbon deposits with wire brush or plug cleaner. Remove sand from plug screw with compressed air.

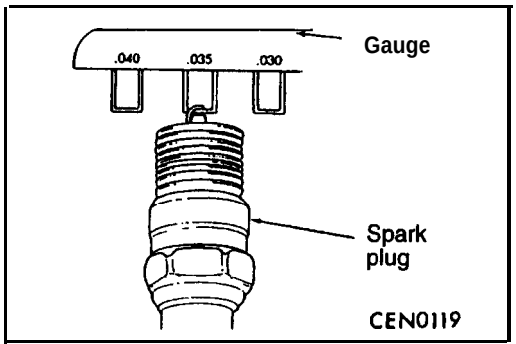

(5) Use a gap gauge to check the plug gap.

Standard value: 1.22-1.35 mm (.048–.053 in.)

If the plug gap is not within the standard value range, adjust by bending the ground electrode.

(6) Clean the engine plug holes.

Caution
Do not allow foreign matter to enter the cylinders.

(7) Install the spark plugs.

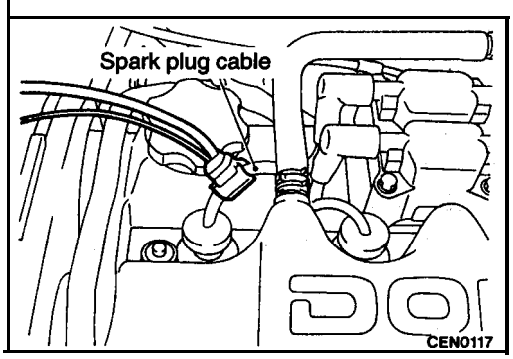

IGNITION SECONDARY VOLTAGE WAVEFORM CHECK 16300170113

MEASUREMENT METHOD

(1) Clamp the SECONDARY PICKUP around the spark plug cable.

NOTE
1: 'The peak ignition voltage will be reversed when the spark cables No.2 and No.4, or No.1 and No.3 cylinders are clamped.
2. Because of the two-cylinder simultaneous ignition system, the waveforms for two cylinders in each group appear during waveform observation (No.1 cylinder - No.4 cylinder, No.2 cylinder - No.3 cylinder). However, waveform observation is only applicable for the cylinder with the spark plug cable clamped by the secondary pickup.

(2) Clamp the spark plug cable with the Trigger pickup.

NOTE
1. Clamp the trigger pickup to the same spark plug cable clamped by the secondary pickup.
2. Identifying which cylinder waveform is displayed can be difficult. For reference, remember that the waveform of the cylinder attached to the secondary pickup will be displayed as stable.

STANDARD WAVEFORM

Observation Conditions

FUNCTION	SECONDARY
PATTERN HEIGHT	HIGH (or LOW)
PATTERN SELECTOR	RASTER
Engine revolutions	Curb idle speed

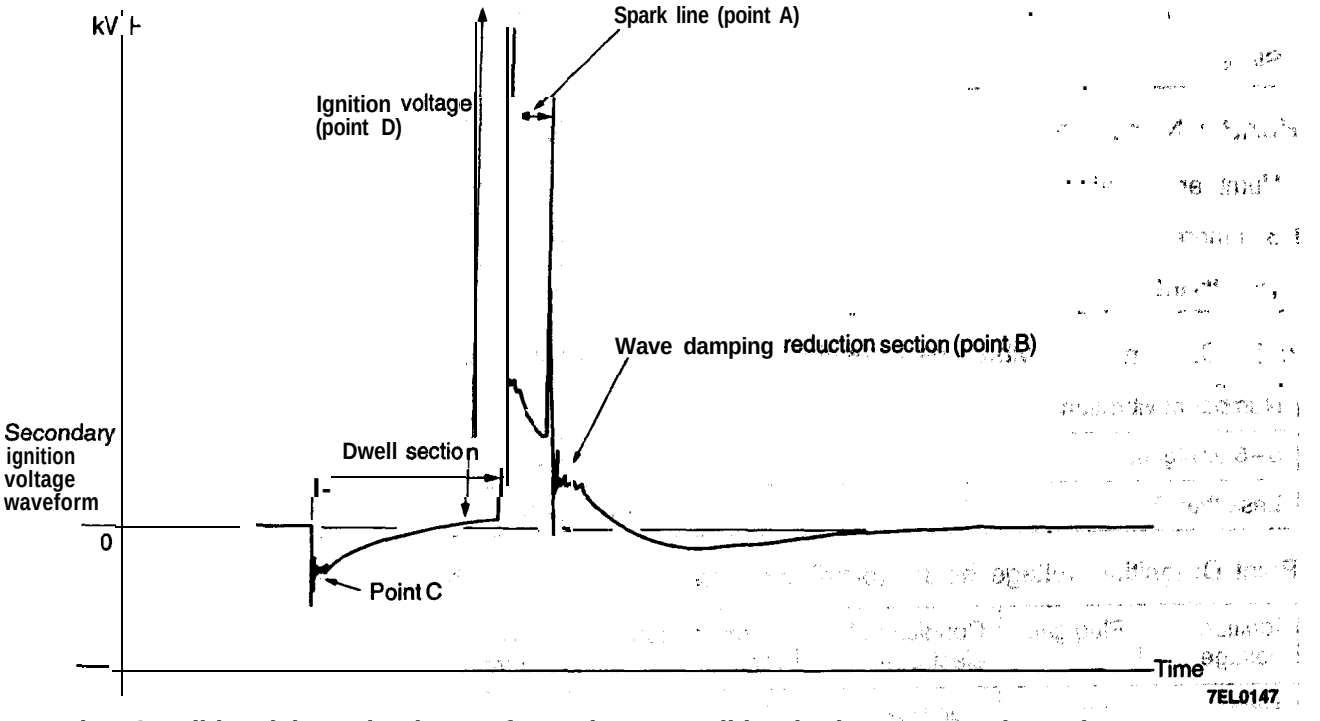

Observation Condition (The only change from above condition is the pattern selector.)

PATTERN SELECTOR	DISPLAY

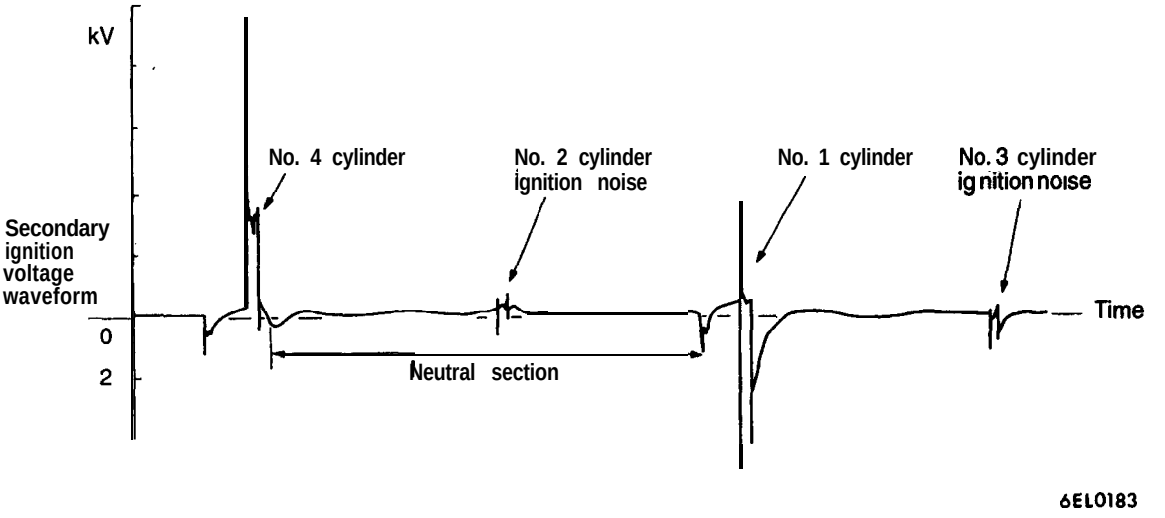

WAVEFORM OBSERVATION POINTS

Point A: The height, length and slope of the spark line (refer to abnormal waveform' examples 1, 2, 3 and 4) show the following trends.

Spark line		Plug gap	Condition of electrode	Compression force	Concentration of air mixture	Ignition timing	Spark plug cable
Length	Long	Small	Normal	Low	Rich	Advanced	Leak
	Short	Large	Large wear	High	Lean	Retarded	High resistance
Height	High	Large	Large wear	High	Lean	Retarded	High Resistance
	Low	Small	Normal	Low	Rich	Advanced	Leak
Slope		Large	Plug is fouled	–			

Point B: Number of vibrations in reduction vibration section (Refer to abnormal waveform example 5)

Number of vibrations	Coil and condenser
3 or more	Normal
Less than 3	Abnormal

Point C: Number of vibrations at beginning of dwell section (Refer to abnormal waveform 'example 5)

Number of vibrations	Coil
5-6 or higher	Normal
Less than 5	Abnormal

Point D: Ignition voltage height (distribution per each cylinder) shows the following trends.

Ignition voltage	Plug gap	Condition of electrode	Compression force	Concentration of air mixture	Ignition timing	Spark plug cable
High	Large	Large wear	High	Lean	Retarded	High resistance
Low	Small	Normal	Low	Rich	Advanced	Leak

ABNORMAL WAVEFORMS EXAMPLES

Abnormal waveform	Wave characteristics	Cause of problem
Example 1 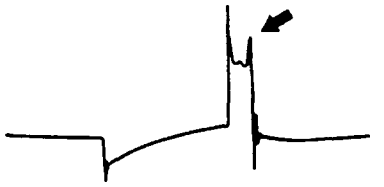 01P0215	Spark line is high and short.	Spark plug gap is too large.
Example 2  01P0216	Spark line is low, long, and sloping. Also, the second half of the spark line is distorted. This could be a result o misfiring.	Spark plug gap is too small.
Example 3  01P0217	Spark line is low, long, and sloping. However, there is almost no spark line distortion.	Spark plug gap is fouled.
Example 4 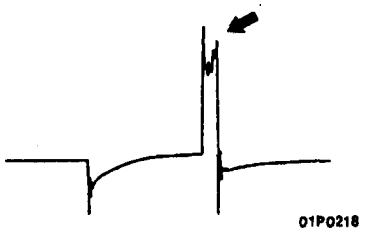 01P0218	Spark line is high and short. Difficult to distinguish between this and abnormal waveform example 1.	Spark plug cable is not properly connected, creating more than one spark from the plug.
Example 5 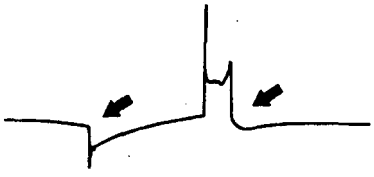 01P0219	lo waves in wave damping section	Short in ignition coil.

IGNITION SYSTEM

16300320020

REMOVAL AND INSTALLATION

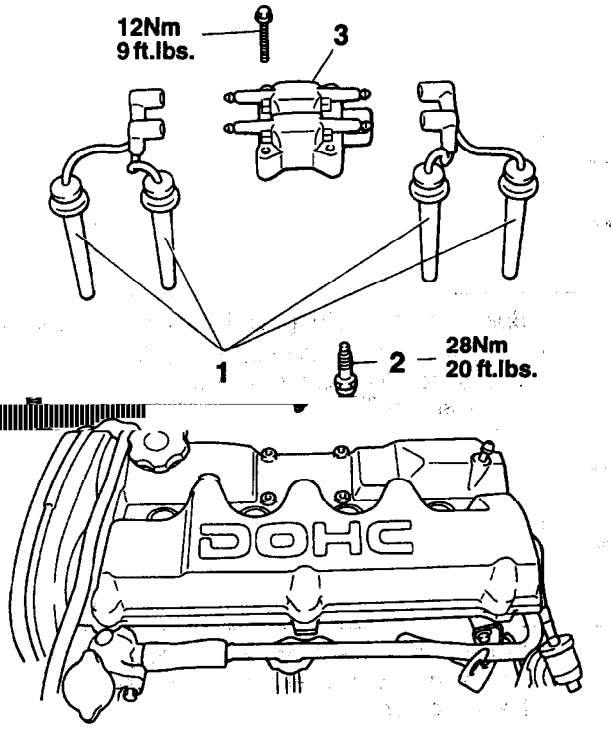

CEN0118

Removal steps

1. Spark plug cable
2. Spark plug
3. Ignition coil pack

TSB Revision

CAMSHAFT POSITION SENSOR

16300340019

REMOVAL AND INSTALLATION

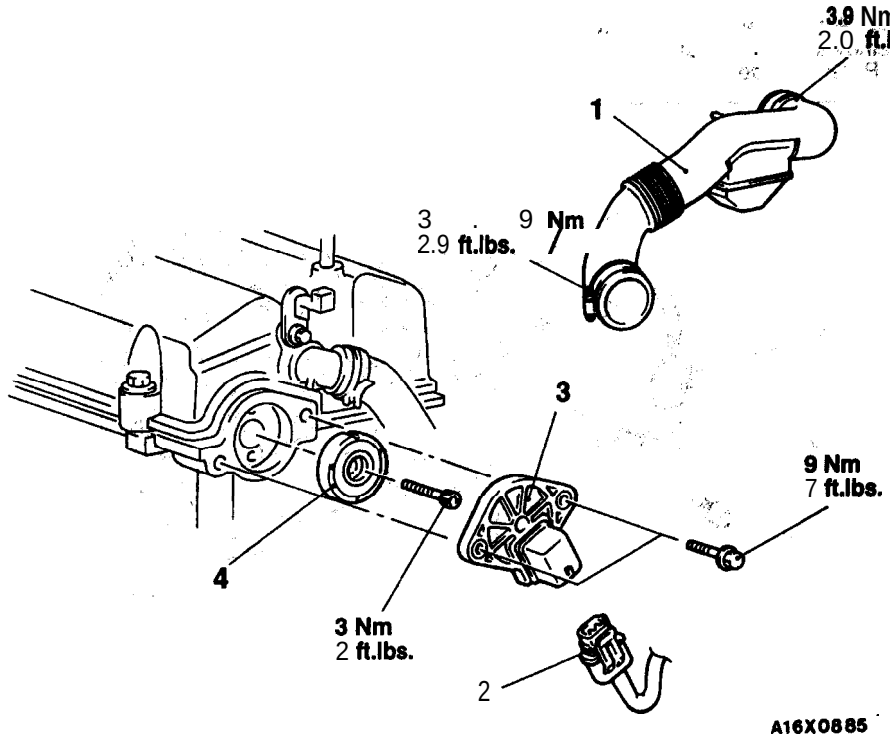

Removal steps

1. Air intake hose
2. Camshaft position sensor connector
3. Camshaft position sensor
▶A◀ 4. Target magnet

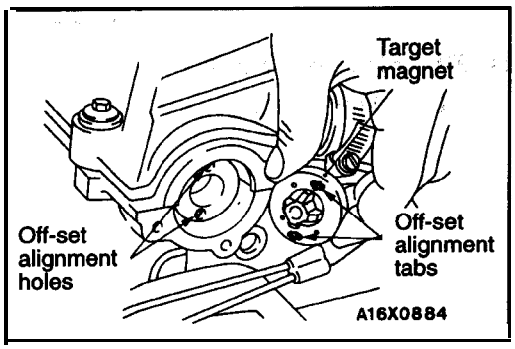

INSTALLATION SERVICE POINT

▶A◀ TARGET MAGNET INSTALLATION

To install the target magnet, align the off-set tabs of the magnet with the off-set holes of the camshaft.

INSPECTION

16300260322

CAMSHAFT POSITION SENSOR

Refer to GROUP 13A – Troubleshooting.

CRANKSHAFT POSITION SENSOR

16300350012

REMOVAL AND INSTALLATION

Pre-removal and Post-installation Operation
Under Cover Removal and Installation
(Refer to GROUP 42 – Under Cover)

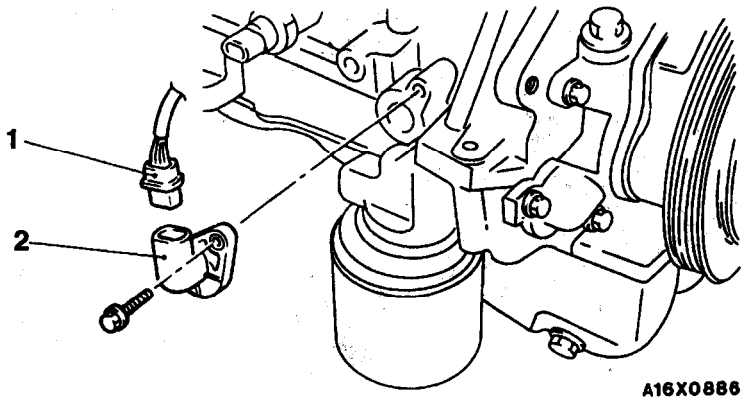

Removal steps

1. Crankshaft position sensor connector
2. Crankshaft position sensor

INSPECTION

16300260339

CRANKSHAFT POSITION SENSOR CHECK

Refer to GROUP 13A – Troubleshooting.

TSB Revision

KNOCK SENSOR

16300280069

REMOVAL AND INSTALLATION

Pre-removal and Post-installation Operation
Under Cover Removal and Installation
(Refer to GROUP 42 – Under Cover)

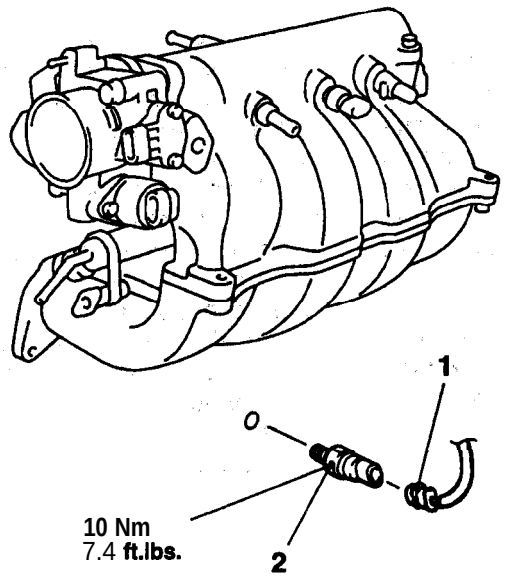

Removal steps

1. Knock sensor connector
2. Knock sensor

Caution
Do not subject the knock sensor to any shocks.

INSPECTION

16300290116

KNOCK SENSOR CHECK

Refer to GROUP 13A – Troubleshooting.

IGNITION SYSTEM <2.0L ENGINE (TURBO) AND 2.4L ENGINE>

16300010224

GENERAL INFORMATION

This system is provided with two ignition coils (A and B) and two ignition power transistors (A and B) for the No. 1 and No. 4 cylinders, and No. 2 and No. 3 cylinders respectively.

Interruption of the primary current flowing in the primary side of ignition coil A generates a high voltage in the secondary side of ignition coil A. The high voltage thus generated is applied to the spark plugs of No. 1 and No. 4 cylinders to generate sparks. At the time that the sparks are generated at both spark plugs, if one cylinder is at the compression stroke, the other cylinder is at the exhaust stroke, so that ignition of the compressed air/fuel mixture occurs only for the cylinder which is at the compression stroke.

In the same way, when the primary current flowing in ignition coil B is interrupted, the high voltage thus generated is applied to the spark plugs of No. 2 and No. 3 cylinders.

The engine control module controls the two ignition power transistors (A and B) to turn them alternately ON and OFF. This causes the primary currents in the ignition coils (A and B) to be alternately interrupted and allowed to flow to fire the cylinders in the order 1-3-4-2.

The engine control module determines which ignition coil should be controlled by means of the signals from the camshaft position sensor which is incorporated in the camshaft and from the crankshaft position sensor which is incorporated in the crankshaft. It also detects the crankshaft position in order to provide ignition at the most appropriate timing in response to the engine operation conditions.

When the engine is cold or operated at high altitudes, the ignition timing is slightly advanced to provide optimum performance.

Furthermore, if knocking occurs, the ignition timing is gradually retarded until knocking ceases.

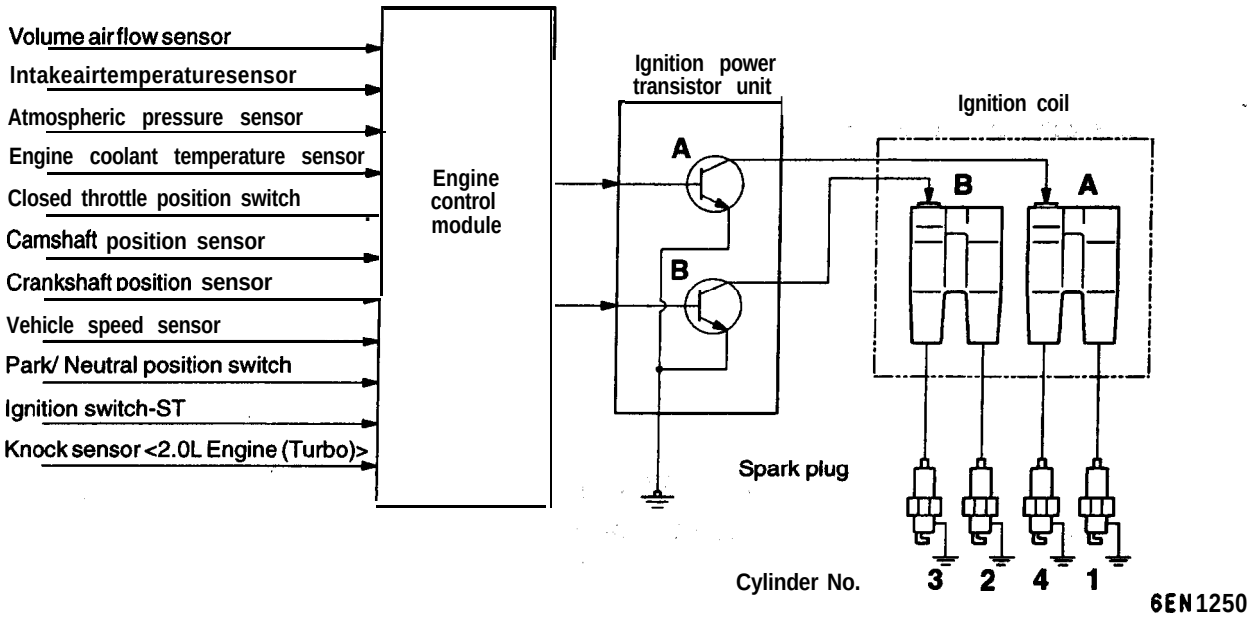

TSB Revision

IGNITION COIL SPECIFICATION

Items	Specifications
Type	Molded 2 coil

SPARK PLUG SPECIFICATION

Items		2.0L Engine (Turbo)	2.4L Engine
Type	NGK	BPR6EKN, BPR6ES	BKR5E-11
	NIPPON DENSO	W20ETR-L8, W20EPR	K16PR-U11
	CHAMPION	RN9YC	RC9YC4

OPERATION

- Turn ignition switch to "ON" position, and battery positive voltage will be applied to primary winding of ignition coil.
- When crankshaft position sensor signal is input to engine control module, engine control module makes ON-OFF control of ignition power transistor one by one.
- When ignition power transistor is turned on, current flows from ignition coil (primary winding) to ground through ignition power transistor.
- When ignition power transistor A is turned from ON to OFF, the spark plugs of No. 1 and No. 4 cylinders spark. Turning of ignition power transistor B from ON to OFF will produce sparking in spark plugs of No. 2 and No. 3 cylinders.

SERVICE SPECIFICATIONS

16300030084

Items			Standard value	Limit
Ignition coil	Primary coil resistance Ω	2.0L Engine (Turbo)	0.70–0.86	
		2.4L Engine	0.74–0.90	
	Secondary coil resistance kΩ	2.0L Engine (Turbo)	11.3–15.3	
		2.4L Engine	20.1–27.3	
Spark plug gap mm (in.)		2.0L Engine (Turbo)	0.7–0.8 (.028–.031)	
		2.4L Engine	1.0–1.1 (.039–.043)	
Spark plug cable resistance kΩ			–	max. 22

SPECIAL TOOLS

16300060069

Tool	Tool number and name	Supersession	Application
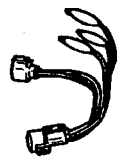	MD998478 Harness connector (3 pin, square)	MD998478	Inspection of ignition primary voltage (connection of ignition coil connector) <2.0L Engine (Turbo)>
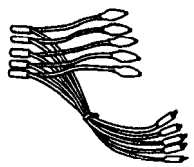	MB991348 Test harness set	Tool not available	Inspection of ignition primary voltage (connection of ignition power transistor connector) <2.4L Engine >

TROUBLESHOOTING

16300070048

TROUBLESHOOTING HINTS

1. Engine cranks, but does not start.
   (1) Spark is insufficient or does not occur at all (on spark plug).
   - Check ignition coil.
   - Check crankshaft position sensor.
   - Check ignition power transistor.
   - Check spark plugs.
   - Check spark plug cable.

   (2) Spark is good.
   - Check ignition timing.

2. Engine idles roughly or stalls.
   - Check spark plugs.
   - Check ignition timing.
   - Check ignition coil.
   - Check spark plug cable.

3. Poor acceleration
   - Check ignition timing.
   - Check spark plug cable.
   - Check ignition coil.

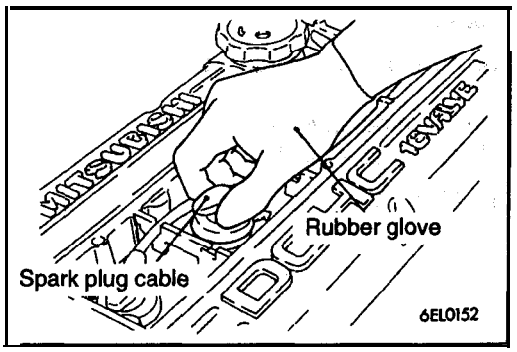

ON-VEHICLE SERVICE

16300090044

SPARK PLUG CABLE TEST

(1) Disconnect, one at a time, each of the spark plug cables while the engine is idling to check whether the engine's running performance changes or not.

WARNING
Wear rubber gloves and rubber-soled shoes while working on the ignition system.

(2) If the engine performance does not change, check the resistance of the spark plug cable, and check. the spark plug itself.

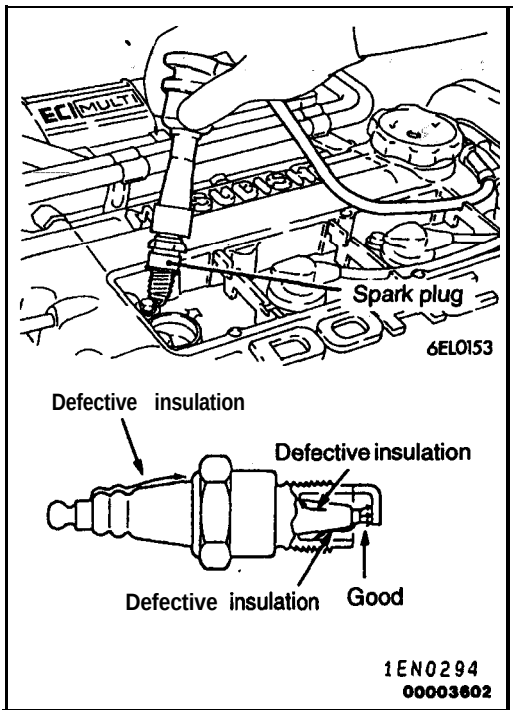

SPARK PLUG TEST

16300150117

(1) Remove the spark plug from the engine and connect it to the spark plug cable boot.
(2) Ground the spark plug outer electrode (body), and crank the engine. Check for spark across the electrodes.
(3) Remove the spark plug from the boot and usually inspect it for cracks in its insulation.
(4) Replace the spark plug if it has a weak spark and/or detective insulation.

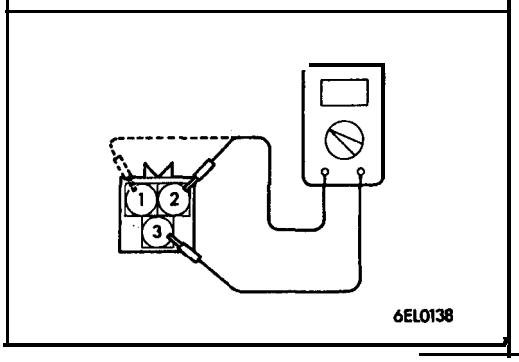

IGNITION COIL CHECK

16300120118

<2.0L Engine (Turbo)>

Primary Coil Resistance

Measure the resistance between connector terminal 3 (power) and each coil terminal.
Measuring point:
No. 1 – No. 4 cylinder side coil; 2-3
No. 2 – No. 3 cylinder side coil; 1–3

Standard value: 0.70–0.86Ω

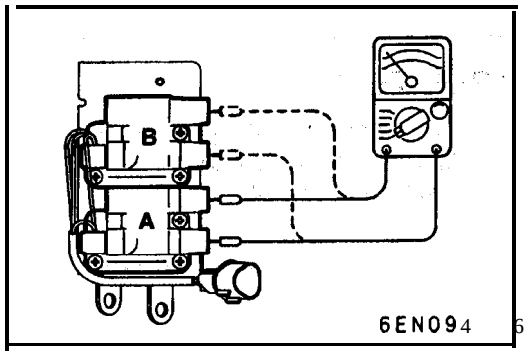

Secondary Coil Resistance

Measure the resistance between coil high voltage terminals;
Measuring point:
No. 1 – No. 4 cylinder side coil; A
No, 2 – No. 3 cylinder bide coil; B

Standard value: 11.3–15.3 kΩ

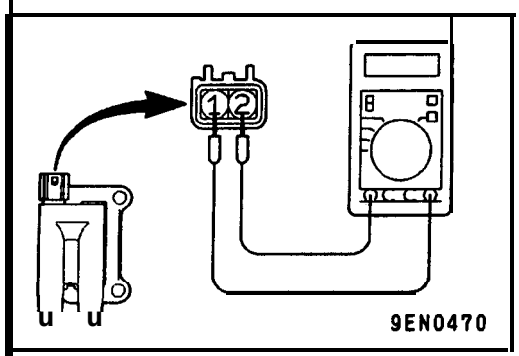

<2.4L Engine>

Primary Coil Resistance

Measure the resistance between the ignition coil connector terminals.

Standard value: 0.74–0.90Ω

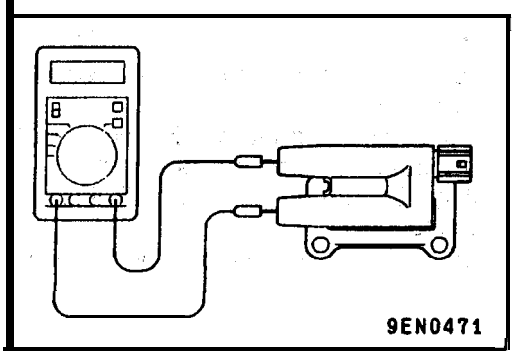

Secondary Coil Resistance

Measure the resistance between the ignition coil connector terminals.

Standard value: 20.1–27.3 kΩ

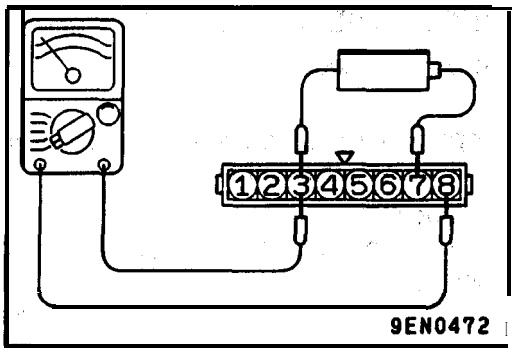

IGNITION POWER TRANSISTOR CHECK 16300130081

NOTE
An analog-type ohmmeter should be used.

No. 1 – No. 4 coil side

(1) Connect the negative (–) terminal of the 1.5V power supply to terminal 3 of the ignition power transistor; then check whether there is continuity between terminal 8 and terminal 3 when terminal 7 and the positive (+) terminal are connected, and disconnected.

NOTE
Connect the (–) probe of the ohmmeter to terminal 8.

Terminal 7 and (+) terminal	Terminal 8 and terminal 3
Connected	Continuity
Unconnected	No continuity

(2) Replace the ignition power. transistor if 'there is a malfunction.

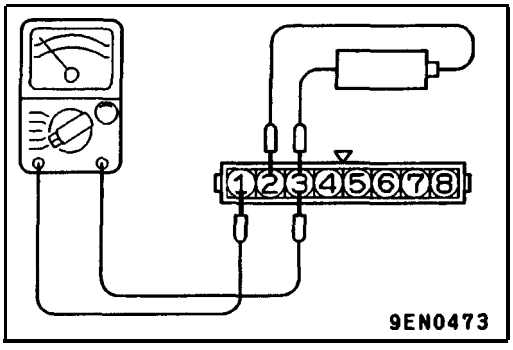

No. 2 – No. 3 coil side

(1) Connect the negative (–) terminal of the 1.5V power supply to terminal 3 of the ignition power transistor; then check whether there is continuity between terminal 1 and terminal 3 when terminal 2 and the positive (+) terminal are connected and disconnected.

NOTE
Connect the (–) probe of the ohmmeter to terminal 1.

Terminal 2 and (+) terminal	Terminal 1 and terminal 3
Connected	Continuity
Unconnected	No continuity

(2) Replace the ignition power transistor if there is a malfunction.

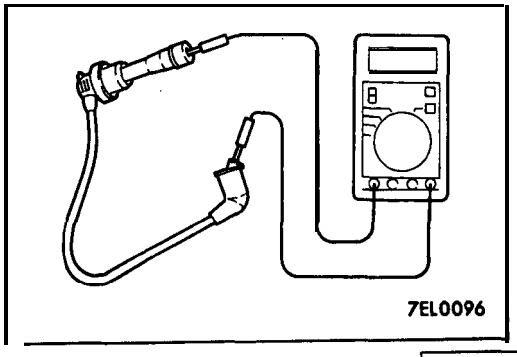

SPARK PLUG CABLE RESISTANCE CHECK 16300140077

Measure the resistance of the all spark plug leads.
(1) Check cap and coating for cracks.
(2) Measure resistance.

Limit: max. 22 kΩ

'SPARK PLUG CHECK AND CLEANING 16300150124

(1) Remove the spark plug cables.

Caution
When pulling the spark plug cable boot from the plug, always hold the boot, not the cable.

(2) Remove the spark plugs.
(3) Check for a burned-out electrode or damaged insulator. Check for even burning.
(4) Remove carbon deposits with wire brush or plug cleaner. Remove sand from plug screw with compressed air.

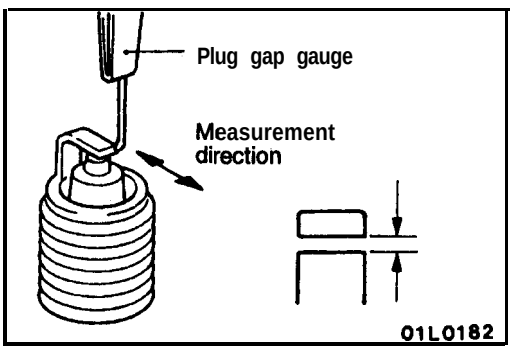

(5) Use a gap gauge to check the plug gap.

Standard value:
<2.0L Engine (Turbo)> 0.7–0.8 mm (.028–.031 in.)
<2.4L Engine> 1.0–1.1 mm (.039–.043 in.)

If the plug gap is not within the standard value range, adjust by bending the ground electrode.

(6) Clean the engine plug holes.

Caution
Do not allow foreign matter to enter the cylinders.

(7) Install the spark plugs.

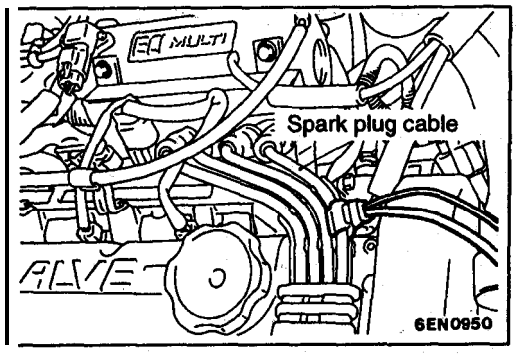

IGNITION SECONDARY VOLTAGE WAVEFORM CHECK

16300170120

MEASUREMENT METHOD

(1)' **Clamp** the SECONDARY PICKUP around the spark plug **cable.**

NOTE
1. The peak ignition voltage will be reversed when the spark cables **No.2** and **No.4,** or **No.1** and **No.3** cylinders are clamped.
2. Because of the two-cylinder simultaneous ignition system, the waveforms for two cylinders in each group appear during wave form observation **(No.1** cylinder **- No.4** cylinder, **No.2** cylinder **- No.3** cylinder). However, wave form observation ***is only*** applicable for the cylinder with the spark plug cable clamped by the secondary pickup.

(2) Clamp the spark plug cable with the Trigger pickup.

NOTE
1. Clamp the trigger pickup to the same spark plug cable clamped by the secondary pickup.
2. Identifying which cylinder waveform **pattern** is displayed can be difficult. **For reference,** remember, that the wave form pattern of the cylinder attached to the secondary pickup will be displayed as stable.

STANDARD WAVEFORM

For standard waveform, refer to **P.16-47.**

WAVEFORM OBSERVATION POINTS

For waveform observation points, refer to **P.16-48.**

ABNORMAL WAVEFORMS EXAMPLES

For examples of abnormal waveforms, refer to **P.16-49.**

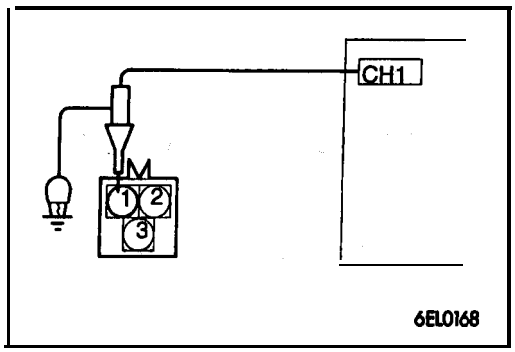

IGNITION PRIMARY VOLTAGE WAVEFORM CHECK

16300170137

<2.0L Engine (Turbo)>

(1) Disconnect the ignition coil connector and connect the special tool (harness connector:. MD998478) in between.
(2) Connect the analyzer primary pickup to the ignition coil connector terminal 1 (black clip on the special tool) when observing the No. 2 – No. 3 cylinder group, terminal 2 (red clip) for the No. 1 – No. 4 cylinder group.
(3) Connect the primary pickup 'earth terminal.
(4) Clamp the spark plug with the trigger pickup.

NOTE
1. Clamp the spark plug cable for No.1 and No.3 cylinders of the same group with the cylinder that is connected to the primary pickup.
2. The wave pattern of either cylinder in the same group will appear at the left edge of the screen.

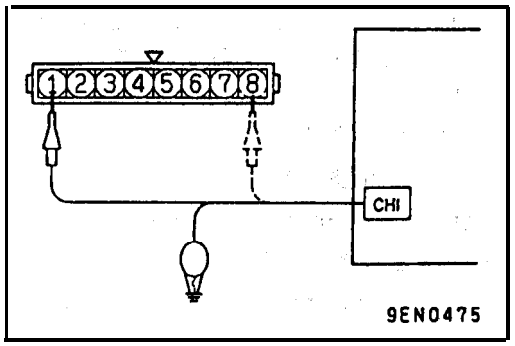

<2.4L Engine>

(1) Disconnect the ignition power transistor connector and connect the special tool (harness connector: MB991348) in between. (Connect all the terminals.)
(2) Connect the analyzer primary pickup to the ignition power transistor connector terminal 8 when observing the No. 1 – No. 4 cylinder group, terminal 1 for the No. 2 – No. 3 cylinder group.
(3) Connect the primary pickup earth terminal.
(4) Clamp the spark plug with the trigger pickup.

NOTE
1. Clamp the spark plug cable for No.1 and No.3 cylinders of the same group with the cylinder that is connected to the primary pickup.
2. The wave pattern of either cylinder in the same group will appear at the left edge of the screen.

STANDARD WAVEFORM

Observation Conditions

FUNCTION	SECONDARY
PATTERN HEIGHT	HIGH (OR LOW)
PATTERN SELECTOR	RASTER
Engine revolutions	Curb idle speed

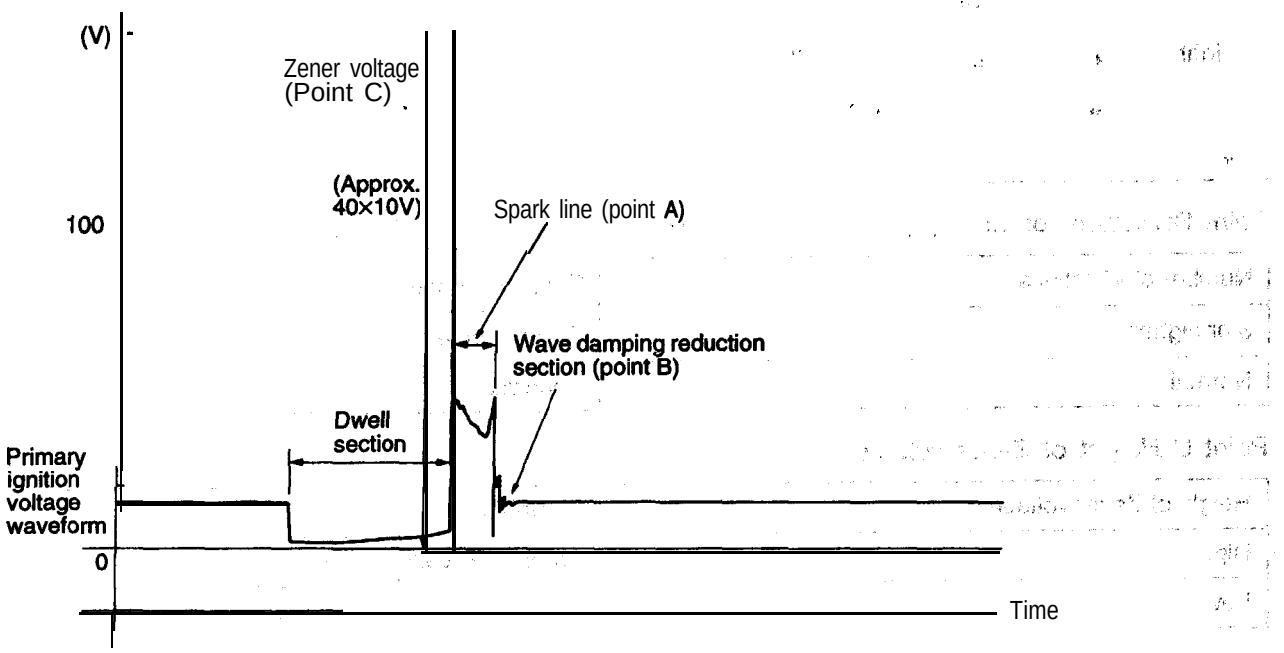

7EL0149

Observation Conditions (The only change from above condition is the pattern selector.)

PATTERN SELECTOR	DISPLAY

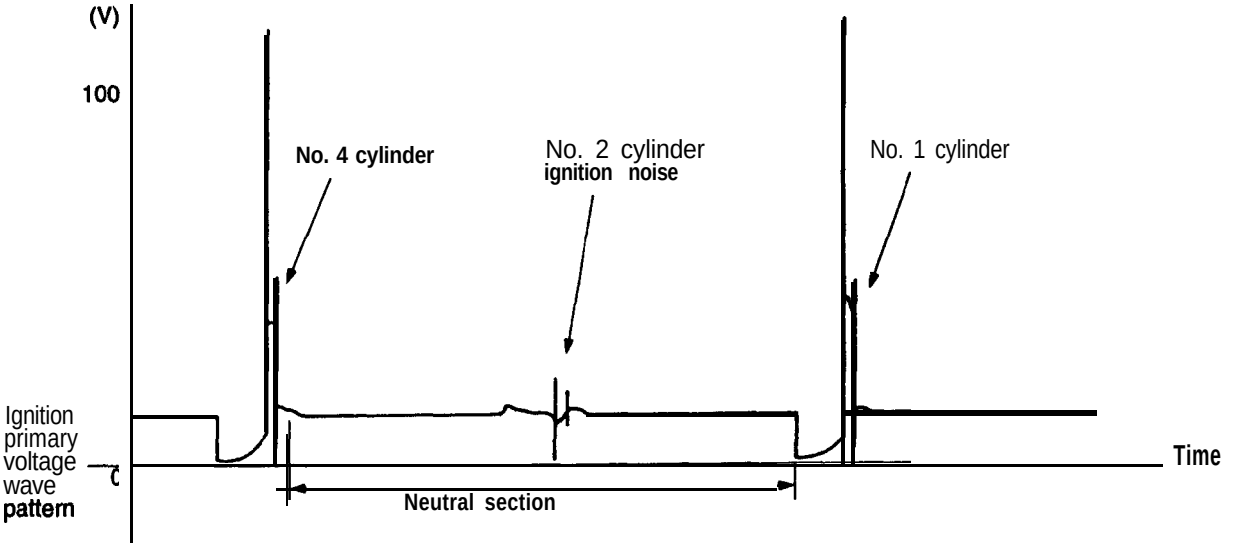

6EL0185

TSB Revision

WAVEFORM OBSERVATION POINTS

Point A: The height, length and slope of the spark line (refer to abnormal waveform examples 1, 2, 3 and 4) show the following trends.

Spark line		Plug gap	Condition of electrode	Compression force	Concentration of air mixture	Ignition timing	High tension cable
Length	Long	Small	Normal	Low	Rich	Advanced	Leak
	Short	Large	Large wear	High	Lean	Retarded	High resistance
Height	High	Large	Large wear	High	Lean	Retarded	High Resistance
	Low	Small	Normal	Low	Rich	Advanced	Leak
Slope		Large	Plug is fouled	–	-	-	–

Point B: Number of vibrations in reduction vibration section (Refer to abnormal waveform example 5)

Number of vibrations	Coil, condenser
3 or higher	Except above
Normal	Abnormal

Point C: Height of Zener voltage

Height of Zener voltage	Probable cause
High	Problem in Zener diode
Low	Abnormal resistance in primary coil circuit

ABNORMAL WAVEFORMS EXAMPLES

Abnormal waveform	Wave characteristics	Cause of problem
Example 1  01P0210	Spark line is high and short.	Spark plug gap is too large.
Example 2  01P0211	Spark line is low, long, and sloping. Also, the second half of the spark line is distorted. This could be a result of misfiring.	Spark plug gap is too small.
Example 3  01P0212	Spark line is low, long, and sloping. However, there is almost no spark line distortion.	Spark plug gap is fouled.
Example 4  01P0213	Spark line is high and short.	Spark plug cable is not property connected, creating more than one spark from the plug
Example 5 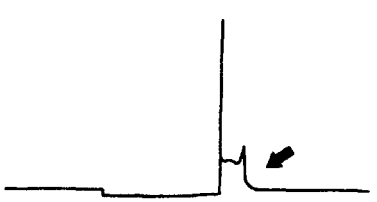 01P0214	No waves in wave damping section	Short in ignition coil.

IGNITION SYSTEM <2.0L Engine (Turbo)>

16300200065

REMOVAL AND INSTALLATION

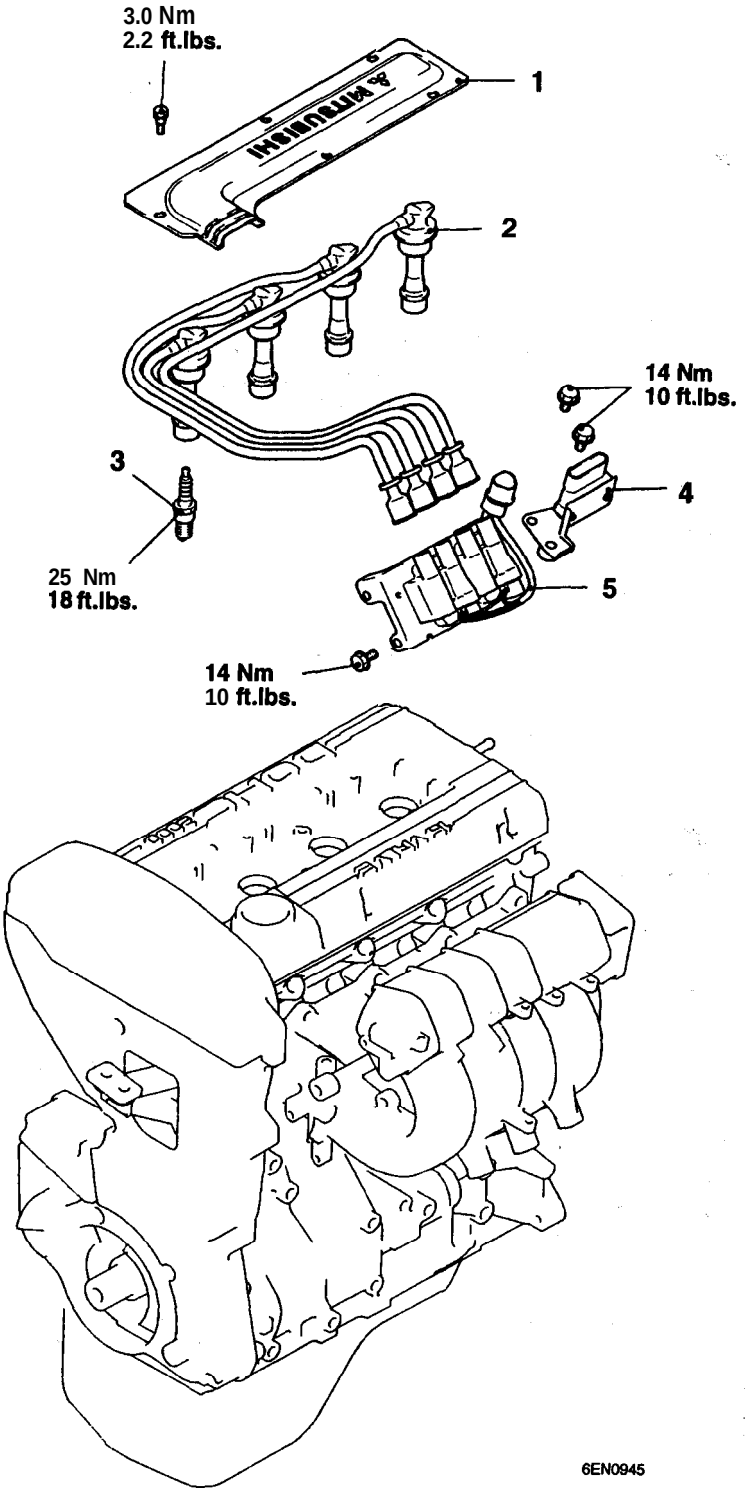

Removal steps

1. Center cover
▶A◀ 2. Spark plug cable
3. Spark plug
4. Ignition power transistor
5. Ignition coil

TSB Revision

INSTALLATION SERVICE POINT

▶A◀ SPARK PLUG CABLE INSTALLATION

improper arrangement of spark plug cables will induce voltage between the cables, causing misfiring and developing a surge at acceleration in high-speed operation.

Therefore, be careful to arrange the spark plug cables properly by the following procedure.

1. Install the spark plug cable clamps as shown in the illustration.
2. The numerals on the support and clamp indicate the spark plug cable No.
3. Pay attention to the following items when the spark plug cables are installed.
   (1) Install the cables securely to avoid possible contact with metal parts.
   (2) install the cables neatly, ensuring they are not too tight, loose, twisted or kinked.

'The spark plug cables should each be routed in the directions indicated by the arrows on the rocker cover.

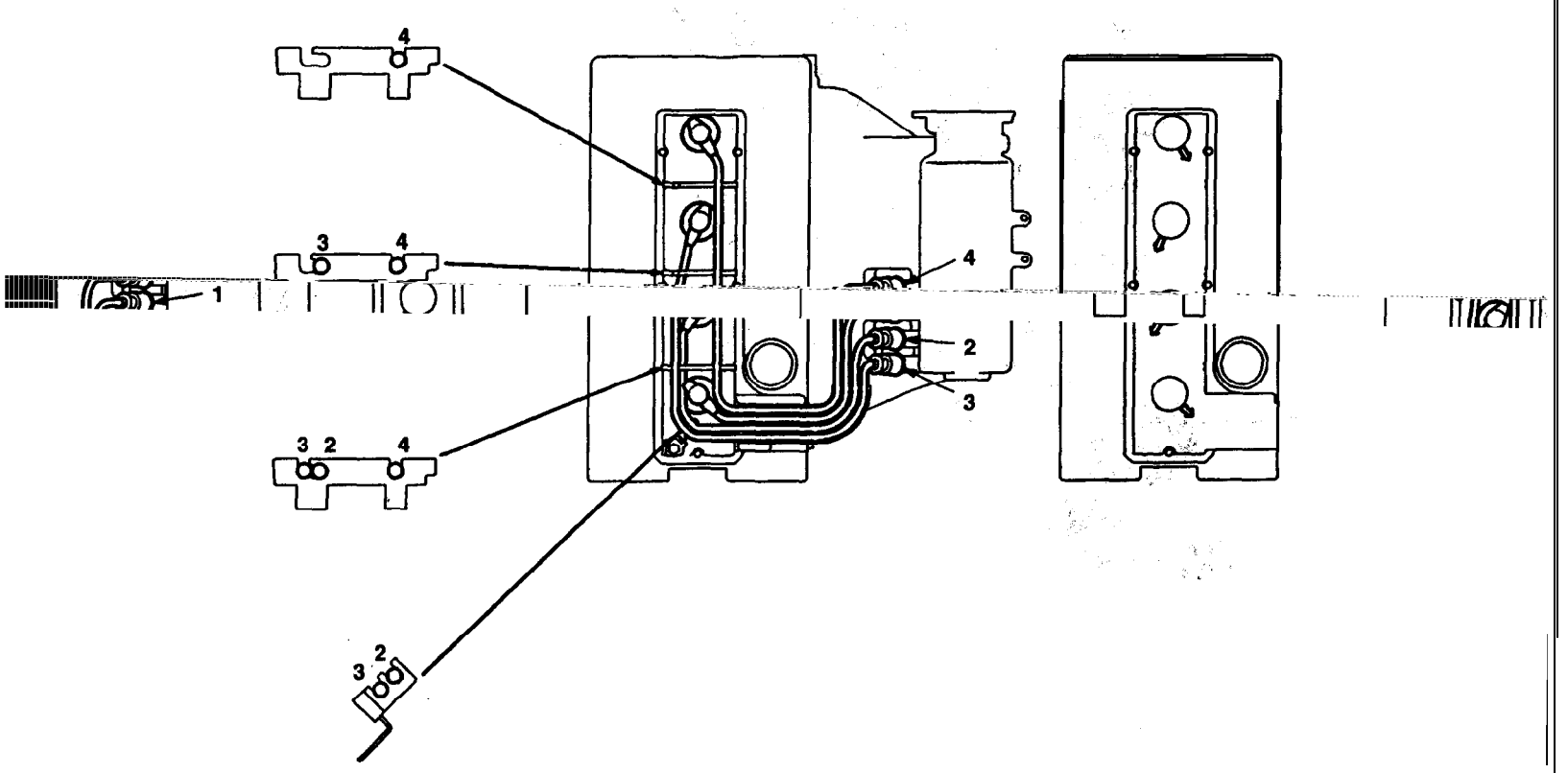

6EN0947

IGNITION SYSTEM <2.4L Engine>

16300200089

REMOVAL AND INSTALLATION

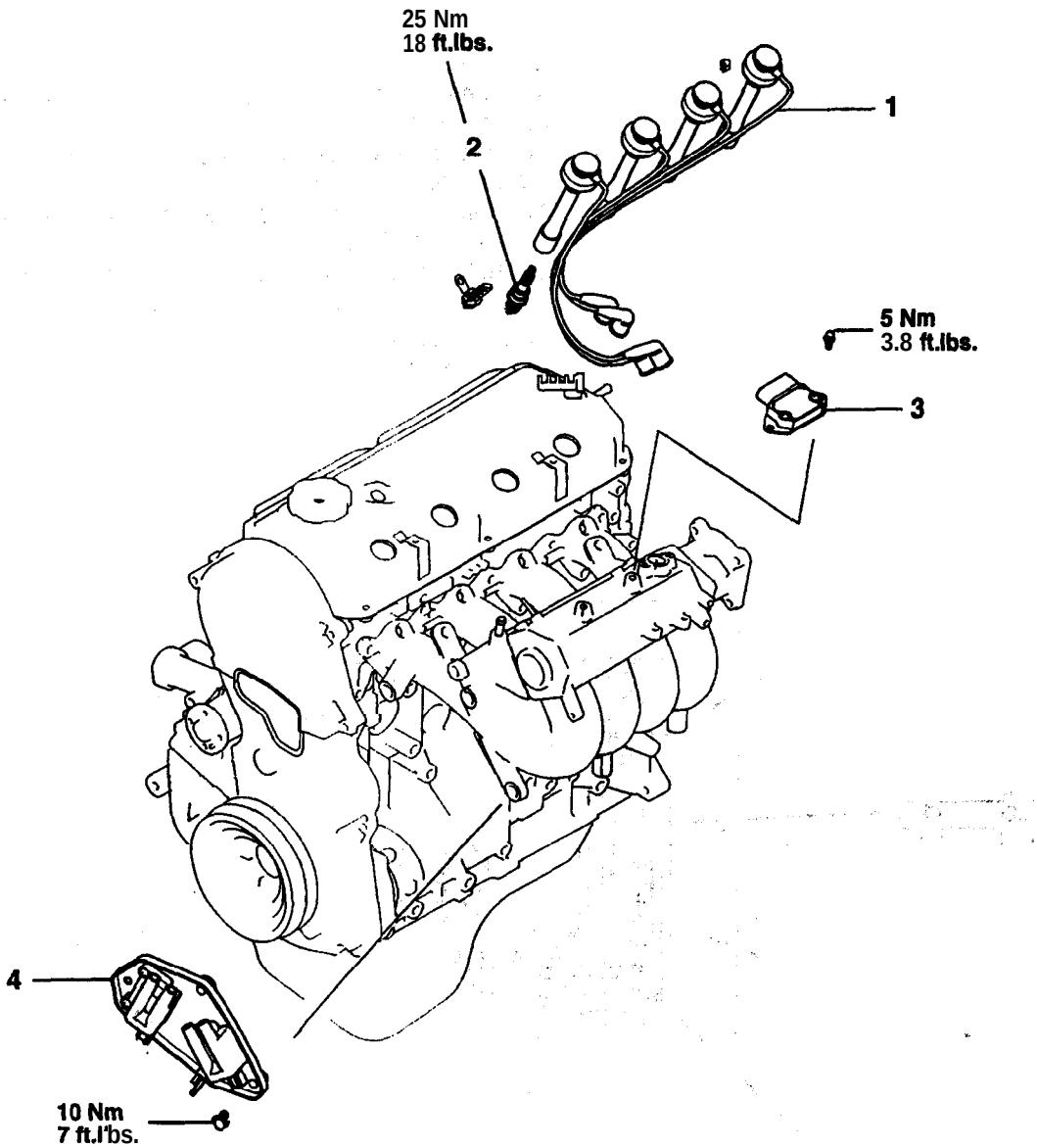

Removal steps

▶A◀ 1. Spark plug cable
2. Spark plug
3. Ignition power transistor
4. Ignition coil

TSB Revision

INSTALLATION SERVICE POINT

▶A◀ SPARK PLUG CABLE INSTALLATION

Improper arrangement of spark plug cables will induce voltage between the cables, causing misfiring and developing a surge at acceleration in high-speed operation.
Therefore, be careful to arrange the spark plug cables properly by the following procedure.

1. Install the spark plug cable clamps as shown in the illustration.
2. The numerals on the support and clamp indicate the spark plug cable No.
3. Pay attention to the following items when the spark plug cables are installed.
   (1) Install the cables securely to avoid possible contact with metal parts.
   (2) Install the cables neatly, ensuring they are not too tight, loose, twisted or kinked.

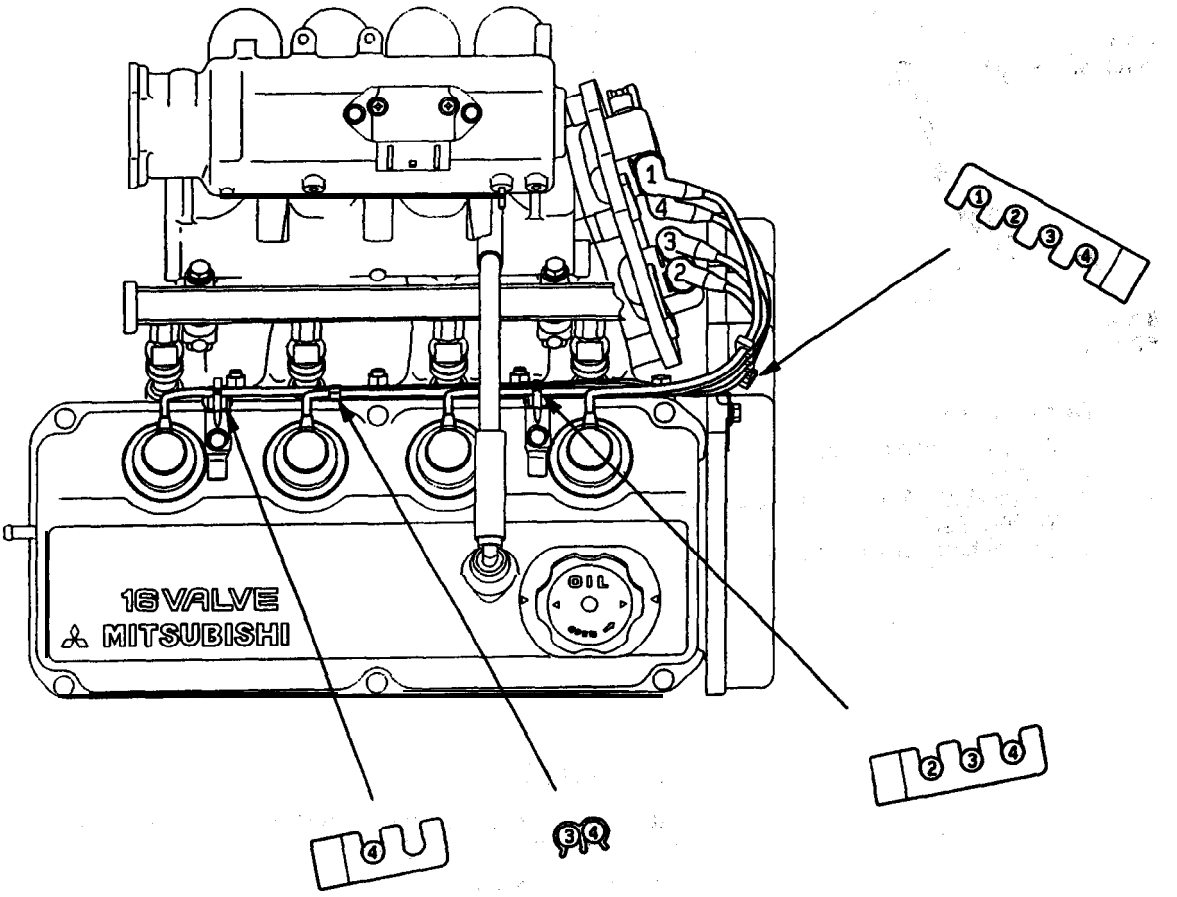

6EN1094

TSB Revision

CAMSHAFT POSITION SENSOR AND CRANKSHAFT POSITION SENSOR <2.0L Engine (Turbo)>

16200220152

REMOVAL AND INSTALLATION

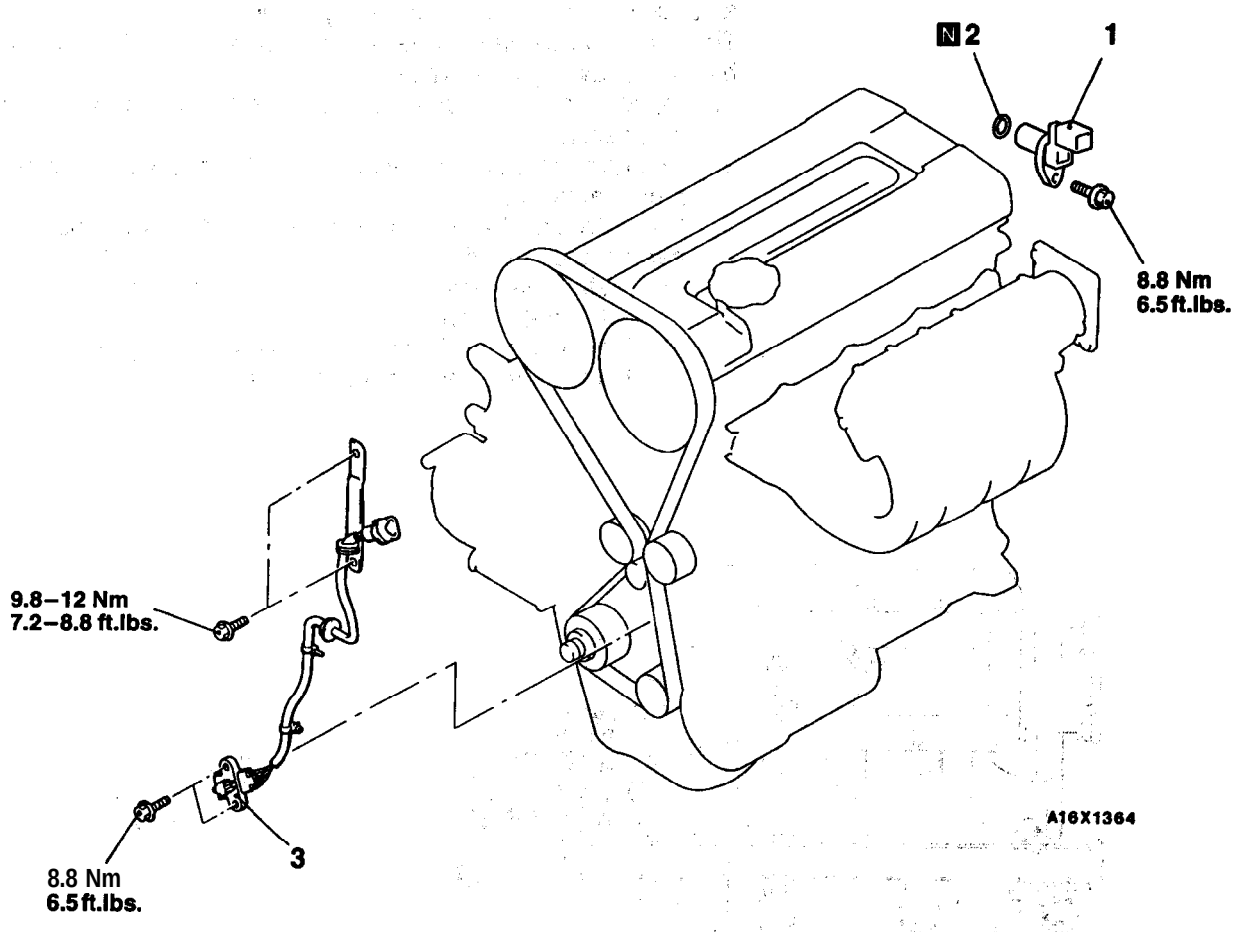

Removal steps

1. Camshaft position sensor
2. O-ring
- Timing belt (Refer to GROUP 11A – Timing Belt)
3. Crankshaft position sensor

INSPECTION

16300260346

CAMSHAFT POSITION SENSOR, CRANKSHAFT POSITION SENSOR CHECK

Refer to GROUP 13A – Troubleshooting.

TSB Revision

CAMSHAFT POSITION SENSOR AND CRANKSHAFT POSITION SENSOR <2.4L Engine>

16300260169

REMOVAL AND INSTALLATION

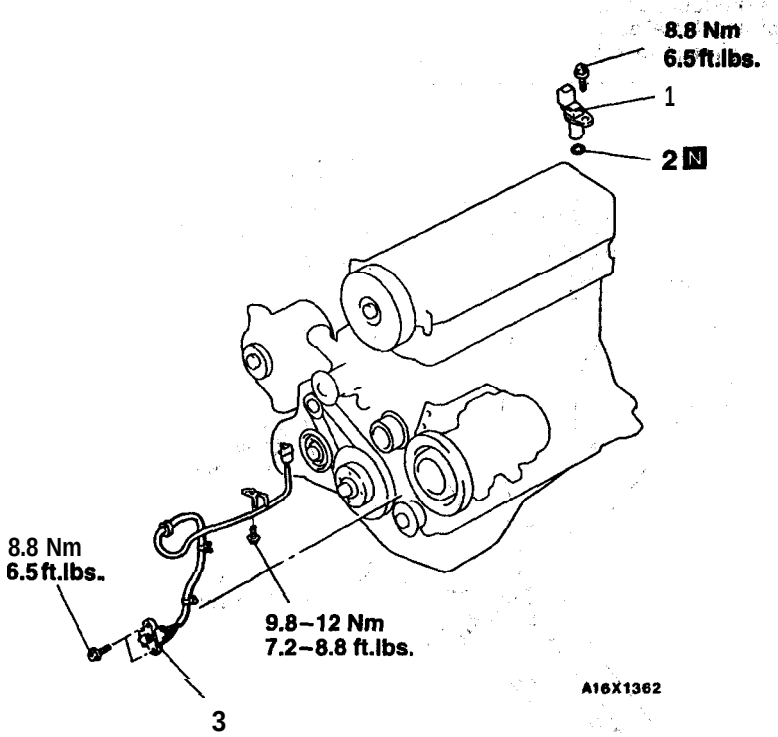

Removal steps

1. Camshaft position sensor
2. O-ring
- Timing belt (Refer to GROUP 11E – Timing Belt.)
3. Crankshaft position sensor

INSPECTION

16300260346

CAMSHAFT POSITION SENSOR, CRANKSHAFT POSITION SENSOR CHECK

Refer to GROUP 13A – Troubleshooting.

TSB Revision

KNOCK SENSOR <2.0L Engine (Turbo)>

16300280120

REMOVAL AND INSTALLATION

Pre-removal and Post-installation Operation
Under Cover Removal and Installation
(Refer to GROUP 42 – Under Cover)

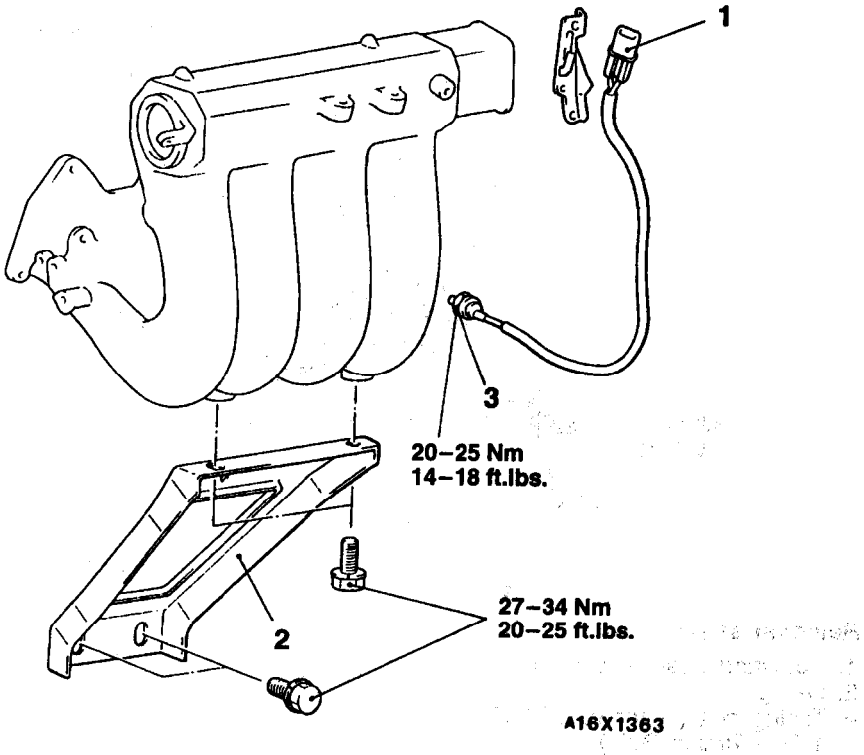

Removal steps

1. Knock sensor connector
2. Intake manifold stay
   (Refer to GROUP 15 – Intake Manifold <2.0L Engine (Turbo)>)
3. Knock sensor

Caution
Do not subject the knock sensor to any. shocks.

INSPECTION

16300290123

KNOCK SENSOR CHECK

Refer to GROUP 13A – Troubleshooting.

TSB Revision

CHASSIS ELECTRICAL

CONTENTS

54109000068

CONTINUED ON NEXT PAGE

WARNINGS REGARDING SERVICING OF SUPPLEMENTAL RESTRAINT SYSTEM (SRS) EQUIPPED VEHICLES

WARNING!

(1) Improper service or maintenance of any component of the SRS, or any SRS-related component, can lead to personal injury or death to service personnel (from inadvertent firing of the air bag) or to the driver and passenger (from rendering the SRS inoperative).

(2) Service or maintenance of any SRS component or SRS-related component must be performed only at an authorized MITSUBISHI dealer.

(3) MITSUBISHI dealer personnel must thoroughly review this manual, and especially its GROUP 52B – Supplemental Restraint System (SRS) and GROUP 00 – Maintenance Service before beginning any service or maintenance of any component of the SRS or any SRS-related component.

NOTE

The SRS includes the following components: SRS-ECU, SRS warning light, air bag module, clock spring and interconnecting wiring. Other SRS-related components (that may have to be removed/installed in connection with SRS service or maintenance) are indicated in the table of contents by and asterisk (*).

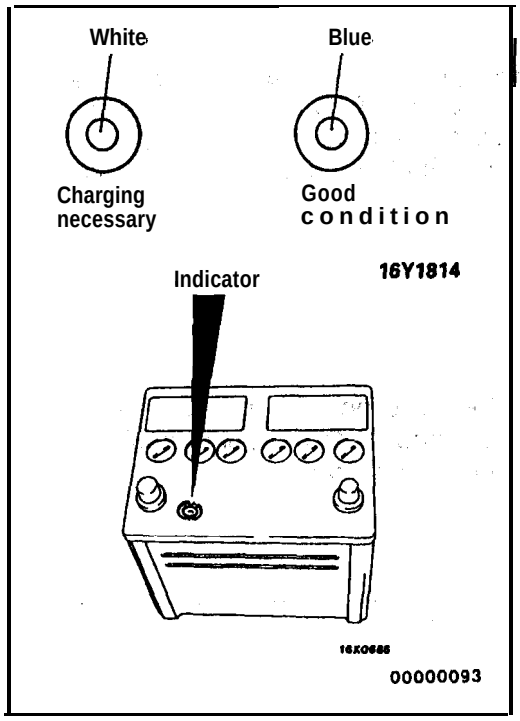

BATTERY

54100100040

ON-VEHICLE SERVICE

BATTERY CHECK

BATTERY VISUAL CHECK (1)

The battery contains a visual test indicator which gives blue signal when an adequate charge level exists, and white signal when charging is required.

BATTERY VISUAL INSPECTION (2)

Make sure ignition switch is in, OFF position and all battery feed accessories are OFF.

1. Disconnect ground cable from battery before disconnecting (+) cable.
2. Remove battery from vehicle.

Caution
Care should be taken *in* the event battery case is cracked or leaking to protect hands from the electrolyte. A suitable pair of rubber gloves (not the household type) should be worn when removing battery by hand.

3. Inspect battery carrier for damage caused by loss of acid from battery. If acid damage is present, it will be necessary to clean area with a solution of clean warm water and baking soda. Scrub area with a stiff bristle, brush and' wipe off with a cloth moistened with ammonia or baking soda in water.
4. Clean top of battery with same solutions as described in step 3
5. Inspect battery case and cover for cracks. If cracks are present, battery must be replaced.
6. Clean the battery post with a suitable battery post cleaning tool.
7. Clean the inside surfaces of the terminal clamps with a suitable battery terminal cleaning tool. Replace damaged or frayed cables and broken terminal clamps.
8. Install the battery in vehicle.
9. Connect (+) and (–) cables to battery in the order of mention.
10. Tighten the clamp nut securely.

BATTERY CHARGING

54100110050

Caution

When batteries are being charged, an explosive gas forms beneath the cover of each cell. Do not smoke near batteries on charge or which have recently been charged.

Do not break live circuits at the 'terminals of the batteries on charge. A spark will occur where the live circuit is broken.

Keep all open flames away from the battery.

Battery electrolyte temperature may temporarily be allowed to rise to **55°C (131 °F). Increase** of electrolyte temperature **above 55°C (131°F)** is harmful to the battery, causing deformation of battery cell, decrease in life of battery, etc..

CHARGE RATE

If the test indicator is white, the battery should be charged as outlined below.

When the dot appears or when maximum charge shown below is reached, charging should be stopped.

NOTE

If the indicator does not **turn** to **blue** even after the battery is charged, the **battery should** be replaced; do not overcharge

Charge Rate Chart

Battery	B.C.I. GROUP size 86
Slow charging	5 amps 15 hrs.
	10 amps 7.5 hrs.
Fast charging	20 amps 3.75 hrs.
	30 amps 2.5 hrs

BATTERY TESTING PROCEDURE

54100120138

TEST STEP

(1) Remove negative cable, then positive cable.
(2) Check for dirty or corroded connections.

NG → Clean terminals and clamps.

OK ↓

Check for loose battery post.

NG → Replace battery

OK ↓

(1) Remove hold-downs and shields.
(2) Check for broken/cracked case or cover.

NG → Replace battery

OK ↓

(1) Turn headlights on for 15 seconds.
(2) Turn headlights off for 2 minutes to allow battery voltage to stabilize.
(3) Disconnect cables.
(4) Read open circuit voltage.
OK: Open circuit voltage is more than 12.4V

NG → Charge battery at 5 amps. → Re-test

OK ↓

(1) Connect a load tester to the battery.
(2) Load the battery at the recommended discharge rate (see LOAD TEST RATE CHART) for 15 seconds.
(3) Read voltage after 15 seconds, then remove load,
(4) Compare the measured value with the minimum voltage. (See LOAD TEST CHART)
OK: Higher than the minimum voltage

NG → Replace battery

OK ↓

Normal

LOAD TEST CHART

Temperature °C (°F)	21 (70) and above	16 (60)	10 (50)	4 (40)	-1 (30)	-7 (20)	–12 (10)	–18 (0)
Minimum voltage	9.6	9.5	9.4	9.3	9.1	8.9	8.7	8.5

LOAD TEST RATE CHART

Load test (AMPS)	206 amps	252 amps
Cranking rating (0°F)	430 amps	525 amps
Reserve capacity	90 minutes	90 minutes
Application	B.C.I. GROUP size 86: 2.0L Engine <Non-turbo M/T>, 2.0L Engine <Turbo>	B.C.I. GROUP size 86: 2.0L Engine <Non-turbo A/T>

IGNITION SWITCH

54300010073

GENERAL INFORMATION

OPERATION

Ignition key hole illumination light timer

- When, with the ignition switch turned to the OFF position, the driver's door is opened (door switch is switched ON), the ECU timer circuit is activated and the ignition key hole illumination light illuminates for 10 seconds.
- When the ignition switch is turned to the ON position while the timer circuit is activated, the illumination output comes off and the ignition key hole illumination light comes off.

Ignition key reminder warning buzzer

- When, with the ignition key inserted in the key cylinder (with the key reminder switch at OFF), the driver's door is opened (door switch is switched ON), the ECU detective circuit will function.
- With the detective circuit activated, buzzer output from the drive circuit makes the buzzer sound intermittently to remind the ignition key.

SPECIAL TOOLS

54300060139

Tool	Tool number and name	Supersession	Application
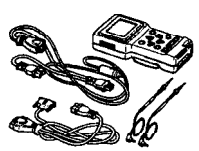	MB991502 Scan tool (MUT-II)	MB991502	ETACS-ECU input signal checking
	ROM pack		
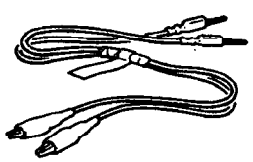	MB991529 Diagnostic trouble code check harness	Tool not necessary if scan tool <MUT-II> is available	ETACS-ECU input signal checking (when using a voltmeter)

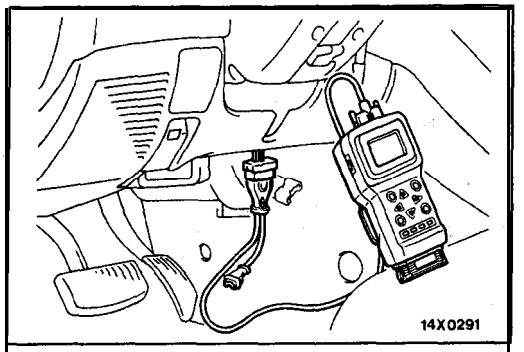

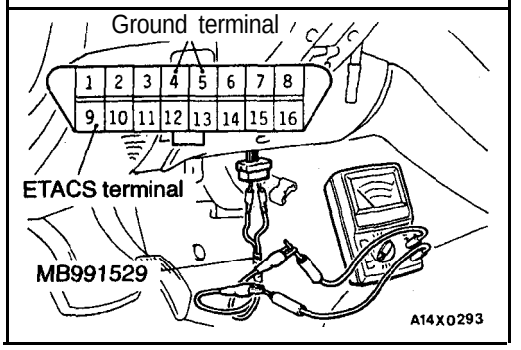

TROUBLESHOOTING

54300700062

DIAGNOSTIC FUNCTION

INPUT SIGNAL INSPECTION POINTS

When Using the Scan Tool

1. Connect the scan tool to the data link connector.

   Caution
   Always turn the ignition switch off when connecting and disconnecting the scan tool.

2. If buzzer of the scan tool sounds once when a switch is operated (ON/OFF), the ECU input signal for that switch circuit system is normal.

When Using a Voltmeter

1. Use the-special tool to connect a voltmeter between the ground terminal and the ETACS terminal of data link connector.
2. If the voltmeter indicator deflects once when a switch is operated (ON/OFF), the ECU input signal for that switch circuit system is normal.

INSPECTION CHART FOR TROUBLE SYMPTOMS

54300720099

Trouble symptom		Inspection procedure No.	Reference page
Communication with scan tool is not possible.	Communication with all systems is not possible.	1	54-8
	Communication with the one-shot pulse input signal only is not possible.	2	54-8
Ignition key hole illumination light	While key hole illumination light is illuminated, ignition key is turned to the ON position but key hole illumination light does not switch off. (However, it switches off after 10 seconds.)	3	54-8
	Key hole illumination light remains illuminated.	4	54-9
	Even if driver's side door is opened, key hole illumination light does not illuminate.	5	54-9
Ignition key remind-er warning buzzer	While the ignition key reminder warning buzzer sounds, the buzzer does not stop sounding when the ignition key is turned to the ON position. (The buzzer does not sound by closing the driver's door.)	3	54-8
	The ignition key reminder warning buzzer does not stop sounding by removing the ignition key. (The buzzer does not sound by closing the driver's door.)	6	54-10
	The ignition key reminder warning buzzer does not sound when the ignition key is inserted and the driver's door is opened. (The ignition key is turned to OFF position.)	7	54-11

INSPECTION PROCEDURE FOR TROUBLE SYMPTOMS

INSPECTION PROCEDURE 1

Communication with scan tool is not possible. (Communication with all systems is not possible.)	Probable cause
[Comment] The reason is probably a defect in the power supply system (including ground) for the diagnostic line.	• Malfunction 'of connector • Malfunction of harness wire

- Refer to GROUP 13A – Troubleshooting <2.0L Engine (Turbo) and 2.4L Engine>.
- Refer to GROUP 13A – Troubleshooting <2.0L Engine (Turbo) and 2.4L Engine>.

INSPECTION PROCEDURE 2

Communication with scan tool is not possible. (Communication with the one-shot pulse input signal only is not possible.)	Probable cause
[Comment] The cause is probably a defective one-shot pulse input signal circuit system of the diagnostic line.	• Malfunction of connector • Malfunction of harness wire . Malfunction of ECU

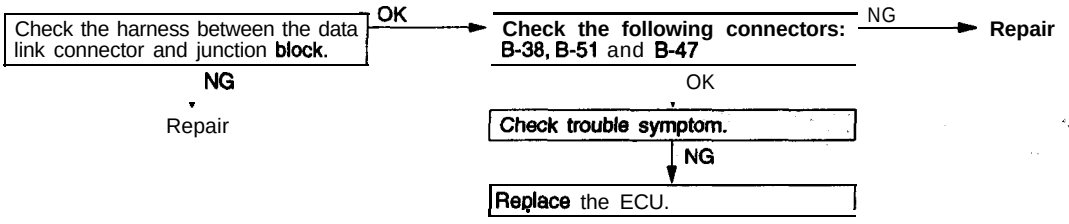

INSPECTION PROCEDURE 3

• While key hole illumination light is illuminated, ignition key is turned to the ON position but key hole illumination light does not switch off. (However, it switches off after 10 seconds.) • While the ignition key reminder warning buzzer sounds, the buzzer does not stop sounding when the ignition key is turned to the ON position. (The buzzer does not sound by closing the driver's door.)	Probable cause
[Comment] The cause is probably a defective ignition switch input circuit or a defective ECU.	• Malfunction of connector • Malfunction of harness wire . Malfunction of ECU

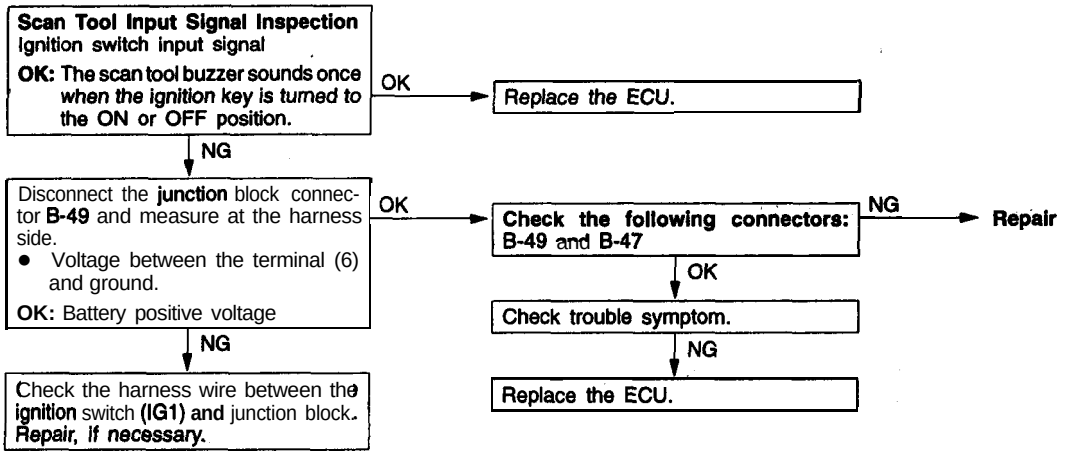

TSB Revision

INSPECTION PROCEDURE 4

Key hole illumination light remains Illuminated.	Probable cause
[Comment] The cause is probably a harness short or a defective ECU.	• Malfunction of harness wire • Malfunction of ECU

When the connector B-51 of the junction block is disconnected, does the light switch off?
- NO → Check the harness wire between the key reminder switch and junction block. Repair, if necessary.
- YES → Replace the ECU.

INSPECTION PROCEDURE 5

Even if driver's side door is opened, key hole illumination light does not illuminate.	Probable cause
[Comment] The cause is probably a defective key hole illumination light circuit system or a defective driver's side door switch input circuit system.	• Malfunction of driver's side door switch • Malfunction of bulb • Malfunction of connector • Malfunction of harness wire • Malfunction of ECU

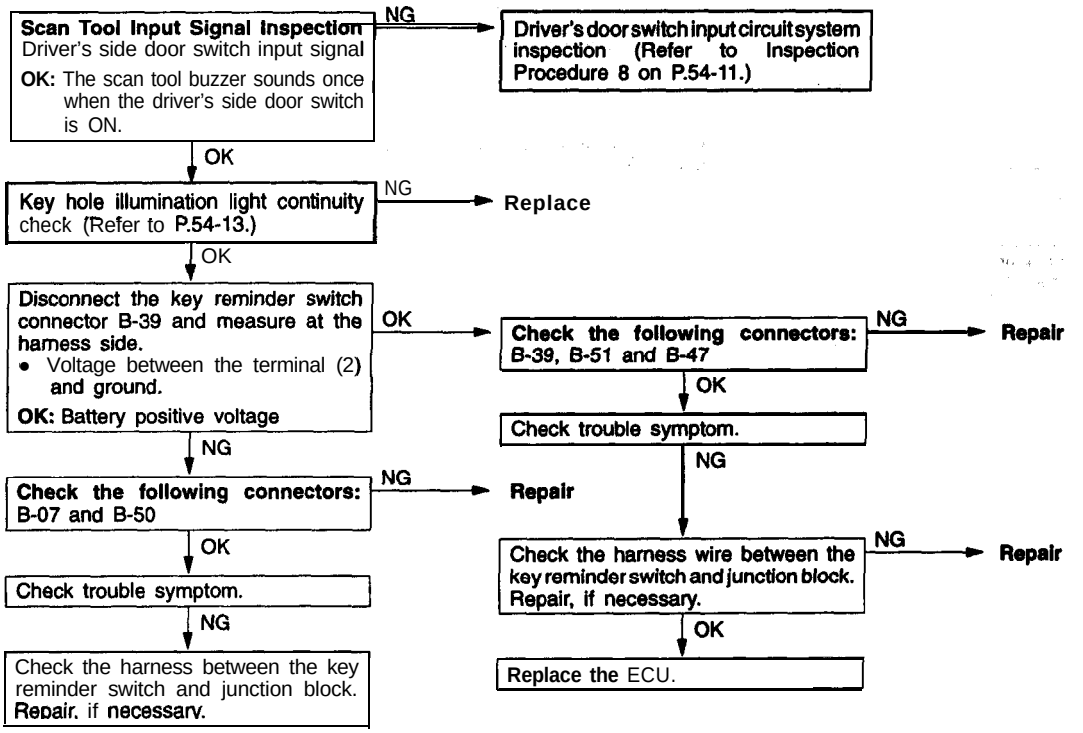

INSPECTION PROCEDURE 6

The ignition key remlnder warning buzzer does not stop sounding by removing the ignition key. (The buzzer does not sound by closing the driver's door.)	Probable cause
[Comment] It is possible that there is a malfunction of the key reminder switch input circuit or the ECU.	• Malfunction of key reminder switch • Malfunction of connector • Malfunction of harness wire • Malfunction of ECU

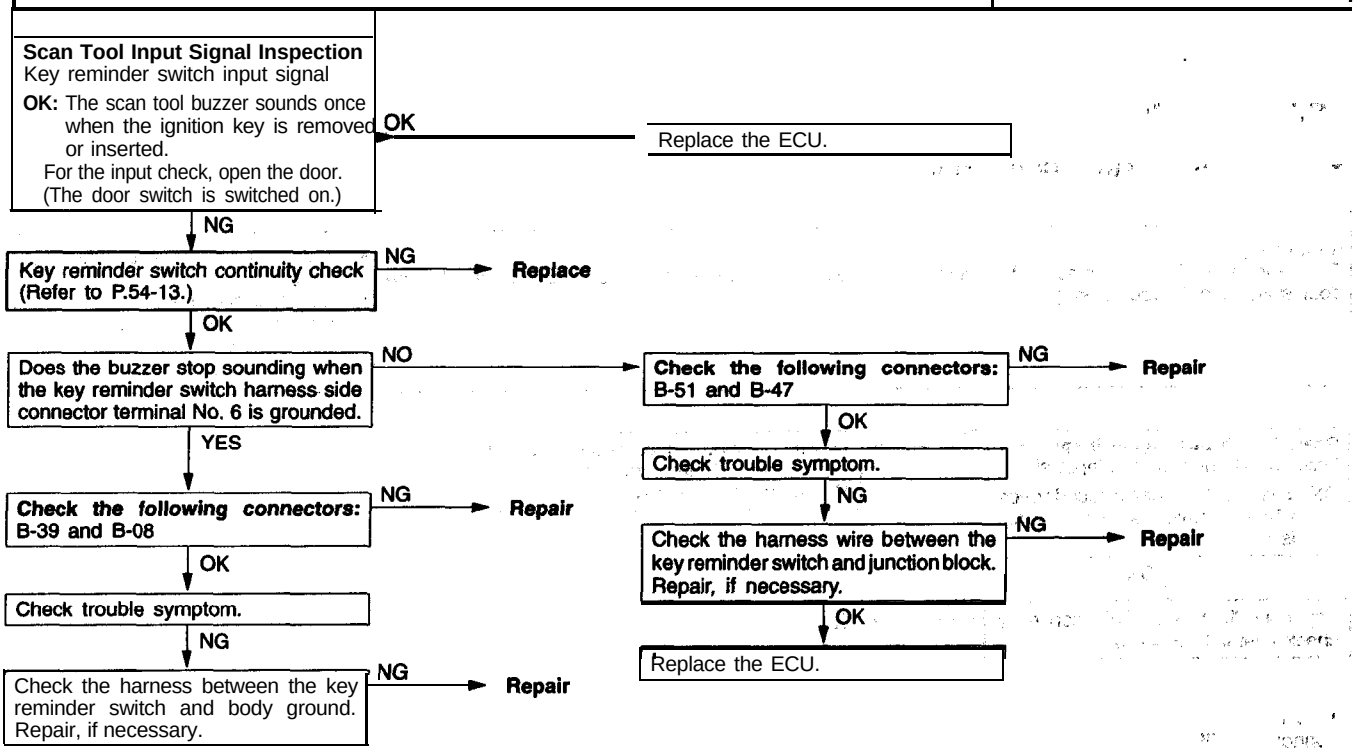

INSPECTION PROCEDURE 7

The ignition key reminder warning buzzer does not sound when the ignition key is inserted in the key cylinder and the driver's door is opened. (The ignition key is turned to OFF position.)	Probable cause
[Comment] It is possible that there is a malfunction of the door switch input circuit or the key. reminder switch input circuit, in case the ignition key hole illumination light is defective.	• Malfunction of driver's side door switch • Malfunction of key reminder switch • Malfunction of connector • Malfunction of harness wire • Malfunction of ECU

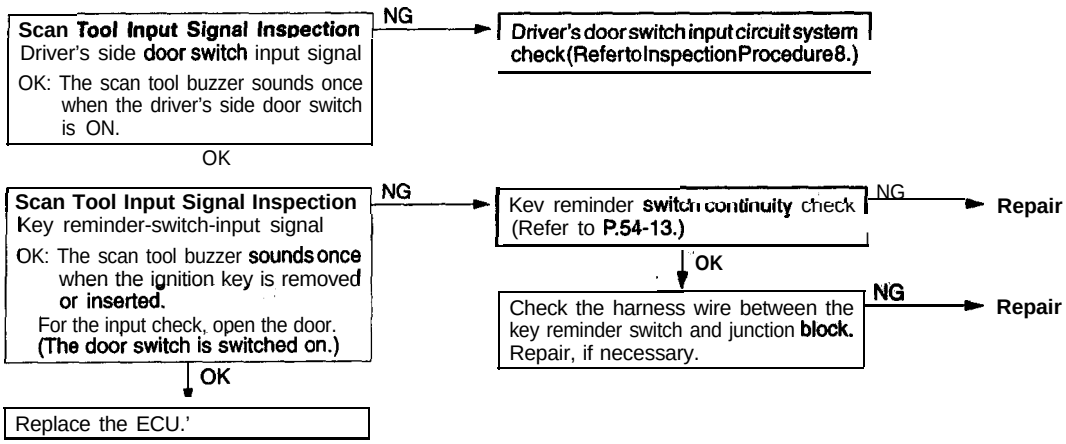

INSPECTION PROCEDURE 8

Driver's side door switch input circuit system check

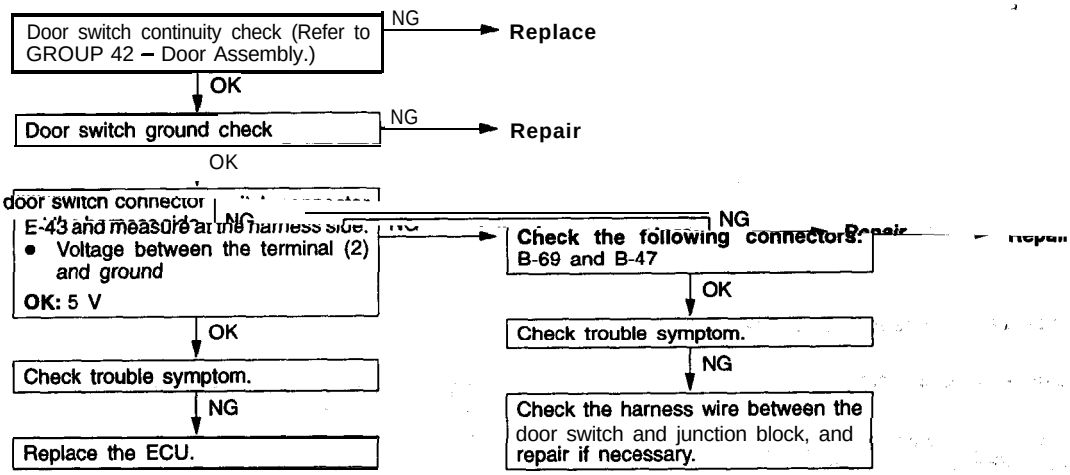

IGNITION SWITCH

54300210060

REMOVAL AND INSTALLATION

CAUTION: SRS
Before removal of air bag module and clock spring, refer to the following sections;
GROUP 52B – SRS Service Precautions.
GROUP 52B – Air Bag Modules and Clock Spring.

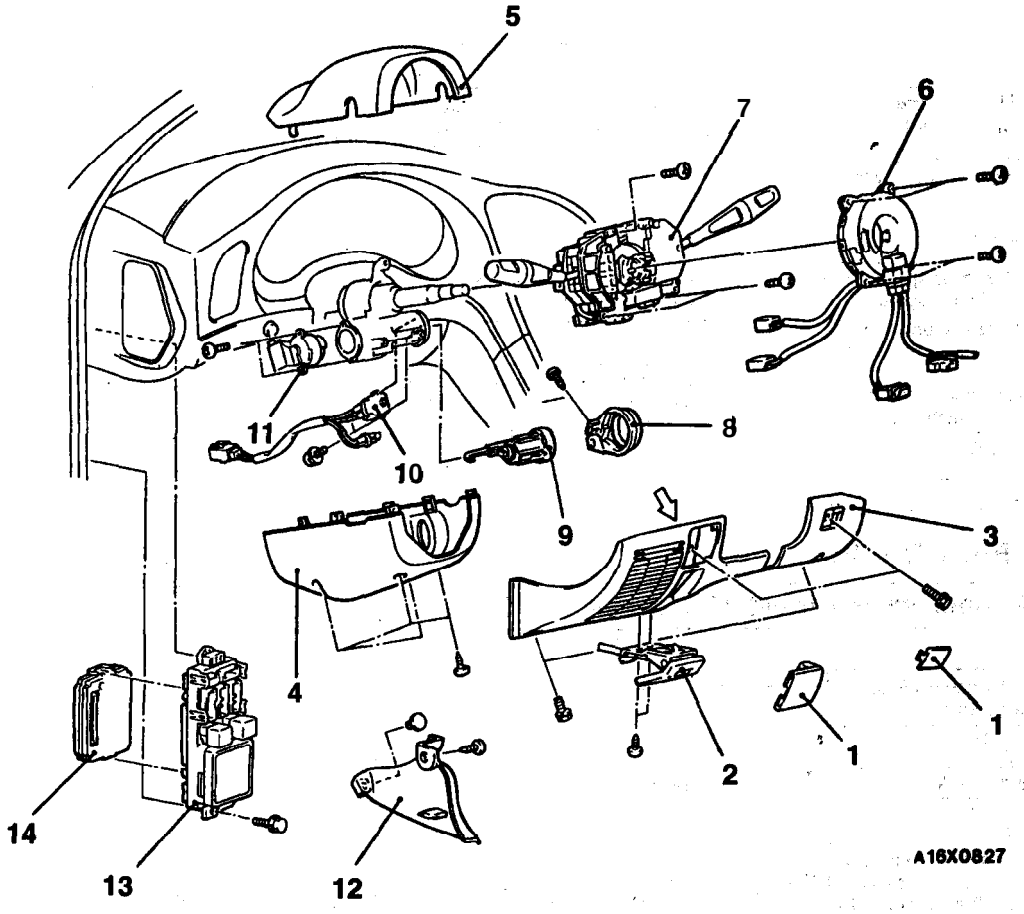

NOTE
The ⇦ mark indicates the sheet metal clip position.

Steering lock cylinder removal steps

- Steering wheel (Refer to GROUP 37A – Steering Wheel and Shaft.)

1. Plug
2. Hood lock release handle
3. Instrument under cover
4. Column cover lower
5. Column cover upper
6. Clock spring
7. Column switch
8. Ignition key illumination ring or ring cover
9. Steering lock cylinder

◀A▶

Key reminder switch segment or key hole illumination light removal steps

4. Column cover lower
5. Column cover upper
10. Key reminder switch segment or key hole illumination light

Ignition switch segment removal steps

4. Column cover lower
5. Column cover upper
11. Ignition switch segment

ETACS-ECU removal steps

12. **Cowl side trim (L.H.)**
13. Junction block
14. ETACS-ECU

TSB Revision

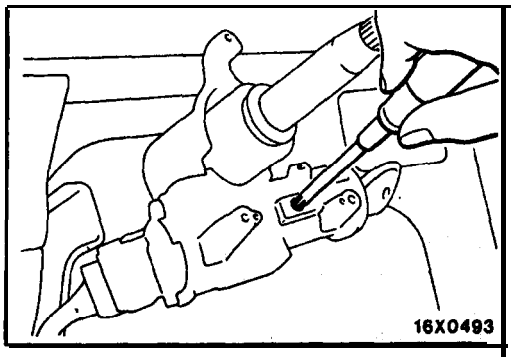

REMOVAL SERVICE POINT

◀A▶ STEERING LOCK CYLINDER REMOVAL

(1) Insert the key in the steering lock cylinder and turn it to the "ACC" position.
(2) Using a cross-tip (+) screwdriver (small) or a similar tool, push the lock pin of the steering lock cylinder inward and then pull the steering lock cylinder toward you.

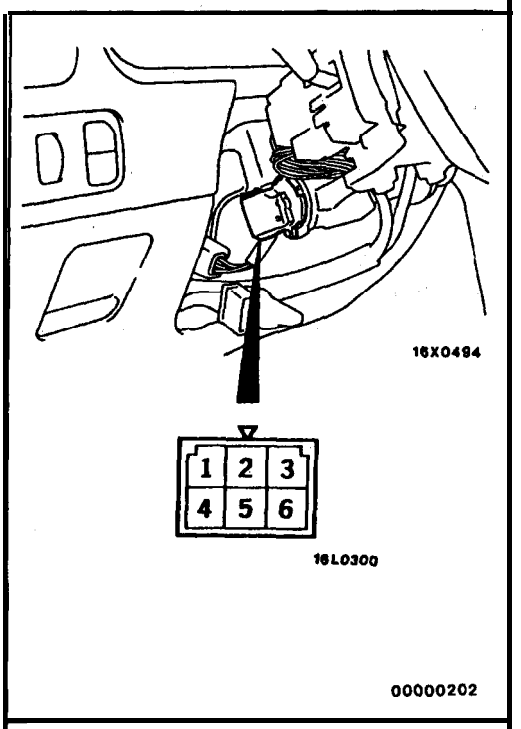

INSPECTION

54300220063

IGNITION SWITCH CONTINUITY CHECK

(1) Remove the instrument under cover. (Refer to P.54-12.)
(2) Remove the column cover lower and upper.
(3) Disconnect the wiring connector from the ignition switch and connect an ohmmeter to the switch side 'connector.
(4) Operate the ignition 'switch' and check the continuity.

Ignition key position	Terminal No.					
	1	2	3	4	5	6
LOCK						
ACC	○					○
ON	○	○		○		○
START	○	○	○		○	

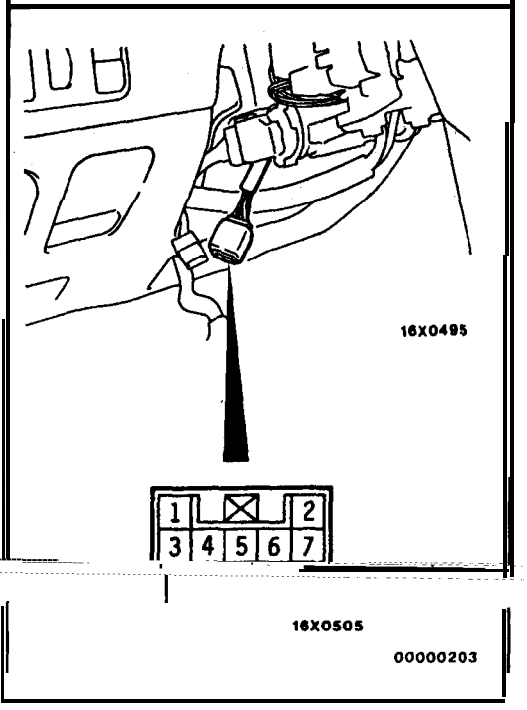

KEY REMINDER SWITCH,' KEY HOLE' ILLUMINATION LIGHT CONTINUITY CHECK

54300770032

(1) Remove the column cover lower and upper.
(2) Disconnect the wiring "connector from the key, reminder switch or from the key hole illumination light and connect an ohmmeter to the 'switch 'side connector.
(3) Check the continuity when the ignition key is pulled out of and inserted into the steering lock cylinder.

Ignition key position	Terminal No.			
	Key reminder switch		Key hole illumination light	
	4	6	1	2
Removed	○	○	○	○
Inserted				

COMBINATION METERS

54300010080

GENERAL INFORMATION

OPERATION

Fuel gauge

- When the ignition key is at the "ON" position, the fuel gauge is activated.
- When there is much fuel, the unit's resistance is small and the current flowing in the circuit is great, so the gauge's indicator indicates in the **"F"** area.
- When there is little fuel, the unit's resistance is high and the current flowing in the circuit is small, so the gauge's indicator indicates in the "E" area.

Engine coolant temperature gauge

- When the ignition key is at the "ON" position, the engine coolant temperature gauge is activated.
- When the engine coolant temperature is high, the unit's resistance is low and there is a great flow of current in the circuit, so the gauge's indicator indicates in the **"H"** area.
- When the engine coolant temperature is low, the unit's resistance is high and there is a small flow of current in the circuit, so the gauge's indicator indicates in the **"C"area.**

Electric type speedometer

<2.0L Engine (Non-turbo) – M/T, 2.0L Engine (Turbo) and 2.4L Engine>

- With the ignition switch turned to ON position, speedometer operates.
- The electric type speedometer uses an electric circuit to shape the wave of the electric signal from the vehicle speed sensor and after calculating vehicle speed, it drives the pointer.

<2.0L Engine (Non-turbo) – A/T>

- With the ignition switch turned to ON position, speedometer operates.
- Electric signals from the input speed sensor and output speed sensor drive the EATX-ECM.

Boost gauge

- When the ignition key is 'set to the **"ON** position, the gauge indicator will be **at "0".**
- When the engine **is stared,** the indicator will move from **"0"** to the. minus **(–) side.** Then, as the boost level increases, it will move to the **puls (+)** side.

Brake warning light

This warning light illuminates when the ignition key is in "ON" position, and goes **off** after the engine has started. This indicator comes on when the parking brake is applied or **brake fluid** level falls less than the specific level.

Oil pressure warning light'

This warning light illuminates when the ignition key is in "ON" position, and goes off after the engine has started. This indicator comes on when the oil, fails or the trouble occurs in the oil circulating system **while driving.**

Low fuel level warning light

With the ignition key turned to the ON position, the fuel level sensor resistance becomes small by' its exposure from the fuel, **when** the fuel level comes' down.

When the resistance value becomes lower than the specified value, the low fuel level warning light comes on to indicate that the fuel residual quantity is small.

SERVICE SPECIFICATIONS

54300030082

Items			Standard values
Speedometer indication error		20 mph	19–22
		40 mph	38–44
		60 mph	57–66
		80 mph	76–88
		100 mph	94–110
		40 km/h	37–44
		80 km/h	75–88
		120 km/h	113–132
		160 km/h	150–176
Tachometer indication error r/min		1,000	±100
		3,000	±150
		5,000	±250
		6,000	±300
Fuel gauge unit resistance Ω	<FWD>	Float point "F"	4±2
		Float point "E"	112±7
	<AWD>	Float point "F"	2±1*1, 2±1*2
		Float point "E"	56.9±1*1, 50.1±1*2
Fuel gauge unit float height mm (in.)	<FWD>	A (Float point "F")	26.6 (1.05)
		B (Float point "E")	159.9 (6.3)
	<AWD>	A (Float point "F")	10.4±3 (.41±.12)*1, 3.0±3 (.12±.12)*2
		B (Float point "E")	119.5±3 (4.7±.12)*1, 126.7±3 (5.0±.12)*2
Input speed sensor resistance Ω			0.3–1.2
Output speed sensor resistance Ω			0.3–1.2
Fuel gauge resistance Ω		Between power supply and ground	249±30
		Between power supply and fuel gauge	127±25
		Between fuel gauge and ground	122±10
Engine coolant temperature gauge resistance Ω		Between power supply and ground	178.9±18
		Between power supply and engine coolant temperature gauge	54±2.7
		Between engine coolant temperature gauge and ground	232.9±23
Engine coolant temperature gauge unit resistance [at 70°C (158°F)] Ω			104±13.5
Oil pressure gauge resistance Ω			42±2
Boost gauge resistance Ω			75.8±7.6

NOTE
*1: Main fuel gauge unit
*2: Sub fuel gauge unit

SEALANT

54300050044

items	Specified sealants
Engine coolant temperature gauge unit threaded portion	Loctite 242 or equivalent <2.0L Engine (Non-turbo) and 2.4L Engine)
	3M Adhesive Nut Locking No. 4171 or equivalent <2.0L Engine (Turbo)>

SPECIAL TOOLS

54300060146

Tool	Tool number and name	Supersession	Application
A 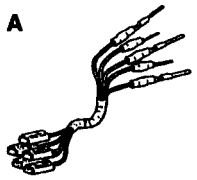 B  C  D 	MB991 223 Harness set A: MB99121 9 Test harness B: MB991 220 LED harness C : MB991221 LED harness adapter D: MB991 222 Probe	MB991 223	Fuel gauge simple check A: Connector pin contact pressure check 'B, C: Power circuit check D: Commercial tester connection

TSB Revision

TROUBLESHOOTING

INSPECTION PROCEDURE FOR TROUBLE SYMPTOMS

54300070095

INSPECTION PROCEDURE 1

Speedometer does not operate.	Probable cause
[Comment] The cause is probably a defective vehicle speed sensor circuit system or a defective speedometer.	• Malfunction of vehicle speed sensor <2.0L Engine (Non-turbo) – M/T, 2.0L Engine (Turbo) and 2.4L Engine> • Malfunction of input speed sensor or output speed sensor <2.0L Engine (Non-turbo) – A/T> • Malfunction of speedometer • Malfunction of harness wire • Malfunction of connector • Malfunction of EATX-ECM <2.0L Engine (Non-turbo) – A/T>

Disconnect the combination meter connectors C-05 or C-06 and measure at the harness sides.
1. Measure the voltage between terminal (36) and ground when the vehicle is moved forward and backward.
   OK: 4.5 V or more
2. Voltage between the terminal (10) and ground
   OK: Battery positive voitage

1. NG → Vehicle speed sensor circuit system check (Refer to Inspection Procedure 2)

2. NG → Check the following connectors: B-66 and B-49
- OK → Check trouble symptom.
- NG → Repair

Check trouble symptom.
- OK → Check trouble symptom.
- NG → Replace the speedometer.

Check trouble symptom.
- NG → Check the harness wire between the power supply and combination meter. Repair, if necessary.

INSPECTION PROCEDURE 2

Vehicle speed sensor circuit system check

<2.0L Engine (Turbo) and 2.4L Engine>

Vehicle speed sensor check (Refer to P.54-27.)
- NG → Replace
- OK →

Disconnect the vehicle speed sensor connector A-76 and measure at the harness side.
1. Voltage between the terminal (3) and ground
   OK: 4.5 V or more
2. Continuity between terminal (2) and ground
   OK: Continuity
3. Voltage between the terminal (1) and ground
   OK: Battery psitive voltage

1. NG → Check the following connectors: A-76, C-22 and C-05
- OK → Check trouble symptom.
- NG → Repair

Check trouble symptom.
- NG → Check the harness wire between the vehicle speed sensor and combination meter. Repair, if necessary.

2. NG → Check the following connector: A-76
- OK → Check trouble symptom.
- NG → Repair

Check trouble symptom.
- NO → Check the harness wire between the vehicle speed sensor and ground, and repair if necessary.

3. NG → Check the following connectors: A-76 and B-63
- OK → Check trouble symptom.
- NG → Repair

Check trouble symptom.
- NG → Check the harness wire between the vehicle speed sensor and power supply. Repair, if necessary.

TSB Revision

<2.0L Engine (Non-turbo) – M/T>

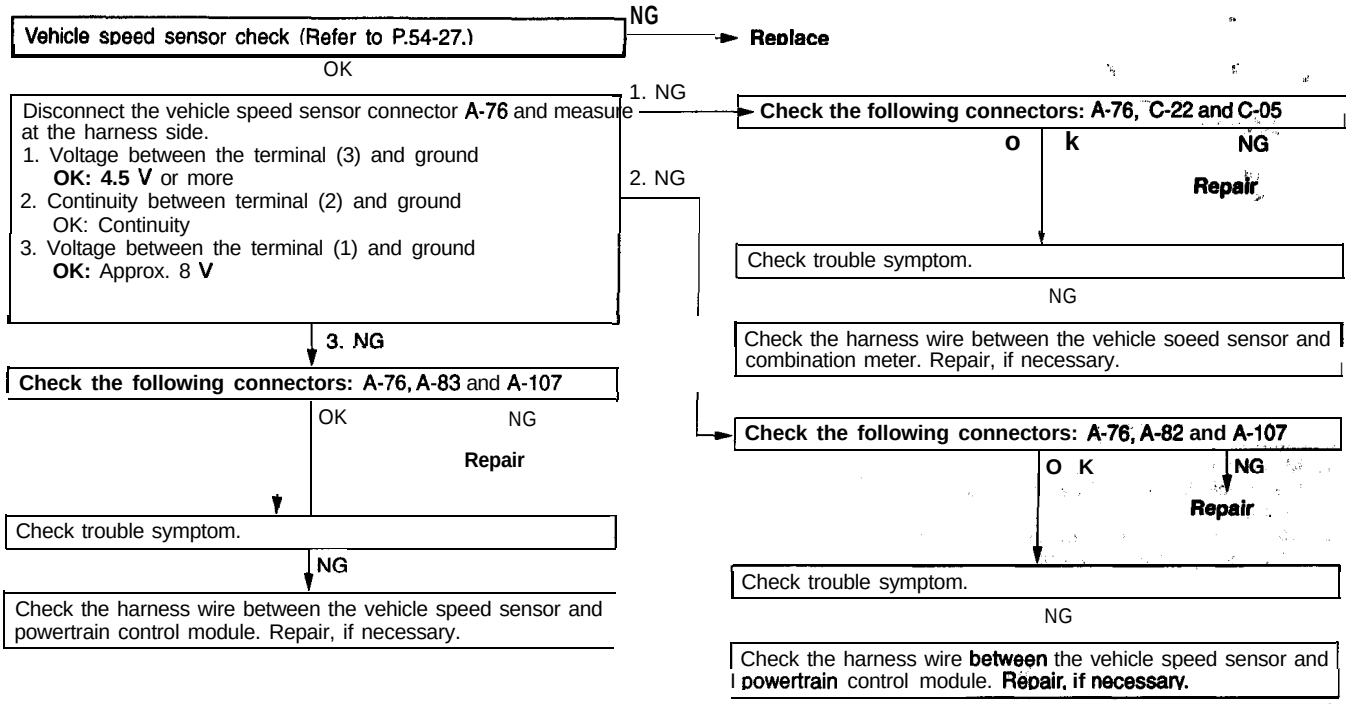

<2.0L Engine (Non-turbo) – A/T>

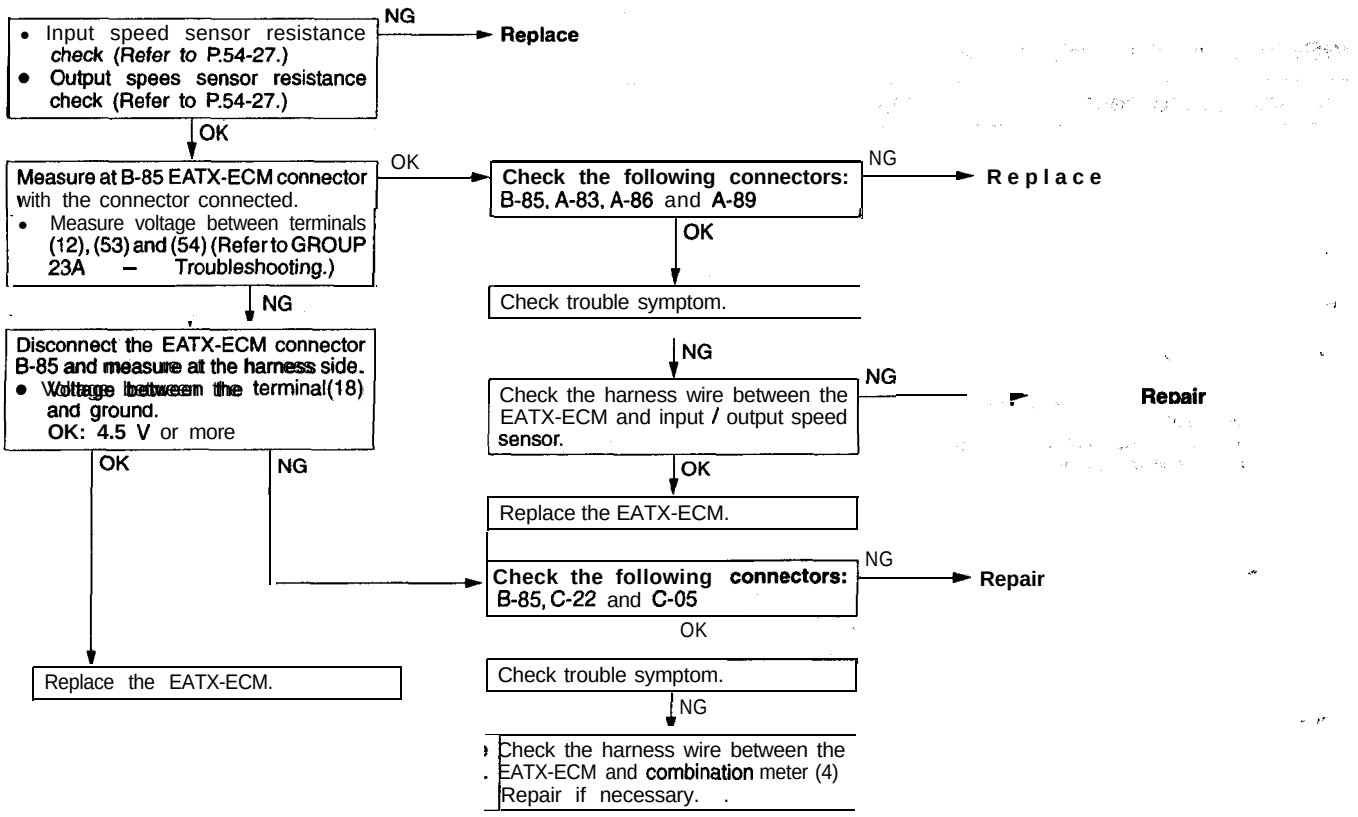

TSB Revision

TROUBLESHOOTING HINTS

1. Tachometer does not operate, or indicates improperly.
   - Check the tachometer. (Refer to P.54-20.)
2. Fuel gauge does not operate, or indicates improperly.
   - Check the tachometer. '(Refer to P.54-20.)
   - Check the fuel gauge. (Refer to P.54-21, 28.)
   - Check the fuel gauge unit. (Refer to P.54-22.)
3. Engine coolant temperature gauge does not operate, or indicates improperly.
   - Check the engine coolant temperature gauge. (Refer to P.54-24, 28.)
   - Check the engine coolant temperature gauge unit. (Refer to P.54-24.)
4. Speedometer does not operate.
   (1) Auto-cruise control system does not operate.
   - Check the vehicle speed sensor <2.0L Engine (Non-turbo) – M/T, 2.0L Engine (Turbo) and 2.4L Engine> (Refer to P.54-27.)
   - Check the input speed sensor <2.0L Engine (Non-turbo) – A/T> (Refer to P.54-27.)
   - Check the output speed sensor <2.0L Engine (Non-turbo) –A/T> (Refer to P.54-27.)

   (2) Systems other than auto-cruise control do not operate.
   - Check the speedometer (Refer to P.54-19.)

<FWD>

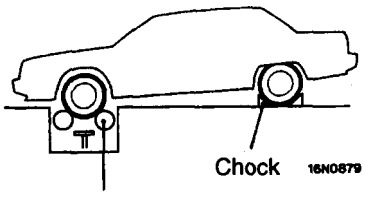

Speedometer tester drum

<AWD>
Rear wheels on free rollers

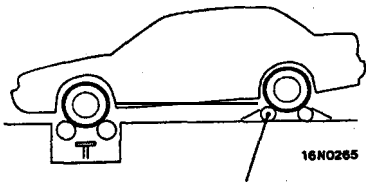

Free rollers

Rear wheels raised on jack

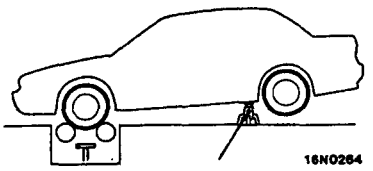

Rigid rack

00003508

ON-VEHICLE SERVICE

54300090053

SPEEDOMETER CHECK

(1) Adjust the pressure of the tires to the specified level. (Refer to GROUP 31 – On-vehicle Service.)
(2) Place the vehicle on a speedometer tester drum. <FWD>
(3) Set free rollers securely on the floor according to the wheelbase and rear tread of the vehicle (when rear wheels are to be set on free rollers). <AWD>
(4) Raise the rear wheels on a jack and place rigid racks to support the specified positions of the side' sills (when rear wheels are to be raised on a jack). <AWD>
(5) Apply the parking brake. <FWD>

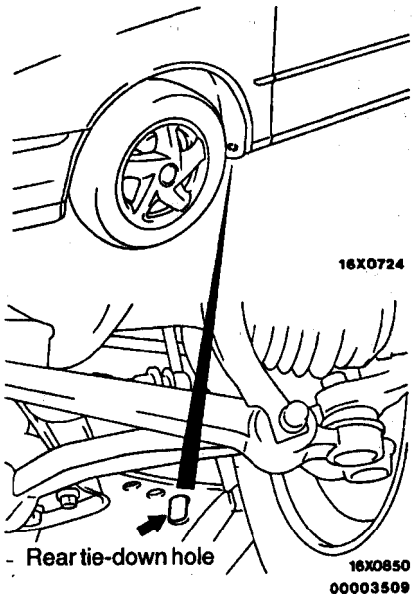

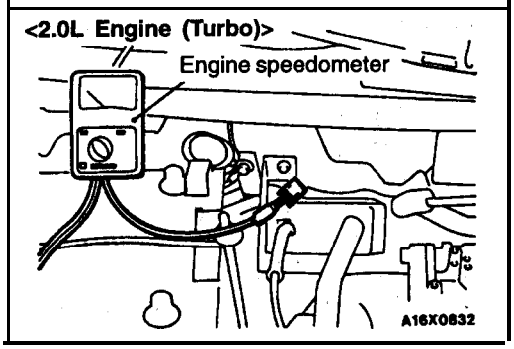

(6) Attach a chain or wire to the rear tie-down holes. Secure the end of the wire or chain.
(7) Take all other necessary precautions.
(8) Check, if the speedometer indication range is within the standard values.

Caution
Do not operate the clutch suddenly or increase/decrease speed rapidly Chile testing.

Standard values:

Standard indication	Allowable range
20 mph	19–22 mph
40 mph	38–44 mph
60 mph	57–66 mph
80 mph	76–88 mph
100 mph	94–110 mph
40 km/h	37–44 km/h
80 km/h	75–88 km/h
120 km/h	113–132 km/h
160 km/h	150–176 km/h

TACHOMETER CHECK

54300100053

(1) Insert a paper clip into the engine revolution speed detection terminal in the engine compartment, and connect an engine tachometer to the clip. <2.0L Engine (Turbo) and 2.4L Engine>

NOTE
1. For tachometer inspection, use of a fluxmeter-type engine speedometer is recommended; (Because a fluxmeter only needs to be clipped to the high tension cable.)
2. Because non-turbo vehicles do not have an engine revolution speed detection terminal, it is recommended that the above engine speedometer be used for these vehicles.

(2) Compare the readings of the engine speedometer and the tachometer at every engine speed, and check if the' variations are within the standard values.

Standard value:

Engine speed	Indicated variation
1,000 r/min	±100 r/min
3,000 r/min	±150 r/min
5,000 r/min	±250 r/min
6,000 r/min	±300 r/min

FUEL GAUGE SIMPLE CHECK

54300110063

Remove the fuel gauge unit connector (Refer to GROUP 13F – Fuel Tank.)

↓

Use the special tool to connect a test light (12 V–3.4W) to the harness side connector.

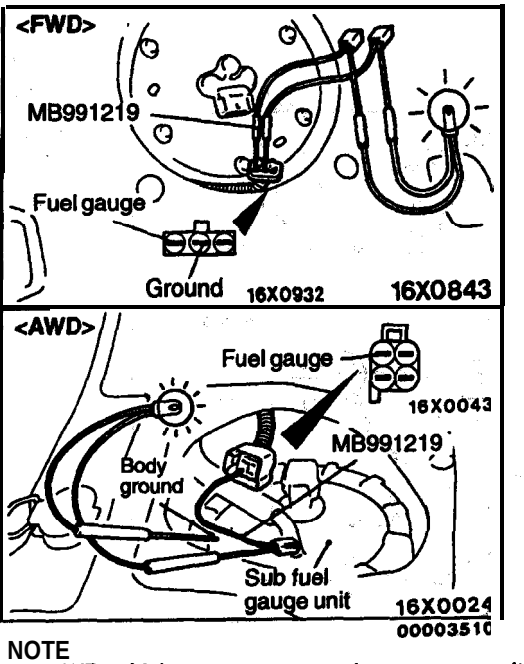

NOTE
For AWD vehicles, check at the sub fuel gauge unit side.

↓

Turn the ignition switch to ON.

↓

Check the condition of the test tight and the gauge.

1. Test light is Ruminated (Gauge needle is not moving) → Replace the fuel gauge.
2. Test light is illuminated (Gauge needle is moving) → Replace the fuel gauge unit.
3. Test light is not illuminated (Gauge needle is not moving) → Repair the harness.

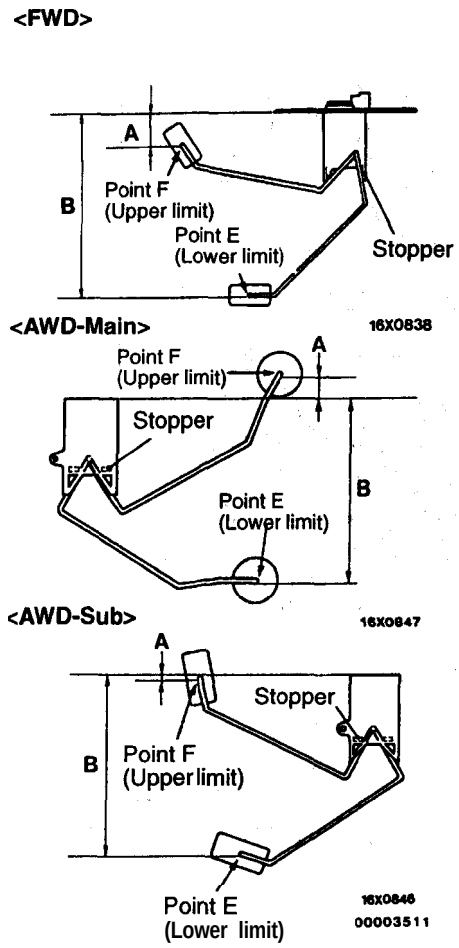

FUEL GAUGE UNIT CHECK

54300120196

To check, remove the fuel gauge unit from the fuel tank. (Refer to GROUP 13F – Fuel Tank.)

FUEL GAUGE UNIT FLOAT HEIGHT

Move the float and measure the height A at point F (highest) and B at point E (lowest) with float arm touching stopper.

Standard value:

<FWD>
A: 26.6 mm (1.05 in.)
B: 159.9 mm (6.3 in.)
<AWD – Main>
A: 10.4 mm (.41±.12 in.)
B: 119.5 mm (4.7±.12 in.)
<AWD – Sub>
A: 3.0±3 mm (.12±.12 in.)
B: 126.7±3 mm (5.0±.12 in.)

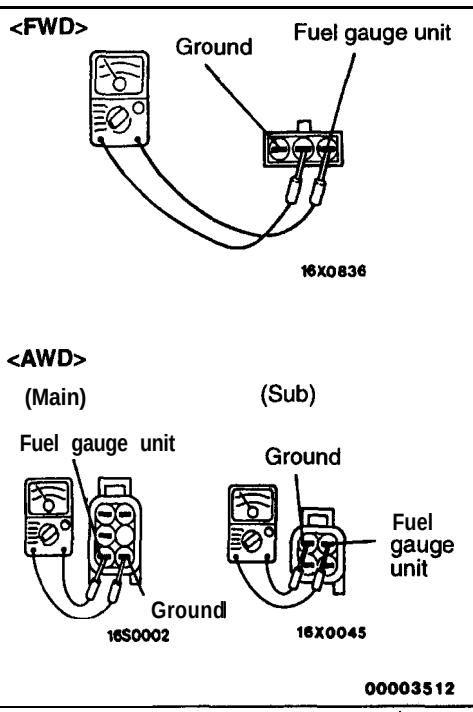

FUEL GAUGE UNIT RESISTANCE

1. Check that resistance value between the fuel gauge terminal and ground terminal is at standard value when the fuel gauge unit float is at point F (highest) and point E (lowest).

   Standard value:

   <FWD>
   POINT F: 4±2 Ω
   POINT E: 112±7 Ω
   <AWD – Main>
   POINT F: 2±1 Ω
   POINT E: 56.9±1 Ω
   <AWD – Sub>
   POINT F: 2±1 Ω
   POINT E: 50.1 ± 1 Ω

2. Check that resistance value changes smoothly when the float moves slowly between point F (highest) and point E (lowest.)

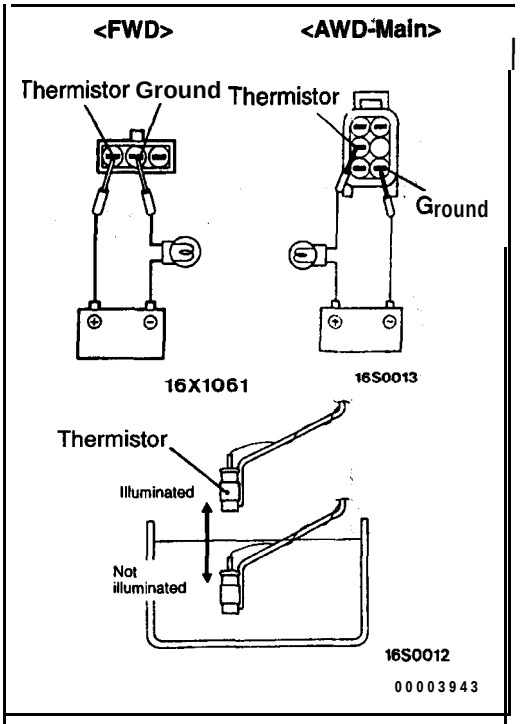

THERMISTOR

1. Connect fuel gauge unit to battery via test light (12V–3.4W). Immerse it in water.
2. The condition is good if light goes off when thermistor is in water and lights when it is removed from water.

Caution
Dry the unit, or water will get into the fuel tank.

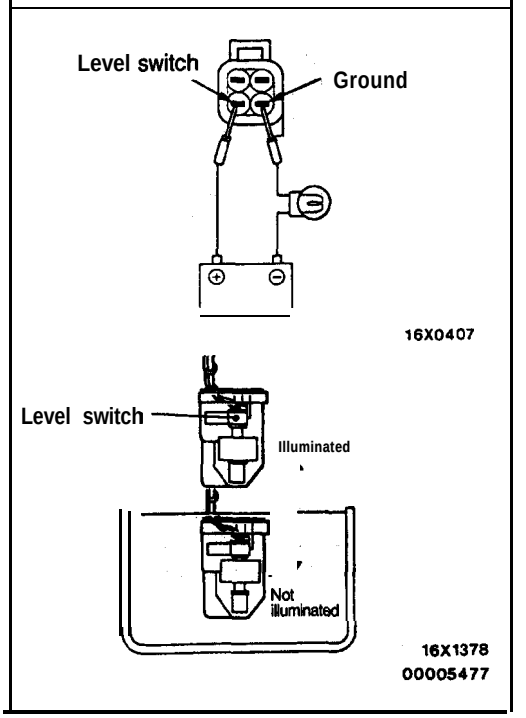

LEVEL SWITCH <AWD-Sub>

1. Connect fuel gauge unit to battery via test light (12V–3.4W). Immerse it in water.
2. The condition is good. if light goes off when level switch is in water and lights when it is removed from water.

Caution
Dry the unit, or water will get into the fuel tank.

ENGINE COOLANT TEMPERATURE GAUGE SIMPLE CHECK

54300140079

Remove the engine coolant gauge unit connector.

↓

Connect a test light (12V–3.4W) between the harness side connector and the ground.

↓

Turn the ignition switch ON.

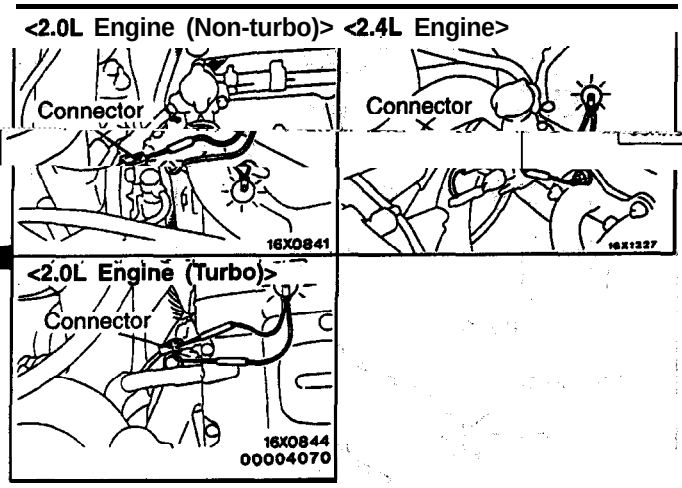

Check the condition of the test light and the gauge.

1. Test light is illuminated (Gauge needle is not moving)	Replace the engine coolant temperature gauge.
2. Test light is illuminated (Gauge needle is moving)	Replace the engine coolant temperature gauge unit.
3. Test light is not illuminated (Gauge needle is not moving)	Repair the harness.

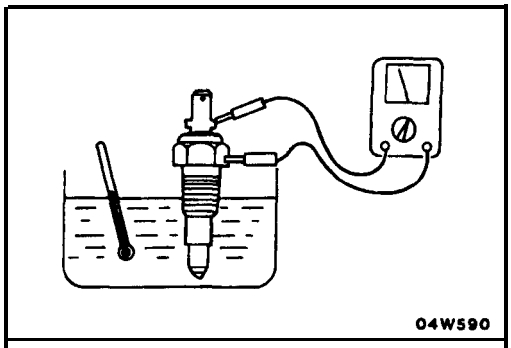

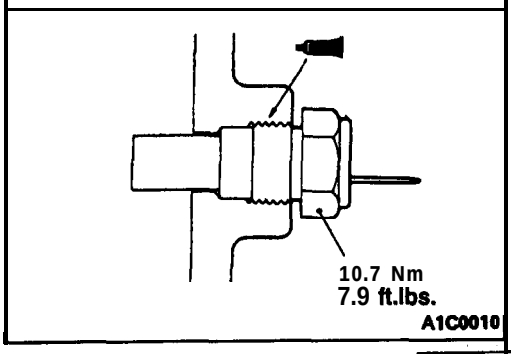

ENGINE COOLANT TEMPERATURE GAUGE UNIT CHECK

54300150069

1. Drain the engine coolant.
   (Refer to GROUP 00 – Maintenance Service.)
2. Remove the engine coolant temperature gauge unit.
3. Immerse the unit in 70°C (158°F) water to measure the resistance.

   Standard value: 104±13.5 Ω

4. After checking, apply the specified adhesive around the thread of engine coolant temperature gauge unit.

   Specified sealant:
   Loctite 242 or equivalent <2.0L Engine (Non-turbo) and 2.4L Engine>
   3M Adhesive Nut Locking No.4171 or equivalent <2.0L Engine (Turbo)>

5. Fill engine coolant. (Refer to GROUP 00 – Maintenance Service.)

TSB Revision

OIL PRESSURE GAUGE SIMPLE CHECK <Turbo>

54300160020

Remove the oil pressure gauge unit connector.

↓

Connect a test light (12V–3.4 W) between the harness side connector and the ground.

↓

Turn the ignition switch ON.

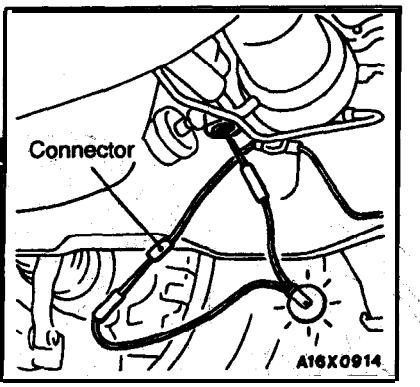

↓

Check the condition of the test light and the gauge.

1. Test light is illuminated (Gauge needle is not moving) → Replace the oil pressure gauge.
2. Test light is illuminated (Gauge needle is moving) → Replace the oil pressure gauge unit.
3. Test light is not illuminated (Gauge needle is not moving) → Replace the harness.

COMBINATION METERS

54300290064

REMOVAL AND INSTALLATION

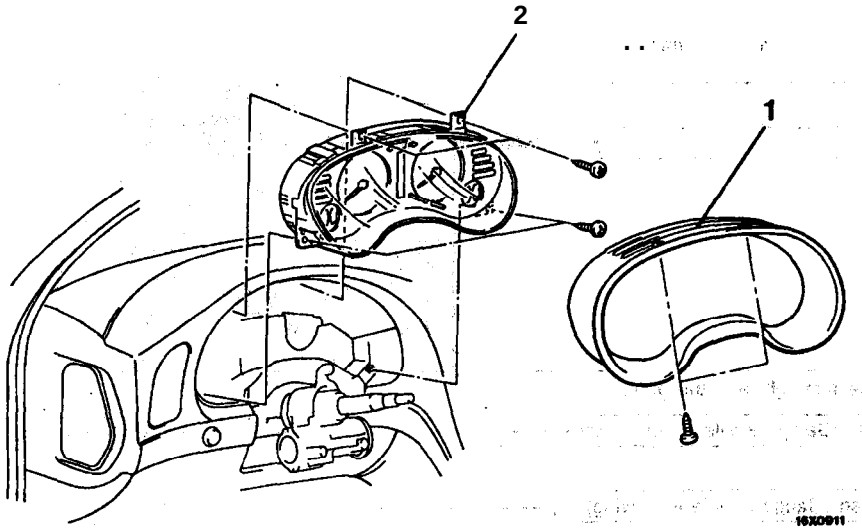

<2.0L Engine (Non-turbo) – M/T>

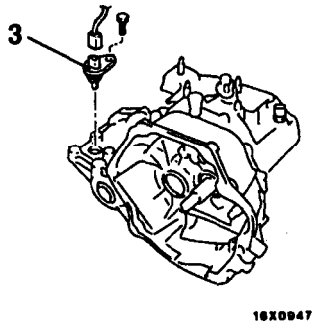

<2.0L Engine (Non-turbo) – A/T>

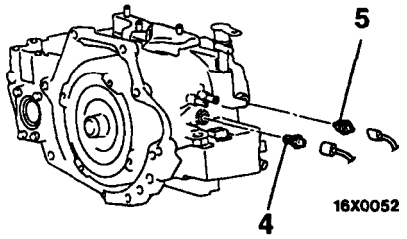

<2.0L E & e (Turbo) and 2.4L Engine>

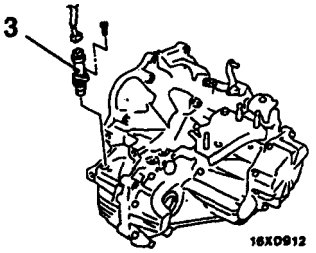

00003515

Removal steps

1. Meter bezel
2. Combination meter
   - Under cover (Refer to GROUP 42 – Under Cover.)
3. Vehicle speed sensor
   <2.0L Engine (Non-turbo) – M/T, 2.01 Engine (Turbo) and 2.4L Engine>
4. Input speed sensor
   <2.0L Engine (Non-turbo) – A/T>
5. Output speed sensor
   <2.0L Engine (Non-turbo) – A/T>

TSB Revision

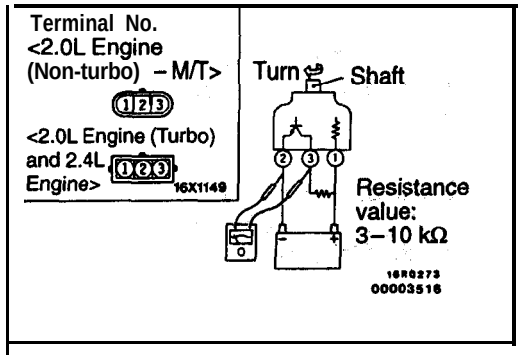

INSPECTION

54300640043

VEHICLE- SPEED SENSOR CHECK,
<2.0L Engine (Non-turbo) – M/T, 2.0L Engine (Turbo) and 2.4L Engine>

(1) Remove the vehicle speed sensor and connect a 3–10 kΩ resistance as shown in the illustration."
(2) Turn the shaft of the vehicle speed sensor and check that there is voltage between terminals 2 – 3.
(1 turn = 4 pulses)

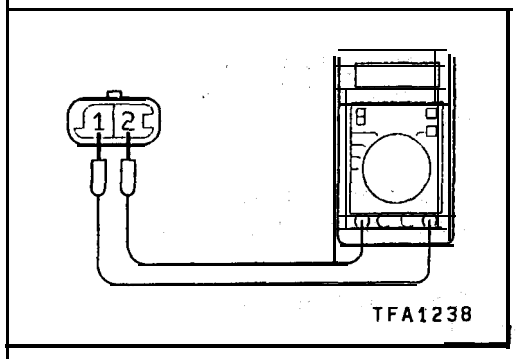

INPUT SPEED SENSOR RESISTANCE CHECK
<2.0L Engine (Non-turbo) – A/T>

(1) Disconnect the input speed sensor connector.
(2) Measure the resistance between the input speed sensor side connector terminals 1 and 2.

Standard value: 0.3–1.2 kΩ

(3) If the resistance is outside the standard value, replace the input speed sensor.

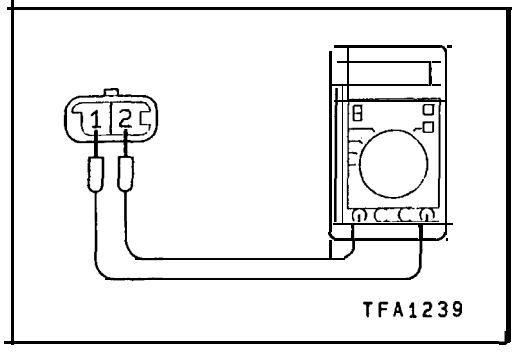

OUTPUT SPEED SENSOR RESISTANCE CHECK
<2.0L Engine (Non-turbo) – A/T>

(1) Disconnect the output speed sensor connector.
(2) Measure the resistance between the input speed sensor side connector terminals 1 and 2.

Standard value: 0.3–1.2 kΩ

(3) If the resistance is outside the standard value, replace the output speed sensor.

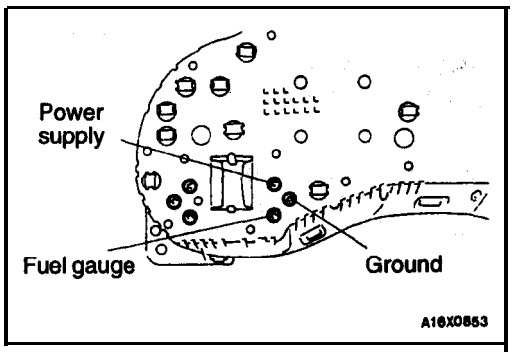

FUEL GAUGE CHECK

54300300026

(1) Remove the power supply tightening screw.
(2) Use an ohmmeter to measure the resistance value between the terminals.

Standard value:
Power supply–Ground: 249±30 Ω
Power supply–Fuel gauge: 127±25 Ω
Fuel gauge-Ground: 122±10 Ω

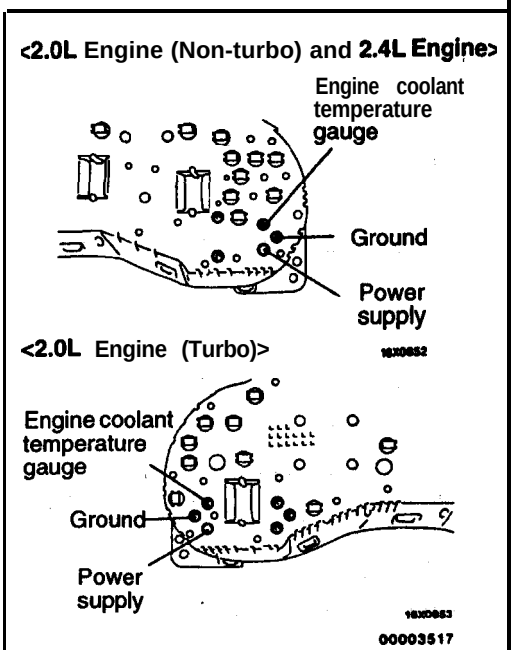

ENGINE COOLANT TEMPERATURE GAUGE CHECK

(1) Remove the power supply tightening screw.
(2) Use an ohmmeter to measure the resistance value between the terminals.

Caution
When inserting the testing probe into the power supply terminal, be careful not to touch the printed 'board.

Standard value:
Power supply-Ground: 178.9±18 Ω
Power supply-Engine coolant temperature gauge: 54±2.7 Ω
Engine coolant temperature gauge-Ground: 232.9±23 Ω

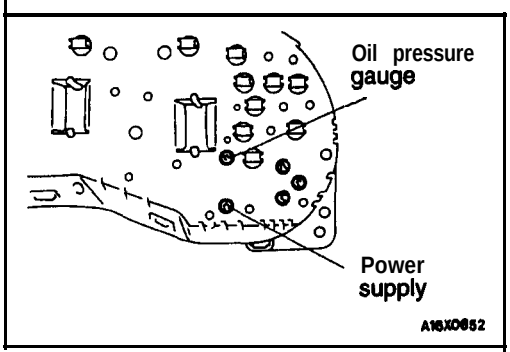

OIL PRESSURE GAUGE CHECK <Turbo>

Use an ohmmeter to measure resistance between terminals.

Standard value: 42±2 Ω

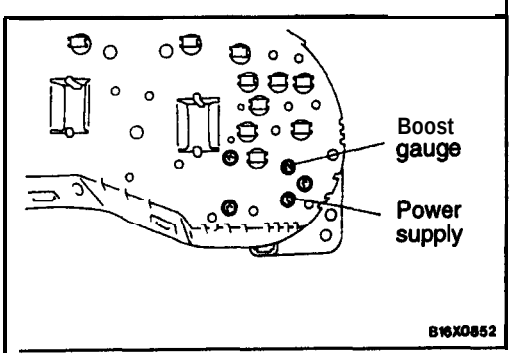

BOOST GAUGE CHECK <Turbo>

Use an ohmmeter to measure resistance between terminals.

Standard value: 75.8±7.6 Ω

DISASSEMBLY AND REASEMBLY

54300319043

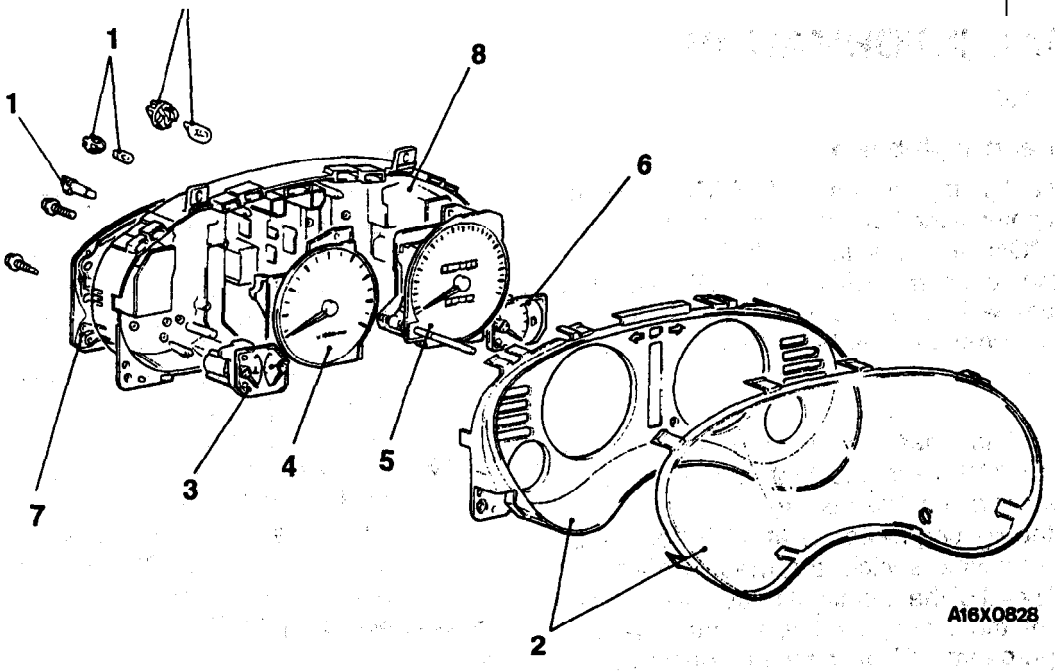

Disassembly steps

1. Bulb, socket
2. Meter glass and window plate
3. Boost gauge/oil pressure gauge <2.0L Engine (Turbo)>, engine coolant temperature gauge <2.0L Engine (Non-turbo) and 2.4L Engine>
4. Tachometer
5. Speedometer
6. Fuel level gauge/engine coolant temperature gauge <2.0L Engine (Turbo)>, fuel level gauge <2.0L Engine (Non-turbo) and 2.4L Engine>
7. Printed-circuit board
8. Meter case

HEADLIGHT, FRONT TURN-SIGNAL LIGHT AND POSITION LIGHT ASSEMBLY

54200010025

GENERAL INFORMATION

OPERATION

Low-beam and high-beam

- Turn the lighting switch to "HEAD", and the contact point of the headlight relay will be closed to turn "ON" the headlight relay.
- Turn the dimmer switch to "LO", and the low-beam will be lit. Turn the switch to "HI", and the high-beam will be lit together with the low-beam.

Passing

- When the low-beam is lit, turn the passing switch to "ON", and the high-beam will be lit together with the low-beam.
- When the lighting switch is at "OFF" or "TAIL", and the passing switch is turned to "ON", the contact point of the headlight relay will be closed turning on the headlight relay, and the low-beam and high-beam will be simultaneously lit.

High-beam indicator light

- When the high-beam is lit or when the passing switch is activated, the high-beam indicator light will be lit.

Turn-signal lights

1. When operation is normal
   - When the ignition switch is switched to the ON position, battery voltage is applied (via the multi-purpose fuse No. 4 and hazard warning switch) to the turn-signal and hazard flasher unit.
   - When the turn-signal switch is switched to the LH (or RH) position, Tr (within the flasher unit) is switched ON and OFF repeatedly. Then the contacts of the relay (also within the flasher unit) repeatedly switch from ON to OFF, causing the turn-signal lights and turn-signal indicator light LH (or RH) to flash.
2. If one bulb is burned out
   - If either of the turn-signal light bulbs is burned-out, the resistance of the turn-signal circuit as a whole increases, resulting in shorter ON and OFF intervals of the Tr and a higher flashing rate of the lights.

Hazard-warning lights

- When the hazard-warning switch is switched to the "ON" position, the relay contact of the turn signal and hazard flasher unit is switched ON and OFF repeatedly, in the. same manner as for the operation of the turn-signal lights, and the left and right turn-signal lights and turn-signal indicator lights simultaneously flash repeatedly.

  NOTE
  (1) The number of flashes of the hazard-warning lights does not change if there is damaged or disconnected wiring of one light.

SERVICE SPECIFICATIONS

54200030090

items		Limit
Headlight intensity	**High-beam cd**	**18,000 or more**
	Low-beam cd	**7,000** or more

HOW TO HANDLE HEADLIGHT, FRONT TURN-SIGNAL LIGHT AND POSITION LIGHT ASSEMBLY

Plastic outer lenses are used for the headlight, front turn-signal light and position light assembly, and so pay attention to the following items.

- No brush the outer lens surface with a protruded tool.
- Use the specified genuine parts; bulbs.
- Don't apply the masking tape on the outer lens surface.
- When carrying out aiming adjustment, do not cover the headlights for more than three minutes while they are turned on. Otherwise heat from the bulb may warp the headlight lens.

TROUBLESHOOTING

54200070313

TROUBLESHOOTING HINTS

Headlight

1. Any headlight does not come on.
   (1) Tail light comes on.
   - Check the headlight relay. (Refer to P.54-36.)
   - Check the lighting switch. (Refer to P.54-37.)

   (2) The taillight dose not come on, either.
   - Check the fusible link No. 5.
2. Low-beam does not *come* on on either side.
   - Check the grounding circuit.
3. High-beam does not come on on either side but comes on when the passing switch is ON.
   - Check the dimmer switch. (Refer to P.54-37.)
4. High-beam indicator light dose not come on. However, high-beam is lit when the dimmer switch is at "HI"position or the passing switch is activated.
   - Check the dedicated fuse No. 7
   - Check the bulb.
5. Even if passing is activated, the headlights will not come on. However, the headlights will come on when the dimmer switch is at either "LO or "HI".
   - Check the passing switch. (Refer to P.54-37.)

Turn-signal light and hazard warning light

1. The turn-signal lights and hazard-warning lights do not operate at all.
   - Check the hazard warning switch contact (power supply side).
   - Check the turn-signal and hazard flasher unit.
2. All turn-signal lights at the left (or right) side do not function.
   (1) The hazard-warning lights function normally.
   - Check the hazard warning switch contact (turn-signal side).
   - Check the turn-signal switch. (Refer to P.54-37.)
3. The number of flashes of the turn-signal lights is excessive.
   - Check the bulbs.
4. The hazard-warning lights do not function.
   (1) The turn-signal lights function normally.
   - Check the hazard' warning switch contact.

ON-VEHICLE SERVICE

54200000067

HEADLIGHT AIMING

PRE-AIMING INSTRUCTIONS

1. Inspect for badly rusted or faulty 'headlight assemblies.
2. These conditions must be corrected before a satisfactory adjustment can be made.
3. Place vehicle on a level floor.
4. Bounce front suspension through,, three (3) oscillations by applying body weight to hood or bumper.
5. Inspect tire inflation.
6. Rock vehicle sideways to allow vehicle to assume its normal position.
7. If fuel is not full, place a weight 'in trunk of vehicle to, simulate weight of a full tank [3 kg (6.5 lbs.) per gallon.]
8. There should be no other load in the vehicle other than driver or substituted weight of approximately 70 'kg (150 lbs.) placed in driver's position.

Thoroughly clean headlight lenses."

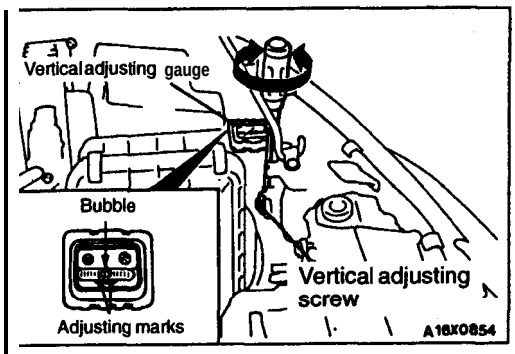

VERTICAL ADJUSTING

Adjust the vertical angle by rotating the vertical adjusting screw so that the bubble in the vertical adjusting gauge locates inside the adjusting marks.

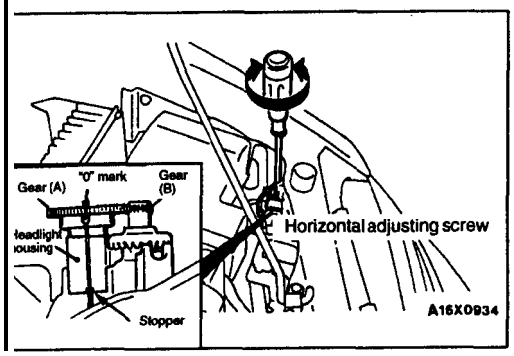

HORIZONTAL ADJUSTING

1. Check that gear (A) and gear (B) are engaged. If they are not engaged, press down the stopper until the gears engage.
2. Turn the horizontal adjusting screw to align the "0" mark of gear (B) with the stopper line and the headlight housing line.

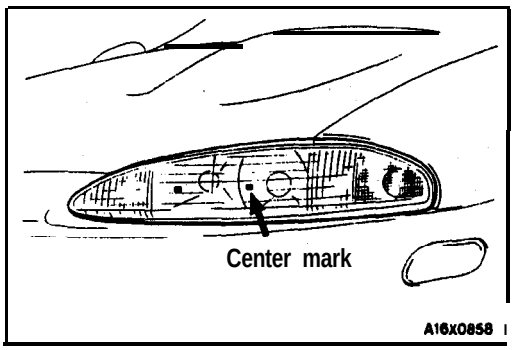

AIMING WITH SCREEN

Headlight Aim Preparation

1. Set the distance between the screen and the bulb center marks of the headlight as shown in the illustration.

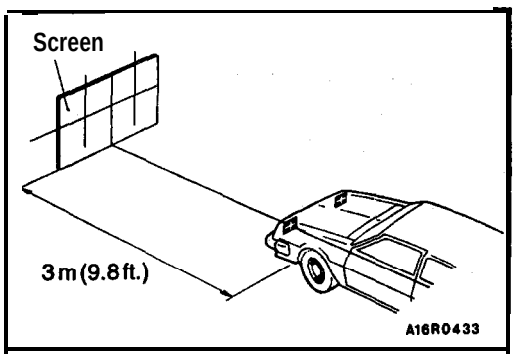

2. Four lines of adhesive tape or like are required on screen or wall:
   (1) Position a vertical tape so that it is aligned with the vehicle center line.
   (2) Position a horizontal tape with reference to center line of headlight bulb.
   (3) Position a vertical tape on the screen with reference to the center line of each headlight bulb.

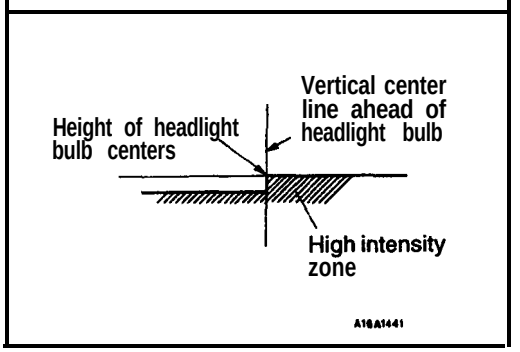

Visual Headlight Adjustment

1. A properly aimed lower beam will appear on the aiming screen 3 m (9.8 feet) in front of the vehicle. The shaded area as shown in the illustration indicates high intensity zone.
2. Adjust low beam of headlights to match the low beam pattern of the right and left headlights.

Caution
When adjusting one headlight, the other headlight should be turned off if possible. If this is not possible, do not cover the other headlight for more than three minutes while it is turned on. Otherwise, heat from the bulb may warp the headlight lens.

NOTE
If the visual headlight adjustment at low beam is made, the adjustment at high beam is not necessary.

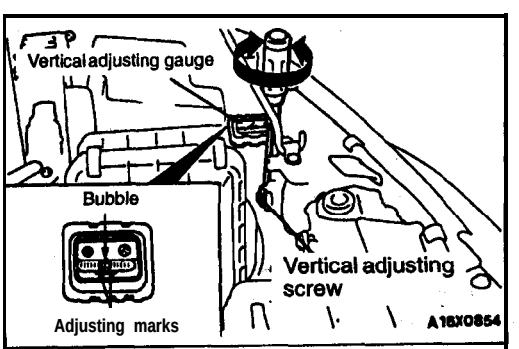

Vertical Adjusting

1. Adjust the vertical angle by rotating, the vertical adjusting screw so that the bubble in the vertical adjusting gauge locates inside the adjusting marks.
2. Check to see if the light distribution projected on the aiming screen is as same as the light distribution pattern described in Visual Headlight Adjustment.
3. In case they differ, turn the vertical adjusting screw to adjust the vertical angle until the light distribution coincides with the correct lighting pattern.

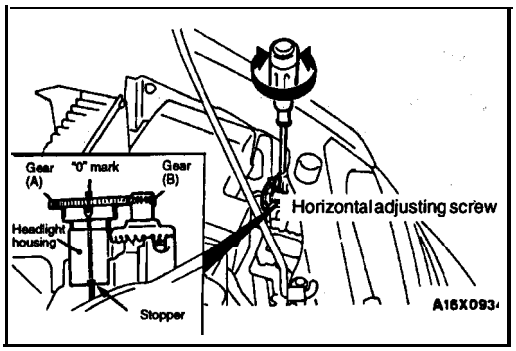

Horizontal Adjusting

1. Check that gear, (A) and gear (B) are engaged. If they are not engaged, press down the stopper until the gears engage.
2. Check to see if the light distribution projected on the aiming screen is as same as the light distribution pattern described in Visual Headlight Adjustment;
3. In case they differ, turn the vertical adjusting screw to adjust the vertical angle until the light distribution coincides with the correct lighting pattern.
4. Turn the horizontal adjusting screw to align the "0" mark of gear (B) with the stopper line and the headlight housing line.

LUMINOUS INTENSITY MEASUREMENT 54200100043

Measure the luminous intensity of headlights with a photometer in accordance with the instruction manual prepared by the manufacturer of the photometer and make sure that the luminous intensity is within the following limit:

Limit:

High-beam: 18,000 cd or more
Low-beam: 7,000 cd or more

NOTE

1. When measuring the luminous intensity of headlight, keep the engine at 2,000 rpm and have the battery charged.
2. If there are specific regulations for luminous intensity of headlights in the region where the vehicle is operated, make sure that the intensity conforms to the requirements of such regulations.

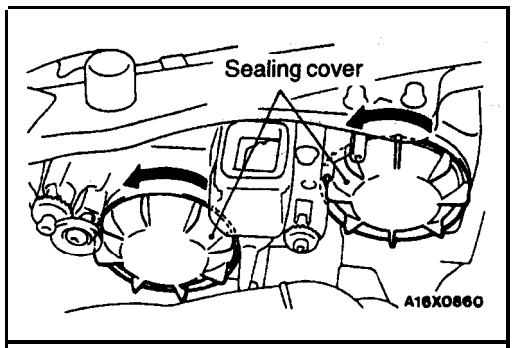

HEADLIGHT BULB REPLACEMENT 54200130073

(1) Remove the air cleaner assembly and radiator reserve tank. (When replacing the right headlight for turbo vehicles)
(2) Remove the sealing cover by turning it counterclockwise.

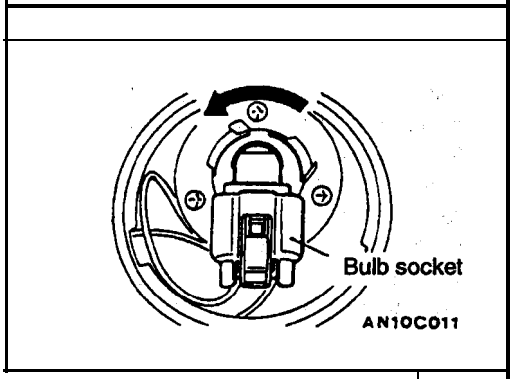

(3) Remove the bulb socket by turning it counterclockwise, and then remove the bulb.

Caution

Do not touch the surface of the bulb glass with hands' or dirty gloves. If the glass does become dirty, clean it with alcohol or thinner, and let it dry thoroughly before installing.

(4) Install the sealing' cover securely, after the bulb replacement, or the lens will 'be out of focus, or water will get inside the light unit.

HEADLIGHT, FRONT TURN-SIGNAL LIGHT AND POSITION LIGHT ASSEMBLY

54200240042

REMOVAL AND INSTALLATION

CAUTION: SRS
Before removal of air bag *module* and clock, spring, refer to the following sections;
GROUP 52B – SRS Service Precautions.
GROUP 52B – Air Bag Module and Clock Spring.

Pm-removal and Post-installation Operation
Removal and Installation of Air Cleaner Assembly and **Radiator** Reserve **Tank.** (When **removing** the nght headlight for turbo **vehicles)**

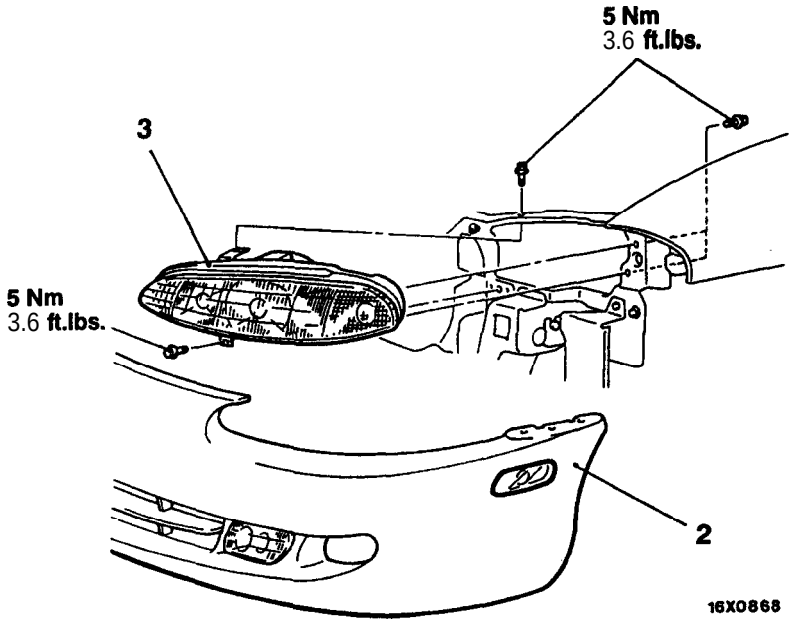

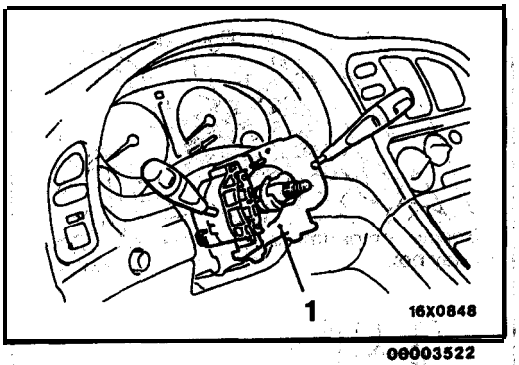

00003522

Column switch removal steps

1. Column switch -Lighting switch and dimmer/passing switch>
   (Refer to GROUP 51 – Windshield Wiper and Washer.)

Headlight, front turn-signal. light and position light removal steps

2. Front bumper (Refer to GROUP 51 – Front Bumper.)
3. Headlight, front **turn-signal** light and position **light** assembly

<2.0L Engine (Non-turbo)>

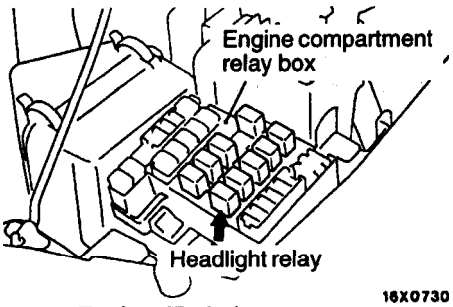

<2.0L Engine (Turbo)>

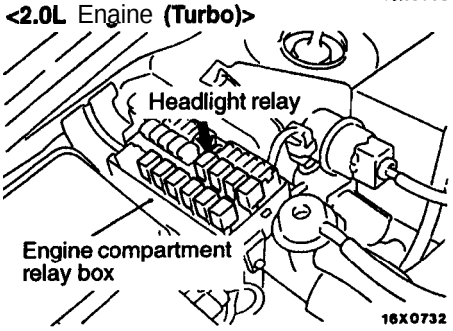

<2.4L Engine>

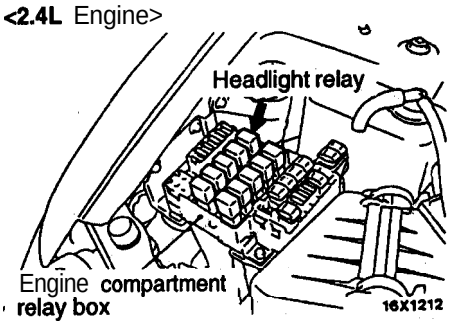

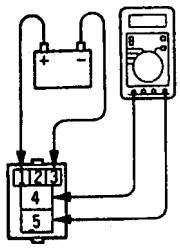

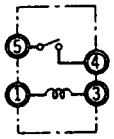

18W0350
00003903

INSPECTION

54200820048

HEADLIGHT RELAY CONTINUITY CHECK

Battery voltage	Terminal No.			
	1	3	4	5
Powerisnotsupplied				
Power is supplied				

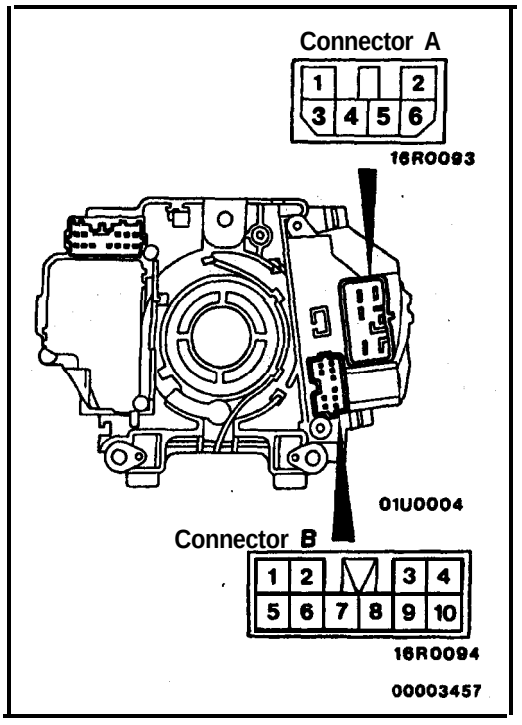

COLUMN SWITCH CONTINUITY CHECK

54200800080

Switch position		Connector A-terminal No.					Connector B-terminal No.				
		1	2	3	4	6	3	5	6	7	8	9
LIGHTING SWITCH	OFF											
	TAIL							○		○		
	HEAD	○						○	○	○		
DIMMER/ PASSING SWITCH	LOWER			○	○							
	UPPER				○	○						
	PASSING	○	○	○	○ *1 ○	○ *2 ○						
TURN-SIGNAL LAMP SWITCH	RH										○	○
	OFF											
	LH						○				○	

NOTE

1. ● I indicates continuity when the dimmer switch in the lower beam position.
2. '2 indicates continuity when the dimmer switch in the upper beam position.

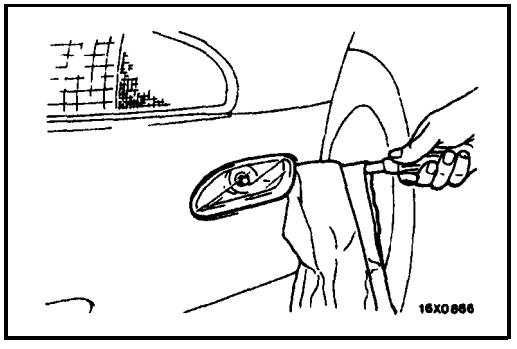

FRONT SIDE-MARKER LIGHT

54200210012

REMOVAL SERVICE POINTS

FRONT SIDE-MARKER LIGHT REMOVAL

Use a flat-tip screwdriver to remove the front side-marker light from the front bumper.

FOG LIGHT

54200010032

GENERAL INFORMATION

OPERATION

- When the fog light switch is placed in the ON position with the lighting switch in the HEAD position and the dimmer switch in the LO position, current flows through the dedicated fuse No. 7 to the coil of the fog light relay, the fog light switch, the dimmer switch and ground, causing the contacts of the fog light relay to close.
  When the contacts of the fog light relay close, current flows through the dedicated fuse No. 7 to the contacts of the fog light relay, the, fog lights and ground, causing the fog lights to come on.
- When the dimmer-switch is placed in the HI position or the lighting switch is, placed in the TAIL or OFF position while the fog, lights are ON, current supply to the fog light relay or headlight relay is cut off. As a result, the contacts of the fog light, relay -open, and the fog lights go out.

SERVICE SPECIFICATIONS

54200030103

Items		Standard value
Fog light aiming	Vertical direction	150 mm (5.9 in.) below horizontal (H)
	Horizontal direction	Parallel to direction of vehicles travel

TROBLESHOOTING

54200070139

TROUBLESHOOTING HINTS

1. The right or left fog lights only go on.
   - Check the bulb.
2. Fog lights do not go on when the fog light switch is set at ON.
   - Check the dedicated fuse No. 6.
   - Check the fog light relay. (Refer to P.54-41.)
   - Check the fog light switch. (Refer to P.54-41.)

ON-VEHICLE SERVICE

54200110091

FOG LIGHT AIMING

1. Inspect for badly rusted or faulty fog light.
2. These conditions must, be corrected before a satisfactory adjustment can be made.
3. Place vehicle on a level floor.
4. Bounce front suspension through three (3) oscillations by applying body weight to hood or bumper.
5. Inspect tire inflation.
6. Rock vehicle sideways to allow vehicle to assume its normal position.
7. If fuel tank is not full, place a weight in trunk of vehicle to simulate weight of a full tank [3 kg (6.5 lbs.) per @ton].-
8. There should be no other load in the vehicle other than driver or substituted weight of approximately 70 kg (150 lbs.) placed in driver's position.
   Thoroughly clean fog light lenses.

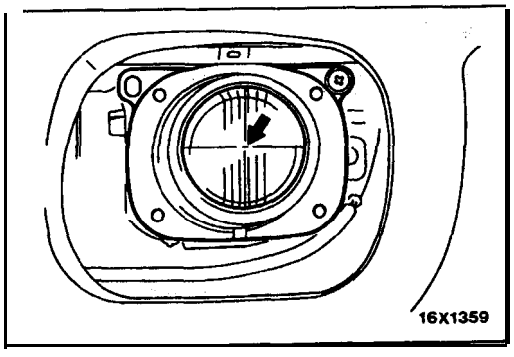

9. Measure the center of the fog lights as shown in the illustration.

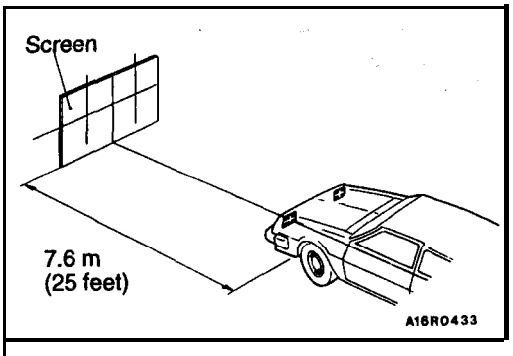

10. Set the distance between the screen and the center of the fog lights as shown in the illustration.

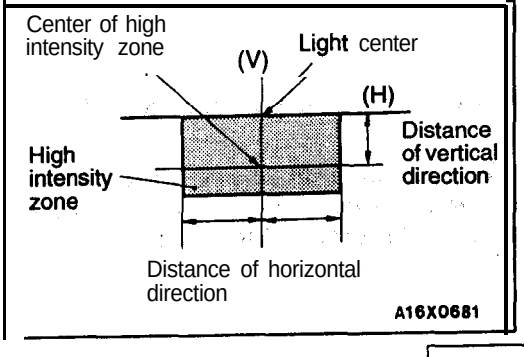

11. Check if the beain shining onto the screen is at the standard value.

    Standard value:
    (Vertical direction)
    150 mm (5.9 in.) below horizontal (H)
    (Horizontal direction)
    Parallel to direction of vehicle travel

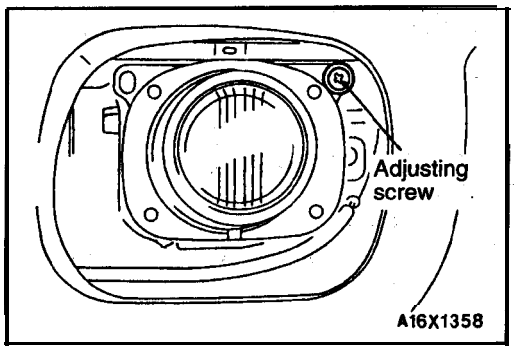

N O T E
The horizontal direction is non-adjustable. If the deviation of the light beam axis exceeds the standard value, check that the mounting location or some other point is not defective.

FOG LIGHT

54200150123

REMOVAL AND INSTALLATION

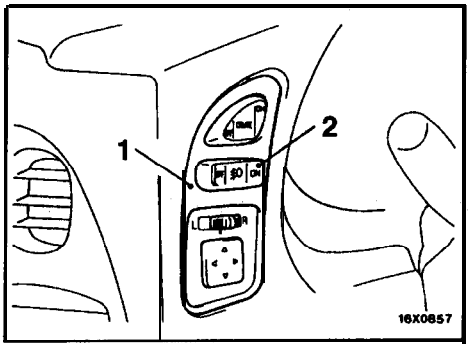

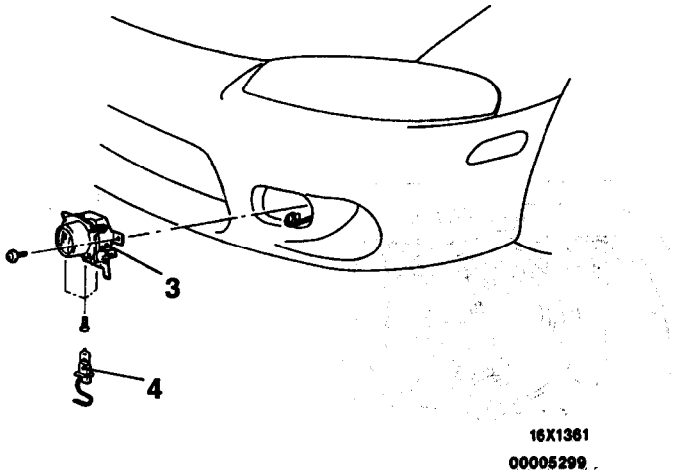

Fog light switch removal steps
1. Instrument panel switch
2. Fog light switch

◀A▶

Fog light removal steps
3. Fog light
4. Bulb

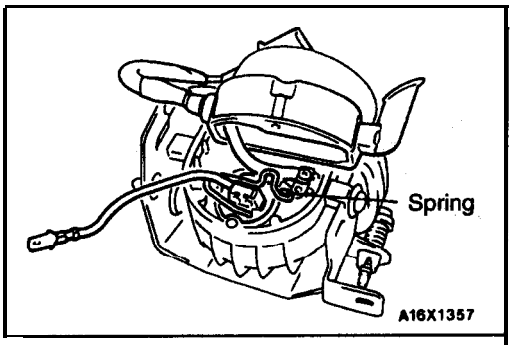

REMOVAL SERVICE POINT

◀A▶ BULB REMOVAL

Remove the bulb attaching spring and pull out the bulb.

Caution
Do not touch the surface of the bulb glass with hands or dirty gloves. If the surface does become dirty, clean it with alcohol or thinner, and let it dry thoroughly before installing.

TSB Revision

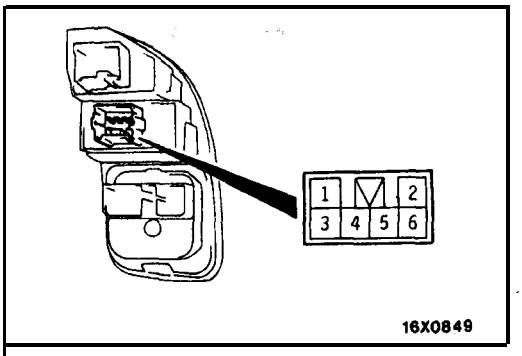

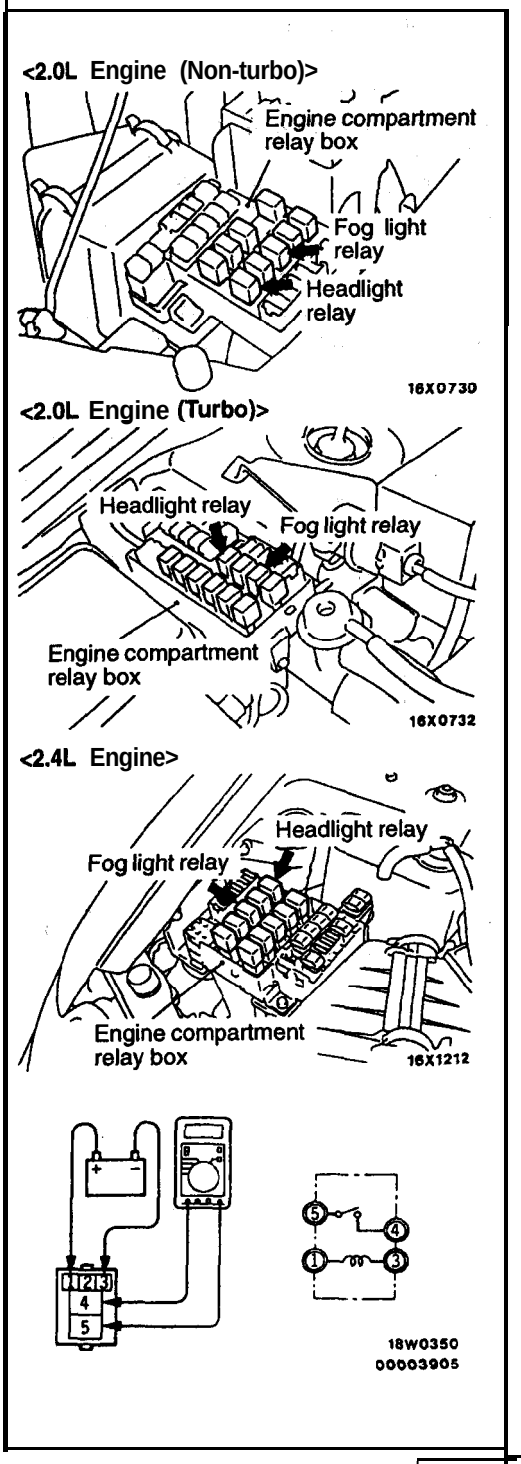

INSPECTION

54200740030

FOG LIGHT SWITCH CONTINUITY CHECK

Switch position	Terminal No.				
Switch position	1		3	4	5
OFF		ILL			
ON		ILL			

FOG LIGHT RELAY CONTINUITY CHECK

54200750040

Battery voltage	Terminal No.			
	1	3	4	5
Power is not supplied				
Power is supplied ,	⊕	⊖		

HEADLIGHT RELAY CONTINUITY CHECK

54200820055

Refer to P.54-36.

REAR COMBINATION LIGHT AND BACK-UP LIGHT

54200010049

GENERAL INFORMATION

OPERATION

Taillight

- The taillight relay is switched ON when the lighting switch is set to the "TAIL" or "HEAD" position.
- As a result, electricity flows via dedicated fuse No. 5 to each light, and each light illuminates.

Back-up light

- When, with the ignition switch at the "ON" position, the shift lever (or the selector lever) is moved to the "R" position, the back-up light switch <M/T> is switched ON (or the transaxle range switch <2.0L Engine (Non-turbo) – A/T> park/neutral position switch <2.0L Engine (Turbo) – A/T and 2.4L Engine – A/T> is switched to the "R" position), and the back-up light illuminates.

Stop light

- Battery voltage is always applied to the stop light switch through the dedicated fuse No. 2.
- When the brake pedal is pressed, the stop light switch will be turned "ON" to turn on the stop lights.

Lighting monitor buzzer

- When, with the tail light illuminated (lighting switch-tail), the ignition switch is turned off and the driver's door is opened (door switch is switched ON), the ECU detective circuit will function.
- With the detective circuit activated, buzzer output makes the buzzer sound, continuously to remind that the taillight is illuminated.

SPECIAL TOOLS

54200060143

Tool	Tool number and name	Supersession	Application
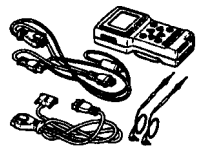	MB991 502 Scan tool (MUT-II)	MB991 502	ETACS-ECU input signal checking
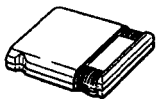	ROM pack		
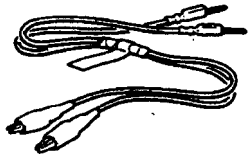	MB991 529 Diagnostic trouble codecheckhamess	Tool not necessary if scan tool <MUT-II> is available	ETACS-ECU input signal checking (when ysing a voltmeter)

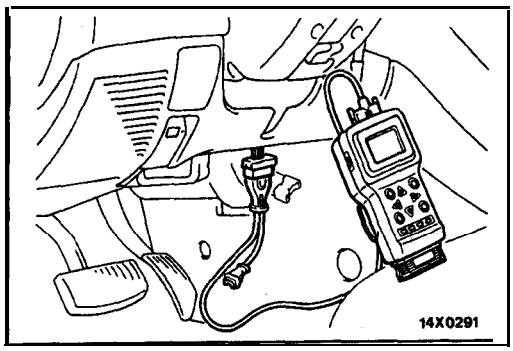

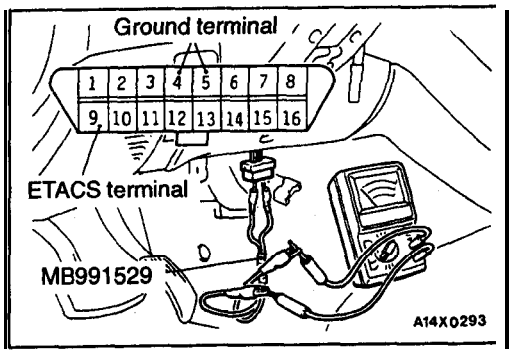

TROUBLESHOOTING

54300700062

DIAGNOSTIC FUNCTION

INPUT SIGNAL INSPECTION POINTS

When Using the Scan Tool

1. Connect the scan tool to the data link connector.

   Caution
   Always turn the ignition switch off when connecting and disconnecting the scan tool..

2. If buzzer of the scan tool sounds once when a switch is operated (ON/OFF); the ECU input signal for that switch circuit system is normal.

When Using a Voltmeter

1. Use the special tool to connect a voltmeter between the ground terminal and the ETACS terminal of data link connector.
2. If the voltmeter indicator deflects once when a switch -is operated (ON/OFF), the ECU input signal for that switch circuit system is normal.

INSPECTION CHART FOR TROUBLE SYMPTOMS

54300720105

Trouble symptom		Inspection procedure No.	Reference page
Communication with scan tool is not possible.	Communication with all systems is not possible.	1	54-44
	Communication with one-shot pulse input signal only is not possible.	2	54-44
While the tail lights or headlight are illuminated, driver's side door is opened but the light reminder warning buzzer does not sound. (With the ignition key inserted in the key cylinder, the 'ignition key reminder warning buzzer sounds.)		3	54-44

INSPECTION PROCEDURE FOR TROUBLE SYMPTOMS

INSPECTION PROCEDURE 1

Communication with scan tool is not possible'. (Communication with all systems is not possible.)	Probable cause
[Comment] The cause is probably a defect in the power supply system (including ground) for the diagnostic line.'	• Malfunction of connector • Malfunction harness wire

- Refer to GROUP 13A – Troubleshooting <2.0L Engine (Turbo) and 2.4L Engine>
- Refer to GROUP 13A – Troubleshooting <2.0L Engine (Non-turbo)>

INSPECTION PROCEDURE 2

Communication with scan tool is not possible. (Communication with one-shot pulse input signal only is not possible.)	Probable cause
[Comment] The cause probably a defective one-shot pulse input signal circuit system of the diagnostic line.	• Malfunction of connector • Malfunction of harness wire • Malfunction of ECU

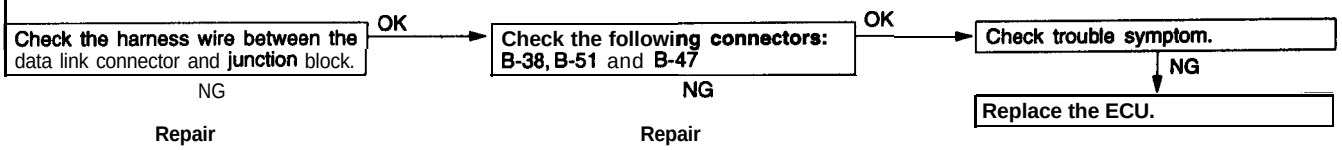

INSPECTION PROCEDURE 3

While the taillights or headlight are illuminated, driver's side door is opened but the light reminder warning buzzer does not sound. (With the ignition key inserted in the key cylinder, the ignition key reminder warning buzzer sounds.)	Probable cause
[Comment] The cause is probably a defective lighting switch input circuit system or a defective ECU. While the ignition key reminder warning buzzer sounds, the taillight or headlight are turned ON but the light reminder warning buzzer does not sound.	• Malfunction of connector • Malfunction of harness wire • Malfunction of ECU

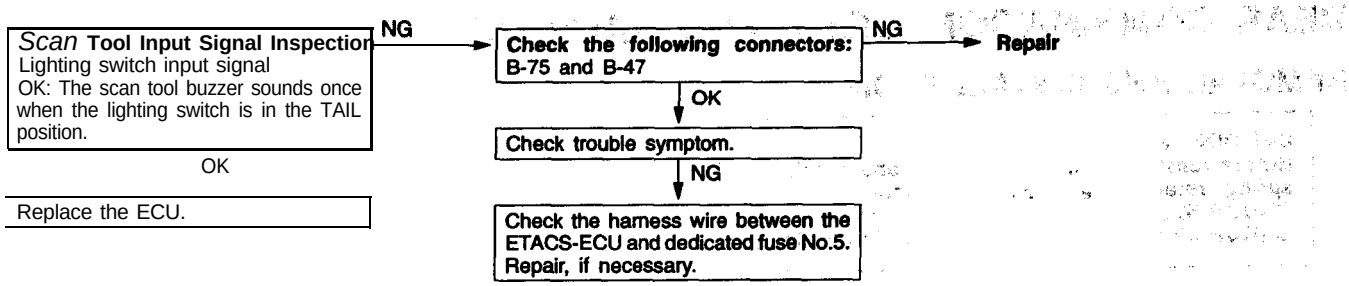

TROUBLESHOOTING HINTS

Taillight

All lights do not illuminate.

(1) The headlights also do not illuminate.
- Check fusible link No. 5.

(2) The headlights illuminate.
- Check the taillight relay. (Refer to P.54-48.)
- Check the dedicated fuse No.5.

Back-up light

Even if the shift lever (or the selector lever) is moves to "R" position, the back-up light will not illuminate.

- Check the back-up light swich <M/T>
- Check the park/neutral position swich <A/T>
  <2.0L Engine (Non-turbo)> : (Refer to GROUP 23A - On-vehice Service.)
  <2.0L Engine (Turbo) and 2.4L Engine> : (Refer to GROUP 23A – On-vehicle Service.)
- Check the transaxle range swich <A/T>
  <2.0L Engine (Non-turbo)> : (Refer to GROUP 23A - On-vehice Service.)
- Check the back-up light bulb.

Stop light

1. The stop light do not come on.
   - Check the stop llight swich. (Refer to GROUP 35A – On-vehicle Service.)
   - Check the dedicated fuse No. 2.
   - Check the turn-signal and hazard flasher unit.
2. A stop light dose. not illminate.
   - Check the stop light bulb.
   - Check the ground circuit.

REAR COMBINATION LIGHT AND BACK-UP LIGHT

54200390099

REMOVAL AND INSTALLATION

CAUTION: SRS
Before removal of air bag module and clock spring, refer to the following sections;
GROUP 52B – SRS Service Precautions.
GROUP 52B – Air Bag Module and Clock Spring,

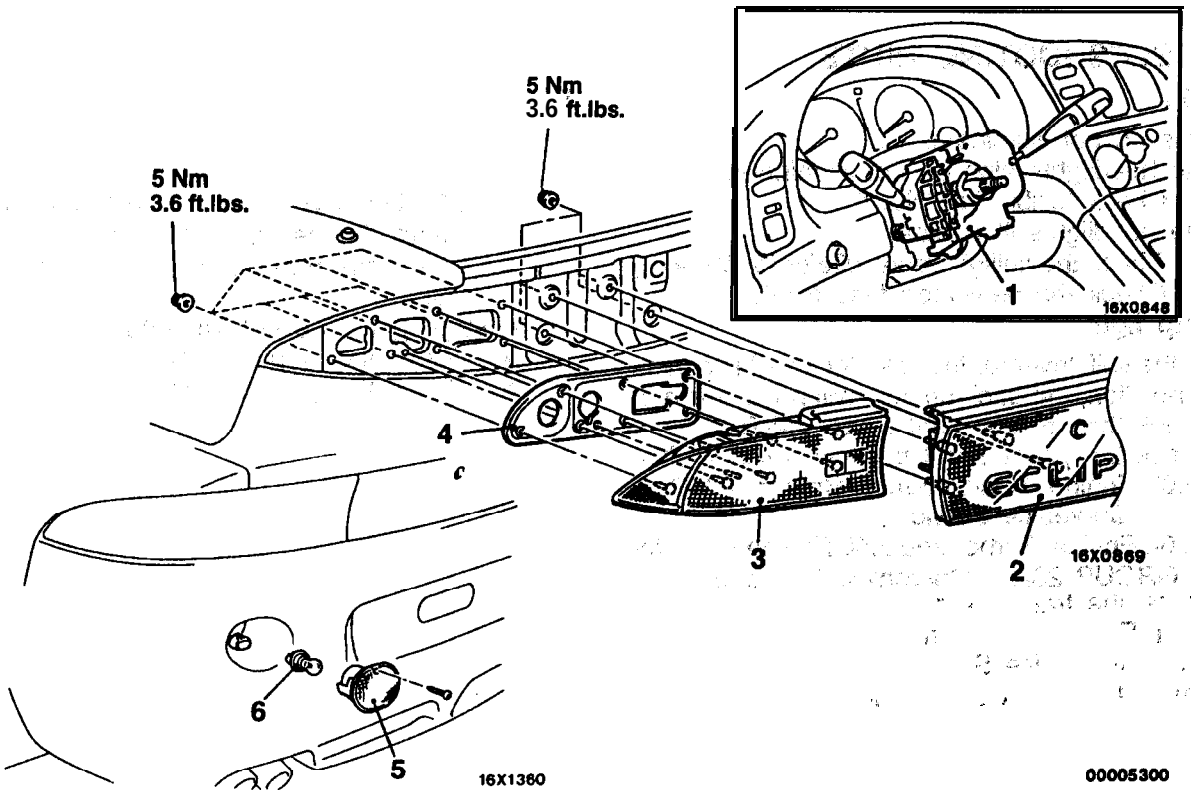

Column switch removal

1. Column switch <Lighting switch> (Refer to GROUP 51 – Windshield Wiper and Washer.)

◀A▶

Rear combination light removal steps

- Rear end trim (Refer to GROUP 52A – Trims.)
2. Rear panel garnish assembly
3. Rear combination light
4. Gasket

Back-up light removal

5. Back-up light
6. Bulb

TSB Revision

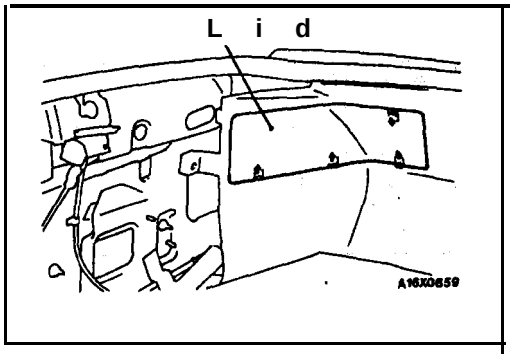

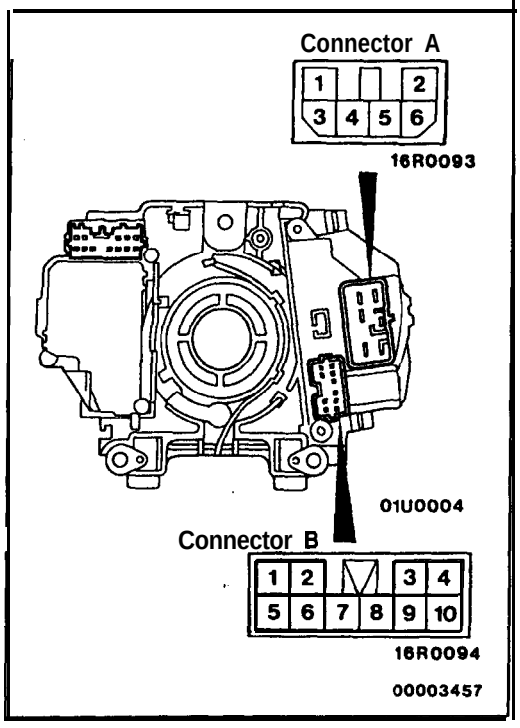

REMOVAL

SERVICE POINT

◀A▶ REAR COMBINATION LIGHT REMOVAL

Slide the' lock knob of the lid in the direction of the arrow in the illustration to remove the lid, and 'then remove the rear combination light mounting nut.

INSPECTION

54200760135

COLUMN SWITCH CONTINUITY CHECK

Switch position		Connector A–terminal No.					Connector B–terminal No.					
		1	2	3	4	6	3	5	6	7	8	9
LIGHTING SWITCH	OFF											
	TAIL							○		○		
	HEAD	○						○	○	○		

<2.0L Engine (Non-turbo)>

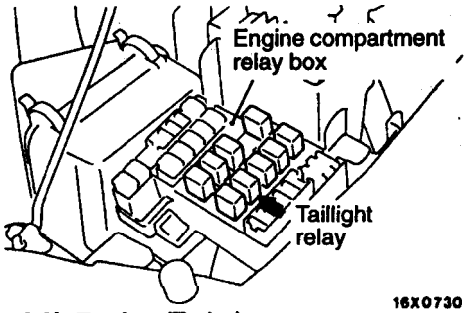

<2.0L Engine (Turbo)>

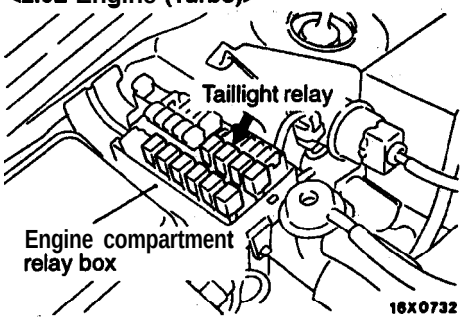

<2.4L Engine>

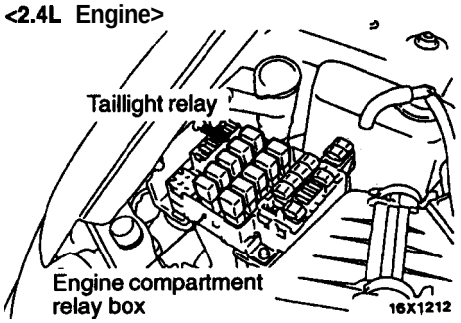

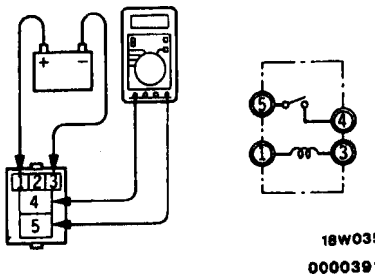

TAILLIGHT RELAY CONTINUITY CHECK

54200780063

Battery voltage	Terminal No.			
	1	3	4	5
Power is not supplied	0	0		
Power is supplied	⊕	⊖	0	O

TSB Revision

HIGH-MOUNTED STOP LIGHT

54200070078

TROUBLESHOOTING

Refer to Rear Combination Light and Back-up Light – Troubleshooting Hints.

HIGH MOUNTED STOP LIGHT

54200510128

REMOVAL AND INSTALLATION

<ECLIPSE>

Pre-removal and Post-installation Operation
- Liftgate Lower Trim Removal and Installation (Refer to GROUP 52A – Trims.)

<Vehicles with rear shelf>

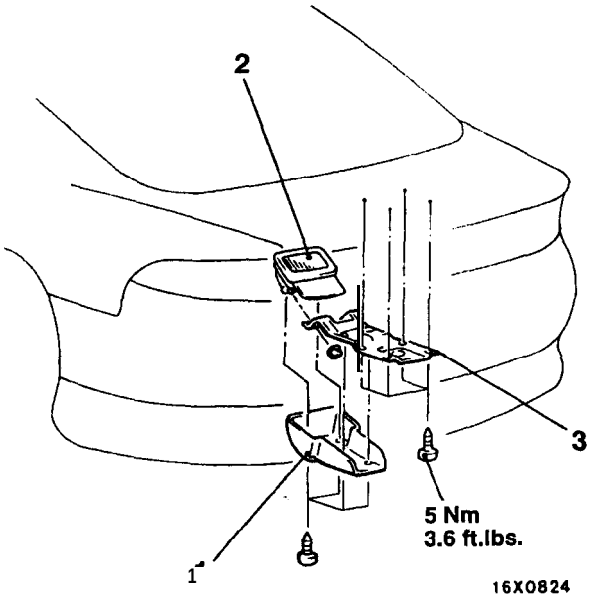

<Vehicles with rear spoiler>

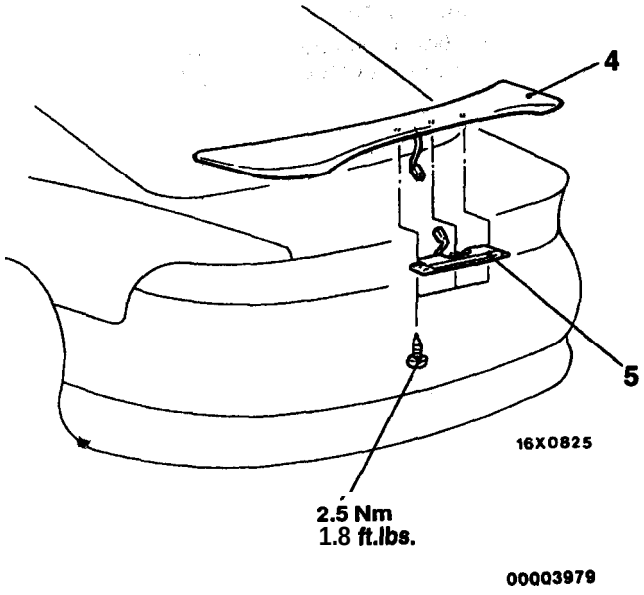

<Vehicles with rear shelf>

Removal steps

1. Cover
2. High mounted stop light
3. Bracket

<Vehicles with rear spoiler>

Removal steps

4. Rear spoiler (Refer to GROUP 51 – Aero Parts.)
5. High mounted stop light

TSB Revision

<ECLIPSE SPYDER>

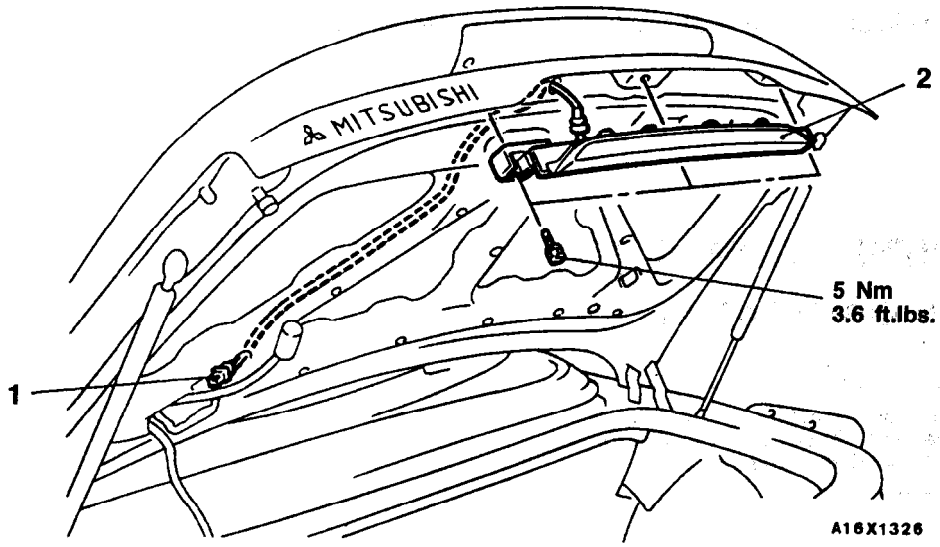

Removal steps

1. High mounted stop light connector
2. High mounted stop light

INTERIOR LIGHT

54200010056

GENERAL INFORMATION

OPERATION

Glove compartment light and vanity mirror light

- If the lighting switch is set at "TAIL" or "HEAD", the contact point of the taillight is closed turning "ON" the taillight relay,
- When the glove compartment is opened, the glove compartment light switch is switched "ON" and the glove compartment light illuminates.
- When the vanity mirror lid is opened, the vanity mirror light switch is switched "ON" and the vanity mirror light illuminates.

Dome light

- Battery voltage is always applied to the dome light.
  When the dome switch is turned to "ON", the dome light will remain lit. After either door is opened if the dome light switch is at "DOOR" position, the dome light will come on.
- In this case, the timer circuit in the ETACS-ECU will be activate to gradually vary the voltage for approx. 6 seconds owing to the duty control, and the 'voltage will be output to power transistor. Since the voltage applied to the dome light gradually decreases, the dome light will be dimmed.
- If the ignition switch is turned to "ON" while the donie light is lit (while the timer is activated), the timer circuit will be opened to turn "OFF" power transistor.
  This will immediately turn off the dome light without, dimming.

Foot lights

- Battery voltage is always applied to the foot lights.
- If either door or liftgate is opened, the foot lights will come on.
- After all doors and liftgate are closed, the foot lights will be dimmed.

SPECIAL TOOLS

54200060143

Tool	Tool number and name	Supersession	Application
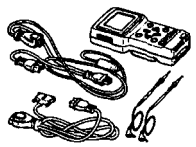	MB991502 Scan tool (MUT-II)	MB991502	ETACS-ECU input signal checking
	ROM pack		
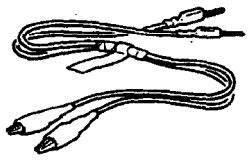	MB991529 Diagnostic trouble code check harness	Tool not necessary if scan tool <MUT-II> is available	ETACS-ECU input signal checking (when using a voltmeter)

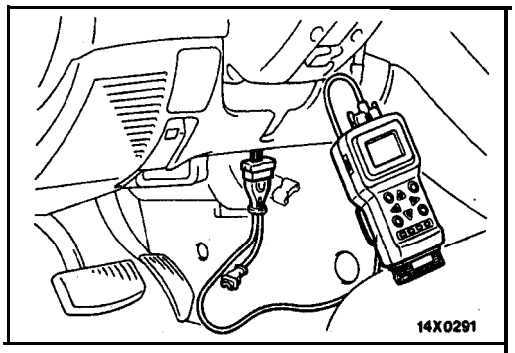

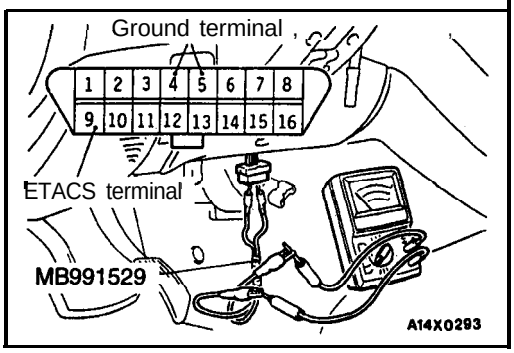

TROUBLESHOOTING

54300700062

DIAGNOSTIC FUNCTION

INPUT SIGNAL INSPECTION POINTS

When Using the Scan Tool

1. Connect the scan tool to the data link ‘connector.

   Caution
   Always turn the ignition switch off when connecting and disconnecting the scan tool.

2. if buzzer of the scan tool sounds once when a switch is operated (ON/OFF), the ECU input signal for that switch circuit system is normal.

When Using a Voltmeter

1. Use the special tool to connect a voltmeter between the ground terminal and the ETACS terminal of data link connector.
2. if the voltmeter indicator deflects once when a switch is operated (ON/OFF), the ECU input signal for that switch circuit system is normal.

INSPECTION CHART FOR TROUBLE SYMPTOMS

54300720112

Trouble symptom		Inspection procedure No.	Reference page
Communication with scan tool is not possible.	Communication with all systems is not possible.	1	54-53
	Communication with one-shot pulse input signal only is not possible.	2	54-53
The dome light and foot light do not illuminate when any of the doors is opened. (However, they do when the dome light switch is in the DOOR position for vehicles without sunroof.)		3	54-54
Even if all doors are closed, the dome light and foot light switch off immediately and do not become dimmed.		4	54-55
While the dome light and foot light are dimmed, the ignition key is turned to the ON position but the dome light and foot light do not switch off. (However, they switch off after dimming.)		5	54-55
Dome light and foot light remain illuminated although all doors are closed. (In vehicles without sunroof, however, they switch off when the dome light switch is moved from the DOOR position to the OFF position.)		6	54-56

INSPECTION PROCEDURE FOR TROUBLE SYMPTOMS

INSPECTION PROCEDURE 1

Communication with scan tool is not possible. (Communication with all systems is not possible.)	Probable cause
[Comment] The cause is probably a defect in he power supply system [including ground) for the diagnostic line.	• Malfunction of connector • Malfunction of harness wire

- Refer to GROUP 13A – Troubleshooting <2.0L Engine (Turbo) and 2.4L Engine>.
- Refer to GROUP 13A – Troubleshooting <2.0L Engine (Non-turbo)>.

INSPECTION PROCEDURE 2

Communication with scan tool is not possible. (Communication with one-shot pulse input signal only is not possible.)	Probable cause
[Comment] The cause probably a defective one-shot pulse input signal circuit system of the diagnostic line.	• Malfunction of connector • Malfunction of harness wire • Malfunction of ECU

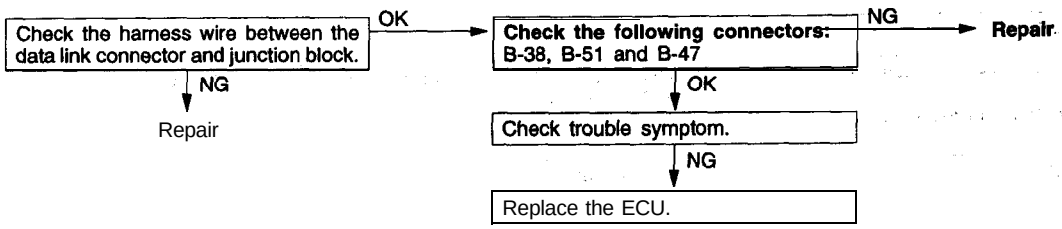

TSB Revision

INSPECTION PROCEDURE 3

The dome light and foot light do not illuminate when any of the doors is opened. (However, they do when the dome light switch is in the DOOR position for vehicles without sunroof.)	Probable cause
[Comment] The cause is probably defective door switch input circuit systems in all doors a defective dome light and foot light illumination circuit system.	• Malfunction of dome light • Malfunction of foot light • Malfunction of connector • Malfunction of harness wire • Malfunction of ECU

<Dome light>

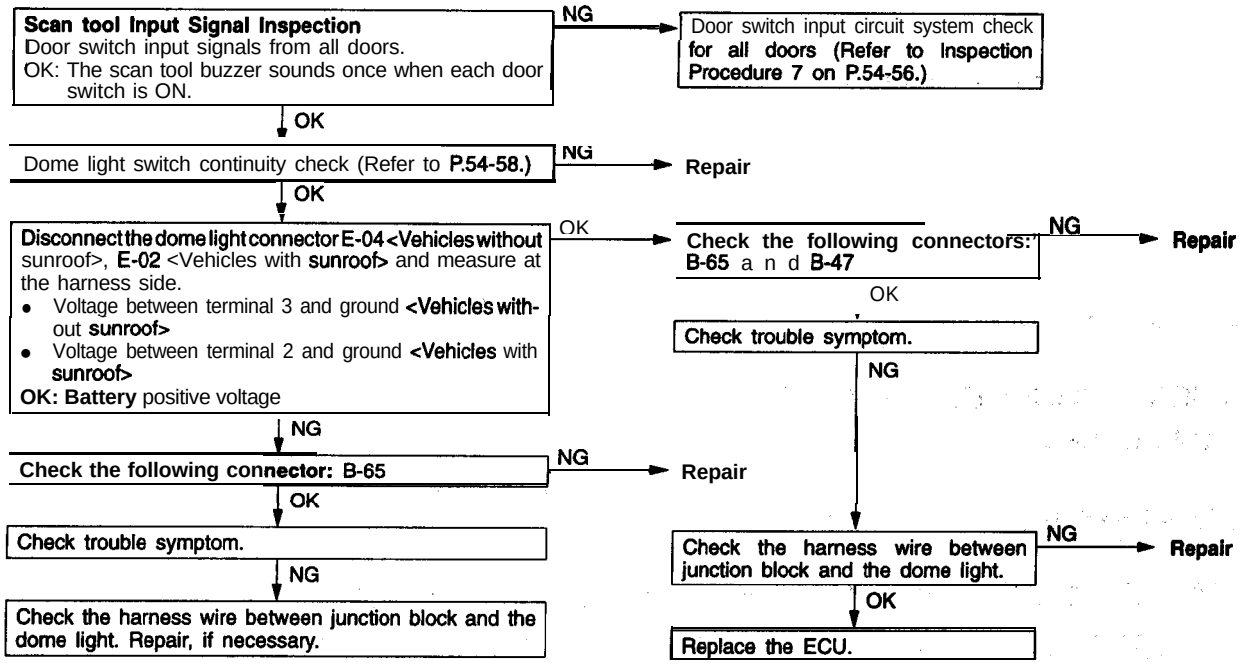

<Foot lights>

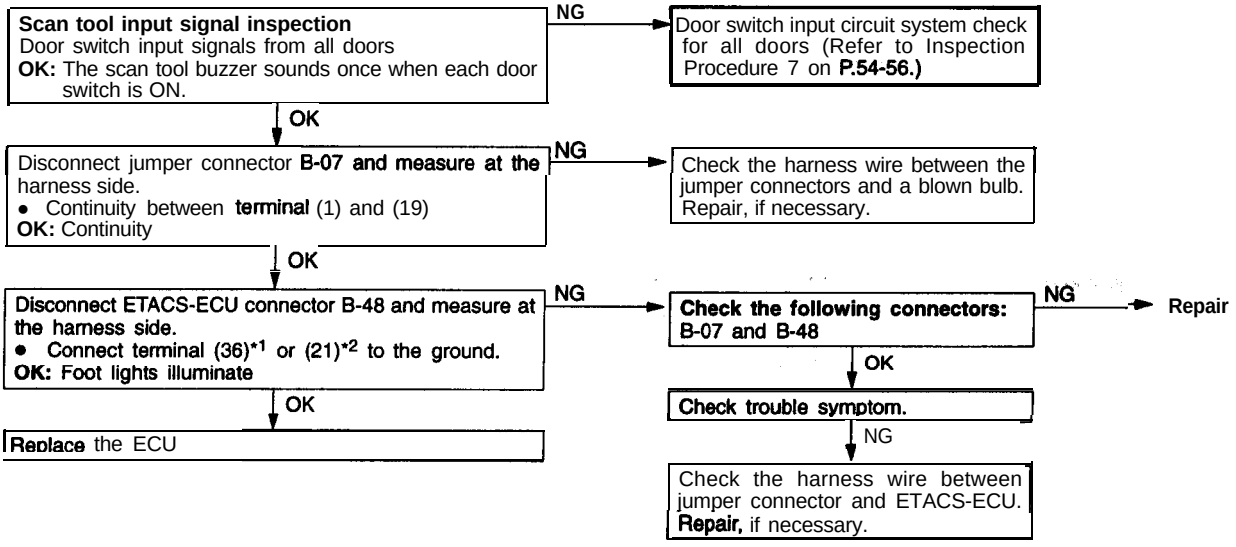

NOTE
*1: Vehicles with theft-alarm system.
*2: Vehicles without theft-alarm system.

TSB Revision

INSPECTION PROCEDURE 4

Even if ail doors are closed, the dome light and foot light switch off immediately and do not become dimmed.	Probable cause
[Comment] The cause is probably a defective ground circuit harness or a defective ECU.	• Malfunction of connector • Malfunction of harness wire • Malfunction of ECU

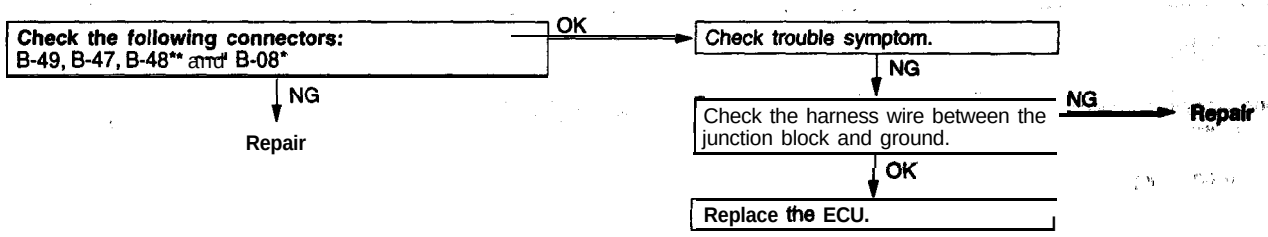

NOTE
*: Vehicles without theft-alarm system.

INSPECTION PROCEDURE 5

While the dome light and foot light are dimmed, the ignition key is turned to the ON position but the dome light and foot light do not switch off. (However, they switches off after dimming.)	Probable cause
[Comment] The cause is probably a defective ignition circuit system or a defective ECU. In addition, if there is a defective fuse, the indicator light mechanism inside the combination meter will also become defective, so the cause might also be a harness short.	• Malfunction of fuse • Malfunction of connector • Malfunction of harness wire • Malfunction of ECU

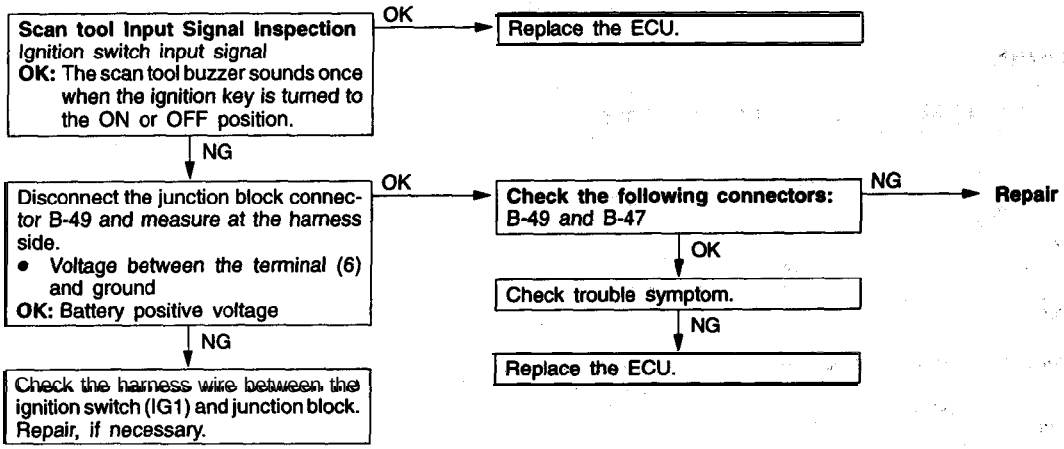

INSPECTION PROCEDURE 6

Dome light and foot light remaln illuminated although all 'doors are closed. (In vehicles without sunroof, however, they switch off when the dome light switch is moved from the DOOR position to the OFF position.)	Probable cause
[Comment] The cause is probably a harness short, a defective ECU or a defective door switch in one of the doors.	• Malfunction of door switch • Malfunction of ECU • Malfunction of harness wire

<Dome light>

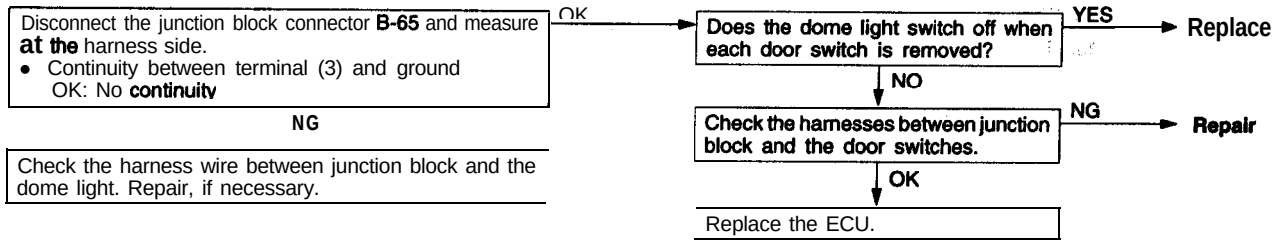

<Foot lights>

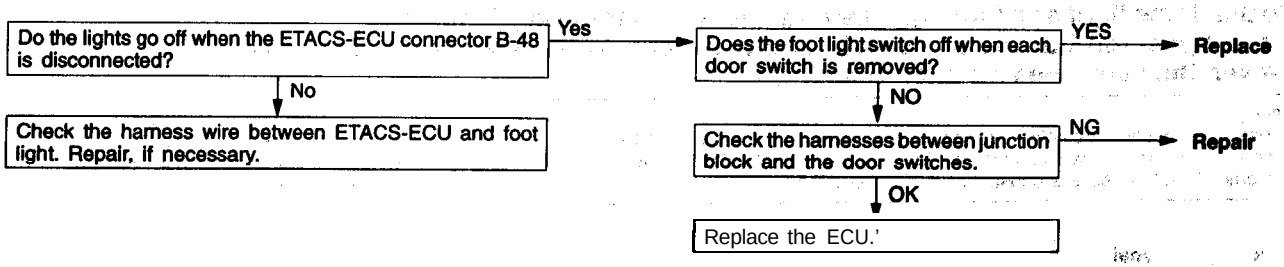

INSPECTION PROCEDURE 7

Door switch input circuit system check for all doors

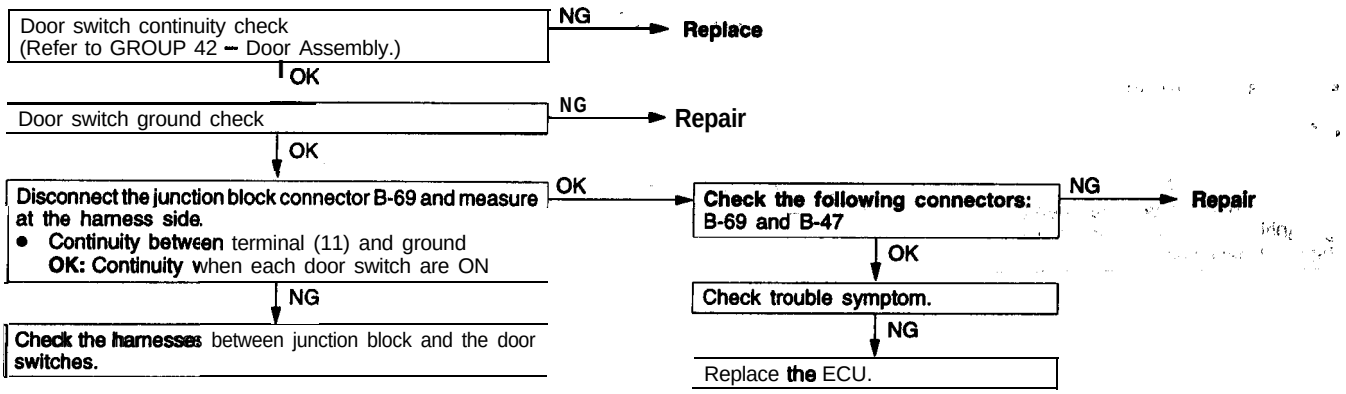

TROUBLESHOOTING HINTS

Glove compartment light and vanity mirror light

1. Glove compartment light or vanity mirror light does not come on.
   - Check the bulb.
   - Check the glove compartment light switch.
   - Check the vanity mirror light switch.
   - Check the switch grounding.
2. Neither glove compartment light nor vanity mirror light comes on.
   - Check the dedicated fuse No. 5.

TSB Revision

INTERIOR LIGHT

54200630030

REMOVAL AND INSTALLATION

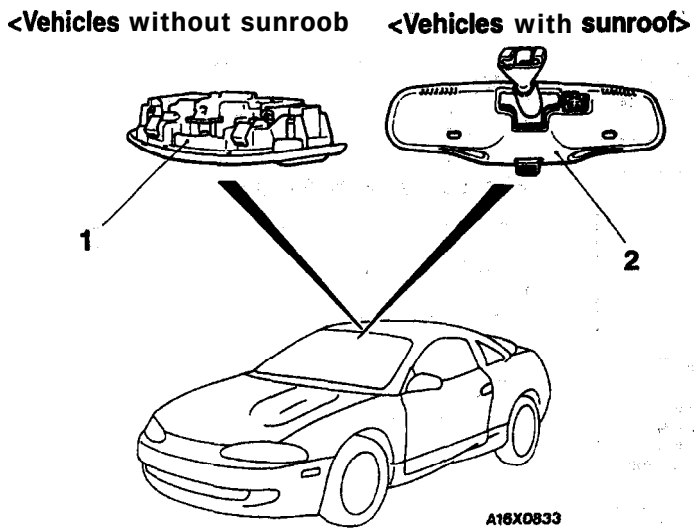

Dome light removal

◀A▶ 1. Dome light assembly
2. Inside rear view mirror <Dome light integrated> (Refer to **GROUP 52A –** Inside Rear View Mirror.)

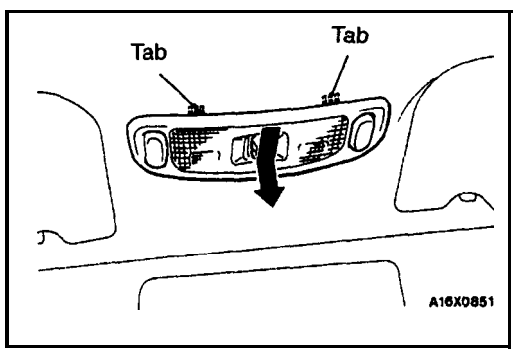

REMOVAL SERVICE POINT

◀A▶ DOME LIGHT ASSEMBLY REMOVAL

Press and **pull** the tabs downwards to remove the dome light assembly.

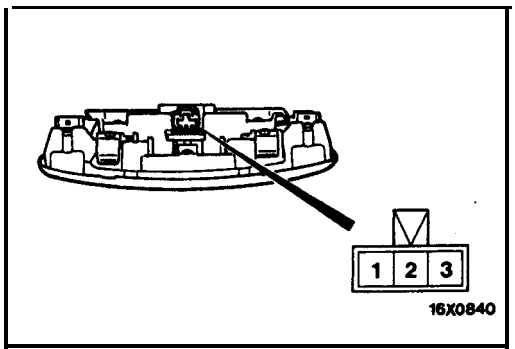

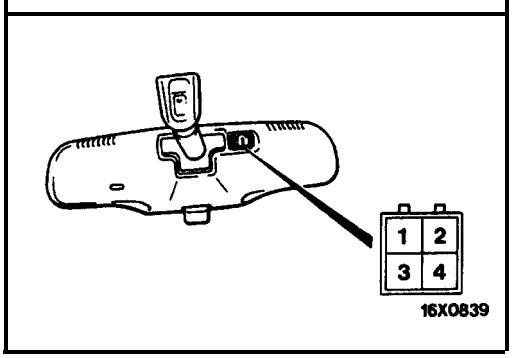

INSPECTION

54200790035

DOME LIGHT SWITCH CONTINUITY CHECK

<Vehicles without Sunroof>

Switch position	Terminal No.			
	1	2		3
OFF				
ON	○		⊕	○
DOOR		○	⊕	○

<Vehicles with Sunroof>

Switch position	Terminal No.				
	1		2		3
OFF			○	⊕	○
ON	○	⊕	○		

TSB Revision

RHEOSTAT

54200600048

REMOVAL AND INSTALLATION

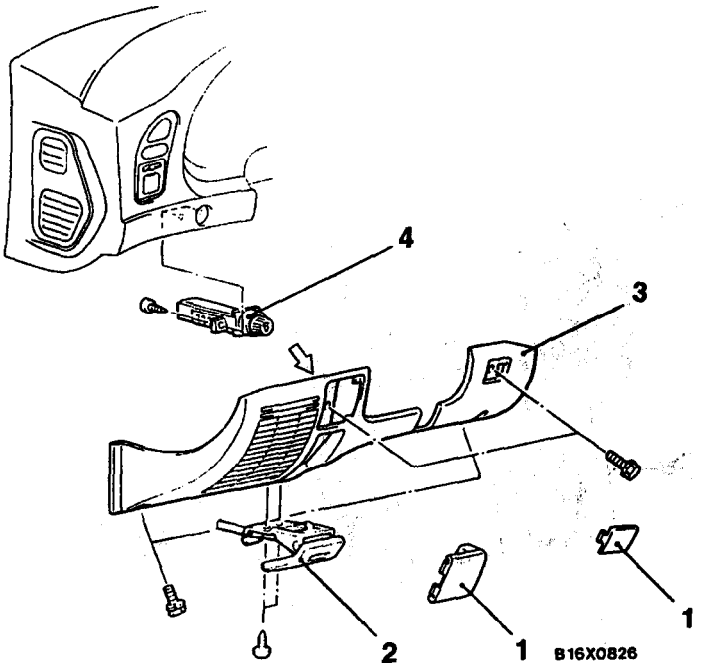

NOTE
The ⇦ mark indicates the sheet metal clip position.

Removal steps

1. Plug
2. Hood lock release handle
3. Instrument under cover
4. Rheostat

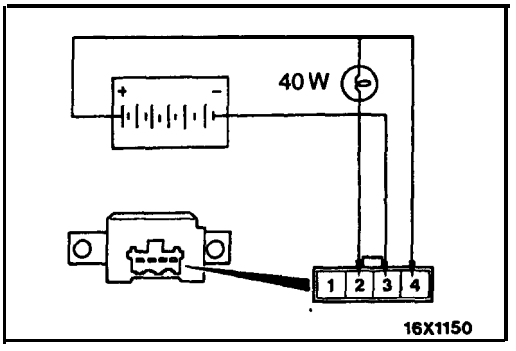

INSPECTION

54200610058

(1) Connect the battery and the test light **(40W)** as shown in the illustration.
(2) Operate the rheostat, and if the brightness changes smoothly without switching off, then the **rheostat** function is normal.

HAZARD WARNING LIGHT SWITCH

54200660046

REMOVAL AND INSTALLATION

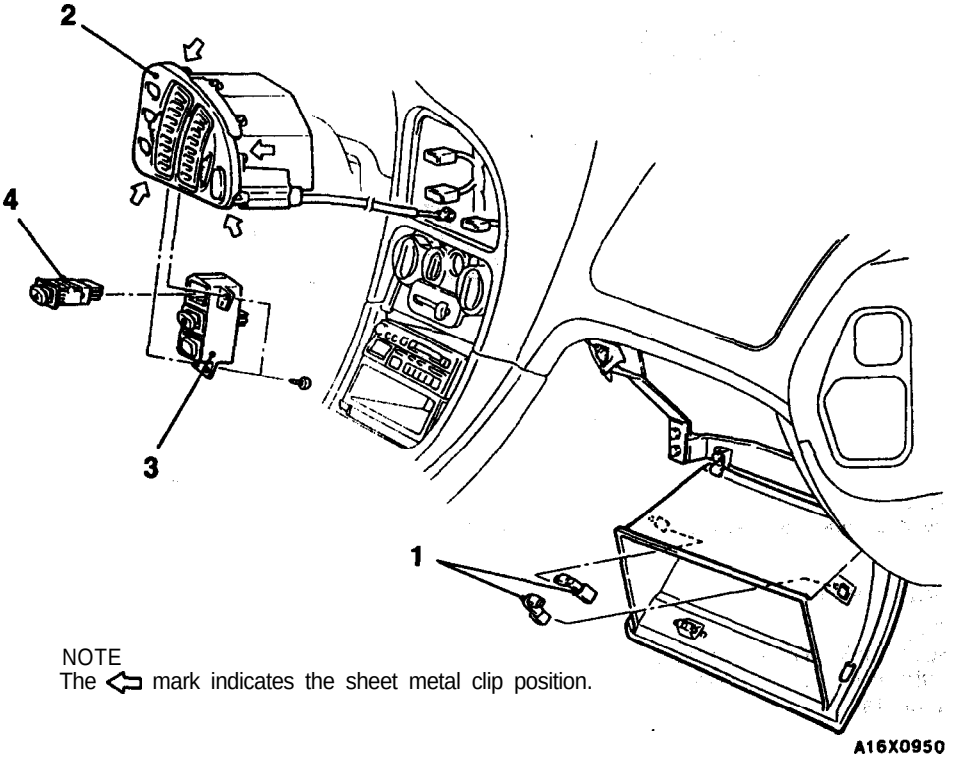

NOTE
The ⇦ mark indicates the sheet metal clip position.

Removal steps

1. Stopper
▶A◀ 2. Center air outlet assembly
3. Holder
4. Hazard warning light switch

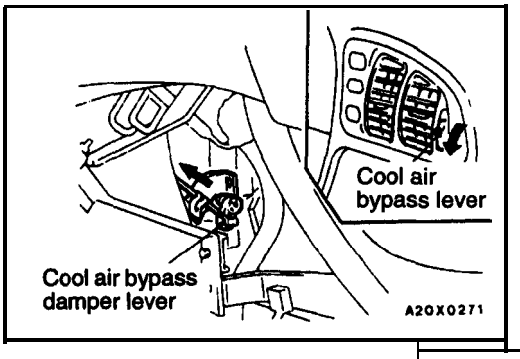

INSTALLATION SERVICE POINTS

▶A◀ CENTER AIR OUTLET INSTALLATION

(1) Turn the cool air bypass lever of the center air outlet fully downward.
(2) Pull the cool air bypass damper lever on the heater unit side fully toward you, and then attach the cable to the pin of the lever.
(3) Push the outer cable in the direction of the arrow so that there is no looseness, and then secure it with the clip.

TSB Revision

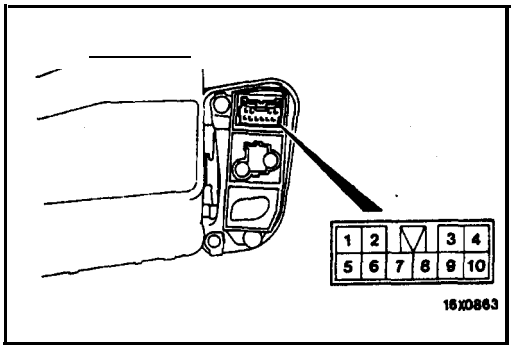

INSPECTION

54200670063

HAZARD WARNING LIGHT SWITCH CONTINUITY CHECK

Switch position	Terminal No.								
	1	2	4	5	6	7	9		10
OFF				○	○		○	ILL	○
ON	○	○	○	○	○		○	ILL	○

HORN

54300010097

GENERAL INFORMATION

OPERATION

- Battery voltage is always applied to the horn relay through the dedicated fuse No. 3.
- When the horn switch is turned "ON", the contact point of horn relay will be closed to turn "ON" the horn relay. While the horn switch is "ON", the horn sounds.

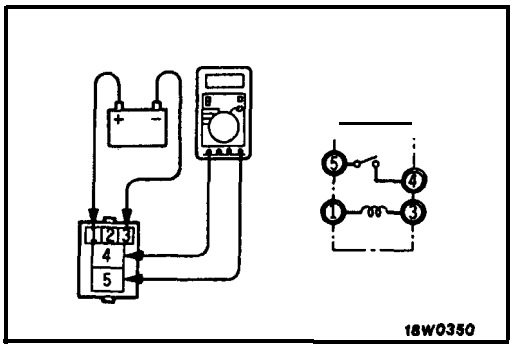

HORN

INSPECTION

54300650053

HORN RELAY AND THEFT-ALARM HORN RELAY CONTINUITY CHECK

Battery voltage	Terminal No.			
	1	3	4	5
Power is not supplied	○	○		
Power is supplied	⊕	⊖	○	○

CIGARETTE LIGHTER

54300010110

GENERAL INFORMATION

OPERATION

- If the plug is pressed into the socket, the plug will remain in, and the cigarette lighter will be turned "ON".
- The element area of the plug is heated. The plug will automatically return to turn "OFF" the cigarette lighter.

TROUBLESHOOTING

54300070194

TROUBLESHOOTING HINTS

1. Cigarette lighter does not operate.
   - Check the multi-purpose fuse **No.14.**
   - Check the cigarette lighter. (Refer to **P.54-62.**)
2. Cigarette lighter illumination light does not come on or is dim.
   - Check the **rheostat. (Refer** to **P.54-59.)**

CIGARETTE LIGHTER

54300560059

REMOVAL AND INSTALLATION

CAUTION: SRS
When removing and installing the floor console assembly, do not let it bump against the SRS-ECU.

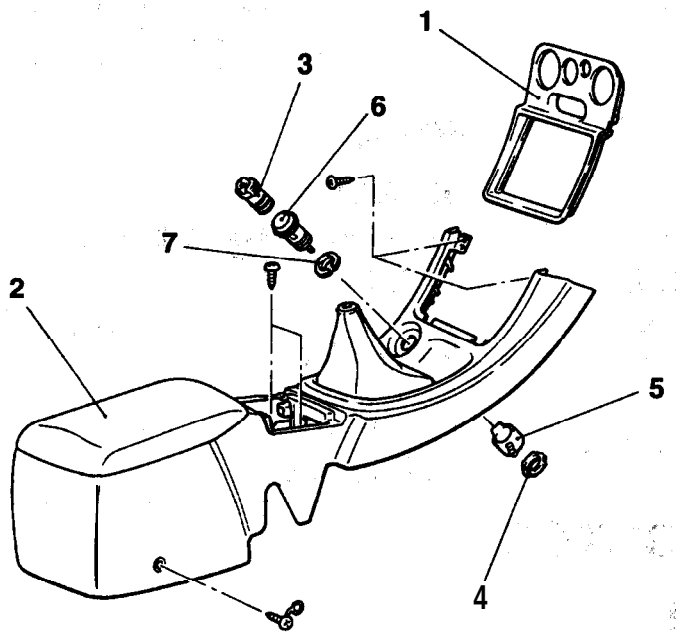

Removal steps
1. Center console panel
2. Floor console assembly
3. Plug
4. Nut
5. Socket case
6. Socket
7. Protector

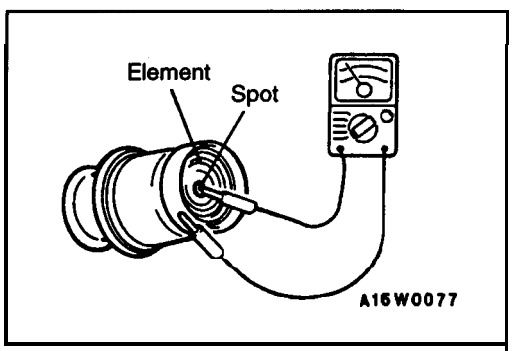

INSPECTION

54300570059

- Take out the plug, and check for a worn edge on the element spot connection, and for shreds of tobacco or other material on the element.
- Using an ohmmeter, check the continuity of the element.

TSB Revision

RADIO, TAPE PLAYER, CD PLAYER, AMPLIFIER, SPEAKER AND ANTENNA

54400070074

TROUBLESHOOTING

QUICK-REFERENCE TROUBLESHOOTING CHART

Items	Problem symptom	Relevant chart
Noise	Noise appears at certain places when travelling (AM).	A - I
	Noise appears at certain places when travelling (FM).	A–2
	Mixed with noise, only at night (AM).	A–3
	Broadcasts can be heard but both AM and FM have a lot of. noise	A–4
	There is more noise either on AM or on FM.	A–5
	There is noise when starting the engine.	A–6
	Some noise appears when there is vibration or shocks during traveling	A–7
	Noise sometimes appears on FM during traveling. ,	A–8
	Ever-present noise.	A–9
Radio	When switch is set to ON, no power is available.	B–1
	No sound from one speaker.	B–2
	There is noise but no reception for both AM and FM or no sound from AM, or no sound from FM.	B–3
	Insufficient sensitivity.	B–4
	Distortion on AM or on both AM and FM.	B–5
	Distortion on FM only.	B–6
	Too few automatic select stations.	B–7
	Insufficient memory (preset stations are erased).	B–8
'ape player	Cassette tape will not insert.	C–1
	No sound.	C–2
	No sound from one speaker.	C–3
	Sound quality is poor, or sound is weak.	C–4
	Cassette tape will not eject.	C–5
	Uneven revolution. Tape speed is fast or slow.	C–6
	Faulty auto reverse.	C–7
	Tape gets caught in mechanism.	C–8
	Automatic search does not work	C–9

Items	Problem symptom	Relevant chart
CD player	CD will not be accepted.	D - I
	No sound.	D–2
	CD sound skips.	D–3
	Sound quality is poor.	D–4
	CD will not be ejected.	D–5
	No sound from one speaker.	D–6
Motor antenna	Motor antenna won't extend or retract.	E - I
	Motor antenna extends and retracts but does not receive.	E–2

CHART

A. NOISE

A-I Noise appears at certain places when traveling (AM).

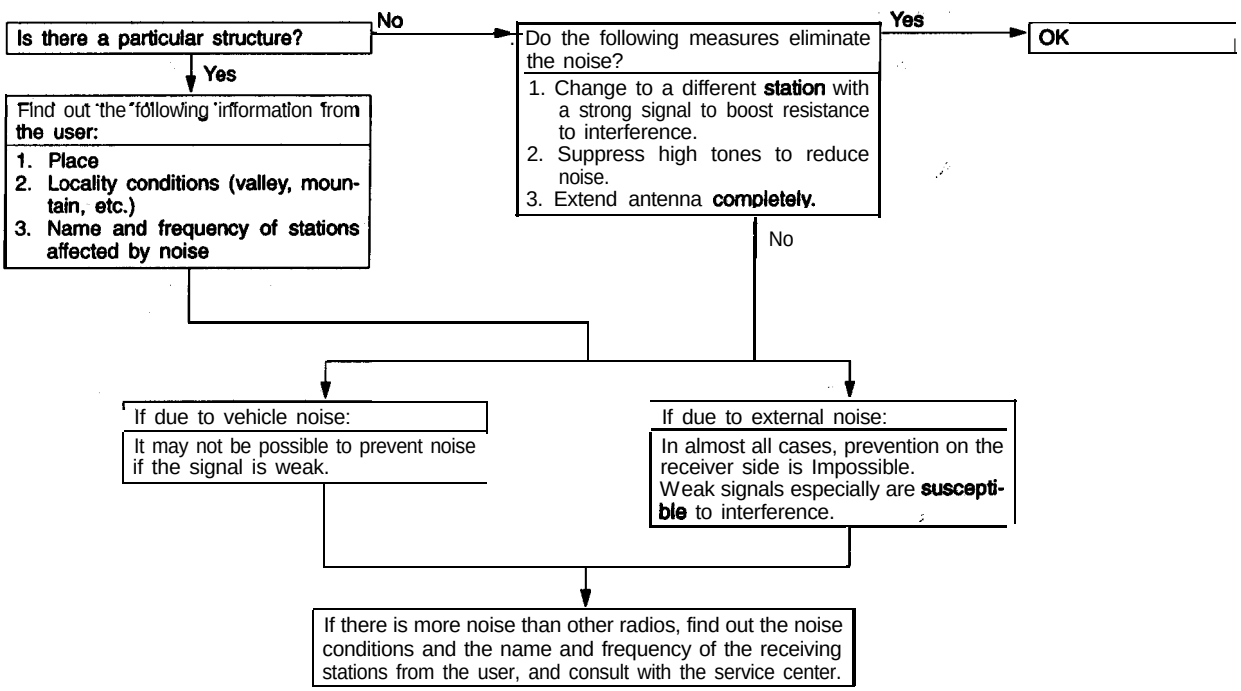

A-2 Noise appears at certain places when traveling (FM).

Do the following measures eliminate the noise?

- Change to a different station with a strong signal to boost resistance to interference.
- Suppress high tones to reduce noise.
- Extend antenna completely.

Yes → OK

No

If there is more noise than other radios, find out the noise conditions and the name and frequency of the receiving stations from the user, and consult with the service center.

NOTE

About FM waves:

FM waves have the same properties as light, and can be deflected and blocked. Wave reception is not possible in the shadow of obstructions such as buildings or mountains.

1. The signal becomes weak as the distance from the station's transmission antenna increases. Although this may vary according to the signal strength of the transmitting station and intervening geographical formation or buildings, the area of good reception is approx. 20–25 km (12-16 miles) for stereo reception, and 30–40 km (19-25 miles) for monaural reception.
2. The signal becomes weak when an area of shadow from the transmitting antenna (places where there are obstructions such as mountains or buildings between the antenna and the car), and noise will appear. <This is called first fading, and gives a steady buzzing noise.>
3. If a direct signal hits the antenna at the same time as a signal reflected by obstructions such as mountains or buildings, interference of the two signals will generate noise. During travelling, noise will, appear each time the vehicle's antenna passes through this kind of obstructed area. The strength and interval of the noise varies according to the signal strength and the conditions of deflection. <This is called multipath noise, and is a repetitious buzzing.>
4. Since FM stereo transmission and reception has a weaker field than monaural, it is often accompanied by a hissing noise.

FM Broadcast Good Reception Areas

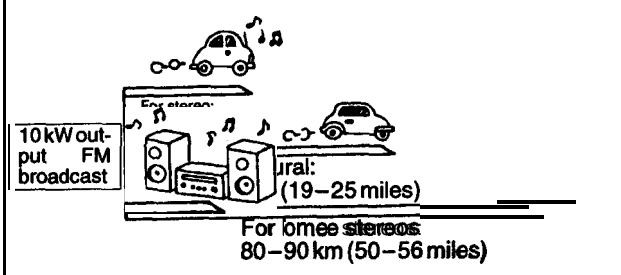

FM Signal Characteristics and Signal Interference

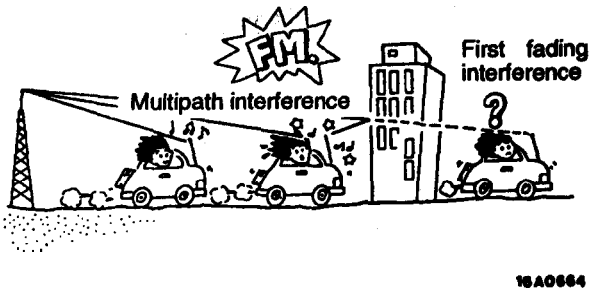

A–3 Mixed with noise, only at night (AM).

The following factors can be considered as possible causes of noise appearing at night.

1. Factors due to signal conditions: Due to the fact that long-distance signals are more easily received at night, even stations that are received without problem during the day may experience interference in a general worsening of reception conditions. The weaker a station is the more susceptible it is to interference, and a change to a different station or the appearance of a beating sound* may occur. Beat sound*: Two signals close in frequency interfere with each other, creating a repetitious high-pitched sound. This sound is generated not only by sound signals but by electrical waves as well.
2. Factors due to vehicle noise: Generator noise may be a cause.

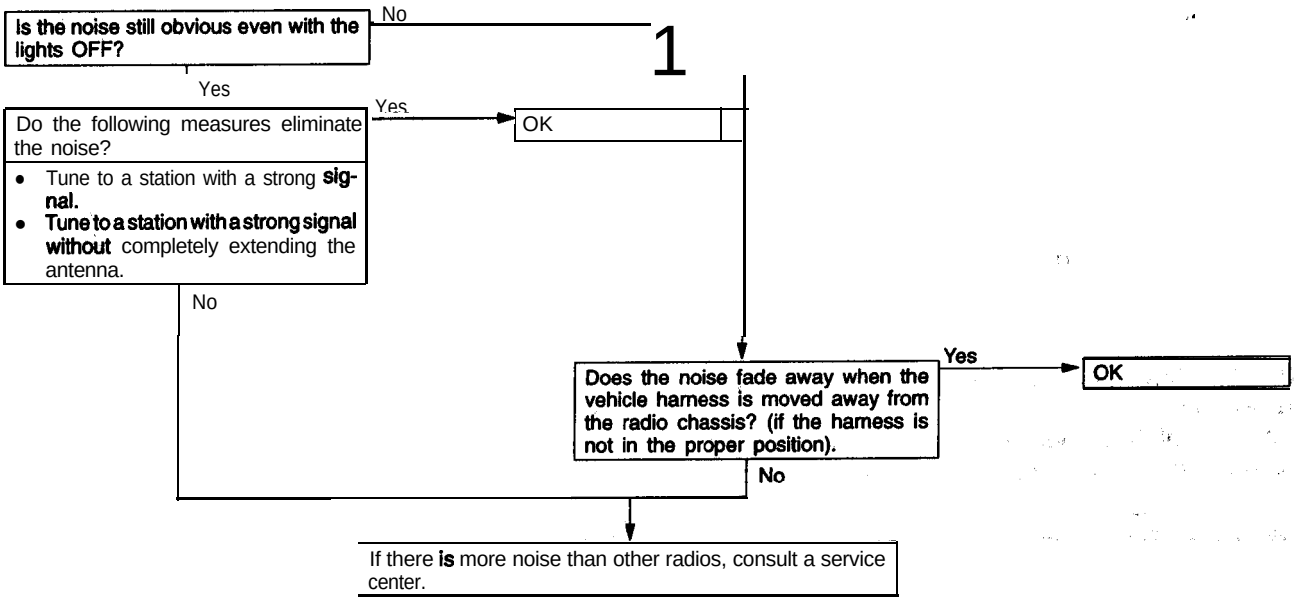

A–4 Broadcasts can be heard but both AM and FM have a lot of noise.

(1)

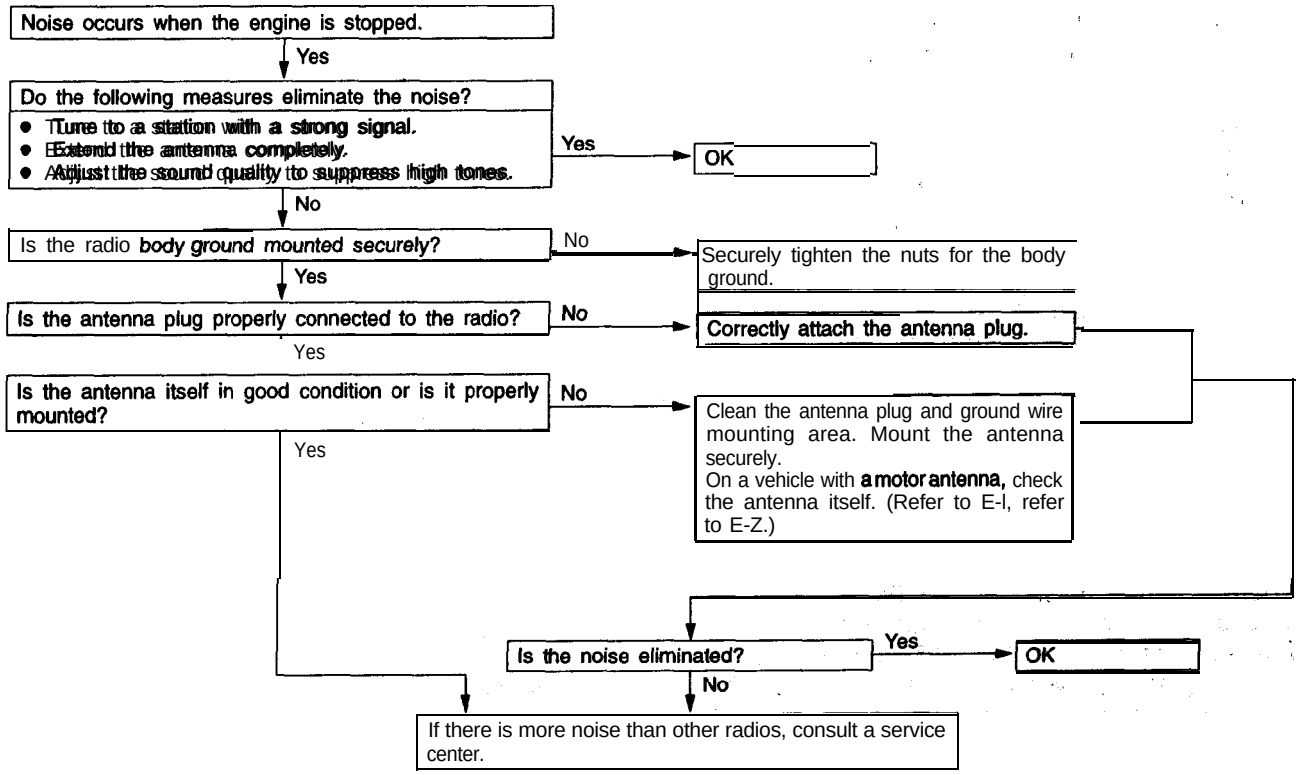

(2)

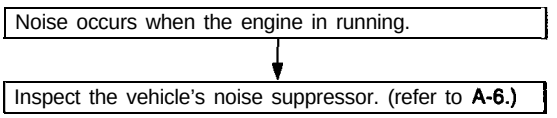

NOTE
About noise encountered during FM reception only. Due to differences in FM and AM systems, FM is not as susceptible as AM to interference from engines, power lines, lightning, etc. On the other hand, there are cases due to the characteristics of FM waves of noise or distortion generated by typical noise interference (first fading and multipath). (Refer to **A-2.)**

<**Noise** (hissing) occurs in weak signal areas such as mountainous regions, but this is not due to a problem with the radio.>

A–5 There is more noise either on AM or on FM.

1. There is much noise only on AM
   Due to differences in AM and FM systems, AM is more susceptible to noise interference.

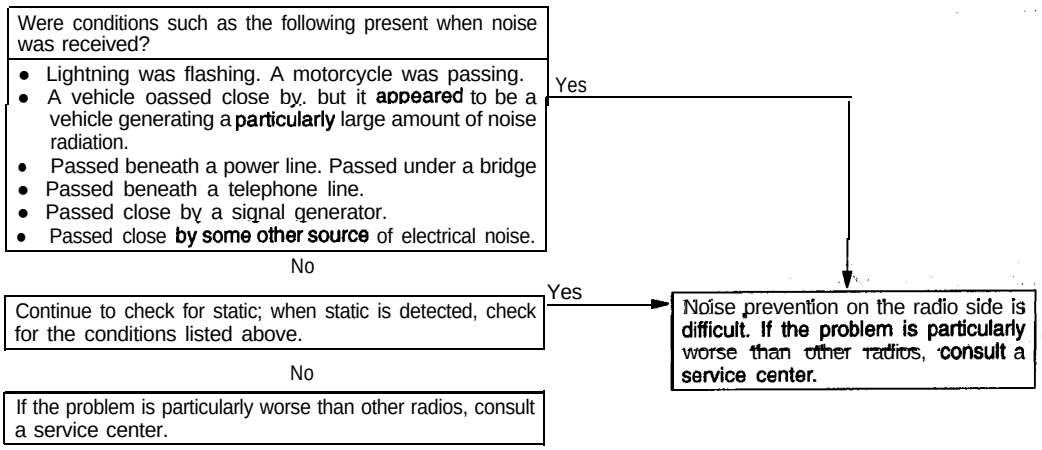

2. There is much noise only on FM
   Due to differences in FM and AM systems, FM is not as susceptible as AM to interference from engines, power lines, lightning, etc. On the other hand, there are cases due to the characteristics of FM waves of noise or distortion generated by typical noise interference (first fading and multipath). (Refer to A-2) <Noise (hissing) occurs in weak signal areas such as mountainous regions, but this is not due to a problem with the radio.>

A-6 There is noise when starting the engine.

Noise type Sounds are in parentheses ( ).	Conditions	Cause	Remedy
AM, FM: Ignition noise (Popping, Snapping, Cracking, Buzzing)	• Increasing the engine speed causing the popping sound to speed up, and volume decreases. • Disappears when the ignition switch is turned to ACC.	• Mainly due to the spark plugs. • Due to the engine noise.	• Check or replace the ground cable. (Refer to P.54-124.) • Check or replace the noise capacitor. (Refer to P.54-124.)
Other electrical components	–	Noise may appear as electrical components become older.	Repair or replace electrical components.
Static electricity (Cracking, Crinkling)	• Disappears when the vehicle is completely stopped. • Severe when the clutch is engaged.	Occurs when parts or wiring move for some reason and contact metal parts of the body.	Return parts or wiring to their proper position.
	• Various noises are produced depending on the body part of the vehicle.	Due to detachment from the body of the front hood, bumpers, exhaust pipe and muffler, suspension, etc.	Tighten the mounting bolts securely. Cases where the problem is not eliminated by a single response to one area are common, due to several body parts being imperfectly grounded.

Caution

1. **Never connect a high-tension cable to the noise filter, or the filter will be destroyed.**
2. **Do not let any external noise get into the vehicle, or the noise source cannot be identified.**
3. **Prevent noise by suppressing strong sources of noise step by step.**

NOTE

1. Capacitor
   The capacitor does not pass D.C. current, but as the number of waves increases when it passes A.C. current, impedance (resistance against A.C.) decreases, and current flow is facilitated. A noise suppressing condenser which takes advantage of this property is inserted between the power line for the noise source and the ground. This suppresses noise by grounding the noise component (A.C. or pulse signal) to the body of the vehicle.
2. Coil
   The coil passes D.C. current, but impedance rises as the number of waves increases relative to the A.C. current. A noise suppressing coil which takes advantage of this property is inserted into the power line for the noise source, and works by preventing the noise component from flowing or radiating out of the line.

NOISE SUPPRESSOR MOUNTING LOCATION

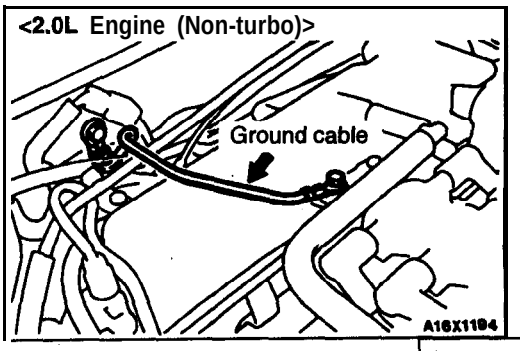

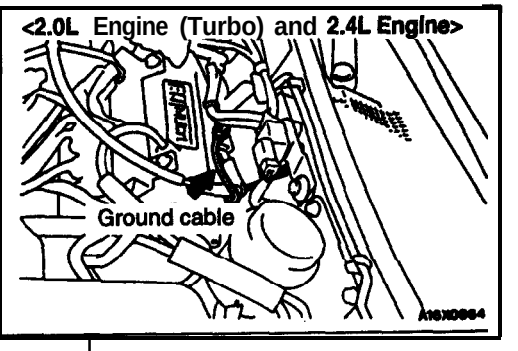

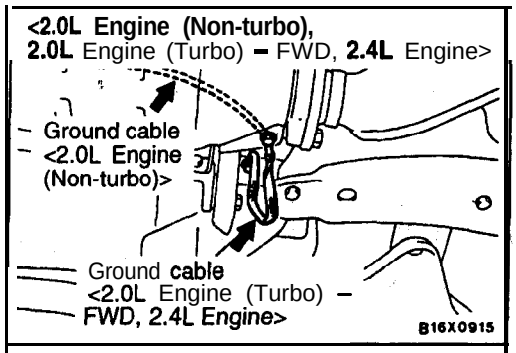

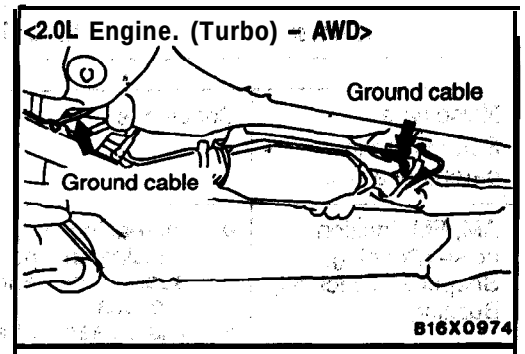

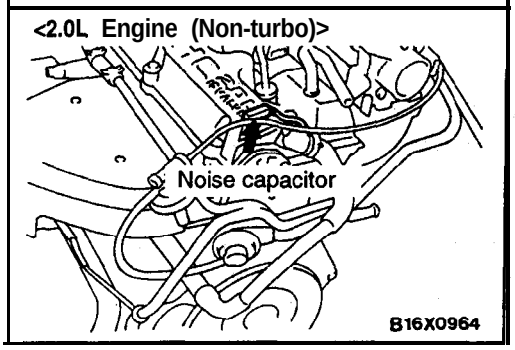

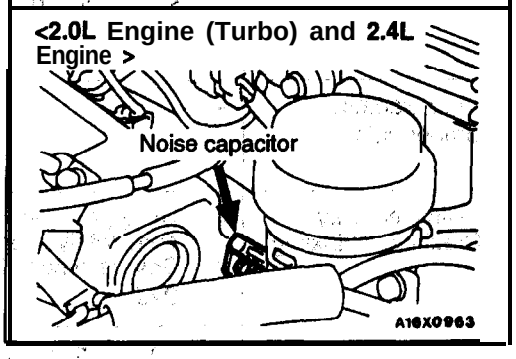

TSB Revision

A–7 Some noise appears when there is vibration or shocks during traveling.

- Are connectors properly connected? — No → Ensure proper connection
- Yes ↓
- Does noise appear when the radio switch is turned on while the vehicle is stopped and the radio is struck while tuned away from a station? — No → Static electricity noise: Body static electric from the shock absorber rubber bushings used to prevent vibration, tyres, etc. occurs because of separation from the ground, causing a buzzing noise. Since no measures can be taken on the radio side, steps should be taken to discharge the static electricity of the vehicle body.
- Yes ↓
- Is the radio correctly grounded? (Is the mounting screw tightened securely?) — No → Tighten the screw securely.
- Yes ↓
- Is the antenna correctly grounded? (If noise appears when the antenna is moved, this means the ground is not securely connected.) — No → If rust is present of the antenna ground screw, clean and tighten the ground securely.
- Yes ↓
- Repair or replace radio.

A–8 Noise sometimes appears on FM during traveling.

- Does the problem clear up when returned? — Yes → OK
- No ↓
- Does the problem appear only in certain locations and only with certain stations? — Yes → Due to electrical field conditions. (Multipath noise*, fading noise*).
- No ↓
- Are connectors property connected? — No → Check connector connections.
- Yes ↓
- Does noise appear when the radio switch is turned on while the vehicle is stopped and the radio is struck while tuned awav from a station? — No → Static electricity noise: Body static electric from the shock absorber rubber bushings used to prevent vibration, tyres, etc. occurs because of separation from the ground, causing a buzzing noise. Since no measures can be taken on the radio side, steps should be taken to discharge the static electricity of the vehicle body.
- Yes ↓
- Is the radio body correctly grounded? (Is the mounting screw tightened securely?) — No → Tighten the screw securely.
- Yes ↓
- Is the antenna correctly grounded? (If noise appears when the antenna is moved, this means the ground is not securely connected.) — No → If rust is present of the antenna ground screw, clean and tighten the ground securely.
- Yes ↓
- Repair or replace radio.

* About multipath noise and fading noise
Because the frequency of FM waves is extremely high, it is highly susceptible to effects from geological formations and buildings. These effects disrupt the broadcast signal and obstruct reception in several ways.

- Multipath noise
  This describes the echo that occurs when the broadcast signal is reflected by a large obstruction and enters the receiver with a slight time delay relative to the direct signal (repetitious buzzing).
- Fading noise
  This is a buzzing noise that occurs when the broadcast beam is disrupted by obstructing objects and the signal strength fluctuates intricately within a narrow range.

A–9 Ever-present noise.

Noise is often created by the following factors, and often the radio is OK when it is checked individually.

- Traveling conditions of the vehicle
- Terrain of area traveled through.
- Surrounding buildings
- Signal conditions
- Time period

For this reason, if there are still problems with noise even after the measures described in steps **A-1** to **A-8** have been taken, get information on the factors listed above as well-as determining whether the problem occurs with AM or FM, the station names, frequencies, etc., and contact a service center.

B. RADIO

B-l No power is supplied when the switch is set to ON.

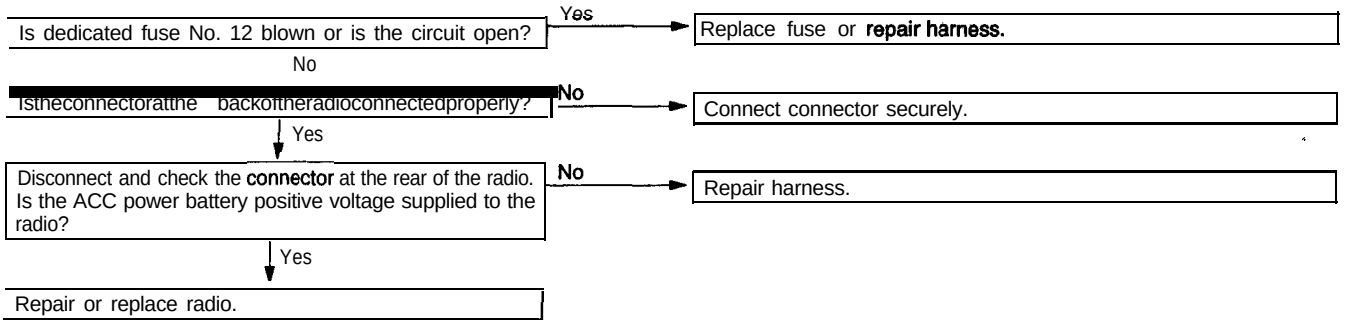

B–2 No sound from one speaker.

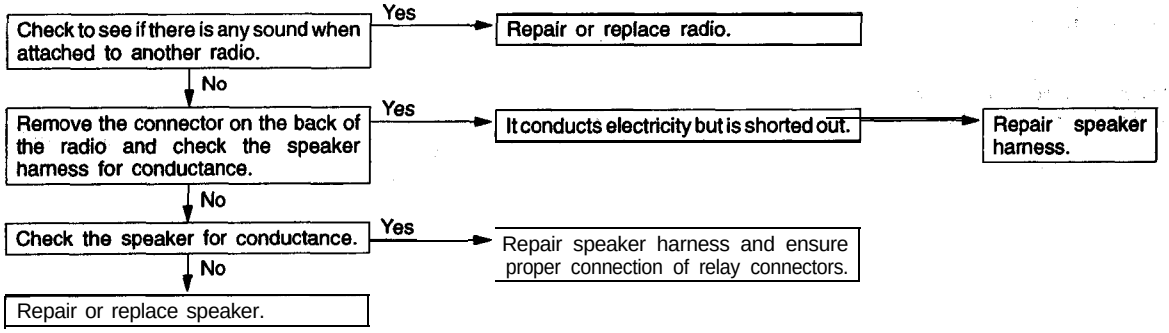

B–3 There is noise but no reception for both AM and FM or no sound from AM, or no sound from FM.

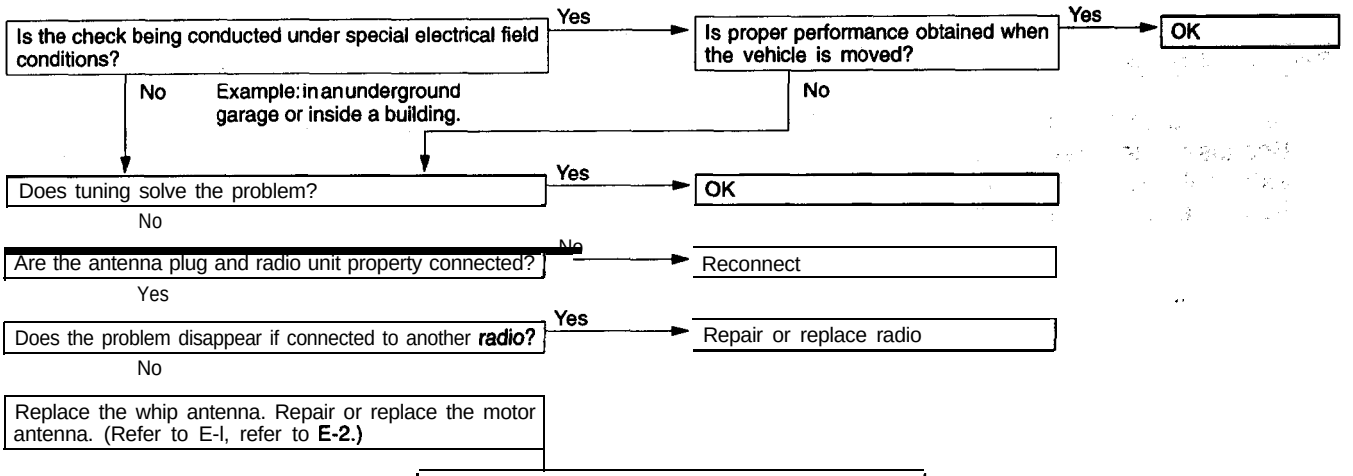

TSB Revision

B–4 Insufficient sensitivity.

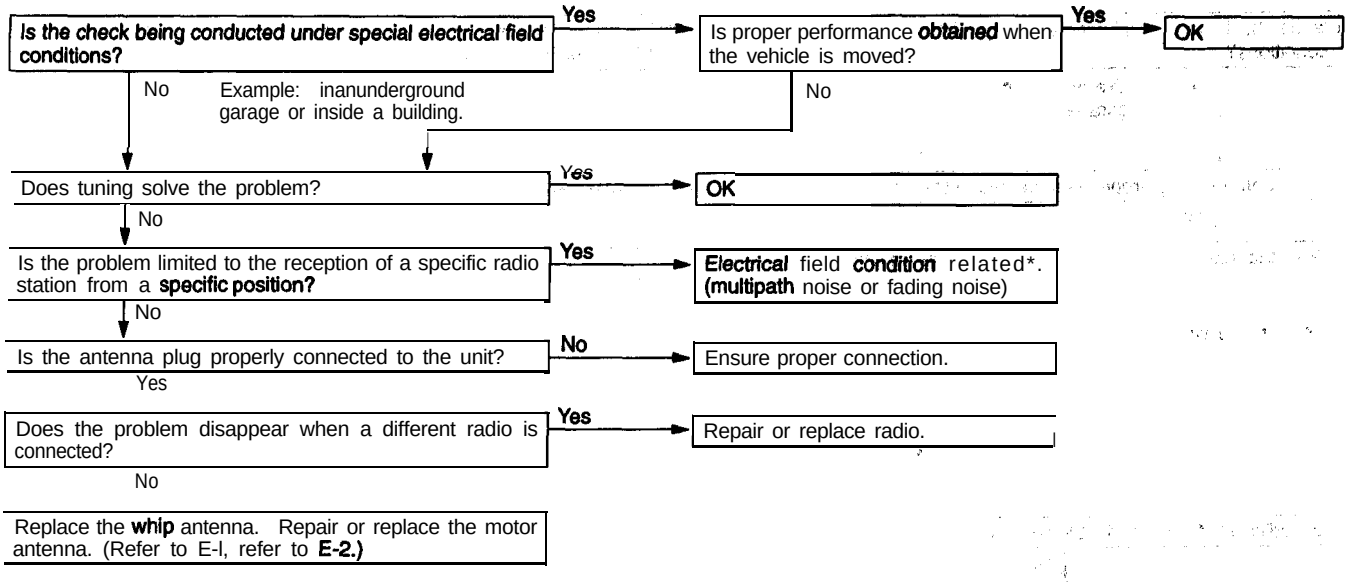

- For multipath noise and fading noise problems, refer to P.54-65.

B–5 Distortion on AM or on both AM and FM.

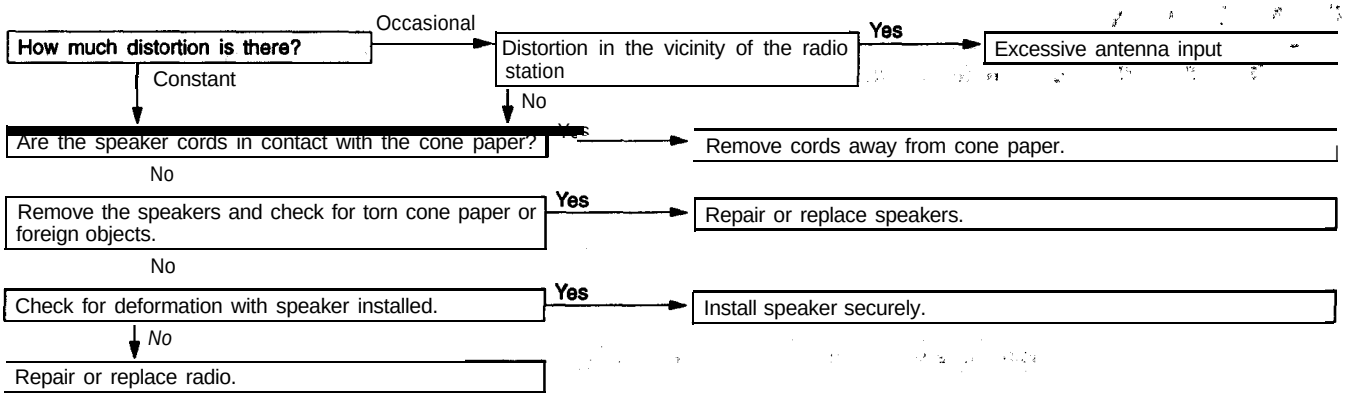

B–6 Distortion on FM only

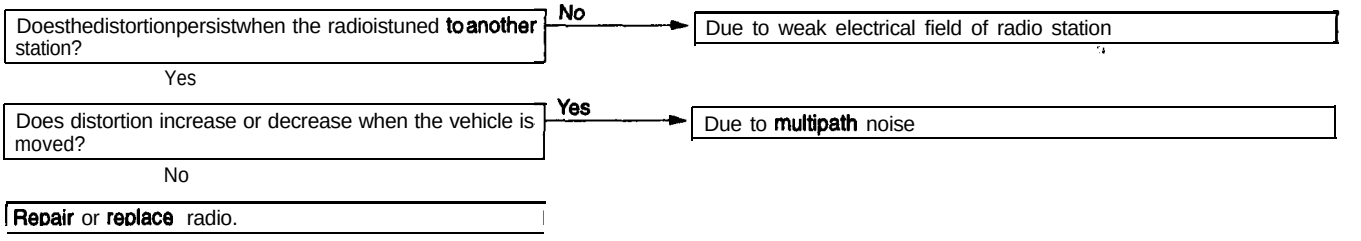

B–7 Too few automatic select stations.

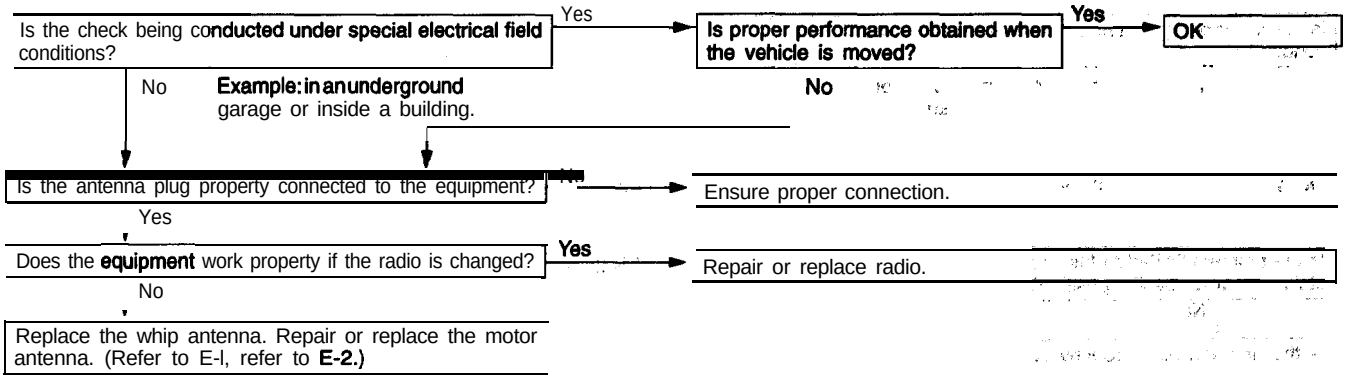

B–8 Insufficient memory (preset stations are erased).

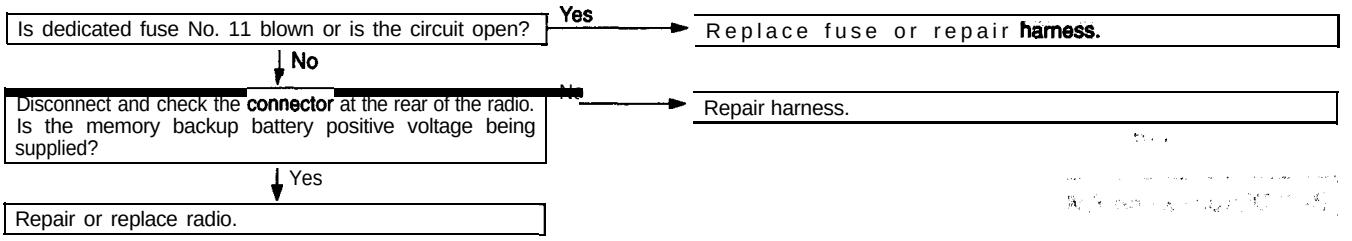

C. TAPE PLAYER

C-l Cassette tape will not be inserted.

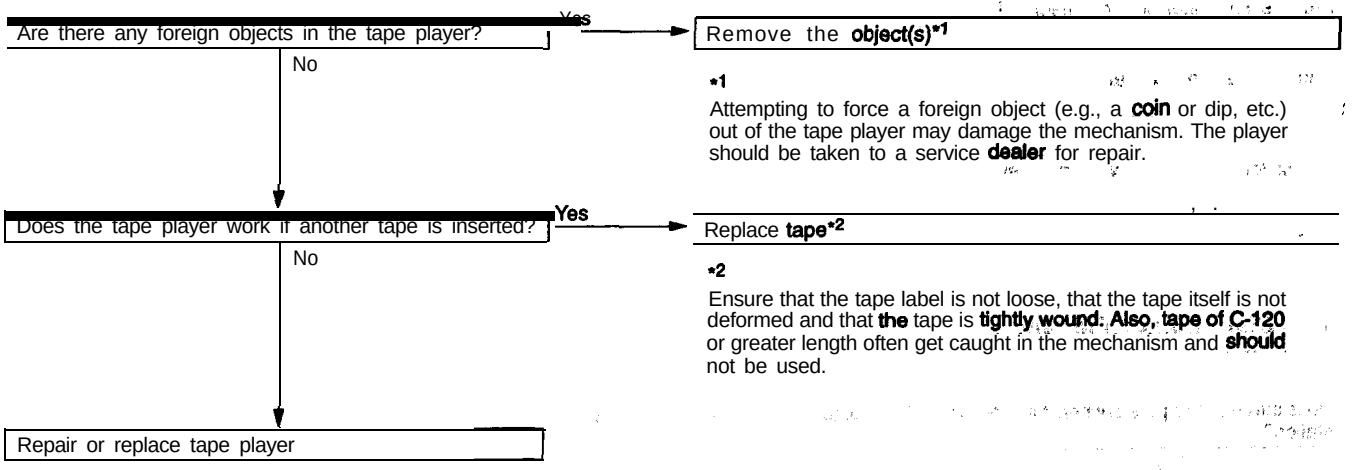

C–2 No sound (even after a tape has been inserted).

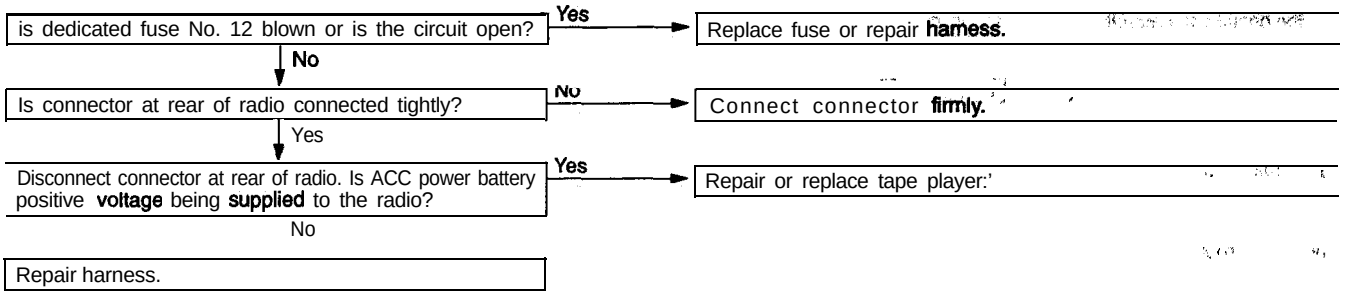

C–3 No sound from one speaker.

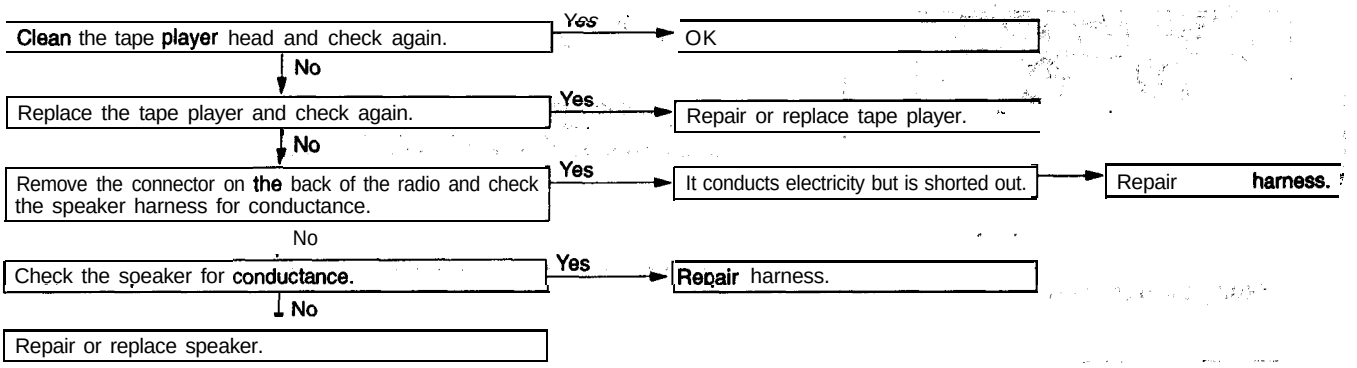

C–4 Sound quality is poor, or sound, is weak.

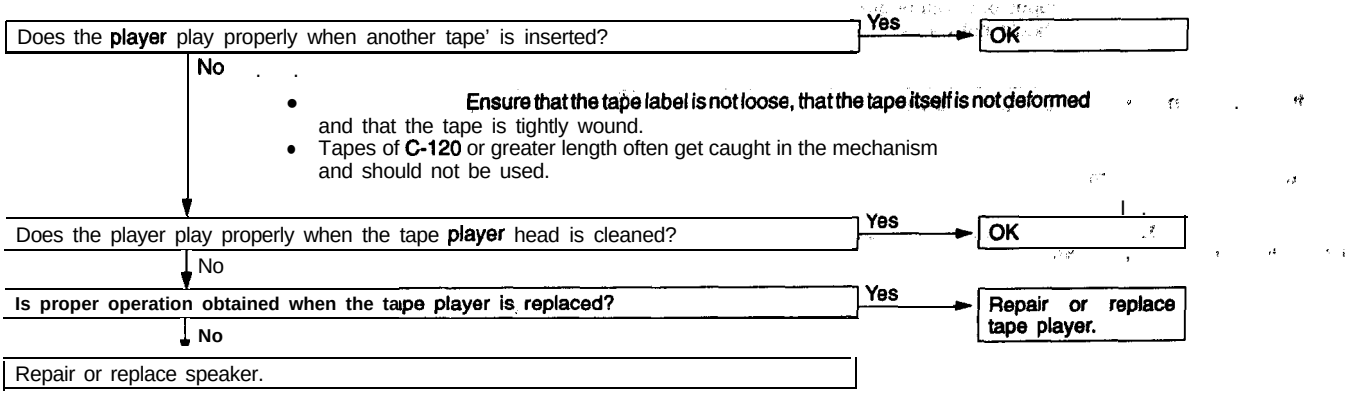

C–5 Cassette tape will not eject.

The problems covered here are all the result of the use of a bad tape (deformed or not properly tightened) or of a malfunction of the tape player itself. Malfunctions involving the tape becoming caught in the mechanism and ruining the case are also possible, and attempting to force the tape out of the player can cause damage to the mechanism. The player should be take to a service dealer for repair.

C-6 Uneven revolution. Tape speed is fast or slow.

Does the player play OK if the tape*1 is changed?
- Yes → OK
- No ↓

Are there any foreign objects ● * inside the tape player?
- Yes → Remove foreign object(s)
- No ↓

Is the head or capstan roller dirty? (Refer to the illustration below.)
- Yes → Clean.
- No ↓

Repair or replace tape player.

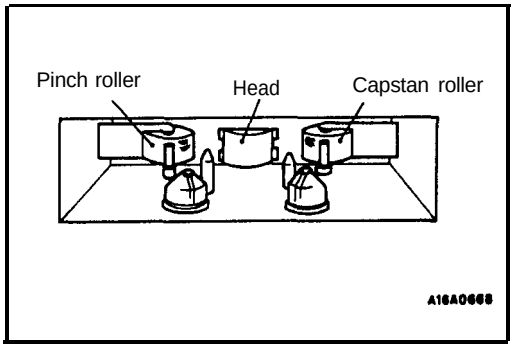

1 Ensure that the tape label is not loose, that the tape itself is not deformed and that the tape is tightly wound. Also, tape of C-120 or greater length often get caught in the mechanism and should not be used.

2 Attemptlng to force a foreign object (e.g., a coin or clip, etc.) out of the tape player may damage the mechanism. The player should be taken to a service dealer for repair.

C-7 Faulty auto reverse.

Does the player play OK if the tape' is changed?
- Yes → OK
- No *:
  - Ensure that the tape label is not loose, that the tape itself is not deformed and that the tape is tightly wound.
  - Tapes of C-120 or greater length often get caught in the mechanism and should not be used.

Does the problem only occur while the vehicle is being driven?
- No → Repair or replace tape player.
- Yes ↓

Is the tape player properly installed to the vehicle?
- No → Ensure tape player installation.
- Yes

Repair or replace tape player.

C–8 Tape gets caught in mechanism*1.

*1
When the tape is caught in the mechanism, the case may not eject. When this occurs, do not try to force the tape out as this may damage the tape player mechanism. Take the cassette to a service dealer for repair.

Does the player play OK if the tape*2 is changed?
- Yes → Tape used is bad.
- No ↓

*2
Ensure that the tape label is not loose, that the tape itself is not deformed and that the tape is tightly wound. Also, tapes of C-120 or greater length often get caught in the mechanism and should not be used.

Repair or replace tape player.

C–9 Automatic search does not work

Does the MSS (automatic search) button*1 depress properly?
- No → Button improperly operated.
- Yes ↓

Does the player play OK if the tape*2 is changed?
- Yes → Tape used is bad.
- No ↓

*1
- When the time between songs on a tape is less than three seconds. or when there is a three second period in the middle of a song In which the volume level is extremely low, the automatic search function may not work properly.

'2
- Ensure that the tape label is not loose, that the tape itself is not deformed and that the tape is tightly wound. Also, tapes of C-120 or greater length often get caught in the mechanism and should not be used.

Repair or replace the tape player.

D. CD PLAYER

D-l CD will not be accepted.

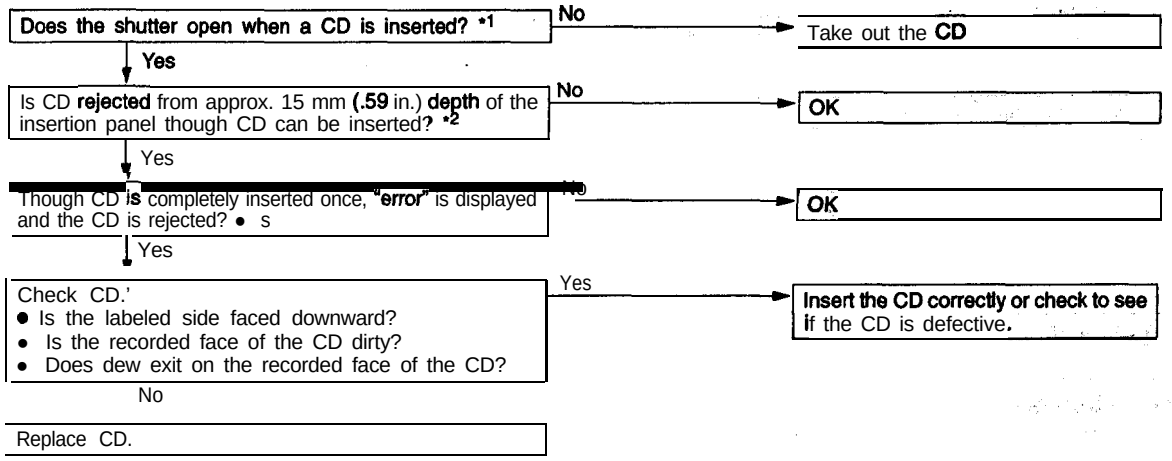

• t If the CD is already loaded, doesn't the shutter open to allow insertion when another CD is inserted?
*2 If the key switch is not at ACC or ON, the CD stops at depth of 15 mm (.59 in.) below the panel surface even when it is inserted, and it will be rejected when pushed farther?
• 3 Even though the CD is loaded. E (error) is sometimes displayed with the CD rejected because of vibration/shock or dew on the CD face or optical lens.

D–2 No sound.

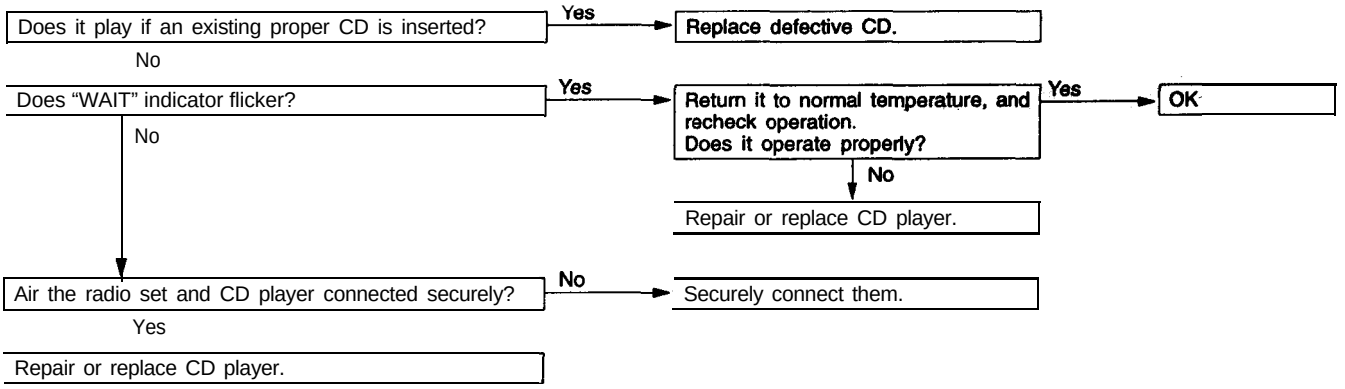

(The combined radio cassette must operate properly.)

TSB Revision

D–3 CD sound skips.

1. Sound sometimes skips during parking.

Is CD face scratched or dirty? — Yes → CD is defective, or clean CD

No ↓

Does it play properly if D is replaced with an existing proper CD? — No → Repair or replace CD player.

Yes ↓

Replace CD.

2. Sound sometimes skips during driving.
(Stop vehicle, and check it.)
(Check it by using a proper CD which is free of scratch, dirt or other abnormality.)

Does sound skip when the side of CD player is tapped? — No → Check the sound skipping state during driving in detail, and contact a service shop.

Yes

Securely mount the CD player.

D–4 Sound quality is poor

Does it play properly if another proper CD is loaded? — Yes → Replace CD.

No

Repair or replace CD player.

D-S CD will not be ejected.

Is the key switch (ignition key) at ACC or ON? — No → Turn the key to ON.

Yes

Is the combined amplifier or radio set connected securely? — No → Securely connect the subjected one.

Yes

If CD is not ejected, don't reject it.
The player may be damaged. Therefore, contact a service shop for repairs.

D–6 No sound from one speaker.

Is CD player securely connected to the combined radio set? → No → Securely connect them.

↓ Yes

Does it play properly it another CD player is combined? → Yes → Repair or replace CD player.

↓ No

Repair or replace the combined radio set.

E. MOTOR ANTENNA

E-l Motor antenna won't extend or retract.

Clean and polish the surface of the antenna rod.

Is the radio power switch ON? → No → Switch it ON.

↓ Yes

Is battery positive voltage emitted to the radio's motor antenna terminal? → No → Repair or replace the radio.

↓ Yes

Is the antenna bent? → Yes → Repair the bend, or replace the antenna pole.

↓ No

Is the motor antenna-ECU OK? → No → Replace the motor antenna-ECU

↓ Yes

Is the motor OK? → No → Replace the motor antenna.

↓ Yes

Repair the harness.

E–2 Motor antenna extends and retracts but does not receive.

Is the antenna itself OK? (Refer to the illustration below.)
- No → Repair or replace it.
- Yes ↓

Is operation normal when a new antenna assembly is directly installed to the radio?
- No → Refer to Quick-Reference Troubleshooting Chart.
- Yes

Replace the feeder cable.

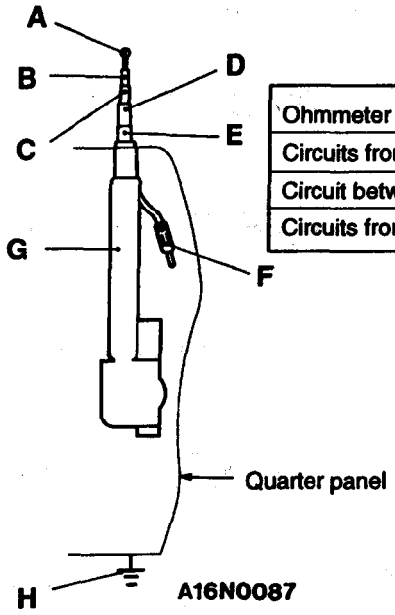

Ohmmeter measurement locations	Result
Circuits from F to A, B, C, D and E	Continuity
Circuit between G and H	Continuity
Circuits from H to A, B, C, D and E	No continuity

ANTI-THEFT SYSTEM

After the power supply to the radio and tape player' has been interrupted for one hour or more, the anti-theft system will prevent the radio, tape player and CD player from working, even if the power supply is restored. -Problems with the; anti-theft system can be found using, the flow chart below.

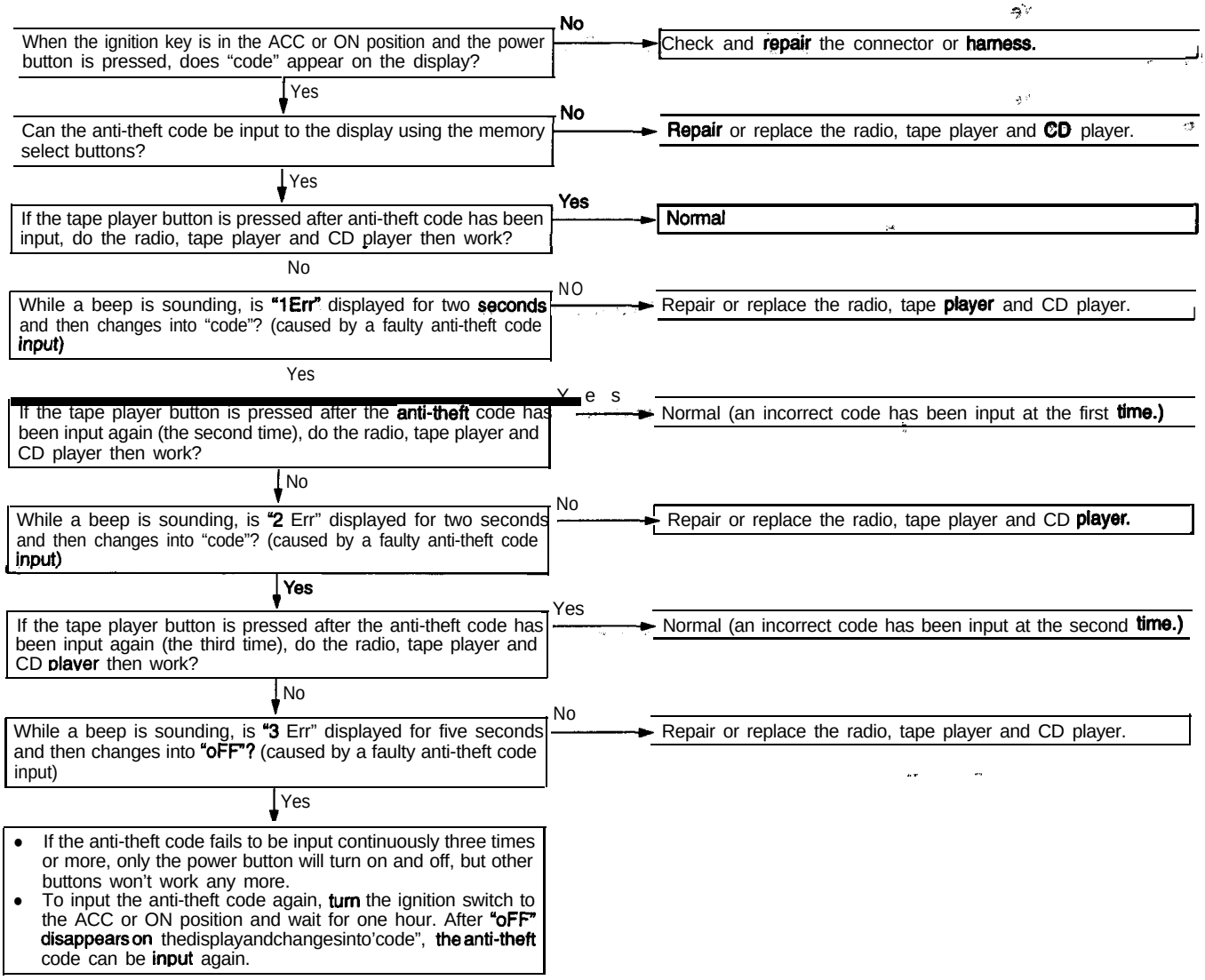

PROCEDURE FOR INPUT OF ANTI-THEFT CODE FOR ANTI-THEFT SYSTEM

'The radio, tape player and, CD player does not work in the following states.

(1) Power supply to the radio, tape,. player and CD player has been suspended for more than one hour continuously by removing the cable from the battery terminal or disconnecting the harness connectors.

(2) The power supply to the radio, tape player and CD player has been suspended for more than one hour owing to blown fuse or discharged battery-

(3) The radio, tape player and- CD player 'has been replaced.

If the radio, tape player and CD played do not work for these causes, input the anti-theft code, by the following procedure to operate it.

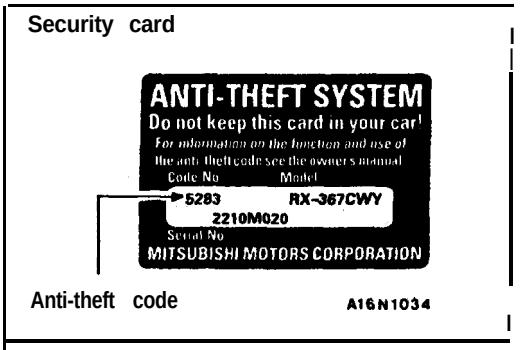

1. Using any of the following methods, confirm the an&theft code.
   (1) Read the anti-theft code indicated on the cards retained by the user.

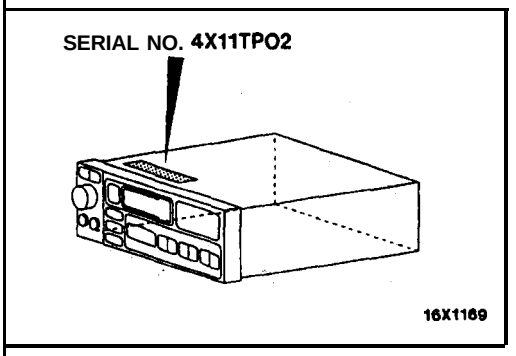

   (2) If the anti-theft code is unknown owing to the user's loss of the cards.
      1) Remove the radio, tape player and CD player (Refer to P.54-138.)
      2) Read the serial No. shown on the name card of the radio and tape player.
      3) Look up the anti-theft code corresponding to the serial number in the serial number-anti-theft code table; or, make inquiries to Mitsubishi Motor Sales of America, Inc.

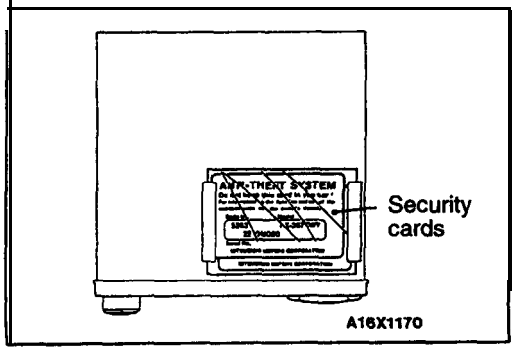

   (3) When the radio, tape player and CD player is replaced. Read the anti-theft code on the cards attached to the upper anti-theft of the replacement radio, tape player and CD player.

NOTE
Deliver the cards (two) to the user.

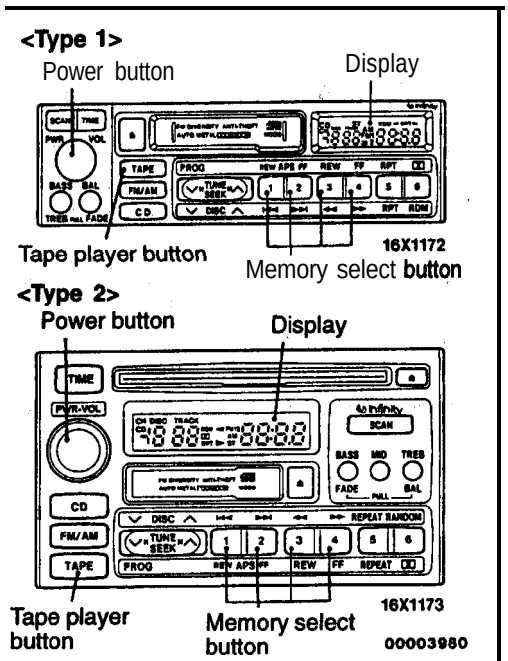

Typical anti-theft code "5283"

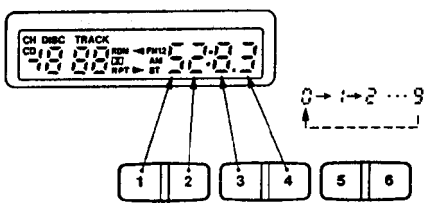

2. Return power supply for the radio, tape player and CD player to the normal state.
3. Turn the ignition key to the "ACC" position.
4. Press the Power button, and 'code" will be displayed on the display.

5. Press No. 1 through No. 4 memory select 'buttons and set the 4-digit anti-theft code indicated on the card.

   NOTE
   Pressing the memory select button increases the number displayed.

6. Press the tape player button; After a beep is heard, the radio, tape playerr and CD player will be in the operating state.
7. If the input anti-theft code does not agree with that in memory, a beep sounds for two seconds. "1 Err" is displayed at that time and changes into "code". Then repeat steps 5 and 6.

NOTE
(1) The anti-theft code can be set three 'times at the most.
(2) The seconds error is displayed as "2 Err"; If the third trial fails, a beep sounds for five seconds. "3 Err" is displayed at that time and changes into "oFF".
(3) When setting is attempted three or more times, keeping the ignition key in the "ACC" or "ON" position for about one hour will automatically erase the "oFF" display. After the erasing, therefore, repeat step 3 and up.

RADIO, TAPE PLAYER AND CD PLAYER

54400110042

REMOVAL AND INSTALLATION

Caution: SRS
When removing and installing the floor console assembly, do not let it bump against the SRS-ECU.

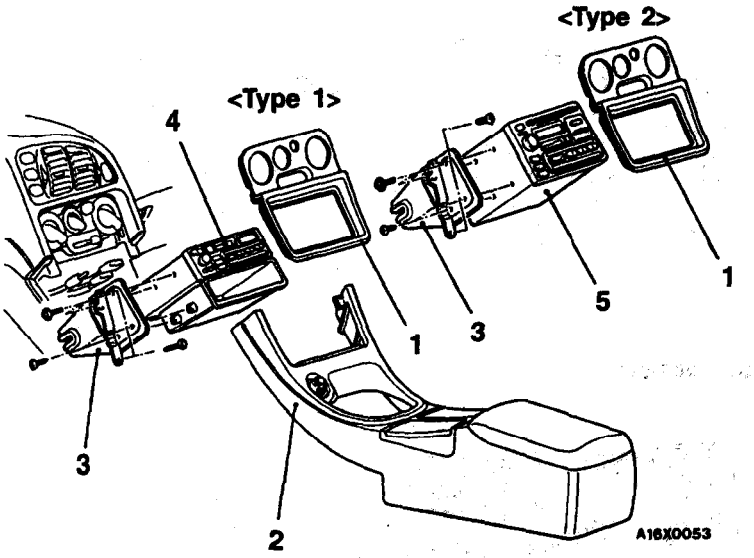

Removal steps

1. Center panel
2. Floor console assembly
3. Radio bracket
4. Radio or radio with tape player <Type 1>
5. Radio with CD/tape player <Type 2>

AMPLIFIER

54400410029

REMOVAL AND INSTALLATION

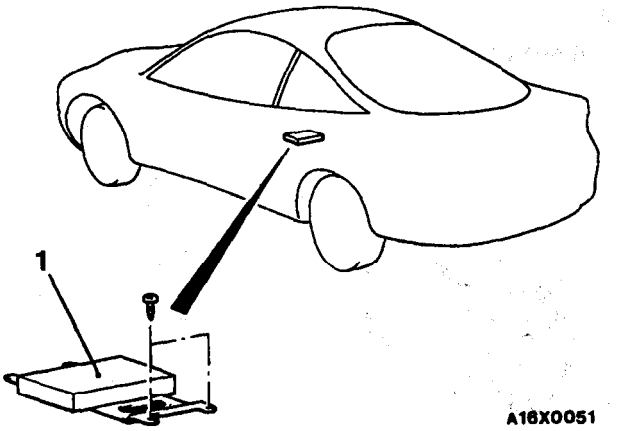

Removal steps

- Front passenger's seat (Refer to GROUP 52A – Front Seat)

1. Amplifier

TSB Revision

SPEAKER

54400260198

REMOVAL AND INSTALLATION

<Front speaker>

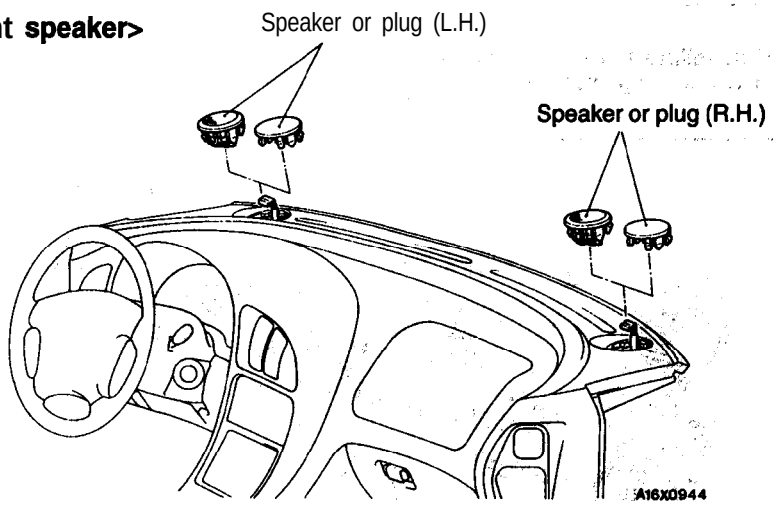

<Door speaker>

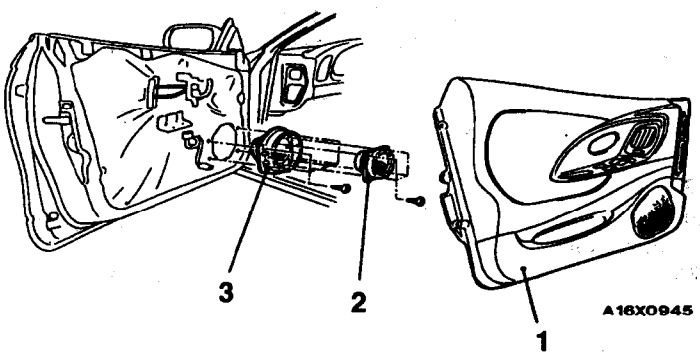

Removal steps

1. Door trim (Refer to GROUP 42 – Door Trim and Waterproof Film)
2. Speaker
3. Speaker bracket

<Rear speaker-ECLIPSE>

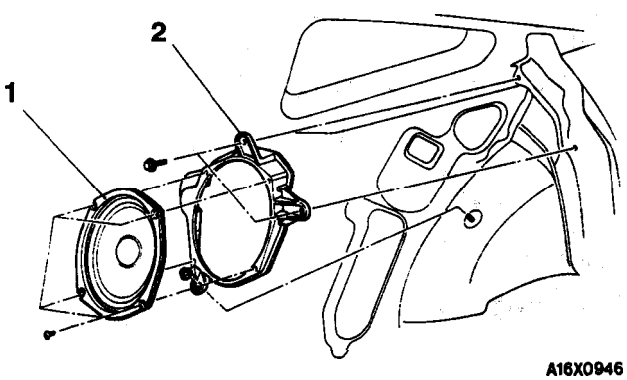

Removal steps

- Quarter trim (Refer to GROUP 52A – Trims)

1. Speaker
2. Speaker bracket

TSB Revision

<Rear speaker-ECLIPSE SPYDER>

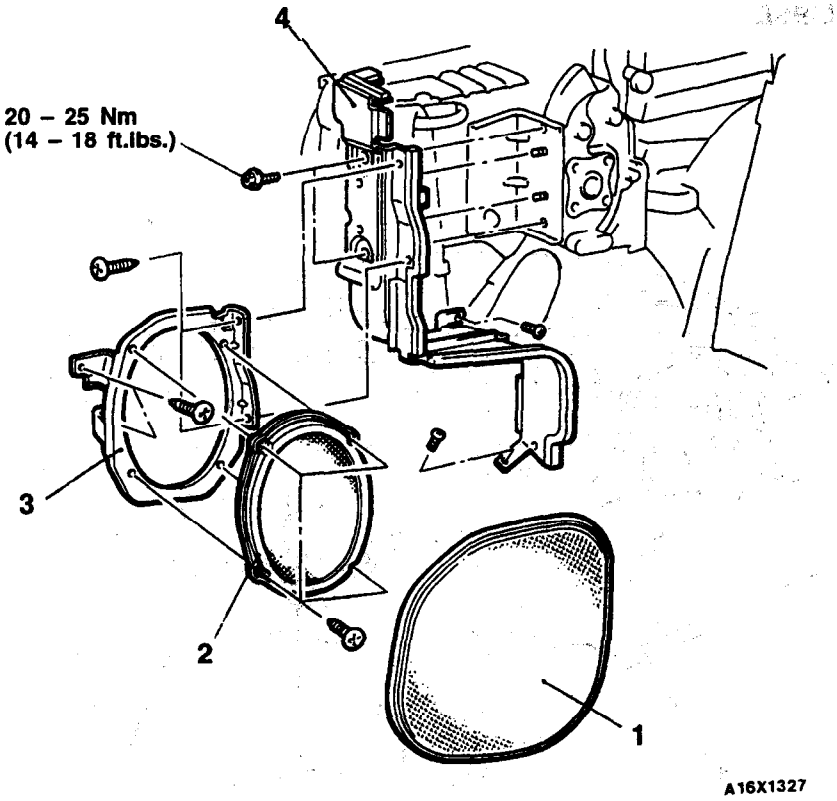

Removal steps

1. Speaker garnish
2. Speaker
3. Rear speaker bracket A
- Quarter trim, lower (Refer to GROUP 52A – Trims.)
4. Rear speaker bracket B

ANTENNA

54400290135

REMOVAL AND INSTALLATION

<Whip Antenna-ECLIPSE>

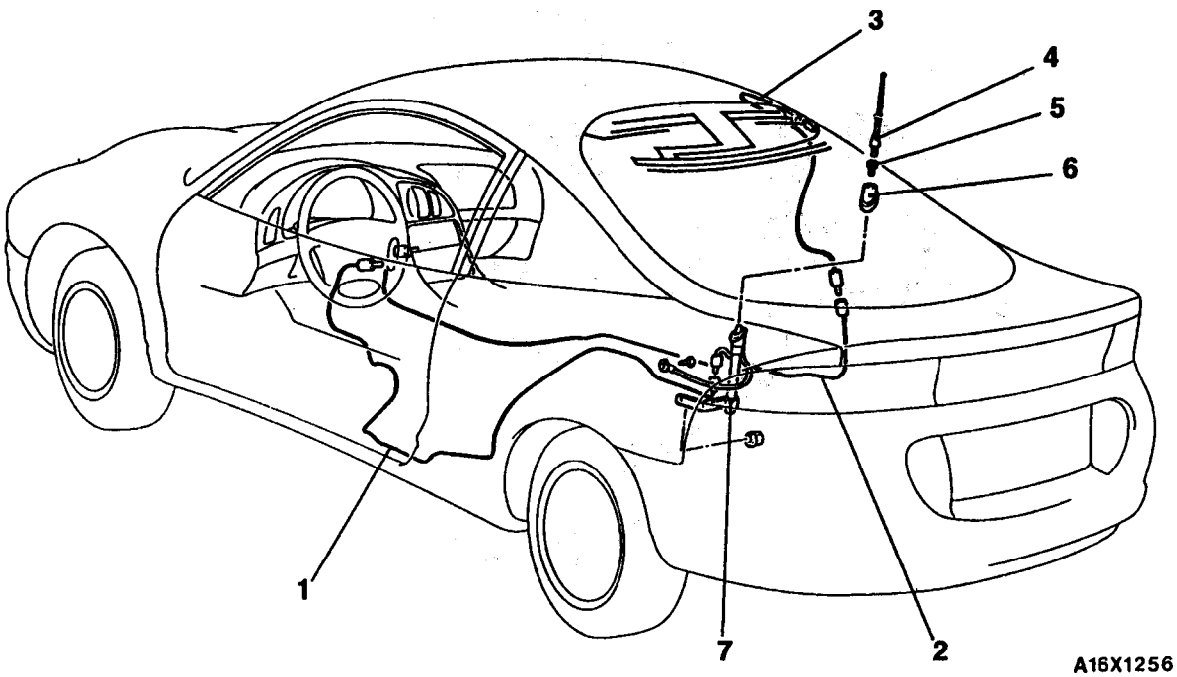

Antenna feeder cable (for motor antenna side) removal steps

- Front seat (driver's side) (Refer to GROUP 52A – Front Seat.)
- Rear seat cushion and seatback (L.H.) (Refer to GROUP 52A – Rear Seat.)
- Radio, tape player and CD player (Refer to P.54-85.)
- Rear speaker (L.H.) (Refer to P.54-86.)
- Rear side trim (L.H.) and cowl side trim (L.H.) (Refer to GROUP 52A – Trims.)

1. Antenna feeder cable

Antenna feeder cable A (for glass antenna side) removal steps

- Front seat (passenger's side) (Refer to GROUP 52A – Front Seat.)
- Rear seat cushion and seatback (R.H.) (Refer to GROUP 52A – Rear Seat.)
- Quarter trim lower (R.H.) and cowl side trim (R.H.) (Refer to GROUP 52A – Trims.)

2. Antenna feeder cable A

◀A▶

Antenna feeder cable B (for glass antenna side) removal steps

- Rear seat cushion and seatback (R.H.) (Refer to GROUP 52A – Rear Seat.)
- Quarter trim (R.H.), liftgate side trim (R.H.) and upper trim (Refer to GROUP 52A – Trims.)

3. Antenna feeder cable B

Whip antenna removal steps

- Rear side trim (L.H.) (Refer to GROUP 52A – Trims.)

4. Antenna whip
5. Mounting nut
8. Base
7. Whip antenna body

TSB Revision

<Motor Antenna-ECLIPSE>

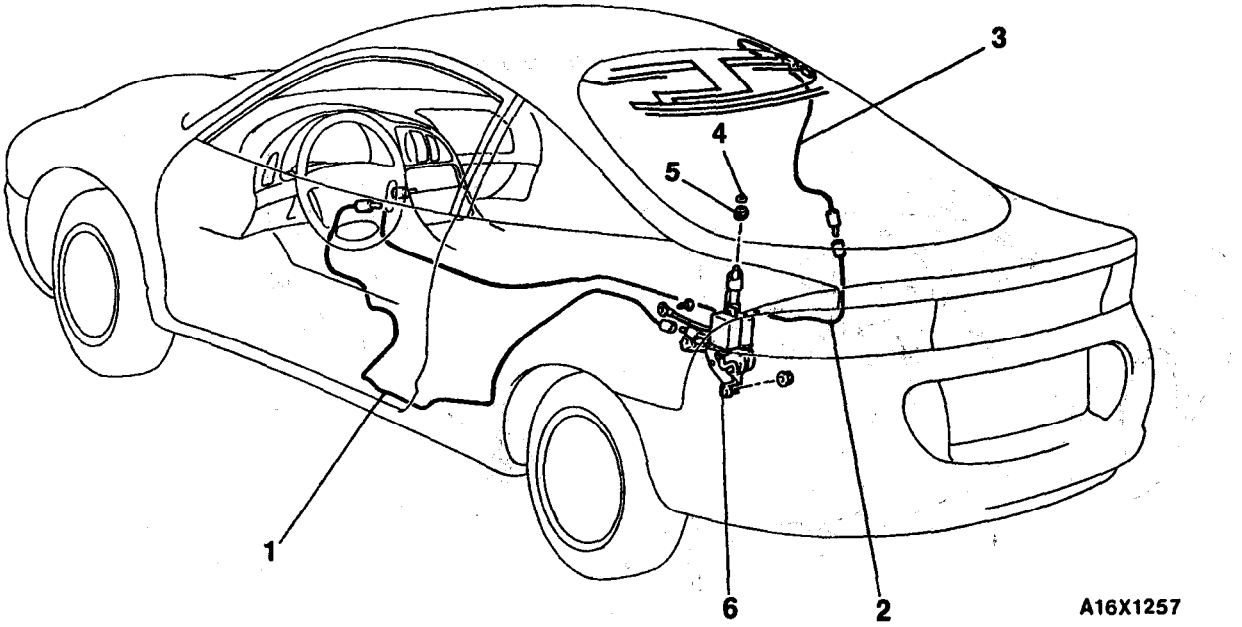

Antenna feeder cable (for motor antenna side) removal steps

- Front seat (driver's side) (Refer to GROUP 52A – Front Seat.)
- Rear seat cushion and seatback (L.H.) (Refer to GROUP 52A – Rear Seat.)
- Radio, tape player and CD player (Refer to P.54-85.)
- Rear speaker (L.H.) (Refer to P.54-86.)
- Rear side trim (L.H.) and cowl side trim (L.H.) (Refer to GROUP 52A – Trims.)

1. Antenna feeder cable

Antenna feeder cable A (for glass antenna side) removal steps

- Front seat (passenger's side) (Refer to GROUP 52A – Front Seat.)
- Rear seat cushion and seatback (R.H.) (Refer to GROUP 52A – Rear Seat.)
- Quarter trim lower (R.H.) and cowl side trim (R.H.) (Refer to GROUP 52A – Trims.)

2. Antenna feeder cable A

◀A▶

Antenna feeder cable B (for glass antenna side) removal steps

- Rear seat cushion and seatback (R.H.) (Refer to GROUP 52A – Rear Seat.)
- Quatter trim (R.H.), liftgate side trim (R.H.) and upper trim (Refer to GROUP 52A – Trims.)

3. Antenna feeder cable B

Whip antenna removal steps

- Rear side trim (L.H.) (Refer to GROUP 52A – Trims.)

4. Ring nut
5. Base
8. Motor antenna

TSB Revision

<ECLIPSE SPYDER>

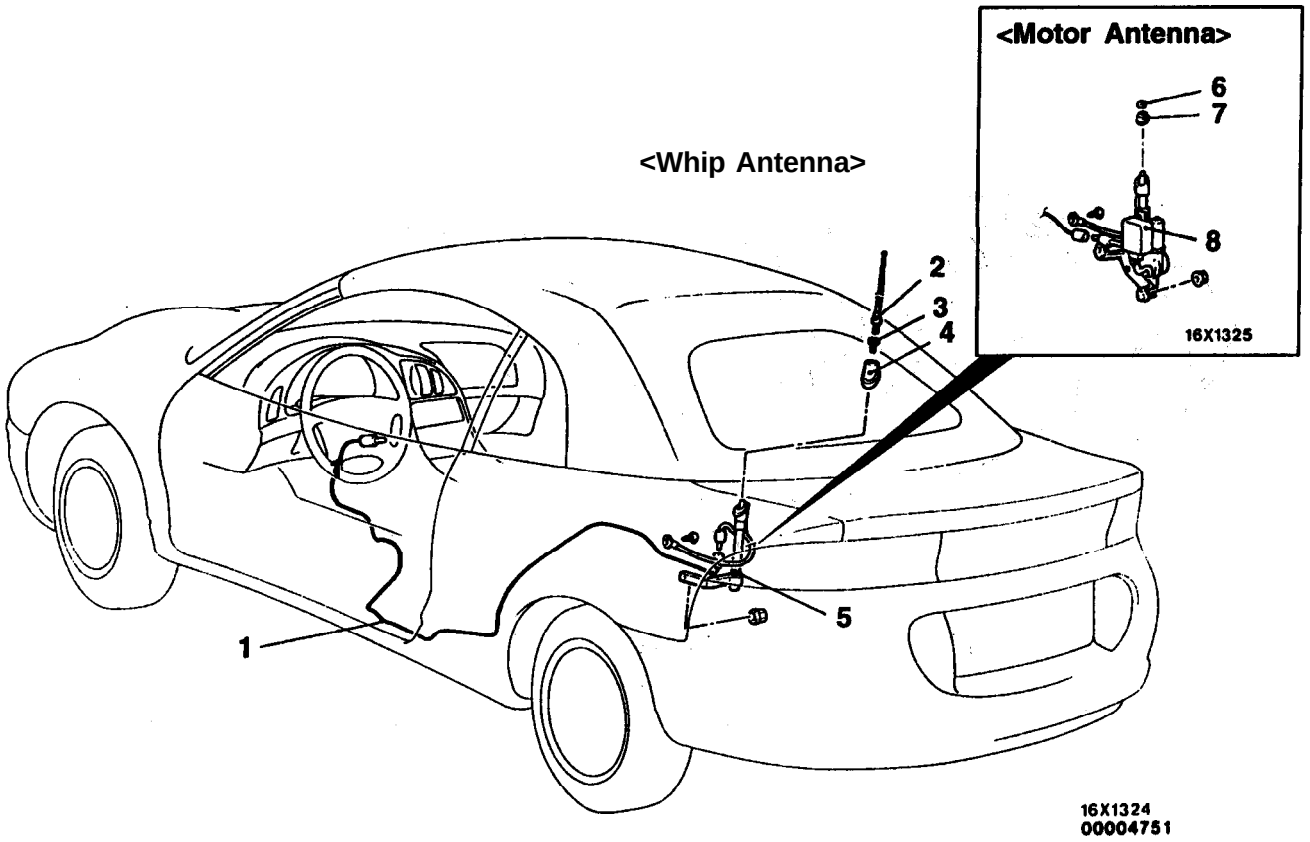

Antenna feeder cable removal steps

- Front seat (Driver's side) (Refer to the '98 ECLIPSE GROUP 52A – Front Seat.)
- Rear seat cushion and seatback (Refer to GROUP 52A – Rear Seat.)
- Radio, tape player and CD player (Refer to P.54-85.)
- Scuff plate (L.H.), quarter trim (L.H.) and luggage compartment side trim (L.H.) (Refer to GROUP 52A -Trims.)

Antenna feeder cable

Whip antenna. removal steps

- Luggage compartment side trim (L.H.) (Refer to GROUP 52A – Trims.)

2. Antenna whip
3. Mounting nut
4. Base
5. Whip antenna body

Motor antenna removal steps

- Luggage compartment side trim (L.H.) (Refer to GROUP 52A – Trims.)

6. Ring nut
7. Base
8. Motor 'antenna

TSB Revision

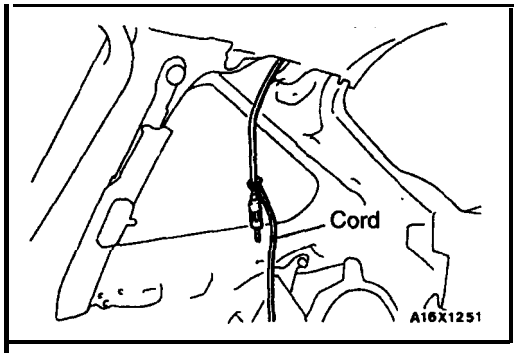

REMOVAL SERVICE POINTS

◀A▶ ANTENNA FEEDER CABLE B REMOVAL

(1) Tie a cord to the end of the antenna feeder cable.

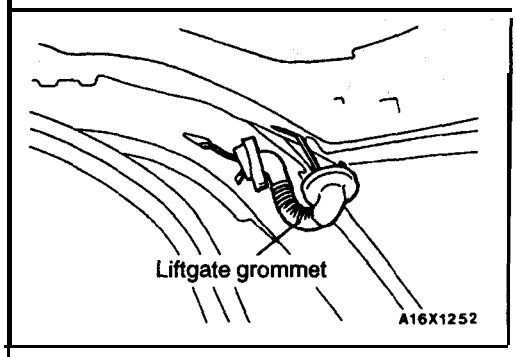

(2) Remove the liftgate grommet.
(3) Pull out the antenna feeder cable little by little to remove it.

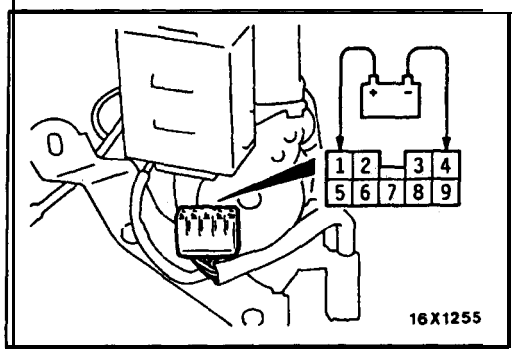

INSPECTION

54400300029

ANTENNA MOTOR CHECK

Remove the motor antenna control unit connector and check if the antenna goes up when the battery (+) side is connected to terminal No.1, and the battery (–) side to terminal No.4, and check if it goes down when the connections are reversed.

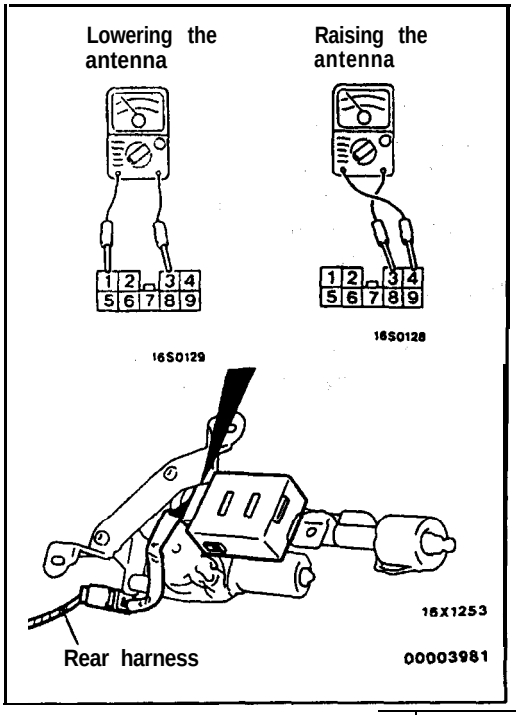

MOTOR ANTENNA CONTROL UNIT CHECK

(1) Connect the antenna to the harness connector (Rear harness).
(2) With the ignition switch turned to ACC or ON, operate the radio switch and check the voltage between the terminals while the antenna is moving up and down.

Antenna Operation Direction	Measurement Terminals	Voltage (V)
While moving down	1–3	10–13
While moving up	3–4	10–13

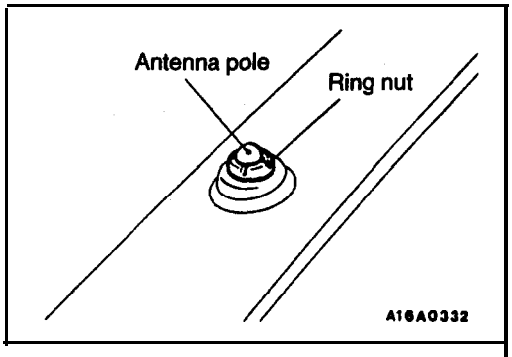

ANTENNA POLE, REPLACEMENT 54400090056

(1) Remove the ring nut.

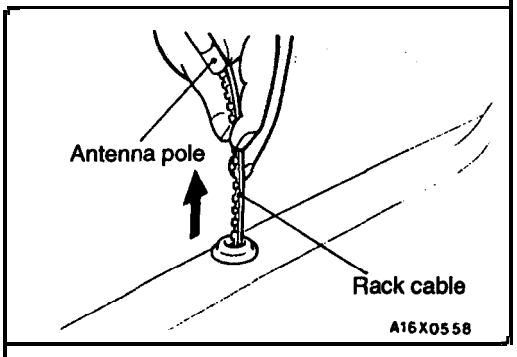

(2) After turning the ignition switch to ACC or ON, turn the radio switch to ON to raise the antenna pole, and remove it, together with the rack cable.

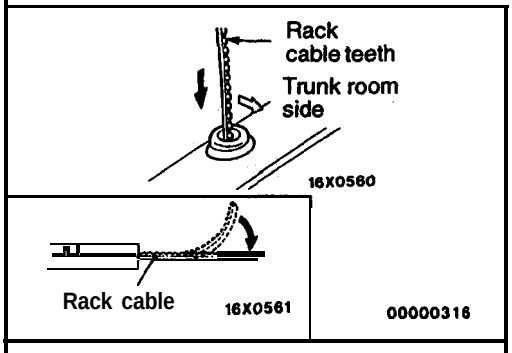

(3) Draw out the antenna pole to the maximum extension..

N O T E
If there is a bend in the motor end of the rack cable, remove the bend.

(4) Insert the rack cable into the motor assembly with the rack. cable teeth facing the luggage compartment room side.

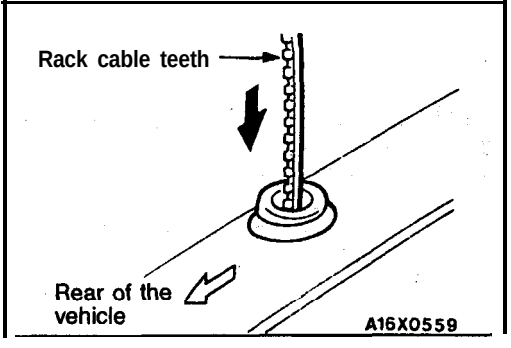

(5) Turn the rack cable teeth towards the rear of the vehicle (right 90°) so that the rack cable meshes with the motor gear.

(6) If the rack cable pulls out with no resistance when it is, lightly pulled, then the cable is not meshed with the motor gear, so check that there are no bends in the end of the rack cable, and then repeat steps (4) and (5) above.

(7) Set the antenna pole vertically and turn the radio switch OFF to wind up the rack, cable. Insert the antenna to the motor antenna side to align it with the wound-up rack cable.

(8) After tightening the ring nut, check the movement of the antenna by turning the radio switch ON and OFF.

REAR WINDOW DEFOGGER

54300010103

GENERAL INFORMATION

OPERATION

- If the defogger switch is turned to "ON" when the ignition switch at the "ON" position, the timer circuit in the ETACS-ECU will be operated keep the transistor "on" for 11 minutes to close the contact point of the defogger relay. When the defogger relay is "on", the defogger will be activated. Moreover, the indicator light of the defogger switch is lit to inform that the defogger is activated.
- When 11 minutes have passed, the defogger will stop activating even if the defogger switch is at "ON".
  When the defogger is. activated (the timer is activated), they will also stop-activating even if the defogger switch is set at "ON" again.

SPECIAL TOOLS

54300060139

Tool	Tool number and name	Supersession	Application
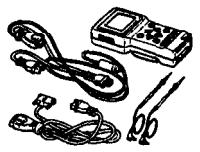	MB991502 Scan tool (MUT-II)	MB991502	ETACS-ECU input signal checking
	ROM pack		
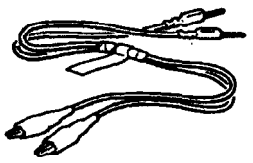	MB991529 Diagnostic trouble code check harness	Tool not necessary if scan tool <MUT-II> is available	ETACS-ECU input signal checking (when using a voltmeter)

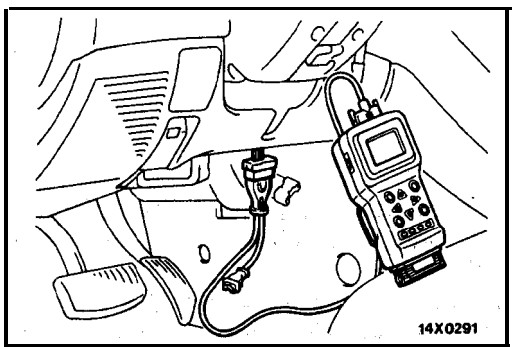

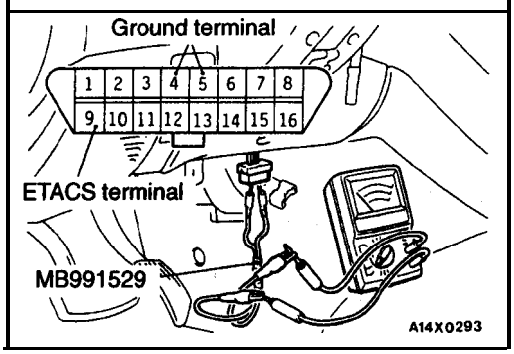

TROUBLESHOOTING

54300700062

DIAGNOSTIC FUNCTION

INPUT SIGNAL INSPECTION POINTS

When Using the Scan Tool

1. Connect- the scan tool to the data link connector.

   Caution
   Always turn the ignition switch off when connecting and disconnecting the scan tool.

2. If buzzer of the scan tool sounds once when a' switch is operated (ON/OFF), the ECU input signal for that switch circuit system is normal.

When Using a Voltmeter

1. Use the special tool to connect a vot meter between the ground terminal and the ETACS terminal of data link connector.
2. If the "voltmeter indicator deflects once when a switch is operated (ON/OFF), the ECU input signal for that switch circuit system is normal.

INSPECTION CHART FOR TROUBLE SYMPTOMS

54300720129

Trouble symptom		Inspection procedure No.	Reference page
Communication with scan tool is not possible.	Communication with all systems is not possible.	1	54-95
	Communication with one-shot pulse input signal only is not possible.	2	54-95
Even if defogger switch is ON, defogger does not operate.		3	54-96

INSPECTION PROCEDURE FOR TROUBLE SYMPTOMS

INSPECTION PROCEDURE 1

Communication with scan tool is not possible. (Communication with all systems is not possible.)	Probable cause
[Comment] The cause is probably a defect in the power supply system (including ground) for the diagnostic line.	• Malfunction of connector • Malfunction of harness wire

- Refer to GROUP 13A – Troubleshooting <2.0L Engine (Turbo) and 2.4L Engine>.
- Refer to GROUP 13A – Troubleshooting <2.0L Engine (Non-turbo)>.

INSPECTION PROCEDURE 2

Communication with scan tool is not possible. (Communication with one-shot pulse input signal only is not possible.)	Probable cause
[Comment] The cause is probably a defective one-shot pulse input signal circuit system of the diagnostic line.	• Malfunction of connector • Malfunction of harness . Malfunction of ECU

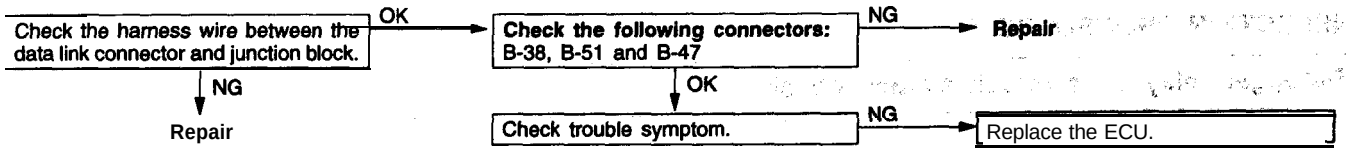

INSPECTION PROCEDURE 3

Even if defogger switch is ON, defogger does not operate.	Probable cause
[Comment] The cause is probably a defective defogger switch circuit system or a defective defogger relay drive circuit system. In addition, if there is a defective fuse, the cause might also be a harness short	• Malfunction of fuse • Malfunction of defogger switch • Malfunction of defogger relay • Malfunction of connector • Malfunction of harness wire . Malfunction of ECU

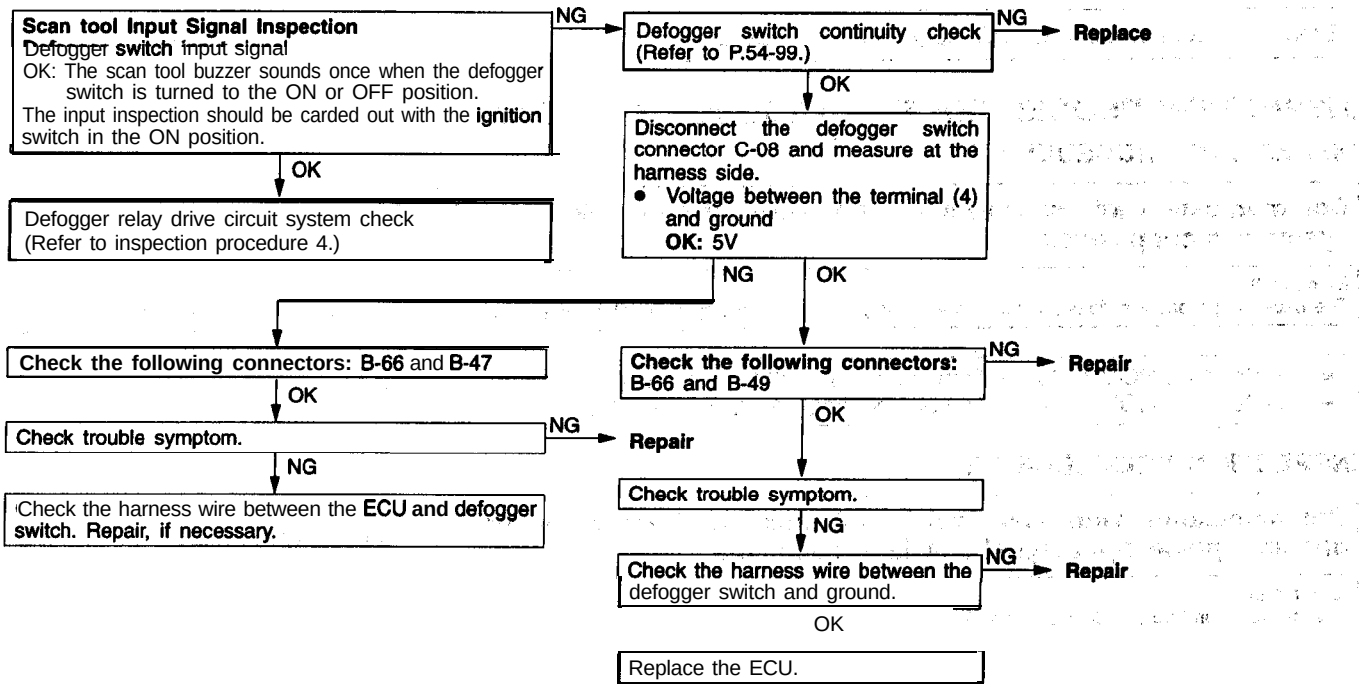

INSPECTION PROCEDURE 4

Defogger relay drive circuit system check

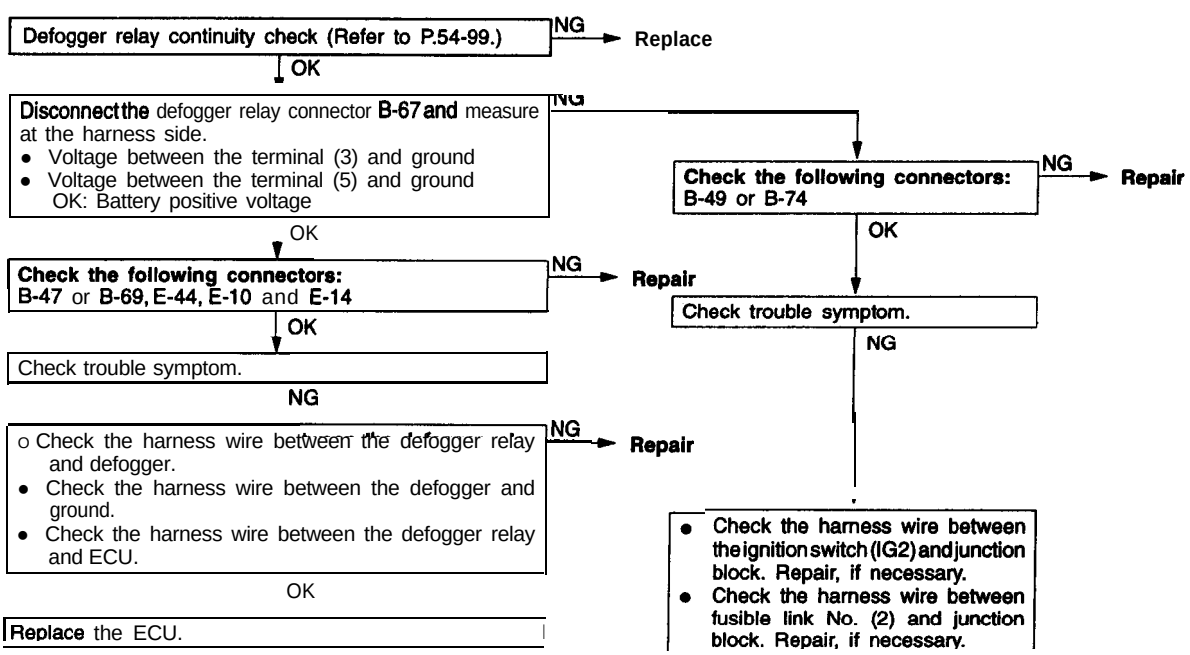

TSB Revision

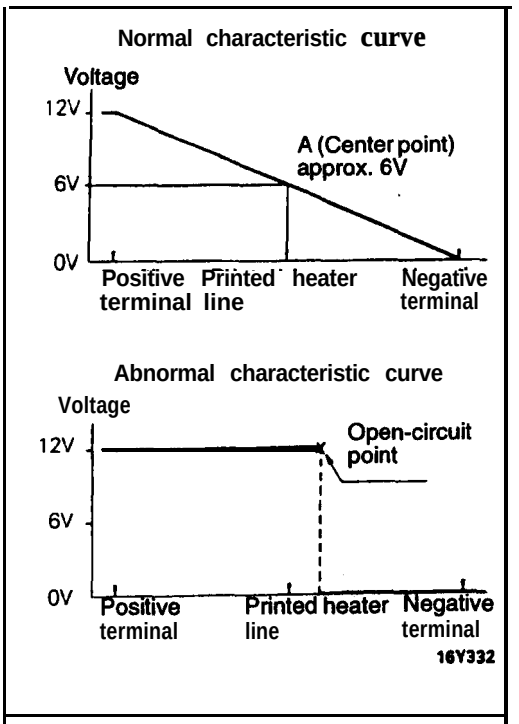

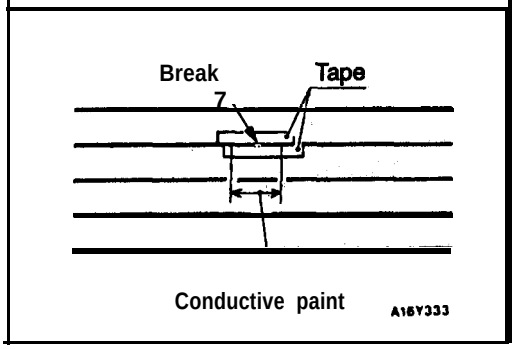

ON-VEHICLE SERVICE 54300190057

PRINTED-HEATER LINE CHECK

(1) Run engine at 2,000 r/min. Check heater element with battery at full.
(2) Turn ON rear window defogger switch. Measure heater element voltage with voltmeter at rear window glass center A.
Condition good if indicating about 6V.
(3) If battery positive voltage is indicated at A, there is a break in the negative terminals from A.
Move test bar slowly to negative terminal to detect where voltage changes suddenly (0V).
(4) If OV is indicated at A, there is a break in the positive terminals from A. Detect where the voltage changes suddenly (battery positive voltage) with the same method described.

PRINTED-HEATER LINE REPAIR 54300190036

REQUIRED MATERIALS

- Thinner
- Lead-free gasoline
- Tape
- Fine brush
- Conductive paint

(1) Clean disconnected area with lead-free gasoline. Tape along both sides: of heater element.
(2) Mix conductive paint thoroughly. Thin the required amount of paint in a separate container with a small amount of thinner and paint break three times at 15 minutes intervals.
(3) Remove tape and leave for a while before use (circuit complete).
(4) Finish exterior with a knife after 24 hours (completely dry).

Caution
Clean glass with a soft cloth (dry or damp) along defogger heater element.

REAR WINDOW DEFOGGER SWITCH

54300620047

REMOVAL AND INSTALLATION

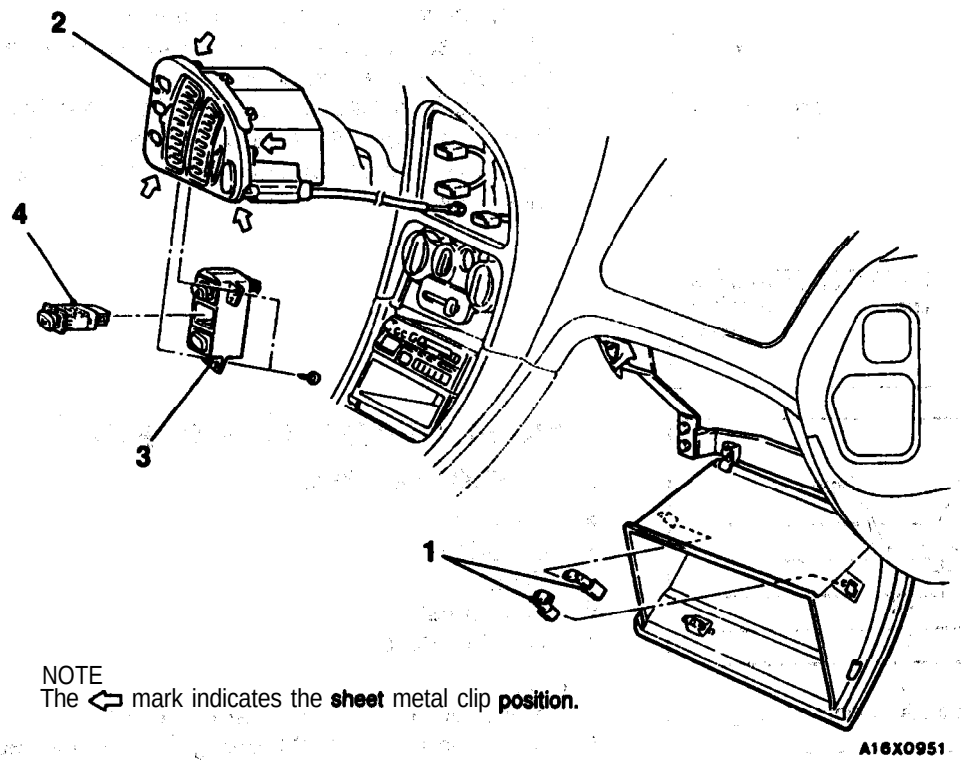

NOTE
The ⇦ mark indicates the sheet metal clip position.

Removal steps

1. Stopper
▶A◀ 2. Center air outlet assembly
3. Holder
4. Rear window defogger switch

TSB Revision

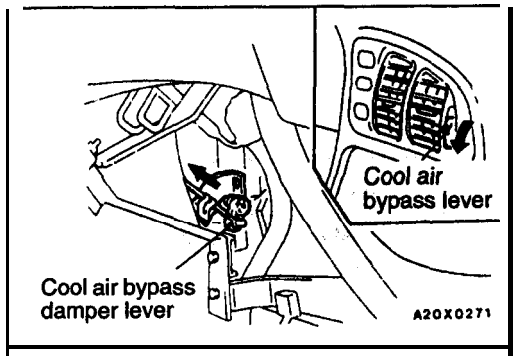

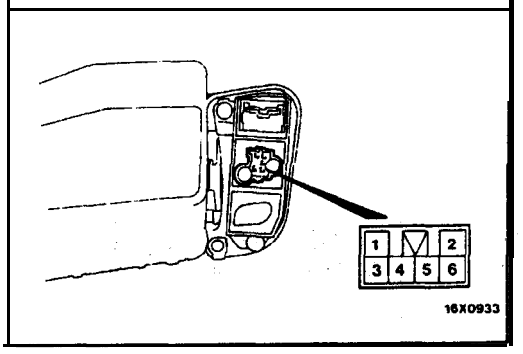

INSTALLATION SERVICE POINT

▶A◀ CENTER AIR OUTLET INSTALLATION

(1) Turn the cool air bypass lever of the center air outlet fully downward.
(2) Pull. the cool air' bypass damper lever on the heater unit side fully toward you; and then attach the cable to the pin of the lever.
(3) Push the outer cable in the direction of the. arrow so that there is no looseness, and then secure it with the clip.

INSPECTION

54300670042

DEFOGGER SWITCH CONTINUITY CHECK

Switch position	Terminal No. 1		3	4	2		6
OFF		IND				ILL	
ON		IND				ILL	

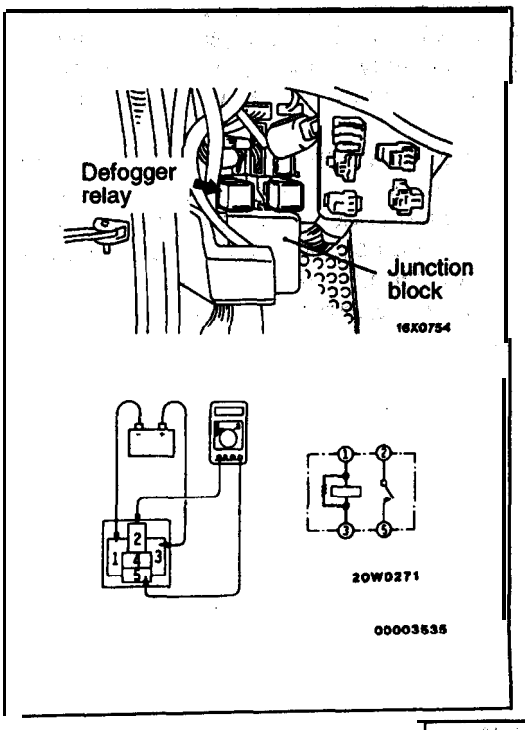

DEFOGGER RELAY CONTINUITY CHECK

54300680052

Battery voltage	Terminal No. 1	3	2	5
Power is not supplied				
Power is supplied	⊖	⊕		

THEFT-ALARM SYSTEM

54700060032

SPECIAL TOOLS

Tool	Toot number and name	Supersession	Application
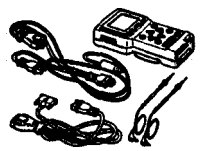	MB991 502 Scan tool (MUT-II)	MB991 502	ETACS-ECU input signal checking
	ROM pack		
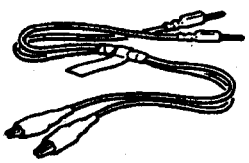	MB991 529 Diagnostic trouble code check harness	Tool not necessary if scan tool <MUT-II> is available	ETACS-ECU input signal checking (When using a voltmeter)

TROUBLESHOOTING

54700070028

TROUBLESHOOTING GUIDE

1. Get a full understanding of the trouble symptoms by check the theft-alarm system, and then carry out troubleshooting.
2. The signals input to the ETACS-ECU from the switches which are related to the following systems should be normal.
   - Central door locking system
   - Headlight system
   - Horn system
   - Starting system

   In addition, the signals input to the ETACS-ECU from the following switches should be normal.
   - Hood switch
   - Liftgate switch
   - Liftgate key cylinder switch

   NOTE

   (1) The ECU may not accept the alarm canceling signal under the following conditions.
   - If the liftgate key cylinder switch or door lock key cylinder switch is operated roughly
   - If these switches have been installed incorrectly or switches themselves are defective

   In such case, the alarm will work when the door is opened using a key.
   [However, when the door key cylinder switch has been shorted with the ignition' switch ON, the ECU judges the detection. switch as faulty. Since then, it will prevent setting of alarm until the shorting is corrected.]

   (2) If the liftgate is opened using, a. key and is left opened when the door key cylinder switch system has a trouble (wiring harness damage, open circuit, etc.), the ECU judges it as the liftgate holding mode and does not produce alarm even when the door is opened.

SYSTEM OPERATION CHECKING

The activation/operation of the system can" be checked by following the steps below.

(1) Turn the ignition key to the ON position and then use the power-window switch to fully open the window on the driver's 'side.
(2) Turn the ignition key to the LOCK position and then remove the key from the ignition.
(3) Open only the driver's door, and close all the other doors, including the hood and the liftgate.
(4) Lock the drivers' ddor with the key or the keyless-locking method.
(5) All doors will then be locked, and the SECURITY light (within the combination meter) will illuminate; Check that illumination stops in about 20 seconds.
(6) After about two seconds have passed after the SECURITY light switched off, reach through the window of the driver's door, pull, up the lock lever to unlock the door, and then open the door.
(7) Check that, when the door is opened, the horn starts sounding and the headlights flash on and off,
(6) To stop the alarm, insert the key into the door's key cylinder and turn the key.

NOTE
To check the alarm for the liftgate or hood, pull the remote, release lever before the alarm is activated by the opening of a door or after the first three-minute alarm.

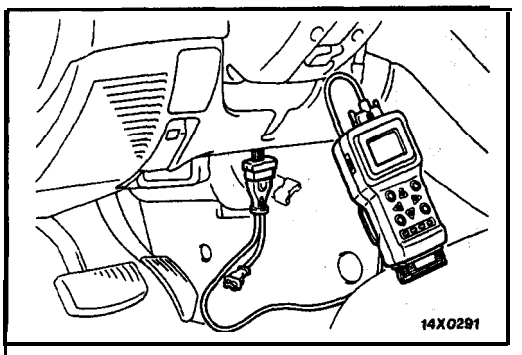

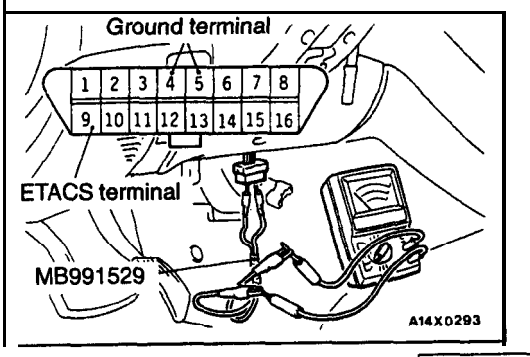

DIAGNOSTIC FUNCTION

54700130023:

INPUT SIGNAL INSPECTION POINTS

When Using the Scan Tool

1. Connect the scan tool to the data link connector.

   Caution
   Always turn off the ignition switch when connecting and disconnecting the scan tool.

2. If buzz& of the' scan" tool Sounds once when a switch is operated (ON/OFF), the ECU input signal for that switch circuit system is normal.

When Using a Voltmeter

1. Use the special tool to connect a-voltmeter between the' ground terminal and the ETACS terminal of data link connector.
2. If the voltmeter indicator deflects once when a switch is operated (ON/OFF), the ECU input signal for that switch circuit system is normal.

INSPECTION CHART FOR TROUBLE SYMPTOMS

54700150029

Trouble symptom		Inspection procedure No.	Reference page
Communication with scan tool is not possible.	Communication with all systems is not possible.	1	54-103
	Communication with one-shot pulse input signal only is not possible.	2	54-103
Arming/disarming relationship	The system is not armed (The SECURITY indicator doesn't illuminate, and the alarm doesn't function.)	3	54-103
	The arming procedures are followed, but the SECURITY indicator does not illuminate. (There is an alarm, however, when an alarm test is conducted after about 20 seconds have passed.)	4	54-104
	The alarm sounds in error when, while the system is armed, a door or the liftgate is unlocked by using the key.	–	54-106
Activation/deactivation relationship	There is no alarm when, as an alarm test, a door is opened without using the key. (The arming and disarming are normal, and the alarm is activated when the liftgate or hood is opened.)	–	54-106
	There is no alarm when, as an alarm test, the liftgate is opened without using the key. (The alarm is activated, however, by opening a door or the hood.)	–	54-106
	There is no alarm when, as an alarm test, the hood is opened from within the vehicle. (The alarm is activated, however, by opening a door or the liftgate.)	–	54-106
	Engine would not start		54-106
	When, as a test of the alarm, a door or the liftgate is opened without using the key, or the hood is opened from within the vehicle, the horn and the theft-alarm horn sound but the headlights don't flash. (The headlights can, however, be switched ON by using the passing switch.)	5	54-104
	The headlights flash during an alarm test but the horn or the theft alarm horn does not sound.	6	54-105
	The system is not deactivated when, during an alarm test in which the alarm is intentionally activated, the door or liftgate is unlocked by using the key. (The system cannot be disarmed, either.)	–	54-106

INSPECTION PROCEDURE FOR TROUBLE SYMPTOMS

INSPECTION PROCEDURE 1

Communication with scan tool is not possible. (Communication with all systems is not possible.)	Probable cause
[Comment] The cause is probably a defect in the power supply system (including ground) for the diagnostic line.	• Malfunction of connector • Malfunction of harness wire

- Refer to GROUP 13A – Troubleshooting <2.0L Engine (Turbo) and 2.4L Engine>
- Refer to GROUP 13A – Troubleshooting <2.0L Engine (Non-turbo)>

INSPECTION PROCEDURE 2

Communication with scan tool is not possible. (Communication with one-shot pulse input signal only is not possible.)	Probable cause
[Comment] The cause is probably a defective one-shot pulse input signal circuit system of the diagnostic line.	• Malfunction of connector • Malfunction of harness • Malfunction of ECU

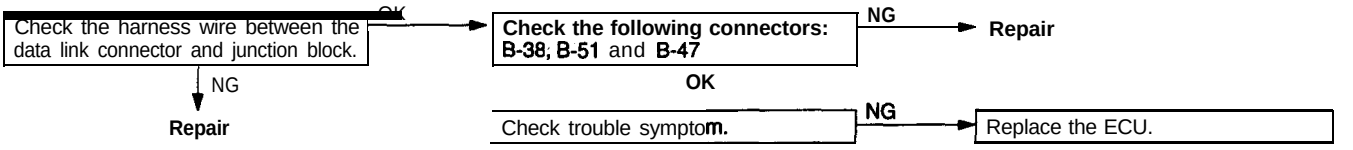

INSPECTION PROCEDURE 3

The systemn is not armed
(The SECURITY indicator doesn't illuminate, and the alarm doesn't function.)

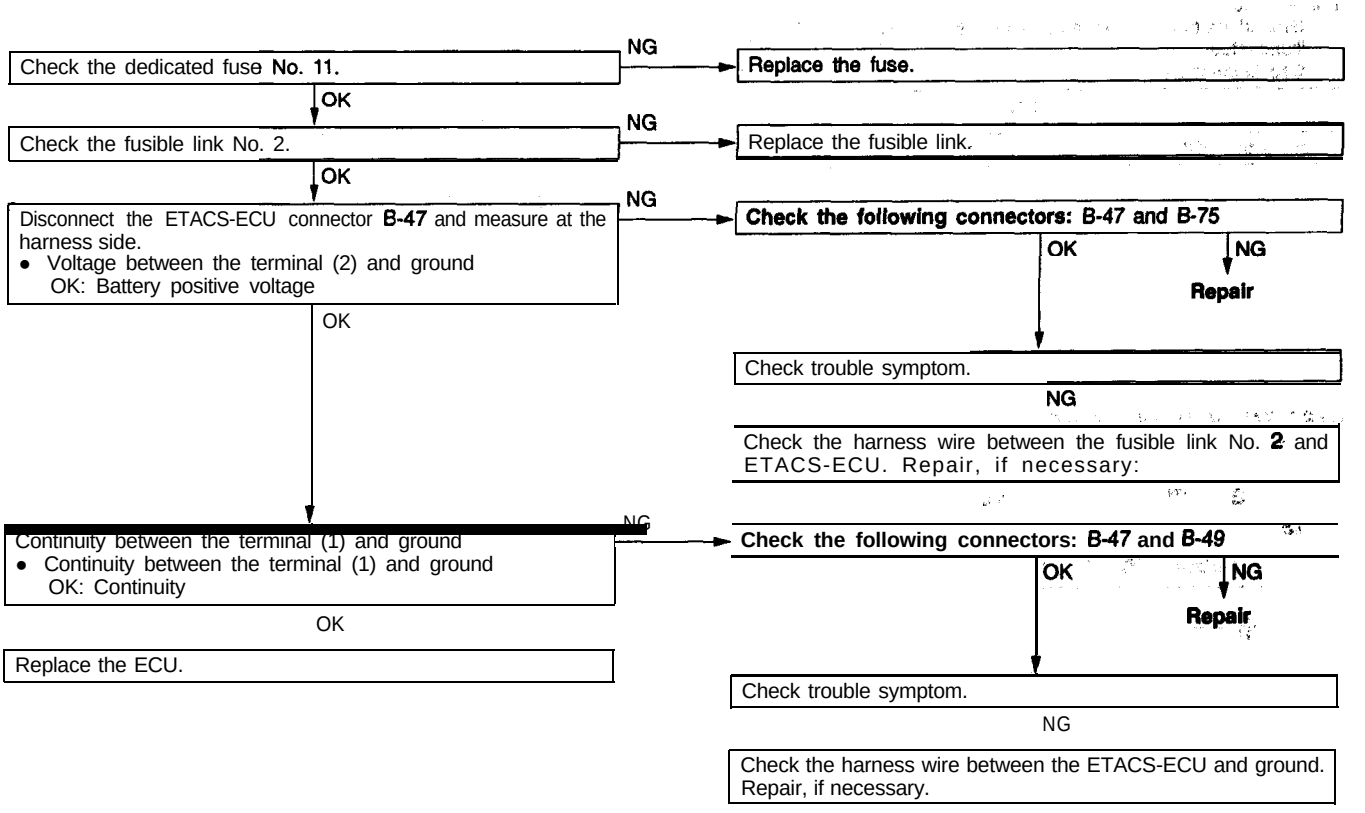

INSPECTION PROCEDURE 4

The arming procedures are follwed, but the SECURITY indicator does not illuminate.
(There is an alarm, however, when an alarm test is conducted after about 20 seconds have passed.)

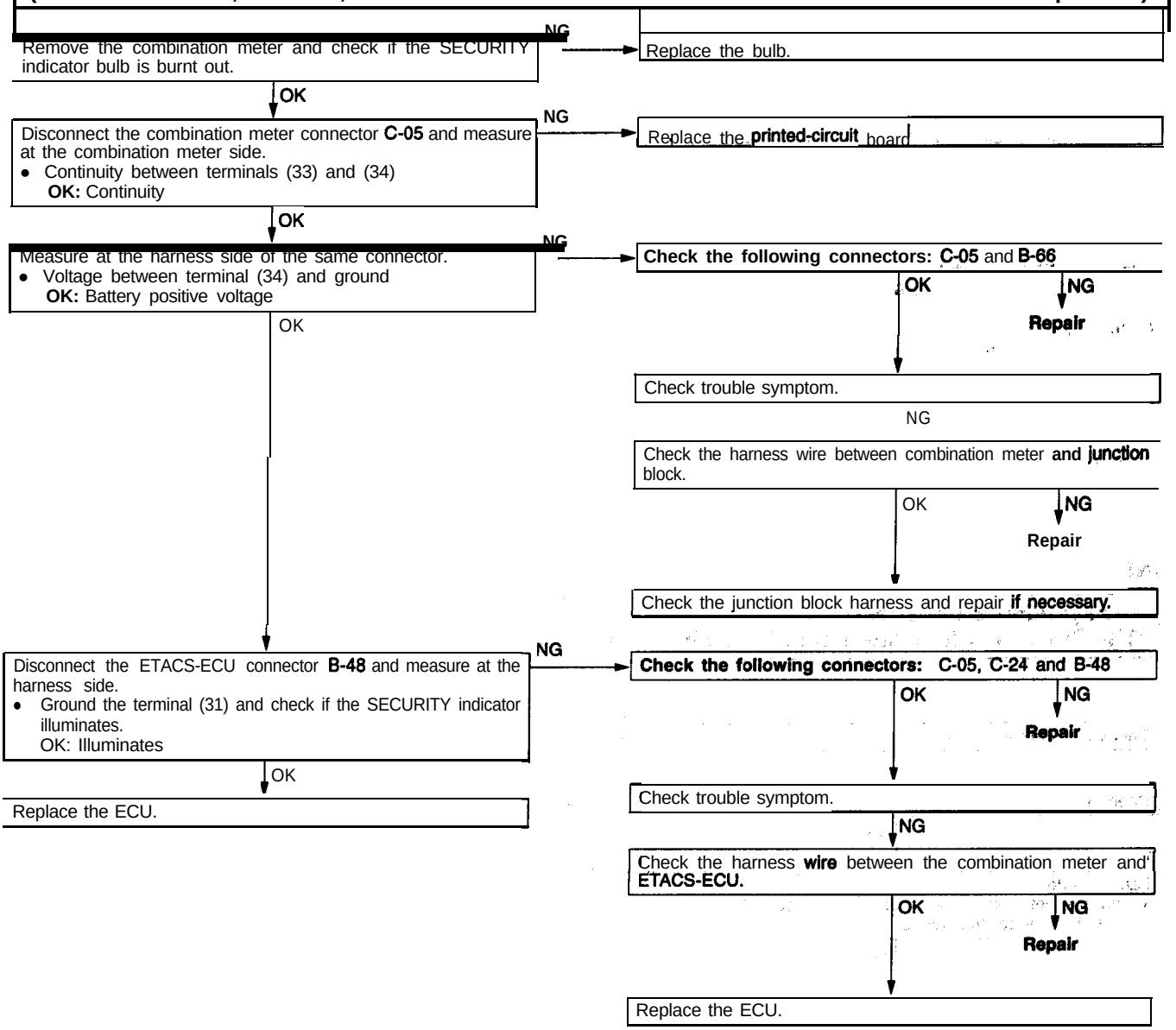

INSPECTION PROCEDURE 5

When, as a test of the alarm, a door or the liftgate is opened without using the key, or the hood is opened from within the vehicle, the horn and the theft-alarm horn sound but the headlights don't flash.
(The headliqhts can, however, be switch ON bv using the passing switch.)

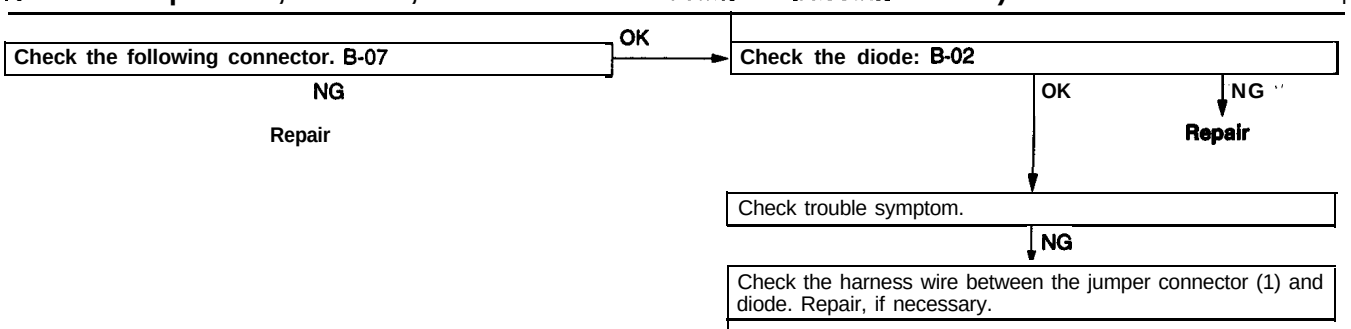

TSB Revision

INSPECTION PROCEDURE 6

The headilght flash during an alarm test but the horn or the theft alarm horn dose not sound. (If the horn switch is pressed, the horns will sound)

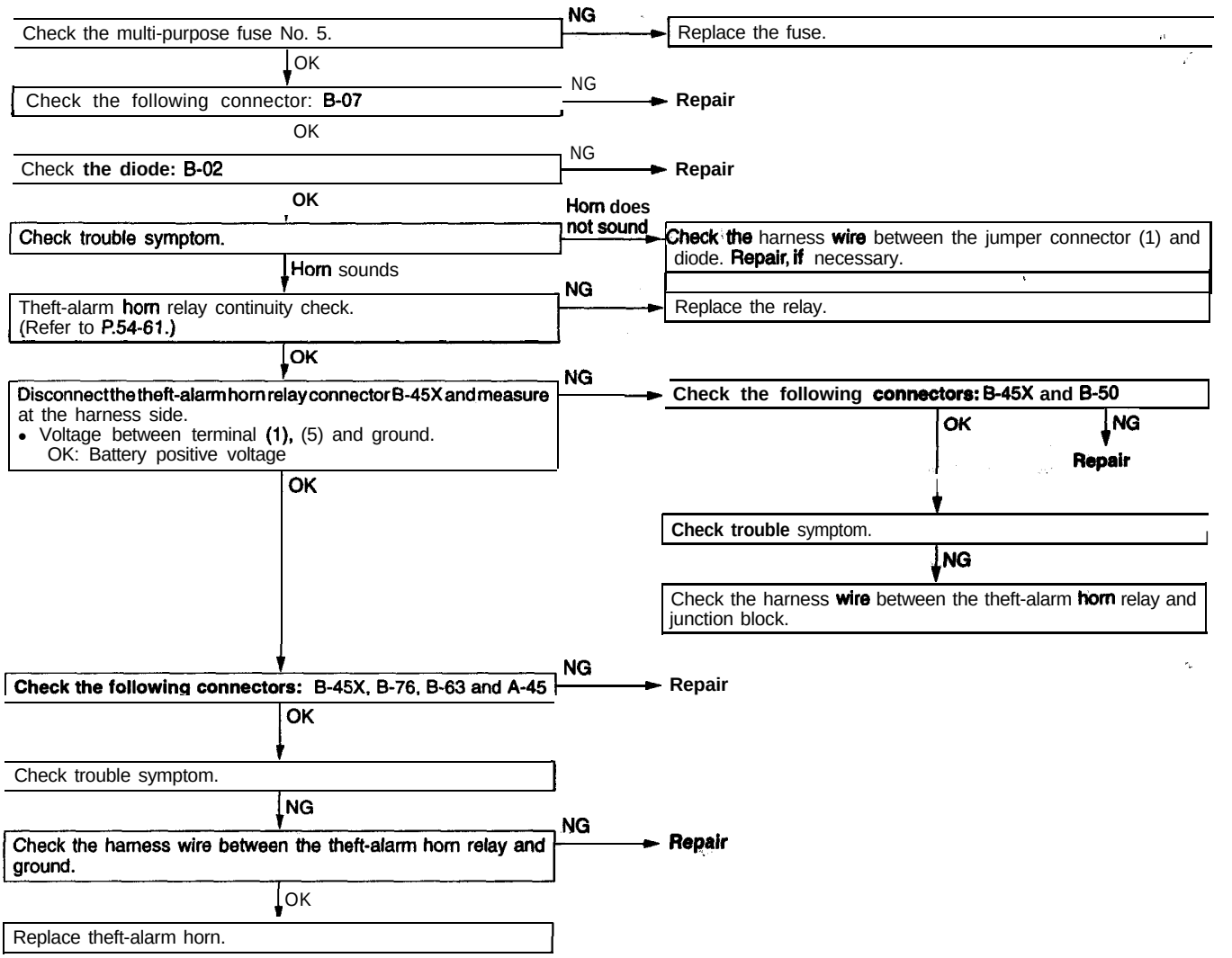

TSB Revision

MEASUREMENT AT ECU TERMINALS

16X0965

16X0966 00003598

Terminal No.	item	Check condition		Normal value
2	ECU power supply	At all times		Battery positive voltage
17	Key-reminder switch	Key removed		0 V
		Key inserted		5 V
22	Hood switch	Hood open		5 V
		Hood closed		0 V
13	Driver's door switch	Door open		o v
		Door closed		5 V
21	Passenger's door switch	Door open		ov
		Door closed		5 V
32	Door lock actuator switch (LH)	Inside lock knob or key	Lock	5 V
			Unlock	o v
34	Transmitter switch (Receiver output signal)	ON		o v
		OFF		5 V
25	Door lock actuator switch (RH)	Inside lock knob or key	Lock	5 V
			Unlock	o v
33	Door lock key cylinder switch (LH)	Lock		0 V
		Neutral		5 V
18		Unlock		0 V
		Neutral		5 V
19	Door lock key cylinder switch (RH)	Lock		o v
		Neutral		5 V
10		Unlock		o v
		Neutral		5 V
8	Liftgate switch	Liftgate open		o v
		Liftgate closed		5 V

NOTE
* Measurements other than that for the ECU power supply are impossible using a voltmeter, but are possible using an oscilloscope.

A

B

D

E

F

G

H

I

P

Q

R

S

T

U

V

W