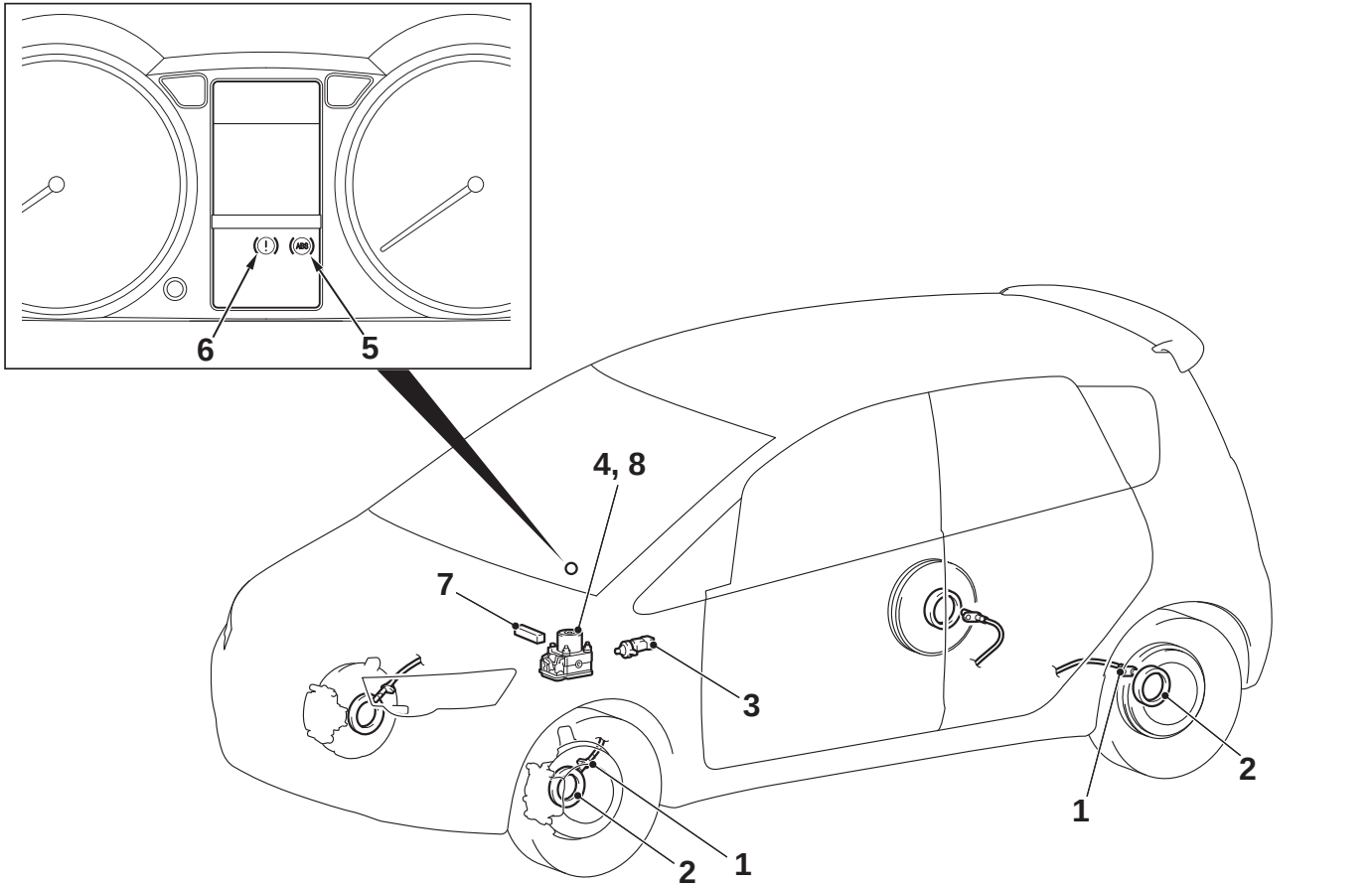
6
5
4, 8
7
3
2
1
1
2
AC805582AB