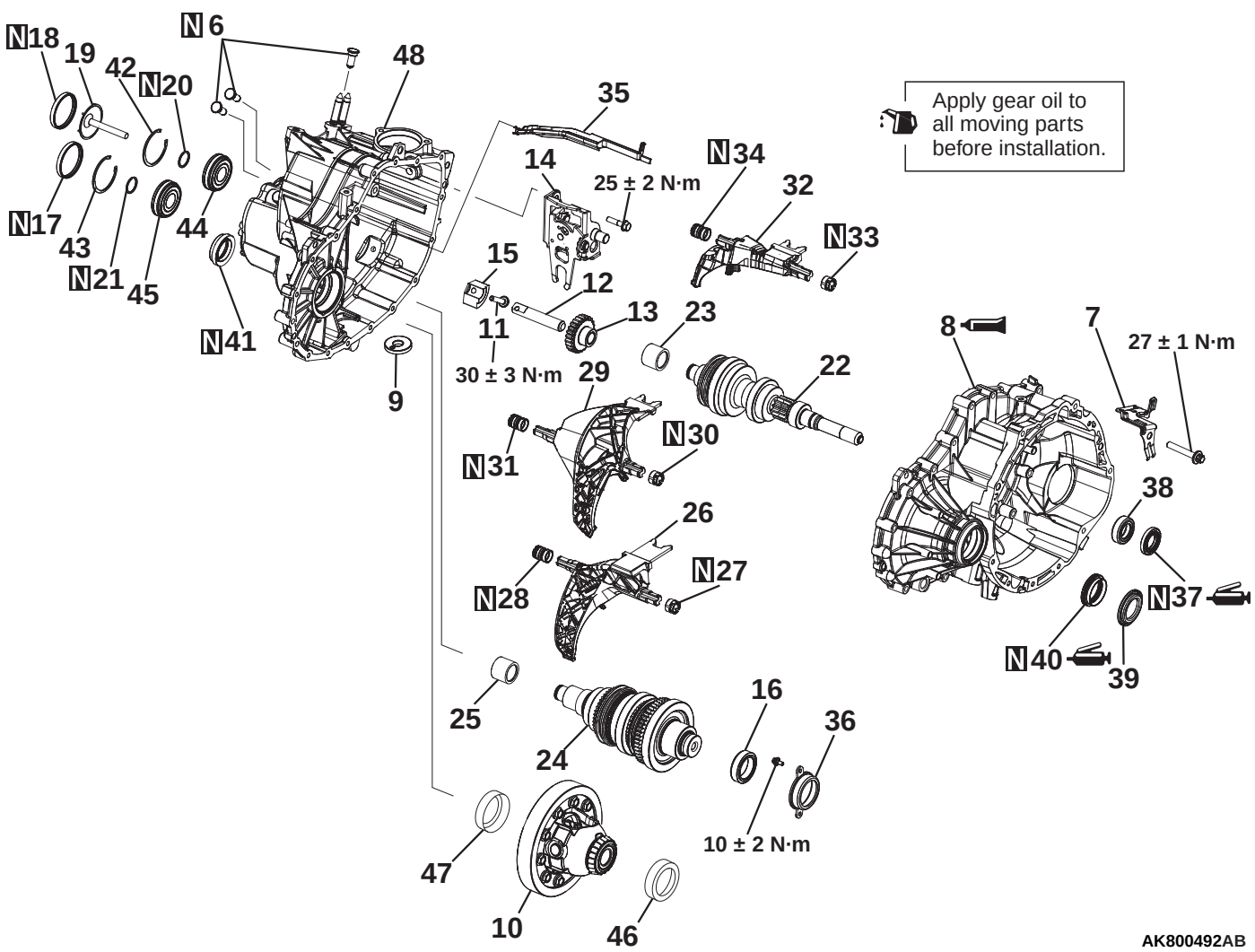
N18
19
42
N20
N6
48
35
14
25 ± 2 N·m
N34
32
N33
Apply gear oil to all moving parts before installation.
N17
43
N21
45
44
N41
15
11
30 ± 3 N·m
12
13
23
9
29
22
N31
N30
8
7
27 ± 1 N·m
38
26
N28
N27
N37
N40
39
25
24
16
36
10 ± 2 N·m
47
10
46
AK800492AB