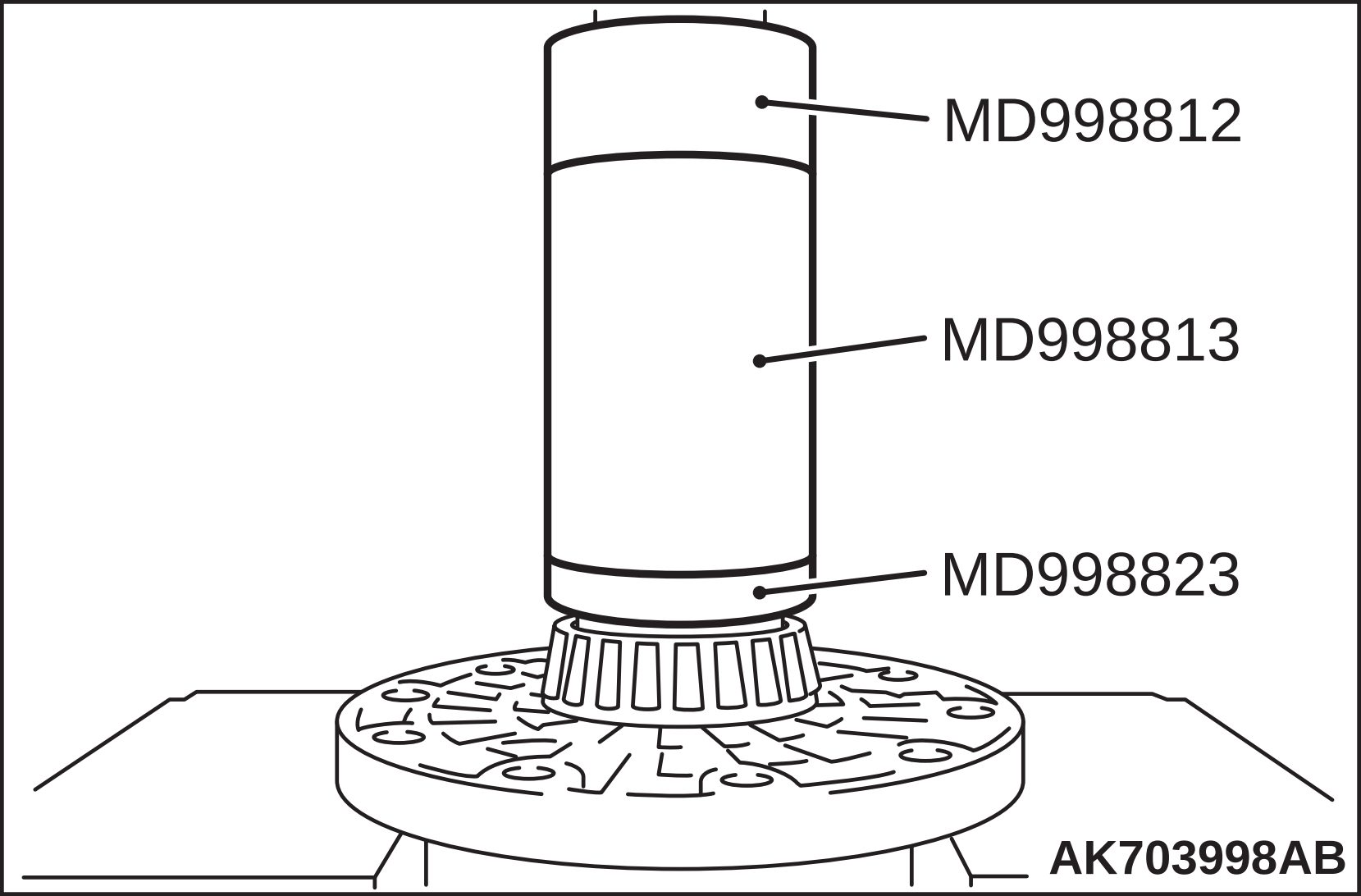
MD998812
MD998813
MD998823
AK703998AB