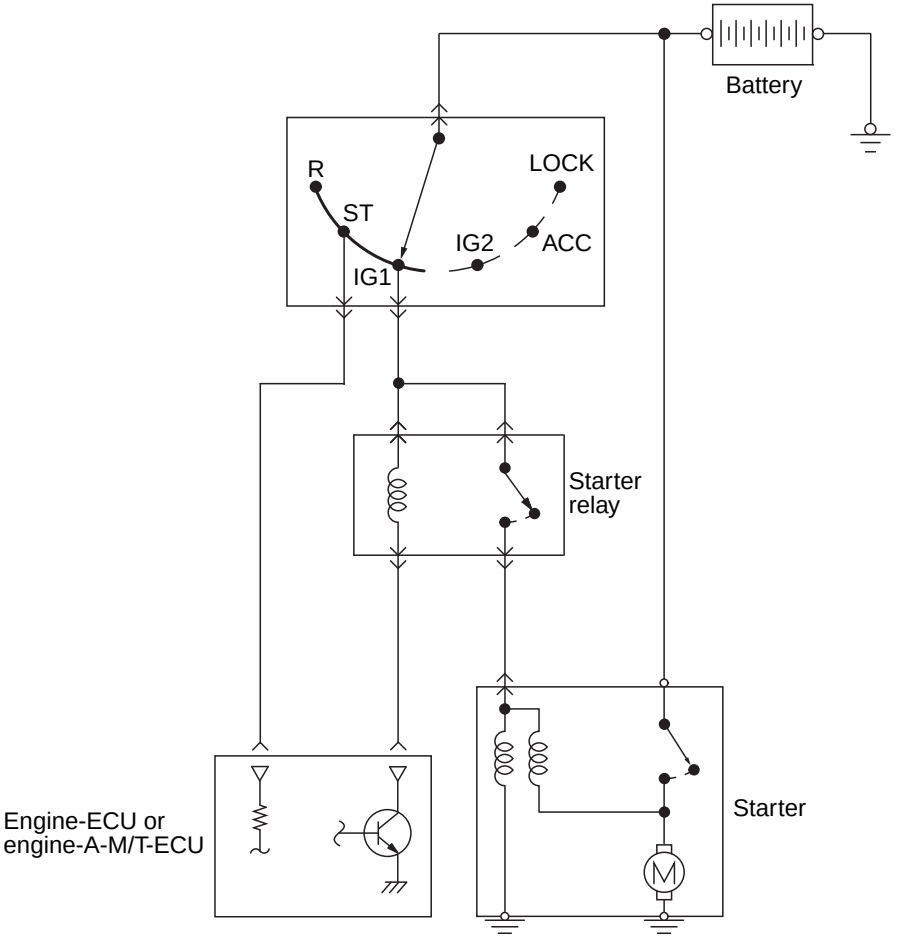
Battery
R
ST
IG1
IG2
LOCK
ACC
Starter
relay
Engine-ECU or
engine-A-M/T-ECU
Starter
M

AK305457 AB