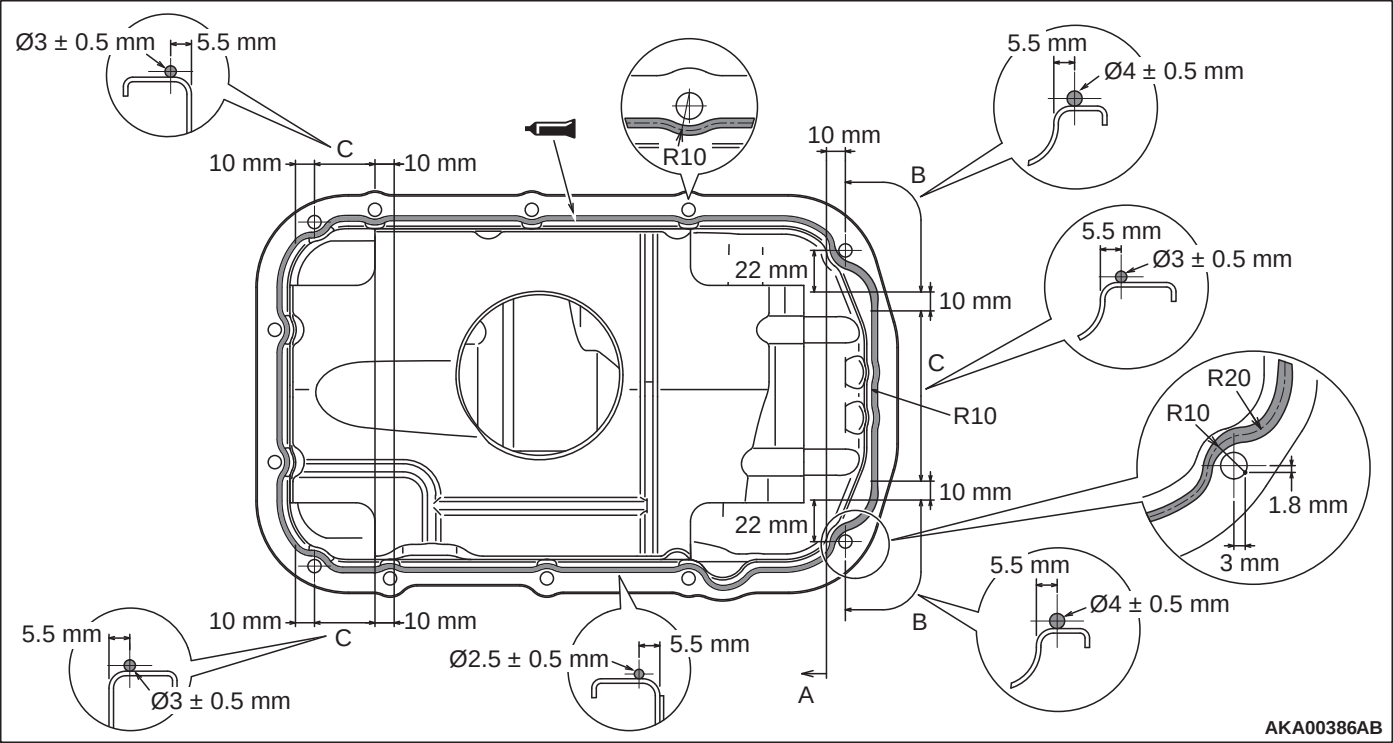
Ø3 ± 0.5 mm
5.5 mm
C
10 mm
10 mm
R10
10 mm
B
5.5 mm
Ø4 ± 0.5 mm
22 mm
10 mm
5.5 mm
Ø3 ± 0.5 mm
C
R10
R20
R10
10 mm
22 mm
1.8 mm
3 mm
5.5 mm
Ø4 ± 0.5 mm
B
10 mm
10 mm
C
5.5 mm
Ø3 ± 0.5 mm
Ø2.5 ± 0.5 mm
5.5 mm
A
AKA00386AB