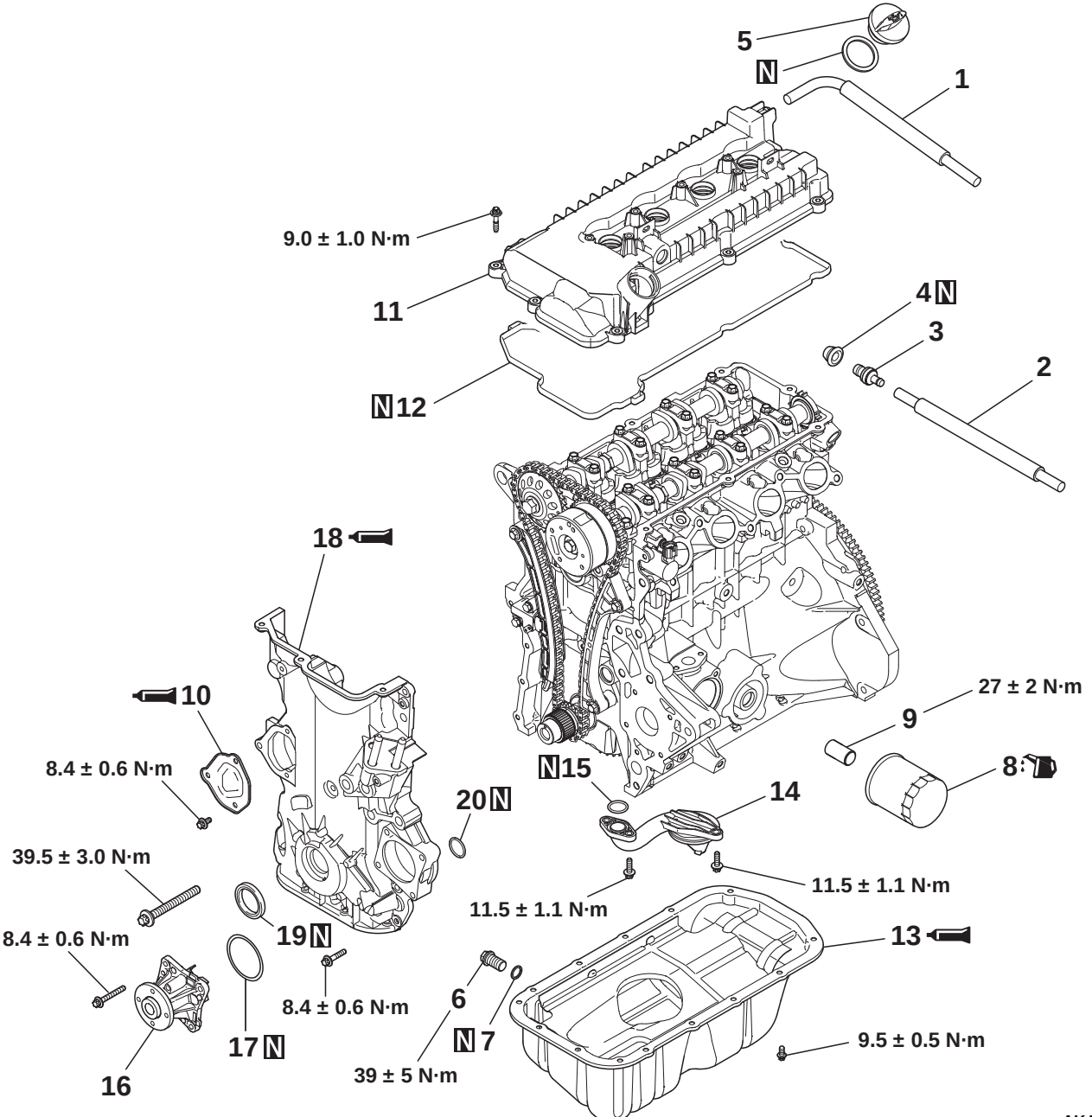
5
N
1
9.0 ± 1.0 N·m
11
4 N
3
2
N 12
18
10
8.4 ± 0.6 N·m
27 ± 2 N·m
9
8
N 15
14
20 N
39.5 ± 3.0 N·m
11.5 ± 1.1 N·m
11.5 ± 1.1 N·m
19 N
8.4 ± 0.6 N·m
13
6
8.4 ± 0.6 N·m
N 7
17 N
9.5 ± 0.5 N·m
39 ± 5 N·m
16
AKA00352 AB