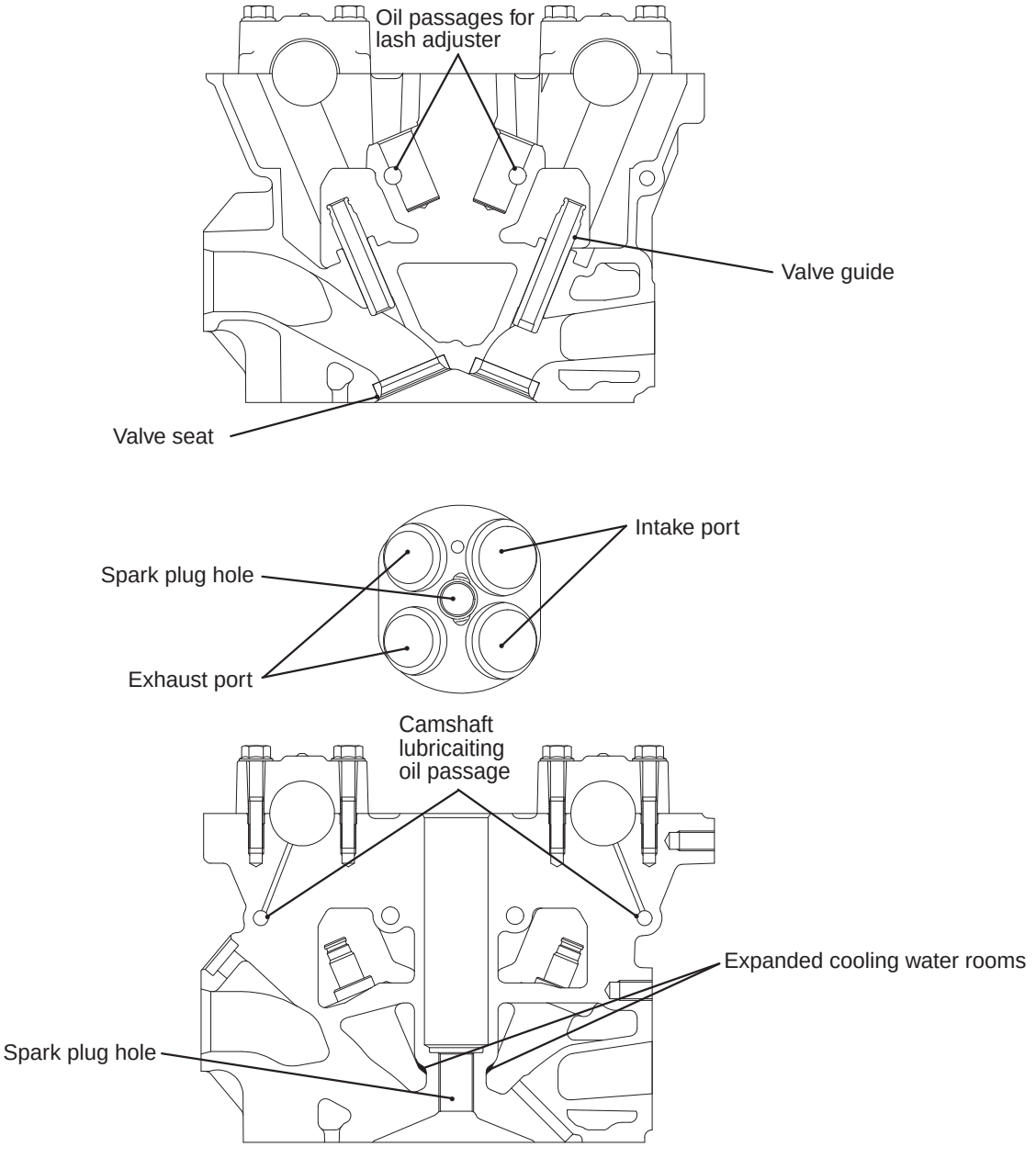
Oil passages for
lash adjuster
Valve guide
Valve seat
Intake port
Spark plug hole
Exhaust port
Camshaft
lubricaiting
oil passage
Expanded cooling water rooms
Spark plug hole
AK401494AB