OUTLINE OF CHANGES

CONTENTS

WIRING HARNESS CONFIGURATION DIAGRAMS 2

SINGLE PART INSTALLATION POSITION 4

CIRCUIT DIAGRAM 5

TABLE OF CIRCUIT DIAGRAMS 8

WIRING HARNESS CONFIGURATION DIAGRAMS

Connector symbol	Name		Reference page	Description of changes
A	ENGINE COMPART-MENT	MPI-SOHC <L.H. drive vehicles>	2-2	• The colours of the following connectors have been changed. Input shaft speed sensor (A-28) Output shaft speed sensor (A-29) Condenser fan motor (A-34) Outside thermo sensor (A-35) • The mounting positions of the following connectors have been changed. Outside thermo sensor (A-35) Horn (LO) (A-25) Horn (HI) (A-41) Condenser fan relay (LO) (A-90X) • An oxygen sensor (front) connector (A-126) has been added to correspond to changes to the engine control system. • An ignition failure sensor connector (A-131) has been added to correspond to changes to the ignition system.
		MPI-SOHC <R.H. drive vehicles>	2-6	
		GDI <L.H. drive vehicles>	2-10	• The colours of the following connectors have been changed. Condenser fan motor (A-34) Outside thermo sensor (A-35) • The mounting positions of the following connectors have been changed. Outside thermo sensor (A-35) Horn (LO) (A-25) Horn (HI) (A-41) Condenser fan relay (LO) (A-90X) Fuel pressure sensor (A-122) • The oxygen sensor connector (A-126) has been changed to an oxygen sensor (front) connector (A-126) to correspond to changes to the engine control system. • An ignition failure sensor connector (A-131) has been added to correspond to changes to the ignition system. • The control wiring harness and ABV wiring harness combination connector (A-119) has been abolished, and an EGR wiring harness and control wiring harness combination connector (A-135) has been added.
		GDI <R.H. drive vehicles>	2-14	
		Diesel <F9Q-L.H. drive vehicles>	2-18	• A wiring harness configuration diagram has been added to correspond to the adoption of vehicles with F9Q engine.
		Diesel <F9Q-R.H. drive vehicles>	2-22	

Connector symbol	Name		Reference page	Description of changes
B	DASH PANEL	L.H. drive vehicles	2-26	• The following connectors have been changed to correspond to the adoption of vehicles with F9Q engine. Clutch switch (B-01) Stop lamp switch (B-42) • The following connectors have been added to correspond to the adoption of vehicles with F9Q engine. Control wiring harness and body wiring harness combination (B-129) Main relay (B-130) Accelerator pedal position sensor (B-133) • The following connectors have been changed to correspond to changes to the A/T control system in vehicles with GDI engine. Engine-A/T-ECU <Petrol-A/T> (B-101, 102, 103, 104) Engine-ECU <Petrol-M/T (GDI)> (B-114, 115, 116) • The mounting positions of the following connectors have been changed. Engine-ECU <Petrol-M/T (except GDI)> (B-19, 20, 21, 22) Engine-ECU <Petrol-M/T (GDI)> (B-114, 115, 116) • The following connectors have been added to correspond to changes to the engine control system in vehicles with petrol engine. Oxygen sensor (Rear) <GDI> (B-131) Oxygen sensor (Rear) <except-GDI> (B-132)
		R.H. drive vehicles	2-32	
D	FLOOR AND ROOF	L.H. drive vehicles	2-38	• A catalytic temperature sensor <GDI> has been added to correspond to changes to the engine control system in vehicles with GDI engine.
		R.H. drive vehicles	2-40	

SINGLE PART INSTALLATION POSITION

Location changes	Reference page	Description of changes
RELAY	3-2	• The mounting position of the condenser fan relay (LO) has been changed. • Mounting positions for the following relays have been added to correspond to the adoption of vehicles with F9Q engine. Additional heater relay 1, 2 Glow plug relay box Main relay
ECU	3-3	• A mounting position for the engine-ECU <F9Q> has been added to correspond to the adoption of vehicles with F9Q engine.
SOLENOID VALVE	3-3	• Mounting positions for the following solenoid valves have been added to correspond to the adoption of vehicles with F9Q engine. EGR solenoid valve Throttle solenoid valve Turbo charger solenoid valve
SENSOR	3-4	• The mounting position for the outside air thermo sensor has been changed. • Mounting position for the following sensors have been added to correspond to changes to the engine control system in vehicles with petrol engine. Catalytic temperature sensor <4G93> Ignition failure sensor Oxygen sensor (Front, Rear) • Mounting positions for the following sensors have been added to correspond to the adoption of vehicles with F9Q engine. Accelerator pedal position sensor Advance actuator Air flow sensor Boost sensor Engine coolant temperature sensor Fuel temperature sensor Rail pressure sensor Top dead center and engine speed sensor Vehicles speed sensor
EARTH	3-7	• An earth mounting position has been added to correspond to the adoption of vehicles with F9Q engine.

CIRCUIT DIAGRAM

Main title	Subtitle	Reference page	Description of changes
CENTRALIZED JUNCTION	–	4-4	• The rated capacities of fusible link No. 7 and dedicated fuses No. 2 and 4 have been changed. • Contents for the fusible links, dedicated fuses and centralized relay have been added in vehicles with F9Q engine.
POWER DISTRIBUTION SYSTEM	Vehicles without daytime running lamp	4-6	• The circuit has been changed in vehicles with F9Q engine.
	Vehicles with daytime running lamp	4-12	
STARTING SYSTEM	Diesel-powered vehicles <F9Q>	4-18	• A circuit has been established to correspond to the adoption of vehicles with F9Q engine.
IGNITION SYSTEM	MPI-SOHC-M/T	4-20	• The circuit has been changed to correspond to the addition of an ignition failure sensor.
	MPI-SOHC-A/T	4-22	
	GDI-M/T	4-24	• The circuit has been changed to correspond to the addition of an ignition failure sensor. • Separate circuits for M/T and A/T vehicles have been established to correspond to the adoption of engine-A/T comprehensive control in vehicles with A/T.
	GDI-A/T	4-26	
CHARGING SYSTEM	Petrol-powered vehicles <GDI>	4-28	• The circuit has been changed to correspond to the adoption of engine-A/T comprehensive control in vehicles with A/T.
	Diesel-powered vehicles <F9Q>	4-30	• A circuit has been established to correspond to the adoption of vehicles with F9Q engine.
GLOW SYSTEM	F9Q	4-32	
MPI SYSTEM	MPI-SOHC-M/T	4-40	• The circuit has been changed to correspond to the addition of an ignition failure sensor and an oxygen sensor (rear).
	MPI-SOHC-A/T	4-48	
GDI SYSTEM	M/T	4-56	• Separate circuits for M/T and A/T vehicles have been established to correspond to the adoption of engine-A/T comprehensive control in vehicles with A/T. • The circuit has been changed to correspond to the addition of an ignition failure sensor, an oxygen sensor (rear) and a catalytic temperature sensor.
	A/T	4-70	
COOLING SYSTEM	Petrol-powered vehicles	4-83	• The circuit has been changed to correspond to the adoption of engine-A/T comprehensive control in vehicles with GDI engine and A/T.
	Diesel-powered vehicles <F9Q>	4-84	• A circuit has been established to correspond to the adoption of vehicles with F9Q engine.

Main title	Subtitle	Reference page	Description of changes
ELC 4-SPEED AUTOMATIC TRANSMISSION	MPI-SOHC	-	• The diameter of the wire between multi-purpose fuse No. 4 and the front wiring harness and body wiring harness combination connector (B-50) has been changed from 0.5 mm to 0.85 mm. • The diameter of the wire between terminal (5) of the J/C (1) connector (B-75X) and the HOLD switch connector (D-19) has been changed from 0.3 mm to 0.5 mm. • The diameter of the wire between the HOLD switch connector (D-19) and the J/C (1) connector (B-75X) has been changed from 0.3 mm to 0.5 mm. • The colour of the wire between terminal (36) of the combination meter connector (B-05) and the control wiring harness and body wiring harness combination connector <A/T> (B-36) has been changed from Y to V mm.
	GDI	4-86	• The circuit has been changed to correspond to the adoption of engine-A/T comprehensive control in vehicles with A/T. • The circuit has been changed to correspond to the addition of vehicles with Sports Mode 4A/T.
HEADLAMP	Vehicles with daytime running lamp	-	• The diameter and colour of the wire between the front wiring harness and body wiring harness combination connector (B-53) and earth No. 12 have been changed from B and <F> 2B to <F> 2B.
TAIL LAMP, POSITION LAMP, LICENSE PLATE LAMP AND LIGHTING MONITOR BUZZER	Vehicles with daytime running lamp	-	
FRONT FOG LAMP	Vehicles with daytime running lamp	-	
REAR FOG LAMP	Vehicles with daytime running lamp	-	
STOP LAMP	Hatchback	4-96	• The circuit has been changed to correspond to changes to the stop lamp switch in diesel vehicles.
	Sedan	4-97	
BACK-UP LAMP	-	4-98	• The circuit has been changed to correspond to the addition of a sensor wiring harness in diesel vehicles.
HORN	-	-	• The names of the horn (L.H.) and horn (R.H.) have been changed to the horn (LO) and horn (HI) respectively.
METER AND GAUGE	Petrol-powered vehicles	4-100	• The circuit has been changed to correspond to the adoption of engine-A/T comprehensive control in vehicles with GDI engine and A/T.
	Diesel-powered vehicles <F9Q>	4-102	• A circuit has been established to correspond to the adoption of vehicles with F9Q engine.

Main title	Subtitle	Reference page	Description of changes
CENTRAL DOOR LOCKING SYSTEM	Vehicles without keyless entry system <Hatch-back>	–	• All wires which are connected to terminal (3) of the door lock-ECU connector (B-67X) have been changed to LG. • The rated capacity (A) of dedicated fuse No. 4 has been changed from 20 A to 15 A.
	Vehicles without keyless entry system <Sedan>	–	
	Vehicles with keyless entry system <Hatch-back>	–	• The rated capacity (A) of dedicated fuse No. 4 has been changed from 20 A to 15 A.
	Vehicles with keyless entry system <Sedan>	–	
MANUAL AIR CONDITIONER	Petrol-powered vehicles	4-106	• The circuit has been changed to correspond to the adoption of engine-A/T comprehensive control in vehicles with GDI engine and A/T.
	Diesel-powered vehicles <F9Q>	4-112	• A circuit has been established to correspond to the adoption of vehicles with F9Q engine.
AUTOMATIC AIR CONDITIONER	Petrol-powered vehicles	4-116	• The circuit has been changed to correspond to the adoption of engine-A/T comprehensive control in vehicles with GDI engine and A/T.
	Diesel-powered vehicles <F9Q>	4-124	• A circuit has been established to correspond to the adoption of vehicles with F9Q engine.
DEFOGGER AND DOOR MIRROR HEATER	Vehicles without auto air conditioner	4-132	• The circuit has been changed to correspond to changes to the A/C switch.
MULTI CENTER DISPLAY	Petrol-powered vehicles	4-134	• The circuit has been changed to correspond to the adoption of engine-A/T comprehensive control in vehicles with GDI engine and A/T.
	Diesel-powered vehicles <F9Q>	4-140	• A circuit has been established to correspond to the adoption of vehicles with F9Q engine.
HEATED SEAT	–	4-146	• The earth circuit has been changed.
ANTI-LOCK BRAKING SYSTEM (ABS)	Vehicles without TCL	4-148	• The circuit has been changed in vehicles with F9Q engine.
AUTO-CRUISE CONTROL SYSTEM	M/T	4-150	• Dedicate circuits for M/T and A/T vehicles have been established to correspond to the addition of an engine-A/T-ECU.
	A/T	4-158	
IMMOBILIZER SYSTEM	Diesel-powered vehicles	4-166	• The circuit has been changed to correspond to changes to the immobilizer-ECU.
	Petrol-powered vehicles	4-168	• The circuit has been changed to correspond to the adoption of engine-A/T comprehensive control in vehicles with GDI engine and A/T.

TABLE OF CIRCUIT DIAGRAMS

This table of circuit diagrams indicates those circuits in which changes and/or additions, etc. have been made; the circuits are here listed in the sequence in which they are presented in the wiring diagrams. Please use this table for reference when following maintenance or repair procedures.

NOTE

(1) A (Added) : This circuit has been newly added.
(2) R (Revised) : This circuit has been changed.
(3) D (Deleted) : This circuit has been deleted.
(4) I (Included) : This circuit is included in the previous manual(s).
(5) N (Not applicable) : This circuit is not applicable.
(6) P (Previous manual) : This circuit is not included, because it has not been changed. Refer to the previous manual(s).

Main circuit	Circuit classifications	Previous manual: Pub. No. PHDE9501 '96 model (Basic)	Previous manual: Pub. No. PHDE9501-A (Supplement)	Previous manual: Pub. No. PHDE9501-B (Supplement)	Previous manual: Pub. No. PHDE9501-C (Supplement)	Previous manual: Pub. No. PHDE9501-D (Supplement)	This manual: Pub. No. PHDE9501-E (Supplement)
JUNCTION BLOCK (J/B)	–	I	P	P	P	R	P
JOINT CONNECTOR (J/C)	–	I	P	P	P	P	P
CENTRALIZED JUNCTION	–	I	R	R	P	R	R
POWER DISTRIBUTION SYSTEM	Vehicles without daytime running lamp	I	R	R	P	R	R
	Vehicles with daytime running lamp	I	R	R	P	R	R
STARTING SYSTEM	Petrol-powered vehicles <MPI>	I	P	P	P	R	P
	Petrol-powered vehicles <GDI>	N	N	N	A	R	P
	Diesel-powered vehicles	N	A	P	P	R	D
	Diesel-powered vehicles <F9Q>	N	N	N	N	N	A
IGNITION SYSTEM	MPI-SOHC-M/T	I	R	P	P	R	R
	MPI-SOHC-A/T	N	N	A	P	R	R
	MPI-DOHC	I	R	D	D	D	D
	GDI	N	N	A	P	R	D
	GDI-M/T	N	N	N	N	N	A
	GDI-A/T	N	N	N	N	N	A
CHARGING SYSTEM	Petrol-powered vehicles <MPI>	I	P	P	P	R	P
	Petrol-powered vehicles <GDI>	N	N	N	A	R	R
	Diesel-powered vehicles	N	A	R	P	R	D
	Diesel-powered vehicles <F9Q>	N	N	N	N	N	A

Main circuit	Circuit classifications	Previous manual: Pub. No. PHDE9501 '96 model (Basic)	Previous manual: Pub. No. PHDE9501-A (Supplement)	Previous manual: Pub. No. PHDE9501-B (Supplement)	Previous manual: Pub. No. PHDE9501-C (Supplement)	Previous manual: Pub. No. PHDE9501-D (Supplement)	This manual: Pub. No. PHDE9501-E (Supplement)
GLOW SYSTEM	–	N	A	R	P	R	D
	F9Q	N	N	N	N	N	A
MPI SYSTEM	MPI-SOHC <Vehicles without TCL>	I	R	D	D	D	D
	MPI-SOHC <Vehicles with TCL>	I	R	D	D	D	D
	MPI-SOHC-M/T <Vehicles without TCL>	N	N	A	P	D	D
	MPI-SOHC-A/T <Vehicles without TCL>	N	N	A	P	D	D
	MPI-SOHC-M/T	N	N	N	N	A	R
	MPI-SOHC-A/T	N	N	N	N	A	R
	MPI-DOHC	I	R	D	D	D	D
	GDI	N	N	N	A	D	D
GDI SYSTEM	–	N	N	N	N	A	D
	M/T	N	N	N	N	N	A
	A/T	N	N	N	N	N	A
COOLING SYSTEM	Petrol-powered vehicles	I	R	P	P	R	R
	Diesel-powered vehicles	N	A	P	P	R	D
	Diesel-powered vehicles <F9Q>	N	N	N	N	N	A
ELC 4-SPEED AUTOMATIC TRANSMISSION	MPI-SOHC	I	R	R	P	R	P
	GDI	N	N	N	A	R	R
HEADLAMP	Vehicles without daytime running lamp	I	R	R	P	R	P
	Vehicles with daytime running lamp	I	R	R	P	R	P
HEADLAMP LEVELING SYSTEM	–	I	P	P	P	R	P
TAIL LAMP, POSITIONLAMP, LICENSE PLATE LAMP AND LIGHTING MONITOR BUZZER	Vehicles without daytime running lamp	I	R	P	P	R	P
	Vehicles with daytime running lamp	I	R	P	P	R	P
FRONT FOG LAMP	Vehicles without daytime running lamp	I	R	R	P	R	P
	Vehicles with daytime running lamp	I	R	R	P	R	P

Main circuit	Circuit classifications	Previous manual: Pub. No. PHDE9501 '96 model (Basic)	Previous manual: Pub. No. PHDE9501-A (Supplement)	Previous manual: Pub. No. PHDE9501-B (Supplement)	Previous manual: Pub. No. PHDE9501-C (Supplement)	Previous manual: Pub. No. PHDE9501-D (Supplement)	This manual: Pub. No. PHDE9501-E (Supplement)
REAR FOG LAMP	Vehicles without daytime runninglamp<Hatchback>	I	P	D	D	D	D
	Vehicles without daytime running lamp <Sedan>	N	A	D	D	D	D
	Vehicles without daytime running lamp	N	N	A	P	R	P
GLOVE BOX LAMP	–	N	N	N	N	A	P
ROOM LAMP, MAP LAMP AND LUGGAGE COMPARTMENT LAMP	Hatchback	I	P	R	P	R	P
	Sedan	N	A	R	P	R	P
TURN-SIGNAL LAMP AND HAZARD WARNING LAMP	Hatchback	I	P	D	D	D	D
	Sedan	N	A	D	D	D	D
	–	N	N	A	P	R	P
STOP LAMP	Hatchback	I	P	P	P	R	R
	Sedan	N	A	P	P	R	R
BACK-UP LAMP	–	I	R	R	P	R	R
HORN	Vehicles without SRS	I	P	P	P	D	D
	Vehicles with SRS	I	P	P	P	D	D
	–	N	N	N	N	A	P
METER AND GAUGE	Petrol-powered vehicles	I	R	R	P	R	R
	Diesel-powered vehicles	N	A	R	P	R	D
	Diesel-powered vehicles <F9Q>	N	N	N	N	N	A
ODOMETER AND TRIP METER	–	N	N	A	P	R	P
OIL PRESSURE WARNING LAMP	Petrol-powered vehicles	I	P	D	D	D	D
	Diesel-powered vehicles	N	A	D	D	D	D
	–	N	N	A	R	P	P
FUEL WARNING LAMP	Petrol-powered vehicles	I	P	D	D	D	D
	Diesel-powered vehicles	N	A	D	D	D	D
	–	N	N	A	P	R	P
BRAKE WARNING LAMP	Petrol-powered vehicles	I	P	D	D	D	D
	Diesel-powered vehicles	N	A	D	D	D	D
	–	N	N	A	P	P	P
OVER HEATING WARNING LAMP	Diesel-powered vehicles	N	A	R	P	P	P

Main circuit	Circuit classifications	Previous manual: Pub. No. PHDE9501 '96 model (Basic)	Previous manual: Pub. No. PHDE9501-A (Supplement)	Previous manual: Pub. No. PHDE9501-B (Supplement)	Previous manual: Pub. No. PHDE9501-C (Supplement)	Previous manual: Pub. No. PHDE9501-D (Supplement)	This manual: Pub. No. PHDE9501-E (Supplement)
CENTRAL DOOR LOCKING SYSTEM	Vehicles without theft-alarm system <Hatch-back>	I	P	D	D	D	D
	Vehicles without theft-alarm system <Sedan>	N	A	D	D	D	D
	Vehicles with theft-alarm system <Hatchback>	I	R	D	D	D	D
	Vehicles with theft-alarm system <Sedan>	N	A	D	D	D	D
	Vehicles without keyless entry system <Hatchback>	N	N	A	P	R	P
	Vehicles without keyless entry system <Sedan>	N	N	A	P	R	P
	Vehicles with keyless entry system <Hatchback>	N	N	A	P	R	P
	Vehicles with keyless entry system <Sedan>	N	N	A	P	R	P
POWER WINDOWS	–	I	P	P	P	R	P
HEATER	–	I	P	P	P	R	P
MANUAL AIR CONDITIONER	Petrol-powered vehicles	I	P	R	P	R	R
	Petrol-powered vehicles <GDI>	N	N	N	A	D	D
	Diesel-powered vehicles	N	A	P	P	R	D
	Diesel-powered vehicles <F9Q>	N	N	N	N	N	A
AUTOMATIC AIR CONDITIONER AND AIR PURIFIER	Petrol-powered vehicles	I	P	R	P	R	R
	Petrol-powered vehicles <GDI>	N	N	N	A	D	D
	Diesel-powered vehicles	N	A	P	P	R	D
	Diesel-powered vehicles <F9Q>	N	N	N	N	N	A
WINDSHIELD WIPER AND WASHER	–	I	P	R	P	R	P
REAR WIPER AND WASHER	Vehicles without intermittent wiper	I	P	P	P	D	D
	Vehicles with intermittent wiper	I	P	P	P	R	P
HEADLAMP WASHER	–	I	R	P	P	R	P

Main circuit	Circuit classifications	Previous manual: Pub. No. PHDE9501 '96 model (Basic)	Previous manual: Pub. No. PHDE9501-A (Supplement)	Previous manual: Pub. No. PHDE9501-B (Supplement)	Previous manual: Pub. No. PHDE9501-C (Supplement)	Previous manual: Pub. No. PHDE9501-D (Supplement)	This manual: Pub. No. PHDE9501-E (Supplement)
DEFOGGER AND DOOR MIRROR HEATER	L.H. drive vehicles <Hatchback>	I	P	D	D	D	D
	L.H. drive vehicles <Sedan>	N	A	D	D	D	D
	R.H. drive vehicles <Hatchback>	I	P	D	D	D	D
	R.H. drive vehicles <Sedan>	N	A	D	D	D	D
	Vehicles without defogger timer	N	N	A	P	D	D
	Vehicles with defogger timer	N	N	A	P	D	D
	Vehicles without full-auto air conditioner	N	N	N	N	A	R
	Vehicles with full-auto air conditioner	N	N	N	N	A	P
REMOTE CONTROLLED MIRROR	–	I	P	P	P	R	P
CLOCK	L.H. drive vehicles	I	P	P	P	D	D
	R.H. drive vehicles	I	P	P	P	D	D
MULTI CENTER DISPLAY	Petrol-powered vehicles	N	N	N	N	A	R
	Diesel-powered vehicles	N	N	N	N	A	D
	Diesel-powered vehicles <F9Q>	N	N	N	N	N	A
CIGARETTE LIGHTER	–	I	P	P	P	R	P
RADIO AND TAPE PLAYER (VEHICLE HARNESS WITHOUT RADIO AND TAPE PLAYER COMPONENT)	–	I	R	P	P	D	D
RADIO AND TAPE PLAYER	–	I	R	P	P	D	D
RADIO AND TAPE PLAYER OR CD PLAYER	–	N	N	N	N	A	P
SUNROOF	–	I	P	P	P	D	D
HEATED SEAT	–	I	P	P	P	R	R
ANTI-LOCK BRAKING SYSTEM (ABS)	–	I	P	R	P	D	D
	Vehicles without TCL	N	N	N	N	A	R

Main circuit	Circuit classifications	Previous manual. Pub No. PHDE9501 '96 model (Basic)	Previous manual. Pub No. PHDE9501-A (Supplement)	Previous manual· Pub. No PHDE9501-B (Supplement)	Previous manual: Pub. No. PHDE9501-C (Supplement)	Previous manual: Pub No. PHDE9501-D (Supplement)	This manual: Pub. No. PHDE9501-E (Supplement)
TRACTION CONTROL SYSTEM (TCL)	-	I	R	D	D	D	D
	M/T	N	N	A	P	D	D
	A/T	N	N	A	P	D	D
ANTI-LOCK BRAKING SYSTEM, TRACTION CONTROL SYSTEM (BTCL)	-	N	N	N	N	A	P
AUTO-CRUISE CONTROL SYSTEM	-	I	P	R	P	D	D
	GDI	N	N	N	N	A	R
SUPPLEMEN-TAL RESTRAINT SYSTEM (SRS)	-	I	P	D	D	A	P
	Vehicles without side air bag	N	N	A	P	D	D
	Vehicles with side air bag	N	N	A	P	D	D
THEFT-ALARM SYSTEM	Hatchback	I	R	D	D	D	D
	Sedan	N	A	D	D	D	D
IMMOBILIZER SYSTEM	Petrol-powered vehicles	I	P	R	P	R	R
	Diesel-powered vehicles	N	A	R	P	R	R
RHEOSTAT	-	I	P	P	P	R	P
FUEL LINE HEATER	-	N	A	P	P	R	P

HOW TO READ THE WIRING DIAGRAMS

CONTENTS

MODELS 1-2

MODELS

<HATCHBACK>

Model code		Engine model	Transmission model	Fuel supply system
DA1A	LNSEL6/R6	4G92-SOHC (1,597 mℓ)	F5MR1 (2WD-5M/T)	MPI
	LNUEL6/R6			
	LRUEL6/R6		F4A41 (2WD-4A/T)	
	LNGEL6/R6		F5MR1 (2WD-5M/T)	
	LRGEL6/R6		F4A41 (2WD-4A/T)	
DA2A	LNSCL6/R6	4G93-DOHC (1,834 mℓ)	F5M42 (2WD-5M/T)	GDI
	LNUCL6/R6			
	LRUCL6/R6		F4A42 (2WD-4A/T)	
	LRUCL6C/R6C		F4A42 (2WD-Sports Mode 4A/T)	
	LNGCL6/R6		F5M42 (2WD-5M/T)	
	LRGCL6/R6		F4A42 (2WD-4A/T)	
	LNXCL6/R6		F5M42 (2WD-5M/T)	
	LRXCL6/R6		F4A42 (2WD-4A/T)	
DA5A	LNSFL6/R6	F9Q1 (1,870 mℓ)	F5MV1 (2WD-5M/T)	Fuel injection pump
	LNUFL6/R6			
	LNXFL6/R6			
	LNUVL6/R6	F9Q2 (1,870 mℓ)		
	LNXVL6/R6			
	LNGVL6/R6			

<SEDAN>

Model code		Engine model	Transmission model	Fuel supply system
DA1A	SNSEL6/R6	4G92-SOHC (1,597 mℓ)	F5MR1 (2WD-5M/T)	MPI
	SNUEL6/R6			
	SRUEL6/R6		F4A41 (2WD-4A/T)	
	SNGEL6/R6		F5MR1 (2WD-5M/T)	
	SRGEL6/R6		F4A41 (2WD-4A/T)	

Model code		Engine model	Transmission model	Fuel supply system
DA2A	SNSCL6/R6	4G93-DOHC (1,834 mℓ)	F5M42 (2WD-5M/T)	GDI
	SNUCL6/R6			
	SRUCL6/R6		F4A42 (2WD-4A/T)	
	SRUCL6C/R6C		F4A42 (2WD-Sports Mode 4A/T)	
	SNGCL6/R6		F5M42 (2WD-5M/T)	
	SRGCL6/R6		F4A42 (2WD-4A/T)	
	SNXCL6/R6		F5M42 (2WD-5M/T)	
	SRXCL6/R6		F4A42 (2WD-4A/T)	
DA5A	SNSFL6/R6	F9Q1 (1,870 mℓ)	F5MV1 (2WD-5M/T)	Fuel injection pump
	SNUFL6/R6			
	SNXFL6/R6			
	SNUVL6/R6	F9Q2 (1,870 mℓ)		
	SNXVL6/R6			
	SNGVL6/R6			

WIRING HARNESS CONFIGURATION DIAGRAMS

CONTENTS

ENGINE COMPARTMENT

MPI-SOHC <L.H. drive vehicles> 2-2
MPI-SOHC <R.H. drive vehicles> 2-6
GDI <L.H. drive vehicles> 2-10
GDI <R.H. drive vehicles> 2-14
Diesel <F9Q-L.H. drive vehicles> 2-18
Diesel <F9Q-R.H. drive vehicles> 2-22

DASH PANEL

L.H. drive vehicles 2-26
R.H. drive vehicles 2-32

FLOOR AND ROOF

L.H. drive vehicles 2-38
R.H. drive vehicles 2-40

ENGINE COMPARTMENT

MPI-SOHC <L.H. drive vehicles>

Connector Symbol

A

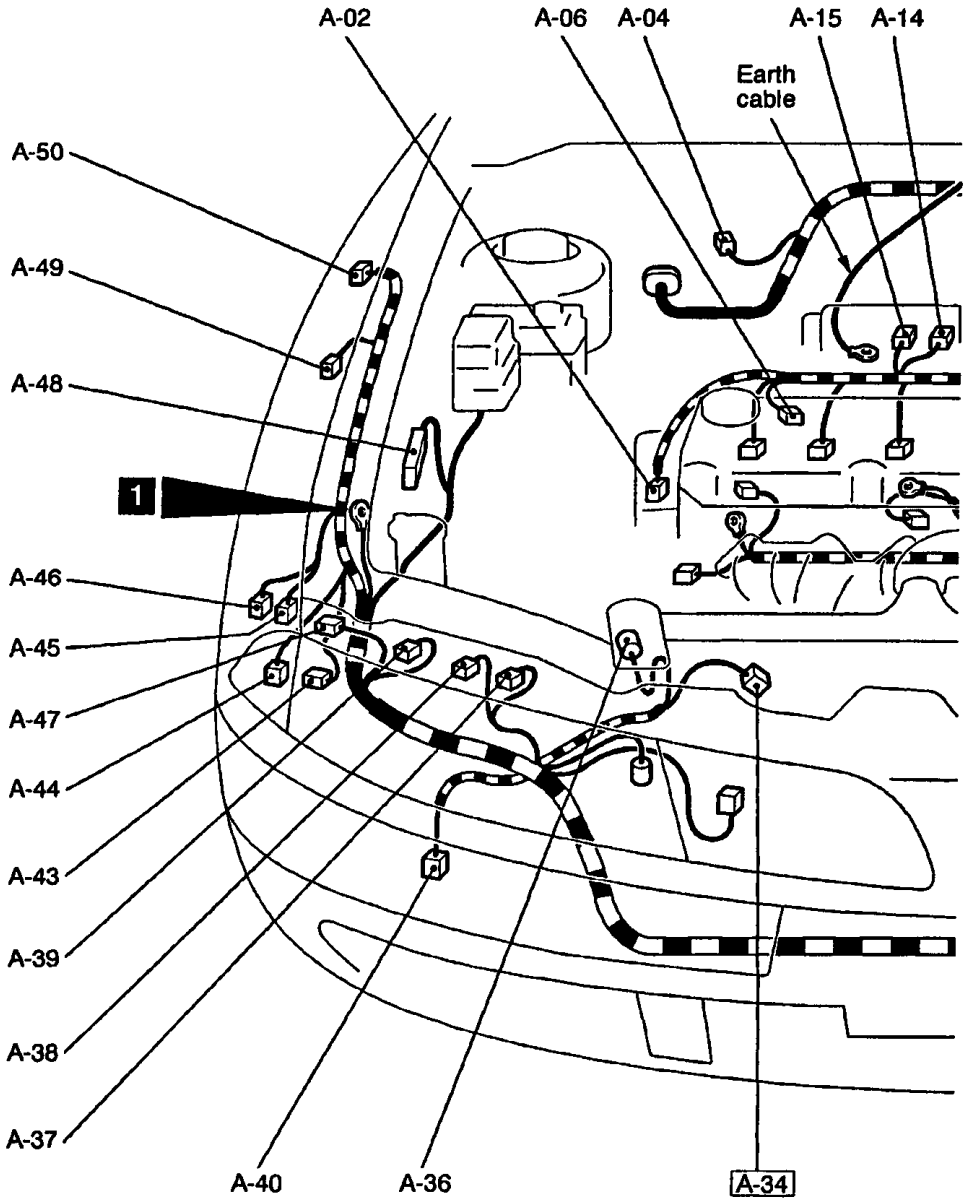

A-02 (3-GR)	Crank angle sensor
A-03 (3-B)	Camshaft position sensor
A-04 (5-B)	Windshield wiper motor
A-05 (3-GR)	Ignition coil B
A-06 (3-GR)	Ignition coil A
A-11 (1-L)	Engine speed detection connector
A-13 (2-B)	Brake fluid level sensor
A-14 (2-B)	Purge control solenoid valve
A-15 (2-BR)	EGR solenoid valve
A-16 (12)	DRL-ECU
A-17 (4)	DRL relay 1
A-18 (4)	DRL relay 2
A-19 (2-B)	Side turn signal lamp (LH)
A-20 (7-B)	Air flow sensor
A-21 (2-B)	Front speed sensor (LH) <ABS>
A-22 (10-B)	Front wiring harness and control wiring harness combination
A-23 (4-B)	Control wiring harness and battery cable assembly combination
A-24 (2-B)	Front turn signal lamp (LH)
A-25 (2-B)	Horn (LO)
A-27 (2-GR)	Front fog lamp (LH)
A-28 (3-B)	Input shaft speed sensor <A/T>
A-29 (3-GR)	Output shaft speed sensor <A/T>

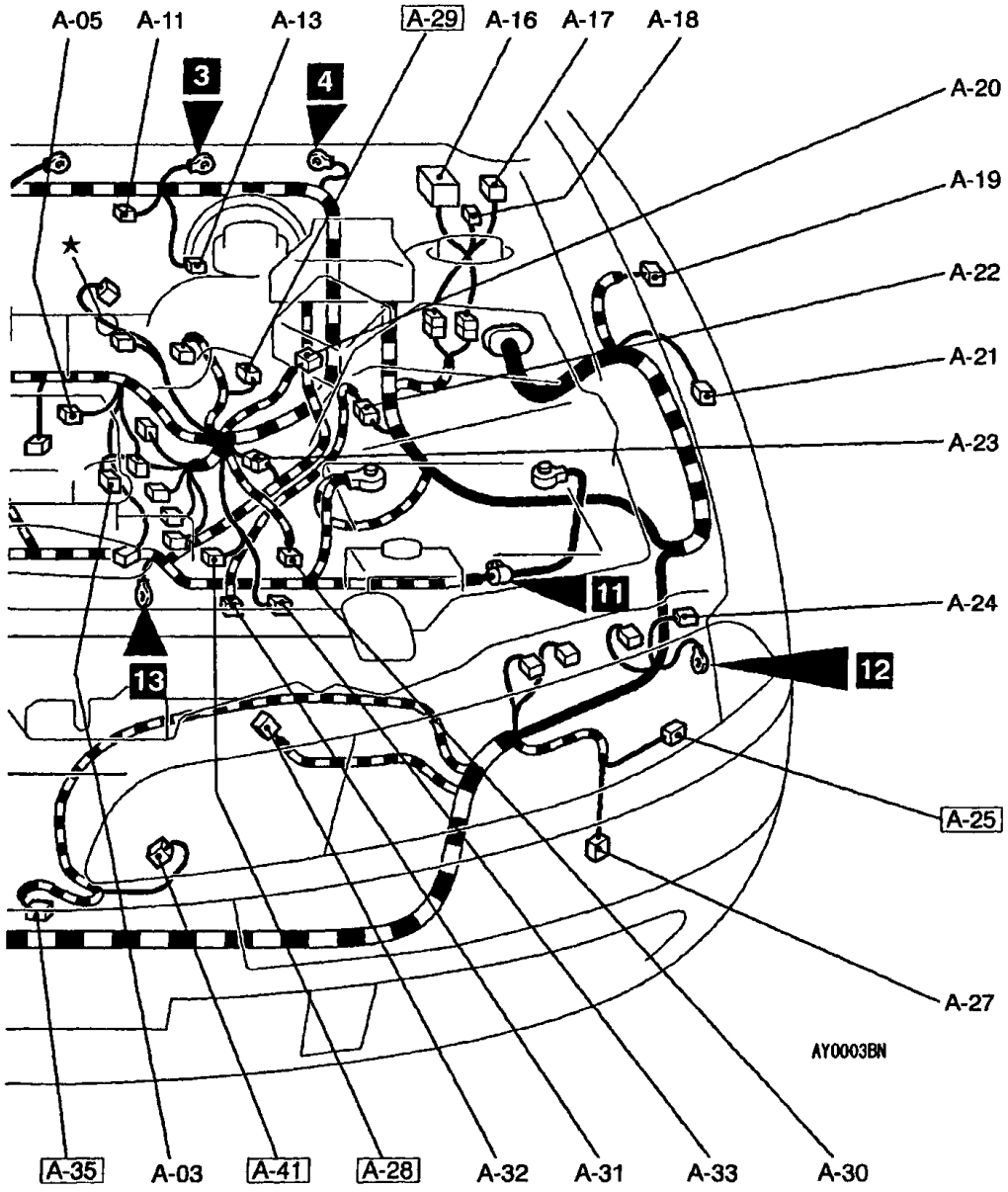

A-30 (10-GR)	ELC-4A/T control solenoid valve
A-31 (2-G)	Back-up lamp switch <M/T>
A-32 (2-B)	Radiator fan motor
A-33 (10-B)	Inhibitor switch <A/T>
A-34 (4-GR)	Condenser fan motor
A-35 (2-BR)	Outside thermo sensor
A-36 (1)	Power steering oil pressure switch
A-37 (2-B)	Position lamp (RH)
A-38 (3-B)	Headlamp (RH)
A-39 (3-B)	Headlamp leveling unit (RH)
A-40 (2-GR)	Front fog lamp (RH)
A-41 (2-B)	Horn (HI)
A-43 (2-BR)	Washer fluid level sensor
A-44 (2)	Headlamp washer motor
A-45 (2)	Rear washer motor
A-46 (2)	Windshield washer motor
A-47 (2-B)	Front turn signal lamp (RH)
A-48 (31-B)	ABS-ECU
A-49 (2-B)	Front speed sensor (RH) <ABS>
A-50 (2-B)	Side turn signal lamp (RH)

NOTE
Connector numbers in [ ] are connector numbers which have been changed or added.

MPI-SOHC <L.H. drive vehicles>

Connector Symbol

A

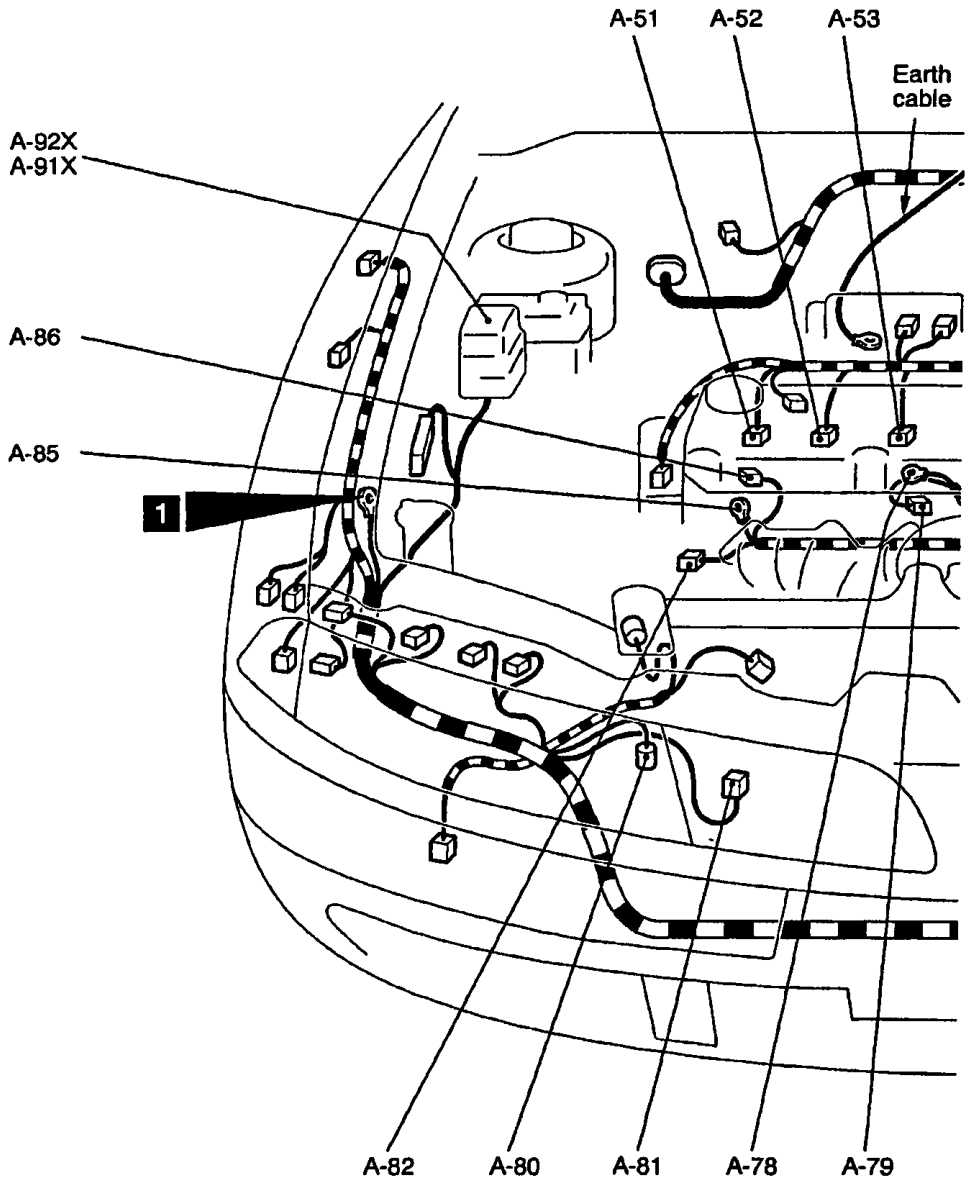

A-51 (2-GR)	Injector No. 1
A-52 (2-GR)	Injector No. 2
A-53 (2-GR)	Injector No. 3
A-54 (2-GR)	Injector No. 4
A-56 (4-B)	Throttle position sensor
A-57 (6-B)	Idle speed control servo
A-61X (5)	Tail lamp relay <DRL>
A-62X (4)	Alternator relay
A-63X (5)	Radiator fan relay
A-64X (5)	Headlamp relay
A-65X (5)	Headlamp washer relay
A-67X (5)	Horn relay
A-68 (10-B)	Front wiring harness and DRL wiring harness combination
A-69 (10-B)	Front wiring harness and DRL wiring harness combination
A-70 (3-B)	Headlamp leveling unit (LH)
A-71 (3-B)	Headlamp (LH)
A-72 (2-B)	Position lamp (LH)
A-75 (1-B)	Engine coolant temperature gauge unit

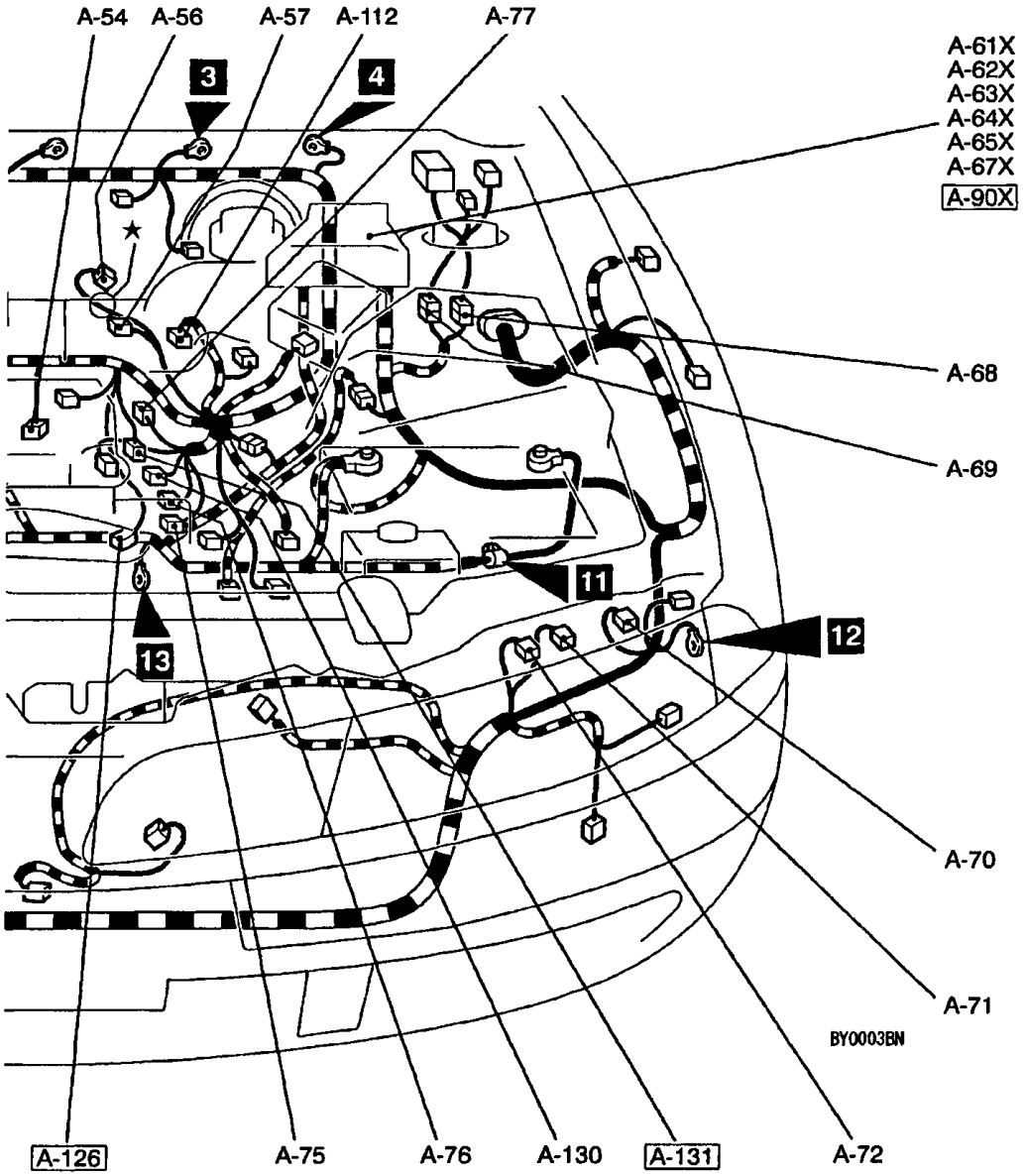

A-76 (2-B)	Engine coolant temperature sensor
A-77 (2-GR)	Detonation sensor
A-78 (1)	Starter
A-79 (1-B)	Starter
A-80 (2-BR)	Dual pressure switch
A-81 (1-B)	A/C refrigerant temperature switch and magnetic clutch
A-82 (1-B)	Oil pressure switch
A-85 (1)	Alternator
A-86 (2)	Alternator
A-90X (5)	Condenser fan relay (LO)
A-91X (5)	Condenser fan relay (HI)
A-92X (5)	A/C compressor relay
A-112 (3-B)	Vehicle speed sensor
A-126 (4-B)	Oxygen sensor (Front)
A-130 (1-B)	Capacitor
A-131 (4-B)	Ignition failure sensor

NOTE
Connector numbers in ☐ are connector numbers which have been changed or added.

ENGINE COMPARTMENT

MPI-SOHC <R.H. drive vehicles>

Connector Symbol

A

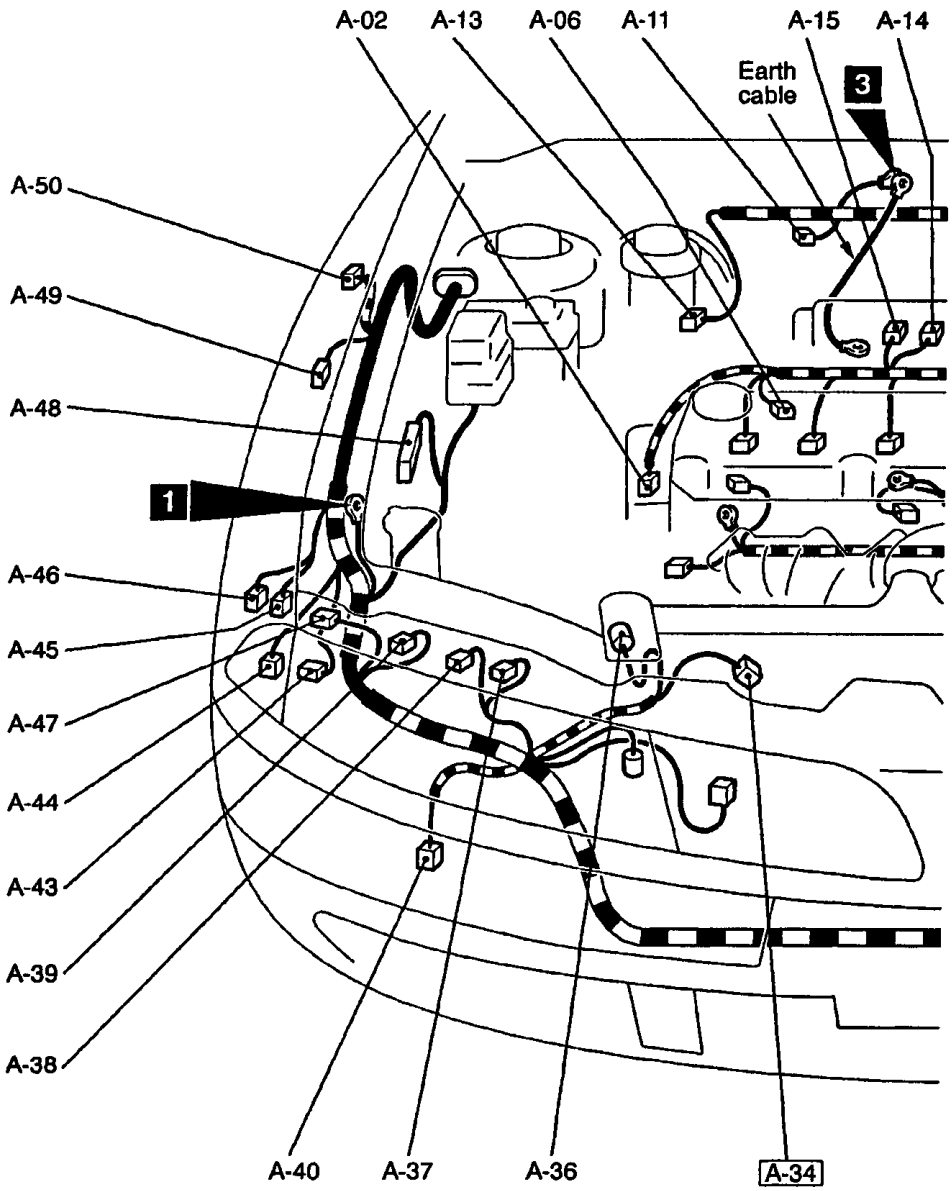

A-02 (3-GR)	Crank angle sensor
A-03 (3-B)	Camshaft position sensor
A-04 (5-B)	Windshield wiper motor
A-05 (3-GR)	Ignition coil B
A-06 (3-GR)	Ignition coil A
A-11 (1-L)	Engine speed detection connector
A-13 (2-B)	Brake fluid level sensor
A-14 (2-B)	Purge control solenoid valve
A-15 (2-BR)	EGR solenoid valve
A-19 (2-B)	Side turn signal lamp (LH)
A-20 (7-B)	Air flow sensor
A-21 (2-B)	Front speed sensor (LH) <ABS>
A-22 (10-B)	Front wiring harness and control wiring harness combination
A-23 (4-B)	Control wiring harness and battery cable assembly combination
A-24 (2-B)	Front turn signal lamp (LH)
A-25 (2-B)	Horn (LO)
A-27 (2-GR)	Front fog lamp (LH)
A-28 (3-B)	Input shaft speed sensor <A/T>
A-29 (3-GR)	Output shaft speed sensor <A/T>
A-30 (10-GR)	ELC-4A/T control solenoid valve

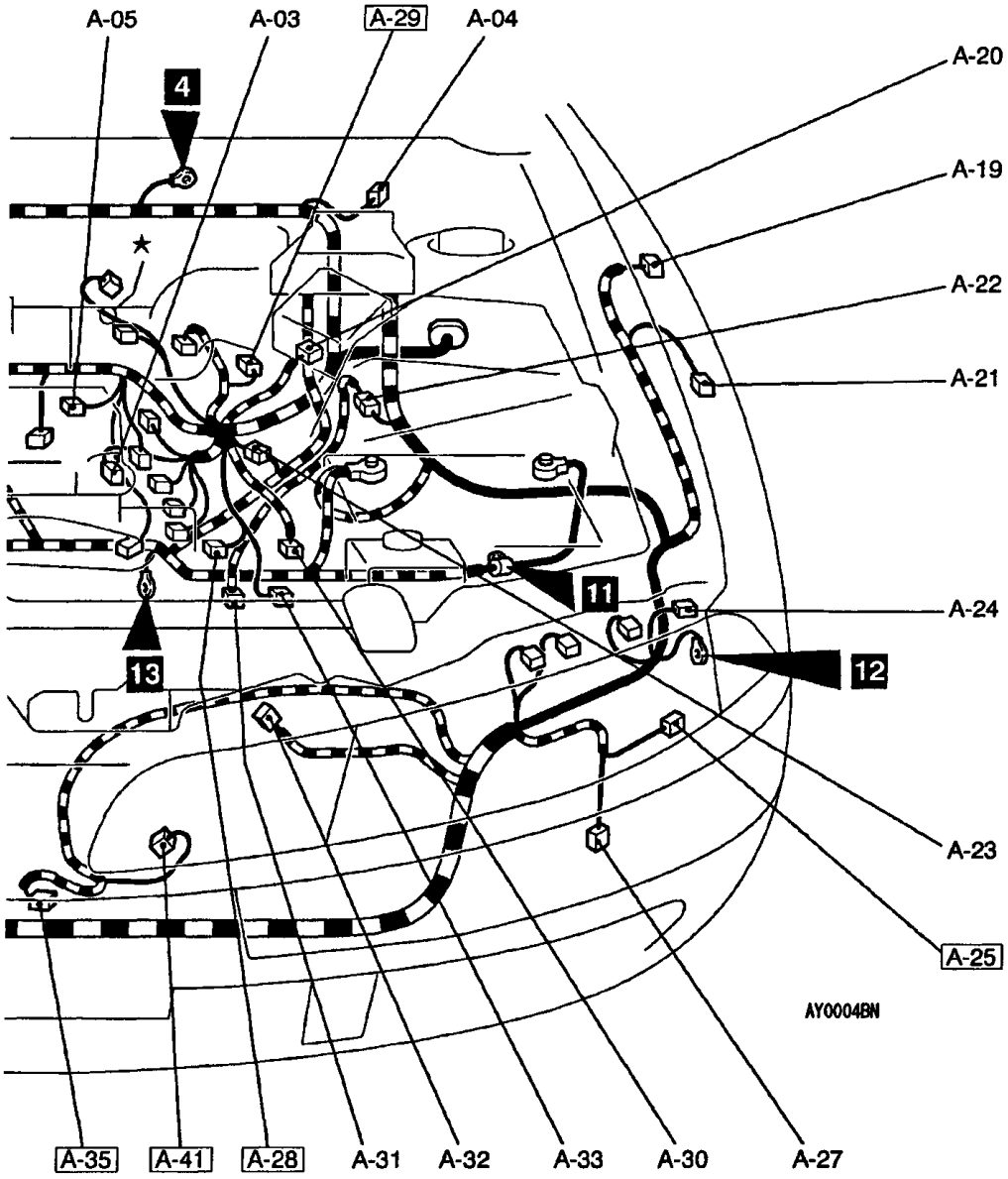

A-31 (2-G)	Back-up lamp switch <M/T>
A-32 (2-B)	Radiator fan motor
A-33 (10-B)	Inhibitor switch <A/T>
A-34 (4-GR)	Condenser fan motor
A-35 (2-BR)	Outside thermo sensor
A-36 (1)	Power steering oil pressure switch
A-37 (2-B)	Position lamp (RH)
A-38 (3-B)	Headlamp (RH)
A-39 (3-B)	Headlamp leveling unit (RH)
A-40 (2-GR)	Front fog lamp (RH)
A-41 (2-B)	Horn (HI)
A-43 (2-BR)	Washer fluid level sensor
A-44 (2)	Headlamp washer motor
A-45 (2)	Rear washer motor
A-46 (2)	Windshield washer motor
A-47 (2-B)	Front turn signal lamp (RH)
A-48 (31-B)	ABS-ECU
A-49 (2-B)	Front speed sensor (RH) <ABS>
A-50 (2-B)	Side turn signal lamp (RH)

NOTE
Connector numbers in ☐ are connector numbers which have been changed or added.

MPI-SOHC <R.H. drive vehicles>

Connector Symbol

A

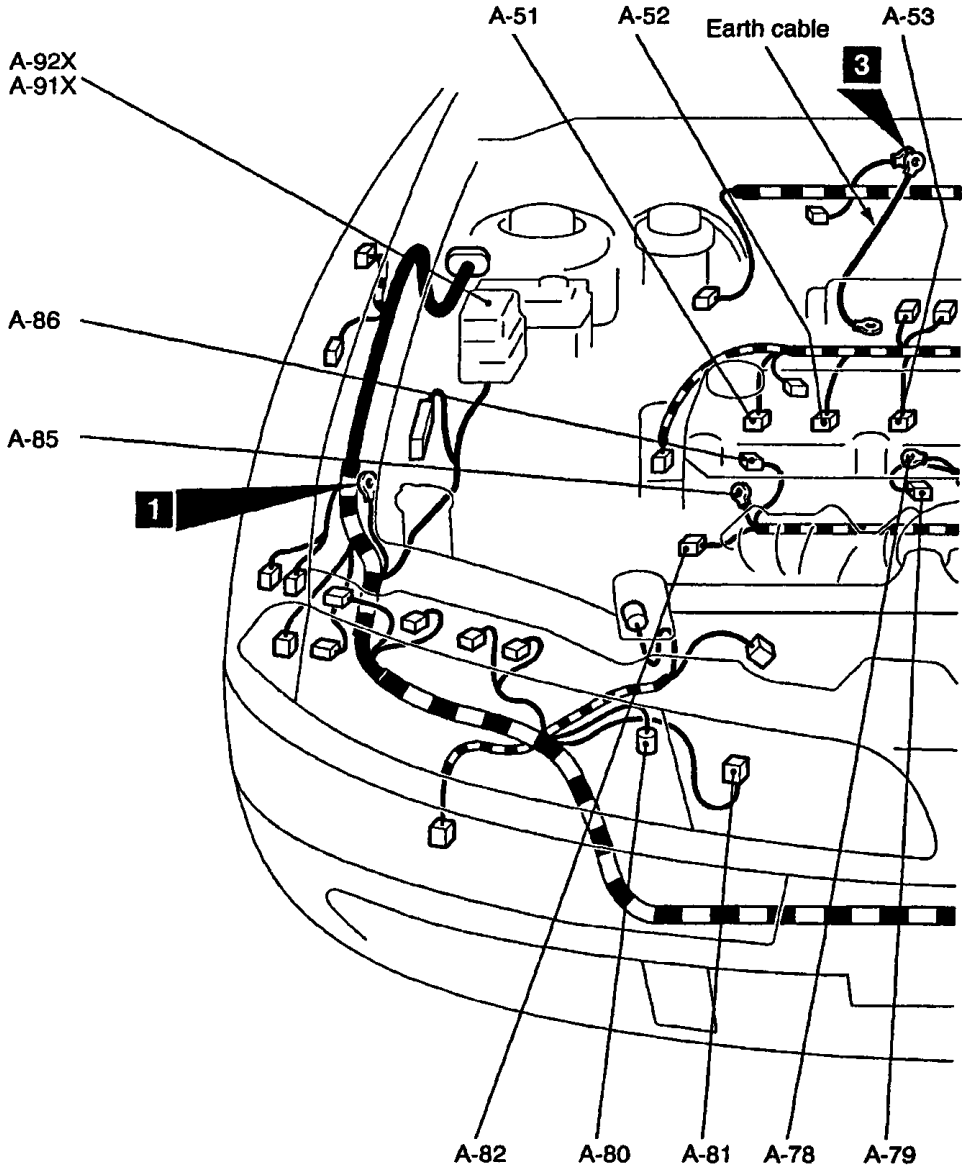

A-51 (2-GR)	Injector No. 1
A-52 (2-GR)	Injector No. 2
A-53 (2-GR)	Injector No. 3
A-54 (2-GR)	Injector No. 4
A-56 (4-B)	Throttle position sensor
A-57 (6-B)	Idle speed control servo
A-62X (4)	Alternator relay
A-63X (5)	Radiator fan relay
A-64X (5)	Headlamp relay
A-65X (5)	Headlamp washer relay
A-67X (5)	Horn relay
A-70 (3-B)	Headlamp leveling unit (LH)
A-71 (3-B)	Headlamp (LH)
A-72 (2-B)	Position lamp (LH)
A-75 (1-B)	Engine coolant temperature gauge unit
A-76 (2-B)	Engine coolant temperature sensor
A-77 (2-GR)	Detonation sensor
A-78 (1)	Starter

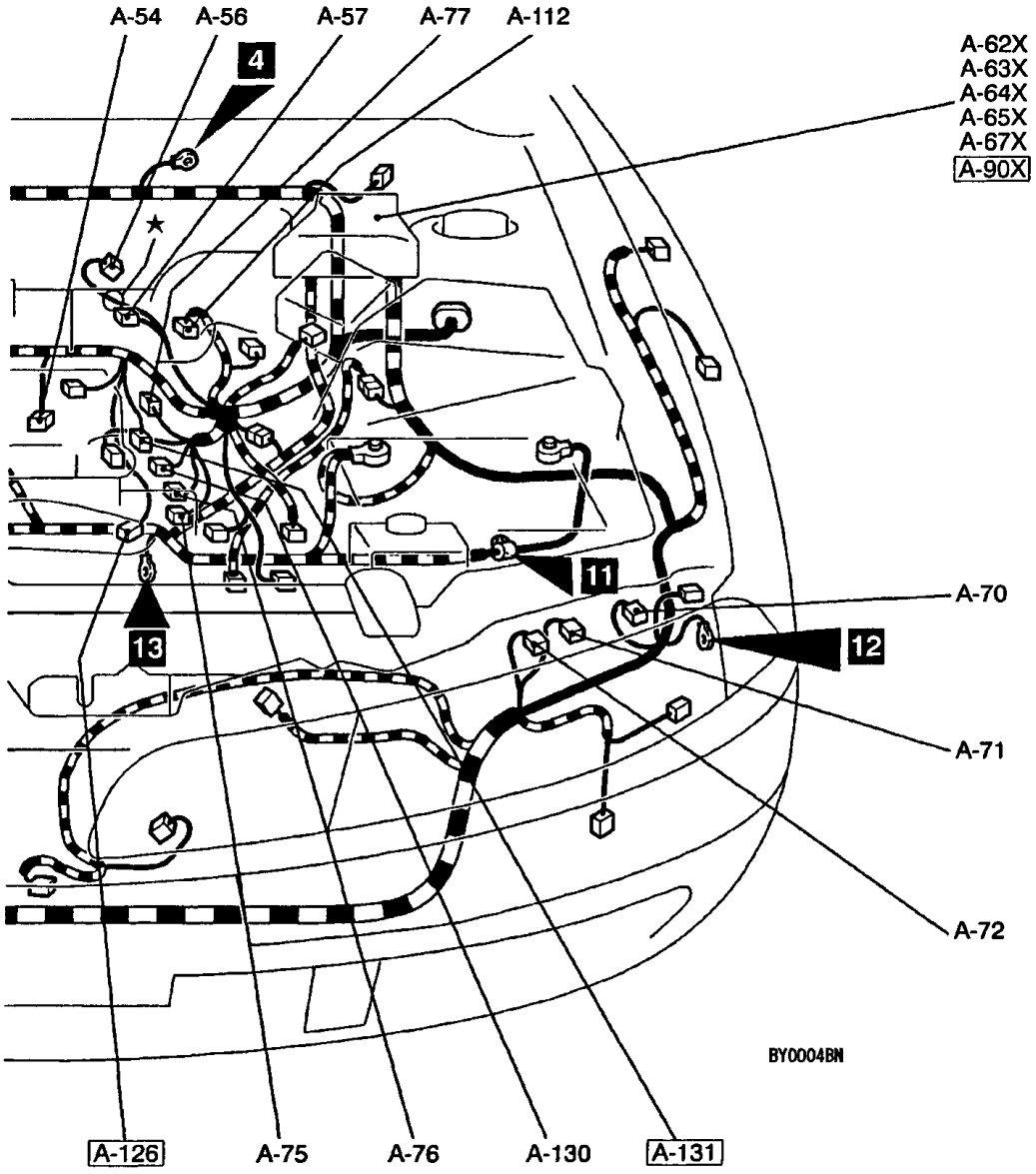

A-79 (1-B)	Starter
A-80 (2-BR)	Dual pressure switch
A-81 (1-B)	A/C refrigerant temperature switch and magnetic clutch
A-82 (1-B)	Oil pressure switch
A-85 (1)	Alternator
A-86 (2)	Alternator
A-90X (5)	Condenser fan relay (LO)
A-91X (5)	Condenser fan relay (HI)
A-92X (5)	A/C compressor relay
A-112 (3-B)	Vehicle speed sensor
A-126 (4-B)	Oxygen sensor (Front)
A-130 (1-B)	Capacitor
A-131 (4-B)	Ignition failure sensor

NOTE
Connector numbers in [ ] are connector numbers which have been changed or added.

ENGINE COMPARTMENT

GDI <L.H. drive vehicles>

Connector Symbol

A

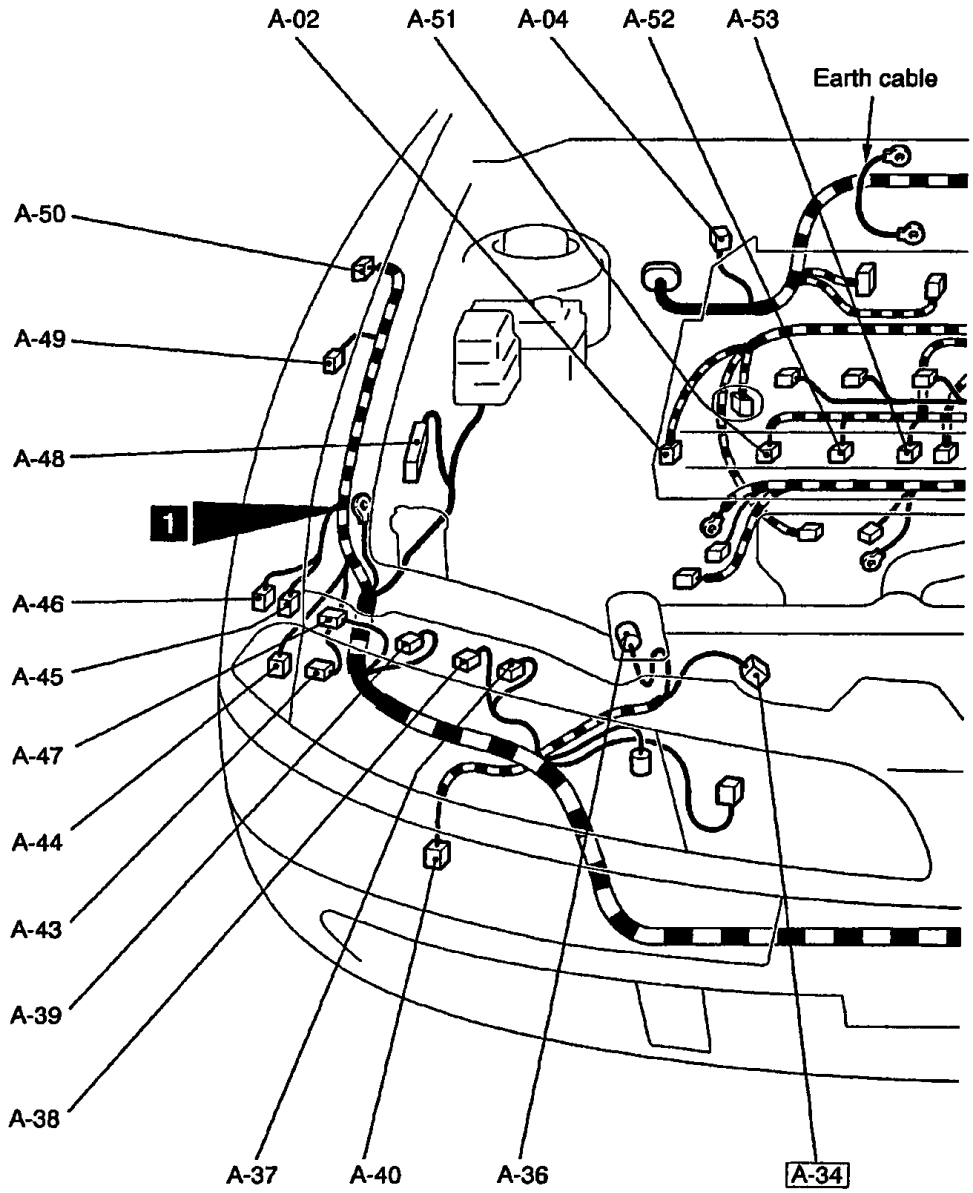

A-02 (3-GR)	Crank angle sensor
A-03 (3-B)	Camshaft position sensor
A-04 (5-B)	Windshield wiper motor
A-11 (1-L)	Engine speed detection connector
A-13 (2-B)	Brake fluid level sensor
A-14 (2-B)	Purge control solenoid valve
A-16 (12)	DRL-ECU
A-17 (4)	DRL relay 1
A-18 (4)	DRL relay 2
A-19 (2-B)	Side turn signal lamp (LH)
A-20 (7-B)	Air flow sensor
A-21 (2-B)	Front speed sensor (LH) <ABS>
A-22 (10-B)	Front wiring harness and control wiring harness combination
A-23 (6-B)	Control wiring harness and battery cable assembly combination
A-24 (2-B)	Front turn signal lamp (LH)
A-25 (2-B)	Horn (LO)
A-27 (2-GR)	Front fog lamp (LH)
A-28 (3-B)	Input shaft speed sensor <A/T>
A-29 (3-GR)	Output shaft speed sensor <A/T>
A-30 (10-GR)	ELC-4A/T control solenoid valve
A-31 (2-B)	Back-up lamp switch <M/T>
A-32 (2-B)	Radiator fan motor

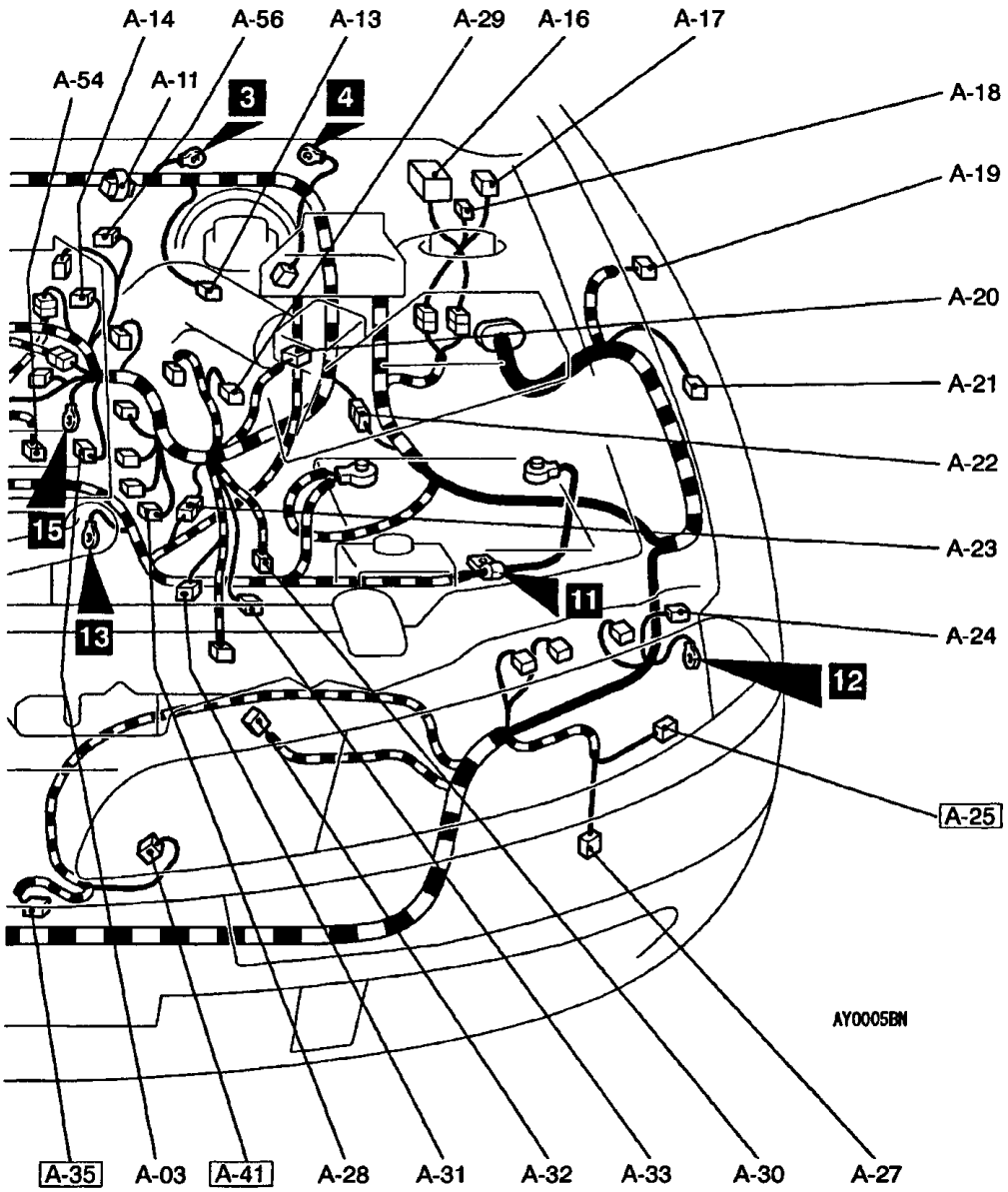

A-33 (10-B)	Inhibitor switch <A/T>
A-34 (4-GR)	Condenser fan motor
A-35 (2-BR)	Outside thermo sensor
A-36 (1)	Power steering oil pressure switch
A-37 (2-B)	Position lamp (RH)
A-38 (3-B)	Headlamp (RH)
A-39 (3-B)	Headlamp leveling unit (RH)
A-40 (2-GR)	Front fog lamp (RH)
A-41 (2-B)	Horn (HI)
A-43 (2-BR)	Washer fluid level sensor
A-44 (2)	Headlamp washer motor
A-45 (2)	Rear washer motor
A-46 (2)	Windshield washer motor
A-47 (2-B)	Front turn signal lamp (RH)
A-48 (31-B)	ABS-ECU
A-49 (2-B)	Front speed sensor (RH) <ABS>
A-50 (2-B)	Side turn signal lamp (RH)
A-51 (2-GR)	Injector No. 1
A-52 (2-GR)	Injector No. 2
A-53 (2-GR)	Injector No. 3
A-54 (2-GR)	Injector No. 4
A-56 (4-B)	Throttle position sensor

NOTE
Connector numbers in ☐ are connector numbers which have been changed or added.

GDI <L.H. drive vehicles>

Connector symbol

A

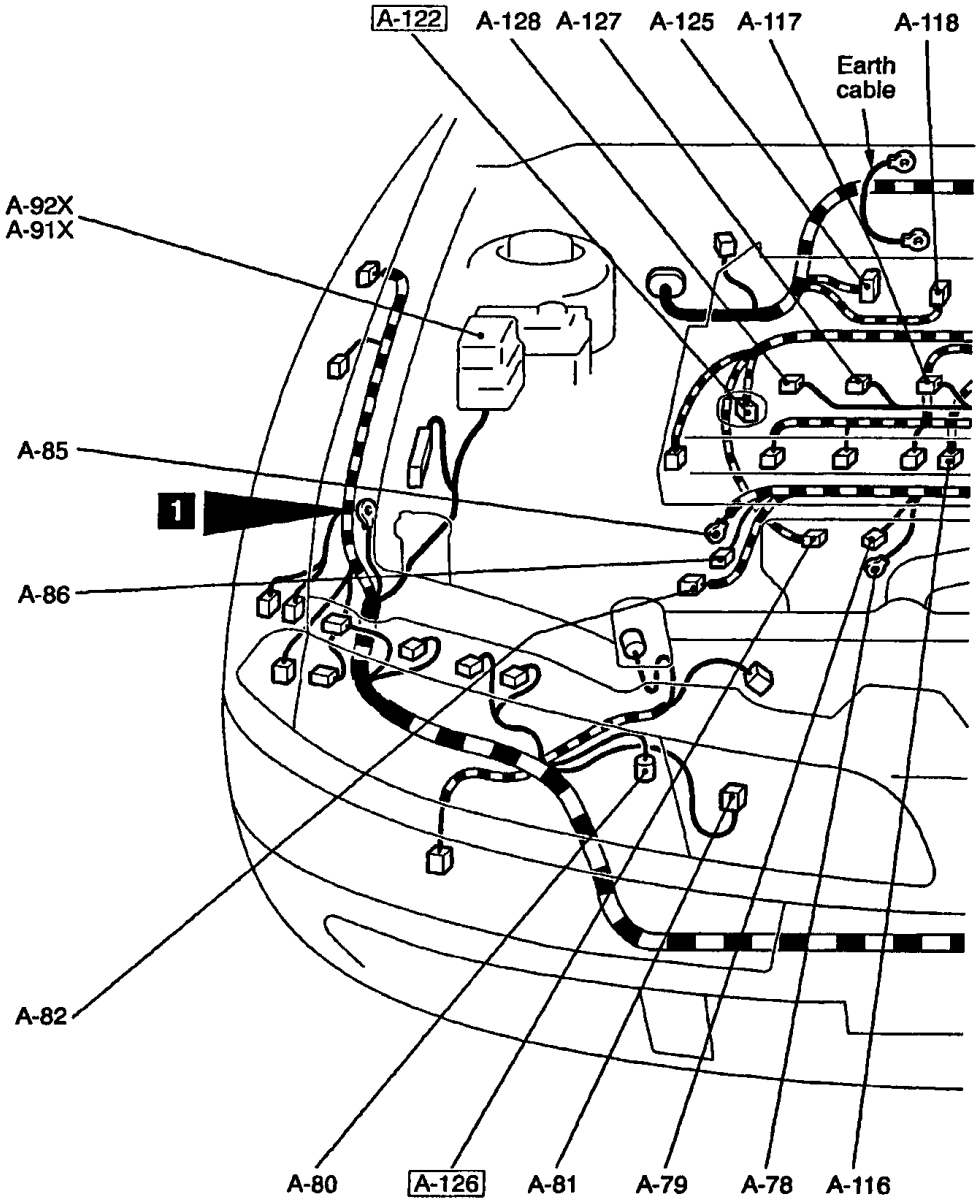

A-61X (5)	Tail lamp relay <DRL>
A-62X (4)	Alternator relay
A-63X (5)	Radiator fan relay
A-64X (5)	Headlamp relay
A-65X (5)	Headlamp washer relay
A-67X (5)	Horn relay
A-68 (10-B)	Front wiring harness and DRL wiring harness combination
A-69 (10-B)	Front wiring harness and DRL wiring harness combination
A-70 (3-B)	Headlamp leveling unit (LH)
A-71 (3-B)	Headlamp (LH)
A-72 (2-B)	Position lamp (LH)
A-75 (1-B)	Engine coolant temperature gauge unit
A-76 (2-B)	Engine coolant temperature sensor
A-77 (2-GR)	Detonation sensor
A-78 (1)	Starter
A-79 (1-B)	Starter
A-80 (2-BR)	Dual pressure switch
A-81 (1-B)	A/C refrigerant temperature switch and magnetic clutch
A-82 (1-B)	Oil pressure switch
A-85 (1)	Alternator
A-86 (4-DG)	Alternator

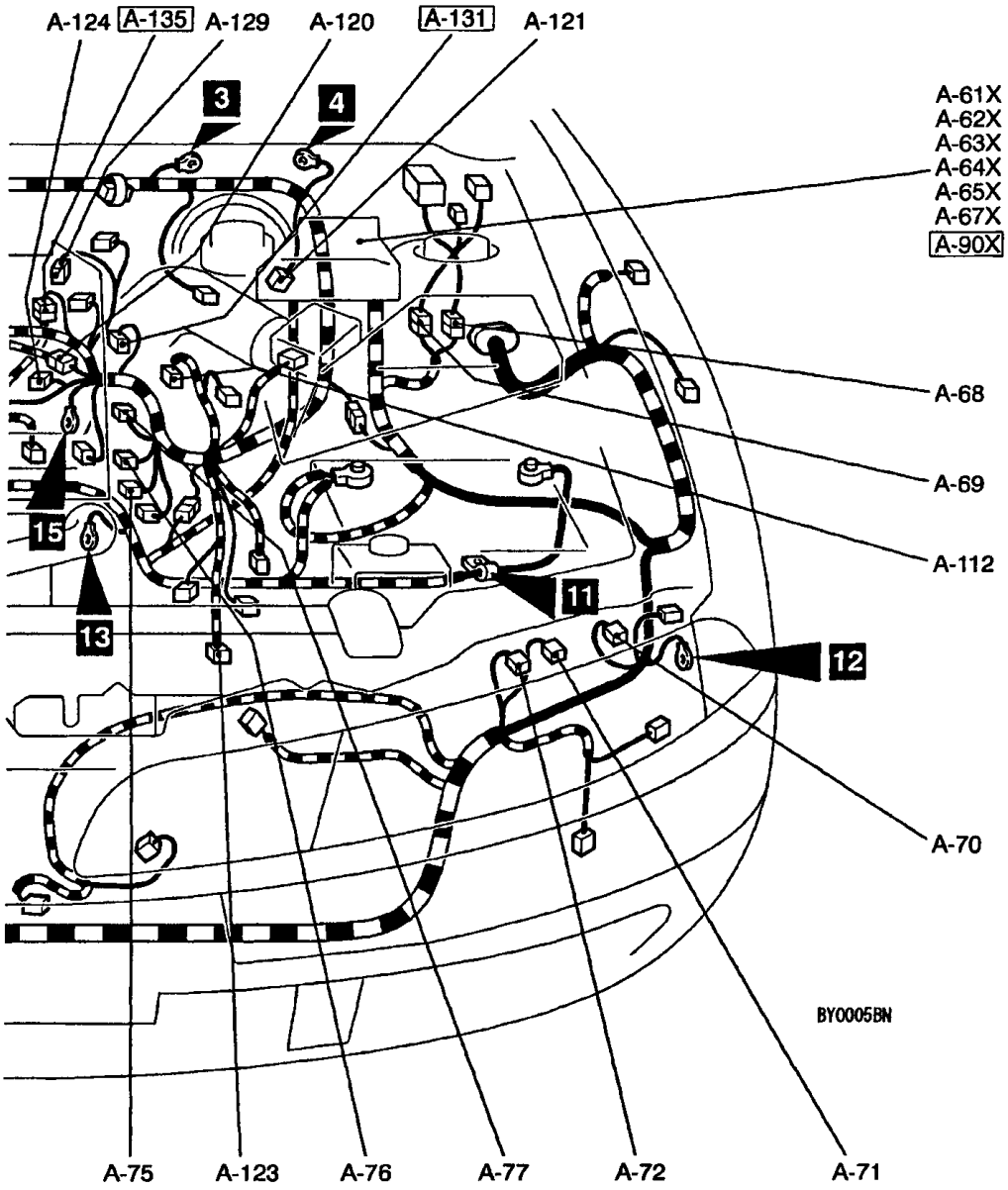

A-90X (5)	Condenser fan relay (LO)
A-91X (5)	Condenser fan relay (HI)
A-92X (5)	A/C compressor relay
A-112 (3-B)	Vehicle speed sensor
A-116 (6-DG)	EGR servo
A-117 (26-B)	Injector driver
A-118 (4-GR)	Injector driver control relay
A-120 (8-B)	Control wiring harness and injector wiring harness combination
A-121 (3-B)	Brake vacuum sensor
A-122 (3-B)	Fuel pressure sensor
A-123 (2-GR)	M/T oil temperature sensor
A-124 (3-GR)	Ignition coil 4
A-125 (3-GR)	Ignition coil 3
A-126 (4-B)	Oxygen sensor (Front)
A-127 (3-GR)	Ignition coil 2
A-128 (3-GR)	Ignition coil 1
A-129 (4-DG)	Throttle control servo
A-131 (4-B)	Ignition failure sensor
A-135 (6-B)	EGR wiring harness and control wiring harness combination

NOTE
Connector numbers in ☐ are connector numbers which have been changed or added.

ENGINE COMPARTMENT

GDI <R.H. drive vehicles>

Connector Symbol

A

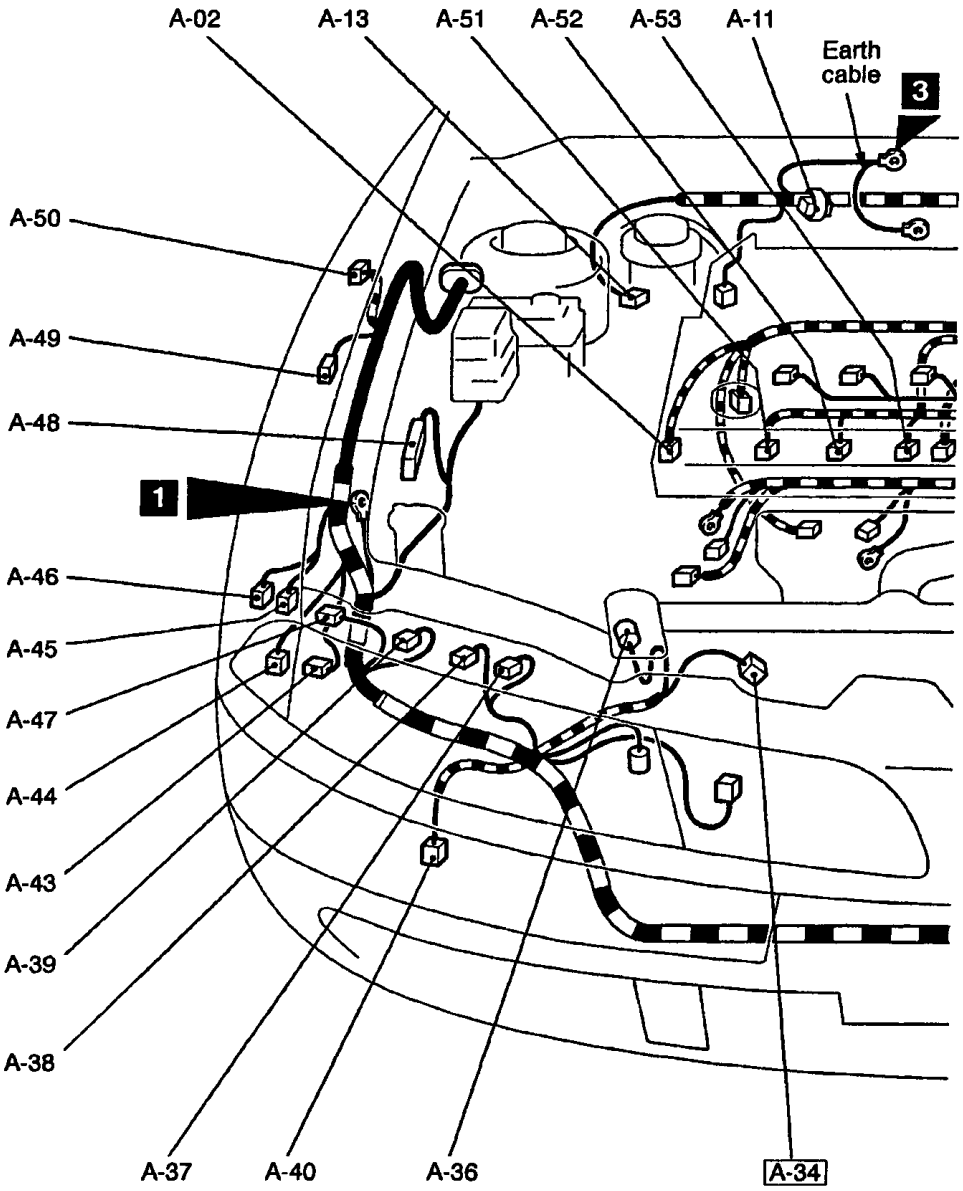

A-02 (3-GR)	Crank angle sensor
A-03 (3-B)	Camshaft position sensor
A-04 (5-B)	Windshield wiper motor
A-11 (1-L)	Engine speed detection connector
A-13 (2-B)	Brake fluid level sensor
A-14 (2-B)	Purge control solenoid valve
A-19 (2-B)	Side turn signal lamp (LH)
A-20 (7-B)	Air flow sensor
A-21 (2-B)	Front speed sensor (LH) <ABS>
A-22 (10-B)	Front wiring harness and control wiring harness combination
A-23 (6-B)	Control wiring harness and battery cable assembly combination
A-24 (2-B)	Front turn signal lamp (LH)
A-25 (2-B)	Horn (LO)
A-27 (2-GR)	Front fog lamp (LH)
A-28 (3-B)	Input shaft speed sensor <A/T>
A-29 (3-GR)	Output shaft speed sensor <A/T>
A-30 (10-GR)	ELC-4A/T control solenoid valve
A-31 (2-B)	Back-up lamp switch <M/T>
A-32 (2-B)	Radiator fan motor
A-33 (10-B)	Inhibitor switch <A/T>
A-34 (4-GR)	Condenser fan motor

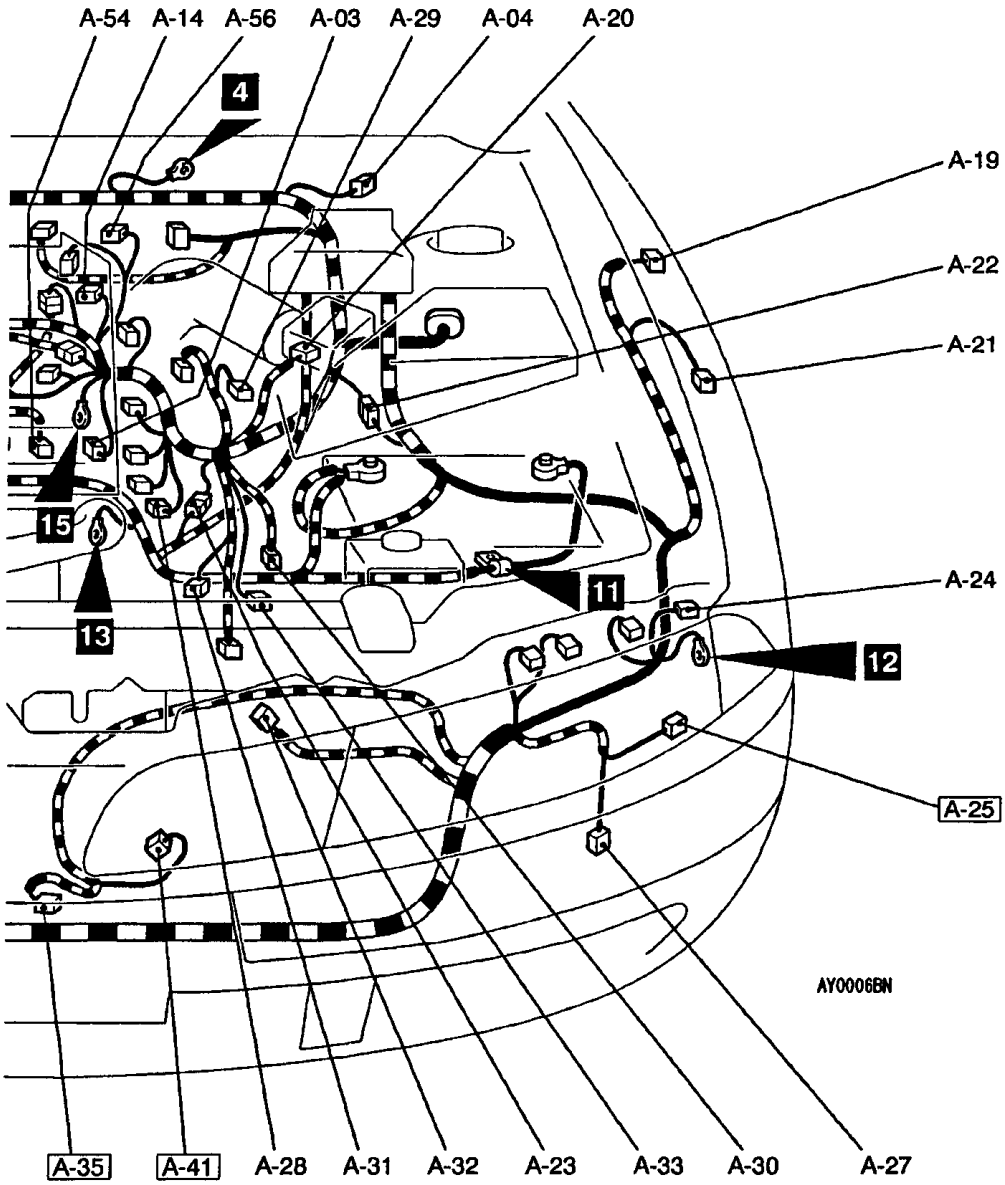

A-35 (2-BR)	Outside thermo sensor
A-36 (1)	Power steering oil pressure switch
A-37 (2-B)	Position lamp (RH)
A-38 (3-B)	Headlamp (RH)
A-39 (3-B)	Headlamp leveling unit (RH)
A-40 (2-GR)	Front fog lamp (RH)
A-41 (2-B)	Horn (HI)
A-43 (2-BR)	Washer fluid level sensor
A-44 (2)	Headlamp washer motor
A-45 (2)	Rear washer motor
A-46 (2)	Windshield washer motor
A-47 (2-B)	Front turn signal lamp (RH)
A-48 (31-B)	ABS-ECU
A-49 (2-B)	Front speed sensor (RH) <ABS>
A-50 (2-B)	Side turn signal lamp (RH)
A-51 (2-GR)	Injector No. 1
A-52 (2-GR)	Injector No. 2
A-53 (2-GR)	Injector No. 3
A-54 (2-GR)	Injector No. 4
A-56 (4-B)	Throttle position sensor

NOTE
Connector numbers in ☐ are connector numbers which have been changed or added.

GDI <R.H. drive vehicles>

Connector Symbol

A

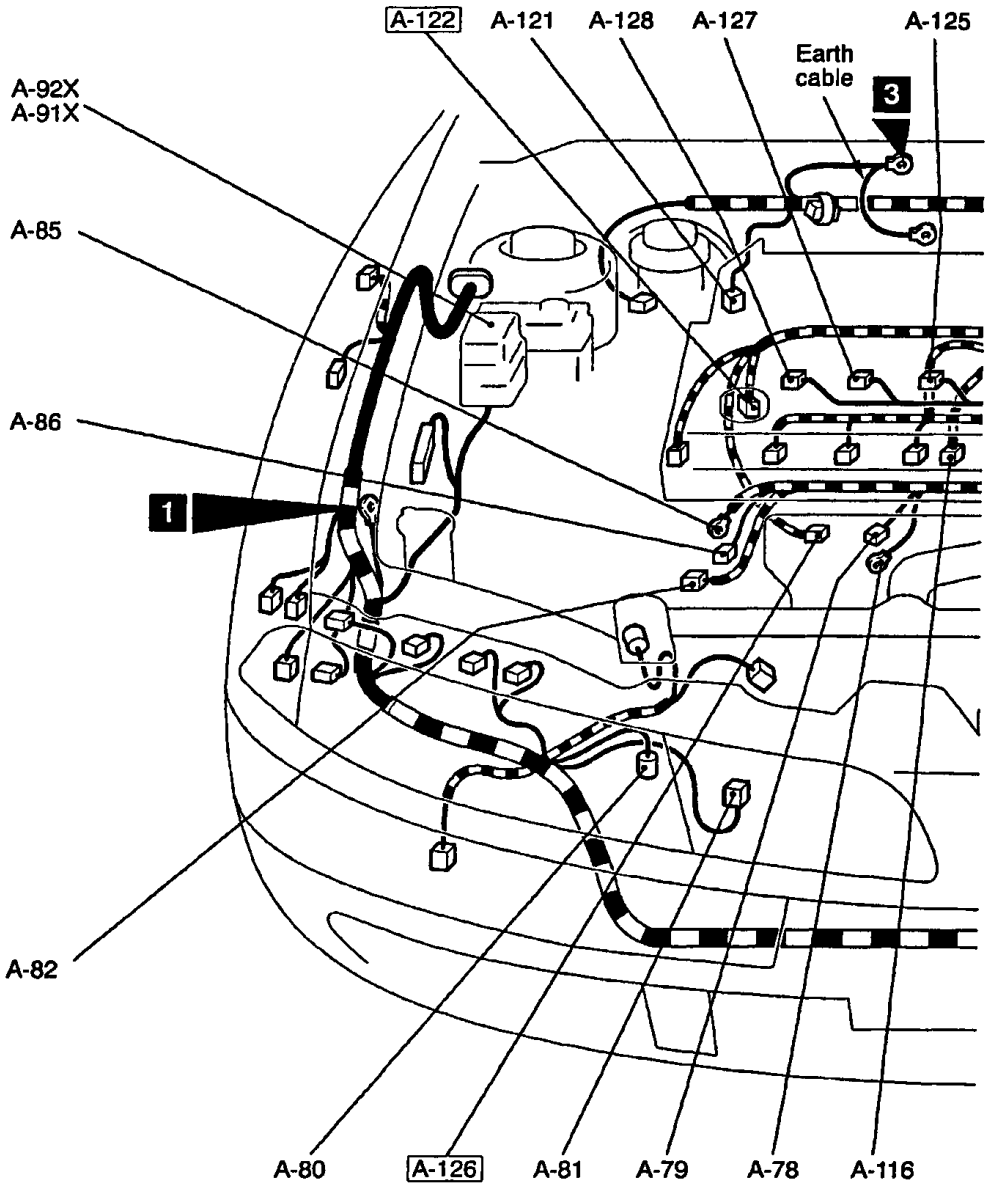

A-62X (4)	Alternator relay
A-63X (5)	Radiator fan relay
A-64X (5)	Headlamp relay
A-65X (5)	Headlamp washer relay
A-67X (5)	Horn relay
A-70 (3-B)	Headlamp leveling unit (LH)
A-71 (3-B)	Headlamp (LH)
A-72 (2-B)	Position lamp (LH)
A-75 (1-B)	Engine coolant temperature gauge unit
A-76 (2-B)	Engine coolant temperature sensor
A-77 (2-GR)	Detonation sensor
A-78 (1)	Starter
A-79 (1-B)	Starter
A-80 (2-BR)	Dual pressure switch
A-81 (1-B)	A/C refrigerant temperature switch and magnetic clutch
A-82 (1-B)	Oil pressure switch
A-85 (1)	Alternator
A-86 (4-DG)	Alternator
A-90X (5)	Condenser fan relay (LO)
A-91X (5)	Condenser fan relay (HI)
A-92X (5)	A/C compressor relay

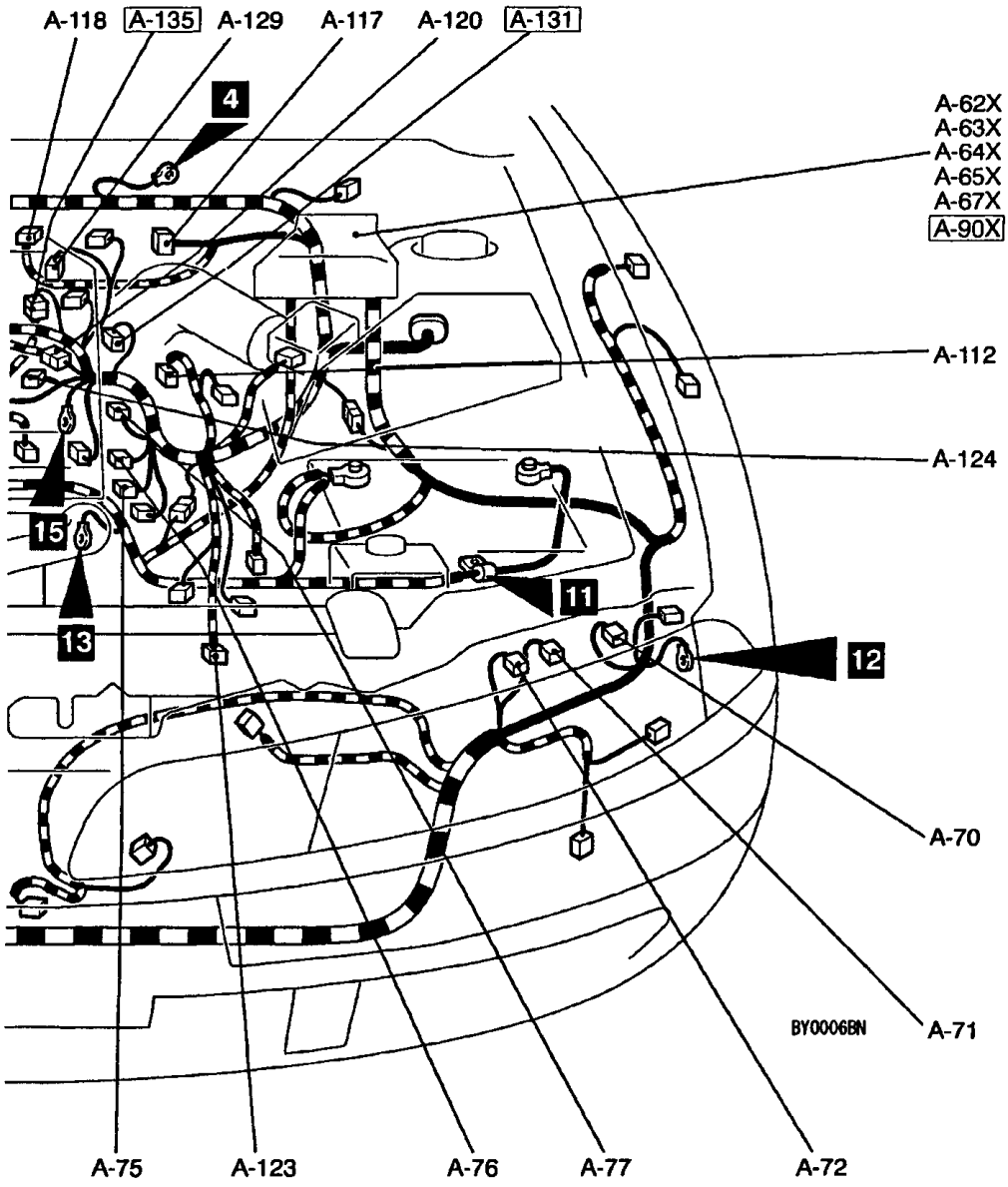

A-112 (3-B)	Vehicle speed sensor
A-116 (6-DG)	EGR servo
A-117 (26-B)	Injector driver
A-118 (4-GR)	Injector driver control relay
A-120 (8-B)	Control wiring harness and injector wiring harness combination
A-121 (3-B)	Brake vacuum sensor
A-122 (3-B)	Fuel pressure sensor
A-123 (2-GR)	M/T oil temperature sensor
A-124 (3-GR)	Ignition coil 4
A-125 (3-GR)	Ignition coil 3
A-126 (4-B)	Oxygen sensor (Front)
A-127 (3-GR)	Ignition coil 2
A-128 (3-GR)	Ignition coil 1
A-129 (4-DG)	Throttle control servo
A-131 (4-B)	Ignition failure sensor
A-135 (6-B)	EGR wiring harness and control wiring harness combination

NOTE
Connector numbers in [ ] are connector numbers which have been changed or added.

ENGINE COMPARTMENT

Diesel <F9Q-L.H. drive vehicles>

Connector Symbol

A

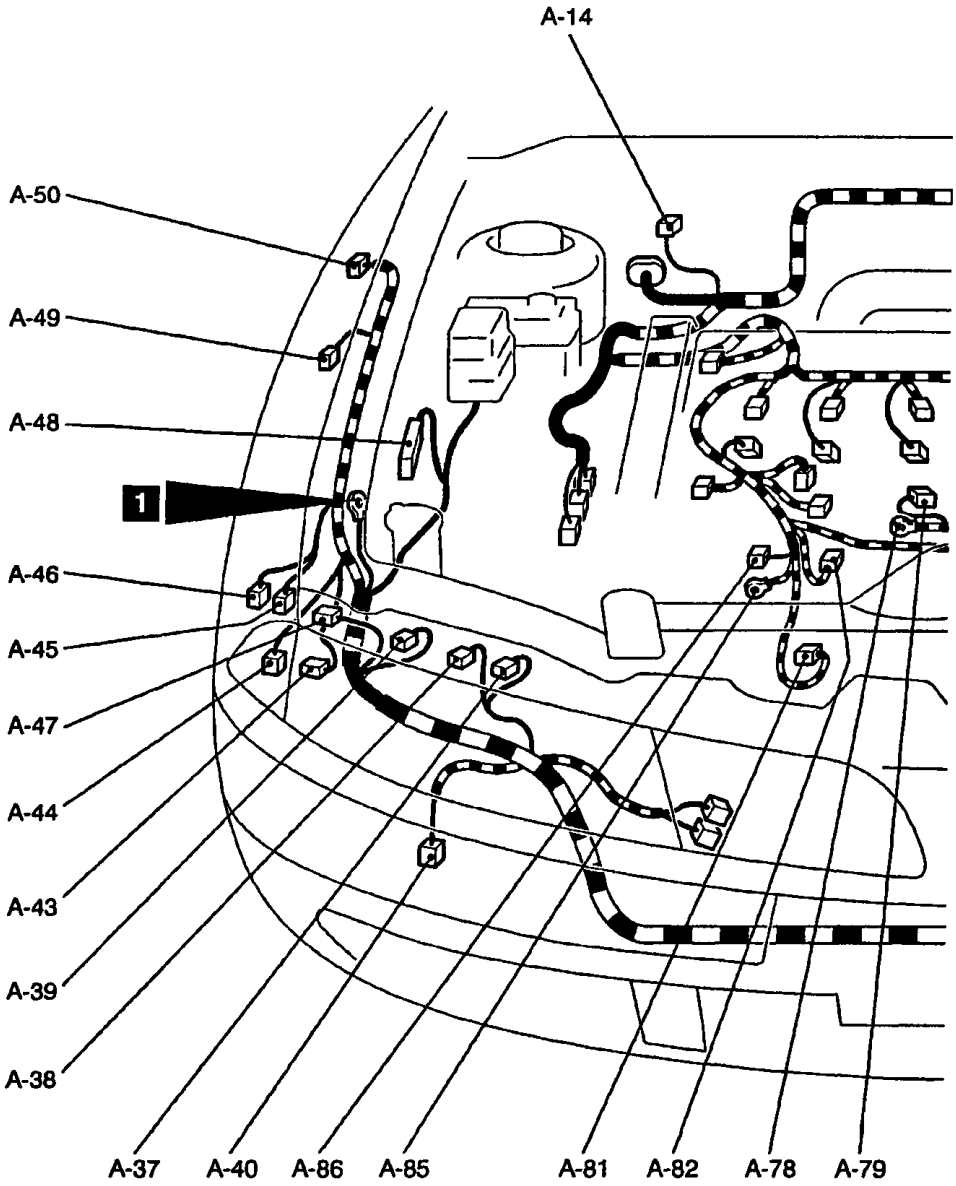

A-04 (5-B)	Windshield wiper motor
A-13 (2-B)	Brake fluid level sensor
A-16 (12)	DRL-ECU
A-17 (4)	DRL relay 1
A-18 (4)	DRL relay 2
A-19 (2-B)	Side turn signal lamp (LH)
A-21 (2-B)	Front speed sensor (LH) <ABS>
A-22 (12-B)	Front wiring harness and control wiring harness combination
A-24 (2-B)	Front turn signal lamp (LH)
A-25 (2-B)	Horn (LO)
A-27 (2-GR)	Front fog lamp (LH)
A-31 (2-B)	Back-up lamp switch
A-32 (4-DG)	Radiator fan motor
A-35 (2-BR)	Outside thermo sensor
A-37 (2-B)	Position lamp (RH)
A-38 (3-B)	Headlamp (RH)
A-39 (3-B)	Headlamp leveling unit (RH)
A-40 (2-GR)	Front fog lamp (RH)
A-41 (2-B)	Horn (HI)
A-43 (2-BR)	Washer fluid level sensor
A-44 (2)	Headlamp washer motor
A-45 (2)	Rear washer motor
A-46 (2)	Windshield washer motor
A-47 (2-B)	Front turn signal lamp (RH)
A-48 (31-B)	ABS-ECU

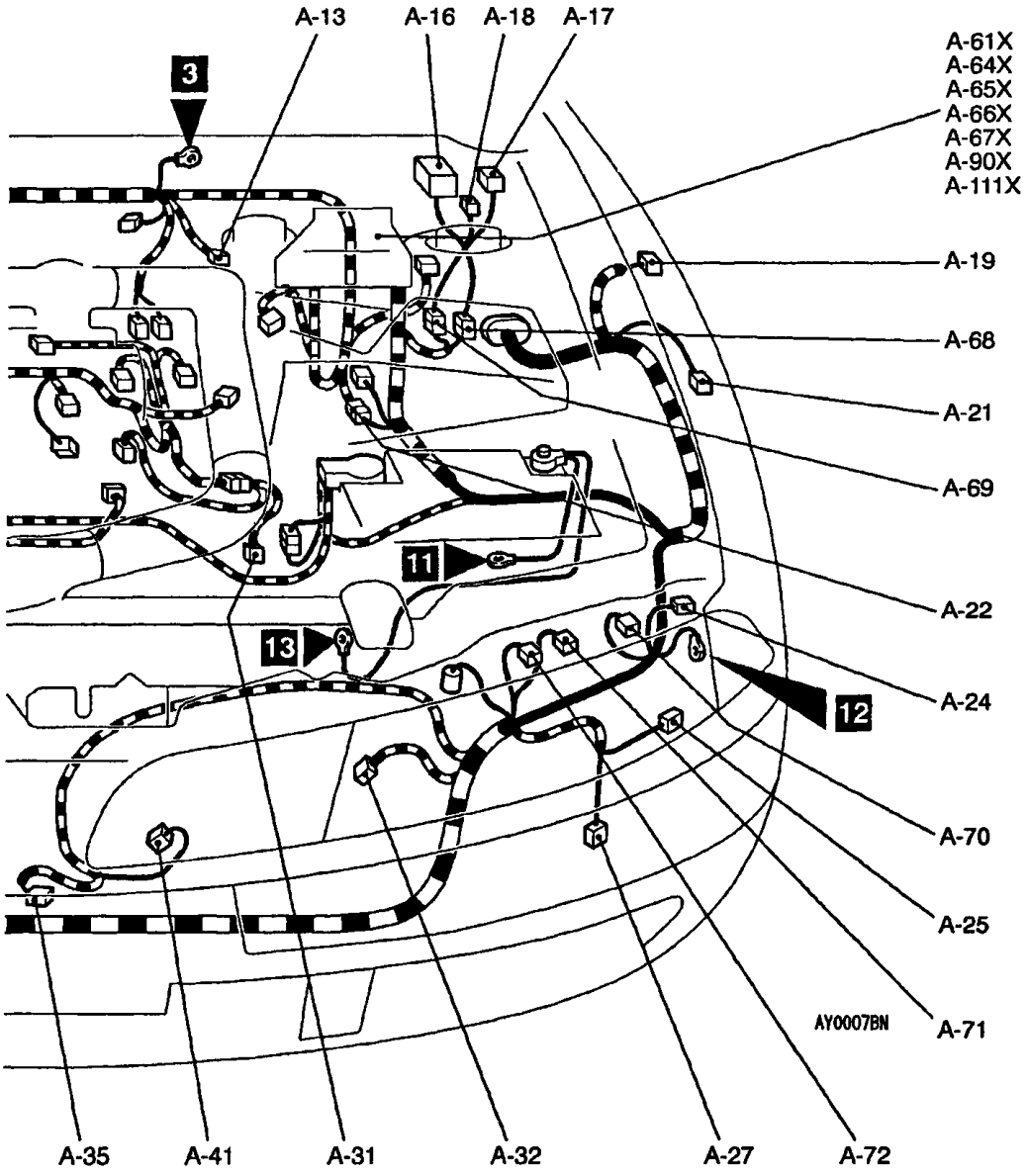

A-49 (2-B)	Front speed sensor (RH) <ABS>
A-50 (2-B)	Side turn signal lamp (RH)
A-61X (5)	Tail lamp relay <DRL>
A-64X (5)	Headlamp relay
A-65X (5)	Headlamp washer relay
A-66X (5)	Fuel line heater relay
A-67X (5)	Horn relay
A-68 (10-B)	Front wiring harness and DRL wiring harness combination
A-69 (10-B)	Front wiring harness and DRL wiring harness combination
A-70 (3-B)	Headlamp leveling unit (LH)
A-71 (3-B)	Headlamp (LH)
A-72 (2-B)	Position lamp (LH)
A-78 (1)	Starter
A-79 (1)	Starter
A-81 (1-B)	A/C refrigerant temperature switch and magnetic clutch
A-82 (1)	Oil pressure switch
A-85 (1)	Alternator
A-86 (2-B)	Alternator
A-90X (5)	Condenser fan relay (LO)
A-111X (5)	Radiator fan relay

Diesel <F9Q-L.H. drive vehicles>

Connector Symbol

A

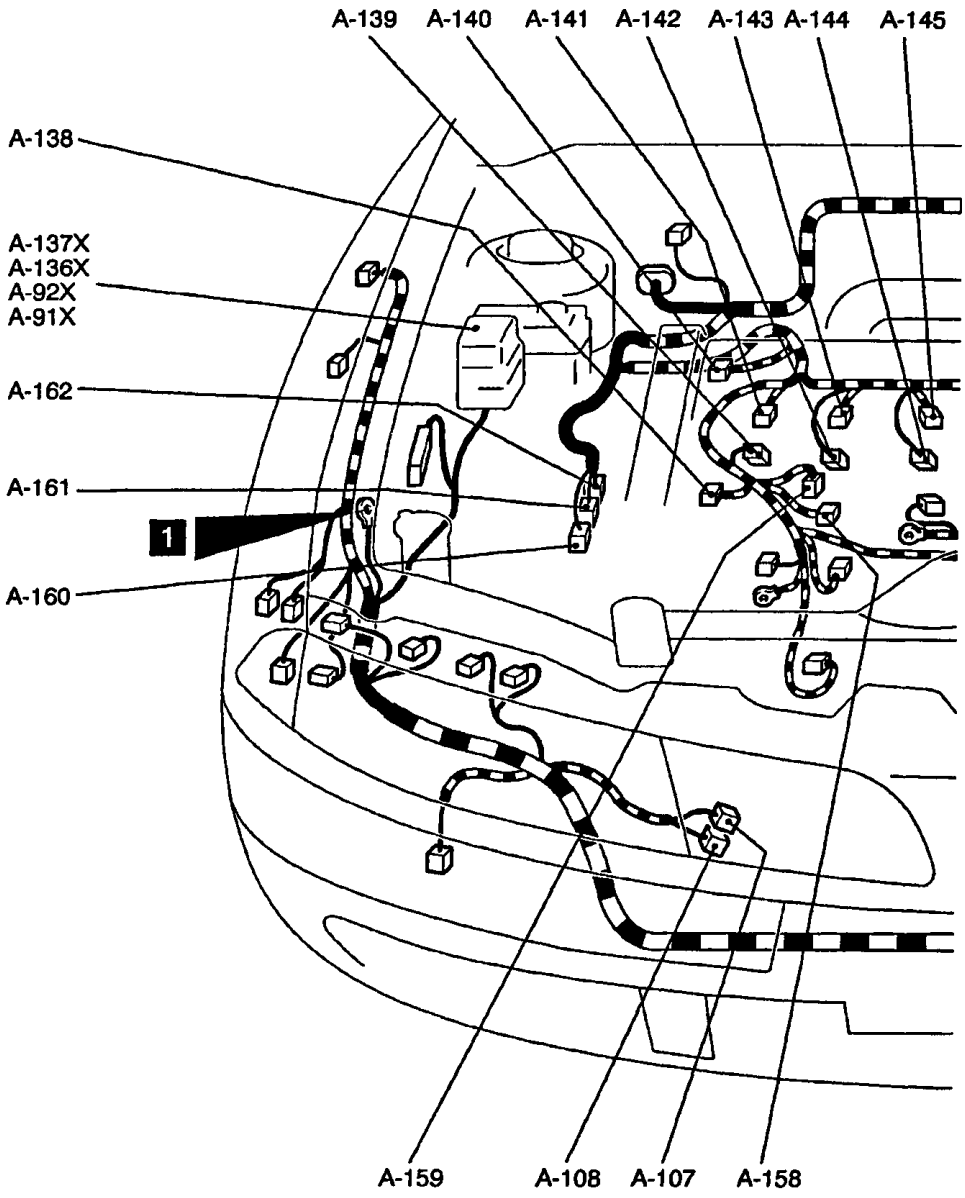

A-91X (5)	Condenser fan relay (HI)
A-92X (5)	A/C compressor relay
A-98 (6)	EGR solenoid valve
A-103 (2-B)	Fuel line heater
A-104 (4-BR)	Engine coolant temperature gauge unit
A-105 (2-B)	Top dead center and engine speed sensor
A-107 (2-B)	Condenser fan motor
A-108 (2-GR)	Condenser fan motor
A-112 (3-B)	Vehicle speed sensor
A-136X (5)	Additional heater relay 1
A-137X (5)	Additional heater relay 2
A-138 (2-B)	High pressure pump
A-139 (1)	Glow plug 4
A-140 (3-B)	Advance actuator
A-141 (2-B)	Injector 4
A-142 (1)	Glow plug 3
A-143 (2-B)	Injector 3
A-144 (1)	Glow plug 2
A-145 (2-B)	Injector 2

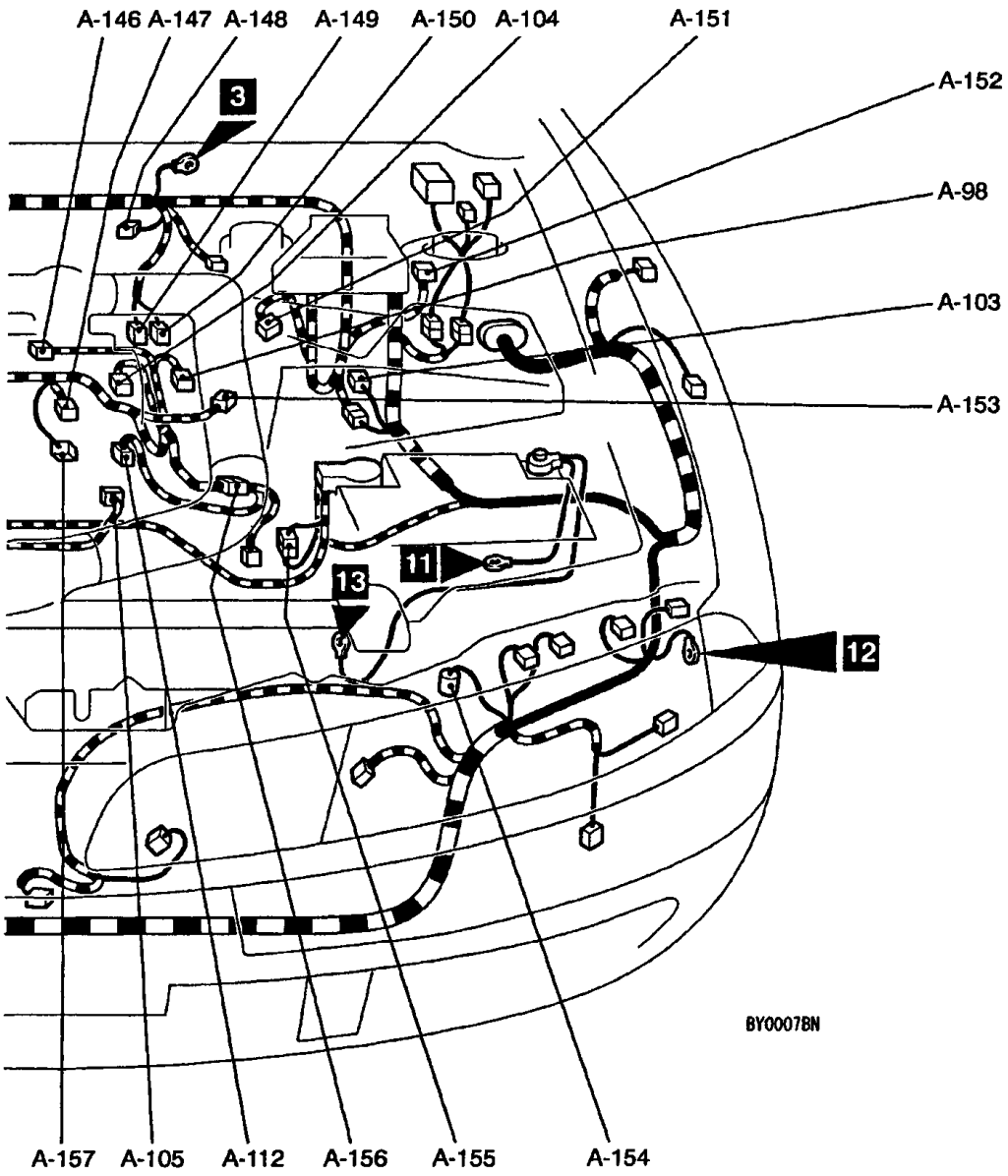

A-146 (2-B)	Throttle solenoid valve
A-147 (2-B)	Injector 1
A-148 (2-B)	Turbo charger solenoid valve
A-149 (1)	Additional heater 1
A-150 (1)	Additional heater 2
A-151 (6-B)	Air flow sensor
A-152 (8-B)	Glow plug relay box
A-153 (3-GR)	Boost sensor
A-154 (4)	Triple pressure switch
A-155 (1-B)	Front wiring harness and battery cable assembly combination
A-156 (4-DG)	Control wiring harness and sensor wiring harness combination
A-157 (1)	Glow plug 1
A-158 (2-GR)	Fuel temperature sensor
A-159 (3-B)	Rail pressure sensor
A-160 (48-B)	Engine-ECU
A-161 (48-BR)	Engine-ECU
A-162 (32-GR)	Engine-ECU

ENGINE COMPARTMENT

Diesel <F9Q-R.H. drive vehicles>

Connector Symbol

A

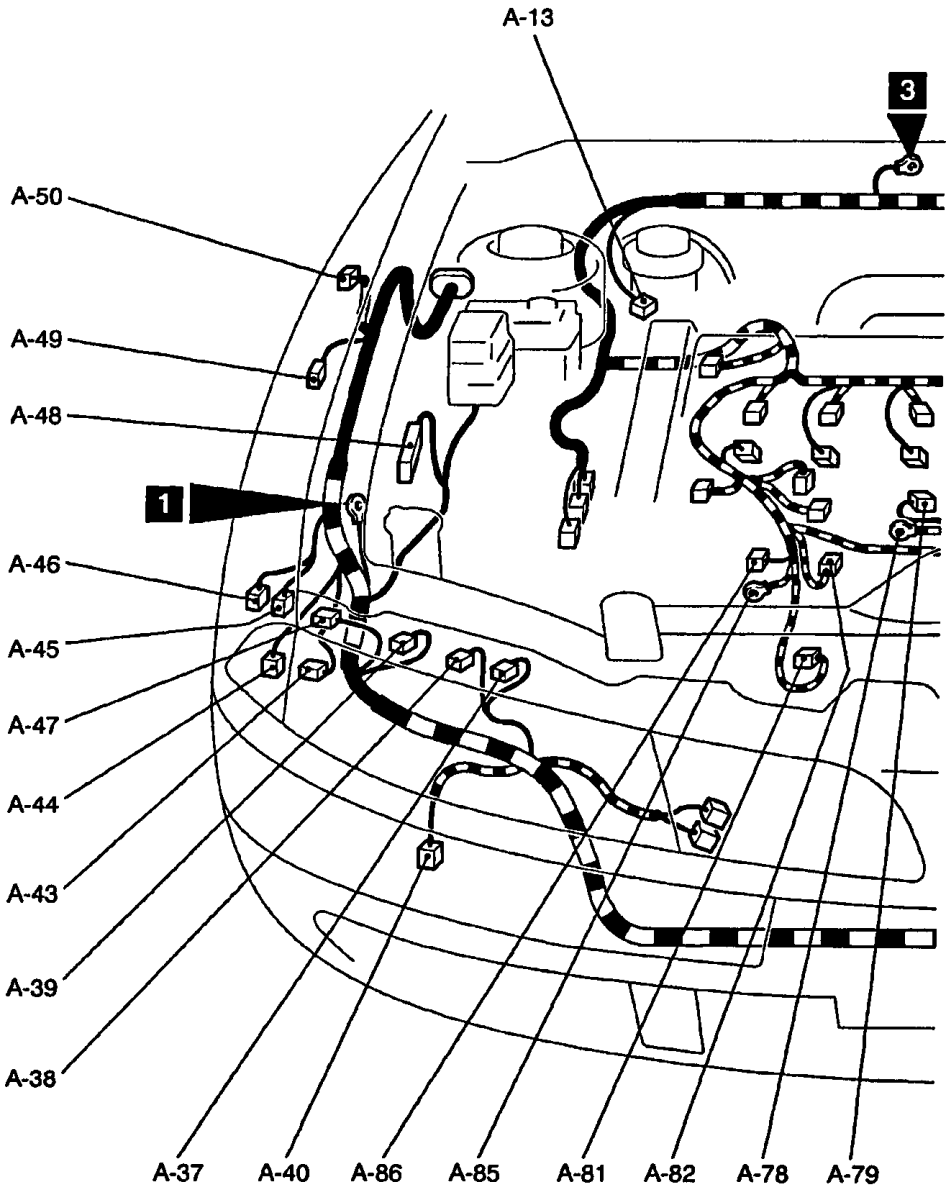

A-04 (5-B)	Windshield wiper motor
A-13 (2-B)	Brake fluid level sensor
A-19 (2-B)	Side turn signal lamp (LH)
A-21 (2-B)	Front speed sensor (LH) <ABS>
A-22 (12-B)	Front wiring harness and control wiring harness combination
A-24 (2-B)	Front turn signal lamp (LH)
A-25 (2-B)	Horn (LO)
A-27 (2-GR)	Front fog lamp (LH)
A-31 (2-B)	Back-up lamp switch
A-32 (4-DG)	Radiator fan motor
A-35 (2-BR)	Outside thermo sensor
A-37 (2-B)	Position lamp (RH)
A-38 (3-B)	Headlamp (RH)
A-39 (3-B)	Headlamp leveling unit (RH)
A-40 (2-GR)	Front fog lamp (RH)
A-41 (2-B)	Horn (HI)
A-43 (2-BR)	Washer fluid level sensor
A-44 (2)	Headlamp washer motor
A-45 (2)	Rear washer motor
A-46 (2)	Windshield washer motor
A-47 (2-B)	Front turn signal lamp (RH)

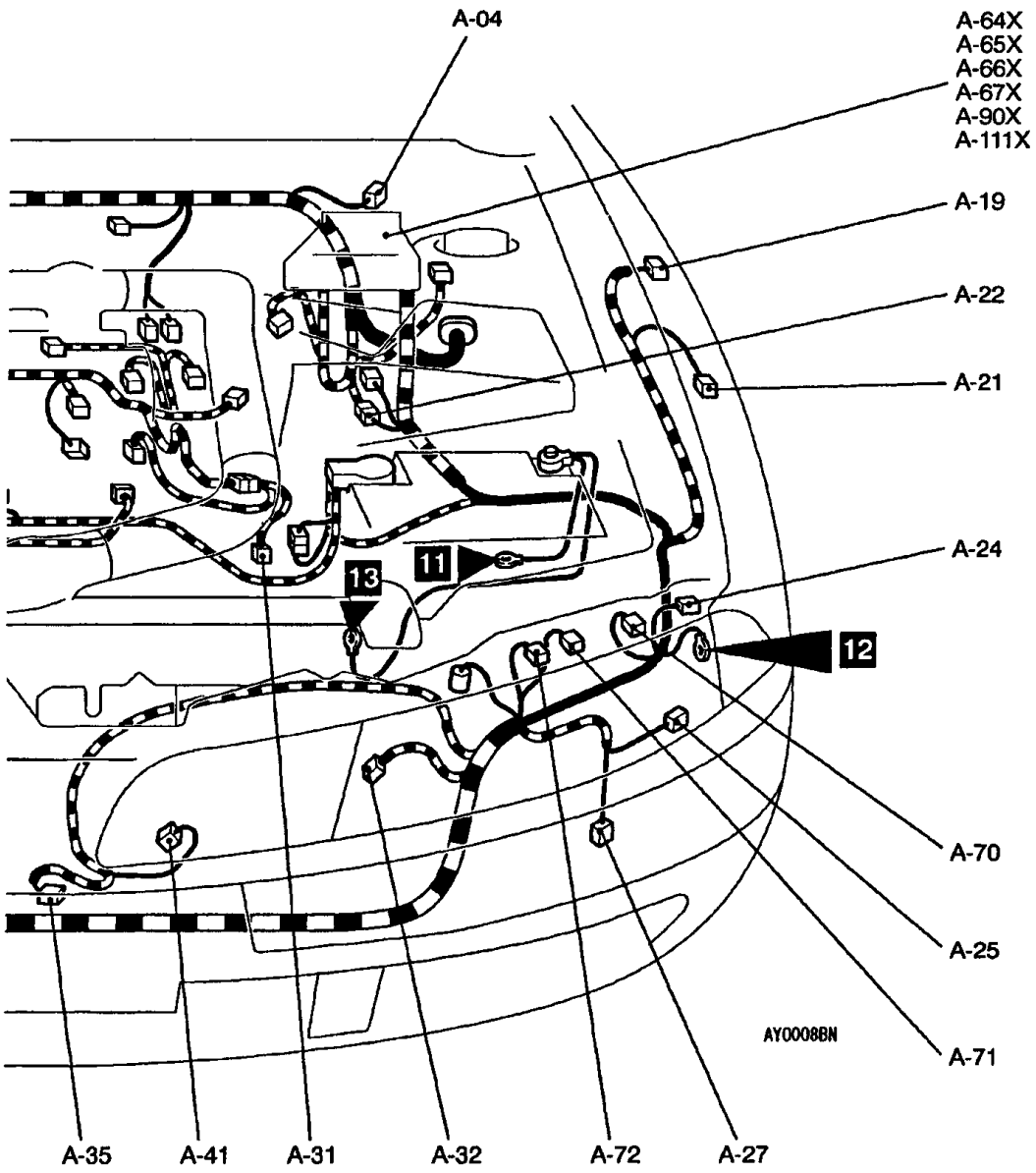

A-48 (31-B)	ABS-ECU
A-49 (2-B)	Front speed sensor (RH) <ABS>
A-50 (2-B)	Side turn signal lamp (RH)
A-64X (5)	Headlamp relay
A-65X (5)	Headlamp washer relay
A-66X (5)	Fuel line heater relay
A-67X (5)	Horn relay
A-70 (3-B)	Headlamp leveling unit (LH)
A-71 (3-B)	Headlamp (LH)
A-72 (2-B)	Position lamp (LH)
A-78 (1)	Starter
A-79 (1)	Starter
A-81 (1-B)	A/C refrigerant temperature switch and magnetic clutch
A-82 (1)	Oil pressure switch
A-85 (1)	Alternator
A-86 (2-B)	Alternator
A-90X (5)	Condenser fan relay (LO)
A-111X (5)	Radiator fan relay

Diesel <F9Q-R.H. drive vehicles>

Connector Symbol

A

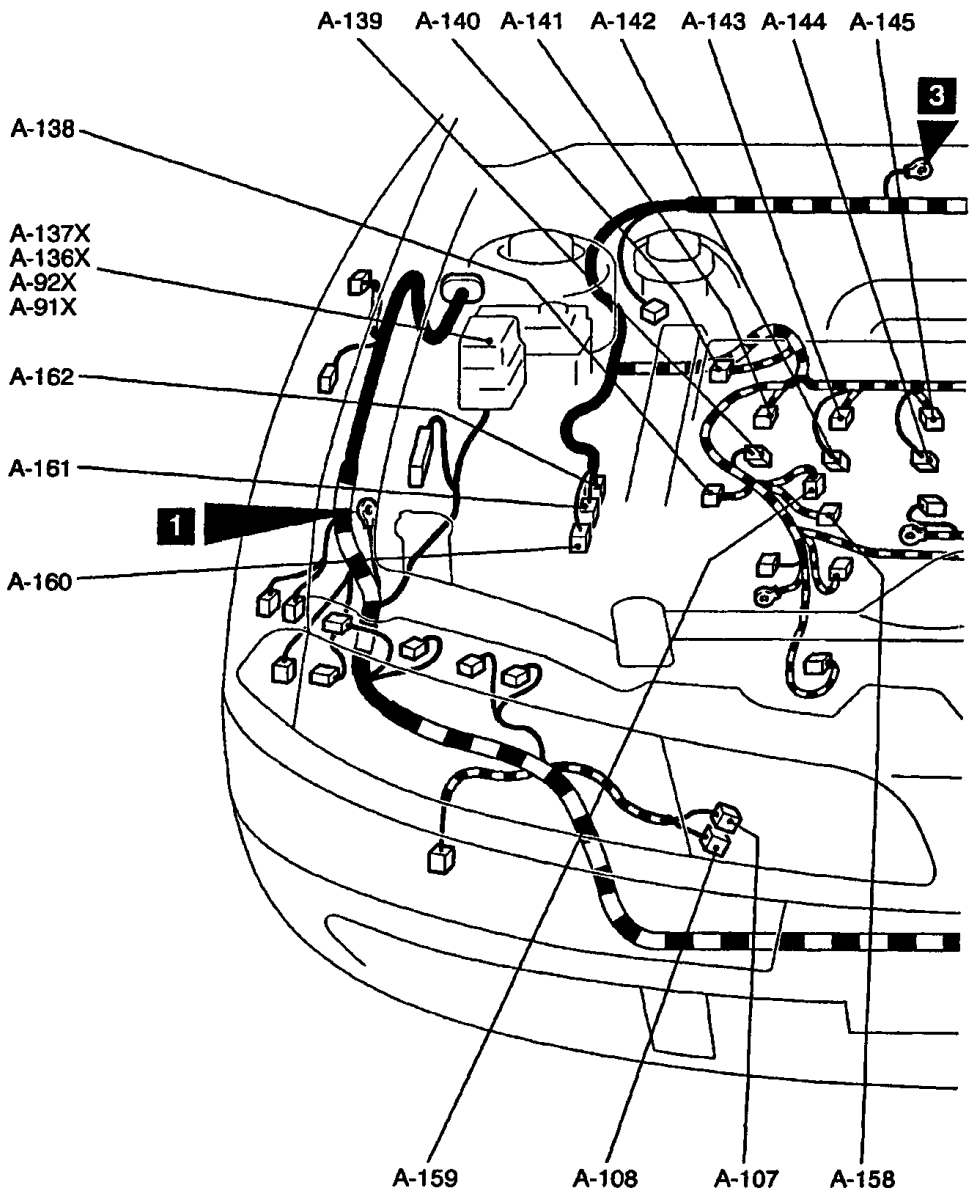

A-91X (5)	Condenser fan relay (HI)
A-92X (5)	A/C compressor relay
A-98 (6)	EGR solenoid valve
A-103 (2-B)	Fuel line heater
A-104 (4-BR)	Engine coolant temperature gauge unit
A-105 (2-B)	Top dead center and engine speed sensor
A-107 (2-B)	Condenser fan motor
A-108 (2-GR)	Condenser fan motor
A-112 (3-B)	Vehicle speed sensor
A-136X (5)	Additional heater relay 1
A-137X (5)	Additional heater relay 2
A-138 (2-B)	High pressure pump
A-139 (1)	Glow plug 4
A-140 (3-B)	Advance actuator
A-141 (2-B)	Injector 4
A-142 (1)	Glow plug 3
A-143 (2-B)	Injector 3
A-144 (1)	Glow plug 2
A-145 (2-B)	Injector 2

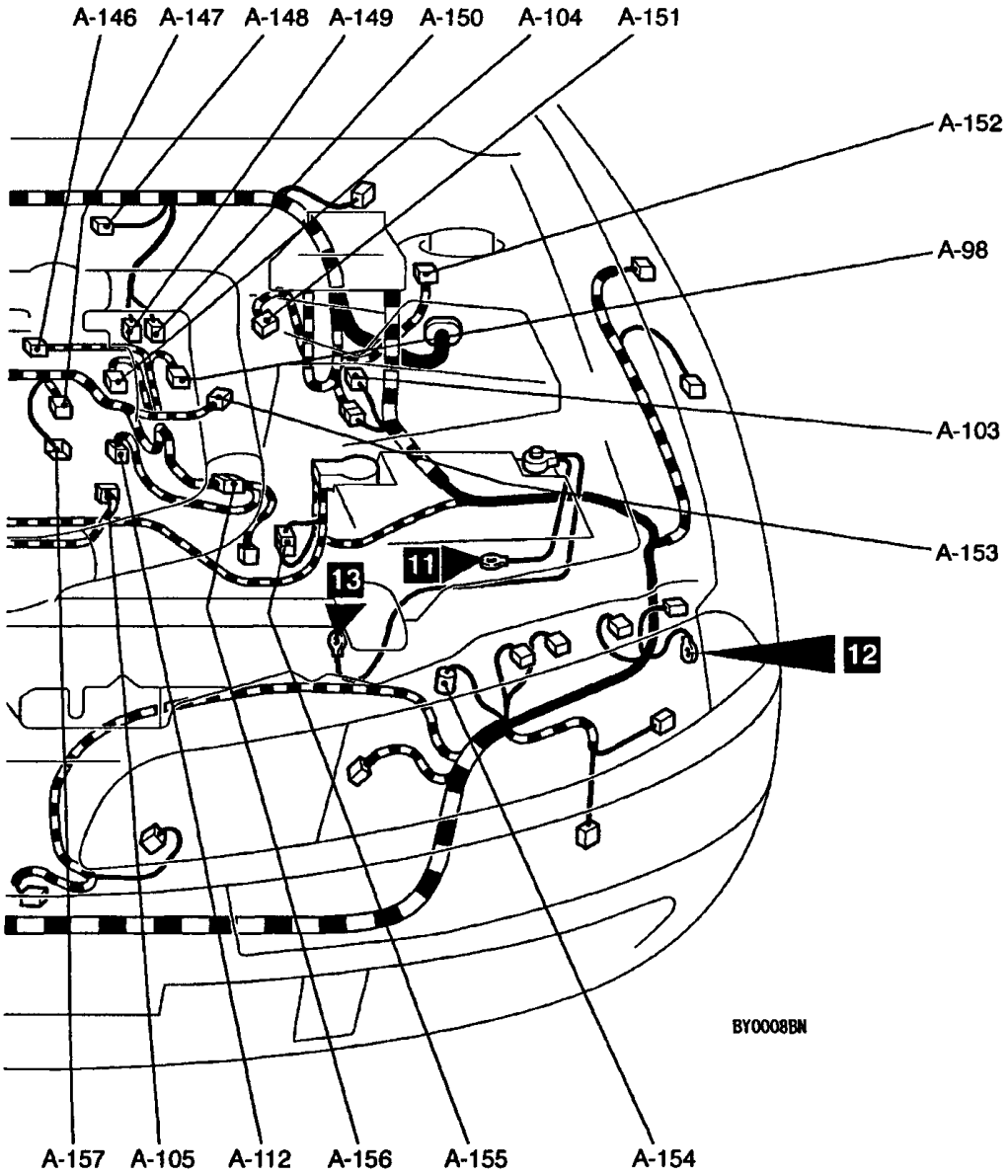

A-146 (2-B)	Throttle solenoid valve
A-147 (2-B)	Injector 1
A-148 (2-B)	Turbo charger solenoid valve
A-149 (1)	Additional heater 1
A-150 (1)	Additional heater 2
A-151 (6-B)	Air flow sensor
A-152 (8-B)	Glow plug relay box
A-153 (3-GR)	Boost sensor
A-154 (4)	Triple pressure switch
A-155 (1-B)	Front wiring harness and battery cable assembly combination
A-156 (4-DG)	Control wiring harness and sensor wiring harness combination
A-157 (1)	Glow plug 1
A-158 (2-GR)	Fuel temperature sensor
A-159 (3-B)	Rail pressure sensor
A-160 (48-B)	Engine-ECU
A-161 (48-BR)	Engine-ECU
A-162 (32-GR)	Engine-ECU

DASH PANEL

L.H. drive vehicles

Connector Symbol

B

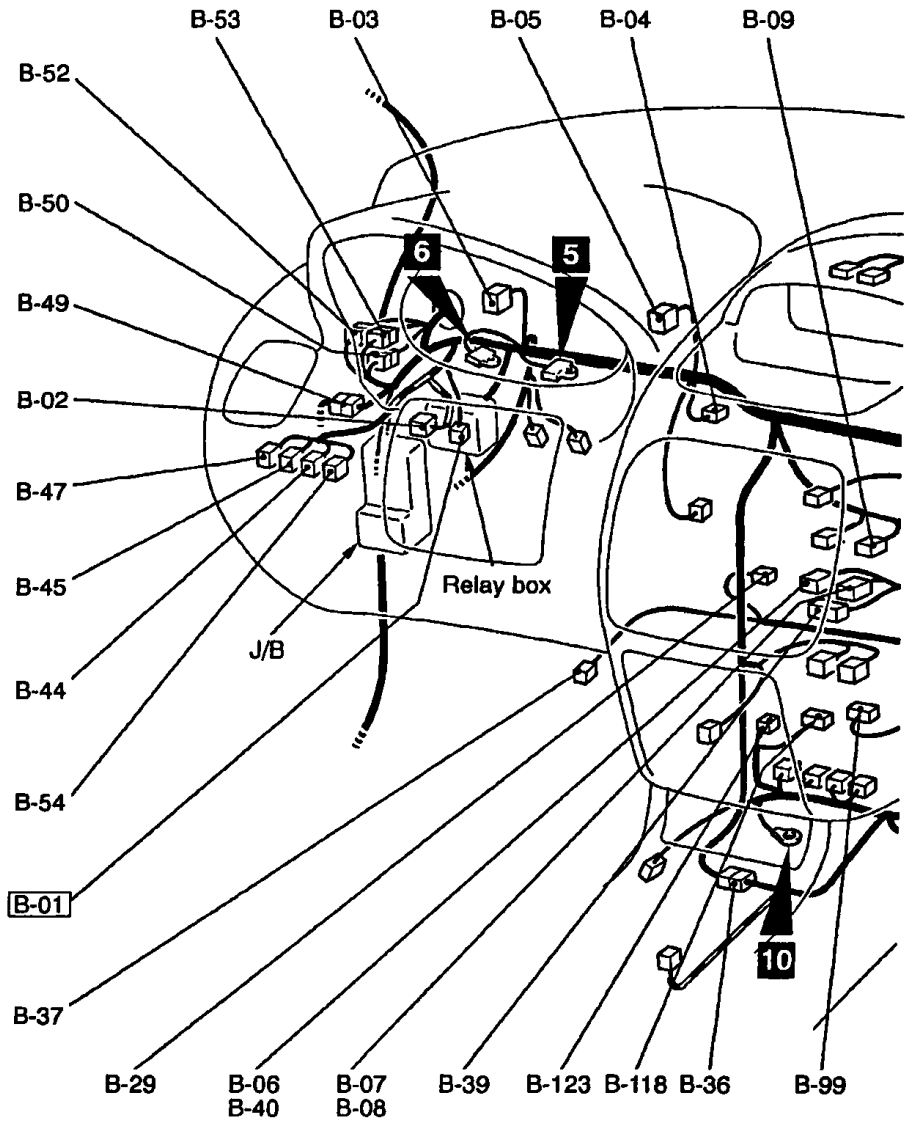

B-01 (2)	Clutch switch <Petrol>
B-01 (4)	Clutch switch <Diesel>
B-02 (12-B)	Immobilizer-ECU
B-03 (25)	Combination meter
B-04 (6)	Mode selection damper control motor <Auto A/C>
B-05 (25)	Combination meter
B-06 (16-B)	A/C control panel and ECU assembly <Auto A/C>
B-07 (20-B)	A/C control panel and ECU assembly <Auto A/C>
B-08 (2)	Blower control illumination lamp <Heater and manual A/C>
B-09 (14)	Radio and tape player or CD player
B-10 (2)	Photo sensor <Auto A/C>
B-11 (2)	Heater water temperature sensor <Auto A/C>
B-12 (2-R)	Air bag module (squib) (passenger's side)
B-14 (4-G)	Outside/inside air selection damper motor
B-18 (20)	Front door wiring harness (passenger's side) and body wiring harness combination
B-24 (2)	Blower motor
B-25 (4)	Automatic compressor ECU <Manual A/C>
B-26 (4)	Resistor <Heater or manual A/C>
B-27 (4)	Power transistor <Auto A/C>
B-28 (2-B)	Air thermo sensor <A/C>
B-29 (4)	A/T relay

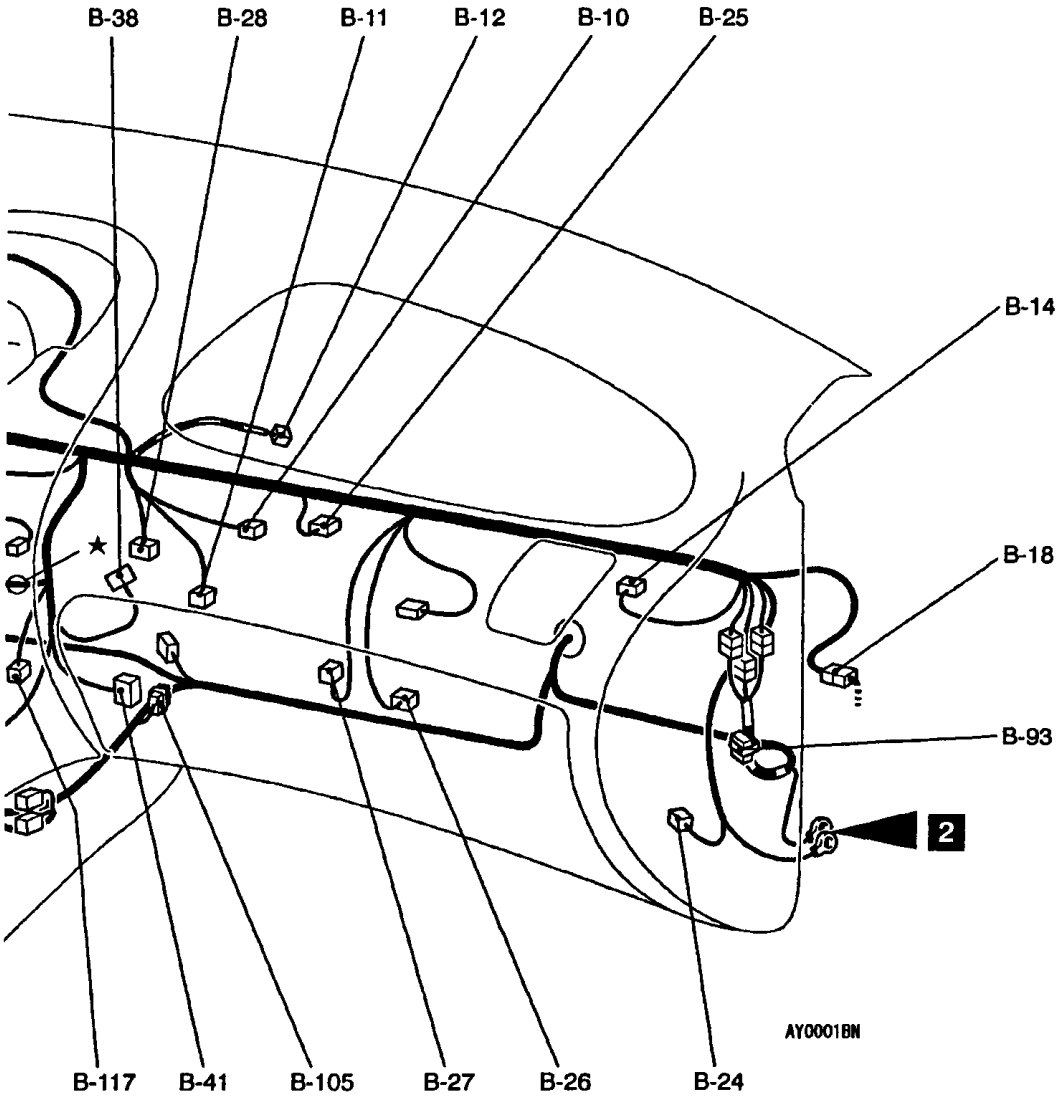

B-36 (14)	Control wiring harness and body wiring harness combination <A/T>
B-37 (2-B)	Wide open throttle switch <A/T>
B-38 (6)	Air mixing damper control motor <Auto A/C>
B-39 (12)	A/C switch <Manual A/C>
B-40 (6)	Blower switch <Heater or manual A/C>
B-41 (16-B)	Diagnosis connector
B-44 (12)	Remote controlled mirror switch
B-45 (6)	Headlamp leveling switch
B-47 (10)	Front fog lamp switch or rear fog lamp switch
B-49 (32-B)	Front door wiring harness (driver's side) and body wiring harness combination
B-50 (22-GR)	Front wiring harness and body wiring harness combination
B-52 (18)	Front wiring harness and body wiring harness combination
B-53 (10-B)	Front wiring harness and body wiring harness combination
B-54 (3)	Rheostat or jumper connector
B-93 (2)	Diode <Diesel>
B-99 (22-DG)	Keyless entry receiver ECU
B-105 (12)	Diagnosis connector <Petrol>
B-117 (2-B)	Roof antenna
B-118 (26-Y)	Throttle valve controller <GDI>
B-123 (4)	Throttle control servo relay <GDI>

NOTE
Connector numbers in ☐ are connector numbers which have been changed.

L.H. drive vehicles

Connector Symbol

B

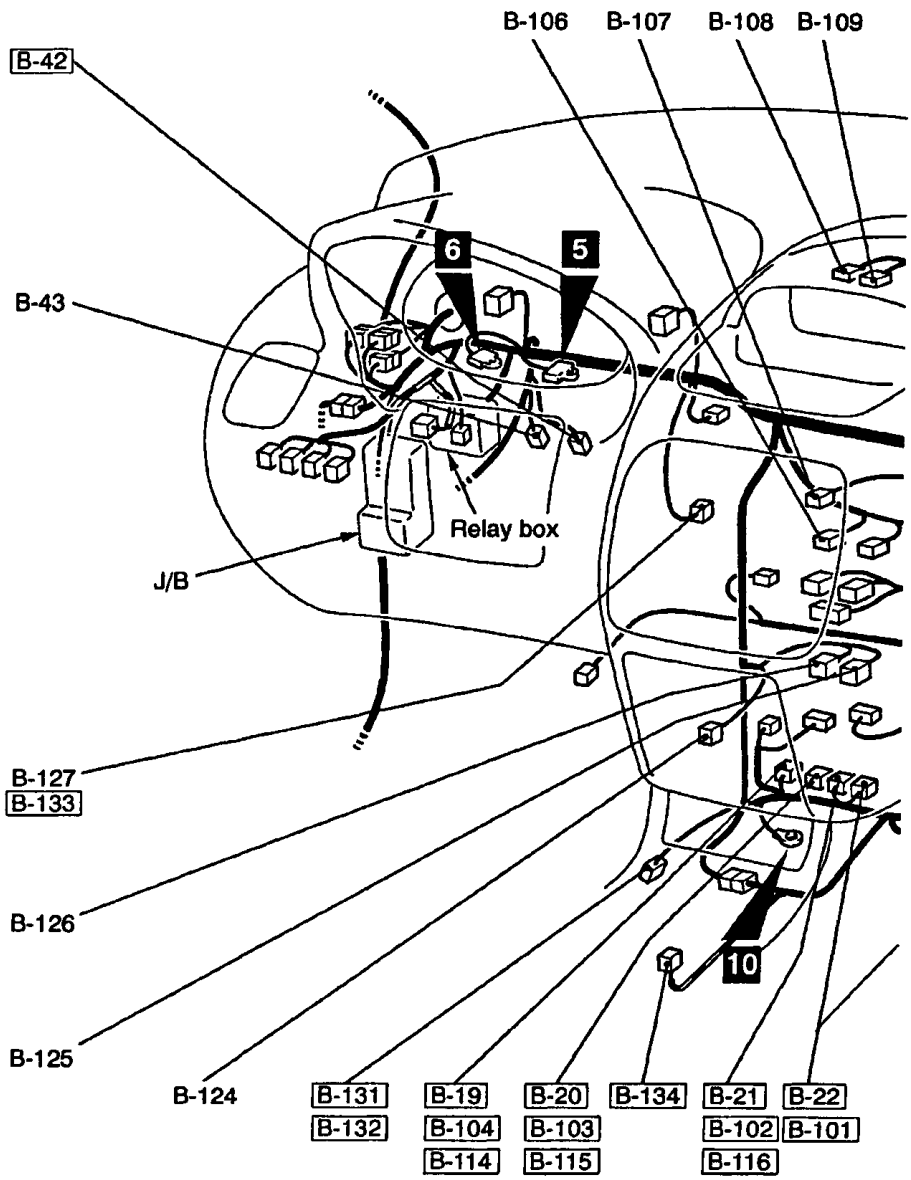

B-15 (4)	Control wiring harness and body wiring harness combination <Petrol>
B-16 (20)	Control wiring harness and body wiring harness combination
B-19 (26-Y)	Engine-ECU <Petrol-M/T (except GDI)>
B-20 (16-Y)	Engine-ECU <Petrol-M/T (except GDI)>
B-21 (12-Y)	Engine-ECU <Petrol-M/T (except GDI)>
B-22 (22-Y)	Engine-ECU <Petrol-M/T (except GDI)>
B-42 (3-B)	Stop lamp switch <Petrol powered vehicles without auto-cruise control system> or no connection <Petrol powered vehicles with auto-cruise control system>
B-42 (4)	Stop lamp switch <Diesel>
B-43 (4-BR)	Stop lamp switch <Petrol powered vehicles with auto-cruise control system>
B-96 (4)	Engine control relay <Petrol>
B-97 (4)	Fuel pump relay <Petrol>
B-100 (2)	Control wiring harness and body wiring harness combination <Diesel>
B-101 (30)	Engine-A/T-ECU <Petrol-A/T>
B-102 (28)	Engine-A/T-ECU <Petrol-A/T>
B-103 (26)	Engine-A/T-ECU <Petrol-A/T>
B-104 (35)	Engine-A/T-ECU <Petrol-A/T>
B-106 (16)	Radio and tape player or CD player
B-107 (10)	Hazard warning switch
B-108 (16-B)	Multi center display unit

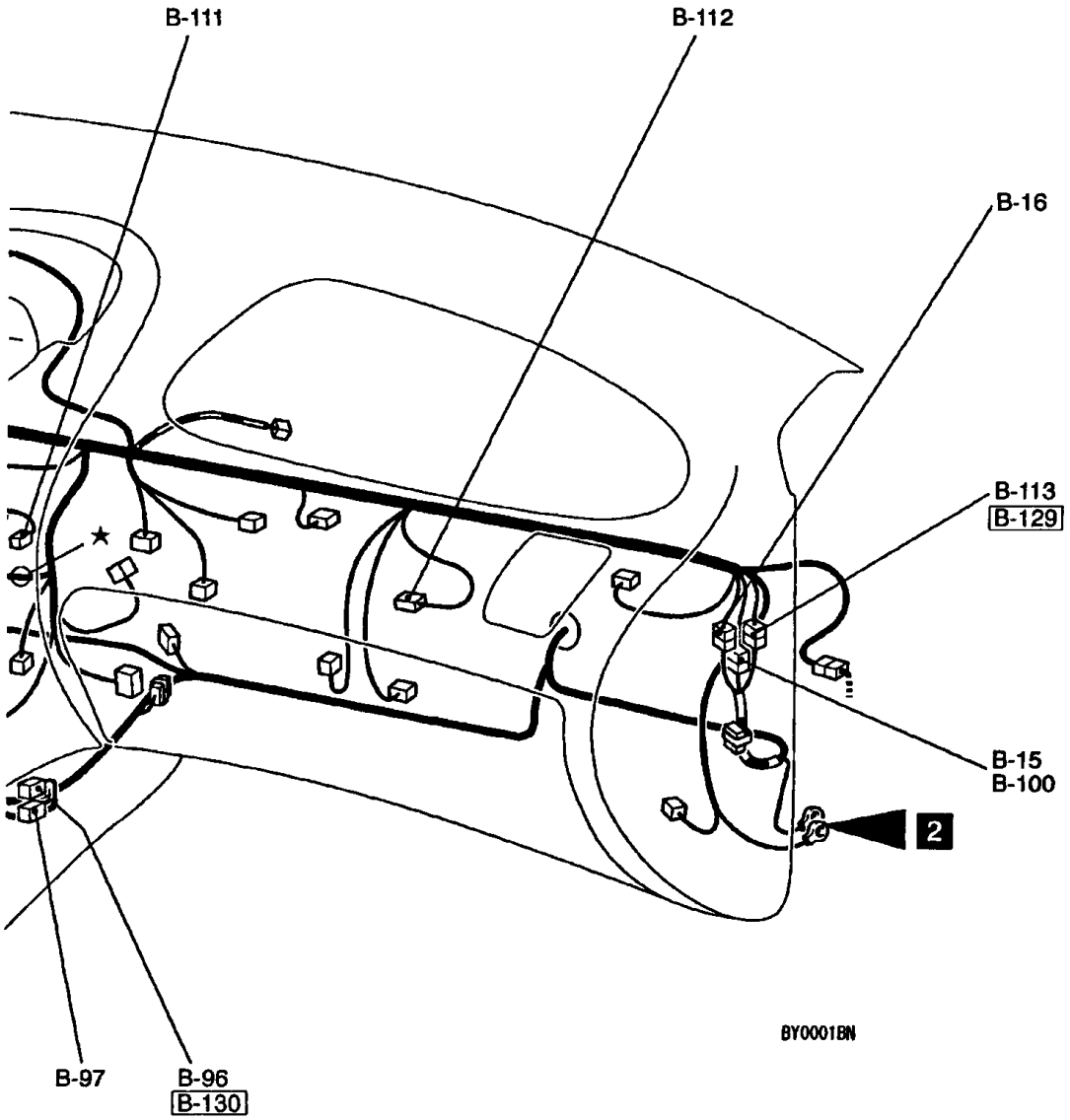

B-109 (20-B)	Multi center display unit
B-111 (1-B)	Radio and tape player or CD player
B-112 (2-B)	Glove box lamp
B-113 (18)	Control wiring harness and body wiring harness combination <GDI>
B-114 (35-GR)	Engine-ECU <Petrol-M/T (GDI)>
B-115 (28-GR)	Engine-ECU <Petrol-M/T (GDI)>
B-116 (30-GR)	Engine-ECU <Petrol-M/T (GDI)>
B-124 (3)	Cigarette lighter
B-125 (1-B)	Navigation unit
B-126 (12-B)	Navigation unit
B-127 (8-DG)	Accelerator pedal position sensor <GDI>
B-129 (14)	Control wiring harness and body wiring harness combination <Diesel>
B-130 (4)	Main relay <Diesel>
B-131 (4)	Oxygen sensor (Rear) <GDI>
B-132 (4)	Oxygen sensor (rear) <except-GDI>
B-133 (6-B)	Accelerator pedal position sensor <Diesel>
B-134 (8)	Shift switch assembly <Sports mode 4A/T>

NOTE
Connector numbers in ☐ are connector numbers which have been changed or added.

L.H. drive vehicles

Connector symbol

B

Steering column

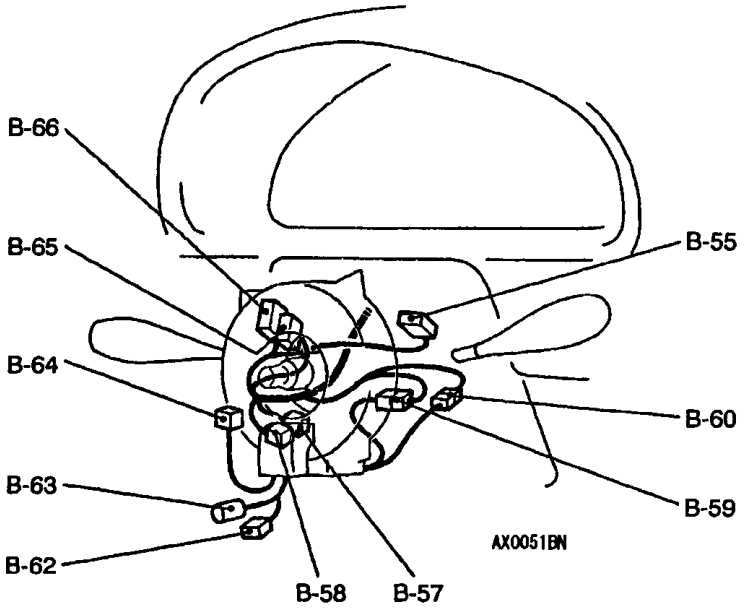

Relay box in passenger compartment

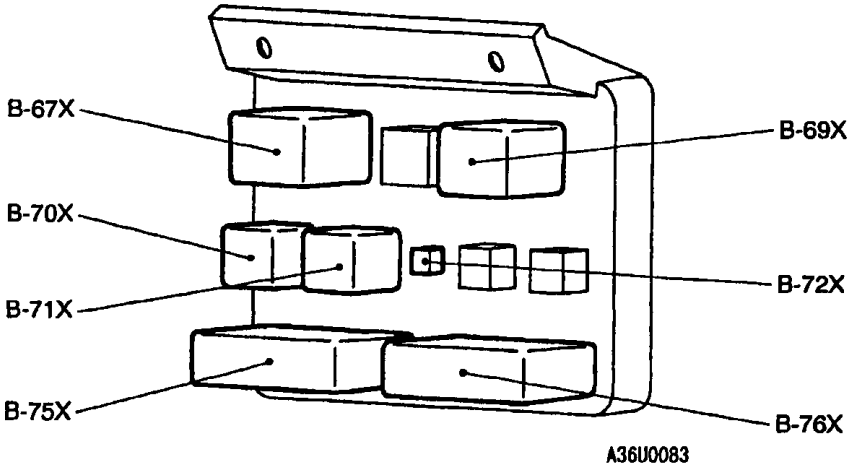

B-55 (12)	Column switch	B-66 (6)	Column switch
B-57 (2)	Ignition key ring antenna	B-67X (9)	Door lock ECU <Vehicles without keyless entry system>
B-58 (6)	Ignition switch	B-69X (7)	Rear intermittent wiper relay
B-59 (4)	Clock spring	B-70X (5)	Rear fog lamp relay
B-60 (2-R)	Clock spring	B-71X (5)	Front fog lamp relay
B-62 (2)	Auto-cruise control switch	B-72X (3)	Diode
B-63 (1)	Horn switch	B-75X (33)	J/C (1)
B-64 (2)	Air bag module (squib) (driver's side)	B-76X (33)	J/C (2)
B-65 (10)	Column switch		

J/B

(Front view)

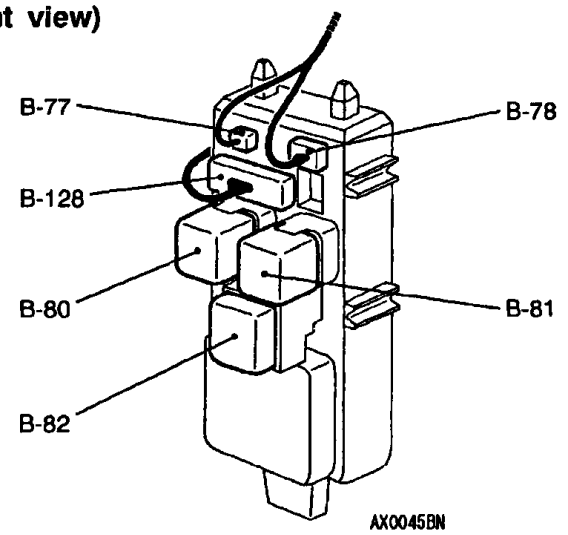

(Rear view)

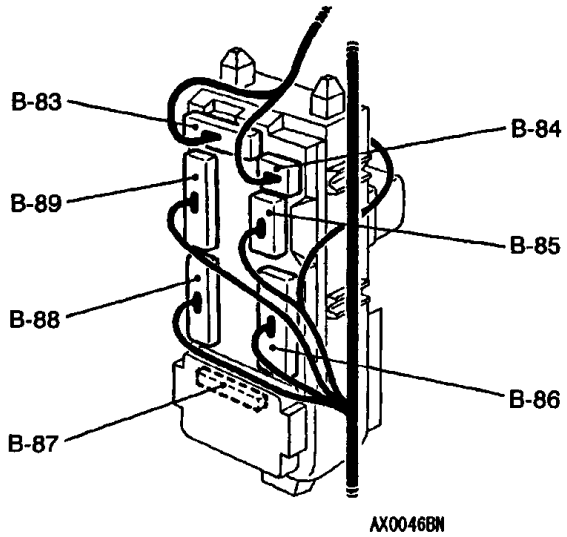

B-77 (2)	J/B and roof wiring harness combination <Vehicles with sunroof>
B-78 (6)	J/B and roof wiring harness combination
B-80 (5)	Blower relay
B-81 (5)	Defogger relay
B-82 (5)	Turn-signal and hazard warning flasher unit
B-83 (20)	J/B and front wiring harness combination
B-84 (2)	J/B and front wiring harness combination
B-85 (3)	J/B and body wiring harness combination
B-86 (18)	J/B and body wiring harness combination
B-87 (10)	Buzzer-ECU
B-88 (22)	J/B and body wiring harness combination
B-89 (22)	J/B and body wiring harness combination
B-128 (18)	J/B and body wiring harness combination

DASH PANEL

R.H. drive vehicles

Connector Symbol

B

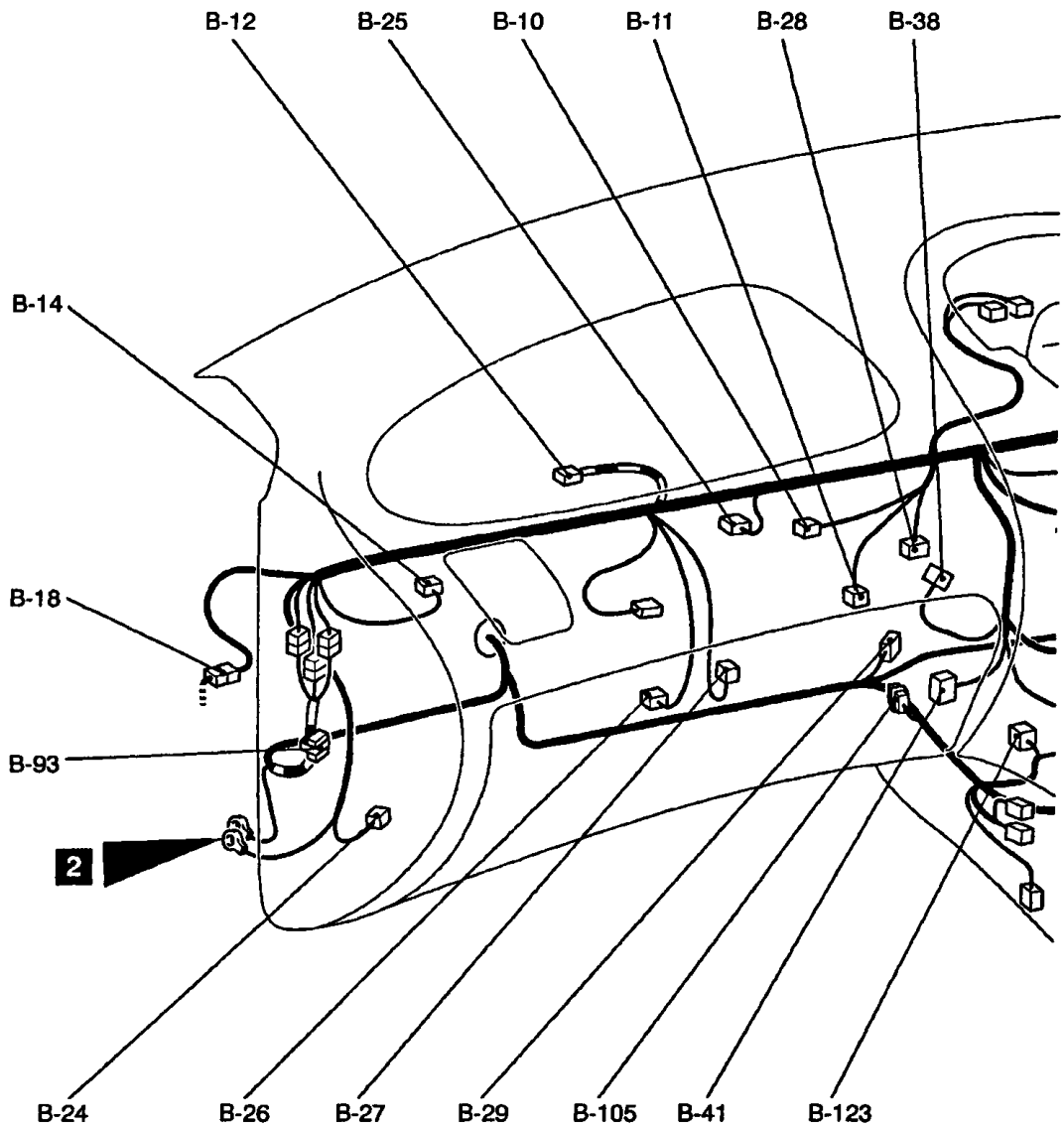

B-01 (2)	Clutch switch <Petrol>
B-01 (4)	Clutch switch <Diesel>
B-02 (12-B)	Immobilizer-ECU
B-03 (25)	Combination meter
B-04 (6)	Mode selection damper control motor <Auto A/C>
B-05 (25)	Combination meter
B-06 (16-B)	A/C control panel and ECU assembly <Auto A/C>
B-07 (20-B)	A/C control panel and ECU assembly <Auto A/C>
B-08 (2)	Blower control illumination lamp <Heater and manual A/C>
B-09 (14)	Radio and tape player or CD player
B-10 (2)	Photo sensor <Auto A/C>
B-11 (2)	Heater water temperature sensor <Auto A/C>
B-12 (2-R)	Air bag module (squib) (passenger's side)
B-14 (4-G)	Outside/inside air selection damper motor
B-18 (20)	Front door wiring harness (passenger's side) and body wiring harness combination
B-24 (2)	Blower motor
B-25 (4)	Automatic compressor-ECU <Manual A/C>
B-26 (4)	Resistor <Heater or manual A/C>
B-27 (4)	Power transistor <Auto A/C>
B-28 (2-B)	Air thermo sensor <A/C>
B-29 (4)	A/T relay

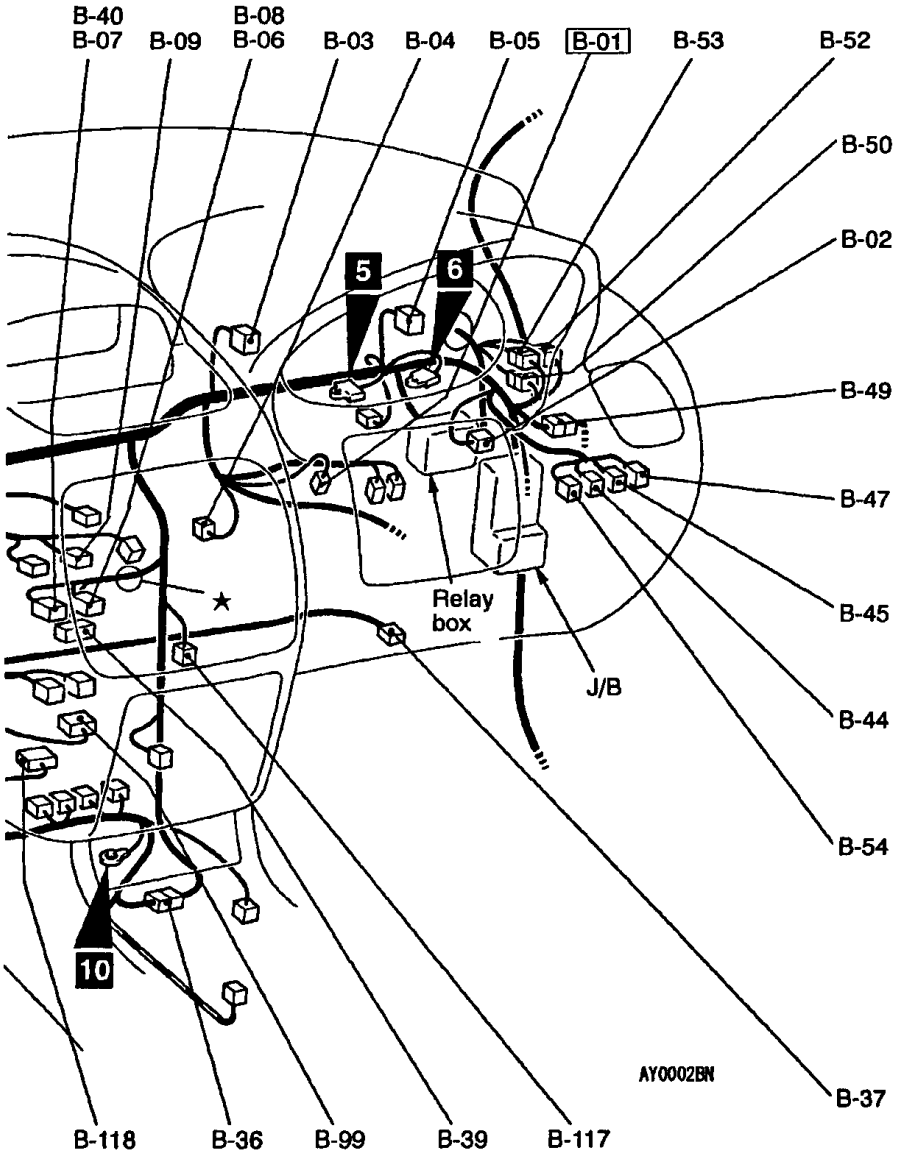

B-36 (14)	Control wiring harness and body wiring harness combination <A/T>
B-37 (2-B)	Wide open throttle switch <A/T>
B-38 (6)	Air mixing damper control motor <Auto A/C>
B-39 (12)	A/C switch <Manual A/C>
B-40 (6)	Blower switch <Heater or manual A/C>
B-41 (16-B)	Diagnosis connector
B-44 (12)	Remote controlled mirror switch
B-45 (6)	Headlamp leveling switch
B-47 (10)	Front fog lamp switch or rear fog lamp switch
B-49 (32-B)	Front door wiring harness (driver's side) and body wiring harness combination
B-50 (22-GR)	Front wiring harness and body wiring harness combination
B-52 (18)	Front wiring harness and body wiring harness combination
B-53 (10-B)	Front wiring harness and body wiring harness combination
B-54 (3)	Rheostat or jumper connector
B-93 (2)	Diode <Diesel>
B-99 (22-DG)	Keyless entry receiver ECU
B-105 (12)	Diagnosis connector <Petrol>
B-117 (2-B)	Roof antenna
B-118 (26-Y)	Throttle valve controller <GDI>
B-123 (4)	Throttle control servo relay <GDI>

NOTE
Connector numbers in ☐ are connector numbers which have been changed or added.

R.H. driver vehicles

Connector Symbol

B

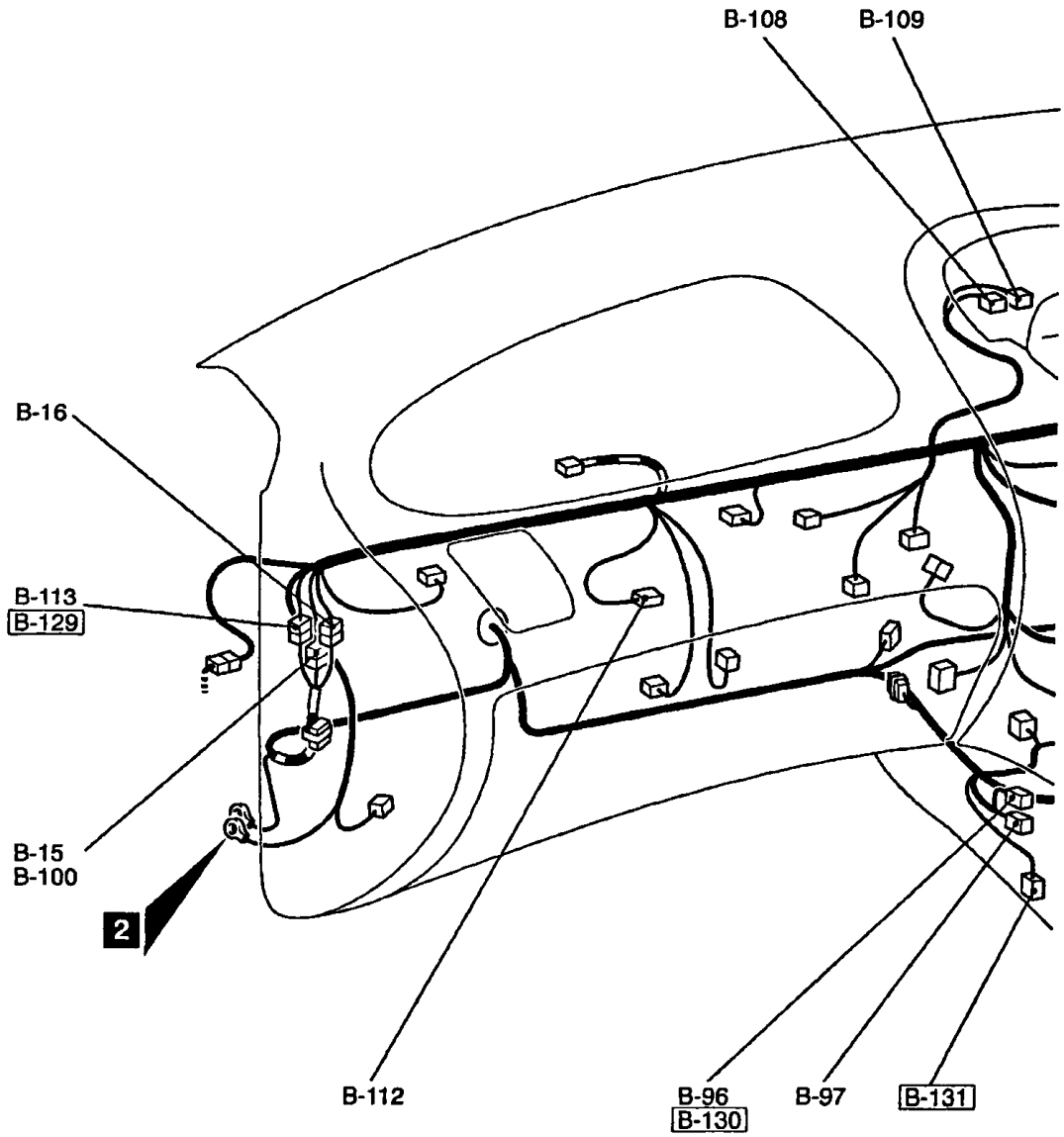

B-15 (4)	Control wiring harness and body wiring harness combination <Petrol>
B-16 (20)	Control wiring harness and body wiring harness combination
B-19 (26-Y)	Engine-ECU <Petrol-M/T (except GDI)>
B-20 (16-Y)	Engine-ECU <Petrol-M/T (except GDI)>
B-21 (12-Y)	Engine-ECU <Petrol-M/T (except GDI)>
B-22 (22-Y)	Engine-ECU <Petrol-M/T (except GDI)>
B-42 (3-B)	Stop lamp switch <Petrol powered vehicles without auto-cruise control system> or no connection <Petrol powered vehicles with auto-cruise control system>
B-42 (4)	Stop lamp switch <Diesel>
B-43 (4-BR)	Stop lamp switch <Petrol powered vehicles with auto-cruise control system>
B-96 (4)	Engine control relay <Petrol>
B-97 (4)	Fuel pump relay <Petrol>
B-100 (2)	Control wiring harness and body wiring harness combination <Diesel>
B-101 (30)	Engine-A/T-ECU <Petrol-A/T>
B-102 (28)	Engine-A/T-ECU <Petrol-A/T>
B-103 (26)	Engine-A/T-ECU <Petrol-A/T>
B-104 (35)	Engine-A/T-ECU <Petrol-A/T>
B-106 (16)	Radio and tape player or CD player
B-107 (10)	Hazard warning switch

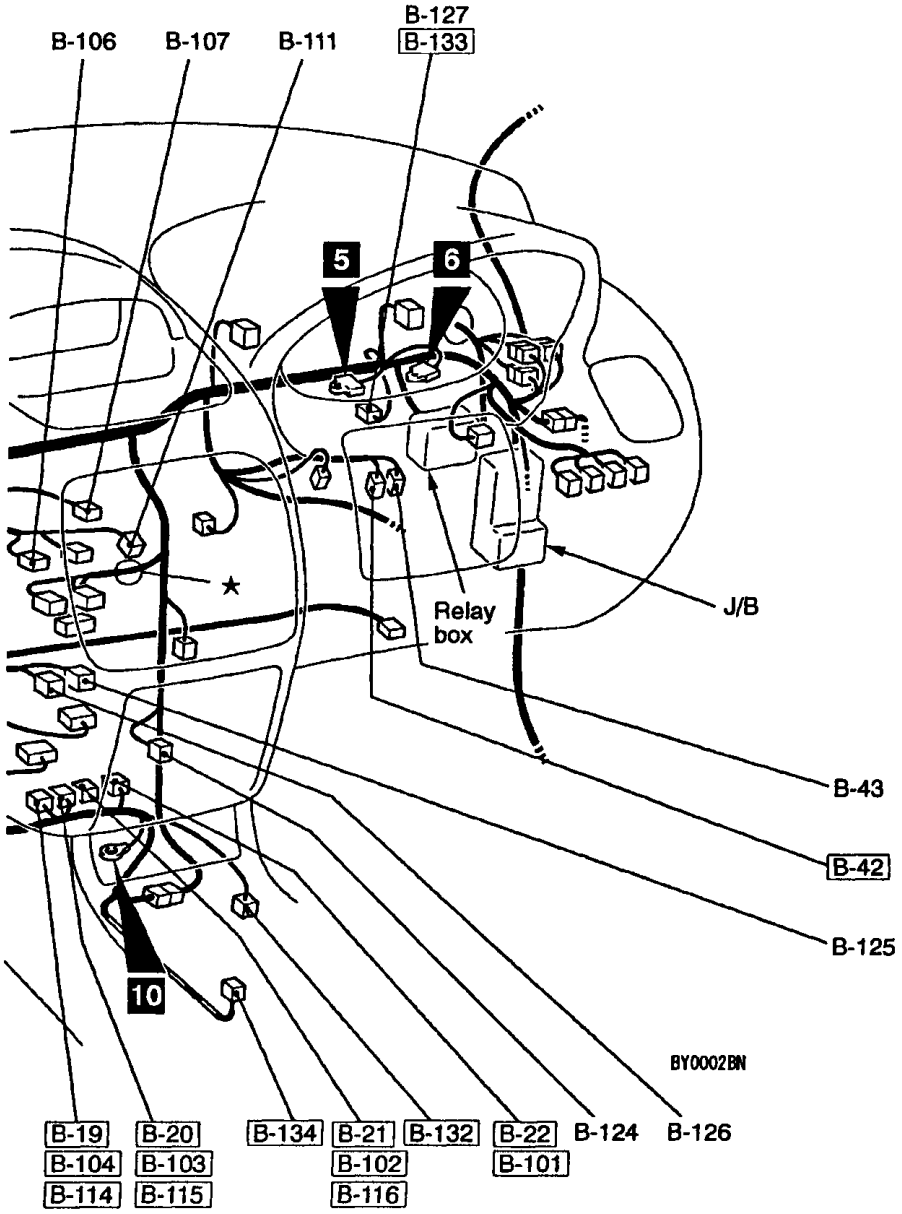

B-108 (16-B)	Multi-center display unit
B-109 (20-B)	Multi-center display unit
B-111 (1-B)	Radio and tape player or CD player
B-112 (2-B)	Glove box lamp
B-113 (18)	Control wiring harness and body wiring harness combination <GDI>
B-114 (35-GR)	Engine-ECU <Petrol-M/T (GDI)>
B-115 (28-GR)	Engine-ECU <Petrol-M/T (GDI)>
B-116 (30-GR)	Engine-ECU <Petrol-M/T (GDI)>
B-124 (3)	Cigarette lighter
B-125 (1-B)	Navigation unit
B-126 (12-B)	Navigation unit
B-127 (8-DG)	Accelerator pedal position sensor <GDI>
B-129 (14)	Control wiring harness and body wiring harness combination <Diesel>
B-130 (4)	Main relay <Diesel>
B-131 (4)	Oxygen sensor (Rear) <GDI>
B-132 (4)	Oxygen sensor (Rear) <except-GDI>
B-133 (6-B)	Accelerator pedal position sensor <Diesel>
B-134 (8)	Shift switch assembly <Sports mode 4A/T>

NOTE
Connector numbers in ☐ are connector numbers which have been changed or added.

R.H. drive vehicles

Connector symbol

B

Steering column

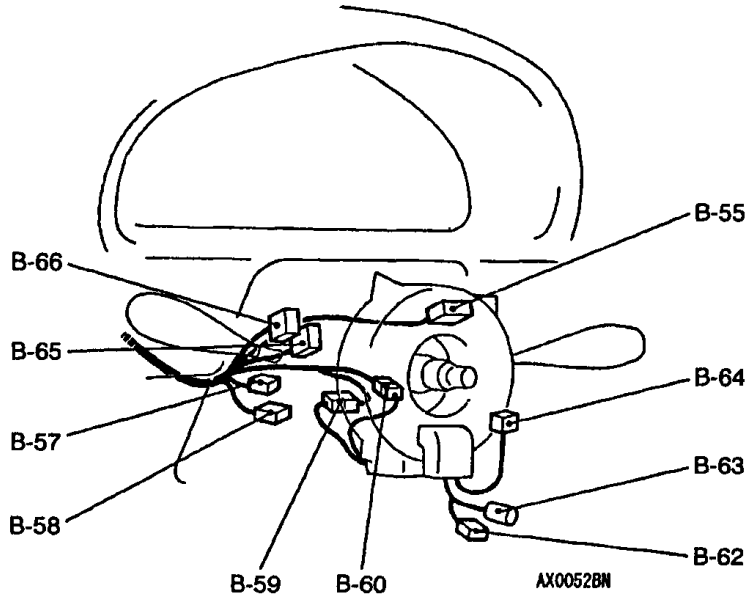

Relay box in passenger compartment

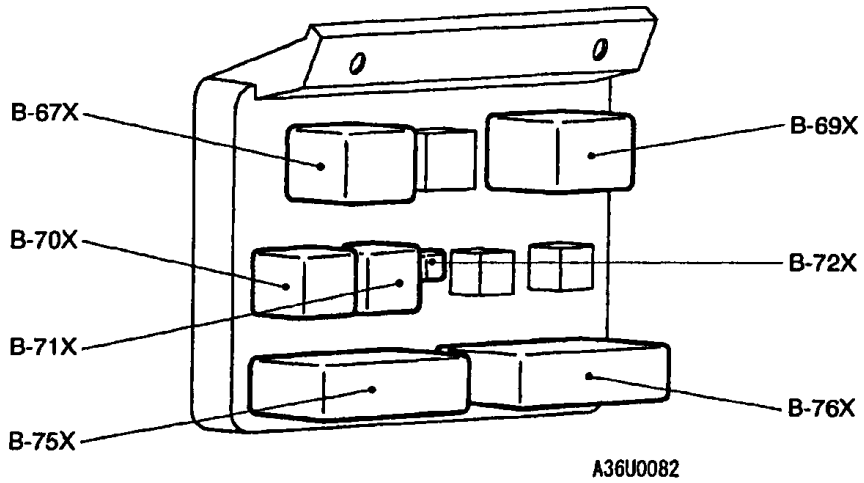

B-55 (12)	Column switch	B-66 (6)	Column switch
B-57 (2)	Ignition key ring antenna	B-67X (9)	Door lock ECU <Vehicles without keyless entry system>
B-58 (6)	Ignition switch		
B-59 (4)	Clock spring	B-69X (7)	Rear intermittent wiper relay
B-60 (2-R)	Clock spring	B-70X (5)	Rear fog lamp relay
B-62 (2)	Auto-cruise control switch	B-71X (5)	Front fog lamp relay
B-63 (1)	Horn switch	B-72X (3)	Diode
B-64 (2)	Air bag module (squib) (driver's side)	B-75X (33)	J/C (1)
B-65 (10)	Column switch	B-76X (33)	J/C (2)

J/B

(Front view)

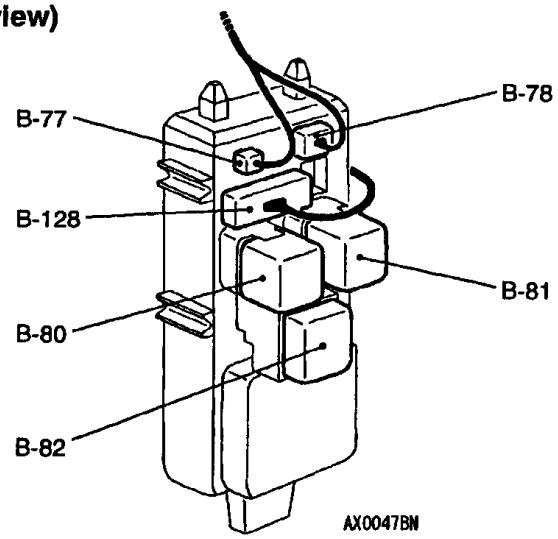

(Rear view)

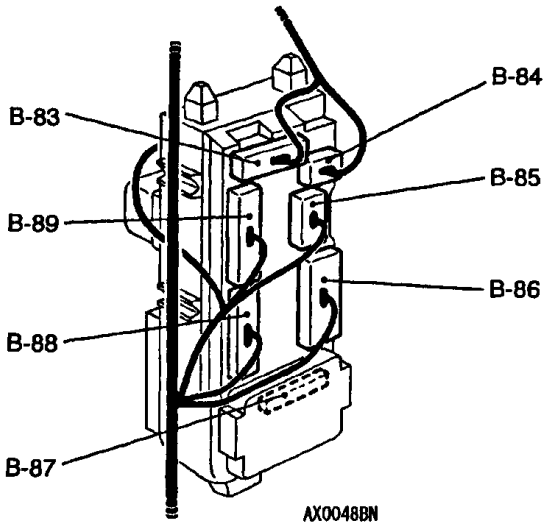

B-77 (2)	J/B and roof wiring harness combination <Vehicles with sunroof>
B-78 (6)	J/B and roof wiring harness combination
B-80 (5)	Blower relay
B-81 (5)	Defogger relay
B-82 (5)	Turn-signal and hazard warning flasher unit
B-83 (20)	J/B and front wiring harness combination
B-84 (2)	J/B and front wiring harness combination
B-85 (3)	J/B and body wiring harness combination
B-86 (18)	J/B and body wiring harness combination
B-87 (10)	Buzzer-ECU
B-88 (22)	J/B and body wiring harness combination
B-89 (22)	J/B and body wiring harness combination
B-128 (18)	J/B and body wiring harness combination

FLOOR AND ROOF

L.H. drive vehicles

Connector symbol

D

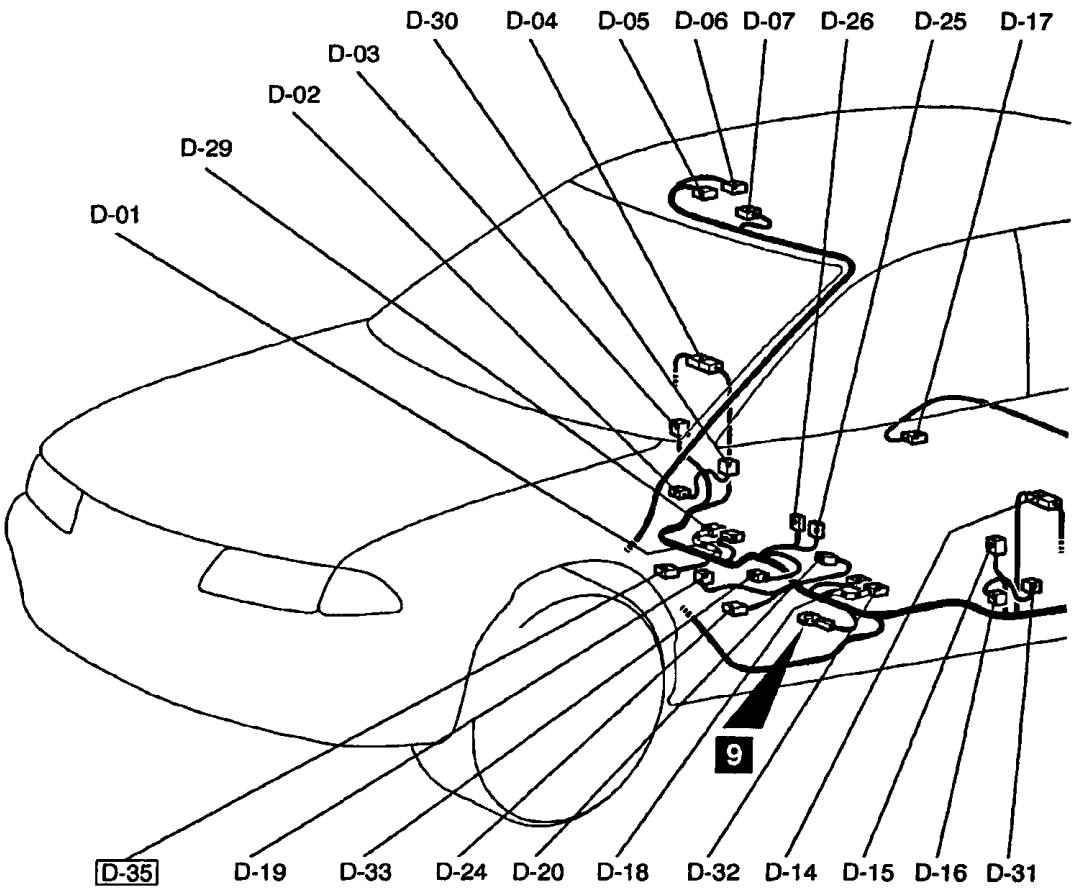

D-01 (3-B)	Heated seat (RH)
D-02 (2-B)	Front door switch (Passenger's side)
D-03 (2-R)	Seat belt pretensioner (Passenger's side) <SRS>
D-04 (8)	Rear door wiring harness (RH) and body wiring harness combination
D-05 (10)	Sunroof-ECU
D-06 (2)	Sunroof motor
D-07 (8)	Room lamp and sunroof switch <Vehicles with sunroof>
D-10 (5-GR)	Fuel pump and gauge unit assembly <Petrol-powered vehicles>
D-10 (5-B)	Fuel gauge unit <Diesel-powered vehicles>
D-11 (22)	Rear wiring harness and body wiring harness combination
D-12 (2-B)	Rear speed sensor (LH) <ABS>
D-13 (10)	Fuel pump wiring harness and body wiring harness combination
D-14 (8)	Rear door wiring harness (LH) and body wiring harness combination

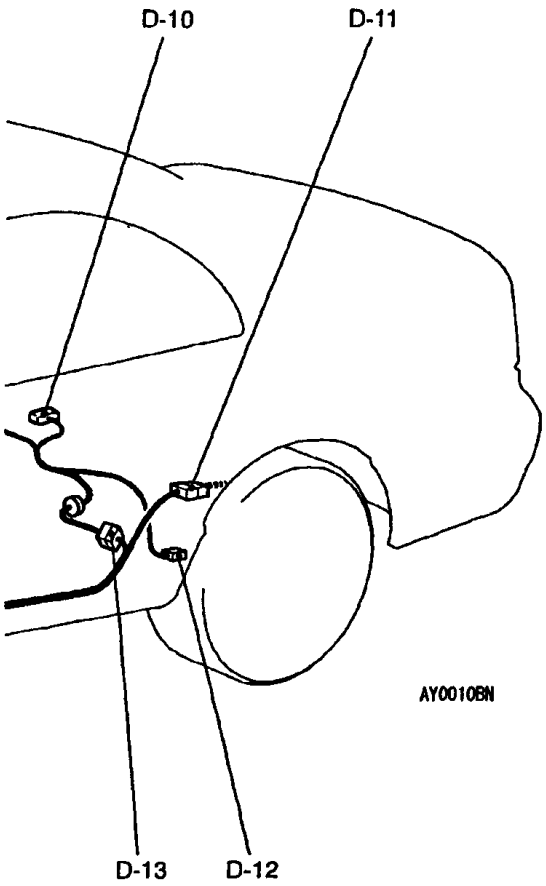

<Vehicles without sunroof>

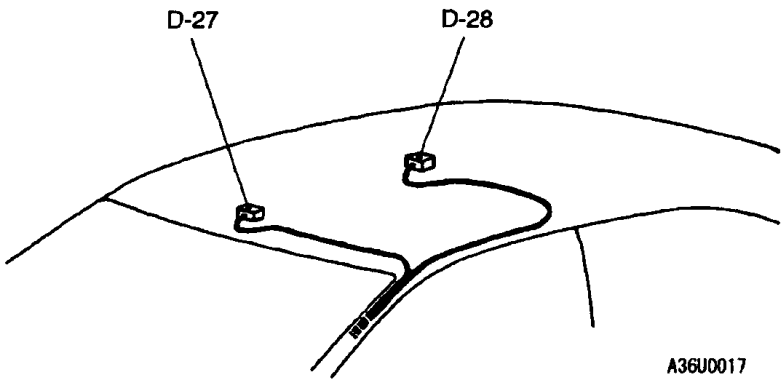

D-15 (2-R)	Seat belt pretensioner (Driver's side) <SRS>
D-16 (2)	Front door switch (Driver's side)
D-17 (2-B)	Rear speed sensor (RH) <ABS>
D-18 (3-B)	Heated seat (LH)
D-19 (6)	Hold switch <A/T>
D-20 (1-B)	Parking brake switch
D-24 (2)	Shift indicator illumination lamp <A/T>
D-25 (6)	Heated seat switch (LH)
D-26 (6-B)	Heated seat switch (RH)
D-27 (1)	Map lamp <Vehicles without sunroof>
D-28 (2)	Room lamp <Vehicles without sunroof>
D-29 (2-R)	Side air bag module (squib) <RH>
D-30 (2-GR)	Side impact sensor (RH)
D-31 (2-GR)	Side impact sensor (LH)
D-32 (2-R)	Side air bag module (squib) <LH>
D-33 (36-O)	SRS-ECU
D-35 (2)	Catalytic temperature sensor <GDI>

NOTE
Connector numbers in ☐ are connector numbers which have been changed or added.

FLOOR AND ROOF

R.H. drive vehicles

Connector symbol

D

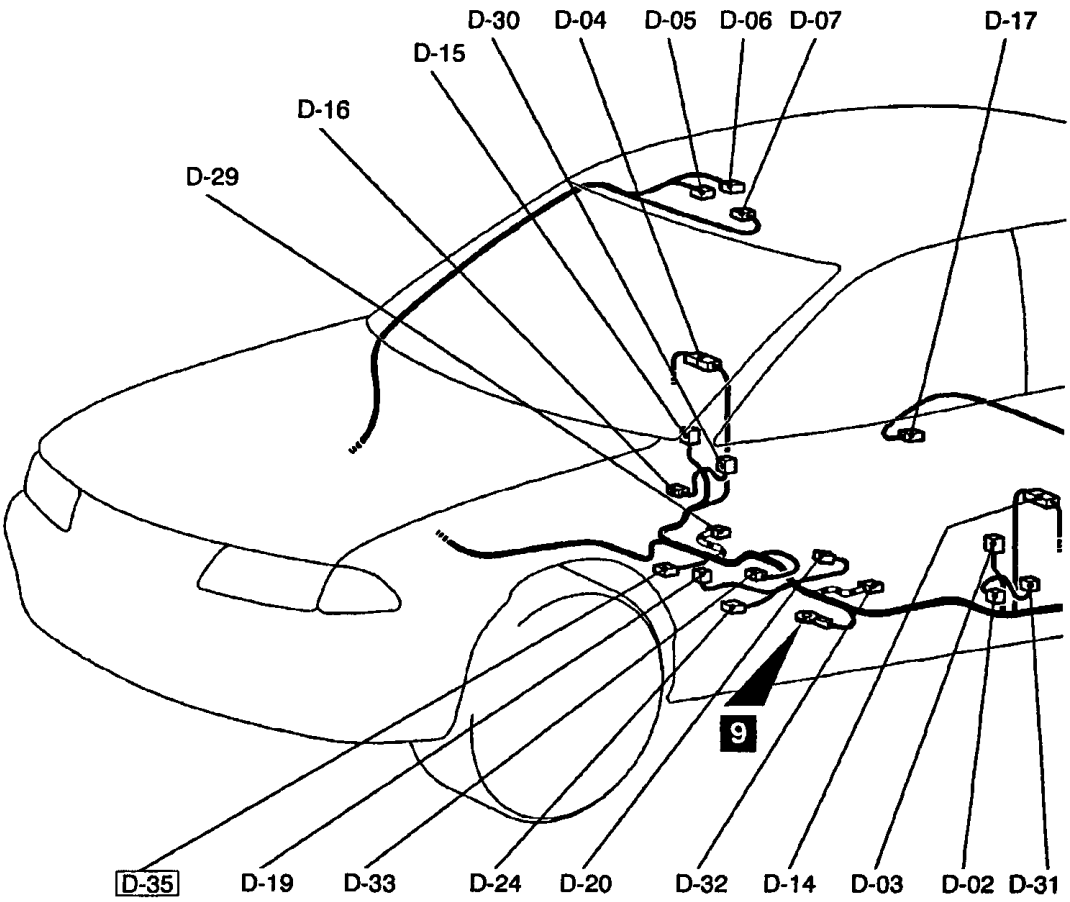

D-02 (2-B)	Front door switch (Passenger's side)
D-03 (2-R)	Seat belt pretensioner (Passenger's side) <SRS>
D-04 (8)	Rear door wiring harness (RH) and body wiring harness combination
D-05 (10)	Sunroof-ECU
D-06 (2)	Sunroof-ECU
D-07 (8)	Room lamp and sunroof switch <Vehicles with sunroof>
D-10 (5-GR)	Fuel pump and gauge unit assembly <Petrol-powered vehicles>
D-10 (5-B)	Fuel gauge unit <Diesel-powered vehicles>
D-11 (22)	Rear wiring harness and body wiring harness combination
D-12 (2-B)	Rear speed sensor (LH) <ABS>
D-13 (10)	Fuel pump wiring harness and body wiring harness combination

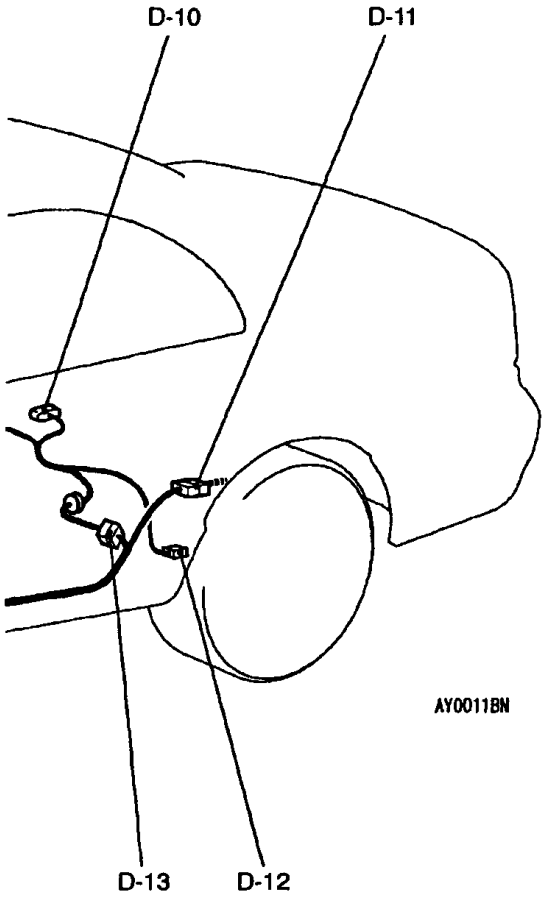

<Vehicles without sunroof>

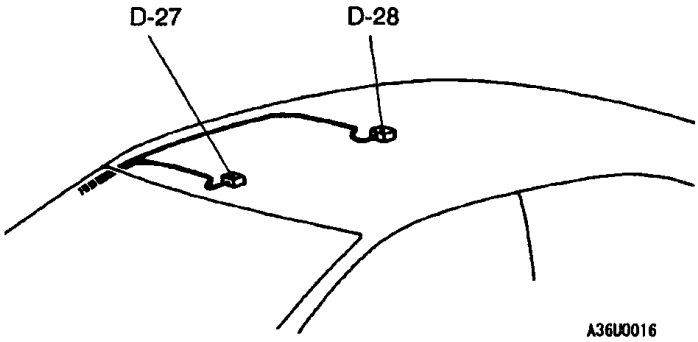

D-14 (8)	Rear door wiring harness (LH) and body wiring harness combination
D-15 (2-R)	Seat belt pretensioner (Driver's side) <SRS>
D-16 (2)	Front door switch (Driver's side)
D-17 (2-B)	Rear speed sensor (RH) <ABS>
D-19 (6)	Hold switch <A/T>
D-20 (1-B)	Parking brake switch
D-24 (2)	Shift indicator illumination lamp <A/T>
D-27 (1)	Map lamp <Vehicles without sunroof>
D-28 (2)	Room lamp <Vehicles without sunroof>
D-29 (2-R)	Side air bag module (squib) <RH>
D-30 (2-GR)	Side impact sensor (RH)
D-31 (2-GR)	Side impact sensor (LH)
D-32 (2-R)	Side air bag module (squib) <LH>
D-33 (36-O)	SRS-ECU
D-35 (2)	Catalytic temperature sensor <GDI>

NOTE
Connector numbers in ☐ are connector numbers which have been changed or added.

SINGLE PART INSTALLATION POSITION

CONTENTS

RELAY 3-2
ECU 3-3
SOLENOID VALVE 3-3
SENSOR 3-4
EARTH 3-7

RELAY

Name	Symbol	Name	Symbol
Additional heater relay 1, 2 <F9Q>	A	Glow plug relay box <F9Q>	C
Condenser fan relay (LO)	B	Main relay <F9Q>	D

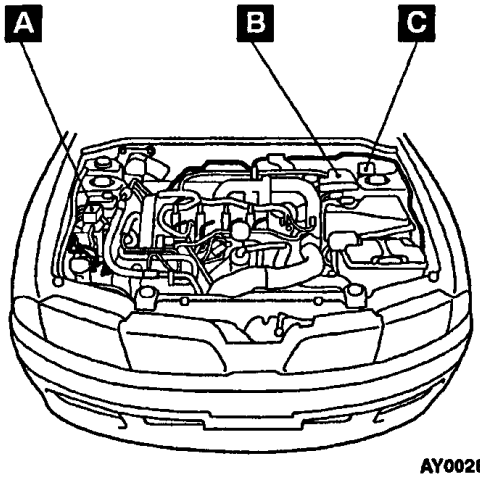

AY0028BN

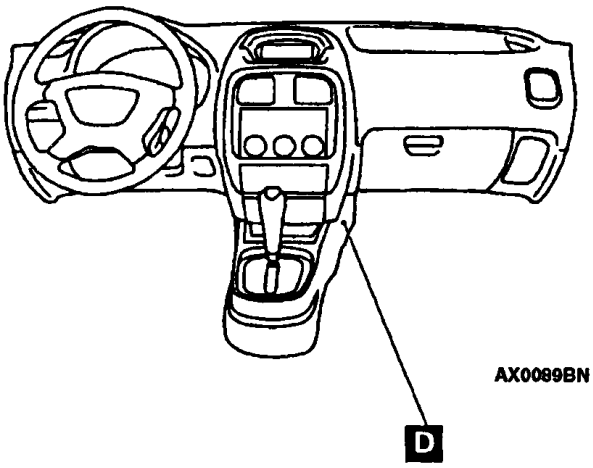

AX0089BN

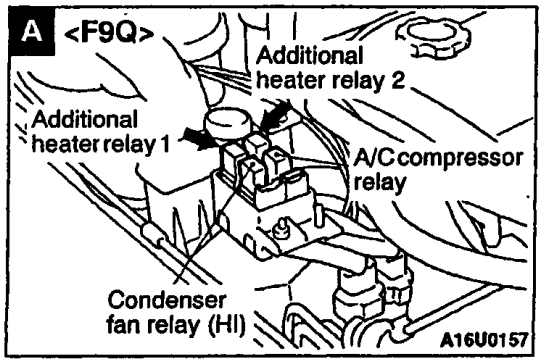

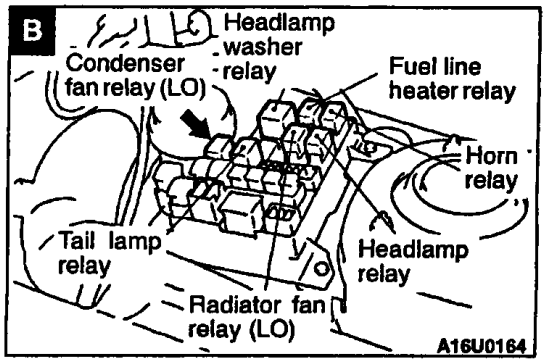

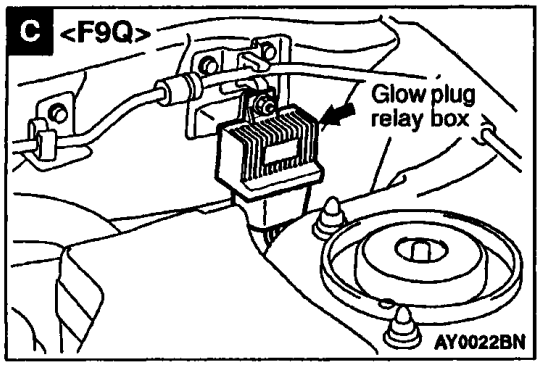

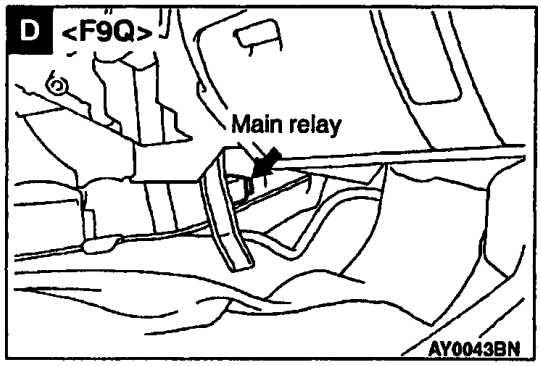

ECU

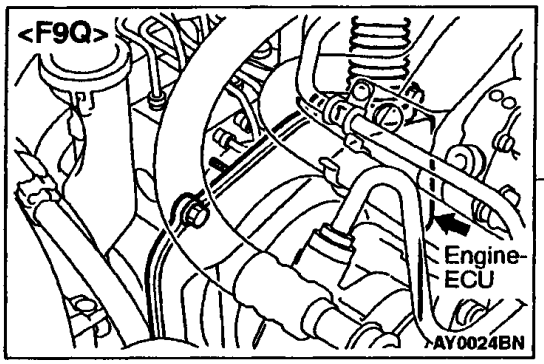

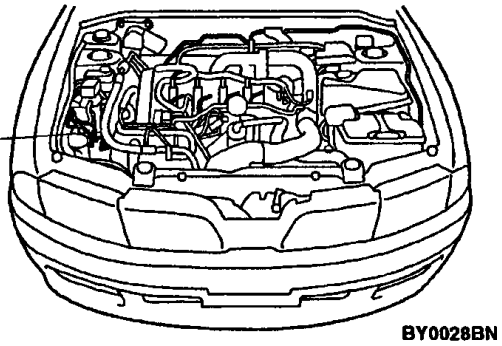

SOLENOID VALVE

Name	Symbol	Name	Symbol
EGR solenoid valve <F9Q>	C	Turbocharger solenoid valve <F9Q>	B
Throttle solenoid valve <F9Q>	A		

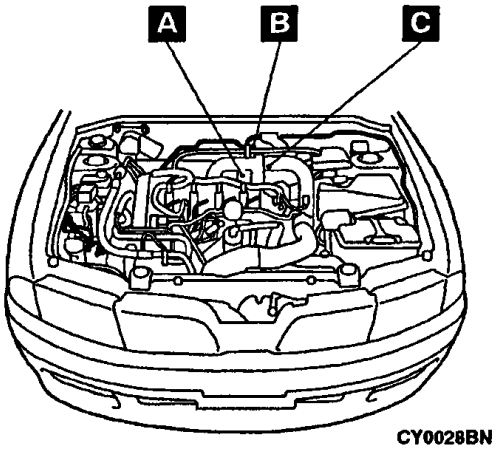

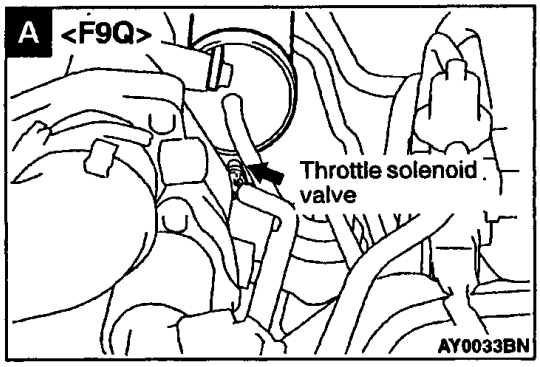

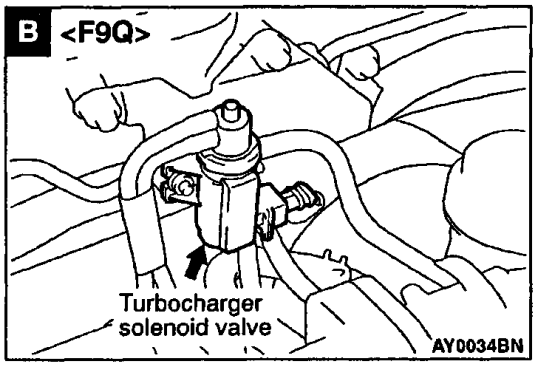

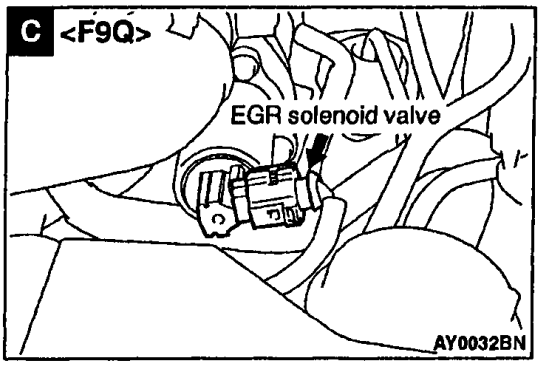

SENSOR

Name	Symbol	Name	Symbol
Accelerator pedal position sensor <F9Q>	J	Ignition failure sensor <Petrol>	A
Advance actuator <F9Q>	D	Outside thermo sensor	C
Air flow sensor <F9Q>	F	Oxygen sensor (Front) <Petrol>	B
Boost sensor <F9Q>	F	Oxygen sensor (Rear) <Petrol>	K
Catalytic temperature sensor <4G93>	K	Rail pressure sensor <F9Q>	I
Engine coolant temperature sensor <F9Q>	E	Top dead center and engine speed sensor <F9Q>	H
Fuel temperature sensor <F9Q>	I	Vehicles speed sensor <F9Q>	G

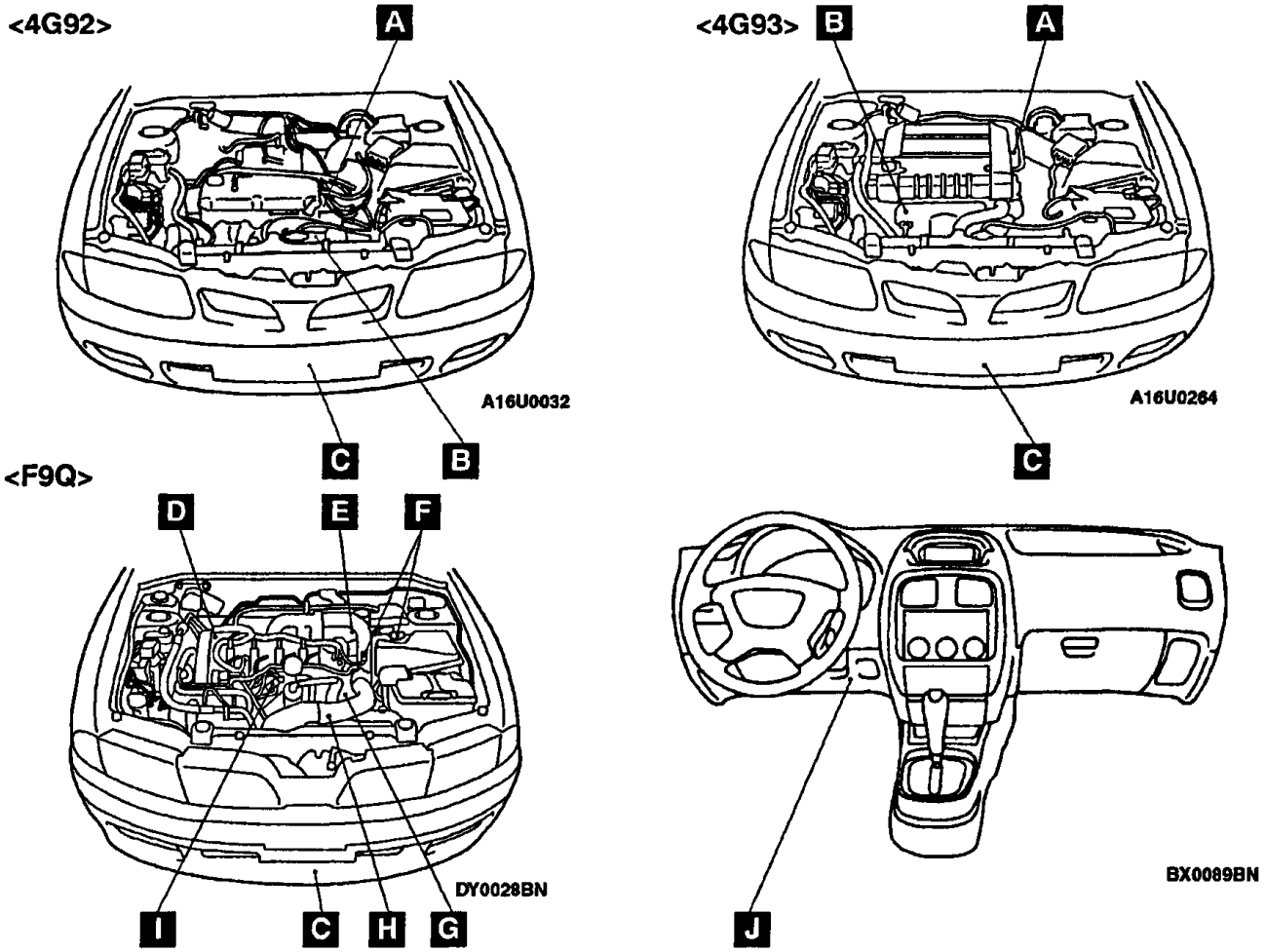

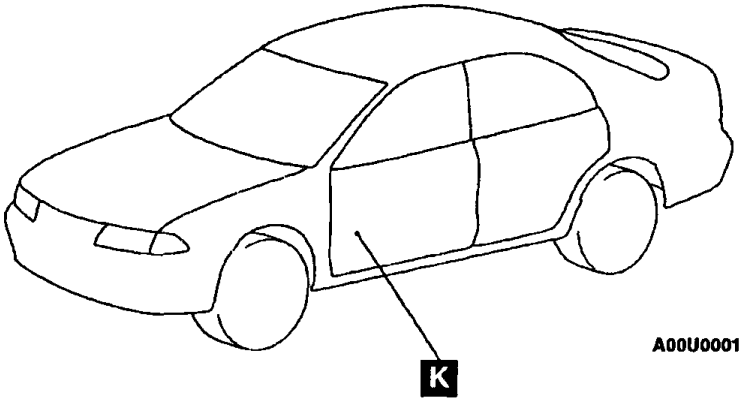
K
A00U0001

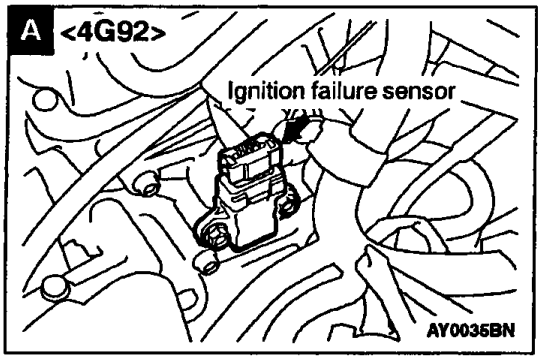
A <4G92>
Ignition failure sensor
AY0035BN

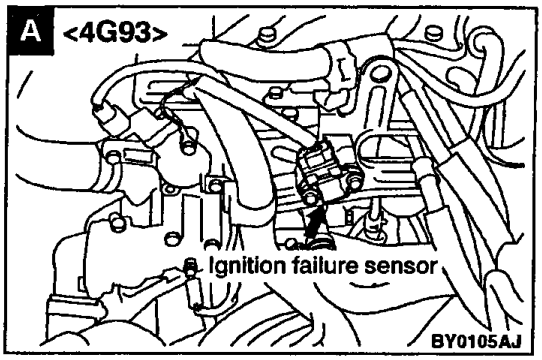
A <4G93>
Ignition failure sensor
BY0105AJ

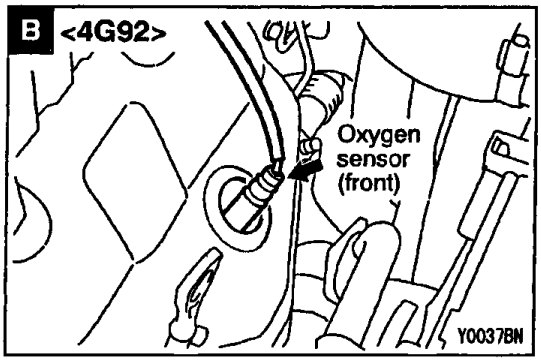
B <4G92>
Oxygen sensor (front)
Y0037BN

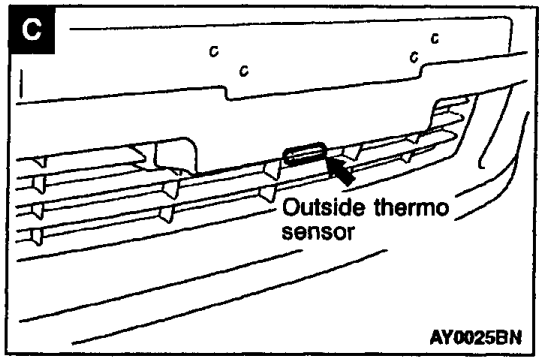
C
Outside thermo sensor
AY0025BN

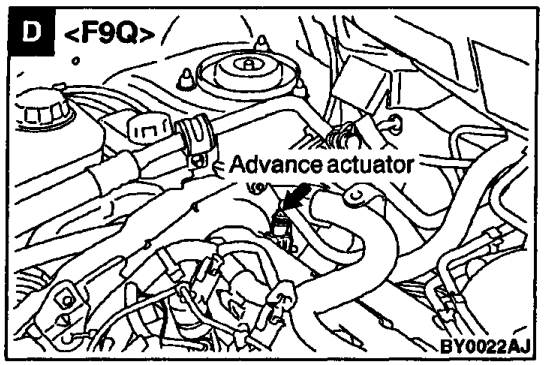
D <F9Q>
Advance actuator
BY0022AJ

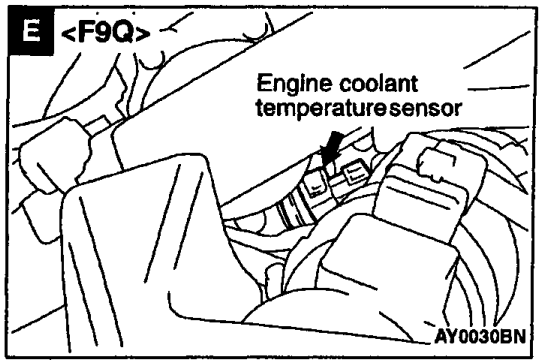
E <F9Q>
Engine coolant temperature sensor
AY0030BN

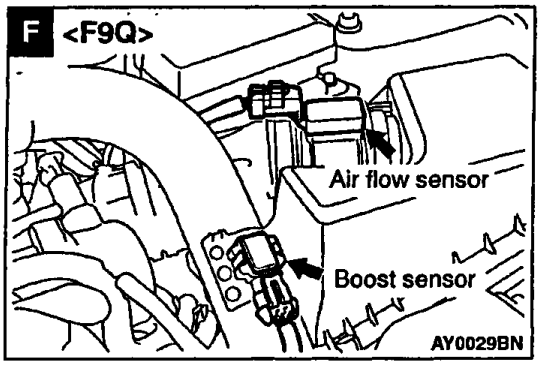
F <F9Q>
Air flow sensor
Boost sensor
AY0029BN

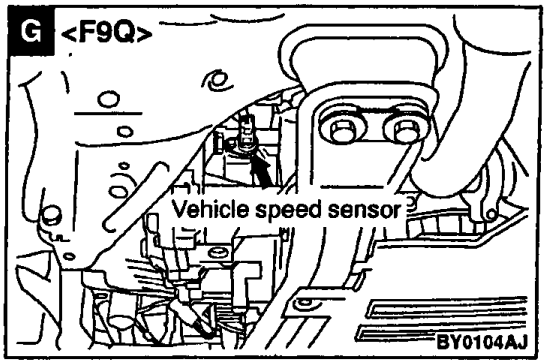
G <F9Q>
Vehicle speed sensor
BY0104AJ

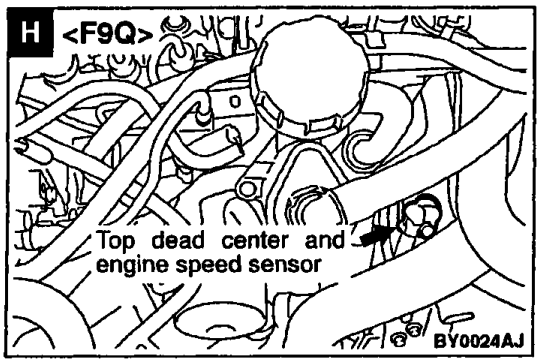
H <F9Q>
Top dead center and engine speed sensor
BY0024AJ

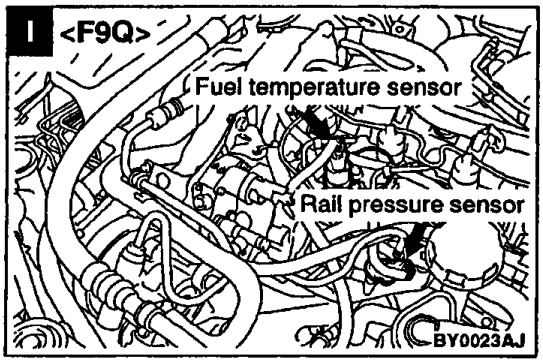
I <F9Q>
Fuel temperature sensor
Rail pressure sensor
BY0023AJ

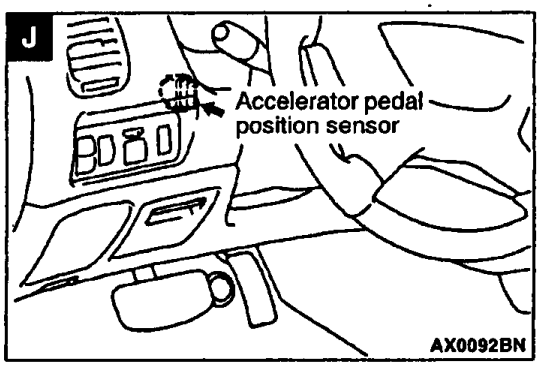
J
Accelerator pedal position sensor
AX0092BN

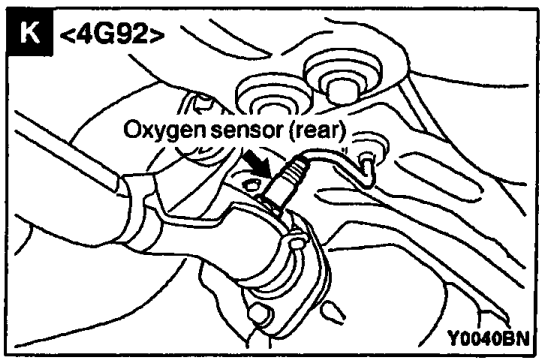
K <4G92>
Oxygen sensor (rear)
Y0040BN

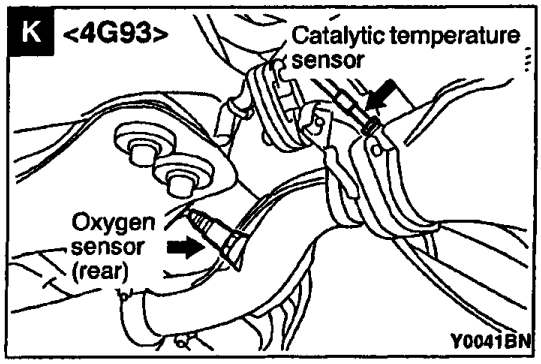
K <4G93>
Catalytic temperature sensor
Oxygen sensor (rear)
Y0041BN

EARTH

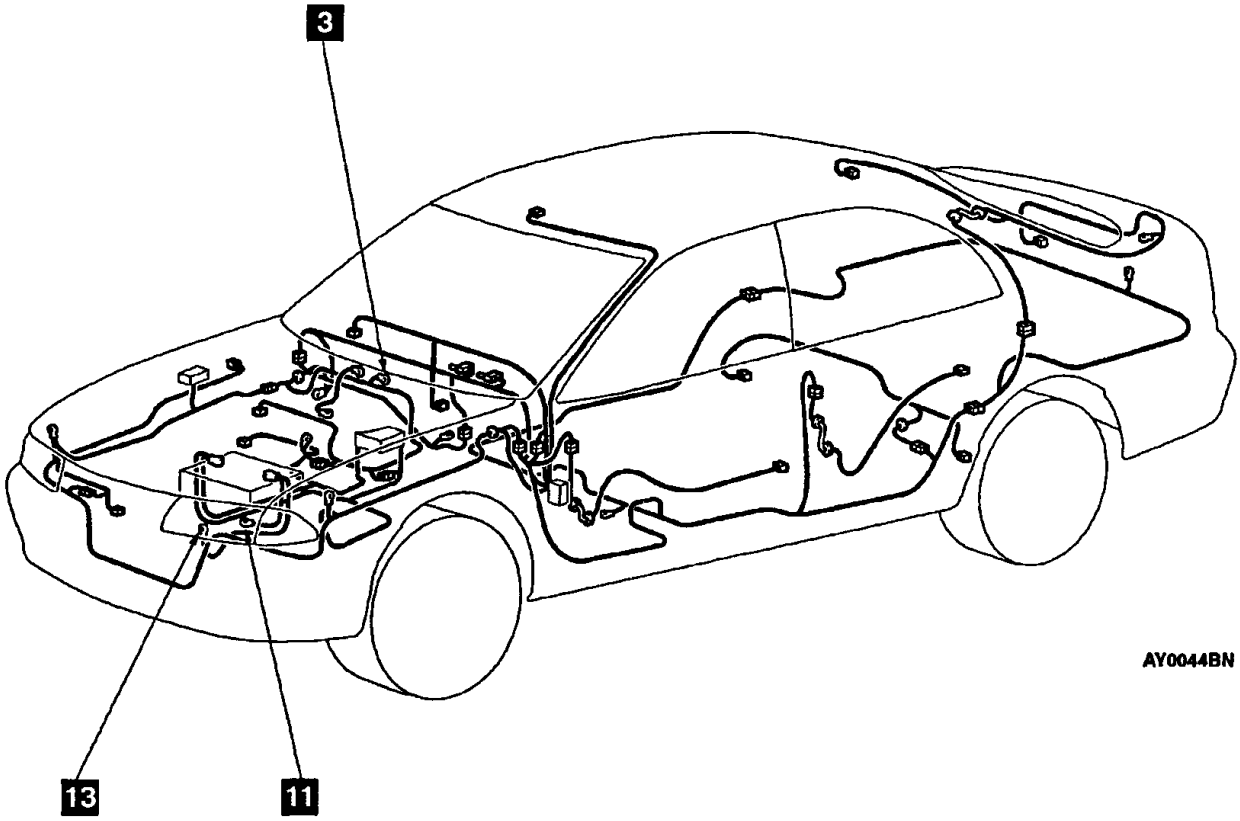
3
13
11
AY0044BN

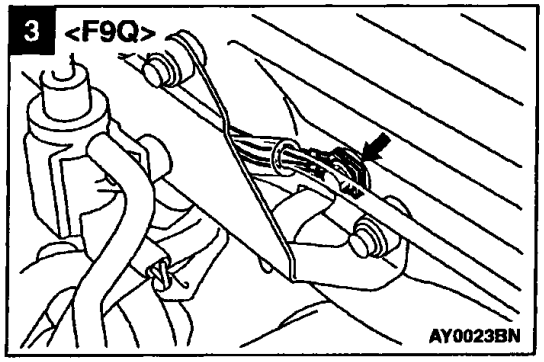
3 <F9Q>
AY0023BN

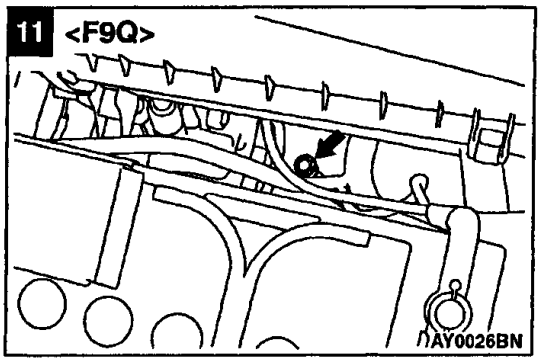
11 <F9Q>
AY0026BN

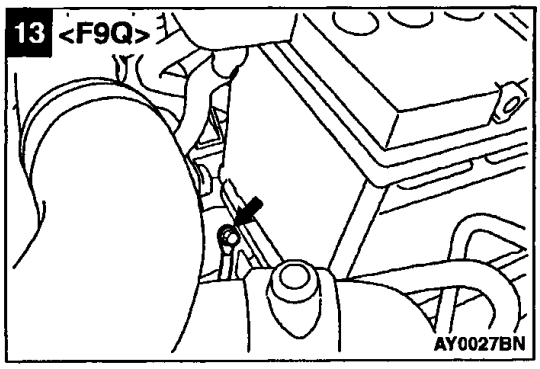
13 <F9Q>
AY0027BN

CIRCUIT DIAGRAM

CONTENTS

CENTRALIZED JUNCTION **4-4**

POWER DISTRIBUTION SYSTEM
- Vehicles without daytime running lamp 4-6
- Vehicles with daytime running lamp 4-12

STARTING SYSTEM
- Diesel-powered vehicles <F9Q> 4-18

IGNITION SYSTEM
- MPI-SOHC-M/T 4-20
- MPI-SOHC-A/T 4-22
- GDI-M/T 4-24
- GDI-A/T 4-26

CHARGING SYSTEM
- Petrol-powered vehicles <GDI> 4-28
- Diesel-powered vehicles <F9Q> 4-30

GLOW SYSTEM
- F9Q 4-32

MPI SYSTEM
- MPI-SOHC-M/T 4-40
- MPI-SOHC-A/T 4-48

GDI SYSTEM
- M/T 4-56
- A/T 4-70

COOLING SYSTEM
- Petrol-powered vehicles 4-83
- Diesel-powered vehicles <F9Q> 4-84

ELC 4-SPEED AUTOMATIC TRANSMISSION
- GDI 4-86

STOP LAMP
- Hatchback 4-96
- Sedan 4-97

BACK-UP LAMP **4-98**

METER AND GAUGE
- Petrol-powered vehicles 4-100
- Diesel-powered vehicles <F9Q> 4-102

MANUAL AIR CONDITIONER
- Petrol-powered vehicles 4-106
- Diesel-powered vehicles <F9Q> 4-112

AUTOMATIC AIR CONDITIONER
- Petrol-powered vehicles 4-116
- Diesel-powered vehicles <F9Q> 4-124

DEFOGGER AND DOOR MIRROR HEATER
- Vehicles without automatic air conditioner 4-132

MULTI CENTER DISPLAY
- Petrol-powered vehicles 4-134
- Diesel-powered vehicles <F9Q> 4-140

HEATED SEAT 4-146

ANTI-LOCK BRAKING SYSTEM (ABS)

Vehicles without TCL 4-148

AUTO-CRUISE CONTROL SYSTEM

M/T 4-150

A/T 4-158

IMMOBILIZER SYSTEM

Diesel-powered vehicles 4-166

Petrol-powered vehicles 4-168

NOTES

CENTRALIZED JUNCTION

FUSIBLE LINK

No.	Circuit	Housing colour	Rated capacity (A)
7	A/C and cooling system circuit	Green	40A

(Relay box in engine compartment)

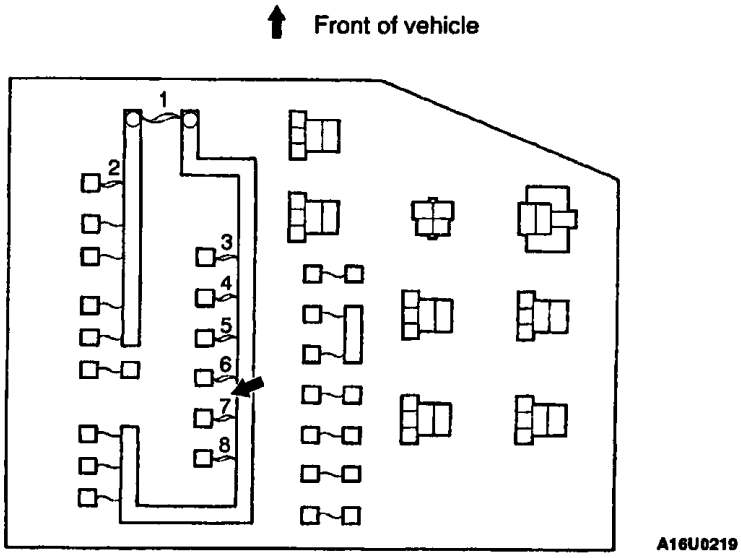

DEDICATED FUSE

Power supply cuit	No.	Rated capacity (A)	Housing colour	Circuit
Battery/Alternator (Fusible link No.1)	2	30A	Green	Condenser fan circuit
	4	15A	Blue	Central door locking circuit
Battery	13	30A	Green	Glow heater circuit
	14	30A	Green	Glow heater circuit

(Relay box in engine compartment

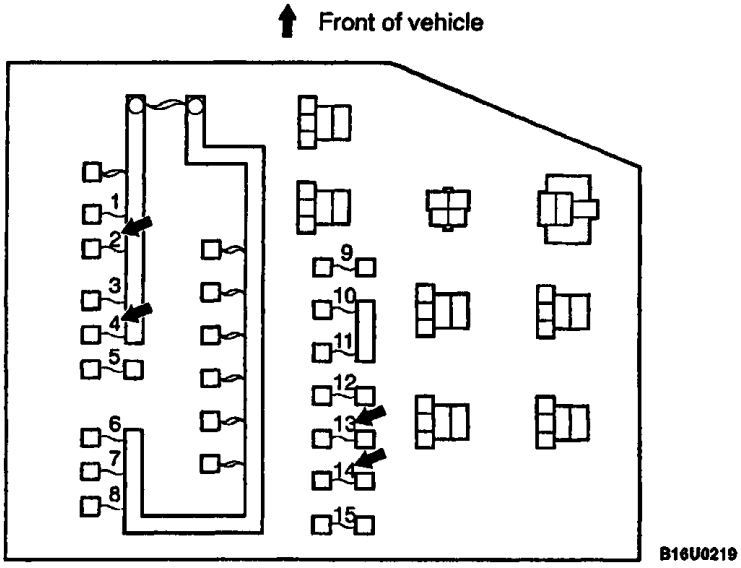

MULTI-PURPOSE FUSE

Connector No.	Name	Connector No.	Name
A-90X	Condenser fan relay (LO)	A-137X	Glow heater relay 2
A-136X	Glow heater relay 1		

(Relay box in engine compartment)

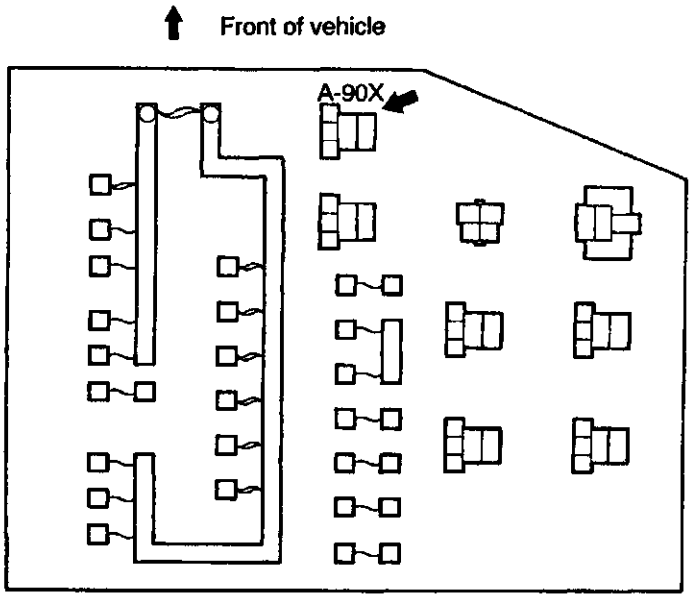

C16U0219

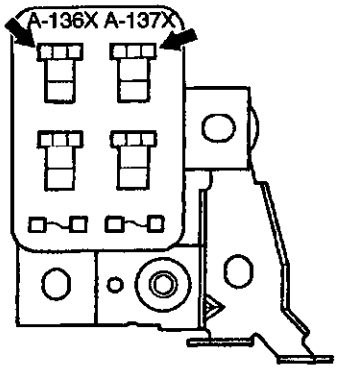

A16U0139

POWER DISTRIBUTION SYSTEM

Vehicles without daytime running lamp

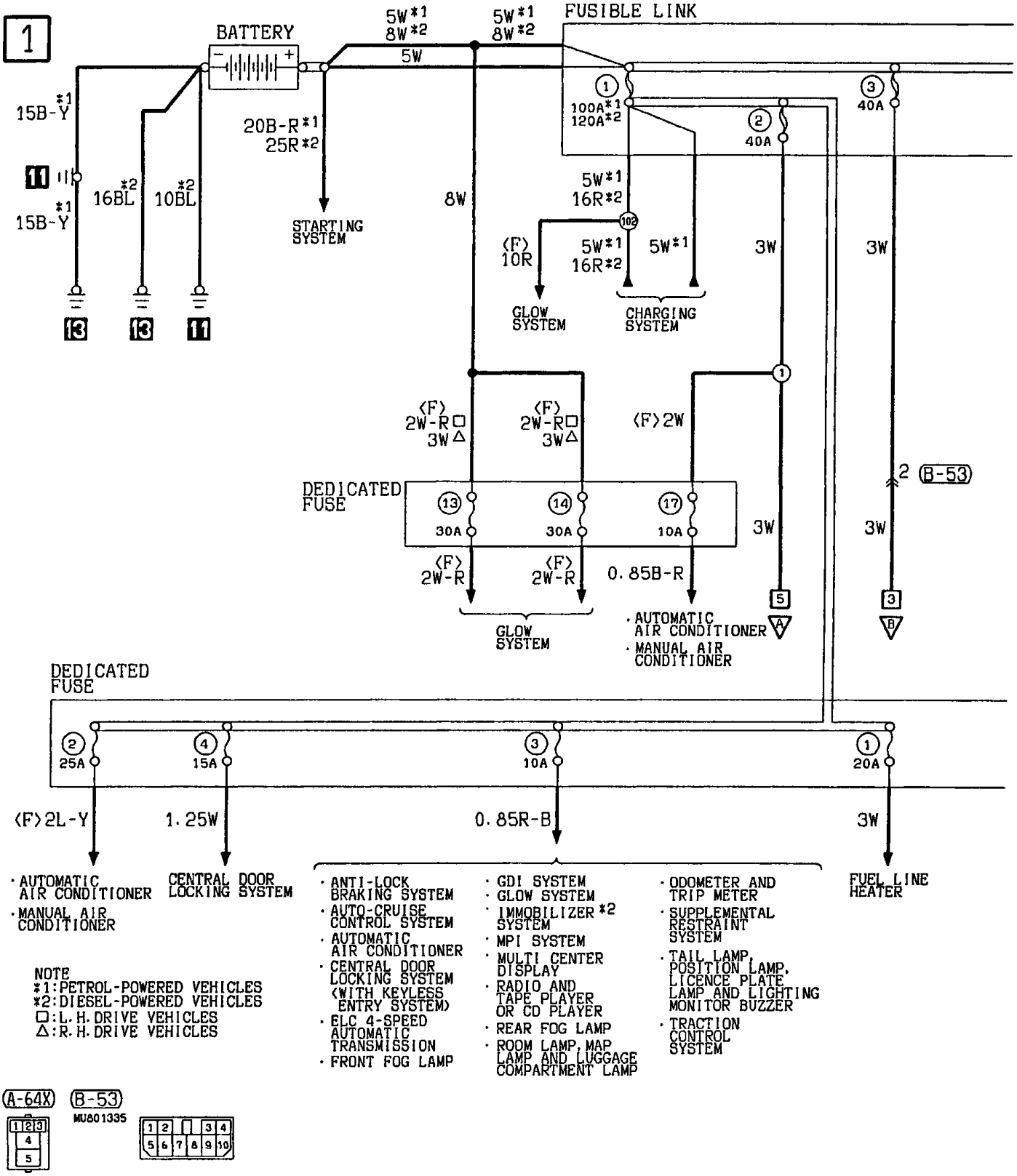

H1T01E00AA

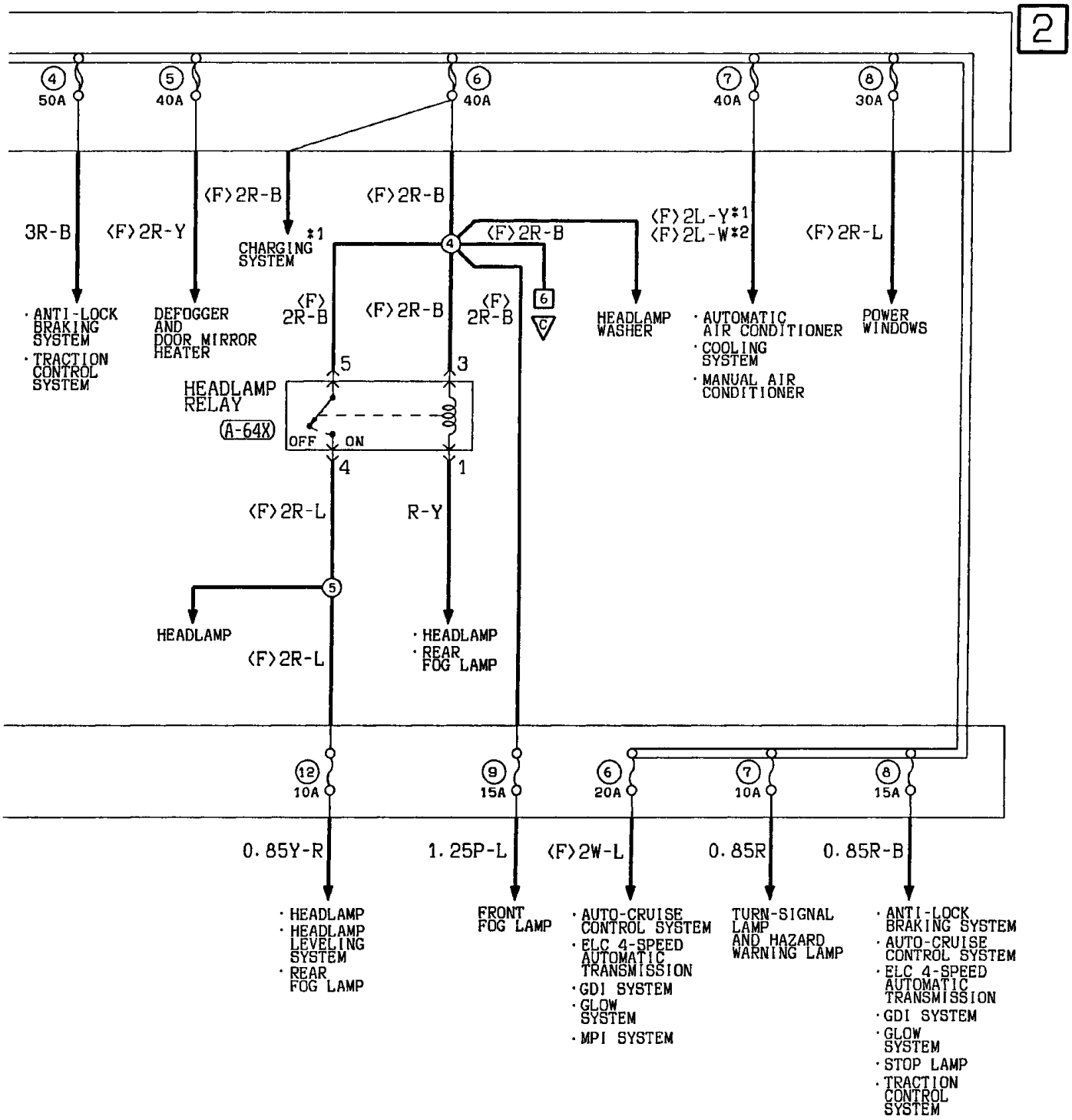

Wire colour code

B :Black	LG:Light green	G :Green	L :Blue	W :White	Y :Yellow	SB:Sky blue
BR:Brown	O :Orange	GR:Gray	R :Red	P :Pink	V :Violet	

H1T01E00AB

POWER DISTRIBUTION SYSTEM <Vehicles without daytime running lamp> (CONTINUED)

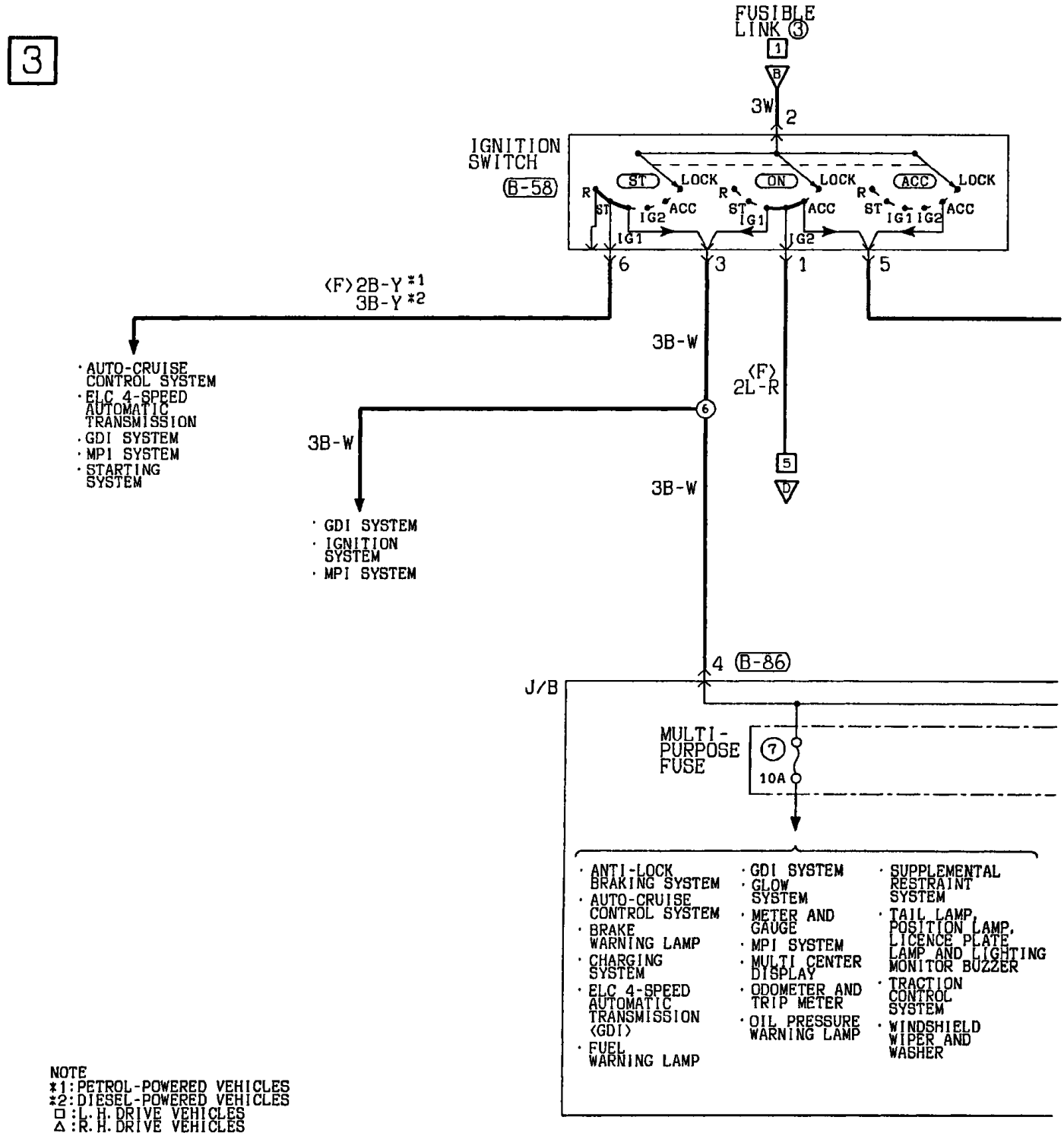

NOTE
*1: PETROL-POWERED VEHICLES
*2: DIESEL-POWERED VEHICLES
□ : L.H. DRIVE VEHICLES
△ : R.H. DRIVE VEHICLES

B-53 B-58 B-86

MU801335

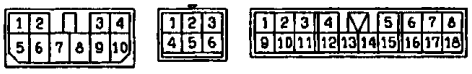

H1T01E00BA

4

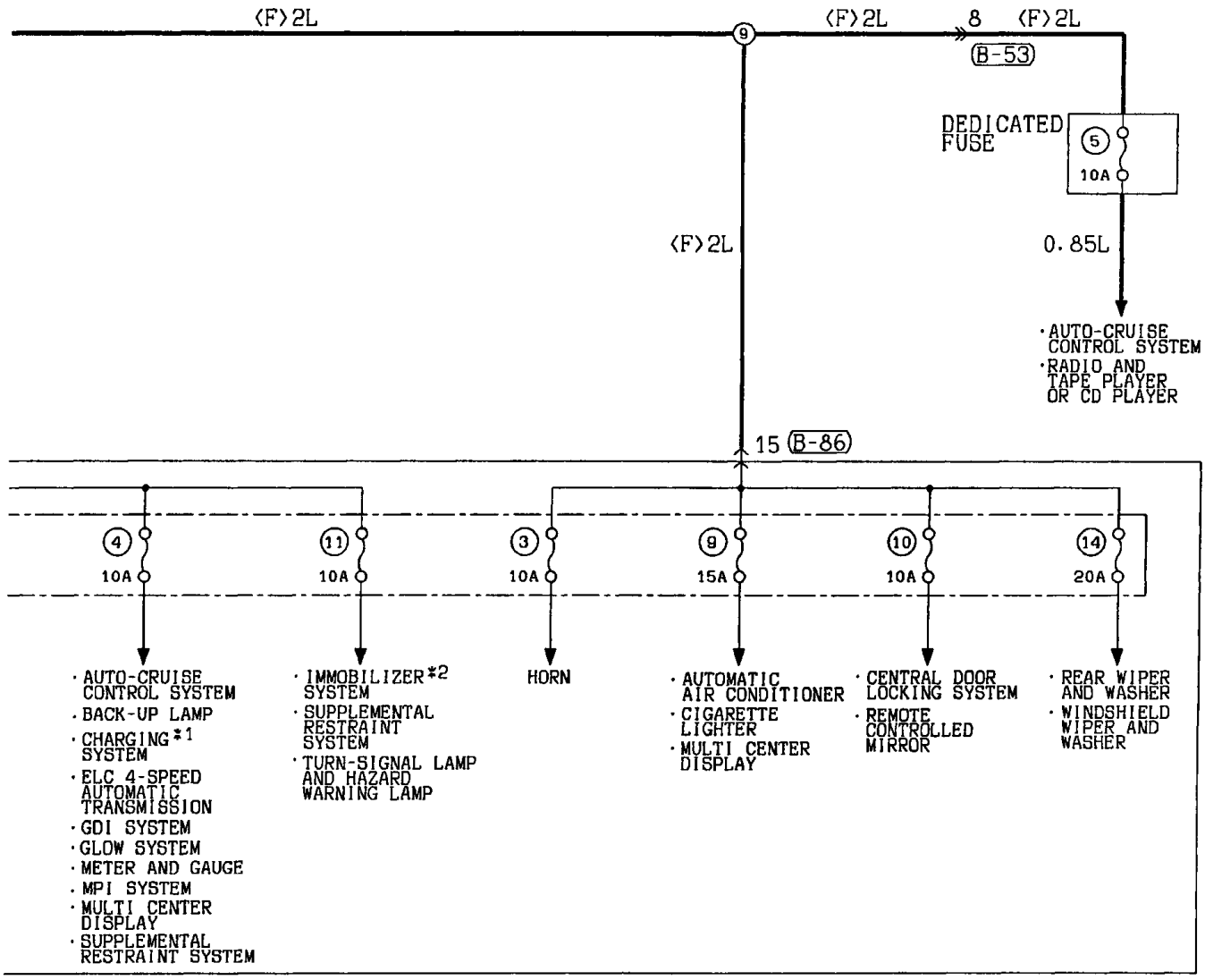

Wire colour code
B :Black LG:Light green G :Green L :Blue W :White Y :Yellow SB:Sky blue
BR:Brown O :Orange GR:Gray R :Red P :Pink V :Violet

H1T01E00BB

POWER DISTRIBUTION SYSTEM <Vehicles without daytime running lamp> (CONTINUED)

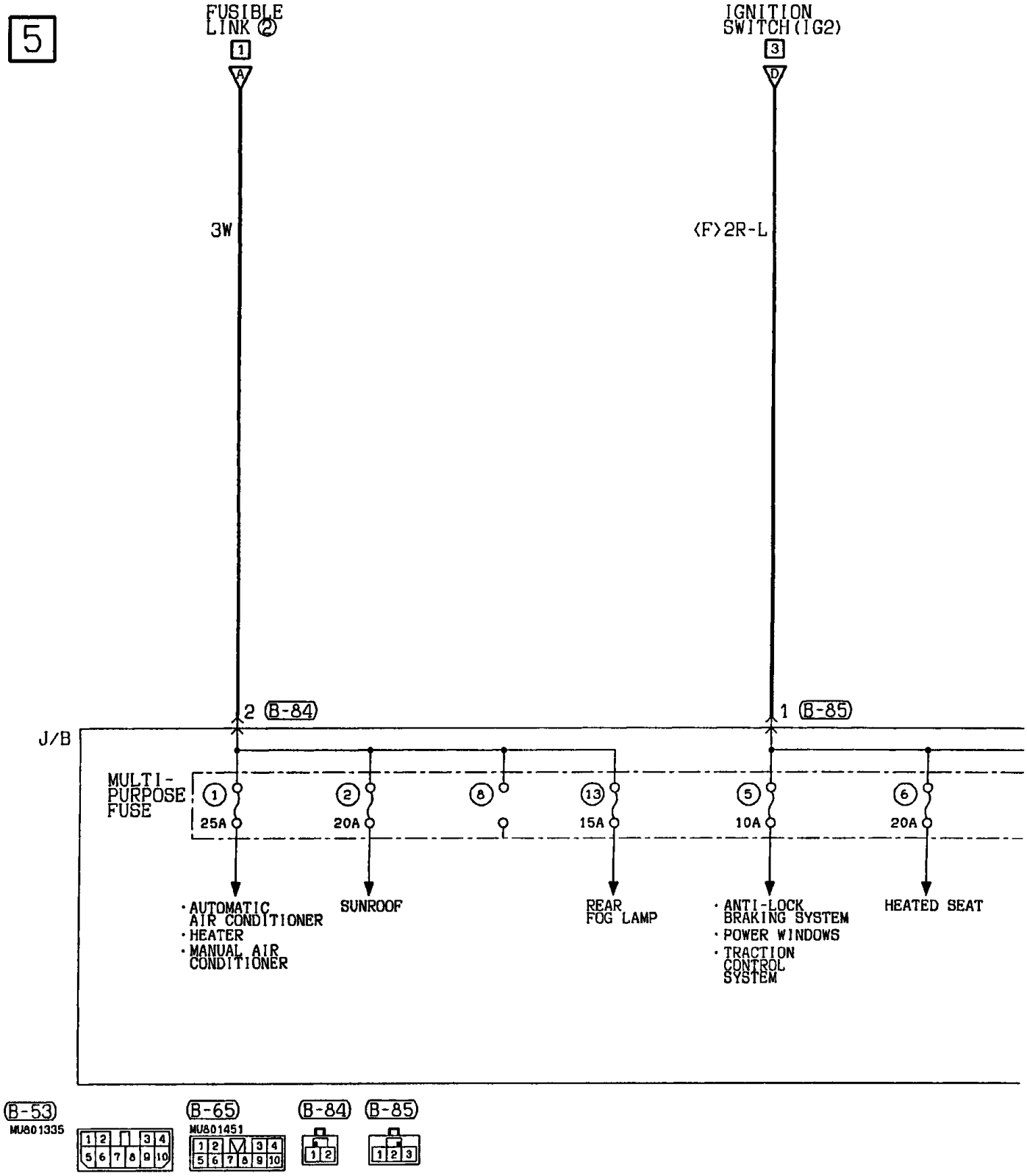

H1T01E00CA

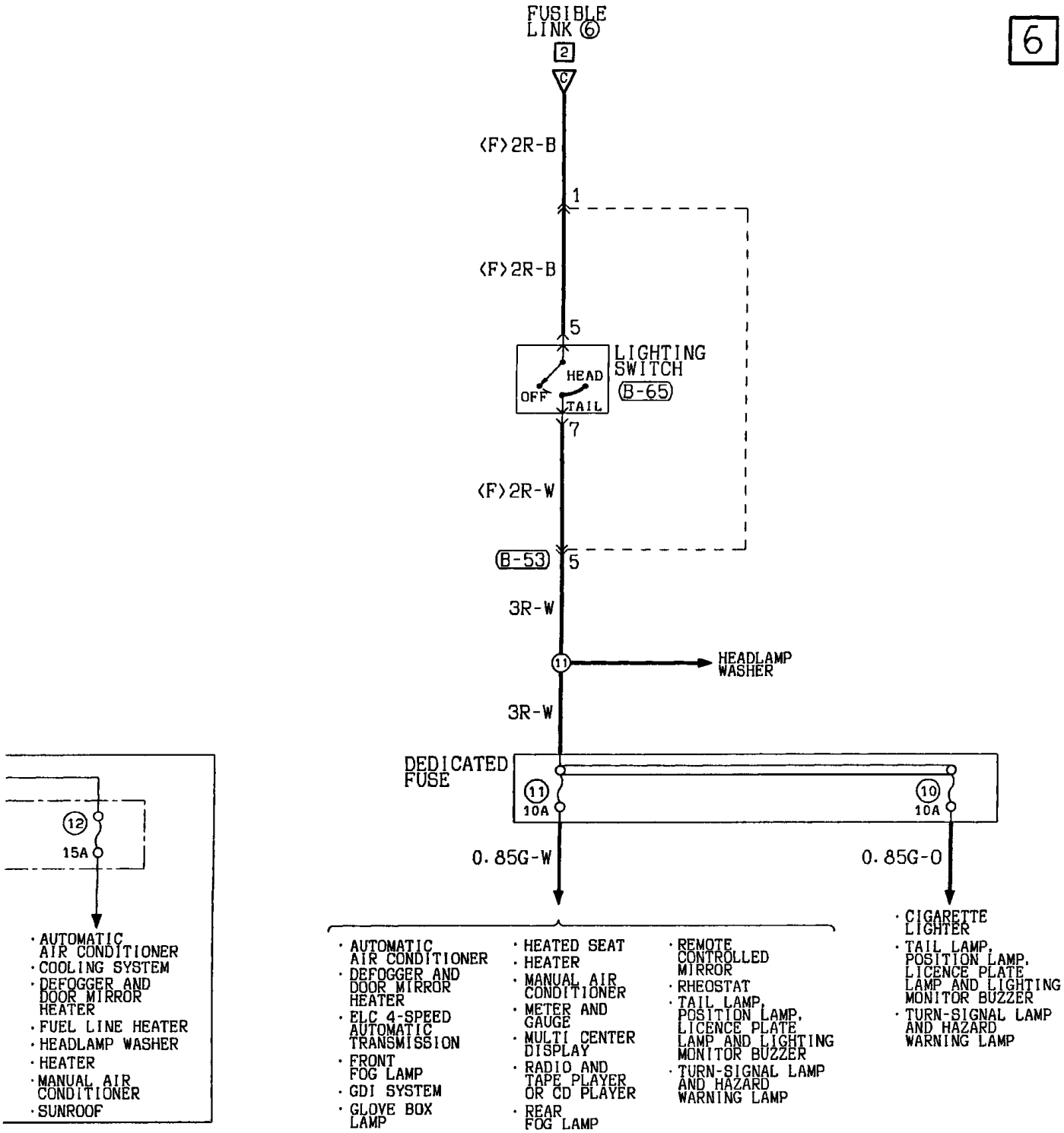

Wire colour code
B :Black LG:Light green G :Green L :Blue W :White Y :Yellow SB:Sky blue
BR:Brown O :Orange GR:Gray R :Red P :Pink V :Violet

H1T01E00CB

POWER DISTRIBUTION SYSTEM

Vehicles with daytime running lamp

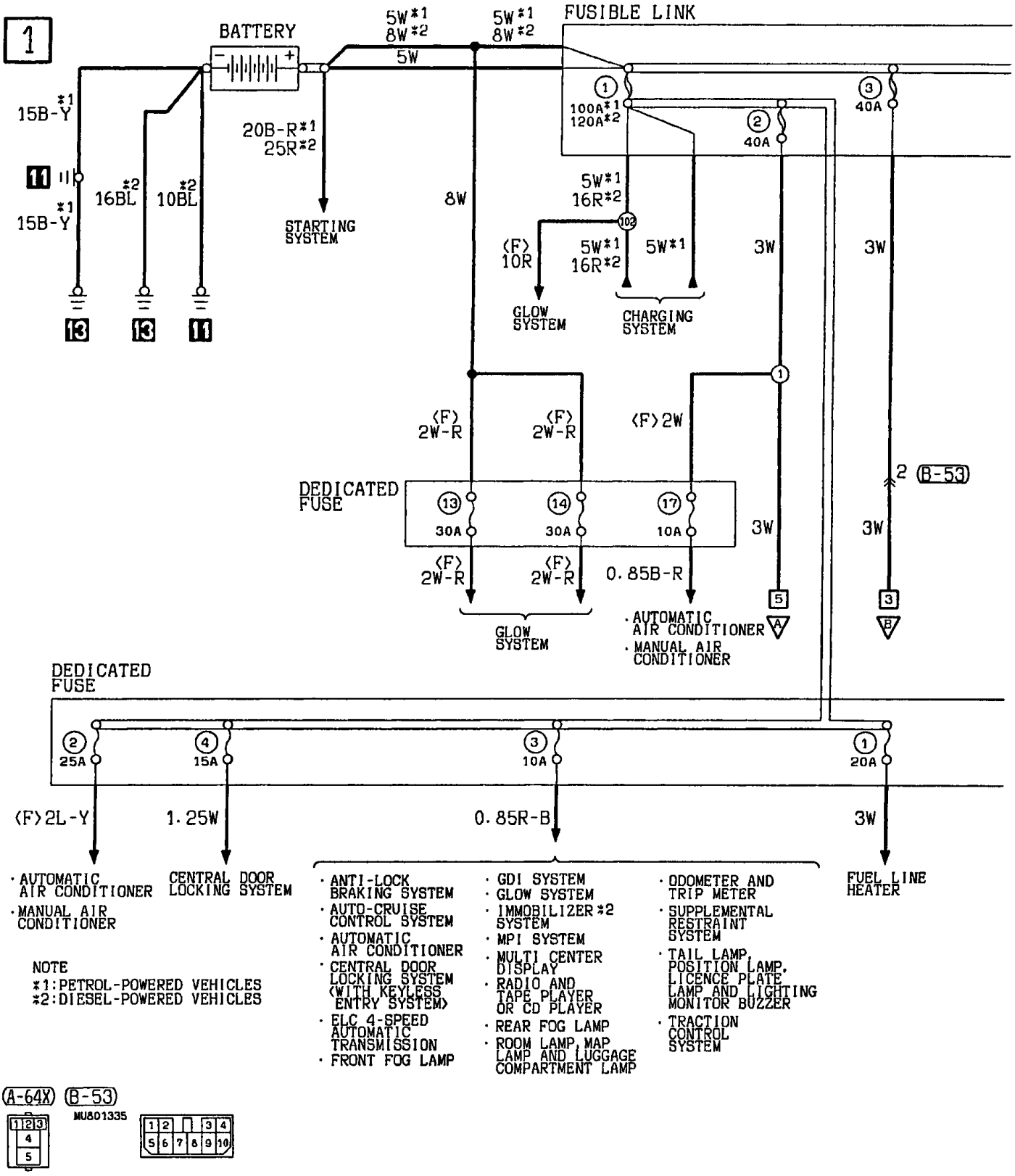

H1T01E01AA

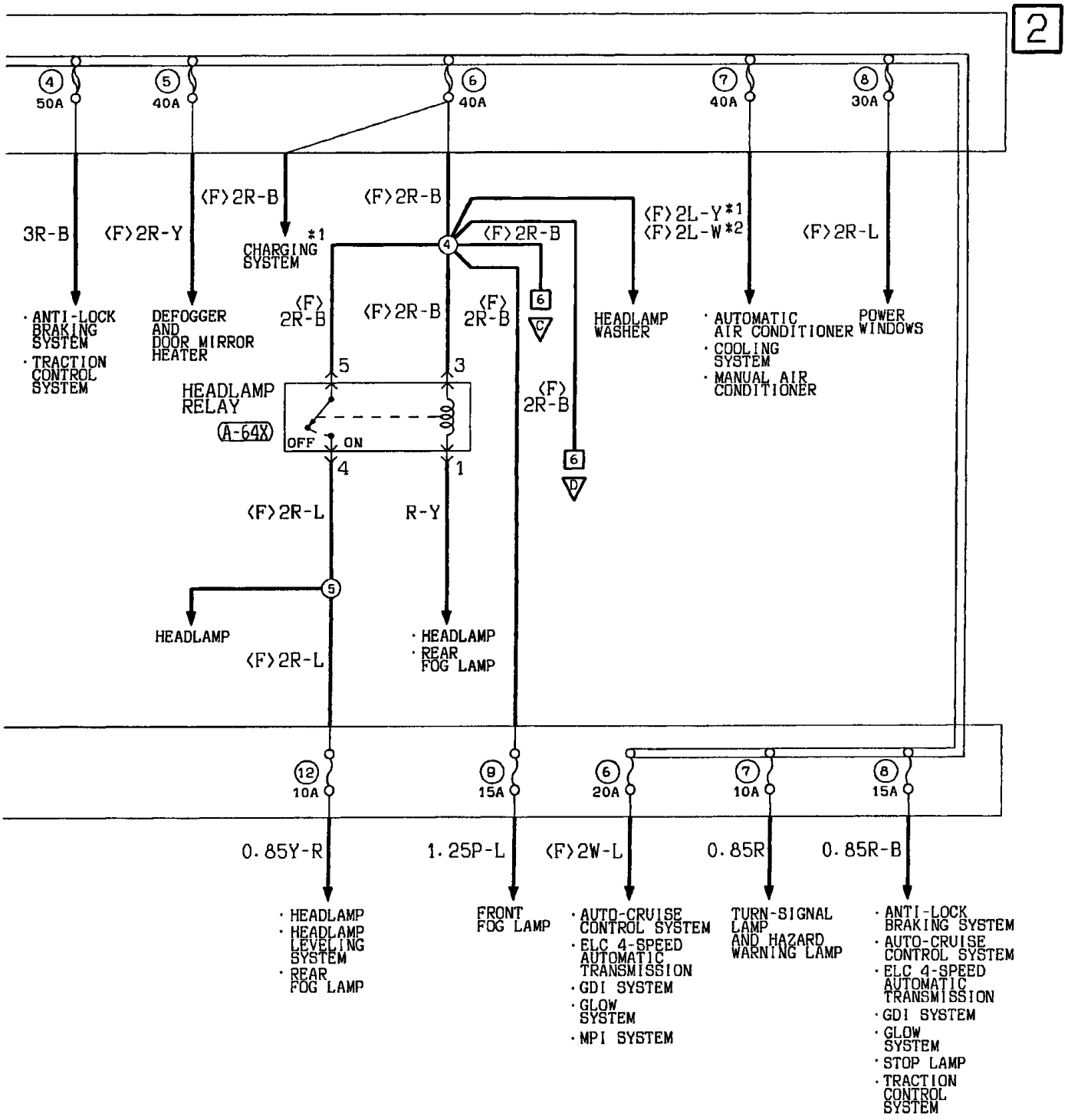

Wire colour code

B :Black	LG:Light green	G :Green	L :Blue	W :White	Y :Yellow	SB:Sky blue
BR:Brown	O :Orange	GR:Gray	R :Red	P :Pink	V :Violet	

H1T01E01AB

POWER DISTRIBUTION SYSTEM <Vehicles with daytime running lamp> (CONTINUED)

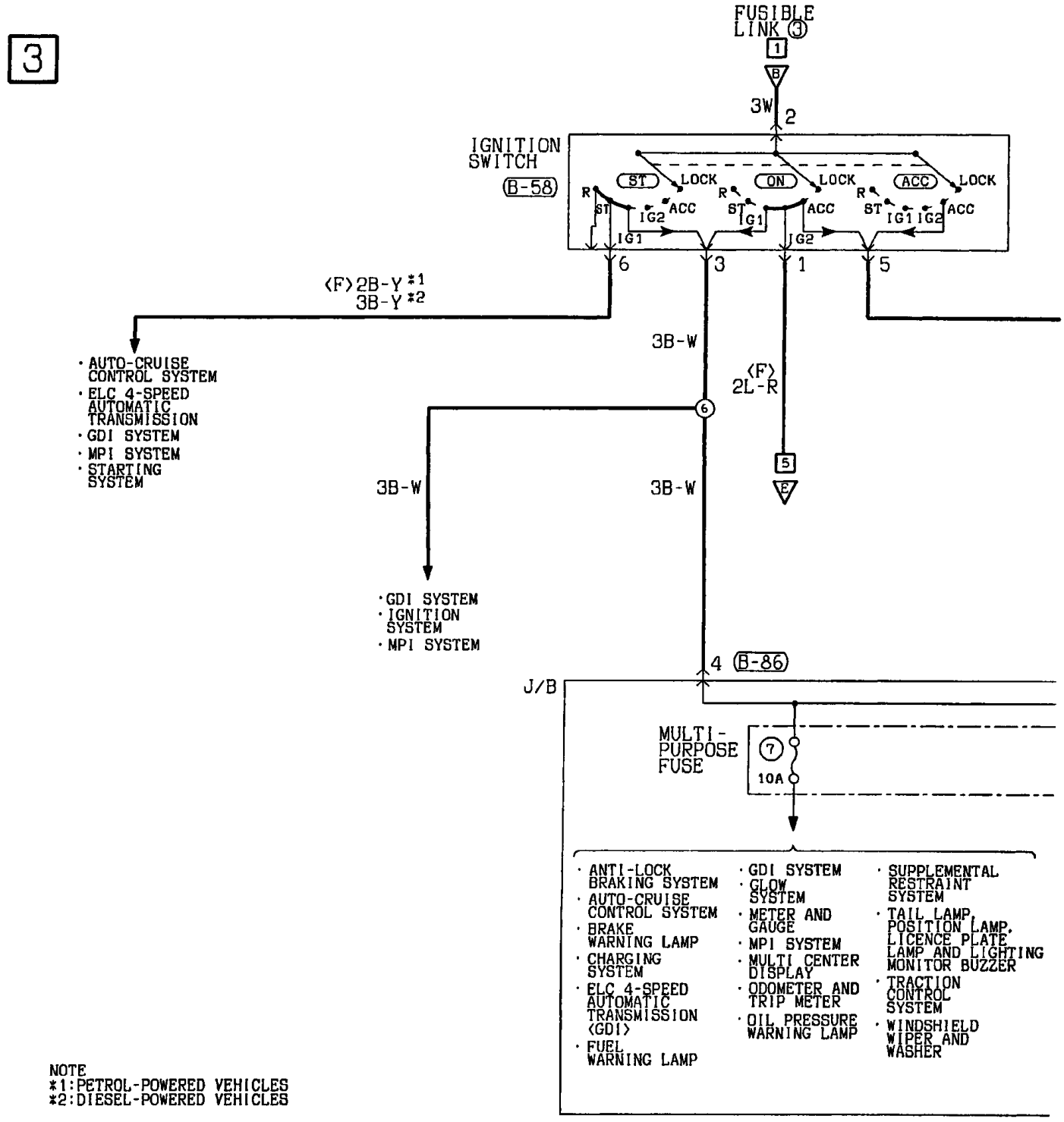

NOTE
*1:PETROL-POWERED VEHICLES
*2:DIESEL-POWERED VEHICLES

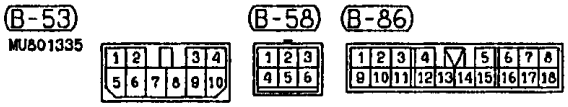

H1T01E01BA

4

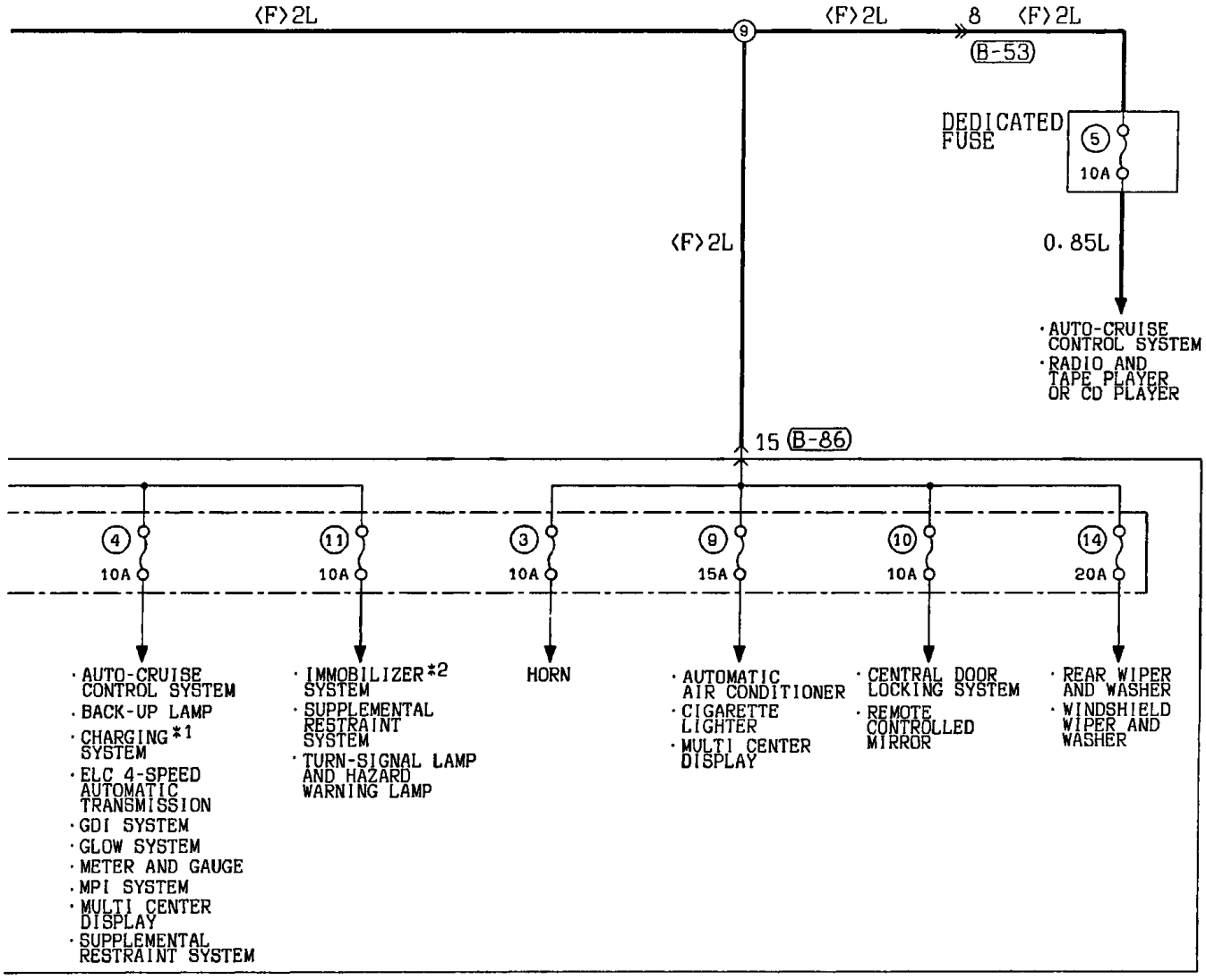

Wire colour code

B :Black	LG:Light green	G :Green	L :Blue	W :White	Y :Yellow	SB:Sky blue
BR:Brown	O :Orange	GR:Gray	R :Red	P :Pink	V :Violet	

H1T01E01BB

POWER DISTRIBUTION SYSTEM <Vehicles with daytime running lamp> (CONTINUED)

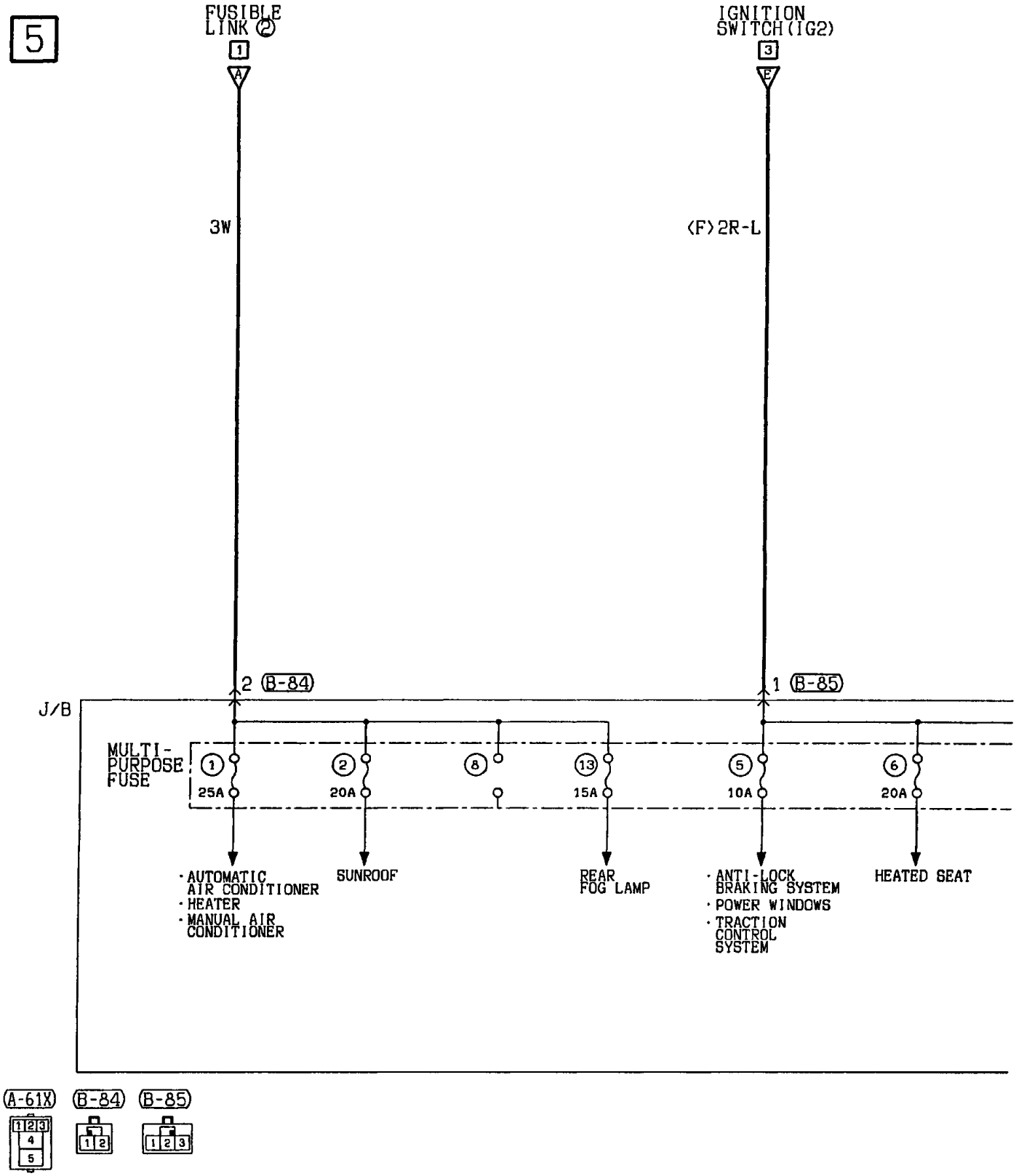

H1T01E01CA

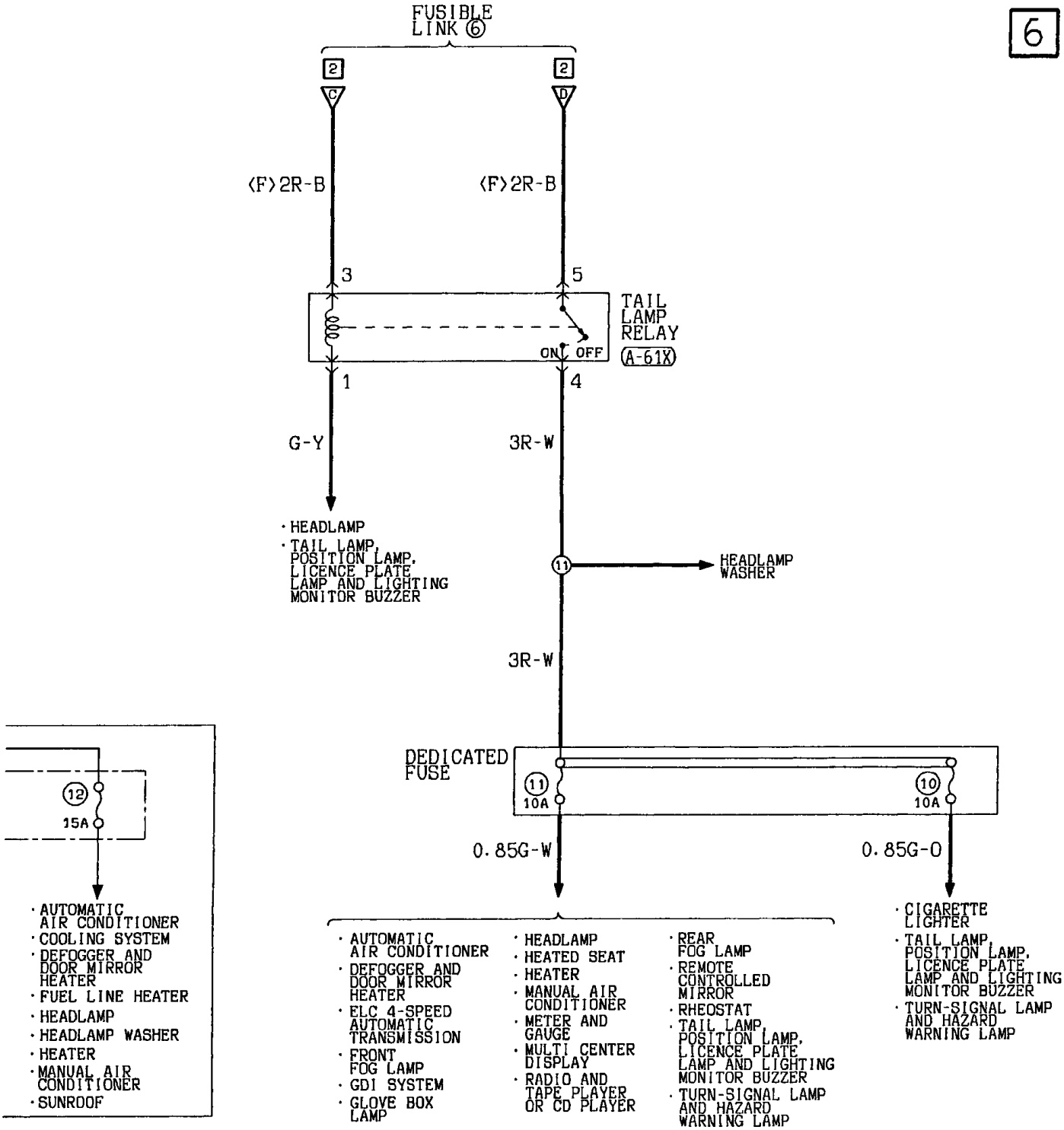

Wire colour code

B :Black	LG:Light green	G :Green	L :Blue	W :White	Y :Yellow	SB:Sky blue
BR:Brown	O :Orange	GR:Gray	R :Red	P :Pink	V :Violet	

H1T01E01CB

STARTING SYSTEM

Diesel-powered vehicles <F9Q>

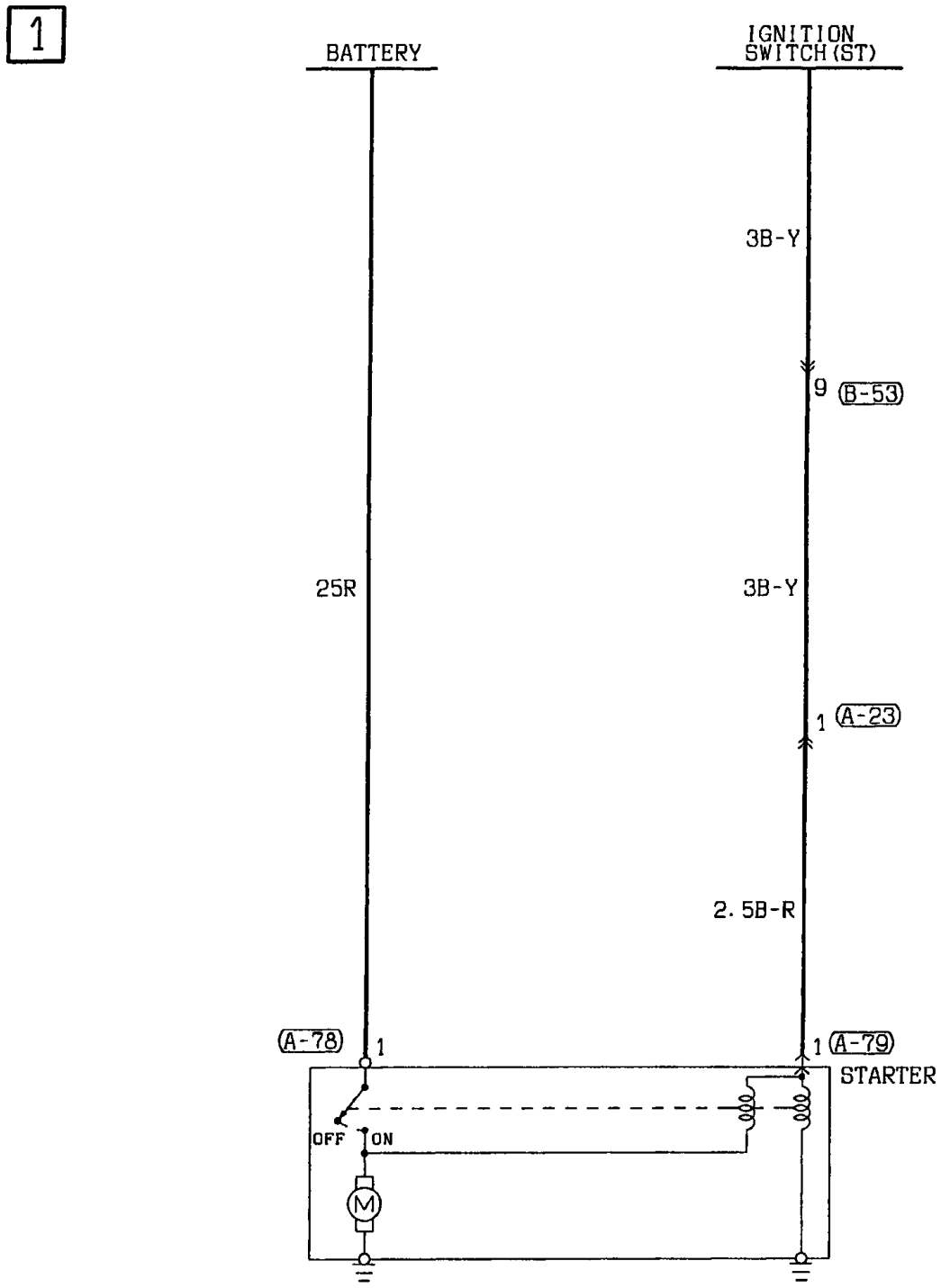

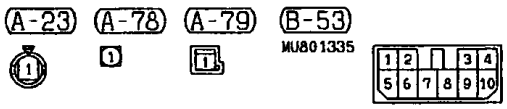

Wire colour code
B :Black LG:Light green G :Green L :Blue W :White Y :Yellow SB:Sky blue
BR:Brown O :Orange GR:Gray R :Red P :Pink V :Violet

H1T02E00AA

STARTING SYSTEM (See P. 4-18.)

OPERATION

On vehicles with automatic transmission, placing the ignition switch in the ST position with the selector lever in P or N position causes the starter contacts (magnet switch) to close energizing the starter motor.

TROUBLESHOOTING HINTS

1. Starter motor does not turn over at all.
   - Check starter (coil).
   - Check battery terminals for proper contact.
2. Starter motor does not stop rotating.
   - Check starter (magnet switch).

IGNITION SYSTEM

MPI-SOHC-M/T

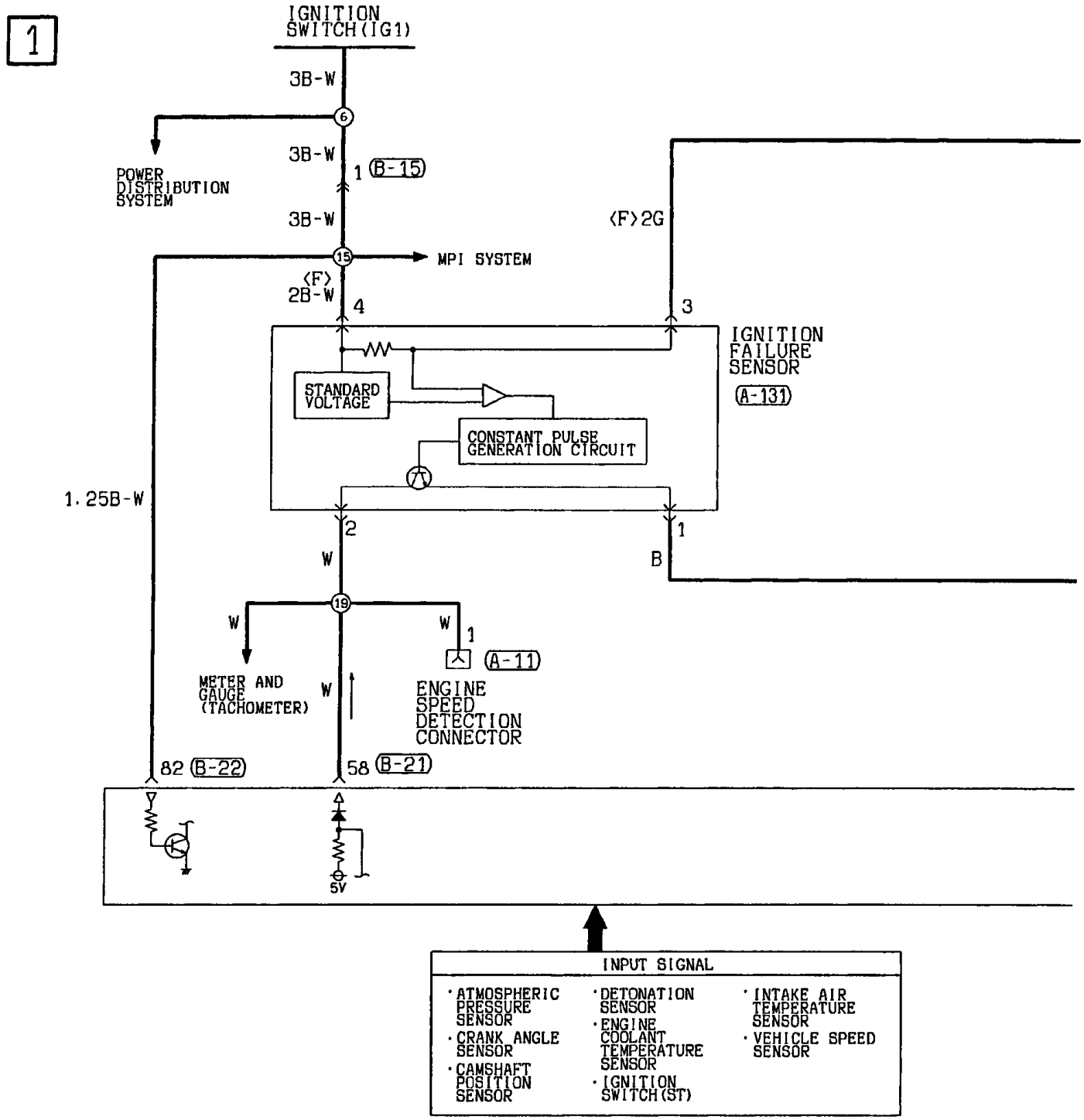

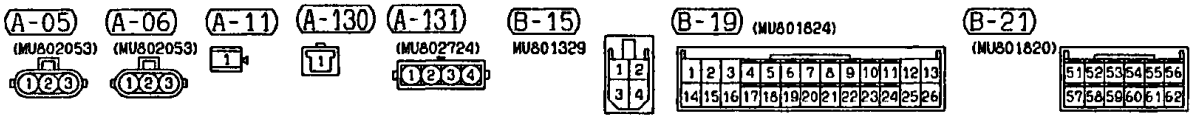

H1T03E00AA

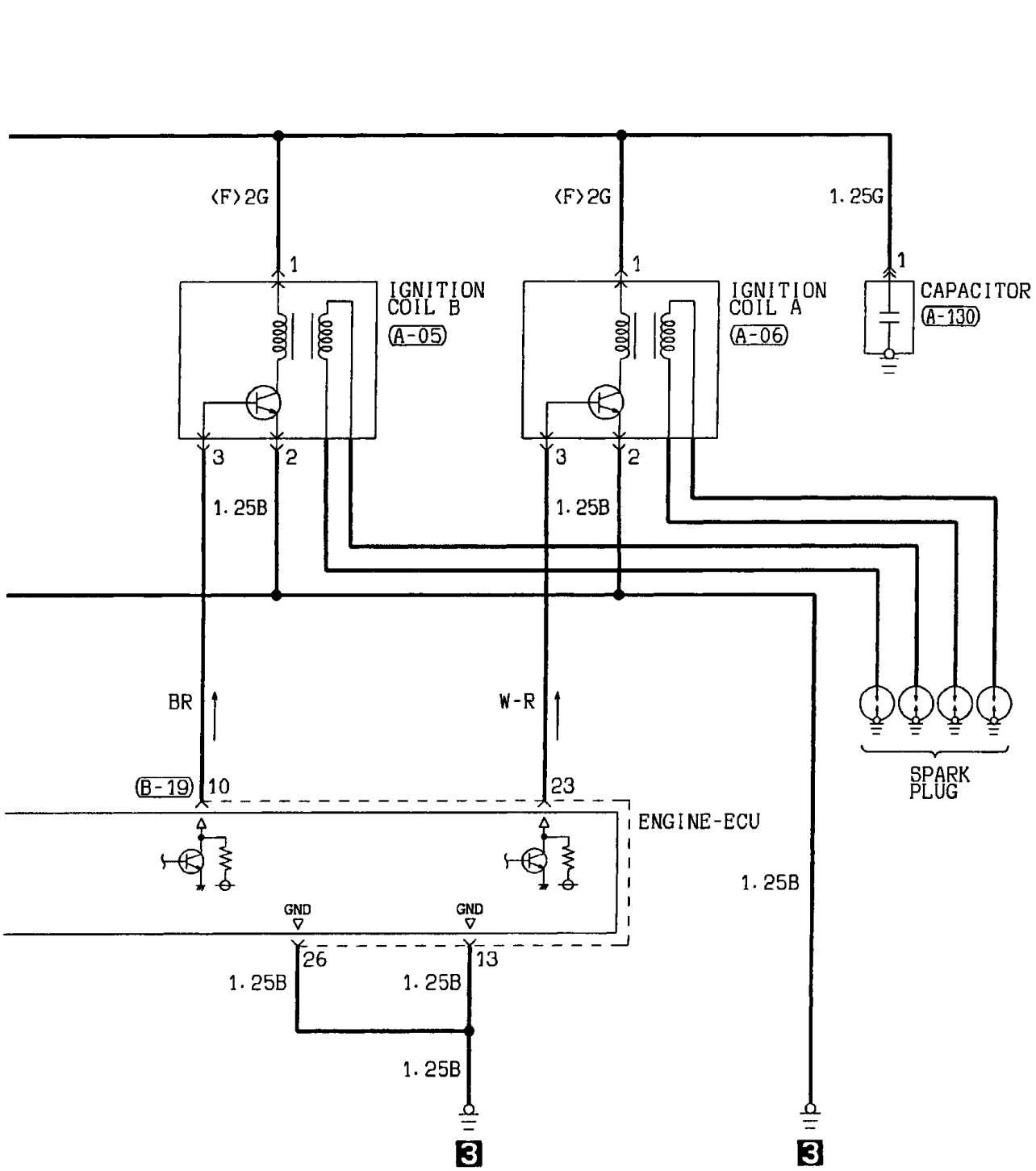

(B-22) (MU801823)

71	72	73	74	75	76	77	78	79	80	81	
82	83	84	85	86	87	88	89	90	91	92	

Wire colour code
B :Black LG:Light green G :Green L :Blue W :White Y :Yellow SB:Sky blue
BR:Brown O :Orange GR:Gray R :Red P :Pink V :Violet

H1T03E00AB

IGNITION SYSTEM

MPI-SOHC-A/T

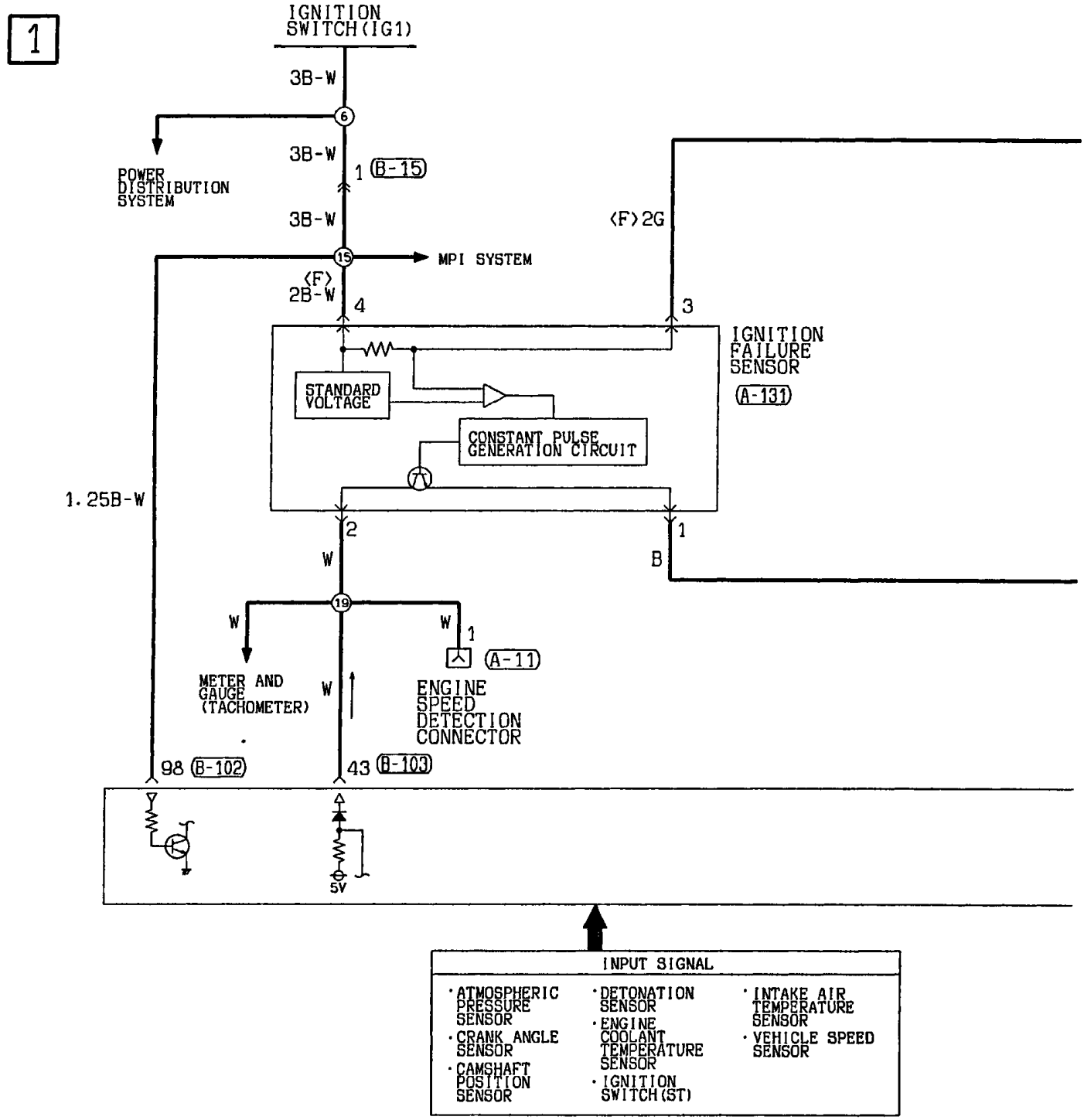

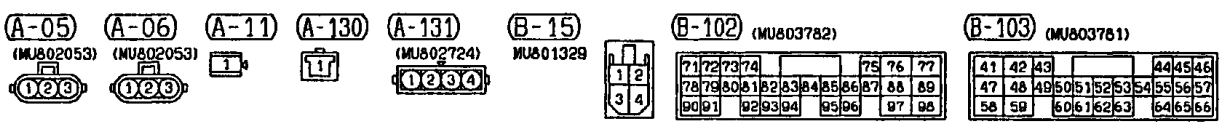

H1T03E01AA

2

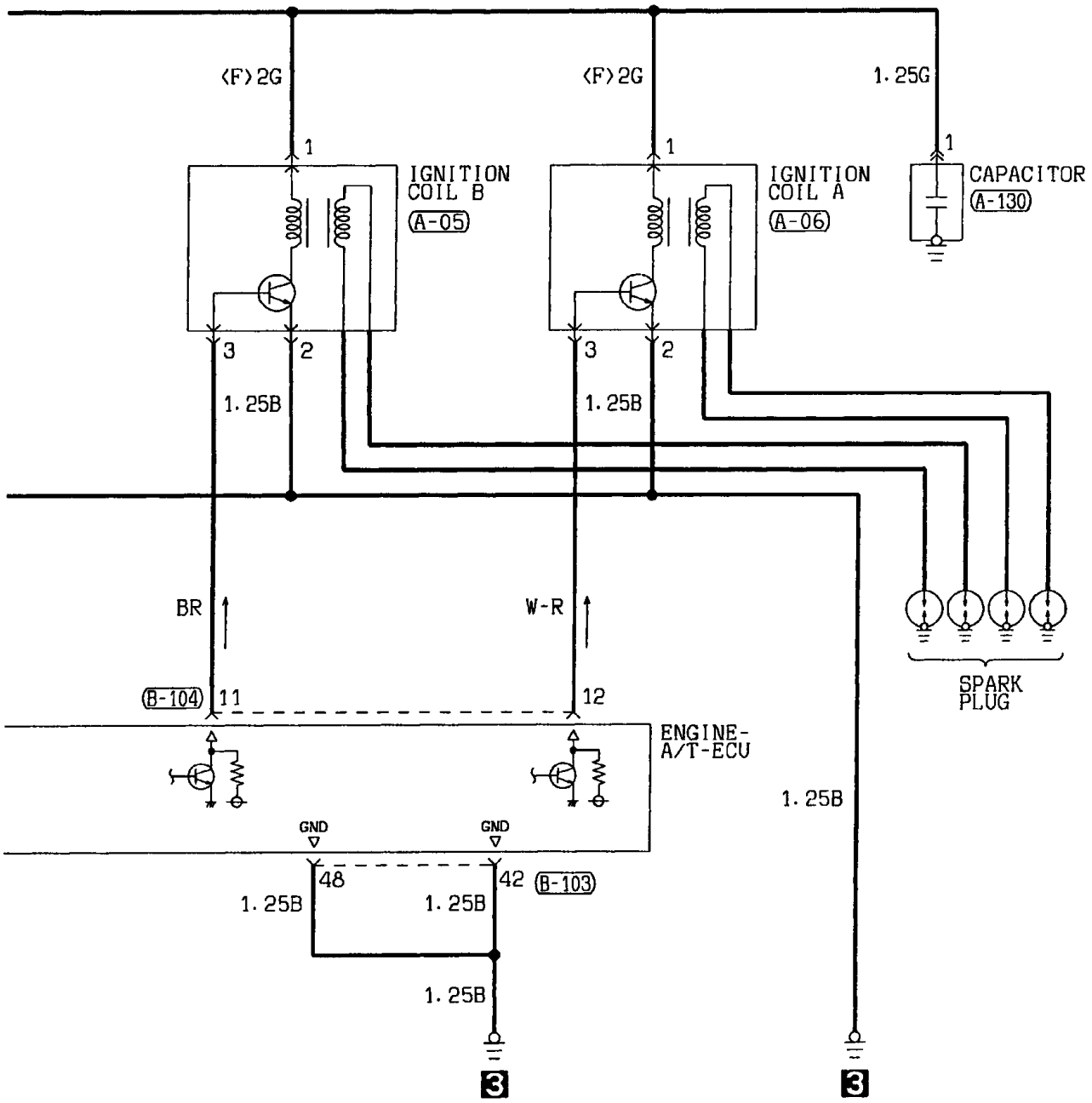

(B-104) (MU803784)

1	2		3	4					5	6		7	8	
9	10	11	12	13	14	15	16	17	18	19	20	21	22	23
24	25		26	27	28	29		30	31	32	33		34	35

Wire colour code
B :Black LG:Light green G :Green L :Blue W :White Y :Yellow SB:Sky blue
BR:Brown O :Orange GR:Gray R :Red P :Pink V :Violet

H1T03E01AB

IGNITION SYSTEM

GDI-M/T

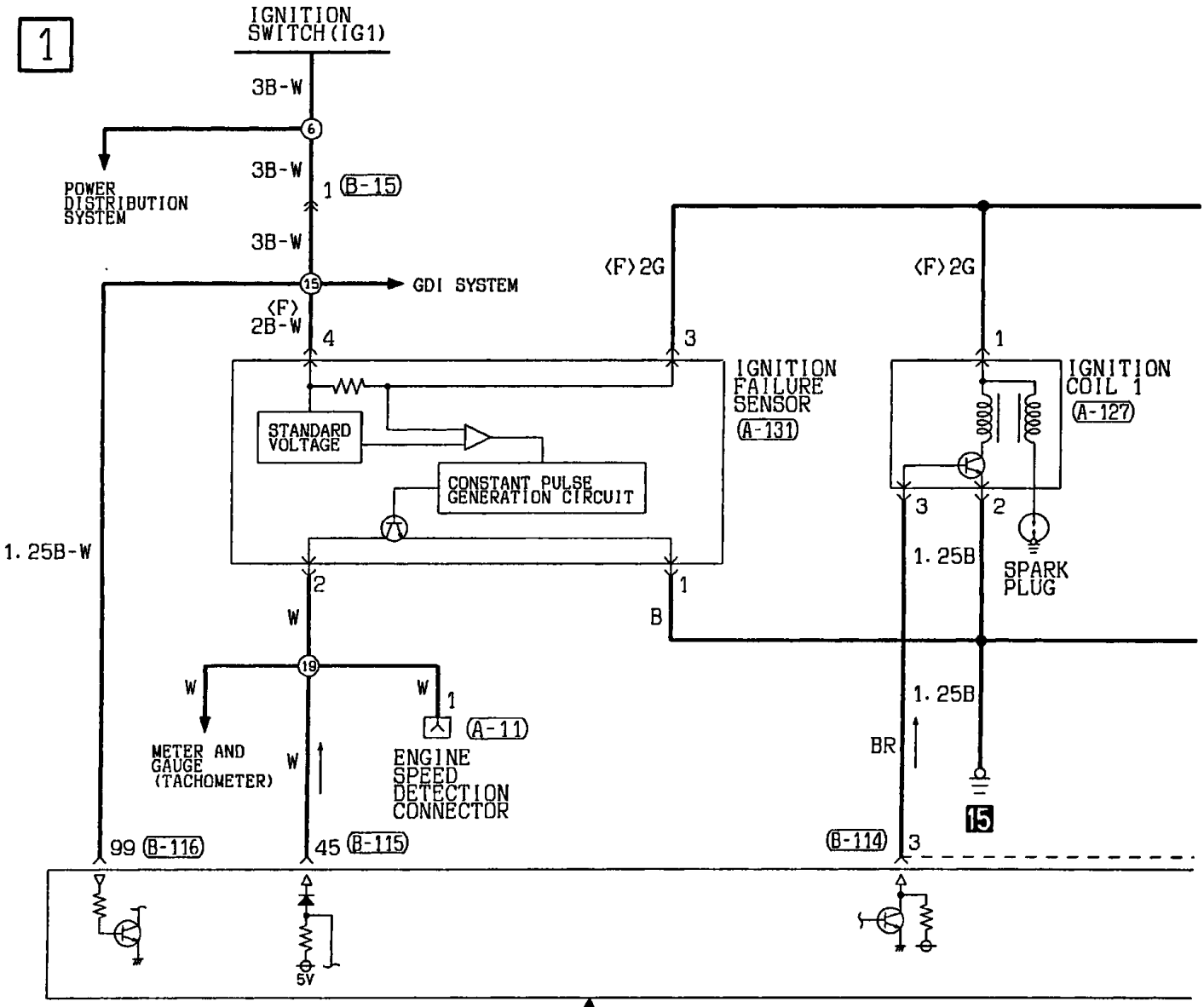

INPUT SIGNAL		
· AIR FLOW SENSOR	· DETONATION SENSOR	· INTAKE AIR TEMPERATURE SENSOR
· ATMOSPHERIC PRESSURE SENSOR	· ENGINE COOLANT TEMPERATURE SENSOR	· VEHICLE SPEED SENSOR
· CRANK ANGLE SENSOR	· IDLE SWITCH	
· CAMSHAFT POSITION SENSOR	· IGNITION SWITCH(ST)	

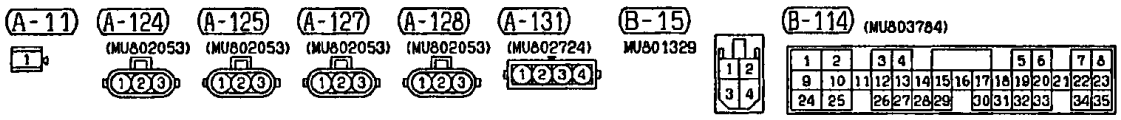

H1T03E02AA

2

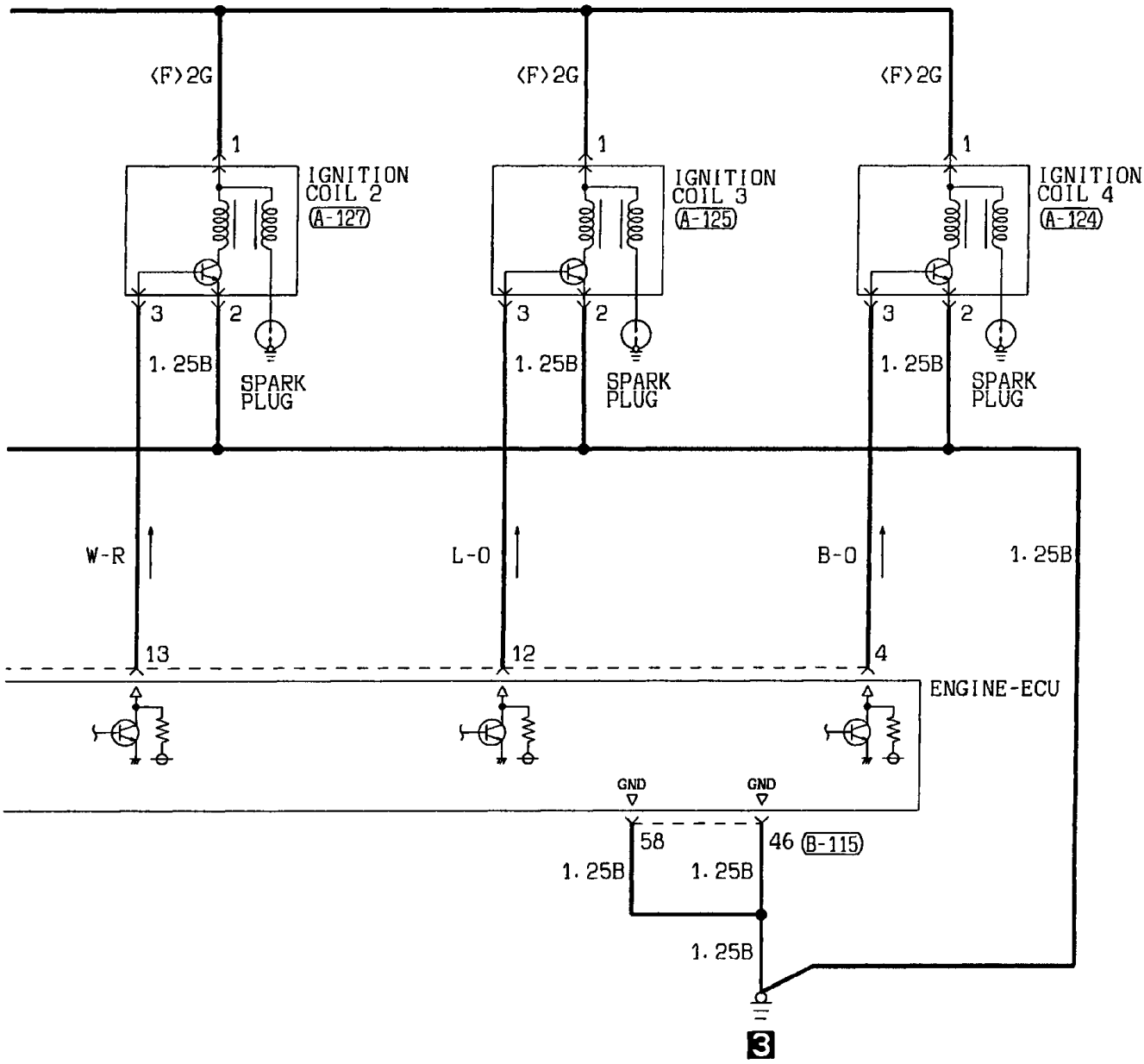

(B-115) (MU803782)

41	42	43	44						45	46	47			
48	49	50	51	52	53	54	55	56	57	58	59			
60	61		62	63	64		65	66		67	68			

(B-116) (MU803783)

71	72		73	74					75	76	77			
78	79	80	81	82	83	84	85	86	87	88	89	90		
91	92	93		94	95		96	97	98		99	100		

Wire colour code
B :Black LG:Light green G :Green L :Blue W :White Y :Yellow SB:Sky blue
BR:Brown O :Orange GR:Gray R :Red P :Pink V :Violet

H1T03E02AB

IGNITION SYSTEM

GDI-A/T

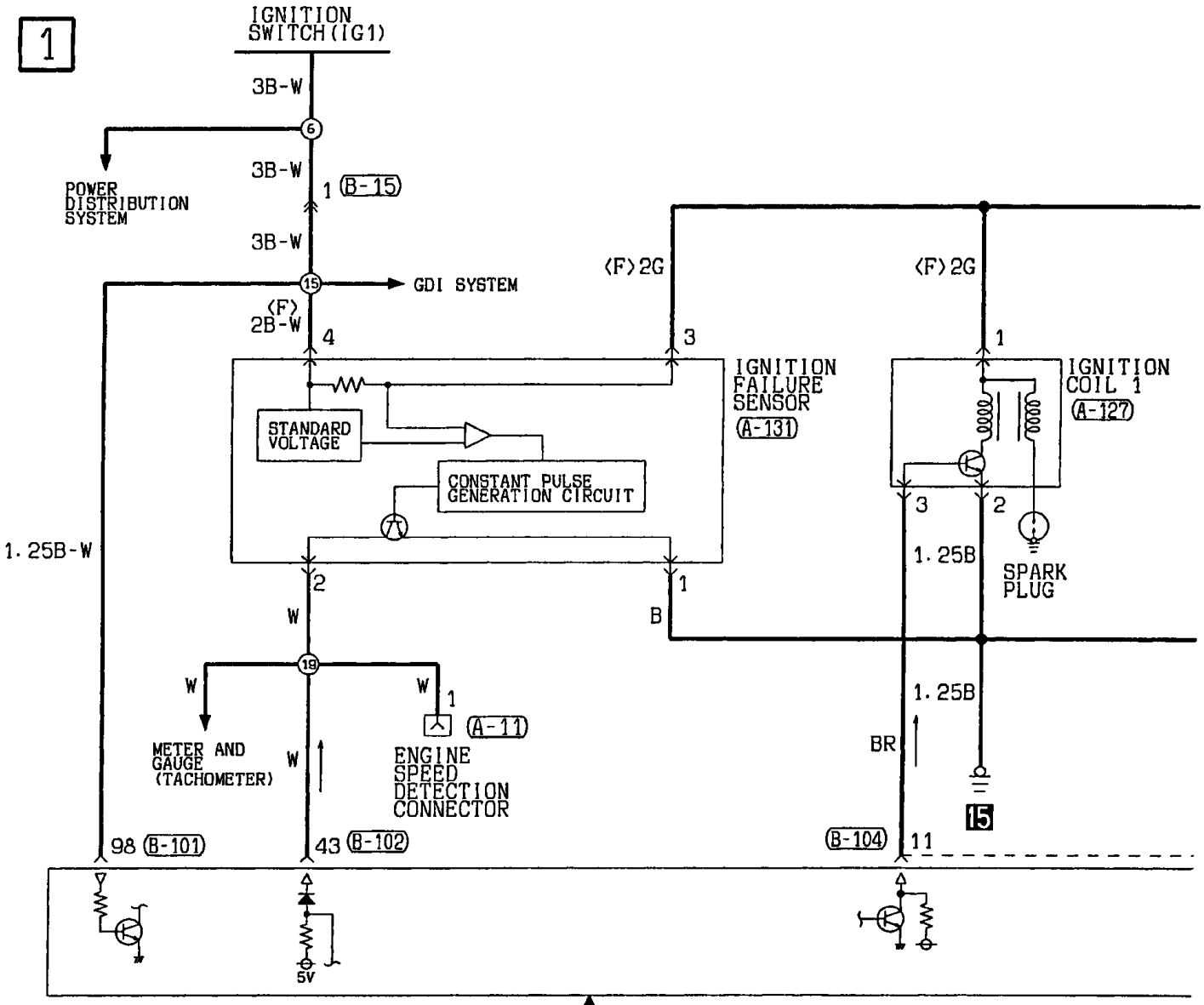

INPUT SIGNAL		
· AIR FLOW SENSOR	· DETONATION SENSOR	· INHIBITOR SWITCH (A/T)
· ATMOSPHERIC PRESSURE SENSOR	· ENGINE COOLANT TEMPERATURE SENSOR	· INTAKE AIR TEMPERATURE SENSOR
· CRANK ANGLE SENSOR	· IDLE SWITCH	· VEHICLE SPEED SENSOR
· CAMSHAFT POSITION SENSOR	· IGNITION SWITCH (ST)	

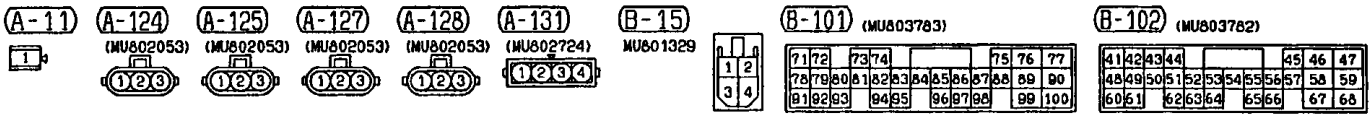

H1T03E03AA

2

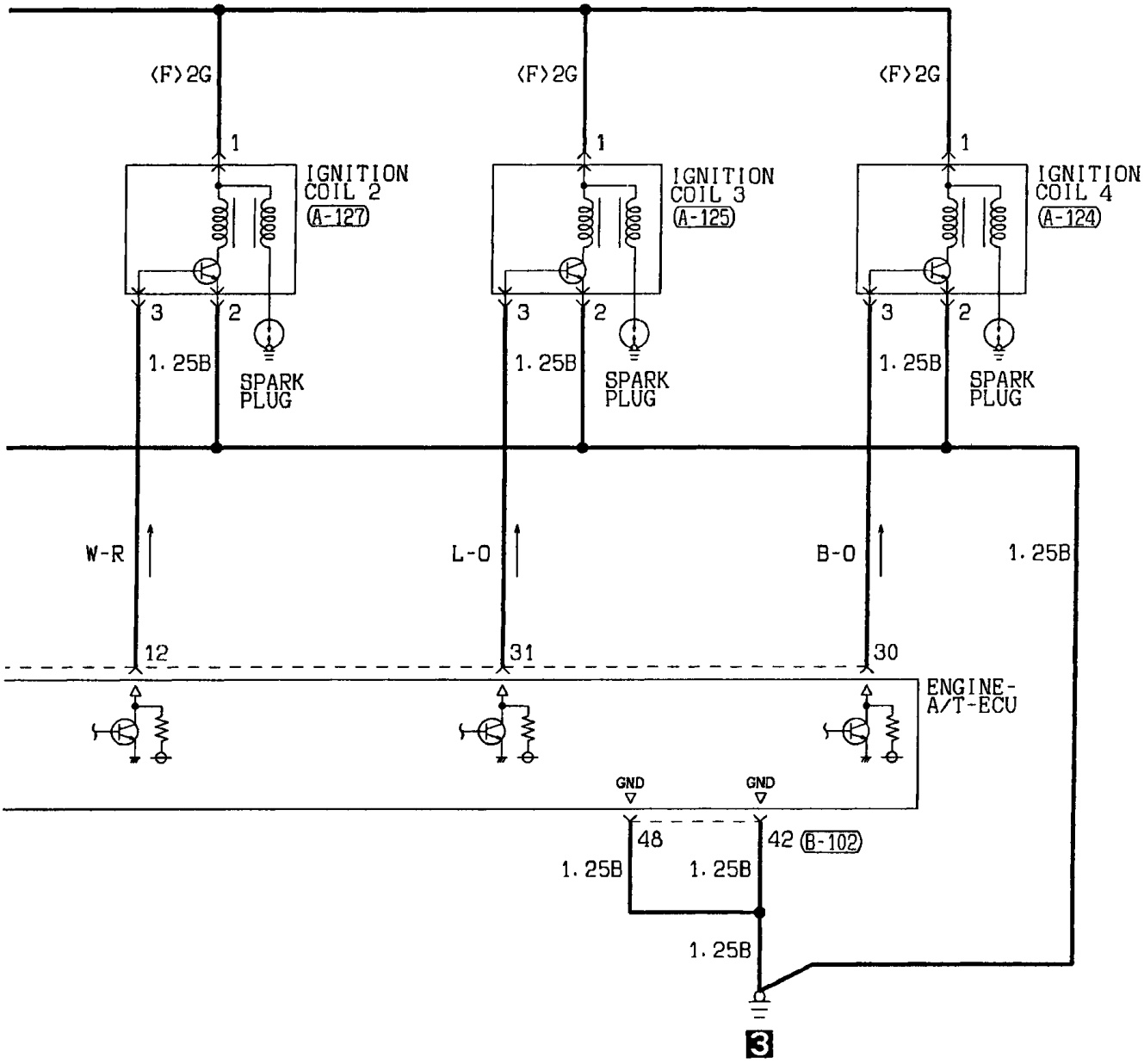

(B-104) (MU803784)

1	2		3	4						5	6			7	8									
9	10	11	12	13	14	15	16	17	18	19	20	21	22	23										
24	25		26	27	28	29		30	31	32	33		34	35										

Wire colour code
B :Black LG:Light green G :Green L :Blue W :White Y :Yellow SB:Sky blue
BR:Brown O :Orange GR:Gray R :Red P :Pink V :Violet

H1T03E03AB

CHARGING SYSTEM

Petrol-powered vehicles <GDI>

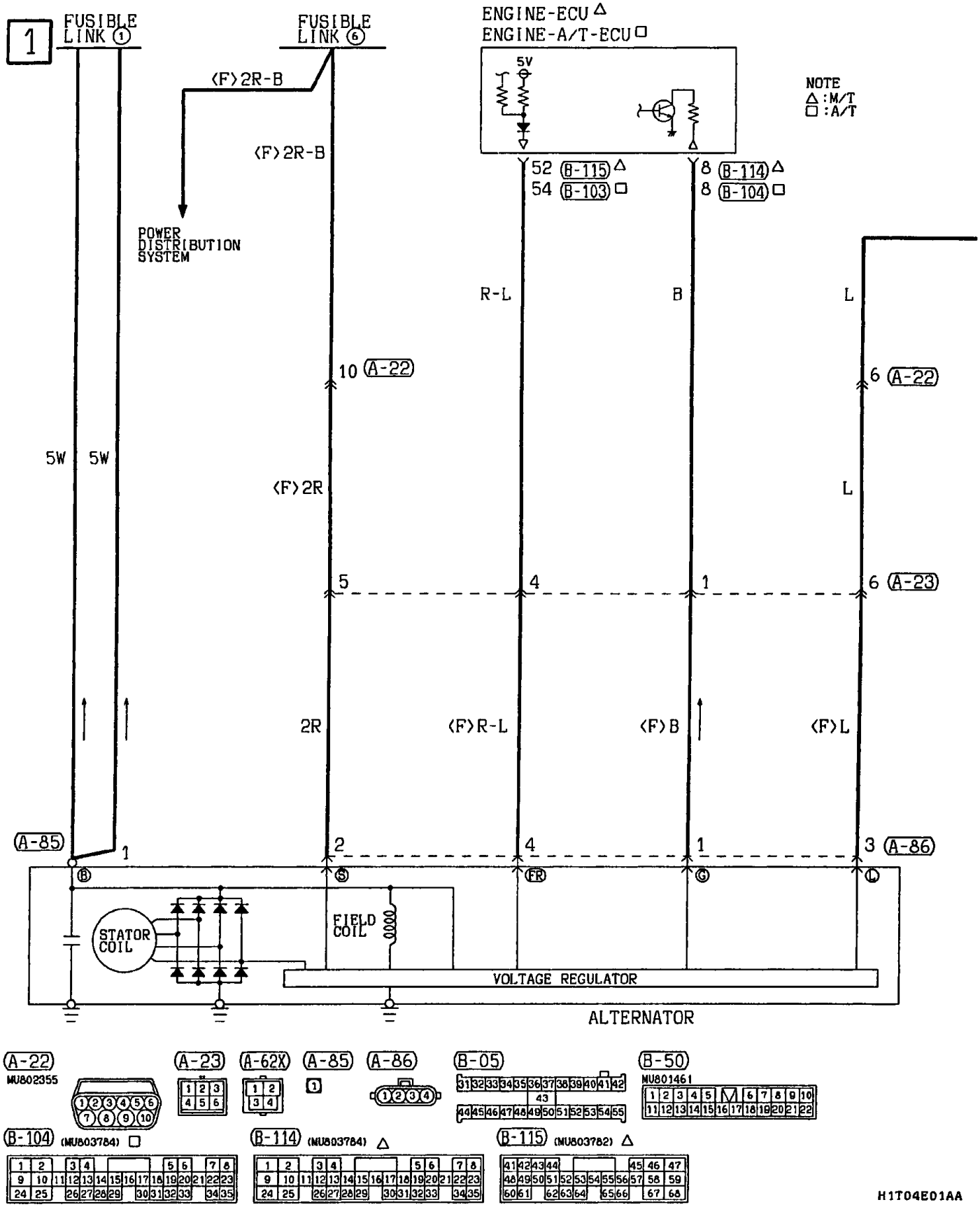

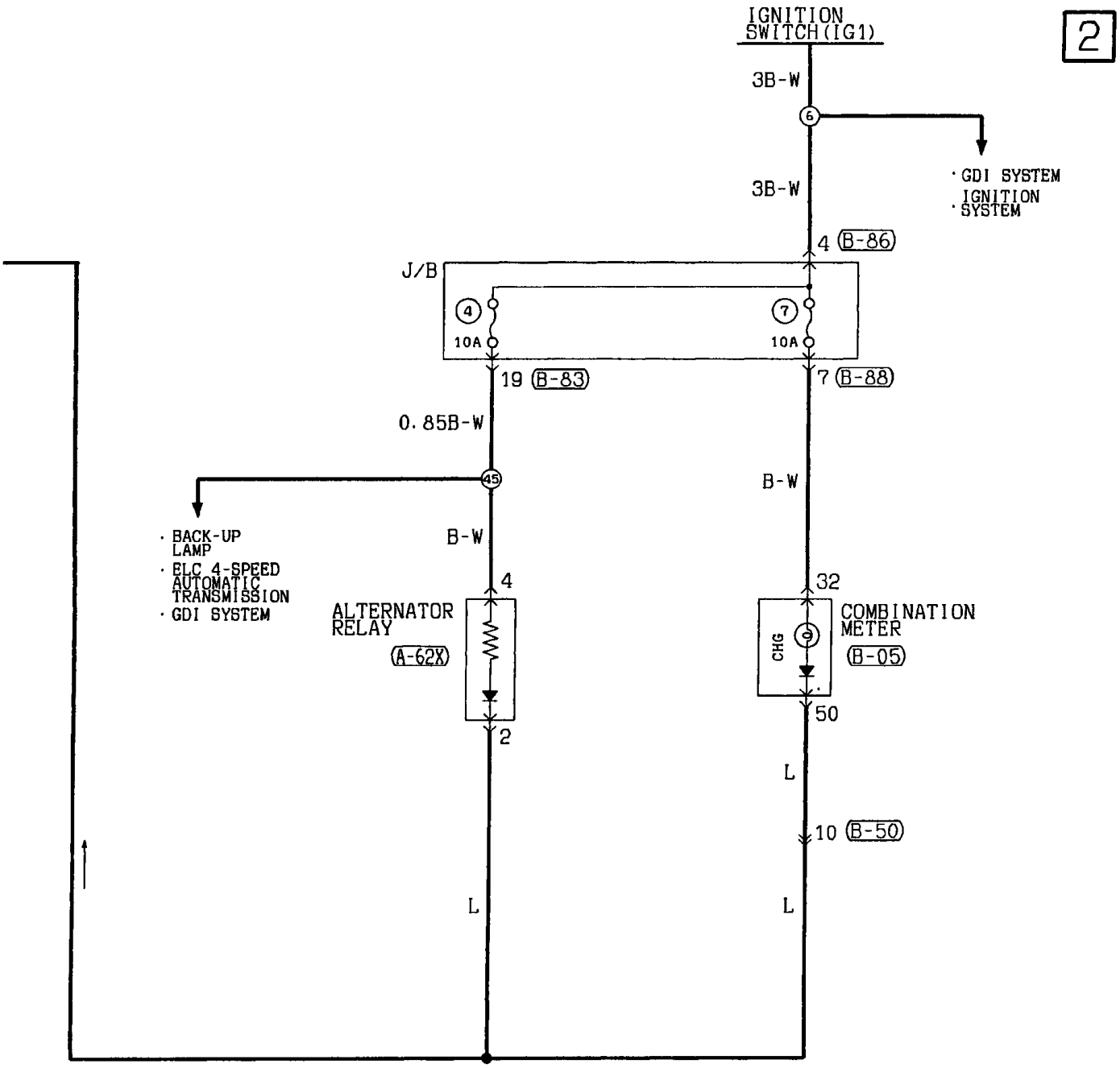

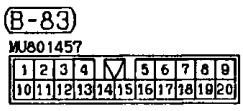

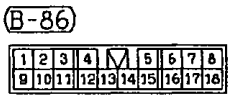

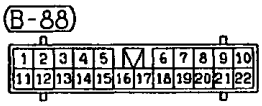

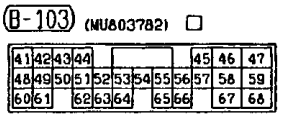

Wire colour code

B :Black	LG:Light green	G :Green	L :Blue	W :White	Y :Yellow	SB:Sky blue
BR:Brown	O :Orange	GR:Gray	R :Red	P :Pink	V :Violet	

H1T04E01AB

CHARGING SYSTEM

Diesel-powered vehicles <F9Q>

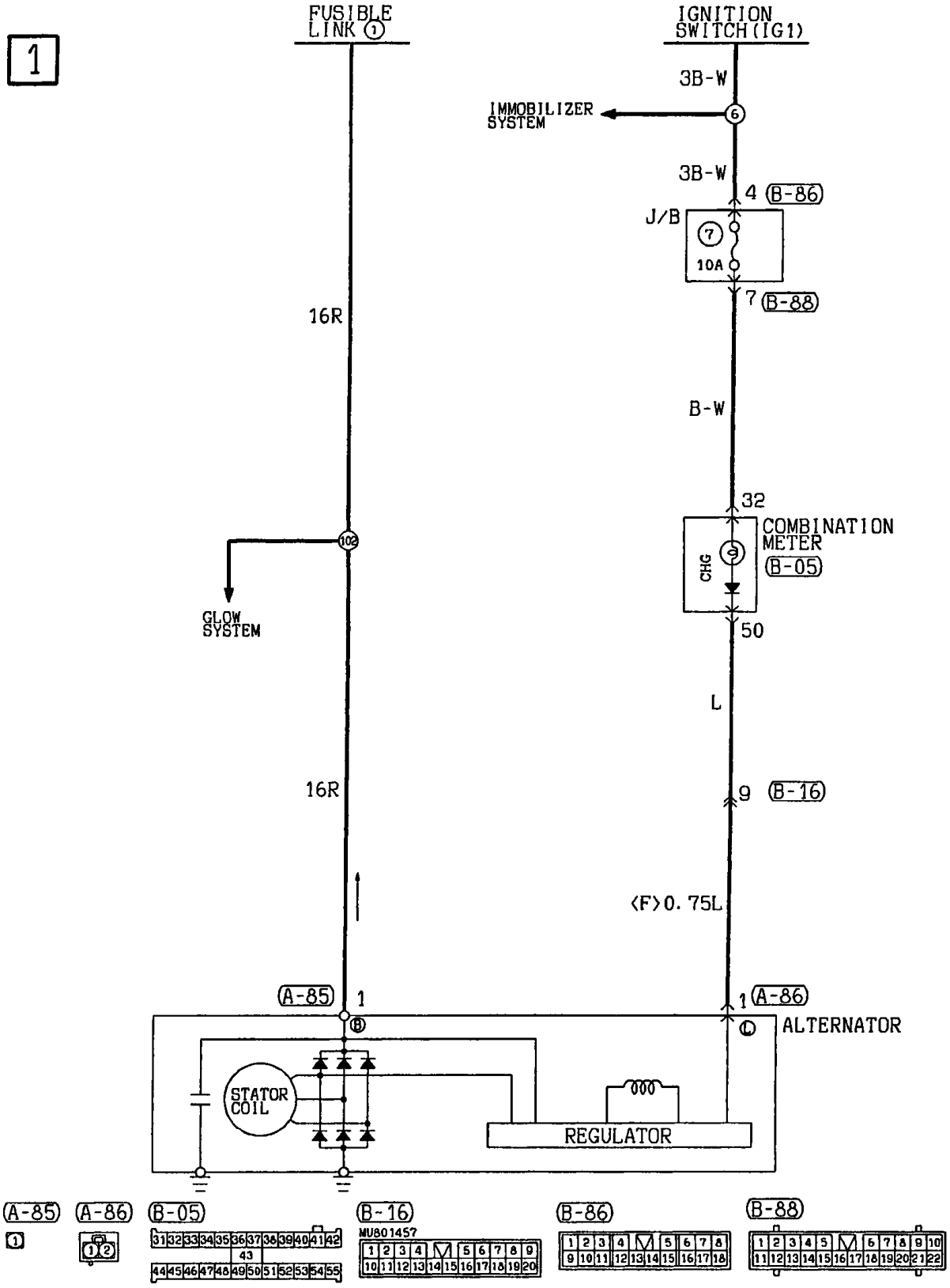

Wire colour code
B :Black LG:Light green G :Green L :Blue W :White Y :Yellow SB:Sky blue
BR:Brown O :Orange GR:Gray R :Red P :Pink V :Violet

H1T04E00AA

CHARGING SYSTEM (See P. 4-28, 30.)

OPERATION

When engine is stationary

- When the ignition switch is turned to the ON position, current flows the alternator L terminal to the field coil and, at the same time, the charge warning lamp illuminates.

When engine is started and after engine has started

- When the engine is started, the charge warning lamp goes out because of the charging voltage begin applied to the alternator L terminal.
- The battery voltage being applied to the alternator S terminal is monitored by the voltage regulator. Therefore, the amount of electricity produced by the alternator is controlled by allowing and cutting off the current flowing to the field coil.
- The alternator B terminal supplies power to each load.

TROUBLESHOOTING HINTS

1. Charging indicator lamp does not illuminate when the ignition switch is turned to ON position, before the engine starts.
   - Check multi-purpose fuse No. (7)
   - Check the bulb.
2. Charging indicator lamp fails to switch off once the engine starts.
   - Check voltage regulator of alternator.
3. Discharged or overcharged battery.
   - Check voltage regulator of alternator.
4. Charge warning lamp illuminates dimly.
   - Check combination meter diode (for short).

GLOW SYSTEM

F9Q

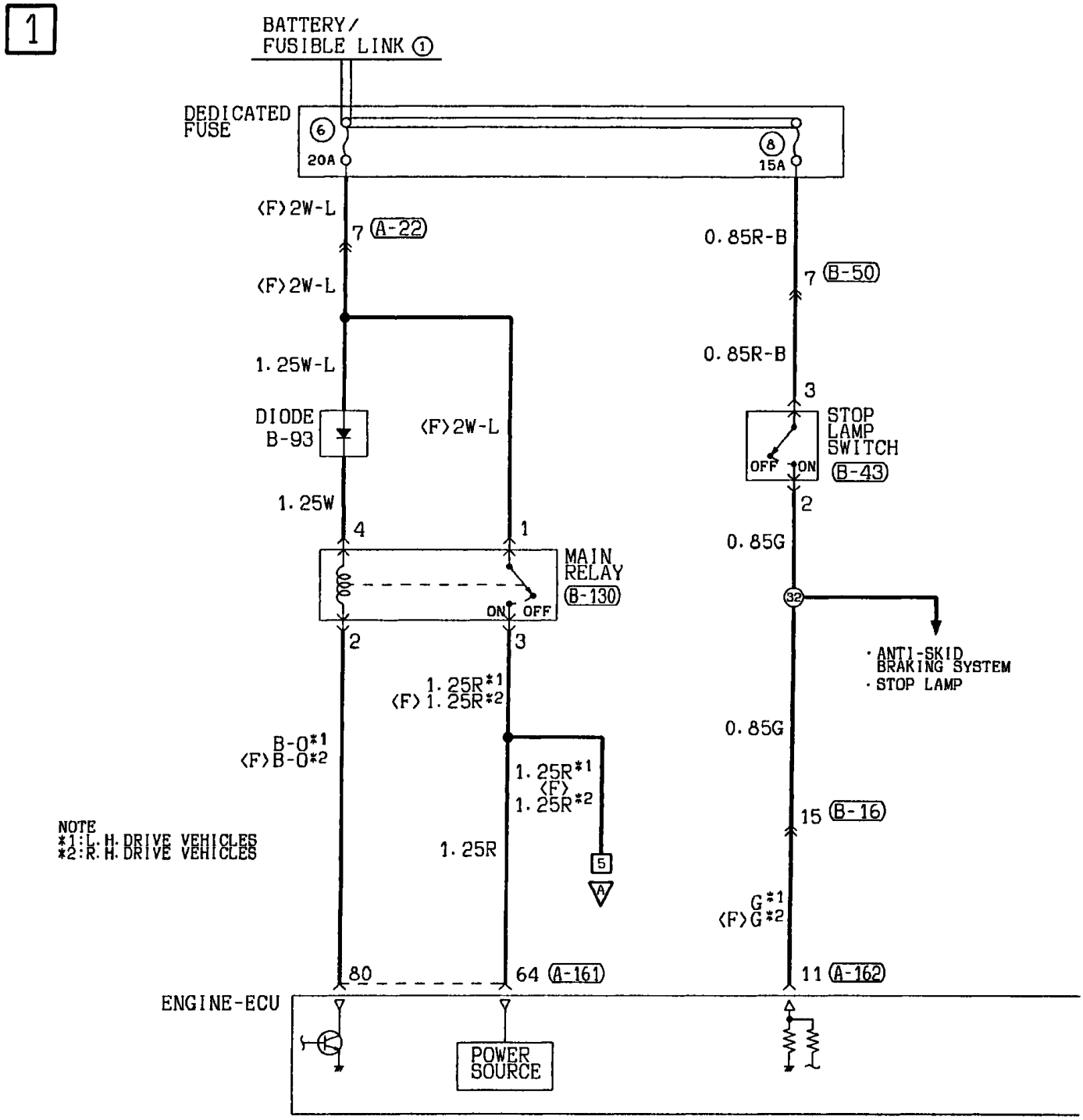

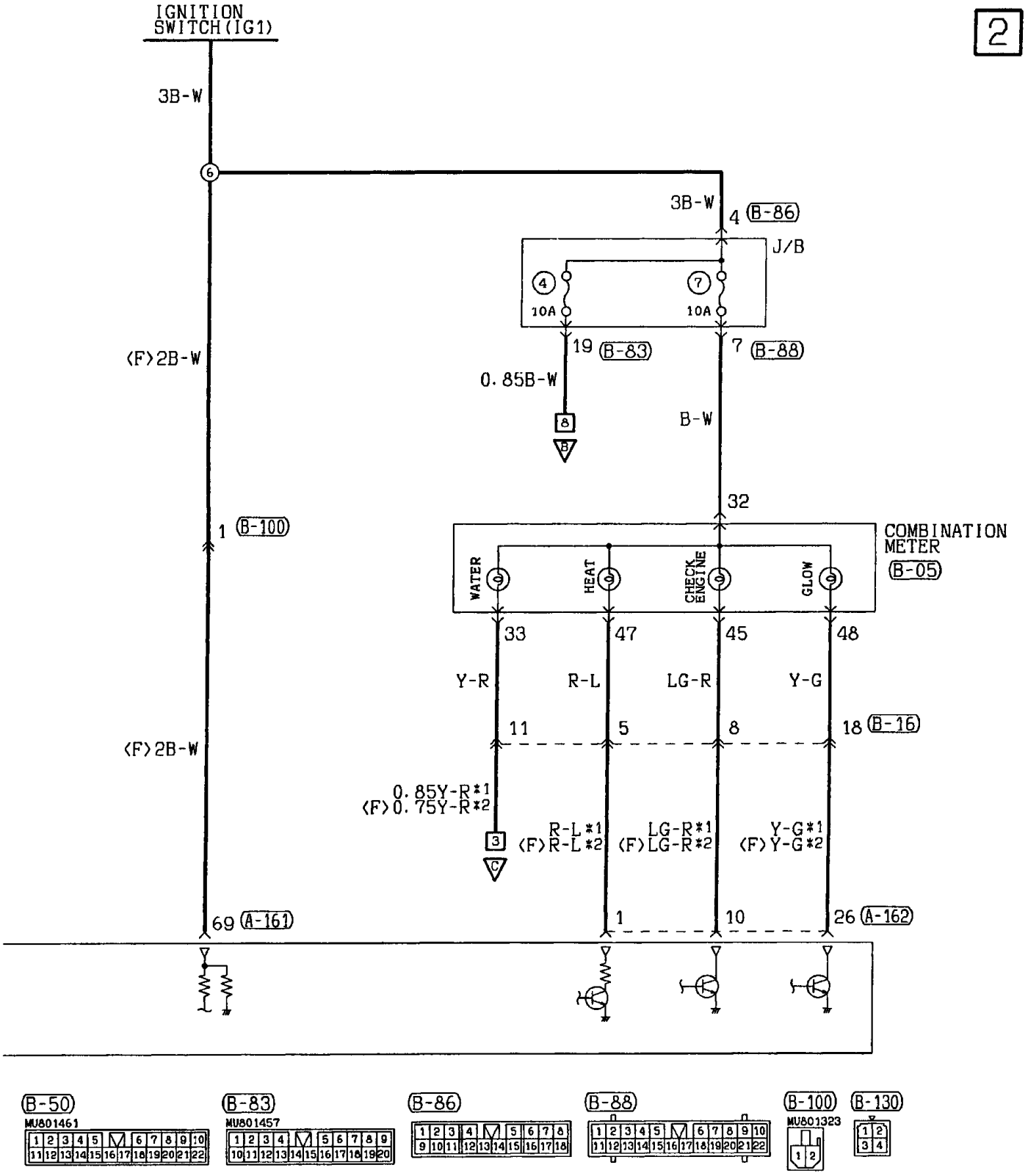

Wire colour code
B :Black LG:Light green G :Green L :Blue W :White Y :Yellow SB:Sky blue
BR:Brown O :Orange GR:Gray R :Red P :Pink V :Violet

H1T05E00AB

GLOW SYSTEM <F9Q> (CONTINUED)

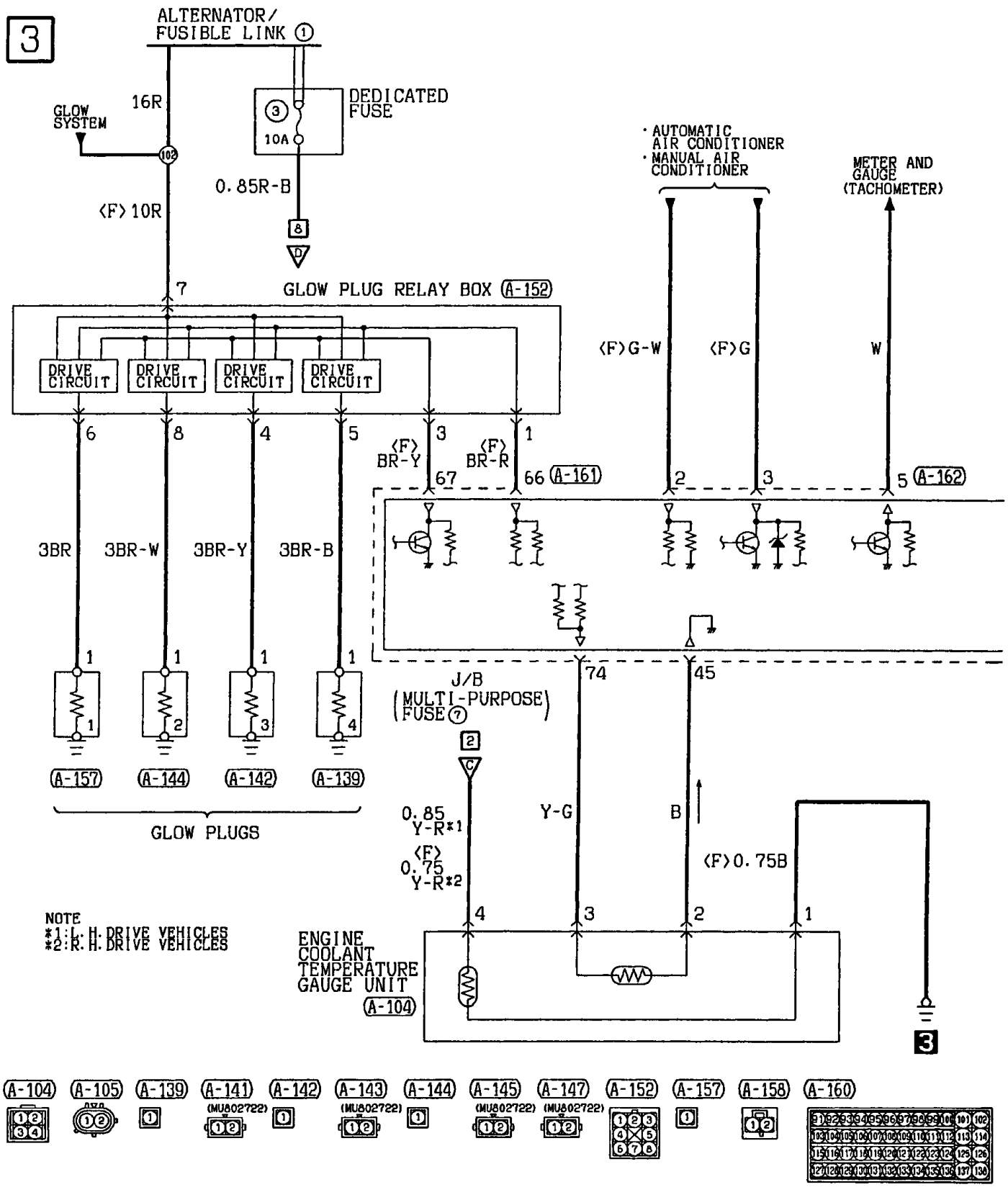

H1T05E00BA

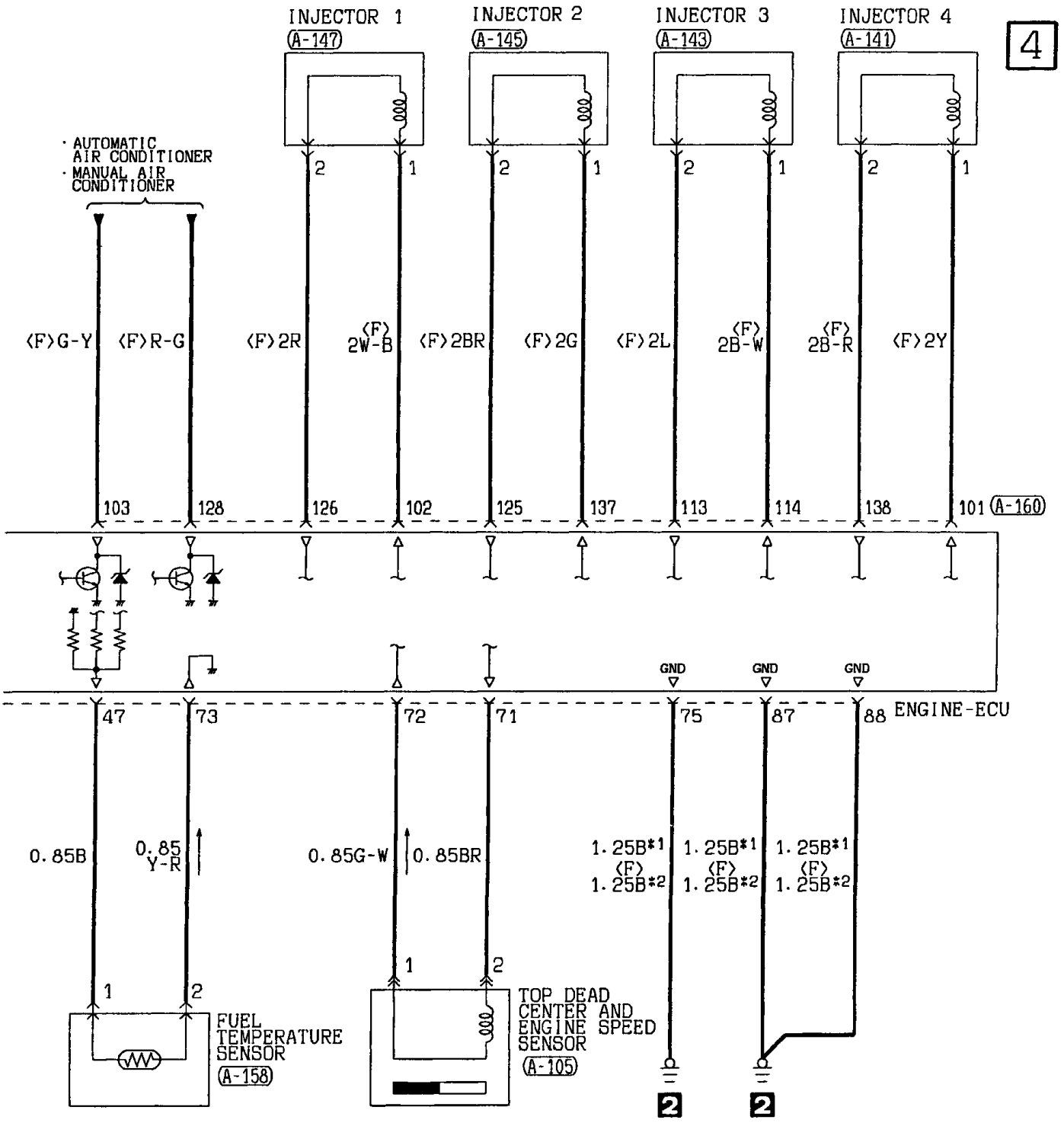

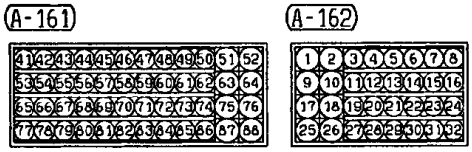

Wire colour code
B :Black LG:Light green G :Green L :Blue W :White Y :Yellow SB:Sky blue
BR:Brown O :Orange GR:Gray R :Red P :Pink V :Violet

H1T05E00BB

GLOW SYSTEM <F9Q> (CONTINUED)

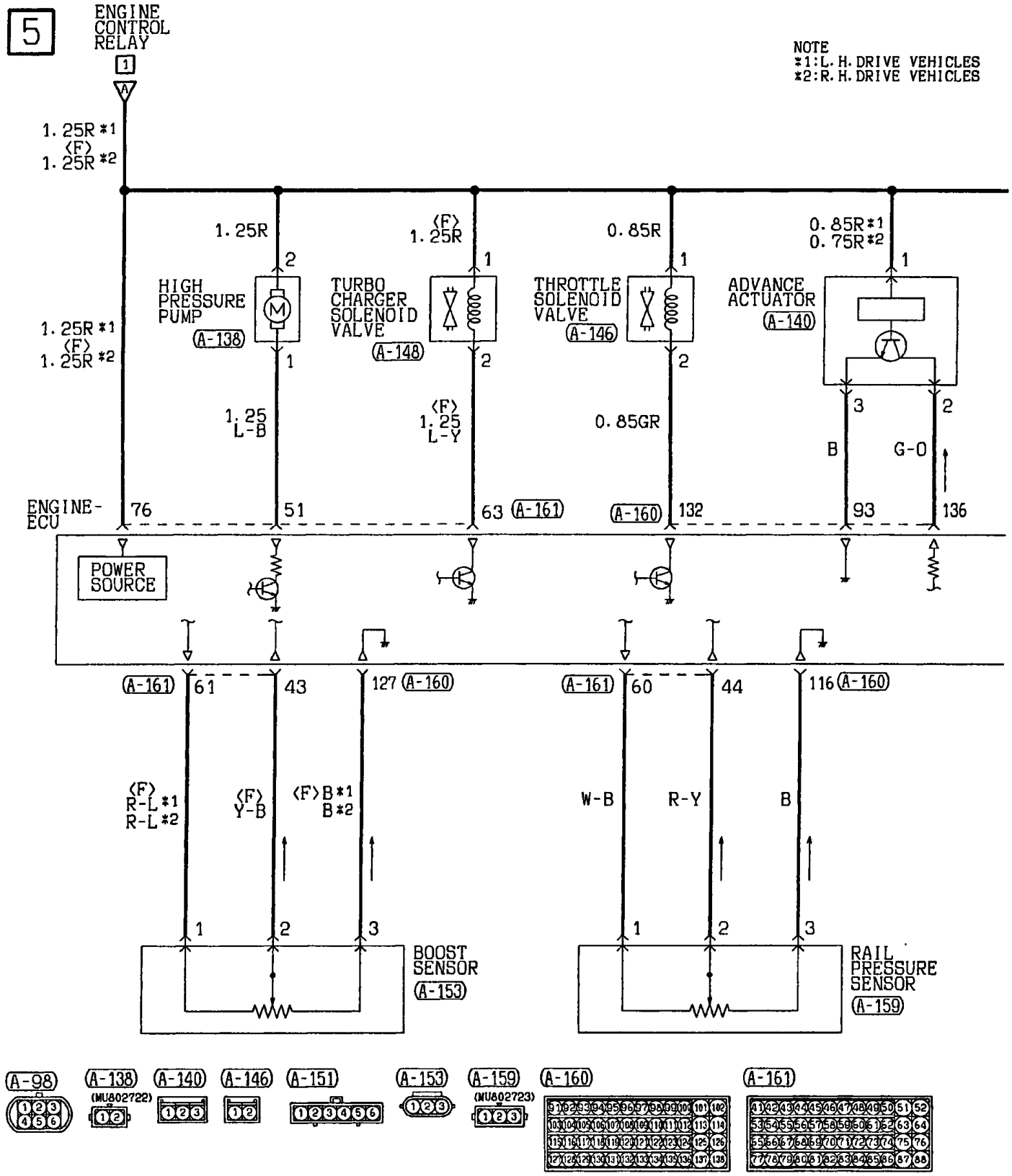

H1T05E00CA

6

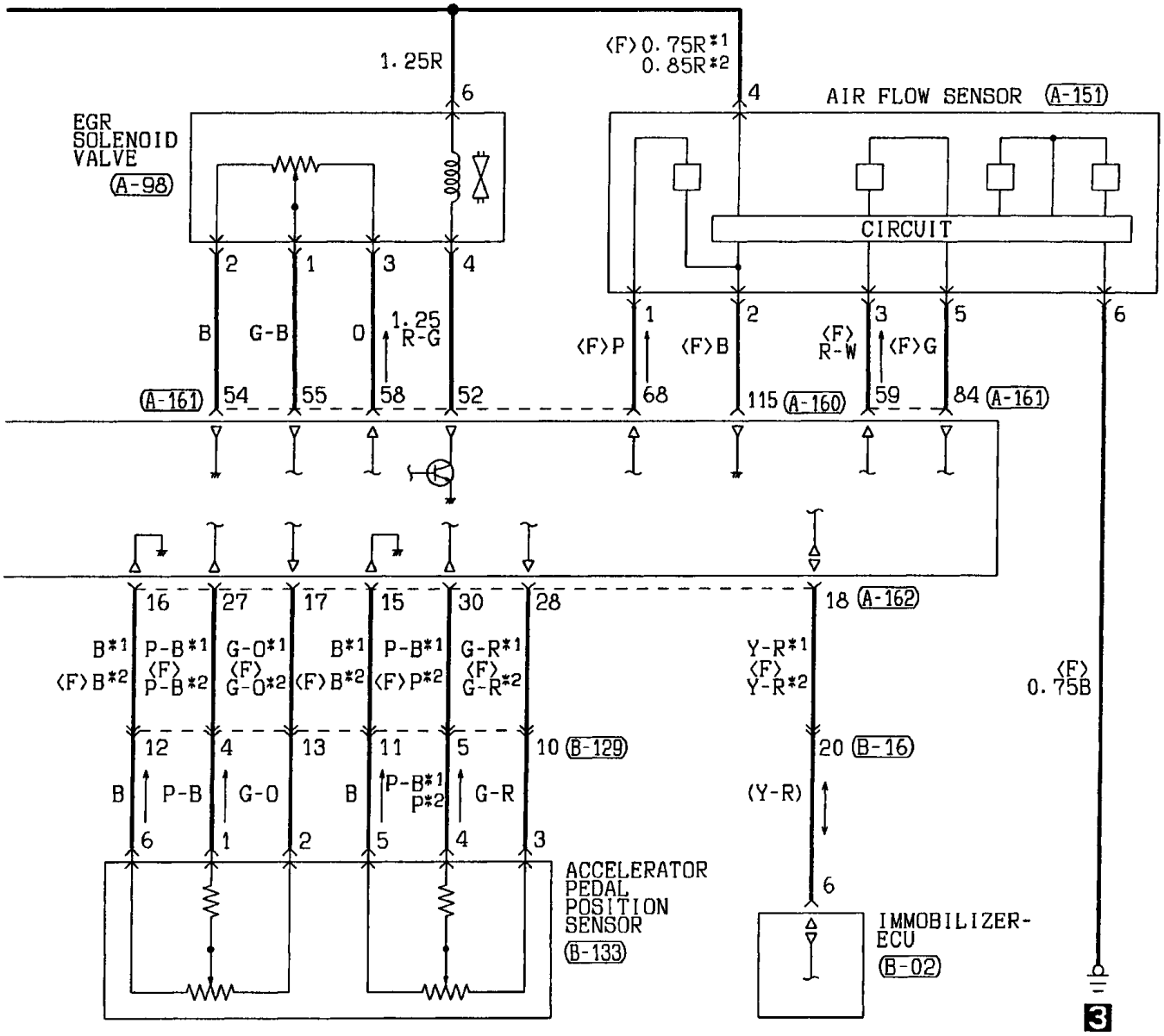

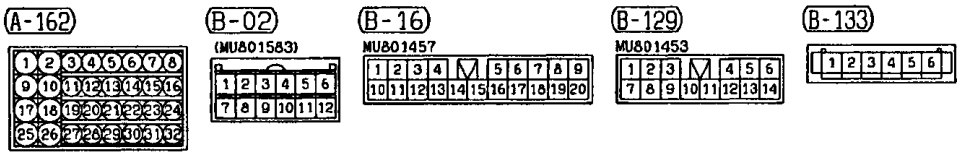

Wire colour code
B :Black LG:Light green G :Green L :Blue W :White Y :Yellow SB:Sky blue
BR:Brown O :Orange GR:Gray R :Red P :Pink V :Violet

H1T05E00CB

GLOW SYSTEM <F9Q> (CONTINUED)

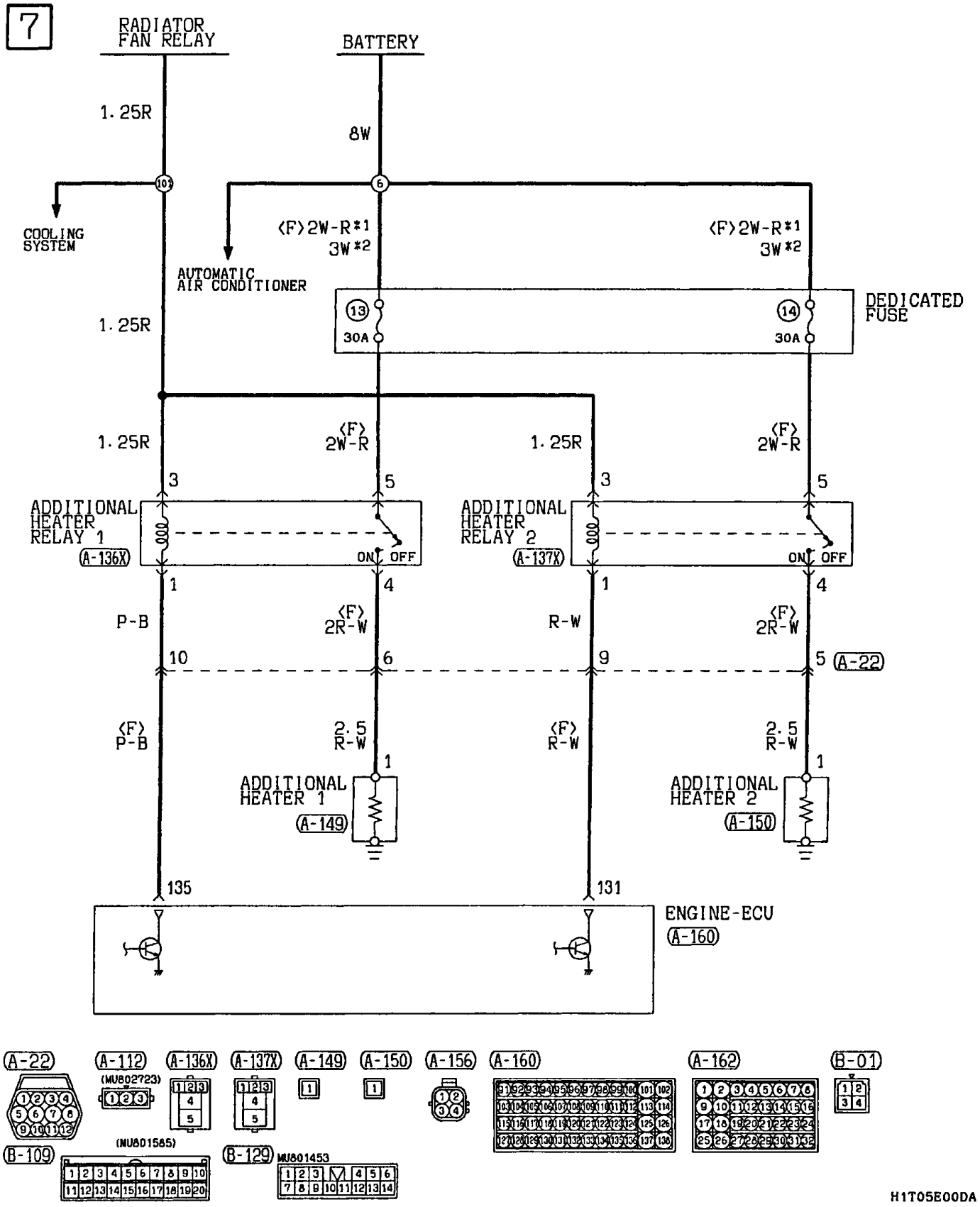

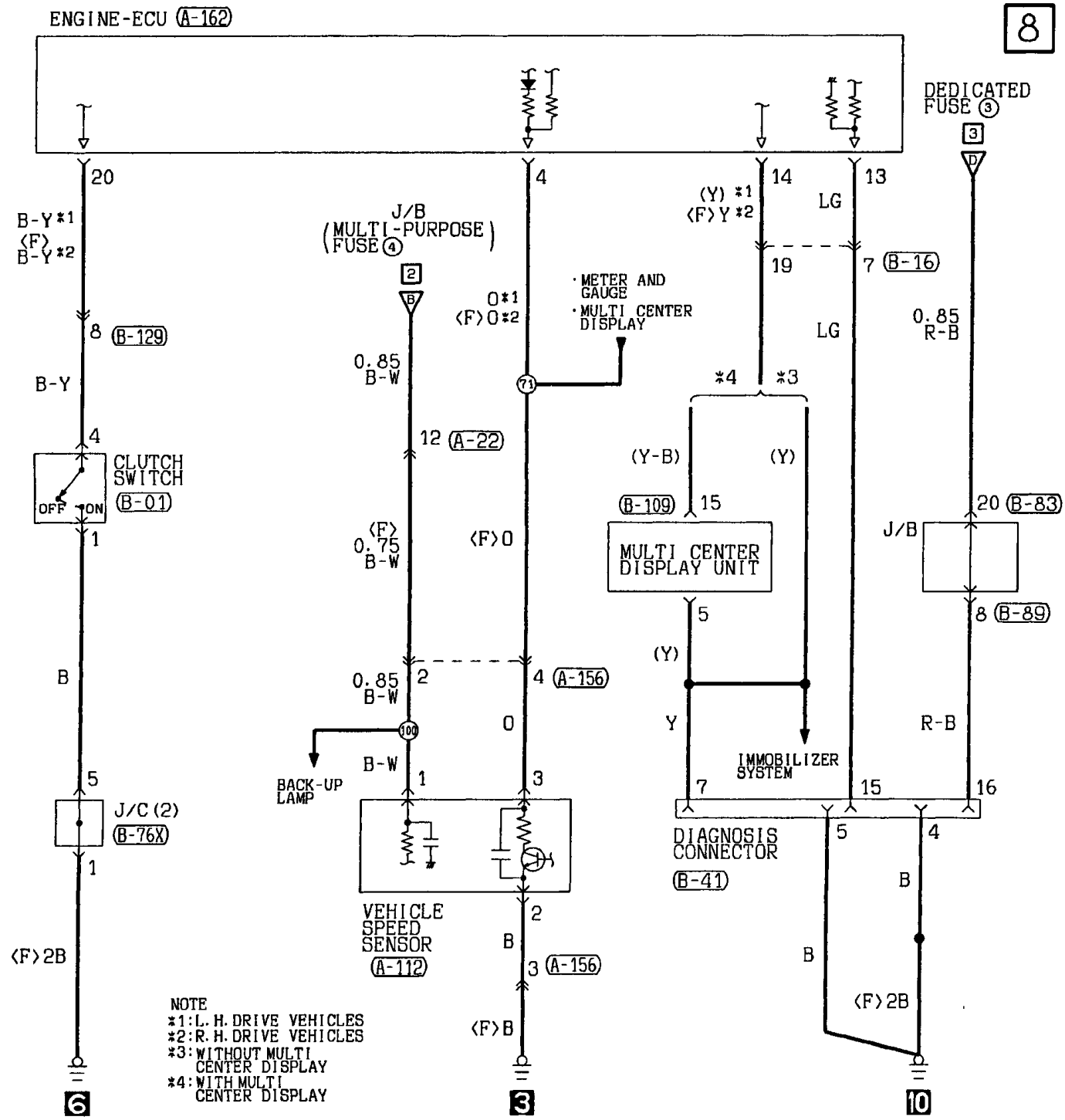
ENGINE-ECU (A-162)
8
DEDICATED FUSE (3)
J/B (MULTI-PURPOSE FUSE (4))
B-Y *1
(F) B-Y *2
B-Y
CLUTCH SWITCH (B-01)
OFF ON
B
J/C (2) (B-76X)
(F)2B
0.85 B-W
12 (A-22)
(F) 0.75 B-W
0.85 B-W
BACK-UP LAMP
B-W
VEHICLE SPEED SENSOR (A-112)
O*1
(F)O*2
· METER AND GAUGE
· MULTI CENTER DISPLAY
(F)O
O
4 (A-156)
B
3 (A-156)
(F)B
(Y) *1
(F)Y *2
LG
19
7 (B-16)
*4
*3
(Y-B)
(Y)
(B-109) 15
MULTI CENTER DISPLAY UNIT
5
(Y)
Y
IMMOBILIZER SYSTEM
DIAGNOSIS CONNECTOR (B-41)
0.85 R-B
20 (B-83)
J/B
8 (B-89)
R-B
B
(F)2B
NOTE
*1:L.H.DRIVE VEHICLES
*2:R.H.DRIVE VEHICLES
*3:WITHOUT MULTI CENTER DISPLAY
*4:WITH MULTI CENTER DISPLAY
6
3
10
(B-16)
(B-41) FRONT SIDE
(B-76X)
(B-83)
(B-89)
Wire colour code
B :Black LG:Light green G :Green L :Blue W :White Y :Yellow SB:Sky blue
BR:Brown O :Orange GR:Gray R :Red P :Pink V :Violet
H1T05E00DB

MPI SYSTEM

MPI-SOHC-M/T

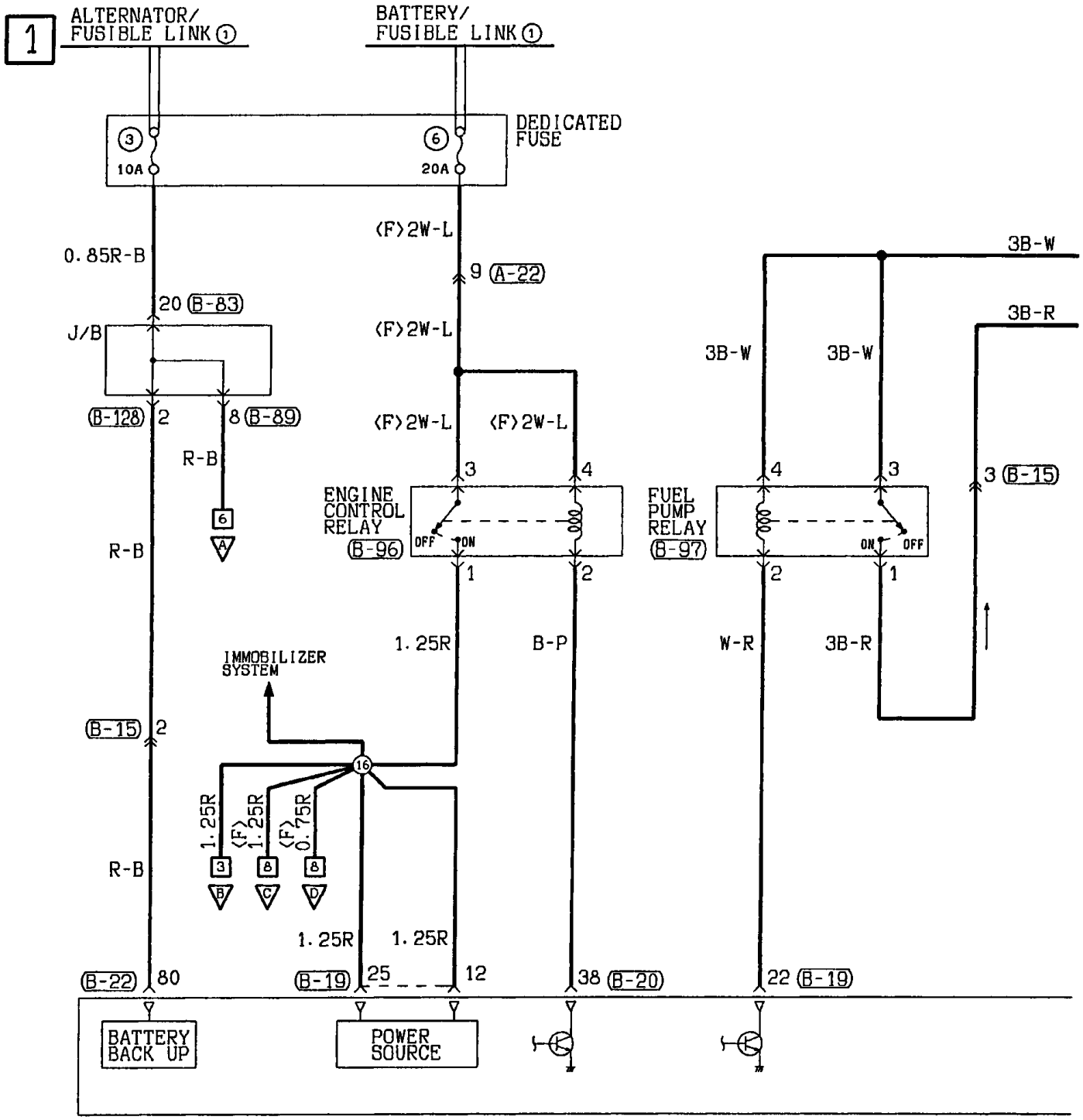

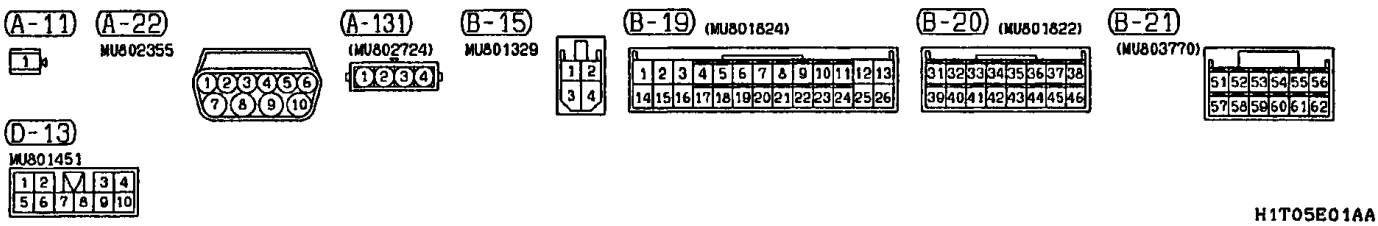

H1T05E01AA

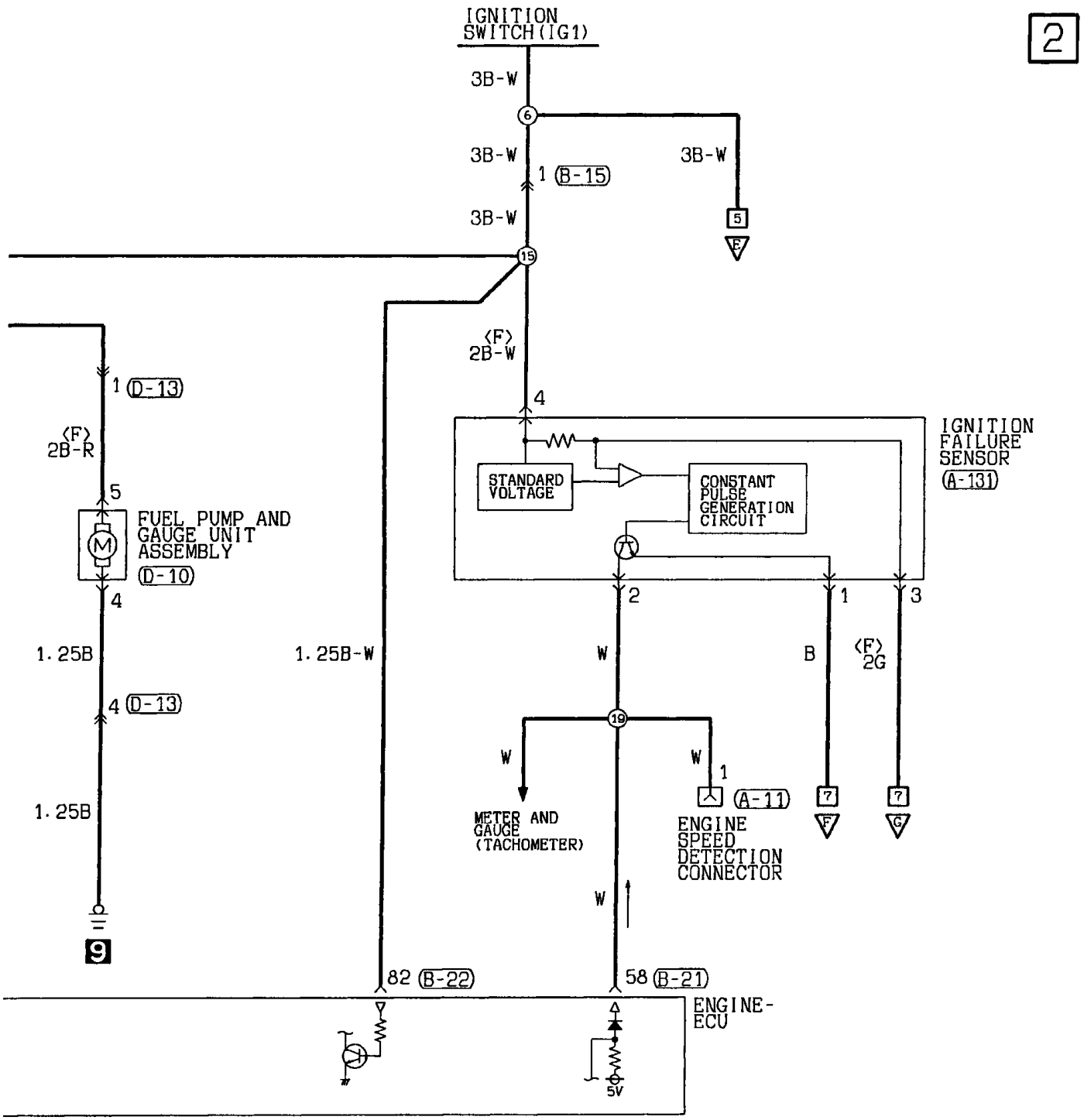

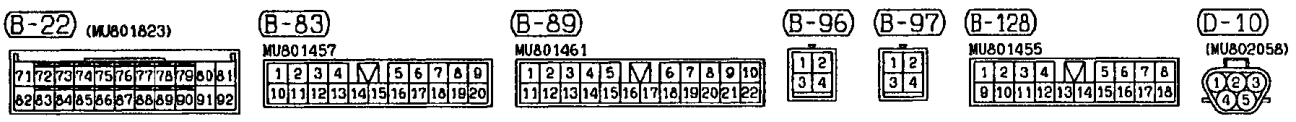

Wire colour code

B :Black	LG:Light green	G :Green	L :Blue	W :White	Y :Yellow	SB:Sky blue
BR:Brown	O :Orange	GR:Gray	R :Red	P :Pink	V :Violet	

H1T05E01AB

MPI SYSTEM <MPI-SOHC-M/T> (CONTINUED)

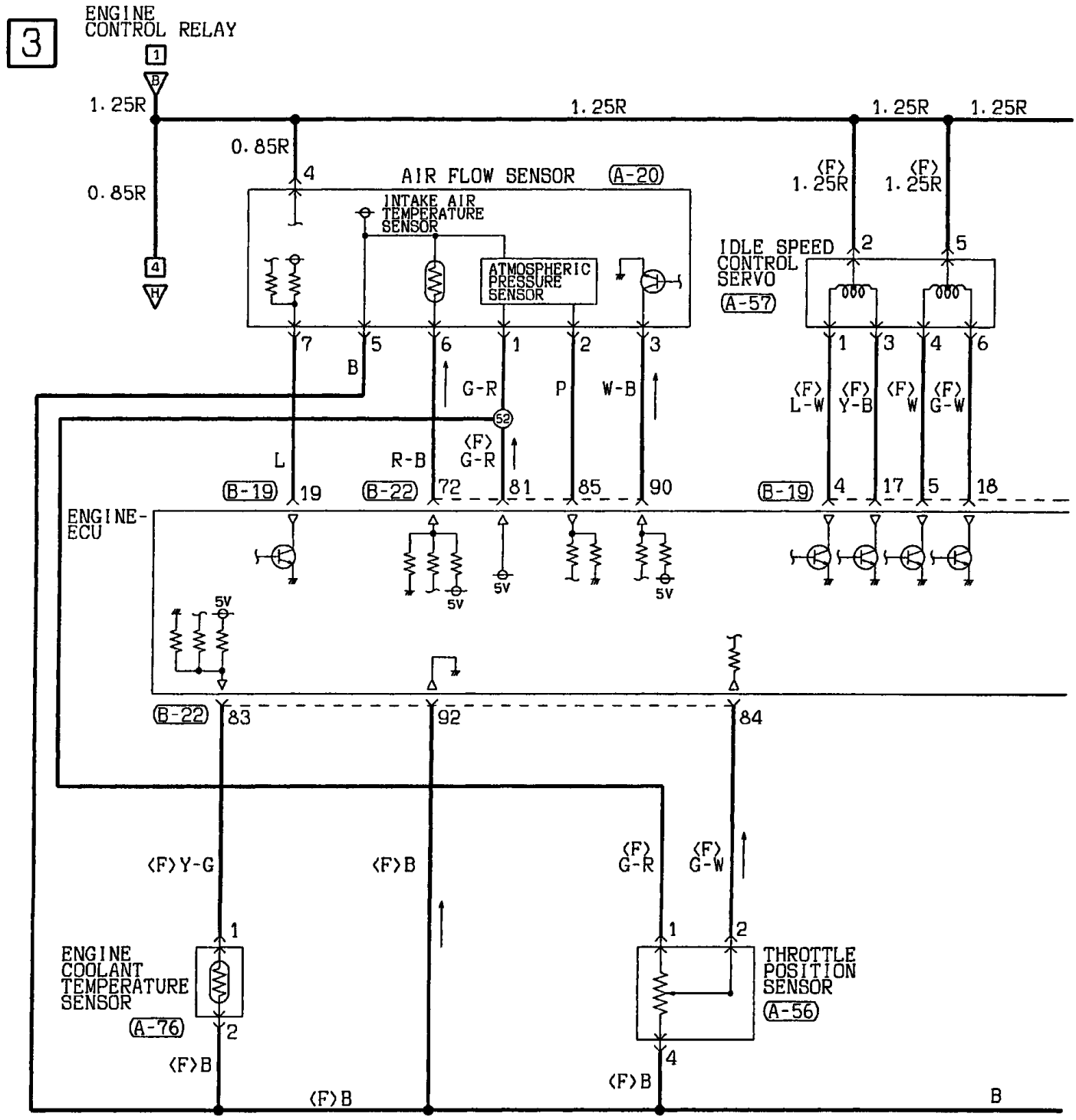

H1T05E01BA

4

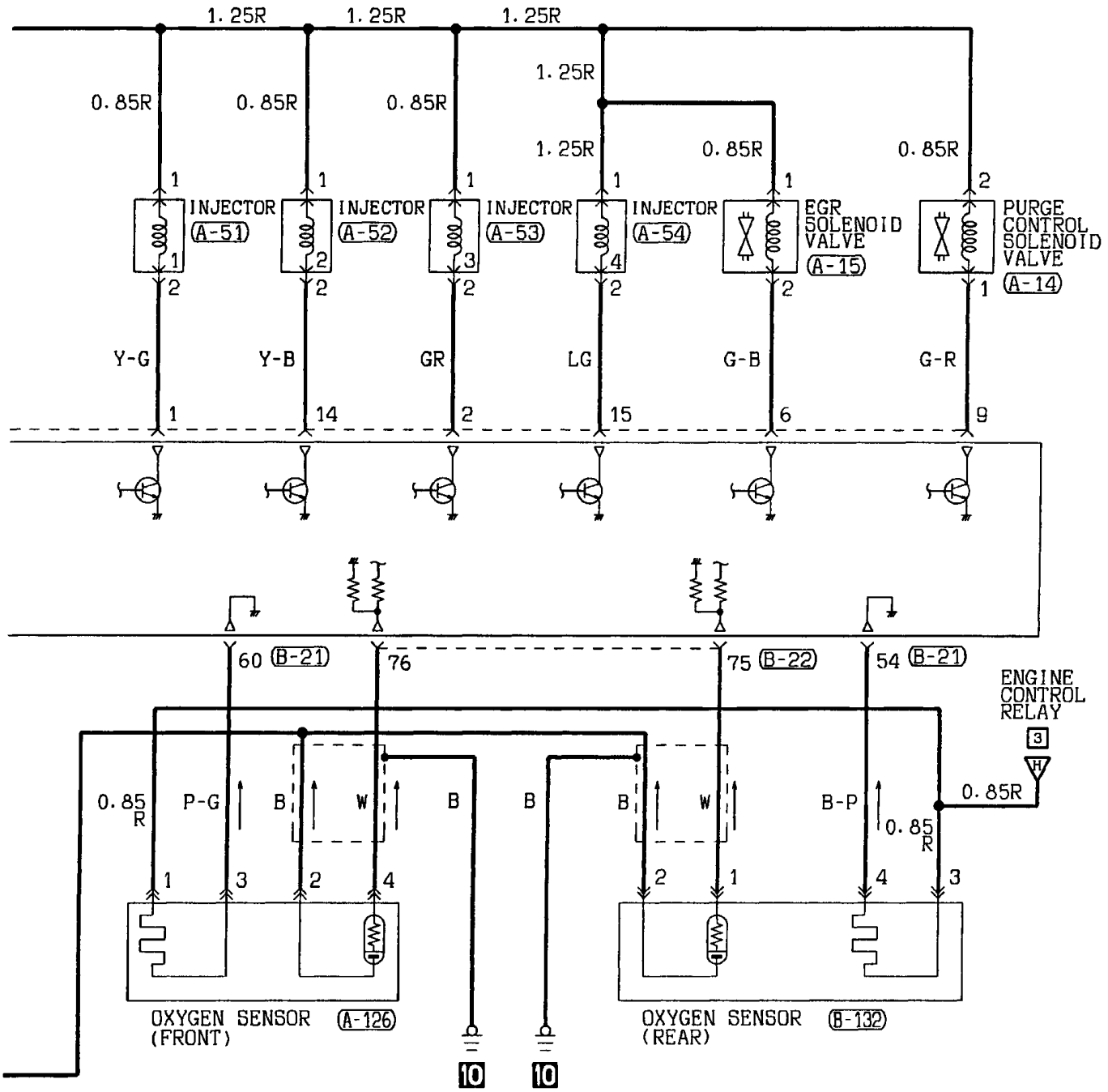

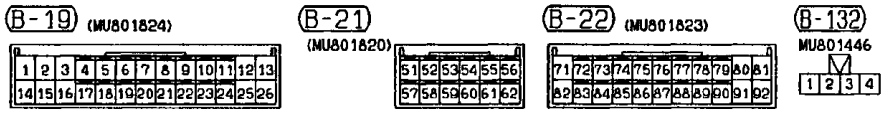

Wire colour code
B :Black LG:Light green G :Green L :Blue W :White Y :Yellow SB:Sky blue
BR:Brown O :Orange GR:Gray R :Red P :Pink V :Violet

H1T05E01BB

MPI SYSTEM <MPI-SOHC-M/T> (CONTINUED)

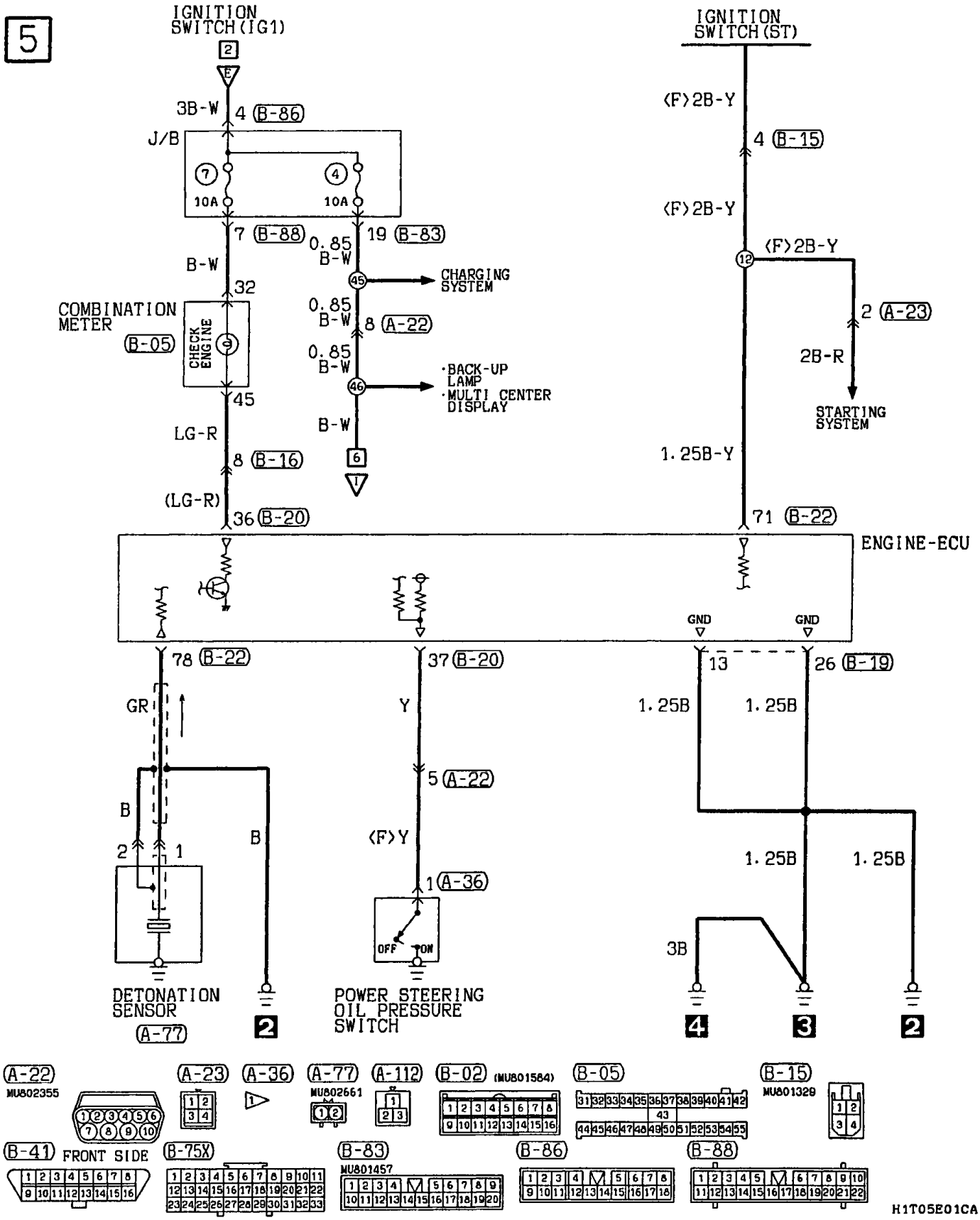

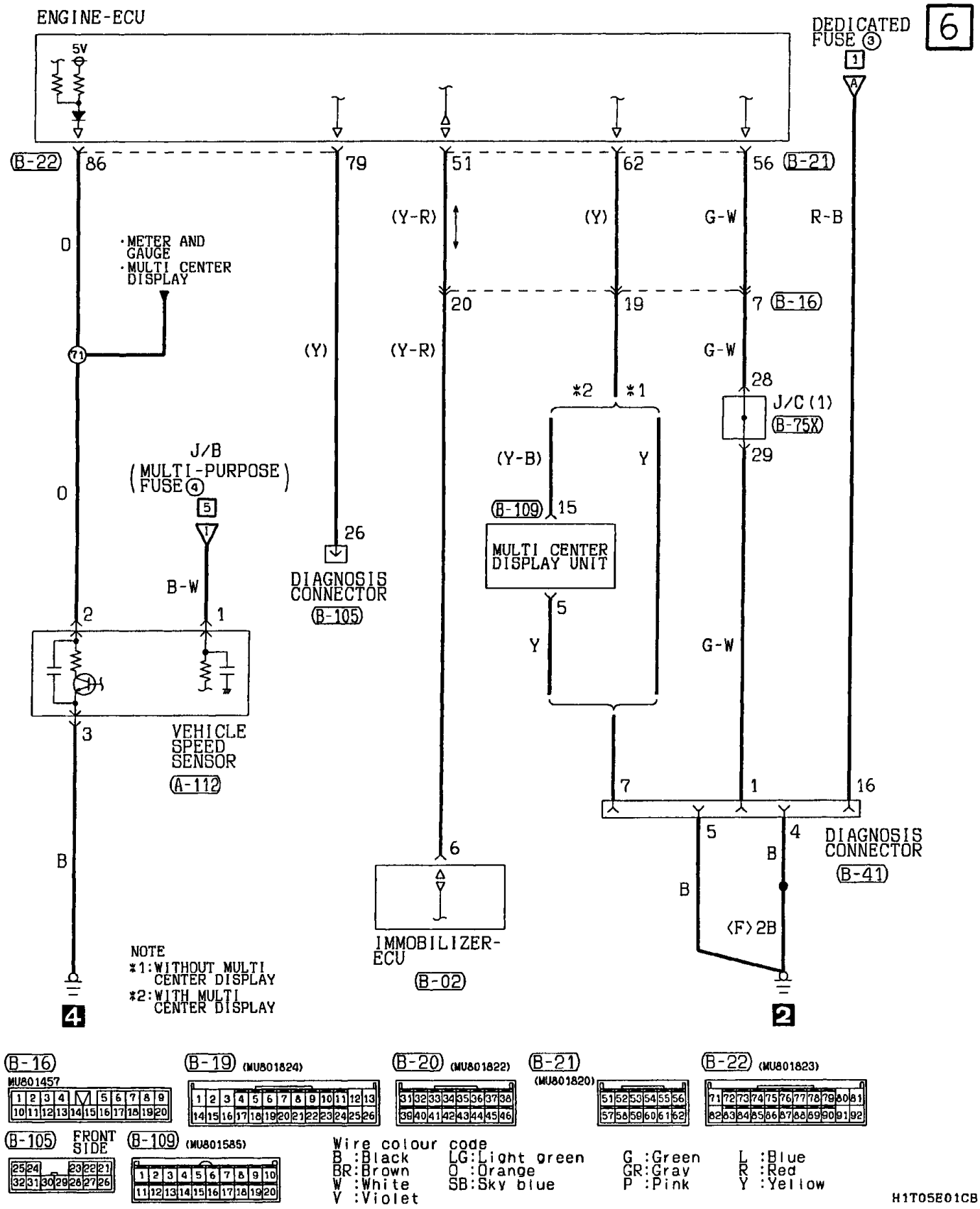
ENGINE-ECU
5V
DEDICATED FUSE ③
6
(B-22) 86
79
51
62
56 (B-21)
(Y-R)
(Y)
G-W
R-B
O
·METER AND GAUGE
·MULTI CENTER DISPLAY
71
20
19
7 (B-16)
(Y)
(Y-R)
G-W
28
*2
*1
J/C (1)
(B-75X)
29
(Y-B)
Y
J/B
(MULTI-PURPOSE FUSE ④)
5
O
(B-109) 15
MULTI CENTER DISPLAY UNIT
26
DIAGNOSIS CONNECTOR
(B-105)
B-W
2
1
5
Y
G-W
3
VEHICLE SPEED SENSOR
(A-112)
7
1
16
5
4
DIAGNOSIS CONNECTOR
(B-41)
B
6
B
B
IMMOBILIZER-ECU
(B-02)
(F) 2B
NOTE
*1:WITHOUT MULTI CENTER DISPLAY
*2:WITH MULTI CENTER DISPLAY
4
2
(B-16)
MU801457
(B-19) (MU801824)
(B-20) (MU801822)
(B-21) (MU801820)
(B-22) (MU801823)
(B-105) FRONT SIDE
(B-109) (MU801585)
Wire colour code
B :Black
BR:Brown
W :White
V :Violet
LG:Light green
O :Orange
SB:Sky blue
G :Green
GR:Gray
P :Pink
L :Blue
R :Red
Y :Yellow
H1T05E01CB

MPI SYSTEM <MPI-SOHC-M/T> (CONTINUED)

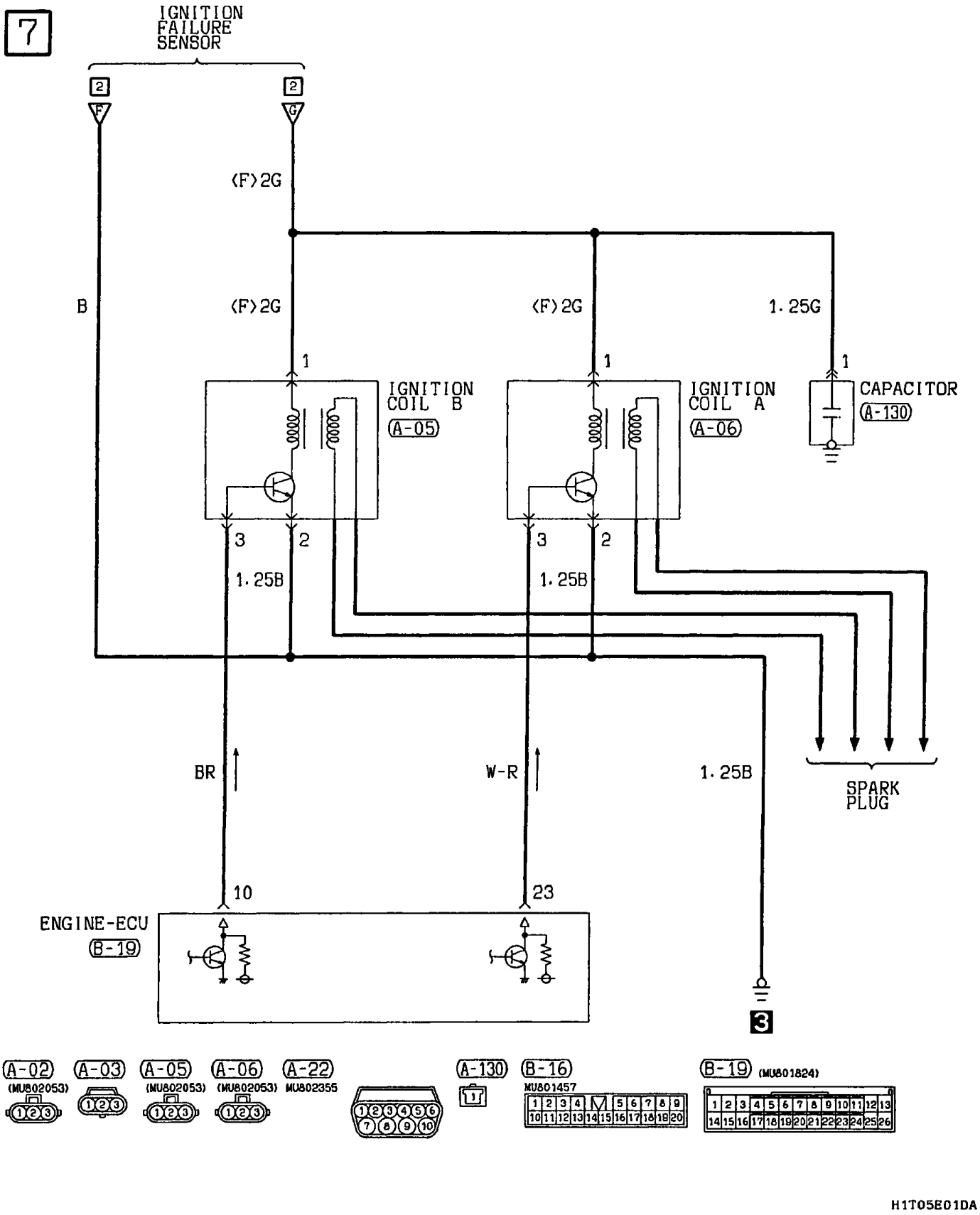

H1T05E01DA

8

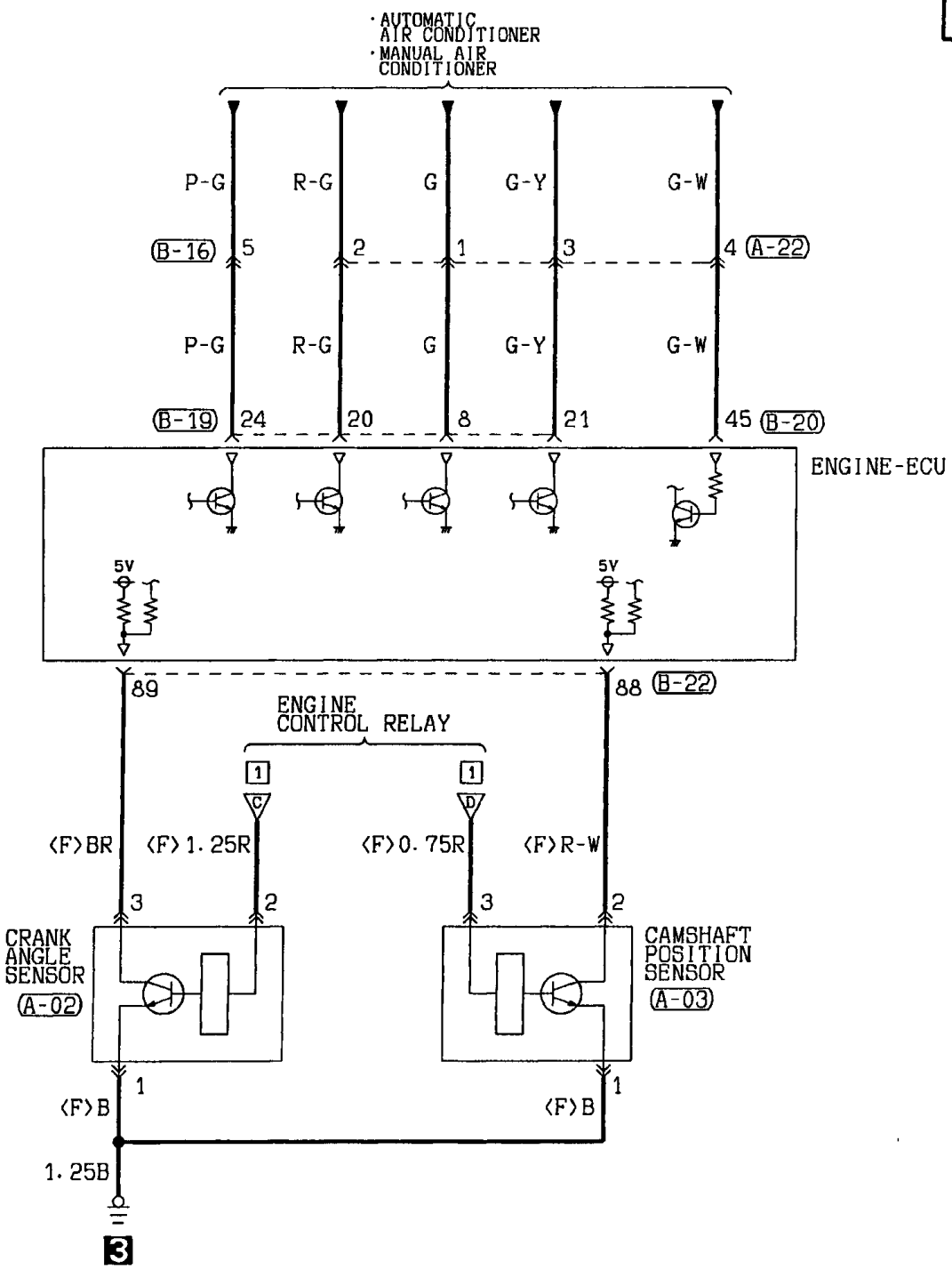

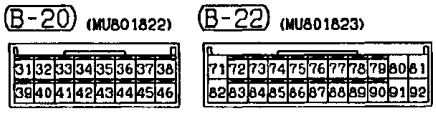

Wire colour code

B :Black	LG:Light green	G :Green	L :Blue	W :White	Y :Yellow	SB:Sky blue
BR:Brown	O :Orange	GR:Gray	R :Red	P :Pink	V :Violet	

H1T05E01DB

MPI SYSTEM

MPI-SOHC-A/T

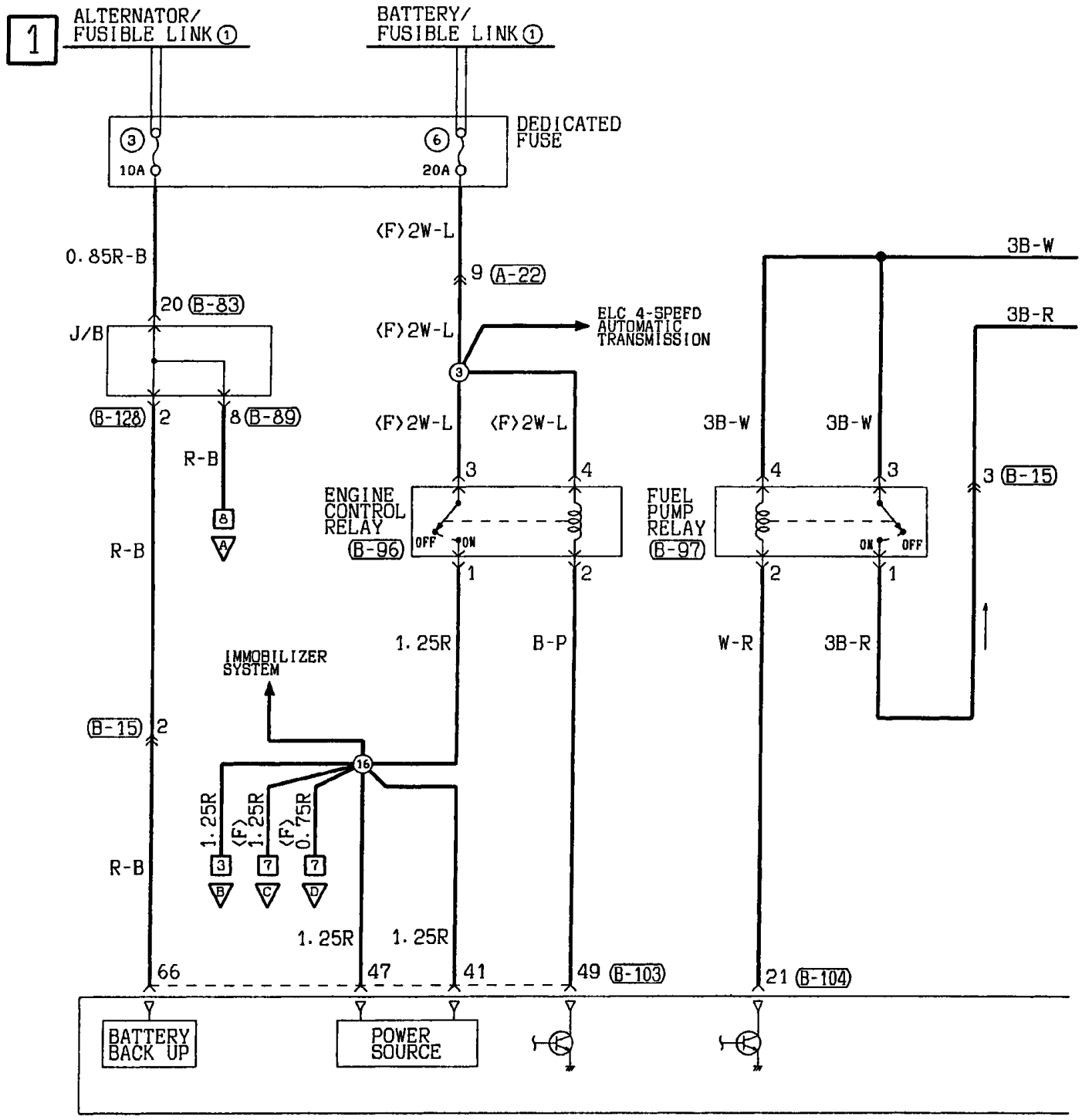

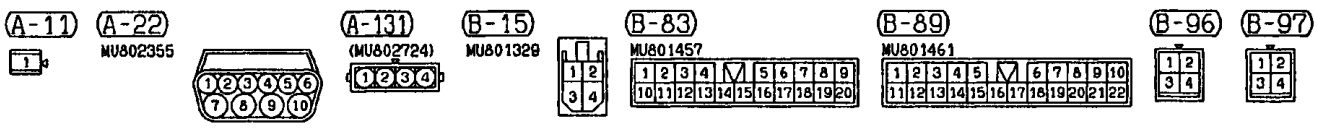

H1T05E02AA

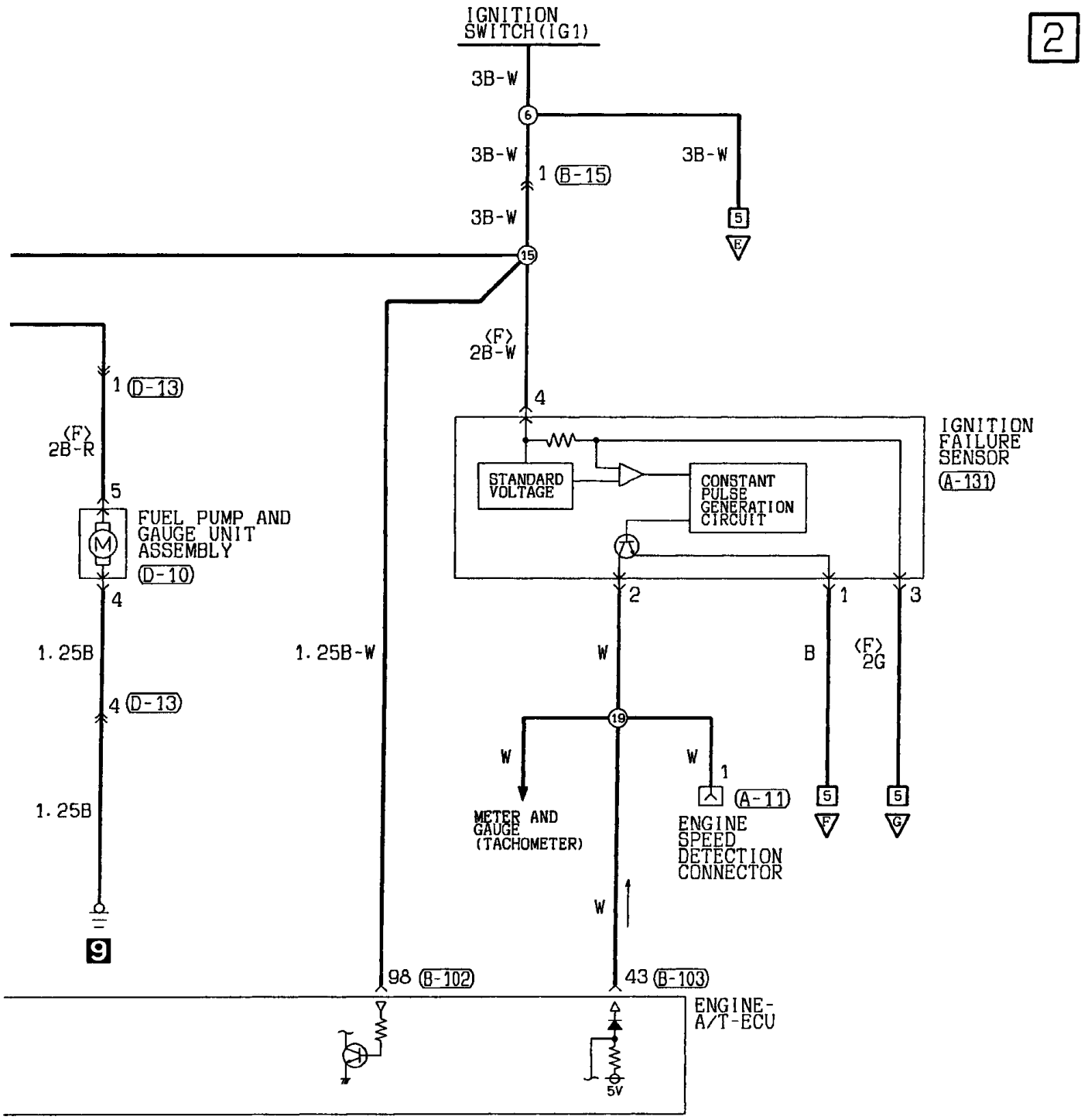

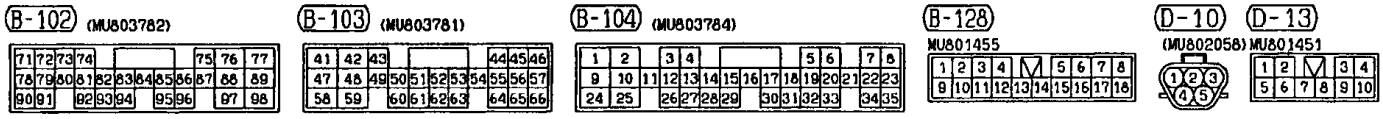

Wire colour code

B :Black	LG:Light green	G :Green	L :Blue	W :White	Y :Yellow	SB:Sky blue
BR:Brown	O :Orange	GR:Gray	R :Red	P :Pink	V :Violet	

H1T05E02AB

MPI SYSTEM <MPI-SOHC-A/T> (CONTINUED)

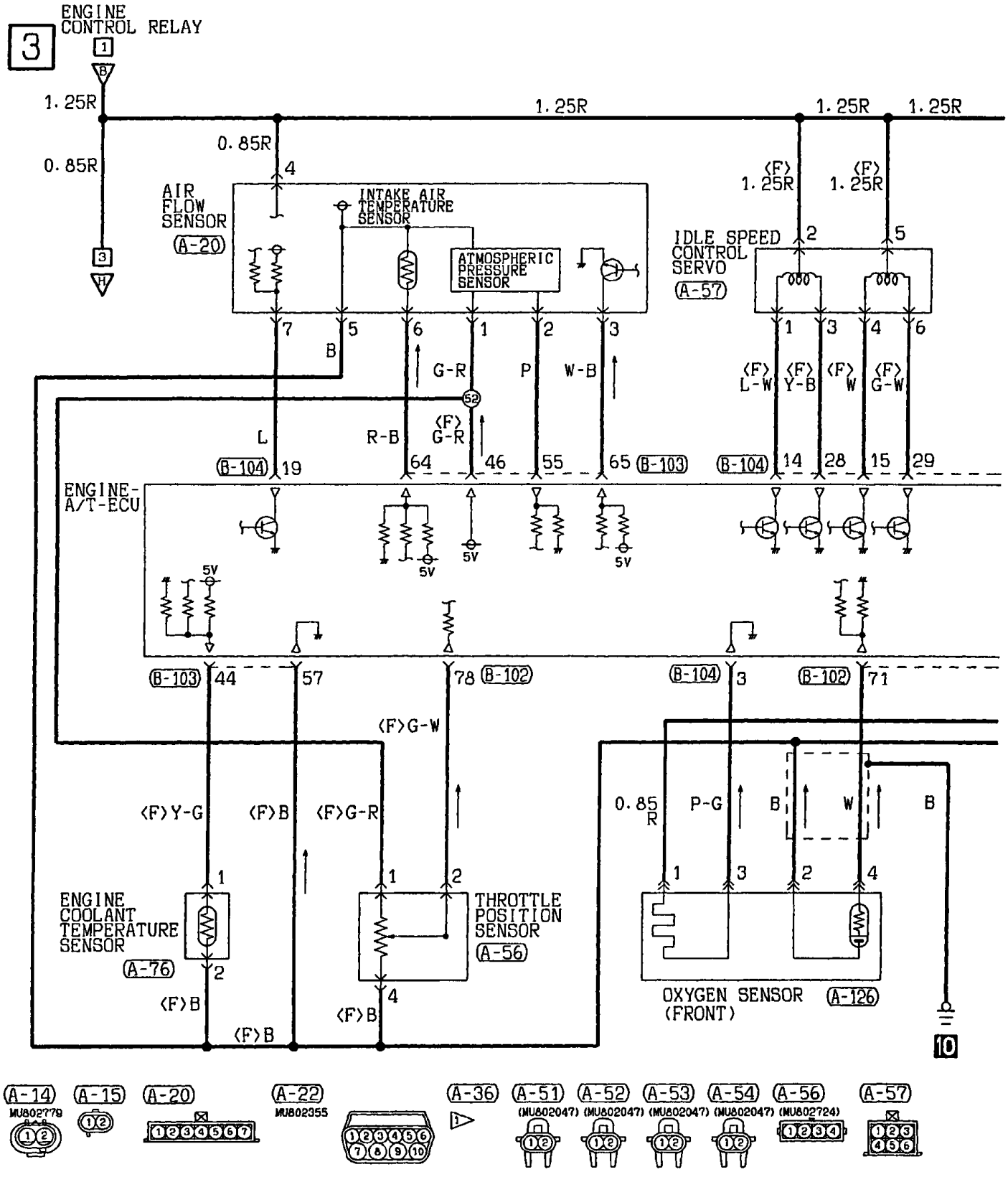

H1T05E02BA

4

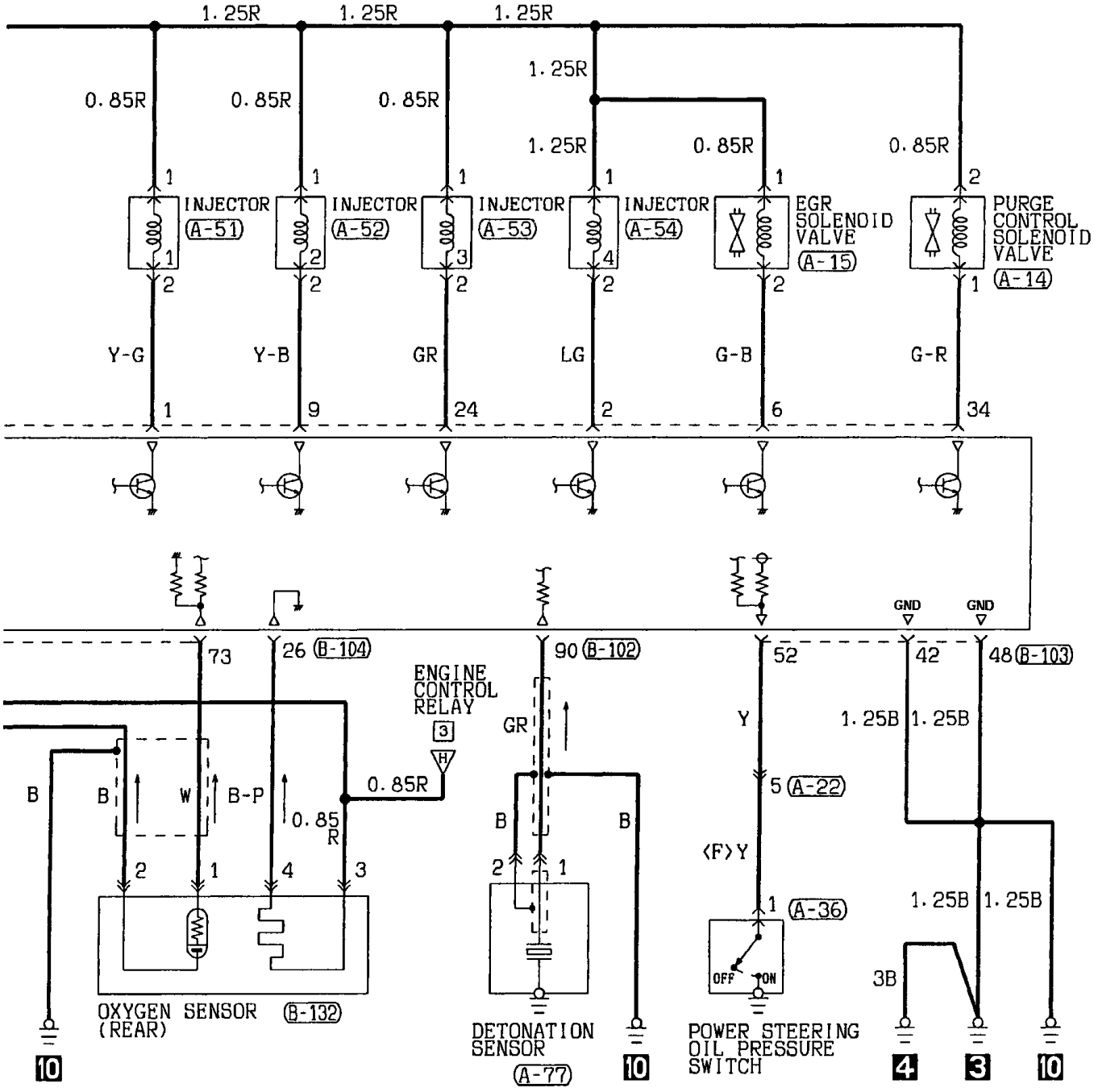

Wire colour code
B :Black LG:Light green G :Green L :Blue W :White Y :Yellow SB:Sky blue
BR:Brown O :Orange GR:Gray R :Red P :Pink V :Violet

H1T05E02BB

MPI SYSTEM <MPI-SOHC-A/T> (CONTINUED)

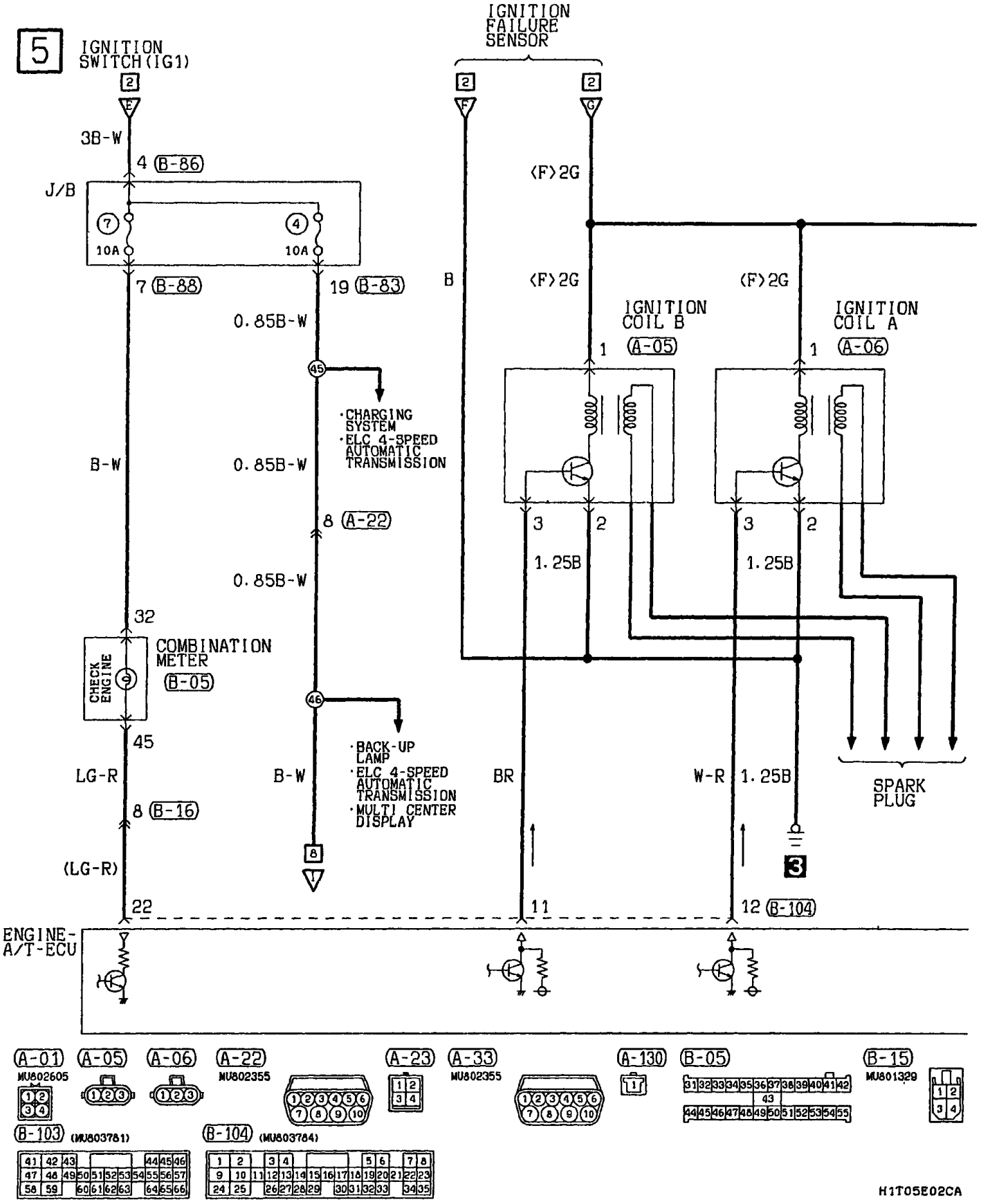

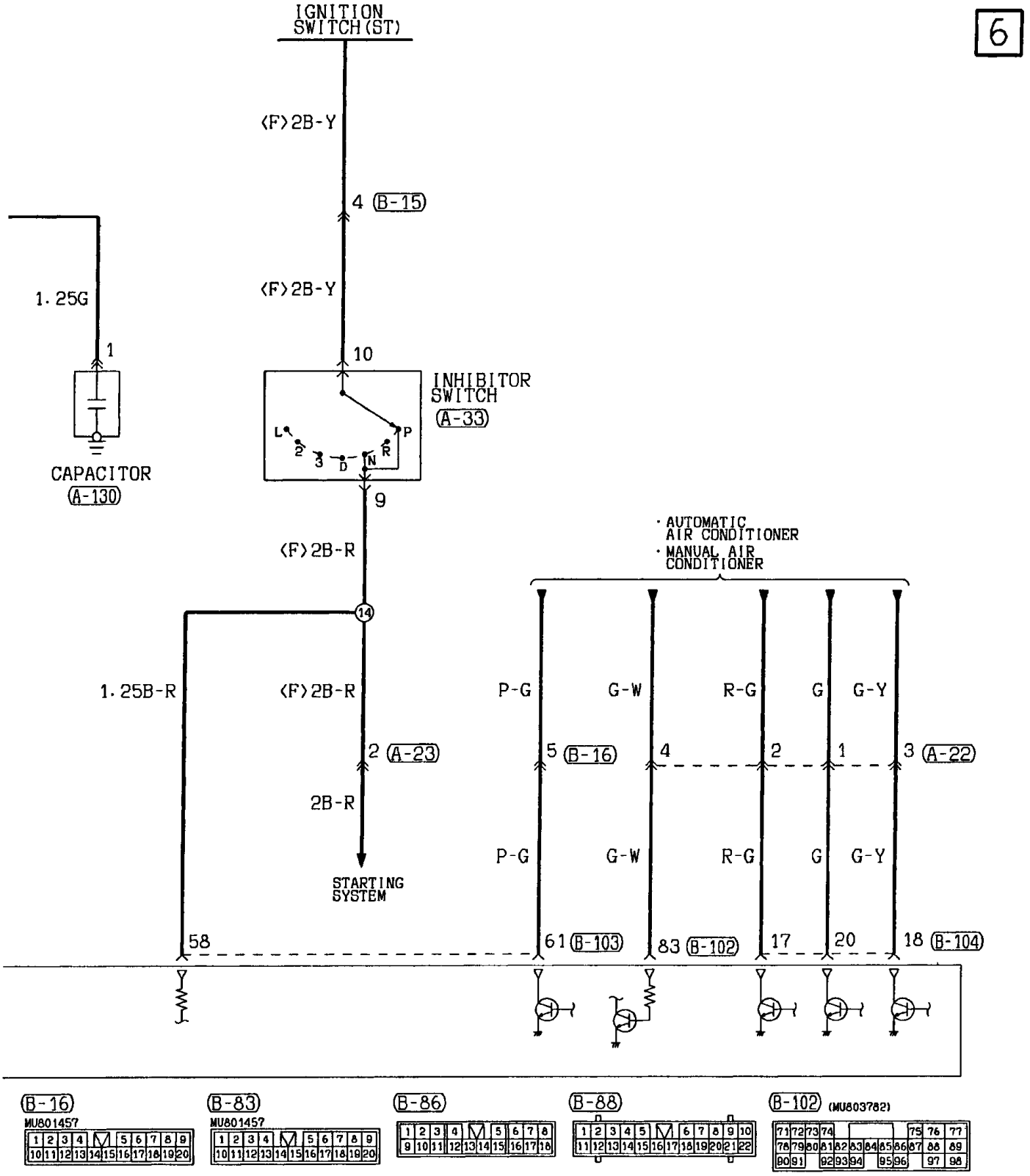

Wire colour code

B :Black	LG:Light green	G :Green	L :Blue	W :White	Y :Yellow	SB:Sky blue
BR:Brown	O :Orange	GR:Gray	R :Red	P :Pink	V :Violet	

H1T05E02CB

MPI SYSTEM <MPI-SOHC-A/T> (CONTINUED)

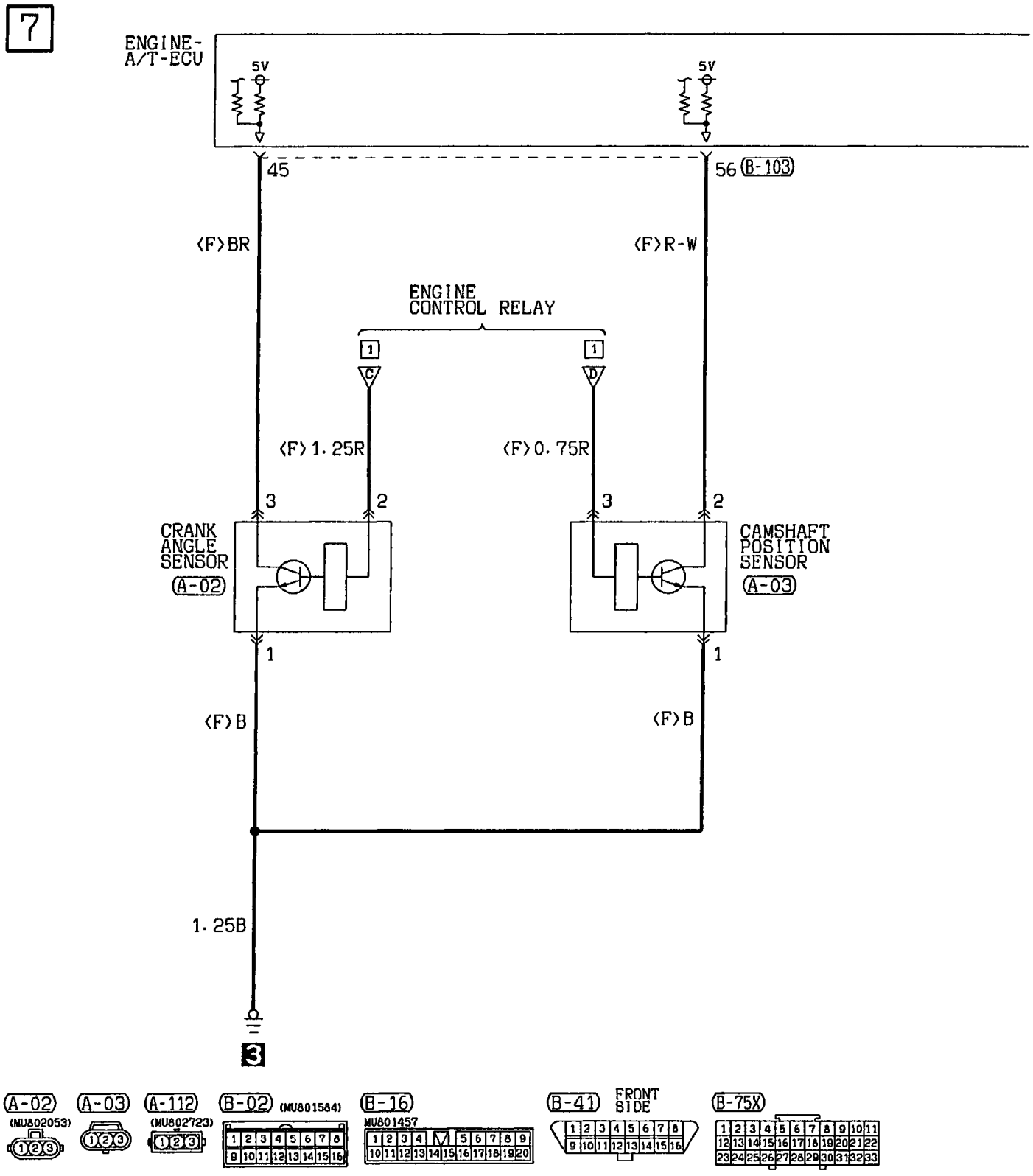

H1T05E02DA

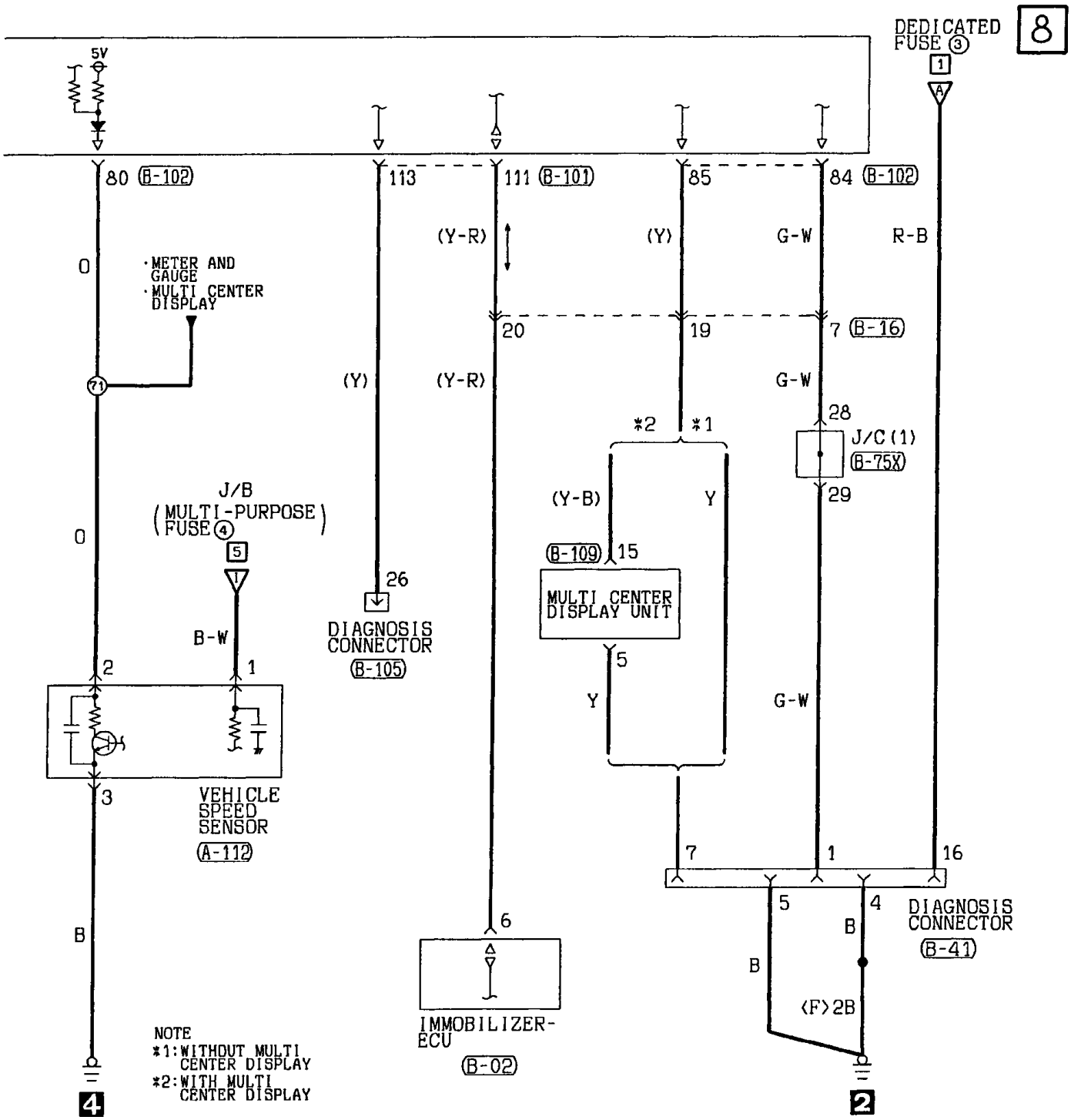

Wire colour code

B :Black	LG:Light green	G :Green	L :Blue	W :White	Y :Yellow	SB:Sky blue
BR:Brown	O :Orange	GR:Gray	R :Red	P :Pink	V :Violet	

H1T05E02DB

GDI SYSTEM

M/T

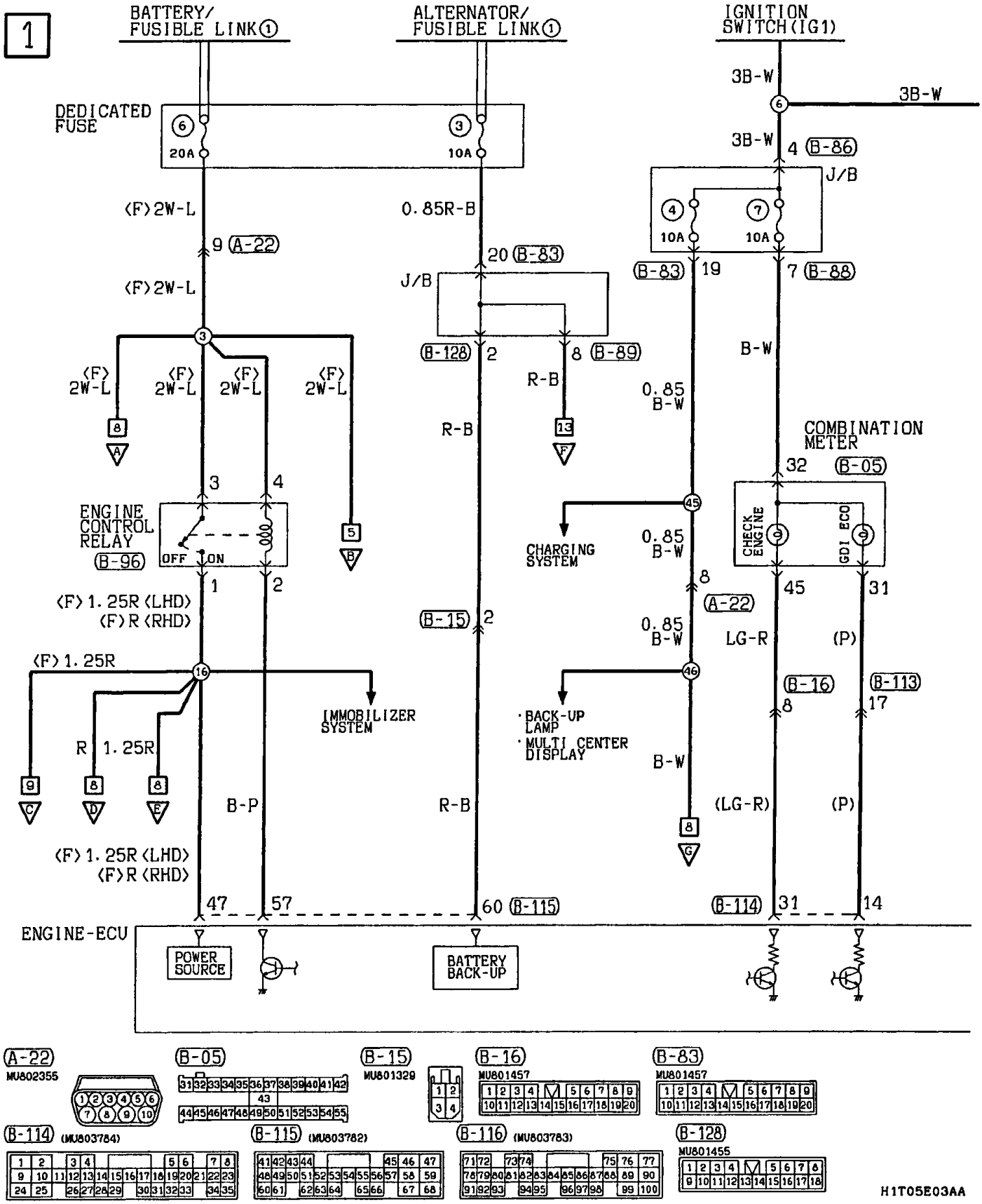

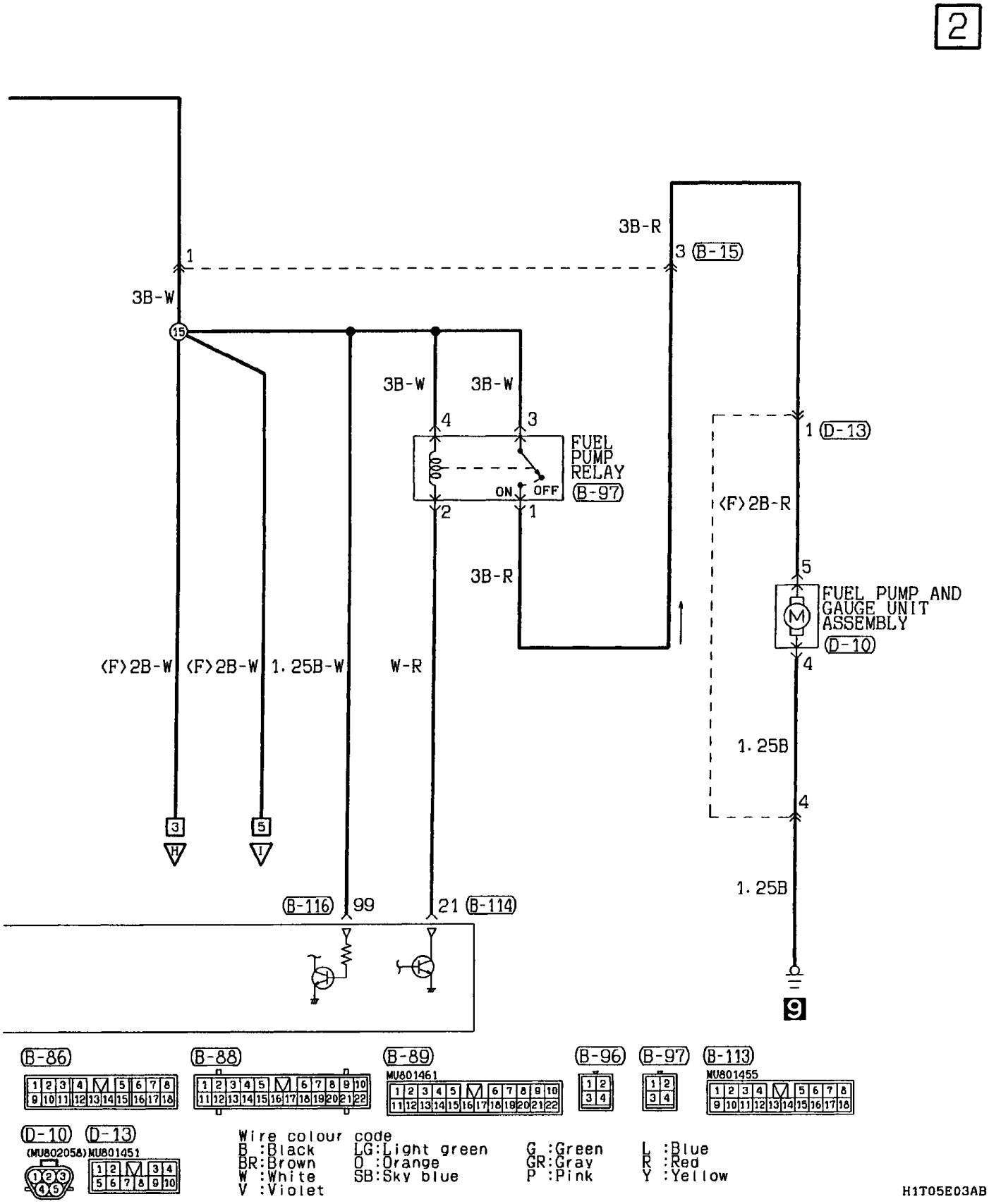
2
3B-R
3 (B-15)
1
3B-W
15
3B-W
3B-W
4
3
FUEL PUMP RELAY
ON
OFF
(B-97)
2
1
1 (D-13)
(F)2B-R
3B-R
5
FUEL PUMP AND GAUGE UNIT ASSEMBLY
(D-10)
4
(F)2B-W
(F)2B-W
1.25B-W
W-R
1.25B
4
3
5
H
I
1.25B
(B-116)
99
21 (B-114)
9
(B-86)
(B-88)
(B-89)
MU801461
(B-96)
(B-97)
(B-113)
MU801455
(D-10)
(MU802058)
(D-13)
MU801451
Wire colour code
B :Black
BR:Brown
W :White
V :Violet
LG:Light green
O :Orange
SB:Sky blue
G :Green
GR:Gray
P :Pink
L :Blue
R :Red
Y :Yellow
H1T05E03AB

GDI SYSTEM <M/T> (CONTINUED)

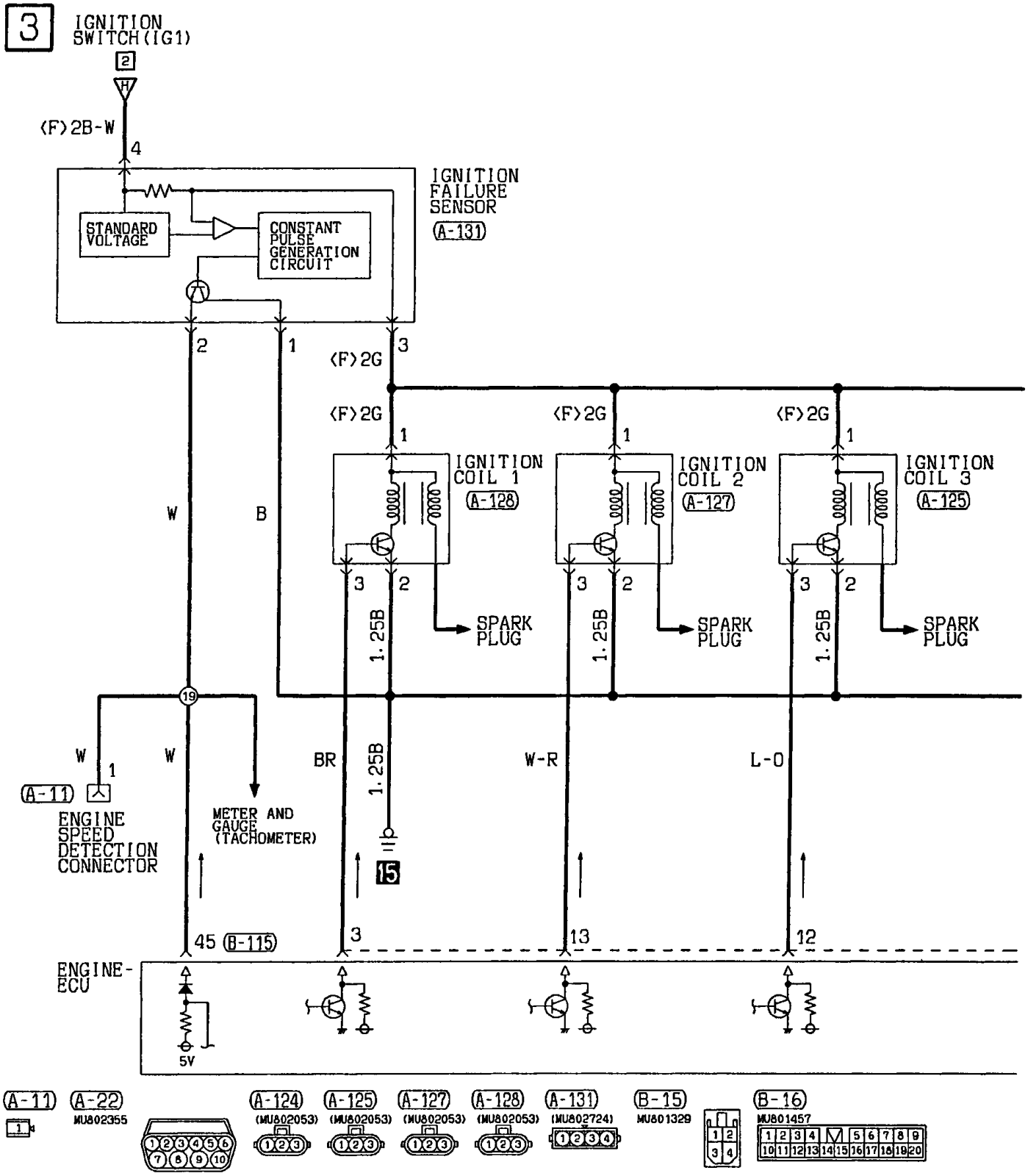

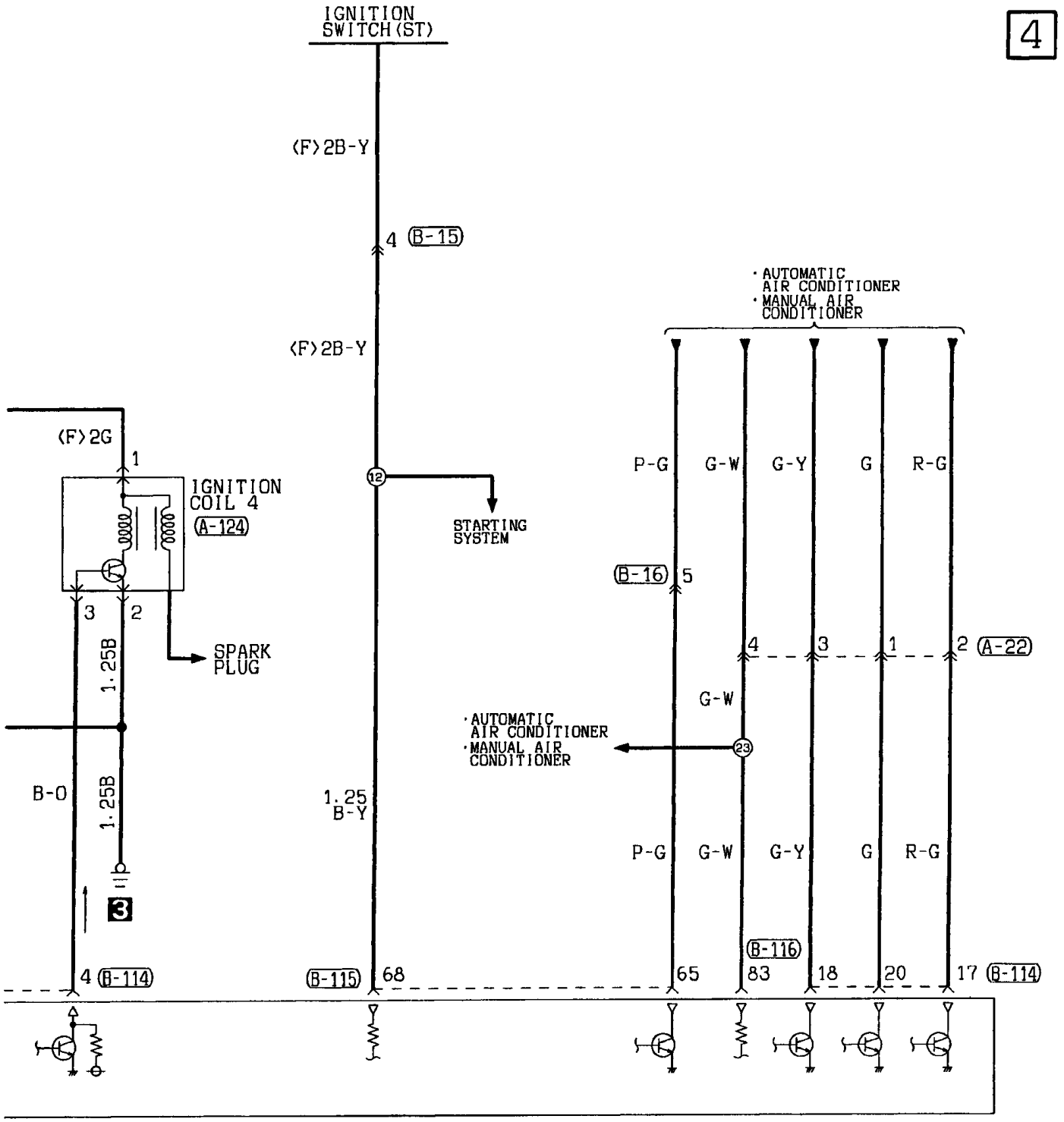

(B-114) (MU803784)

1	2		3	4					5	6		7	8	
9	10	11	12	13	14	15	16	17	18	19	20	21	22	23
24	25		26	27	28	29		30	31	32	33		34	35

(B-115) (MU803782)

41	42	43	44							45	46	47		
48	49	50	51	52	53	54	55	56	57	58	59			
60	61		62	63	64		65	66		67	68			

(B-116) (MU803783)

71	72		73	74					75	76	77			
78	79	80	81	82	83	84	85	86	87	88	89	90		
91	92	93		94	95		96	97	98		99	100		

Wire colour code
B :Black LG:Light green G :Green L :Blue W :White Y :Yellow SB:Sky blue
BR:Brown O :Orange GR:Gray R :Red P :Pink V :Violet

H1T05E03BB

GDI SYSTEM <M/T> (CONTINUED)

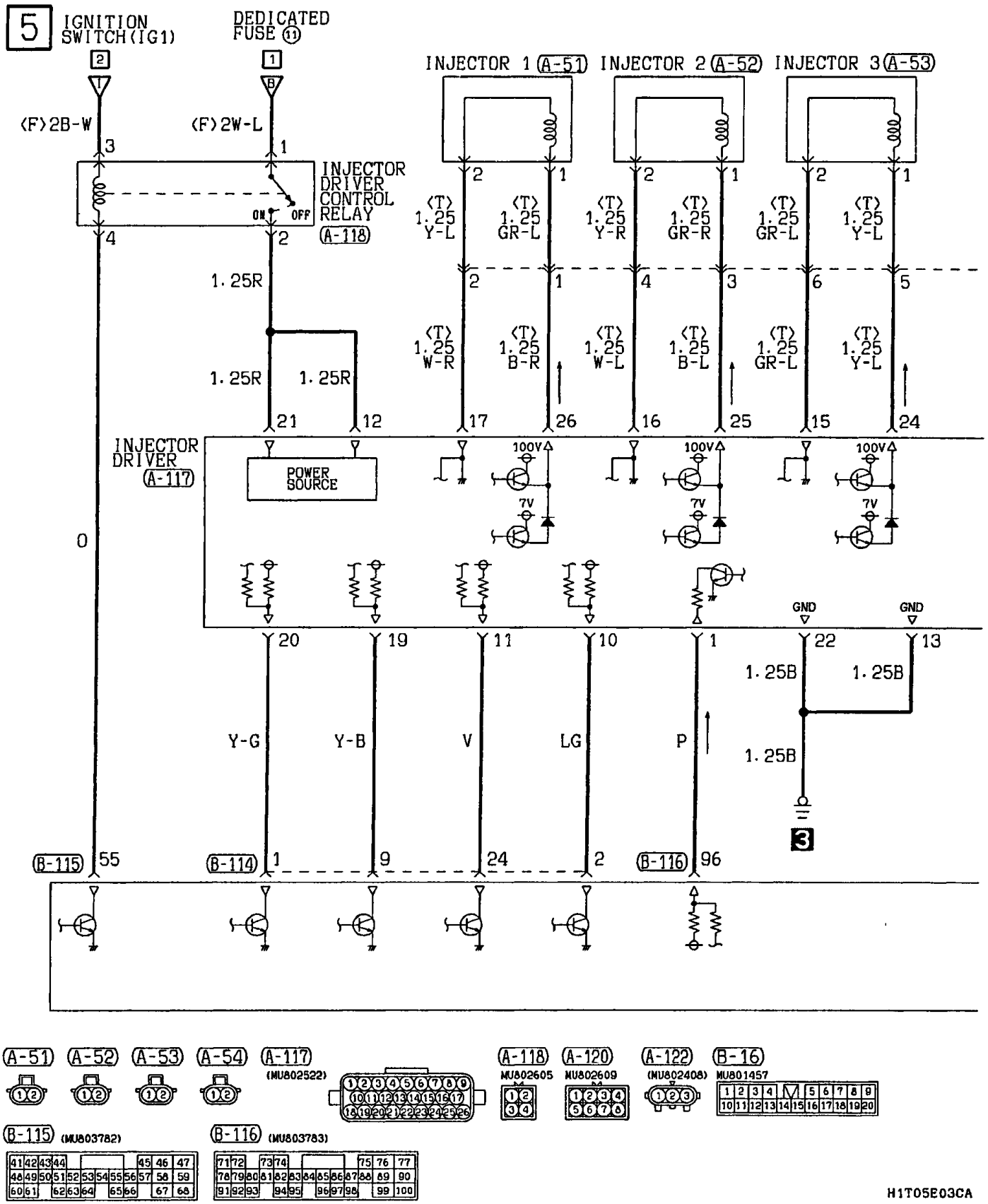

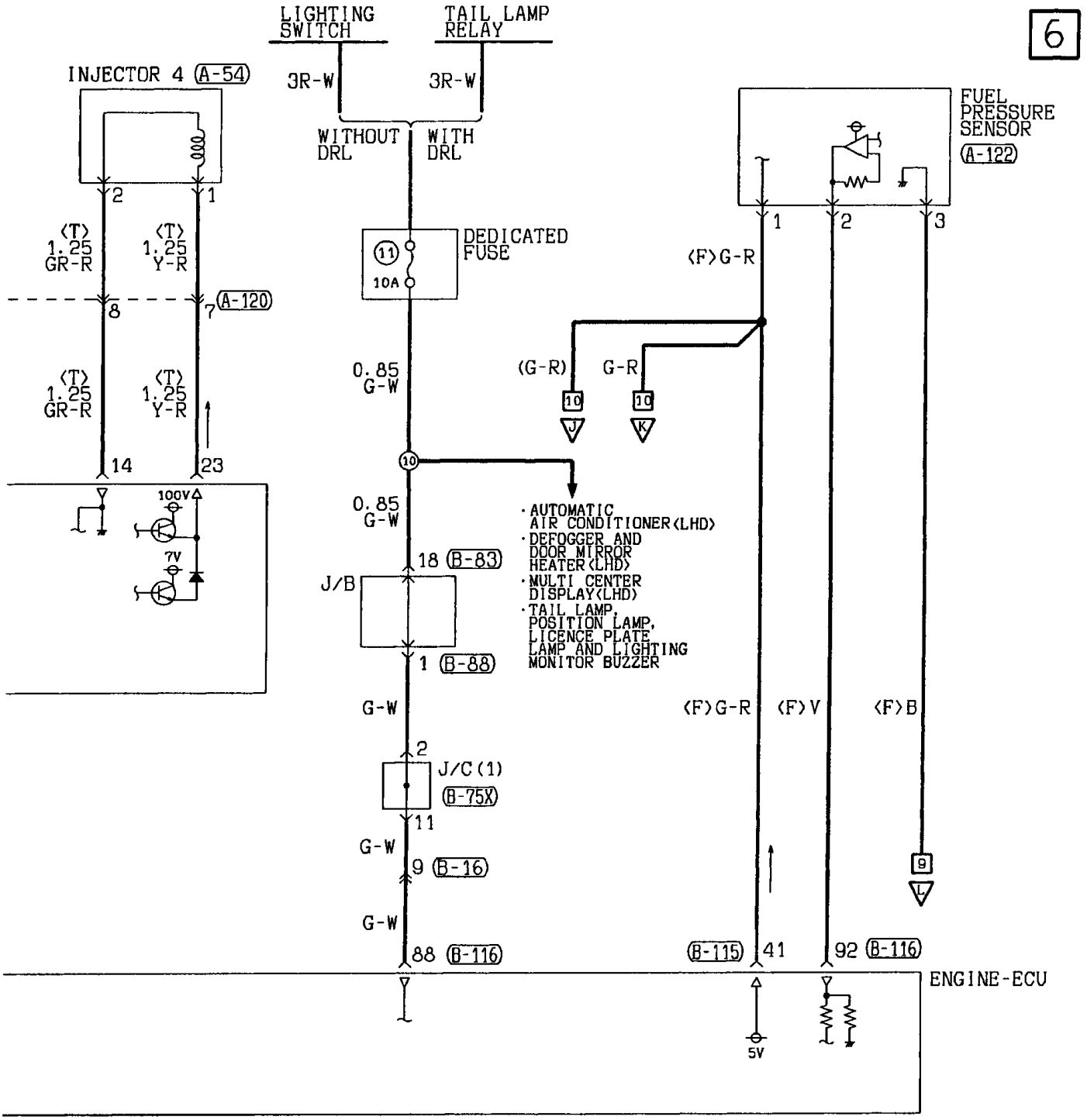

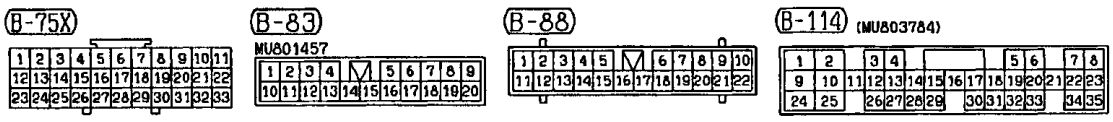

Wire colour code
B :Black LG:Light green G :Green L :Blue W :White Y :Yellow SB:Sky blue
BR:Brown O :Orange GR:Gray R :Red P :Pink V :Violet

H1T05E03CB

GDI SYSTEM <M/T> (CONTINUED)

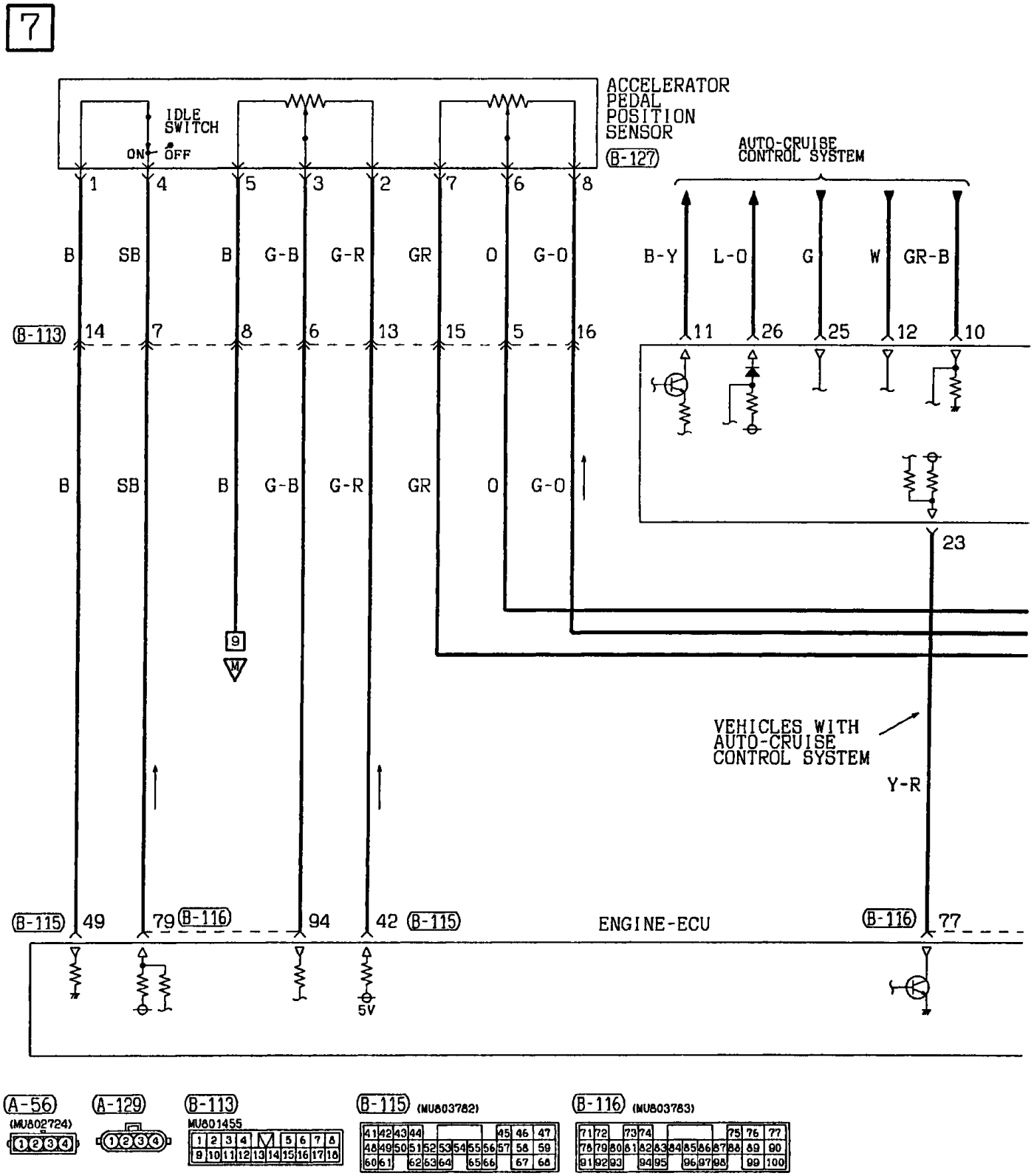

H1T05E03DA

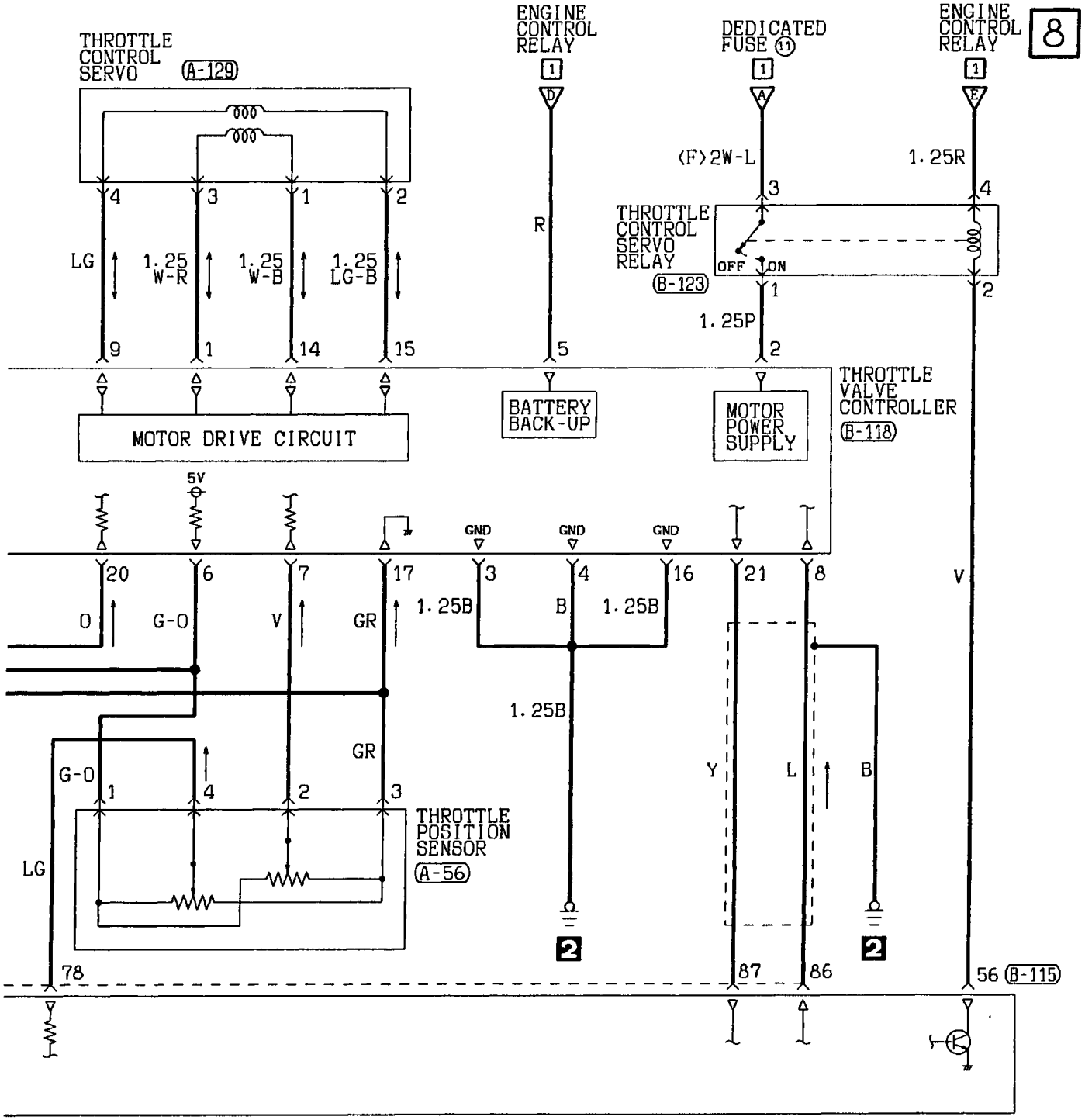

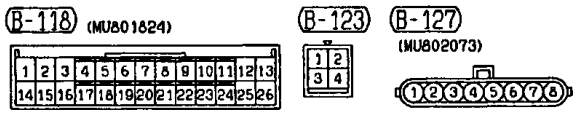

Wire colour code

B :Black	LG:Light green	G :Green	L :Blue	W :White	Y :Yellow	SB:Sky blue
BR:Brown	O :Orange	GR:Gray	R :Red	P :Pink	V :Violet	

H1T05E03DB

GDI SYSTEM <M/T> (CONTINUED)

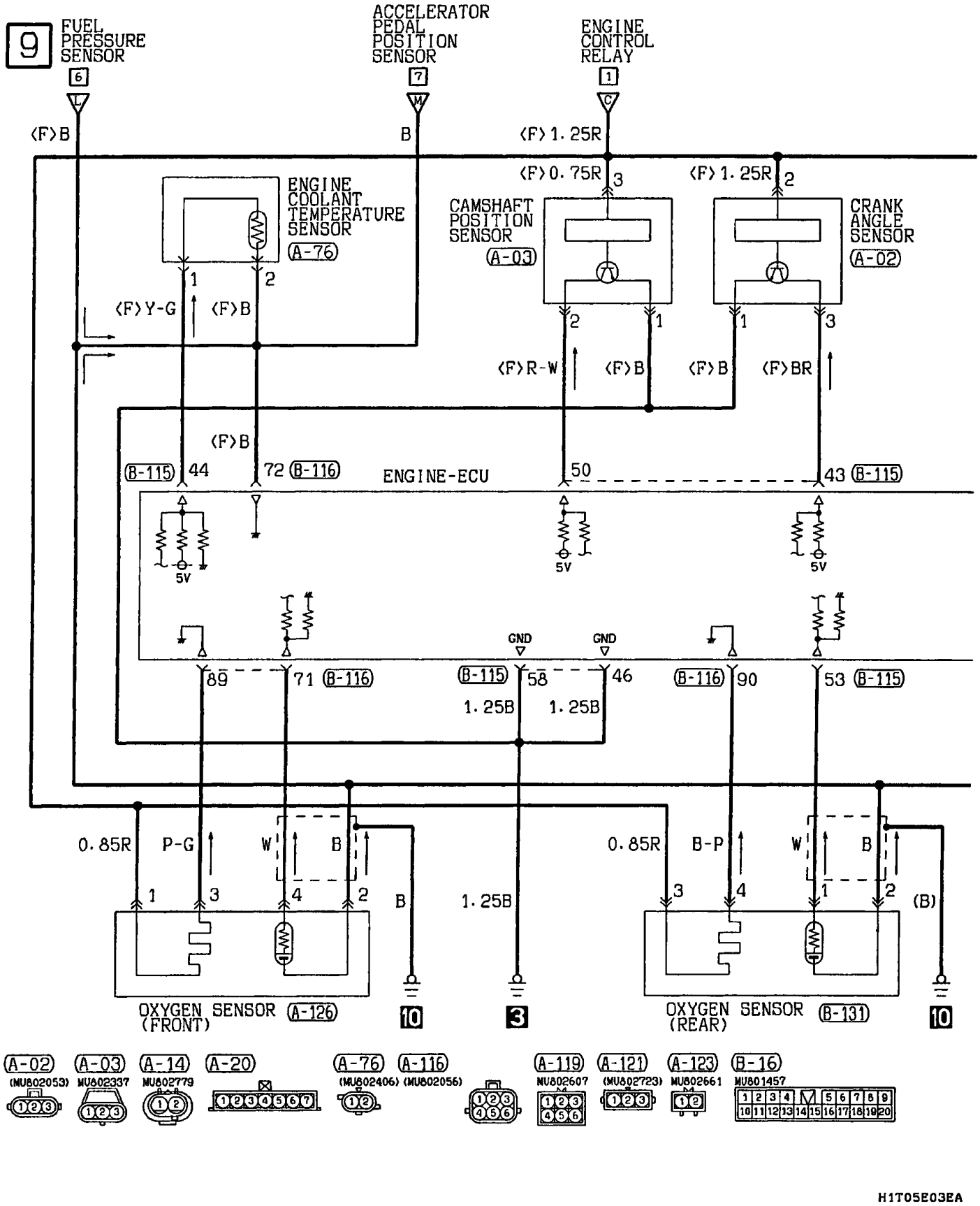

H1T05E03EA

10

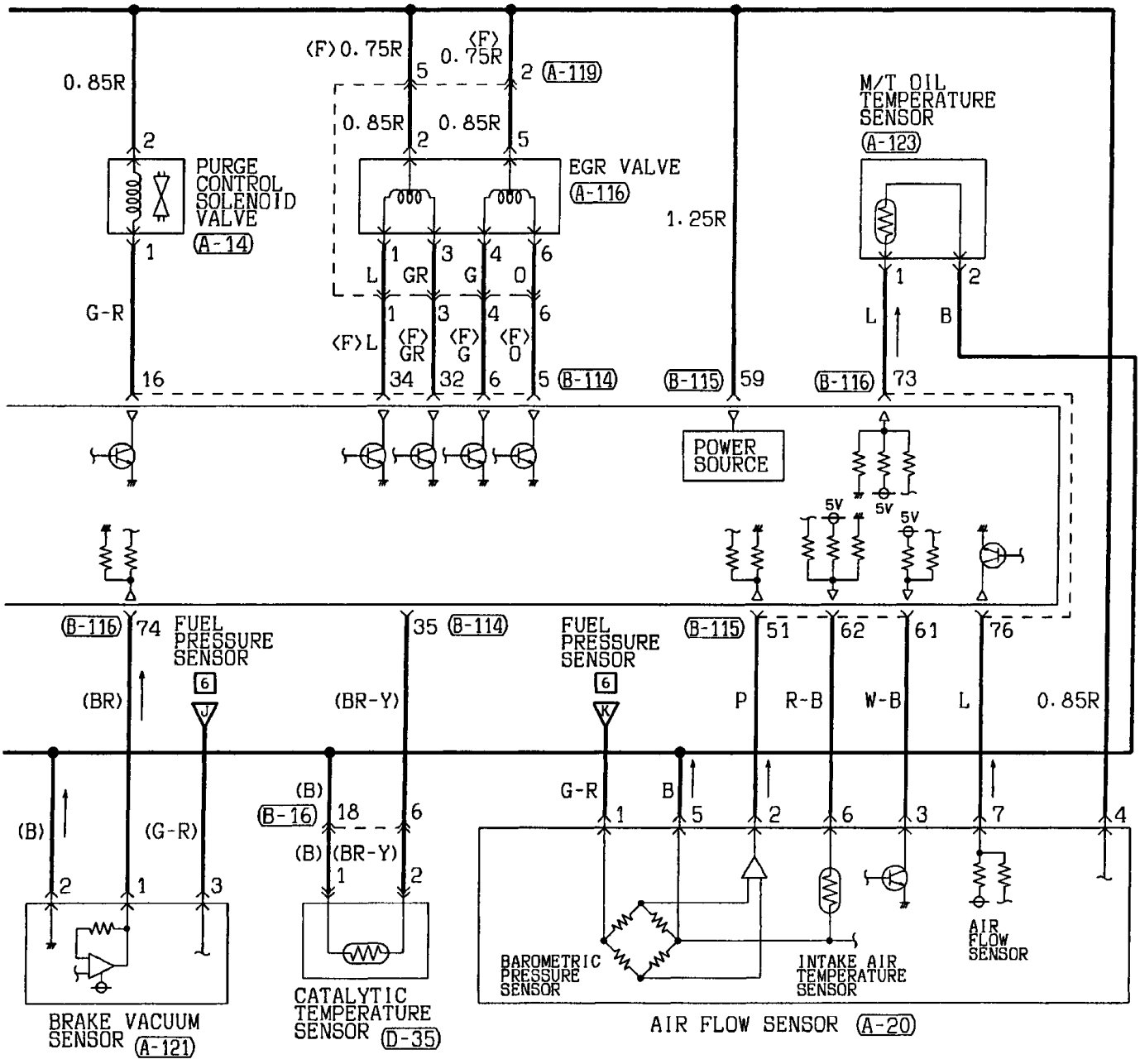

Wire colour code

B :Black	LG:Light green	G :Green	L :Blue	W :White	Y :Yellow	SB:Sky blue
BR:Brown	O :Orange	GR:Gray	R :Red	P :Pink	V :Violet	

H1T05E03EB

GDI SYSTEM <M/T> (CONTINUED)

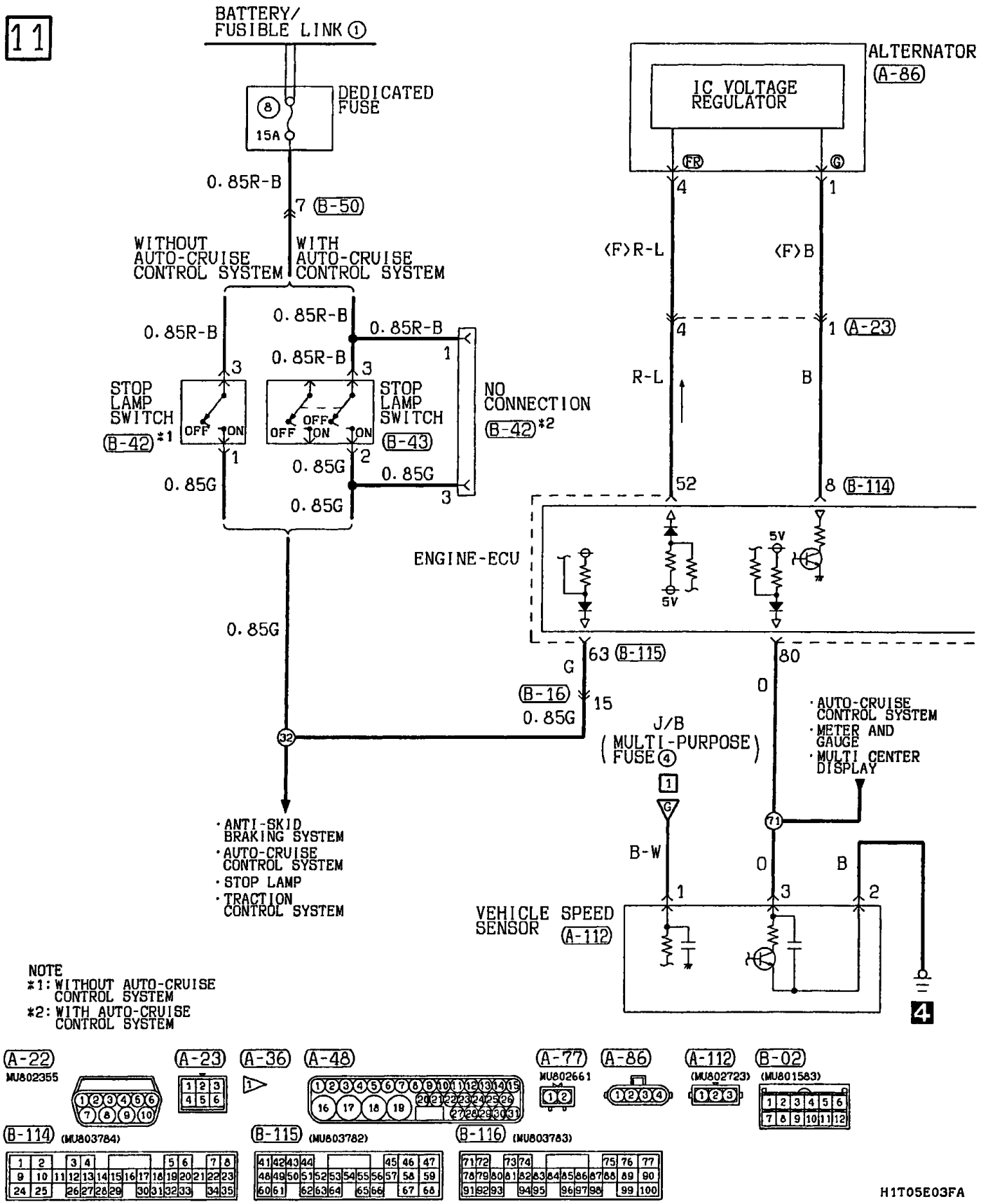

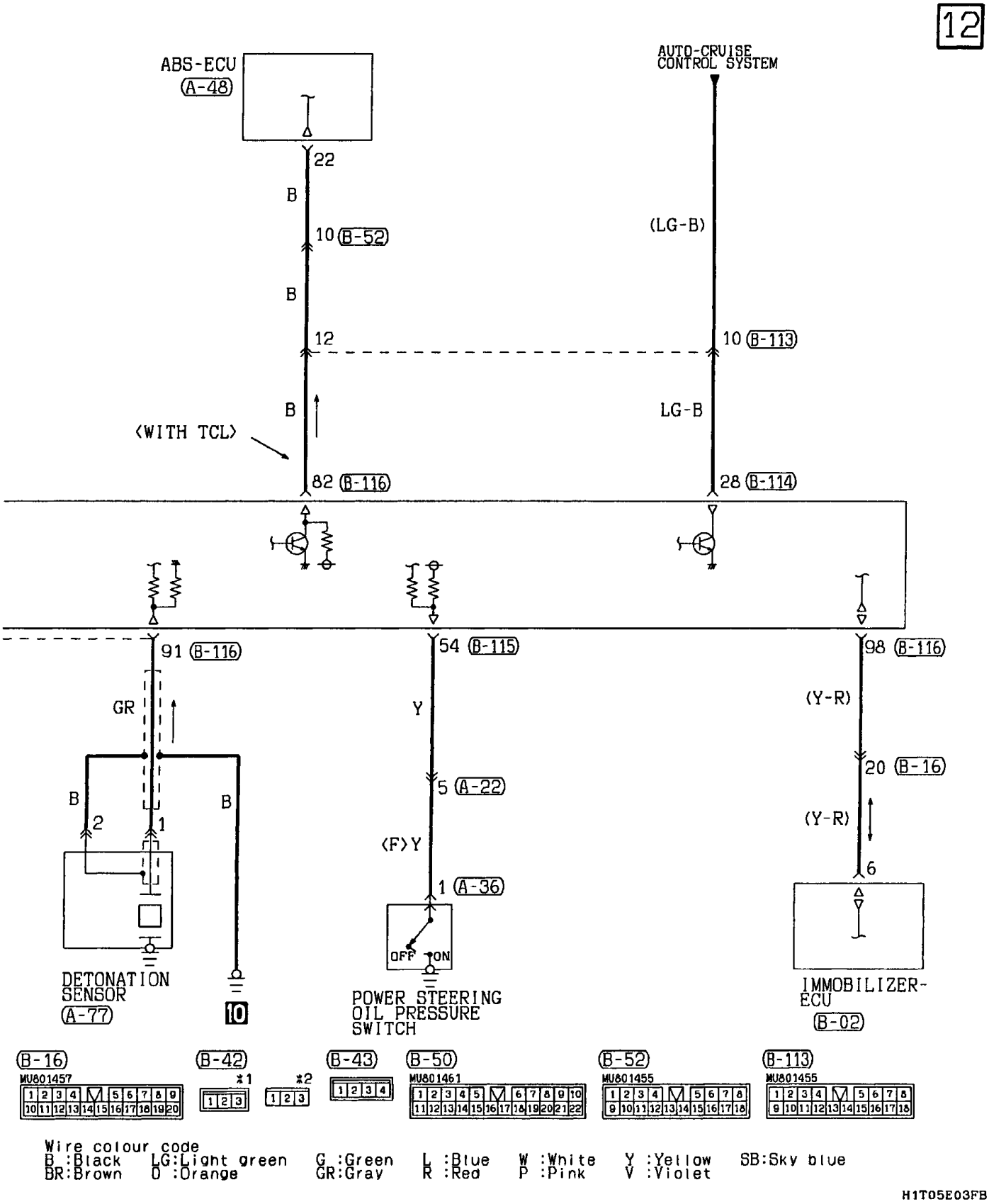
12
ABS-ECU
(A-48)
22
B
10 (B-52)
B
12
B
<WITH TCL>
82 (B-116)
AUTO-CRUISE
CONTROL SYSTEM
(LG-B)
10 (B-113)
LG-B
28 (B-114)
91 (B-116)
GR
B
2
1
B
DETONATION
SENSOR
(A-77)
10
54 (B-115)
Y
5 (A-22)
<F>Y
1 (A-36)
OFF
ON
POWER STEERING
OIL PRESSURE
SWITCH
98 (B-116)
(Y-R)
20 (B-16)
(Y-R)
6
IMMOBILIZER-
ECU
(B-02)
(B-16)
MU801457
(B-42)
*1
*2
(B-43)
(B-50)
MU801461
(B-52)
MU801455
(B-113)
MU801455
Wire colour code
B :Black LG:Light green G :Green L :Blue W :White Y :Yellow SB:Sky blue
BR:Brown O :Orange GR:Gray R :Red P :Pink V :Violet
H1T05E03FB

GDI SYSTEM <M/T> (CONTINUED)

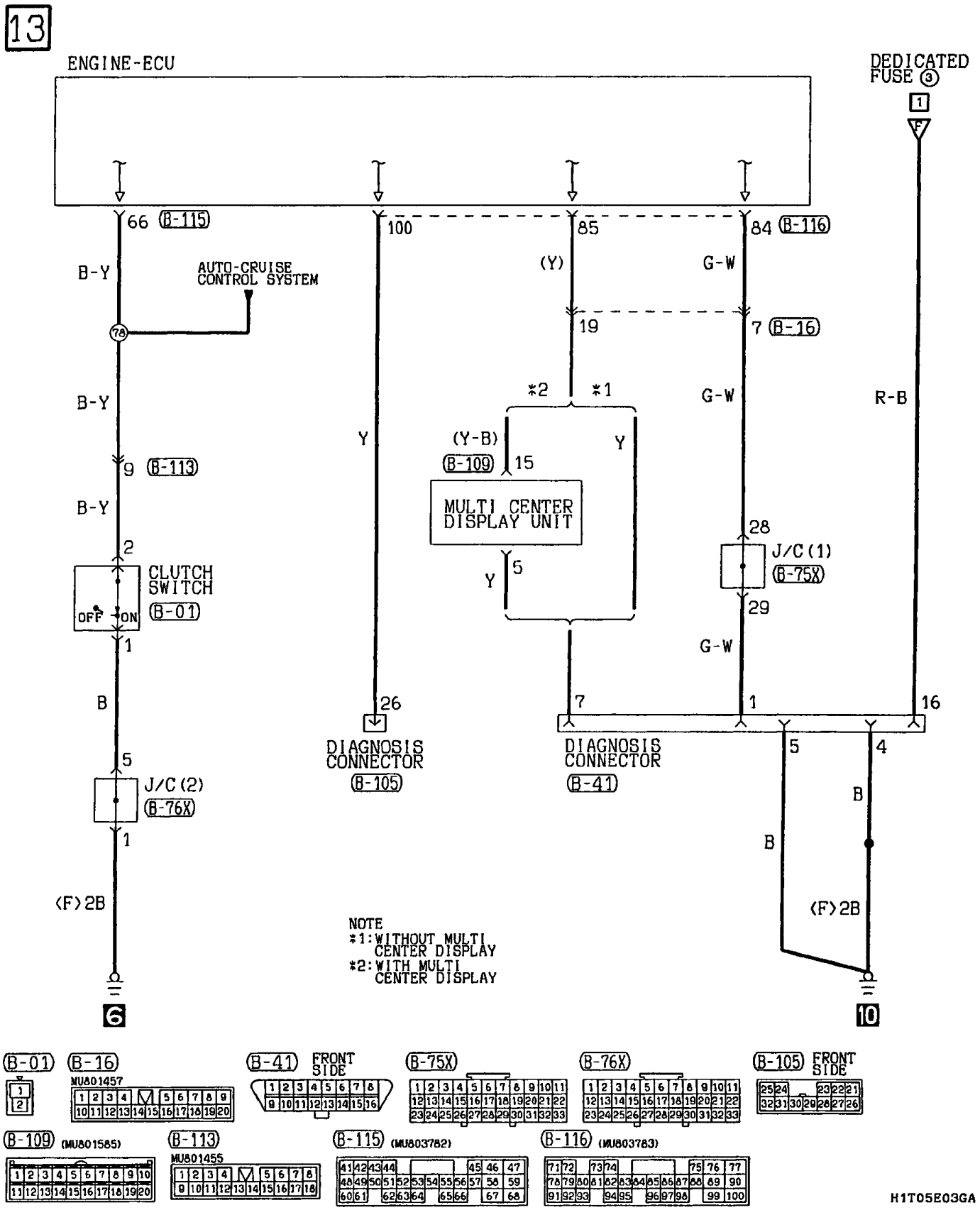

NOTES

GDI SYSTEM

A/T

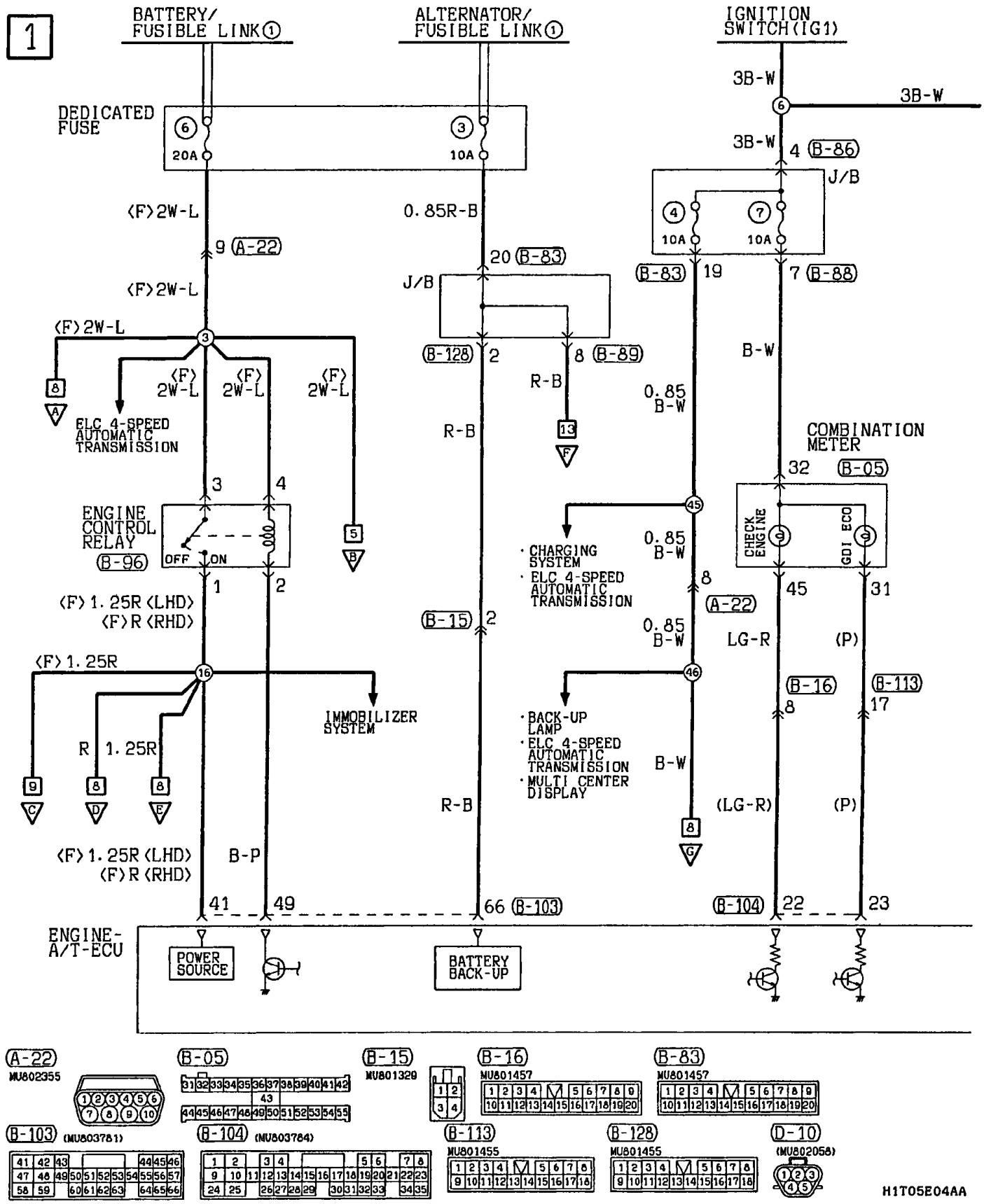

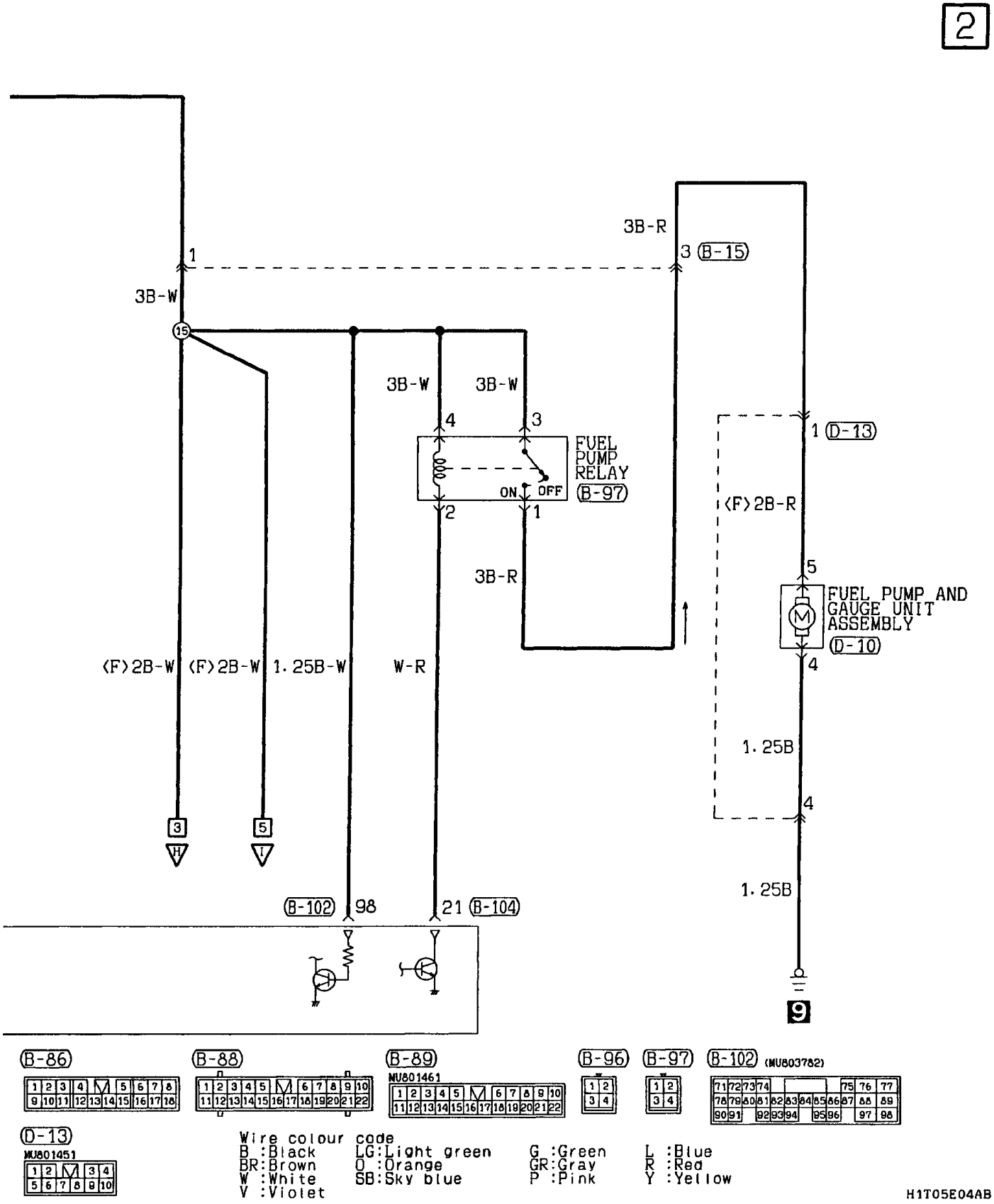

Wire colour code

B :Black	LG:Light green	G :Green	L :Blue
BR:Brown	O :Orange	GR:Gray	R :Red
W :White	SB:Sky blue	P :Pink	Y :Yellow
V :Violet			

H1T05E04AB

GDI SYSTEM <A/T> (CONTINUED)

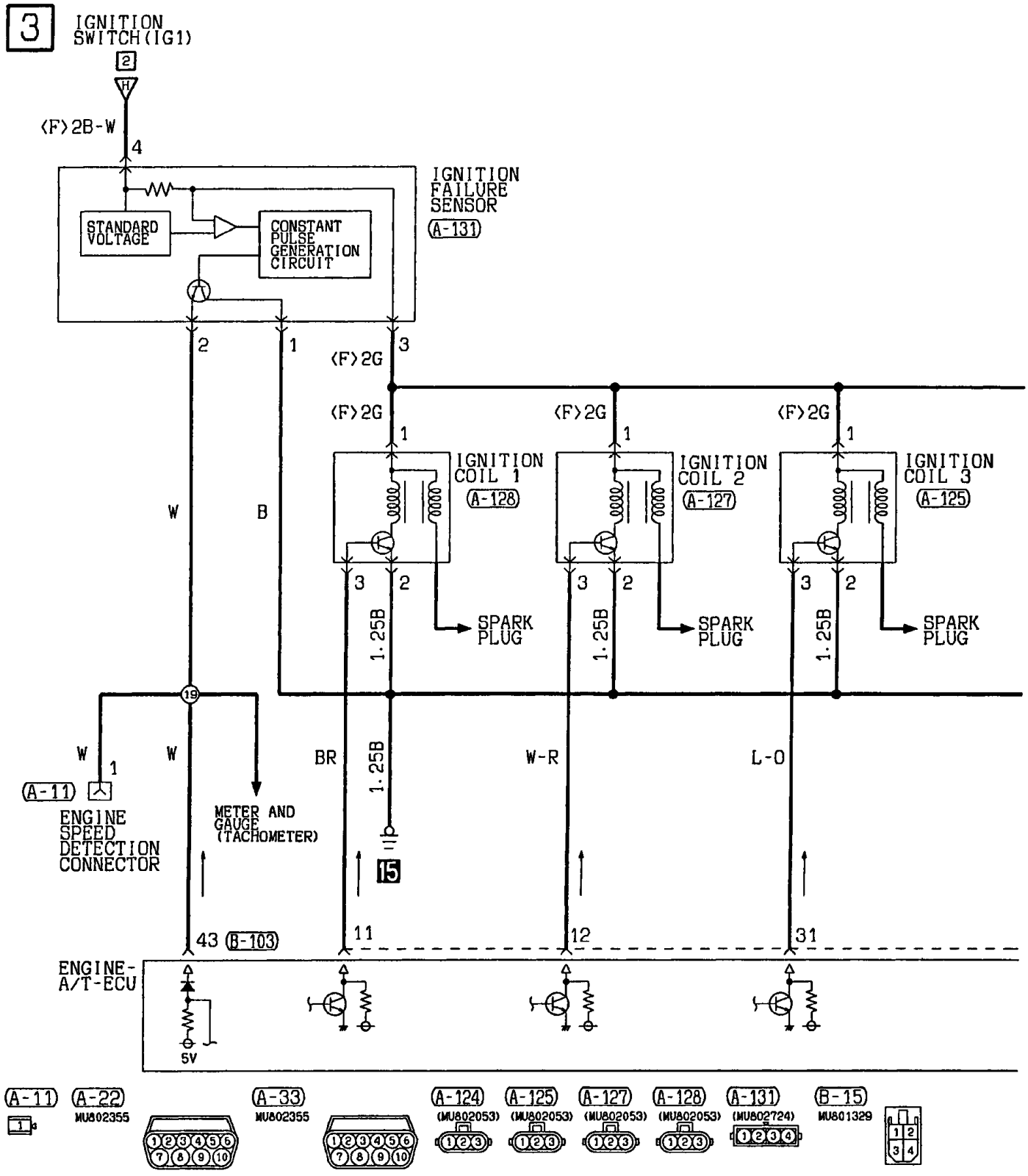

4

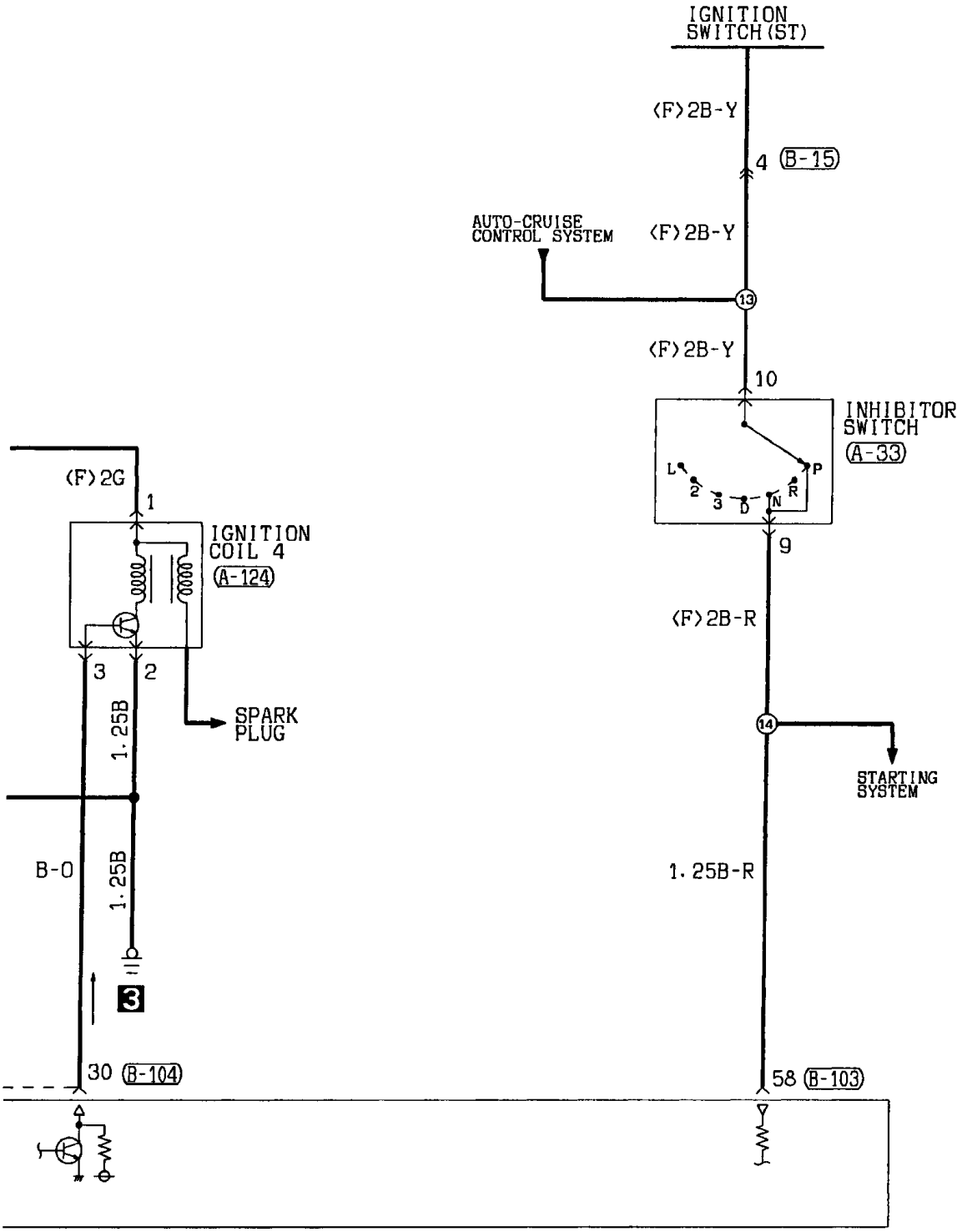

(B-16)
MU801457

1	2	3	4	M	5	6	7	8	9
10	11	12	13	14	15	16	17	18	19	20

(B-103) (MU803781)

41	42	43						44	45	46		
47	48	49	50	51	52	53	54	55	56	57		
58	59		60	61	62	63		64	65	66		

(B-104) (MU803784)

1	2		3	4				5	6		7	8
9	10	11	12	13	14	15	16	17	18	19	20	21	22	23
24	25		26	27	28	29		30	31	32	33		34	35

Wire colour code
B :Black LG:Light green G :Green L :Blue W :White Y :Yellow SB:Sky blue
BR:Brown O :Orange GR:Gray R :Red P :Pink V :Violet

H1T05E04BB

GDI SYSTEM <A/T> (CONTINUED)

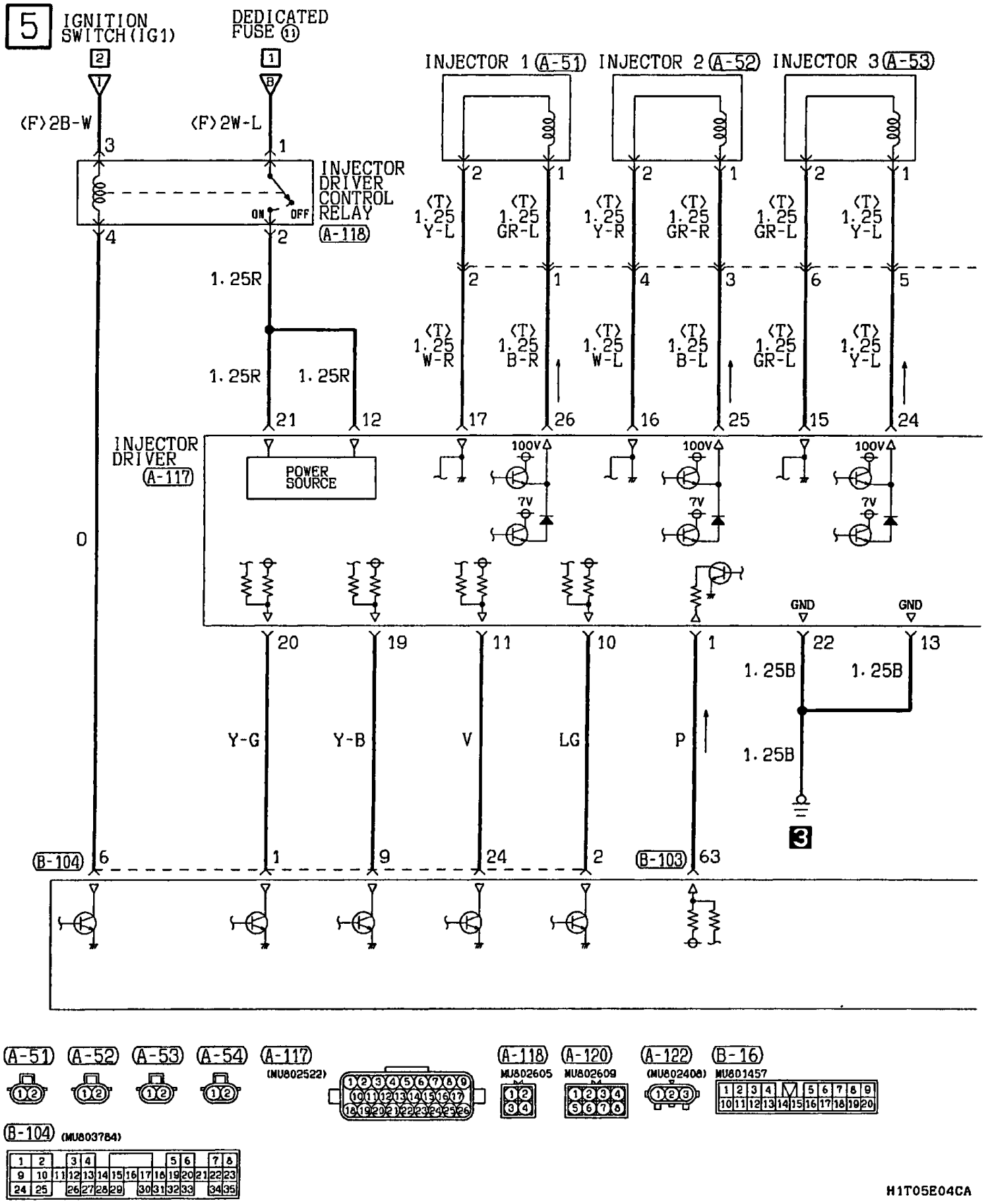

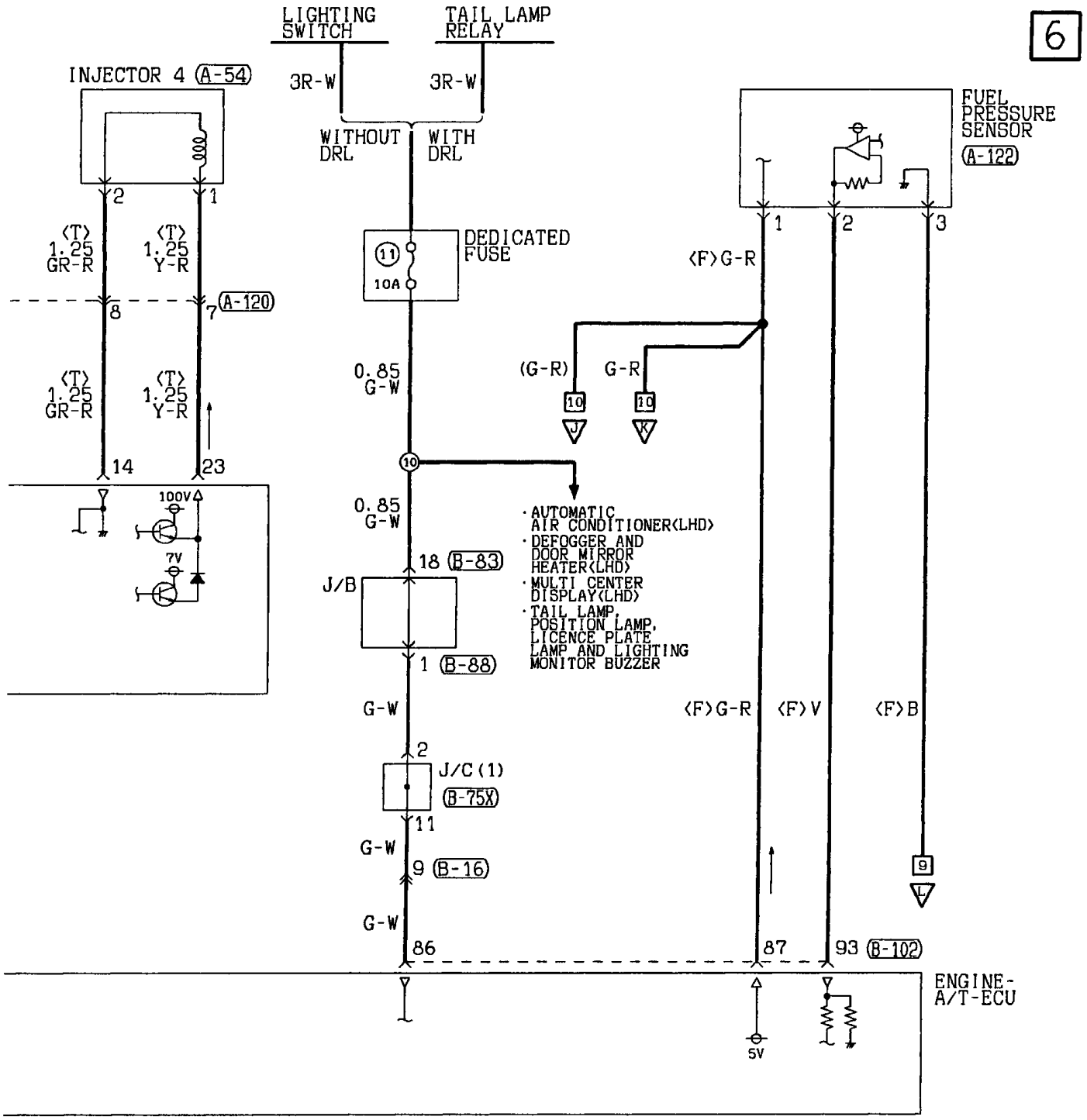

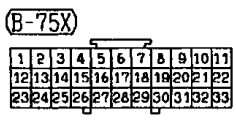

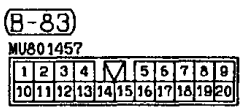

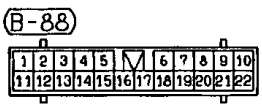

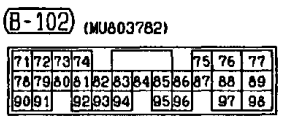

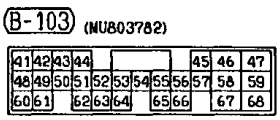

Wire colour code
B :Black LG:Light green G :Green L :Blue W :White Y :Yellow SB:Sky blue
BR:Brown O :Orange GR:Gray R :Red P :Pink V :Violet

H1T05E04CB

GDI SYSTEM <A/T> (CONTINUED)

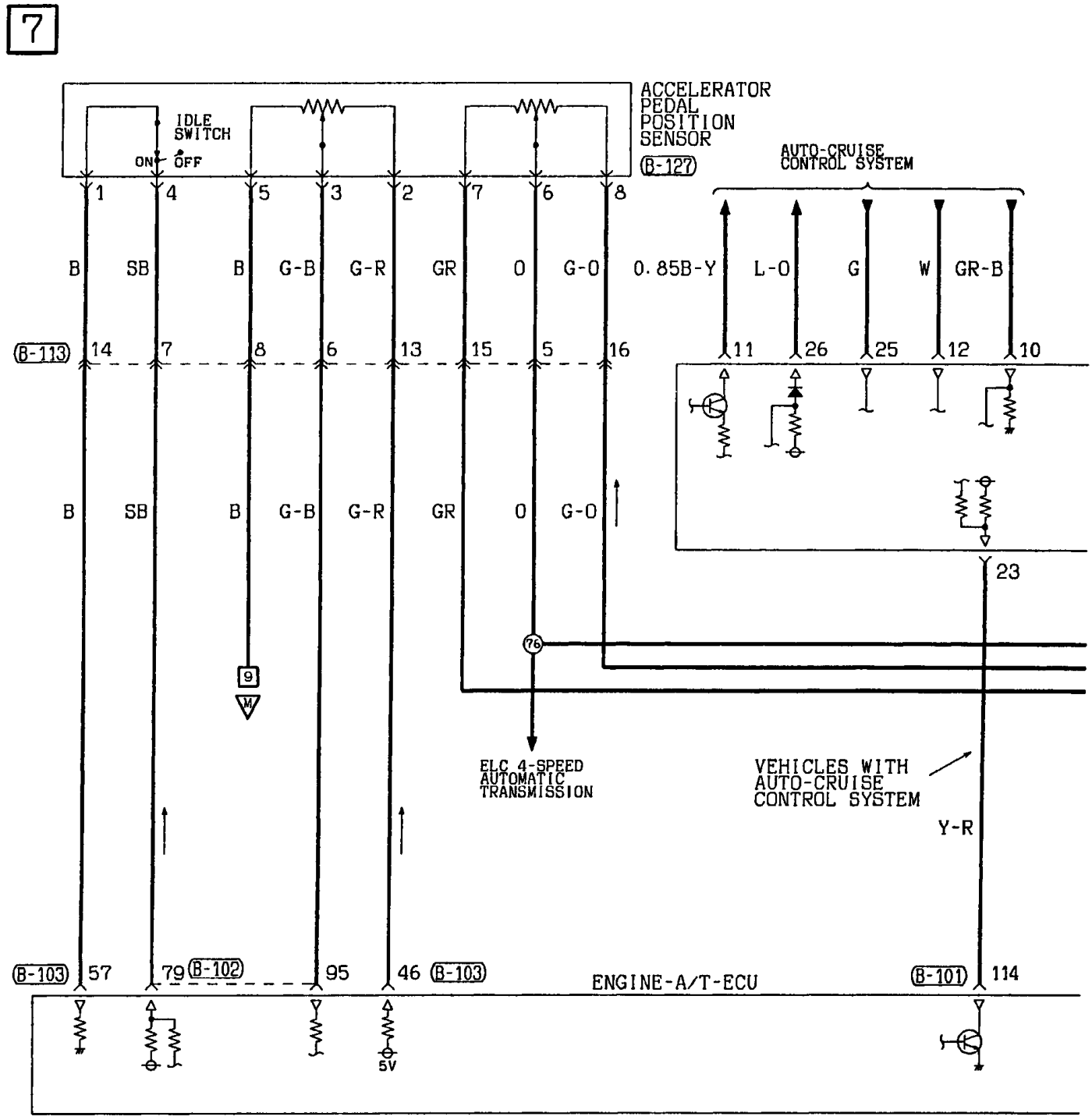

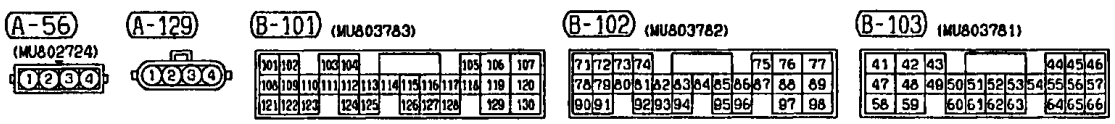

H1T05E04DA

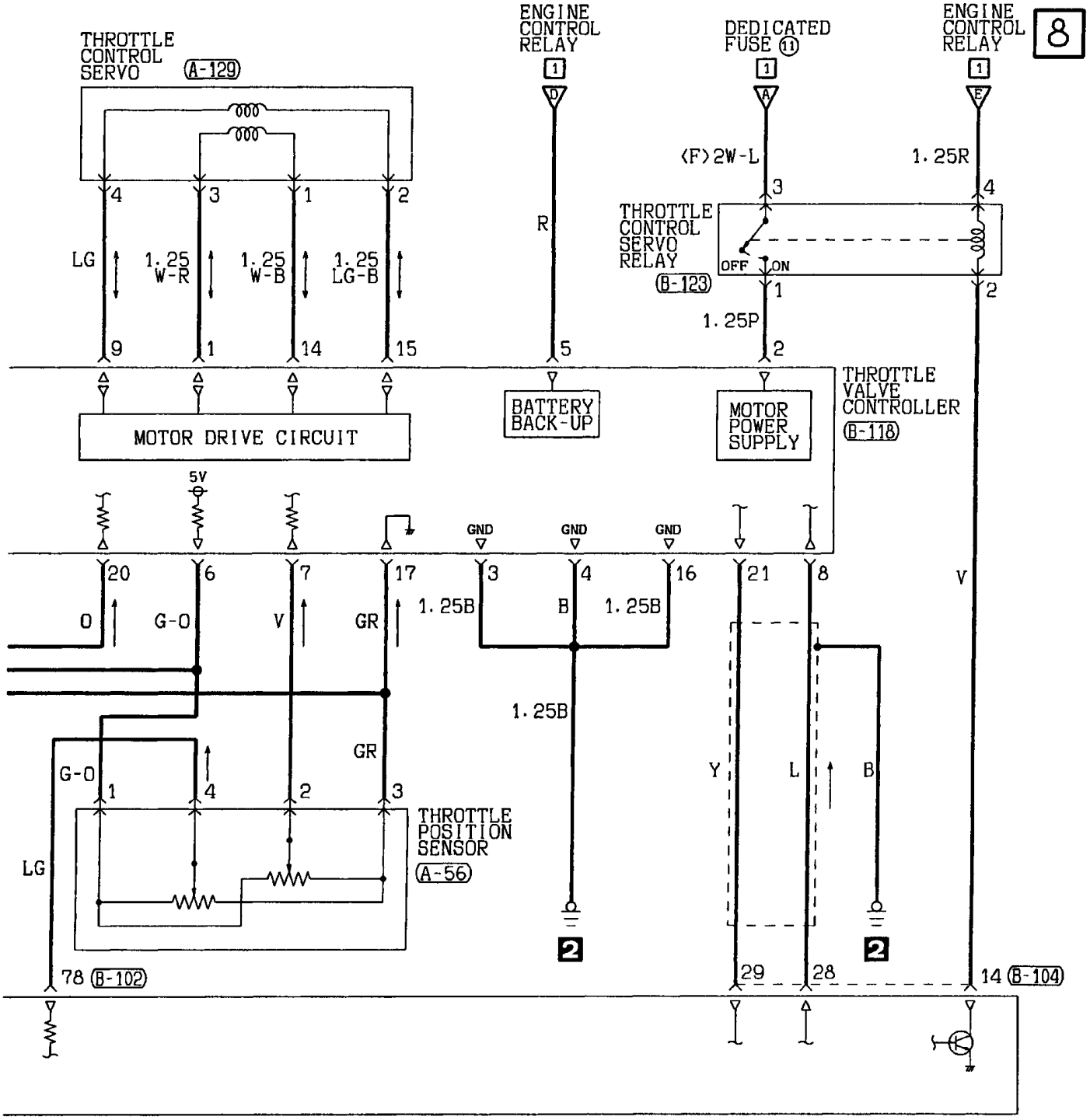

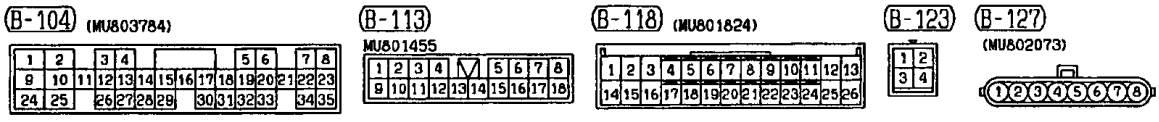

Wire colour code
B :Black LG:Light green G :Green L :Blue W :White Y :Yellow SB:Sky blue
BR:Brown O :Orange GR:Gray R :Red P :Pink V :Violet

H1T05E04DB

GDI SYSTEM <A/T> (CONTINUED)

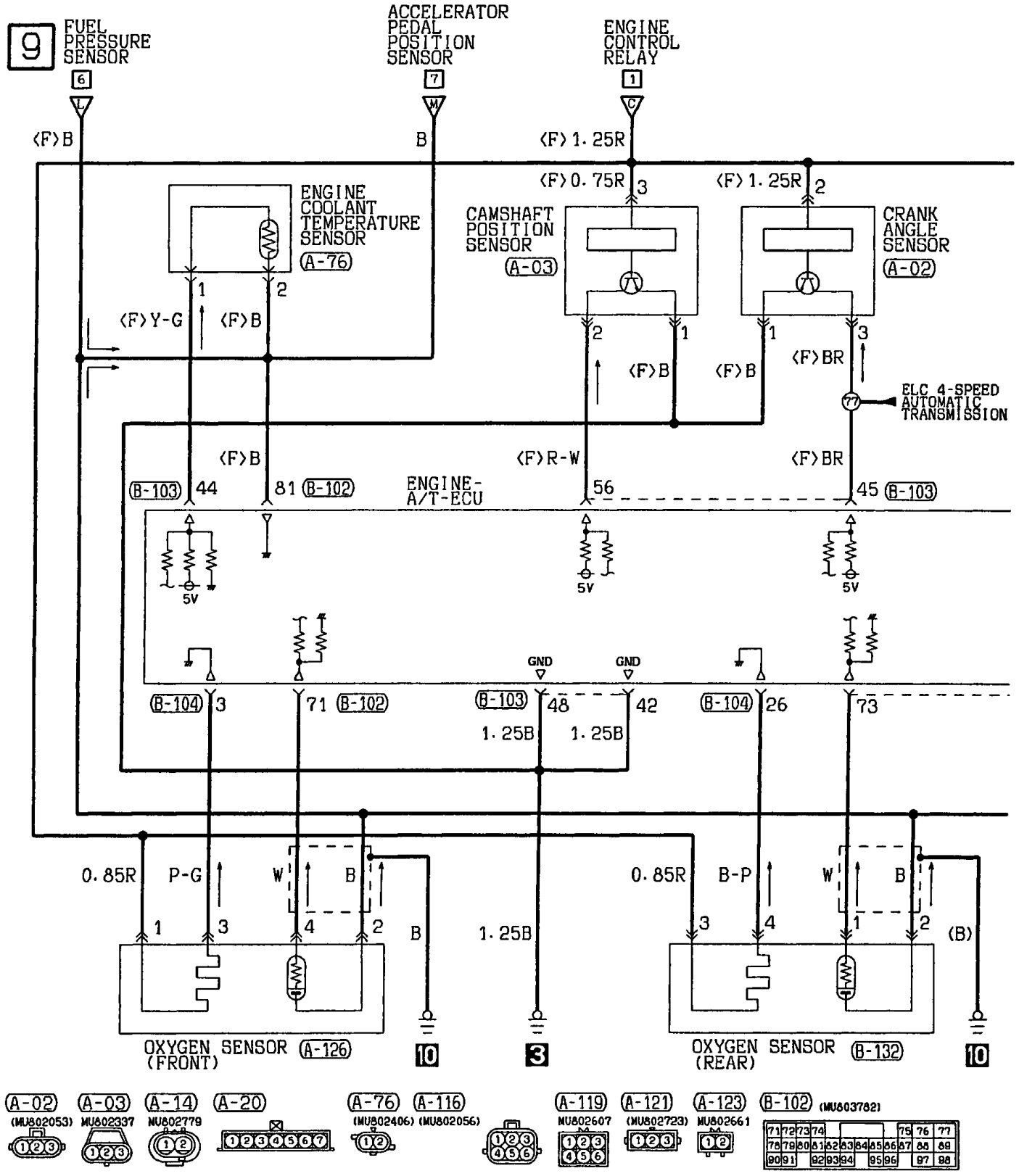

H1T05E04EA

10

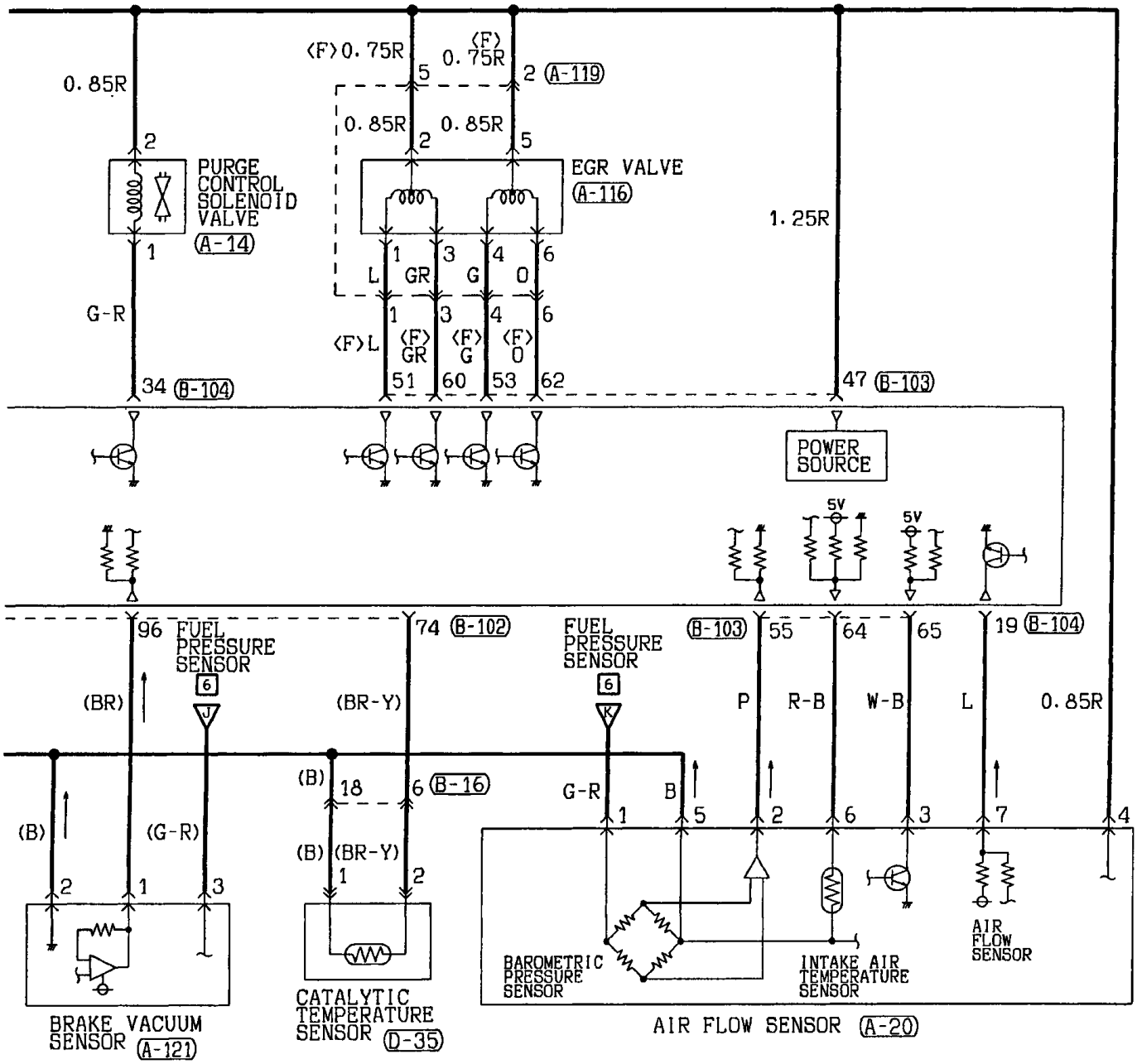

(B-103) (MU803781)

41	42	43						44	45	46				
47	48	49	50	51	52	53	54	55	56	57				
58	59		60	61	62	63		64	65	66				

(B-104) (MU803784)

1	2		3	4				5	6		7	8		
9	10	11	12	13	14	15	16	17	18	19	20	21	22	23
24	25		26	27	28	29		30	31	32	33		34	35

(B-132) MU801446

1 2 3 4

(D-35) MU801670

1 2

Wire colour code

B :Black	LG:Light green	G :Green	L :Blue	W :White	Y :Yellow	SB:Sky blue
BR:Brown	O :Orange	GR:Gray	R :Red	P :Pink	V :Violet	

H1T05E04EB

GDI SYSTEM <A/T> (CONTINUED)

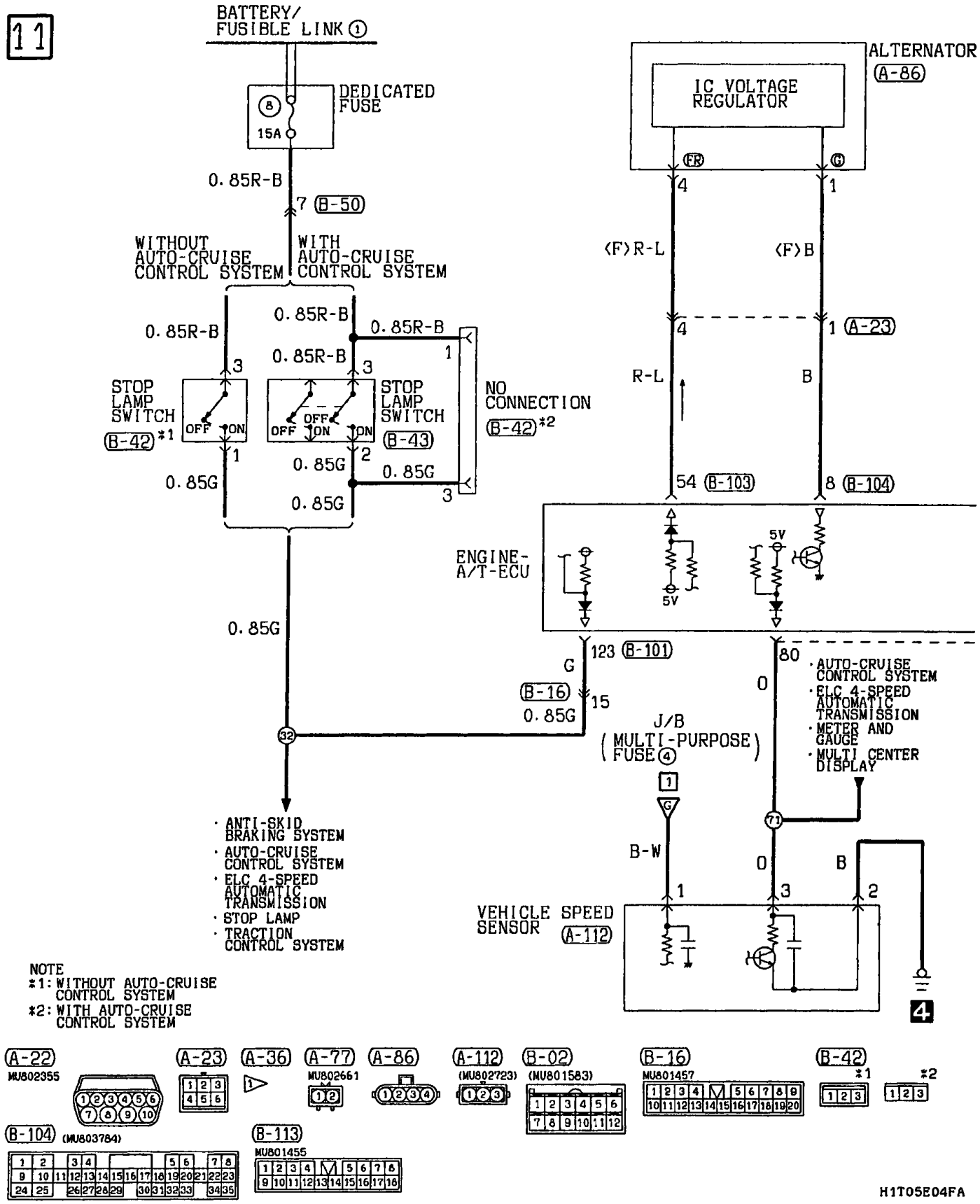

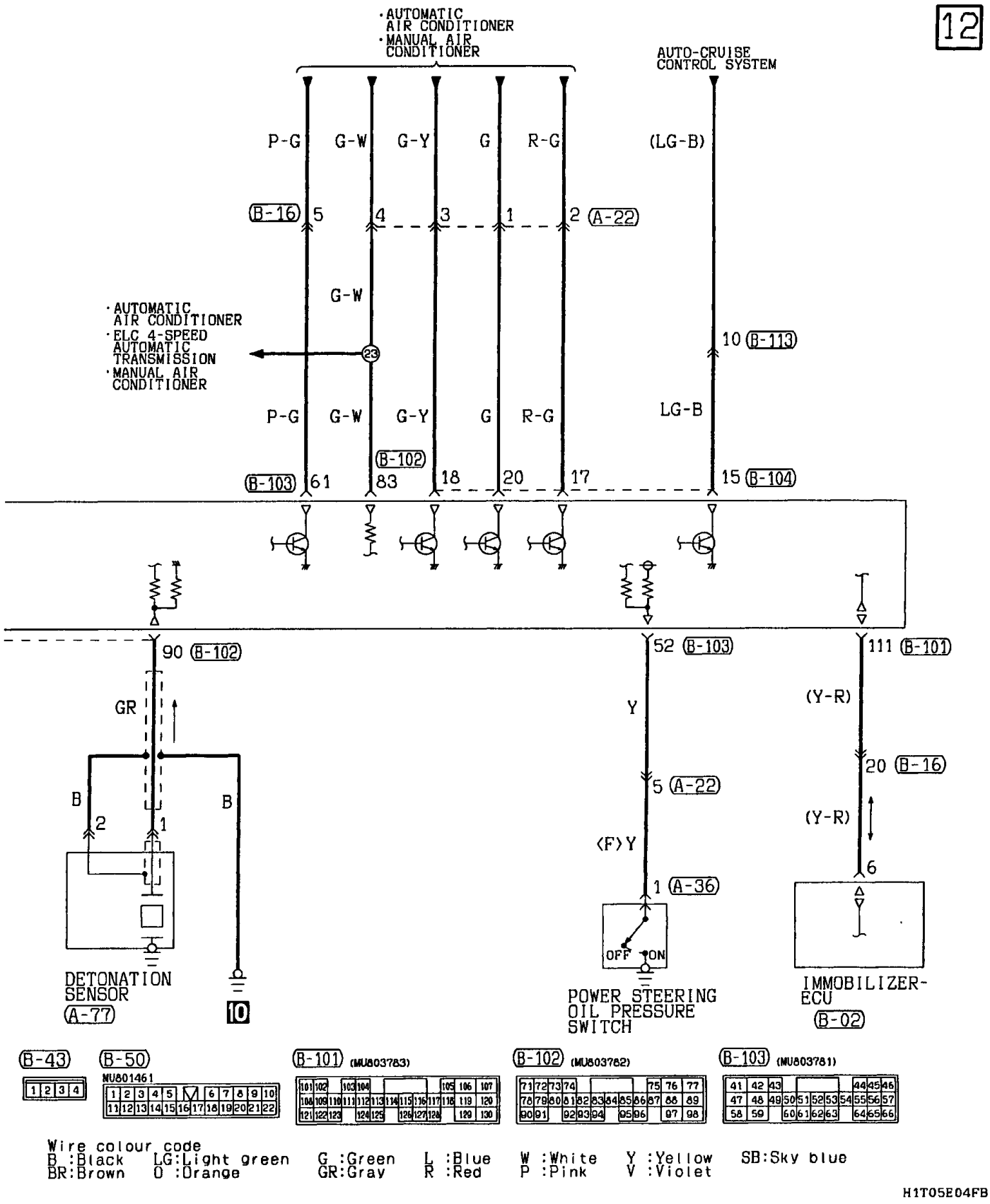
12
·AUTOMATIC AIR CONDITIONER
·MANUAL AIR CONDITIONER
AUTO-CRUISE CONTROL SYSTEM
P-G
G-W
G-Y
G
R-G
(LG-B)
B-16
5
4
3
1
2
A-22
G-W
·AUTOMATIC AIR CONDITIONER
·ELC 4-SPEED AUTOMATIC TRANSMISSION
·MANUAL AIR CONDITIONER
23
10
B-113
P-G
G-W
G-Y
G
R-G
LG-B
B-102
B-103
61
83
18
20
17
15
B-104
90
B-102
GR
B
2
1
B
DETONATION SENSOR
A-77
10
52
B-103
Y
5
A-22
(F)Y
1
A-36
OFF
ON
POWER STEERING OIL PRESSURE SWITCH
111
B-101
(Y-R)
20
B-16
(Y-R)
6
IMMOBILIZER-ECU
B-02
B-43
B-50
MU801461
B-101
(MU803783)
B-102
(MU803782)
B-103
(MU803781)
Wire colour code
B :Black
LG:Light green
G :Green
L :Blue
W :White
Y :Yellow
SB:Sky blue
BR:Brown
O :Orange
GR:Gray
R :Red
P :Pink
V :Violet
H1T05E04FB

GDI SYSTEM <A/T> (CONTINUED)

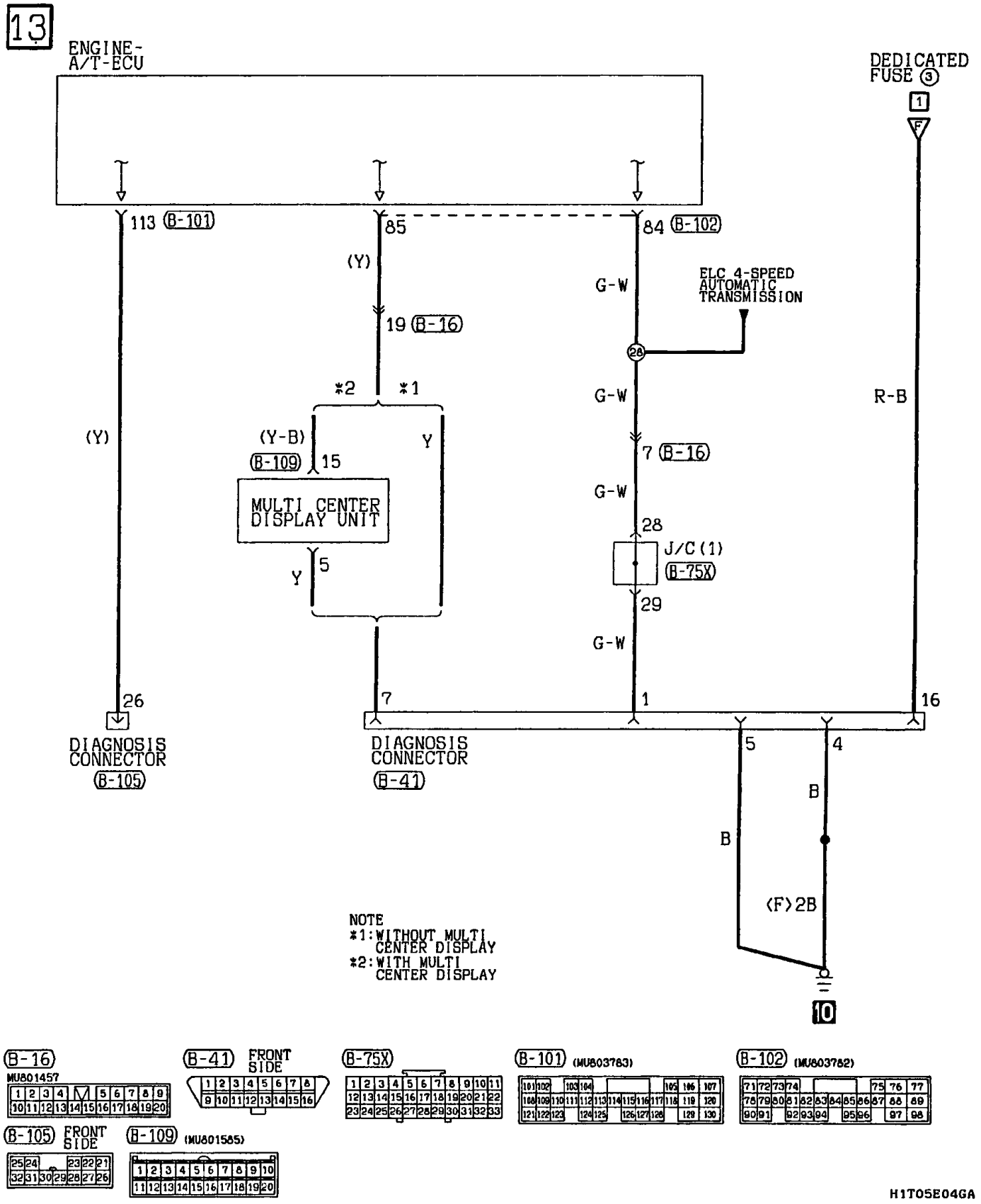

COOLING SYSTEM

Petrol-powered vehicles

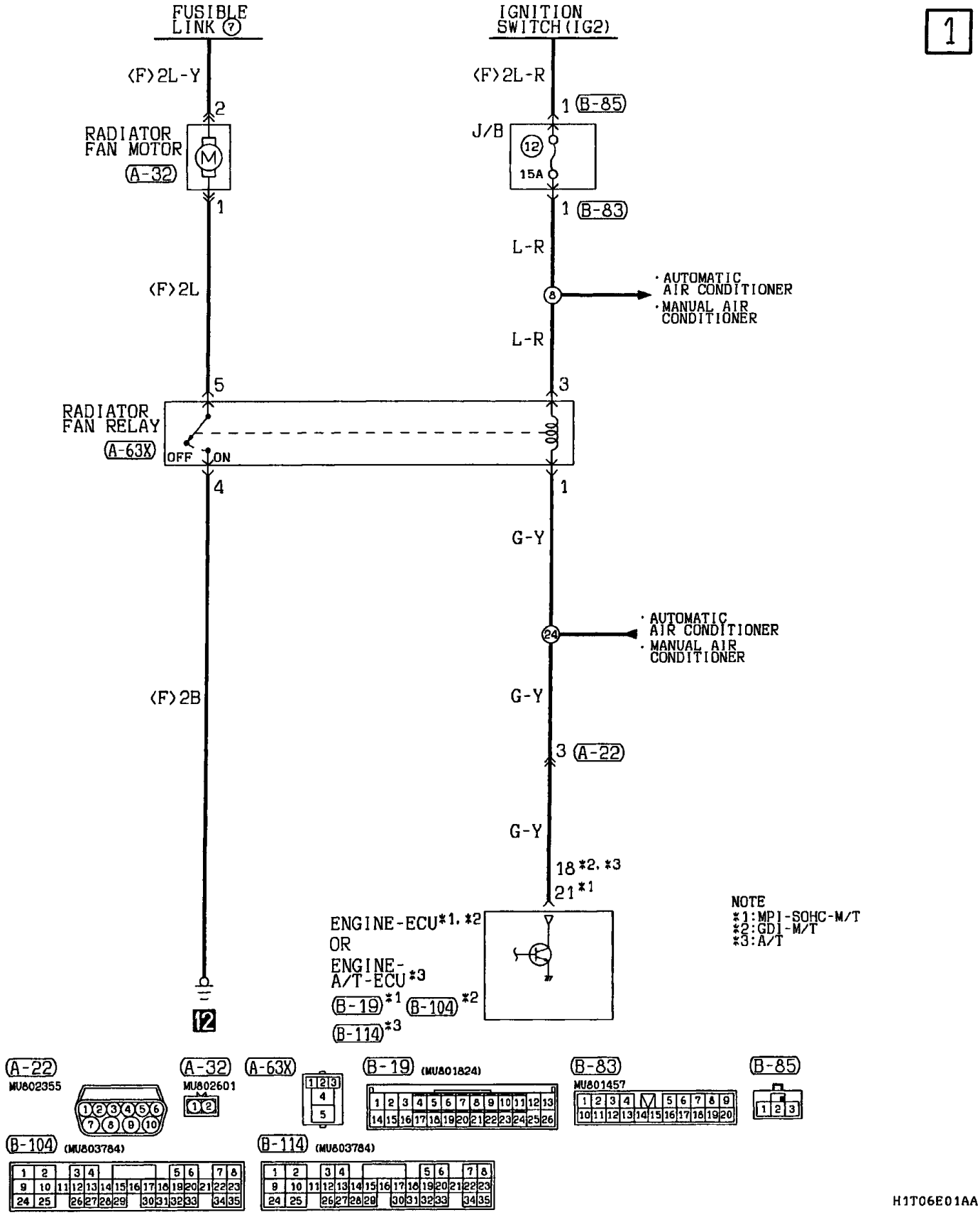

COOLING SYSTEM

Diesel-powered vehicles <F9Q>

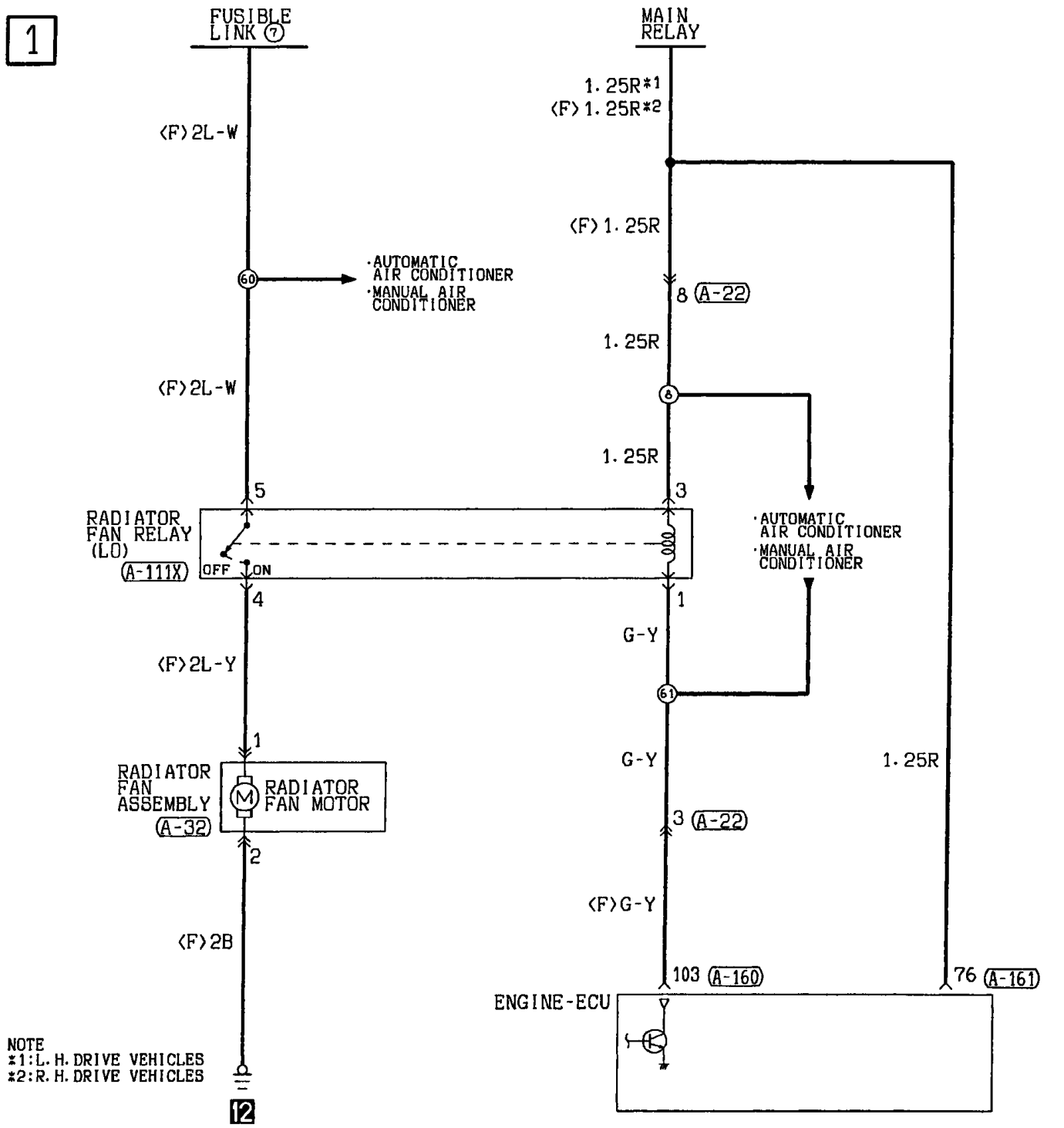

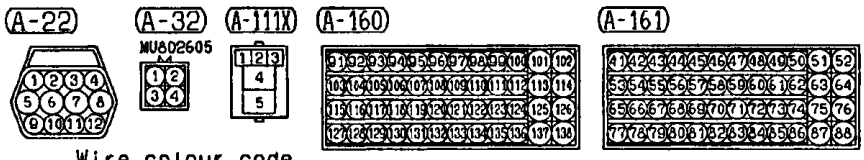

Wire colour code

B :Black	LG:Light green	G :Green	L :Blue	W :White	Y :Yellow	SB:Sky blue
BR:Brown	O :Orange	GR:Gray	R :Red	P :Pink	V :Violet	

H1T06E00AA

NOTES

ELC 4-SPEED AUTOMATIC TRANSMISSION

GDI

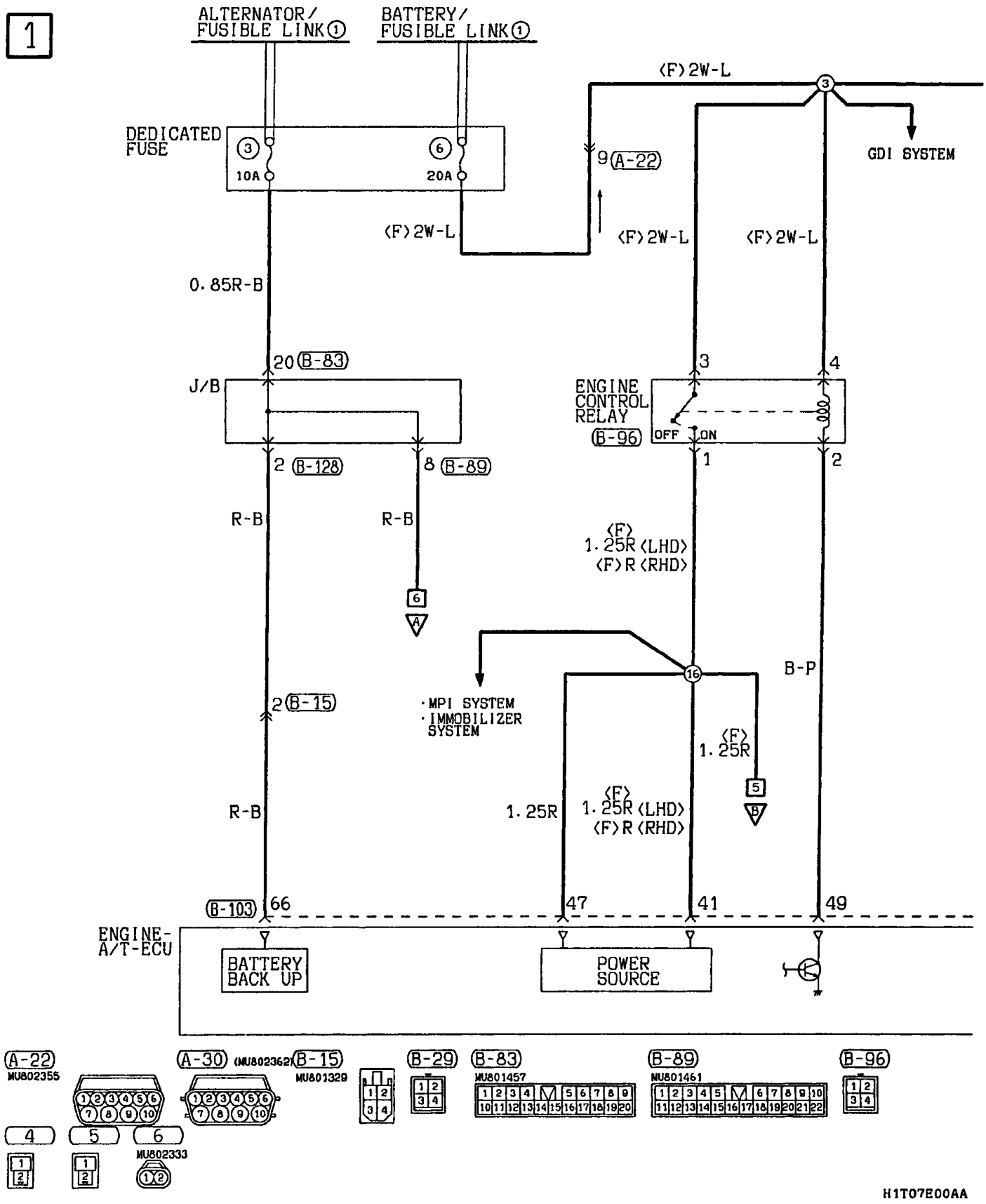

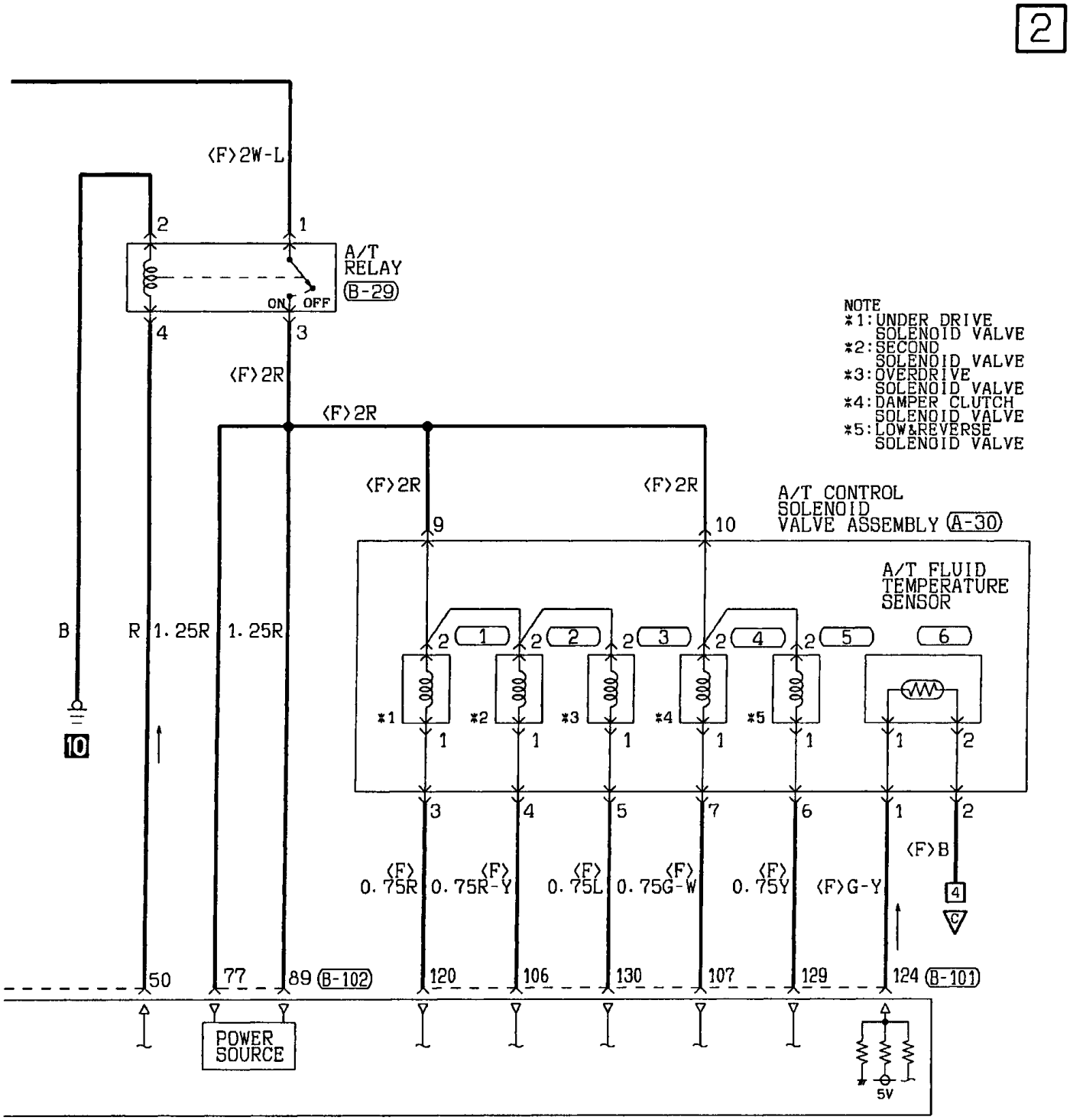

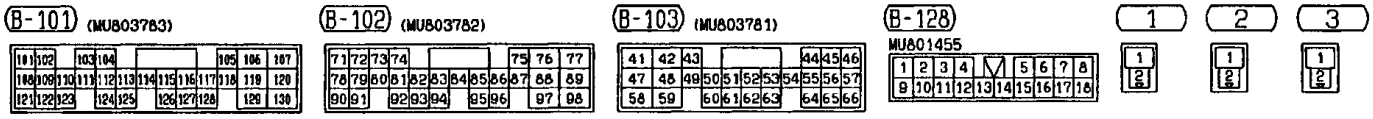

Wire colour code

B :Black	LG:Light green	G :Green	L :Blue	W :White	Y :Yellow	SB:Sky blue
BR:Brown	O :Orange	GR:Gray	R :Red	P :Pink	V :Violet	

H1T07E00AB

ELC 4-SPEED AUTOMATIC TRANSMISSION <GDI> (CONTINUED)

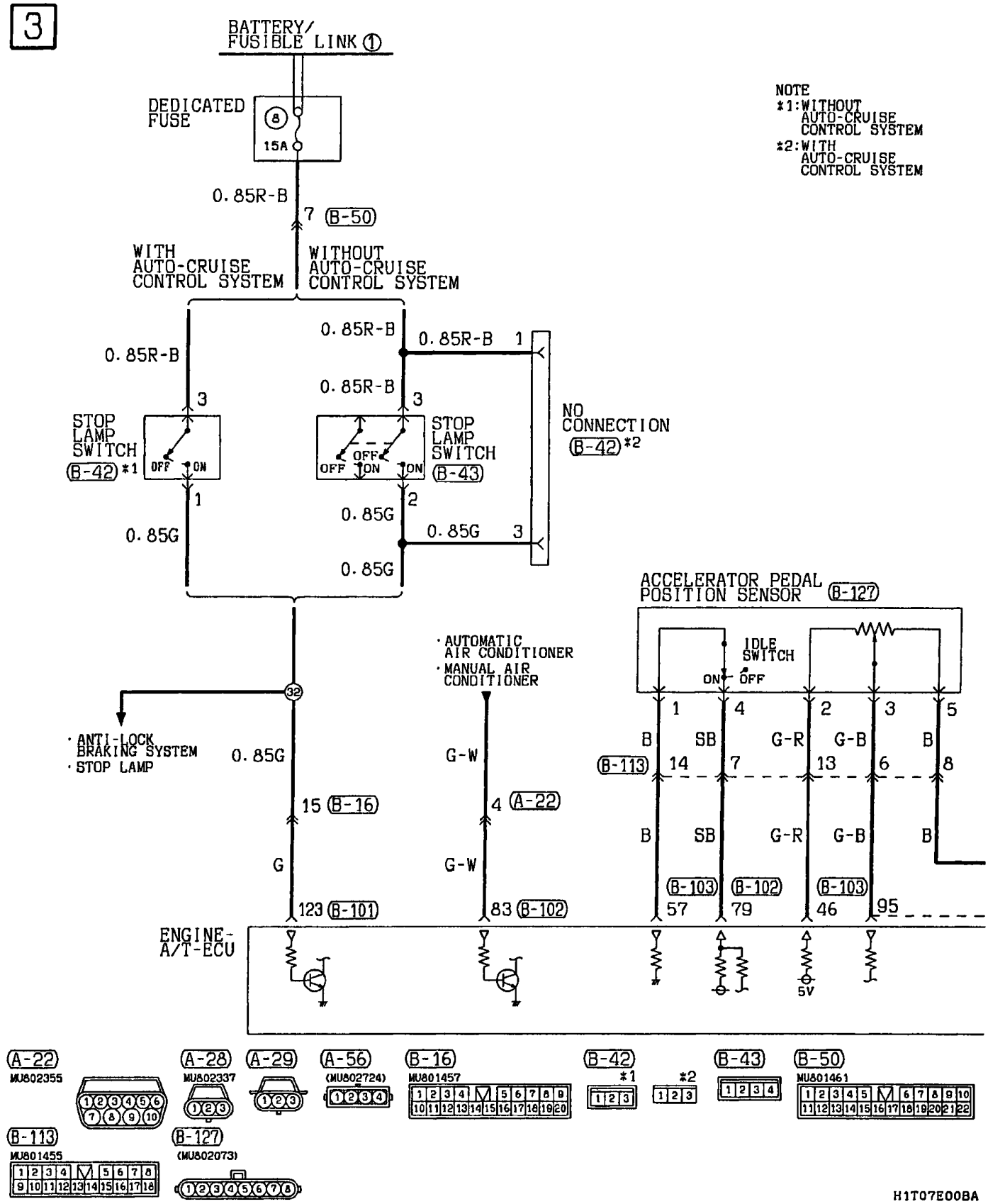

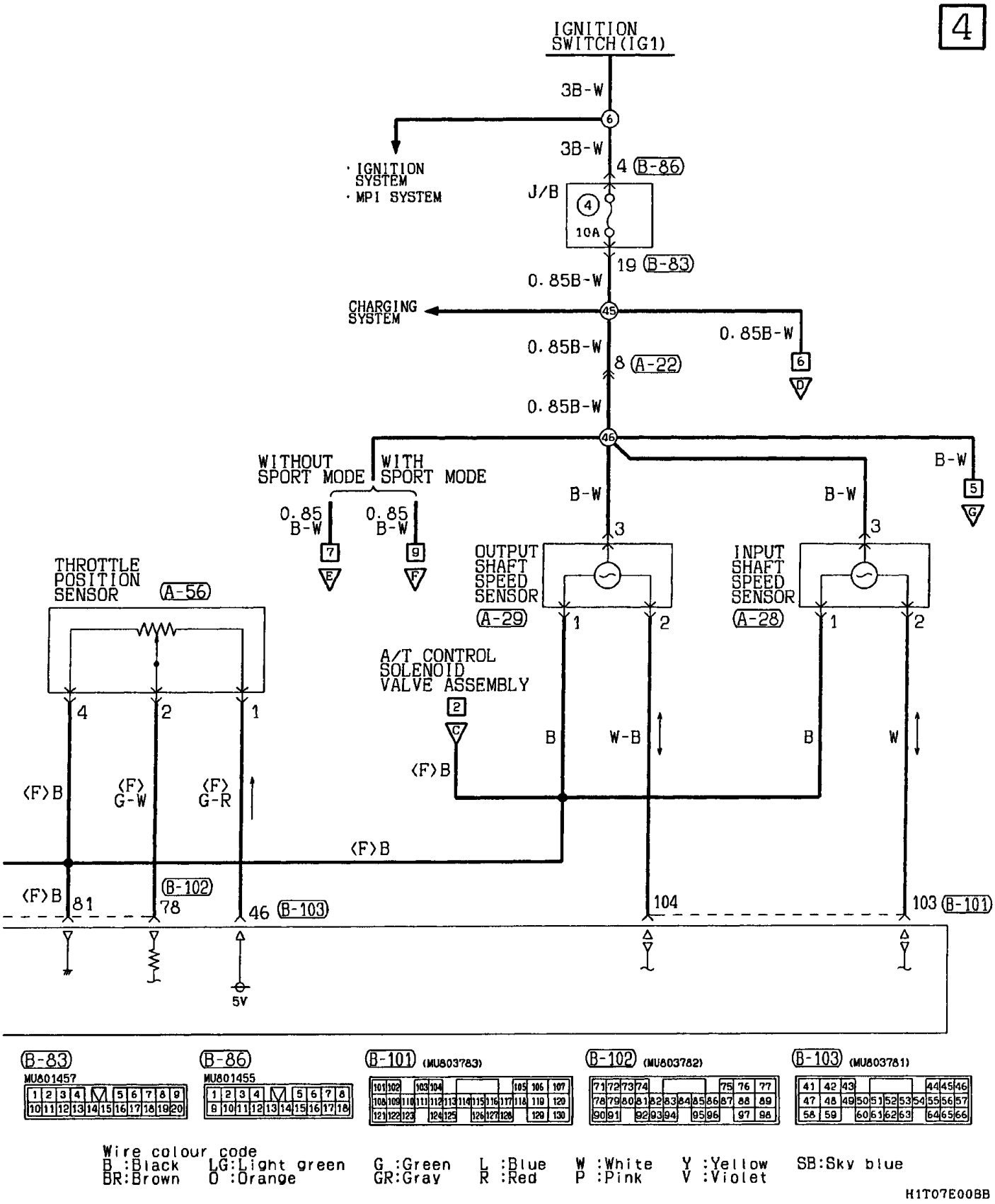

Wire colour code

B :Black	LG:Light green	G :Green	L :Blue	W :White	Y :Yellow	SB:Sky blue
BR:Brown	O :Orange	GR:Gray	R :Red	P :Pink	V :Violet	

H1T07E00BB

ELC 4-SPEED AUTOMATIC TRANSMISSION <GDI> (CONTINUED)

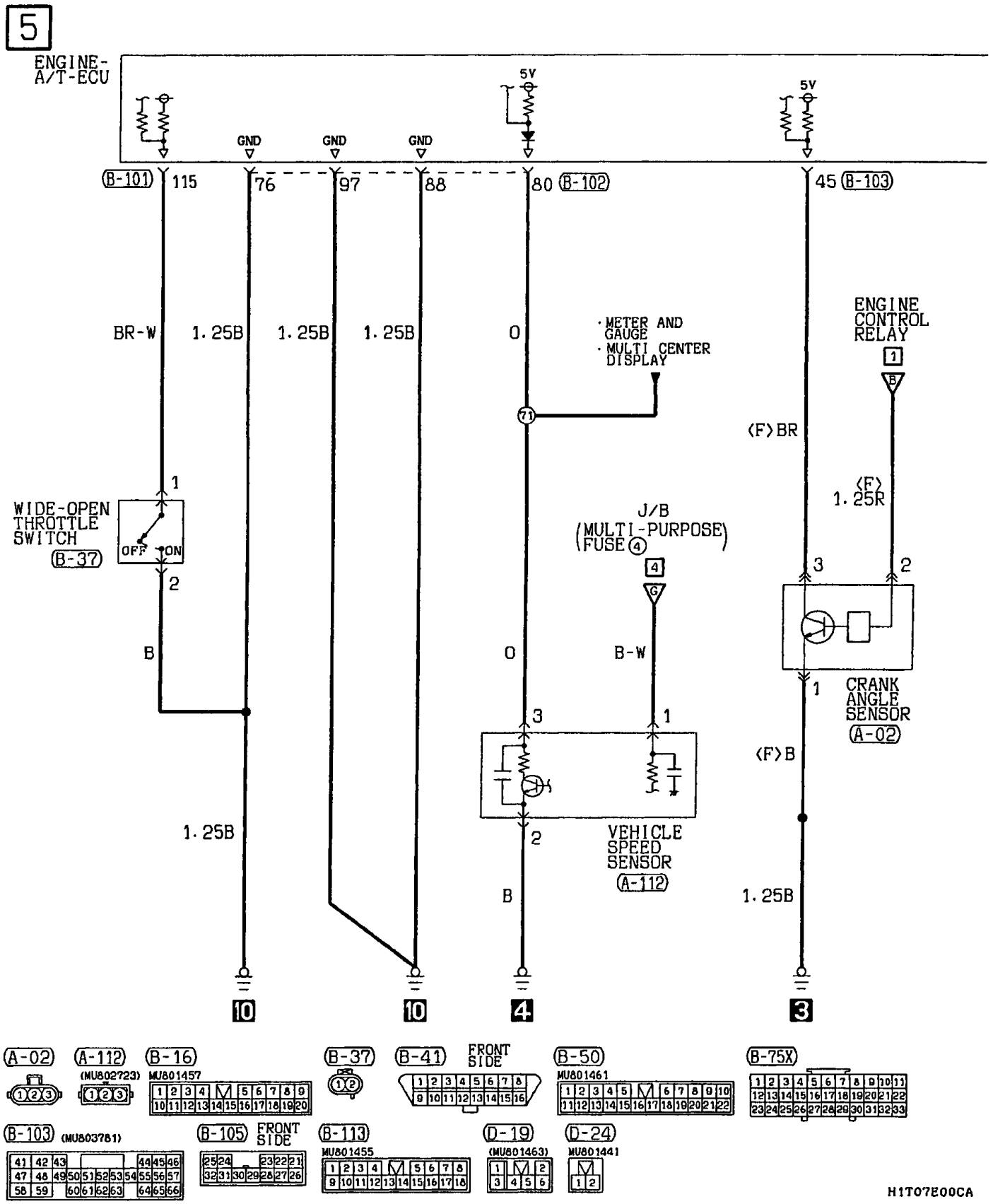

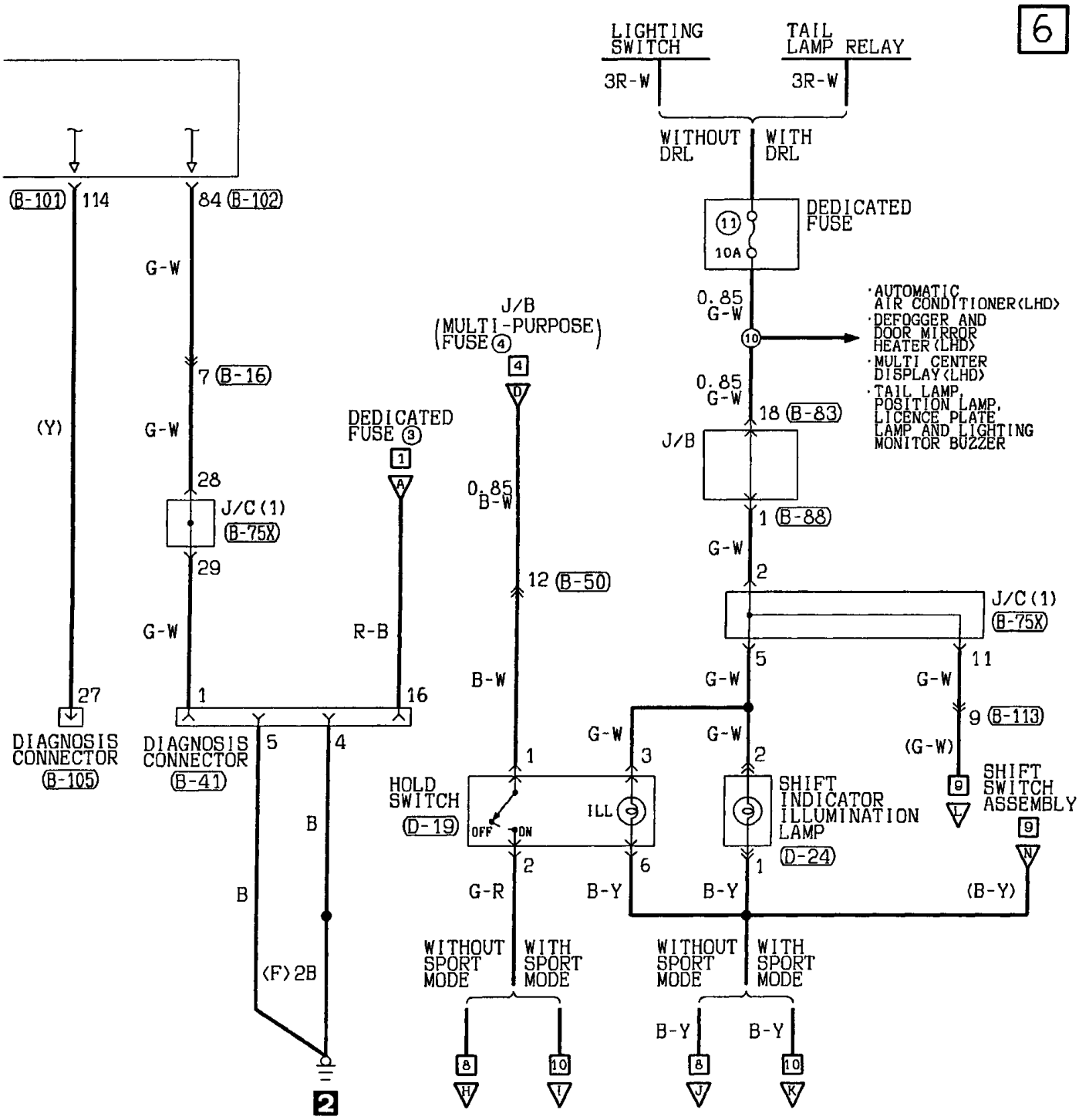

Wire colour code

B :Black	LG:Light green	G :Green	L :Blue	W :White	Y :Yellow	SB:Sky blue
BR:Brown	O :Orange	GR:Gray	R :Red	P :Pink	V :Violet	

H1T07E00CB

ELC 4-SPEED AUTOMATIC TRANSMISSION <GDI> (CONTINUED)

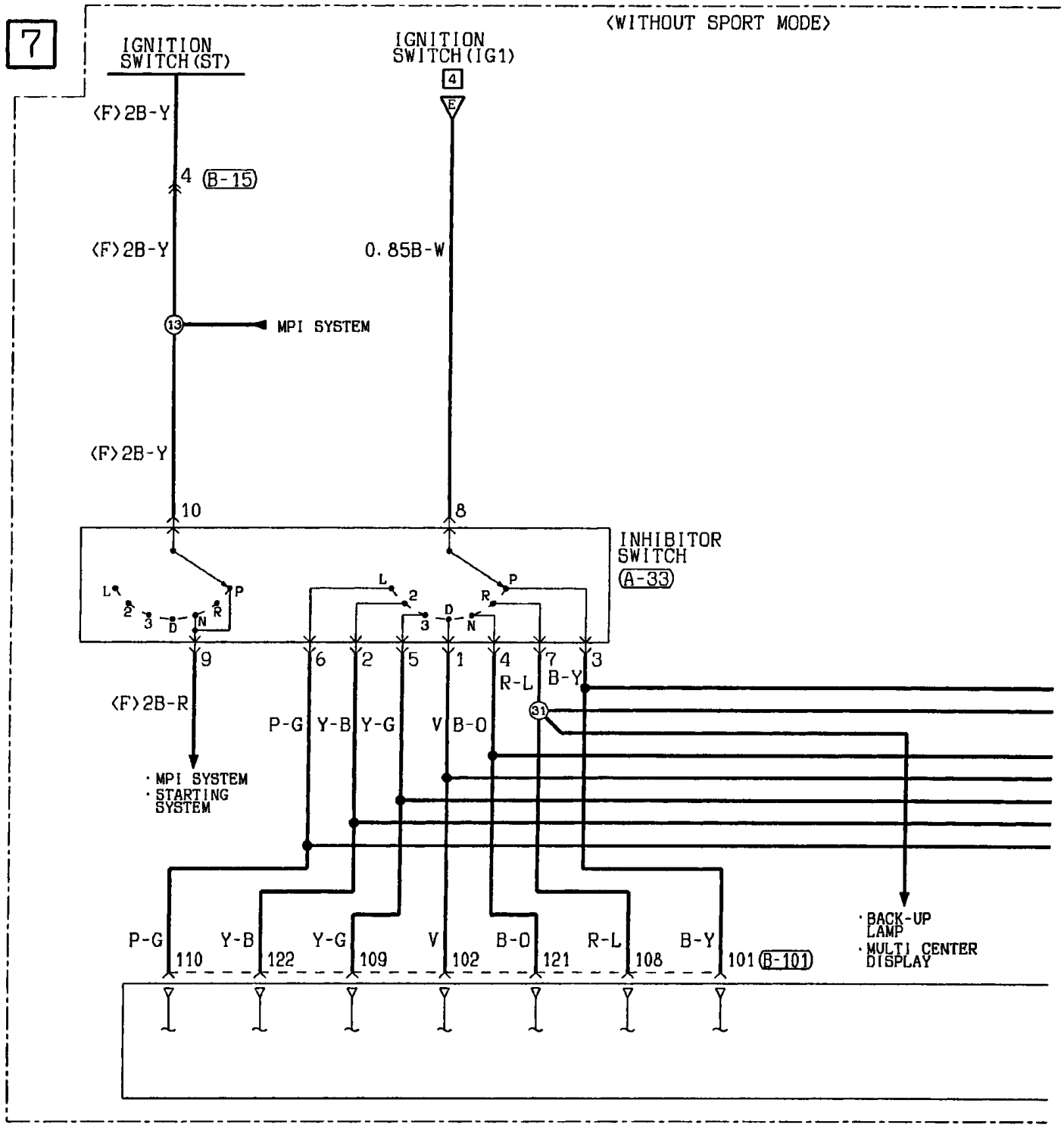

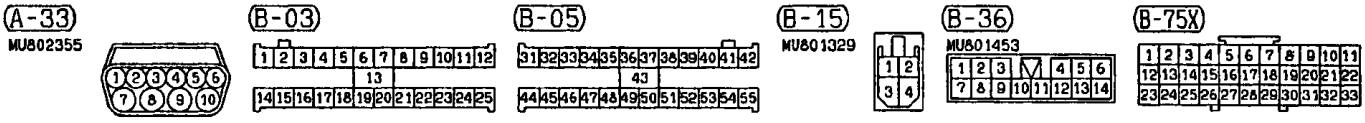

H1T07E00DA

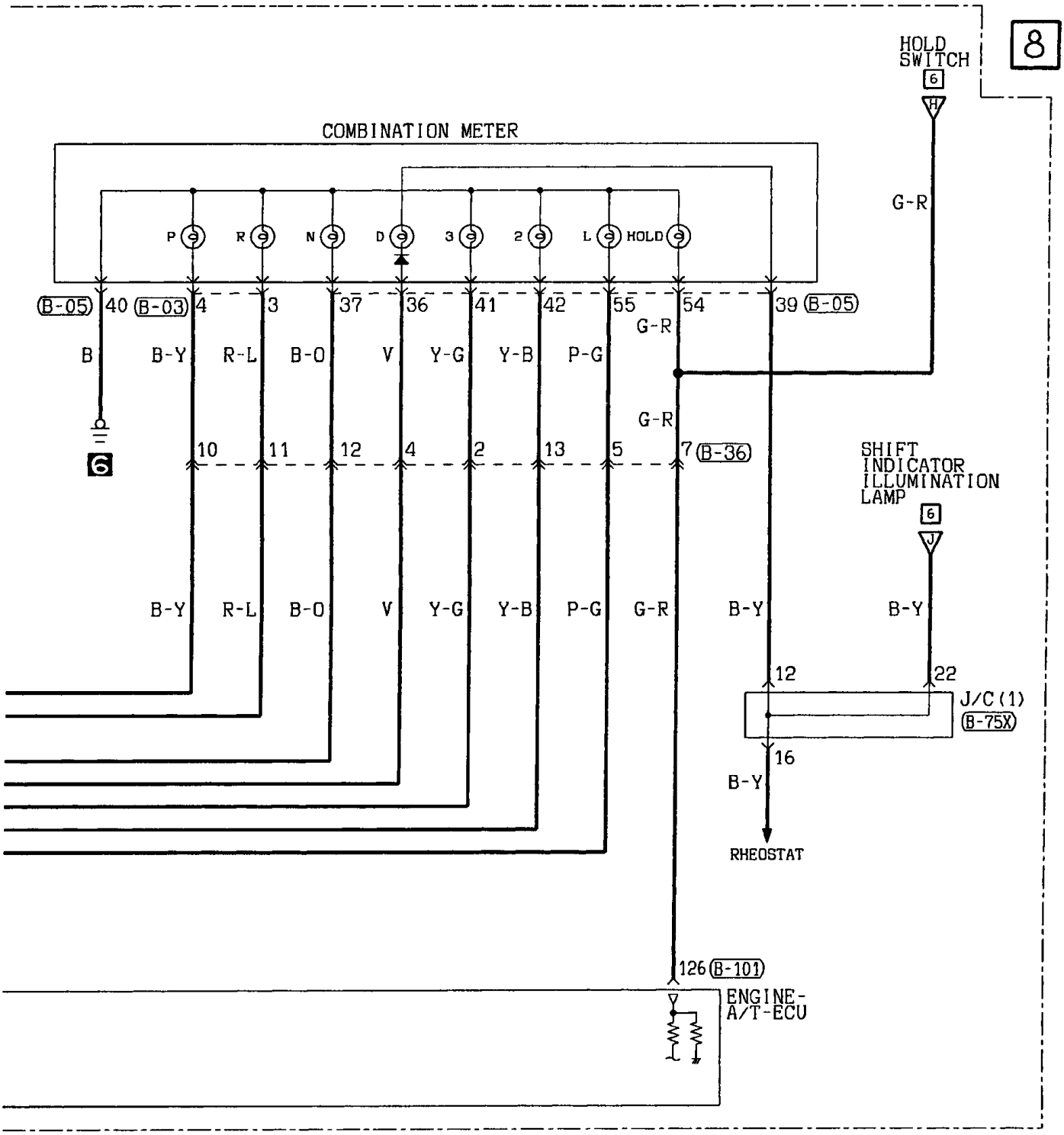

(B-101) (MU803783)

101	102		103	104					105	106	107			
108	109	110	111	112	113	114	115	116	117	118	119	120		
121	122	123		124	125		126	127	128		129	130		

Wire colour code

B :Black	LG:Light green	G :Green	L :Blue	W :White	Y :Yellow	SB:Sky blue
BR:Brown	O :Orange	GR:Gray	R :Red	P :Pink	V :Violet	

H1T07E00DB

ELC 4-SPEED AUTOMATIC TRANSMISSION <GDI> (CONTINUED)

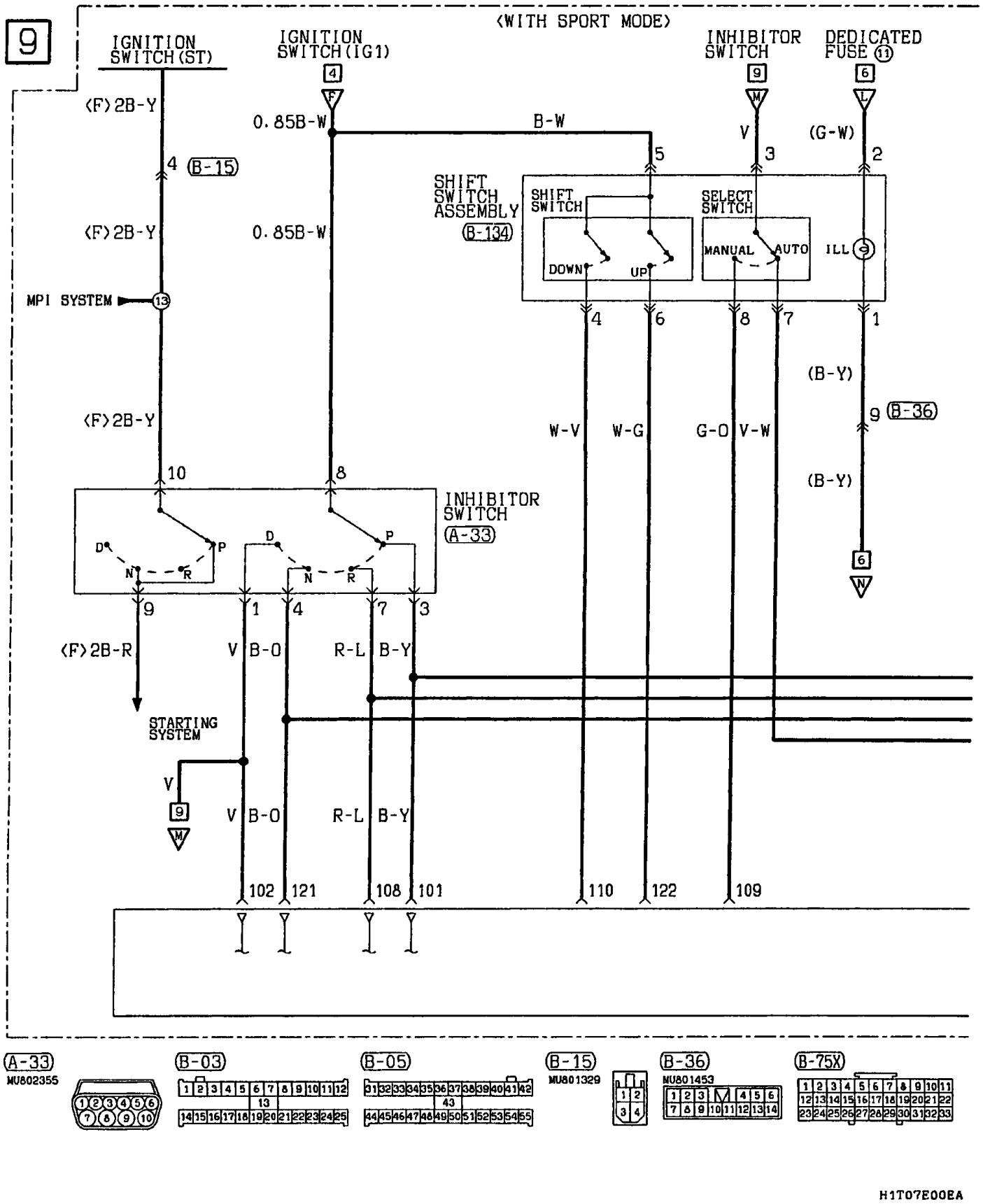

H1T07E00EA

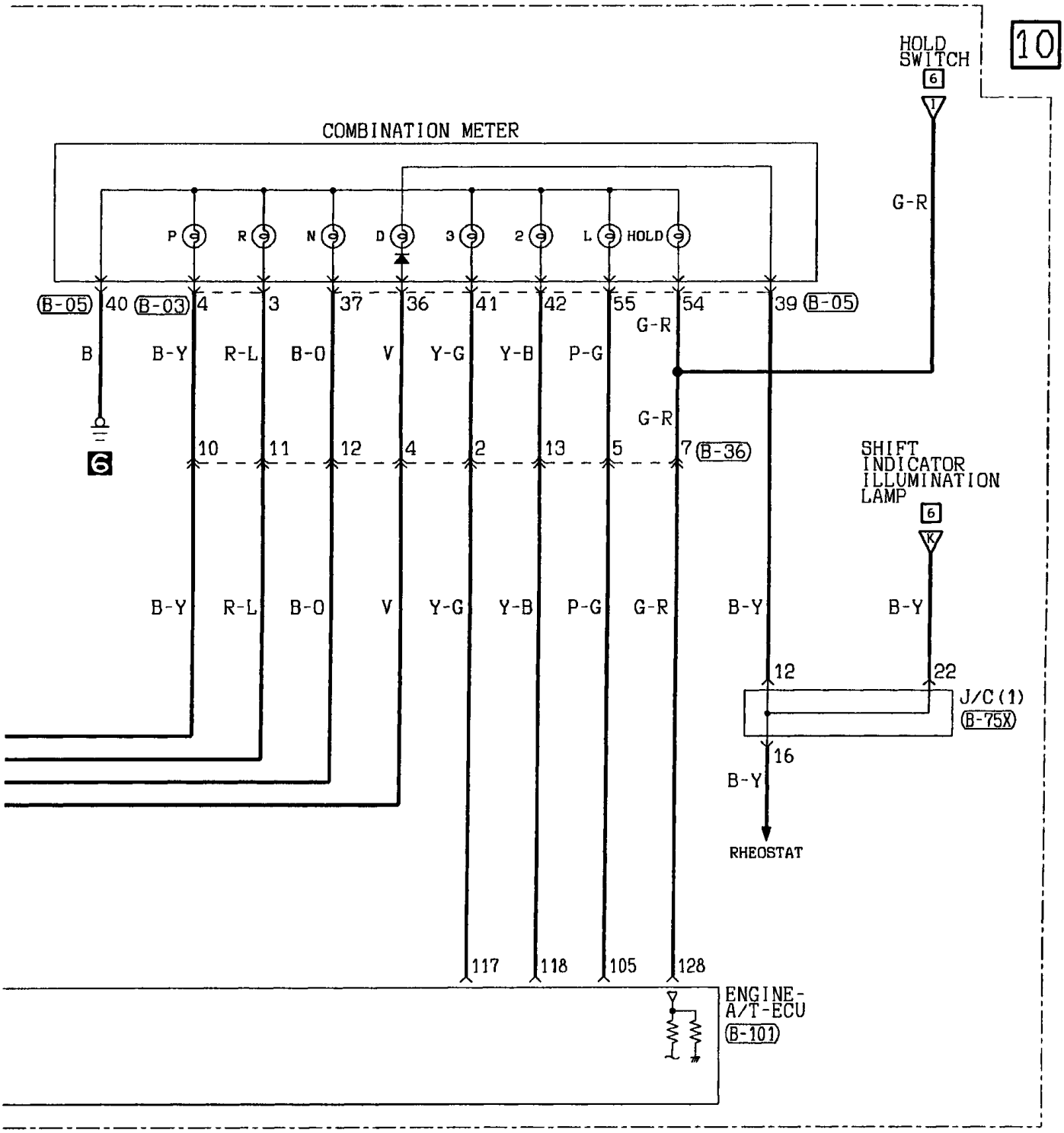

(B-101) (MU803783)

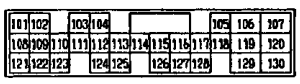

(B-134)
MU801449

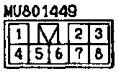

Wire colour code
B :Black LG:Light green G :Green L :Blue W :White Y :Yellow SB:Sky blue
BR:Brown O :Orange GR:Gray R :Red P :Pink V :Violet

H1T07E00EB

STOP LAMP

Hatchback

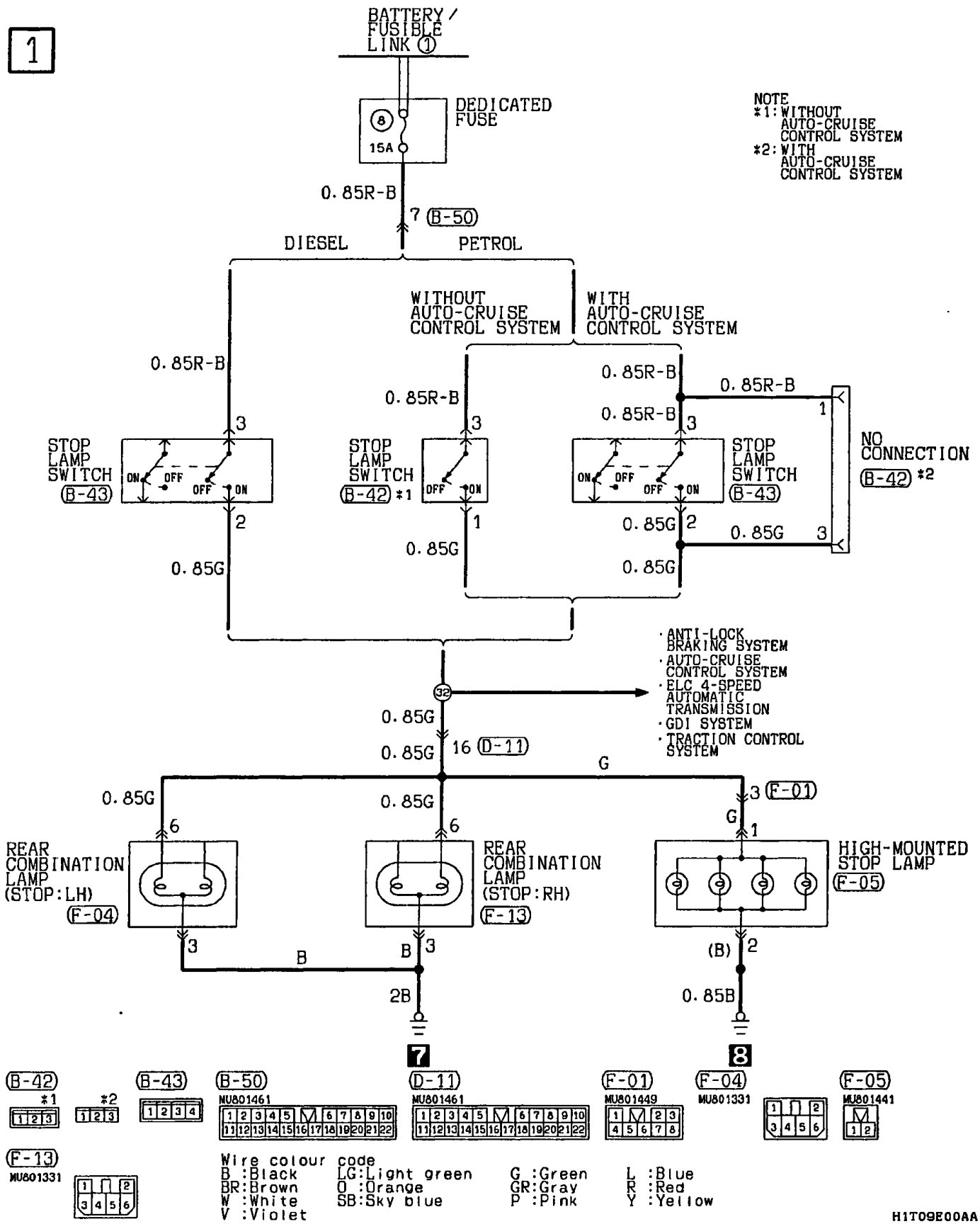

STOP LAMP

Sedan

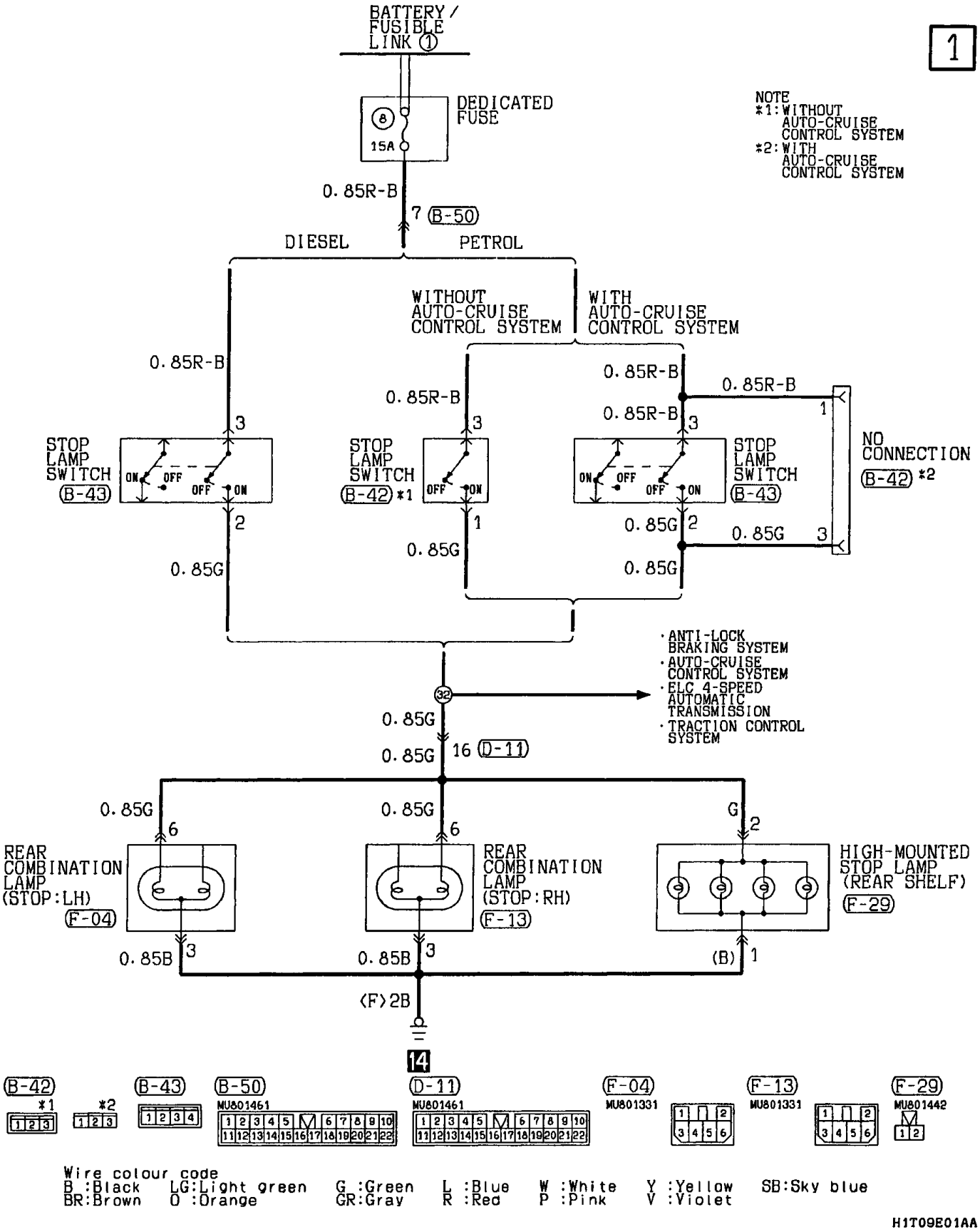

NOTE
*1: WITHOUT AUTO-CRUISE CONTROL SYSTEM
*2: WITH AUTO-CRUISE CONTROL SYSTEM

Wire colour code
B :Black LG:Light green G :Green L :Blue W :White Y :Yellow SB:Sky blue
BR:Brown O :Orange GR:Gray R :Red P :Pink V :Violet

H1T09E01AA

BACK-UP LAMP

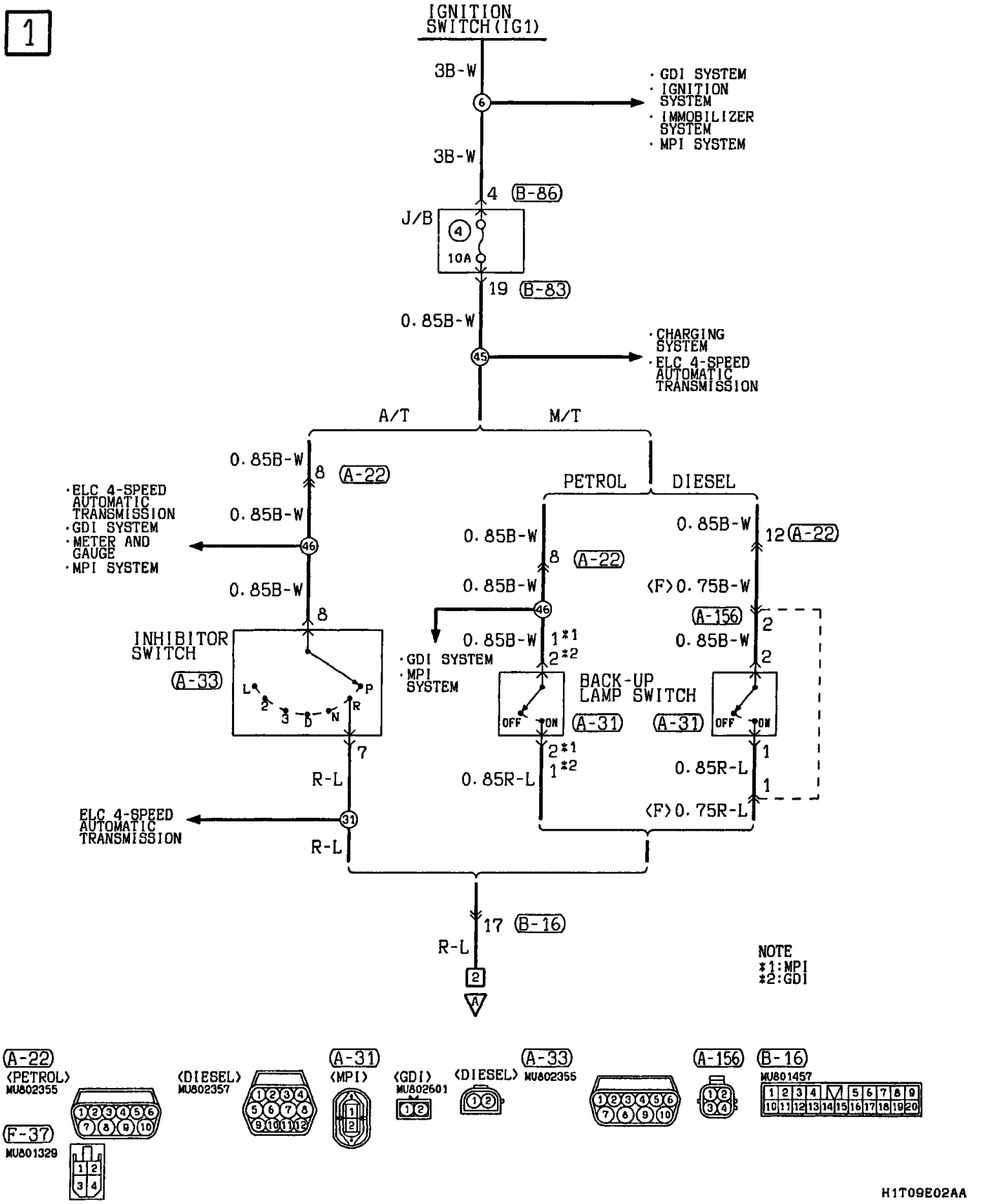
1
IGNITION SWITCH(IG1)
3B-W
6
· GDI SYSTEM
· IGNITION SYSTEM
· IMMOBILIZER SYSTEM
· MPI SYSTEM
3B-W
4 B-86
J/B
4
10A
19 B-83
0.85B-W
45
·CHARGING SYSTEM
·ELC 4-SPEED AUTOMATIC TRANSMISSION
A/T
M/T
0.85B-W
8 A-22
·ELC 4-SPEED AUTOMATIC TRANSMISSION
·GDI SYSTEM
·METER AND GAUGE
·MPI SYSTEM
0.85B-W
46
0.85B-W
8
INHIBITOR SWITCH
A-33
L
2
3
D
N
R
P
7
R-L
ELC 4-SPEED AUTOMATIC TRANSMISSION
31
R-L
PETROL
DIESEL
0.85B-W
8 A-22
0.85B-W
46
·GDI SYSTEM
·MPI SYSTEM
0.85B-W
1*1
2*2
BACK-UP LAMP SWITCH
OFF
ON
A-31
2*1
1*2
0.85R-L
0.85B-W
12 A-22
<F>0.75B-W
A-156
2
0.85B-W
2
A-31
OFF
ON
1
0.85R-L
1
<F>0.75R-L
17 B-16
R-L
2
A
NOTE
*1:MPI
*2:GDI
A-22
<PETROL>
MU802355
F-37
MU801329
<DIESEL>
MU802357
A-31
<MPI>
<GDI>
MU802601
<DIESEL>
A-33
MU802355
A-156
B-16
MU801457
H1T09E02AA

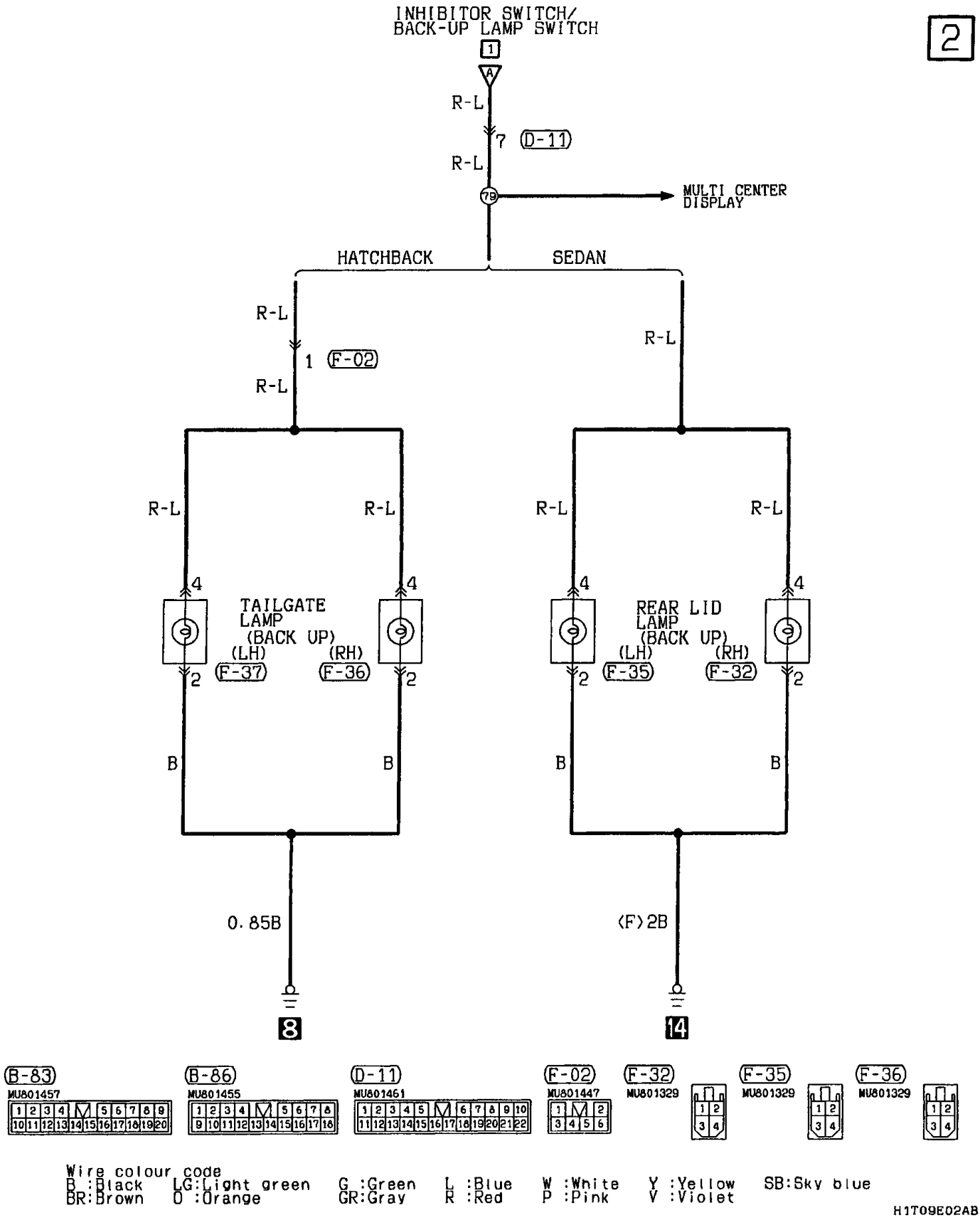
2
INHIBITOR SWITCH/
BACK-UP LAMP SWITCH
1
A
R-L
7 D-11
R-L
79
MULTI CENTER
DISPLAY
HATCHBACK
SEDAN
R-L
1 F-02
R-L
R-L
R-L
R-L
R-L
R-L
4
4
4
4
TAILGATE
LAMP
(BACK UP)
(LH)
(RH)
F-37
F-36
REAR LID
LAMP
(BACK UP)
(LH)
(RH)
F-35
F-32
2
2
2
2
B
B
B
B
0.85B
(F)2B
8
14
B-83
MU801457
B-86
MU801455
D-11
MU801461
F-02
MU801447
F-32
MU801329
F-35
MU801329
F-36
MU801329
Wire colour code
B :Black LG:Light green G :Green L :Blue W :White Y :Yellow SB:Sky blue
BR:Brown O :Orange GR:Gray R :Red P :Pink V :Violet
H1T09E02AB

METER AND GAUGE

Petrol-powered vehicles

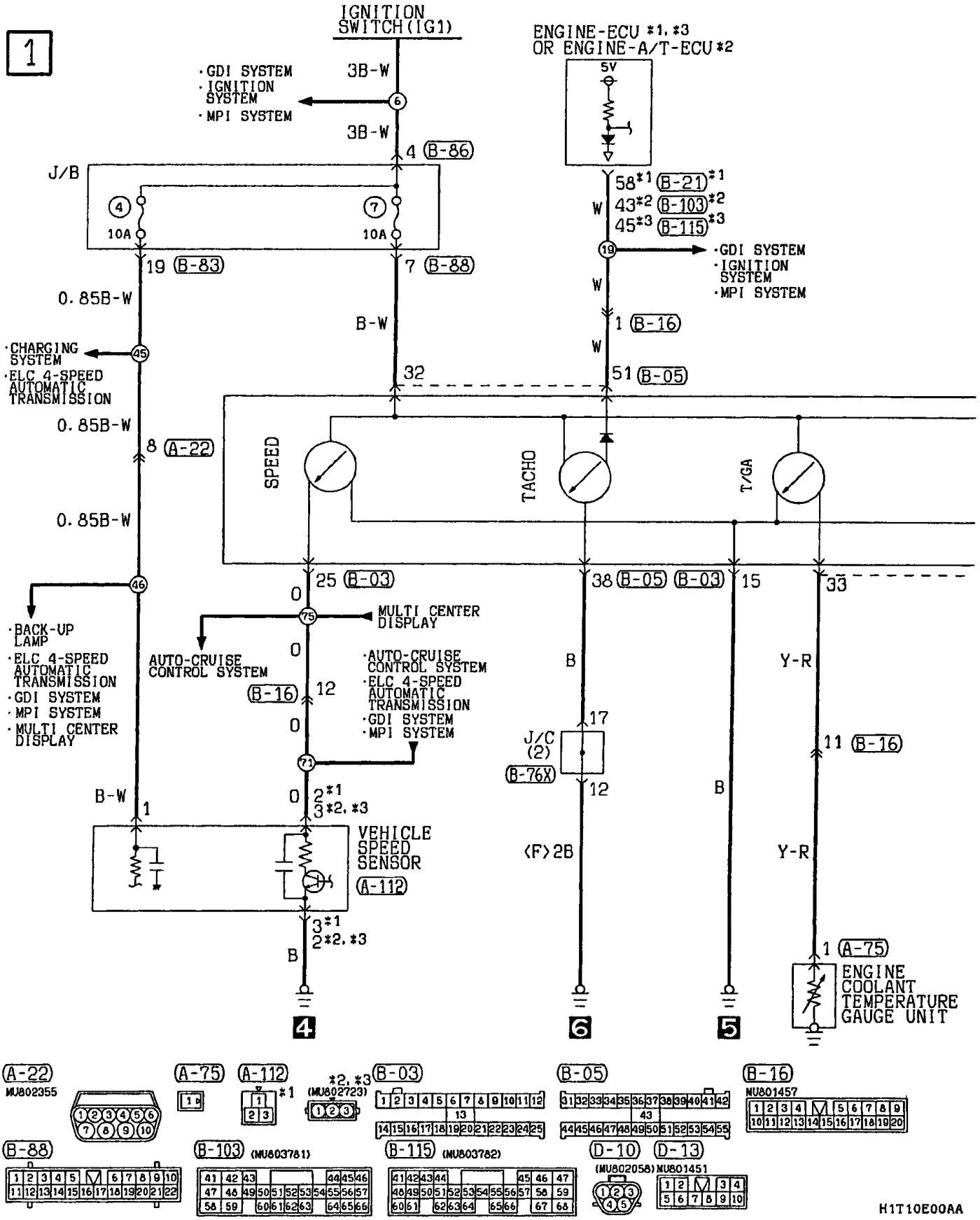

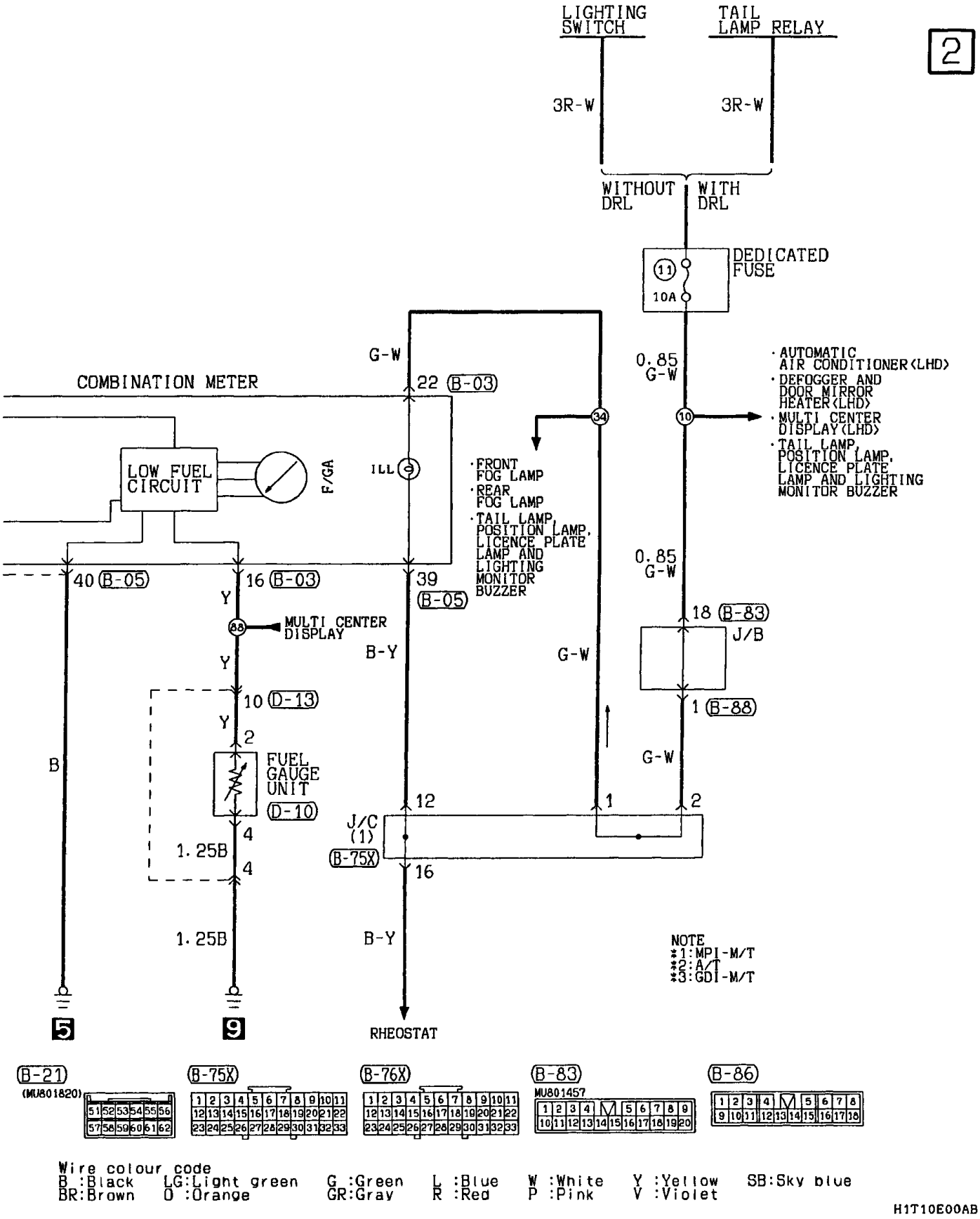

Wire colour code
B :Black LG:Light green G :Green L :Blue W :White Y :Yellow SB:Sky blue
BR:Brown O :Orange GR:Gray R :Red P :Pink V :Violet

H1T10E00AB

METER AND GAUGE

Diesel-powered vehicles <F9Q>

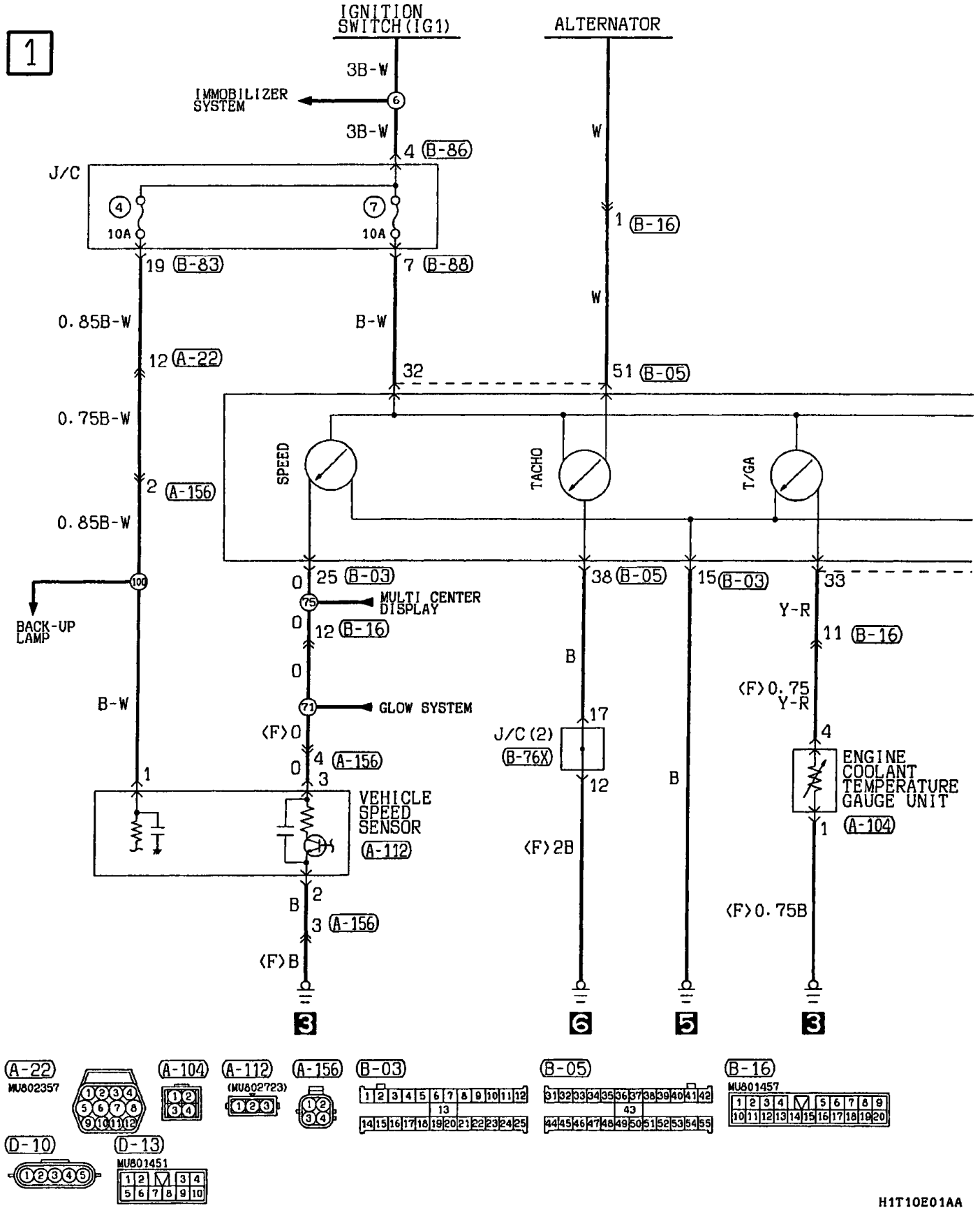

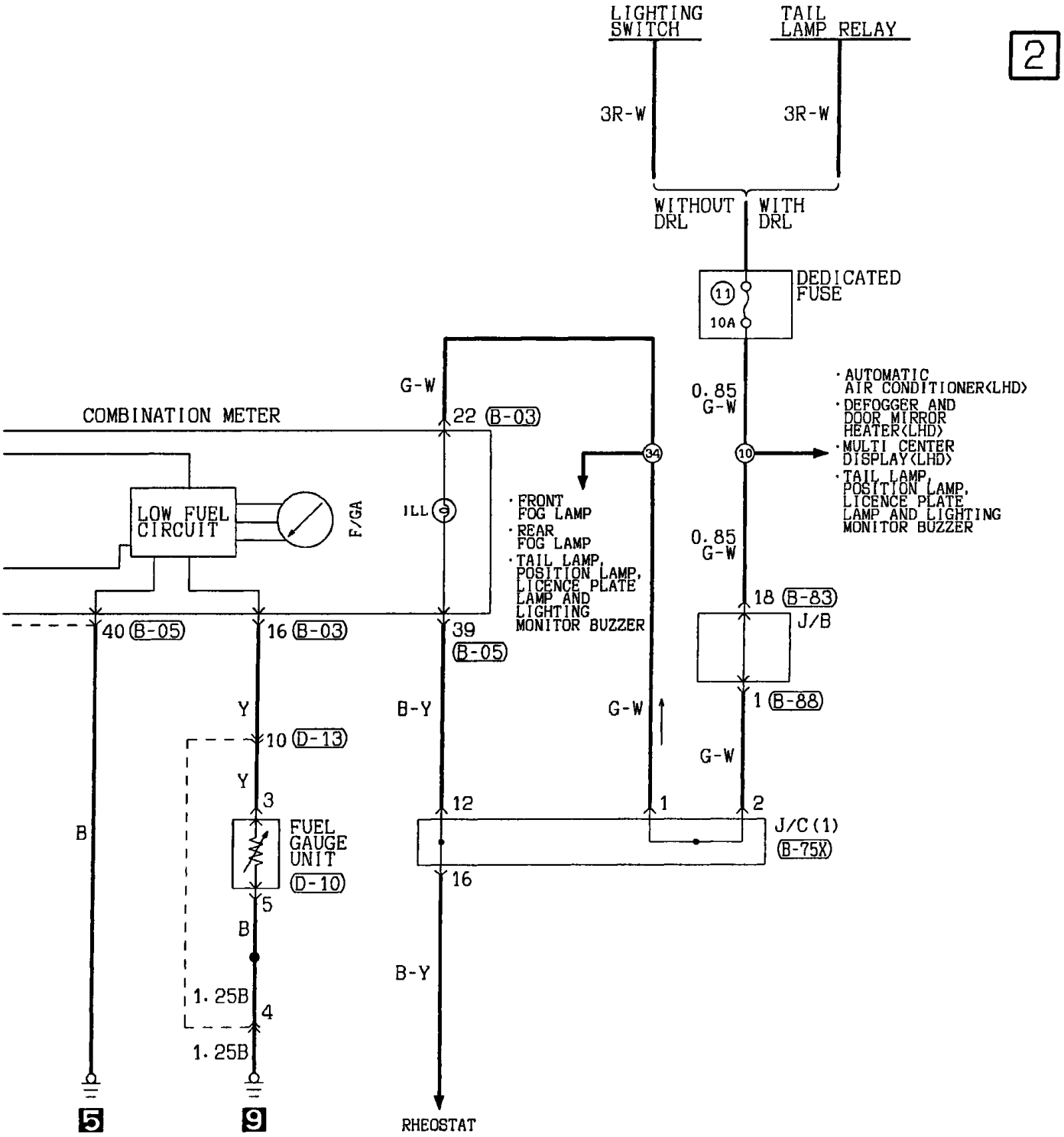

Wire colour code

B :Black	LG:Light green	G :Green	L :Blue	W :White	Y :Yellow	SB:Sky blue
BR:Brown	O :Orange	GR:Gray	R :Red	P :Pink	V :Violet	

H1T10E01AB

METER AND GAUGE (See P. 4-100, 102.)

OPERATION

<Fuel gauge>

- When the ignition switch is at the "ON" position, the fuel gauge is activated.
- When there is much fuel, the unit's resistance is small and the current flowing in the circuit is great, so the gauge's indicator indicates in the "Full" area.
- When there is little fuel, the unit's resistance is high and the current flowing in the circuit is small, so the gauge's indicator indicates in the "Empty" area.

<Engine coolant temperature gauge>

- When the ignition switch is at the "ON" position, the engine coolant temperature gauge is activated.
- When the engine coolant temperature is high, the unit's resistance is low and there is a great flow of current in the circuit, so the gauge's indicator indicates in the "H" area.
- When the engine coolant temperature is low, the unit's resistance is high and there is a small flow of current in the circuit, so the gauge's indicator indicates in the "C" area.

TROUBLESHOOTING HINTS

1. Fuel gauge does not operate, or registers incorrectly.
   (1) The fuel gauge indicates "F" when the fuel gauge unit connector is disconnected and the "3" <Diesel-powered vehicles> or "2" <Petrol-powered vehicles> terminal is earthed.
   - Check fuel gauge.
2. Engine coolant temperature gauge does not operate, or registers incorrectly.
   (1) When the engine coolant temperature gauge is earthed with its connector unplugged, it registers "H".
   - Check engine coolant temperature gauge unit.
3. Meter illumination lamp does not illuminate.
   (1) Tail lamps illuminate.
   - Check rheostat.

NOTES

MANUAL AIR CONDITIONER

Petrol-powered vehicles

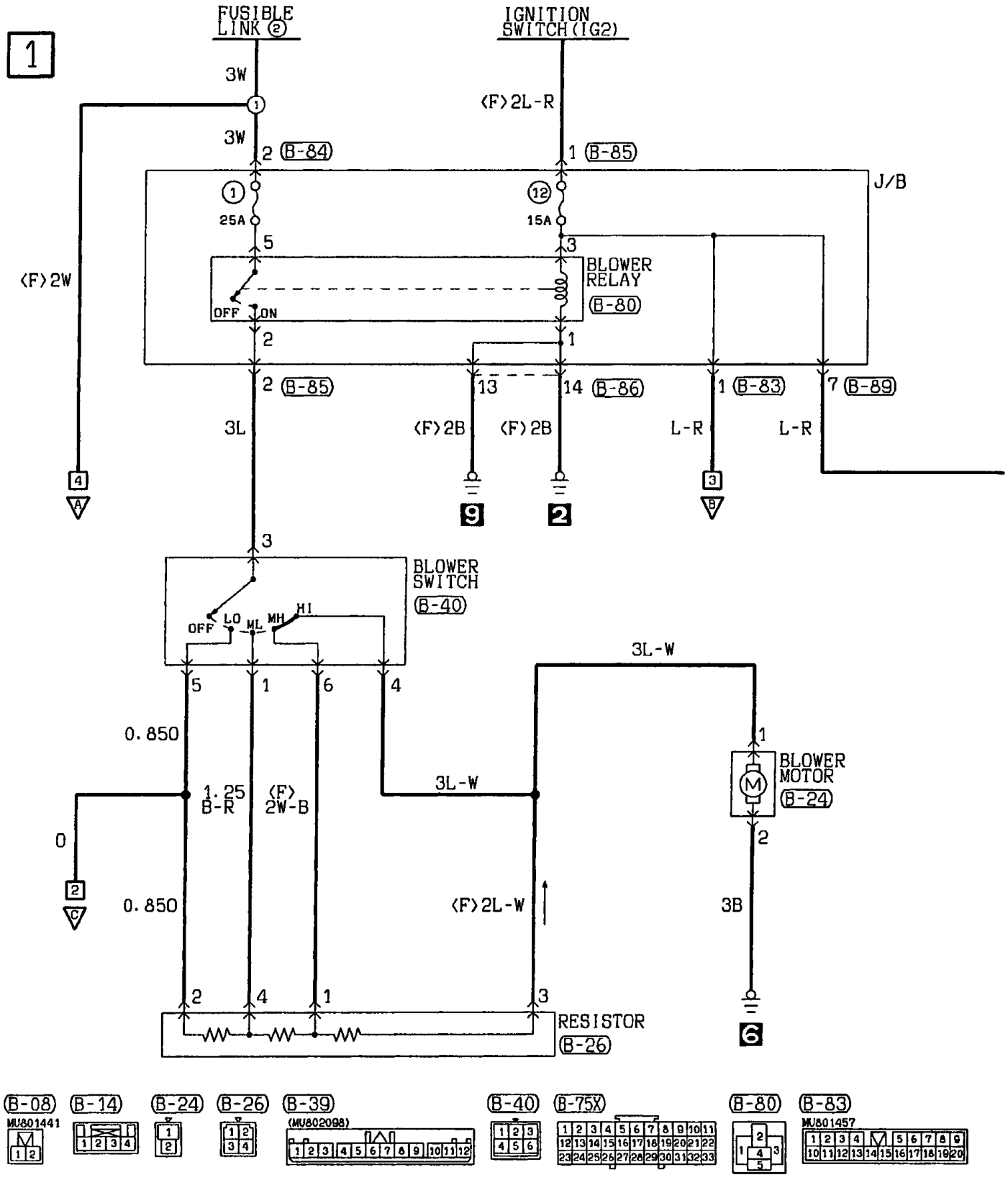

H1T12E01AA

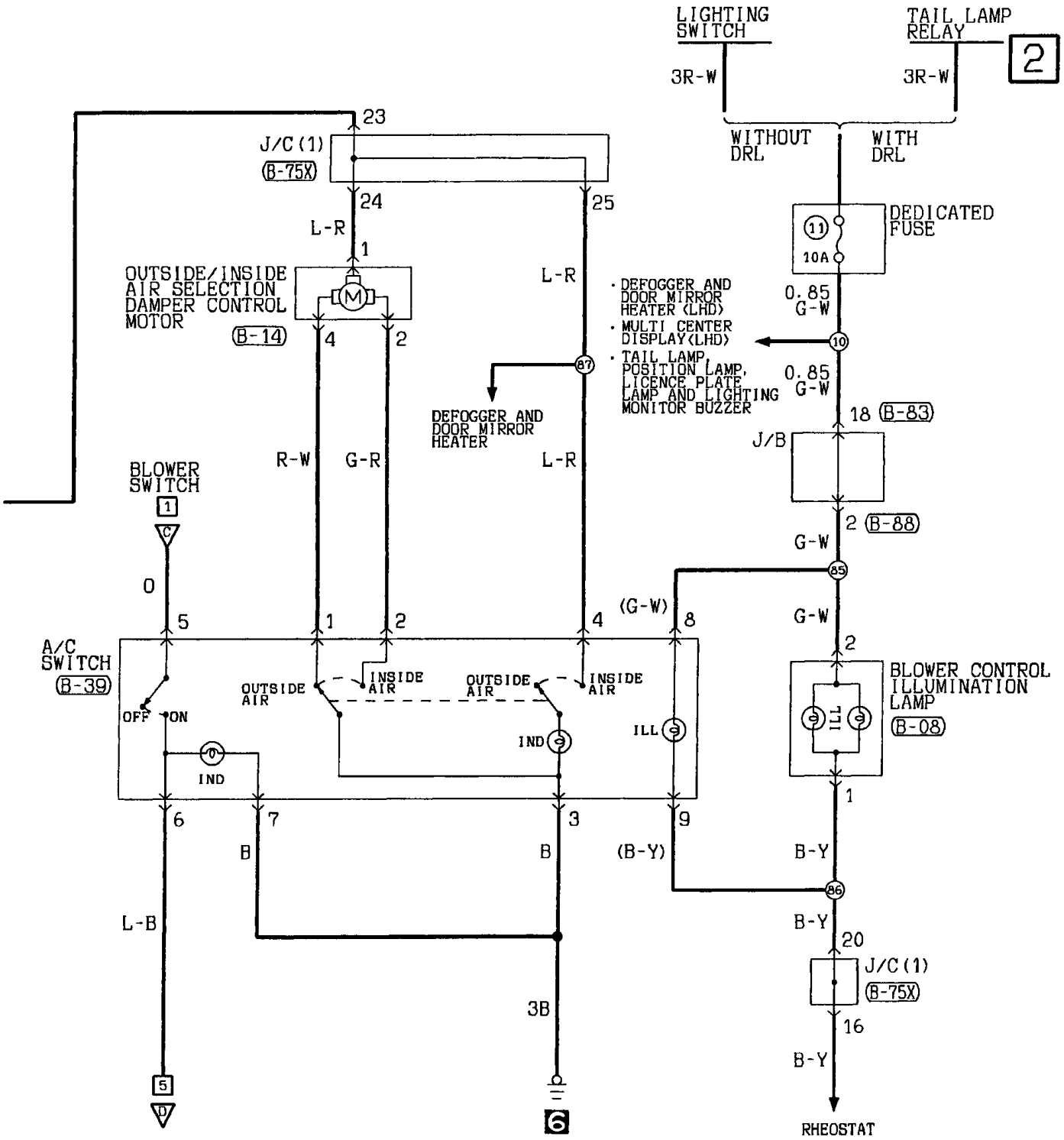

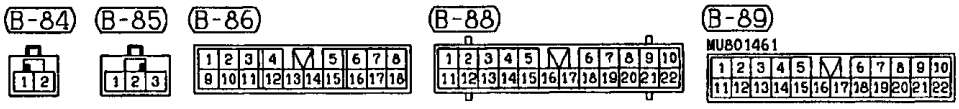

Wire colour code
B :Black LG:Light green G :Green L :Blue W :White Y :Yellow SB:Sky blue
BR:Brown O :Orange GR:Gray R :Red P :Pink V :Violet

H1T12E01AB

MANUAL AIR CONDITIONER <Petrol-powered vehicles> (CONTINUED)

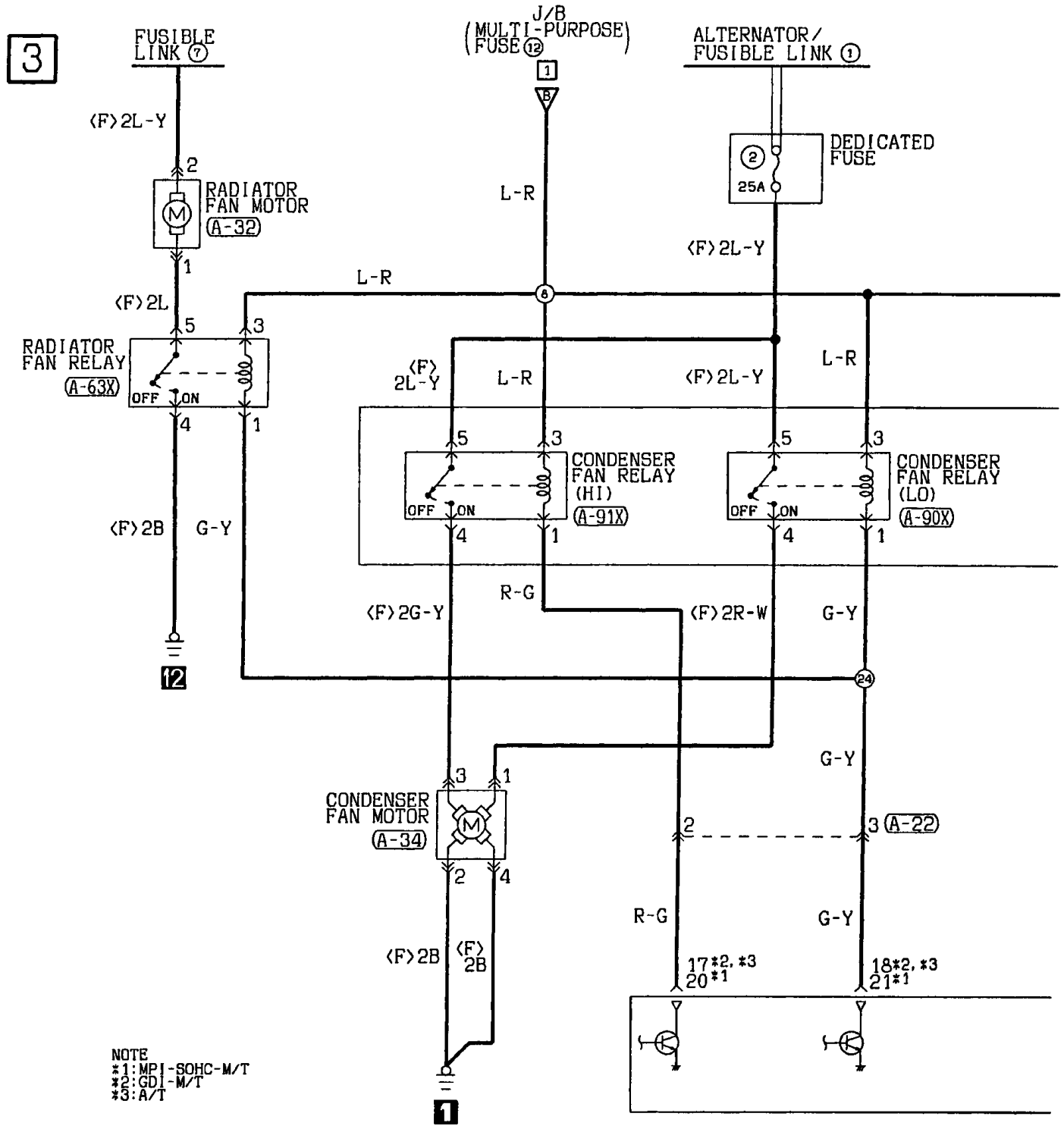

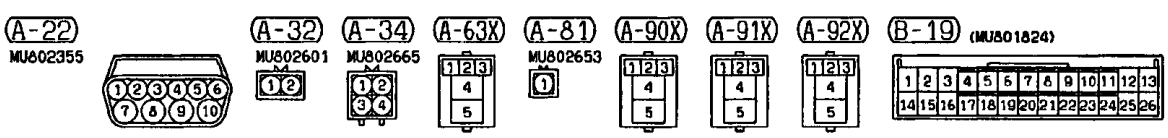

H1T12E01BA

4

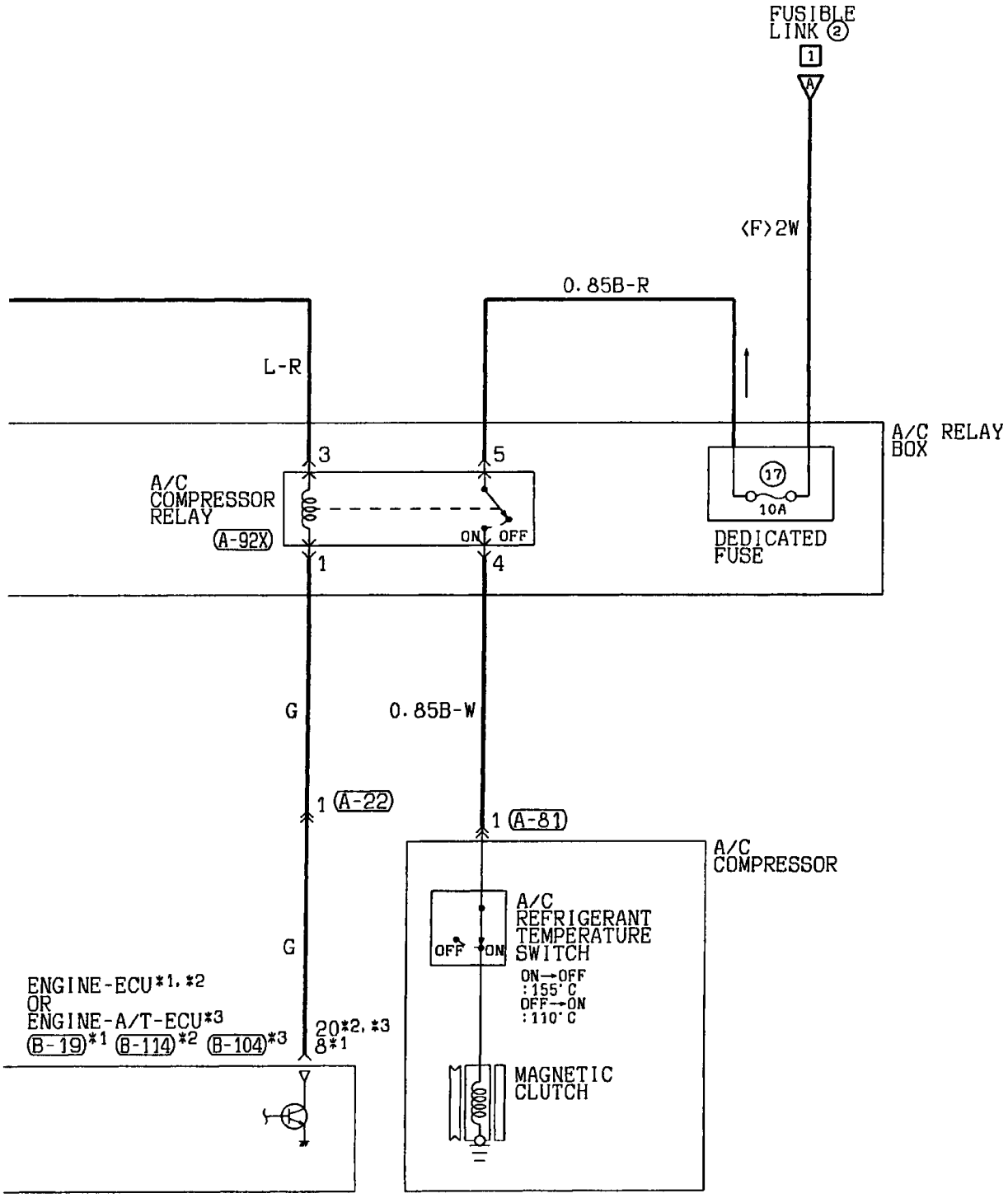

B-104 (MU803784)

1	2		3	4						5	6		7	8										
9	10	11	12	13	14	15	16	17	18	19	20	21	22	23										
24	25		26	27	28	29		30	31	32	33		34	35										

B-114 (MU803784)

1	2		3	4						5	6		7	8										
9	10	11	12	13	14	15	16	17	18	19	20	21	22	23										
24	25		26	27	28	29		30	31	32	33		34	35										

Wire colour code

B :Black	LG:Light green	G :Green	L :Blue	W :White	Y :Yellow	SB:Sky blue
BR:Brown	O :Orange	GR:Gray	R :Red	P :Pink	V :Violet	

H1T12E01BB

MANUAL AIR CONDITIONER <Petrol-powered vehicles> (CONTINUED)

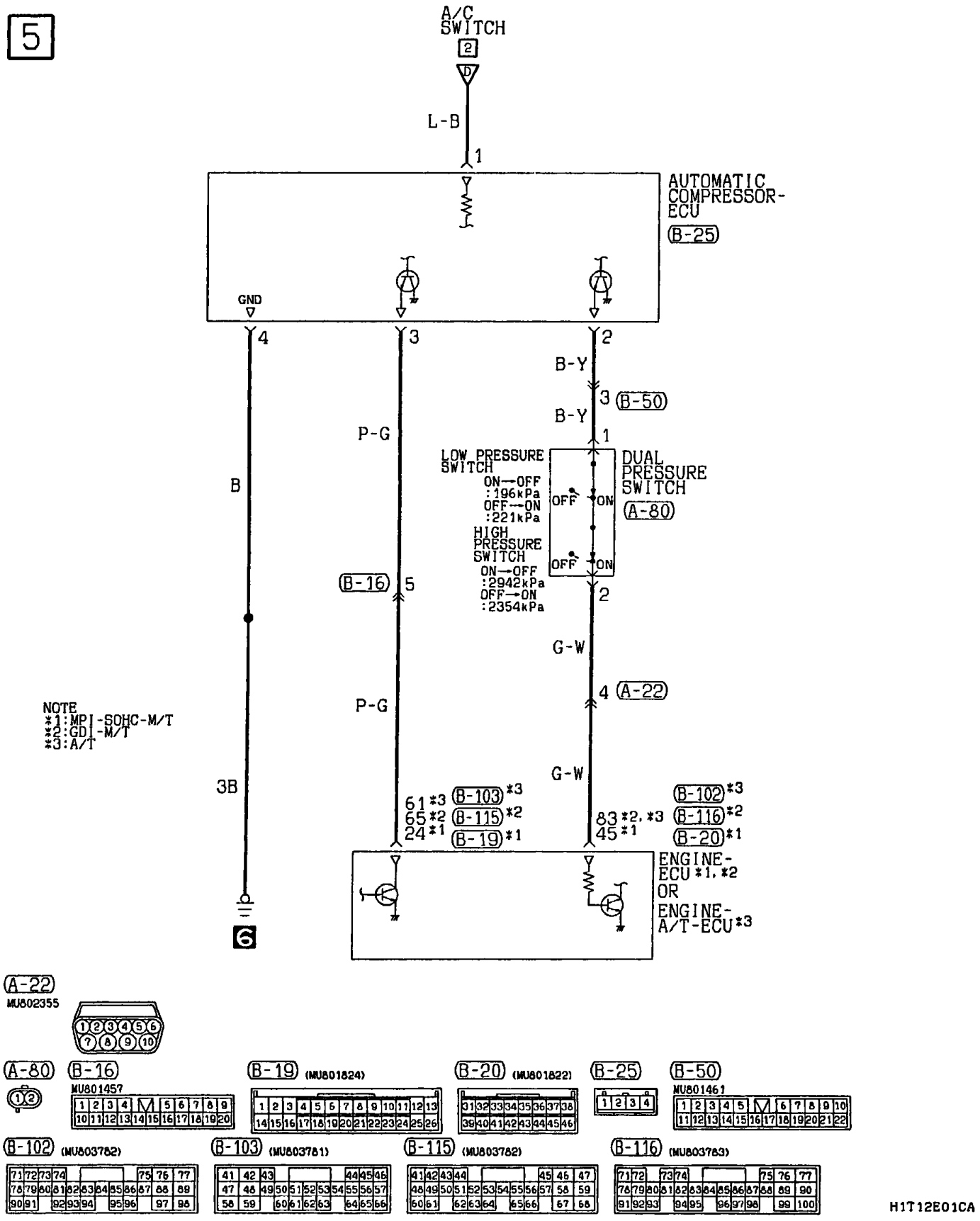

NOTES

MANUAL AIR CONDITIONER

Diesel-powered vehicles <F9Q>

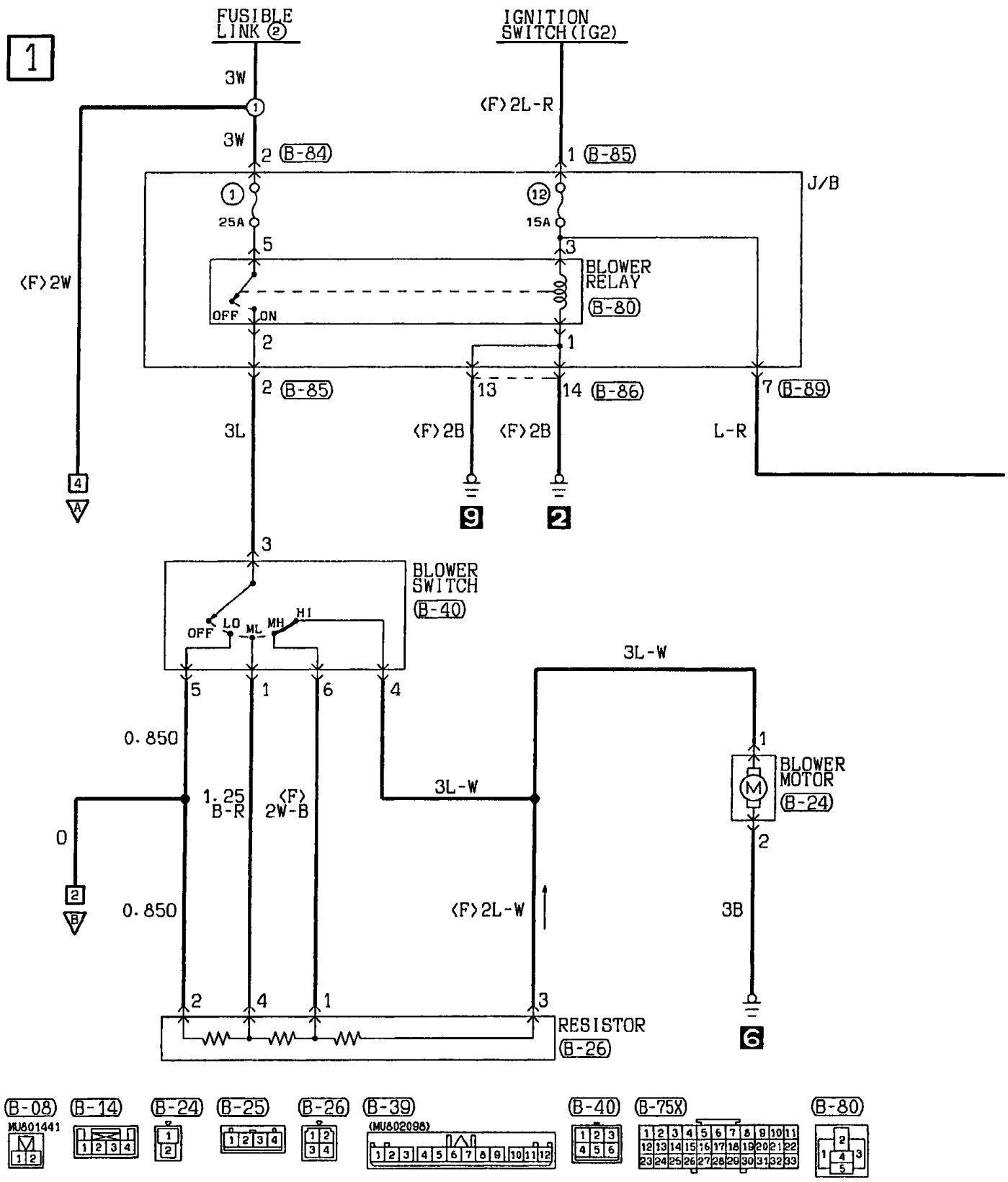

H1T12E00AA

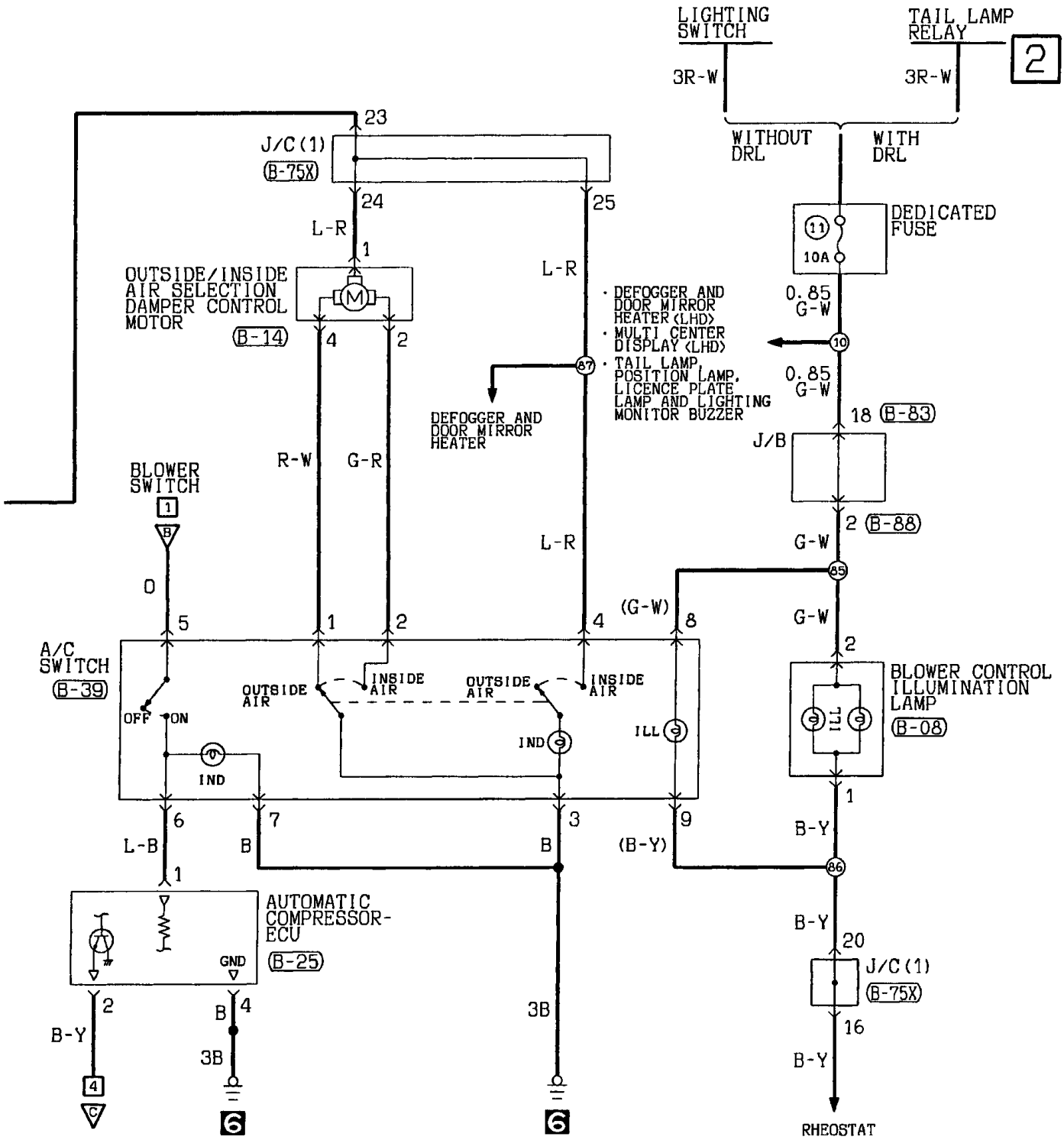

Wire colour code

B :Black	LG:Light green	G :Green	L :Blue	W :White	Y :Yellow	SB:Sky blue
BR:Brown	O :Orange	GR:Gray	R :Red	P :Pink	V :Violet	

H1T12E00AB

MANUAL AIR CONDITIONER <Diesel-powered vehicles (F9Q)> (CONTINUED)

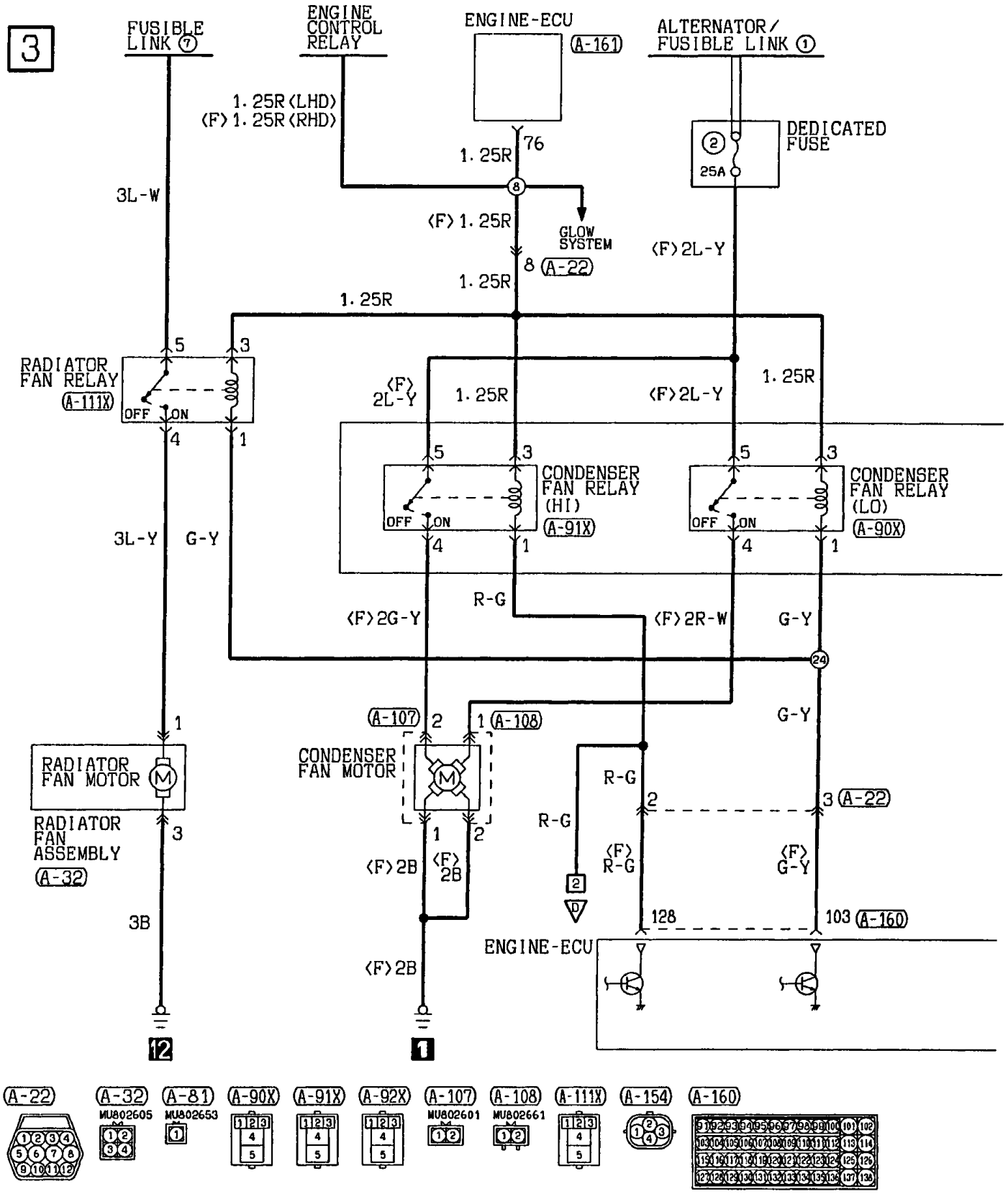

H1T12E00BA

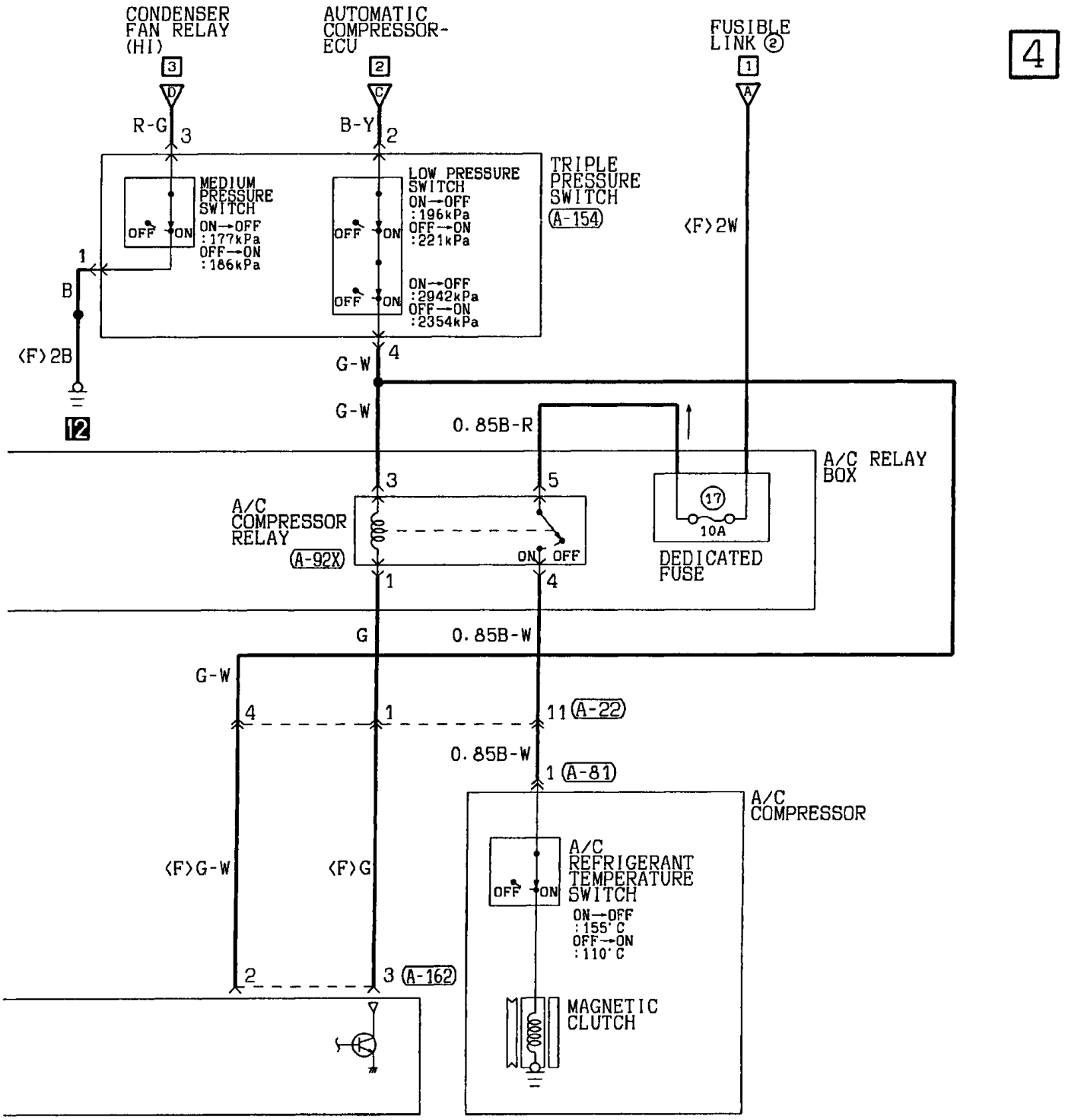

Wire colour code
B :Black LG:Light green G :Green L :Blue W :White Y :Yellow SB:Sky blue
BR:Brown O :Orange GR:Gray R :Red P :Pink V :Violet

H1T12E00BB

AUTOMATIC AIR CONDITIONER

Petrol-powered vehicles

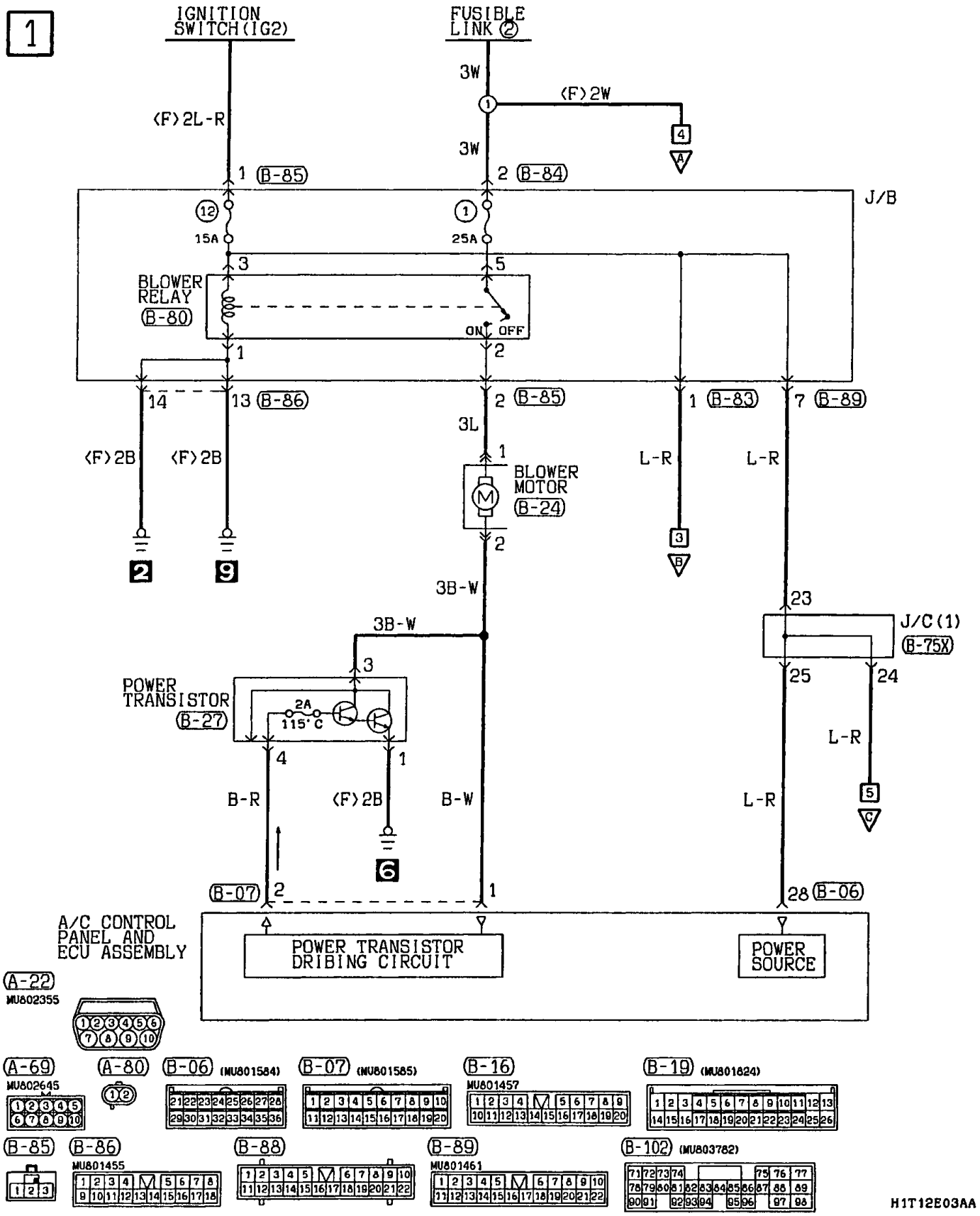

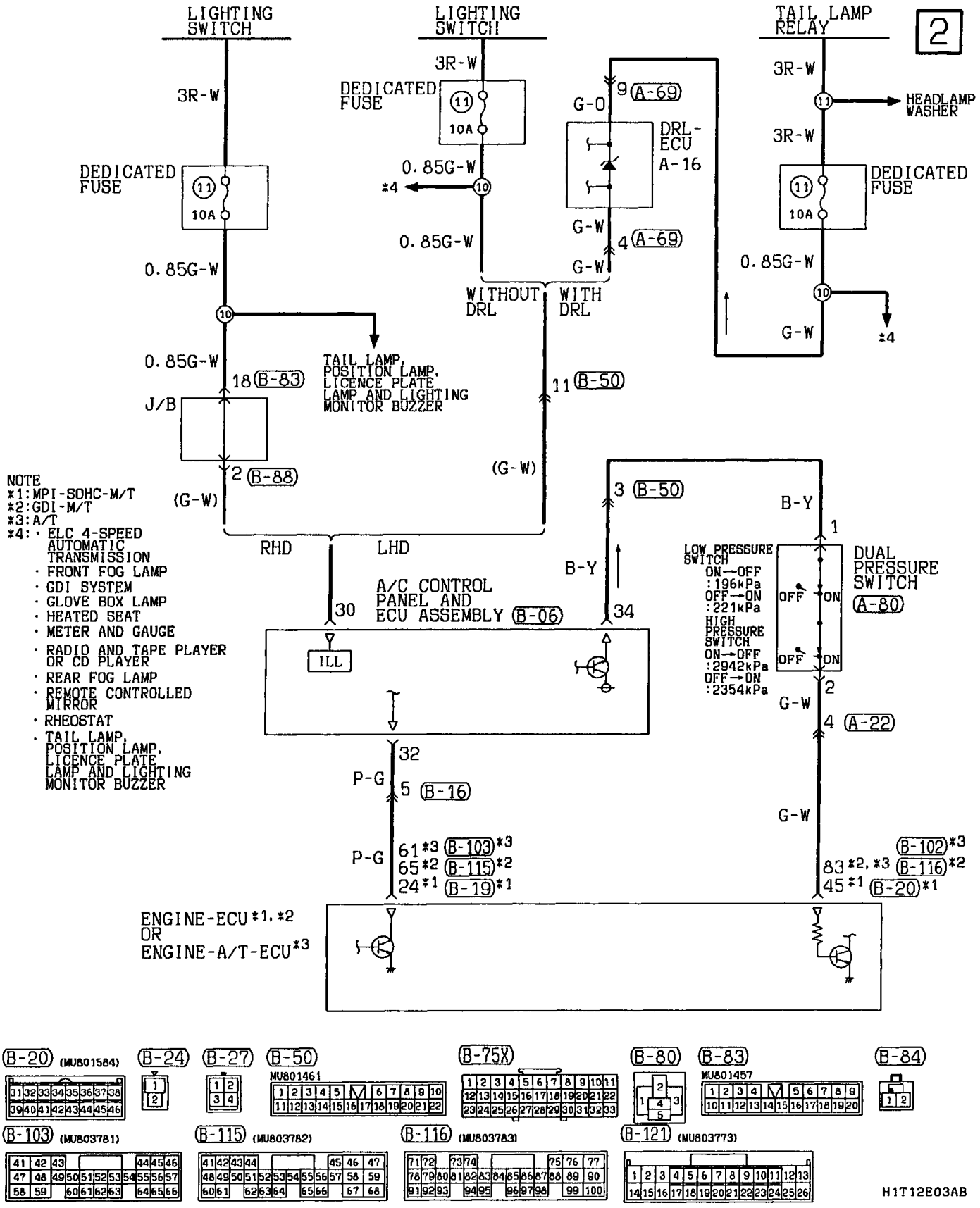
LIGHTING SWITCH
LIGHTING SWITCH
TAIL LAMP RELAY
2
3R-W
DEDICATED FUSE
11
10A
0.85G-W
10
18 (B-83)
J/B
2 (B-88)
(G-W)
TAIL LAMP, POSITION LAMP, LICENCE PLATE LAMP AND LIGHTING MONITOR BUZZER
*4
G-O
9 (A-69)
DRL-ECU A-16
G-W
4 (A-69)
WITHOUT DRL
WITH DRL
11 (B-50)
HEADLAMP WASHER
NOTE
*1:MPI-SOHC-M/T
*2:GDI-M/T
*3:A/T
*4: · ELC 4-SPEED AUTOMATIC TRANSMISSION
· FRONT FOG LAMP
· GDI SYSTEM
· GLOVE BOX LAMP
· HEATED SEAT
· METER AND GAUGE
· RADIO AND TAPE PLAYER OR CD PLAYER
· REAR FOG LAMP
· REMOTE CONTROLLED MIRROR
· RHEOSTAT
· TAIL LAMP, POSITION LAMP, LICENCE PLATE LAMP AND LIGHTING MONITOR BUZZER
RHD
LHD
A/C CONTROL PANEL AND ECU ASSEMBLY (B-06)
30
ILL
3 (B-50)
34
B-Y
LOW PRESSURE SWITCH
ON→OFF :196kPa
OFF→ON :221kPa
HIGH PRESSURE SWITCH
ON→OFF :2942kPa
OFF→ON :2354kPa
OFF
ON
DUAL PRESSURE SWITCH (A-80)
1
2
4 (A-22)
32
P-G
5 (B-16)
61*3 (B-103)*3
65*2 (B-115)*2
24*1 (B-19)*1
83*2, *3 (B-116)*2
45*1 (B-20)*1
(B-102)*3
ENGINE-ECU*1, *2
OR
ENGINE-A/T-ECU*3
(B-20) (MU801584)
(B-24)
(B-27)
(B-50)
MU801461
(B-75X)
(B-80)
(B-83)
MU801457
(B-84)
(B-103) (MU803781)
(B-115) (MU803782)
(B-116) (MU803783)
(B-121) (MU803773)
H1T12E03AB

AUTOMATIC AIR CONDITIONER <Petrol-powered vehicles> (CONTINUED)

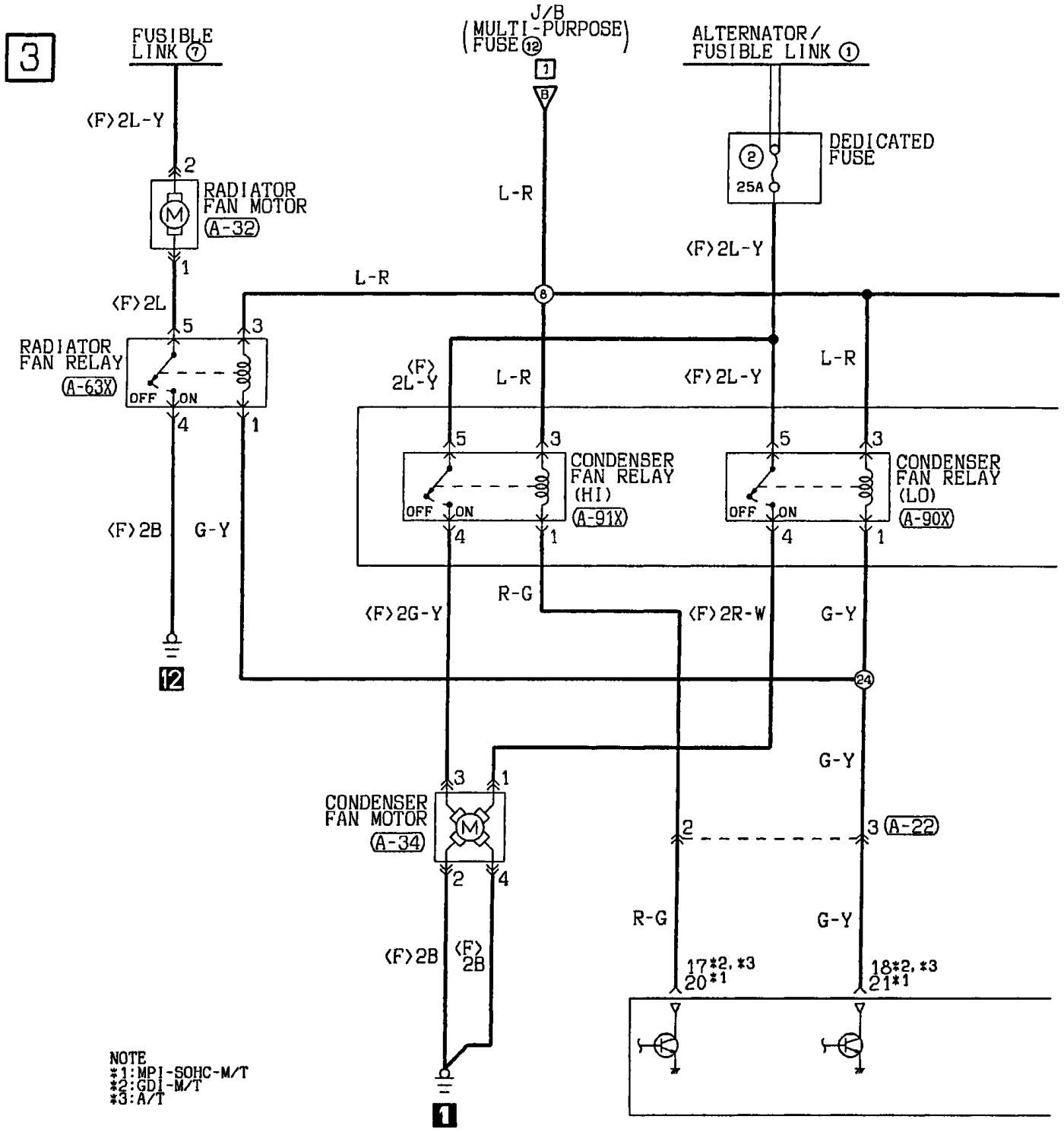

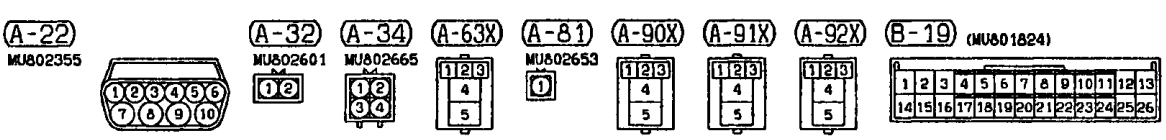

H1T12E03BA

4

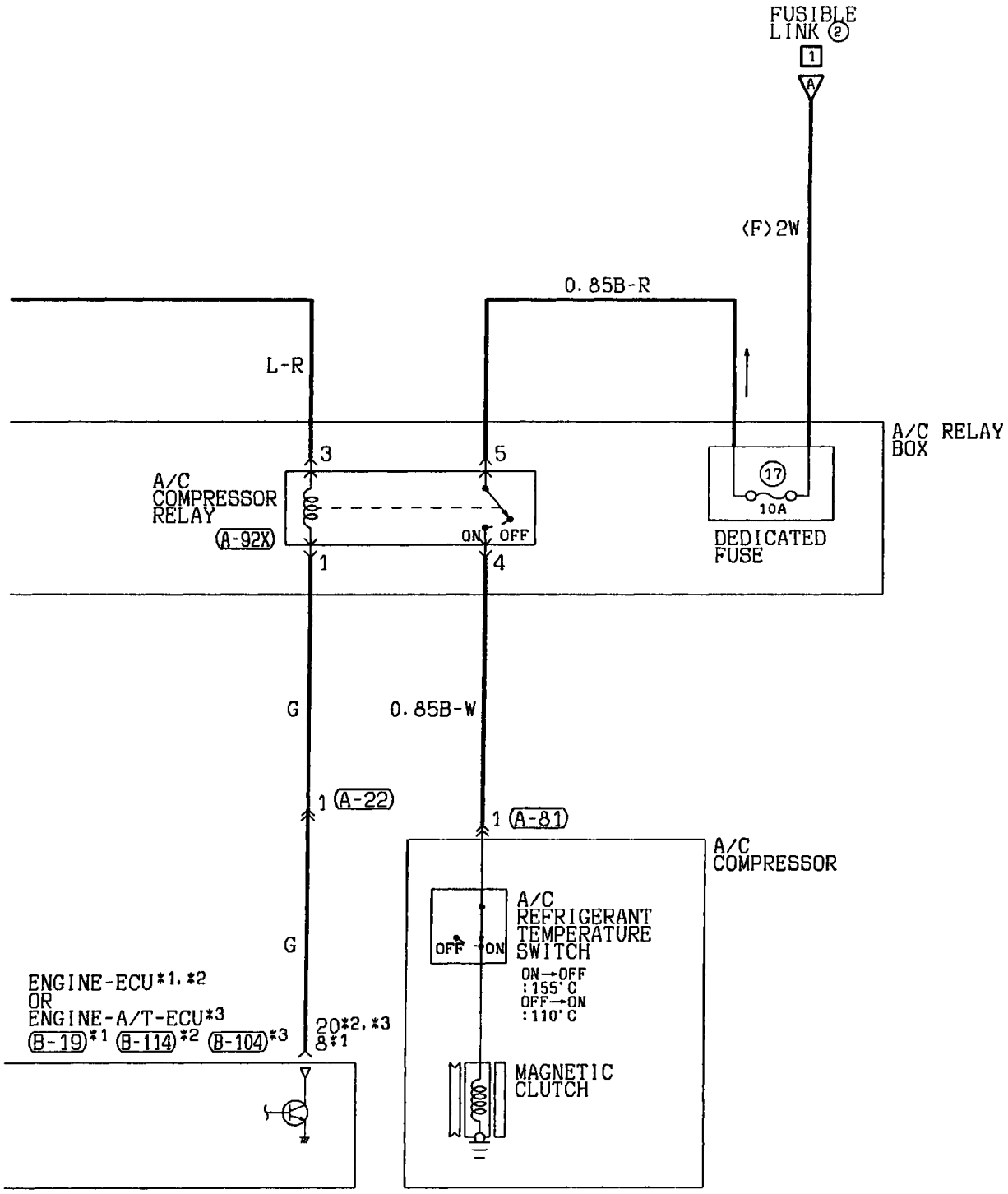

B-104 (MU803784)

1	2		3	4						5	6		7	8										
9	10	11	12	13	14	15	16	17	18	19	20	21	22	23										
24	25		26	27	28	29		30	31	32	33		34	35										

B-114 (MU803784)

1	2		3	4						5	6		7	8										
9	10	11	12	13	14	15	16	17	18	19	20	21	22	23										
24	25		26	27	28	29		30	31	32	33		34	35										

Wire colour code
B :Black LG:Light green G :Green L :Blue W :White Y :Yellow SB:Sky blue
BR:Brown O :Orange GR:Gray R :Red P :Pink V :Violet

H1T12E03BB

AUTOMATIC AIR CONDITIONER <Petrol-powered vehicles> (CONTINUED)

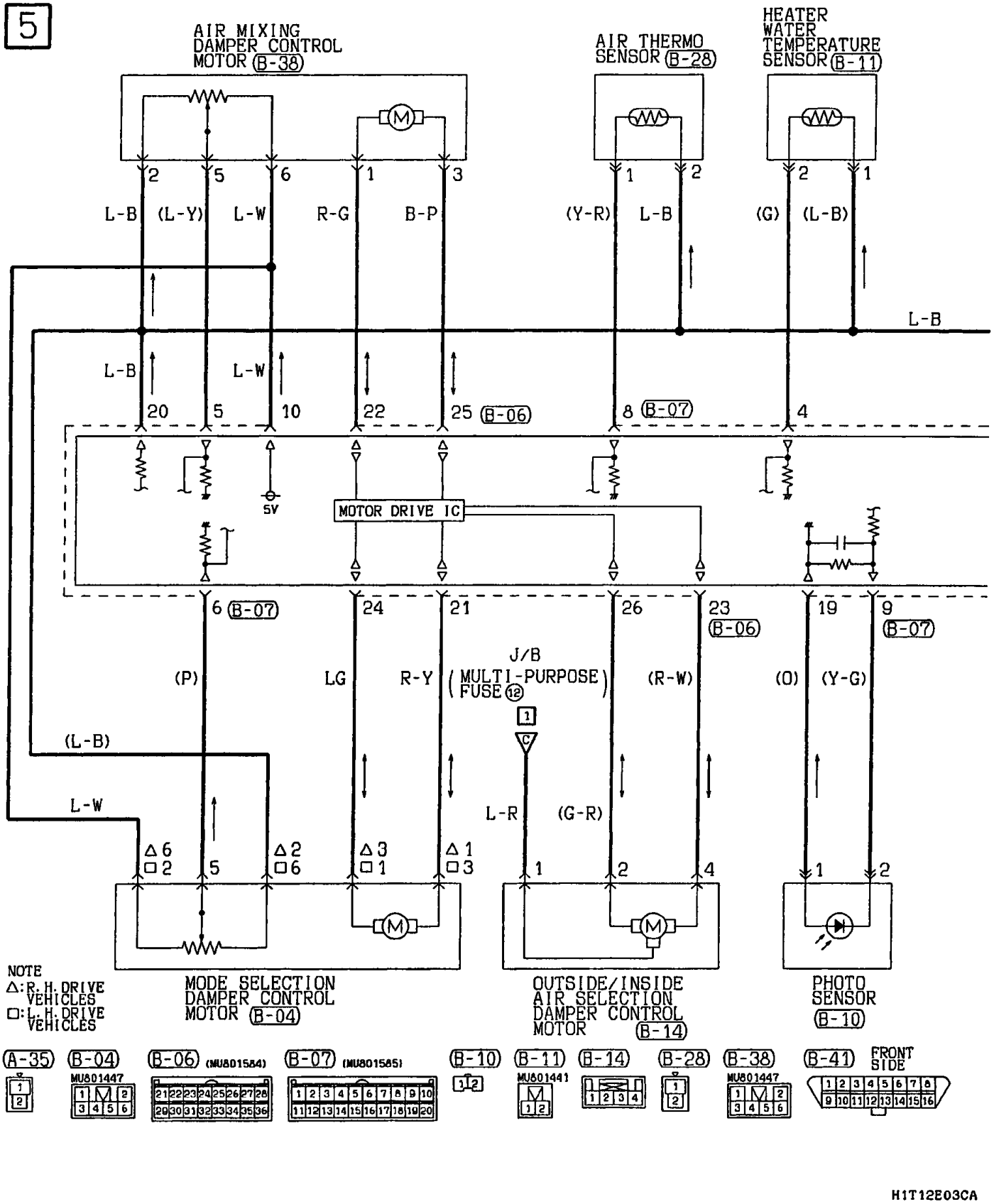

H1T12E03CA

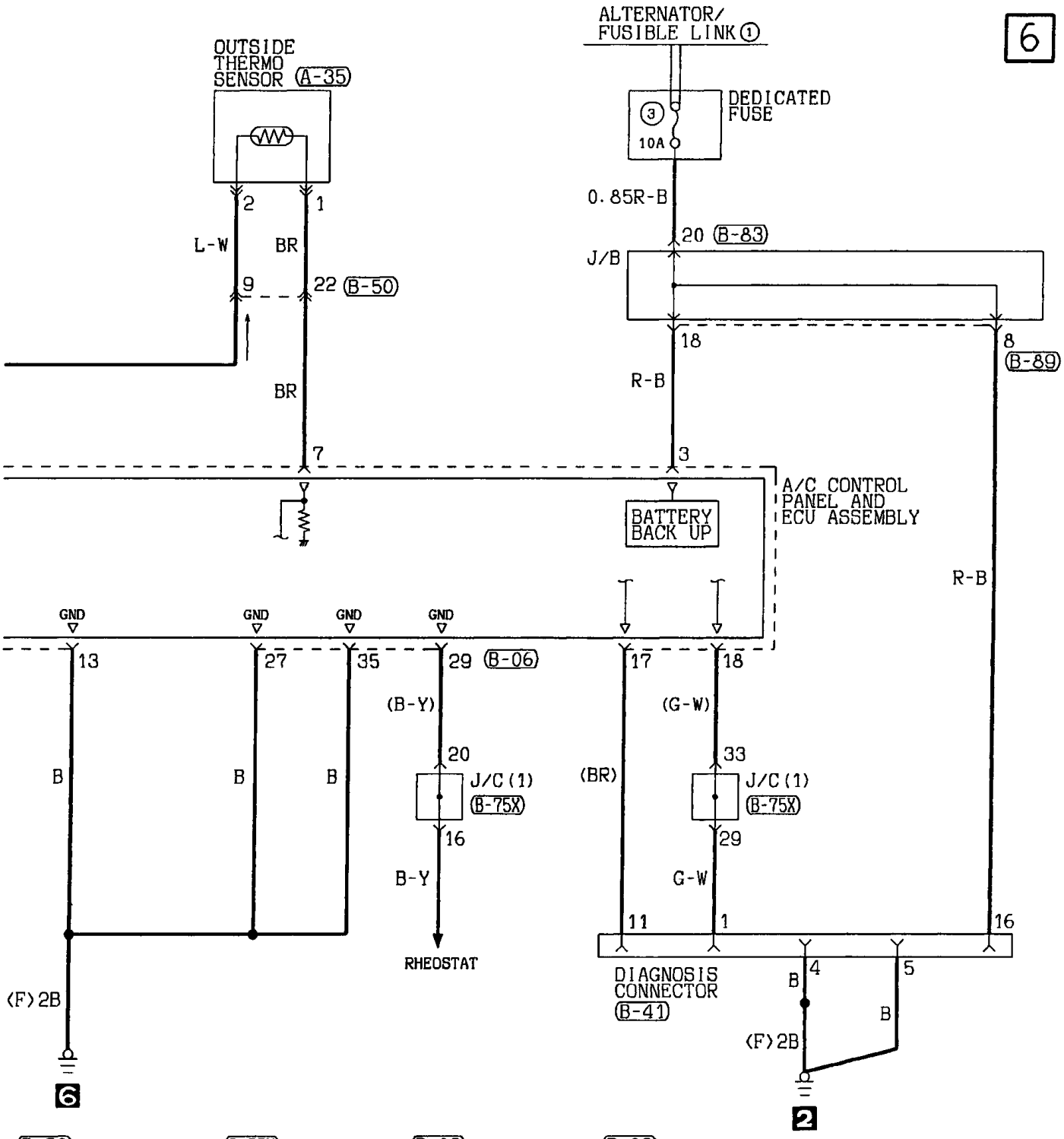

Wire colour code

B :Black	LG:Light green	G :Green	L :Blue	W :White	Y :Yellow	SB:Sky blue
BR:Brown	O :Orange	GR:Gray	R :Red	P :Pink	V :Violet	

H1T12E03CB

AUTOMATIC AIR CONDITIONER <Petrol-powered vehicles> (CONTINUED)

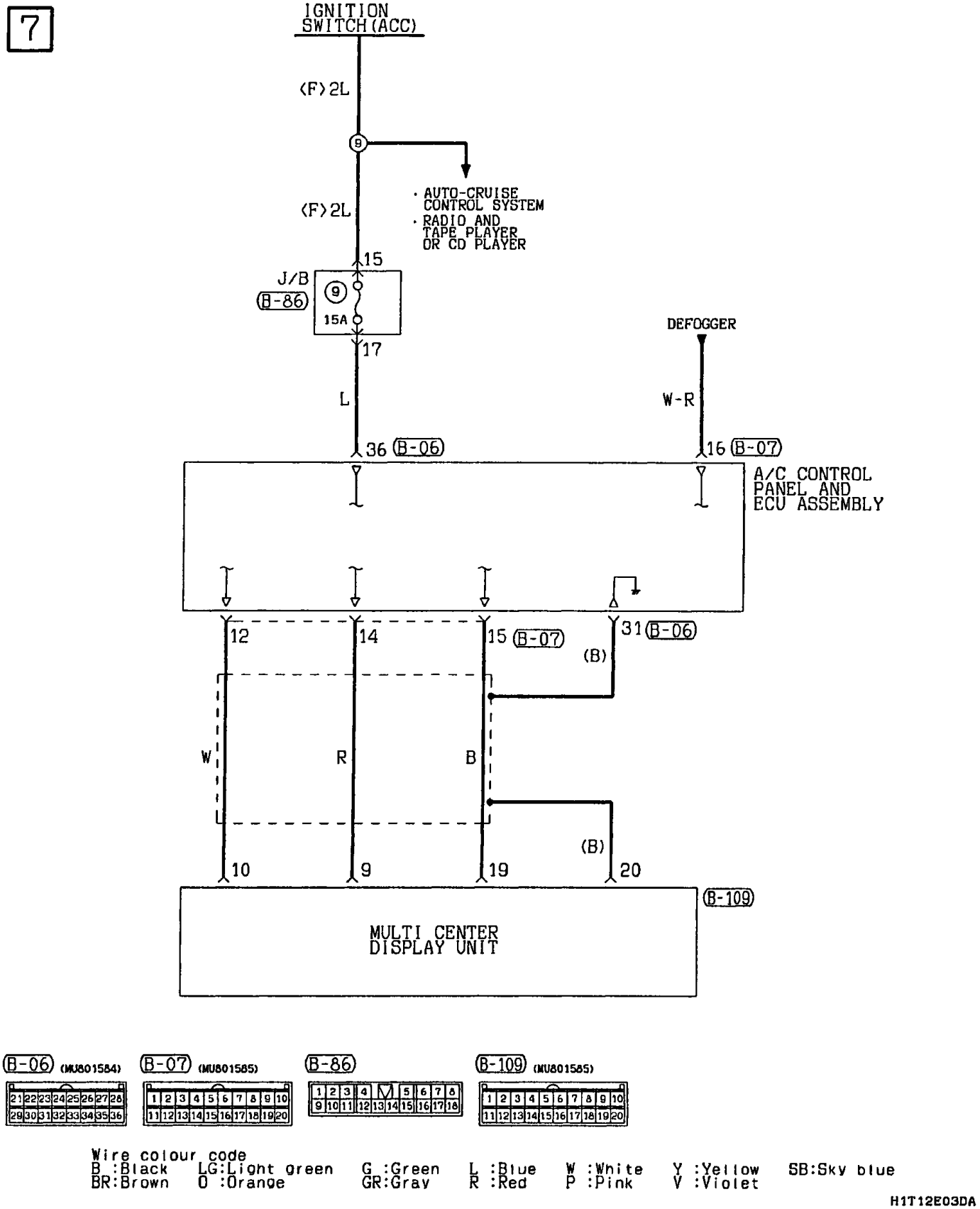

NOTES

AUTOMATIC AIR CONDITIONER

Diesel-powered vehicles <F9Q>

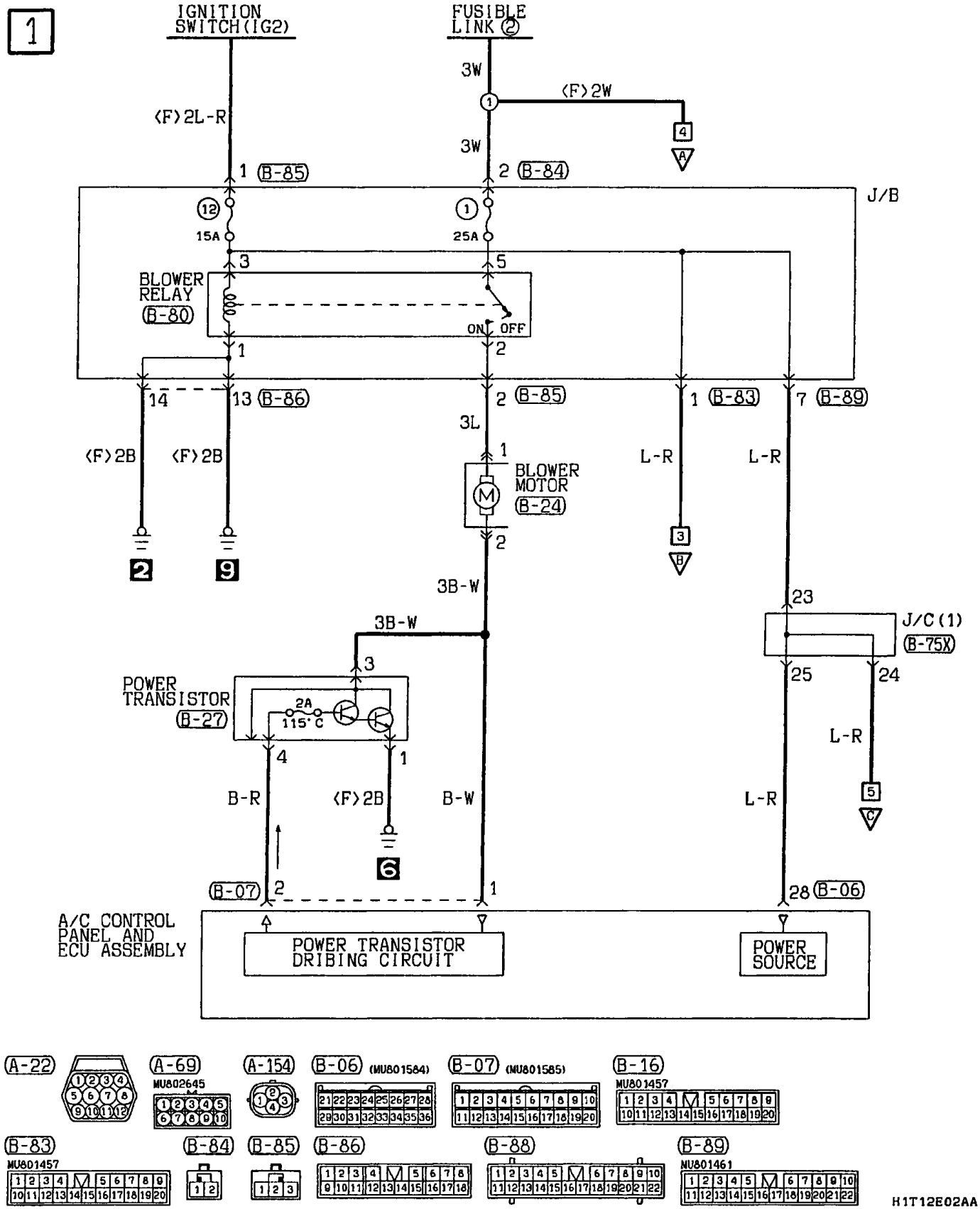

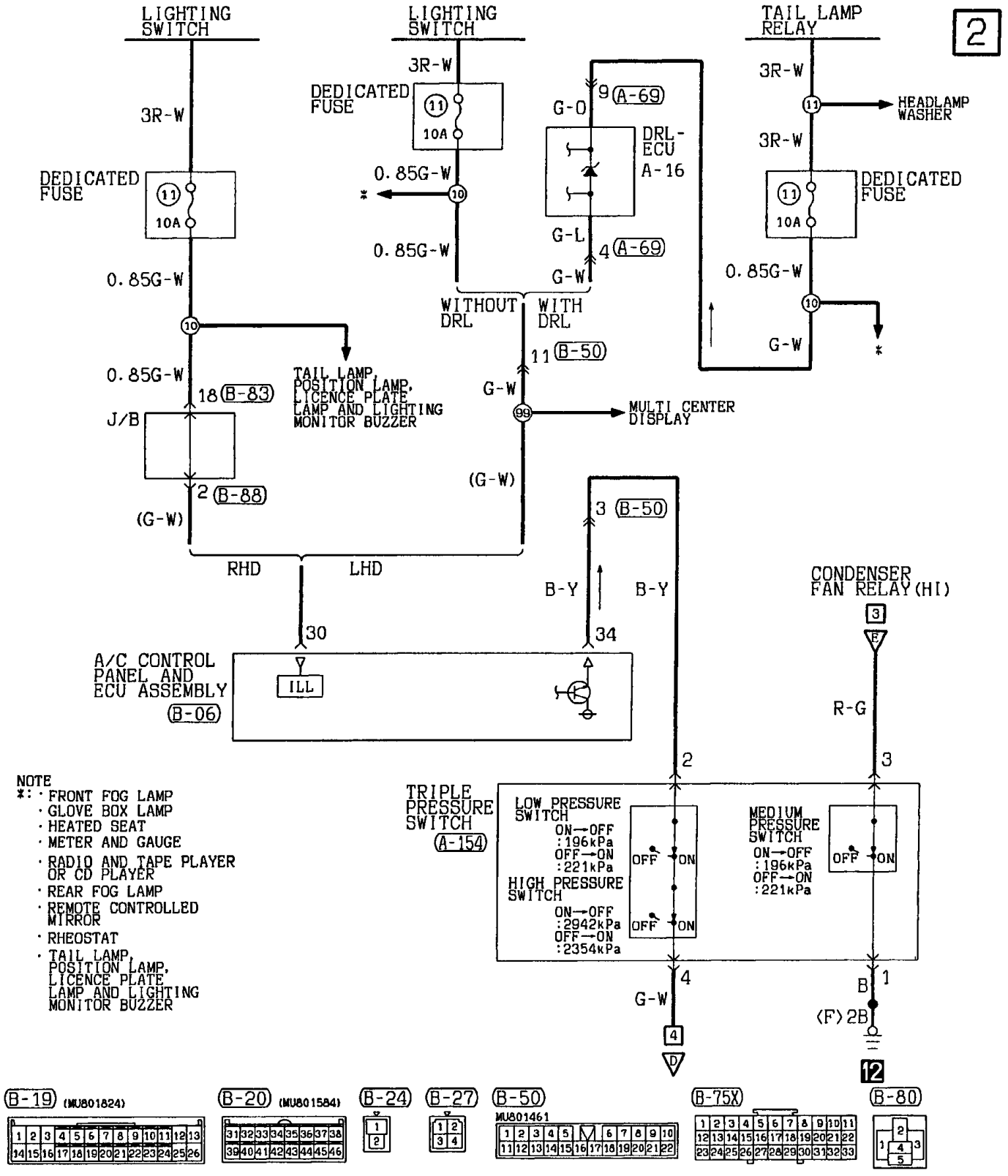

Wire colour code

B :Black	LG:Light green	G :Green	L :Blue	W :White	Y :Yellow	SB:Sky blue
BR:Brown	O :Orange	GR:Gray	R :Red	P :Pink	V :Violet	

H1T12E02AB

AUTOMATIC AIR CONDITIONER <Diesel-powered vehicles (F9Q)> (CONTINUED)

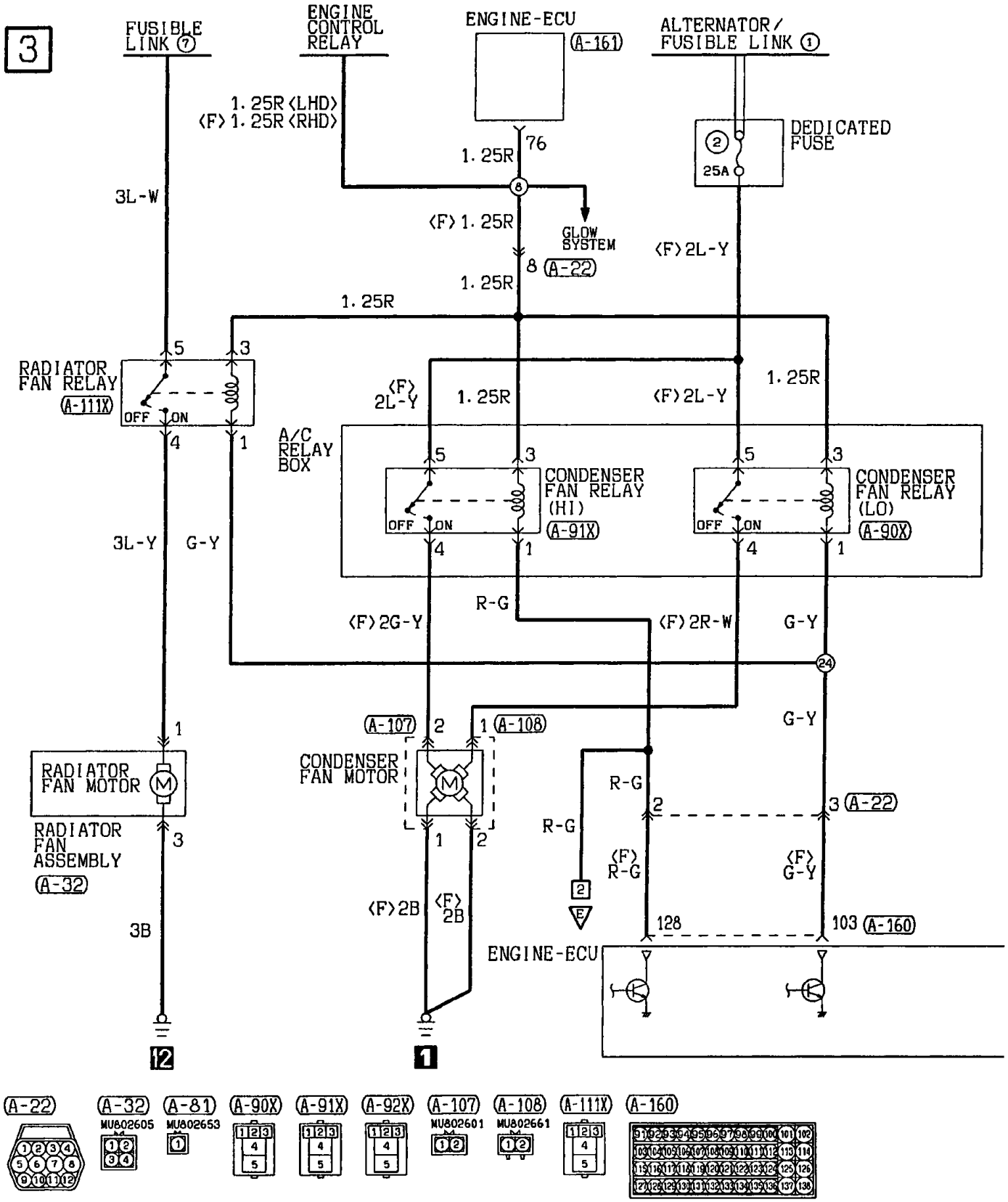

H1T12E02BA

4

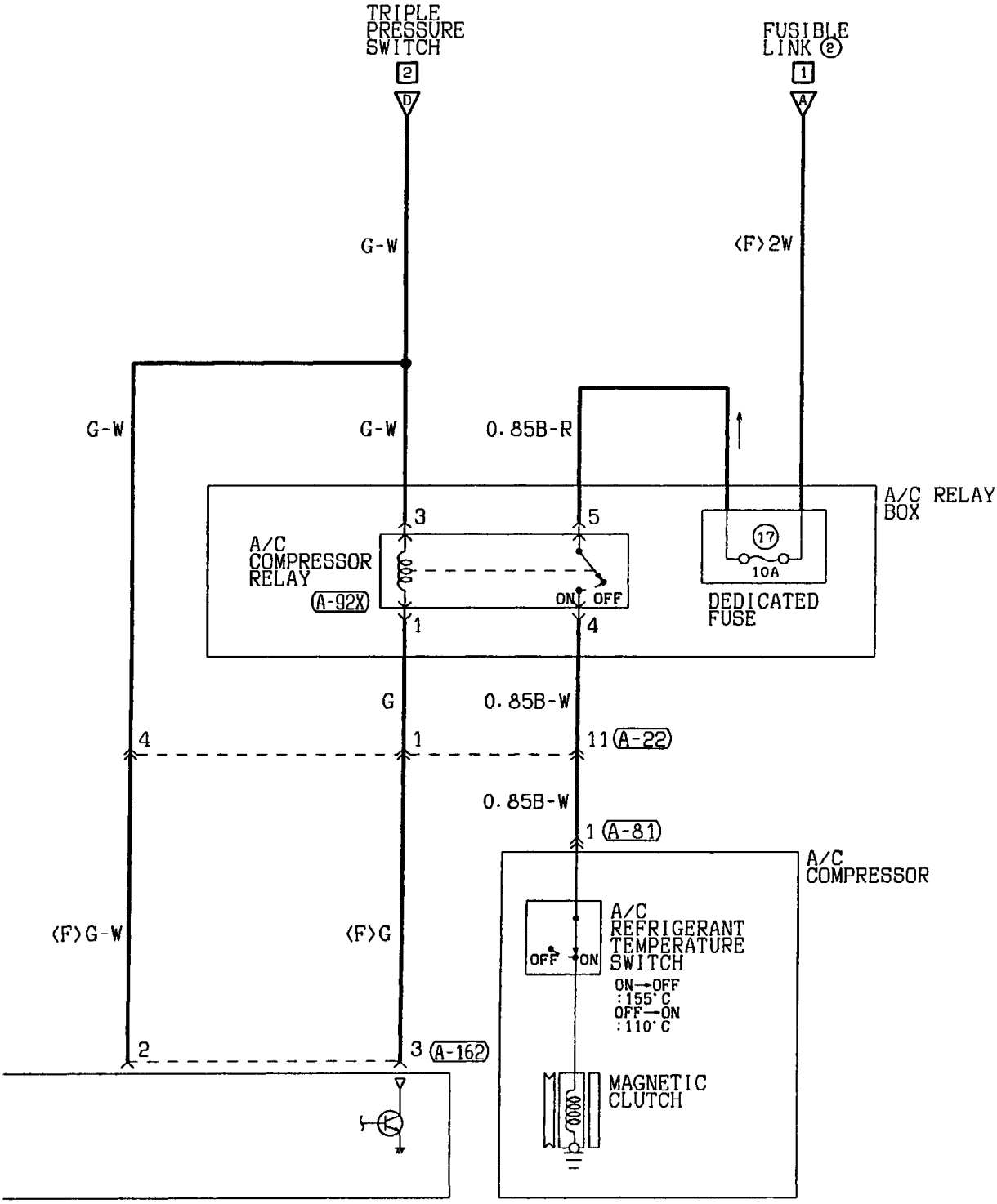

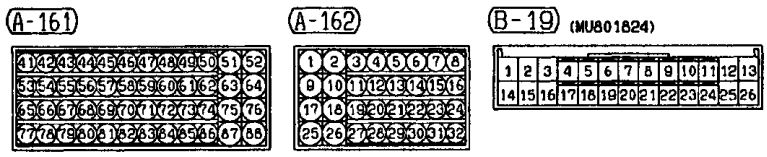

Wire colour code

B :Black	LG:Light green	G :Green	L :Blue	W :White	Y :Yellow	SB:Sky blue
BR:Brown	O :Orange	GR:Gray	R :Red	P :Pink	V :Violet	

H1T12E02BB

AUTOMATIC AIR CONDITIONER <Diesel-powered vehicles (F9Q)> (CONTINUED)

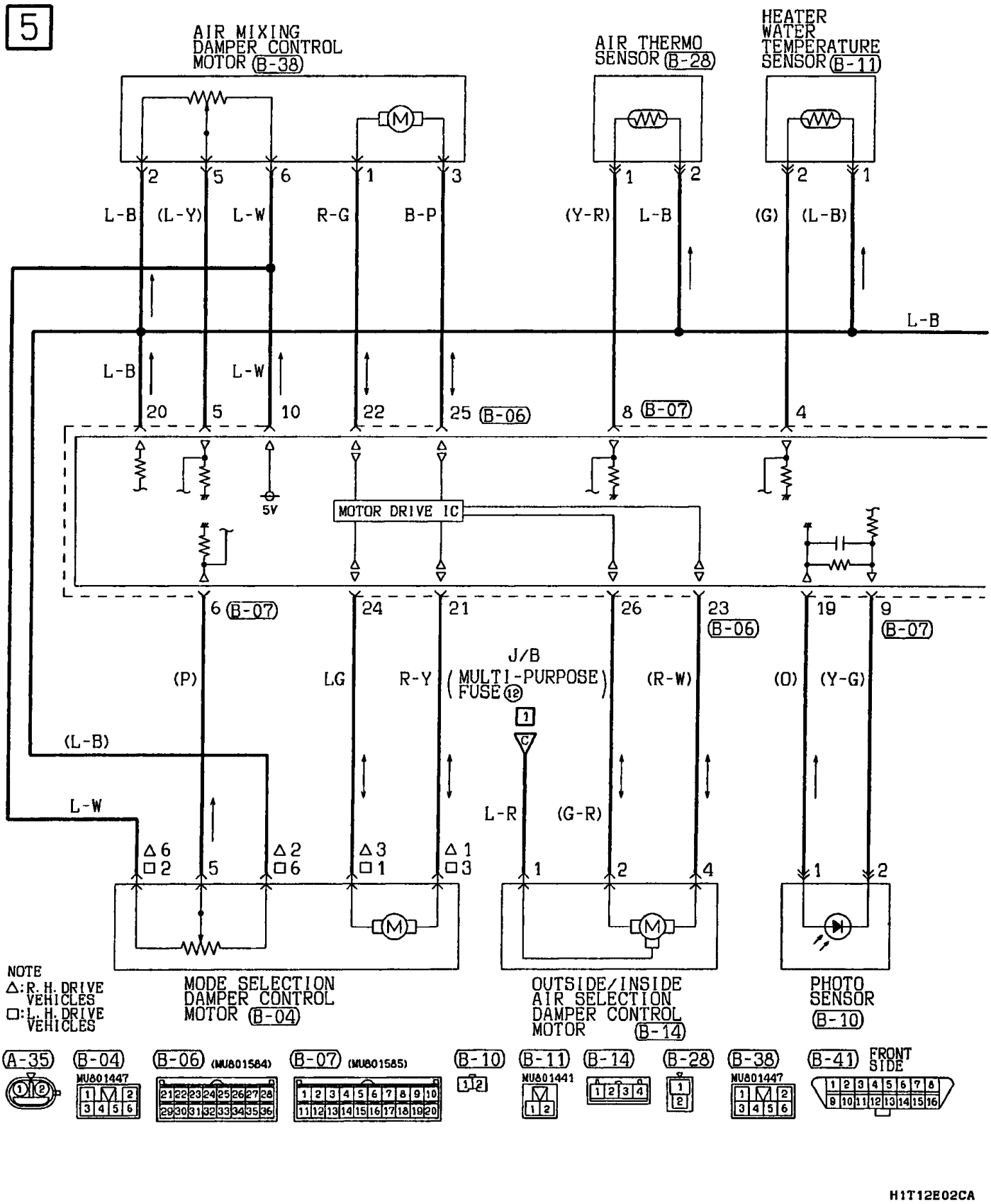

H1T12E02CA

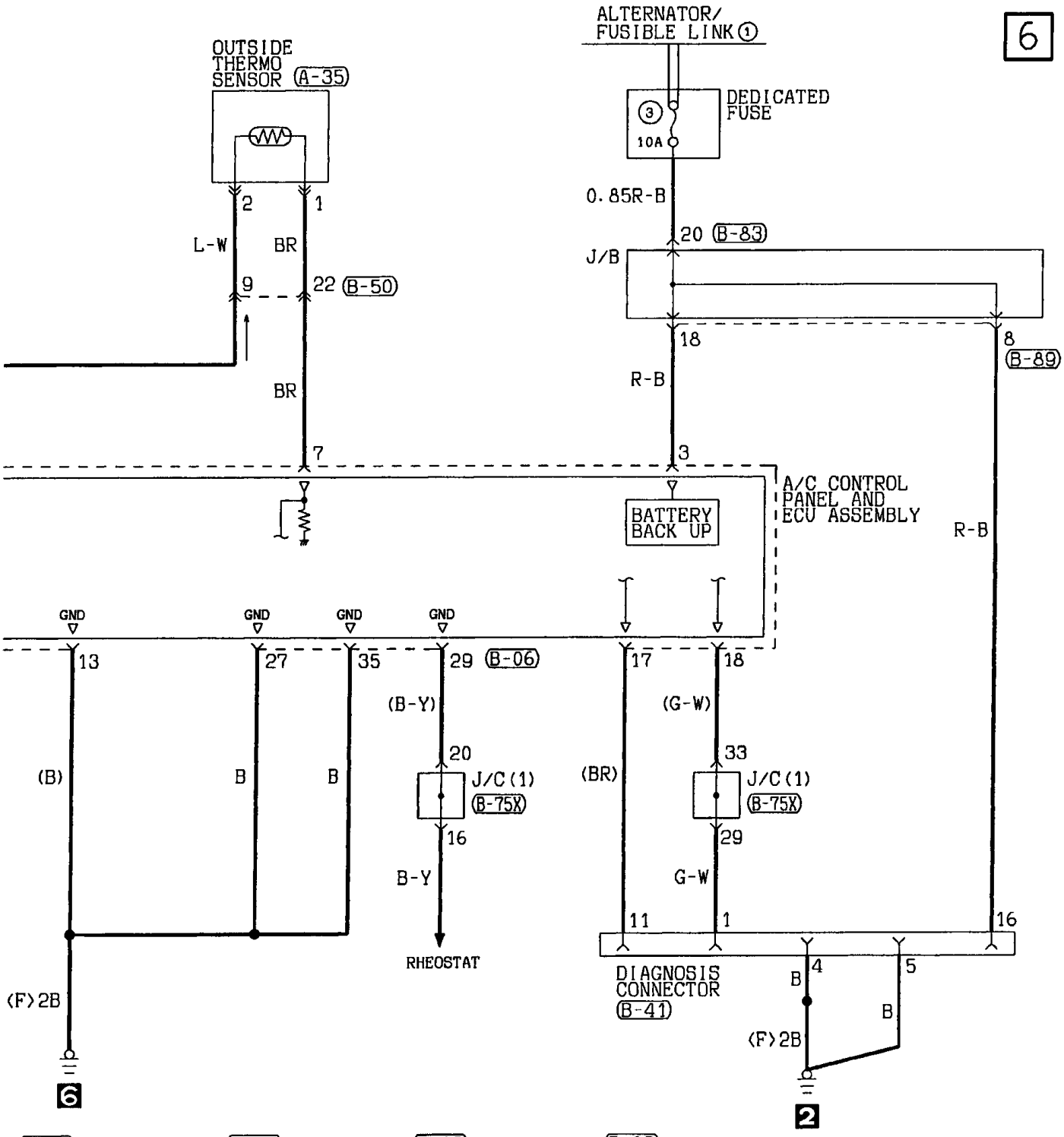

Wire colour code

B :Black	LG:Light green	G :Green	L :Blue	W :White	Y :Yellow	SB:Sky blue
BR:Brown	O :Orange	GR:Gray	R :Red	P :Pink	V :Violet	

H1T12E02CB

AUTOMATIC AIR CONDITIONER <Diesel-powered vehicles (F9Q)> (CONTINUED)

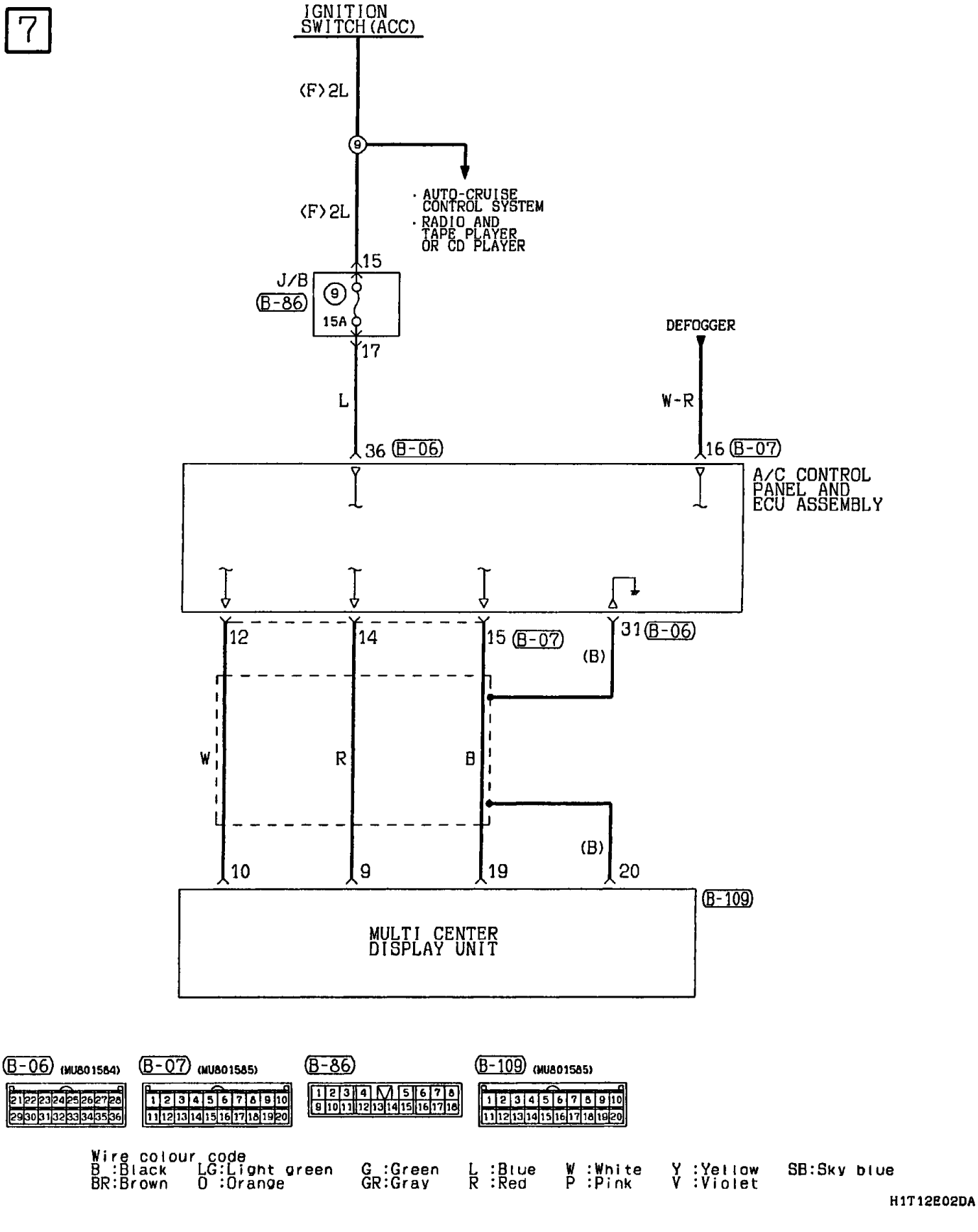

NOTES

DEFOGGER AND DOOR MIRROR HEATER

Vehicles without automatic air conditioner

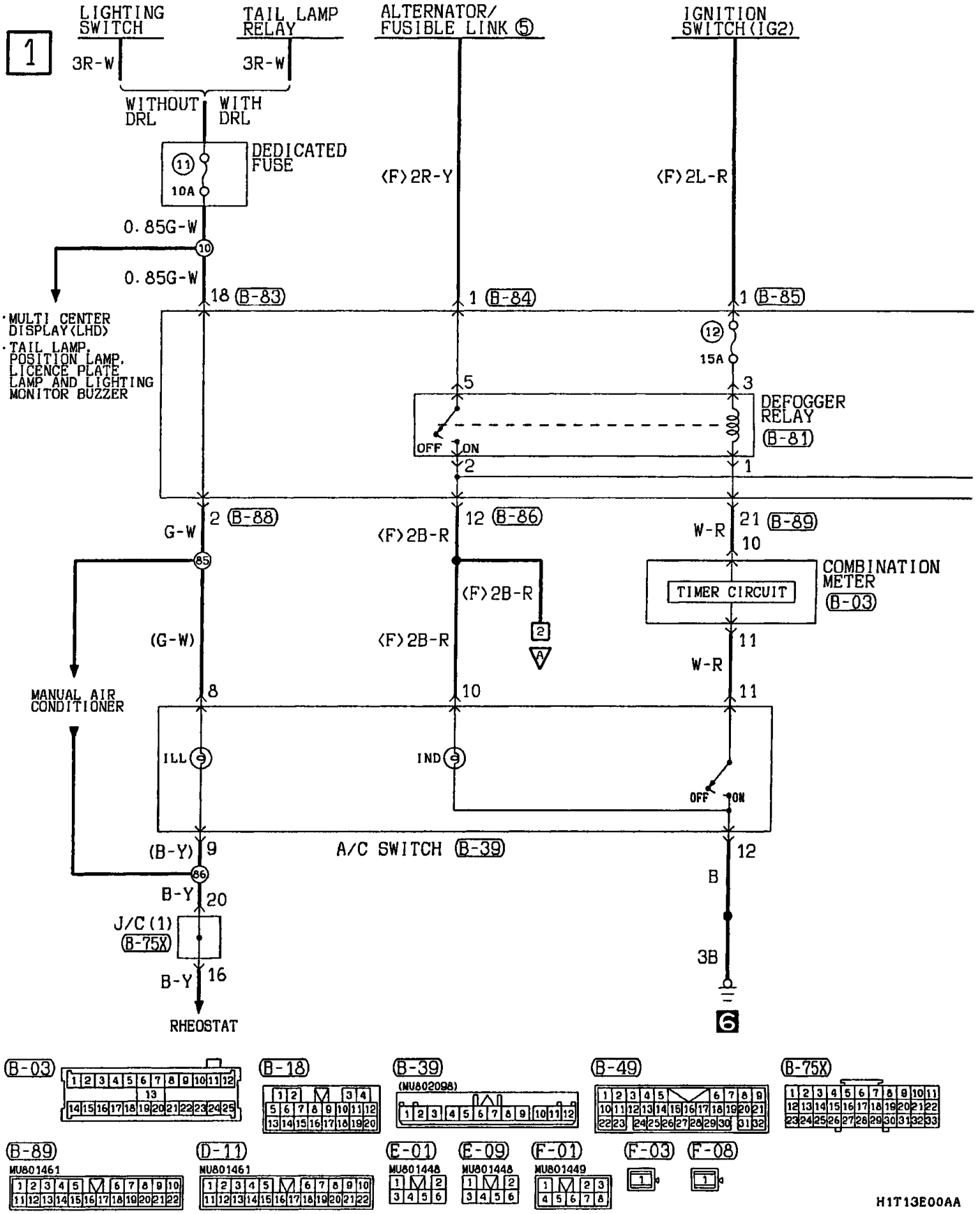

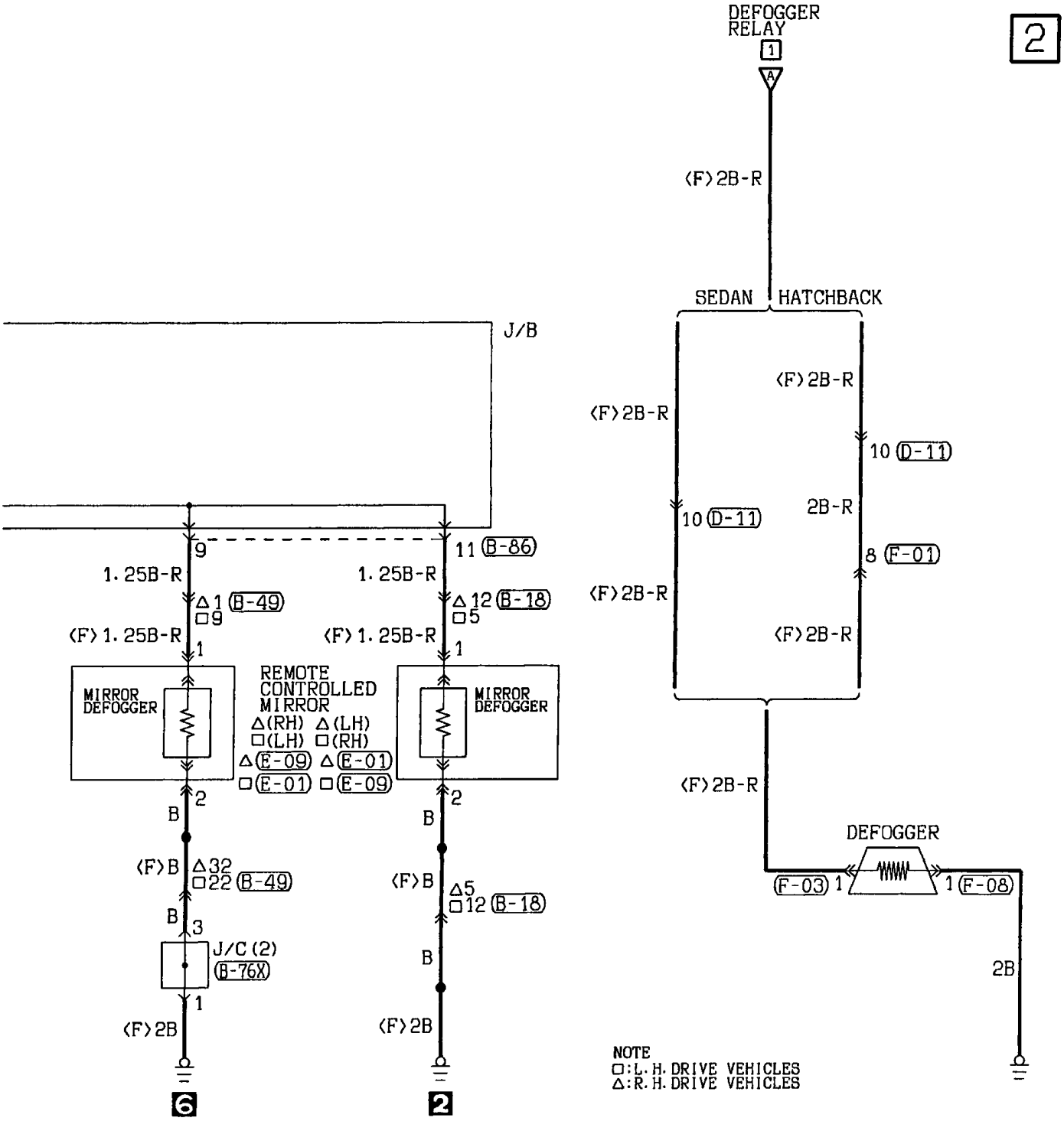

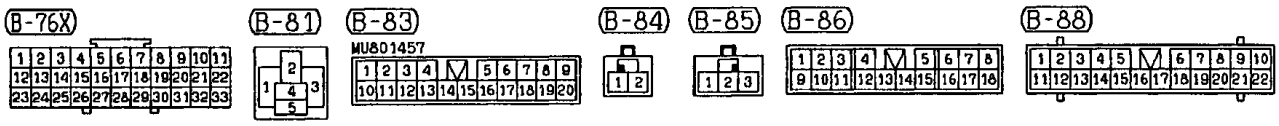

Wire colour code

B :Black	LG:Light green	G :Green	L :Blue	W :White	Y :Yellow	SB:Sky blue
BR:Brown	O :Orange	GR:Gray	R :Red	P :Pink	V :Violet	

H1T13E00AB

MULTI CENTER DISPLAY

Petrol-powered vehicles

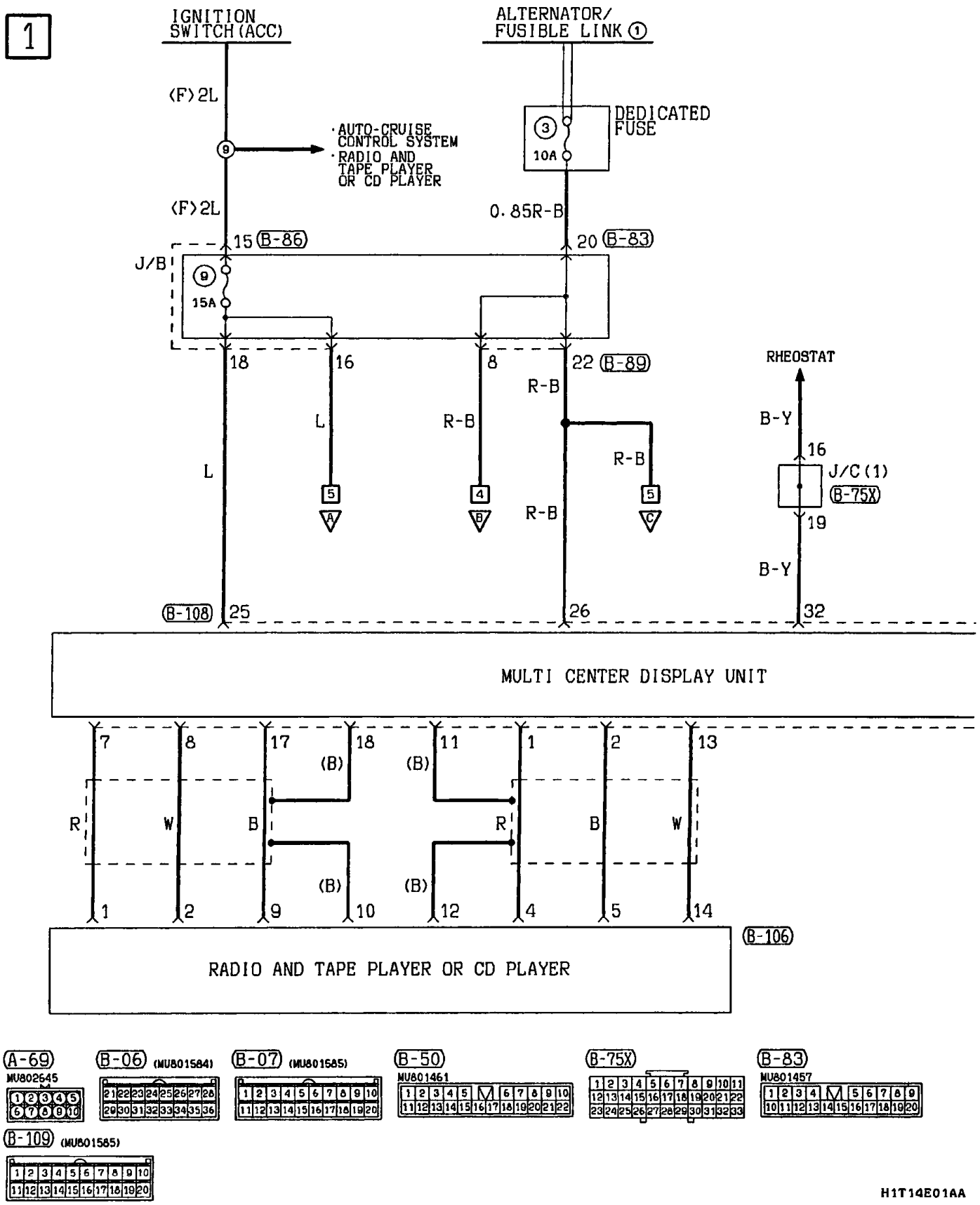

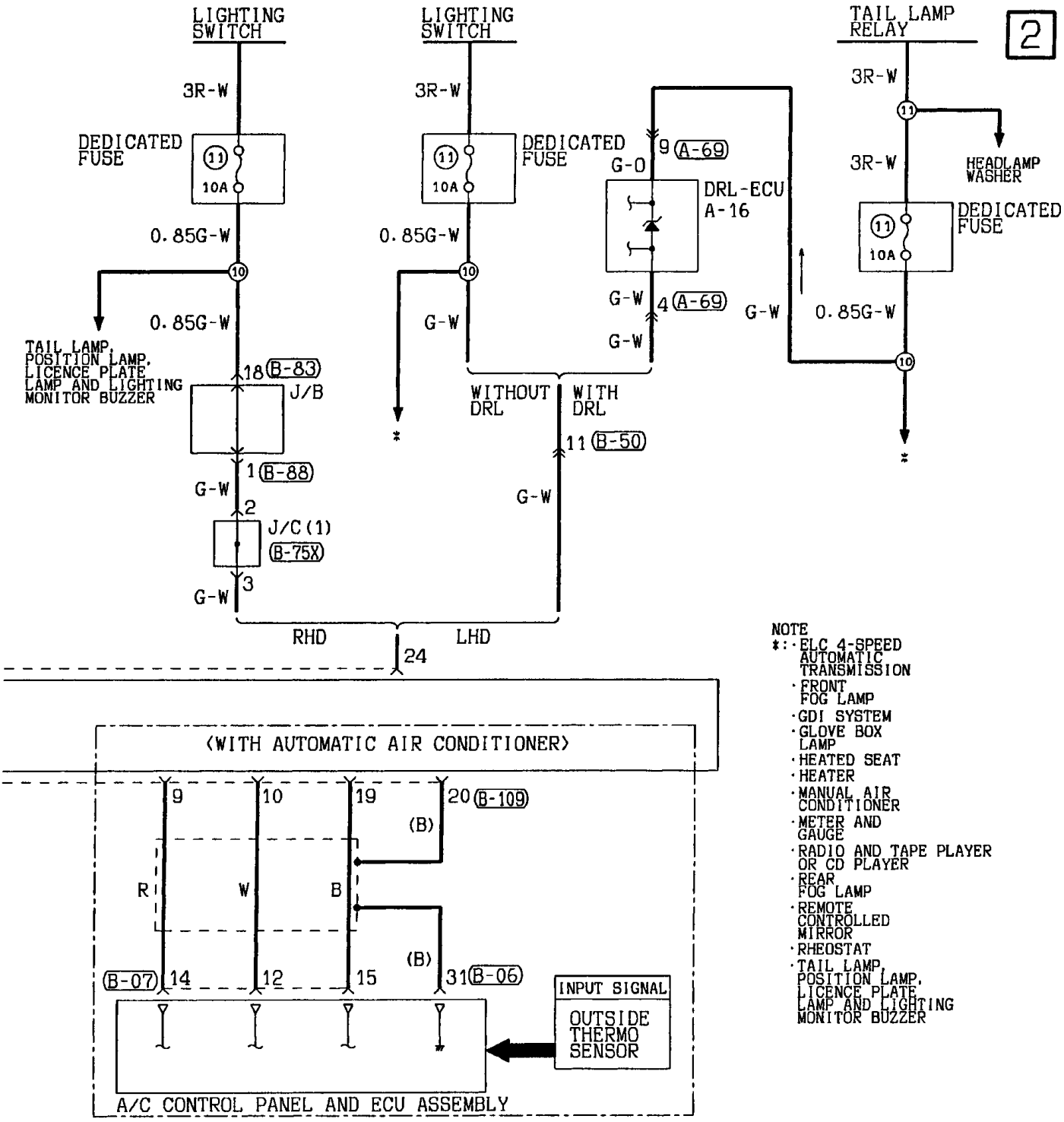

Wire colour code

B :Black	LG:Light green	G :Green	L :Blue	W :White	Y :Yellow	SB:Sky blue
BR:Brown	O :Orange	GR:Gray	R :Red	P :Pink	V :Violet	

H1T14E01AB

MULTI CENTER DISPLAY <Petrol-powered vehicles> (CONTINUED)

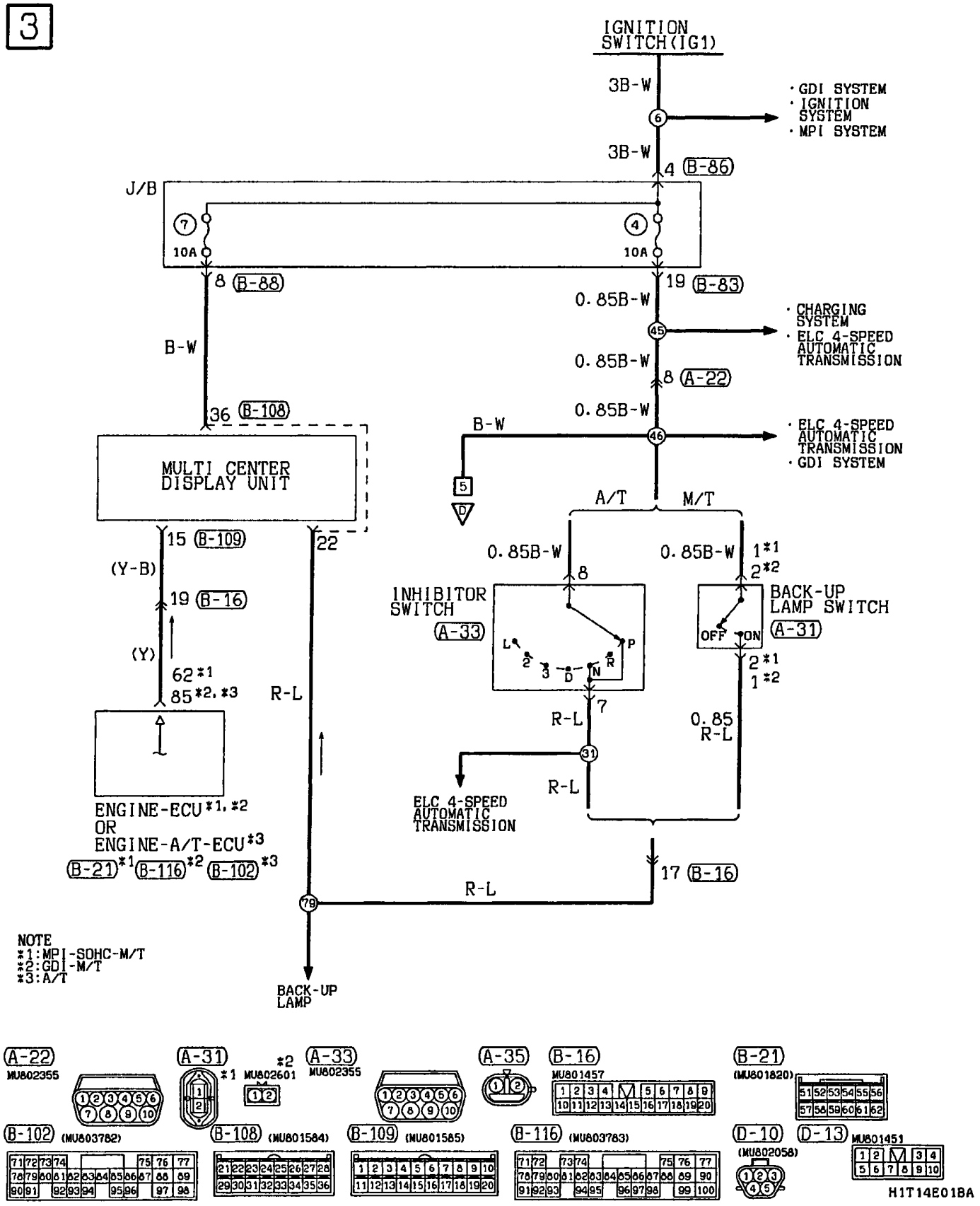

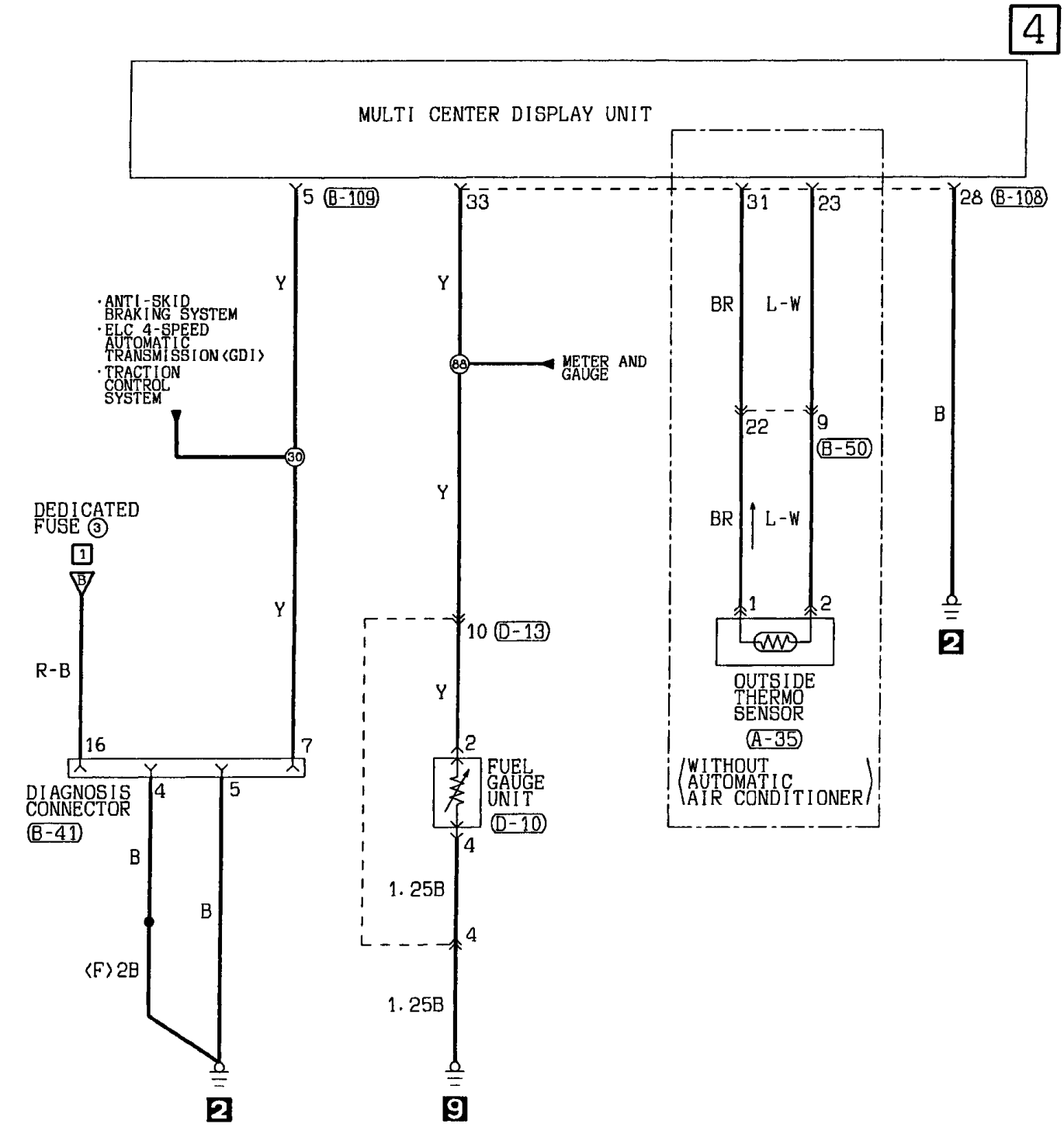

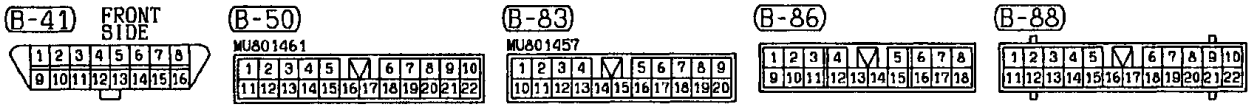

Wire colour code
B :Black LG:Light green G :Green L :Blue W :White Y :Yellow SB:Sky blue
BR:Brown O :Orange GR:Gray R :Red P :Pink V :Violet

H1T14E01BB

MULTI CENTER DISPLAY <Petrol-powered vehicles> (CONTINUED)

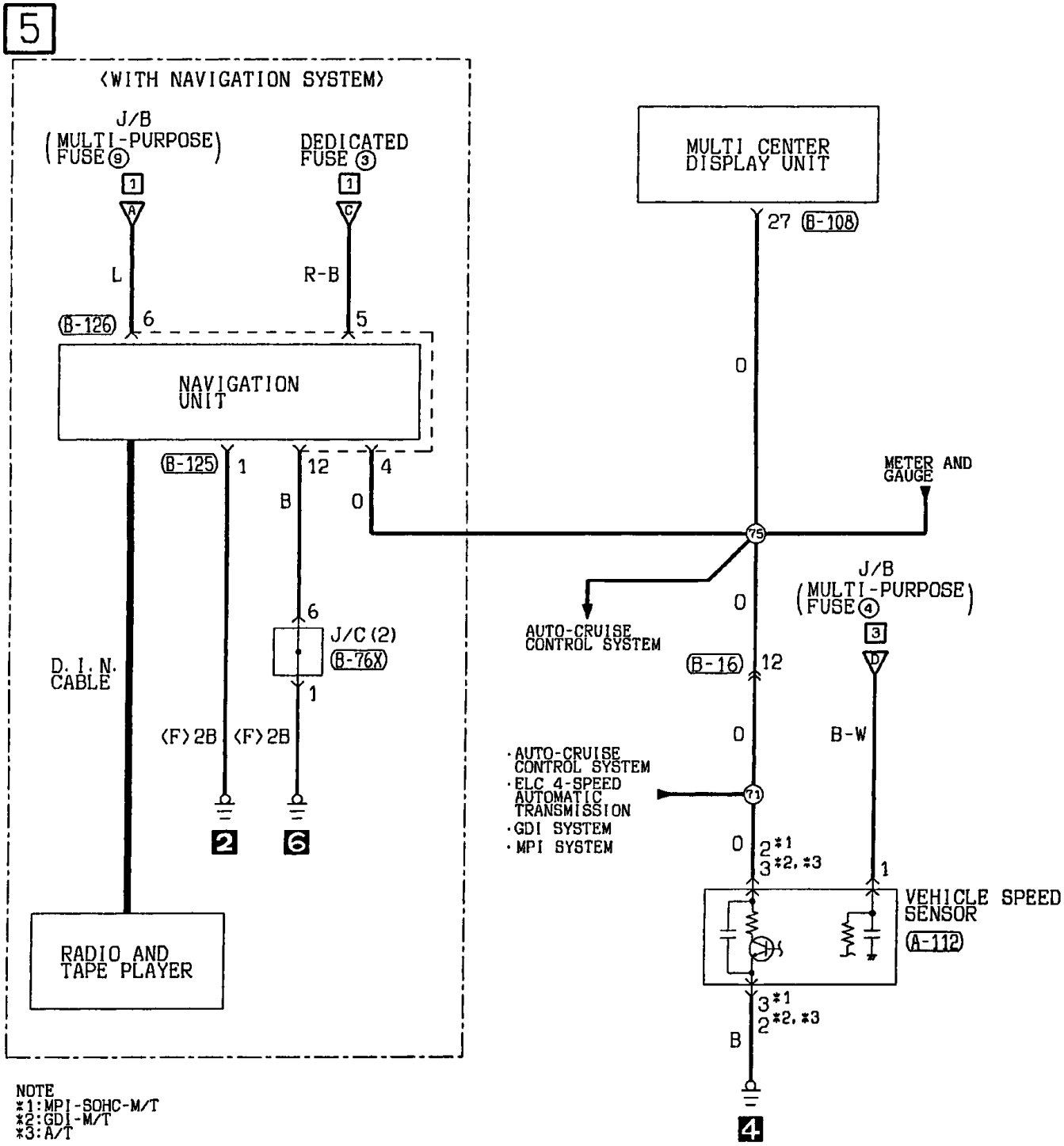

Wire colour code

B :Black	LG:Light green	G :Green	L :Blue	W :White	Y :Yellow	SB:Sky blue
BR:Brown	O :Orange	GR:Gray	R :Red	P :Pink	V :Violet	

H1T14E01CA

NOTES

MULTI CENTER DISPLAY

Diesel-powered vehicles <F9Q>

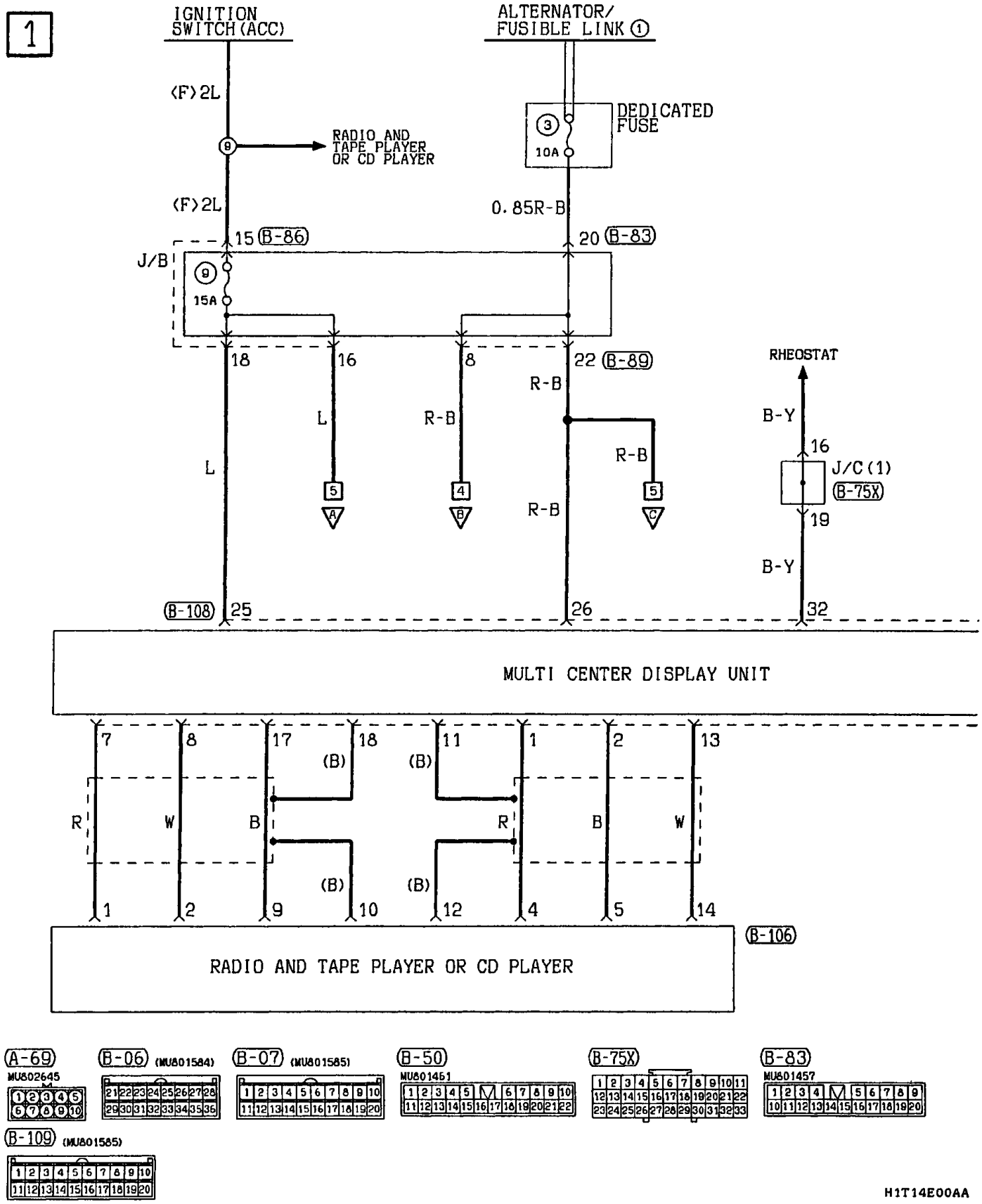

H1T14E00AA

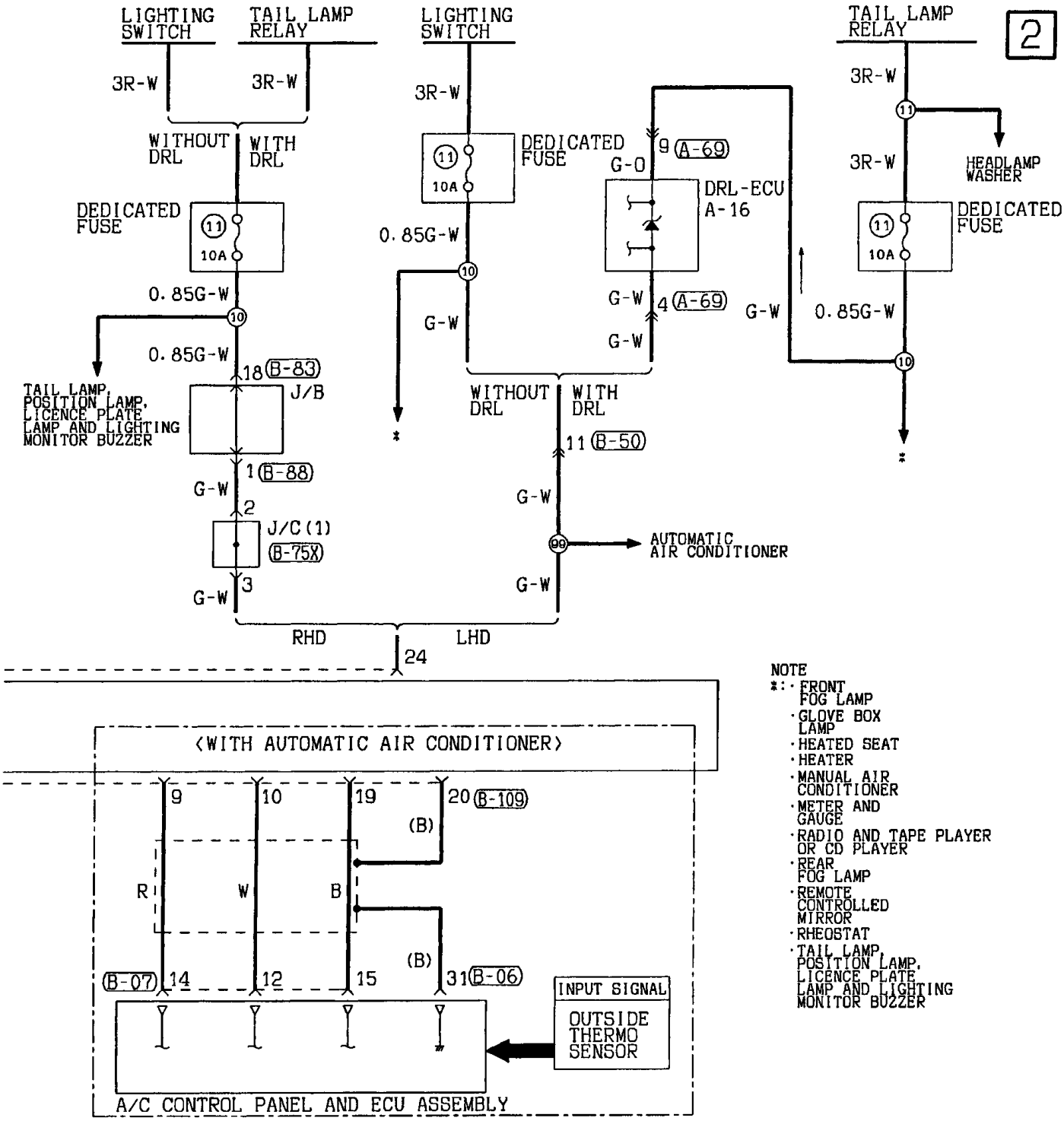

Wire colour code
B :Black LG:Light green G :Green L :Blue W :White Y :Yellow SB:Sky blue
BR:Brown O :Orange GR:Gray R :Red P :Pink V :Violet

H1T14E00AB

MULTI CENTER DISPLAY <Diesel-powered vehicles (F9Q)> (CONTINUED)

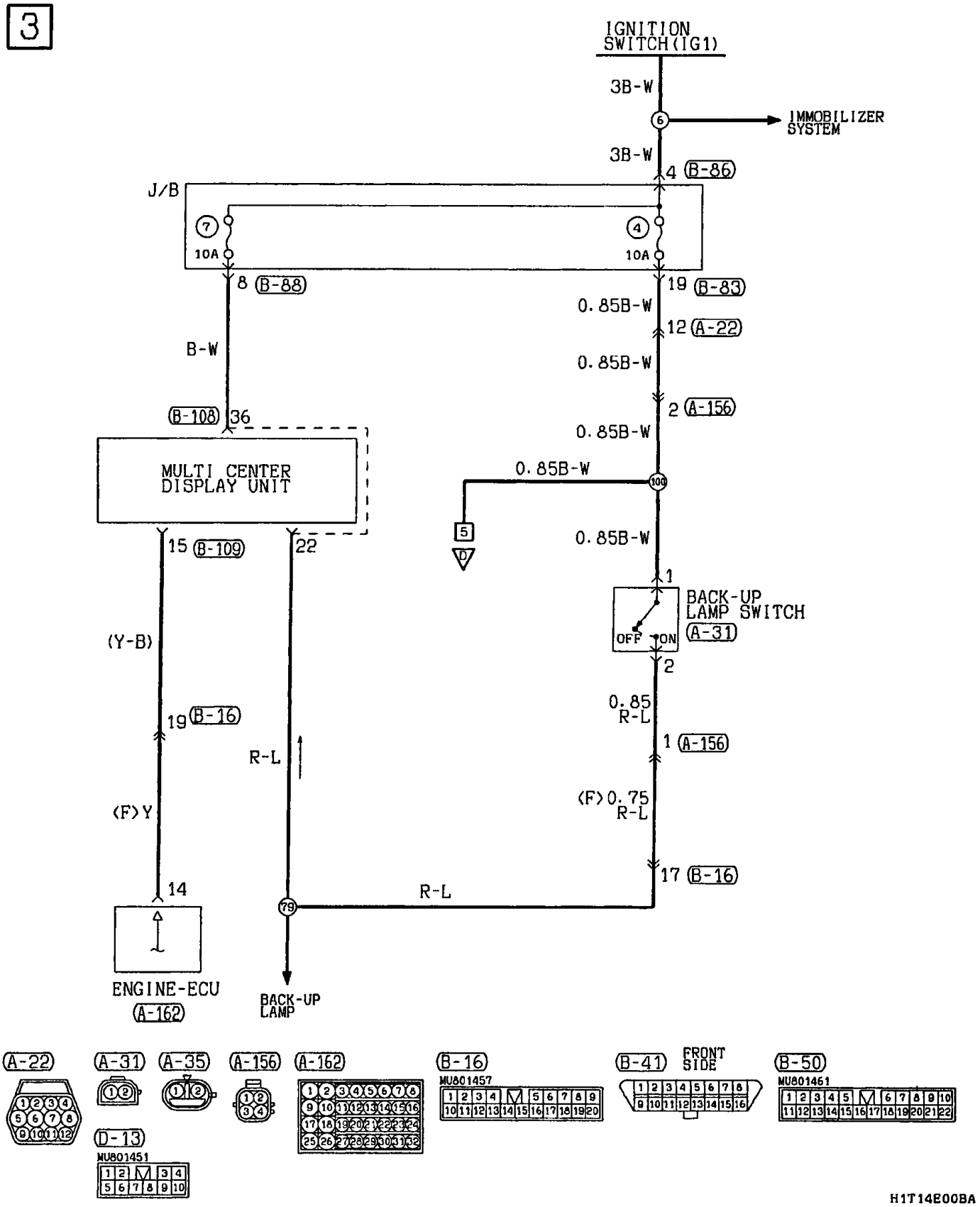

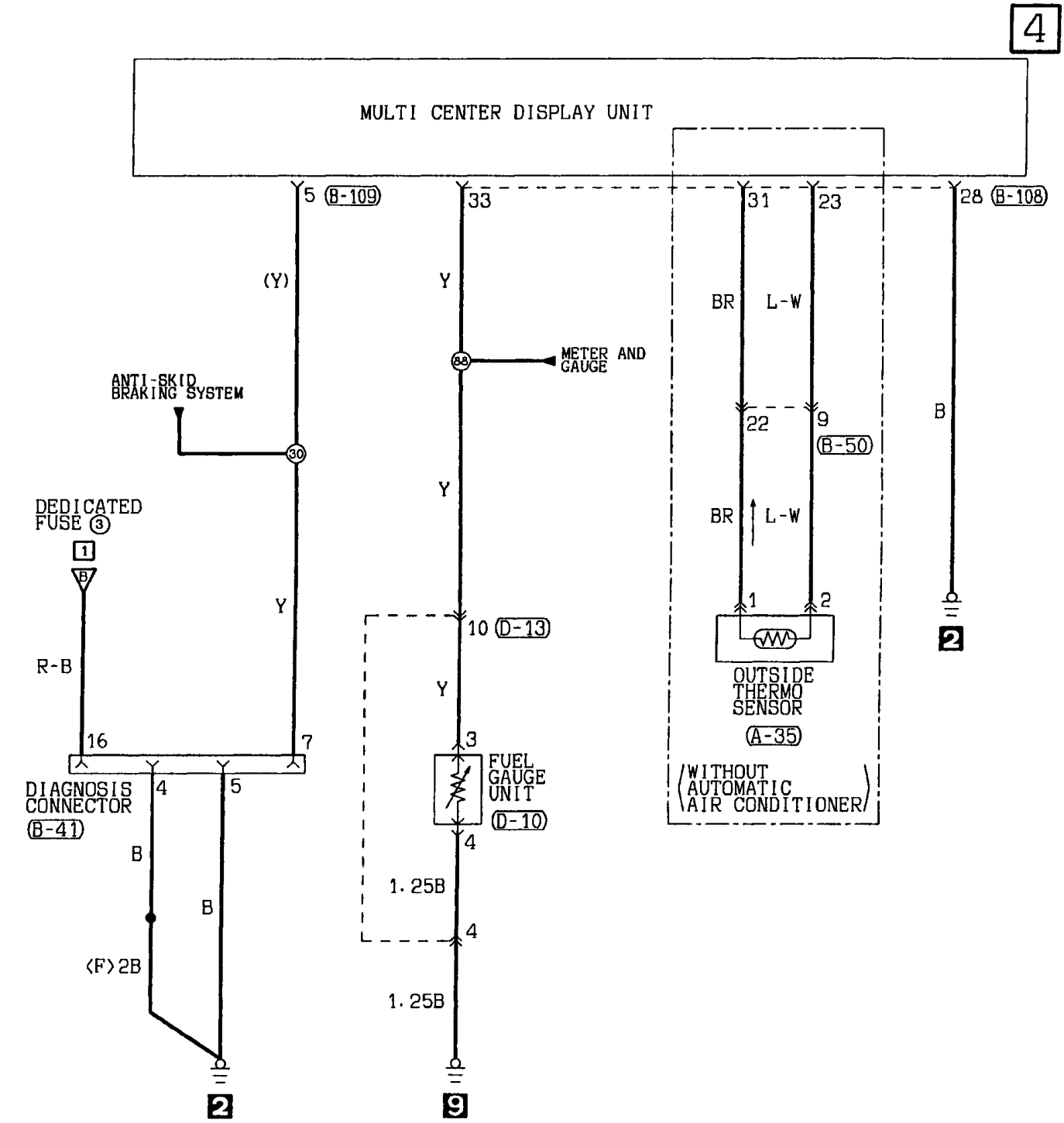

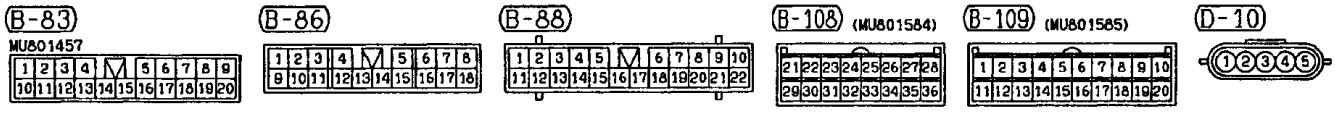

Wire colour code
B :Black LG:Light green G :Green L :Blue W :White Y :Yellow SB:Sky blue
BR:Brown O :Orange GR:Gray R :Red P :Pink V :Violet

H1T14E00BB

MULTI CENTER DISPLAY <Diesel-powered vehicles (F9Q)> (CONTINUED)

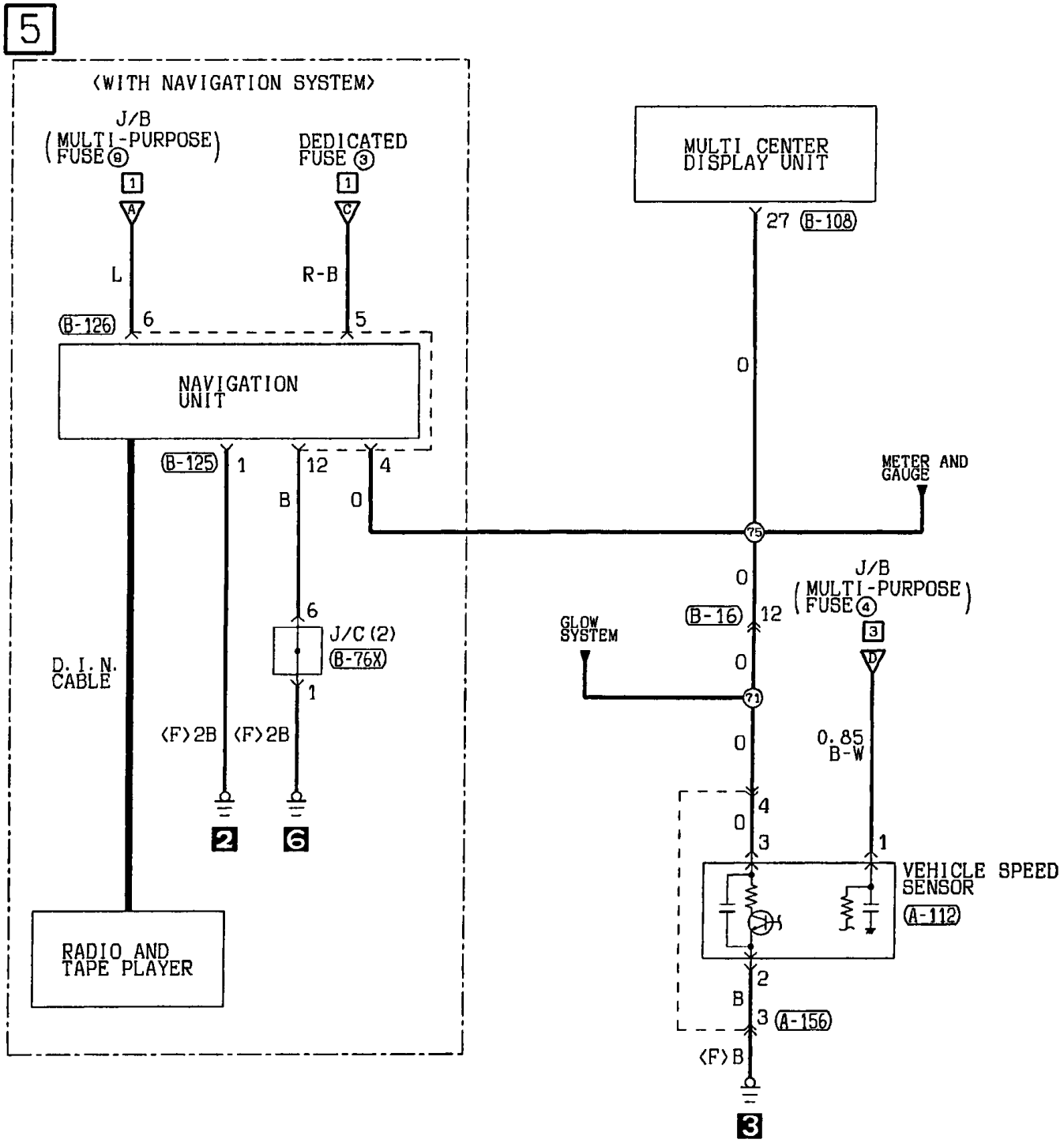

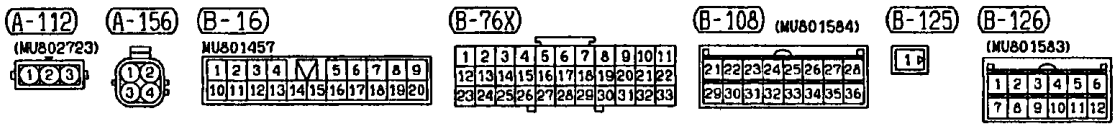

Wire colour code
B :Black LG:Light green G :Green L :Blue W :White Y :Yellow SB:Sky blue
BR:Brown O :Orange GR:Gray R :Red P :Pink V :Violet

H1T14E00CA

NOTES

HEATED SEAT

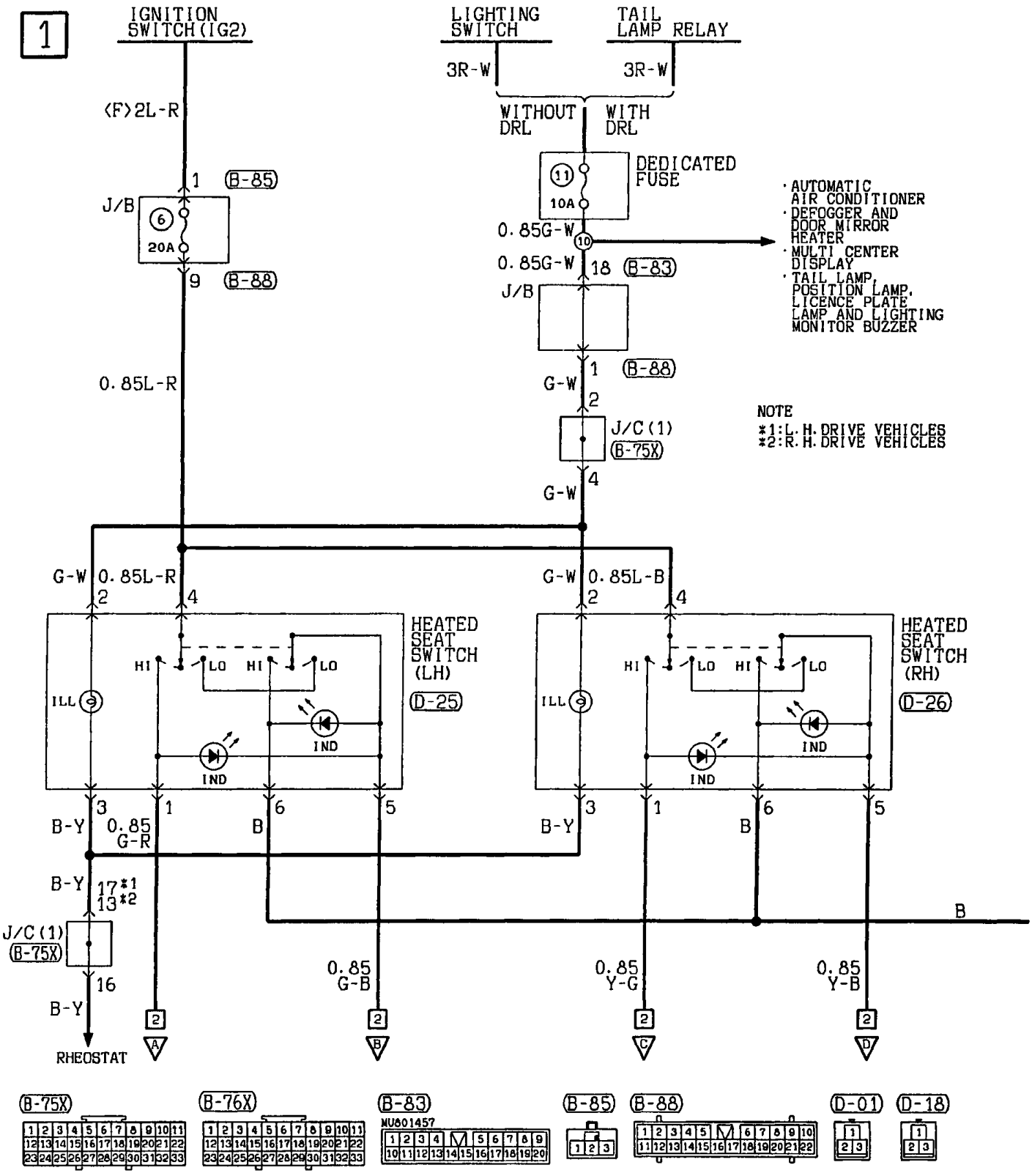

H1T15E00AA

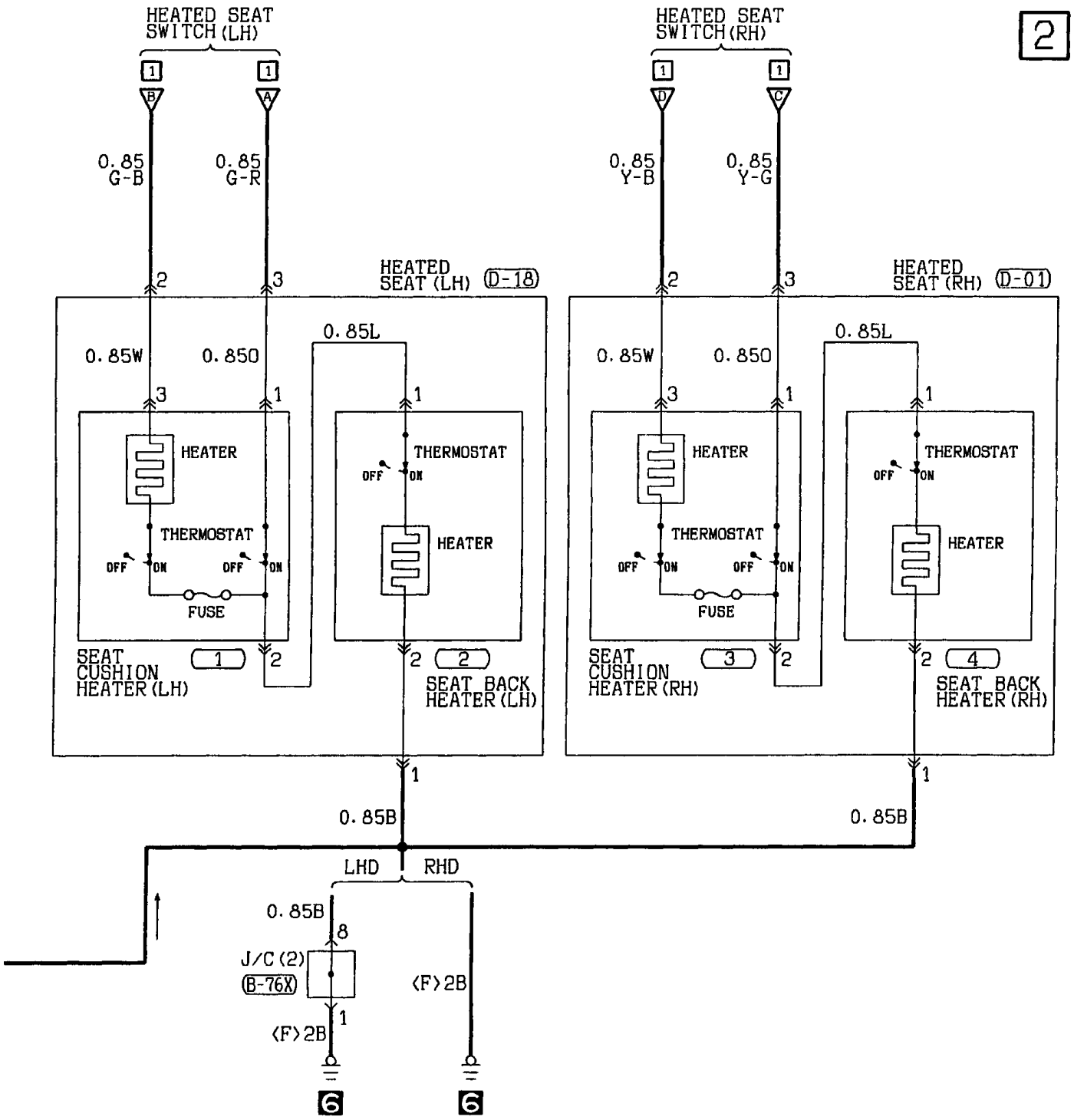

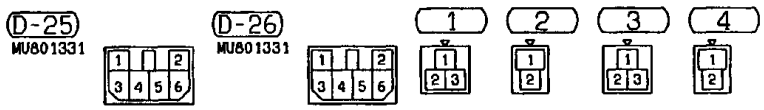

Wire colour code

B :Black	LG:Light green	G :Green	L :Blue	W :White	Y :Yellow	SB:Sky blue
BR:Brown	O :Orange	GR:Gray	R :Red	P :Pink	V :Violet	

H1T15E00AB

ANTI-LOCK BRAKING SYSTEM (ABS)

Vehicles without TCL

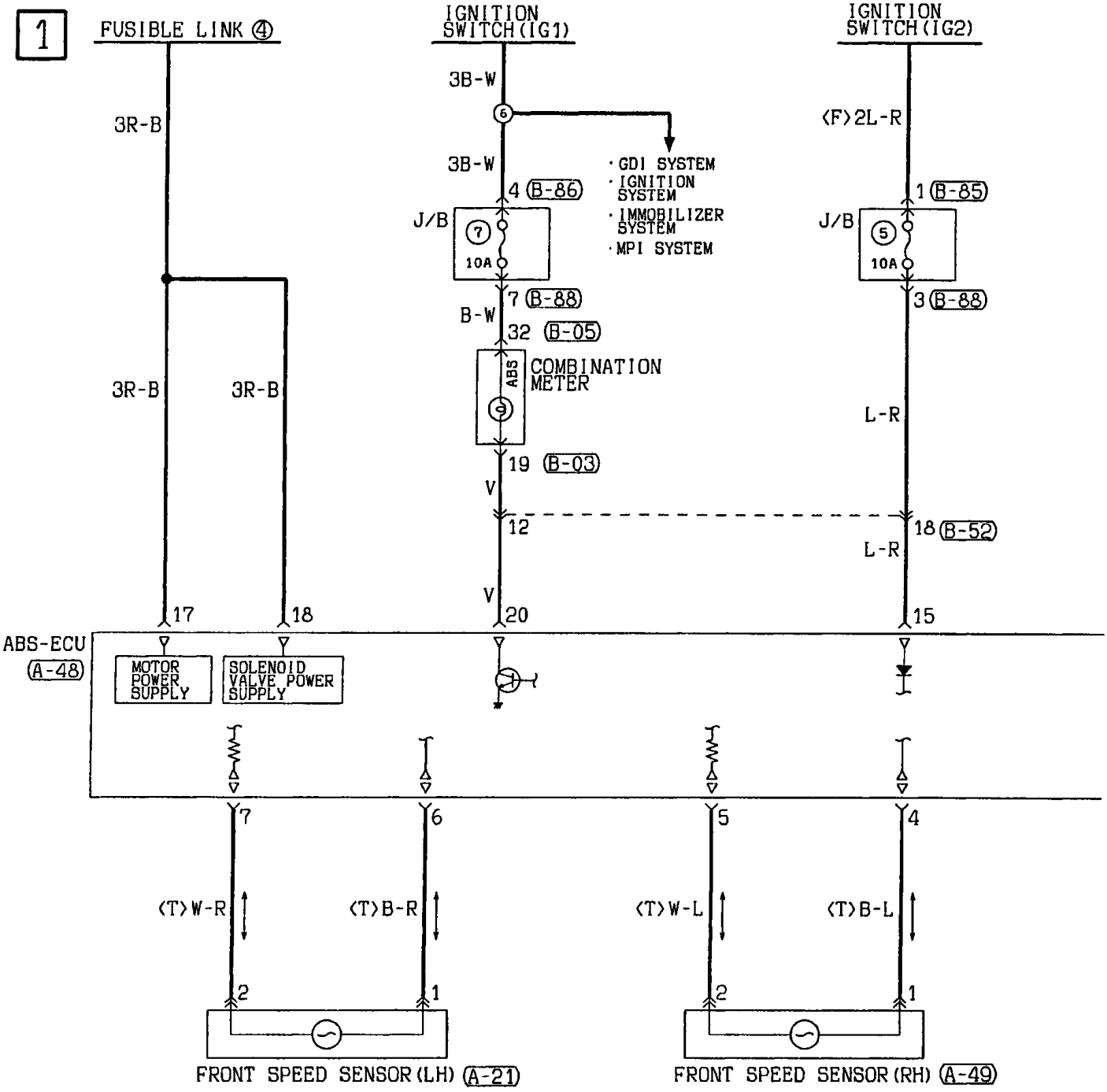

NOTE
*1:WITHOUT AUTO-CRUISE CONTROL SYSTEM
*2:WITH AUTO-CRUISE CONTROL SYSTEM

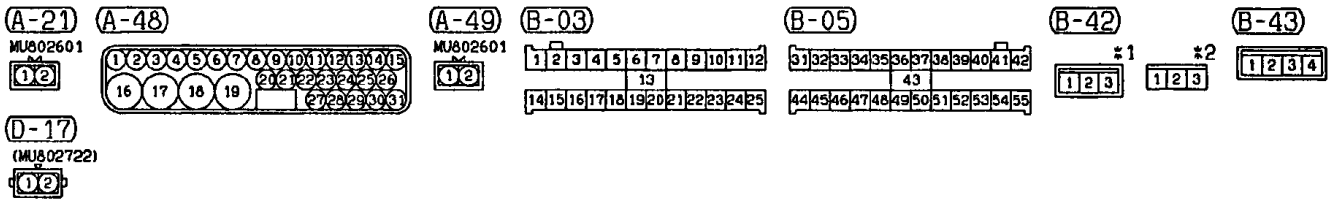

H1T15E01AA

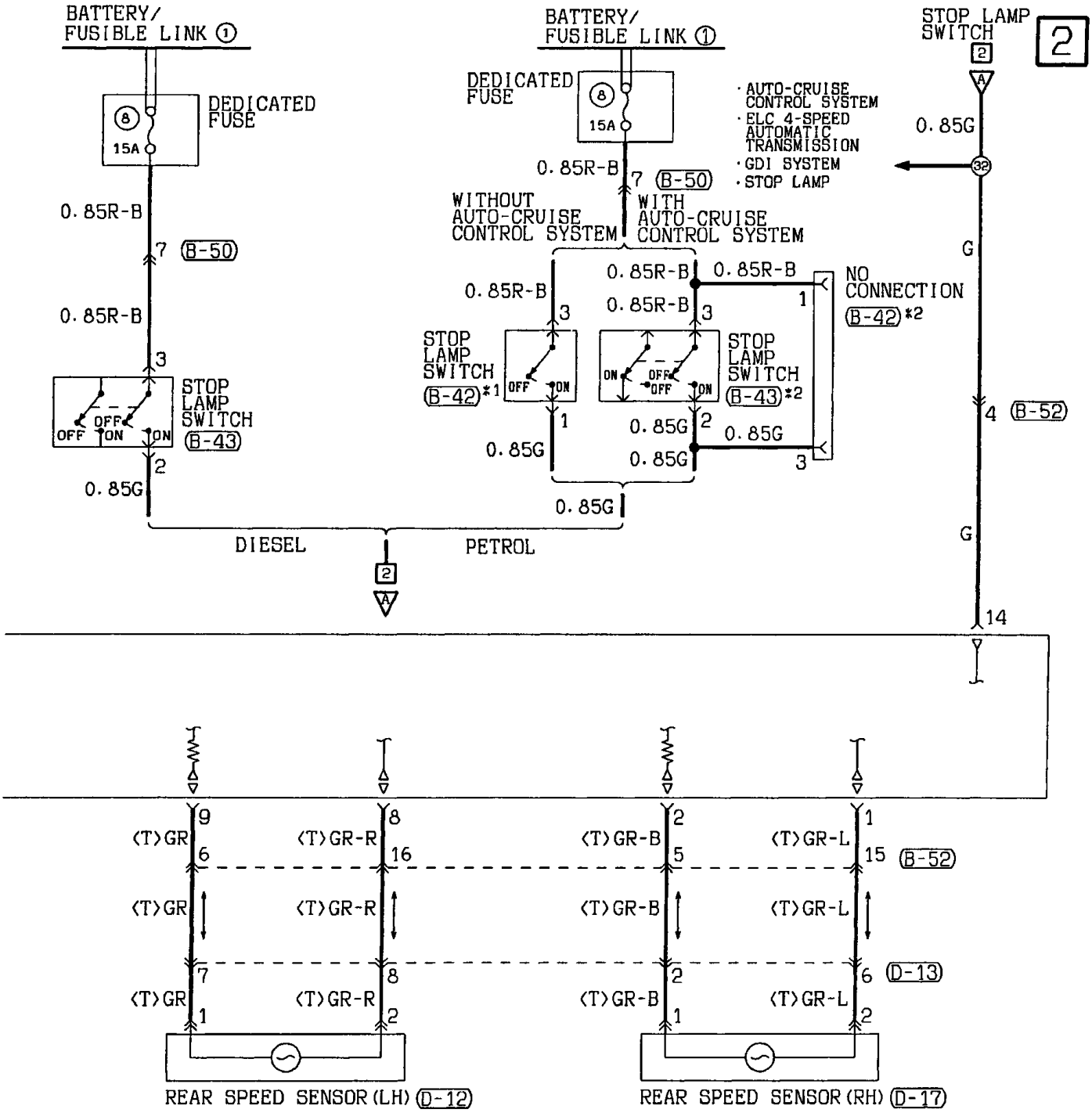

Wire colour code

B :Black	LG:Light green	G :Green	L :Blue	W :White	Y :Yellow	SB:Sky blue
BR:Brown	O :Orange	GR:Gray	R :Red	P :Pink	V :Violet	

H1T15E01AB

AUTO-CRUISE CONTROL SYSTEM

M/T

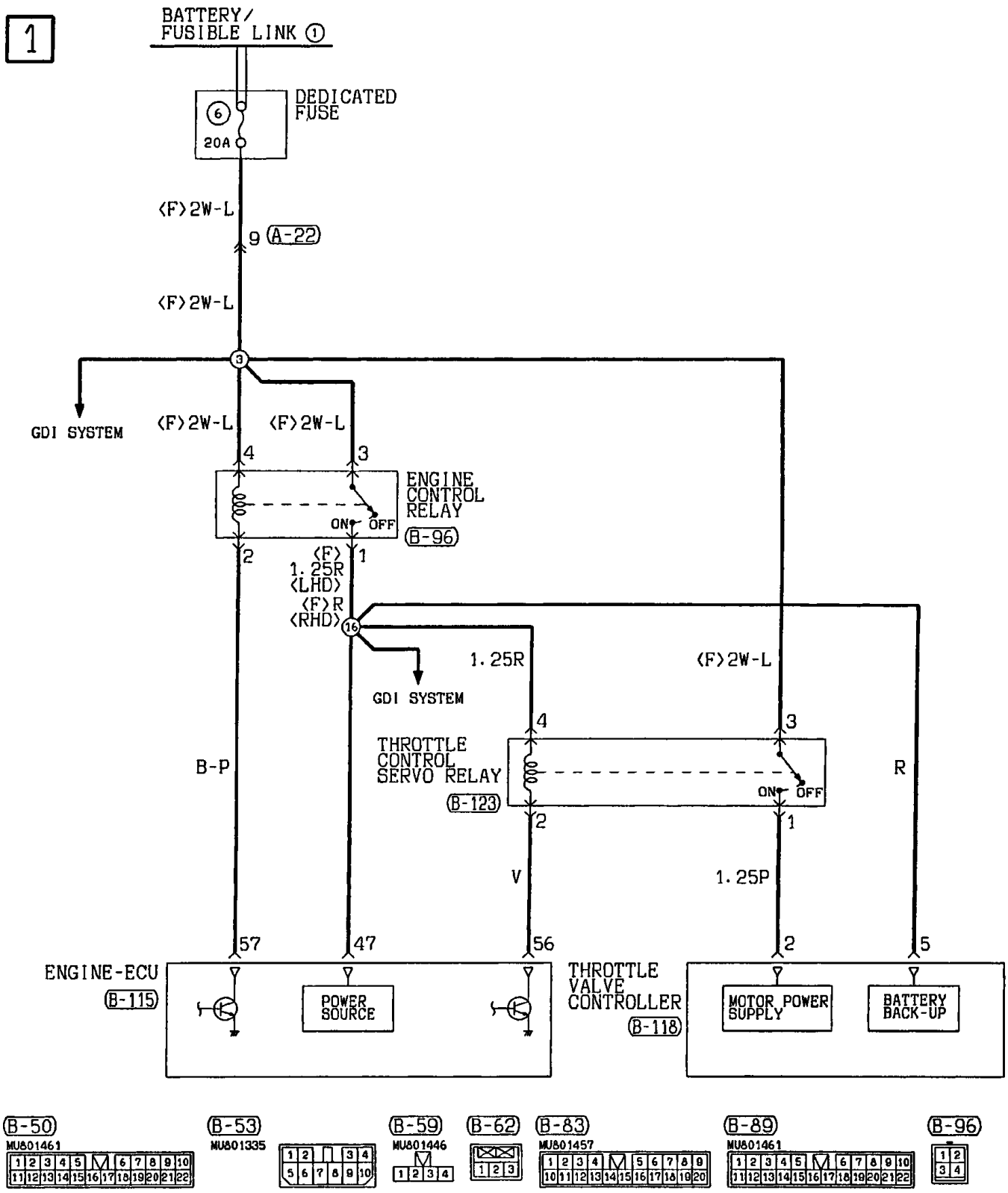

H1T15E02AA

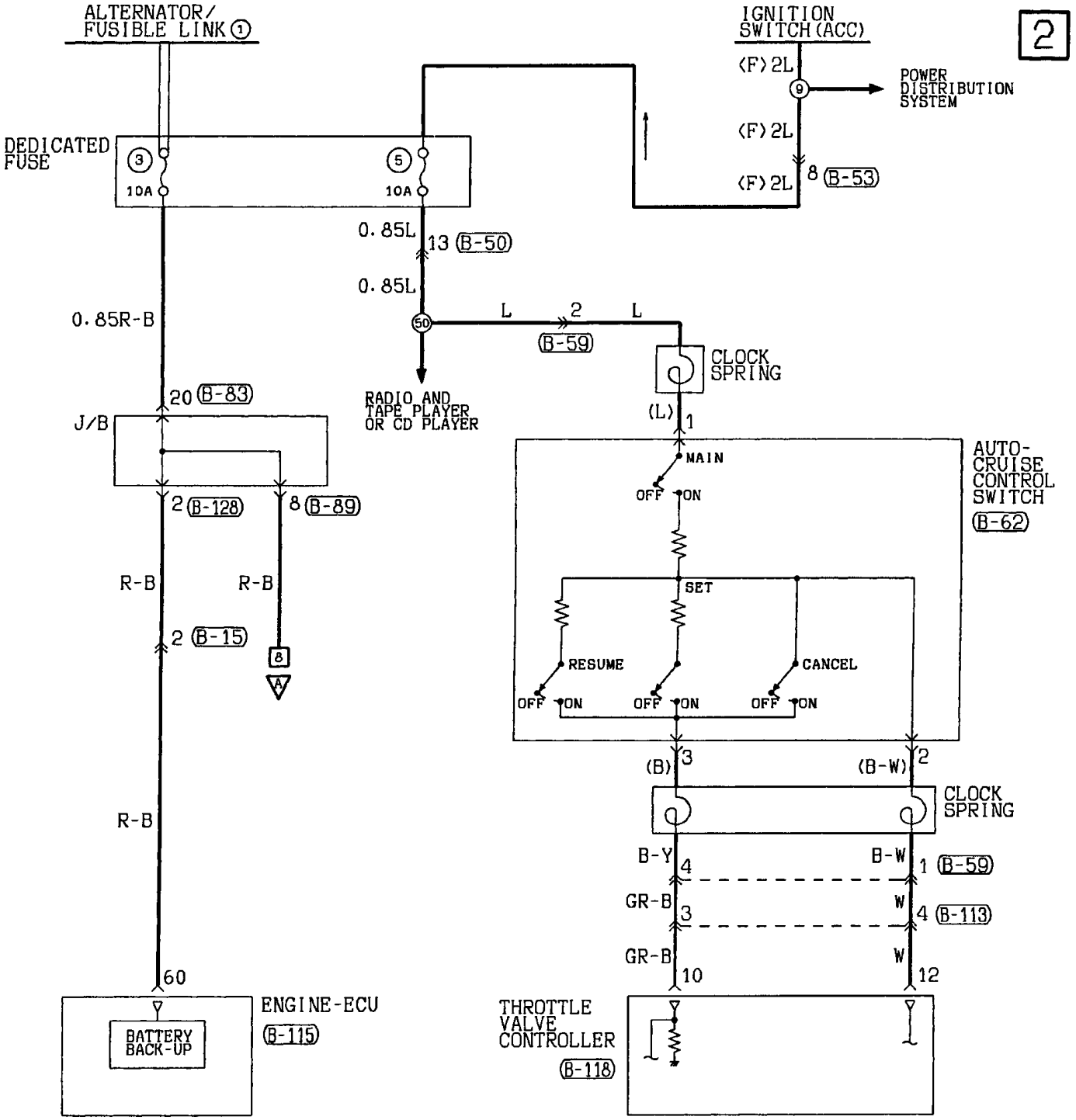

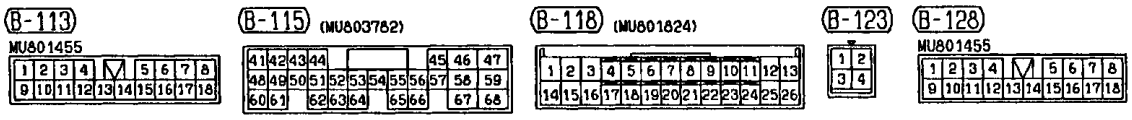

Wire colour code

B :Black	LG:Light green	G :Green	L :Blue	W :White	Y :Yellow	SB:Sky blue
BR:Brown	O :Orange	GR:Gray	R :Red	P :Pink	V :Violet	

H1T15E02AB

AUTO-CRUISE CONTROL SYSTEM <M/T> (CONTINUED)

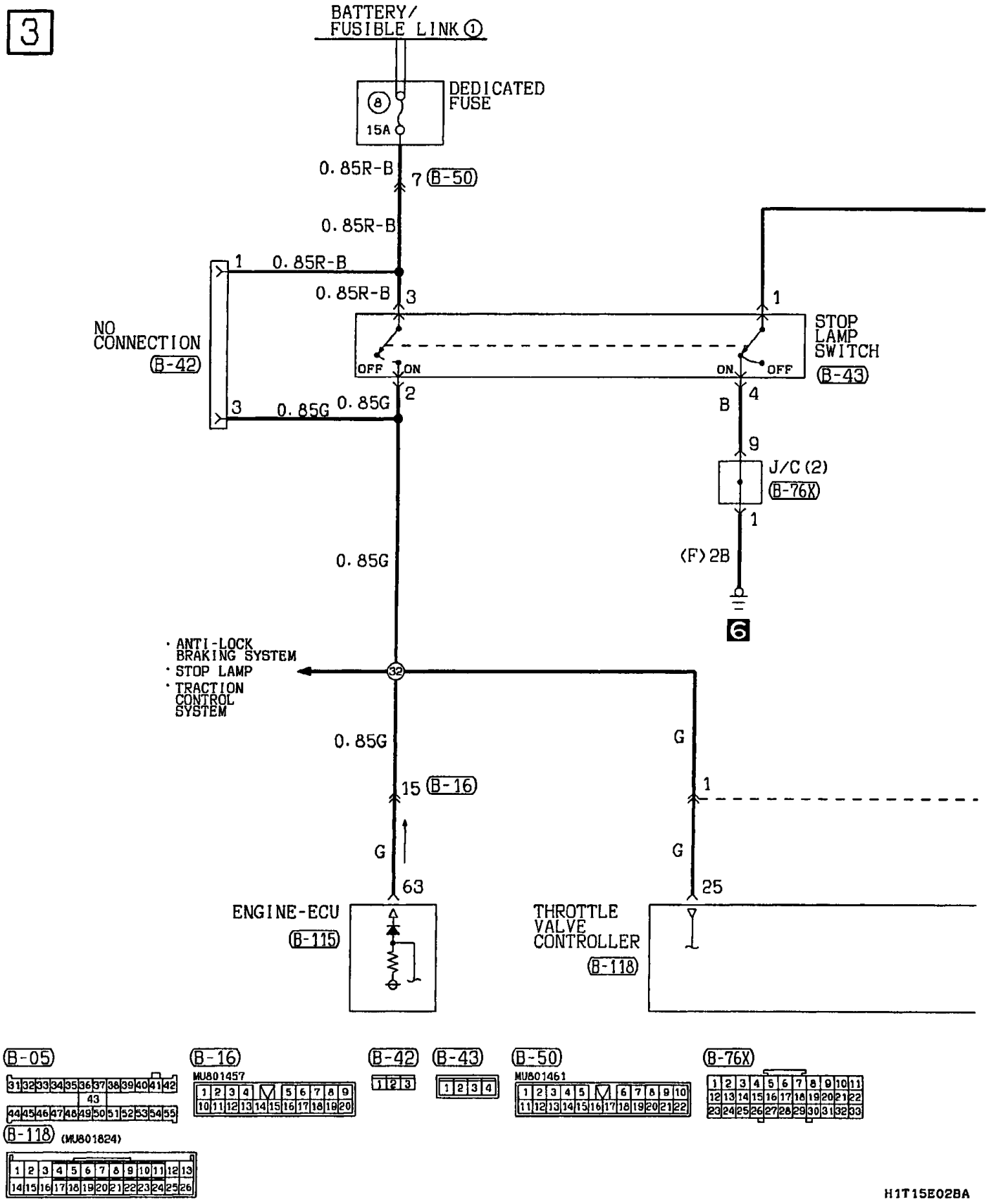

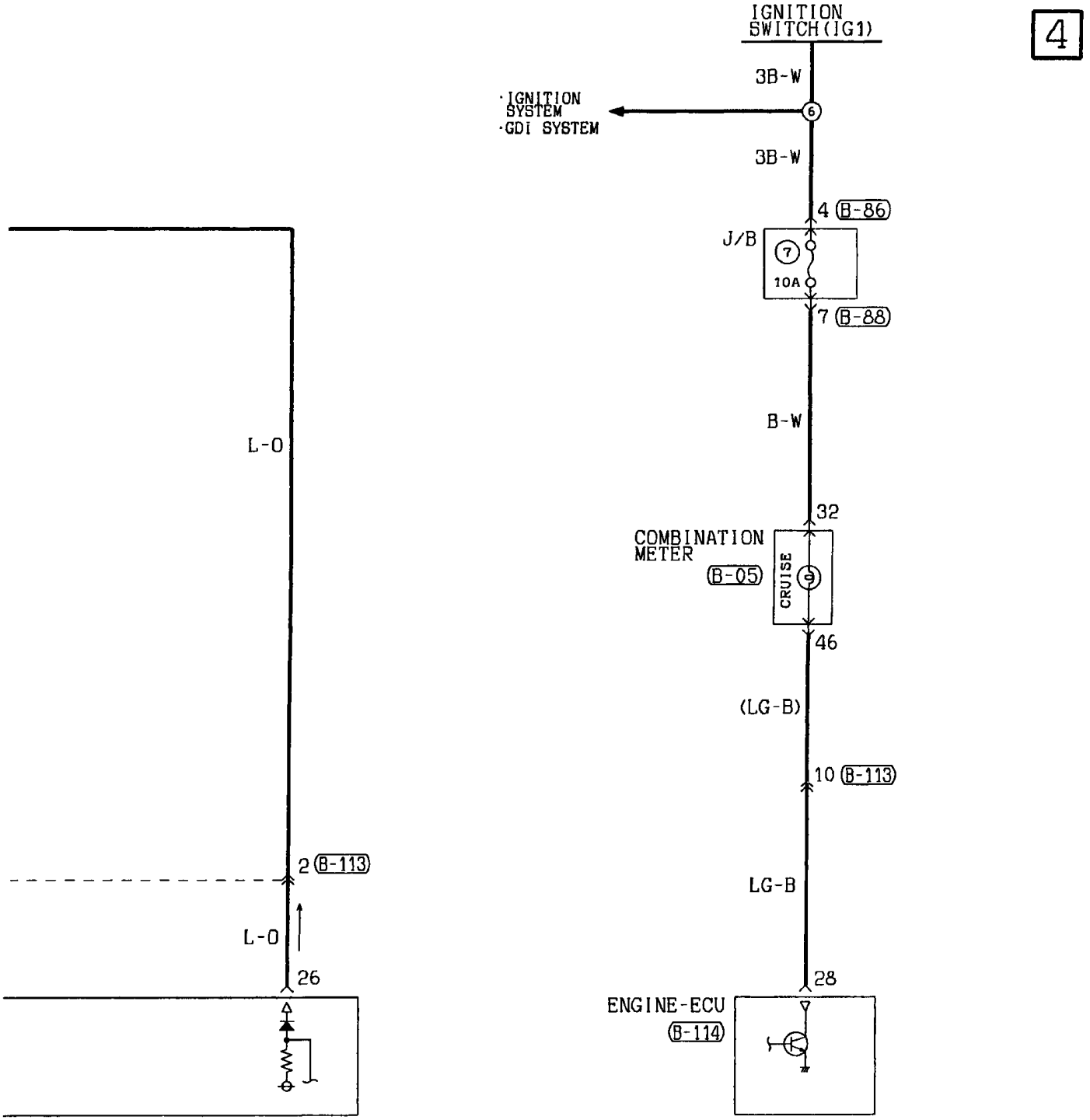

Wire colour code
B :Black LG:Light green G :Green L :Blue W :White Y :Yellow SB:Sky blue
BR:Brown O :Orange GR:Gray R :Red P :Pink V :Violet

H1T15E02BB

AUTO-CRUISE CONTROL SYSTEM <M/T> (CONTINUED)

5

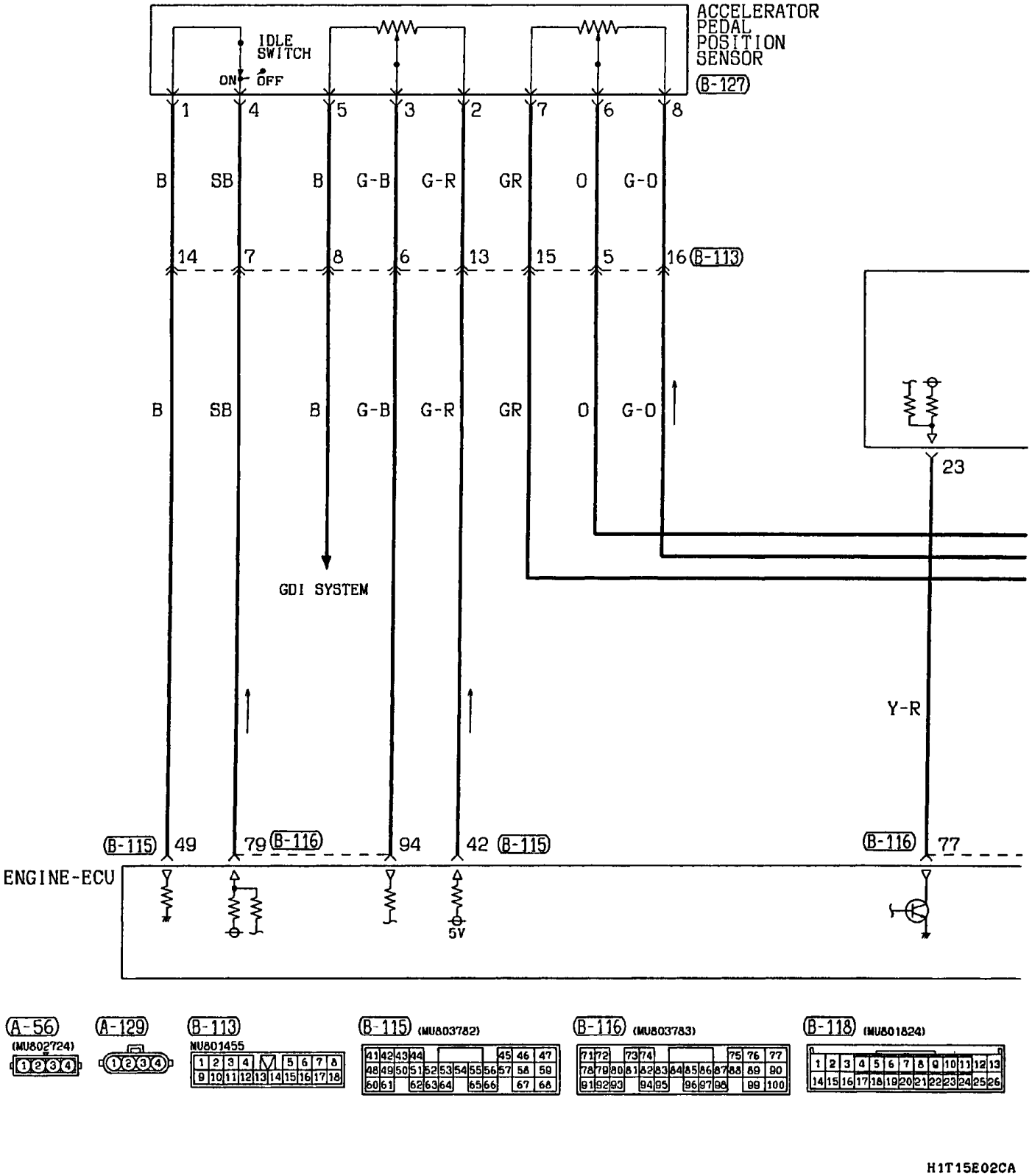

H1T15E02CA

6

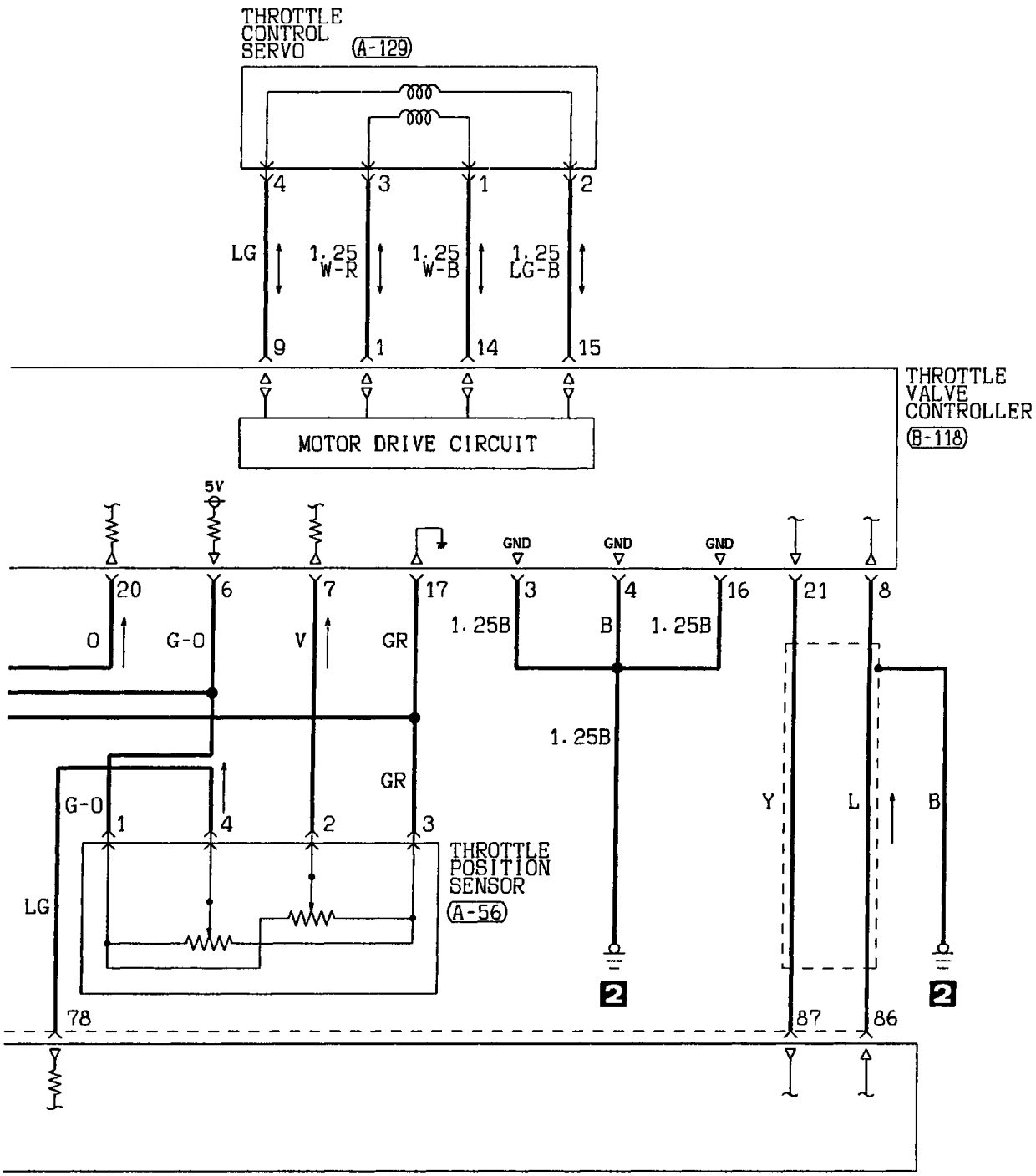

B-127
(NU802073)

Wire colour code
B :Black LG:Light green G :Green L :Blue W :White Y :Yellow SB:Sky blue
BR:Brown O :Orange GR:Gray R :Red P :Pink V :Violet

H1T15E02CB

AUTO-CRUISE CONTROL SYSTEM <M/T> (CONTINUED)

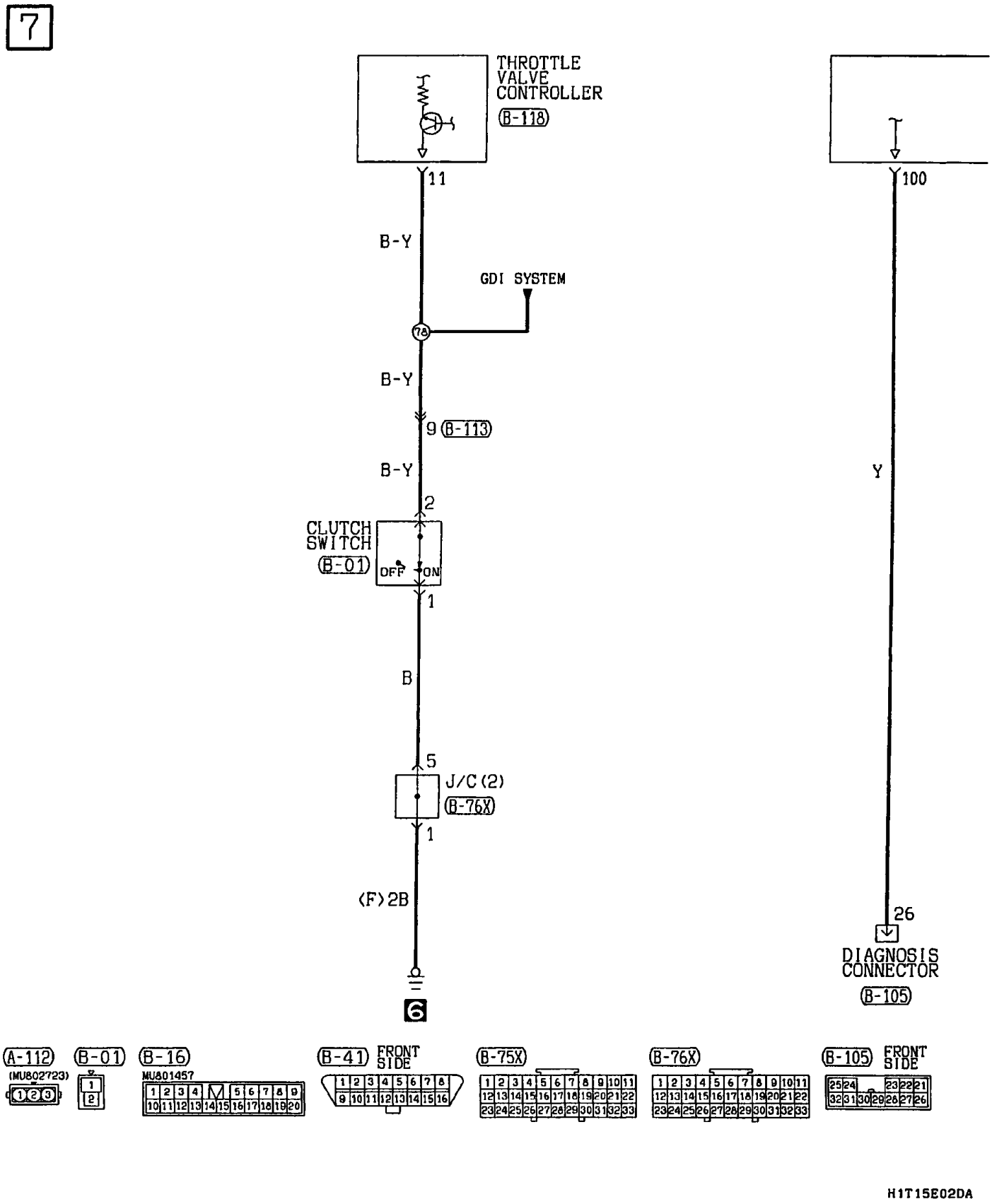

H1T15E02DA

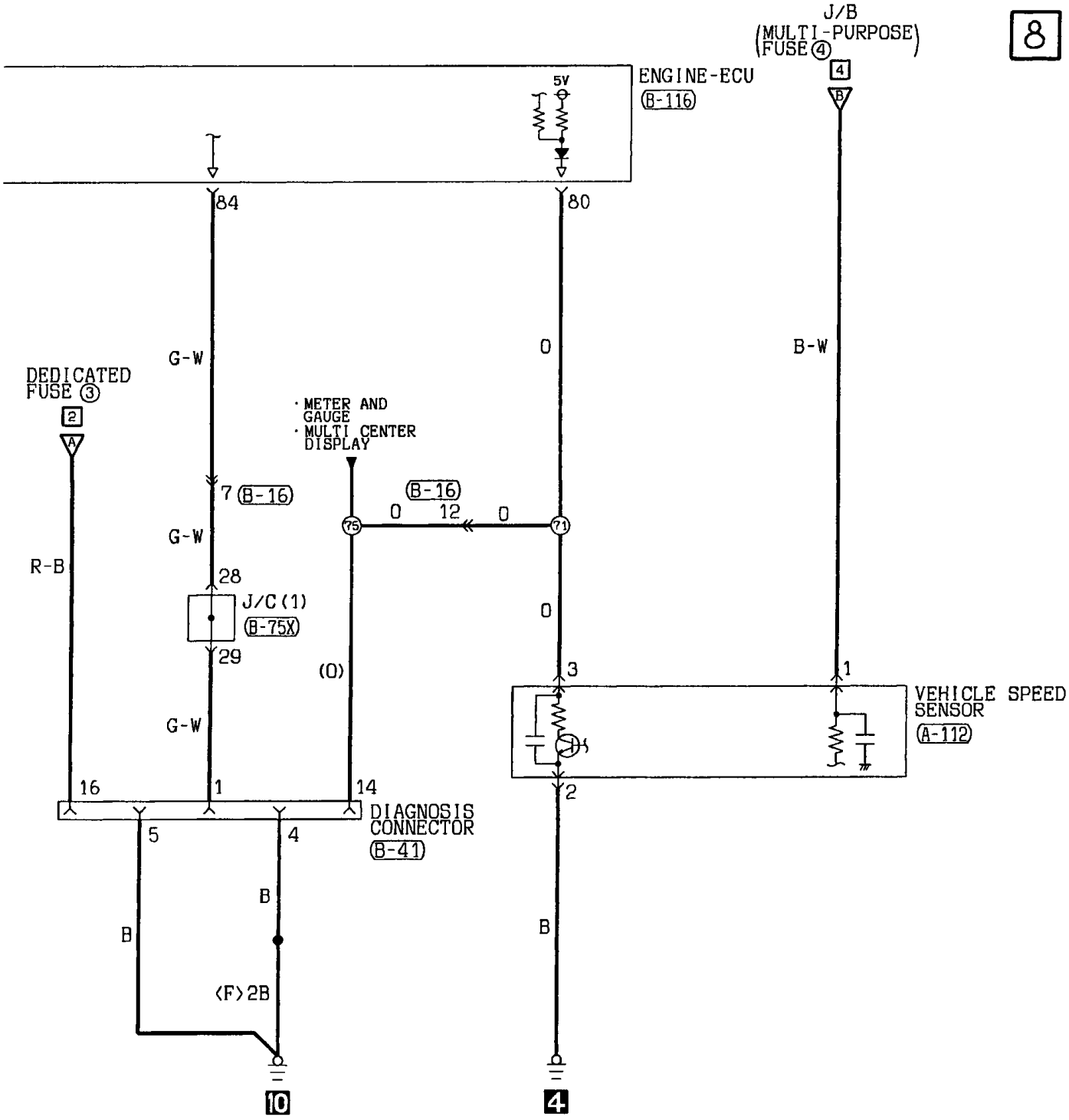

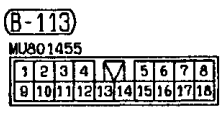

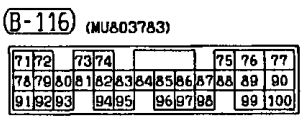

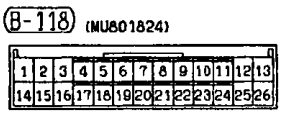

Wire colour code

B :Black	LG:Light green	G :Green	L :Blue	W :White	Y :Yellow	SB:Sky blue
BR:Brown	O :Orange	GR:Gray	R :Red	P :Pink	V :Violet	

H1T15E02DB

AUTO-CRUISE CONTROL SYSTEM

A/T

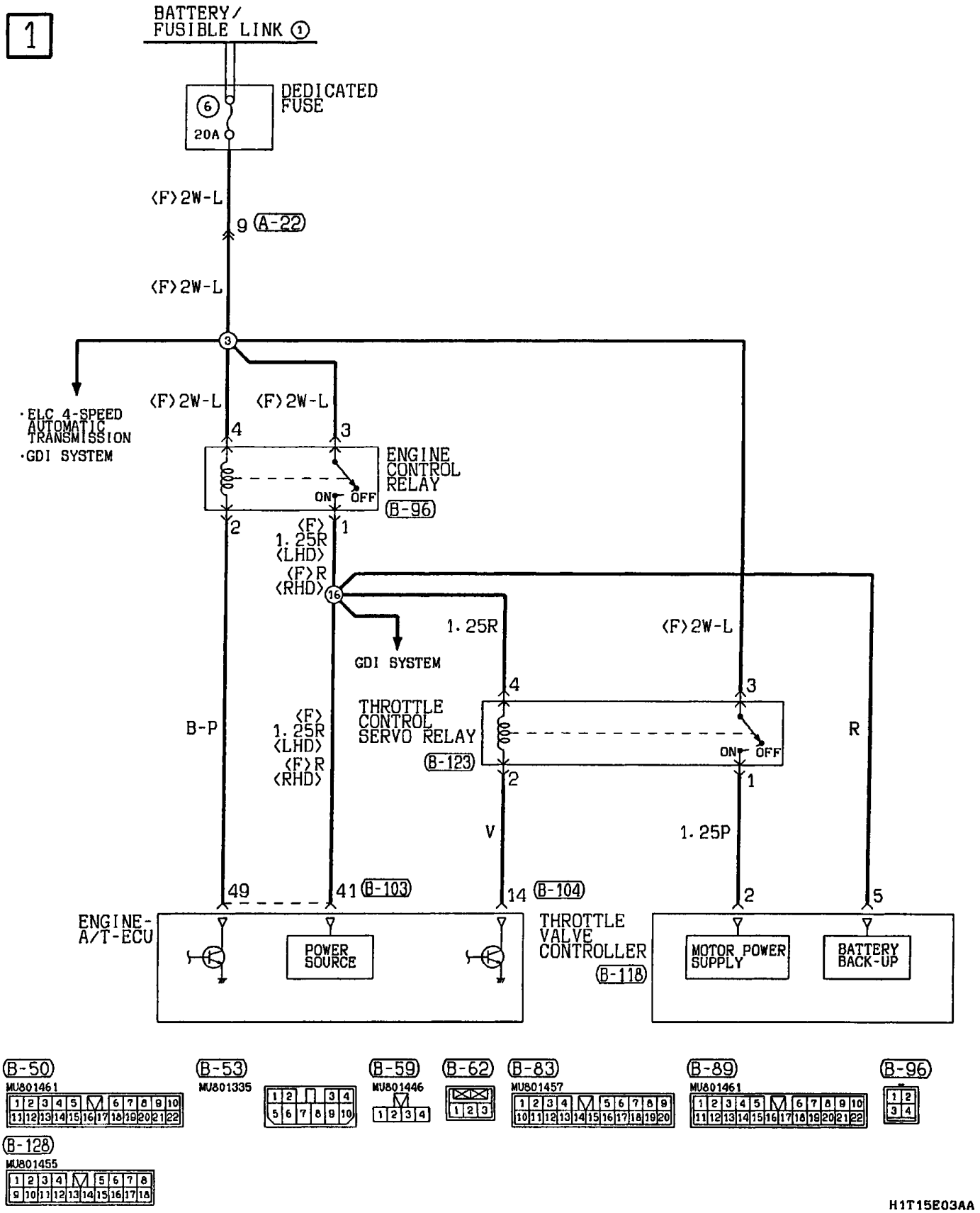

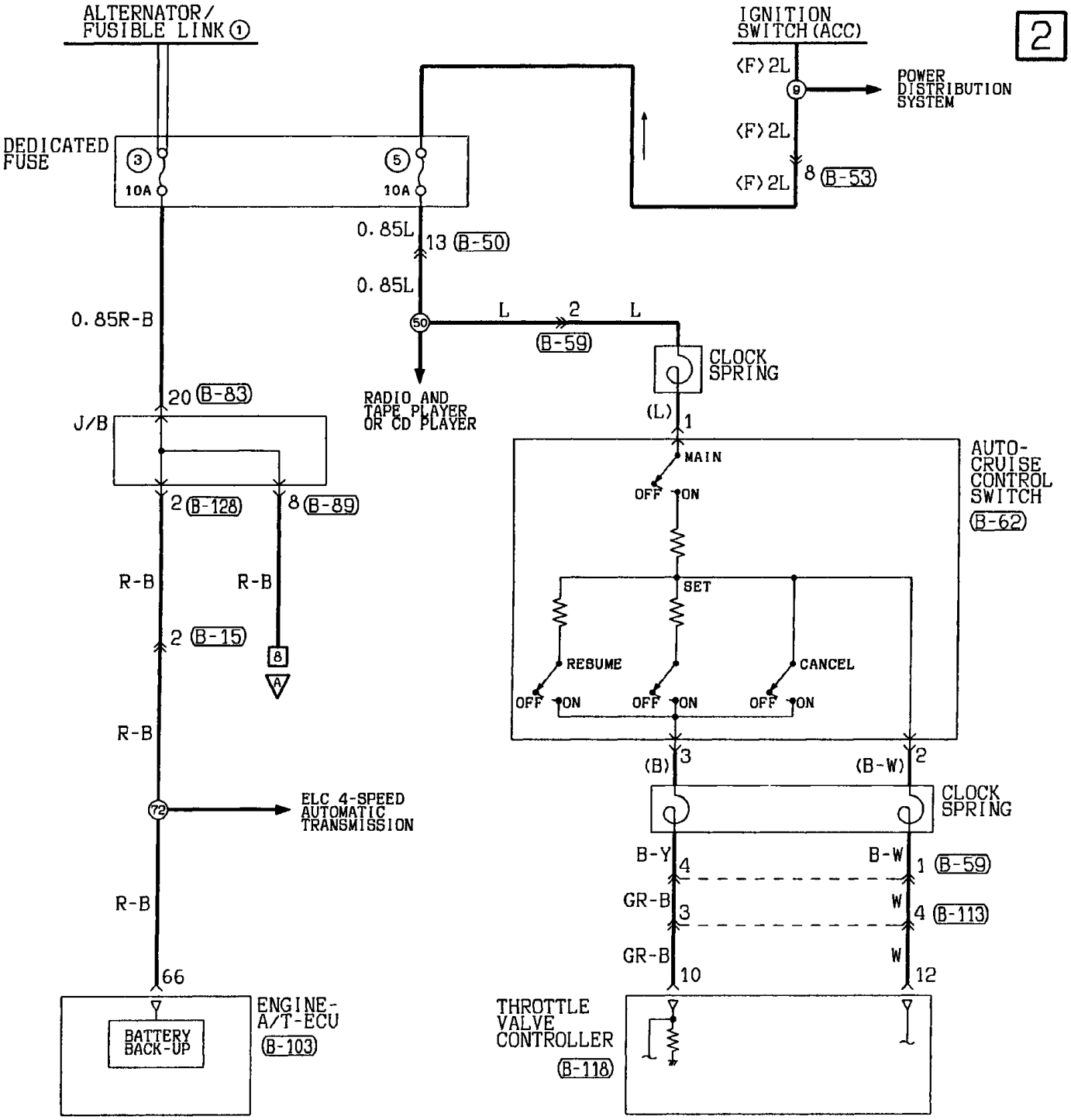

Wire colour code

B :Black	LG:Light green	G :Green	L :Blue	W :White	Y :Yellow	SB:Sky blue
BR:Brown	O :Orange	GR:Gray	R :Red	P :Pink	V :Violet	

H1T15E03AB

AUTO-CRUISE CONTROL SYSTEM <A/T> (CONTINUED)

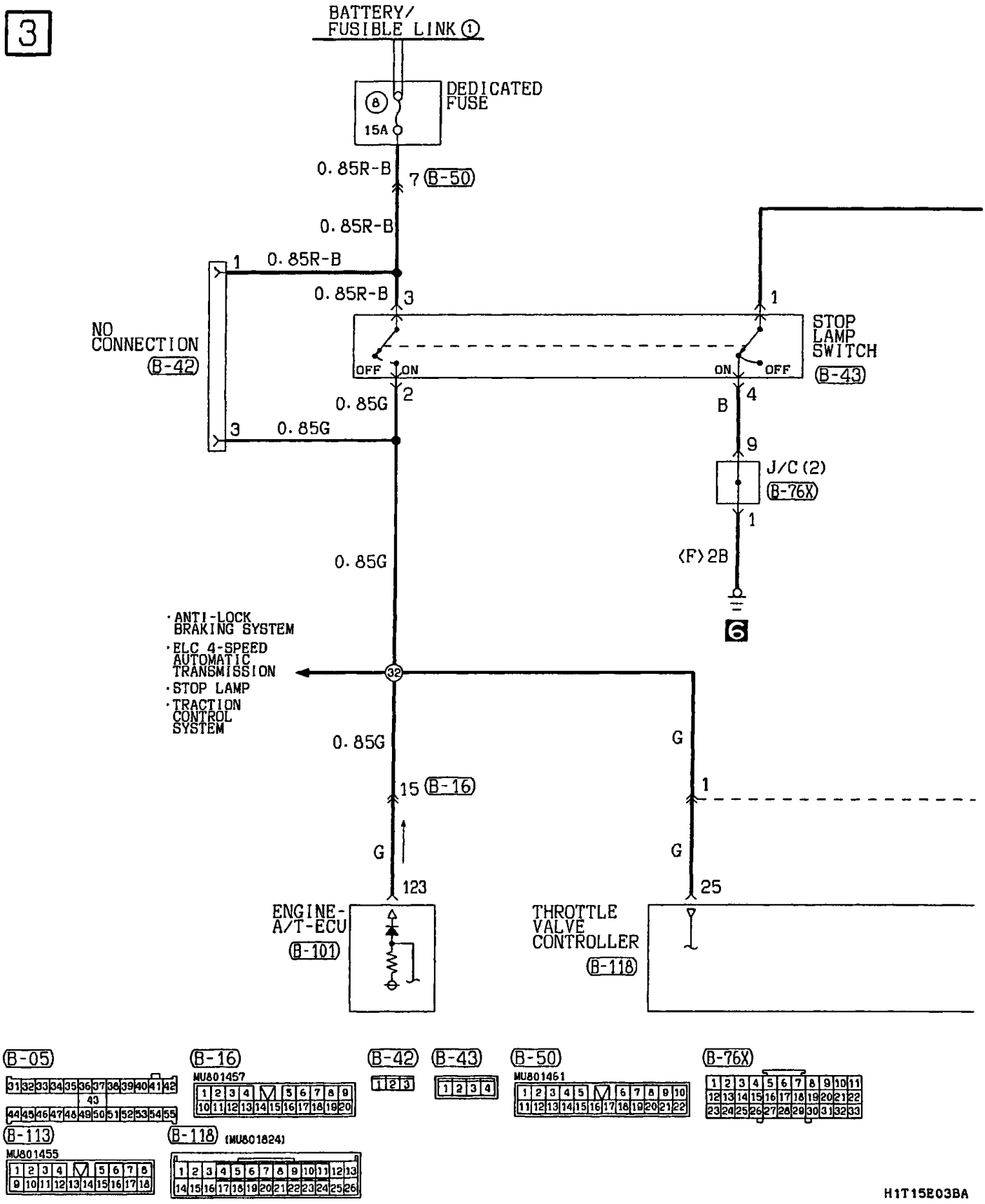

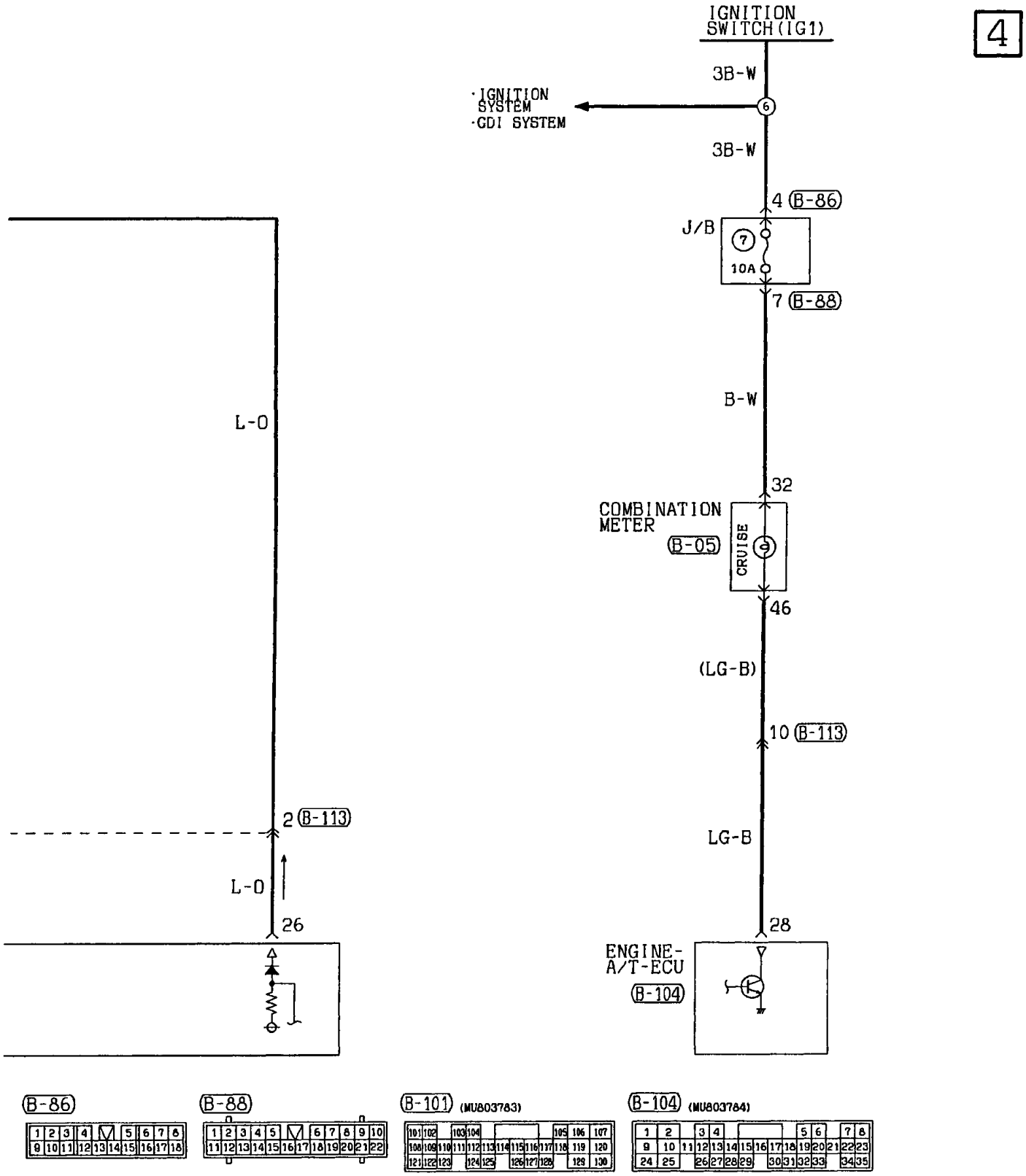

Wire colour code
B :Black LG:Light green G :Green L :Blue W :White Y :Yellow SB:Sky blue
BR:Brown O :Orange GR:Gray R :Red P :Pink V :Violet

H1T15E03BB

AUTO-CRUISE CONTROL SYSTEM <A/T> (CONTINUED)

5

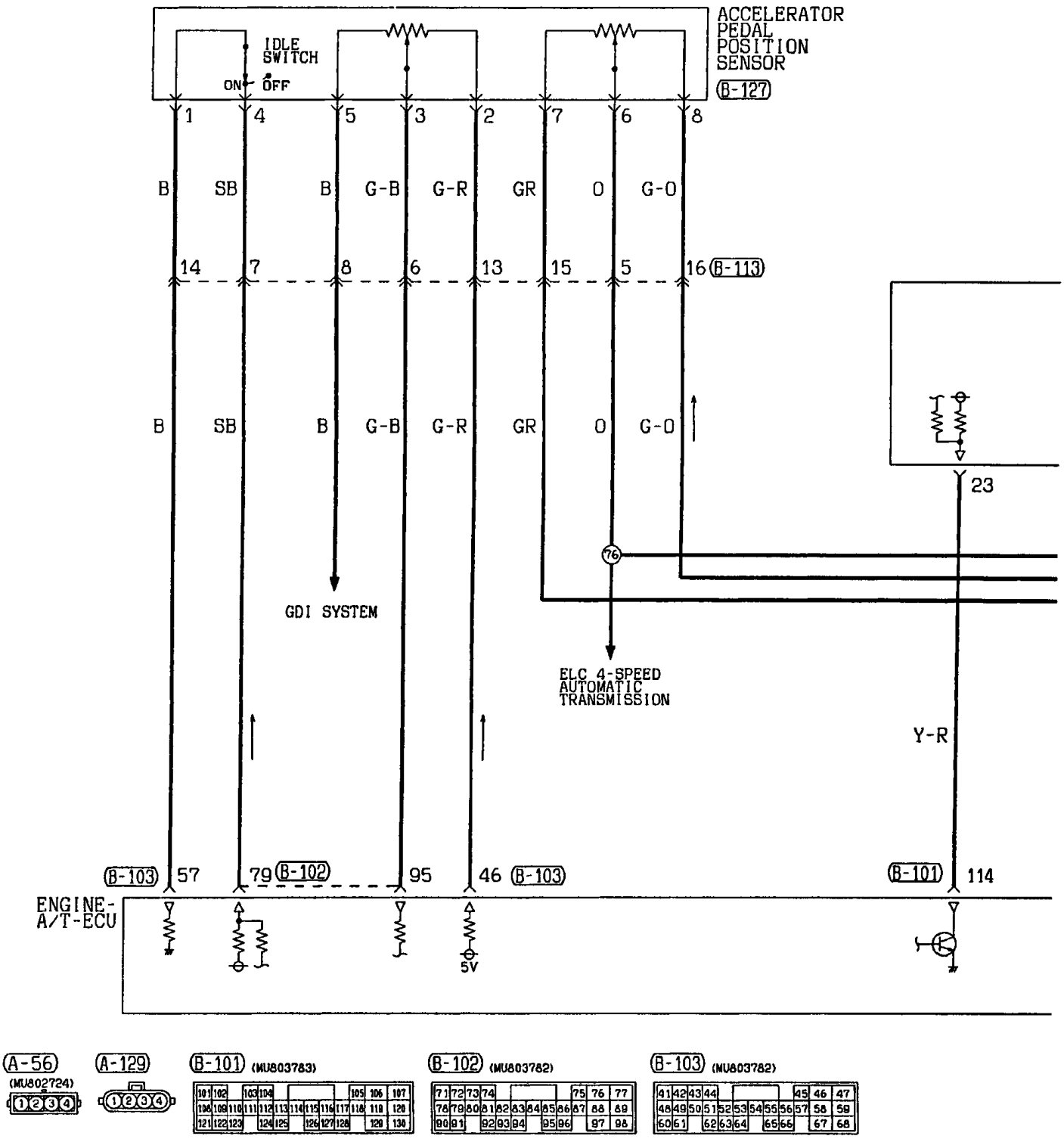

H1T15E03CA

6

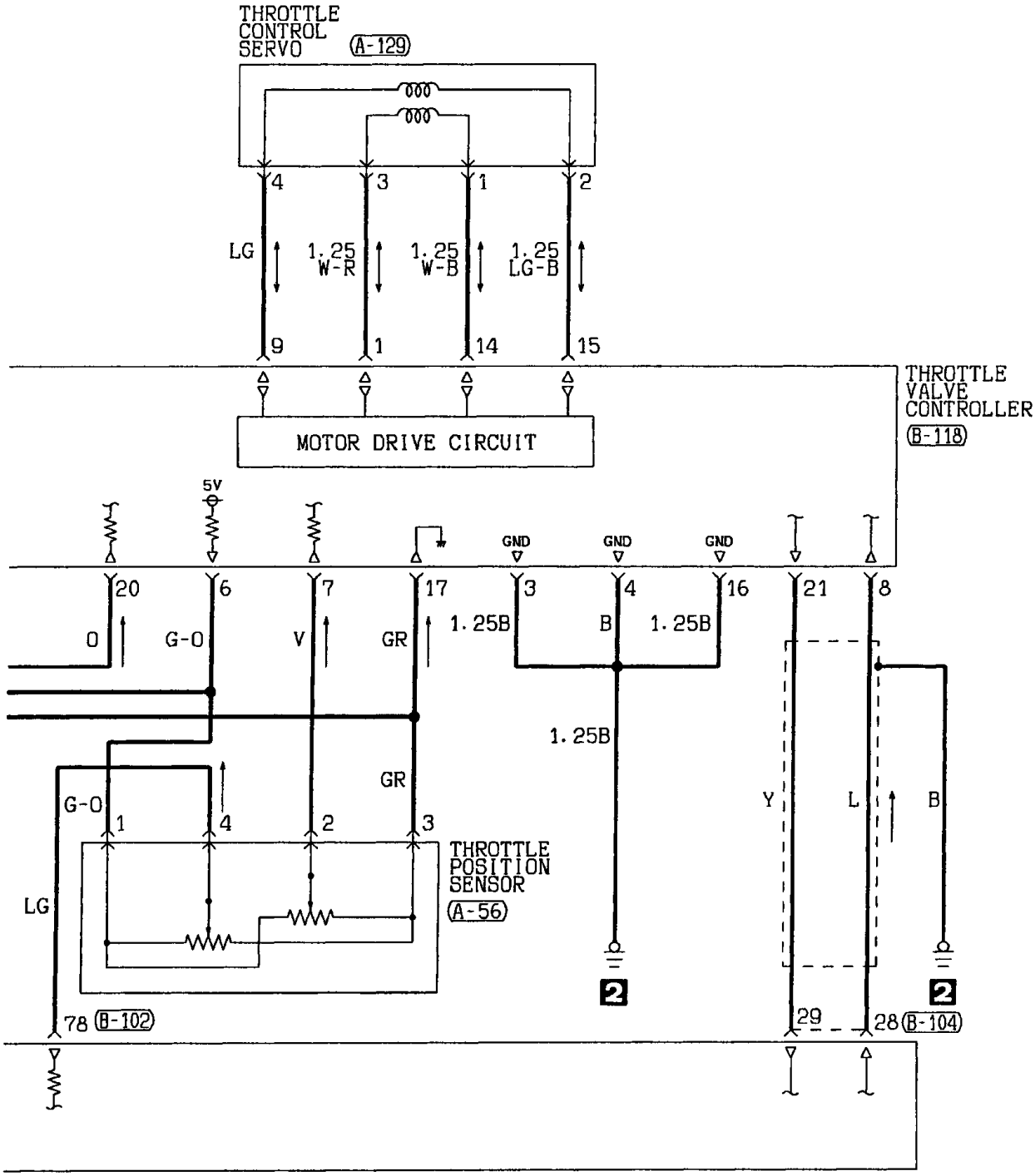

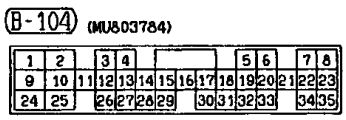

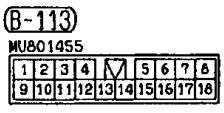

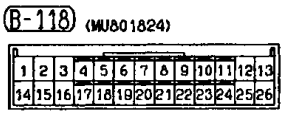

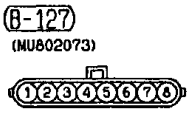

Wire colour code

B :Black	LG:Light green	G :Green	L :Blue	W :White	Y :Yellow	SB:Sky blue
BR:Brown	O :Orange	GR:Gray	R :Red	P :Pink	V :Violet	

H1T15E03CB

AUTO-CRUISE CONTROL SYSTEM <A/T> (CONTINUED)

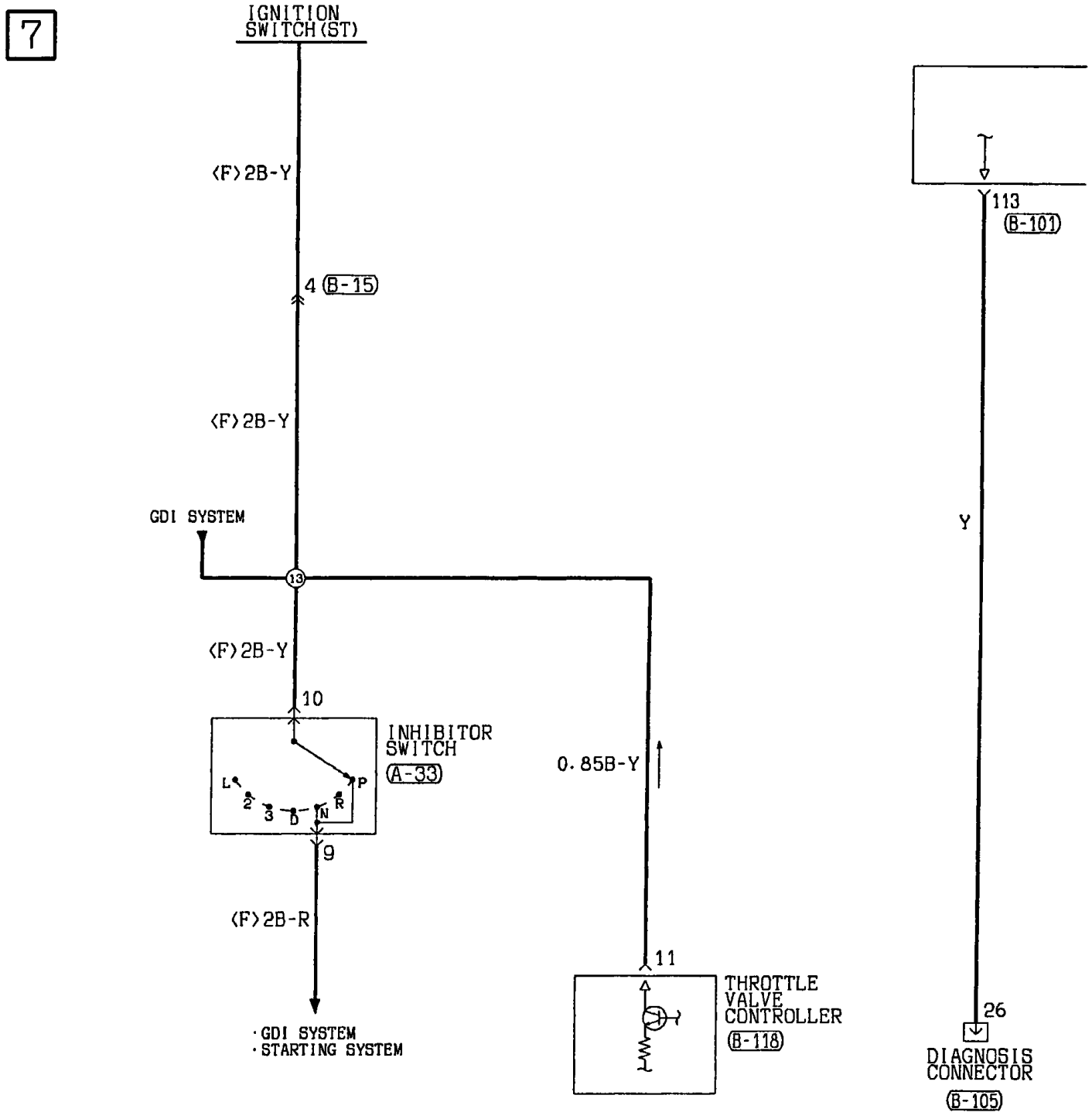

H1T15E03DA

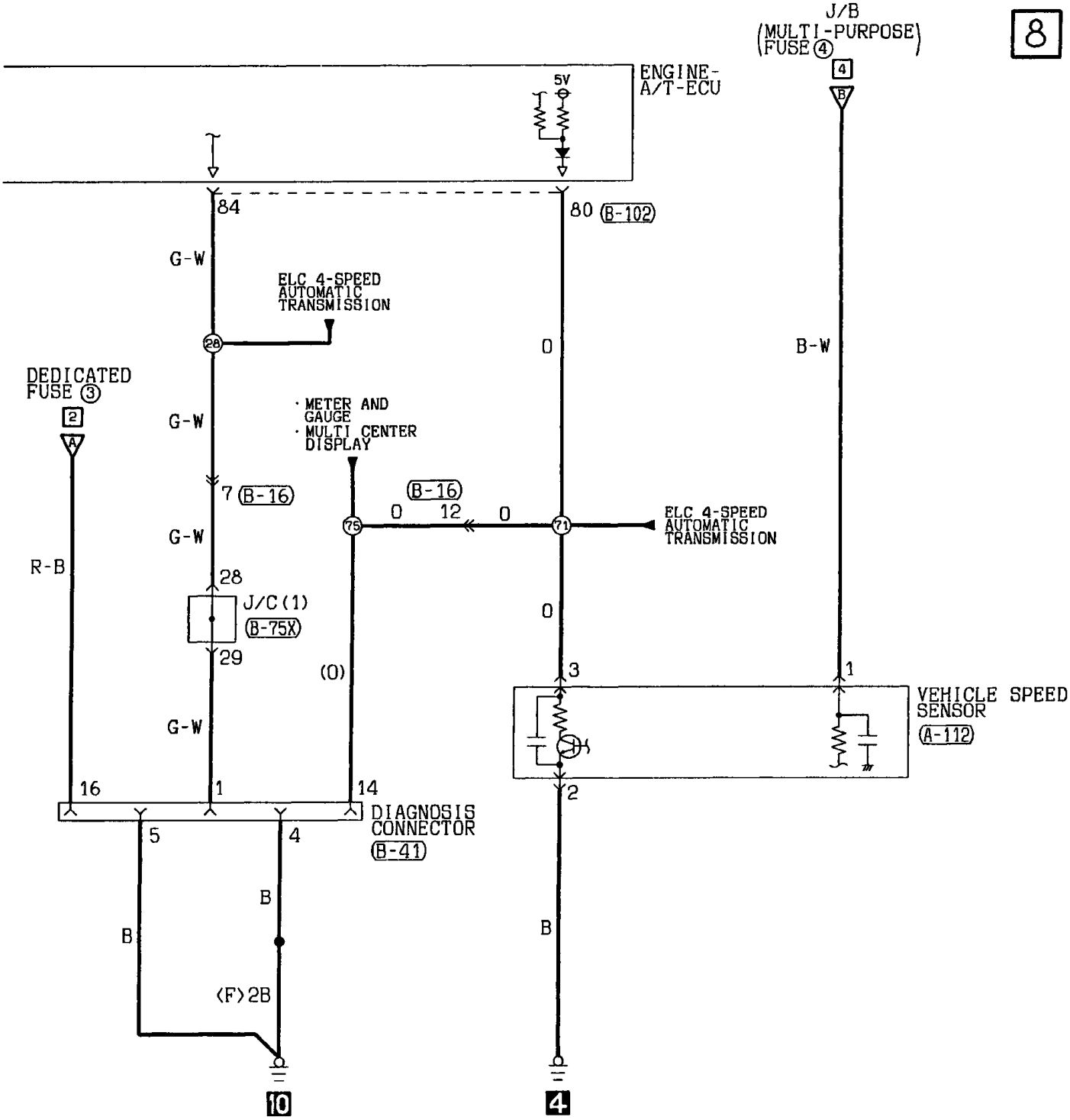

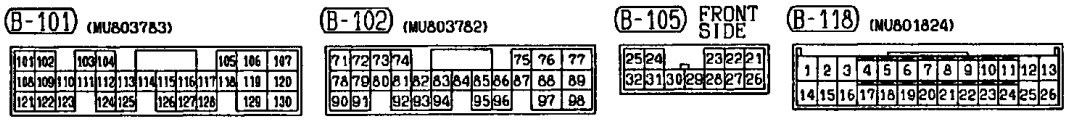

Wire colour code
B :Black LG:Light green G :Green L :Blue W :White Y :Yellow SB:Sky blue
BR:Brown O :Orange GR:Gray R :Red P :Pink V :Violet

H1T15E03DB

IMMOBILIZER SYSTEM

Diesel-powered vehicles

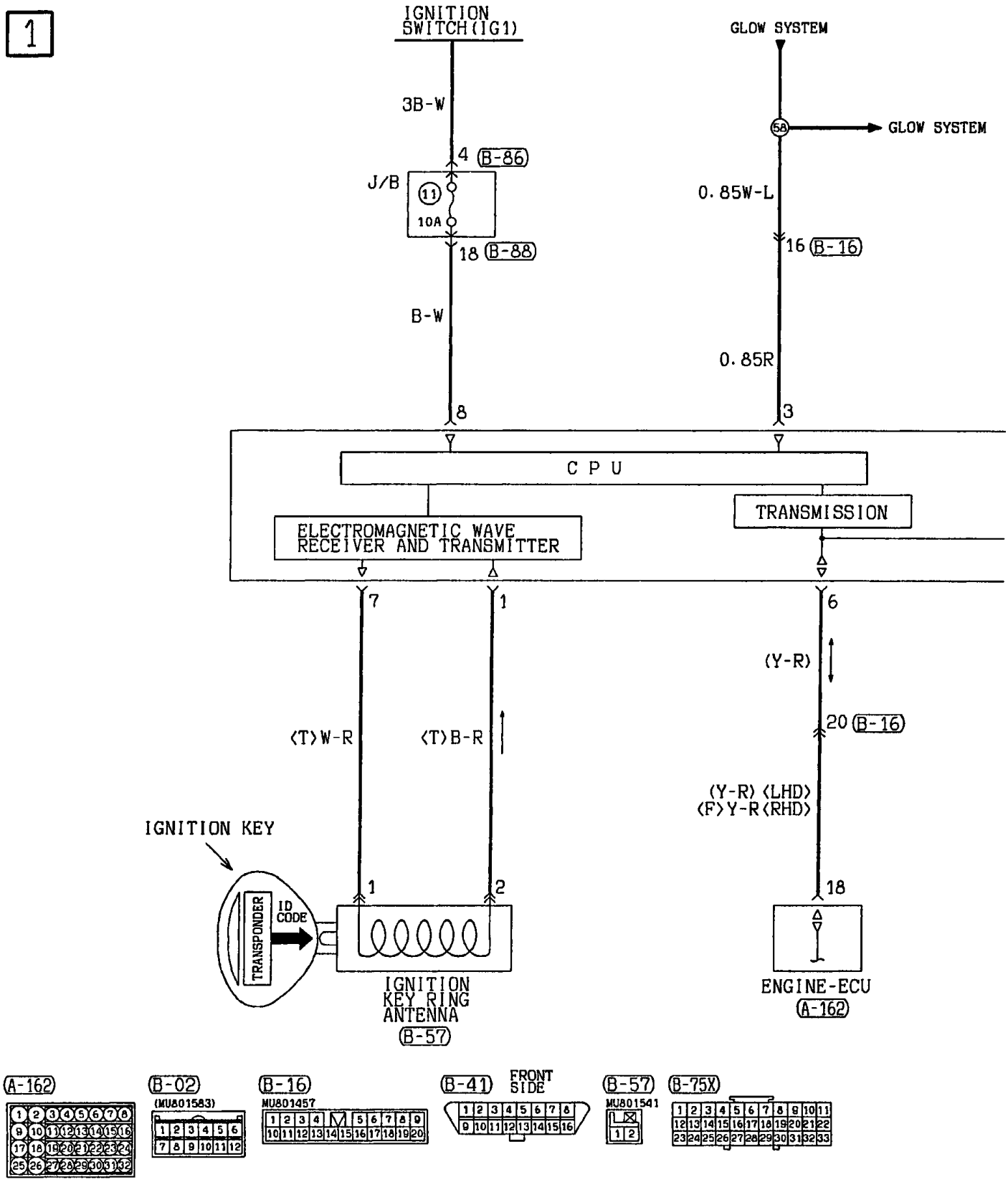

H1T15E04AA

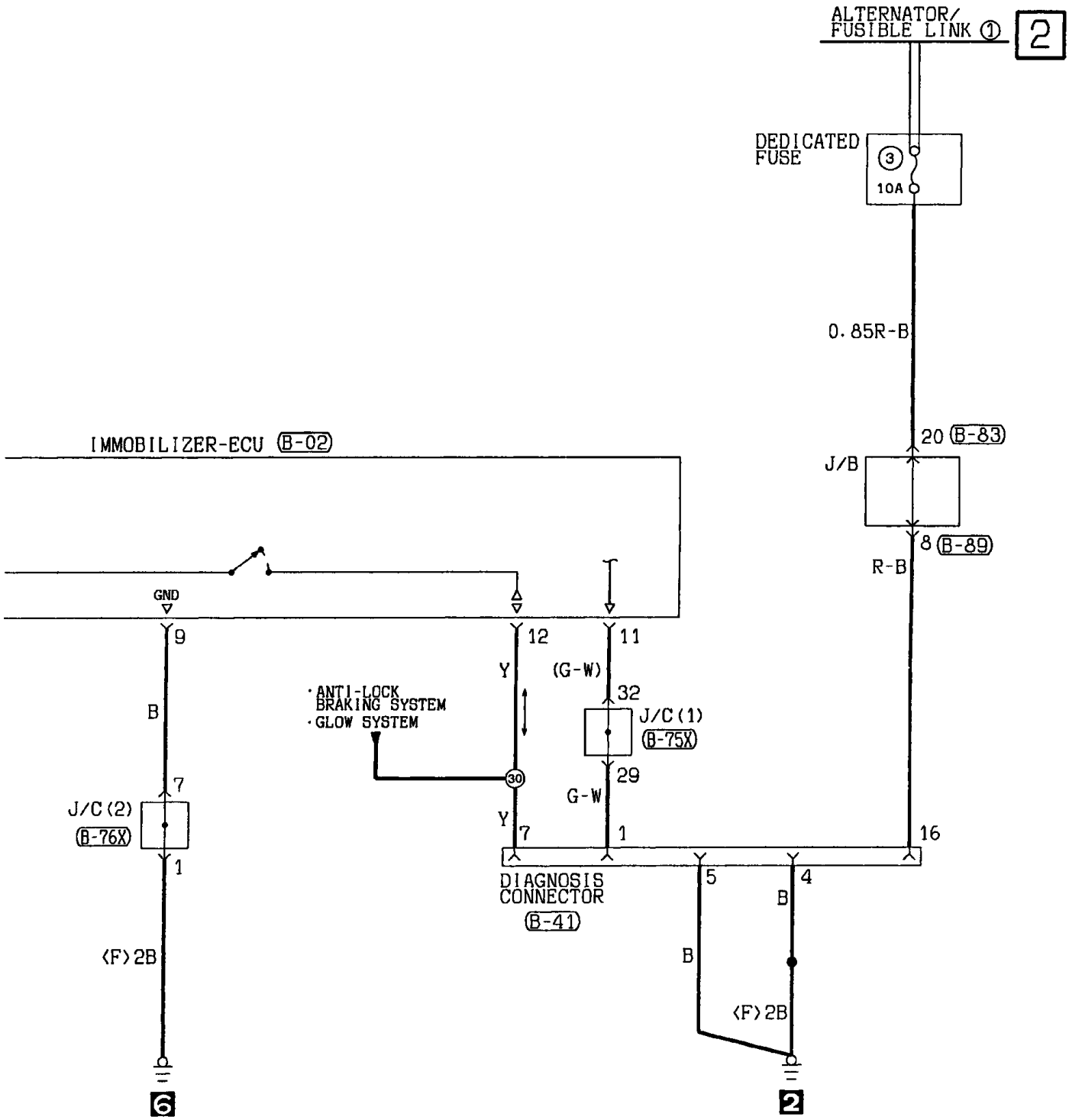

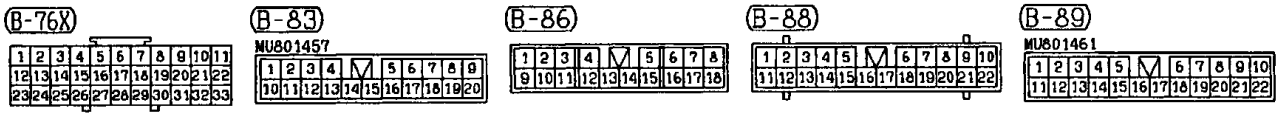

Wire colour code
B :Black LG:Light green G :Green L :Blue W :White Y :Yellow SB:Sky blue
BR:Brown O :Orange GR:Gray R :Red P :Pink V :Violet

H1T15E04AB

IMMOBILIZER SYSTEM

Petrol-powered vehicles

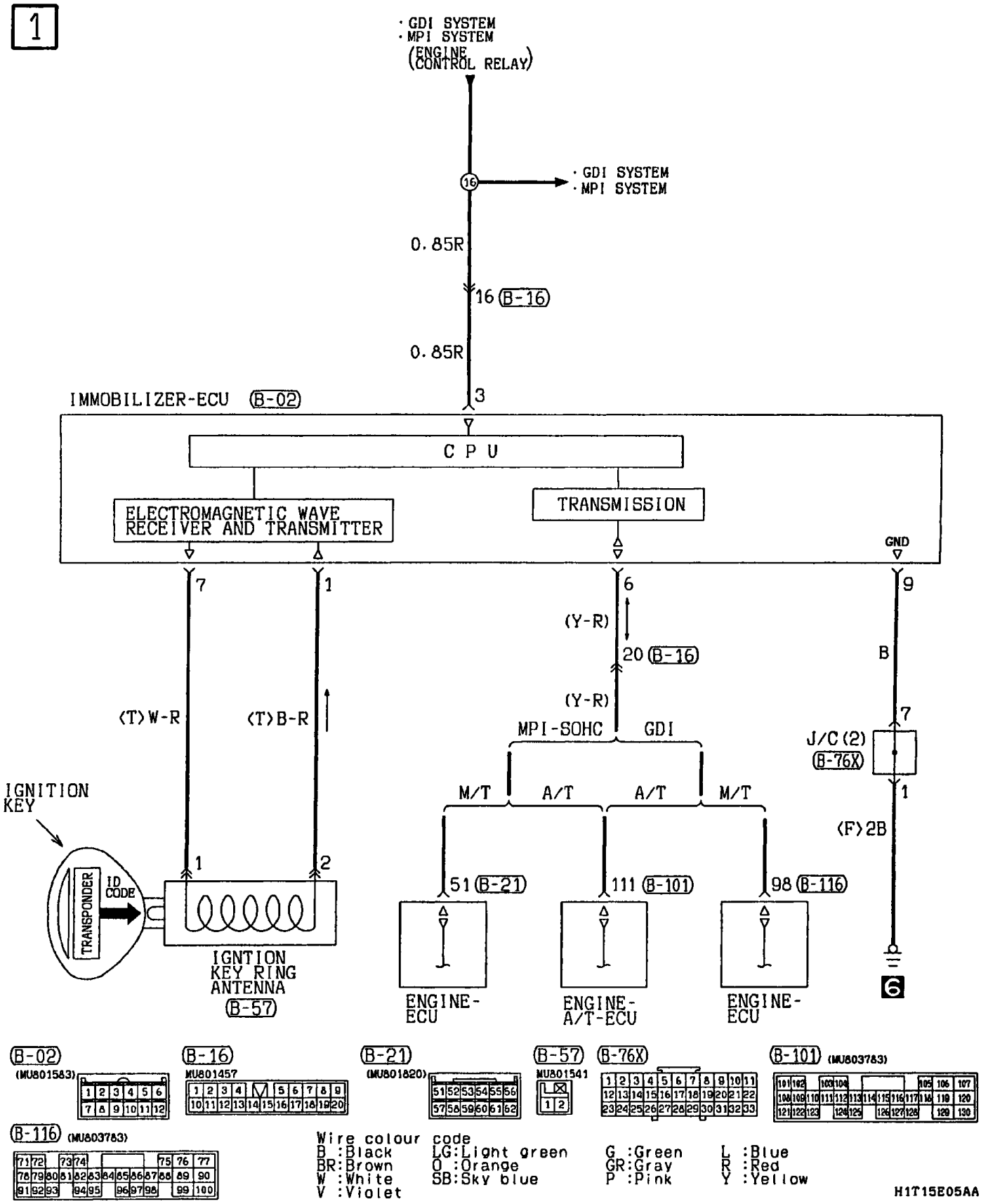

MITSUBISHI MOTORS

Workshop Manual

electrical wiring
SUPPLEMENT

CARISMA 2001

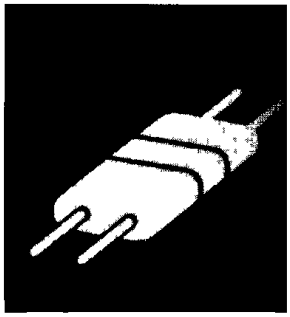

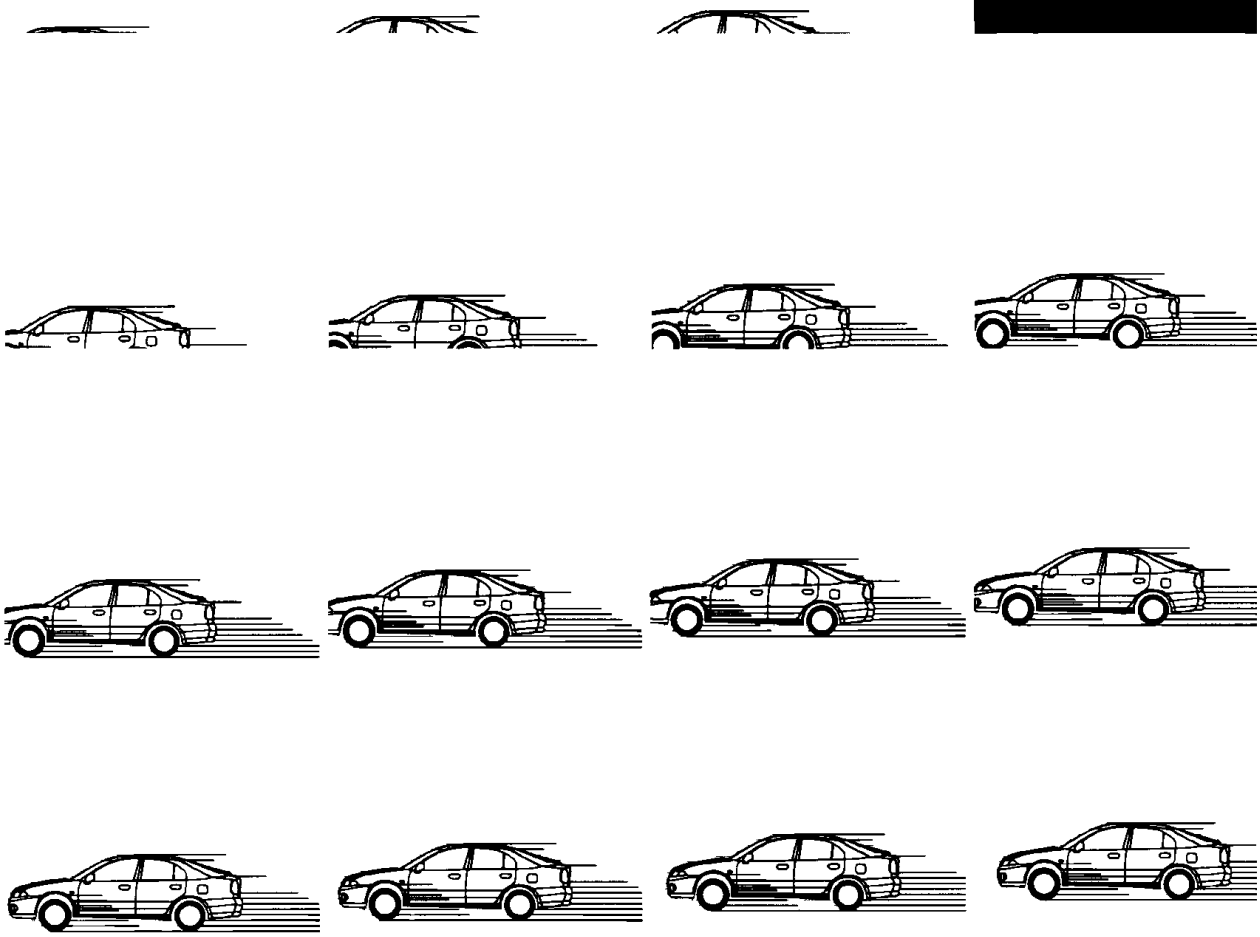

Pub. No. PHDE9501-E

CARISMA

ELECTRICAL WIRING SUPPLEMENT

FOREWORD

This publication is a supplement to the Electrical Wiring Manual Pub. No. PHDE9501-A, PHDE9501-B, PHDE9501-C, PHDE9501-D and contains only additions and changes to the original issue. It is recommended that all service mechanics engaged in the servicing of the vehicle refer to the following publications as well as this manual.

TECHNICAL INFORMATION MANUAL
- PYGE95E1
- PYGE95E1-A (Supplement)
- PYGE95E1-B (Supplement)
- PYGE95E1-C (Supplement)

WORKSHOP MANUAL
- CHASSIS GROUP
  - PWDE9502
  - PWDE9502-A (Supplement)
  - PWDE9502-B (Supplement)
  - PWDE9502-C (Supplement)
  - PWDE9502-D (Supplement)
  - PWDE9502-E (Supplement)
- ELECTRICAL WIRING
  - PHDE9501-A (Supplement)
  - PHDE9501-B (Supplement)
  - PHDE9501-C (Supplement)
  - PHDE9501-D (Supplement)
- BODY REPAIR MANUAL
  - PBGE95E1
  - PBGE95E1-A (Supplement)
- ENGINE GROUP
  - PWEE□□□□ (Looseleaf edition)

PARTS CATALOGUE
- N606C006D□

All information, illustrations and product descriptions contained in this manual are current as at the time of publication. We however, reserve the right to make changes at any time without prior notice or obligation.

MITSUBISHI MOTOR SALES
Europe B.V.

"GDI" is a registered trade mark of Mitsubishi Motors Corporation.

© Mitsubishi Motors Corporation July 2000

GROUP INDEX

OUTLINE OF CHANGES .....

HOW TO READ THE WIRING DIAGRAMS 1

WIRING HARNESS CONFIGURATION DIAGRAMS ... 2

SINGLE PART INSTALLATION POSITION 3

CIRCUIT DIAGRAM 4

WARNINGS REGARDING SERVICING OF SUPPLEMENTAL RESTRAINT SYSTEM (SRS) EQUIPPED VEHICLE

WARNING!

(1) Improper service or maintenance of any component of the SRS or any SRS-related component, can lead to personal injury or death to service personnel (from inadvertent firing of the air bag) or to the driver and passenger (from rendering the SRS inoperative).

(2) SRS components should not be subjected to heat over 93 °C, so remove the SRS-ECU, air bag module (driver's side and front passenger's side) and clock spring before drying or baking the vehicle after painting.

(3) Service or maintenance of any SRS component or SRS-related component must be performed only at an authorized MITSUBISHI dealer.

(4) MITSUBISHI dealer personnel must thoroughly review this manual, and especially its GROUP 52B–Supplemental Restraint System (SRS), before beginning any service or maintenance of any component of the SRS or any SRS-related component.

HOW TO USE THIS MANUAL

CONTENTS

The preceding page contains GROUP INDEX that lists the group title and group number.

PAGE NUMBERS

All page numbers consist of two sets of digits separated by a dash. The digits preceding the dash identify the number of the group. The digits following the dash represent the consecutive page number within the group. The page number can be found on the top left or right of each page.

OPERATION AND TROUBLESHOOTING HINTS

In the GROUP 4 circuit diagrams, the operation and troubleshooting hints are given on the previous page or following page for each circuit where necessary.

MANUAL AIR CONDITIONER

Petrol-powered vehicles

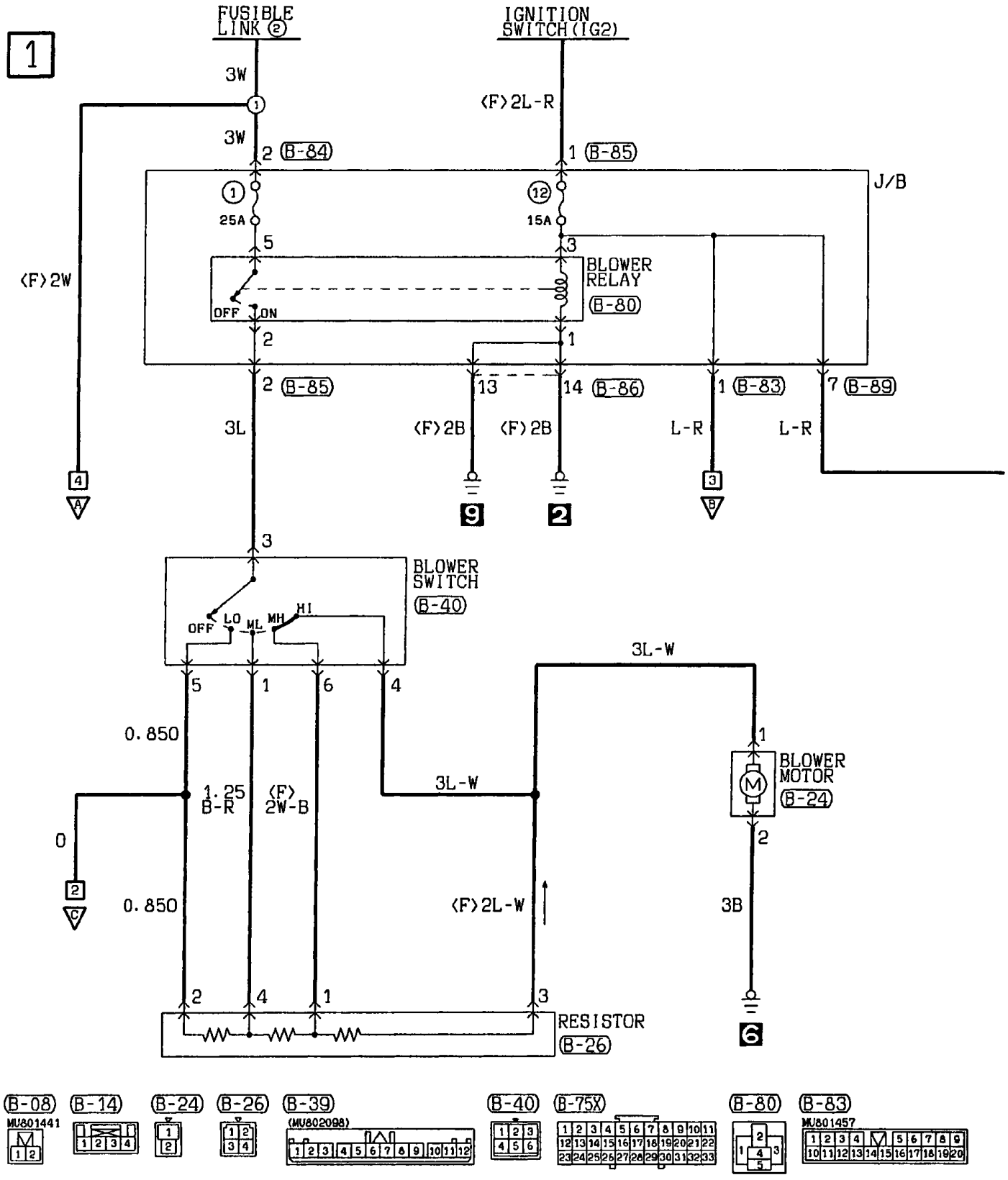

H1T12E01AA

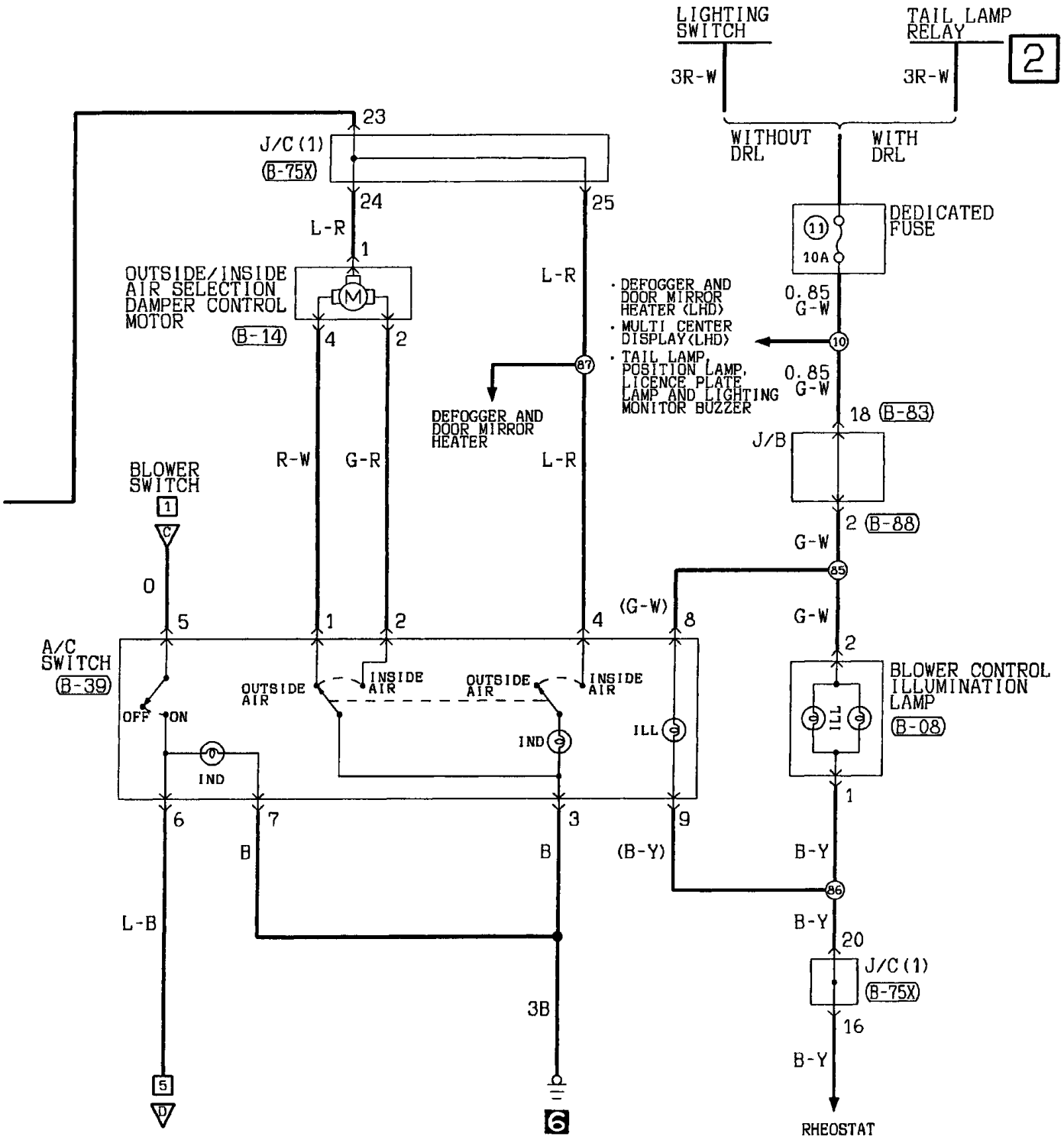

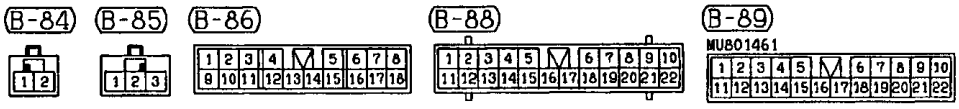

Wire colour code
B :Black LG:Light green G :Green L :Blue W :White Y :Yellow SB:Sky blue
BR:Brown O :Orange GR:Gray R :Red P :Pink V :Violet

H1T12E01AB

MANUAL AIR CONDITIONER <Petrol-powered vehicles> (CONTINUED)

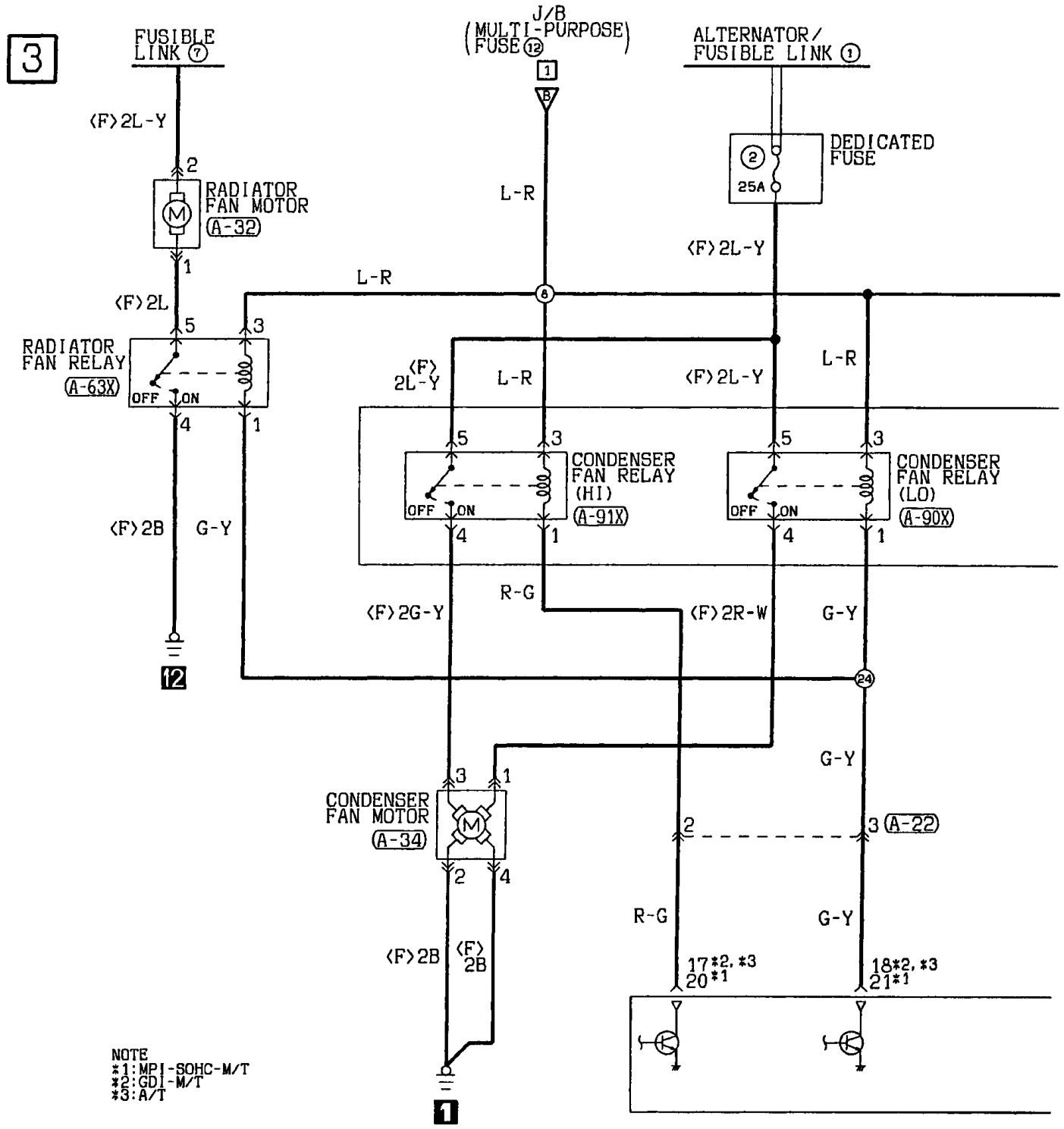

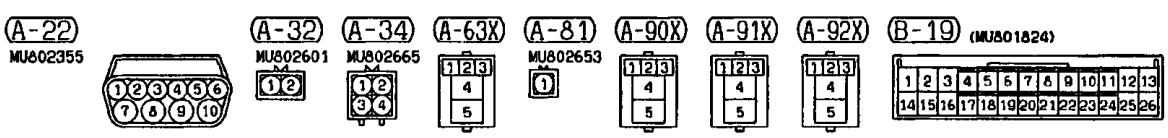

H1T12E01BA

4

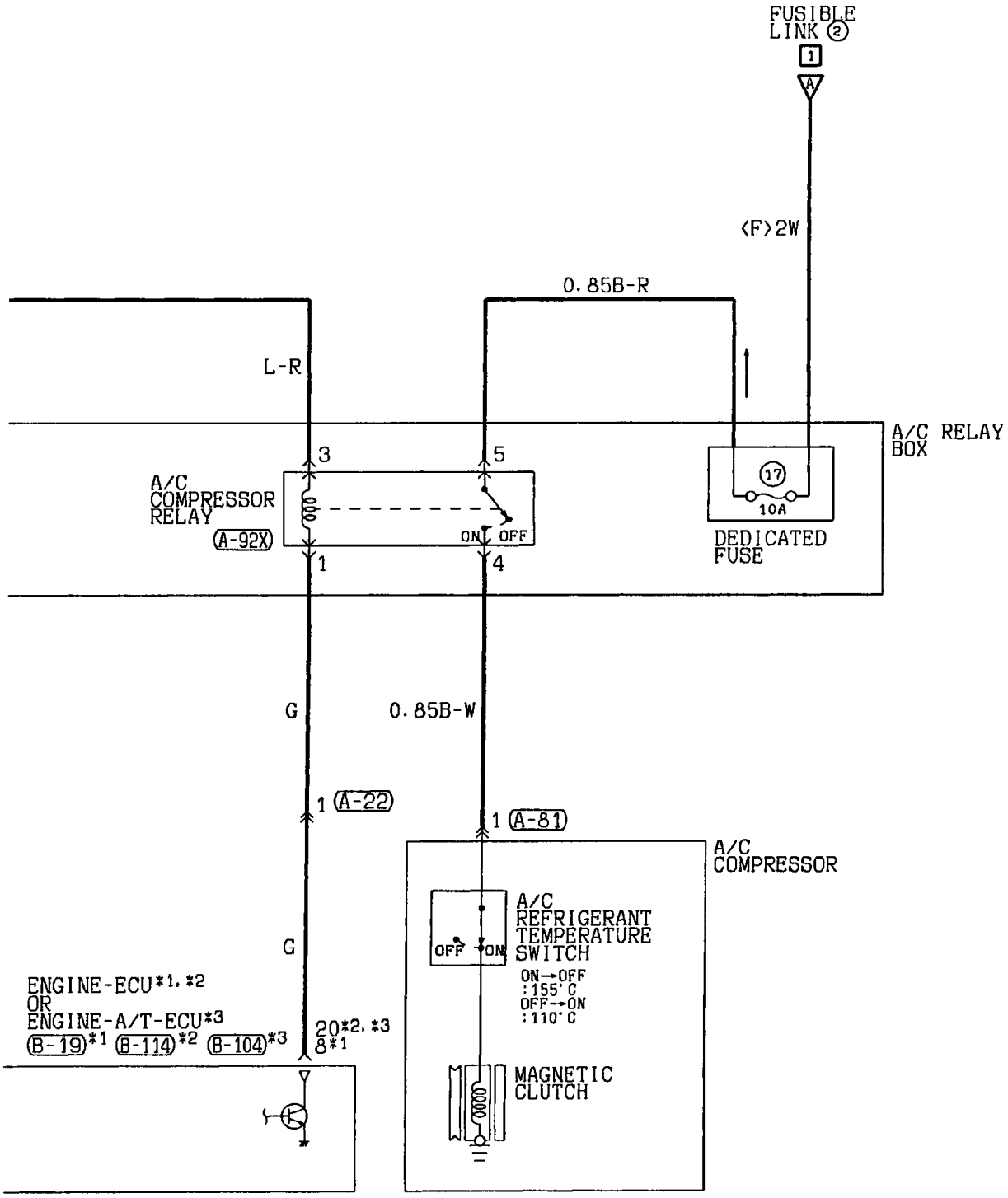

B-104 (MU803784)

1	2		3	4						5	6		7	8										
9	10	11	12	13	14	15	16	17	18	19	20	21	22	23										
24	25		26	27	28	29		30	31	32	33		34	35										

B-114 (MU803784)

1	2		3	4						5	6		7	8										
9	10	11	12	13	14	15	16	17	18	19	20	21	22	23										
24	25		26	27	28	29		30	31	32	33		34	35										

Wire colour code

B :Black	LG:Light green	G :Green	L :Blue	W :White	Y :Yellow	SB:Sky blue
BR:Brown	O :Orange	GR:Gray	R :Red	P :Pink	V :Violet	

H1T12E01BB

MANUAL AIR CONDITIONER <Petrol-powered vehicles> (CONTINUED)

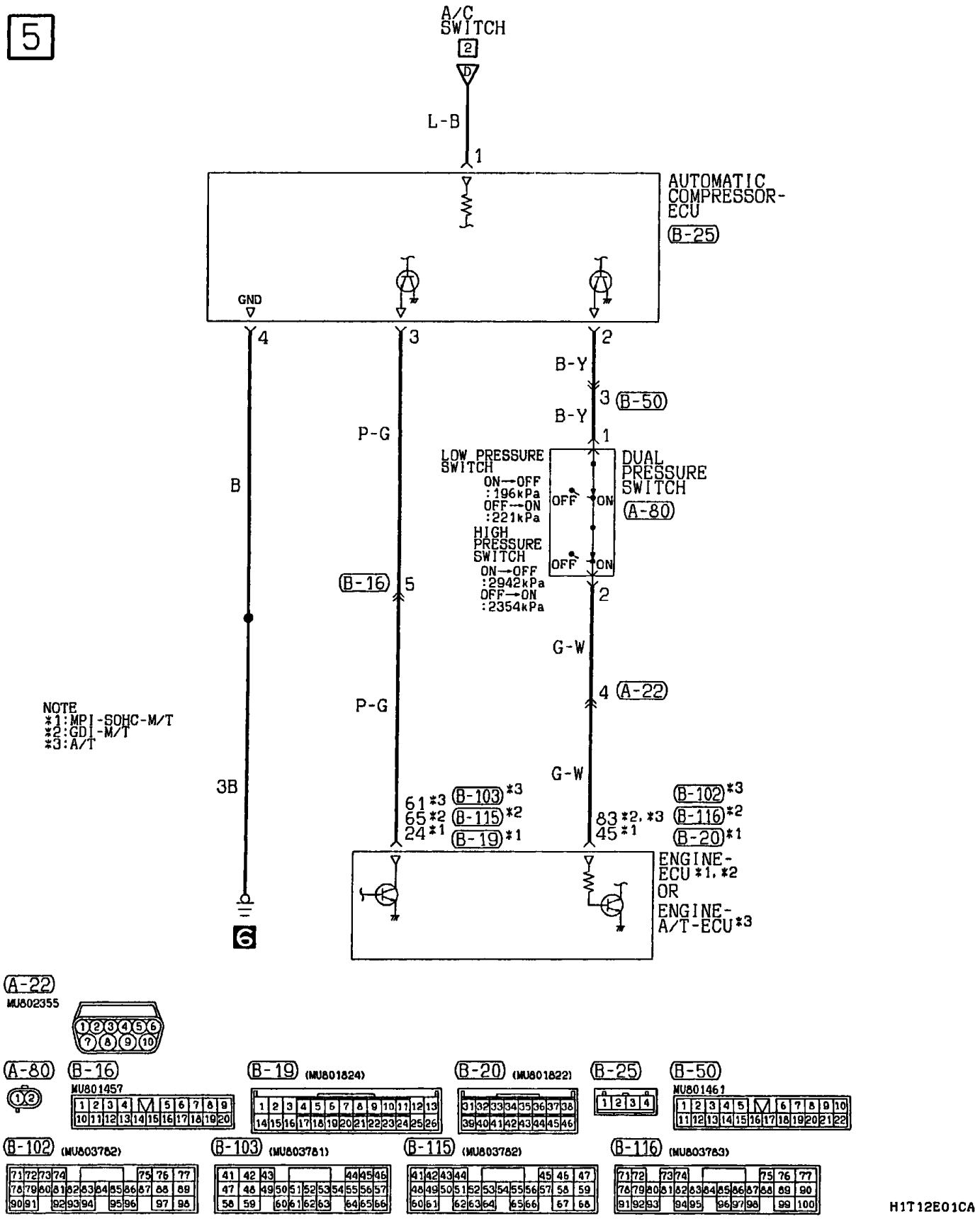

NOTES